Dist	COUNTY	ROUTE	POST MILES TOTAL PROJECT	SHEET No.	TOTAL SHEETS
07	LA,Ven	Var	1,2,5,10,57,60,*etc.*	1	38

ACSTP-000C(315)E

STATE OF CALIFORNIA

DEPARTMENT OF TRANSPORTATION

PROJECT PLANS FOR CONSTRUCTION ON

STATE HIGHWAY

IN LOS ANGELES AND VENTURA COUNTIES AT VARIOUS LOCATIONS

TO BE SUPPLEMENTED BY STANDARD PLANS DATED MAY 2006

INDEX OF PLANS

SHEET No.	DESCRIPTION
1	TITLE AND LOCATION MAP
2-6	TRAFFIC HANDLING PLANS AND DETAILS
7-32	ELECTRICAL PLANS
33-38	REVISED AND NEW STANDARD PLANS

THE STANDARD PLANS LIST APPLICABLE TO THIS CONTRACT IS INCLUDED IN THE NOTICE TO BIDDERS AND SPECIAL PROVISIONS BOOK.

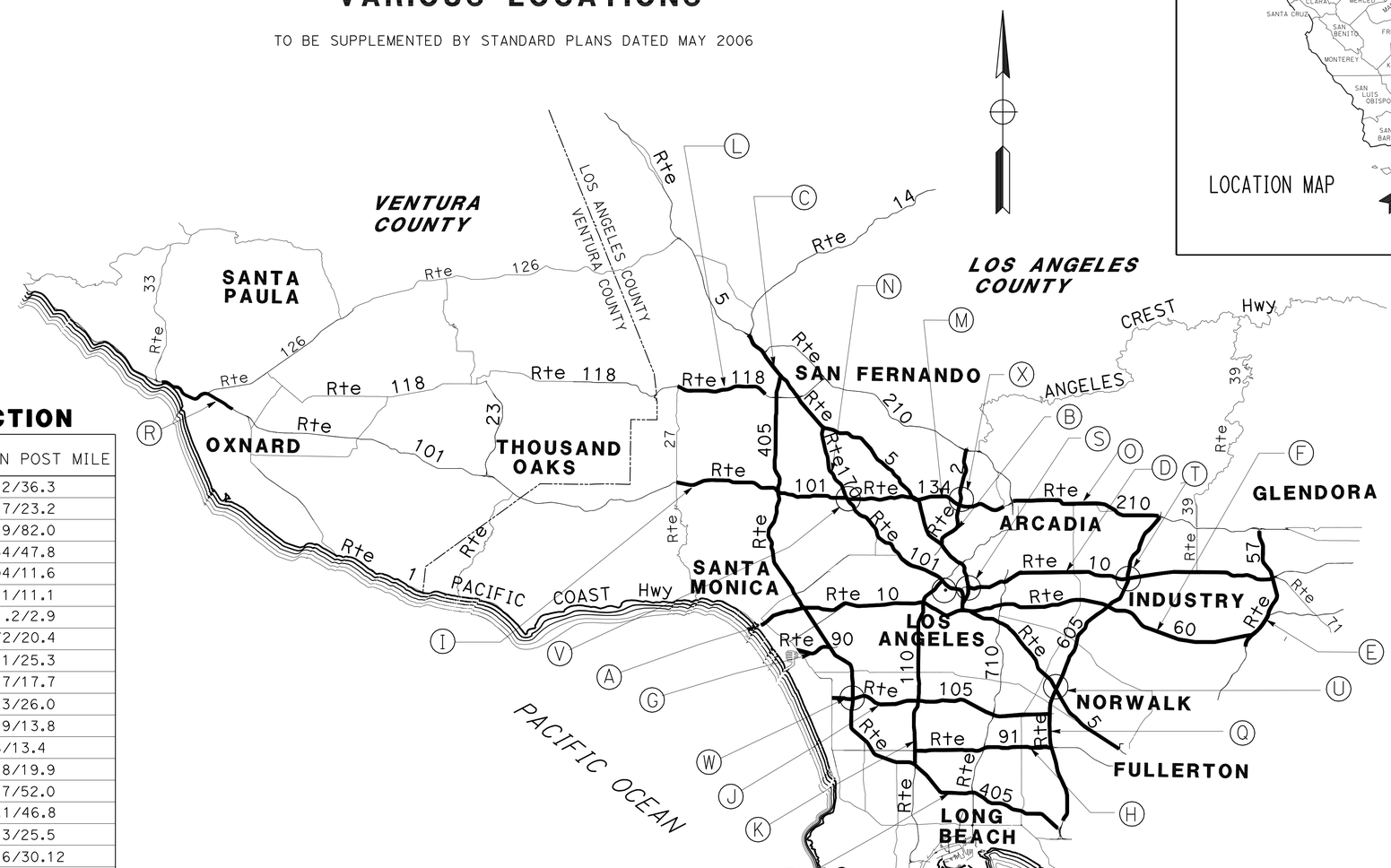

LOCATIONS OF CONSTRUCTION

No.	ROUTE	COUNTY	LIMIT IN POST MILE
A	1	LA	35.2/36.3
B	2	LA	15.7/23.2
C	5	LA	0.9/82.0
D	10	LA	2.34/47.8
E	57	LA	1.94/11.6
F	60	LA	0.1/11.1
G	90	LA	1.2/2.9
H	91	LA	6.72/20.4
I	101	LA	0.1/25.3
J	105	LA	0.7/17.7
K	110	LA	8.3/26.0
L	118	LA	1.9/13.8
M	134	LA	0.38/13.4
N	170	LA	14.8/19.9
O	210	LA	25.7/52.0
P	405	LA	0.1/46.8
Q	605	LA	0.3/25.5
R	101	Ven	24.6/30.12
S	EAST LOS ANGELES HUB	LA	16.9
T	SAN GABRIEL VALLEY HUB	LA	20.2
U	NORWALK HUB	LA	6.8
V	NORTH HOLLYWOOD HUB	LA	11.8
W	LOS ANGELES AIRPORT HUB	LA	21.3
X	LOS ANGELES REGIONAL TRAFFIC MANAGEMENT CENTER	LA	0.4

SEE SHEETS E-2 TO E-13 FOR DETAILED CCTV CAMERA, LARTMC AND HUB LOCATIONS.

THE CONTRACTOR SHALL POSSESS THE CLASS (OR CLASSES) OF LICENSE AS SPECIFIED IN THE "NOTICE TO BIDDERS".

PROJECT MANAGER: DAREK CHMIELEWSKI

DESIGN ENGINEER: PATRICK P. LUI

PROJECT ENGINEER / REGISTERED ELECTRICAL ENGINEER — DATE: 8/31/09

REGISTERED PROFESSIONAL ENGINEER — PATRICK P. LUI — No. E17534 — Exp. 06/30/11 — ELECT. — STATE OF CALIFORNIA

November 30, 2009
PLANS APPROVAL DATE

THE STATE OF CALIFORNIA OR ITS OFFICERS OR AGENTS SHALL NOT BE RESPONSIBLE FOR THE ACCURACY OR COMPLETENESS OF SCANNED COPIES OF THIS PLAN SHEET.

LAST REVISION 00-00-00 — DATE PLOTTED => 03-FEB-2010 — TIME PLOTTED => 06:06

CONTRACT No. 07-256904

Dist	COUNTY	ROUTE	POST MILES TOTAL PROJECT	SHEET No.	TOTAL SHEETS
07	LA,Ven	1,2,5,10, 57,60, *etc.*	Var	2	38

REGISTERED CIVIL ENGINEER DATE 11-12-08

11-30-09
PLANS APPROVAL DATE

REGISTERED PROFESSIONAL ENGINEER ALBERT K. YU No. C43220 Exp. 3-31-10 CIVIL STATE OF CALIFORNIA

THE STATE OF CALIFORNIA OR ITS OFFICERS OR AGENTS SHALL NOT BE RESPONSIBLE FOR THE ACCURACY OR COMPLETENESS OF ELECTRONIC COPIES OF THIS PLAN SHEET.

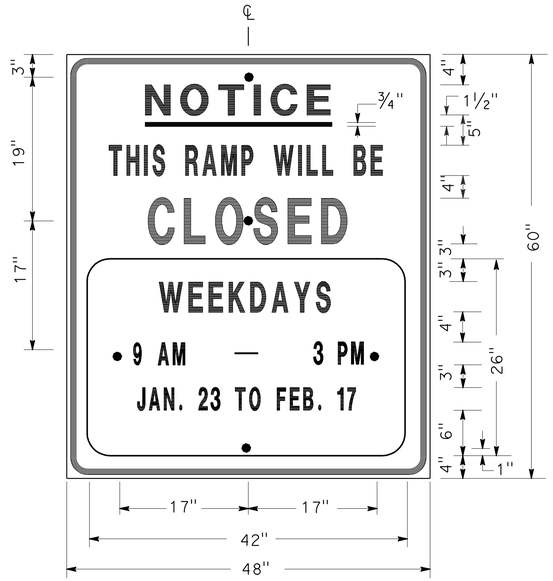

SIGN SP-1

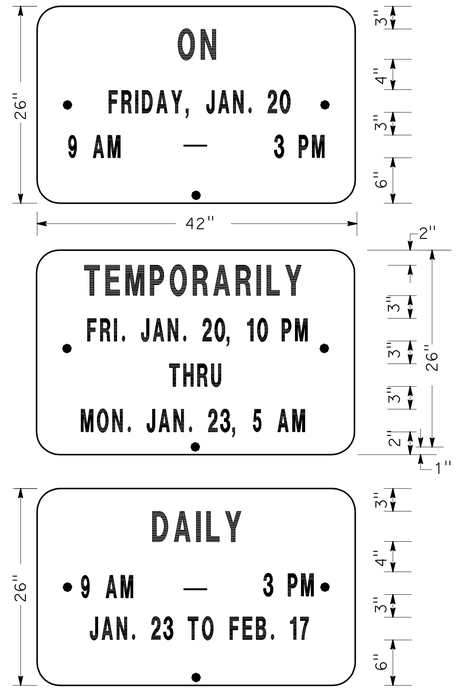

ALTERNATE OVERLAY PANELS (TYPICAL)

SPECIAL ADVANCE NOTICE PUBLICITY SIGN

NOTES: (SIGN SP-1)

1. SIGNS SHALL HAVE ORANGE RETROREFLECTIVE BACKGROUND WITH BLACK BORDER AND LETTERS.
2. BOLT HOLES SHALL BE 3/8" DIAMETERS.
3. BASE MATERIAL SHALL BE ALUMINUM (MINIMUM 0.06").
4. SIGNS SHALL BE MOUNTED WITH BOTTOMS OF SIGNS A MINIMUM OF 6' ABOVE GROUND.

SIZE	BORDER WIDTH	MARGIN WIDTH	LETTER SIZE					CORNER RADIUS
			LINE 1	LINE 2*	LINE 3	LINE 4	LINE 5,6 AND 7*	
48"x60"	1 1/4"	3/4"	4E	4D	6E	4D		3"
42"x26"	OVERLAY						3D	1 1/2"
* CONDENSED SPACING IF NECESSARY								

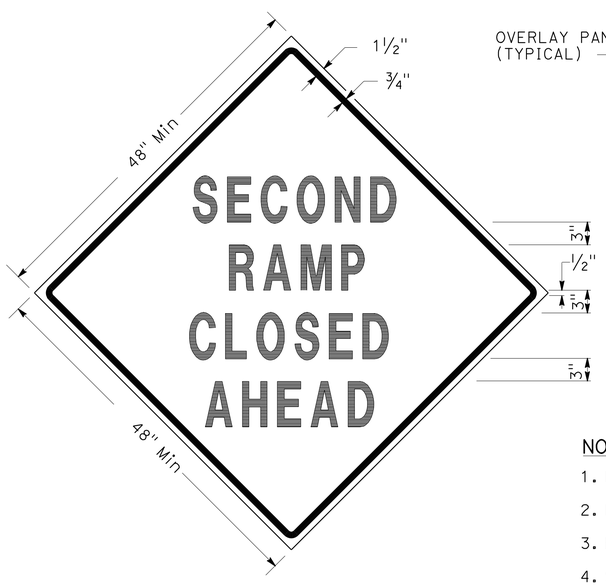

SIGN SP-3

SIGN SP-5

NOTES: (SIGNS SP-3 & SP-5)

1. LETTERS - 6" SERIES D.
2. LETTERS AND BORDERS - BLACK ON RETROREFLECTIVE ORANGE BACKGROUND.
3. BASE MATERIAL SHALL BE ALUMINUM (MINIMUM 0.06").
4. SIGNS SHALL BE MOUNTED WITH BOTTOMS OF SIGNS A MINIMUM OF 6' ABOVE GROUND.

SPECIAL SIGN FOR EXIT RAMP CLOSURES

SIGN SP-4

NOTES: (SIGN SP-4)

1. LETTERS - 6" SERIES C.
2. LETTERS AND BORDERS - BLACK ON RETROREFLECTIVE WHITE BACKGROUND.
3. BASE MATERIAL SHALL BE ALUMINUM (MINIMUM 0.06").
4. SIGNS SHALL BE PLACED AT RAMP ENTRANCES IN ADDITION TO SIGNS POSTED IN ACCORDANCE WITH STANDARD PLAN T14.

SPECIAL SIGN FOR ENTRANCE RAMP CLOSURES

TRAFFIC HANDLING DETAILS

TRAFFIC CONTROL SYSTEM FOR RAMP CLOSURES, DETOUR SIGNS AND MISCELLANEOUS DETAILS

NO SCALE **THD-1**

JC	JC	JC
7/08	10/07	4/07

REVISED BY / DATE REVISED

ALBERT K YU / JOCELYN C CHIANG

CALCULATED-DESIGNED BY / CHECKED BY

FUNCTIONAL SUPERVISOR: JOHN YANG

STATE OF CALIFORNIA - DEPARTMENT OF TRANSPORTATION

Caltrans DTM

LAST REVISION 00-00-00 | DATE PLOTTED => 10-DEC-2009 | TIME PLOTTED => 07:39

Dist	COUNTY	ROUTE	POST MILES TOTAL PROJECT	SHEET No.	TOTAL SHEETS
07	LA,Ven	1,2,5,10, 57,60, *etc.*	Var	3	38

REGISTERED CIVIL ENGINEER DATE 11-12-08

PLANS APPROVAL DATE 11-30-09

REGISTERED PROFESSIONAL ENGINEER ALBERT K. YU No. C43220 Exp. 3-31-10 CIVIL STATE OF CALIFORNIA

THE STATE OF CALIFORNIA OR ITS OFFICERS OR AGENTS SHALL NOT BE RESPONSIBLE FOR THE ACCURACY OR COMPLETENESS OF ELECTRONIC COPIES OF THIS PLAN SHEET.

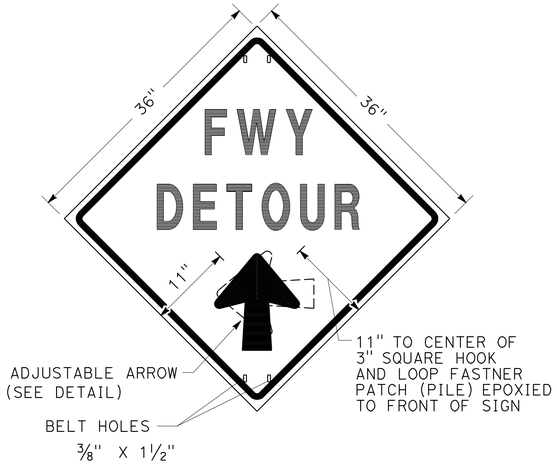

SIGN SP-2

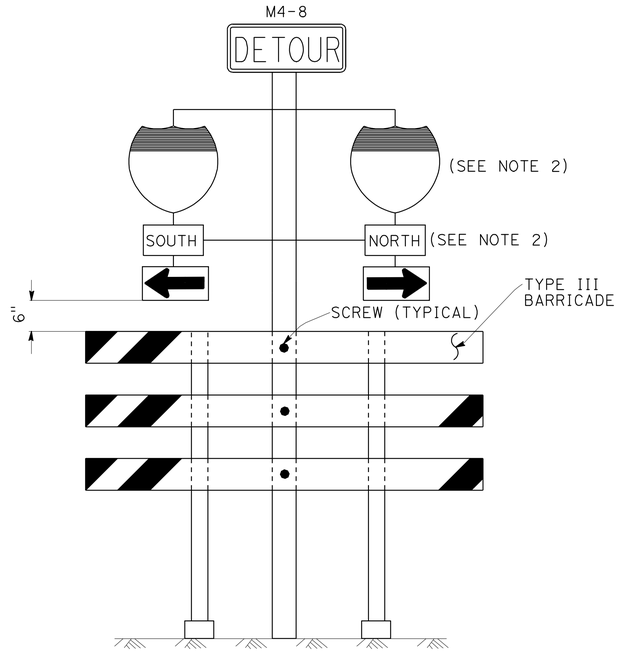

SIGN SP-6

(SEE NOTE 1)

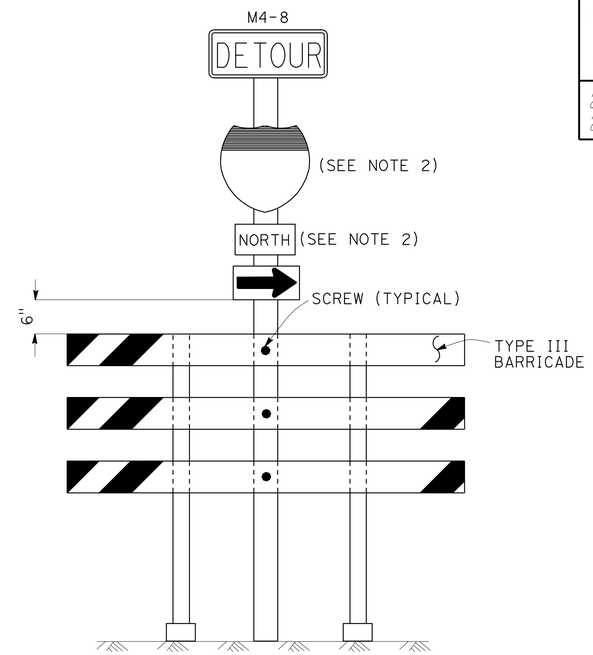

SIGN SP-7

(SEE NOTE 1)

NOTES: (SIGN SP-2)

1. LETTERS -6" SERIES E.
2. LETTERS, BORDER AND ARROW - BLACK ON RETROREFLECTORIZED ORANGE BACKGROUND.
3. BASE MATERIAL FOR SIGNS AND ARROWS SHALL BE ALUMINUM (MINIMUM 0.06").
4. BELTS (LUGGAGE STRAPS) SHALL BE 1" WIDE BY 48" LONG, MADE OF COTTON OR POLYPROPYLENE WEB MATERIAL.
5. SIGNS SHALL BE MOUNTED WITH BOTTOMS OF SIGNS A MINIMUM OF 6' ABOVE GROUND EXCEPT AS OTHERWISE SHOWN ON OTHER TRAFFIC HANDLING DETAILS PLANS.

ABBREVIATION

(CA) CALIFORNIA CODE

NOTES: (SIGNS SP-6 & SP-7)

1. IN LIEU OF PLACING SIGNS ON TYPE III BARRICADES, SIGNS, INCLUDING POSTS, MAY BE PLACED INTO THE GROUND OR FASTENED ONTO ELECTROLIERS.
2. USE APPROPRIATE ROUTE SHIELD [G26-2(CA), G27-2(CA), G28-2(CA)] AND CARDINAL DIRECTION [NORTH (M3-1), SOUTH (M3-3), EAST (M3-2), WEST (M3-4)]

SPECIAL PORTABLE FREEWAY DETOUR SIGNS

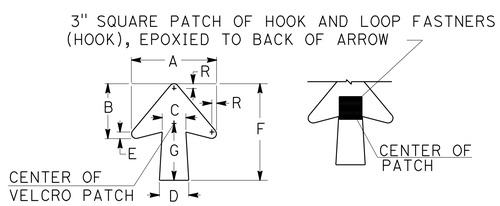

DIMENSIONS							
A	B	C	D	E	F	G	R
11 1/4"	7 1/4"	3 1/8"	4"	7/8"	13"	7 1/2"	5/8"

SPECIAL PORTABLE FREEWAY DETOUR SIGN

ADJUSTABLE ARROW DETAIL

TRAFFIC HANDLING DETAILS

TRAFFIC CONTROL SYSTEM FOR RAMP CLOSURES, DETOUR SIGNS AND MISCELLANEOUS DETAILS

NO SCALE **THD-2**

JC	7/08	ALBERT K YU	JOCELYN C CHIANG
JC	12/07		
JC	4/07		
REVISED BY	DATE REVISED		

CALCULATED-DESIGNED BY / CHECKED BY

FUNCTIONAL SUPERVISOR: JOHN YANG

STATE OF CALIFORNIA - DEPARTMENT OF TRANSPORTATION

Caltrans DTM

LAST REVISION 00-00-00 | DATE PLOTTED => 10-DEC-2009 | TIME PLOTTED => 07:40

Dist	COUNTY	ROUTE	POST MILES TOTAL PROJECT	SHEET No.	TOTAL SHEETS
07	LA,Ven	1,2,5,10, 57,60, *etc.*	Var	4	38

REGISTERED CIVIL ENGINEER DATE 11-12-08

PLANS APPROVAL DATE 11-30-09

REGISTERED PROFESSIONAL ENGINEER ALBERT K. YU No. C43220 Exp. 3-31-10 CIVIL STATE OF CALIFORNIA

THE STATE OF CALIFORNIA OR ITS OFFICERS OR AGENTS SHALL NOT BE RESPONSIBLE FOR THE ACCURACY OR COMPLETENESS OF ELECTRONIC COPIES OF THIS PLAN SHEET.

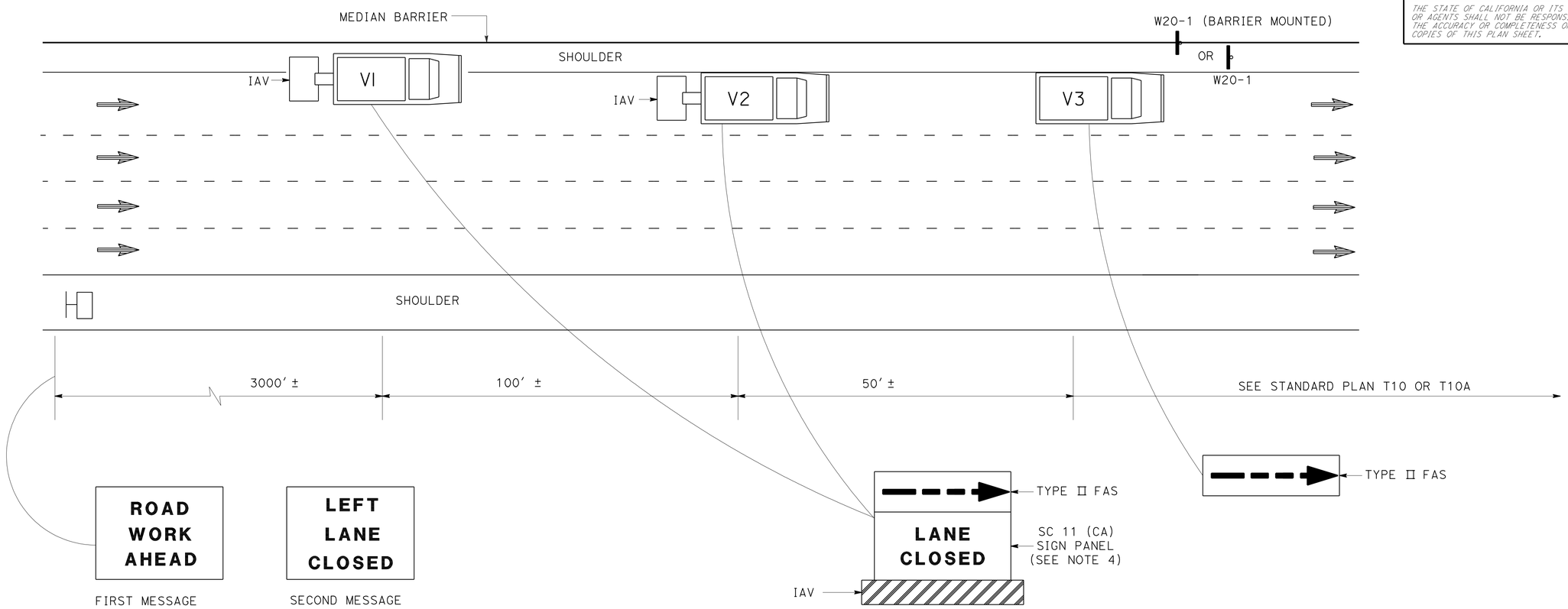

PCMS OR TRUCK MOUNTED CMS
(FOR PCMS, SEE NOTE 2)

NOTES:

1. LANE CLOSURES SHALL NOT BE PLACED ON CREST VERTICAL CURVES OR ON HORIZONTAL CURVES.
2. PCMS SHALL BE ACTIVATED PRIOR TO TRAFFIC CONTROL ACTIVITIES ON THE LANE.
3. A MINIMUM SIGHT DISTANCE OF 1500′ SHALL BE PROVIDED IN ADVANCE OF PCMS.
4. VEHICLE-MOUNTED SIGN PANELS SHALL BE TYPE III OR IV RETROREFLECTIVE SHEETING, BLACK ON WHITE OR BLACK ON ORANGE WITH 8" MINIMUM SERIES D LETTERS PER CALTRANS SIGN SPECIFICATIONS.

LEGEND

V1, V2	SHADOW VEHICLE
V3	WORK OR APPLICATION VEHICLE
	PORTABLE CHANGEABLE MESSAGE SIGN (PCMS)
	DIRECTION OF TRAVEL
	CONSTRUCTION AREA SIGN

ABBREVIATIONS

FAS	FLASHING ARROW SIGN
IAV	IMPACT ATTENUATOR VEHICLE
CMS	CHANGEABLE MESSAGE SIGN
PCMS	PORTABLE CHANGEABLE MESSAGE SIGN
(CA)	CALIFORNIA CODE

TRAFFIC HANDLING DETAILS
TRAFFIC CONTROL SYSTEM
FOR MEDIAN SHOULDERS LESS THAN 8 FEET

NO SCALE

THD-3

STATE OF CALIFORNIA - DEPARTMENT OF TRANSPORTATION
Caltrans DTM

FUNCTIONAL SUPERVISOR: JOHN YANG

CALCULATED-DESIGNED BY: ALBERT K YU
CHECKED BY: JOCELYN C CHIANG

REVISED BY: JC
DATE REVISED: 7/08

LAST REVISION 00-00-00
DATE PLOTTED => 10-DEC-2009
TIME PLOTTED => 07:40

Dist	COUNTY	ROUTE	POST MILES TOTAL PROJECT	SHEET No.	TOTAL SHEETS
07	LA,Ven	1,2,5,10, 57,60, *etc.*	Var	5	38

REGISTERED CIVIL ENGINEER DATE 11-12-08

PLANS APPROVAL DATE 11-30-09

REGISTERED PROFESSIONAL ENGINEER ALBERT K. YU No. C43220 Exp. 3-31-10 CIVIL STATE OF CALIFORNIA

THE STATE OF CALIFORNIA OR ITS OFFICERS OR AGENTS SHALL NOT BE RESPONSIBLE FOR THE ACCURACY OR COMPLETENESS OF ELECTRONIC COPIES OF THIS PLAN SHEET.

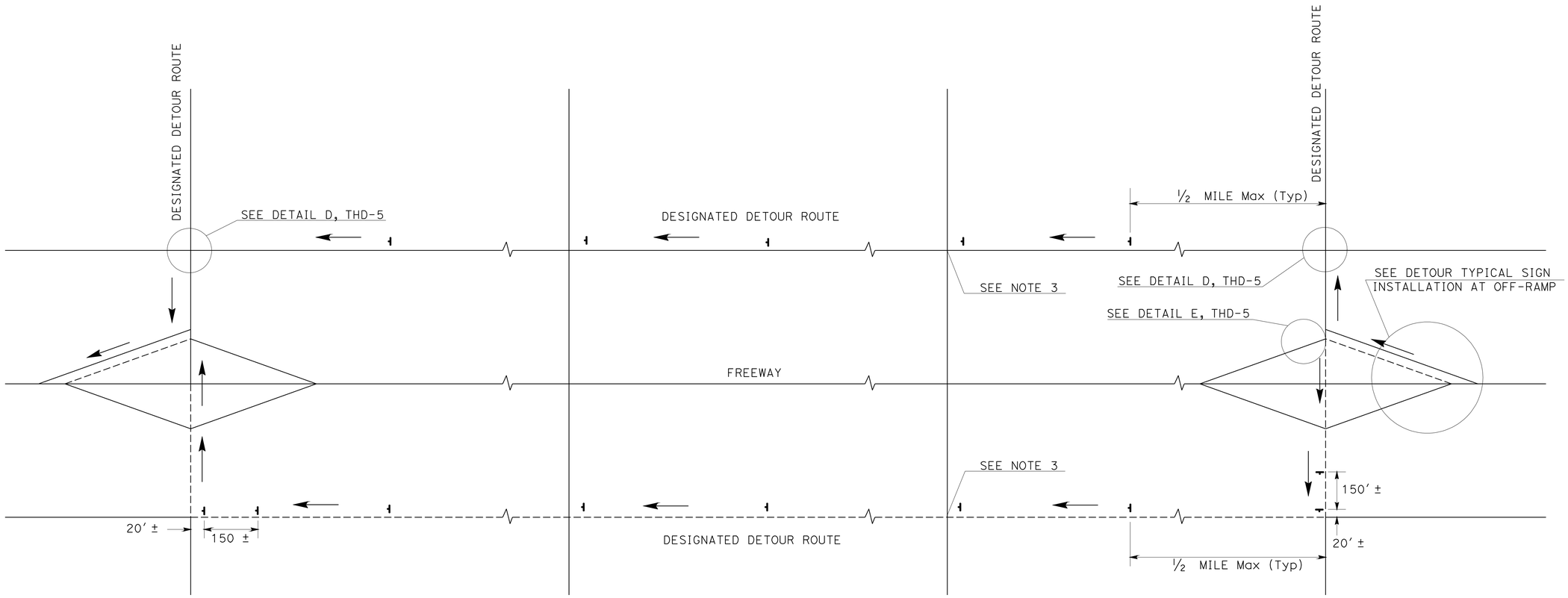

TYPICAL DETOUR SIGN INSTALLATION ALONG DESIGNATED DETOUR ROUTE

LEGEND

- SIGN SP-2
- OR — DESIGNATED DETOUR ROUTE
- DIRECTION OF TRAVEL

NOTES:

1. SP-2 SIGNS SHALL NOT BE INSTALLED ON BARRICADES EXCEPT AS OTHERWISE SHOWN.
2. SIGN LOCATIONS ARE APPROXIMATE. EXACT LOCATIONS WILL BE DETERMINED BY THE ENGINEER.
3. SP-2 SIGNS SHALL BE POSTED AT SIGNALIZED INTERSECTIONS ALONG THE DESIGNATED DETOUR ROUTE OR ½ MILE MAXIMUM APART.

TRAFFIC HANDLING DETAILS
TRAFFIC CONTROL SYSTEM FOR DETOUR SIGN INSTALLATION ALONG DESIGNATED DETOUR ROUTE

NO SCALE

THD-4

ALBERT K YU	JOCELYN C CHIANG	JC	JC
REVISED BY	DATE REVISED	4/07	7/08
CALCULATED-DESIGNED BY	CHECKED BY		
FUNCTIONAL SUPERVISOR	JOHN YANG		

STATE OF CALIFORNIA - DEPARTMENT OF TRANSPORTATION
Caltrans DTM

LAST REVISION 00-00-00 DATE PLOTTED => 10-DEC-2009 TIME PLOTTED => 07:40

Dist	COUNTY	ROUTE	POST MILES TOTAL PROJECT	SHEET No.	TOTAL SHEETS
07	LA,Ven	1,2,5,10, 57,60, *etc.*	Var	6	38

REGISTERED CIVIL ENGINEER DATE 11-12-08

PLANS APPROVAL DATE 11-30-09

REGISTERED PROFESSIONAL ENGINEER ALBERT K. YU No. C43220 Exp. 3-31-10 CIVIL STATE OF CALIFORNIA

THE STATE OF CALIFORNIA OR ITS OFFICERS OR AGENTS SHALL NOT BE RESPONSIBLE FOR THE ACCURACY OR COMPLETENESS OF ELECTRONIC COPIES OF THIS PLAN SHEET.

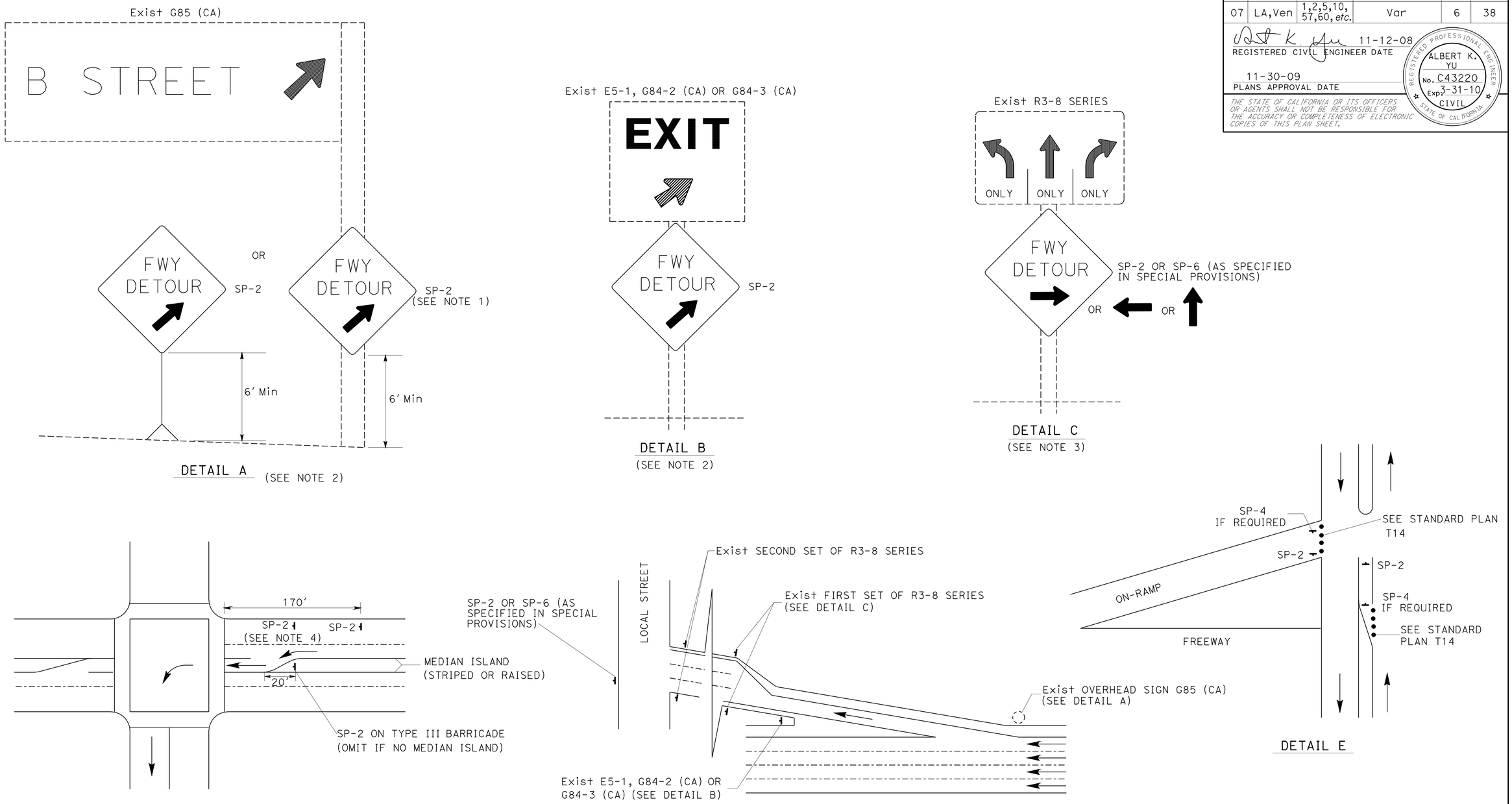

TYPICAL DETOUR SIGN INSTALLATION AT OFF-RAMP

NOTES:

1. SP-2 MAY BE STRAPPED ON EXISTING ELECTROLIER SIGNAL POSTS OR SIGN POSTS.
2. OMIT DETAIL A AND DETAIL B FOR FULL FREEWAY CLOSURES.
3. SEE TRAFFIC HANDLING DETAILS PLAN - TRAFFIC CONTROL SYSTEM FOR RAMP CLOSURES, DETOUR SIGNS AND MISCELLANEOUS DETAILS, SHEET THD-2, FOR SP-6.
4. OMIT IF MEDIAN ISLAND EXIST.

ABBREVIATIONS

(CA) CALIFORNIA CODE

LEGENDS

- CONE
- PORTABLE SIGN
- DIRECTION OF TRAVEL
- EXISTING OVERHEAD SIGN

TRAFFIC HANDLING DETAILS
TRAFFIC CONTROL SYSTEM FOR DETOUR SIGN INSTALLATION ALONG DESIGNATED DETOUR ROUTE

NO SCALE

THD-5

JC	7/08	
JC	1/08	
JC	4/07	
REVISED BY	DATE REVISED	
ALBERT K YU	JOCELYN C CHIANG	
CALCULATED-DESIGNED BY	CHECKED BY	
FUNCTIONAL SUPERVISOR	JOHN YANG	

STATE OF CALIFORNIA - DEPARTMENT OF TRANSPORTATION

Caltrans DTM

LAST REVISION 00-00-00 | DATE PLOTTED => 10-DEC-2009 TIME PLOTTED => 07:40

Dist	COUNTY	ROUTE	POST MILES TOTAL PROJECT	SHEET No.	TOTAL SHEETS
07	LA,Ven	1,2,5,10, 57,60, etc.	Var	7	38

REGISTERED ELECTRICAL ENGINEER 8/31/09 DATE

11-30-09
PLANS APPROVAL DATE

REGISTERED PROFESSIONAL ENGINEER PATRICK P. LUI No. E17534 Exp. 06/30/11 ELECTRICAL STATE OF CALIFORNIA

THE STATE OF CALIFORNIA OR ITS OFFICERS OR AGENTS SHALL NOT BE RESPONSIBLE FOR THE ACCURACY OR COMPLETENESS OF ELECTRONIC COPIES OF THIS PLAN SHEET.

LEGEND:

FIBER OPTIC CABLE

EQUIPMENT IDENTIFICATION

SG123
- POST MILE ACCURATE TO 1/10 MILE (WITHOUT DECIMAL)
- FREEWAY ROUTE

PROJECT NOTES: (FOR E-2 TO E-17)

1 SALVAGE CCTV CAMERA ASSEMBLY TO ELECTRICAL MAINTENANCE YARD

GENERAL NOTES: (FOR E-2 TO E-17)

1. BEFORE REMOVING OR MODIFYING ANY EXISTING ELECTRICAL FACILITIES, THE CONTRACTOR MUST PROVIDE 72-HOUR ADVANCE WRITTEN NOTICE TO ENGINEER.
2. EXISTING COMMUNICATION CABLES, WHERE SHOWN ON THE PLANS TO BE REMOVED, MUST BE REINSTALLED OR REPLACED AND SPLICED TO THE SAME ASSIGNED TWISTED PAIR OR FIBER NUMBER.
3. EXISTING UTILITY FACILITIES HAVE NOT BEEN PLOTTED ON THESE PLANS.

ABBREVIATIONS:

#	NUMBER
1SMFO	1 SINGLEMODE FIBER OPTIC CABLE
12SMFO	12 SINGLEMODE FIBER OPTIC CABLE
24SMFO	24 SINGLEMODE FIBER OPTIC CABLE
72SMFO	72 SINGLEMODE FIBER OPTIC CABLE
4WTO	4 WIRE TRANSMIT ONLY
6P22	6 PAIR 22 AWG, TWISTED PAIR CABLE
50P22	50 PAIR 22 AWG, TWISTED PAIR CABLE
AC	ALTERNATING ALERNATING CURRENT
BLK	BLACK
BLU	BLUE
BNC	BAYONET NAVY CONNECTOR
CAT-5e	TIA/EIA-568-B STANDARD
CCM	CAMERA CONTROL MODEM
CCR	CAMERA CONTROL RECEIVER
COAX	COAXIAL CABLE
CH	CHANNEL
CTX	CLEAR TO SEND
Dir	DIRECTION
EIA-232	ELECTRONICS INDUSTRIES ASSOCIATION STANDARD RS-232
EIA-422	ELECTRONICS INDUSTRIES ASSOCIATION STANDARD RS-422
DB-9	9 PIN D-SUBMINIATURE CONNECTOR
DB-25	25 PIN D-SUBMINIATURE CONNECTOR
DS-1	DIGITAL SIGNAL LEVEL 1
ELA	EAST LOS ANGELES HUB
FDU	FIBER DISTRIBUTION UNIT
F/O	FIBER OPTIC
FOCM	FIBER OPTIC CAMERA MODEM
FOTM	FIBER OPTIC TRAFFIC MODEM
GND	GROUND
ID	IDENTIFICATION NUMBER
LARTMC	LOS ANEGELES REGIONAL TRAFFIC MANAGEMENT CENTER
LAX	LOS ANGELES AIRPORT HUB
LCU	LOCAL CONTROL UNIT
LPP	LOCAL PATCH PANEL
MUX	MUTIPLEXER
NHD	NORTH HOLLYWOOD HUB
NWK	NORWALK HUB
ORN	ORANGE
PDA	POWER DISTRIBUTION ASSEMBLY
RG-6A/U	COAXIAL CABLE
RJ-45	8 PIN 8 CONDUCTOR CONNECTOR
RTS	REQUEST TO SEND
RX	RECEIVER
SGV	SAN GABRIEL VALLEY HUB
SMFO	SINGLEMODE FIBER OPTIC
TB	TERMINAL BLOCK
TX	TRANSMITTER
VR	VIDEO RECEIVER
V	VENTURA
WHT	WHITE

MODIFY CLOSED CIRCUIT TELEVISION CAMERA
(LEGEND, NOTES AND ABBREVIATIONS)

NO SCALE

E-1

PATRICK P. LUI — REVISED BY
JACQUELINE TAN — DATE REVISED
CALCULATED-DESIGNED BY
CHECKED BY
FUNCTIONAL SUPERVISOR
JACQUELINE TAN

STATE OF CALIFORNIA - DEPARTMENT OF TRANSPORTATION
Caltrans OFFICE OF ITS

LAST REVISION 00-00-00 DATE PLOTTED => 10-DEC-2009 TIME PLOTTED => 07:40

Dist	COUNTY	ROUTE	POST MILES TOTAL PROJECT	SHEET No.	TOTAL SHEETS
07	LA,Ven	1,2,5,10, 57,60, etc.	Var	8	38

REGISTERED ELECTRICAL ENGINEER 8/31/09 DATE

11-30-09
PLANS APPROVAL DATE

REGISTERED PROFESSIONAL ENGINEER PATRICK P. LUI No. E17534 Exp. 06/30/11 ELECTRICAL STATE OF CALIFORNIA

THE STATE OF CALIFORNIA OR ITS OFFICERS OR AGENTS SHALL NOT BE RESPONSIBLE FOR THE ACCURACY OR COMPLETENESS OF ELECTRONIC COPIES OF THIS PLAN SHEET.

LEGEND: (E-2 TO E-9)

A - INSTALL MULTIPLEXER
B - LCU TO REMAIN
C - SALVAGE CAMERA
D - INSTALL CAMERA CONTROL MODEM
E - CAMERA CONTROL MODEM TO REMAIN
F - EXISTING POLE MOUNTED
G - EXISTING OVERHEAD SIGN MOUNTED
H - EXISTING TOWER MOUNTED

LOCATIONS OF CONSTRUCTION

LOCATION NUMBER	CAMERA ID	ROUTE	Dir	POST MILE	DESCRIPTION OF LOCATION	SERVICE EQUIPMENT ENCLOSURE LOCATION	A	B	C	D	E	F	G	H
1	101	1	SB	35.20	McCLURE TUNNEL WEST	1400 1/2 PACIFIC COAST Hwy; # P721-010800				1		1		
2	582	2	SB	15.70	FLETCHER Dr OFF-RAMP	2660 1/2 FLETCHER Dr; ID 07-53-002-R-015.700				1			1	
3	585	2	NB	19.20	EAST OF GLENOAKS Blvd	1961 1/4 GLENOAKS Blvd; ID 07-53-002-R-019.181		1	1	1		1		
4	586	2	NB	23.20	Rte 210	1975 1/2 VERDUGO Blvd; ID 07-53-005-R-022.80		1	1	1		1		
5	567	5	SB	0.90	EAST OF VALLEY VIEW Ave	14580 1/2 FIRESTONE Blvd; ID 07-53-005-000.920				1			1	
6	571	5	SB	3.30	ROSECRANS Ave	12614 1/2 ROSECRANS Ave; ID 07-53-005-003.310				1		1		
7	572	5	SB	4.20	NORWALK Blvd	Rte 5 SB AT SAN ANTONIO ON-RAMP; ID 07-53-005-004.270				1		1		
8	573	5	SB	5.10	PIONEER Blvd	12505 PIONEER Blvd; ID 07-53-005-0-005.083				1		1		
9	574	5	SB	5.90	FLORENCE Ave	11438 CRESSON St; ID 07-53-005-0-005.260				1			1	
10	577	5	SB	8.30	LAKEWOOD Blvd	9150 LAKEWOOD Blvd; ID 07-53-005-0-008.298				1		1		
11	578	5	SB	8.90	PARAMOUNT Blvd	9002 PARAMOUNT Blvd; ID 07-53-005-0-008.910		1	1	1			1	
12	579	5	SB	9.30	NORTH OF PARAMOUNT Blvd	7802 BANGLE Rd; ID 07-53-005-0-009.200		1	1	1		1		
13	2	5	SB	10.10	SLAUSON Ave	7335 TELEGRAPH Rd; ID 07-53-005-0-010.101				1		1		
14	3	5	SB	11.00	GARFIELD Ave	GARFIELD Ave NORTH OF 26TH Ave; ID 07-53-005-0-010.780				1		1		
15	5	5	NB	12.00	NORTH OF WASHINGTON Blvd	5900 TELEGRAPH Rd; ID 07-53-005-0-012.100				1			1	
16	6	5	SB	12.70	ATLANTIC Ave	5500 TELEGRAPH Rd; ID 07-53-005-0-012.641				1		1		
17	7	5	NB	13.10	TRIGGS St	5102 TRIGGS St; ID 07-53-005-0-013.029				1			1	
18	8	5	SB	13.60	SOUTH OF Rte 710	4701 TRIGGS St; ID 07-53-005-0-013.581				1		1		
19	9	5	SB	13.90	EASTERN Ave	4447 UNION PACIFIC Ave; ID 07-53-005-0-013.915				1		1		
20	10	5	NB	14.30	DOWNEY Rd	1129 S DOWNEY Rd; ID 07-53-005-0-014.262				1		1		
21	11	5	SB	15.10	CALZONA St	1124 1/2 CALZONA St; ID 07-53-005-0-015.120				1			1	
22	12	5	NB	16.10	GRANDE VISTA Ave	3200 1/2 ATLANTIC St; ID 07-53-005-0-015.770				1			1	
23	14	5	SB	16.90	SB Rte 5 TO WB Rte 10 CONNECTOR	2300 1/2 7TH St; ID 07-53-005-R-017.042				1		1		
24	15	5	SB	17.22	FOURTH St	1820 1/4 5TH St; ID 07-53-005-R-017.653				1		1		
25	16	5	NB	17.97	CESAR E. CHAVEZ Ave	1190 1/2 E 1St St; ID 07-53-005-0-017.760				1			1	
26	17	5	NB	18.33	SOUTH OF Rte 10 INTERCHANGE	543 1/2 SAN BENITO St; ID 07-53-005-0-018.331				1		1		
27	18	5	NB	18.47	NORTH OF Rte 10 INTERCHANGE	543 1/2 SAN BENITO St; ID 07-53-005-0-018.331				1		1		
28	20	5	NB	19.34	DALY St	2131 1/2 DARWIN Ave; ID 07-53-005-0-019.300				1			1	
29	21	5	SB	19.59	SB MAIN St OFF-RAMP	315 1/2 Ave 21; ID 07-53-005-0-019.580				1		1		
30	22	5	NB	20.10	PASADENA Ave	2215 1/2 PASADENA Ave; ID 07-53-005-0-020.30				1		1		
31	23	5	NB	20.50	Rte 110 INTERCHANGE	5 Fwy SB AT Ave 26; ID 07-53-005-0-020.400				1		1		
32	24	5	SB	20.94	SB Rte 5 TO SB Rte 110 CONNECTOR	1002 1/2 RIVERSIDE Dr; ID 07-53-005.-0-020.790				1		1		
33	25	5	SB	21.34	MEADOWVALE Ave AND RIVERSIDE Dr	1425 1/2 RIVERSIDE Dr; ID 07-53-005.-0-021.390				1		1		
34	26	5	SB	22.36	SOUTH OF Rte 2	2650 1/2 BENEDICT St; ID 07-53-005-0-022.200				1		1		
35	27	5	NB	22.75	NORTH OF Rte 2	2600 1/2 RIVERSIDE Dr; ID 07-53-005-0-022.800				1		1		
						SUBTOTAL		4	4	35		25	10	

NOTES: (E-2 TO E-9)

1. REMOVE EXISTING CCTV CAMERA ASSEMBLY, COMPOSITE VIDEO CABLE, CAMERA CONTROL MODEM AND CCR AT LOCATIONS SHOWN, UNLESS OTHERWISE NOTED.
2. INSTALL CCTV CAMERA ASSEMBLY, COMPOSITE VIDEO CABLE, CAMERA CONTROL MODEM, EIA-232 TO EIA-422 CONVERTER AND LOCAL PATCH PANEL AT LOCATIONS SHOWN.
3. SEE E-14 TO E-17 FOR NEW EQUIPMENT INSTALLATION DETAILS.

THIS PLAN IS ACCURATE FOR ELECTRICAL WORK ONLY.

MODIFY CLOSED CIRCUIT TELEVISION CAMERA

E-2

REVISED BY | DATE REVISED
PATRICK P. LUI | JACQUELINE TAN
CALCULATED-DESIGNED BY | CHECKED BY
FUNCTIONAL SUPERVISOR: JACQUELINE TAN
STATE OF CALIFORNIA - DEPARTMENT OF TRANSPORTATION
Caltrans OFFICE OF ITS

LAST REVISION 00-00-00 DATE PLOTTED => 10-DEC-2009 TIME PLOTTED => 07:41

Dist	COUNTY	ROUTE	POST MILES TOTAL PROJECT	SHEET No.	TOTAL SHEETS
07	LA,Ven	1,2,5,10, 57,60, etc.	Var	9	38

REGISTERED ELECTRICAL ENGINEER 8/31/09 DATE

11-30-09
PLANS APPROVAL DATE

REGISTERED PROFESSIONAL ENGINEER PATRICK P. LUI No. E17534 Exp. 06/30/11 ELECTRICAL STATE OF CALIFORNIA

THE STATE OF CALIFORNIA OR ITS OFFICERS OR AGENTS SHALL NOT BE RESPONSIBLE FOR THE ACCURACY OR COMPLETENESS OF ELECTRONIC COPIES OF THIS PLAN SHEET.

LOCATIONS OF CONSTRUCTION

LOCATION NUMBER	CAMERA ID	ROUTE	Dir	POST MILE	DESCRIPTION OF LOCATION	SERVICE EQUIPMENT ENCLOSURE LOCATION	A	B	C	D	E	F	G	H
36	28	5	SB	23.71	GLENDALE Blvd AND HYPERION Ave	3000 1/2 RIVERSIDE Dr; ID 07-53-005-R-023.870				1		1		
37	29	5	SB	24.64	LOS FELIZ Blvd	1001 1/2 CRYSTAL SPRINGS Dr; ID 07-53-005-R0-024.531				1		1		
38	30	5	SB	25.77	SOUTH OF COLORADO St	4801 CRYSTAL SPRINGS Dr; ID 07-53-005-R-025.910				1		1		
39	31	5	NB	26.51	ZOO Dr	4700 3/4 ZOO Dr; ID 07-53-005-R-026.400				1		1		
40	55	5	SB	39.84	BRAND Ave	14550 1/2 CHATSWORTH Dr; ID 07-53-005-R-039.800				1		1		
41	59	5	SB	41.39	Rte 405 INTERCHANGE	12200 1/2 BLUCHER Ave; ID 07-53-005-R-041.661	1			1				1
42	61	5	SB	43.48	SOUTH OF Rte 210	13500 1/2 SAN FERNANDO Rd; ID 07-53-005-R-043.600				1		1		
43	62	5	SB	43.76	SB Rte 5 TO EB Rte 210	13500 1/2 SAN FERNANDO Rd; ID 07-53-005-R-045.600				1		1		
44	64	5	SB	45.68	SB Rte 5 TO NB Rte 14	11886 1/2 SIERRA Hwy; ID 07-53-005-R-045.600				1		1		
45	65	5	SB	46.23	NORTH OF Rte 14	22500 1/2 THE OLD Rd ; ID 07-53-005-R-046.405				1			1	
46	947	5	SB	82.00	QUAIL LAKE Rd	46901 1/2 PEACE VALLEY Rd; ID 07-53-005-0-081.775				1		1		
47	103	10	EB	2.34	LINCOLN Blvd	1012 1/2 E OLYMPIC Blvd; ID 07-53-010-R-002.028				1		1		
48	105	10	WB	3.50	EAST OF CLOVERFIELD Blvd	1840 1/2 24TH ST; ID 07-53-010-0-03.400		1	1	1			1	
49	106	10	EB	4.70	EAST OF BUNDY Dr	2467 1/2 BUNDY Dr; ID 07-53-010-R-004.701				1		1		
50	129	10	WB	18.10	CESAR E. CHAVEZ Ave	1060 1/2 MARY ST; ID 07-53-010-0-0018.398				1		1		
51	130	10	WB	18.50	WEST OF Rte 5	543 1/2 SAN BENITO ST; ID 07-53-005-R-018.331		1	1	1		1		
52	131	10	EB	18.90	WEST OF SOTO St	1031 1/2 N SOTO ST; ID 07-53-010-0-018.900				1		1		
53	132	10	WB	19.40	SOTO St	2683 1/2 MARENGO ST; ID 07-53-010-0-019.080				1		1		
54	133	10	EB	20.10	WEST OF CITY TERRACE Ave	3701 1/2 CITY TERACE Dr; ID 07-53-010-020.200				1		1		
55	134	10	WB	20.90	EASTERN Ave	1600 3/4 N. EASTERN Ave; ID 07-53-010-0-020.650				1		1		
56	426	10	WB	42.90	EAST OF Rte 57	2300 1/4 MURCHISON Ave; ID 07-53-010-0-043.201					1		1	
57	427	10	WB	43.60	FAIRPLEX Dr	1839 1/2 FAIRPLEX Dr; ID 07-53-010-R-043.665					1		1	
58	428	10	WB	44.20	WEST OF DUDLEY St	1504 1/2 GILLETTE Rd; ID 07-53-010-0-044.00					1	1		
59	429	10	EB	45.10	WEST OF WHITE Ave	1263 N WHITE Ave; ID 07-53-010-0-045.305					1		1	
60	430	10	EB	46.50	EAST OF TOWNE Ave	1750 1/2 N TOWNE Ave; ID 07-53-010-0-046.411					1		1	
61	431	10	WB	47.80	WEST OF INDIAN HILL Blvd	793 1/2 COLLEGE Ave; ID 07-53-010-0-047.780					1		1	
62	481	57	SB	1.90	DIAMOND BAR Blvd	Rte 57, DIAMOND BAR Blvd OFF-RAMP; ID 07-53-057-R-001.820					1	1		
63	482	57	SB	3.20	PATHFINDER Rd	Rte 57 SB, PATHFINDER Rd; ID 07-53-057-R-003.260					1	1		
64	485	57	SB	5.17	AT Rte 60	991 1/2 DIAMOND BAR Blvd; ID 07-53-057-R-005.600					1	1		
65	486	57	SB	5.40	NORTH OF SUNSET CROSSING Rd	991 1/2 DIAMOND BAR Blvd; ID 07-53-057-R-005.600					1	1		
66	487	57	NB	6.20	TEMPLE Ave	3099 1/2 TEMPLE Blvd; ID 07-53-057-0-006.172		1	1		1	1		
67	488	57	NB	8.80	VIA VERDE Ave	1 VIA VERDE Ave; ID 07-53-057-R-008.776					1	1		
68	489	57	SB	9.75	SAN DIMAS Ave	1297 1/2 SAN DIMAS Ave; ID 07-53-057-R-009.740 AND 1					1		1	
69	490	57	NB	10.60	ARROW Hwy	698 1/4 ARROW Hwy; ID 07-53-057-R-010.738					1		1	
70	491	57	SB	11.60	GLADSTONE St	GLADSTONE St, SE QUADRANT; ID 07-53-0557-R-011.153				1		1		
						SUBTOTAL	1	3	3	21	14	25	9	1

MODIFY CLOSED CIRCUIT TELEVISION CAMERA

THIS PLAN IS ACCURATE FOR ELECTRICAL WORK ONLY.

E-3

STATE OF CALIFORNIA - DEPARTMENT OF TRANSPORTATION
Caltrans OFFICE OF ITS

FUNCTIONAL SUPERVISOR: JACQUELINE TAN
CALCULATED-DESIGNED BY: PATRICK P. LUI
CHECKED BY: JACQUELINE TAN
REVISED BY
DATE REVISED

LAST REVISION 00-00-00 DATE PLOTTED => 10-DEC-2009 TIME PLOTTED => 07:41

Dist	COUNTY	ROUTE	POST MILES TOTAL PROJECT	SHEET No.	TOTAL SHEETS
07	LA,Ven	1,2,5,10, 57,60, etc.	Var	10	38

REGISTERED ELECTRICAL ENGINEER 8/31/09 DATE

11-30-09
PLANS APPROVAL DATE

REGISTERED PROFESSIONAL ENGINEER PATRICK P. LUI No. E17534 Exp. 06/30/11 ELECTRICAL STATE OF CALIFORNIA

THE STATE OF CALIFORNIA OR ITS OFFICERS OR AGENTS SHALL NOT BE RESPONSIBLE FOR THE ACCURACY OR COMPLETENESS OF ELECTRONIC COPIES OF THIS PLAN SHEET.

LOCATIONS OF CONSTRUCTION

LOCATION NUMBER	CAMERA ID	ROUTE	Dir	POST MILE	DESCRIPTION OF LOCATION	SERVICE EQUIPMENT ENCLOSURE LOCATION	A	B	C	D	E	F	G	H
71	140	60	EB	1.92	4TH St AND INDIANA St	451 1/2 INDIAN St; ID 07-53-060-R-001.901				1		1		
72	141	60	EB	2.40	GAGE St WEST OF DOWNEY Rd	424 1/2 RECORD Ave; ID 07-53-060-R-002.471				1		1		
73	142	60	WB	3.12	EASTERN Ave WEST OFF Rte 710	1 GLEASON St AND EASTERN Ave; ID 07-53-060-R-003.070				1		1		
74	143	60	WB	4.24	ATLANTIC Blvd AND WOODS Ave	5321 FERNFIELD Dr; ID 07-53-060-R-004.410				1		1		
75	145	60	EB	5.75	EAST OF GARFIELD Ave	2890 VIA CAMPO; ID 07-53-060-R-005.890				1		1		
76	146	60	EB	6.84	GREENWOOD Ave	2100 VIA CAMPO; ID 07-53-060-R-006.300				1		1		
77	147	60	EB	7.74	PARAMOUNT Blvd	1501 1/2 PARAMOUNT Blvd; ID 07-53-060-R-007.650				1		1		
78	148	60	WB	8.78	EAST OF SAN GABRIEL Blvd	1004 1/2 MUSCATEL Ave; ID 07-53-060-R-008.770				1			1	
79	149	60	EB	9.44	ROSEMEAD Blvd	100 N ROSEMEAD Blvd; ID 07-53-060-R-009.000				1		1		
80	150	60	WB	9.97	WEST OF SANTA ANITA Ave	SANTA ANITA Ave AND FAWCETT; ID 07-53-060-R-010.490				1		1		
81	151	60	WB	11.12	PECK Rd	1401 PECK Rd; ID 07-53-060-R-010.951				1		1		
82	386	90	WB	1.20	EAST OF MINDANAO WAY	13200 1/2 W MINDANAO Way; ID 07-53-090-0-001.288				1		1		
83	388	90	WB	1.80	EAST OF CENTINELA Ave	5310 1/2 S CENTINELA Ave; ID 07-53-090-0-001.726				1		1		
84	387	90	WB	1.90	CULVER Blvd OFF-RAMP	12910 1/2 CULVER Blvd; ID 07-53-090-0-001.765				1		1		
85	389	90	WB	2.50	WEST OF Rte 405	5445 1/2 SLAUSON Ave; ID 07-53-090-0-002.489				1		1		
86	390	90	EB	2.90	EB SEPULVEDA ON-RAMP	5801 1/2 SEPULVEDA Blvd; ID 07-53-090-0-003.006				1		1		
87	251	91	EB	6.72	BROADWAY	17420 1/2 S BROADWAY; ID 07-53-091-R-006.750				1		1		
88	252	91	WB	7.63	EAST OF AVALON Blvd	935 1/2 ARTESIA Blvd; ID 07-53-091-R-007.843				1			1	
89	253	91	WB	8.30	WEST OF CENTRAL Ave	1100 1/2 ALBERTONI St; ID 07-53-091-R-008.109				1		1		
90	255	91	WB	10.16	ALAMEDA St	17801 1/2 S ALAMEDA St; ID 07-53-091-R-010.288				1		1		
91	256	91	EB	11.20	LONG BEACH Blvd	215 1/2 NEECE St; ID 07-53-091-R-011.260				1		1		
92	257	91	WB	12.42	EAST OF ATLANTIC Blvd	1048 1/2 E PENFOLD St; ID 07-53-091-R-012.408				1			1	
93	258	91	EB	13.30	PARAMOUNT Blvd	6699 1/2 PARAMOUNT Blvd; ID 07-53-091-R-013.603		1	1	1		1		
94	536	91	WB	14.96	WEST OF CLARK Ave	9219 1/2 PALM St; ID 07-53-091-R-014.087				1			1	
95	537	91	SB	15.96	EAST OF BIXBY Ave	9853 1/2 BEVERLY St; ID 07-53-091-R-015.727				1		1		
96	538	91	WB	16.82	WEST OF Rte 605	10805 1/2 ARTESIA Blvd; ID 07-53-091-R-016.890				1		1		
97	539	91	WB	18.15	PIONEER Blvd	16950 PIONEER Blvd; ID 07-53-091-R-018.140				1		1		
98	540	91	WB	19.58	EAST OF ARTESIA Blvd	12800 1/2 ARTESIA Blvd; ID 07-53-091-R-019.500				1		1		
99	541	91	EB	20.43	CARMENITA Ave	18600 3/4 CARMENITA Ave; ID 07-53-091-R-020.750				1		1		
100	155	101	SB	0.10	WHITTIER Blvd	660 1/2 S CLARENCE St; ID 07-53-101-S-000.618				1		1		
101	594	101	SB	0.40	VIGNES St	Rte 101 NR VIGNES St; ID 07-53-101-0-000.434				1			1	
102	156	101	SB	0.60	FOURTH St	1704 1/2 E FOURTH St; ID 07-53-101-S-000.601				1		1		
103	157	101	SB	1.00	FIRST St	1701 1/2 LAS VEGAS St; ID 07-53-101-S-000.907				1			1	
104	595	101	NB	1.70	NORTH OF Rte 110	500 1/2 CLUSTER Ave; ID 07-53-101-0-001.719				1		1		
105	596	101	NB	2.10	EDGEWARE Rd	1312 1/2 BELLEVUE Ave; ID 07-53-101-0-002.680				1		1		
						SUBTOTAL		1	1	35		29	6	

THIS PLAN IS ACCURATE FOR ELECTRICAL WORK ONLY.

MODIFY CLOSED CIRCUIT TELEVISION CAMERA

E-4

REVISED BY | DATE REVISED

PATRICK P. LUI | JACQUELINE TAN

CALCULATED-DESIGNED BY | CHECKED BY

FUNCTIONAL SUPERVISOR: JACQUELINE TAN

STATE OF CALIFORNIA - DEPARTMENT OF TRANSPORTATION
Caltrans OFFICE OF ITS

LAST REVISION: DATE PLOTTED => 10-DEC-2009
00-00-00 TIME PLOTTED => 07:41

Dist	COUNTY	ROUTE	POST MILES TOTAL PROJECT	SHEET No.	TOTAL SHEETS
07	LA,Ven	1,2,5,10, 57,60, etc.	Var	11	38

RECISTERED ELECTRICAL ENGINEER 8/31/09 DATE

11-30-09
PLANS APPROVAL DATE

REGISTERED PROFESSIONAL ENGINEER PATRICK P. LUI No. E17534 Exp. 06/30/11 ELECTRICAL STATE OF CALIFORNIA

THE STATE OF CALIFORNIA OR ITS OFFICERS OR AGENTS SHALL NOT BE RESPONSIBLE FOR THE ACCURACY OR COMPLETENESS OF ELECTRONIC COPIES OF THIS PLAN SHEET.

LOCATIONS OF CONSTRUCTION

LOCATION NUMBER	CAMERA ID	ROUTE	Dir	POST MILE	DESCRIPTION OF LOCATION	SERVICE EQUIPMENT ENCLOSURE LOCATION	A	B	C	D	E	F	G	H
106	597	101	NB	2.70	BONNIE BREA St	555 1/2 BONNIE BRAE St;ID 07-53-101-0-002.714				1		1		
107	598	101	NB	3.40	BENTON WAY	2737 1/2 LONDON St; ID 07-53-101-0-003.361				1		1		
108	599	101	SB	4.10	HOOVER St	320 3/4 COMMONWEALTH Ave; ID 07-53-101-0-003.921				1			1	
109	600	101	NB	4.30	VERMONT Ave	3731 OAKWOOD Ave; ID 07-53-101-0-004.535				1		1		
110	602	101	SB	4.80	SOUTH OF MELROSE Ave	650 1/2 N. MARIPOSA Ave; ID 07-53-101-0-004.855				1		1		
111	603	101	SB	4.90	MELROSE Ave	650 1/2 N. MARIPOSA Ave; ID 07-53-101-0-004.855				1		1		
112	604	101	SB	5.20	WEST OF NORMANDIE Ave	4915 1/2 LEMON GROVE Ave; ID 07-53-101-0-005.171				1			1	
113	605	101	NB	5.50	SANTA MONICA Blvd	1052 1/2 SERRANO Ave; ID 07-53-101-0-005.400				1		1		
114	606	101	SB	6.00	WESTERN Ave	12641 1/2 ANDREWS St; ID 07-53-101-0-005.940				1		1		
115	607	101	NB	6.40	HOLLYWOOD Blvd	1548 1/2 CANYON Dr; ID 07-53-101-0-006.300				1		1		
116	608	101	NB	6.80	GOWER St	6127 1/2 YUCCA St; ID 07-53-101-0-007.000				1		1		
117	609	101	SB	7.30	VINE St	1900 1/2 N VINE St; ID 07-53-101-0-007.200				1		1		
118	611	101	NB	8.10	PILGRIMAGE BRIDGE	2670 1/2 CAHUENGA Blvd; ID 07-53-101-0-008.100				1		1		
119	613	101	NB	8.30	SOUTH OF MULHOLLAND Dr	2670 1/2 CAHUENGA Blvd; ID 07-53-101-0-008.100				1			1	
120	614	101	SB	9.00	BARHAM Blvd	3246 1/2 CAHUENGA Blvd; ID 07-53-101-0-009.290				1		1		
121	615	101	SB	9.50	UNIVERSAL CENTER Dr	3300 1/2 CAHUENGA Blvd; ID 07-53-101-0-009.500				1			1	
122	616	101	SB	10.60	LANKERSHIM Blvd	10731 1/2 VENTURA Blvd; ID 07-53-101-0-010.360				1		1		
123	617	101	NB	11.00	VINELAND Ave	4201 1/2 VINELAND Ave; ID 07-53-101-0-011.160				1		1		
124	618	101	SB	11.40	MOORPARK St	11210 MOORPARK St; ID 07-53-101-0-011.400				1			1	
125	619	101	NB	11.80	Rte 170 AND TUJUNGA Ave	4632 1/2 TUJUNGA Ave; ID 07-53-101-0-011.800				1			1	
126	621	101	SB	12.90	LAUREL CANYON Blvd	4625 1/2 LAUREL CANYON Blvd; ID 07-53-101-0-012.800				1		1		
127	623	101	NB	13.80	COLDWATER CANYON Blvd	12952 1/2 RIVERSIDE Dr; ID 07-53-101-0-013.982				1		1		
128	624	101	SB	14.70	WOODMAN Ave	4701 1/2 WOODMAN Ave; ID 07-53-101-0-014.781				1			1	
129	625	101	SB	15.70	HAZELTINE Ave	4600 1/2 TYRONE Ave; ID 07-53-101-0-015.803				1			1	
130	626	101	NB	16.10	VAN NUYS Blvd	4638 1/2 TILDEN Ave; ID 07-53-101-0-015.804				1		1		
131	627	101	SB	16.90	SEPULVEDA Blvd	14951 1/2 LA MAIDA St; ID 07-53-101-0-016.800				1		1		
132	629	101	NB	17.60	HASKELL Ave	5220 HASKELL Ave; ID 07-53-101-0-017.630					1	1		
133	630	101	SB	18.60	HAYVENHURST Ave	4132 1/2 HAYVENHURST Ave; ID 07-53-101-R-018.600					1	1		
134	631	101	NB	19.30	BALBOA Blvd	16946 1/2 BURBANK Blvd; ID 07-53-101-0-019.332					1	1		
135	632	101	NB	20.30	WHITE OAK Ave	5544 1/2 YARMOUTH Ave; ID 07-53-101-R-020.320					1		1	
136	633	101	NB	21.30	RESEDA Blvd	5627 1/2 RESEDA Blvd; ID 07-53-101-R-021.297					1		1	
137	634	101	NB	22.30	TAMPA Ave	5600 1/2 CALVIN Ave; ID 07-53-101-0-022.433					1	1		
138	635	101	NB	23.20	WINNETKA Ave	20066 1/2 MARTHA St; ID 07-53-101-0-023.350					1	1		
139	636	101	NB	24.30	DE SOTO Ave	5400 1/2 DE SOTO Ave; ID 07-53-101-R-024.320					1	1		
140	637	101	SB	25.30	TOPANGA CANYON Blvd	22015 1/2 BURBANK Blvd; ID 07-53-101-0-025.300					1	1		
						SUBTOTAL				26	9	25	10	

MODIFY CLOSED CIRCUIT TELEVISION CAMERA

THIS PLAN IS ACCURATE FOR ELECTRICAL WORK ONLY.

E-5

STATE OF CALIFORNIA - DEPARTMENT OF TRANSPORTATION
Caltrans OFFICE OF ITS

FUNCTIONAL SUPERVISOR: JACQUELINE TAN
CALCULATED-DESIGNED BY: PATRICK P. LUI
CHECKED BY: JACQUELINE TAN
REVISED BY
DATE REVISED

LAST REVISION 00-00-00 DATE PLOTTED => 10-DEC-2009 TIME PLOTTED => 07:41

Dist	COUNTY	ROUTE	POST MILES TOTAL PROJECT	SHEET No.	TOTAL SHEETS
07	LA,Ven	1,2,5,10, 57,60, etc.	Var	12	38

REGISTERED ELECTRICAL ENGINEER 8/31/09 DATE

11-30-09
PLANS APPROVAL DATE

REGISTERED PROFESSIONAL ENGINEER PATRICK P. LUI No. E17534 Exp. 06/30/11 ELECTRICAL STATE OF CALIFORNIA

THE STATE OF CALIFORNIA OR ITS OFFICERS OR AGENTS SHALL NOT BE RESPONSIBLE FOR THE ACCURACY OR COMPLETENESS OF ELECTRONIC COPIES OF THIS PLAN SHEET.

LOCATIONS OF CONSTRUCTION

LOCATION NUMBER	CAMERA ID	ROUTE	Dir	POST MILE	DESCRIPTION OF LOCATION	SERVICE EQUIPMENT ENCLOSURE LOCATION	A	B	C	D	E	F	G	H
141	301	105	WB	0.70	SEPULVEDA Blvd	11300 1/2 S SEPULVEDA Blvd; ID 07-53-105-R-000.501				1				1
142	302	105	WB	1.40	DOUGLAS St AND WEST OF AVIATION Blvd	5621 1/2 IMPERIAL Hwy; ID 070-53-105-R-001.360				1			1	
143	305	105	EB	3.90	118TH St	EAST OF DOTY Ave; ID 07-53-105-R-003.906				1		1		
144	308	105	WB	5.70	WESTERN Ave	11741 S MANHATTAN PLACE; ID 07-53-105-R-005.700				1		1		
145	309	105	WB	6.70	VERMONT Ave ON-RAMP	11511 S NEW HAMPSHIRE Ave; ID 07-53-105-R-006.900				1		1		
146	310	105	WB	8.10	MAIN St, JUST EAST OF Rte 110	296 1/2 E 116TH PLACE; ID 07-53-105-R-008.039				1			1	
147	311	105	EB	8.6	CENTRAL Ave OFF-RAMP	11610 1/2 STANFORD Ave; ID 07-53-105-R-008.460				1			1	
148	313	105	EB	11.35	LONG BEACH Blvd OFF-RAMP	11440 PEACH St; ID 07-53-105-R-011.550				1			1	
149	315	105	WB	12.90	ATLANTIC Ave	FERNWOOD Ave AND ATLANTIC Ave; ID 07-53-105-0-012.880				1			1	
150	316	105	EB	14.10	GARFIELD Ave, JUST WEST OF Rte 710	SE CORNER OF FRONT Rd; ID 07-53-105-R.014.137				1		1		
151	319	105	EB	16.80	BELLFLOWER Blvd ON-RAMP	13009 BELLFLOWER Blvd; ID 07-53-105-R-016.639				1		1		
152	320	105	EB	17.70	AT Rte 605	10533 ANGELL St; ID 07-53-105-R017.593				1		1		
153	341	110	SB	8.30	SOUTH OF Rte 405	19800 1/2 HAMILTON Ave; ID 07-53-110-0-008.347				1		1		
154	396	110	SB	9.60	190TH St	1887 1/2 S HOOVER St; ID 07-53-405-0-009.400B		1	1	1		1		
155	165	110	SB	11.10	SOUTH OF REDONDO BEACH Blvd	631 1/2 REDONDO BEACH Blvd; ID 07-53-110-0-011.250A					1	1		
156	166	110	SB	11.90	SOUTH OF ROSECRANS Ave	700 1/2 W ROSECRANS Ave; ID 07-53-110-0-011.613					1	1		
157	167	110	SB	12.90	SOUTH OF EL SEGUNDO Blvd	598 1/2 W EL SEGUNDO Blvd; ID 07-53-110-0-012.850					1	1		
158	168	110	SB	13.70	117TH St	11705 1/2 ATHENS WAY; ID 07-53-110-0-013.722					1	1		
159	171	110	SB	16.10	NORTH OF MANCHESTER Blvd	8455 1/2 SOUTH FLOWER St; ID 07-53-110-0-016.140					1		1	
160	173	110	NB	17.40	SOUTH OF GAGE Ave	352 1/2 S GRAND Ave; ID 07-53-110-0-017.513				1			1	
161	177	110	SB	19.50	MLK Blvd	442 1/2 W MLK JR Blvd; ID 07-53-110-0-019.680				1			1	
162	178	110	SB	20.10	EXPOSITION Blvd	3500 1/2 S HOPE St; ID 07-53-110-0-020.050				1			1	
163	180	110	NB	20.70	ADAMS Blvd AND FLOWER St	443 1/2 ADAMS Blvd; ID 07-53-110-0-020.607				1		1		
164	183	110	NB	21.40	NB Rte 110 TO WB Rte 10	1824 CHERRY St; ID 07-53-110-R-021.591				1		1		
165	184	110	SB	22.00	11TH St	1121 1/2 BLAINE St; ID 07-53-110-0-022.010				1		1		
166	185	110	NB	22.60	7TH St	1005 1/2 W 7TH St; ID 07-53-110-0-022.627				1		1		
167	186	110	NB	22.70	WILSHIRE Blvd	985 1/2 WILSHIRE Blvd; ID 07-53-100-0-022.697				1		1		
168	187	110	NB	22.80	5TH St	999 1/2 W 5TH St; ID 07-53-110-0-022.789				1		1		
169	191	110	NB	24.30	HILL St	510 1/2 BERNARD St; ID 07-53-110-0-024.372				1		1		
170	193	110	SB	25.20	JUST NORTH OF PARK ROW BRIDGE	613 1/2 ACADEMY Rd; ID 07-53-110-0-025.090		1	1	1		1		
171	194	110	NB	25.30	BETWEEN 3RD AND 4TH TUNNELS	1561 1/2 N BROADWAY; ID 07-53-110-0-025.301		1	1	1		1		
172	195	110	SB	25.79	Rte 5 INTERCHANGE	2197 N. FIGUEROA St; ID 07-53-110-0-025.774		1	1	1		1		
173	196	110	SB	26.01	AVENUE 26 OFF-RAMP	3252 1/2 ARROYO SECO Ave; ID 07-53-110-0-026.102		1	1	1		1		
174	687	118	EB	1.90	TOPANGA CANYON	11452 1/2 TOPANGA CANYON Blvd; ID 07-53-118-R-001.498				1		1		
175	688	118	WB	2.70	DE SOTO Ave	11100 1/2 DE SOTO Ave; ID 07-53-118-R-002.750				1		1		
						SUBTOTAL		5	5	30	5	25	9	1

MODIFY CLOSED CIRCUIT TELEVISION CAMERA

THIS PLAN IS ACCURATE FOR ELECTRICAL WORK ONLY.

E-6

REVISED BY | DATE REVISED
PATRICK P. LUI | JACQUELINE TAN
CALCULATED-DESIGNED BY | CHECKED BY
FUNCTIONAL SUPERVISOR: JACQUELINE TAN
STATE OF CALIFORNIA - DEPARTMENT OF TRANSPORTATION
Caltrans OFFICE OF ITS

LAST REVISION 00-00-00 DATE PLOTTED => 10-DEC-2009 TIME PLOTTED => 07:41

Dist	COUNTY	ROUTE	POST MILES TOTAL PROJECT	SHEET No.	TOTAL SHEETS
07	LA,Ven	1,2,5,10, 57,60, etc.	Var	13	38

REGISTERED ELECTRICAL ENGINEER 8/31/09 DATE

11-30-09
PLANS APPROVAL DATE

REGISTERED PROFESSIONAL ENGINEER PATRICK P. LUI No. E17534 Exp. 06/30/11 ELECTRICAL STATE OF CALIFORNIA

THE STATE OF CALIFORNIA OR ITS OFFICERS OR AGENTS SHALL NOT BE RESPONSIBLE FOR THE ACCURACY OR COMPLETENESS OF ELECTRONIC COPIES OF THIS PLAN SHEET.

LOCATIONS OF CONSTRUCTION

LOCATION NUMBER	CAMERA ID	ROUTE	Dir	POST MILE	DESCRIPTION OF LOCATION	SERVICE EQUIPMENT ENCLOSURE LOCATION	A	B	C	D	E	F	G	H
176	689	118	NB	4.60	TAMPA Ave	11201 1/2 TAMPA Ave; ID 07-53-118-R-004.585				1		1		
177	690	118	EB	5.80	RESEDA Blvd	11201 1/2 RESEDA Blvd; ID 07-53-118-0-005.890A				1		1		
178	691	118	WB	8.40	HAYVENHURST Ave	11249 1/12 MONOGRAM Ave; ID 07-53-118-R-008.340				1		1		
179	54	118	WB	11.50	Rte 5 INTERCHANGE	14300 1/2 W KINGSBURY St; ID 07-53-118-0-011.342				1		1		
180	693	118	WB	13.80	Rte 118 AND Rte 210 INTERCHANGE	12594 1/2 FOOTHILL Blvd; ID 07-53-118-0-014.100				1		1		
181	648	134	EB	0.38	VINELAND Ave, EAST OF Rte 170	4550 1/2 VINELAND Ave; ID 07-530-134-0-000.380				1		1		
182	649	134	EB	0.90	CAHUENGA Blvd	4506 AUCKLAND Ave; ID 07-53-134-R-001.100		1	1	1		1		
183	650	134	WB	1.60	BETWEEN PASS Ave AND CLYBOURNE Ave	4500 1/3 CLYBOURNE Ave; ID 07-53-134-1-001.540				1		1		
184	652	134	WB	2.10	HOLLYWOOD WAY AND ALAMEDA Ave	3755 1/3 ALAMEDA Ave; ID 07-53-134-R-002.070				1		1		
185	653	134	EB	3.06	BUENA VISTA St	2470 1/3 RIVERSIDE Dr; ID 07-53-134-R-002.953		1	1	1		1		
186	654	134	EB	3.68	WEST OF FOREST LAWN Dr	5697 1/2 FOREST LAWN Dr; ID 07-53-134R-003.740				1			1	
187	656	134	WB	4.68	WEST OF VICTORY Blvd	5201 1/2 ZOO Dr; ID 07-53-134R-004.440				1		1		
188	657	134	WB	5.44	EAST OF Rte 5	200 1/2 ZOO Dr; ID 07-53-005-R-026.500				1		1		
189	659	134	WB	6.18	EAST OF SAN FERNANDO Rd	830 1/4 FAIRMONT Ave; ID 07-53-134-R-006.175				1		1		
190	660	134	WB	6.81	EAST OF PACIFIC Ave	705 1/4 N PACIFIC Ave; ID 07-53-134-R-006.574				1		1		
191	661	134	WB	7.31	EAST OF BRAND Blvd	237 1/4 MARYLAND PLACE; ID 07-53-134-R-007.280				1		1		
192	662	134	WB	7.88	GLENDALE Ave	876 1/4 MONTEREY RD; ID 07-53-134-R-007.842				1		1		
193	664	134	WB	9.19	EAST OF Rte 2	2715 1/2 LAS FLORES Dr; ID 07-53-134-R-009.073				1		1		
194	665	134	EB	11.68	FIGUEROA St	7600 1/2 FIGUEROA PLACE; ID 07-53-134-R-011.500				1		1		
195	667	134	WB	12.50	SAN RAFAEL Ave	25 1/2 N SAN RAFAEL Ave; ID 07-53-134-R-012.355				1		1		
196	668	134	EB	13.37	ORANGE GROVE Blvd	271 1/2 WALNUT St; ID 07-53-134-R-013-263				1		1		
197	647	170	SB	14.80	SB Rte 170 TO EB Rte 134	4632 1/2 TUJUNGA Ave; ID 07-53-170-R-014.729				1		1		
198	97	170	NB	16.50	OXNARD St	11938 1/2 OXNARD St; ID 07-53-170-R016.585				1		1		
199	98	170	SB	19.90	NORTH OF ROSCOE Blvd	12702 1/2 ROSCOE Blvd; ID -07-53-170-0-019.723				1		1		
200	448	210	EB	25.70	MARENGO Ave	265 E CORSON St; ID 07-53-210-R-025.653				1		1		
201	449	210	EB	26.30	LAKE Ave	304 N LAKE Ave; ID 07-53-210-R-026.410				1		1		
202	451	210	WB	27.70	EAST OF ALLEN Ave	1930 1/2 MAPLE St; ID 07-53-210-R-027.550		1	1	1		1		
203	452	210	WB	28.20	WEST OF ALTADENA Dr	2499 1/2 ALTADENA Dr; ID 07-53-210-R-027.791				1		1		
204	453	210	EB	28.70	SIERRA MADRE Blvd	2810 LA TIERRA St; ID 07-53-210-R-027.666				1			1	
205	454	210	EB	29.70	MICHILLINDA Ave	3840 1/2 WALNUT St; ID 07-53-210-R-030.054				1		1		
206	456	210	WB	30.60	BALDWIN Ave	FOOTHILL Ave AT BALWIN Ave; ID 07-53-210-R-031.041				1		1		
207	457	210	WB	32.00	SANTA ANITA Ave	613 1/2 FIRST Ave; ID 07-53-210-R-052.057				1		1		
208	458	210	WB	32.80	NORTH OF HUNTINGTON Dr	704 HUNTINGTON Dr; ID 07-53-210-R-032.74				1			1	
209	459	210	WB	33.90	MYRTLE Ave	123 1/2 CENTRAL Ave; ID 07-53-210-R-033.750				1		1		
210	460	210	WB	34.90	MOUNTAIN Ave	1202 CENTRAL Ave; ID 07-53-210-R-035.043				1		1		
						SUBTOTAL		3	3	35		32	3	

MODIFY CLOSED CIRCUIT TELEVISION CAMERA

THIS PLAN IS ACCURATE FOR ELECTRICAL WORK ONLY.

E-7

REVISED BY | DATE REVISED

PATRICK P. LUI | JACQUELINE TAN

CALCULATED-DESIGNED BY | CHECKED BY

FUNCTIONAL SUPERVISOR: JACQUELINE TAN

STATE OF CALIFORNIA - DEPARTMENT OF TRANSPORTATION
Caltrans OFFICE OF ITS

LAST REVISION 00-00-00 DATE PLOTTED => 10-DEC-2009 TIME PLOTTED => 07:42

Dist	COUNTY	ROUTE	POST MILES TOTAL PROJECT	SHEET No.	TOTAL SHEETS
07	LA,Ven	1,2,5,10, 57,60, etc.	Var	14	38

REGISTERED ELECTRICAL ENGINEER 8/31/09 DATE

11-30-09
PLANS APPROVAL DATE

REGISTERED PROFESSIONAL ENGINEER PATRICK P. LUI No. E17534 Exp. 06/30/11 ELECTRICAL STATE OF CALIFORNIA

THE STATE OF CALIFORNIA OR ITS OFFICERS OR AGENTS SHALL NOT BE RESPONSIBLE FOR THE ACCURACY OR COMPLETENESS OF ELECTRONIC COPIES OF THIS PLAN SHEET.

LOCATIONS OF CONSTRUCTION

LOCATION NUMBER	CAMERA ID	ROUTE	Dir	POST MILE	DESCRIPTION OF LOCATION	SERVICE EQUIPMENT ENCLOSURE LOCATION	A	B	C	D	E	F	G	H
211	461	210	WB	36.40	MOUNT OLIVE Dr	2305 1/2 E CENTRAL Ave; ID 07-53-605-R-025.973	1			1		1		
212	475	210	EB	47.42	EAST OF WHEELER Ave	3984 1/2 BIXBY Dr; ID 07-53-210-R-047.428		1	1		1	1		
213	476	210	EB	48.20	FRUIT St	4372 FRUIT Ave; ID 07-53-210-R-048.220		1	1		1	1		
214	477	210	EB	49.68	TOWNE Ave	4274 1/2 TOWNE Ave; ID 07-53-210-R-049.637		1	1		1	1		
215	478	210	EB	50.40	INDIAN HILL Blvd	1957 1/2 INDIAN HILL Blvd; ID 07-53-210-R050.464		1	1		1	1		
216	479	210	EB	51.50	WEST OF MONTE VISTA Ave	1951 1/2 MILLS Ave; ID 07-53-210-R-051.212		1	1		1	1		
217	480	210	WB	52.00	BASE LINE Rd	1301 1/2 BASELINE Rd; ID 07-53-210-R-051.980		1	1		1	1		
218	323	405	SB	0.10	Rte 405 AND Rte 605	6920 1/2 ATHERTON St; ID 07-53-405-0-000.270				1		1		
219	324	405	NB	1.00	PALO VERDE Ave	2220 PALO VERDE Ave; ID 07-53-405-0-001.137				1		1		
220	325	405	SB	2.40	BELLFLOWER Blvd	5490 1/2 E WILLOW St; ID 07-53-405-0-002.810				1		1		
221	327	405	NB	3.40	LAKEWOOD Blvd	2626 1/2 GRAND Ave; ID 07-53-405-0-003.623				1		1		
222	328	405	NB	4.70	CHERRY Ave	3245 1/2 CHERRY Ave; ID 07-53-405-0-004.880				1		1		
223	329	405	SB	5.50	ORANGE Ave	3051 1/2 ORANGE Ave; ID 07-53-405-0-005.390				1		1		
224	330	405	SB	6.10	ATLANTIC Ave	3100 1/2 ATLANTIC Ave; ID 07-53-405-0-006.082				1		1		
225	332	405	NB	7.40	WEST OF PACIFIC PLACE	3550 1/2 N PACIFIC PLACE; ID 07-53-405-0-007.384				1		1		
226	334	405	SB	8.60	EAST OF ALAMEDA St	22010 1/2 SALMON Ave; ID 07-53-405-0-008.622				1			1	
227	335	405	SB	9.50	WILMINGTON Ave	22101 1/2 WILMINGTON Ave; ID 07-53-405-R-009.055				1		1		
228	336	405	SB	10.50	CARSON St	1002 E CARSON St; ID 07-53-405-0-010.539				1		1		
229	337	405	NB	11.10	213TH St	901 1/2 213TH St; ID 07-53-405-0-010.901				1			1	
230	339	405	NB	11.60	NORTH OF AVALON Blvd	21126 1/2 AVALON Blvd; ID 07-53-405-0-011.18	1	1	1	1		1		
231	340	405	SB	12.50	MAIN St	19700 1/2 MAIN St; ID 07-53-405-R-012.600				1		1		
232	343	405	NB	13.20	WEST OF Rte 110	18701 1/2 HAMILTON Ave; ID 07-53-405-0-013.255				1			1	
233	344	405	NB	13.80	NORMANDIE Ave	18702 1/2 S NORMANDIE Ave; ID 07-53-405-0-013.701				1		1		
234	345	405	SB	14.50	WESTERN Ave	1789 1/2 190TH St; ID 07-53-405-0-014.514				1		1		
235	346	405	SB	15.90	CRENSHAW Blvd	1840 1/2 CRENSHAW Blvd; ID 07-53-405-0-015.601				1		1		
236	348	405	NB	16.60	ARTESIA Blvd	3825 1/2 ARTESIA Blvd; ID 07-53-405-0-016.602				1		1		
237	349	405	SB	17.70	HAWTHORNE Blvd	15300 1/2 HAWTHORNE Blvd; ID 07-53-405-0-017.626				1		1		
238	351	405	SB	19.70	135TH St	5178 1/2 135TH St; ID 07-53-405-0-019.710				1			1	
239	352	405	NB	20.70	120TH St	12201 1/2 TAHOE Ave; ID 07-53-405-0-020.616				1		1		
240	354	405	NB	21.40	SOUTH OF LENNOX Blvd	405 Fwy AT IMPERIAL Hwy; ID 07-53-405-R-021.059				1		1		
241	355	405	NB	22.40	NORTH OF CENTURY Blvd	CENTURY Blvd AT REDFERN Ave; ID 07-53-405-0-022.231				1		1		
242	356	405	SB	23.30	MANCHESTER Blvd	636 1/2 OLIVE Ave; ID 07-53-405-0-023.345				1		1		
243	358	405	NB	23.80	WEST OF LA CIENEGA Blvd	711 1/2 VESTA St; ID 07-53-405-0-023.895				1		1		
244	360	405	SB	25.10	HOWARD HUGHES PARKWAY	6001 1/2 HOWARD HUGHES PARKWAY; ID 07-53-405-0-025.001				1		1		
245	361	405	SB	25.50	SEPULVEDA Blvd AND CENTINELA Ave	6400 1/2 SEPULVEDA Blvd; ID 07-53-405-0-024.459				1		1		
						SUBTOTAL	2	7	7	29	6	31	4	

THIS PLAN IS ACCURATE FOR ELECTRICAL WORK ONLY.

MODIFY CLOSED CIRCUIT TELEVISION CAMERA

E-8

REVISED BY | DATE REVISED
PATRICK P. LUI | JACQUELINE TAN
CALCULATED-DESIGNED BY | CHECKED BY
FUNCTIONAL SUPERVISOR: JACQUELINE TAN
STATE OF CALIFORNIA - DEPARTMENT OF TRANSPORTATION
Caltrans OFFICE OF ITS

LAST REVISION 00-00-00 DATE PLOTTED => 10-DEC-2009 TIME PLOTTED => 07:42

Dist	COUNTY	ROUTE	POST MILES TOTAL PROJECT	SHEET No.	TOTAL SHEETS
07	LA,Ven	1,2,5,10, 57,60, etc.	Var	15	38

REGISTERED ELECTRICAL ENGINEER 8/31/09 DATE

11-30-09
PLANS APPROVAL DATE

REGISTERED PROFESSIONAL ENGINEER PATRICK P. LUI No. E17534 Exp. 06/30/11 ELECTRICAL STATE OF CALIFORNIA

THE STATE OF CALIFORNIA OR ITS OFFICERS OR AGENTS SHALL NOT BE RESPONSIBLE FOR THE ACCURACY OR COMPLETENESS OF ELECTRONIC COPIES OF THIS PLAN SHEET.

LOCATIONS OF CONSTRUCTION

LOCATION NUMBER	CAMERA ID	ROUTE	Dir	POST MILE	DESCRIPTION OF LOCATION	SERVICE EQUIPMENT ENCLOSURE LOCATION	A	B	C	D	E	F	G	H
246	362	405	SB	26.70	SOUTH OF BRADDOCK Dr	5025 1/4 BERRYMAN Ave; ID 07-53-405-0-026.600				1		1		
247	363	405	NB	27.80	VENICE Blvd	3905 1/2 S SEPULVEDA Blvd; ID 07-53-405-0-027.793				1		1		
248	364	405	SB	28.50	SOUTH OF PALMS Ave	11265 1/2 PALMS Blvd; ID 07-53-405-0-028.600				1		1		
249	675	405	SB	39.10	VENTURA Blvd	15438 1/2 VENTURA Blvd; ID 07-53-405-0-039.049	1			1		1		
250	676	405	SB	39.80	NORTH OF Rte 101	15402 BURBANK Blvd; ID 07-53-405-0-39.931				1			1	
251	677	405	NB	40.70	NORTH OF BURBANK Blvd	15390 1/2 OXNARD St; ID 07-53-405-0-040.760				1		1		
252	679	405	SB	42.00	NORTH OF VANOWEN ST	692 1/2 HASKELL Ave; ID 07-53-405-0-042.037				1		1		
253	682	405	NB	44.50	SOUTH OF NORDHOFF St	15612 1/2 RAYEN St; ID 07-53-405-0-044.407				1			1	
254	683	405	SB	45.60	SOUTH OF LASSEN St	15637 1/2 SUPERIOR St; ID 07-53-405-0-044.582				1		1		
255	684	405	SB	46.80	SOUTH OF Rte 118	15707 1/2 CHATSWORTH St; ID 07-53-118-0-009.501				1			1	
256	502	605	NB	0.30	SPRING St	7820 E SPRING St; ID 07-53-605-R-000.283				1		1		
257	503	605	NB	1.10	WARDLOW Rd	22334 1/2 PIONEER Blvd; ID 07-53-605-R-001.300				1		1		
258	504	605	WB	1.70	CARSON St OFF-RAMP	4000 1/2 PIONEER Blvd; ID 07-53-605-R-001.600				1		1		
259	505	605	SB	2.80	DEL AMO Blvd ON-RAMP	11740 DEL AMO Blvd; ID 07-53-605-R-002.880	1			1		1		
260	507	605	NB	3.80	SOUTH St ON-RAMP	11275 SOUTH St; ID 07-53-605-R-003.758				1		1		
261	508	605	NB	4.93	ARTESIA Blvd	16450 PIUMA Ave; ID 07-53-605-R-005.310				1		1		
262	510	605	NB	6.00	ALONDRA Blvd ON-RAMP	15607 DUMONT Ave; ID 07-53-605-R-005.790				1		1		
263	511	605	NB	6.80	ROSECRANS Ave	10805 ROSECRANS Ave; ID 07-53-605-R-006.751				1		1		
264	513	605	SB	7.80	AT Rte 105	10636 IMPERIAL Hwy; ID 07-53-605-R-007.860				1		1		
265	514	605	SB	8.60	NORTH OF FIRESTONE Blvd	FRONTAGE BETWEEN KENNY St and PLUTON St; ID 70-53-605-r-008.650				1		1		
266	515	605	SB	9.60	NORWALK HUB Rte 605 AND Rte 5	9991 FLORENCE Ave; ID 07-53-605-R-009.350				1		1		
267	517	605	NB	11.40	SLAUSON Ave	10900 1/2 MERSIN PLACE; ID 07-53-605-R-011.090				1			1	
268	518	605	SB	12.40	WASHINGTON Blvd	10604 E SARAGOSA St; ID 07-53-605-R-012.373				1		1		
269	519	605	NB	13.40	WHITTIER Blvd OFF-RAMP	10305 E WHITTIER Blvd; ID 07-53-605-R-013.500				1		1		
270	520	605	NB	14.80	NORTH OF BEVERLY Blvd	4800 PIONEER Blvd; ID 07-53-605-R-014.891				1		1		
271	521	605	SB	15.50	ROSE HILLS Rd	3455 SAN GABRIEL RIVER PARKWAY; ID 07-53-605-R-015.491				1		1		
272	522	605	NB	16.80	PECK Rd	2605 PELLISSIER PLACE; ID 07-53-605-R-016.704				1			1	
273	437	605	SB	17.90	SAN JOSE CREEK	1509 S WORKMAN MILL Rd; ID 07-53-605-R-017.800				1		1		
274	438	605	NB	19.30	VALLEY Blvd	ARILLO St AND SAN FIDEL St; ID 07-53-605-R-019.402				1			1	
275	439	605	SB	20.30	Rte 10 AND Rte 60 HUB	3117 PATRITTI Ave; ID 07-53-605-R-020.400				1		1		
276	440	605	SB	22.10	LOWER AZUSA Rd	12901 1/2 LOWER AZUSA Rd; ID 07-53-605-R-022.180				1		1		
277	441	605	SB	24.00	ARROW Hwy	1235 E ARROW Hwy; ID 07-53-605-R-023.965				1		1		
278	442	605	NB	25.50	SOUTH OF Rte 210	1722 FLOWER Ave; ID 07-53-605-R-025.591				1			1	
279	943	101V	NB	24.60	VICTORIA Ave	2301 1/2 VICTORIA PLACE; ID 07-52-101-0-024.500				1		1		
280	944	101V	SB	30.12	CALIFORNIA St	400 1/2 HARBOR Blvd; ID 07-52-101-0-030.070				1		1		
						SUBTOTAL	2			35		28	7	
						TOTAL (SHEETS E-2 TO E-9)	5	23	23	246	34	220	58	2

THIS PLAN IS ACCURATE FOR ELECTRICAL WORK ONLY.

MODIFY CLOSED CIRCUIT TELEVISION CAMERA

E-9

REVISED BY | DATE REVISED

PATRICK P. LUI | JACQUELINE TAN

CALCULATED-DESIGNED BY | CHECKED BY

FUNCTIONAL SUPERVISOR: JACQUELINE TAN

STATE OF CALIFORNIA - DEPARTMENT OF TRANSPORTATION
Caltrans OFFICE OF ITS

LAST REVISION DATE PLOTTED => 10-DEC-2009
00-00-00 TIME PLOTTED => 07:42

Dist	COUNTY	ROUTE	POST MILES TOTAL PROJECT	SHEET No.	TOTAL SHEETS
07	LA,Ven	1,2,5,10, 57,60, etc.	Var	16	38

REGISTERED ELECTRICAL ENGINEER 8/31/09 DATE

11-30-09
PLANS APPROVAL DATE

REGISTERED PROFESSIONAL ENGINEER PATRICK P. LUI No. E17534 Exp. 06/30/11 ELECTRICAL STATE OF CALIFORNIA

THE STATE OF CALIFORNIA OR ITS OFFICERS OR AGENTS SHALL NOT BE RESPONSIBLE FOR THE ACCURACY OR COMPLETENESS OF ELECTRONIC COPIES OF THIS PLAN SHEET.

LOCATIONS OF CONSTRUCTION (DATA NODES)

LOCATION NUMBER	ROUTE	Dir	POST MILE	DESCRIPTION OF LOCATION	DATA NODE ID
1	1	SB	35.2	McCLURE TUNNEL	SM352
2	2	NB	22.8	WEST OF VERDUGO Blvd	GL031
3	5	NB	16.8	ELA HUB	GS168
4	5	NB	18.5	Rte 5 AND Rte 10 INTERCHANGE	GS185
5	5	SB	39.3	Rte 5 AND Rte 118 INTERCHANGE	GS393
6	5	SB	41.4	Rte 5 AND Rte 405 INTERCHANGE	GS414
7	10	WB	47.8	INDIAN HILL Blvd	SB478
8	57	NB	42.5	Rte 10 AND Rte 57 INTERCHANGE	SB425
9	57	SB	3.2	PATHFINDER Rd	OR032
10	57	NB	6.2	TEMPLE Ave	OR062
11	60	EB	1.9	INDIANA St	PO019
12	60	WB	4.2	WEST OF WOODS Ave	PO042
13	60	WB	11.1	PECK Rd	PO111
14	90	WB	2.5	Rte 90 AND Rte 405	MA025
15	91	EB	6.7	BROADWAY	RB067
16	91	EB	11.2	LONG BEACH Blvd	RB112
17	91	EB	15.6	BELLFLOWER Blvd	AR160
18	101	NB	1.7	Rte 101 AND Rte 110 INTERCHANGE	HO017
19	101	SB	7.3	VINE St	HO073
20	101	NB	11.8	NORTH HOLLYWOOD HUB	VE118
21	101	SB	16.9	SEPULVEDA Blvd	VE169
22	101	NB	21.3	RESEDA Blvd	VE213
23	105	WB	4.9	CRENSHAW Blvd	GA049-1
24	105	WB	4.9	CRENSHAW Blvd	GA049-2
25	105	WB	13.0	ATLANTIC Ave	GA130-1
26	105	WB	13.0	ATLANTIC Ave	GA130-2
27	110	SB	17.9	SLAUSON Ave	HA179
28	110	NB	22.6	SOUTH OF 7TH St	HA226
29	110	SB	25.9	Rte 110 AND Rte 5 INTERCHANGE	GS185
30	110	SB	26.0	CYPRESS Ave AND 26TH Ave	PA260
31	118	EB	1.1	IVERSON Rd	SV011
32	118	EB	4.6	TAMPA Ave	SV046
33	118	WB	8.4	HAYVENHURST Ave	SV084
34	118	WB	12.3	SAN FERNANDO Rd	SV123
35	134	EB	0.0	NORTH HOLLYWOOD HUB	VE000
				SUBTOTAL	35

NOTES: (SEE SHEET E-10 TO E-11)

1. SEE SPECIAL PROVISION FOR TESTING DETAILS.
2. SEE SHEET E-18 FOR DETAILS.

THIS PLAN IS ACCURATE FOR ELECTRICAL WORK ONLY.

WORK AT EXISTING DATA NODES
(LOCATIONS OF DATA NODES)

E-10

STATE OF CALIFORNIA - DEPARTMENT OF TRANSPORTATION
Caltrans OFFICE OF ITS

FUNCTIONAL SUPERVISOR: JACQUELINE TAN
CALCULATED-DESIGNED BY: PATRICK P. LUI
CHECKED BY: JACQUELINE TAN
REVISED BY
DATE REVISED

LAST REVISION 00-00-00 DATE PLOTTED => 10-DEC-2009 TIME PLOTTED => 07:42

Dist	COUNTY	ROUTE	POST MILES TOTAL PROJECT	SHEET No.	TOTAL SHEETS
07	LA,Ven	1,2,5,10, 57,60, *etc.*	Var	17	38

REGISTERED ELECTRICAL ENGINEER 8/31/09 DATE

11-30-09
PLANS APPROVAL DATE

REGISTERED PROFESSIONAL ENGINEER PATRICK P. LUI No. E17534 Exp. 06/30/11 ELECTRICAL STATE OF CALIFORNIA

THE STATE OF CALIFORNIA OR ITS OFFICERS OR AGENTS SHALL NOT BE RESPONSIBLE FOR THE ACCURACY OR COMPLETENESS OF ELECTRONIC COPIES OF THIS PLAN SHEET.

LOCATIONS OF CONSTRUCTION (DATA NODES)

LOCATION NUMBER	ROUTE	Dir	POST MILE	DESCRIPTION OF LOCATION	DATA NODE ID
36	134	NB	2.1	HOLLYWOOD WAY AND ALAMEDA St	VE034
37	134	WB	6.0	SAN FERNANDO Rd	VE097
38	134	WB	9.2	Rte 134 AND Rte 2 INTERCHANGE	VE148
39	134	EB	13.5	ORANGE GROVE Ave	VE218
40	170	NB	20.3	Rte 170 AND Rte 5 INTERCHANGE	HO203
41	210	WB	27.5	ALLEN Ave	FT443
42	210	NB	31.3	BALDWIN Ave	FT503
43	210	WB	35.4	BUENA VISTA St AND MOUNT OLIVE Dr	FT570
44	210	EB	5.3	WEST OF TOWNE Ave	FT052
45	405	SB	0.1	Rte 405 AND Rte 605	SD001
46	405	NB	3.4	LAKEWOOD Ave	SD034
47	405	NB	7.4	NORTH OF PACIFIC PLACE	SD074
48	405	NB	11.1	213TH St	SD111
49	405	NB	11.6	AVALON Blvd	SD116
50	405	NB	21.3	LOS ANGELES AIRPORT HUB	SD213
51	405	NB	25.1	HOWARD HUGHES PARKWAY	SD251
52	405	SB	30.1	OLYMPIC Blvd AND PICO Blvd	SD301
53	405	SB	39.1	VENTURA Blvd	SD391
54	405	SB	46.8	NORTH OF Rte 118	SD468
55	605	SB	2.8	DEL AMO Blvd	SG028
56	605	SB	9.6	NORWALK HUB	SG096
57	605	SB	15.6	ROSE HILLS Rd	SG156
58	605	SB	20.2	SAN GABRIEL VALLEY HUB	SG202
59	605	SB	24.0	ARROW Hwy	SG240
				SUBTOTAL	24
				TOTAL (SHEETS E-10 TO E-11)	59

THIS PLAN IS ACCURATE FOR ELECTRICAL WORK ONLY.

WORK AT EXISTING DATA NODES
(LOCATIONS OF DATA NODES)

E-11

REVISED BY | DATE REVISED
PATRICK P. LUI | JACQUELINE TAN
CALCULATED-DESIGNED BY | CHECKED BY
FUNCTIONAL SUPERVISOR
JACQUELINE TAN
STATE OF CALIFORNIA - DEPARTMENT OF TRANSPORTATION
Caltrans OFFICE OF ITS

LAST REVISION DATE PLOTTED => 10-DEC-2009
00-00-00 TIME PLOTTED => 07:43

Dist	COUNTY	ROUTE	POST MILES TOTAL PROJECT	SHEET No.	TOTAL SHEETS
07	LA,Ven	1,2,5,10, 57,60, etc.	Var	18	38

REGISTERED ELECTRICAL ENGINEER 8/31/09 DATE

11-30-09
PLANS APPROVAL DATE

REGISTERED PROFESSIONAL ENGINEER PATRICK P. LUI No. E17534 Exp. 06/30/11 ELECTRICAL STATE OF CALIFORNIA

THE STATE OF CALIFORNIA OR ITS OFFICERS OR AGENTS SHALL NOT BE RESPONSIBLE FOR THE ACCURACY OR COMPLETENESS OF ELECTRONIC COPIES OF THIS PLAN SHEET.

LOCATIONS OF CONSTRUCTION (VIDEO NODES)

LOCATION NUMBER	ROUTE	Dir	POST MILE	DESCRIPTION OF LOCATION	VIDEO NODE ID	VIDEO MUTILPLEXER
1	5	NB	41.4	Rte 5 AND Rte 405 INTERCHANGE	GS414	1
2	210	NB	36.6	MOUNT OLIVE Dr	FT590	1
3	405	NB	11.6	NORTH OF AVALON Blvd	SD116	1
4	405	NB	39.1	VENTURA Blvd	SD391	1
5	605	NB	1.7	DEL AMO Blvd	GS028	1
					TOTAL QUANTITIES	5

NOTES:

1. REMOVE EXISTING MULTIPLEXER.
2. INSTALL MULTIPLEXER.
3. SEE E-19 FOR NEW EQUIPMENT INSTALLATION DETAILS.

THIS PLAN IS ACCURATE FOR ELECTRICAL WORK ONLY.

WORK AT EXISTING VIDEO NODES
(LOCATIONS OF VIDEO NODES)

E-12

STATE OF CALIFORNIA - DEPARTMENT OF TRANSPORTATION
Caltrans OFFICE OF ITS

FUNCTIONAL SUPERVISOR: JACQUELINE TAN
CALCULATED-DESIGNED BY: PATRICK P. LUI
CHECKED BY: JACQUELINE TAN
REVISED BY
DATE REVISED

LAST REVISION DATE PLOTTED => 10-DEC-2009
00-00-00 TIME PLOTTED => 07:43

Dist	COUNTY	ROUTE	POST MILES TOTAL PROJECT	SHEET No.	TOTAL SHEETS
07	LA,Ven	1,2,5,10, 57,60, etc.	Var	19	38

REGISTERED ELECTRICAL ENGINEER 8/31/09 DATE

11-30-09
PLANS APPROVAL DATE

REGISTERED PROFESSIONAL ENGINEER PATRICK P. LUI No. E17534 Exp. 06/30/11 ELECTRICAL STATE OF CALIFORNIA

THE STATE OF CALIFORNIA OR ITS OFFICERS OR AGENTS SHALL NOT BE RESPONSIBLE FOR THE ACCURACY OR COMPLETENESS OF ELECTRONIC COPIES OF THIS PLAN SHEET.

LOCATIONS OF CONSTRUCTION (HUBS AND LARTMC)

LOCATION NUMBER	ROUTE	POST MILE	DESCRIPTION OF LOCATION	NEW DEMULTIPLEXER
1	5	16.9	ELA - EAST LOS ANGELES	1
2	605	20.2	SGV - SAN GABRIEL VALLEY	1
3	5	6.8	NWK - NORWALK	1
4	101	11.8	NHD - NORTH HOLLYWOOD	1
5	405	21.3	LAX - LOS ANGELES AIRPORT	1
6	2	18.7	LARTMC - LOS ANGELES REGIONAL TRAFFIC MANAGEMENT CENTER	
			TOTAL QUANTITIES:	5

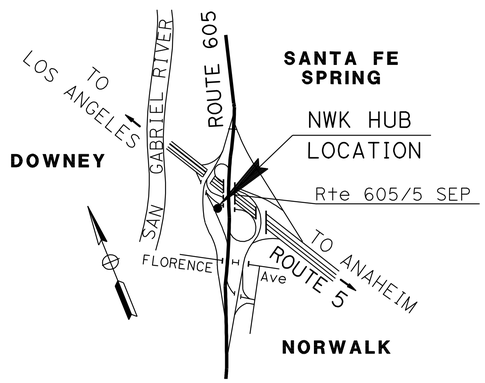

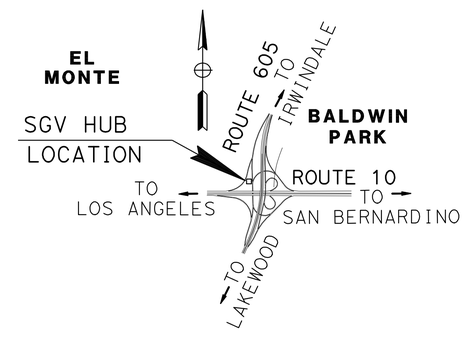

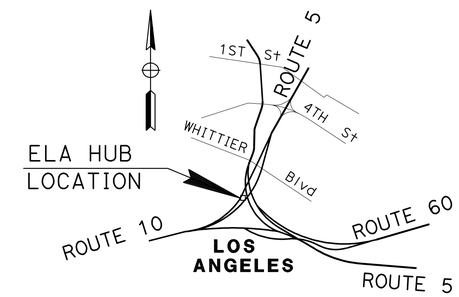

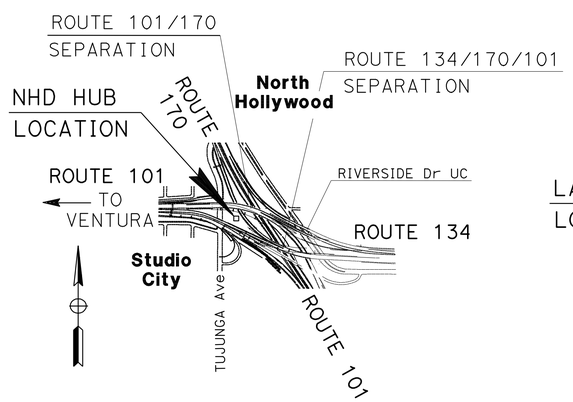

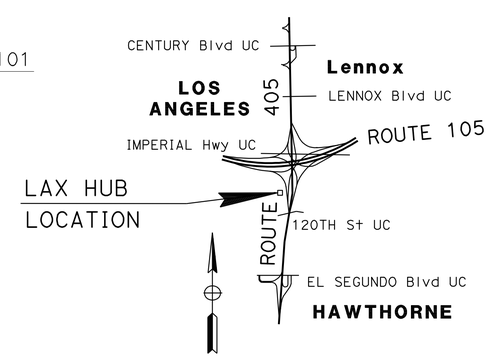

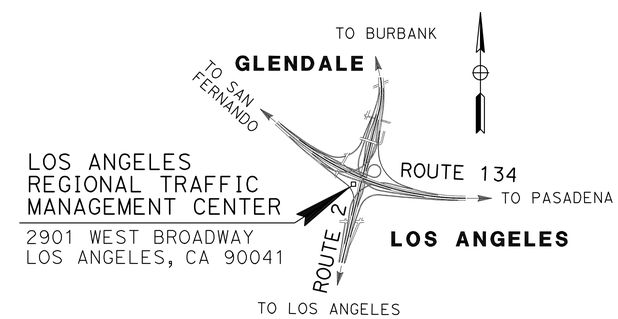

NOTES: (SEE SHEETS E-20 TO E-21)

1. INSTALL D4 CHANNEL BANK, AUDIO PATCH PANELS, MODEM RACK, RACK MOUNTED CAMERA CONTROL MODEMS AND SERIAL SERVER.
2. REMOVE AND SALVAGE VIDEO DEMULTIPLEXER.
3. SEE E-20 TO E-21 FOR NEW EQUIPMENT INSTALLATION DETAILS.

THIS PLAN IS ACCURATE FOR ELECTRICAL WORK ONLY.

WORK AT EXISTING HUBS AND LOS ANGELES REGIONAL TRAFFIC MANAGEMENT CENTER

(LOCATIONS OF HUBS AND LOS ANGELES REGIONAL TRAFFIC MANAGEMENT CENTER)

NO SCALE

E-13

REVISED BY | DATE REVISED
PATRICK P. LUI | JACQUELINE TAN
CALCULATED-DESIGNED BY | CHECKED BY
FUNCTIONAL SUPERVISOR: JACQUELINE TAN

STATE OF CALIFORNIA - DEPARTMENT OF TRANSPORTATION
Caltrans OFFICE OF ITS

LAST REVISION 00-00-00 DATE PLOTTED => 10-DEC-2009 TIME PLOTTED => 07:43

Dist	COUNTY	ROUTE	POST MILES TOTAL PROJECT	SHEET No.	TOTAL SHEETS
07	LA,Ven	1,2,5,10, 57,60, etc.	Var	20	38

REGISTERED ELECTRICAL ENGINEER 8/31/09 DATE

11-30-09
PLANS APPROVAL DATE

REGISTERED PROFESSIONAL ENGINEER PATRICK P. LUI No. E17534 Exp. 06/30/11 ELECTRICAL STATE OF CALIFORNIA

THE STATE OF CALIFORNIA OR ITS OFFICERS OR AGENTS SHALL NOT BE RESPONSIBLE FOR THE ACCURACY OR COMPLETENESS OF ELECTRONIC COPIES OF THIS PLAN SHEET.

NOTES: (WIRING DIAGRAM)

1. CONTRACTOR TO PROVIDE CABLE LENGTH FROM THE CAMERA ASSEMBLY TO THE LOCAL PATCH PANEL INCLUDING CONNECTORS AS SHOWN IN THIS SHEET.
2. THE CONTRACTOR SHALL PROVIDE ALL CABLES FROM THE LOCAL PATCH PANEL TO THE FIBER OPTIC VIDEO TRANSMITTER, CAMERA CONTROL MODEM AND PDA.
3. ALL CABLES SHALL BE ALUMINUM SHIELDED TO PREVENT CROSS TALK.
4. IN THE CCTV CAMERA CONTROLLER CABINET, THE NUMBER INDENTIFIES THE SPECIFIC CONDUCTOR TO BE USED FOR THE INDICATED FUNCTION.
5. CONNECT ALL DRAIN WIRES OF SHIELDED-CONDUCTORS TO CABINET GROUND AT THE LOCAL PATCH PANEL.
6. INSTALL CONNECTORS IN ACCORDANCE WITH THE MANUFACTURER'S INSTRUCTIONS.
7. WATERPROOF ALL CONNECTORS AND CABLES USING WATER-TIGHT GROMMETS, SEALING COMPOUNDS AND TAPE.
8. AS REQUIRED, CONTRACTOR SHALL INSTALL ADAPTER MOUNTING PLATES TO MOUNT CCTV CAMERA ON EXISTING POLE, TRUSS MOUNT OR TOWER.
9. AS REQUIRED, CONTRACTOR SHALL INSTALL LOCAL PATCH PANEL ACCORDING TO EXISTING CONFIGURATIONS.

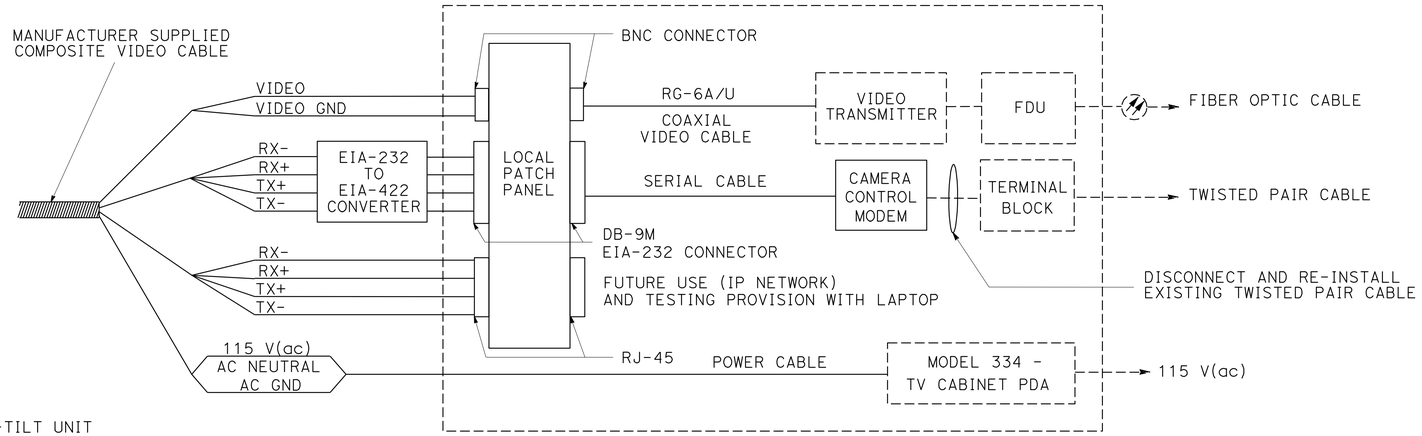

MODEL 334 - TV CCTV CAMERA CONTROLLER CABINET

EXISTING TYPICAL WIRING DIAGRAM

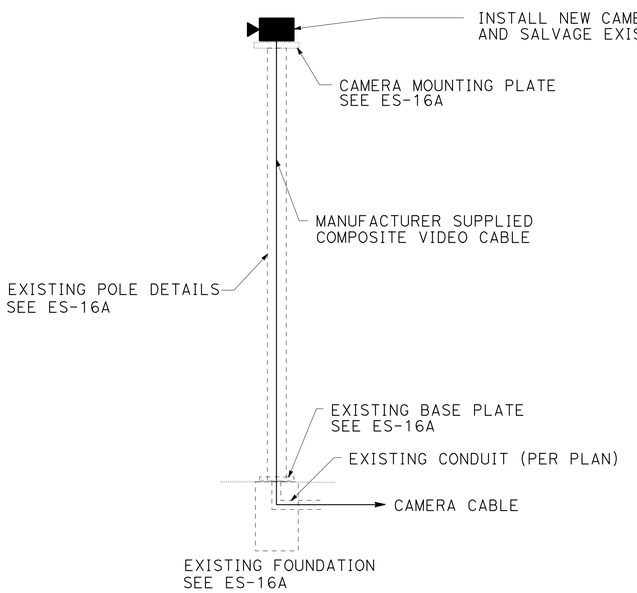

PROPOSED TYPICAL CAMERA WITH PAN-AND-TILT UNIT

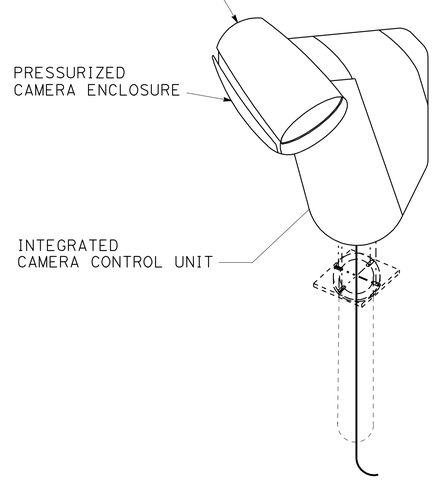

PROPOSED TYPICAL CAMERA WITH PAN-AND-TILT UNIT

VIDEO BLANKING PRIVACY ZONES TO EXCLUDE NON-TRAFFIC FEATURES WHICH ARE NOT TO BE VIEWED. THE PRIVACY ZONES SHALL BE ADJUSTED AS DIRECTED BY THE ENGINEER.

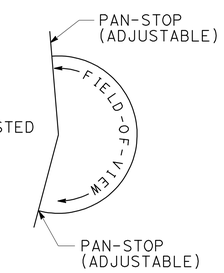

MODIFY CLOSED CIRCUIT TELEVISION CAMERA
(WIRING DIAGRAM WITH PAN-AND-TILT UNIT)

NO SCALE

THIS PLAN IS ACCURATE FOR ELECTRICAL WORK ONLY.

E-14

REVISED BY | DATE REVISED
PATRICK P. LUI | JACQUELINE TAN
CALCULATED-DESIGNED BY | CHECKED BY
FUNCTIONAL SUPERVISOR: JACQUELINE TAN
STATE OF CALIFORNIA - DEPARTMENT OF TRANSPORTATION
Caltrans OFFICE OF ITS

LAST REVISION 00-00-00 DATE PLOTTED => 10-DEC-2009 TIME PLOTTED => 07:43

Dist	COUNTY	ROUTE	POST MILES TOTAL PROJECT	SHEET No.	TOTAL SHEETS
07	LA,Ven	1,2,5,10, 57,60, etc.	Var	21	38

REGISTERED ELECTRICAL ENGINEER 8/31/09 DATE

11-30-09
PLANS APPROVAL DATE

REGISTERED PROFESSIONAL ENGINEER PATRICK P. LUI No. E17534 Exp. 06/30/11 ELECTRICAL STATE OF CALIFORNIA

THE STATE OF CALIFORNIA OR ITS OFFICEEIA OR AGENTS SHALL NOT BE RESPONSIBLE FOR THE ACCURACY OR COMPLETENESS OF ELECTRONIC COPIES OF THIS PLAN SHEET.

NOTES:

1. CONNECTORIZING DONE BY THE CONTRACTOR AT THE MODEL 334 - TV CCTV CAMERA CONTROLLER CABINET.
2. ALL COMPONENTS AND CONNECTORS MUST MEET NEMA TS 2, 2.1.5.1, 2.1.5.2, 3.3.3.1, 3.3.3.2, 5.2.5 AND 5.2.6.

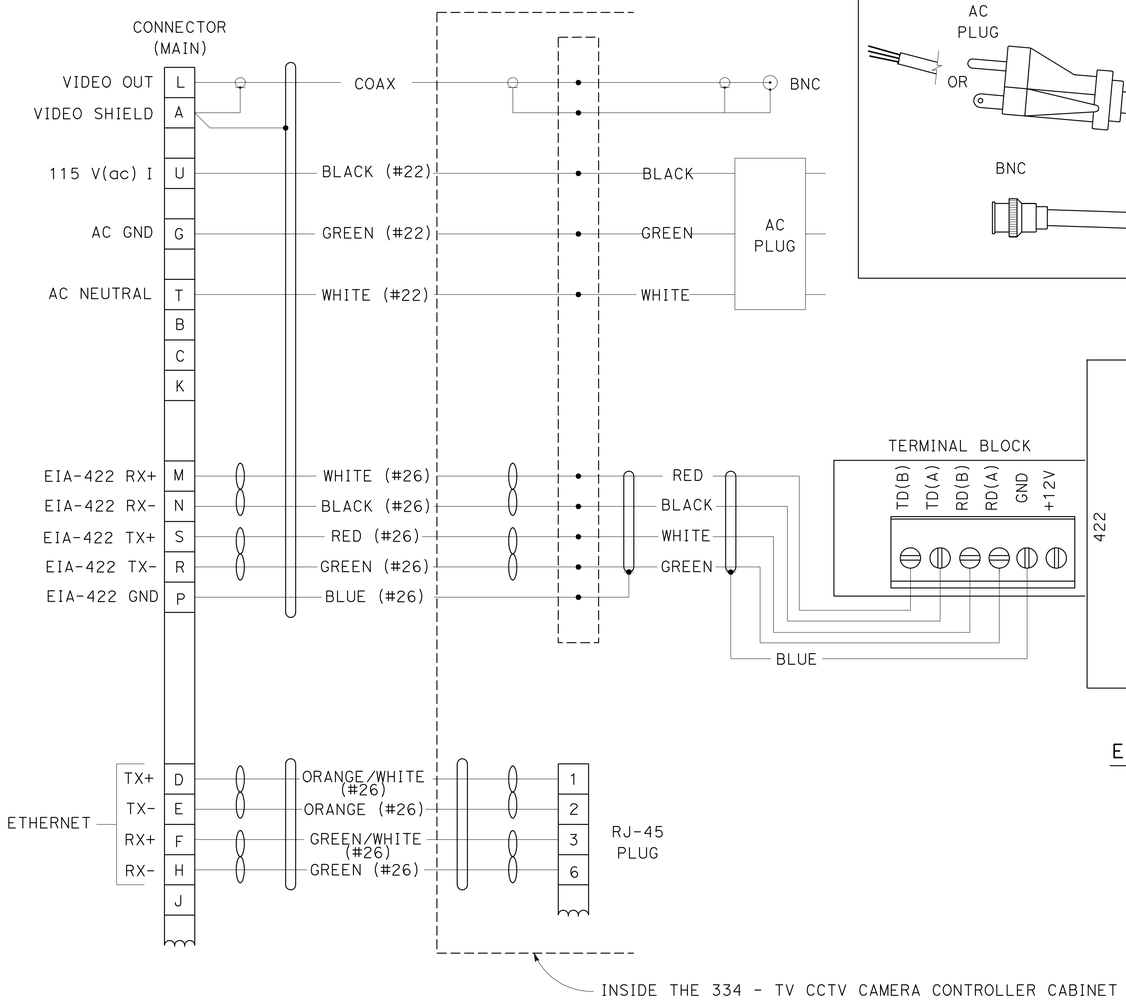

CABLE SCHEMATIC

SEE SHEET E-16 FOR DETAIL

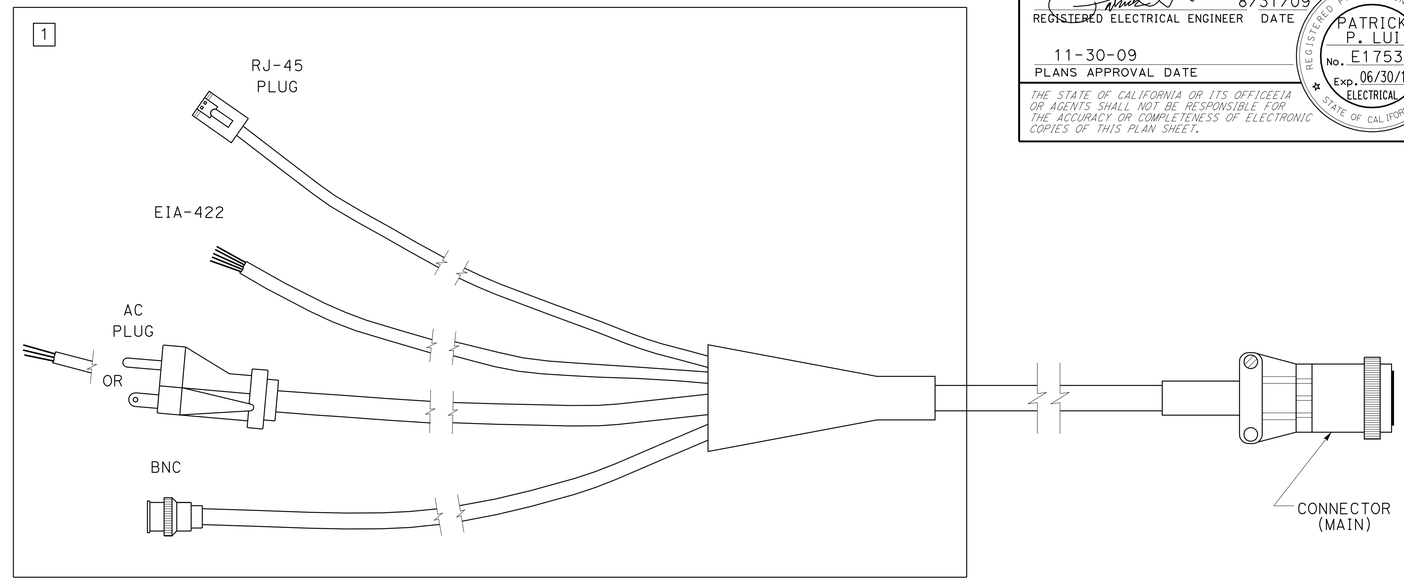

COMPOSITE VIDEO CABLE

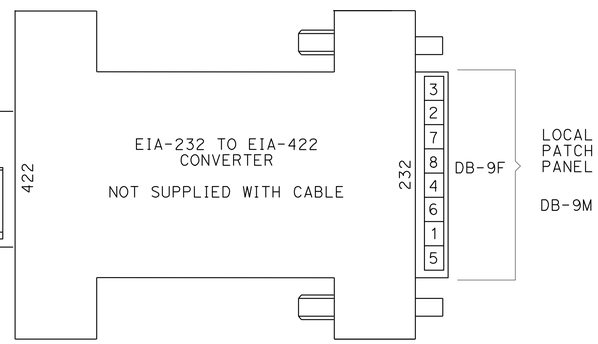

EIA-232 TO EIA-422 CONVERTER

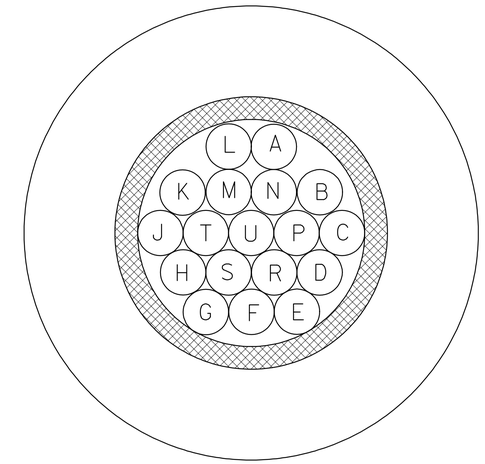

COMPOSITE VIDEO CABLE CROSS SECTION

THIS PLAN IS ACCURATE FOR ELECTRICAL WORK ONLY.

MODIFY CLOSED CIRCUIT TELEVISION CAMERA
(COMPOSITE VIDEO CABLE DETAILS)

NO SCALE

E-15

STATE OF CALIFORNIA - DEPARTMENT OF TRANSPORTATION
Caltrans® OFFICE OF ITS

FUNCTIONAL SUPERVISOR: JACQUELINE TAN
CALCULATED-DESIGNED BY: PATRICK P. LUI
CHECKED BY: JACQUELINE TAN
REVISED BY
DATE REVISED

LAST REVISION 00-00-00 DATE PLOTTED => 10-DEC-2009 TIME PLOTTED => 07:44

Dist	COUNTY	ROUTE	POST MILES TOTAL PROJECT	SHEET No.	TOTAL SHEETS
07	LA,Ven	1,2,5,10, 57,60, etc.	Var	22	38

REGISTERED ELECTRICAL ENGINEER 8/31/09 DATE

11-30-09
PLANS APPROVAL DATE

REGISTERED PROFESSIONAL ENGINEER PATRICK P. LUI No. E17534 Exp. 06/30/11 ELECTRICAL STATE OF CALIFORNIA

THE STATE OF CALIFORNIA OR ITS OFFICEEIA OR AGENTS SHALL NOT BE RESPONSIBLE FOR THE ACCURACY OR COMPLETENESS OF ELECTRONIC COPIES OF THIS PLAN SHEET.

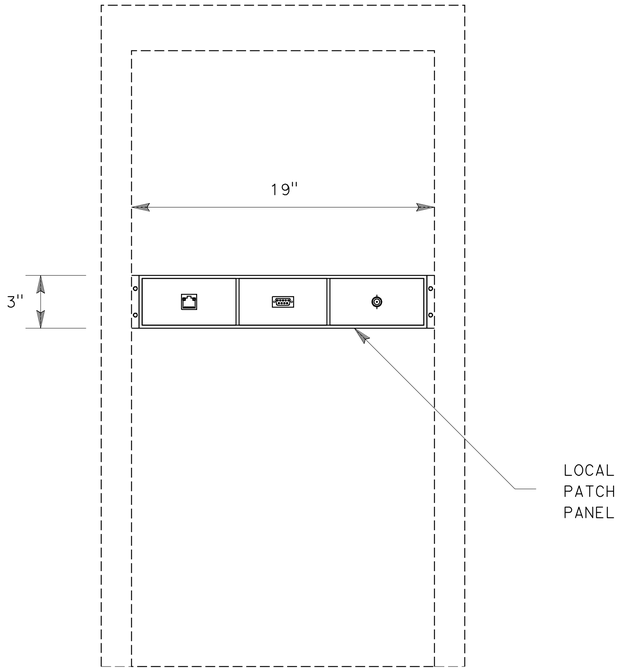

CABINET DETAIL

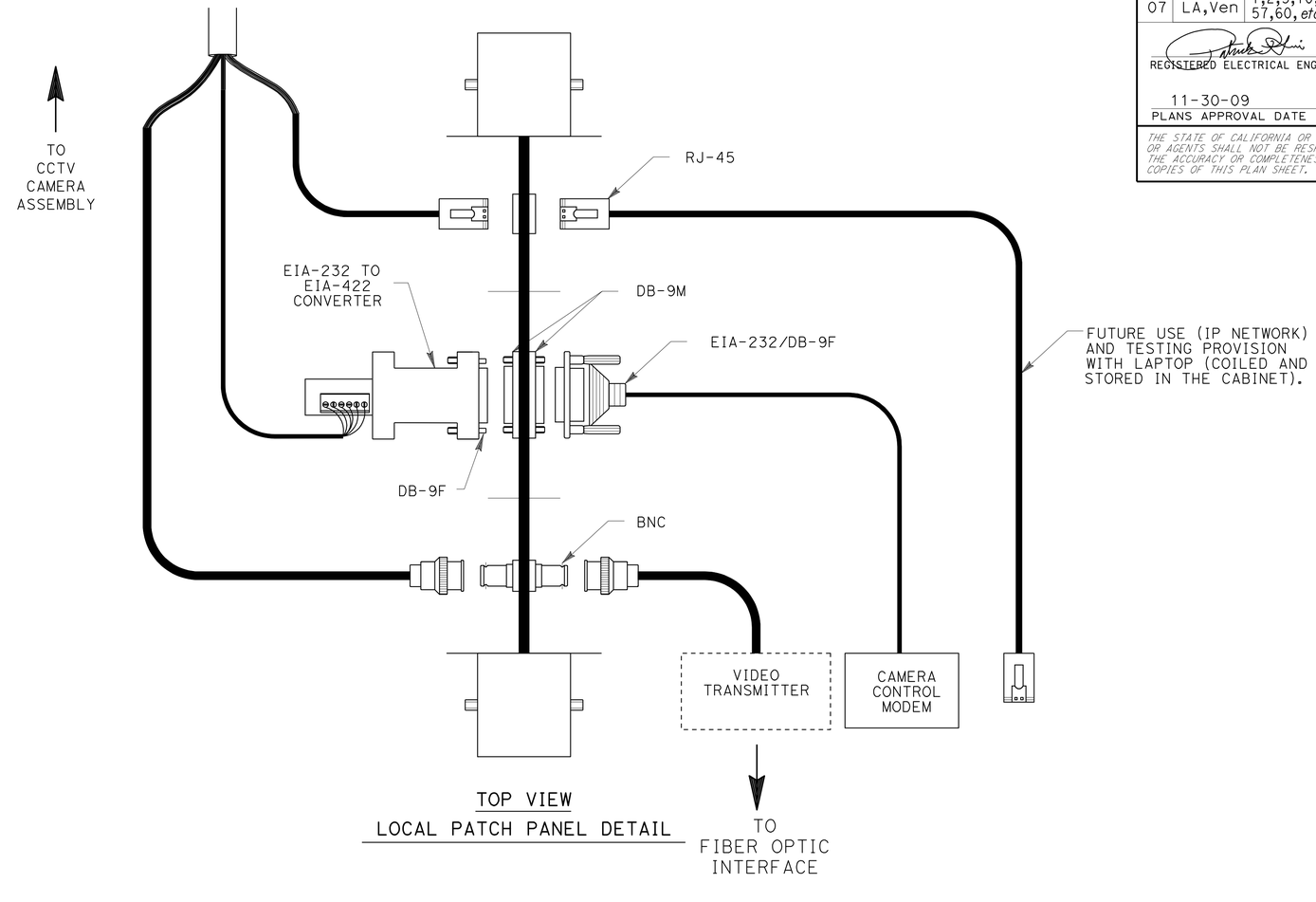

TOP VIEW
LOCAL PATCH PANEL DETAIL

NOTE:

1. ALL COMPONENTS AND CONNECTORS MUST MEET NEMA TS 2, 2.1.5.1, 2.1.5.2, 3.3.3.1, 3.3.3.2, 5.2.5 AND 5.2.6.

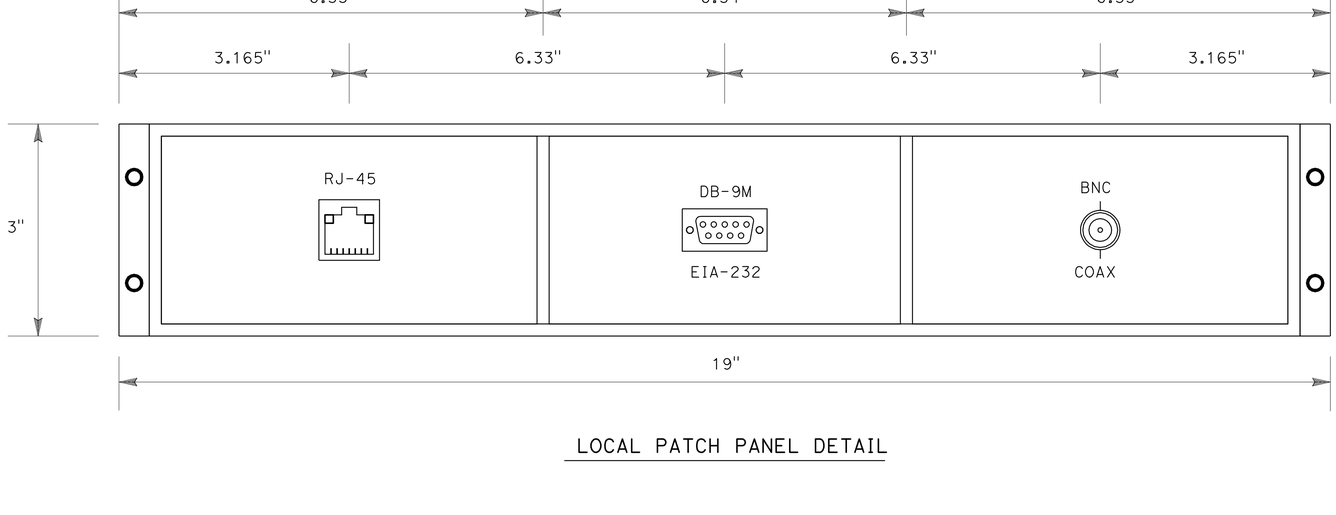

LOCAL PATCH PANEL DETAIL

MODIFY CLOSED CIRCUIT TELEVISION CAMERA
(LOCAL PATCH PANEL DETAILS)

NO SCALE

E-16

THIS PLAN IS ACCURATE FOR ELECTRICAL WORK ONLY.

STATE OF CALIFORNIA - DEPARTMENT OF TRANSPORTATION
Caltrans OFFICE OF ITS

FUNCTIONAL SUPERVISOR: JACQUELINE TAN
CALCULATED-DESIGNED BY: PATRICK P. LUI
CHECKED BY: JACQUELINE TAN
REVISED BY
DATE REVISED

LAST REVISION DATE PLOTTED => 10-DEC-2009
00-00-00 TIME PLOTTED => 07:44

Dist	COUNTY	ROUTE	POST MILES TOTAL PROJECT	SHEET No.	TOTAL SHEETS
07	LA,Ven	1,2,5,10, 57,60, etc.	Var	23	38

REGISTERED ELECTRICAL ENGINEER 8/31/09

11-30-09
PLANS APPROVAL DATE

REGISTERED PROFESSIONAL ENGINEER PATRICK P. LUI No. E17534 Exp. 06/30/11 ELECTRICAL STATE OF CALIFORNIA

THE STATE OF CALIFORNIA OR ITS OFFICEEIA OR AGENTS SHALL NOT BE RESPONSIBLE FOR THE ACCURACY OR COMPLETENESS OF ELECTRONIC COPIES OF THIS PLAN SHEET.

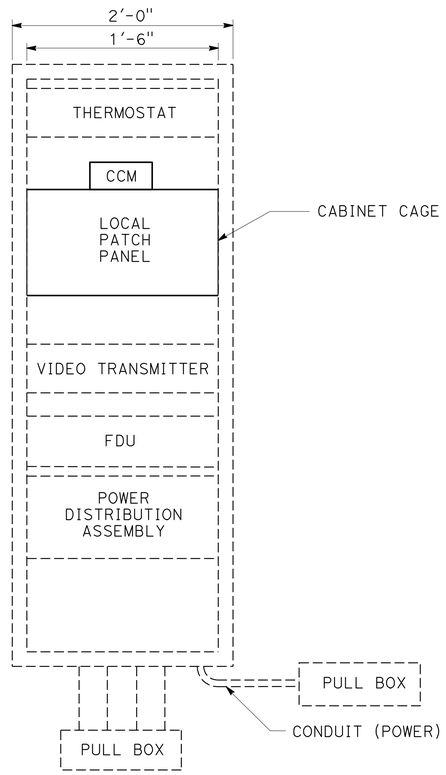

TYPICAL Exist MODEL 334-TV CCTV CAMERA CONTROLLER

CABINET EQUIPMENT LAYOUT

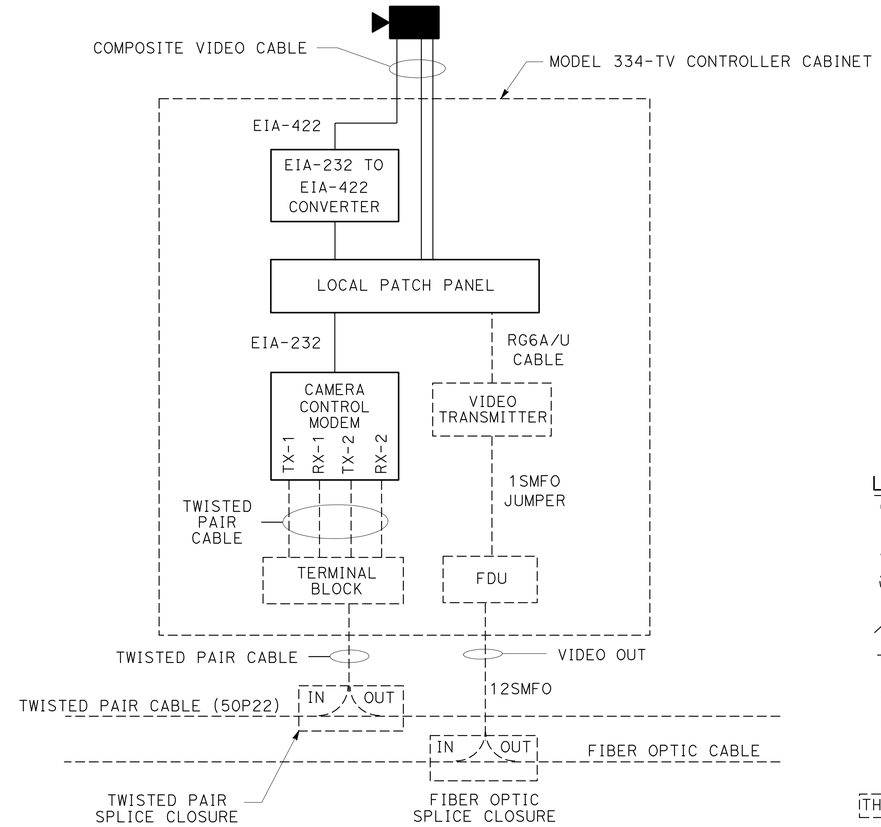

TYPICAL Exist MODEL 334-TV CCTV CAMERA CONTROLLER

CABINET WIRING DETAIL

LEGENDS: (E-17 TO E-19)

- SURGE PROTECTOR
- CIRCUIT BREAKER
- HT — HIGH TEMPERATURE RELAY COIL
- HT — RELAY CONTACT NORMALLY CLOSED
- 6 — WIRE SIZE, IF NOT INDICATED SHALL BE #12 AWG
- F — FAN
- L — INDICATOR LAMP
- THERMOSTATIC CONTROL
- THERMO — ADJUSTABLE CALIBRATED THERMOSTAT
- R — DUPLEX RECEPTACLE
- EQUIPMENT GROUND

ABBREVIATIONS: (E-17 TO E-19)

W/GFI	WITH GROUND FAULT INTERRUPTOR
HT	HIGH TEMPERATURE

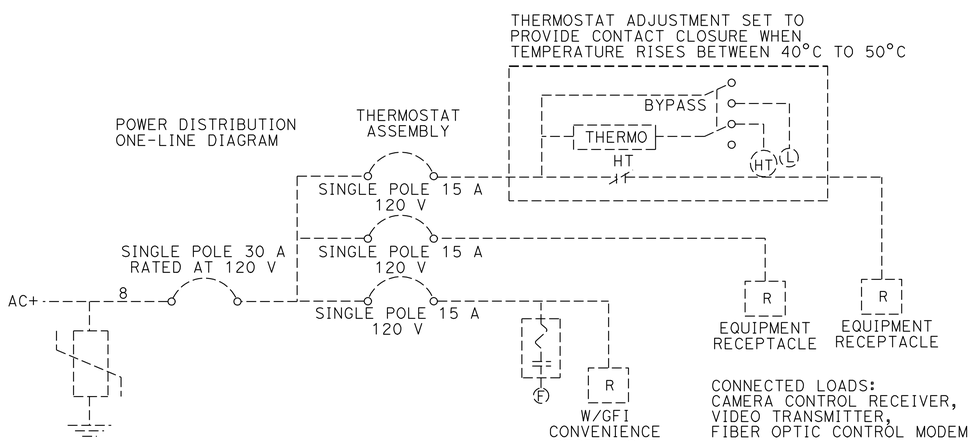

Exist POWER DISTRIBUTION ASSEMBLY

MODIFY CLOSED CIRCUIT TELEVISION CAMERA
(MODEL 334-TV CONTROLLER CABINET DETAILS)

NO SCALE

E-17

THIS PLAN IS ACCURATE FOR ELECTRICAL WORK ONLY.

REVISED BY	
DATE REVISED	
CALCULATED-DESIGNED BY	PATRICK P. LUI
CHECKED BY	JACQUELINE C. TAN
FUNCTIONAL SUPERVISOR	JACQUELINE C. TAN

STATE OF CALIFORNIA - DEPARTMENT OF TRANSPORTATION
Caltrans OFFICE OF ITS

LAST REVISION 00-00-00 | DATE PLOTTED => 10-DEC-2009 | TIME PLOTTED => 07:44

Dist	COUNTY	ROUTE	POST MILES TOTAL PROJECT	SHEET No.	TOTAL SHEETS
07	LA,Ven	1,2,5,10, 57,60, etc.	Var	24	38

REGISTERED ELECTRICAL ENGINEER 8/31/09 DATE

11-30-09
PLANS APPROVAL DATE

REGISTERED PROFESSIONAL ENGINEER PATRICK P. LUI No. E17534 Exp. 06/30/11 ELECTRICAL STATE OF CALIFORNIA

THE STATE OF CALIFORNIA OR ITS OFFICERS OR AGENTS SHALL NOT BE RESPONSIBLE FOR THE ACCURACY OR COMPLETENESS OF ELECTRONIC COPIES OF THIS PLAN SHEET.

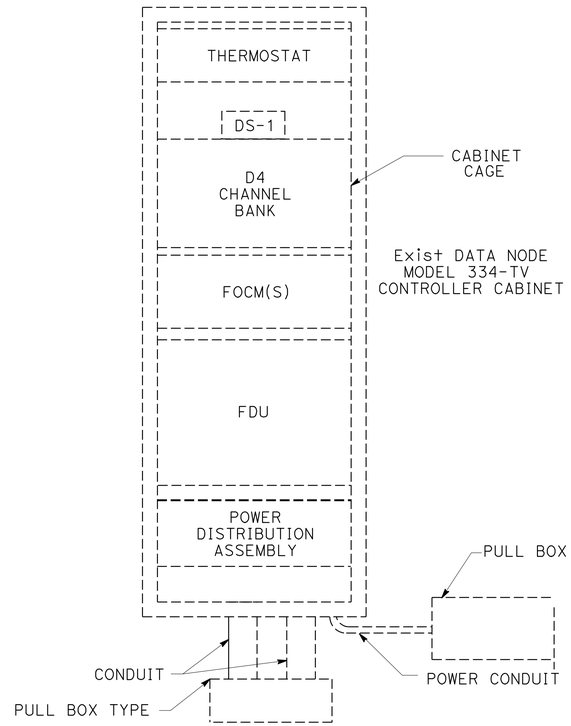

TYPICAL Exist DATA NODE CONTROLLER CABINET

SHOWN FOR TESTING PURPOSES ONLY

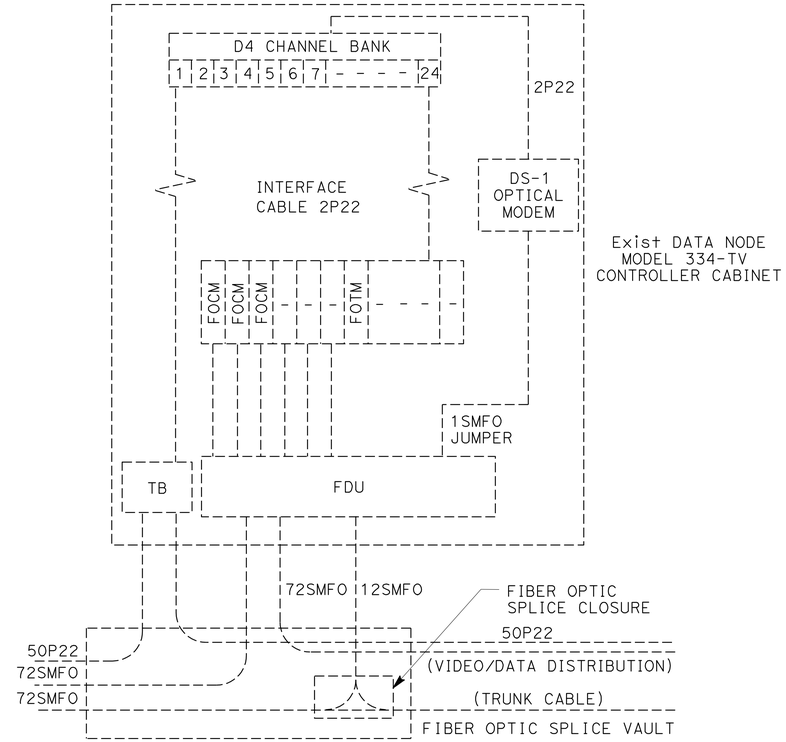

TYPICAL Exist DATA NODE WIRING DIAGRAM

SHOWN FOR TESTING PURPOSES ONLY

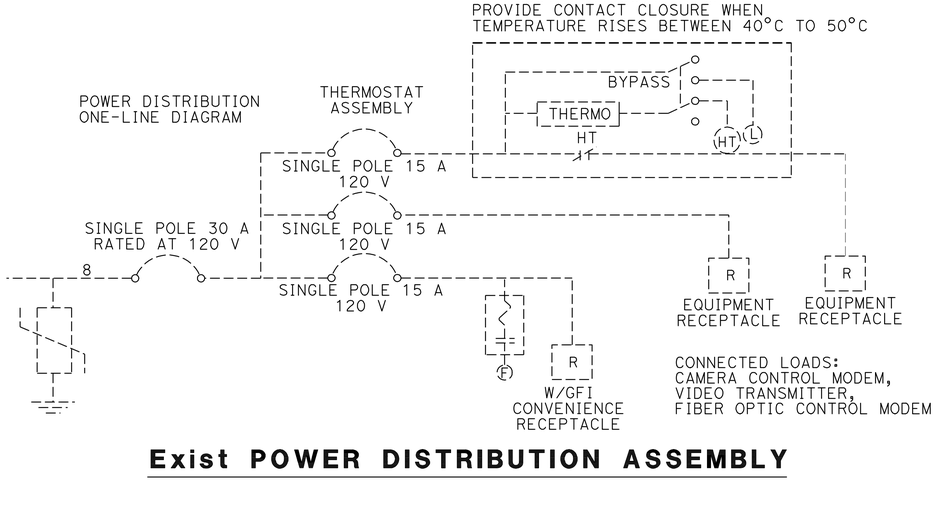

Exist POWER DISTRIBUTION ASSEMBLY

THIS PLAN IS ACCURATE FOR ELECTRICAL WORK ONLY.

WORK AT EXISTING DATA NODES
(DATA NODE CABINET DETAILS FOR REFERENCE ONLY)

NO SCALE

E-18

STATE OF CALIFORNIA - DEPARTMENT OF TRANSPORTATION
Caltrans OFFICE OF ITS

FUNCTIONAL SUPERVISOR: JACQUELINE TAN
CALCULATED-DESIGNED BY: PATRICK P. LUI
CHECKED BY: JACQUELINE TAN
REVISED BY
DATE REVISED

LAST REVISION DATE PLOTTED => 10-DEC-2009
00-00-00 TIME PLOTTED => 07:44

Dist	COUNTY	ROUTE	POST MILES TOTAL PROJECT	SHEET No.	TOTAL SHEETS
07	LA,Ven	1,2,5,10, 57,60, etc.	Var	25	38

REGISTERED ELECTRICAL ENGINEER 8/31/09 DATE

11-30-09
PLANS APPROVAL DATE

REGISTERED PROFESSIONAL ENGINEER PATRICK P. LUI No. E17534 Exp. 06/30/11 ELECTRICAL STATE OF CALIFORNIA

THE STATE OF CALIFORNIA OR ITS OFFICERS OR AGENTS SHALL NOT BE RESPONSIBLE FOR THE ACCURACY OR COMPLETENESS OF ELECTRONIC COPIES OF THIS PLAN SHEET.

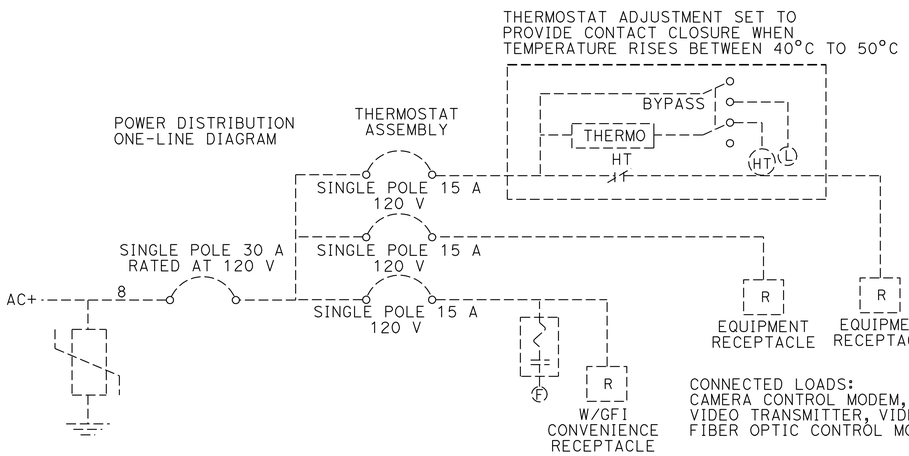

Exist POWER DISTRIBUTION ASSEMBLY

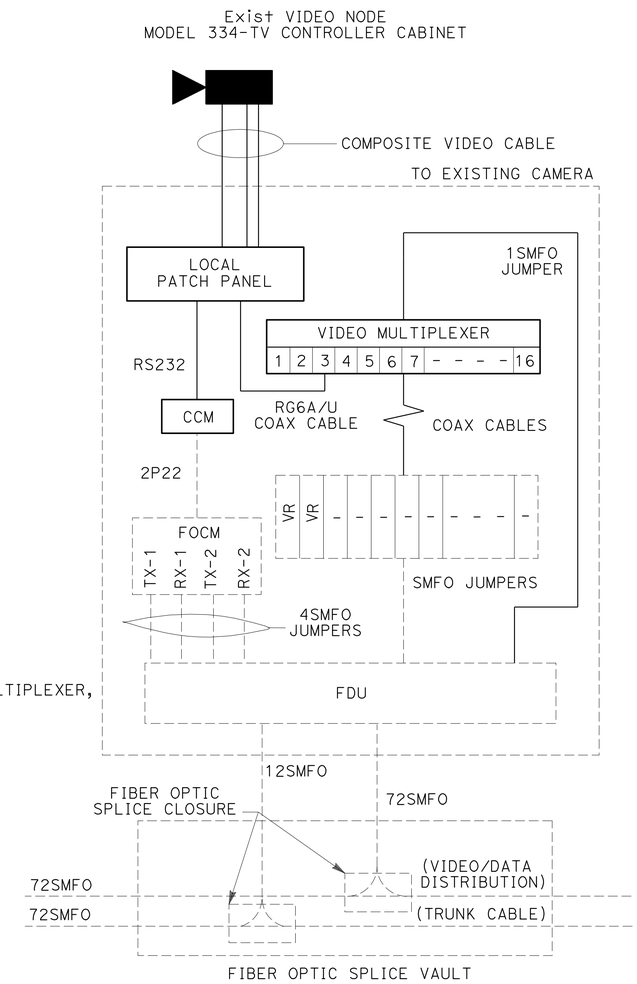

TYPICAL Exist VIDEO NODE WIRING DIAGRAM

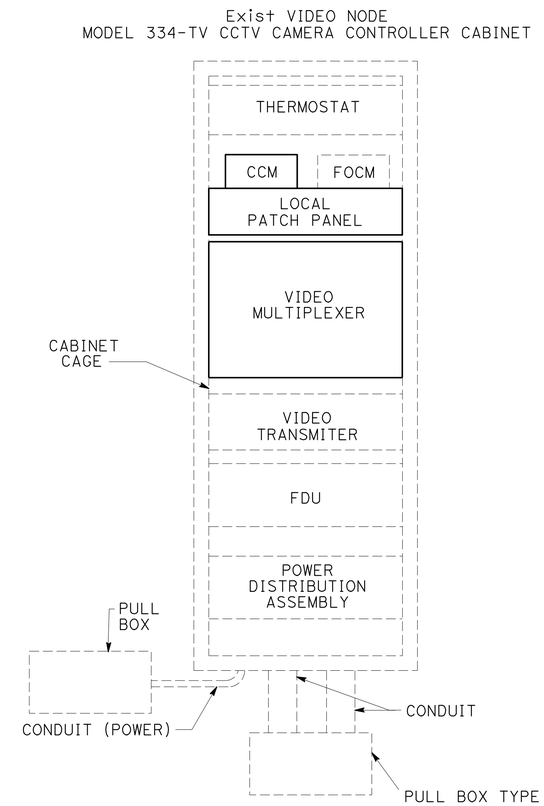

TYPICAL Exist VIDEO NODE MODEL 334-TV CCTV CAMERA CONTROLLER CABINET

THIS PLAN IS ACCURATE FOR ELECTRICAL WORK ONLY.

WORK AT EXISTING VIDEO NODES
(VIDEO NODE CABINET DETAILS)

NO SCALE

E-19

STATE OF CALIFORNIA - DEPARTMENT OF TRANSPORTATION
Caltrans OFFICE OF ITS

FUNCTIONAL SUPERVISOR: JACQUELINE TAN
CALCULATED-DESIGNED BY: PATRICK P. LUI
CHECKED BY: JACQUELINE TAN
REVISED BY
DATE REVISED

LAST REVISION 00-00-00
DATE PLOTTED => 10-DEC-2009
TIME PLOTTED => 07:44

Dist	COUNTY	ROUTE	POST MILES TOTAL PROJECT	SHEET No.	TOTAL SHEETS
07	LA,Ven	1,2,5,10, 57,60, etc.	Var	26	38

REGISTERED ELECTRICAL ENGINEER 8/31/09 DATE

11-30-09
PLANS APPROVAL DATE

REGISTERED PROFESSIONAL ENGINEER PATRICK P. LUI No. E17534 Exp. 06/30/11 ELECTRICAL STATE OF CALIFORNIA

THE STATE OF CALIFORNIA OR ITS OFFICERS OR AGENTS SHALL NOT BE RESPONSIBLE FOR THE ACCURACY OR COMPLETENESS OF ELECTRONIC COPIES OF THIS PLAN SHEET.

LEGEND:(THIS SHEET ONLY)

CH CHANNEL

—|XXX|— "XXX" INDICATES FULLY PROGRAMMABLE ALPHANUMERIC LABEL SUPERIMPOSED ON VIDEO IMAGE

NOTE:(THIS SHEET ONLY)

1 INSTALL EQUIPMENT IN Exist RACK, INSIDE HUB BUILDING, AS DIRECTED BY THE ENGINEER.

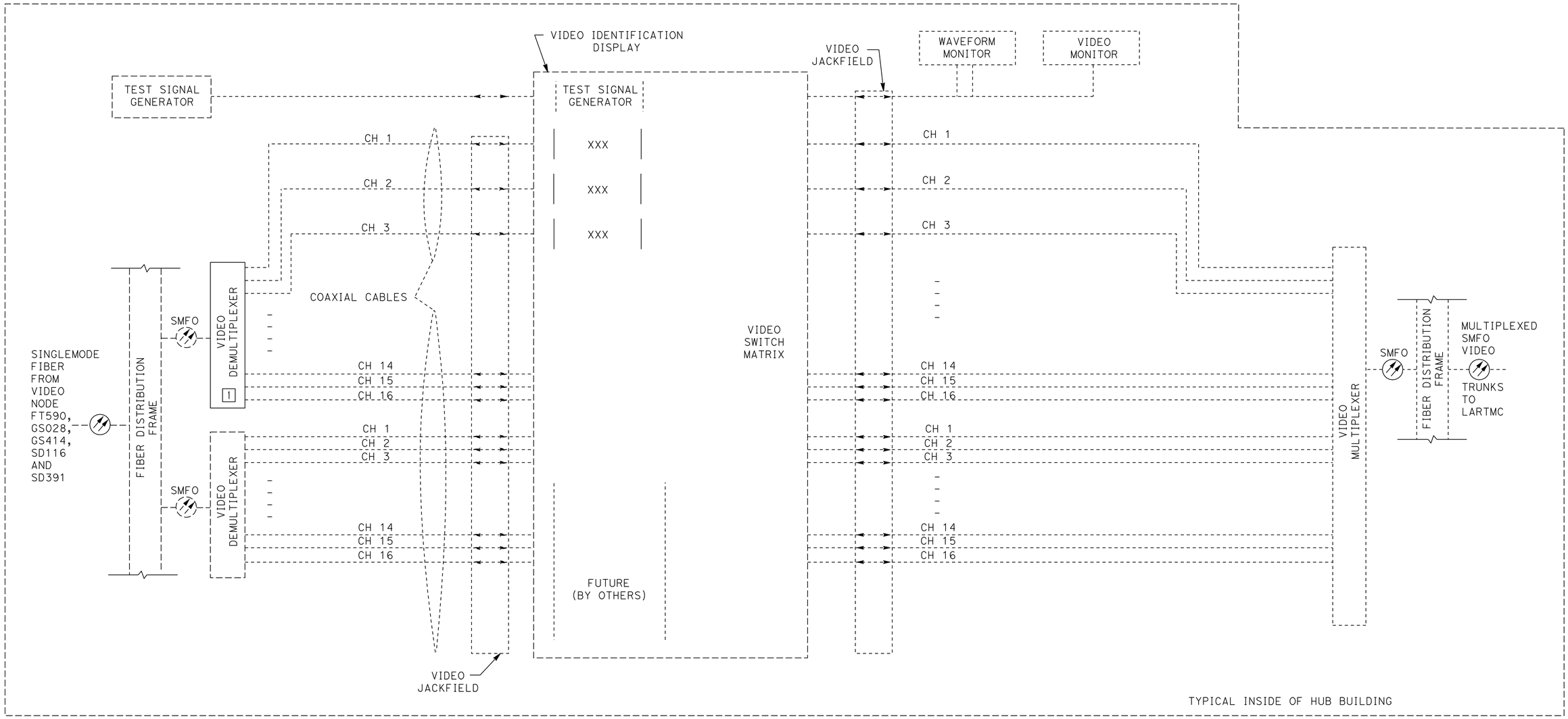

TYPICAL VIDEO CIRCUIT INSIDE OF HUB BUILDING

WORK AT EXISTING HUBS AND LOS ANGELES REGIONAL TRAFFIC MANAGEMENT CENTER

(HUB BUILDING VIDEO CIRCUIT)

NO SCALE

THIS PLAN IS ACCURATE FOR ELECTRICAL WORK ONLY.

E-20

STATE OF CALIFORNIA - DEPARTMENT OF TRANSPORTATION
Caltrans OFFICE OF ITS

FUNCTIONAL SUPERVISOR: JACQUELINE TAN
CALCULATED-DESIGNED BY: PATRICK P. LUI
CHECKED BY: JACQUELINE TAN
REVISED BY
DATE REVISED

LAST REVISION: DATE PLOTTED => 10-DEC-2009
00-00-00 TIME PLOTTED => 07:45

Dist	COUNTY	ROUTE	POST MILES TOTAL PROJECT	SHEET No.	TOTAL SHEETS
07	LA,Ven	1,2,5,10, 57,60, *etc.*	Var	27	38

REGISTERED ELECTRICAL ENGINEER 8/31/09 DATE

11-30-09
PLANS APPROVAL DATE

REGISTERED PROFESSIONAL ENGINEER PATRICK P. LUI No. E17534 Exp. 06/30/11 ELECTRICAL STATE OF CALIFORNIA

THE STATE OF CALIFORNIA OR ITS OFFICERS OR AGENTS SHALL NOT BE RESPONSIBLE FOR THE ACCURACY OR COMPLETENESS OF ELECTRONIC COPIES OF THIS PLAN SHEET.

NOTE: (THIS SHEET ONLY)

1 INSTALL EQUIPMENT IN Exist RACK, INSIDE EACH BUILDING, AS DIRECTED BY THE ENGINEER.

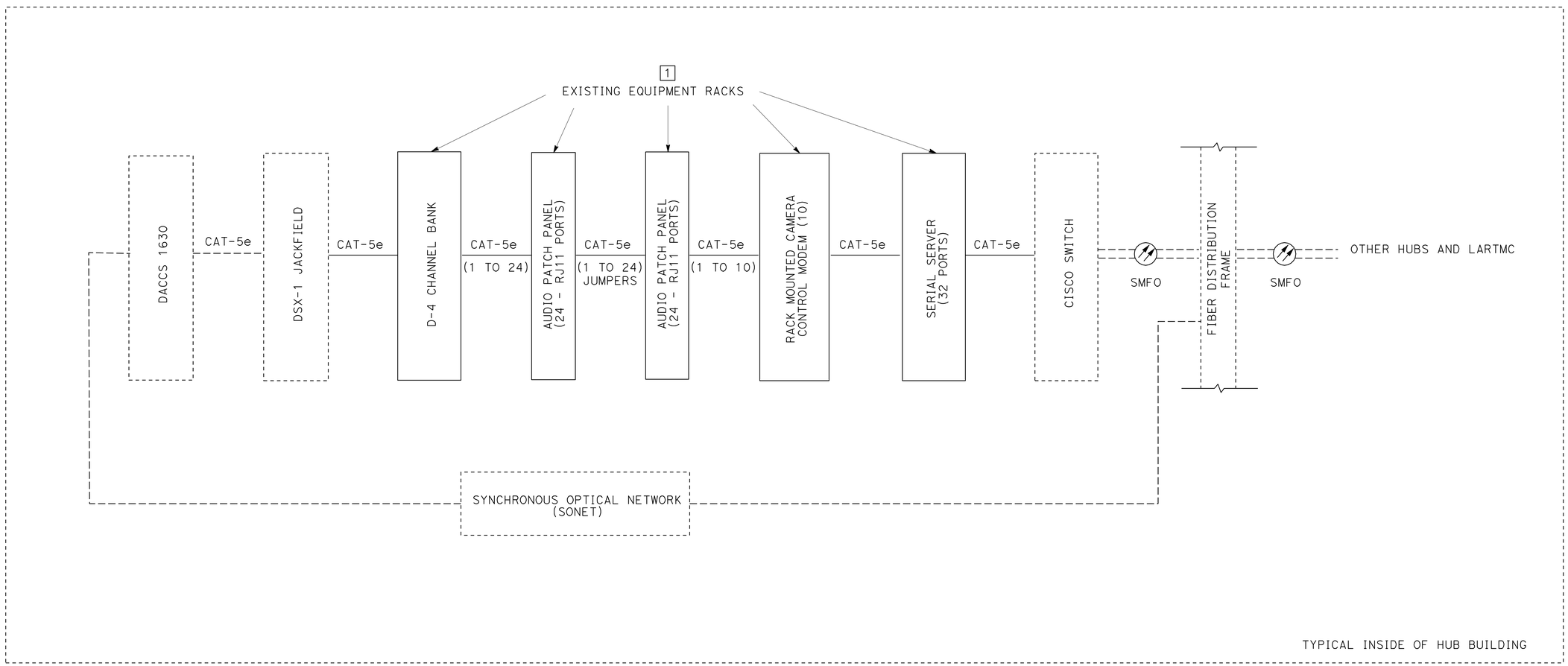

TYPICAL DATA CIRCUIT INSIDE OF HUB BUILDING

THIS PLAN IS ACCURATE FOR ELECTRICAL WORK ONLY.

WORK AT EXISTING HUBS AND LOS ANGELES REGIONAL TRAFFIC MANAGEMENT CENTER

(HUB BUILDING DATA CIRCUIT)

NO SCALE

E-21

STATE OF CALIFORNIA - DEPARTMENT OF TRANSPORTATION
Caltrans OFFICE OF ITS

FUNCTIONAL SUPERVISOR: JACQUELINE TAN
CALCULATED-DESIGNED BY: PATRICK P. LUI
CHECKED BY: JACQUELINE TAN
REVISED BY
DATE REVISED

LAST REVISION DATE PLOTTED => 10-DEC-2009
00-00-00 TIME PLOTTED => 07:45

Dist	COUNTY	ROUTE	POST MILES TOTAL PROJECT	SHEET No.	TOTAL SHEETS
07	LA,Ven	1,2,5,10, 57,60, *etc.*	Var	28	38

REGISTERED ELECTRICAL ENGINEER 8/31/09 DATE

11-30-09
PLANS APPROVAL DATE

REGISTERED PROFESSIONAL ENGINEER PATRICK P. LUI No. E17534 Exp. 06/30/11 ELECTRICAL STATE OF CALIFORNIA

THE STATE OF CALIFORNIA OR ITS OFFICERS OR AGENTS SHALL NOT BE RESPONSIBLE FOR THE ACCURACY OR COMPLETENESS OF ELECTRONIC COPIES OF THIS PLAN SHEET.

NOTE: (THIS SHEET ONLY)

1 INSTALL EQUIPMENT IN Exist RACK, AS DIRECTED BY THE ENGINEER, INSIDE EAST LOS ANGELES HUB BUILDING.

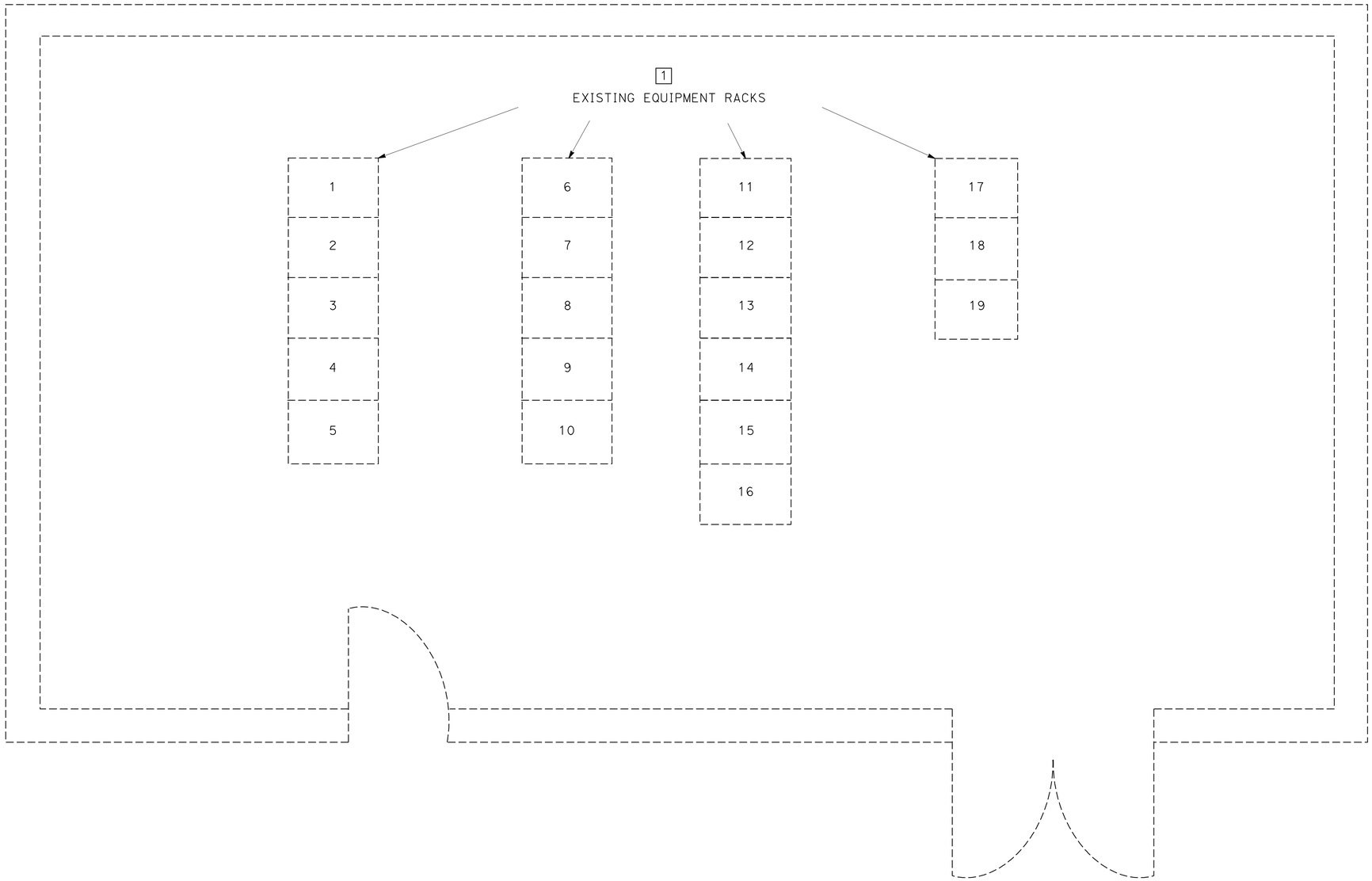

FLOOR PLAN

WORK AT EXISTING HUBS AND LOS ANGELES REGIONAL TRAFFIC MANAGEMENT CENTER

(EAST LOS ANGELES HUB BUILDING EQUIPMENT RACK LAYOUT)

NO SCALE

THIS PLAN IS ACCURATE FOR ELECTRICAL WORK ONLY.

E-22

STATE OF CALIFORNIA - DEPARTMENT OF TRANSPORTATION
Caltrans OFFICE OF ITS

FUNCTIONAL SUPERVISOR: JACQUELINE TAN
CALCULATED-DESIGNED BY: PATRICK P. LUI
CHECKED BY: JACQUELINE TAN
REVISED BY
DATE REVISED

LAST REVISION DATE PLOTTED => 10-DEC-2009
00-00-00 TIME PLOTTED => 07:45

Dist	COUNTY	ROUTE	POST MILES TOTAL PROJECT	SHEET No.	TOTAL SHEETS
07	LA,Ven	1,2,5,10, 57,60, etc.	Var	29	38

REGISTERED ELECTRICAL ENGINEER 8/31/09 DATE

11-30-09
PLANS APPROVAL DATE

REGISTERED PROFESSIONAL ENGINEER PATRICK P. LUI No. E17534 Exp. 06/30/11 ELECTRICAL STATE OF CALIFORNIA

THE STATE OF CALIFORNIA OR ITS OFFICERS OR AGENTS SHALL NOT BE RESPONSIBLE FOR THE ACCURACY OR COMPLETENESS OF ELECTRONIC COPIES OF THIS PLAN SHEET.

NOTE: (THIS SHEET ONLY)

1 INSTALL EQUIPMENT IN Exist RACK, AS DIRECTED BY THE ENGINEER, INSIDE LOS ANGELES AIRPORT HUB BUILDING.

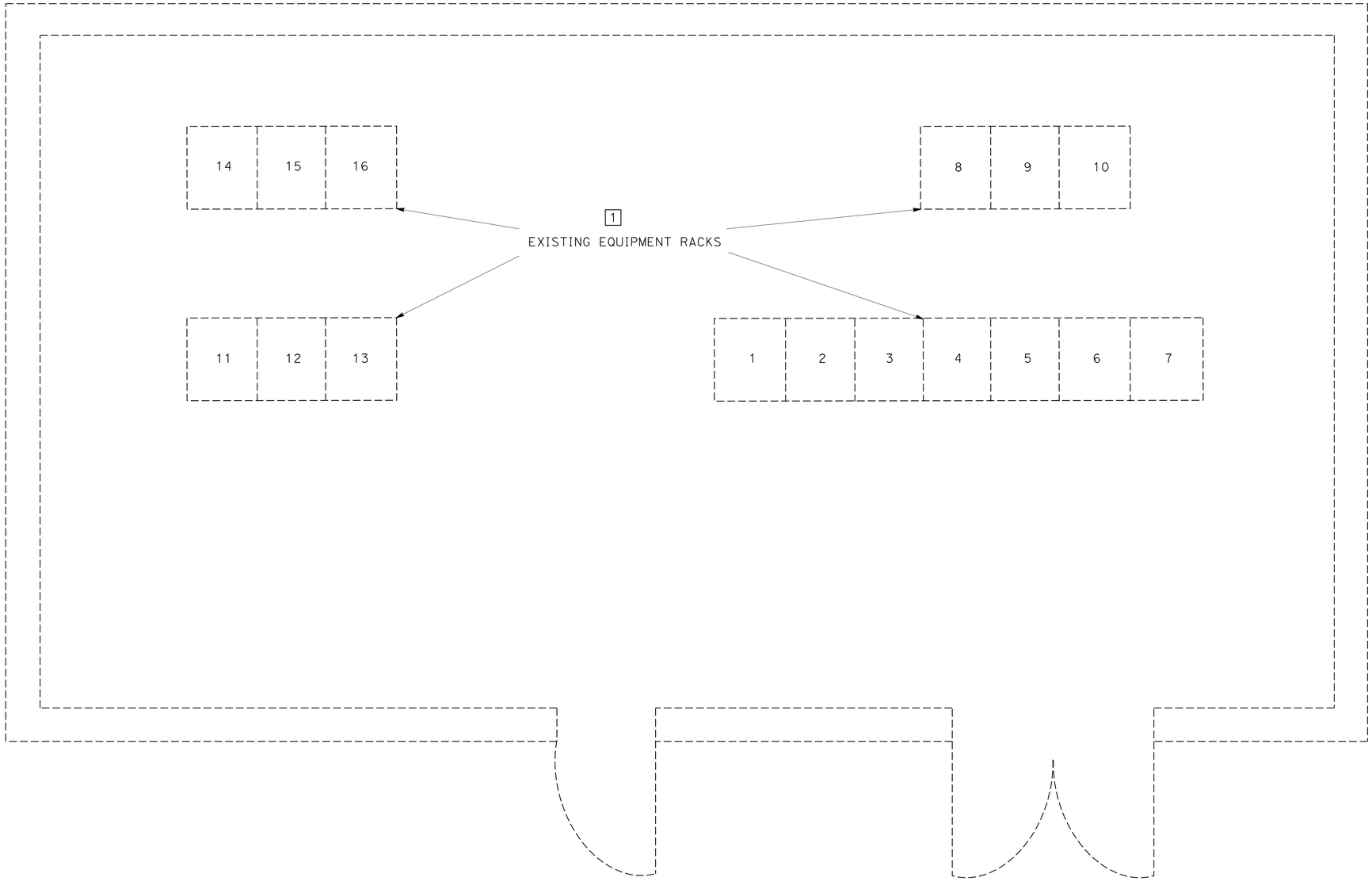

FLOOR PLAN

WORK AT EXISTING HUBS AND LOS ANGELES REGIONAL TRAFFIC MANAGEMENT CENTER

(LOS ANGELES AIRPORT HUB BUILDING EQUIPMENT RACK LAYOUT)

NO SCALE

THIS PLAN IS ACCURATE FOR ELECTRICAL WORK ONLY.

E-23

STATE OF CALIFORNIA - DEPARTMENT OF TRANSPORTATION
Caltrans OFFICE OF ITS

FUNCTIONAL SUPERVISOR: JACQUELINE TAN
CALCULATED-DESIGNED BY: PATRICK P. LUI
CHECKED BY: JACQUELINE TAN
REVISED BY
DATE REVISED

LAST REVISION DATE PLOTTED => 10-DEC-2009
00-00-00 TIME PLOTTED => 07:45

Dist	COUNTY	ROUTE	POST MILES TOTAL PROJECT	SHEET No.	TOTAL SHEETS
07	LA,Ven	1,2,5,10, 57,60, etc.	Var	30	38

REGISTERED ELECTRICAL ENGINEER 8/31/09 DATE

11-30-09
PLANS APPROVAL DATE

REGISTERED PROFESSIONAL ENGINEER
PATRICK P. LUI
No. E17534
Exp. 06/30/11
ELECTRICAL
STATE OF CALIFORNIA

THE STATE OF CALIFORNIA OR ITS OFFICERS OR AGENTS SHALL NOT BE RESPONSIBLE FOR THE ACCURACY OR COMPLETENESS OF ELECTRONIC COPIES OF THIS PLAN SHEET.

NOTE: (THIS SHEET ONLY)

1 INSTALL EQUIPMENT IN Exist RACK, AS DIRECTED BY THE ENGINEER, INSIDE NORTH HOLLYWOOD HUB BUILDING.

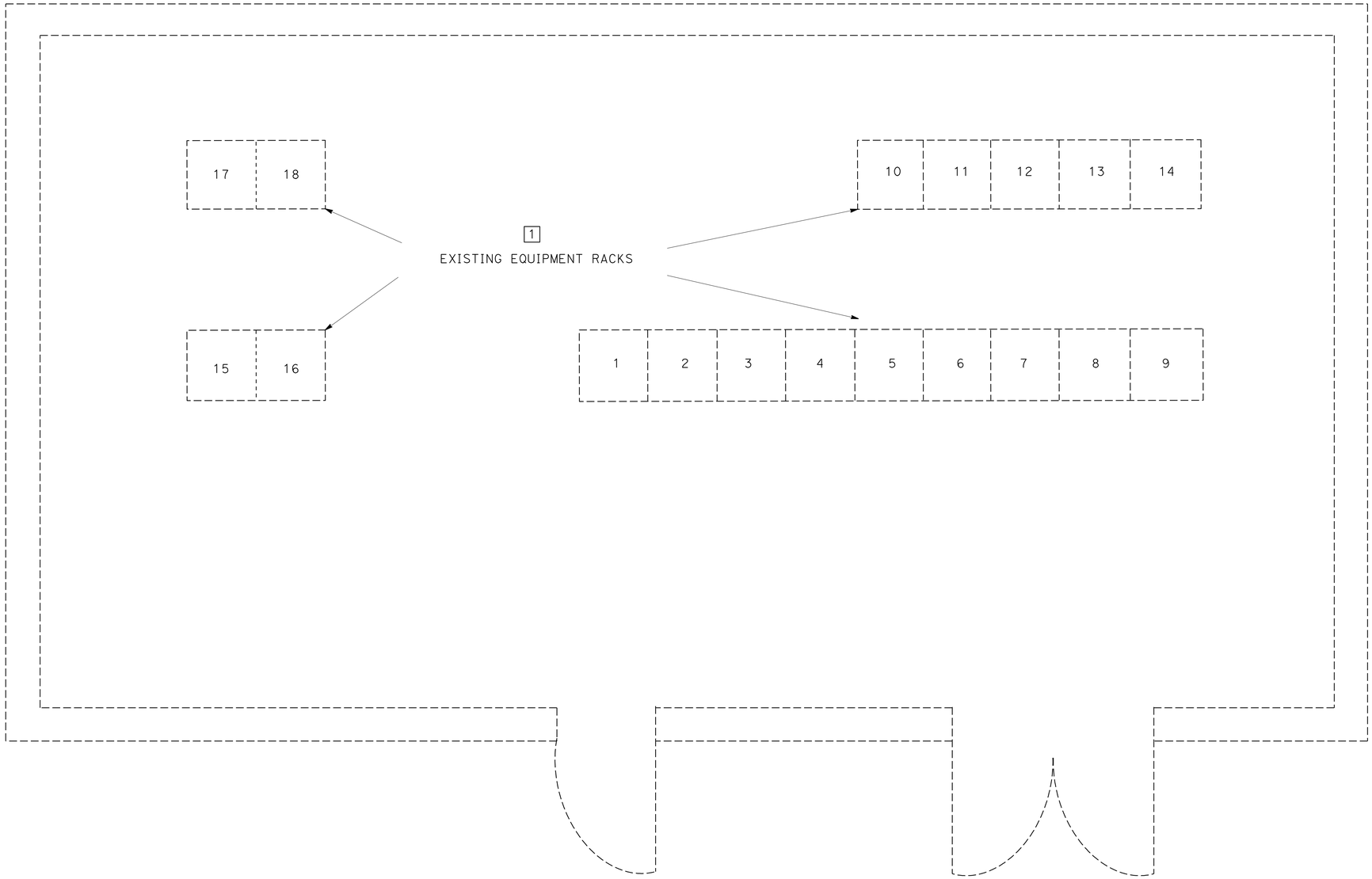

FLOOR PLAN

THIS PLAN IS ACCURATE FOR ELECTRICAL WORK ONLY.

WORK AT EXISTING HUBS AND LOS ANGELES REGIONAL TRAFFIC MANAGEMENT CENTER

(NORTH HOLLYWOOD HUB BUILDING EQUIPMENT RACK LAYOUT)

NO SCALE

E-24

STATE OF CALIFORNIA - DEPARTMENT OF TRANSPORTATION
Caltrans OFFICE OF ITS

FUNCTIONAL SUPERVISOR: JACQUELINE TAN
CALCULATED-DESIGNED BY: PATRICK P. LUI
CHECKED BY: JACQUELINE TAN
REVISED BY
DATE REVISED

LAST REVISION DATE PLOTTED => 10-DEC-2009
00-00-00 TIME PLOTTED => 07:45

Dist	COUNTY	ROUTE	POST MILES TOTAL PROJECT	SHEET No.	TOTAL SHEETS
07	LA,Ven	1,2,5,10, 57,60, etc.	Var	31	38

REGISTERED ELECTRICAL ENGINEER 8/31/09 DATE

11-30-09
PLANS APPROVAL DATE

REGISTERED PROFESSIONAL ENGINEER PATRICK P. LUI No. E17534 Exp. 06/30/11 ELECTRICAL STATE OF CALIFORNIA

THE STATE OF CALIFORNIA OR ITS OFFICERS OR AGENTS SHALL NOT BE RESPONSIBLE FOR THE ACCURACY OR COMPLETENESS OF ELECTRONIC COPIES OF THIS PLAN SHEET.

NOTE: (THIS SHEET ONLY)

1 INSTALL EQUIPMENT IN Exist RACK, AS DIRECTED BY THE ENGINEER, INSIDE NORWALK HUB BUILDING.

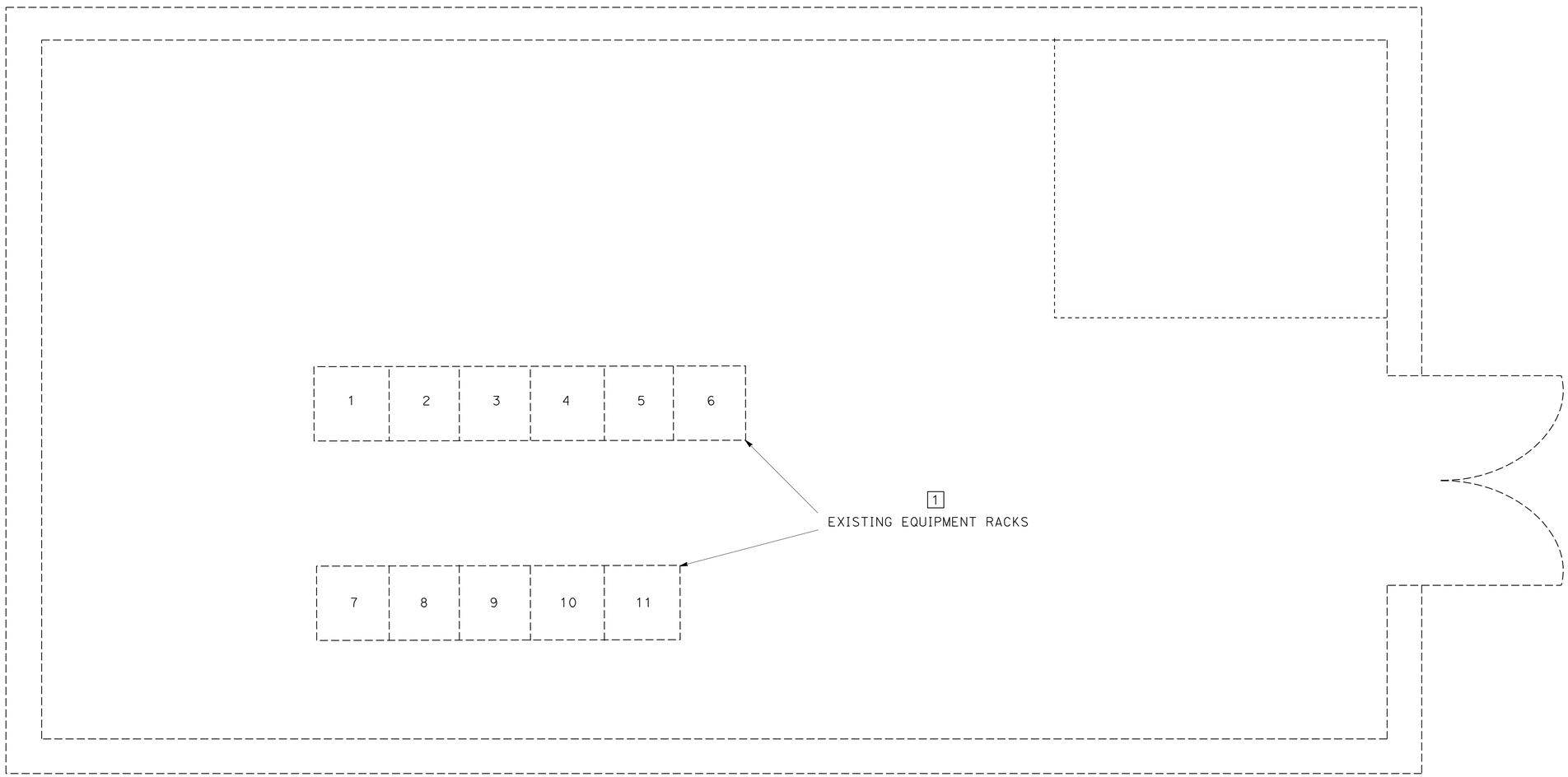

FLOOR PLAN

THIS PLAN IS ACCURATE FOR ELECTRICAL WORK ONLY.

WORK AT EXISTING HUBS AND LOS ANGELES REGIONAL TRAFFIC MANAGEMENT CENTER

(NORWALK HUB BUILDING EQUIPMENT RACK LAYOUT)

NO SCALE

E-25

STATE OF CALIFORNIA - DEPARTMENT OF TRANSPORTATION
Caltrans OFFICE OF ITS

FUNCTIONAL SUPERVISOR: JACQUELINE TAN
CALCULATED-DESIGNED BY: PATRICK P. LUI
CHECKED BY: JACQUELINE TAN
REVISED BY
DATE REVISED

LAST REVISION DATE PLOTTED => 10-DEC-2009
00-00-00 TIME PLOTTED => 07:46

Dist	COUNTY	ROUTE	POST MILES TOTAL PROJECT	SHEET No.	TOTAL SHEETS
07	LA,Ven	1,2,5,10, 57,60, etc.	Var	32	38

REGISTERED ELECTRICAL ENGINEER 8/31/09 DATE

11-30-09
PLANS APPROVAL DATE

REGISTERED PROFESSIONAL ENGINEER PATRICK P. LUI No. E17534 Exp. 06/30/11 ELECTRICAL STATE OF CALIFORNIA

THE STATE OF CALIFORNIA OR ITS OFFICERS OR AGENTS SHALL NOT BE RESPONSIBLE FOR THE ACCURACY OR COMPLETENESS OF ELECTRONIC COPIES OF THIS PLAN SHEET.

NOTE: (THIS SHEET ONLY)

1 INSTALL EQUIPMENT IN Exist RACK, AS DIECTED BY THE ENGINEER, INSIDE SAN GABRIEL VALLEY HUB BUILDING.

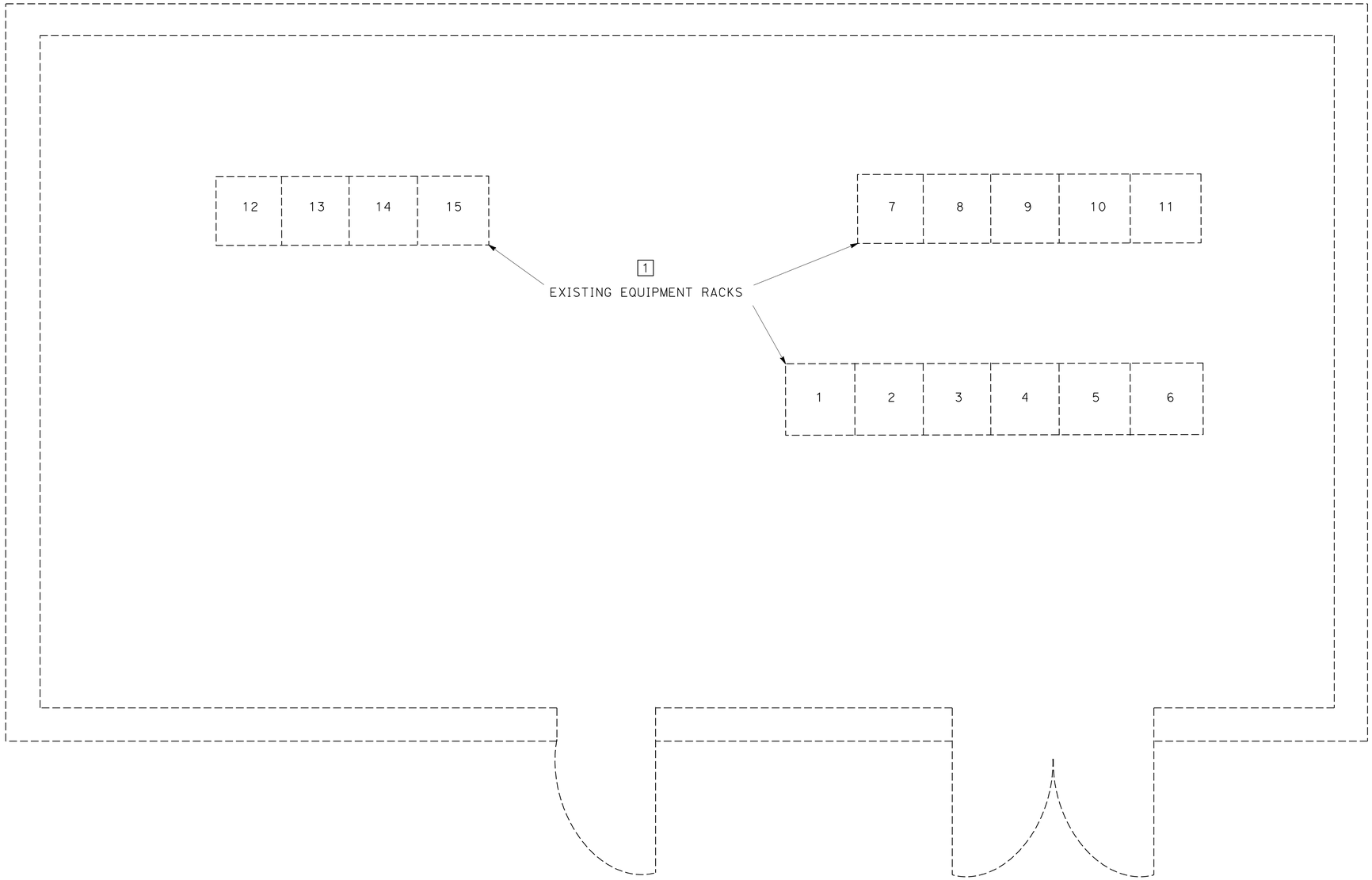

FLOOR PLAN

WORK AT EXISTING HUBS AND LOS ANGELES REGIONAL TRAFFIC MANAGEMENT CENTER

(SAN GABRIEL VALLEY HUB BUILDING EQUIPMENT RACK LAYOUT)

NO SCALE

THIS PLAN IS ACCURATE FOR ELECTRICAL WORK ONLY.

E-26

STATE OF CALIFORNIA - DEPARTMENT OF TRANSPORTATION
Caltrans OFFICE OF ITS

FUNCTIONAL SUPERVISOR: JACQUELINE TAN
CALCULATED-DESIGNED BY: PATRICK P. LUI
CHECKED BY: JACQUELINE TAN
REVISED BY
DATE REVISED

LAST REVISION DATE PLOTTED => 10-DEC-2009
00-00-00 TIME PLOTTED => 07:46

DIST	COUNTY	ROUTE	POST MILES TOTAL PROJECT	SHEET NO.	TOTAL SHEETS
07	LA,Ven	1,2,5,10, 57,60, etc.	Var	33	38

Randell D. Hiatt
REGISTERED CIVIL ENGINEER

June 6, 2008
PLANS APPROVAL DATE

REGISTERED PROFESSIONAL ENGINEER
Randell D. Hiatt
No. C50200
Exp. 6-30-09
CIVIL
STATE OF CALIFORNIA

The State of California or its officers or agents shall not be responsible for the accuracy or completeness of electronic copies of this plan sheet.

To accompany plans dated 11-30-09

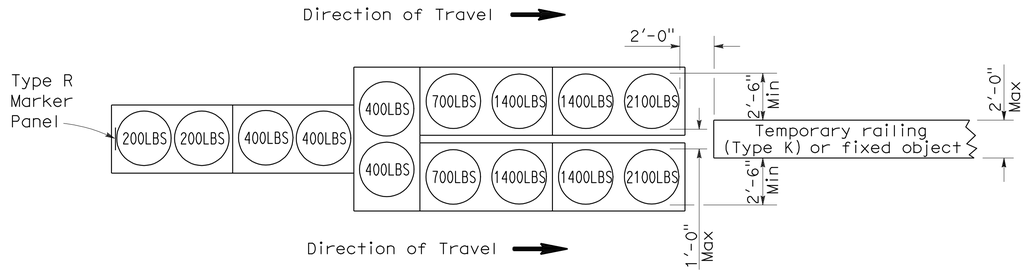

ARRAY 'TU14'

Approach speed 45 mph or more

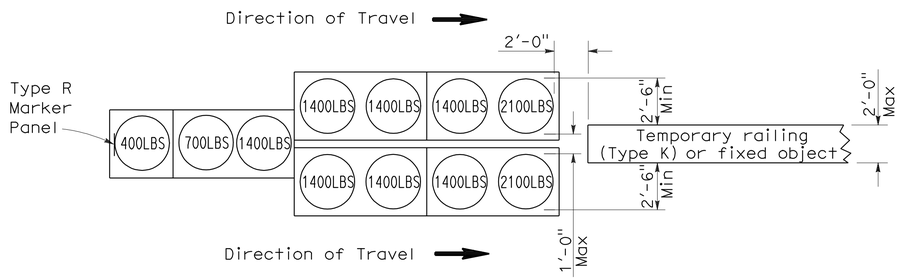

ARRAY 'TU11'

Approach speed less than 45 mph

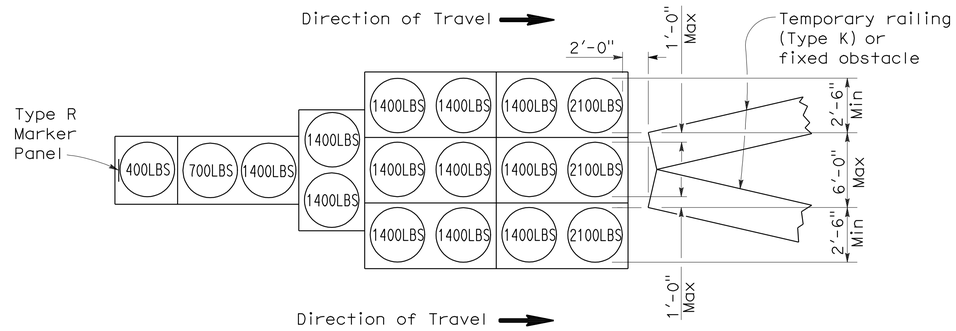

ARRAY 'TU17'

Approach speed less than 45 mph

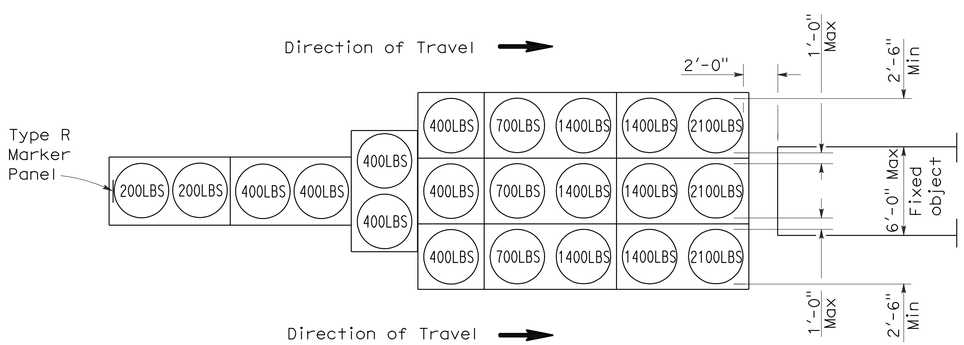

ARRAY 'TU21'

Approach speed 45 mph or more

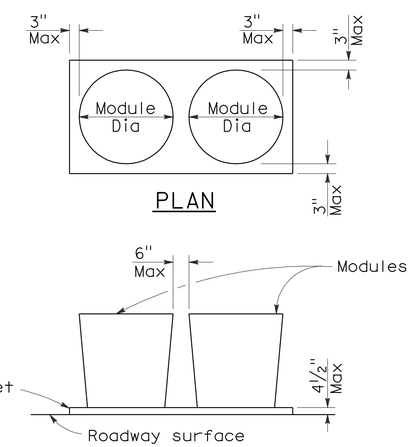

CRASH CUSHION PALLET DETAIL

See Note 7

NOTES:

1. (XXX) Indicates sand filled module location and weight of sand in pounds for each module. Module spacing is based on the greater diameter of the module.
2. All sand weights are nominal.
3. Temporary crash cushion arrays shall not encroach on the traveled way.
4. Place the top of Type R marker panel 1" below the module lid.
5. Refer to Standard Plan A73B for marker details.
6. Approach speeds indicated conform to NCHRP 350 Report criteria.
7. Use of pallets is optional.

STATE OF CALIFORNIA
DEPARTMENT OF TRANSPORTATION

TEMPORARY CRASH CUSHION, SAND FILLED (UNIDIRECTIONAL)

NO SCALE

RSP T1A DATED JUNE 6, 2008 SUPERSEDES STANDARD PLAN T1A
DATED MAY 1, 2006 - PAGE 211 OF THE STANDARD PLANS BOOK DATED MAY 2006.

REVISED STANDARD PLAN RSP T1A

2006 REVISED STANDARD PLAN RSP T1A

DIST	COUNTY	ROUTE	POST MILES TOTAL PROJECT	SHEET NO.	TOTAL SHEETS
07	LA,Ven	1,2,5,10, 57,60, etc.	Var	34	38

Randell D. Hiatt
REGISTERED CIVIL ENGINEER

June 6, 2008
PLANS APPROVAL DATE

REGISTERED PROFESSIONAL ENGINEER
Randell D. Hiatt
No. C50200
Exp. 6-30-09
CIVIL
STATE OF CALIFORNIA

The State of California or its officers or agents shall not be responsible for the accuracy or completeness of electronic copies of this plan sheet.

To accompany plans dated 11-30-09

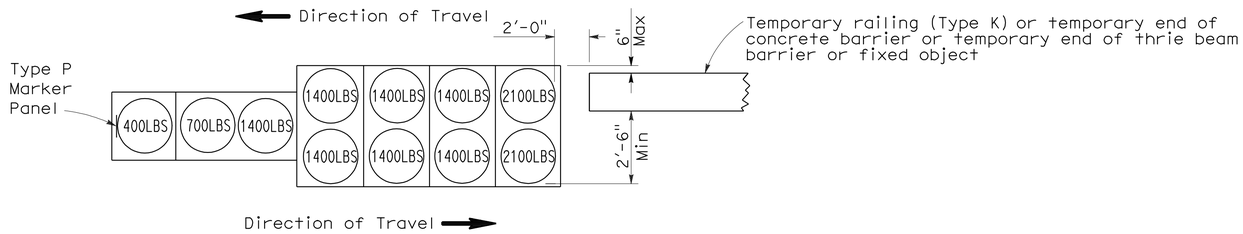

ARRAY 'TB11'

Approach speed less than 45 mph

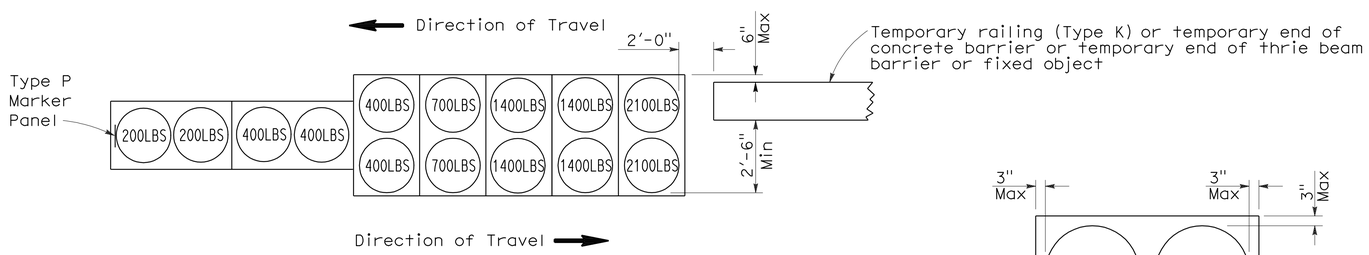

ARRAY 'TB14'

Approach speed 45 mph or more

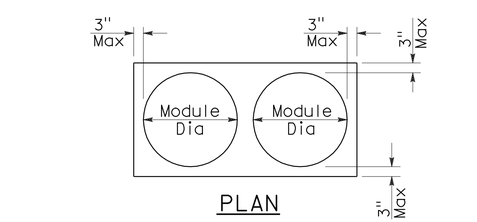

PLAN

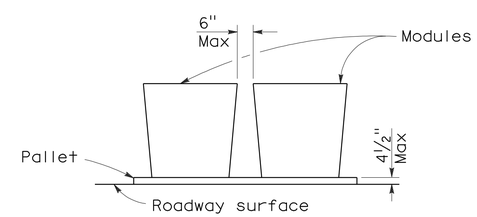

ELEVATION

CRASH CUSHION PALLET DETAIL

See Note 7

NOTES:

1. (XXX) Indicates sand filled module location and weight of sand in pounds for each module. Module spacing is based on the greater diameter of the module.
2. All sand weights are nominal.
3. Temporary crash cushion arrays shall not encroach on the traveled way.
4. Place the Type P marker panel so that the bottom of the panel rests upon the pallet.
5. Refer to Standard Plan A73B for marker details.
6. Approach speeds indicated conform to NCHRP 350 Report criteria.
7. Use of pallets is optional.

STATE OF CALIFORNIA
DEPARTMENT OF TRANSPORTATION

TEMPORARY CRASH CUSHION, SAND FILLED (BIDIRECTIONAL)

NO SCALE

RSP T1B DATED JUNE 6, 2008 SUPERSEDES STANDARD PLAN T1B
DATED MAY 1, 2006 - PAGE 212 OF THE STANDARD PLANS BOOK DATED MAY 2006.

REVISED STANDARD PLAN RSP T1B

2006 REVISED STANDARD PLAN RSP T1B

5-15-08

DIST	COUNTY	ROUTE	POST MILES TOTAL PROJECT	SHEET NO.	TOTAL SHEETS
07	LA,Ven	1,2,5,10, 57,60, etc.	Var	35	38

Randell D. Hiatt
REGISTERED CIVIL ENGINEER

June 6, 2008
PLANS APPROVAL DATE

REGISTERED PROFESSIONAL ENGINEER
Randell D. Hiatt
No. C50200
Exp. 6-30-09
CIVIL
STATE OF CALIFORNIA

The State of California or its officers or agents shall not be responsible for the accuracy or completeness of electronic copies of this plan sheet.

To accompany plans dated 11-30-09

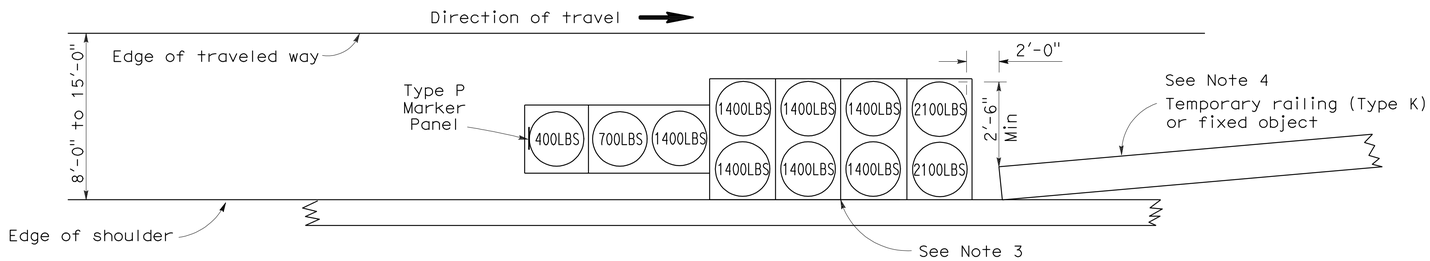

ARRAY 'TS11'

Approach speed less than 45 mph
See Note 9

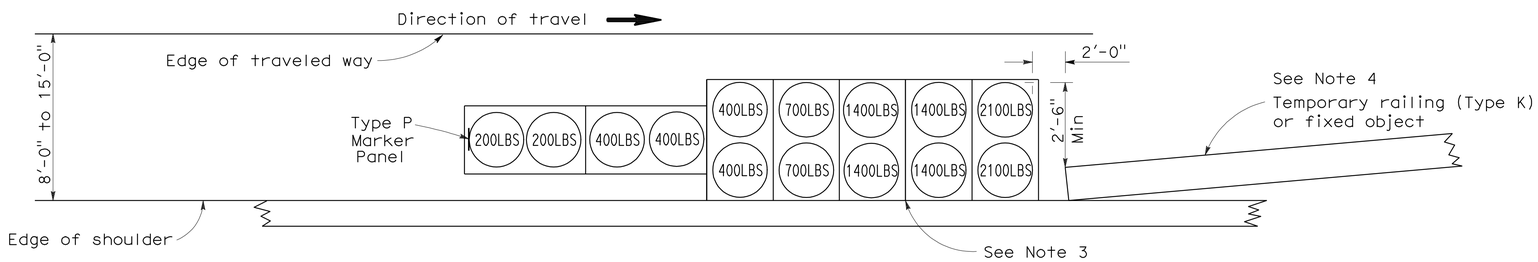

ARRAY 'TS14'

Approach speed 45 mph or more
See Note 9

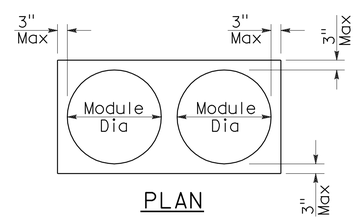

PLAN

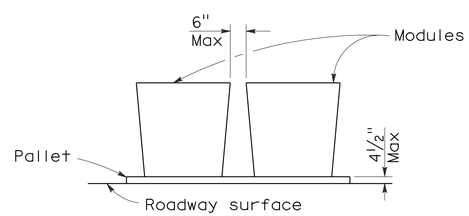

ELEVATION

CRASH CUSHION PALLET DETAIL

See Note 11

NOTES:

1. (XXX) Indicates sand filled module location and weight of sand in pounds for each module. Module spacing is based on the greater diameter of the module.
2. All sand weights are nominal.
3. The temporary crash cushion arrays shown on this plan shall be used only in locations where there will be traffic on one side of the temporary crash cushion array.
4. If the fixed object or approach end of the temporary railing is less than 15'-0" from the edge of traveled way, a temporary crash cushion is required in a construction or work zone.
5. Temporary crash cushion arrays shall not encroach on the traveled way.
6. Arrays for median shoulders shall conform to details shown on this plan for outside shoulders.
7. Place the Type P marker panel so that the bottom of the panel rests upon the pallet and faces traffic.
8. Refer to Standard Plan A73B for marker details.
9. For shoulder widths less than 8'-0", appropriate approved crash cushion protection, other than sand filled modules, shall be provided at fixed objects and at approach ends of temporary railing. The specific type of crash cushion shall be as shown on the project plans or as specified in the Special Provisions, or if not shown on the project plans or specified in the Special Provisions, shall be as approved by the Engineer.
10. Approach speeds indicated conform to NCHRP 350 Report criteria.
11. Use of pallets is optional.

STATE OF CALIFORNIA
DEPARTMENT OF TRANSPORTATION

TEMPORARY CRASH CUSHION, SAND FILLED (SHOULDER INSTALLATIONS)

NO SCALE

RSP T2 DATED JUNE 6, 2008 SUPERSEDES STANDARD PLAN T2
DATED MAY 1, 2006 - PAGE 213 OF THE STANDARD PLANS BOOK DATED MAY 2006.

REVISED STANDARD PLAN RSP T2

2006 REVISED STANDARD PLAN RSP T2

5-15-08

DIST	COUNTY	ROUTE	POST MILES TOTAL PROJECT	SHEET NO.	TOTAL SHEETS
07	LA,Ven	1,2,5,10, 57,60, etc.	Var	36	38

REGISTERED ELECTRICAL ENGINEER

October 5, 2007
PLANS APPROVAL DATE

REGISTERED PROFESSIONAL ENGINEER Jeffery G. McRae No. E14512 Exp. 6-30-08 ELECTRICAL STATE OF CALIFORNIA

The State of California or its officers or agents shall not be responsible for the accuracy or completeness of electronic copies of this plan sheet.

To accompany plans dated 11-30-09

ELECTROLIERS

STANDARD TYPES
15, 15D
15 STRUCTURE
21, 21D STRUCTURE
30
31
32
35
36-20A

High mast light pole

Double Arm lighting standard

Existing electrolier

Electrolier foundation (Future installation)

NOTES:

1. Luminaires shall be 310 W HPS when installed on Type 21, 21D, 30, 31, 32, 35 and 36-20A Standards, unless otherwise specified. Luminaires shall be 200 W HPS when installed on other type standards or poles, unless otherwise specified.
2. Luminaires shall be the cutoff type, ANSI Type III medium cutoff lighting distribution, unless otherwise specified.
3. Variations noted adjacent to symbol on project plans.

Electrolier (see project notes or project plans)

Luminaire on wood pole

STANDARD NOTES:

- AB — Abandon. If applied to conduit, remove conductors.
- BC — Install pull box in existing conduit run.
- BP — Pedestrian barricade, type as indicated on plan.
- CB — Install conduit into existing pull box.
- CC — Connect new and existing conduit. Remove existing conductors and install conductors as indicated.
- CF — Conduit to remain for future use. Remove conductors. Install pull wire or rope.
- DH — Detector handhole.
- FA — Foundation to be abandoned.
- IS — Install sign on signal mast arm.
- NS — No slip base on standard.
- PEC — Photoelectric control.
- PEU — Photoelectric unit.
- RC — Equipment or material to be removed and become the property of the Contractor.
- RE — Remove electrolier, fuses and ballast. Tape ends of conductors.
- RL — Relocate equipment.
- RR — Remove and reuse equipment.
- RS — Remove and salvage equipment.
- SC — Splice new to existing conductors.
- SD — Service disconnect.
- SF — Standard to remain for future use. Remove luminaire, pole conductors, fuses and ballast.
- TSP — Telephone service point.

ABBREVIATIONS AND EQUIPMENT DESIGNATIONS

PROPOSED	EXISTING	
BBS	bbs	Battery backup system
BC	bc	Bolt circle
C	C	Conduit
CCTV	cctv	Closed circuit television
CKT	ckt	Circuit
CMS	cms	Changeable message sign
DLC	dlc	Loop detector lead-in cable
EMS	ems	Extinguishable message sign
EVC	evc	Emergency vehicle cable
EVD	evd	Emergency vehicle detector
FB	fb	Flashing beacon
FBCA	fbca	Flashing beacon control assembly
FBS	fbs	Flashing beacon with slip base
FO	fo	Fiber optic
G	G	Ground (Equipment Grounding Conductor)
GFCI	GFCI	Ground fault circuit interrupt
HAR	har	Highway advisory radio
HEX	hex	Hexagonal
HPS	hps	High pressure sodium
IISNS	iisns	Internally illuminated street name sign
ISL	isl	Induction sign lighting
LED	led	Light emitting diode
LMA	lma	Luminaire mast arm
LPS	lps	Low pressure sodium
LTG	ltg	Lighting
LUM	lum	Luminaire
MAT	mat	Mast arm mounting vehicle signal faces, top attachment
MAS	mas	Mast arm mounting vehicle signal faces, side attachment
MAS-4A	mas-4A	Mast arm mounting vehicle signal faces, side attachment - 4 signal section
MAS-4B	mas-4B	
MAS-4C	mas-4C	
MAS-5A	mas-5A	Mast arm mounting vehicle signal faces, side attachment - 5 signal section
MAS-5B	mas-5B	
MC	mc	Mercury contactor
M/M	m/m	Multiple to multiple transformer
MT	mt	Conduit with pull wire or rope only
MTG	mtg	Mounting
	mv	Mercury vapor lighting fixture
N	N	Neutral (Grounded Conductor)
NC	NC	Normally closed
NO	NO	Normally open
PB	pb	Pull box
PEC	pec	Photoelectric control (Type I, II, III, IV or V as shown)
PED	ped	Pedestrian
PEU	peu	Photoelectric unit
PPB	ppb	Pedestrian push button
RL		Relocated equipment
RM	rm	Ramp metering
SB	sb	Slip base
SIC	sic	Signal interconnect cable
SIG	sig	Signal
SMA	sma	Signal mast arm
SNS	sns	Street name sign
SP	sp	Service point
TDC	tdc	Telephone demarcation cabinet
TMS	tms	Traffic monitoring station
TOS	tos	Traffic Operations System
VEH	veh	Vehicle
XFMR	xfmr	Transformer
COMM	comm	Communication
RWIS	rwis	Roadway weather information system

SOFFIT AND WALL MOUNTED LUMINAIRES

Pendant, 70 W HPS unless otherwise specified.

Flush, 70 W HPS unless otherwise specified.

Wall surface, 70 W HPS unless otherwise specified.

Existing soffit or wall luminaire to remain unmodified.

Existing soffit or wall luminaire to be modified as specified.

NOTE:

Arrow indicates "street side" of luminaire.

STATE OF CALIFORNIA
DEPARTMENT OF TRANSPORTATION

ELECTRICAL SYSTEMS (SYMBOLS AND ABBREVIATIONS)

NO SCALE

RSP ES-1A DATED OCTOBER 5, 2007 SUPERSEDES STANDARD PLAN ES-1A DATED MAY 1, 2006 - PAGE 400 OF THE STANDARD PLANS BOOK DATED MAY 2006.

REVISED STANDARD PLAN RSP ES-1A

2006 REVISED STANDARD PLAN RSP ES-1A

DIST	COUNTY	ROUTE	POST MILES TOTAL PROJECT	SHEET NO.	TOTAL SHEETS
07	LA,Ven	1,2,5,10, 57,60, etc.	Var	37	38

REGISTERED ELECTRICAL ENGINEER

October 5, 2007
PLANS APPROVAL DATE

REGISTERED PROFESSIONAL ENGINEER Jeffery G. McRae No. E14512 Exp. 6-30-08 ELECTRICAL STATE OF CALIFORNIA

The State of California or its officers or agents shall not be responsible for the accuracy or completeness of electronic copies of this plan sheet.

To accompany plans dated 11-30-09

CONDUIT

PROPOSED	EXISTING	
		Lighting Conduit, unless otherwise indicated or noted
		Traffic signal conduit
C	c	Communication conduit
T	t	Telephone conduit
F	f	Fire alarm conduit
FO	fo	Fiber optic conduit
		Conduit termination (RSP ES-9A C)
R	r	Conduit riser in/on structure or service pole

SERVICE EQUIPMENT

PROPOSED	EXISTING	
OH	oh	Overhead lines
U	U	Wood pole "U" indicates utility owned
		Pole guy with anchor
		Utility transformer - ground mounted
III		Service equipment enclosure type
		Service equipment enclosure door indicates front of enclosure
T	t	Telephone demarcation cabinet

POLE-MOUNTED SERVICE DESIGNATION

Type of installation

TYPE H SERVICE - 28'-10" ← Pole height above grade

ILLUMINATED OVERHEAD SIGN

PROPOSED	EXISTING	
		Overhead sign - Single post
		Overhead sign - Two post
		Overhead sign - Mounted on structure
		Overhead sign with electrolier

SIGNAL EQUIPMENT

PROPOSED	EXISTING	
		Pedestrian signal face
		Pedestrian push button post
		Pedestrian barricade
		Vehicle signal face (with backplate, 3-Section: red, yellow and green)
		Vehicle signal face with angle visors
PV	PV	Modifications of basic symbols: "L" indicates all non-arrow sections louvered "LG" indicates louvered green section only "PV" indicates 12" programmed visibility sections "8" indicates all 8" sections (only when specified)
		Type 15TS and Vehicle signal face
		Vehicle signal face with red, yellow and green left arrow sections
		Vehicle signal face with red and yellow sections and up green arrow
		Vehicle signal face (5 Section) with red, yellow and green sections and yellow and green right arrows
		Type 1 Standard and attached vehicle signal faces
		Standard with signal mast arm only and attached vehicle signal faces and internally illuminated street name sign
		Type 33 Standard, Left-turn vehicle signal face and sign
		Standard with luminaire and signal mast arms and attached vehicle signal faces
		Cantilever flashing beacon Type 9 Frame, with a sign unless otherwise specified or indicated
		Type 15-FBS Standard with two vehicle signal face sections with lens, backplate and visor with a sign
R	Y	Flashing beacon. One vehicle signal face section with lens, backplate and visor. "R" indicates red indication, "Y" indicates yellow indication
		Controller assembly. Door indicates front of cabinet

SIGNAL EQUIPMENT Cont

PROPOSED	EXISTING	
		Guard post
		Type 1 Standard with "Meter On" sign
		Emergency Vehicle detector

NOTES:

1. All signal sections shall be 12" unless shown otherwise.
2. Signal heads shall be provided with backplates unless shown otherwise.
3. Signal indication shall be LED.

STATE OF CALIFORNIA
DEPARTMENT OF TRANSPORTATION

ELECTRICAL SYSTEMS (SYMBOLS AND ABBREVIATIONS)

NO SCALE

RSP ES-1B DATED OCTOBER 5, 2007 SUPERCEDES STANDARD PLAN ES-1B DATED MAY 1, 2006 - PAGE 401 OF THE STANDARD PLANS BOOK DATED MAY 2006.

REVISED STANDARD PLAN RSP ES-1B

2006 REVISED STANDARD PLAN RSP ES-1B

DIST	COUNTY	ROUTE	POST MILES TOTAL PROJECT	SHEET NO.	TOTAL SHEETS
07	LA,Ven	1,2,5,10, 57,60, etc.	Var	38	38

REGISTERED ELECTRICAL ENGINEER

October 5, 2007
PLANS APPROVAL DATE

The State of California or its officers or agents shall not be responsible for the accuracy or completeness of electronic copies of this plan sheet.

REGISTERED PROFESSIONAL ENGINEER Jeffery G. McRae No. E14512 Exp. 6-30-08 ELECTRICAL STATE OF CALIFORNIA

To accompany plans dated 11-30-09

EQUIPMENT IDENTIFICATION

ILLUMINATED SIGN IDENTIFICATION NUMBER:

Sign No. 12345

10 ISL SCI 1.0

- Sign number - Place on post or structure
- Transformer rating (kVA)
- Lighting control type
- Number and type of fixtures

Do NOT place on standard or structure

ELECTROLIER OR EQUIPMENT IDENTIFICATION NUMBER:

12345 - 15'-0"

- Mast arm length, if shown. Do not place on standard or structure.
- Equipment number - Place on standard or structure. Existing equipment numbers are shown in parenthesis

CONDUIT AND CONDUCTOR IDENTIFICATION:

1½"C, 2#10, 15#14, 2 DLC

- Number and size of conductors and cables
- Size of conduit in inches

Ø1, Ø2, Ø2P, etc.	Traffic phase identification for signal faces, detectors and phase diagrams
1 2 3	Project note numbers
A B C	Equipment description, installation or item numbers
1 2 3	Conduit run numbers

SIGNAL AND LIGHTING STANDARD (TYPICAL DESIGNATION):

19A - 3 - 100

- Wind velocity = 100 mph
- Case 3 arm loading
- Standard type
- Standard Plan sheet number
- Detail number or letter

MISCELLANEOUS EQUIPMENT

PROPOSED	EXISTING	
CMS	cms	Changeable message sign
		Closed circuit television camera
		Highway advisory radio pole and antenna
EMS	ems	Extinguishable message sign
M V	m v	Detection device M = Microwave sensor V = Video image sensor

WIRING DIAGRAM LEGEND

P	Pole
CB	Circuit breaker
A	Ampere
V	Volt
M	Metered
UM	Unmetered
NB	Neutral bus
GB	Ground bus
G	Equipment grounding conductor
N	Grounded conductor (Neutral)

- External conductor
- Conductor or bus
- Tie point
- Contactor coil
- Contactor, Contact NO
- Terminal blocks
- Contactor, Contact NC
- Enclosure bond
- Grounding electrode
- Circuit breaker
- Receptacle

PULL BOXES

PROPOSED	EXISTING	
		Pull box-No. 5 unless otherwise indicated or noted.
3	9A(21)	Pull box-Additional designations or descriptions

3 = No. 3½ pull box
5 = No. 5 pull box
6 = No. 6 pull box
7 = No. 7 (Ceiling pull box)
8 = No. 8 (Pendant soffit pull box)
9 = No. 9 pull box
9A = No. 9A pull box

(C) = Communications pull box
(E) = Pull box with extension
(S) = Sprinkler control pull box
(21) = Anchor bolts and conduit for future installation of Type 21 Standard
(T) = Traffic pull box

VEHICLE DETECTORS

5 J 9 U

- Vehicle detector designation
- U = Upper
- L = Lower
- Slot number in input file
- Input file (I or J)
- Phase

PROPOSED	EXISTING	
		Type A detector loop. Outline of sawcut shown.
		Type B detector loop. Outline of sawcut shown.
		Type C detector loop. Outline of sawcut shown.
		Type D detector loop. Outline of sawcut shown.
		Type E detector loop. Outline of sawcut shown.
		Type Q detector loop. Outline of sawcut shown.
		Magnetic detector
DH	dh	Detector handhole
		Microwave or video detection zone

STATE OF CALIFORNIA
DEPARTMENT OF TRANSPORTATION

ELECTRICAL SYSTEMS (SYMBOLS AND ABBREVIATIONS)

NO SCALE

RSP ES-1C DATED OCTOBER 5, 2007 SUPERCEDES STANDARD PLAN ES-1C DATED MAY 1, 2006 - PAGE 402 OF THE STANDARD PLANS BOOK DATED MAY 2006.

REVISED STANDARD PLAN RSP ES-1C

2006 REVISED STANDARD PLAN RSP ES-1C