Dist	COUNTY	ROUTE	POST MILES TOTAL PROJECT	SHEET No.	TOTAL SHEETS
07	LA,Ven	1,2,5,10, 57,60, etc.	Var	21	38

REGISTERED ELECTRICAL ENGINEER 8/31/09 DATE

11-30-09
PLANS APPROVAL DATE

REGISTERED PROFESSIONAL ENGINEER PATRICK P. LUI No. E17534 Exp. 06/30/11 ELECTRICAL STATE OF CALIFORNIA

THE STATE OF CALIFORNIA OR ITS OFFICEEIA OR AGENTS SHALL NOT BE RESPONSIBLE FOR THE ACCURACY OR COMPLETENESS OF ELECTRONIC COPIES OF THIS PLAN SHEET.

NOTES:

1. CONNECTORIZING DONE BY THE CONTRACTOR AT THE MODEL 334 - TV CCTV CAMERA CONTROLLER CABINET.
2. ALL COMPONENTS AND CONNECTORS MUST MEET NEMA TS 2, 2.1.5.1, 2.1.5.2, 3.3.3.1, 3.3.3.2, 5.2.5 AND 5.2.6.

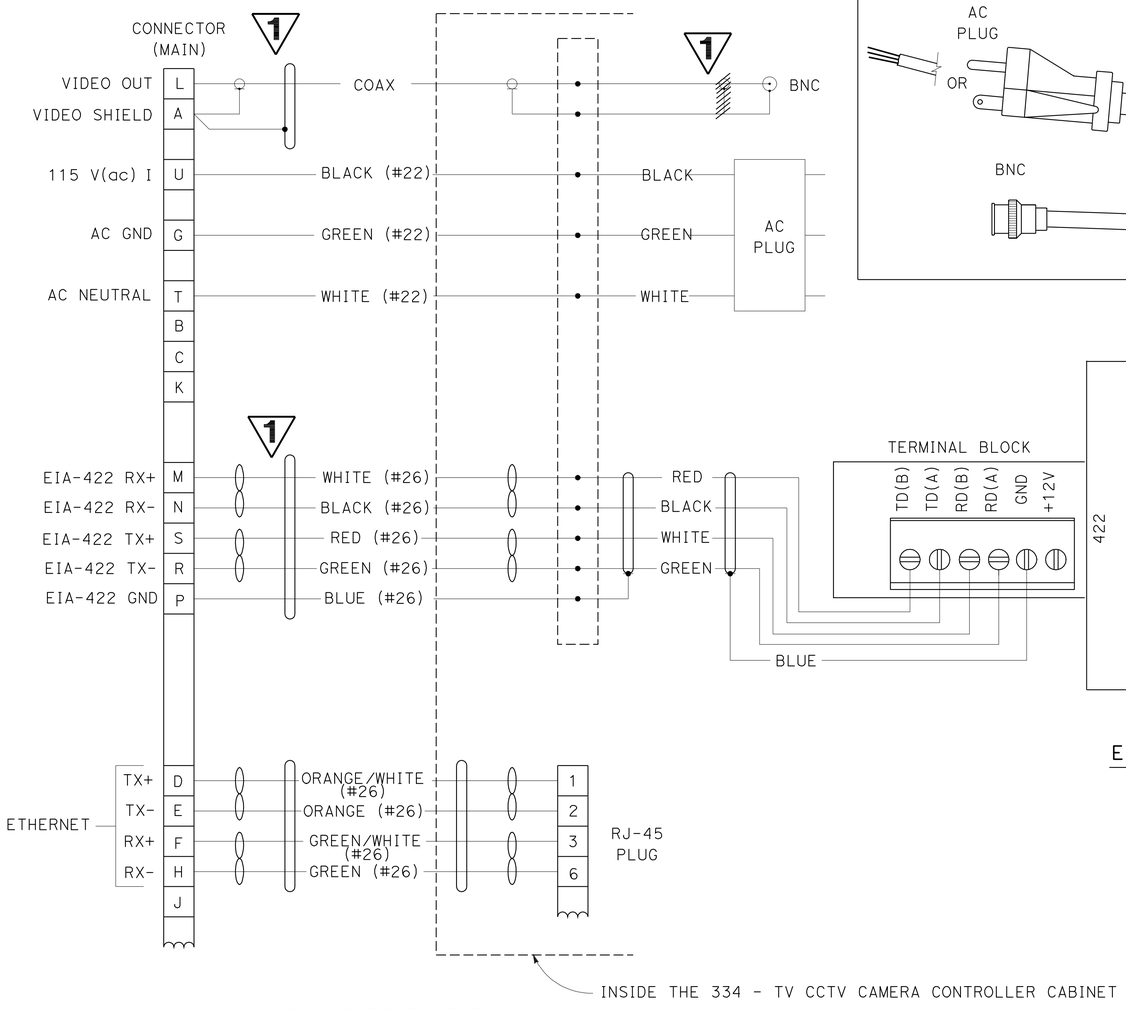

CABLE SCHEMATIC

SEE SHEET E-16 FOR DETAIL

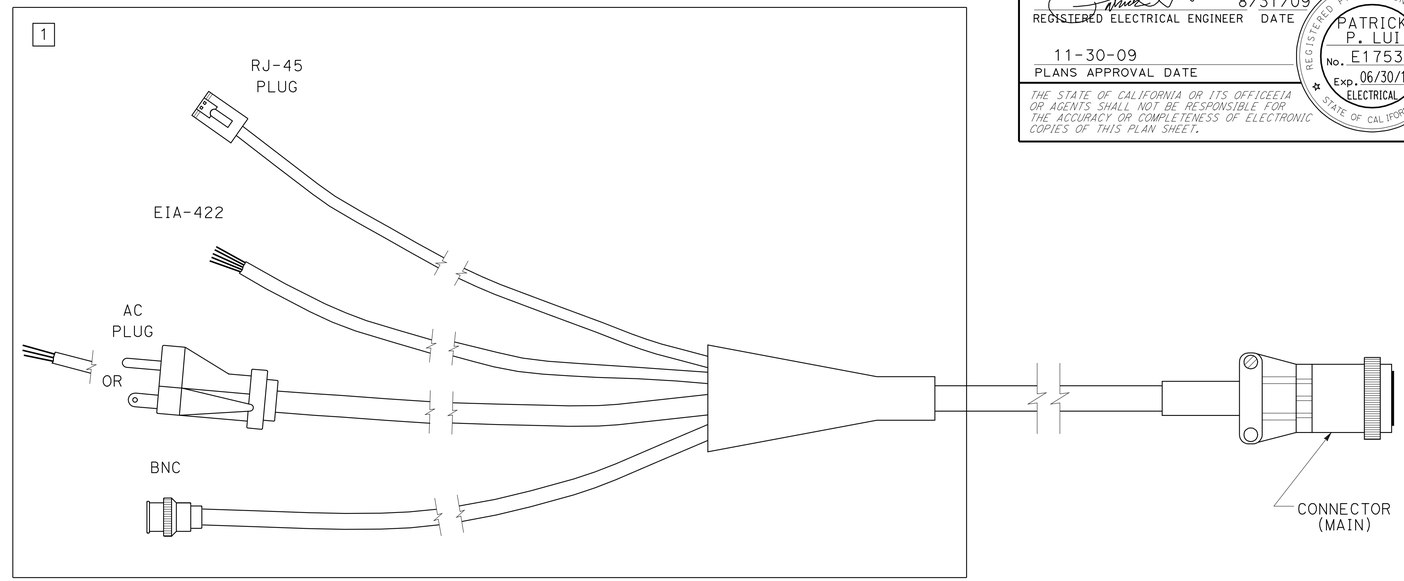

COMPOSITE VIDEO CABLE

EIA-232 TO EIA-422 CONVERTER

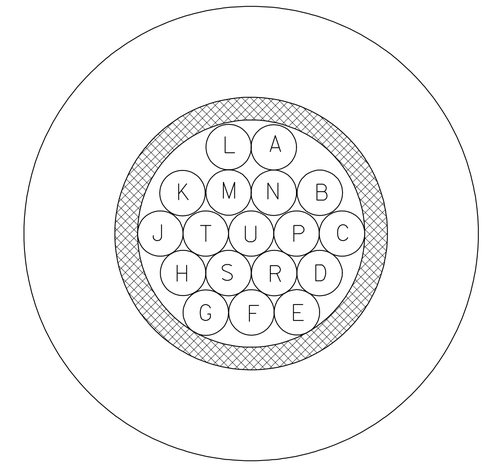

COMPOSITE VIDEO CABLE CROSS SECTION

MODIFY CLOSED CIRCUIT TELEVISION CAMERA
(COMPOSITE VIDEO CABLE DETAILS)

NO SCALE

E-15

1 REVISED PER ADDENDUM No. 1 DATED MARCH 17, 2010

THIS PLAN IS ACCURATE FOR ELECTRICAL WORK ONLY.

STATE OF CALIFORNIA - DEPARTMENT OF TRANSPORTATION
OFFICE OF ITS

FUNCTIONAL SUPERVISOR: JACQUELINE TAN
CALCULATED-DESIGNED BY: PATRICK P. LUI
CHECKED BY: JACQUELINE TAN
REVISED BY
DATE REVISED

LAST REVISION DATE PLOTTED => 16-MAR-2010
00-00-00 TIME PLOTTED => 10:18

Dist	COUNTY	ROUTE	POST MILES TOTAL PROJECT	SHEET No.	TOTAL SHEETS
07	LA,Ven	1,2,5,10, 57,60, etc.	Var	23	38

REGISTERED ELECTRICAL ENGINEER 8/31/09

11-30-09
PLANS APPROVAL DATE

REGISTERED PROFESSIONAL ENGINEER PATRICK P. LUI No. E17534 Exp. 06/30/11 ELECTRICAL STATE OF CALIFORNIA

THE STATE OF CALIFORNIA OR ITS OFFICEEIA OR AGENTS SHALL NOT BE RESPONSIBLE FOR THE ACCURACY OR COMPLETENESS OF ELECTRONIC COPIES OF THIS PLAN SHEET.

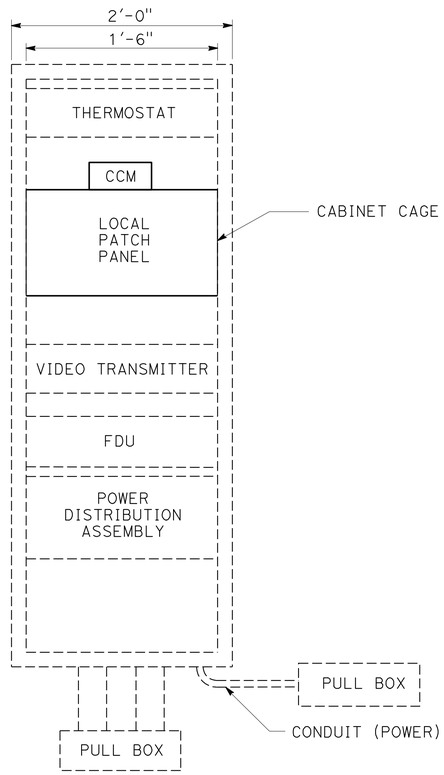

TYPICAL Exist MODEL 334-TV CCTV CAMERA CONTROLLER

CABINET EQUIPMENT LAYOUT

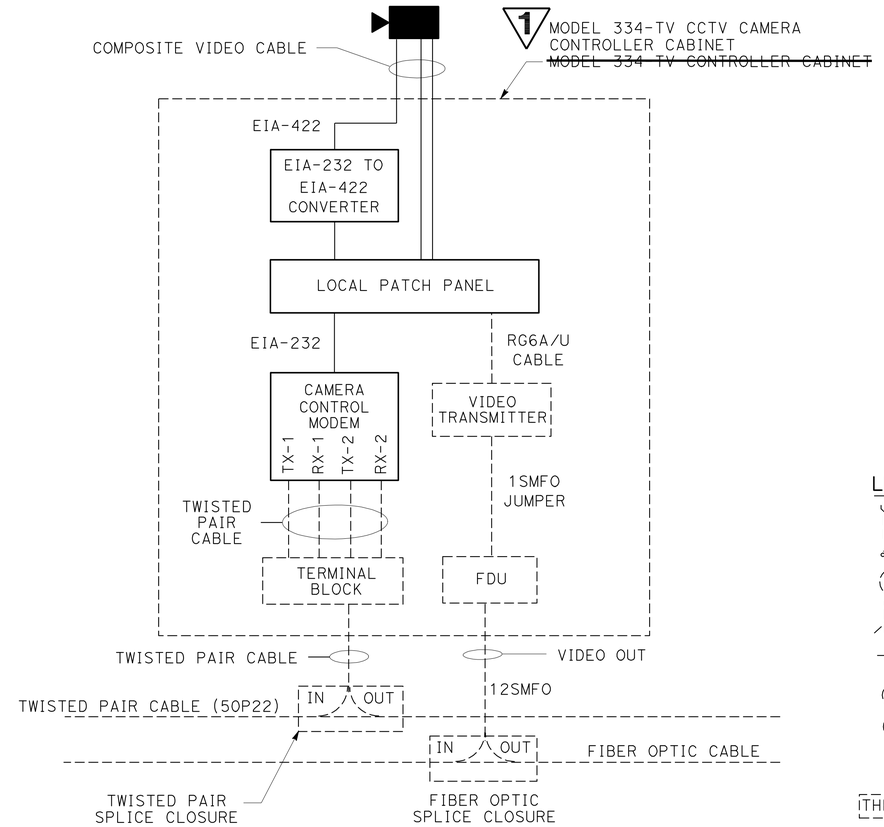

TYPICAL Exist MODEL 334-TV CCTV CAMERA CONTROLLER

CABINET WIRING DETAIL

LEGENDS: (E-17 TO E-19)

- SURGE PROTECTOR
- CIRCUIT BREAKER
- HT — HIGH TEMPERATURE RELAY COIL
- HT — RELAY CONTACT NORMALLY CLOSED
- 6 — WIRE SIZE, IF NOT INDICATED SHALL BE #12 AWG
- F — FAN
- L — INDICATOR LAMP
- THERMOSTATIC CONTROL
- THERMO — ADJUSTABLE CALIBRATED THERMOSTAT
- R — DUPLEX RECEPTACLE
- EQUIPMENT GROUND

ABBREVIATIONS: (E-17 TO E-19)

W/GFI	WITH GROUND FAULT INTERRUPTOR
HT	HIGH TEMPERATURE

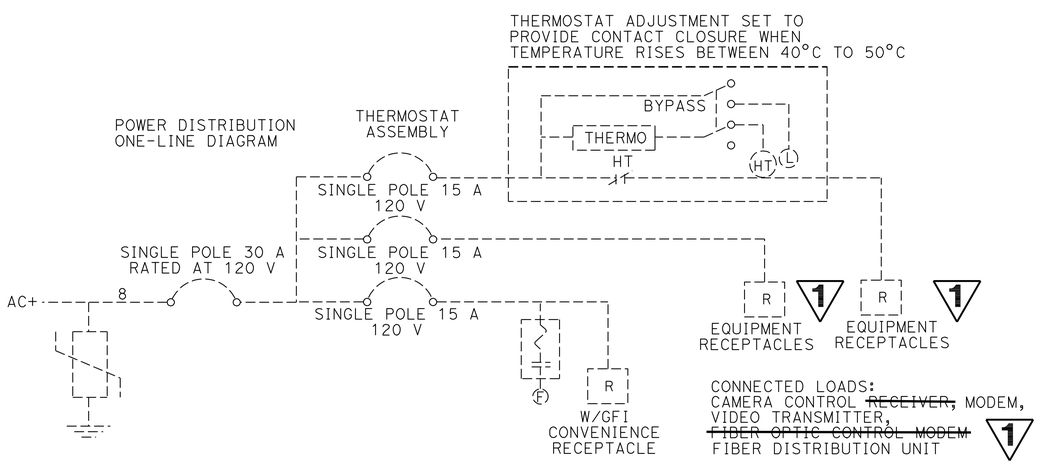

Exist POWER DISTRIBUTION ASSEMBLY

MODIFY CLOSED CIRCUIT TELEVISION CAMERA (MODEL 334-TV CONTROLLER CABINET DETAILS)

NO SCALE

1 **REVISED PER ADDENDUM No. 1 DATED MARCH 17, 2010**

THIS PLAN IS ACCURATE FOR ELECTRICAL WORK ONLY.

E-17

STATE OF CALIFORNIA - DEPARTMENT OF TRANSPORTATION
Caltrans® OFFICE OF ITS

FUNCTIONAL SUPERVISOR: JACQUELINE C. TAN
CALCULATED-DESIGNED BY: PATRICK P. LUI
CHECKED BY: JACQUELINE C. TAN
REVISED BY
DATE REVISED

LAST REVISION 00-00-00 | DATE PLOTTED => 16-MAR-2010 | TIME PLOTTED => 10:18

Dist	COUNTY	ROUTE	POST MILES TOTAL PROJECT	SHEET No.	TOTAL SHEETS
07	LA,Ven	1,2,5,10, 57,60, etc.	Var	24	38

REGISTERED ELECTRICAL ENGINEER 8/31/09 DATE

11-30-09
PLANS APPROVAL DATE

REGISTERED PROFESSIONAL ENGINEER PATRICK P. LUI No. E17534 Exp. 06/30/11 ELECTRICAL STATE OF CALIFORNIA

THE STATE OF CALIFORNIA OR ITS OFFICERS OR AGENTS SHALL NOT BE RESPONSIBLE FOR THE ACCURACY OR COMPLETENESS OF ELECTRONIC COPIES OF THIS PLAN SHEET.

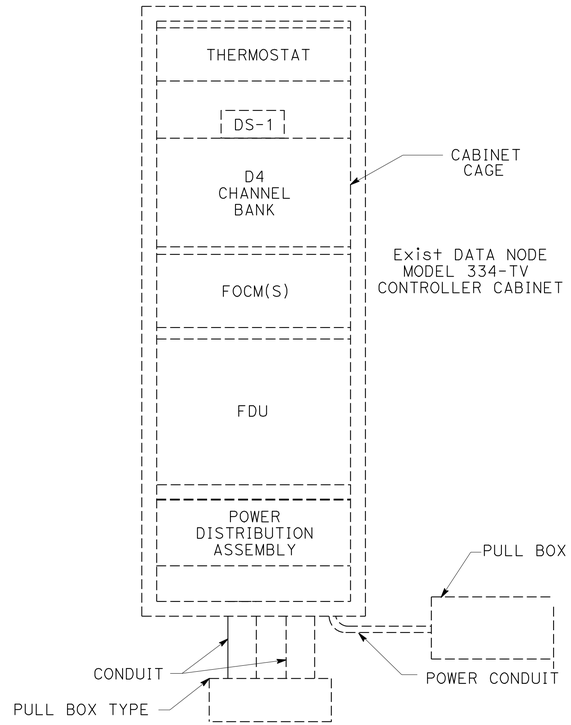

TYPICAL Exist DATA NODE CONTROLLER CABINET

SHOWN FOR TESTING PURPOSES ONLY

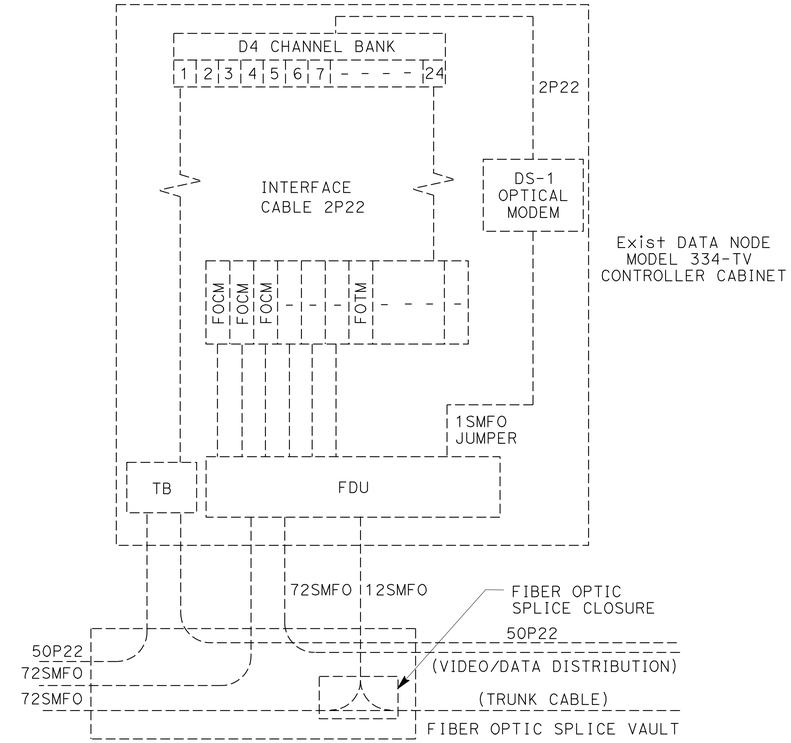

TYPICAL Exist DATA NODE WIRING DIAGRAM

SHOWN FOR TESTING PURPOSES ONLY

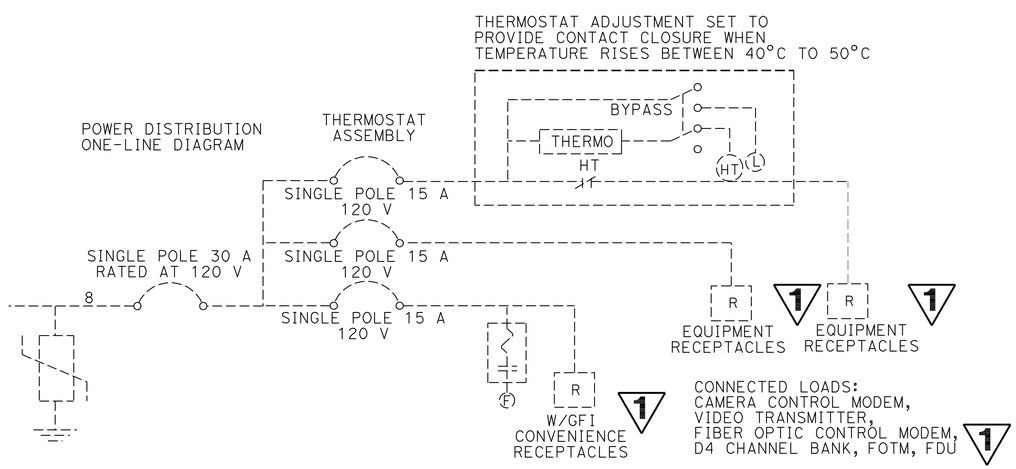

Exist POWER DISTRIBUTION ASSEMBLY

WORK AT EXISTING DATA NODES
(DATA NODE CABINET DETAILS FOR REFERENCE ONLY)

NO SCALE

1 **REVISED PER ADDENDUM No. 1 DATED MARCH 17, 2010**

THIS PLAN IS ACCURATE FOR ELECTRICAL WORK ONLY.

E-18

STATE OF CALIFORNIA - DEPARTMENT OF TRANSPORTATION
Caltrans OFFICE OF ITS

FUNCTIONAL SUPERVISOR: JACQUELINE TAN
CALCULATED-DESIGNED BY: PATRICK P. LUI
CHECKED BY: JACQUELINE TAN
REVISED BY
DATE REVISED

LAST REVISION DATE PLOTTED => 16-MAR-2010
00-00-00 TIME PLOTTED => 12:10

Dist	COUNTY	ROUTE	POST MILES TOTAL PROJECT	SHEET No.	TOTAL SHEETS
07	LA,Ven	1,2,5,10, 57,60, etc.	Var	25	38

REGISTERED ELECTRICAL ENGINEER 8/31/09 DATE

11-30-09
PLANS APPROVAL DATE

REGISTERED PROFESSIONAL ENGINEER PATRICK P. LUI No. E17534 Exp. 06/30/11 ELECTRICAL STATE OF CALIFORNIA

THE STATE OF CALIFORNIA OR ITS OFFICERS OR AGENTS SHALL NOT BE RESPONSIBLE FOR THE ACCURACY OR COMPLETENESS OF ELECTRONIC COPIES OF THIS PLAN SHEET.

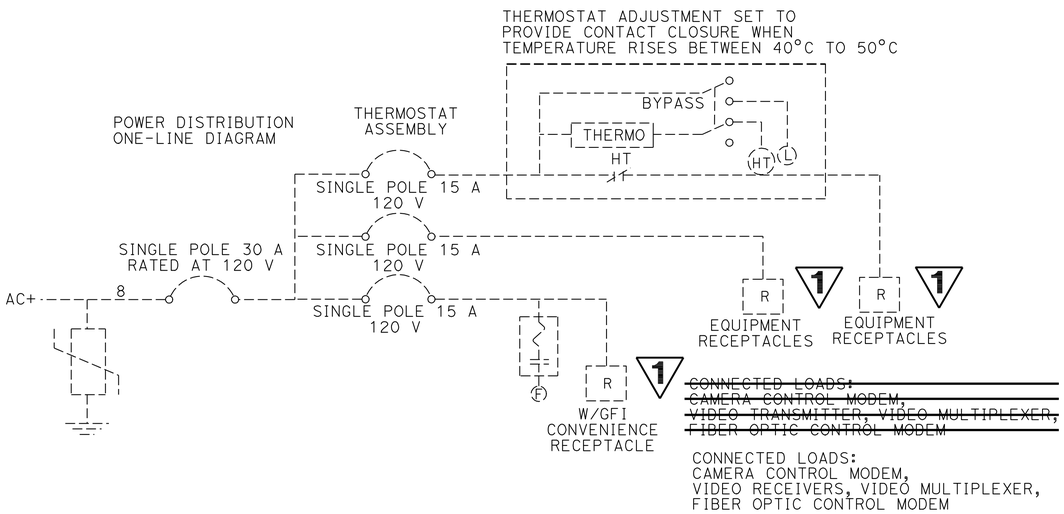

Exist POWER DISTRIBUTION ASSEMBLY

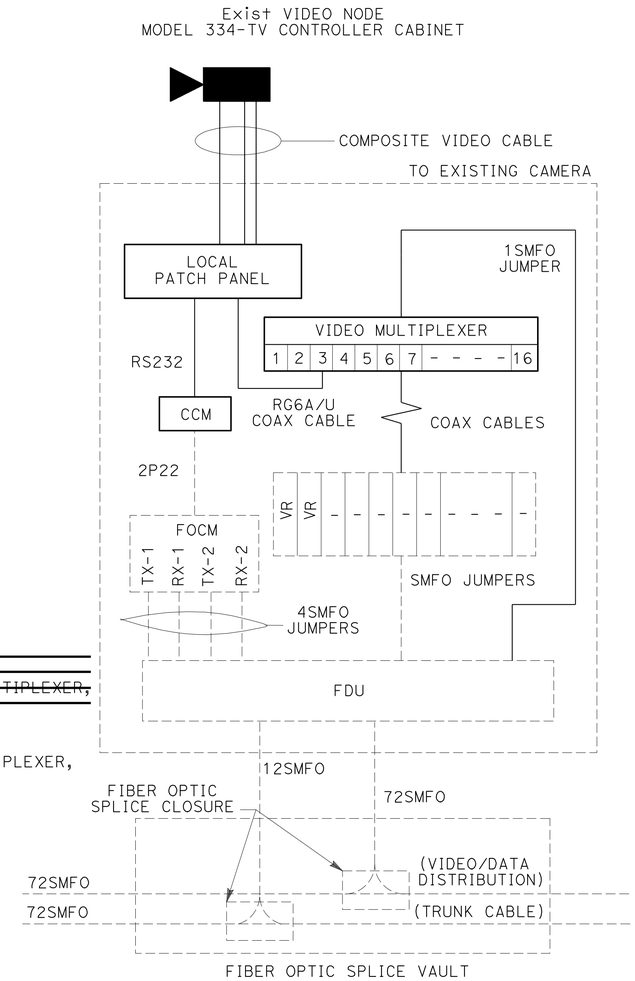

TYPICAL Exist VIDEO NODE WIRING DIAGRAM

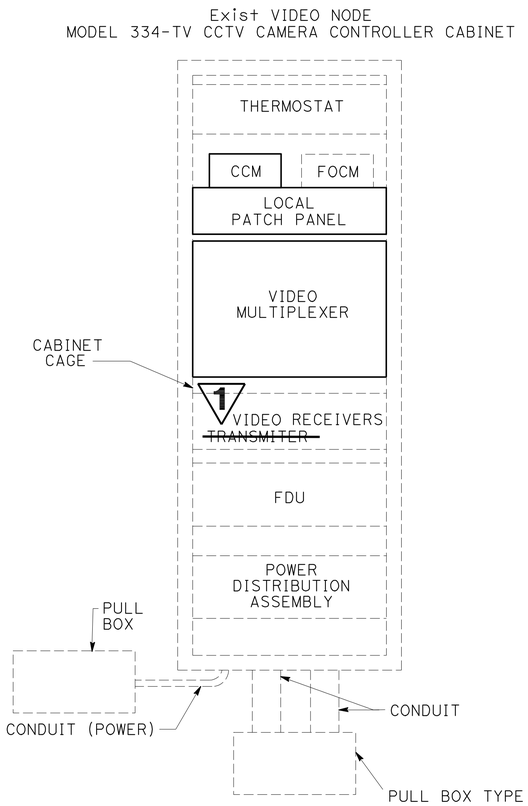

TYPICAL Exist VIDEO NODE MODEL 334-TV CCTV CAMERA CONTROLLER CABINET

THIS PLAN IS ACCURATE FOR ELECTRICAL WORK ONLY.

1 **REVISED PER ADDENDUM No. 1 DATED MARCH 17, 2010**

WORK AT EXISTING VIDEO NODES
(VIDEO NODE CABINET DETAILS)

NO SCALE

E-19

STATE OF CALIFORNIA - DEPARTMENT OF TRANSPORTATION
Caltrans OFFICE OF ITS

FUNCTIONAL SUPERVISOR: JACQUELINE TAN
CALCULATED-DESIGNED BY: PATRICK P. LUI
CHECKED BY: JACQUELINE TAN
REVISED BY
DATE REVISED

LAST REVISION DATE PLOTTED => 16-MAR-2010
00-00-00 TIME PLOTTED => 13:45