ACIM-005-3(047)E

Dist	COUNTY	ROUTE	POST MILES TOTAL PROJECT	SHEET No.	TOTAL SHEETS
07	LA	5	R73.2/R88.6	1	130

STATE OF CALIFORNIA
DEPARTMENT OF TRANSPORTATION

PROJECT PLANS FOR CONSTRUCTION ON
STATE HIGHWAY
IN LOS ANGELES COUNTY
ABOUT 13 MILES NORTH OF CASTAIC
FROM 1.2 MILES SOUTH OF VISTA DEL LAGO OVERCROSSING TO KERN COUNTY LINE

TO BE SUPPLEMENTED BY STANDARD PLANS DATED MAY 2006

INDEX OF PLANS

SHEET No.	DESCRIPTION
1	TITLE AND LOCATION MAP
2-7	TYPICAL CROSS SECTIONS
8-14	CONSTRUCTION DETAILS
15-18	DRAINAGE DETAILS AND QUANTITIES
19	CONSTRUCTION AREA SIGNS
20-35	MOTORIST INFORMATION
36-62	TRAFFIC HANDLING PLANS, DETAILS AND QUANTITIES
63-65	PAVEMENT DELINEATION QUANTITIES
66	SIGN DETAILS AND QUANTITIES
67-73	SUMMARY OF QUANTITIES
74-78	ELECTRICAL PLANS
79-126	REVISED AND NEW STANDARD PLANS

STRUCTURE PLANS

127-130	ROUTE 5 BRIDGES

THE STANDARD PLANS LIST APPLICABLE TO THIS CONTRACT IS INCLUDED IN THE NOTICE TO BIDDERS AND SPECIAL PROVISIONS BOOK.

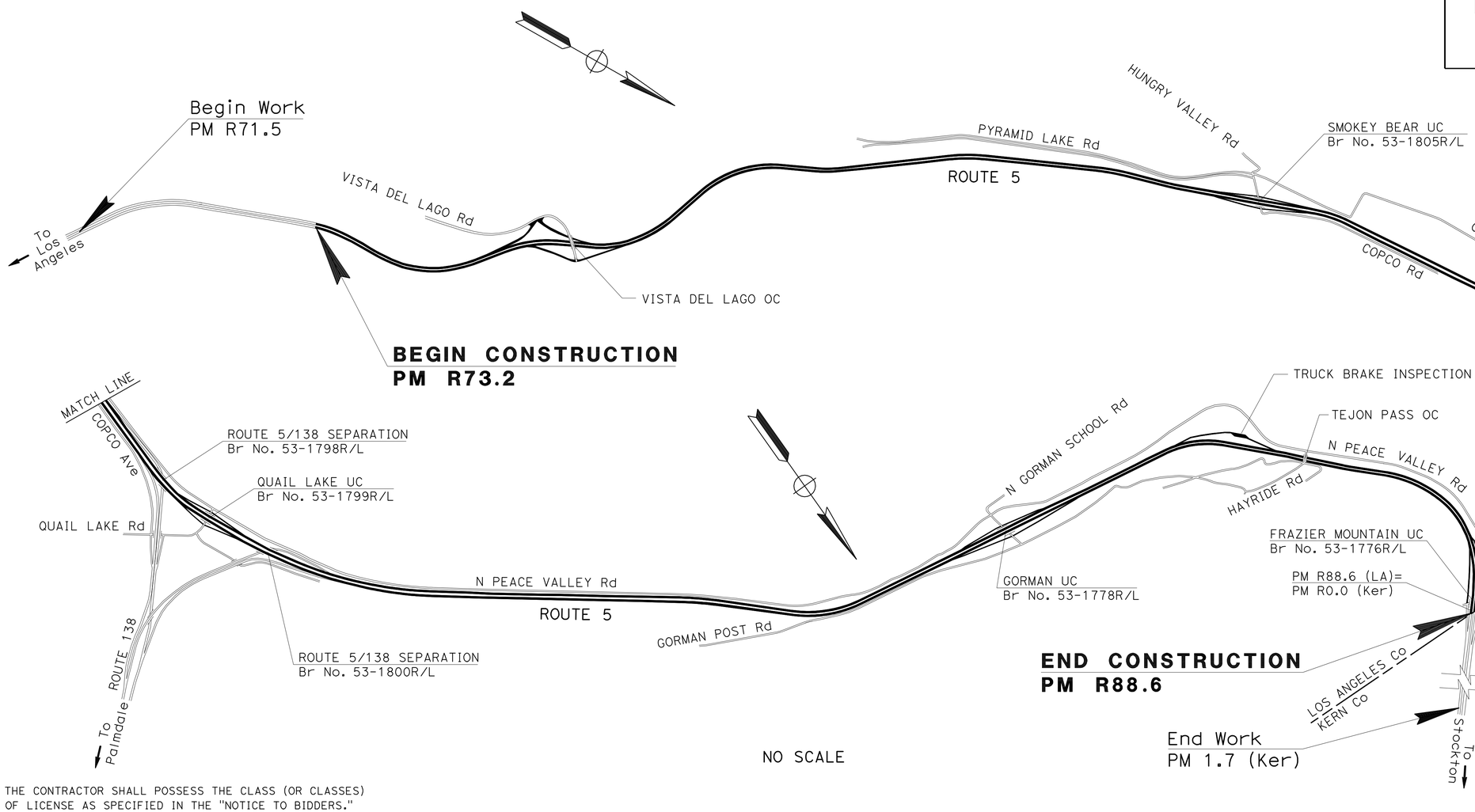

THE CONTRACTOR SHALL POSSESS THE CLASS (OR CLASSES) OF LICENSE AS SPECIFIED IN THE "NOTICE TO BIDDERS."

PROJECT MANAGER: ASHRAF A HABBAK
DESIGN ENGINEER: DEBORAH WONG

5-18-11
PROJECT ENGINEER REGISTERED CIVIL ENGINEER — DATE

REGISTERED PROFESSIONAL ENGINEER — DEBORAH WONG — No. 58313 — Exp. 6/30/12 — CIVIL — STATE OF CALIFORNIA

July 11, 2011
PLANS APPROVAL DATE

THE STATE OF CALIFORNIA OR ITS OFFICERS OR AGENTS SHALL NOT BE RESPONSIBLE FOR THE ACCURACY OR COMPLETENESS OF SCANNED COPIES OF THIS PLAN SHEET.

CONTRACT No.	07-252804
PROJECT ID	0700000455

LAST REVISION 00-00-00 | DATE PLOTTED => 18-AUG-2011 | TIME PLOTTED => 13:46

Dist	COUNTY	ROUTE	POST MILES TOTAL PROJECT	SHEET No.	TOTAL SHEETS
07	LA	5	R73.2/R88.6	2	130

REGISTERED CIVIL ENGINEER 5-19-11 DATE

07-11-11
PLANS APPROVAL DATE

REGISTERED PROFESSIONAL ENGINEER JEFFREY MILLER No. 69162 Exp. 6/30/12 CIVIL STATE OF CALIFORNIA

THE STATE OF CALIFORNIA OR ITS OFFICERS OR AGENTS SHALL NOT BE RESPONSIBLE FOR THE ACCURACY OR COMPLETENESS OF SCANNED COPIES OF THIS PLAN SHEET.

NOTES:

1. DIMENSIONS OF THE PAVEMENT STRUCTURES (STRUCTURAL SECTIONS) ARE SUBJECT TO TOLERANCES SPECIFIED IN THE STANDARD SPECIFICATIONS.
2. SUPERELEVATIONS AS SHOWN OR AS DIRECTED BY THE ENGINEER.
3. SEE QUANTITY SHEETS FOR LIMITS OF INDIVIDUAL SLAB REPLACEMENT (RSC) AND GRIND CONCRETE PAVEMENT. EXACT LOCATIONS WILL BE DETERMINED BY THE ENGINEER.
4. EXISTING UTILITY FACILITIES ARE NOT SHOWN ON THESE PLANS.
5. FOR ACCURATE R/W DATA, CONTACT RIGHT OF WAY ENGINEERING AT THE DISTRICT OFFICE.
6. FOR LOCATION AND TYPES OF HMA DIKE, SEE SHEET C-1, AND Q-4 AND Q-5.

ABBREVIATIONS:

LCB-RS	LEAN CONCRETE BASE (RAPID SETTING)
RSC	RAPID STRENGTH CONCRETE
RUMBLE STRIP (HMA)	SHOULDER RUMBLE STRIP (HMA, GROUND-IN INDENTATIONS)
RUMBLE STRIP (PCC)	SHOULDER RUMBLE STRIP (CONCRETE PAVEMENT, GROUND-IN INDENTATIONS)

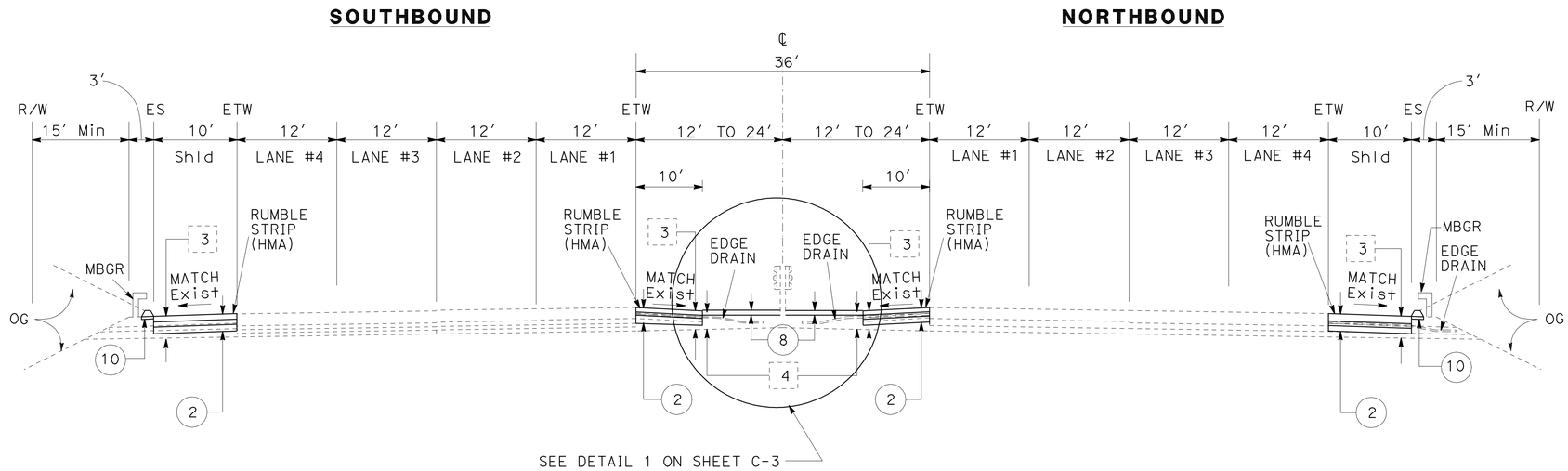

PM R73.2/R73.7

TYPICAL PAVEMENT STRUCTURAL SECTIONS

1. 0.35′ COLD PLANE AC PAVEMENT
   0.35′ HMA (TYPE A)
2. 0.40′ HMA (TYPE A)
   0.35′ LCB
   0.70′ CI 3 AB
3. 0.67′ INDIVIDUAL SLAB REPLACEMENT (RSC)
4. 1.25′ JPCP
   0.50′ LCB
   0.70′ CI 3 AB
5. 0.90′ JPCP (RSC)
   ---- BOND BREAKER
   0.40′ LCB-RS
   0.60′ CI 3 AB
6. 1.00′ JPCP
   0.35′ LCB
7. 0.40′ HMA (TYPE A)
   0.35′ LCB
8. 0.25′ HMA (MISCELLANEOUS AREA)
9. 1.25′ JPCP (RSC)
   ---- BOND BREAKER
   0.50′ LCB-RS
   0.70′ CI 3 AB
10. 0.20′ HMA (TYPE A)

1. EXISTING
   0.35′ AC
   ---- PAVEMENT REINFORCING FABRIC
   0.75′ PCC
   0.50′ CTB
   0.25′ AB
   0.50′ AS
2. EXISTING
   0.35′ AC
   ---- PAVEMENT REINFORCING FABRIC
   0.67′ PCC
   0.35′ CTB
   0.50′ AB
   0.50′ AS
3. EXISTING
   0.70′ AC
   0.65′ AB
   Var AS
4. EXISTING
   Var AC
   Var AS
5. EXISTING
   0.75′ PCC
   0.50′ CTB
   0.25′ AB
   0.50′ AS
6. EXISTING
   0.67′ PCC
   0.33′ CTB
   0.50′ AB
   0.50′ AS
7. EXISTING
   0.35′ AC
   0.66′ AB
   Var AS
8. EXISTING
   0.30′ AC
   0.50′ AB
   Var AS
9. EXISTING
   0.75′ PCC
   0.33′ CTB
   0.25′ AB
   0.67′ AS
10. EXISTING
    0.67′ PCC
    0.33′ CTB
    0.33′ AB
    0.67′ AS
11. EXISTING
    Var 0.16′
    TO 0.33′ AC
    0.50′ AB
    Var AS
12. EXISTING
    Var 0.16′
    TO 0.33′ AC
    0.33′ AB
    Var AS
13. EXISTING
    0.33′ AC
    0.67′ CI 2 AB
    1.00′ CI 4 AS
    OR
    0.67′ CI 4 AS
14. EXISTING
    1.00′ JPCP
    0.50′ LCB
    0.70 CI 3 AB

TYPICAL CROSS SECTIONS

NO SCALE

X-1

STATE OF CALIFORNIA - DEPARTMENT OF TRANSPORTATION
Caltrans MAINTENANCE ENGINEERING

FUNCTIONAL SUPERVISOR: MONIR IBRAHIM
CALCULATED-DESIGNED BY: JEFFREY MILLER
CHECKED BY: MICHAEL DUONG
REVISED BY / DATE REVISED

LAST REVISION 00-00-00
DATE PLOTTED => 18-AUG-2011
TIME PLOTTED => 13:46

Dist	COUNTY	ROUTE	POST MILES TOTAL PROJECT	SHEET No.	TOTAL SHEETS
07	LA	5	R73.2/R88.6	3	130

REGISTERED CIVIL ENGINEER 5-19-11 DATE

07-11-11
PLANS APPROVAL DATE

REGISTERED PROFESSIONAL ENGINEER JEFFREY MILLER No. 69162 Exp. 6/30/12 CIVIL STATE OF CALIFORNIA

THE STATE OF CALIFORNIA OR ITS OFFICERS OR AGENTS SHALL NOT BE RESPONSIBLE FOR THE ACCURACY OR COMPLETENESS OF SCANNED COPIES OF THIS PLAN SHEET.

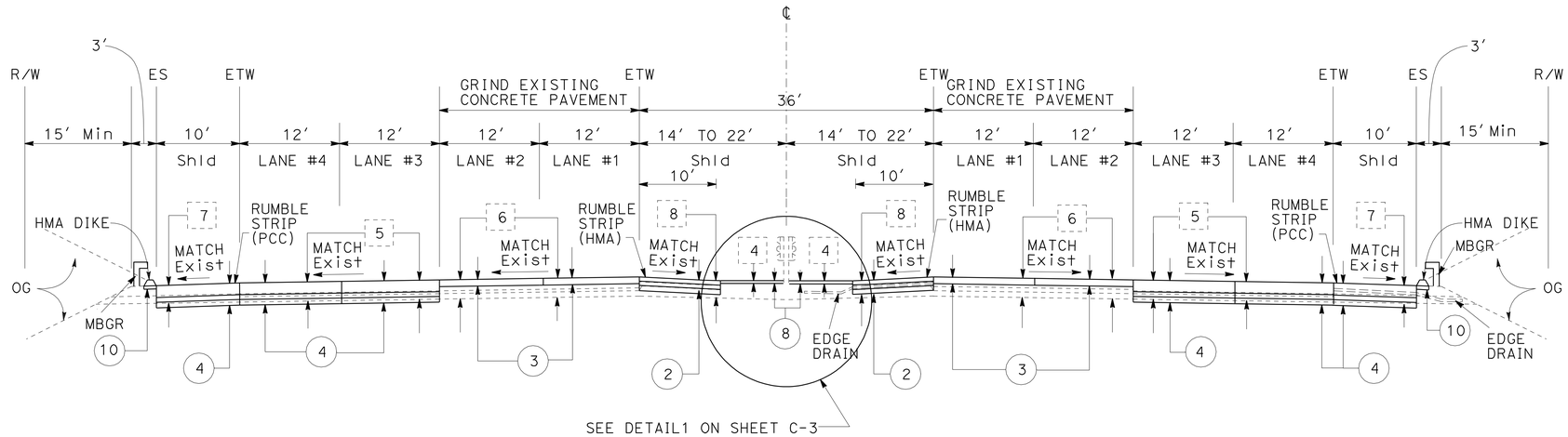

SOUTHBOUND
PM R77.7/R78.2

NORTHBOUND
PM R73.7/R75.3
PM R75.4/R78.2

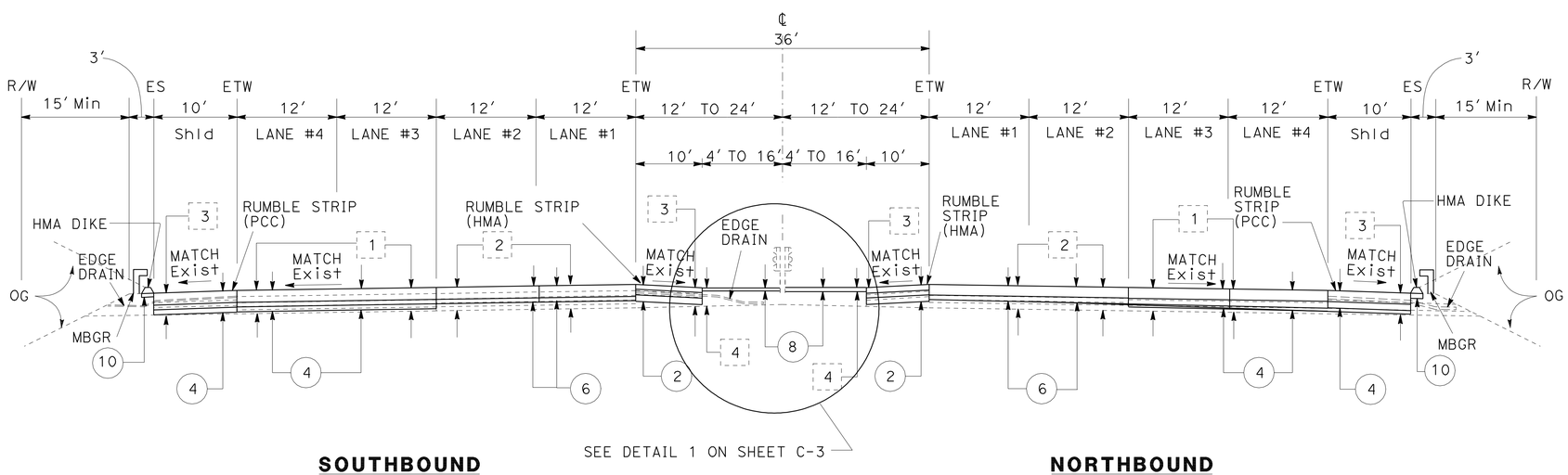

SOUTHBOUND
PM R73.7/R77.7

NORTHBOUND
PM R75.3/R75.4

TYPICAL CROSS SECTIONS

NO SCALE

X-2

STATE OF CALIFORNIA - DEPARTMENT OF TRANSPORTATION
Caltrans MAINTENANCE ENGINEERING

FUNCTIONAL SUPERVISOR: MONIR IBRAHIM
CALCULATED-DESIGNED BY: JEFFREY MILLER
CHECKED BY: DEBBIE WONG
REVISED BY / DATE REVISED

LAST REVISION 00-00-00 | DATE PLOTTED => 18-AUG-2011 | TIME PLOTTED => 13:46

Dist	COUNTY	ROUTE	POST MILES TOTAL PROJECT	SHEET No.	TOTAL SHEETS
07	LA	5	R73.2/R88.6	4	130

REGISTERED CIVIL ENGINEER 5-19-11 DATE

07-11-11
PLANS APPROVAL DATE

REGISTERED PROFESSIONAL ENGINEER JEFFREY MILLER No. 69162 Exp. 6/30/12 CIVIL STATE OF CALIFORNIA

THE STATE OF CALIFORNIA OR ITS OFFICERS OR AGENTS SHALL NOT BE RESPONSIBLE FOR THE ACCURACY OR COMPLETENESS OF SCANNED COPIES OF THIS PLAN SHEET.

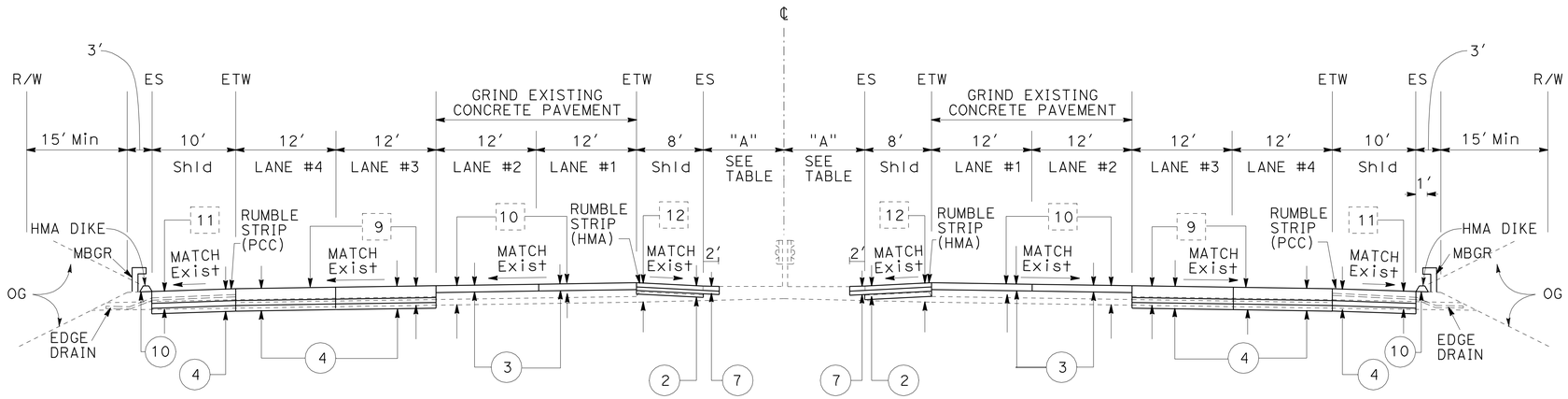

SOUTHBOUND **NORTHBOUND**

PM R80.8/82.7, R83.1/R84.7
PM R84.7/R86.1, R86.1/R86.9

PM	"A"
R80.8/R82.7	2′ TO 58′
R83.1/R84.7	2′ TO 58′
R84.7/R86.1	4′ TO 20′
R86.1/R86.9	10′ TO 14′

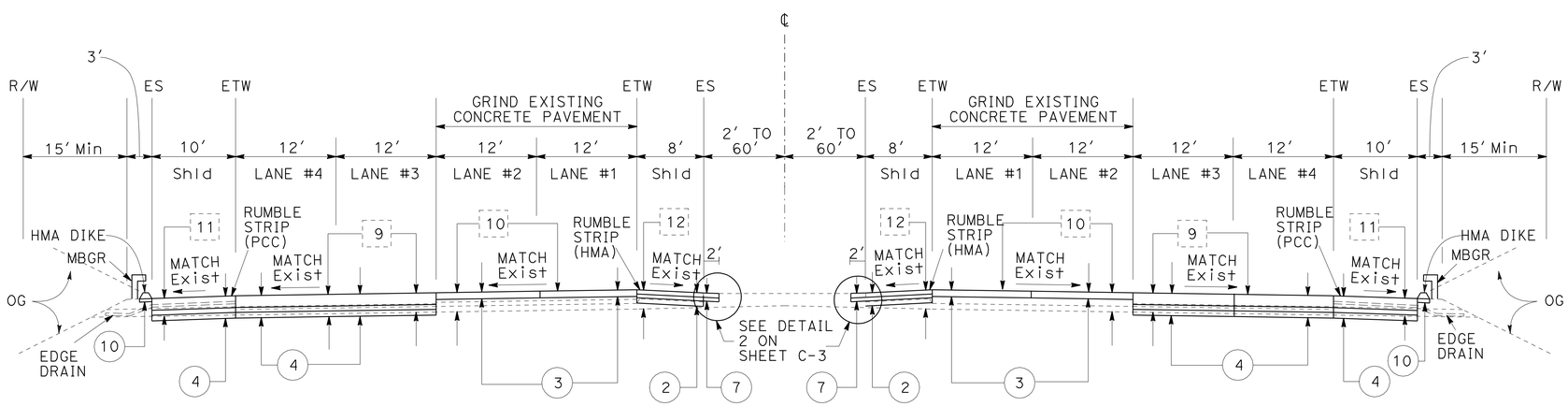

SOUTHBOUND **NORTHBOUND**

PM R78.2/80.8

TYPICAL CROSS SECTIONS

NO SCALE

X-3

REVISED BY | DATE REVISED
JEFFREY MILLER | MICHAEL DUONG
CALCULATED-DESIGNED BY | CHECKED BY
FUNCTIONAL SUPERVISOR
MONIR IBRAHIM

STATE OF CALIFORNIA - DEPARTMENT OF TRANSPORTATION
Caltrans MAINTENANCE ENGINEERING

LAST REVISION 00-00-00 | DATE PLOTTED => 18-AUG-2011 | TIME PLOTTED => 13:46

Dist	COUNTY	ROUTE	POST MILES TOTAL PROJECT	SHEET No.	TOTAL SHEETS
07	LA	5	R73.2/R88.6	5	130

REGISTERED CIVIL ENGINEER 5-19-11 DATE

07-11-11
PLANS APPROVAL DATE

REGISTERED PROFESSIONAL ENGINEER JEFFREY MILLER No. 69162 Exp. 6/30/12 CIVIL STATE OF CALIFORNIA

THE STATE OF CALIFORNIA OR ITS OFFICERS OR AGENTS SHALL NOT BE RESPONSIBLE FOR THE ACCURACY OR COMPLETENESS OF SCANNED COPIES OF THIS PLAN SHEET.

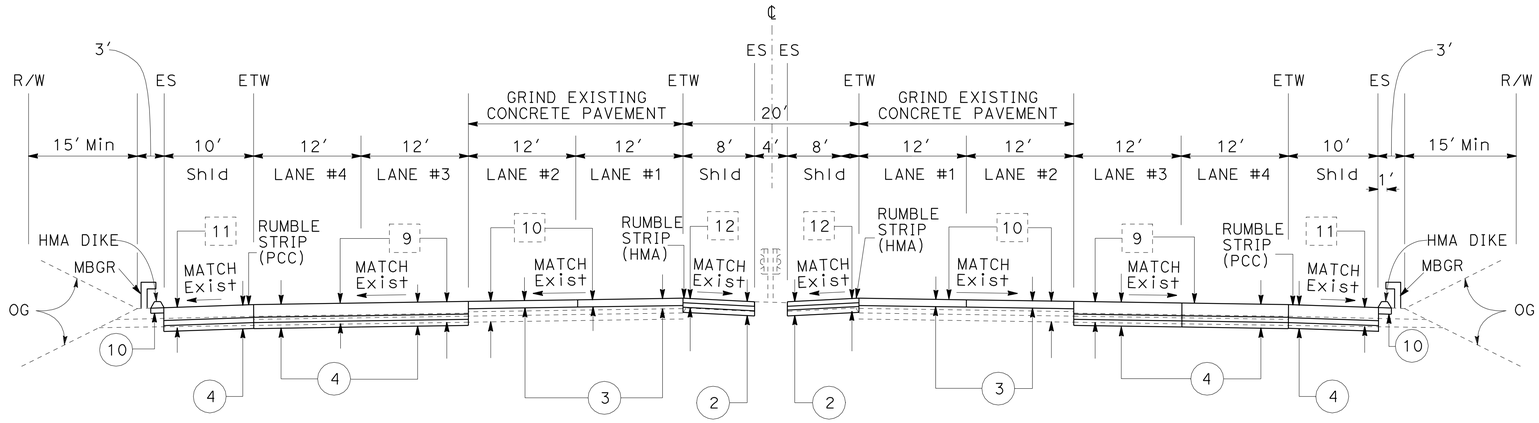

SOUTHBOUND **NORTHBOUND**

PM R86.9/R87.8

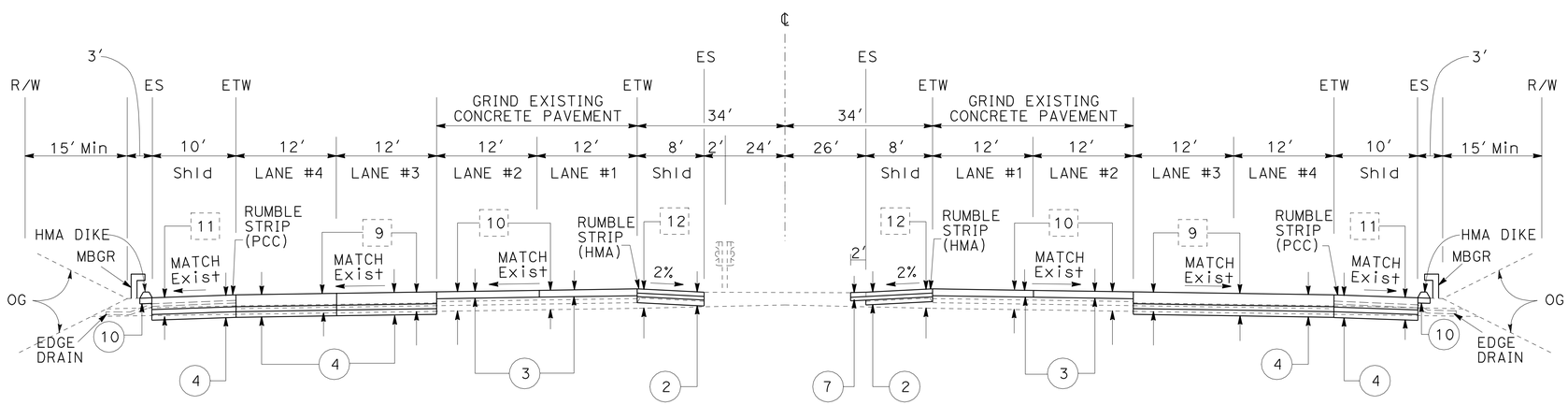

SOUTHBOUND **NORTHBOUND**

PM R82.7/R83.1

TYPICAL CROSS SECTIONS

NO SCALE

X-4

STATE OF CALIFORNIA - DEPARTMENT OF TRANSPORTATION
Caltrans MAINTENANCE ENGINEERING

FUNCTIONAL SUPERVISOR: MONIR IBRAHIM
CALCULATED-DESIGNED BY: JEFFREY MILLER
CHECKED BY: MICHAEL DUONG
REVISED BY / DATE REVISED

LAST REVISION 00-00-00 | DATE PLOTTED => 18-AUG-2011 | TIME PLOTTED => 13:46

BORDER LAST REVISED 7/2/2010 | USERNAME => s110796 | DGN FILE => 0700000455ca004.dgn | RELATIVE BORDER SCALE IS IN INCHES 0 1 2 3 | UNIT 1964 | PROJECT NUMBER & PHASE 07000004551

Dist	COUNTY	ROUTE	POST MILES TOTAL PROJECT	SHEET No.	TOTAL SHEETS
07	LA	5	R73.2/R88.6	6	130

REGISTERED CIVIL ENGINEER 5-19-11 DATE

07-11-11
PLANS APPROVAL DATE

REGISTERED PROFESSIONAL ENGINEER JEFFREY MILLER No. 69162 Exp. 6/30/12 CIVIL STATE OF CALIFORNIA

THE STATE OF CALIFORNIA OR ITS OFFICERS OR AGENTS SHALL NOT BE RESPONSIBLE FOR THE ACCURACY OR COMPLETENESS OF SCANNED COPIES OF THIS PLAN SHEET.

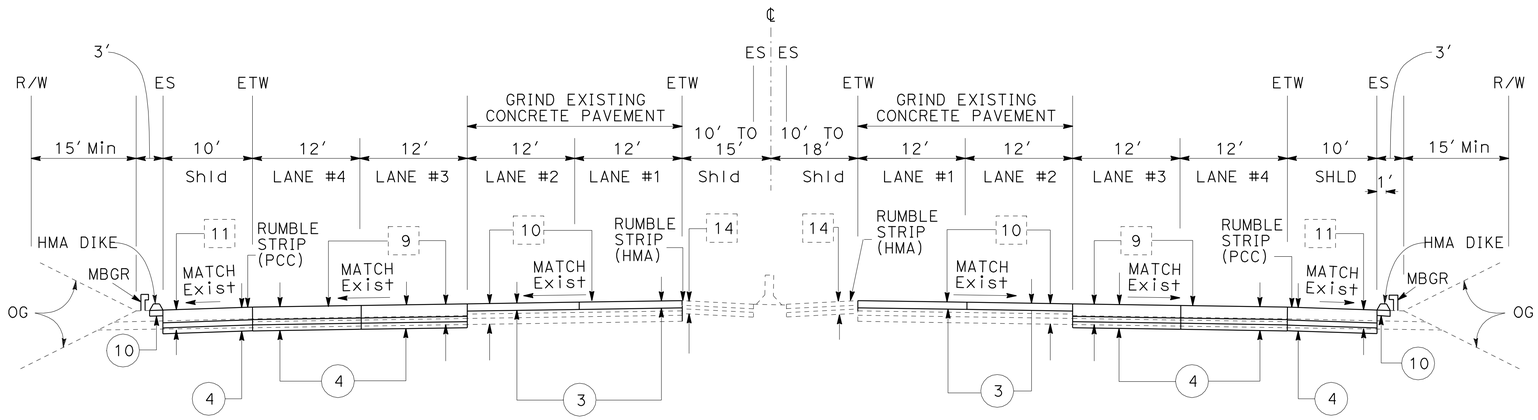

SOUTHBOUND **NORTHBOUND**

PM R87.8/R88.6

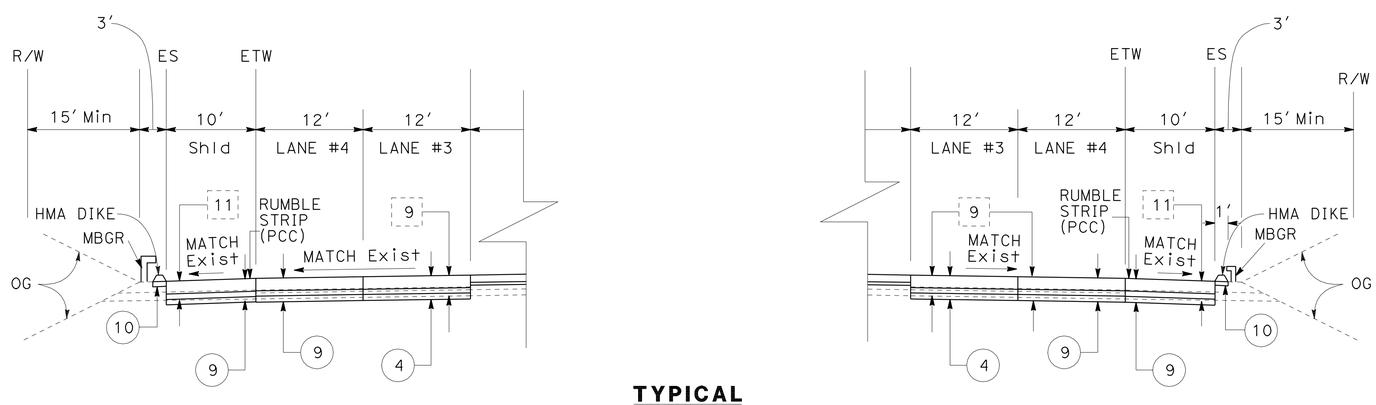

TYPICAL

ON-RAMPS AND OFF-RAMPS

SOUTHBOUND **NORTHBOUND**

TYPICAL CROSS SECTIONS

NO SCALE

X-5

STATE OF CALIFORNIA - DEPARTMENT OF TRANSPORTATION
Caltrans MAINTENANCE ENGINEERING

FUNCTIONAL SUPERVISOR: MONIR IBRAHIM
CALCULATED-DESIGNED BY: JEFFREY MILLER
CHECKED BY: MICHAEL DUONG
REVISED BY / DATE REVISED

LAST REVISION 00-00-00 | DATE PLOTTED => 18-AUG-2011 | TIME PLOTTED => 13:46

Dist	COUNTY	ROUTE	POST MILES TOTAL PROJECT	SHEET No.	TOTAL SHEETS
07	LA	5	R73.2/R88.6	7	130

REGISTERED CIVIL ENGINEER 5-18-11 DATE

07-11-11
PLANS APPROVAL DATE

REGISTERED PROFESSIONAL ENGINEER MICHAEL DUONG No. 73425 Exp. 12-31-12 CIVIL STATE OF CALIFORNIA

THE STATE OF CALIFORNIA OR ITS OFFICERS OR AGENTS SHALL NOT BE RESPONSIBLE FOR THE ACCURACY OR COMPLETENESS OF SCANNED COPIES OF THIS PLAN SHEET.

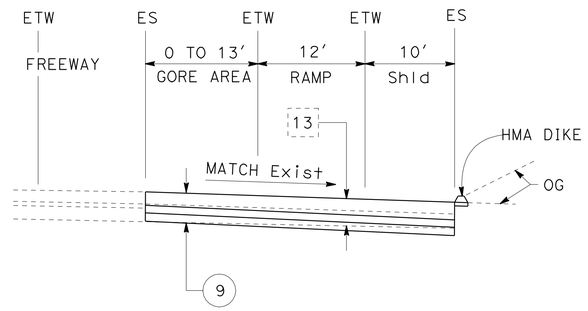

TYPICAL RAMP AND GORE AREA SECTIONS FOR TRUCK BRAKE INSPECTION AREA

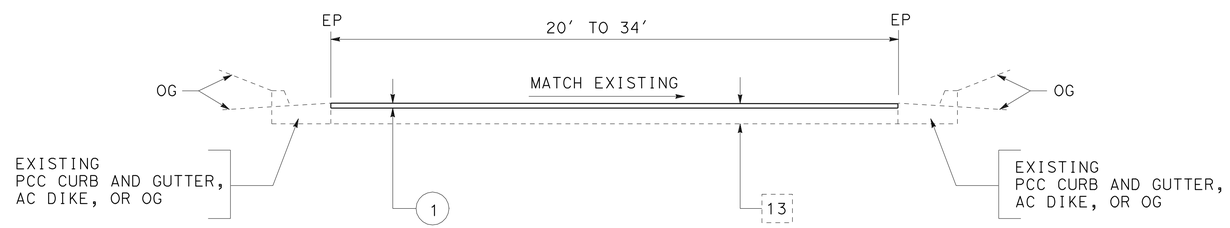

TYPICAL RAMP SECTION

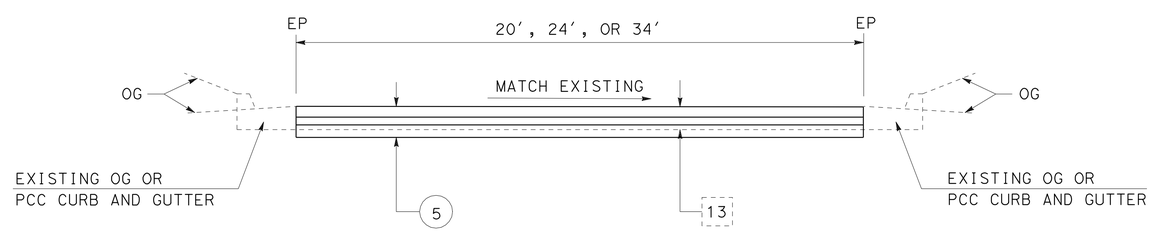

TYPICAL RAPID STRENGTH CONCRETE RAMP TERMINI SECTIONS (150' LENGTH)

TYPICAL CROSS SECTIONS

NO SCALE

X-6

STATE OF CALIFORNIA - DEPARTMENT OF TRANSPORTATION
Caltrans MAINTENANCE ENGINEERING

FUNCTIONAL SUPERVISOR: MONIR ABRAHIM
CALCULATED-DESIGNED BY: MICHAEL DUONG
CHECKED BY: JEFFREY MILLER
REVISED BY
DATE REVISED

LAST REVISION 00-00-00 | DATE PLOTTED => 18-AUG-2011 | TIME PLOTTED => 13:46

Dist	COUNTY	ROUTE	POST MILES TOTAL PROJECT	SHEET No.	TOTAL SHEETS
07	LA	5	R73.2/R88.6	8	130

REGISTERED CIVIL ENGINEER 5-18-11 DATE

07-11-11
PLANS APPROVAL DATE

REGISTERED PROFESSIONAL ENGINEER DEBORAH WONG No. 58313 Exp. 6/30/12 CIVIL STATE OF CALIFORNIA

THE STATE OF CALIFORNIA OR ITS OFFICERS OR AGENTS SHALL NOT BE RESPONSIBLE FOR THE ACCURACY OR COMPLETENESS OF SCANNED COPIES OF THIS PLAN SHEET.

LEGEND:

→ DIRECTION OF TRAVEL

SHOULDER RUMBLE STRIP (CONCRETE PAVEMENT OR HMA, GROUND-IN INDENTATIONS)

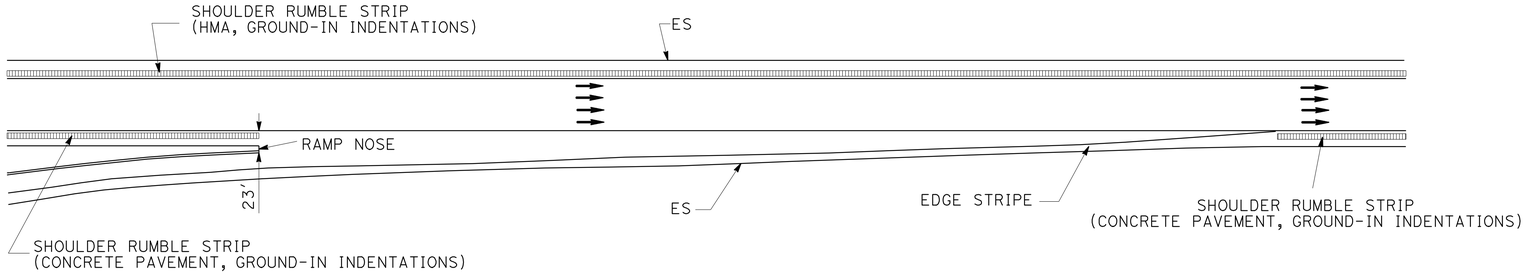

TYPICAL ON-RAMP RUMBLE STRIP

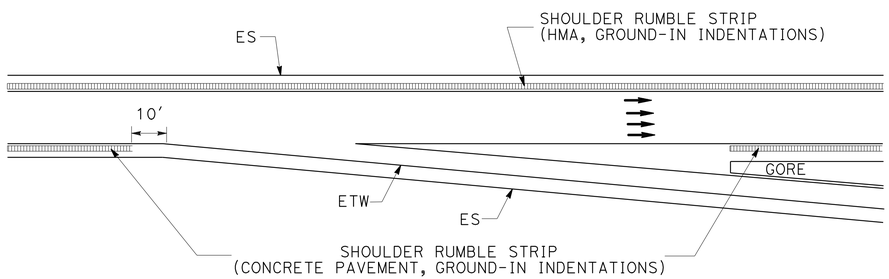

TYPICAL OFF-RAMP RUMBLE STRIP

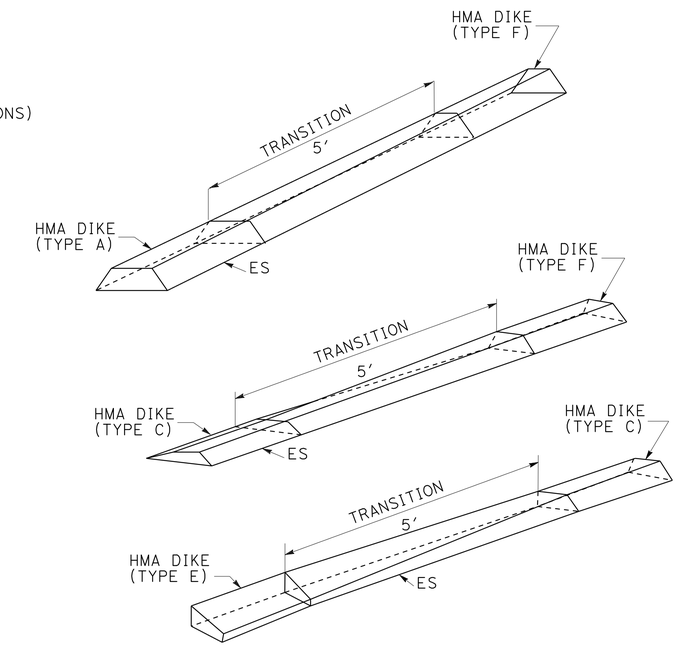

HMA DIKE TRANSITION

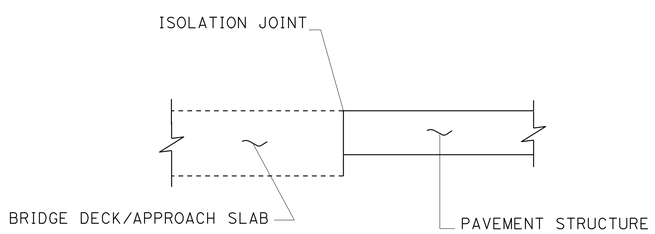

CONFORM TO BRIDGE DECK

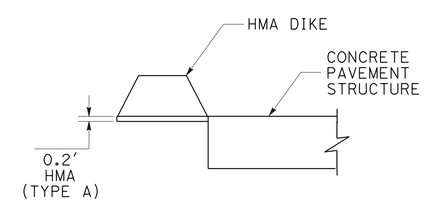

HMA DIKE

CONSTRUCTION DETAILS

NO SCALE

C-1

STATE OF CALIFORNIA - DEPARTMENT OF TRANSPORTATION
Caltrans MAINTENANCE ENGINEERING

FUNCTIONAL SUPERVISOR: MONIR IBRAHIM
CALCULATED-DESIGNED BY: JOHN ZAKI
CHECKED BY: DEBORAH WONG
REVISED BY / DATE REVISED

LAST REVISION 00-00-00 | DATE PLOTTED => 18-AUG-2011 | TIME PLOTTED => 13:46

Dist	COUNTY	ROUTE	POST MILES TOTAL PROJECT	SHEET No.	TOTAL SHEETS
07	LA	5	R73.2/R88.6	9	130

REGISTERED CIVIL ENGINEER 5-18-11 DATE

07-11-11
PLANS APPROVAL DATE

REGISTERED PROFESSIONAL ENGINEER MICHAEL DUONG No. 73425 Exp. 12-31-12 CIVIL STATE OF CALIFORNIA

THE STATE OF CALIFORNIA OR ITS OFFICERS OR AGENTS SHALL NOT BE RESPONSIBLE FOR THE ACCURACY OR COMPLETENESS OF SCANNED COPIES OF THIS PLAN SHEET.

NOTES:

1. EXISTING DRAINAGE INLETS HAVE NOT BEEN PLOTTED ON THESE PLANS.
2. EXISTING UTILITY FACILITIES HAVE NOT BEEN PLOTTED ON THESE PLANS.
3. FOR TRUCK BRAKE INSPECTION AREA ON-RAMP, COLD PLANE AC PAVEMENT AND PLACE HMA (TYPE A) ON THE OUTSIDE SHOULDER.

LEGEND:

COLD PLANE AC PAVEMENT
PLACE HMA (TYPE A)

RAPID STRENGTH CONCRETE PAVEMENT RAMP TERMINUS

JOINTED PLAIN CONCRETE PAVEMENT
(RAPID STRENGTH CONCRETE)

DIRECTION OF TRAFFIC

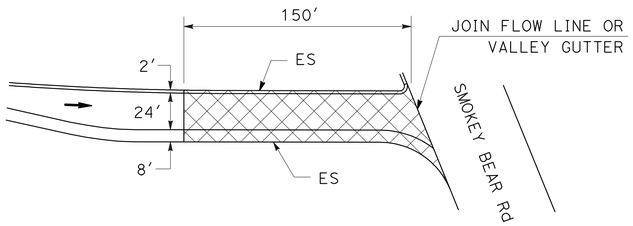

NORTHBOUND SMOKEY BEAR ROAD OFF-RAMP TERMINUS DETAILS

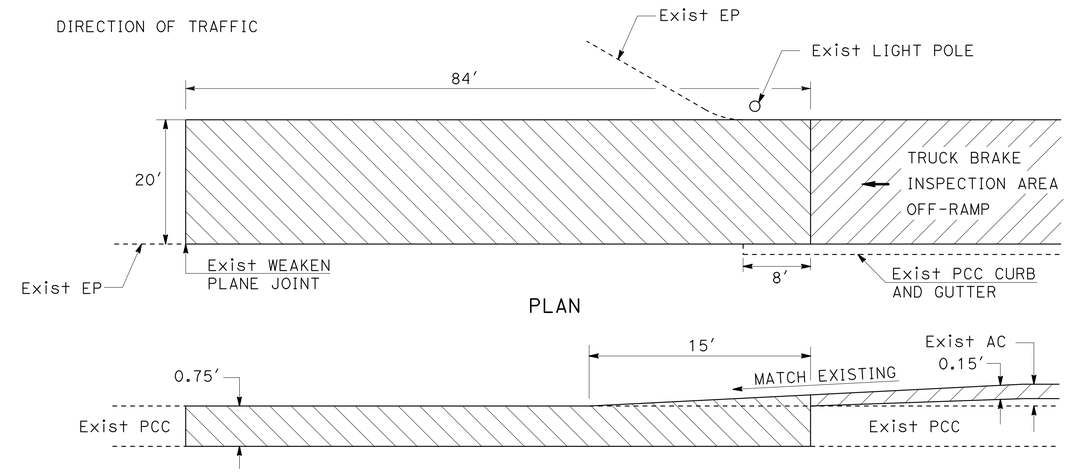

REPLACE CONCRETE PAVEMENT DETAILS AT TRUCK BRAKE INSPECTION AREA OFF-RAMP

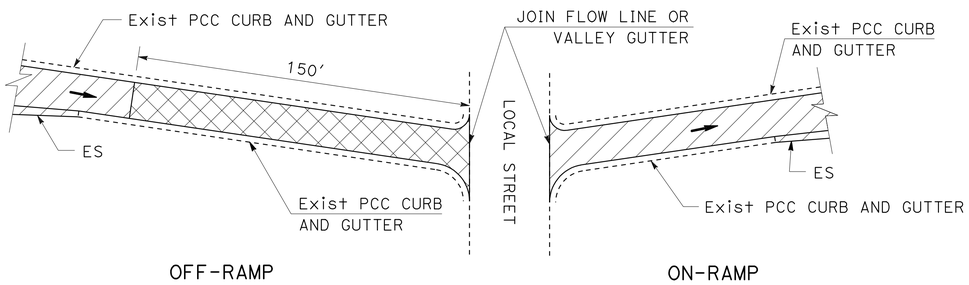

TYPICAL RAMP PAVING DETAILS

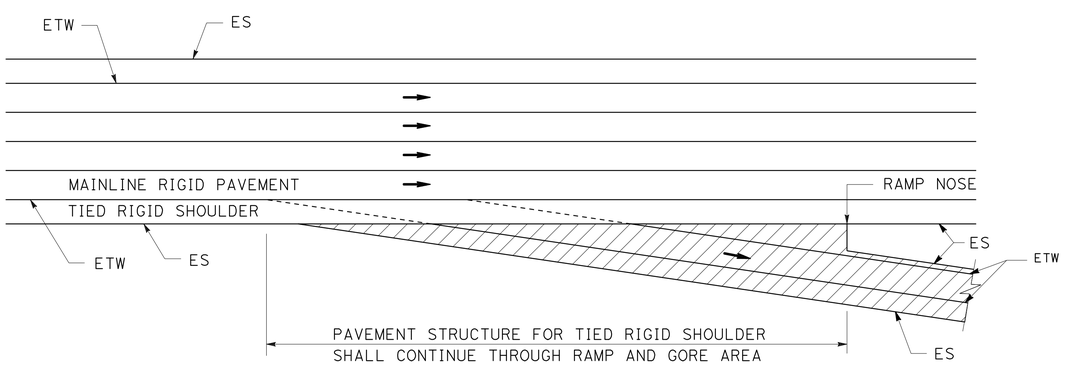

TYPICAL RIGID SHOULDERS AND RAMP PAVING DETAILS

(OFF-RAMP SHOWN, ON-RAMP SIMILAR)

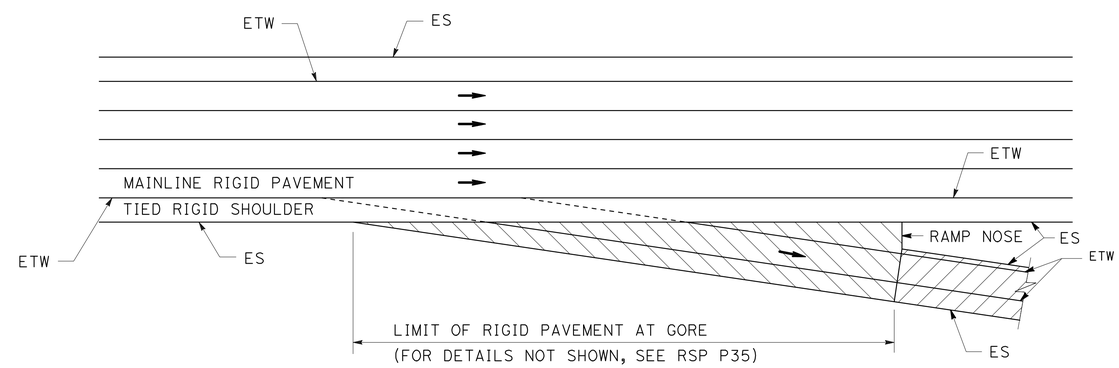

RIGID PAVEMENT AT RAMP GORE AREA DETAILS FOR TRUCK BRAKE INSPECTION AREA

(OFF-RAMP SHOWN, ON-RAMP SIMILAR)

CONSTRUCTION DETAILS

NO SCALE

C-2

REVISED BY | DATE REVISED
MICHAEL DUONG | CHARLIE TRUONG
CALCULATED-DESIGNED BY | CHECKED BY
FUNCTIONAL SUPERVISOR
MONIR ABRAHIM

STATE OF CALIFORNIA - DEPARTMENT OF TRANSPORTATION
Caltrans MAINTENANCE ENGINEERING

LAST REVISION 00-00-00 | DATE PLOTTED => 18-AUG-2011 | TIME PLOTTED => 13:47

Dist	COUNTY	ROUTE	POST MILES TOTAL PROJECT	SHEET No.	TOTAL SHEETS
07	LA	5	R73.2/R88.6	10	130

REGISTERED CIVIL ENGINEER 5-19-11 DATE

07-11-11
PLANS APPROVAL DATE

REGISTERED PROFESSIONAL ENGINEER JEFFREY MILLER No. 69162 Exp. 6/30/12 CIVIL STATE OF CALIFORNIA

THE STATE OF CALIFORNIA OR ITS OFFICERS OR AGENTS SHALL NOT BE RESPONSIBLE FOR THE ACCURACY OR COMPLETENESS OF SCANNED COPIES OF THIS PLAN SHEET.

NOTE:

1. SEE X-1, FOR STRUCTURAL SECTION THICKNESS

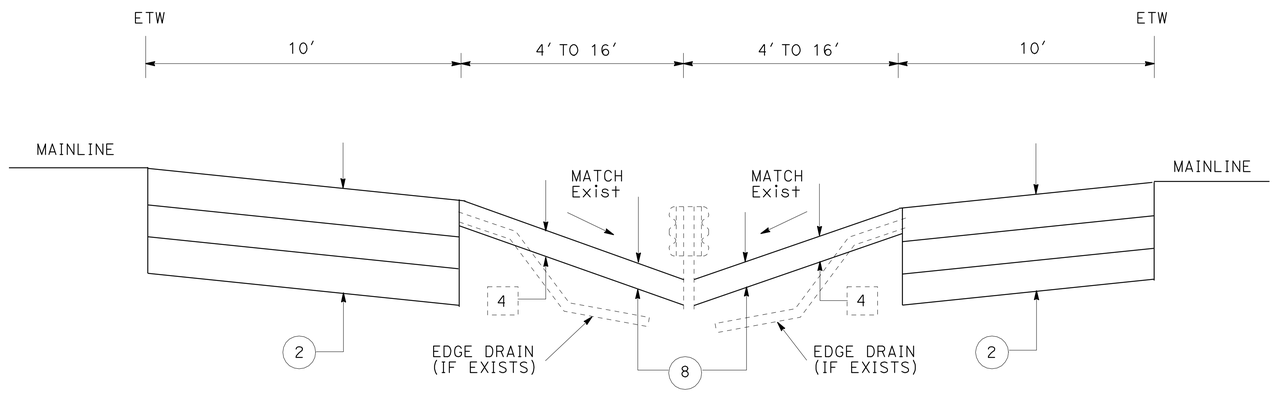

DETAIL 1

LEGEND:

ROADWAY EXCAVATION
(TYPE Z-2)
(AERIALLY DEPOSITED LEAD)

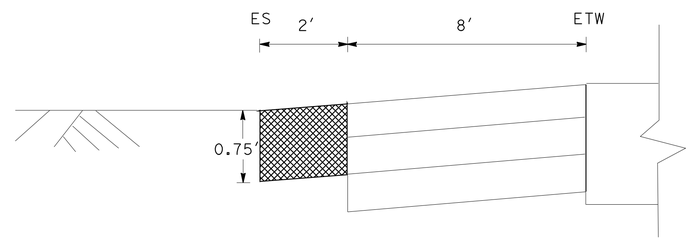

MEDIAN SHOULDER WIDENING

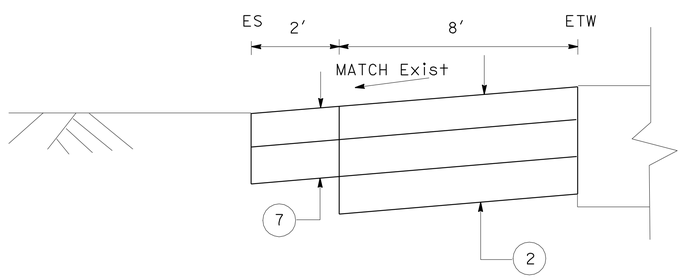

DETAIL 2
MEDIAN SHOULDER

DIRECTION	PM
NB	R78.46/R78.74
NB	R79.12/R80.40
NB	R80.44/R80.57
NB	R84.02/R84.09
NB	R84.52/R84.58
NB	R85.91/R86.86
SB	R81.25/R81.56
SB	R81.97/R82.03
SB	R84.33/R84.43
SB	R85.13/R85.67
SB	R86.27/R86.34

CONSTRUCTION DETAILS

NO SCALE

C-3

REVISED BY | DATE REVISED
JEFFREY MILLER | DEBORAH WONG
CALCULATED-DESIGNED BY | CHECKED BY
FUNCTIONAL SUPERVISOR
MONIR IBRAHIM

STATE OF CALIFORNIA - DEPARTMENT OF TRANSPORTATION
Caltrans MAINTENANCE ENGINEERING

LAST REVISION 00-00-00 | DATE PLOTTED => 18-AUG-2011 | TIME PLOTTED => 13:47

Dist	COUNTY	ROUTE	POST MILES TOTAL PROJECT	SHEET No.	TOTAL SHEETS
07	LA	5	R73.2/R88.6	11	130

REGISTERED CIVIL ENGINEER DATE 5-25-11

07-11-11
PLANS APPROVAL DATE

REGISTERED PROFESSIONAL ENGINEER DEBORAH WONG No. 58313 Exp. 6/30/12 CIVIL STATE OF CALIFORNIA

THE STATE OF CALIFORNIA OR ITS OFFICERS OR AGENTS SHALL NOT BE RESPONSIBLE FOR THE ACCURACY OR COMPLETENESS OF SCANNED COPIES OF THIS PLAN SHEET.

NOTES:

1. FOR PLACEMENT OF TEMPORARY RAILING (TYPE K) ALONG ROUTE 5 MAIN LINE AREA REFER TO TYPICAL DETAILS ON SHEET TH-3.
2. FOR EXACT QUANTITY OF JPCP (RSC) SEE SHEET Q-1.
3. EXACT LOCATIONS WILL BE DETERMINED BY THE ENGINEER.

LEGEND:

JPCP (RSC)

PM	DIRECTION	LOCATION	LENGTH OF JPCP (RSC)	
			A	B
			FT	FT
R74.2	SB	VISTA DEL LAGO Rd ON RAMP	1270	1740
R74.3	NB	VISTA DEL LAGO Rd OFF RAMP	355	385
R74.4	SB	VISTA DEL LAGO Rd OFF RAMP	305	305
R74.6	NB	VISTA DEL LAGO Rd ON RAMP	1360	1965
R77.8	NB	SMOKEY BEAR Rd OFF RAMP	355	380
R77.8	SB	SMOKEY BEAR Rd ON RAMP	1355	1945
R78.1	NB	SMOKEY BEAR Rd ON RAMP	1270	1860
R78.1	SB	SMOKEY BEAR Rd OFF RAMP	380	400
R81.6	NB	QUAIL LAKE Rd OFF RAMP	335	345
R81.7	SB	QUAIL LAKE Rd ON RAMP	1275	1875
R81.9	NB	QUAIL LAKE Rd ON RAMP	1385	1990
R82.0	SB	QUAIL LAKE Rd OFF RAMP	390	355
R85.6	NB	GORMAN Rd OFF RAMP	355	380
R85.6	SB	GORMAN Rd ON RAMP	1270	1870
R86.0	NB	GORMAN Rd ON RAMP	1270	1870
R86.1	SB	GORMAN Rd OFF RAMP	355	380
R86.7	SB	TRUCK BRAKE INSPECTION AREA OFF RAMP	355	380
R87.2	SB	TRUCK BRAKE INSPECTION AREA ON RAMP	1270	1870
R88.3	NB	FRAZIER MOUNTAIN PARK Rd OFF RAMP	340	360
R88.3	SB	FRAZIER MOUNTAIN PARK Rd ON RAMP	1270	1870

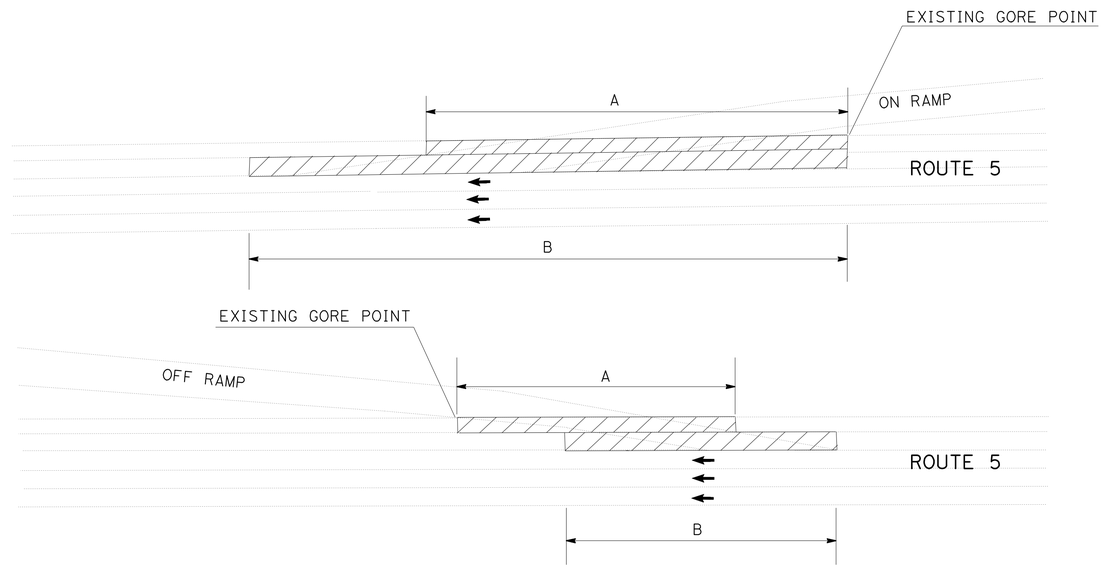

CONSTRUCTION LIMITS FOR JPCP (RSC)

CONSTRUCTION DETAILS

NO SCALE

C-4

STATE OF CALIFORNIA - DEPARTMENT OF TRANSPORTATION
Caltrans MAINTENANCE ENGINEERING

FUNCTIONAL SUPERVISOR: MONIR IBRAHIM
CALCULATED-DESIGNED BY: ROXANA DIANATI
CHECKED BY: DEBORAH WONG
REVISED BY
DATE REVISED

LAST REVISION 06-28-10
DATE PLOTTED => 18-AUG-2011
TIME PLOTTED => 13:47

Dist	COUNTY	ROUTE	POST MILES TOTAL PROJECT	SHEET No.	TOTAL SHEETS
07	LA	5	R73.2/R88.6	12	130

REGISTERED CIVIL ENGINEER DATE 5-25-11

07-11-11
PLANS APPROVAL DATE

REGISTERED PROFESSIONAL ENGINEER DEBORAH WONG No. 58313 Exp. 6/30/12 CIVIL STATE OF CALIFORNIA

THE STATE OF CALIFORNIA OR ITS OFFICERS OR AGENTS SHALL NOT BE RESPONSIBLE FOR THE ACCURACY OR COMPLETENESS OF SCANNED COPIES OF THIS PLAN SHEET.

NOTE:

1. SEE PAVEMENT DELINEATION QUANTITIES FOR LOCATION AND TYPES OF REPLACE TRAFFIC STRIPES AND PAVEMENT MARKINGS TO BE PLACED.

LEGEND:

- DIRECTION OF TRAVEL
- 4" YELLOW
- TYPE H ONE-WAY YELLOW RETROREFLECTIVE

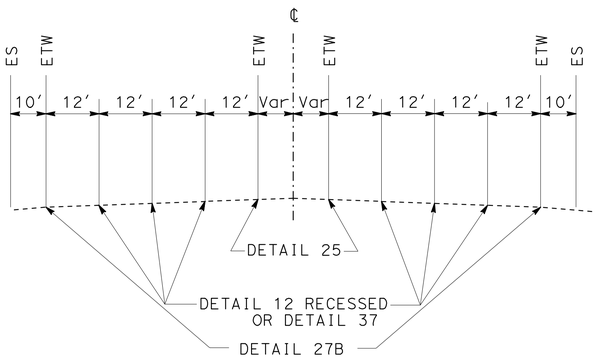

FOUR-LANE FREEWAY SEGMENT

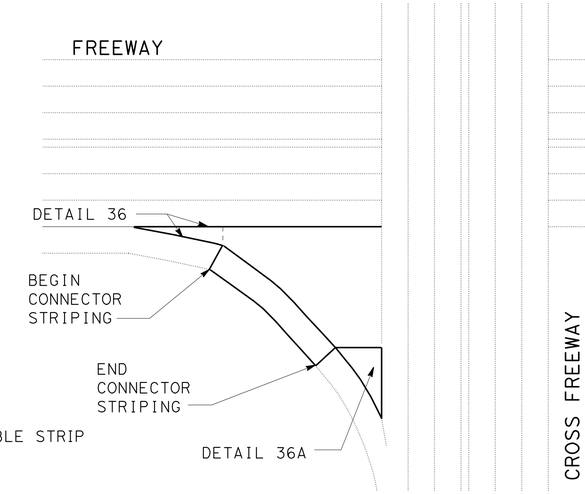

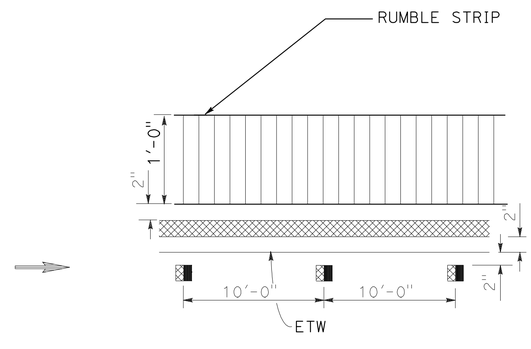

DETAIL 25A (MOD)

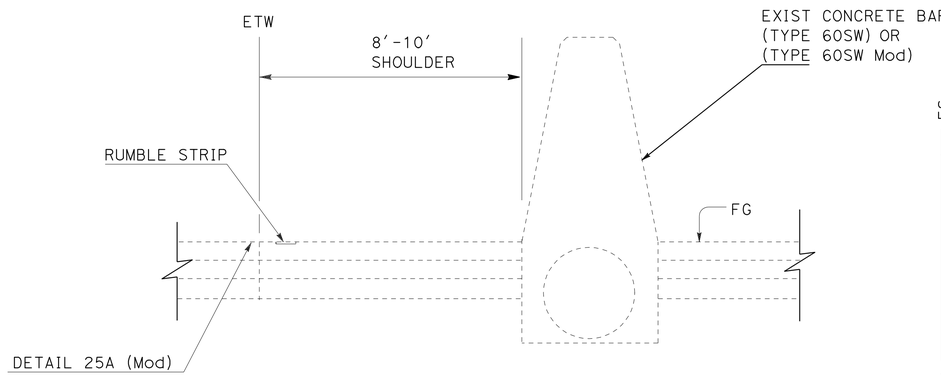

SB PM R87.8 TO R88.6

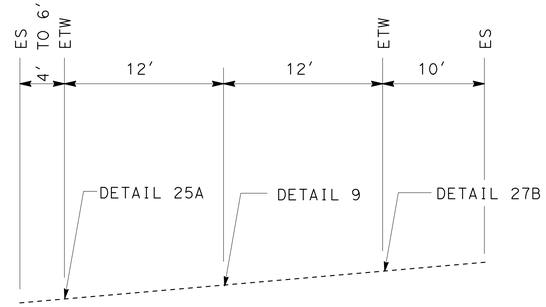

TWO-LANE CONNECTOR

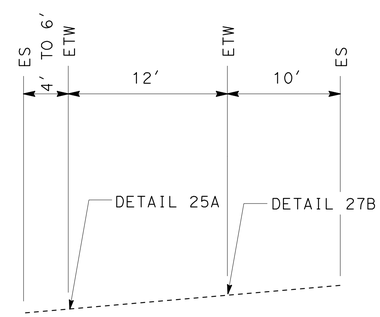

ONE-LANE CONNECTOR

CONSTRUCTION DETAILS
(TYPICAL CROSS SECTIONS FOR TRAFFIC STRIPE REPLACEMENT)

NO SCALE

C-5

STATE OF CALIFORNIA - DEPARTMENT OF TRANSPORTATION
Caltrans MAINTENANCE ENGINEERING

FUNCTIONAL SUPERVISOR: MONIR IBRAHIM
CALCULATED-DESIGNED BY: AMBACHEW YIRGU
CHECKED BY: DEBORAH WONG
REVISED BY / DATE REVISED

LAST REVISION 06-28-10 | DATE PLOTTED => 18-AUG-2011 | TIME PLOTTED => 13:47

Dist	COUNTY	ROUTE	POST MILES TOTAL PROJECT	SHEET No.	TOTAL SHEETS
07	LA	5	R73.2/R88.6	13	130

REGISTERED CIVIL ENGINEER — DATE: 5-19-11

07-11-11
PLANS APPROVAL DATE

REGISTERED PROFESSIONAL ENGINEER — JOHN ZAKI — No. C63665 — Exp. 9-30-12 — CIVIL — STATE OF CALIFORNIA

THE STATE OF CALIFORNIA OR ITS OFFICERS OR AGENTS SHALL NOT BE RESPONSIBLE FOR THE ACCURACY OR COMPLETENESS OF SCANNED COPIES OF THIS PLAN SHEET.

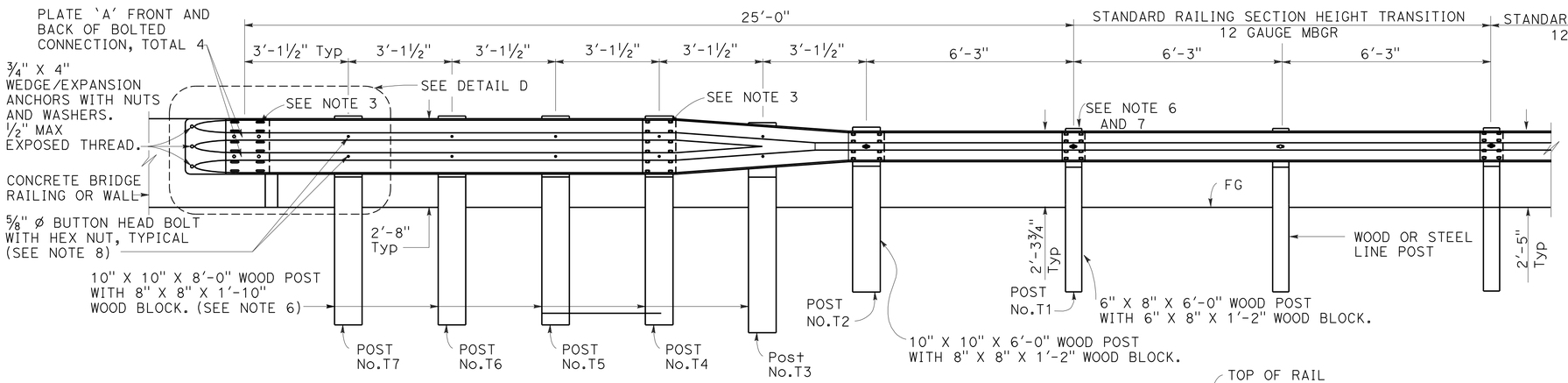

ELEVATION

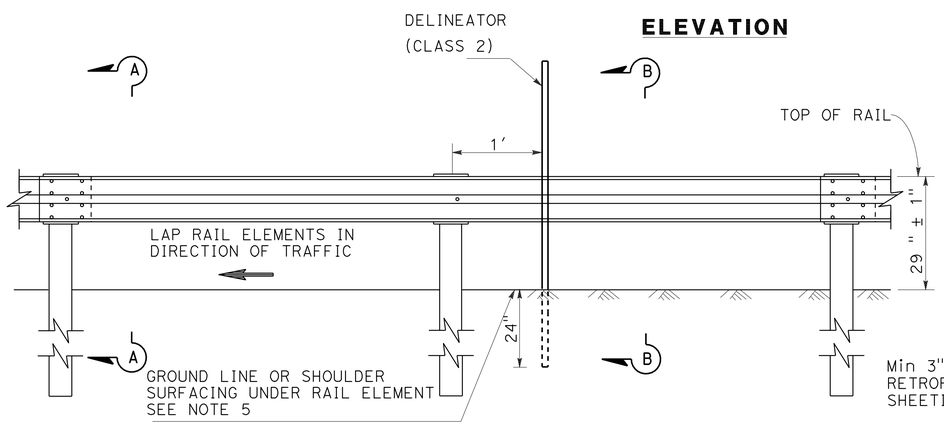

ELEVATION

METAL BEAM GUARD RAILING WITH STEEL POSTS AND NOTCHED WOOD OR NOTCHED RECYCLED PLASTIC BLOCKS

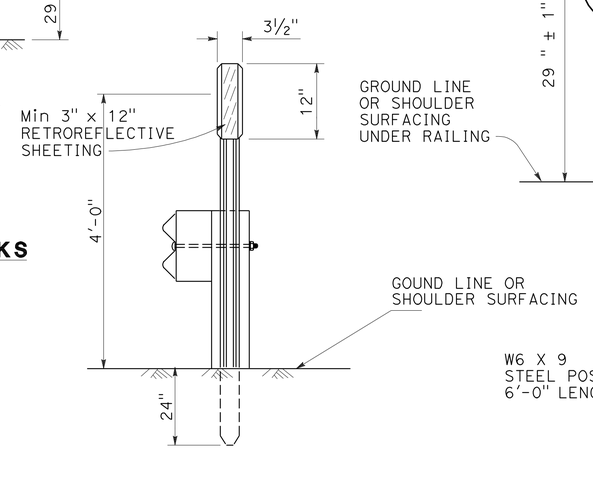

SECTION B-B

DELINEATOR (CLASS 2)

METAL POST

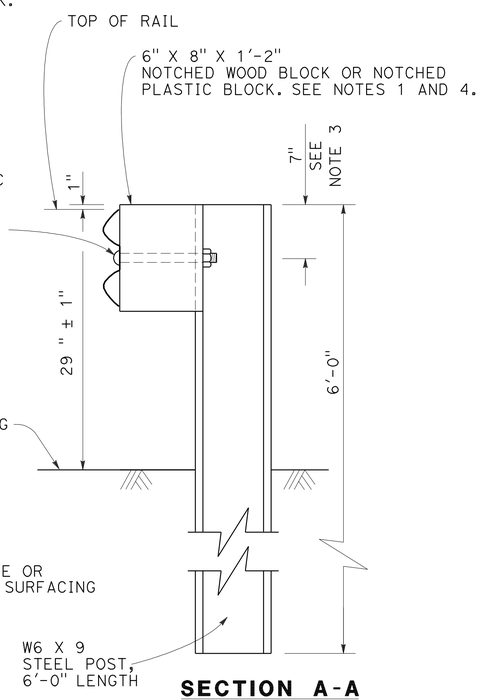

SECTION A-A

TYPICAL STEEL LINE POST INSTALLATION

SEE NOTE 2

NOTES:

1. FOR DETAILS OF STEEL POSTS AND NOTCHED WOOD BLOCKS USED TO CONSTRUCT GUARD RAILING, SEE STANDARD PLAN A77C2.
2. FOR ADDITIONAL INSTALLATION DETAILS, SEE STANDARD PLAN A77C3.
3. TO CONNECT RAILING TO TERMINAL SYSTEM END TREATMANT TRANSITION THE TOP OF RAILING HEIGHT AT A RATIO OF 120:1 TO TERMINAL SYSTEM END TREATMENT HEIGHT PLUS ONE 12'-6" STANDARD RAILING SECTION AT THE TRANSITIONED HEIGHT FOR A HORIZONTAL CONNECTION TO THE END TREATMENT.
4. NOTCHED FACE OF BLOCK FACES STEEL POST.
5. INSTALL POSTS IN SOIL.
6. TYPICALLY, THE RAILING CONNECTED TO TRANSITION RAILING (TYPE WB) WILL BE EITHER STANDARD RAILING SECTION OF METAL BEAM GUARD RAILING WITH HEIGHT TRANSITION RATIO OF 120:1 OR AN APPROVED CALTRANS END TREATMENT ATTACHED TO POST No. T1.
7. CONFORM STANDARD RAILING SECTION HEIGHT TO 2'-3/4" AT POST T1 USING HEIGHT TRANSITION RATIO OF 120:1.
8. USE ⅝" Ø BUTTON HEAD BOLTS AND HEX NUTS FOR CONNECTIONS TO POSTS. NO WASHER ON RAIL FACE FOR BOLTED CONNECTIONS TO POST.

CONSTRUCTION DETAILS

NO SCALE

C-6

REVISED BY | DATE REVISED
JOHN ZAKI | JEFFREY MILLER
CALCULATED-DESIGNED BY | CHECKED BY
FUNCTIONAL SUPERVISOR | MONIR IBRAHIM

STATE OF CALIFORNIA - DEPARTMENT OF TRANSPORTATION
Caltrans MAINTENANCE ENGINEERING

LAST REVISION 02-14-11 | DATE PLOTTED => 18-AUG-2011 | TIME PLOTTED => 13:47

Dist	COUNTY	ROUTE	POST MILES TOTAL PROJECT	SHEET No.	TOTAL SHEETS
07	LA	5	R73.2/R88.6	14	130

John T. Zaki 5-19-11
REGISTERED CIVIL ENGINEER DATE

07-11-11
PLANS APPROVAL DATE

REGISTERED PROFESSIONAL ENGINEER JOHN ZAKI No. C63665 Exp. 9-30-12 CIVIL STATE OF CALIFORNIA

THE STATE OF CALIFORNIA OR ITS OFFICERS OR AGENTS SHALL NOT BE RESPONSIBLE FOR THE ACCURACY OR COMPLETENESS OF SCANNED COPIES OF THIS PLAN SHEET.

NOTES:

1. SEE THE A77E, A77F and A77G SERIES OF STANDARD PLANS FOR TYPICAL USE OF END ANCHOR ASSEMBLY (TYPE SFT).

2. A 6'-0" LENGTH STEEL FOUNDATION tube, TS 8 x 6 x 3/16, WITHOUT A SOIL PLATE, MAY BE FURNISHED AND INSTALLED IN PLACE OF THE 4'-6" LENGTH STEEL FOUNDATION TUBE AND SOIL PLATE SHOWN. MINIMUM EMBEDMENT OF THE 6'-0" LENGTH TUBE SHALL BE 5'-9". A 5/8" ø HEX HEAD BOLT AND NUT SHALL BE INSTALLED IN THE HOLE IN THE 6'-0" LENGTH TUBE TO KEEP THE WOOD POST FROM DROPPING INTO THE TUBE.

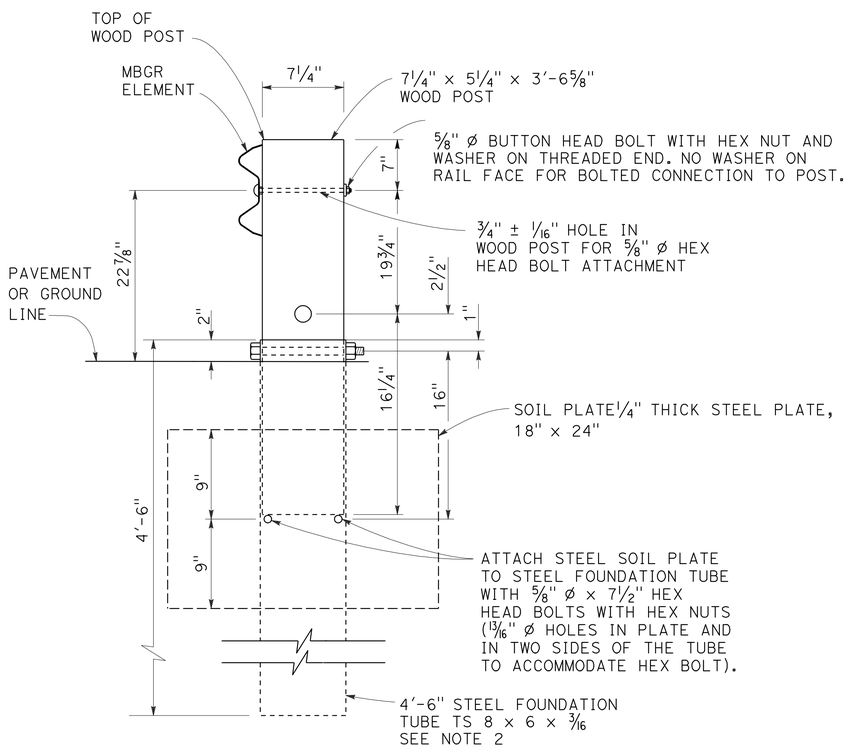

SECTION A-A

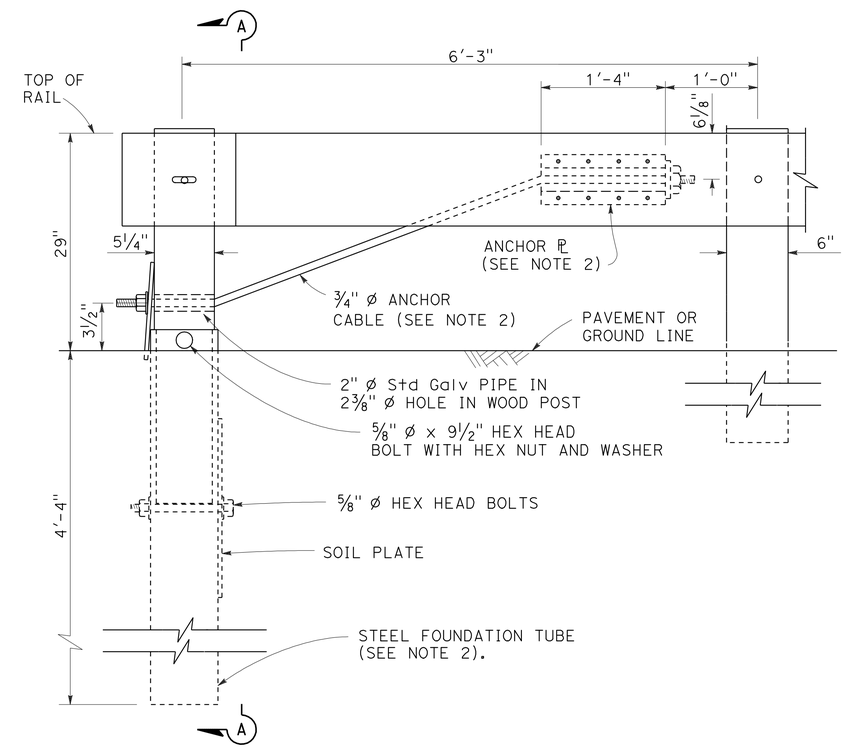

ELEVATION
END ANCHOR
ASSEMBLY (TYPE SFT)
See Note 1

METAL RAILING END ANCHOR ASSEMBLY (TYPE SFT)

CONSTRUCTION DETAILS
NO SCALE

C-7

STATE OF CALIFORNIA - DEPARTMENT OF TRANSPORTATION
Caltrans MAINTENANCE ENGINEERING

FUNCTIONAL SUPERVISOR: MONIR IBRAHIM
CALCULATED-DESIGNED BY: JOHN ZAKI
CHECKED BY: DEBORAH WONG
REVISED BY
DATE REVISED

LAST REVISION 02-14-11
DATE PLOTTED => 18-AUG-2011
TIME PLOTTED => 13:47

Dist	COUNTY	ROUTE	POST MILES TOTAL PROJECT	SHEET No.	TOTAL SHEETS
07	LA	5	R73.2/R88.6	15	130

REGISTERED CIVIL ENGINEER 5-16-11 DATE

07-11-11
PLANS APPROVAL DATE

REGISTERED PROFESSIONAL ENGINEER
CHARLIE TRUONG
No. 69881
Exp. 9/30/12
CIVIL
STATE OF CALIFORNIA

THE STATE OF CALIFORNIA OR ITS OFFICERS OR AGENTS SHALL NOT BE RESPONSIBLE FOR THE ACCURACY OR COMPLETENESS OF SCANNED COPIES OF THIS PLAN SHEET.

NOTES:

1. RAISE ALL INLETS TO TOP OF HMA PAVEMENT SHOWN ON PLANS OR AS DIRECTED BY THE ENGINEER.
2. GROUT DOWELS INTO DRILLED HOLES.
3. THICKNESS OF PROPOSED WALLS SHALL BE EQUAL TO THE THICKNESS OF EXISTING WALLS.

LEGEND:

- REMOVE CONCRETE

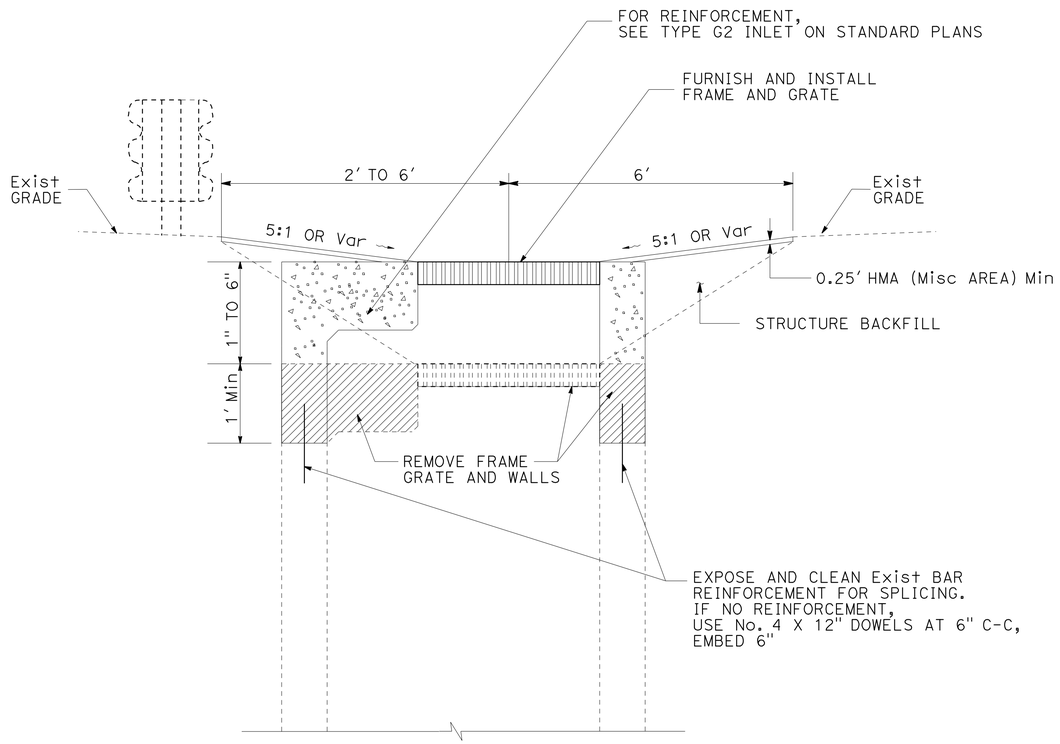

ADJUST INLET

(TYPE G2 INLET)

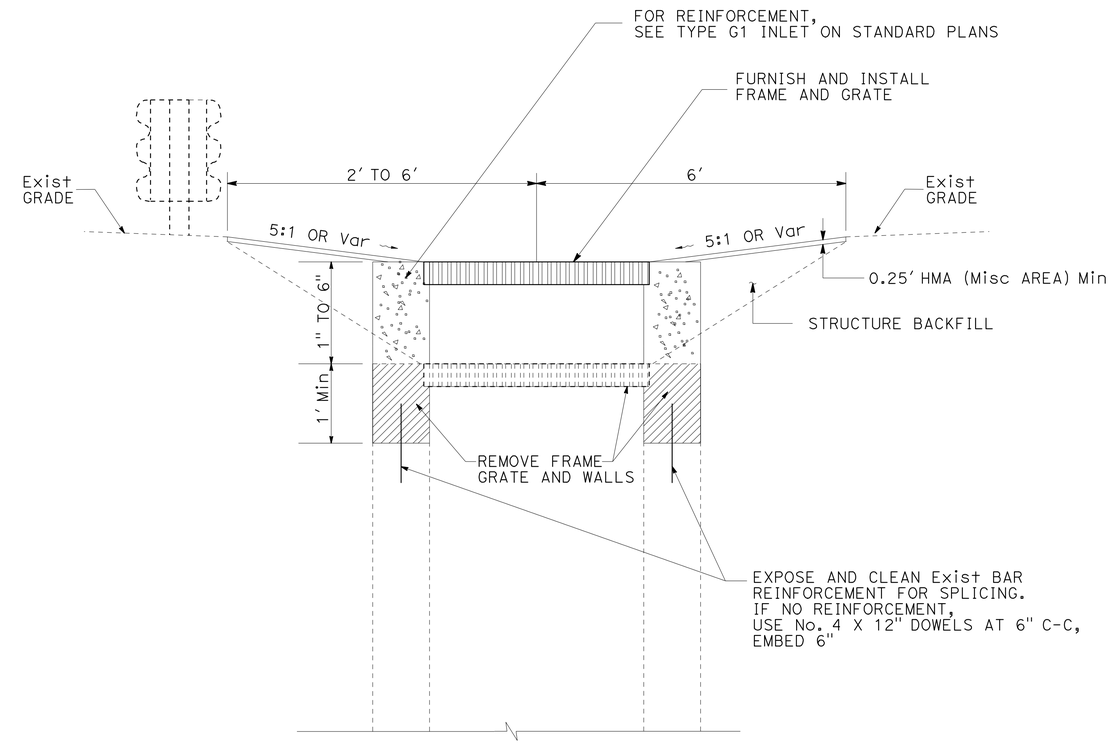

ADJUST INLET

(TYPE G1 INLET)

DRAINAGE DETAILS

NO SCALE

DD-1

STATE OF CALIFORNIA - DEPARTMENT OF TRANSPORTATION
Caltrans MAINTENANCE ENGINEERING

FUNCTIONAL SUPERVISOR: MONIR IBRAHIM
CALCULATED-DESIGNED BY: CHARLIE TRUONG
CHECKED BY: JOHN ZAKI
REVISED BY
DATE REVISED

LAST REVISION 00-00-00
DATE PLOTTED => 18-AUG-2011
TIME PLOTTED => 13:47

Dist	COUNTY	ROUTE	POST MILES TOTAL PROJECT	SHEET No.	TOTAL SHEETS
07	LA	5	R73.2/R88.6	16	130

REGISTERED CIVIL ENGINEER 5-16-11 DATE

07-11-11
PLANS APPROVAL DATE

REGISTERED PROFESSIONAL ENGINEER CHARLIE TRUONG No. 69881 Exp. 9/30/12 CIVIL STATE OF CALIFORNIA

THE STATE OF CALIFORNIA OR ITS OFFICERS OR AGENTS SHALL NOT BE RESPONSIBLE FOR THE ACCURACY OR COMPLETENESS OF SCANNED COPIES OF THIS PLAN SHEET.

NOTES:

1. INLETS TO BE ADJUSTED ARE IN MEDIAN.
2. REMOVE AND REPLACE GRATES ARE ON OUTSIDE MAINLINE SHOULDERS.
3. FOR BAR REINFORCING STEEL AND SEAL ISOLATION JOINT DETAIL, SEE REVISED STANDARD PLAN RSP P45.

ADJUST INLET QUANTITIES

LOCATION (POSTMILE)	DIRECTION	DESCRIPTION	INLET TYPE (N) G1/G2	TYPE 24-9 FRAME & GRATE (N)	ADJUST INLET
			EA	EA	EA
R73.4	NB	ADJUST INLET TO GRADE	1	1	1
R73.8	NB	ADJUST INLET TO GRADE	1	1	1
R73.8	NB	ADJUST INLET TO GRADE	1	1	1
R73.9	NB	ADJUST INLET TO GRADE	1	1	1
R74.0	NB	ADJUST INLET TO GRADE	2	2	2
R74.7	NB	ADJUST INLET TO GRADE	3	3	3
R74.8	NB	ADJUST INLET TO GRADE	1	1	1
R75.0	NB	ADJUST INLET TO GRADE	1	1	1
R77.5	NB	ADJUST INLET TO GRADE	1	1	1
SUBTOTAL			12	12	12

LOCATION (POSTMILE)	DIRECTION	DESCRIPTION	INLET TYPE (N) G1/G2	TYPE 24-9 FRAME & GRATE (N)	ADJUST INLET
			EA	EA	EA
R77.5	SB	ADJUST INLET TO GRADE	1	1	1
R77.3	SB	ADJUST INLET TO GRADE	1	1	1
R76.8	SB	ADJUST INLET TO GRADE	1	1	1
R76.7	SB	ADJUST INLET TO GRADE	1	1	1
R76.2	SB	ADJUST INLET TO GRADE	1	1	1
R75.6	SB	ADJUST INLET TO GRADE	2	2	2
R74.4	SB	ADJUST INLET TO GRADE	1	1	1
SUBTOTAL			8	8	8

(N) NOT A SEPARATE PAY ITEM, FOR INFORMATION ONLY.

REVISED BY | DATE REVISED
CHARLIE TRUONG | JOHN ZAKI
CALCULATED-DESIGNED BY | CHECKED BY
FUNCTIONAL SUPERVISOR: MONIR IBRAHIM

STATE OF CALIFORNIA - DEPARTMENT OF TRANSPORTATION
Caltrans MAINTENANCE ENGINEERING

DRAINAGE QUANTITIES

DQ-1

LAST REVISION 00-00-00 | DATE PLOTTED => 18-AUG-2011 | TIME PLOTTED => 13:47

Dist	COUNTY	ROUTE	POST MILES TOTAL PROJECT	SHEET No.	TOTAL SHEETS
07	LA	5	R73.2/R88.6	17	130

REGISTERED CIVIL ENGINEER 5-16-11 DATE

07-11-11
PLANS APPROVAL DATE

REGISTERED PROFESSIONAL ENGINEER CHARLIE TRUONG No. 69881 Exp. 9/30/12 CIVIL STATE OF CALIFORNIA

THE STATE OF CALIFORNIA OR ITS OFFICERS OR AGENTS SHALL NOT BE RESPONSIBLE FOR THE ACCURACY OR COMPLETENESS OF SCANNED COPIES OF THIS PLAN SHEET.

MAINLINE DRAINAGE QUANTITIES

POSTMILE	DIRECTION	DESCRIPTION	GRATE (24-12X) (N)	REMOVE GRATE	MISCELLANEOUS IRON AND STEEL	BAR REINFORCING STEEL	SEAL ISOLATION JOINT
			EA	EA	LB	LB	LF
R73.2/R74.0	NB	REMOVE & REPLACE GRATE	6	6	1,152	62	25
R74.0/R75.0	NB	REMOVE & REPLACE GRATE	4	4	768	82	33
R75.0/R76.0	NB	REMOVE & REPLACE GRATE	4	4	768	82	33
R76.0/R77.0	NB	REMOVE & REPLACE GRATE	10	10	1,920	206	83
R77.0/R78.0	NB	REMOVE & REPLACE GRATE	10	10	1,920	206	83
R78.0/R79.0	NB	REMOVE & REPLACE GRATE	8	8	1,536	165	66
R79.0/R80.0	NB	REMOVE & REPLACE GRATE	2	2	384	41	17
R80.0/R81.0	NB	REMOVE & REPLACE GRATE	4	4	768	82	33
R81.0/R82.0	NB	REMOVE & REPLACE GRATE	5	5	960	103	42
R85.0/R86.0	NB	REMOVE & REPLACE GRATE	8	8	1,536	165	66
R86.0/R87.0	NB	REMOVE & REPLACE GRATE	5	5	960	103	42
R87.0/R88.0	NB	REMOVE & REPLACE GRATE	5	5	960	103	42
R88.0/R88.6	NB	REMOVE & REPLACE GRATE	4	4	768	82	33
SUBTOTAL			75	75	14,400	1,483	598

POSTMILE	DIRECTION	DESCRIPTION	GRATE (24-12X) (N)	REMOVE GRATE	MISCELLANEOUS IRON AND STEEL	BAR REINFORCING STEEL	SEAL ISOLATION JOINT
			EA	EA	LB	LB	LF
R73.2/R74.0	SB	REMOVE & REPLACE GRATE	7	7	1,344		
R74.0/R75.0	SB	REMOVE & REPLACE GRATE	12	12	2,304	247	100
R75.0/R76.0	SB	REMOVE & REPLACE GRATE	3	3	576	62	25
R76.0/R77.0	SB	REMOVE & REPLACE GRATE	9	9	1,728	185	75
R77.0/R78.0	SB	REMOVE & REPLACE GRATE	11	11	2,112	227	91
R78.0/R79.0	SB	REMOVE & REPLACE GRATE	2	2	384	41	17
R81.0/R82.0	SB	REMOVE & REPLACE GRATE	4	4	768	82	33
R82.0/R83.0	SB	REMOVE & REPLACE GRATE	5	5	960	103	42
R83.0/R84.0	SB	REMOVE & REPLACE GRATE	12	12	2,304	247	100
R84.0/R85.0	SB	REMOVE & REPLACE GRATE	4	4	768	82	33
R85.0/R86.0	SB	REMOVE & REPLACE GRATE	7	7	1,344	144	58
R86.0/R87.0	SB	REMOVE & REPLACE GRATE	1	1	192	21	8
R87.0/R88.0	SB	REMOVE & REPLACE GRATE	6	6	1,152	124	50
SUBTOTAL			83	83	15,936	1,566	631

(N) NOT A SEPARATE PAY ITEM, FOR INFORMATION ONLY.

REVISED BY | DATE REVISED

CHARLIE TRUONG | JOHN ZAKI

CALCULATED-DESIGNED BY | CHECKED BY

FUNCTIONAL SUPERVISOR: MONIR IBRAHIM

STATE OF CALIFORNIA - DEPARTMENT OF TRANSPORTATION
Caltrans MAINTENANCE ENGINEERING

DRAINAGE QUANTITIES

DQ-2

LAST REVISION 00-00-00 | DATE PLOTTED => 18-AUG-2011 | TIME PLOTTED => 13:47

Dist	COUNTY	ROUTE	POST MILES TOTAL PROJECT	SHEET No.	TOTAL SHEETS
07	LA	5	R73.2/R88.6	18	130

REGISTERED CIVIL ENGINEER 5-16-11 DATE

07-11-11
PLANS APPROVAL DATE

REGISTERED PROFESSIONAL ENGINEER CHARLIE TRUONG No. 69881 Exp. 9/30/12 CIVIL STATE OF CALIFORNIA

THE STATE OF CALIFORNIA OR ITS OFFICERS OR AGENTS SHALL NOT BE RESPONSIBLE FOR THE ACCURACY OR COMPLETENESS OF SCANNED COPIES OF THIS PLAN SHEET.

RAMP DRAINAGE QUANTITIES

LOCATION	DESCRIPTION	GRATE (24-12X) (N)	REMOVE GRATE	MISCELLANEOUS IRON AND STEEL	BAR REINFORCING STEEL	SEAL ISOLATION JOINT	ADJUST INLET	REMARKS
		EA	EA	LB	LB	LF	EA	
NB OFF RAMP TO VISTA DEL LAGO Rd	REMOVE & REPLACE GRATE	1	1	192				AT THE END OF OFF-RAMP AND RIGHT SIDE
NB ON RAMP FROM VISTA DEL LAGO Rd	REMOVE & REPLACE GRATE	1	1	192				AT BEGIN OF ON-RAMP AND RIGHT SIDE
NB OFF RAMP TO SMOKEY BEAR Rd	REMOVE & REPLACE GRATE	12	12	2,304				
NB OFF RAMP TO QUAIL LAKE Rd	REMOVE & REPLACE GRATE	1	1	192				
NB OFF RAMP TO GORMAN Rd	REMOVE & REPLACE GRATE	1	1	192				
NB ON RAMP FROM GORMAN Rd	REMOVE & REPLACE GRATE	2	2	384				
NB OFF RAMP TO FRAZIER M†	REMOVE & REPLACE GRATE	2	2	384				
SB ON RAMP FROM FRAZIER M†	REMOVE & REPLACE GRATE	1	1	192				
SB OFF RAMP TO GORMAN Rd	REMOVE & REPLACE GRATE	3	3	576				
SB ON RAMP TO GORMAN Rd	REMOVE & REPLACE GRATE	1	1	192				
SUBTOTAL FOR RAMP		25	25	4,800				
SUBTOTAL FOR MAINLINE (NB)		75	75	14,400	1,483	598	12	
SUBTOTAL FOR MAINLINE (SB)		83	83	15,936	1,566	631	8	
SUBTOTAL		183	183	35,136	3,049	1,229	20	
GRAND TOTAL		183	183	35,136	3,049	(*)	20	

(N) NOT A SEPARATE PAY ITEM, FOR INFORMATION ONLY.

(*) SEE SHEET Q-2 FOR GRAND TOTAL

DRAINAGE QUANTITIES

DQ-3

REVISED BY | DATE REVISED
CHARLIE TRUONG | JOHN ZAKI
CALCULATED-DESIGNED BY | CHECKED BY
FUNCTIONAL SUPERVISOR
MONIR IBRAHIM
STATE OF CALIFORNIA - DEPARTMENT OF TRANSPORTATION
Caltrans MAINTENANCE ENGINEERING

LAST REVISION 00-00-00 | DATE PLOTTED => 18-AUG-2011 | TIME PLOTTED => 13:47

Dist	COUNTY	ROUTE	POST MILES TOTAL PROJECT	SHEET No.	TOTAL SHEETS
07	LA	5	R73.2/R88.6	19	130

REGISTERED CIVIL ENGINEER 6-09-11 DATE

07-11-11
PLANS APPROVAL DATE

REGISTERED PROFESSIONAL ENGINEER DEBORAH WONG No. 58313 Exp. 6/30/12 CIVIL STATE OF CALIFORNIA

THE STATE OF CALIFORNIA OR ITS OFFICERS OR AGENTS SHALL NOT BE RESPONSIBLE FOR THE ACCURACY OR COMPLETENESS OF SCANNED COPIES OF THIS PLAN SHEET.

NOTES

1. SIGNS LOCATIONS SHOWN ARE APPROXIMATE. EXACT LOCATIONS WILL BE DETERMINED BY THE ENGINEER.
2. FOR SIGN "C40 (CA)" (TRAFFIC FINES DOUBLE IN CONSTRUCTION ZONES), ALL LETTERS SHALL BE BLACK ON WHITE BACKGROUND.
3. COVER CONFLICTING SIGNING.
4. THE CONSTRUCTION AREA SIGNS ALSO INCLUDE THE DETOUR ROUTE SIGNS SHOWN ON MOTORIST INFORMATION PLANS.

CONSTRUCTION AREA SIGNS (STATIONARY MOUNTED)

SIGN No.	SIGN CODE	PANEL SIZE	SIGN MESSAGE	No. OF POSTS AND SIZE	No. OF SIGNS
A	G20-1	90" X 48"	ROAD WORK NEXT 19 MILES	2 - 6" X 6"	2
B	W20-1	48" X 48"	ROAD WORK AHEAD	1 - 4" X 6"	11
C	G20-2	48" X 24"	END ROAD WORK	1 - 6" X 6"	13
D	C40 (CA)	144" X 60"	TRAFFIC FINES DOUBLED IN CONSTRUCTION ZONES	2 - 6" X 6"	14
E	W3-5 (55 MPH)	48" X 48"	55 MPH SPEED LIMIT AHEAD (SYMBOL)	1 - 6" X 6"	4
F	R2-1 (55 MPH)	48" X 48"	SPEED LIMIT (55 MPH)	1 - 6" X 6"	16
G	R3(CA)	48" X 48"	END SPEED LIMIT (55 MPH)	1 - 6" X 6"	4

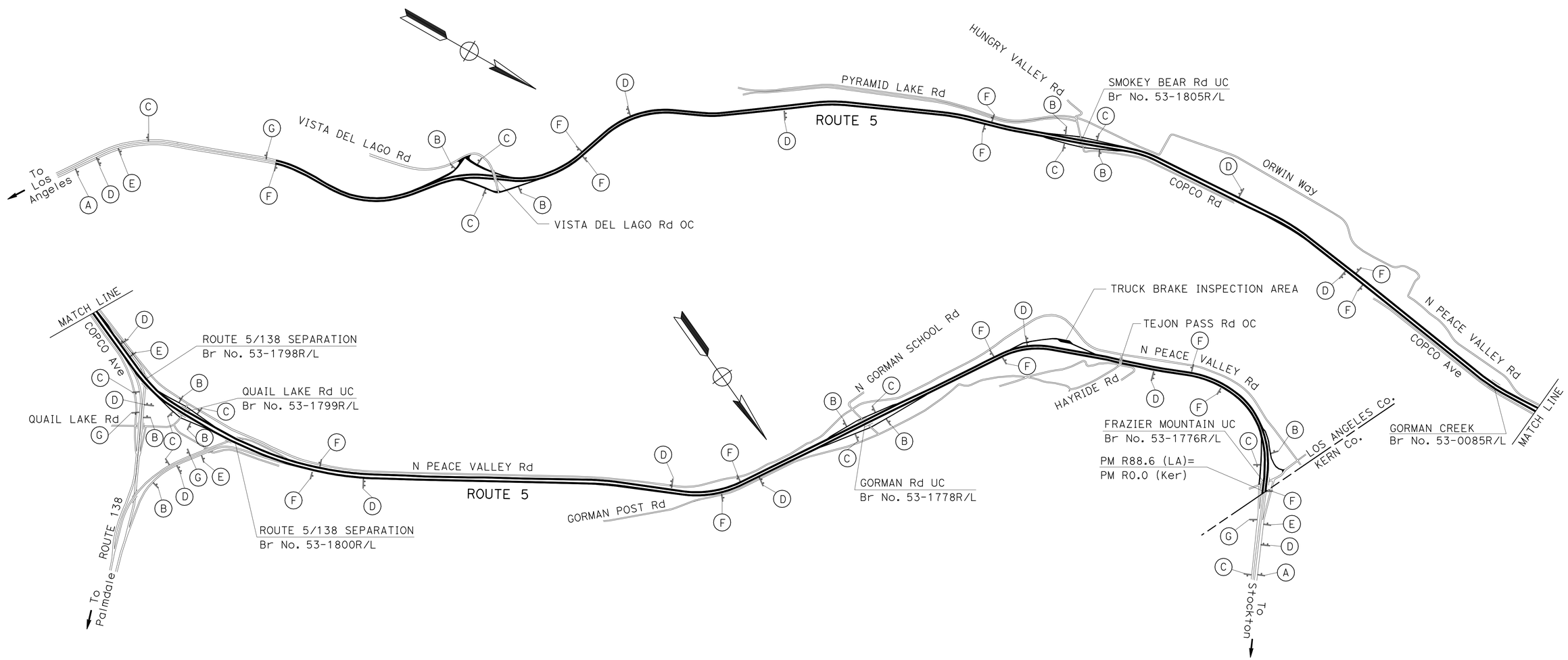

CONSTRUCTION AREA SIGNS

NO SCALE

CS-1

THIS PLAN ACCURATE CONSTRUCTION AREA SIGNS WORK ONLY.

STATE OF CALIFORNIA - DEPARTMENT OF TRANSPORTATION
Caltrans MAINTENANCE ENGINEERING

FUNCTIONAL SUPERVISOR: MONIR IBRAHIM
CALCULATED-DESIGNED BY: DINESH BHAVSAR
CHECKED BY: DEBORAH WONG
REVISED BY / DATE REVISED

LAST REVISION 00-00-00 | DATE PLOTTED => 18-AUG-2011 | TIME PLOTTED => 13:47

Dist	COUNTY	ROUTE	POST MILES TOTAL PROJECT	SHEET No.	TOTAL SHEETS
07	LA	5	R73.2/R88.6	20	130

REGISTERED CIVIL ENGINEER 03/11/11 DATE

07-11-11
PLANS APPROVAL DATE

REGISTERED PROFESSIONAL ENGINEER
DENNIS DO
No. C68587
Exp. 9-30-11
CIVIL
STATE OF CALIFORNIA

THE STATE OF CALIFORNIA OR ITS OFFICERS OR AGENTS SHALL NOT BE RESPONSIBLE FOR THE ACCURACY OR COMPLETENESS OF SCANNED COPIES OF THIS PLAN SHEET.

MESSAGE	
1ST FLASH	SOUTH 5 / EXIT / CLOSED
2RD FLASH	DETOUR / QUAIL / LAKE RD

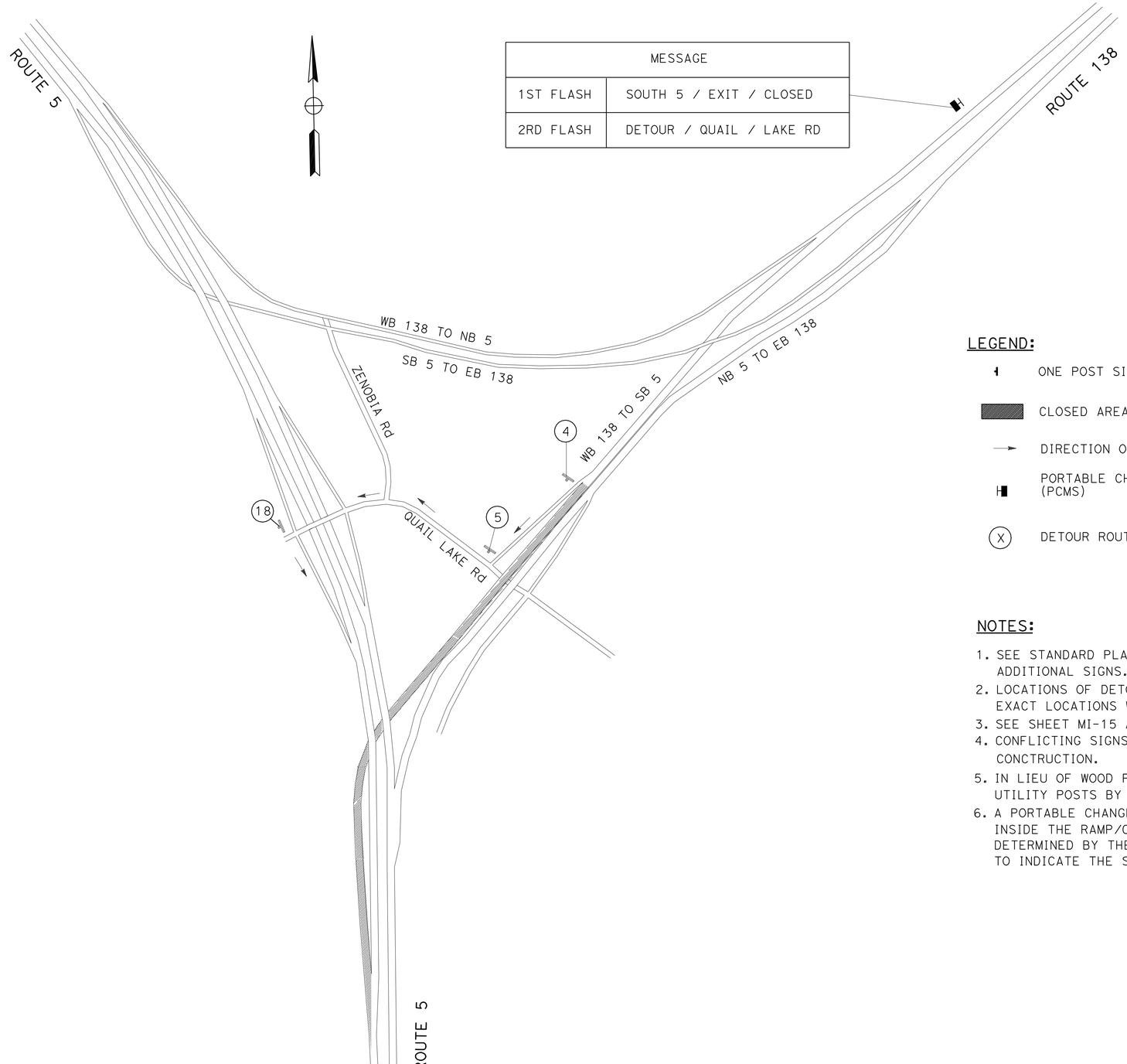

LEGEND:

- ONE POST SIGN
- CLOSED AREA
- DIRECTION OF TRAVEL
- PORTABLE CHANGEABLE MESSAGE SIGN (PCMS)
- (X) DETOUR ROUTE SIGN

NOTES:

1. SEE STANDARD PLAN T-14 FOR RAMP CLOSURE DETAILS AND ADDITIONAL SIGNS.
2. LOCATIONS OF DETOUR SIGNS SHOWN ARE APPROXIMATE EXACT LOCATIONS WILL BE DETERMINED BY THE ENGINEER.
3. SEE SHEET MI-15 AND MI-16 FOR SIGN DETAILS.
4. CONFLICTING SIGNS SHALL BE REMOVED OR COVERED DURING CONCTRUCTION.
5. IN LIEU OF WOOD POSTS, SIGNS MAY BE ATTACHED TO EXISTING UTILITY POSTS BY STRAP AND SADDLE BRACKET METHOD.
6. A PORTABLE CHANGEABLE MESSAGE SIGN SHALL BE PLACED INSIDE THE RAMP/CONNECTOR OR MAINLINE SHOULDER, AS DETERMINED BY THE ENGINEER, 7 DAYS IN ADVANCE OF THE CLOSURE TO INDICATE THE START AND THE END DATES OF THE CLOSURE.

MOTORIST INFORMATION
COMPLETE CONNECTOR CLOSURE
WB Rte 138 TO SB Rte 5

NO SCALE

MI-1

STATE OF CALIFORNIA - DEPARTMENT OF TRANSPORTATION
Caltrans DTM

FUNCTIONAL SUPERVISOR: MARTIN OREGEL
CALCULATED-DESIGNED BY: DENNIS DO
CHECKED BY: MARTIN OREGEL
REVISED BY
DATE REVISED

LAST REVISION 00-00-00
DATE PLOTTED => 18-AUG-2011
TIME PLOTTED => 13:47

Dist	COUNTY	ROUTE	POST MILES TOTAL PROJECT	SHEET No.	TOTAL SHEETS
07	LA	5	R73.2/R88.6	21	130

REGISTERED CIVIL ENGINEER DATE 03/11/11

07-11-11
PLANS APPROVAL DATE

REGISTERED PROFESSIONAL ENGINEER
DENNIS DO
No. C68587
Exp. 9-30-11
CIVIL
STATE OF CALIFORNIA

THE STATE OF CALIFORNIA OR ITS OFFICERS OR AGENTS SHALL NOT BE RESPONSIBLE FOR THE ACCURACY OR COMPLETENESS OF SCANNED COPIES OF THIS PLAN SHEET.

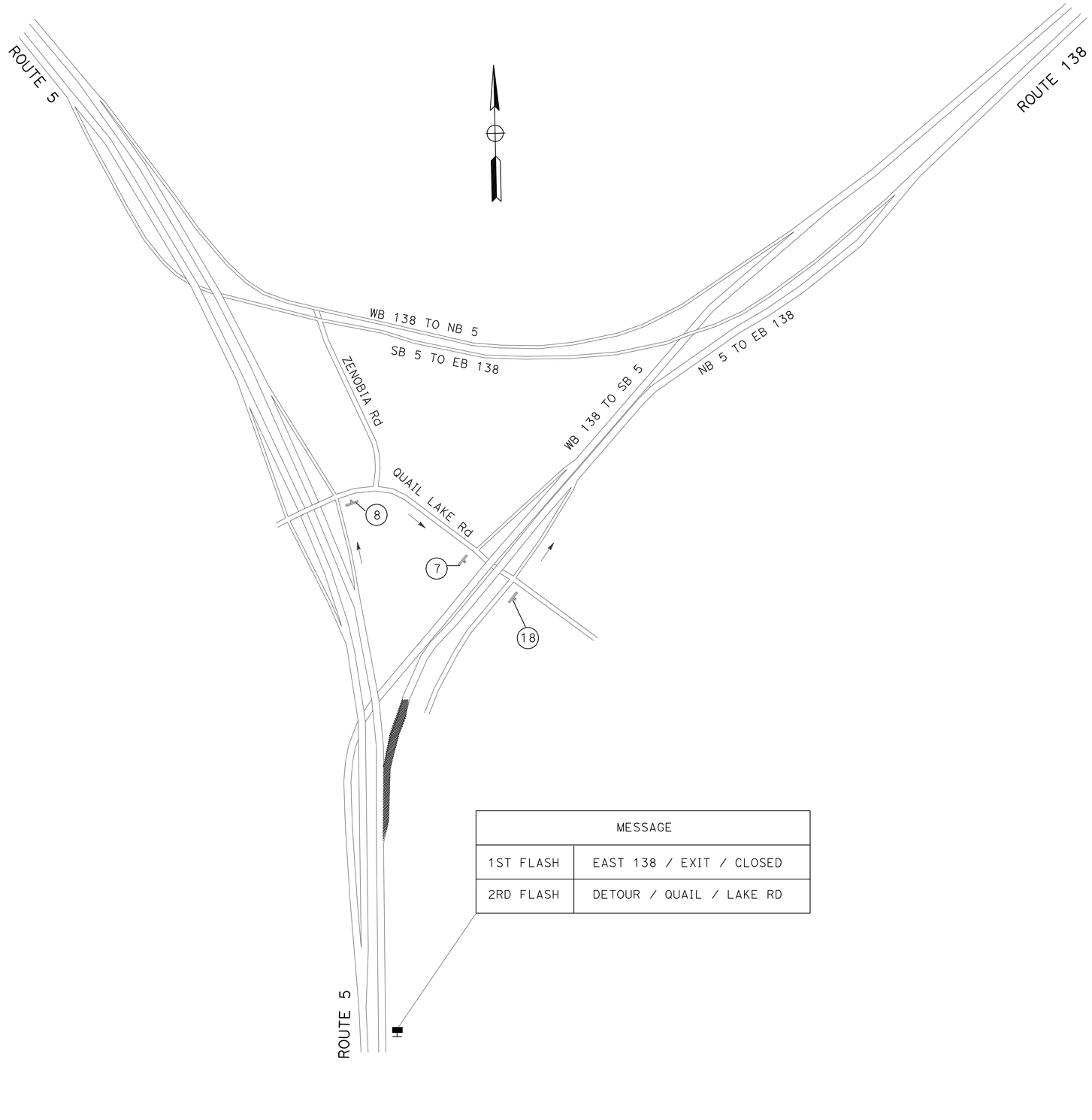

MESSAGE	
1ST FLASH	EAST 138 / EXIT / CLOSED
2RD FLASH	DETOUR / QUAIL / LAKE RD

MOTORIST INFORMATION
COMPLETE CONNECTOR CLOSURE
NB Rte 5 TO EB Rte 138

NO SCALE

MI-2

STATE OF CALIFORNIA - DEPARTMENT OF TRANSPORTATION
Caltrans® DTM

FUNCTIONAL SUPERVISOR: MARTIN OREGEL
CALCULATED-DESIGNED BY: DENNIS DO
CHECKED BY: MARTIN OREGEL
REVISED BY
DATE REVISED

LAST REVISION 00-00-00
DATE PLOTTED => 18-AUG-2011
TIME PLOTTED => 13:47

Dist	COUNTY	ROUTE	POST MILES TOTAL PROJECT	SHEET No.	TOTAL SHEETS
07	LA	5	R73.2/R88.6	22	130

REGISTERED CIVIL ENGINEER 03/11/11 DATE

07-11-11
PLANS APPROVAL DATE

REGISTERED PROFESSIONAL ENGINEER
DENNIS DO
No. C68587
Exp. 9-30-11
CIVIL
STATE OF CALIFORNIA

THE STATE OF CALIFORNIA OR ITS OFFICERS OR AGENTS SHALL NOT BE RESPONSIBLE FOR THE ACCURACY OR COMPLETENESS OF SCANNED COPIES OF THIS PLAN SHEET.

MESSAGE	
1ST FLASH	NORTH 5 / EXIT / CLOSED
2RD FLASH	DETOUR / QUAIL / LAKE RD

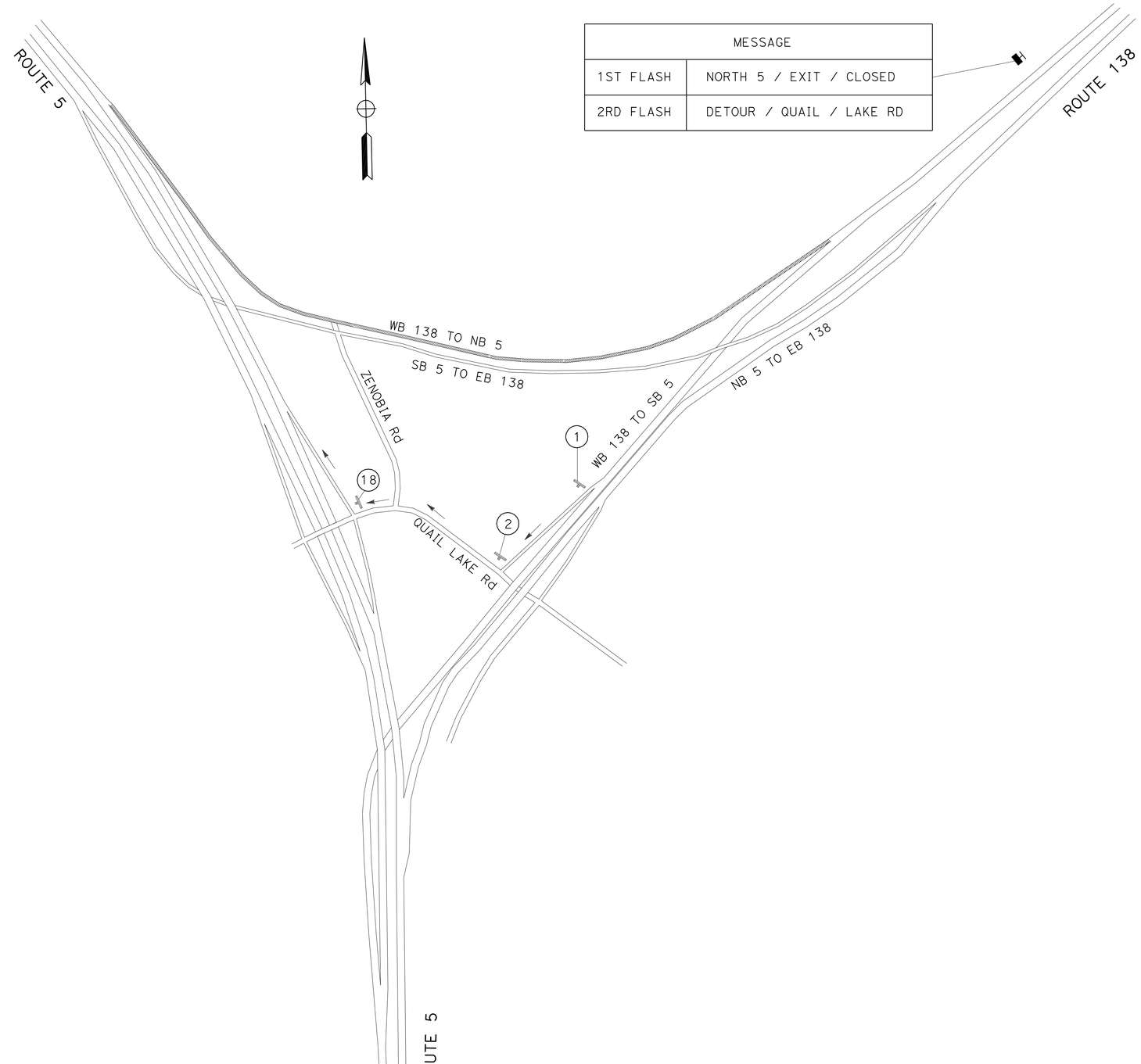

MOTORIST INFORMATION
COMPLETE CONNECTOR CLOSURE
WB Rte 138 TO NB Rte 5

NO SCALE

MI-3

STATE OF CALIFORNIA - DEPARTMENT OF TRANSPORTATION
Caltrans® DTM

FUNCTIONAL SUPERVISOR: MARTIN OREGEL
CALCULATED-DESIGNED BY: DENNIS DO
CHECKED BY: MARTIN OREGEL
REVISED BY
DATE REVISED

LAST REVISION 00-00-00
DATE PLOTTED => 18-AUG-2011
TIME PLOTTED => 13:47

Dist	COUNTY	ROUTE	POST MILES TOTAL PROJECT	SHEET No.	TOTAL SHEETS
07	LA	5	R73.2/R88.6	23	130

REGISTERED CIVIL ENGINEER DATE 03/11/11

07-11-11
PLANS APPROVAL DATE

REGISTERED PROFESSIONAL ENGINEER
DENNIS DO
No. C68587
Exp. 9-30-11
CIVIL
STATE OF CALIFORNIA

THE STATE OF CALIFORNIA OR ITS OFFICERS OR AGENTS SHALL NOT BE RESPONSIBLE FOR THE ACCURACY OR COMPLETENESS OF SCANNED COPIES OF THIS PLAN SHEET.

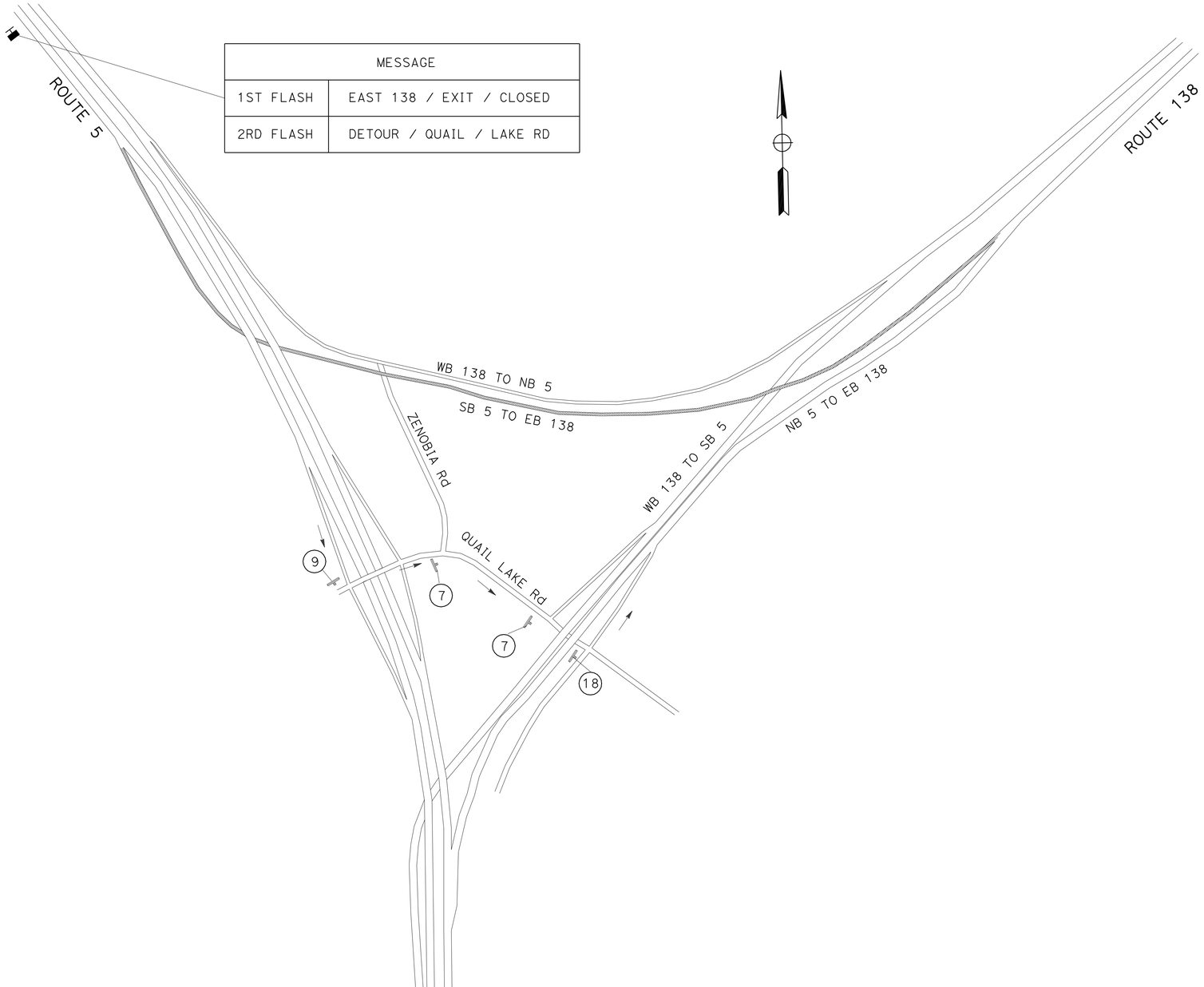

MESSAGE	
1ST FLASH	EAST 138 / EXIT / CLOSED
2RD FLASH	DETOUR / QUAIL / LAKE RD

MOTORIST INFORMATION
COMPLETE CONNECTOR CLOSURE
SB Rte 5 TO EB Rte 138

NO SCALE

MI-4

STATE OF CALIFORNIA - DEPARTMENT OF TRANSPORTATION
Caltrans® DTM

FUNCTIONAL SUPERVISOR: MARTIN OREGEL
CALCULATED-DESIGNED BY: DENNIS DO
CHECKED BY: MARTIN OREGEL
REVISED BY
DATE REVISED

LAST REVISION 00-00-00
DATE PLOTTED => 18-AUG-2011
TIME PLOTTED => 13:47

Dist	COUNTY	ROUTE	POST MILES TOTAL PROJECT	SHEET No.	TOTAL SHEETS
07	LA	5	R73.2/R88.6	24	130

REGISTERED CIVIL ENGINEER DATE 03/11/11

07-11-11
PLANS APPROVAL DATE

REGISTERED PROFESSIONAL ENGINEER
DENNIS DO
No. C68587
Exp. 9-30-11
CIVIL
STATE OF CALIFORNIA

THE STATE OF CALIFORNIA OR ITS OFFICERS OR AGENTS SHALL NOT BE RESPONSIBLE FOR THE ACCURACY OR COMPLETENESS OF SCANNED COPIES OF THIS PLAN SHEET.

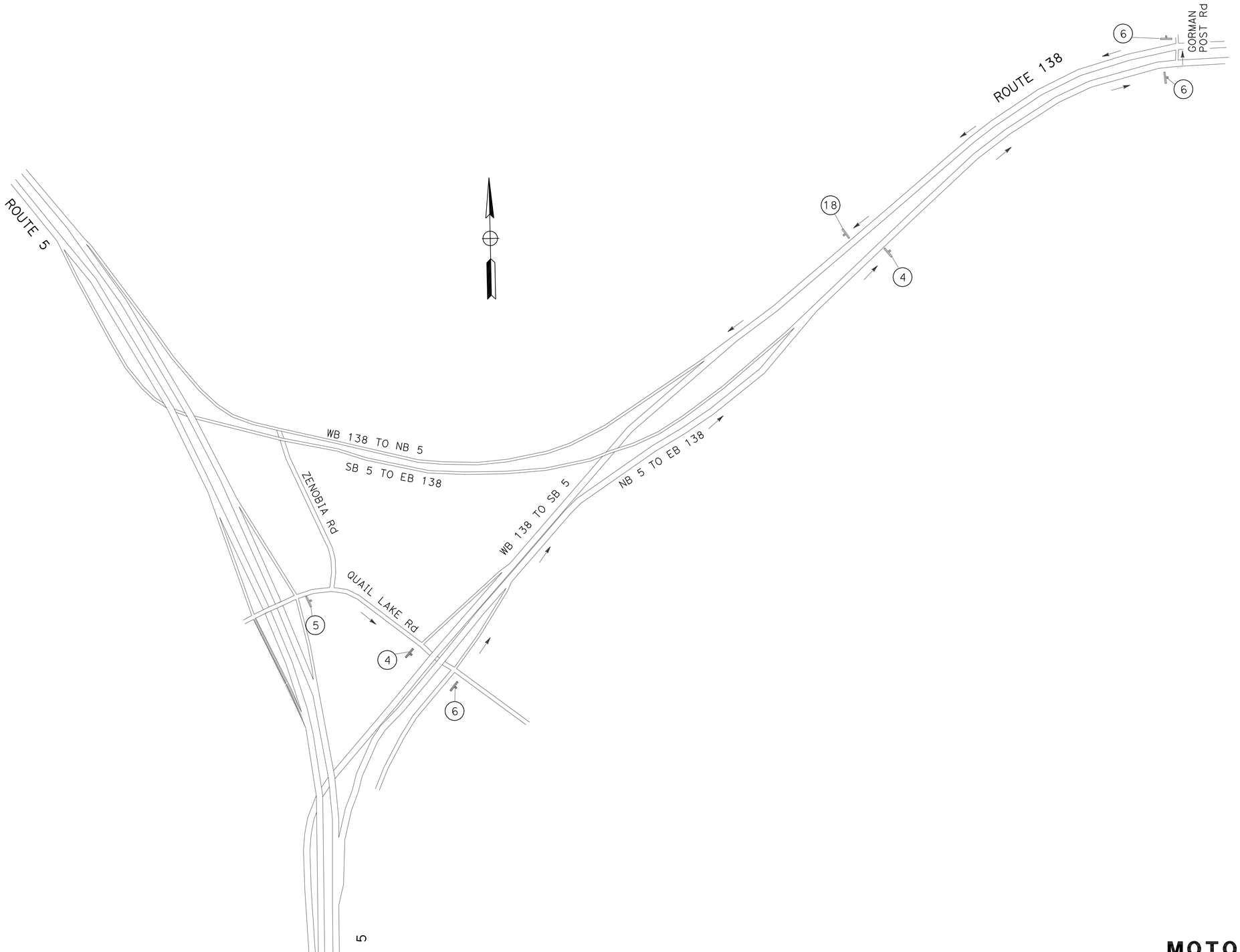

MOTORIST INFORMATION
QUAIL LAKE Rd ON-RAMP CLOSURE TO SB Rte 5

NO SCALE

MI-5

STATE OF CALIFORNIA - DEPARTMENT OF TRANSPORTATION
Caltrans
DTM

FUNCTIONAL SUPERVISOR: MARTIN OREGEL
CALCULATED-DESIGNED BY: DENNIS DO
CHECKED BY: MARTIN OREGEL
REVISED BY
DATE REVISED

LAST REVISION 00-00-00
DATE PLOTTED => 18-AUG-2011
TIME PLOTTED => 13:47

Dist	COUNTY	ROUTE	POST MILES TOTAL PROJECT	SHEET No.	TOTAL SHEETS
07	LA	5	R73.2/R88.6	25	130

REGISTERED CIVIL ENGINEER 03/11/11 DATE

07-11-11
PLANS APPROVAL DATE

REGISTERED PROFESSIONAL ENGINEER
DENNIS DO
No. C68587
Exp. 9-30-11
CIVIL
STATE OF CALIFORNIA

THE STATE OF CALIFORNIA OR ITS OFFICERS OR AGENTS SHALL NOT BE RESPONSIBLE FOR THE ACCURACY OR COMPLETENESS OF SCANNED COPIES OF THIS PLAN SHEET.

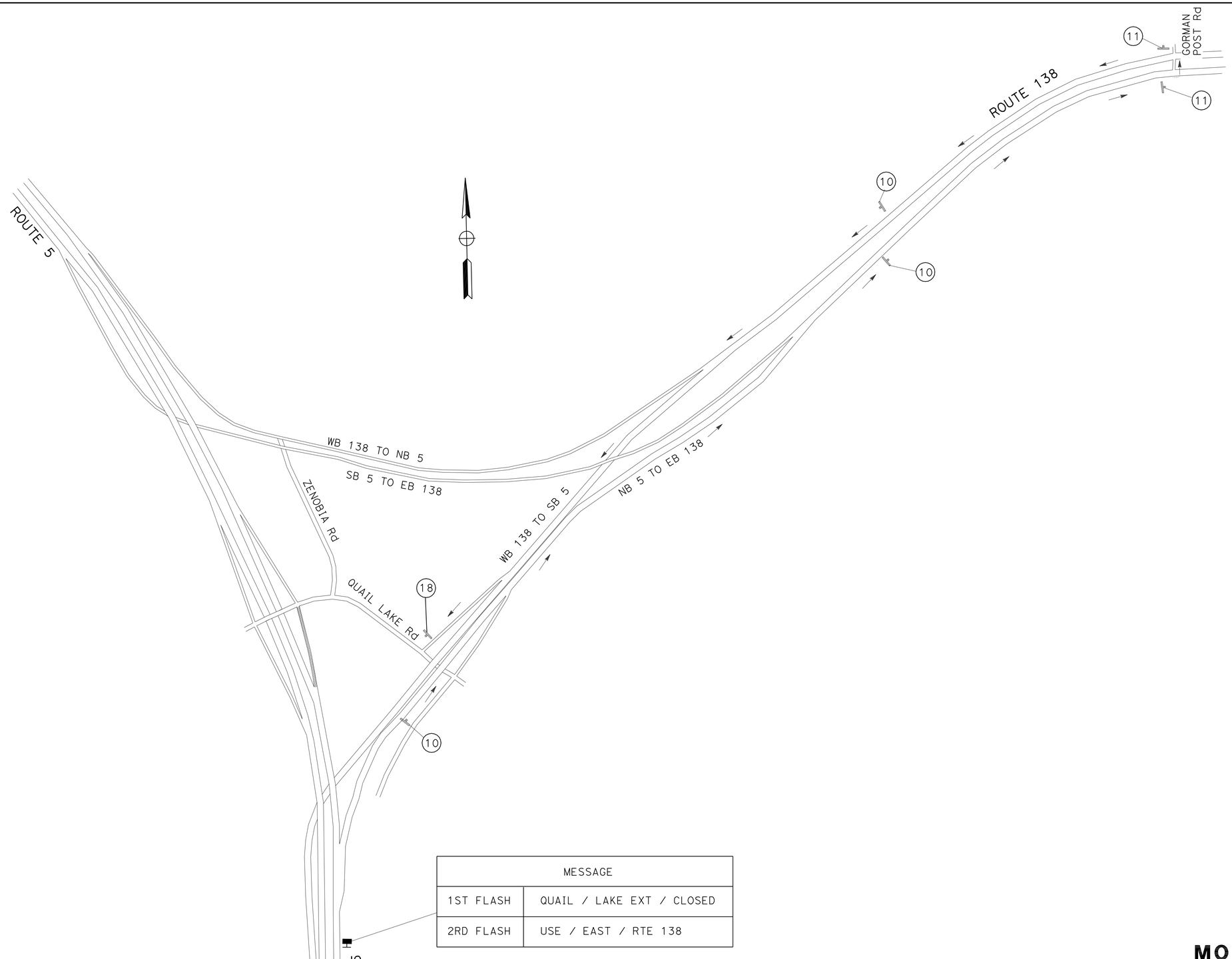

MESSAGE	
1ST FLASH	QUAIL / LAKE EXT / CLOSED
2RD FLASH	USE / EAST / RTE 138

MOTORIST INFORMATION
QUAIL LAKE Rd OFF-RAMP CLOSURE FROM NB Rte 5

NO SCALE

MI-6

STATE OF CALIFORNIA - DEPARTMENT OF TRANSPORTATION
Caltrans
DTM

FUNCTIONAL SUPERVISOR: MARTIN OREGEL
CALCULATED-DESIGNED BY: DENNIS DO
CHECKED BY: MARTIN OREGEL
REVISED BY
DATE REVISED

LAST REVISION 00-00-00
DATE PLOTTED => 18-AUG-2011
TIME PLOTTED => 13:47

Dist	COUNTY	ROUTE	POST MILES TOTAL PROJECT	SHEET No.	TOTAL SHEETS
07	LA	5	R73.2/R88.6	26	130

REGISTERED CIVIL ENGINEER 03/11/11 DATE

07-11-11
PLANS APPROVAL DATE

REGISTERED PROFESSIONAL ENGINEER
DENNIS DO
No. C68587
Exp. 9-30-11
CIVIL
STATE OF CALIFORNIA

THE STATE OF CALIFORNIA OR ITS OFFICERS OR AGENTS SHALL NOT BE RESPONSIBLE FOR THE ACCURACY OR COMPLETENESS OF SCANNED COPIES OF THIS PLAN SHEET.

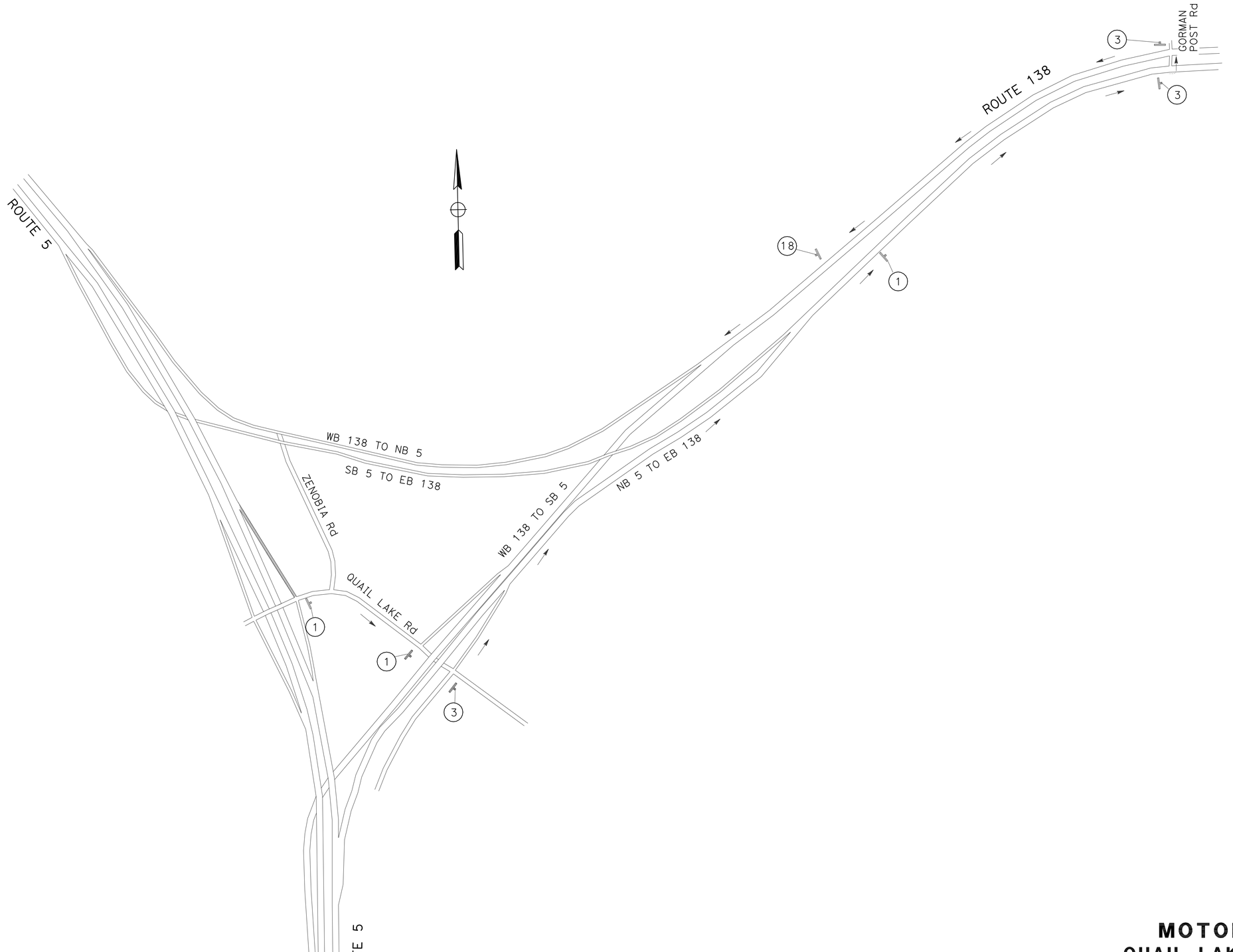

MOTORIST INFORMATION
QUAIL LAKE Rd ON-RAMP CLOSURE TO NB Rte 5

NO SCALE

MI-7

STATE OF CALIFORNIA - DEPARTMENT OF TRANSPORTATION
Caltrans®
DTM

FUNCTIONAL SUPERVISOR: MARTIN OREGEL
CALCULATED-DESIGNED BY: DENNIS DO
CHECKED BY: MARTIN OREGEL
REVISED BY
DATE REVISED

LAST REVISION 00-00-00 | DATE PLOTTED => 18-AUG-2011 | TIME PLOTTED => 13:47

Dist	COUNTY	ROUTE	POST MILES TOTAL PROJECT	SHEET No.	TOTAL SHEETS
07	LA	5	R73.2/R88.6	27	130

REGISTERED CIVIL ENGINEER 03/11/11 DATE

07-11-11
PLANS APPROVAL DATE

REGISTERED PROFESSIONAL ENGINEER
DENNIS DO
No. C68587
Exp. 9-30-11
CIVIL
STATE OF CALIFORNIA

THE STATE OF CALIFORNIA OR ITS OFFICERS OR AGENTS SHALL NOT BE RESPONSIBLE FOR THE ACCURACY OR COMPLETENESS OF SCANNED COPIES OF THIS PLAN SHEET.

MESSAGE	
1ST FLASH	QUAIL / LAKE EXT / CLOSED
2RD FLASH	USE / EAST / RTE 138

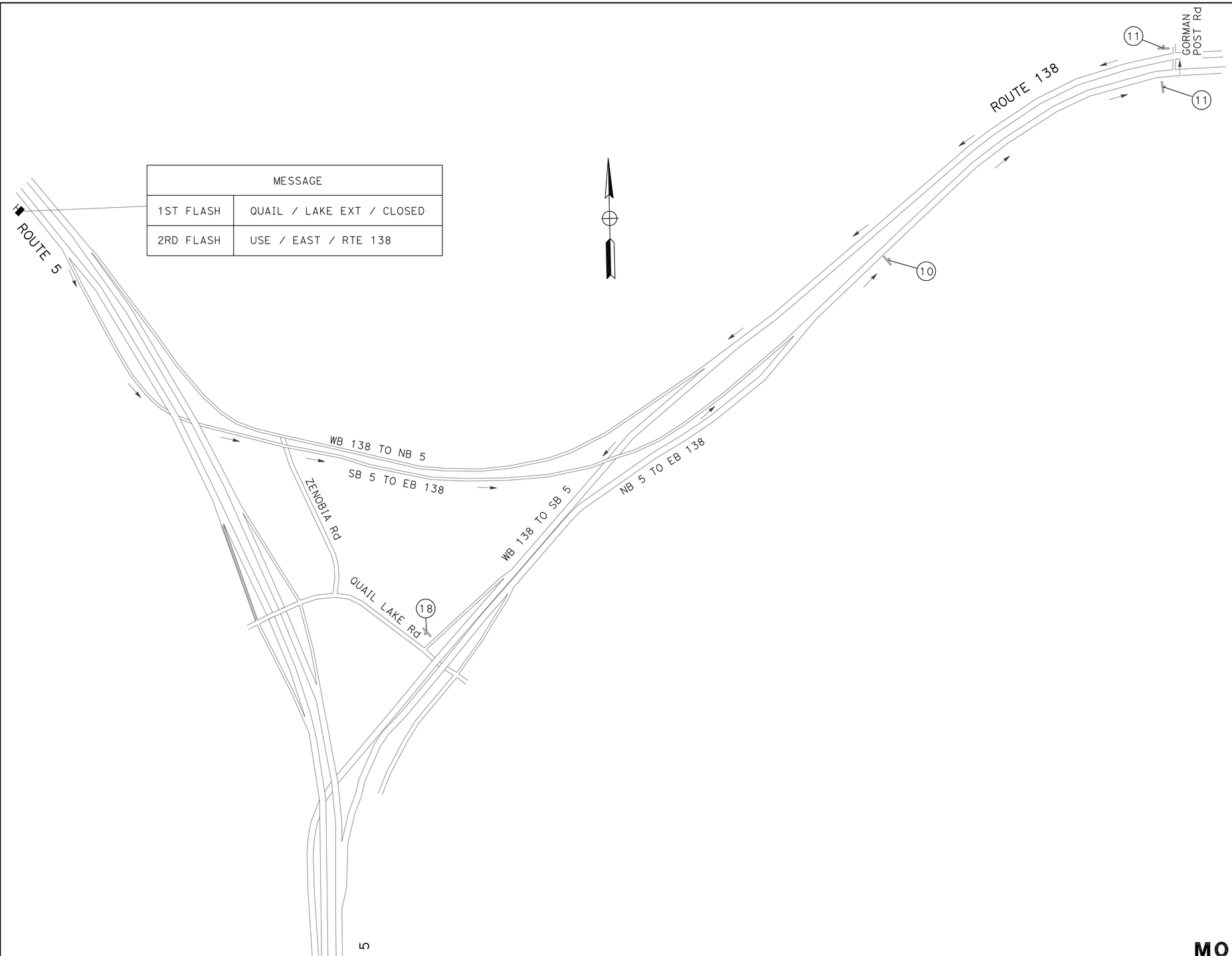

MOTORIST INFORMATION
QUAIL LAKE Rd OFF-RAMP CLOSURE
FROM SB Rte 5

NO SCALE

MI-8

STATE OF CALIFORNIA - DEPARTMENT OF TRANSPORTATION
Caltrans
DTM

FUNCTIONAL SUPERVISOR: MARTIN OREGEL
CALCULATED-DESIGNED BY: DENNIS DO
CHECKED BY: MARTIN OREGEL
REVISED BY
DATE REVISED

LAST REVISION 00-00-00
DATE PLOTTED => 18-AUG-2011
TIME PLOTTED => 13:47

Dist	COUNTY	ROUTE	POST MILES TOTAL PROJECT	SHEET No.	TOTAL SHEETS
07	LA	5	R73.2/R88.6	28	130

REGISTERED CIVIL ENGINEER 03/11/11 DATE

07-11-11
PLANS APPROVAL DATE

REGISTERED PROFESSIONAL ENGINEER
DENNIS DO
No. C68587
Exp. 9-30-11
CIVIL
STATE OF CALIFORNIA

THE STATE OF CALIFORNIA OR ITS OFFICERS OR AGENTS SHALL NOT BE RESPONSIBLE FOR THE ACCURACY OR COMPLETENESS OF SCANNED COPIES OF THIS PLAN SHEET.

MOTORIST INFORMATION
GORMAN SCHOOL Rd ON-RAMP CLOSURE TO SB Rte 5

NO SCALE

MI-9

STATE OF CALIFORNIA - DEPARTMENT OF TRANSPORTATION
Caltrans
DTM

FUNCTIONAL SUPERVISOR: MARTIN OREGEL
CALCULATED-DESIGNED BY: DENNIS DO
CHECKED BY: MARTIN OREGEL
REVISED BY
DATE REVISED

LAST REVISION 00-00-00
DATE PLOTTED => 18-AUG-2011
TIME PLOTTED => 13:48

Dist	COUNTY	ROUTE	POST MILES TOTAL PROJECT	SHEET No.	TOTAL SHEETS
07	LA	5	R73.2/R88.6	29	130

REGISTERED CIVIL ENGINEER DATE 03/11/11

07-11-11
PLANS APPROVAL DATE

REGISTERED PROFESSIONAL ENGINEER
DENNIS DO
No. C68587
Exp. 9-30-11
CIVIL
STATE OF CALIFORNIA

THE STATE OF CALIFORNIA OR ITS OFFICERS OR AGENTS SHALL NOT BE RESPONSIBLE FOR THE ACCURACY OR COMPLETENESS OF SCANNED COPIES OF THIS PLAN SHEET.

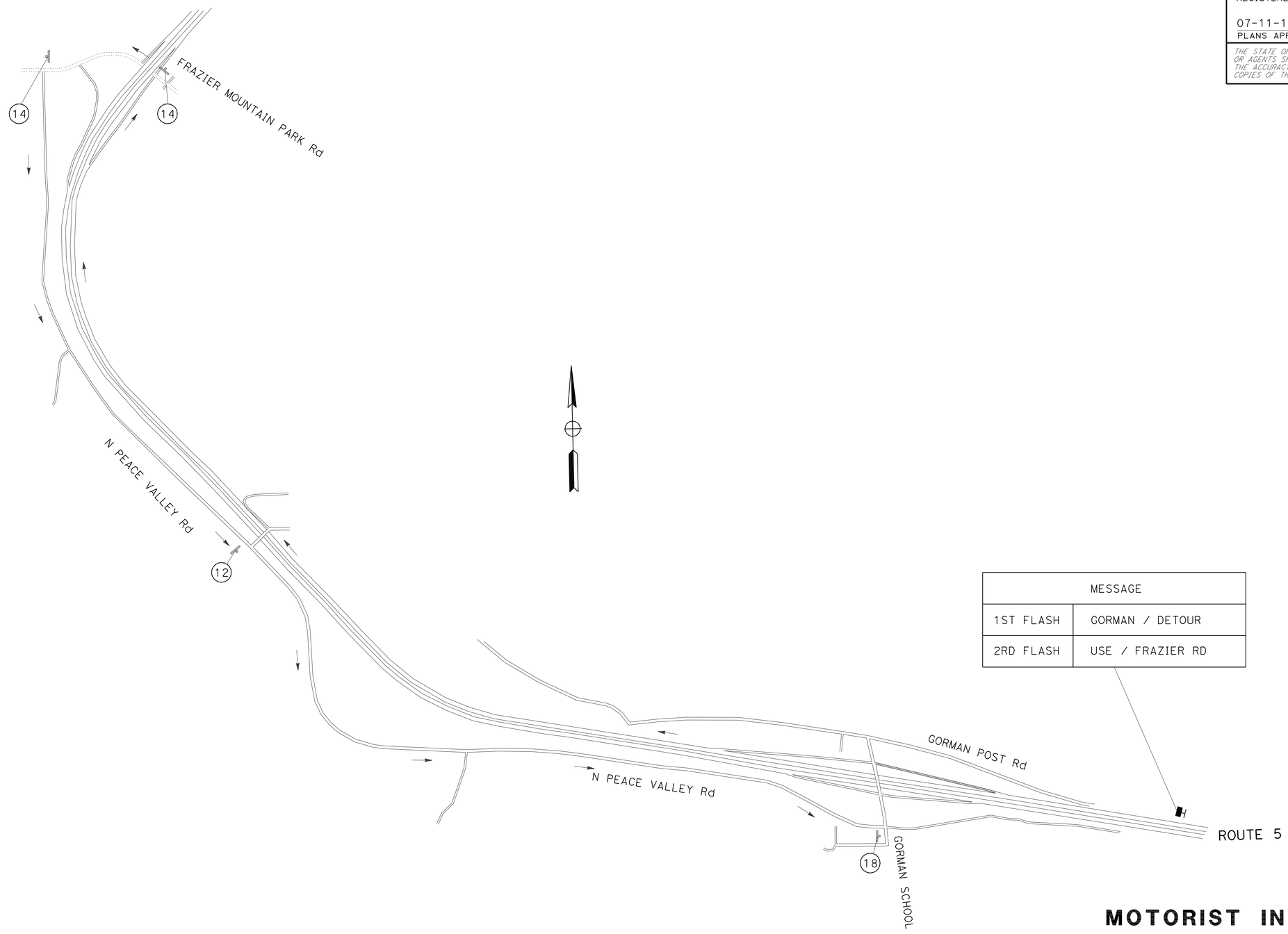

MESSAGE	
1ST FLASH	GORMAN / DETOUR
2RD FLASH	USE / FRAZIER RD

MOTORIST INFORMATION
GORMAN SCHOOL Rd OFF-RAMP CLOSURE FROM NB Rte 5

NO SCALE

MI-10

STATE OF CALIFORNIA - DEPARTMENT OF TRANSPORTATION
Caltrans
DTM

FUNCTIONAL SUPERVISOR: MARTIN OREGEL
CALCULATED-DESIGNED BY: DENNIS DO
CHECKED BY: MARTIN OREGEL
REVISED BY
DATE REVISED

LAST REVISION 00-00-00
DATE PLOTTED => 18-AUG-2011
TIME PLOTTED => 13:48

Dist	COUNTY	ROUTE	POST MILES TOTAL PROJECT	SHEET No.	TOTAL SHEETS
07	LA	5	R73.2/R88.6	30	130

REGISTERED CIVIL ENGINEER 03/11/11 DATE

07-11-11
PLANS APPROVAL DATE

REGISTERED PROFESSIONAL ENGINEER
DENNIS DO
No. C68587
Exp. 9-30-11
CIVIL
STATE OF CALIFORNIA

THE STATE OF CALIFORNIA OR ITS OFFICERS OR AGENTS SHALL NOT BE RESPONSIBLE FOR THE ACCURACY OR COMPLETENESS OF SCANNED COPIES OF THIS PLAN SHEET.

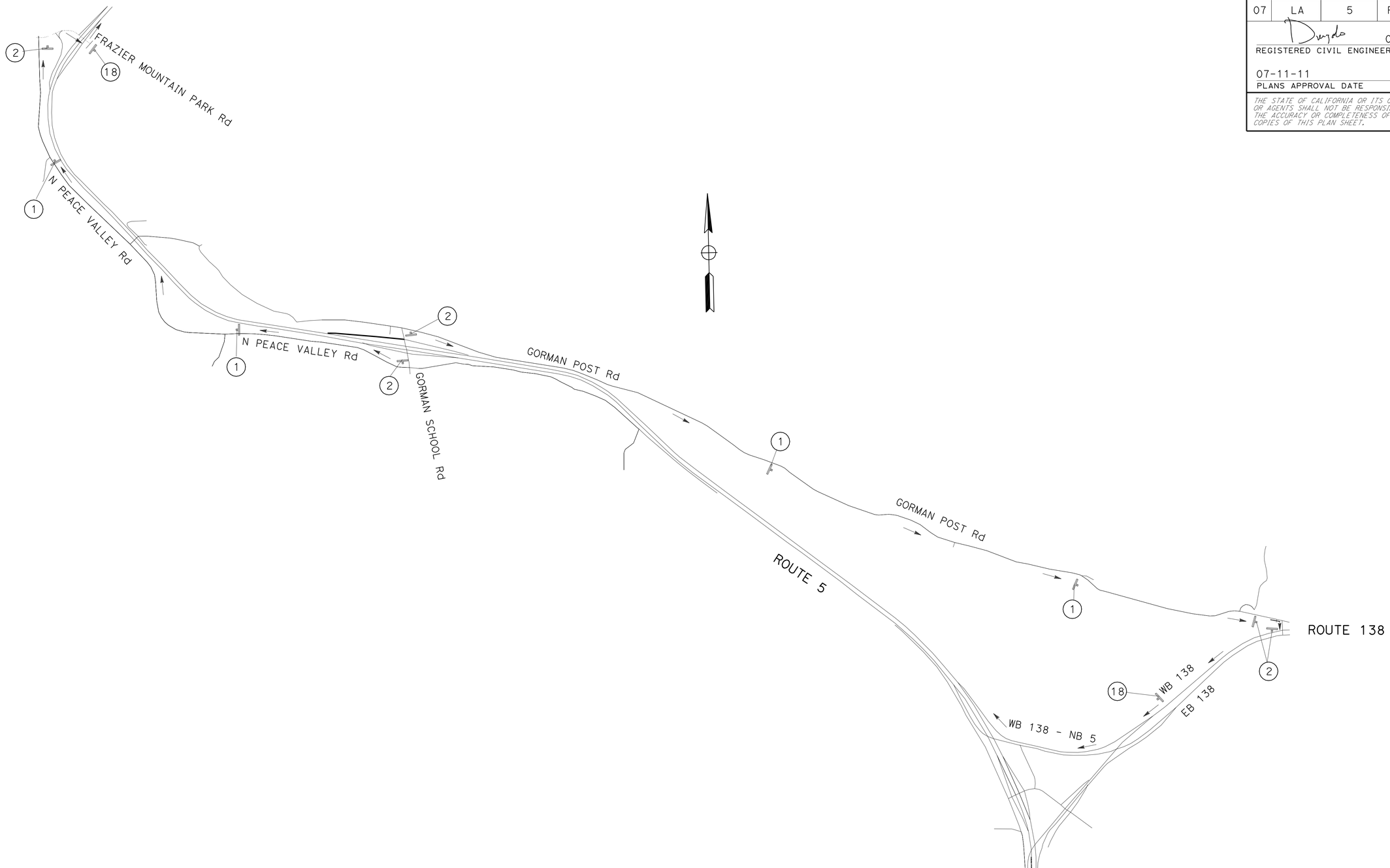

MOTORIST INFORMATION
GORMAN SCHOOL Rd ON-RAMP CLOSURE TO NB Rte 5

NO SCALE

MI-11

STATE OF CALIFORNIA - DEPARTMENT OF TRANSPORTATION
Caltrans
DTM

FUNCTIONAL SUPERVISOR: MARTIN OREGEL
CALCULATED-DESIGNED BY: DENNIS DO
CHECKED BY: MARTIN OREGEL
REVISED BY
DATE REVISED

LAST REVISION 00-00-00
DATE PLOTTED => 18-AUG-2011
TIME PLOTTED => 13:48

Dist	COUNTY	ROUTE	POST MILES TOTAL PROJECT	SHEET No.	TOTAL SHEETS
07	LA	5	R73.2/R88.6	31	130

REGISTERED CIVIL ENGINEER 03/11/11 DATE

07-11-11
PLANS APPROVAL DATE

REGISTERED PROFESSIONAL ENGINEER
DENNIS DO
No. C68587
Exp. 9-30-11
CIVIL
STATE OF CALIFORNIA

THE STATE OF CALIFORNIA OR ITS OFFICERS OR AGENTS SHALL NOT BE RESPONSIBLE FOR THE ACCURACY OR COMPLETENESS OF SCANNED COPIES OF THIS PLAN SHEET.

MESSAGE	
1ST FLASH	GORMAN/ EXIT / CLOSED
2RD FLASH	DETOUR / EXIT / FRAZIER

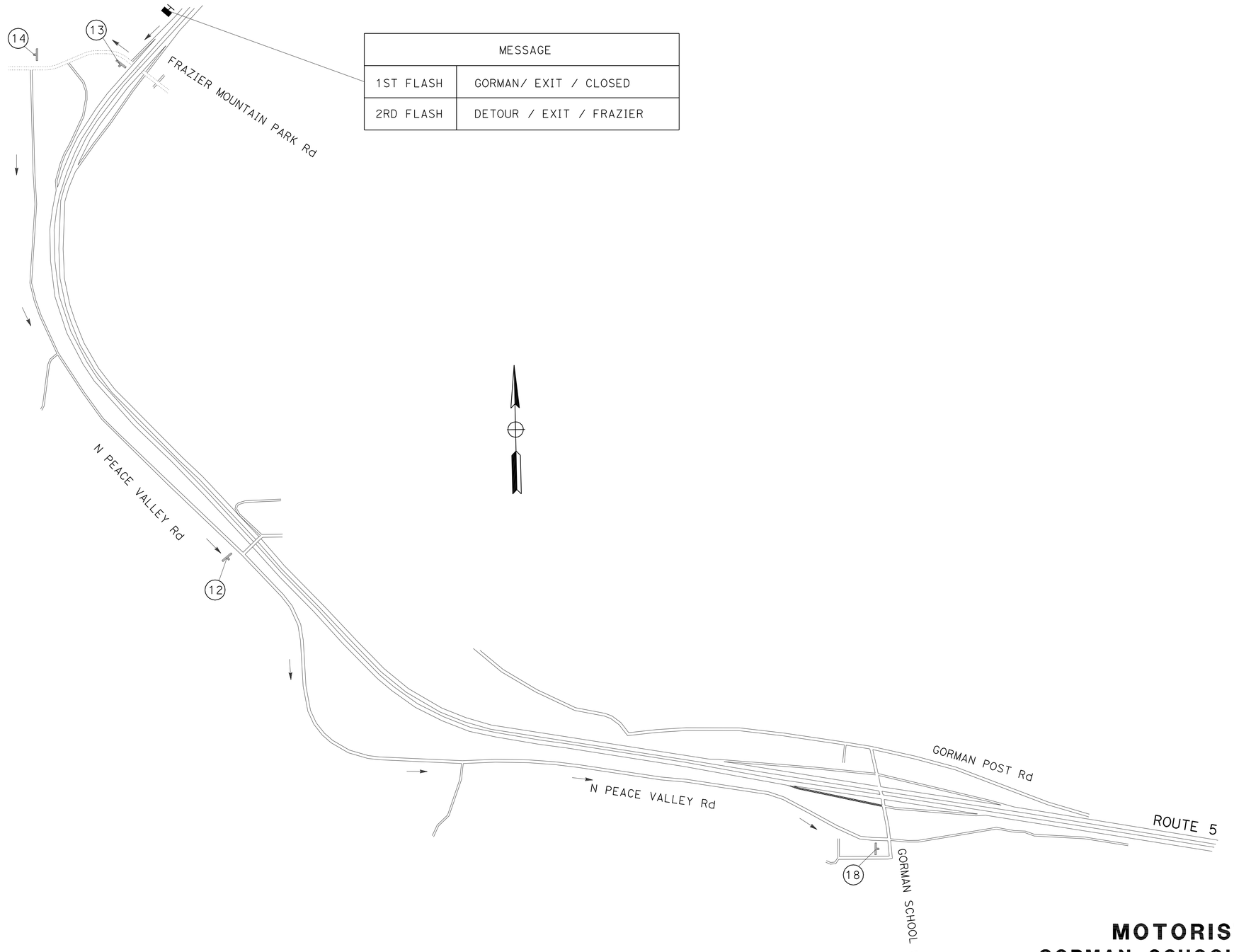

MOTORIST INFORMATION
GORMAN SCHOOL Rd OFF-RAMP CLOSURE FROM SB Rte 5

NO SCALE

MI-12

STATE OF CALIFORNIA - DEPARTMENT OF TRANSPORTATION
Caltrans® DTM

FUNCTIONAL SUPERVISOR: MARTIN OREGEL
CALCULATED-DESIGNED BY: DENNIS DO
CHECKED BY: MARTIN OREGEL
REVISED BY
DATE REVISED

LAST REVISION 00-00-00
DATE PLOTTED => 18-AUG-2011
TIME PLOTTED => 13:48

Dist	COUNTY	ROUTE	POST MILES TOTAL PROJECT	SHEET No.	TOTAL SHEETS
07	LA	5	R73.2/R88.6	32	130

REGISTERED CIVIL ENGINEER DATE 03/11/11

07-11-11
PLANS APPROVAL DATE

REGISTERED PROFESSIONAL ENGINEER
DENNIS DO
No. C68587
Exp. 9-30-11
CIVIL
STATE OF CALIFORNIA

THE STATE OF CALIFORNIA OR ITS OFFICERS OR AGENTS SHALL NOT BE RESPONSIBLE FOR THE ACCURACY OR COMPLETENESS OF SCANNED COPIES OF THIS PLAN SHEET.

MOTORIST INFORMATION
FRAZIER MOUNTAIN PARK Rd ON-RAMP CLOSURE TO SB Rte 5

NO SCALE

MI-13

STATE OF CALIFORNIA - DEPARTMENT OF TRANSPORTATION
Caltrans
DTM

FUNCTIONAL SUPERVISOR: MARTIN OREGEL

CALCULATED-DESIGNED BY: DENNIS DO
CHECKED BY: MARTIN OREGEL

REVISED BY
DATE REVISED

LAST REVISION 00-00-00
DATE PLOTTED => 18-AUG-2011
TIME PLOTTED => 13:48

Dist	COUNTY	ROUTE	POST MILES TOTAL PROJECT	SHEET No.	TOTAL SHEETS
07	LA	5	R73.2/R88.6	33	130

REGISTERED CIVIL ENGINEER DATE 03/11/11

07-11-11
PLANS APPROVAL DATE

REGISTERED PROFESSIONAL ENGINEER
DENNIS DO
No. C68587
Exp. 9-30-11
CIVIL
STATE OF CALIFORNIA

THE STATE OF CALIFORNIA OR ITS OFFICERS OR AGENTS SHALL NOT BE RESPONSIBLE FOR THE ACCURACY OR COMPLETENESS OF SCANNED COPIES OF THIS PLAN SHEET.

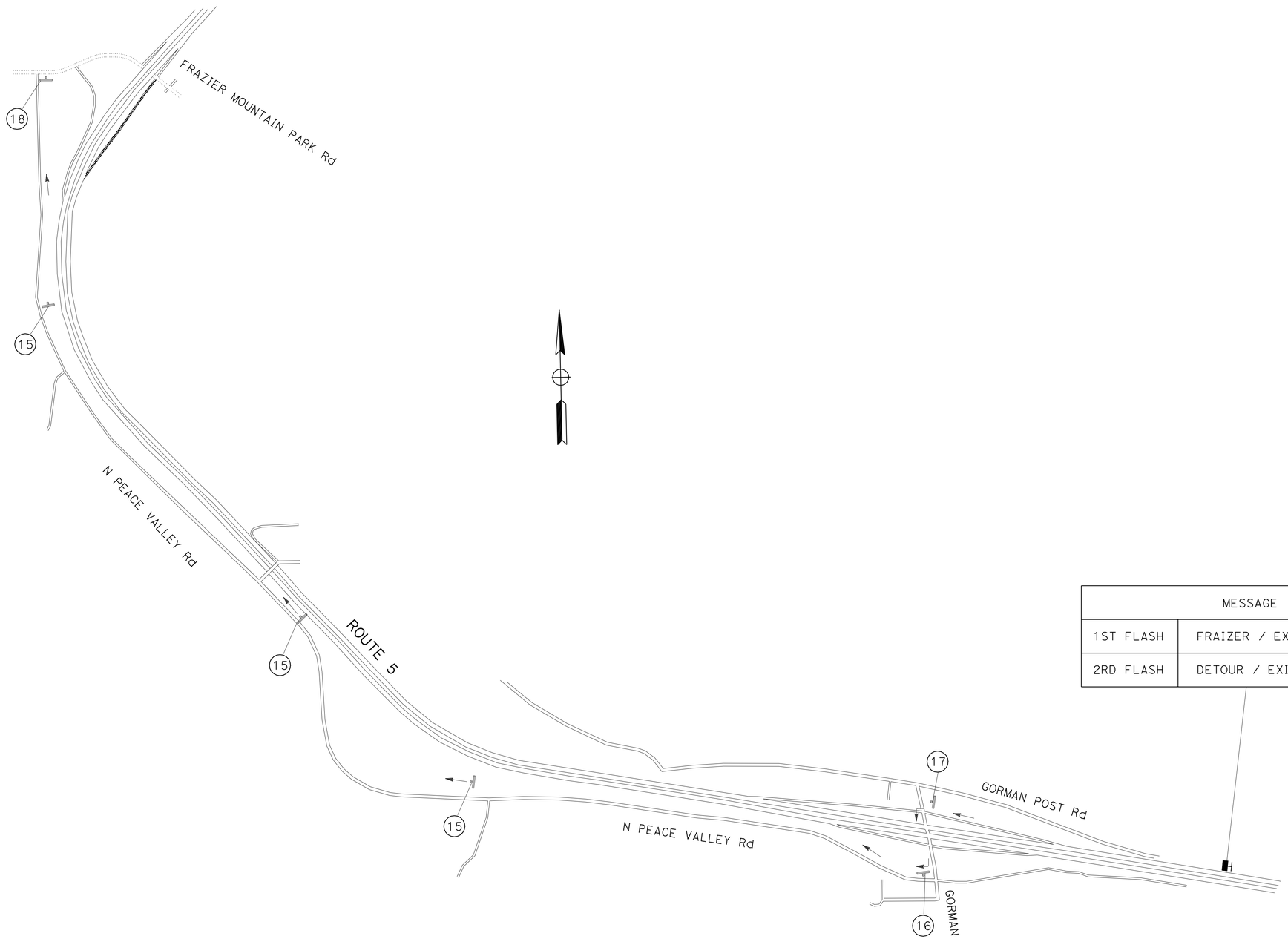

MESSAGE	
1ST FLASH	FRAIZER / EXIT / CLOSED
2RD FLASH	DETOUR / EXIT / GORMAN

MOTORIST INFORMATION
FRAZIER MOUNTAIN PARK Rd OFF-RAMP CLOSURE FROM NB Rte 5

NO SCALE

MI-14

STATE OF CALIFORNIA - DEPARTMENT OF TRANSPORTATION
Caltrans
DTM

FUNCTIONAL SUPERVISOR: MARTIN OREGEL
CALCULATED-DESIGNED BY: DENNIS DO
CHECKED BY: MARTIN OREGEL
REVISED BY
DATE REVISED

LAST REVISION 00-00-00
DATE PLOTTED => 18-AUG-2011
TIME PLOTTED => 13:48

Dist	COUNTY	ROUTE	POST MILES TOTAL PROJECT	SHEET No.	TOTAL SHEETS
07	LA	5	R73.2/R88.6	34	130

REGISTERED CIVIL ENGINEER 03/11/11 DATE

07-11-11
PLANS APPROVAL DATE

REGISTERED PROFESSIONAL ENGINEER
DENNIS DO
No. C68587
Exp. 9-30-11
CIVIL
STATE OF CALIFORNIA

THE STATE OF CALIFORNIA OR ITS OFFICERS OR AGENTS SHALL NOT BE RESPONSIBLE FOR THE ACCURACY OR COMPLETENESS OF SCANNED COPIES OF THIS PLAN SHEET.

SIGN No.	SIGN CODE	PANEL SIZE (INCH)	SIGN MESSAGE	No. OF POSTS AND SIZE (INCH)	No. OF SIGNS (EA)	REMARKS
1	M4-8	30 X 15	DETOUR	1- 4 X 4	8	BLACK ON RETROREFLECTIVE ORANGE BACKGROUND
	M3-3	24 X 12	NORTH			BLACK ON RETROREFLECTIVE WHITE BACKGROUND
	M1-1	24 X 24	5			RED, WHITE, BLUE
	M6-1	21 X 15	↑			BLACK ON RETROREFLECTIVE WHITE BACKGROUND
2	M4-8	30 X 15	DETOUR	1- 4 X 4	5	BLACK ON RETROREFLECTIVE ORANGE BACKGROUND
	M3-3	24 X 12	NORTH			BLACK ON RETROREFLECTIVE WHITE BACKGROUND
	M1-1	24 X 24	5			RED, WHITE, BLUE
	M6-1	21 X 15	→			BLACK ON RETROREFLECTIVE WHITE BACKGROUND
3	M4-8	30 X 15	DETOUR	1- 4 X 4	3	BLACK ON RETROREFLECTIVE ORANGE BACKGROUND
	M3-3	24 X 12	NORTH			BLACK ON RETROREFLECTIVE WHITE BACKGROUND
	M1-1	24 X 24	5			RED, WHITE, BLUE
	M6-1	21 X 15	←			BLACK ON RETROREFLECTIVE WHITE BACKGROUND
4	M4-8	30 X 15	DETOUR	1- 4 X 4	8	BLACK ON RETROREFLECTIVE ORANGE BACKGROUND
	M3-3	24 X 12	SOUTH			BLACK ON RETROREFLECTIVE WHITE BACKGROUND
	M1-1	24 X 24	5			RED, WHITE, BLUE
	M6-1	21 X 15	↑			BLACK ON RETROREFLECTIVE WHITE BACKGROUND
5	M4-8	30 X 15	DETOUR	1- 4 X 4	7	BLACK ON RETROREFLECTIVE ORANGE BACKGROUND
	M3-3	24 X 12	SOUTH			BLACK ON RETROREFLECTIVE WHITE BACKGROUND
	M1-1	24 X 24	5			RED, WHITE, BLUE
	M6-1	21 X 15	→			BLACK ON RETROREFLECTIVE WHITE BACKGROUND
6	M4-8	30 X 15	DETOUR	1- 4 X 4	4	BLACK ON RETROREFLECTIVE ORANGE BACKGROUND
	M3-3	24 X 12	SOUTH			BLACK ON RETROREFLECTIVE WHITE BACKGROUND
	M1-1	24 X 24	5			RED, WHITE, BLUE
	M6-1	21 X 15	←			BLACK ON RETROREFLECTIVE WHITE BACKGROUND

SIGN 10 SIGN 11

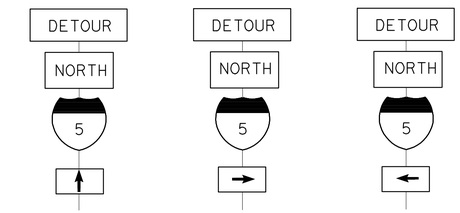

SIGN 1 SIGN 2 SIGN 3

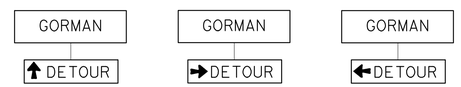

SIGN 12 SIGN 13 SIGN 14

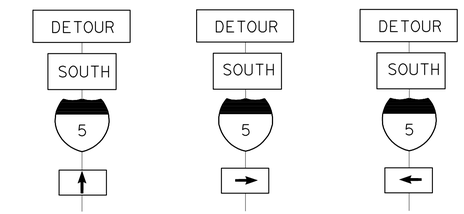

SIGN 4 SIGN 5 SIGN 6

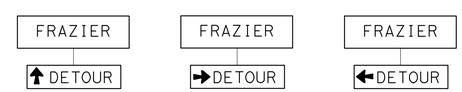

SIGN 15 SIGN 16 SIGN 17

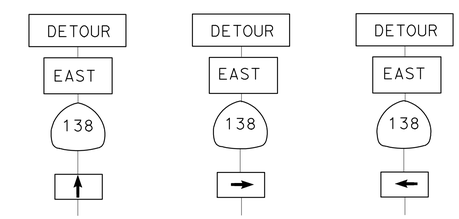

SIGN 7 SIGN 8 SIGN 9

SIGN 18

MOTORIST INFORMATION
DETOUR ROUTE SIGNS AND SUMMARY OF QUANTITIES

MI-15

STATE OF CALIFORNIA - DEPARTMENT OF TRANSPORTATION
Caltrans DTM

FUNCTIONAL SUPERVISOR: MARTIN OREGEL
CALCULATED-DESIGNED BY: DENNIS DO
CHECKED BY: MARTIN OREGEL
REVISED BY
DATE REVISED

LAST REVISION 00-00-00
DATE PLOTTED => 18-AUG-2011
TIME PLOTTED => 13:48

Dist	COUNTY	ROUTE	POST MILES TOTAL PROJECT	SHEET No.	TOTAL SHEETS
07	LA	5	R73.2/R88.6	35	130

REGISTERED CIVIL ENGINEER 03/11/11 DATE

07-11-11
PLANS APPROVAL DATE

REGISTERED PROFESSIONAL ENGINEER DENNIS DO No. C68587 Exp. 9-30-11 CIVIL STATE OF CALIFORNIA

THE STATE OF CALIFORNIA OR ITS OFFICERS OR AGENTS SHALL NOT BE RESPONSIBLE FOR THE ACCURACY OR COMPLETENESS OF SCANNED COPIES OF THIS PLAN SHEET.

SIGN No.	SIGN CODE	PANEL SIZE (INCH)	SIGN MESSAGE	No. OF POSTS AND SIZE (INCH)	No. OF SIGNS (EA)	REMARKS
12	D3	30 X 15	GORMAN	1- 4 X 6	2	BLACK ON RETROREFLECTIVE ORANGE BACKGROUND
	SC3(CA)	36 X 12	↑ DETOUR			
13	D3	30 X 15	GORMAN	1- 4 X 6	1	BLACK ON RETROREFLECTIVE ORANGE BACKGROUND
	SC3(CA)	36 X 12	→ DETOUR			
14	D3	30 X 15	GORMAN	1- 4 X 6	3	BLACK ON RETROREFLECTIVE ORANGE BACKGROUND
	SC3(CA)	36 X 12	← DETOUR			
15	D3	30 X 15	FRAZIER	1- 4 X 6	3	BLACK ON RETROREFLECTIVE ORANGE BACKGROUND
	SC3(CA)	36 X 12	↑ DETOUR			
16	D3	30 X 15	FRAZIER	1- 4 X 6	1	BLACK ON RETROREFLECTIVE ORANGE BACKGROUND
	SC3(CA)	36 X 12	→ DETOUR			
17	D3	30 X 15	FRAZIER	1- 4 X 6	1	BLACK ON RETROREFLECTIVE ORANGE BACKGROUND
	SC3(CA)	36 X 12	← DETOUR			
18	M4-8a	24 X 18	END DETOUR	1- 4 X 4	16	BLACK ON RETROREFLECTIVE ORANGE BACKGROUND

SIGN No.	SIGN CODE	PANEL SIZE (INCH)	SIGN MESSAGE	No. OF POSTS AND SIZE (INCH)	No. OF SIGNS (EA)	REMARKS
7	M4-8	30 X 15	DETOUR	1- 4 X 4	4	BLACK ON RETROREFLECTIVE ORANGE BACKGROUND
	M3-3	24 X 12	NORTH			BLACK ON RETROREFLECTIVE WHITE BACKGROUND
	M1-1	24 X 24	138			WHITE, GREEN
	M6-1	21 X 15	↑			BLACK ON RETROREFLECTIVE WHITE BACKGROUND
8	M4-8	30 X 15	DETOUR	1- 4 X 4	1	BLACK ON RETROREFLECTIVE ORANGE BACKGROUND
	M3-3	24 X 12	NORTH			BLACK ON RETROREFLECTIVE WHITE BACKGROUND
	M1-1	24 X 24	138			WHITE, GREEN
	M6-1	21 X 15	→			BLACK ON RETROREFLECTIVE WHITE BACKGROUND
9	M4-8	30 X 15	DETOUR	1- 4 X 4	1	BLACK ON RETROREFLECTIVE ORANGE BACKGROUND
	M3-3	24 X 12	NORTH			BLACK ON RETROREFLECTIVE WHITE BACKGROUND
	M1-1	24 X 24	138			WHITE, GREEN
	M6-1	21 X 15	←			BLACK ON RETROREFLECTIVE WHITE BACKGROUND
10	D3	30 X 15	QUAIL LAKE	1- 4 X 6	4	BLACK ON RETROREFLECTIVE ORANGE BACKGROUND
	SC3(CA)	36 X 12	↑ DETOUR			
11	D3	30 X 15	QUAIL LAKE	1- 4 X 6	4	BLACK ON RETROREFLECTIVE ORANGE BACKGROUND
	SC3(CA)	36 X 12	← DETOUR			

MOTORIST INFORMATION
DETOUR ROUTE SIGNS AND SUMMARY OF QUANTITIES

MI-16

STATE OF CALIFORNIA - DEPARTMENT OF TRANSPORTATION
Caltrans® DTM

FUNCTIONAL SUPERVISOR: MARTIN OREGEL
CALCULATED-DESIGNED BY: DENNIS DO
CHECKED BY: MARTIN OREGEL
REVISED BY
DATE REVISED

LAST REVISION 00-00-00
DATE PLOTTED => 18-AUG-2011
TIME PLOTTED => 13:48

Dist	COUNTY	ROUTE	POST MILES TOTAL PROJECT	SHEET No.	TOTAL SHEETS
07	LA	5	R73.2/R88.6	36	130

REGISTERED CIVIL ENGINEER 5-23-11 DATE

07-11-11
PLANS APPROVAL DATE

REGISTERED PROFESSIONAL ENGINEER DEBORAH WONG No. 58313 Exp. 6/30/12 CIVIL STATE OF CALIFORNIA

THE STATE OF CALIFORNIA OR ITS OFFICERS OR AGENTS SHALL NOT BE RESPONSIBLE FOR THE ACCURACY OR COMPLETENESS OF SCANNED COPIES OF THIS PLAN SHEET.

LEGEND:

- DIRECTION OF TRAFFIC OR DIRECTION OF DETOUR
- TEMPORARY RAILING (TYPE K)
- CHANNELIZER (SURFACE MOUNTED)
- Temp CRASH CUSHION
- XX — TEMPORARY TRAFFIC STRIPE DETAIL No.
- CONSTRUCTION AREA SIGN (ONE POST / TWO POST)
- X — CONSTRUCTION AREA SIGN No.
- XX — EXISTING TRAFFIC STRIPE DETAIL No.
- PAVEMENT MARKING TYPE VI ARROW
- FLASHING ARROW SIGN
- (PCMS) PORTABLE CHANGEABLE MESSAGE SIGN
- PAVEMENT MARKING "THRU OK"
- PAVEMENT MARKING TYPE I 24'-0"ARROW
- CONSTRUCTION AREA

NOTES:

1. LOCATIONS OF CONSTRUCTION AREA SIGNS SHOWN ARE APPROXIMATE, EXACT LOCATIONS WILL BE DETERMINED BY THE ENGINEER.
2. EXACT LOCATIONS OF PCMS WILL BE DETERMINED BY THE ENGINEER.
3. FOR ADDITIONAL CONSTRUCTION AREA SIGNS, REFER TO CONSTRUCTION SIGN DETAIL AND MOTORIST INFORMATION PLANS.

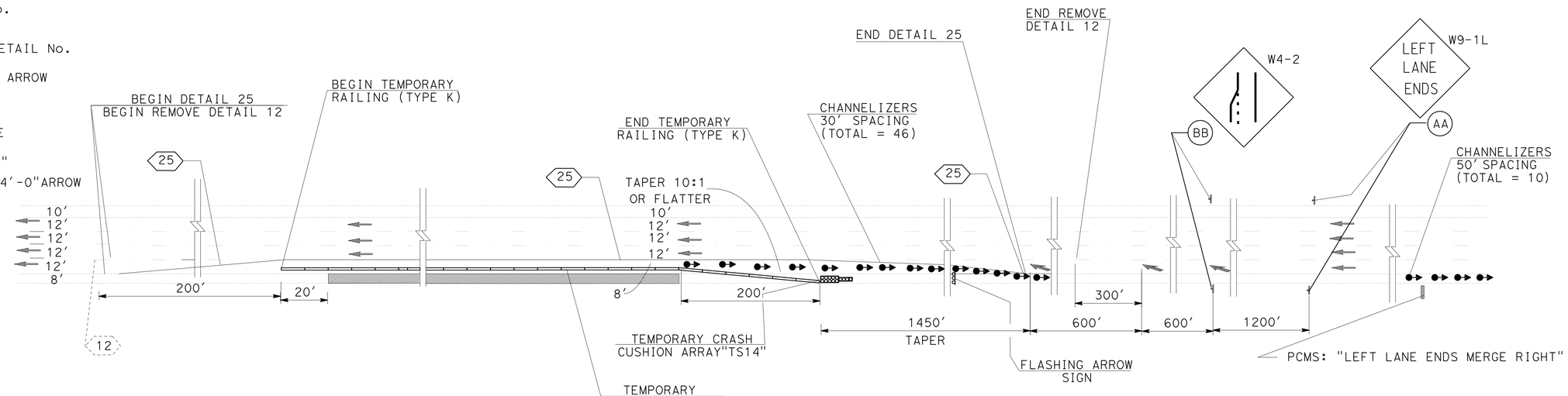

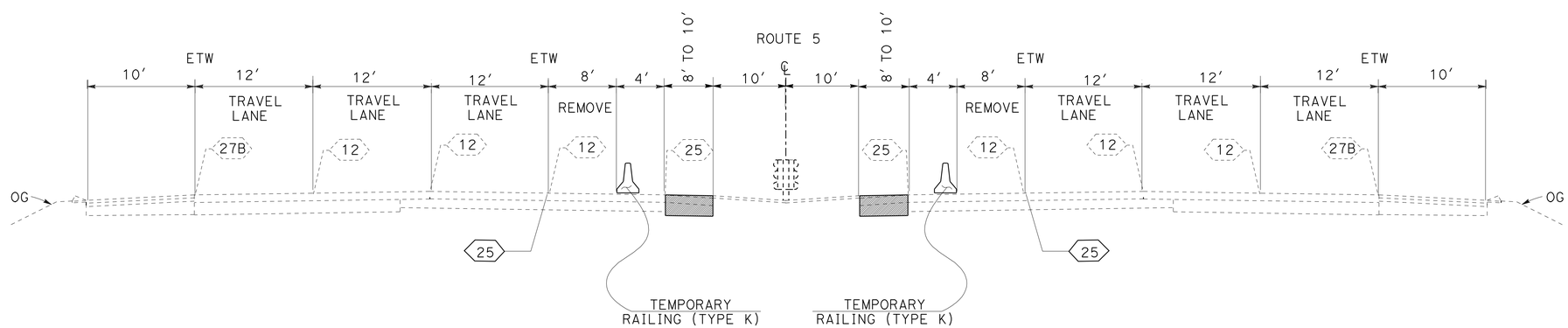

SOUTHBOUND

RECONSTRUCT MEDIAN 8' TO 10' SHOULDER FOR PM R73.2/R88.6

NORTHBOUND

RECONSTRUCT MEDIAN 8' TO 10' SHOULDER FOR PM R73.2/R88.6

TYPICAL CROSS SECTION

TRAFFIC HANDLING PLAN
(STAGE 1)

NO SCALE

TH-1

THIS PLAN ACCURATE FOR TRAFFIC HANDLING WORK ONLY.

REVISED BY	DATE REVISED
ROXANA DIANATI	DEBORAH WONG
CALCULATED-DESIGNED BY	CHECKED BY
FUNCTIONAL SUPERVISOR	MONIR IBRAHIM

STATE OF CALIFORNIA - DEPARTMENT OF TRANSPORTATION
Caltrans MAINTENANCE ENGINEERING

LAST REVISION 06-28-10 | DATE PLOTTED => 18-AUG-2011 | TIME PLOTTED => 13:48

Dist	COUNTY	ROUTE	POST MILES TOTAL PROJECT	SHEET No.	TOTAL SHEETS
07	LA	5	R73.2/R88.6	37	130

REGISTERED CIVIL ENGINEER 5-23-11 DATE

07-11-11
PLANS APPROVAL DATE

REGISTERED PROFESSIONAL ENGINEER DEBORAH WONG No. 58313 Exp. 6/30/12 CIVIL STATE OF CALIFORNIA

THE STATE OF CALIFORNIA OR ITS OFFICERS OR AGENTS SHALL NOT BE RESPONSIBLE FOR THE ACCURACY OR COMPLETENESS OF SCANNED COPIES OF THIS PLAN SHEET.

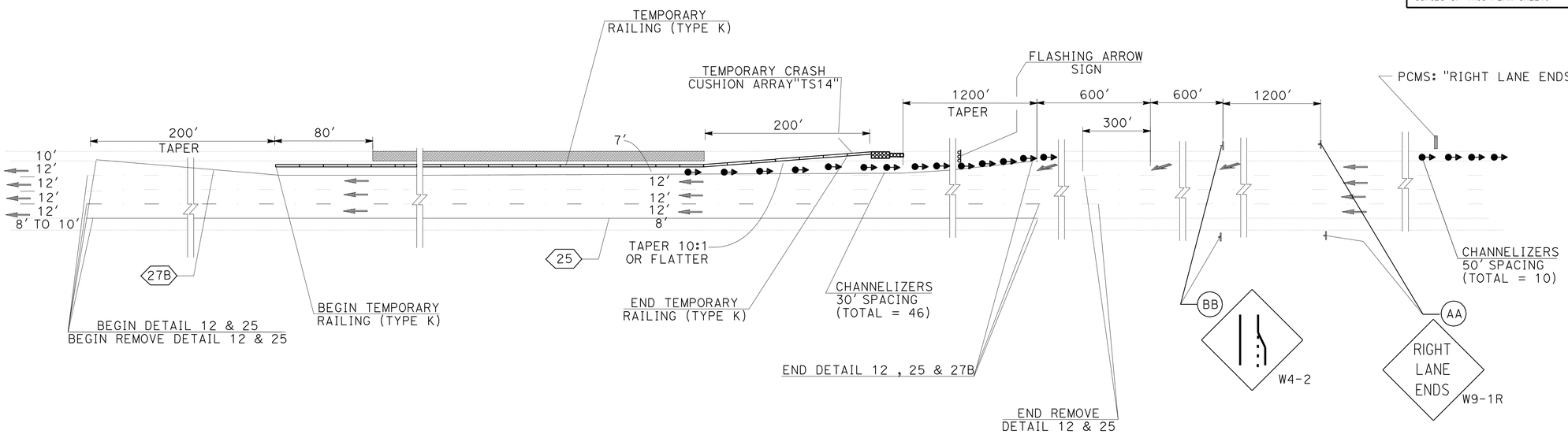

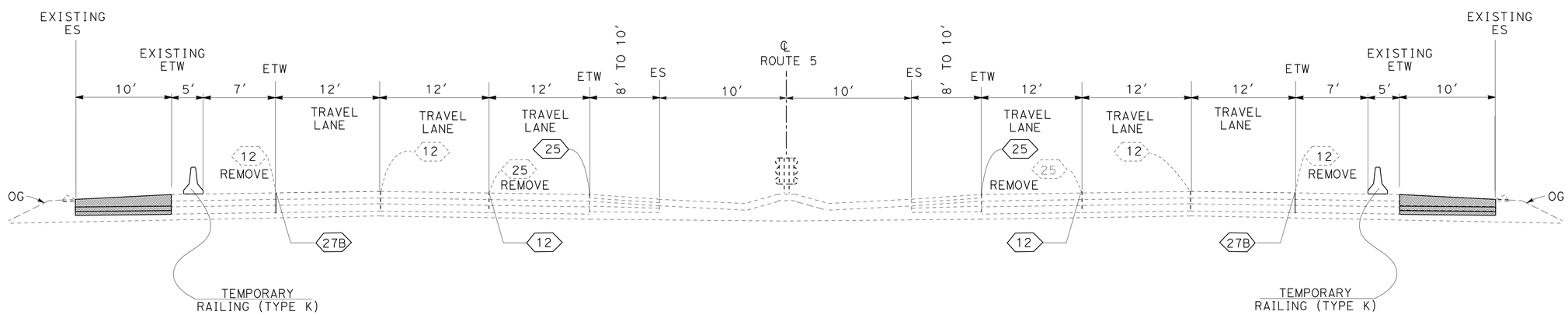

SOUTHBOUND

RECONSTRUCT OUTSIDE SHOULDER FOR PM R73.2/R73.7

NORTHBOUND

RECONSTRUCT OUTSIDE SHOULDER FOR PM R73.2/R73.7

TYPICAL CROSS SECTION

TRAFFIC HANDLING PLAN
(STAGE 2)

NO SCALE

TH-2

THIS PLAN ACCURATE FOR TRAFFIC HANDLING WORK ONLY.

STATE OF CALIFORNIA - DEPARTMENT OF TRANSPORTATION
Caltrans MAINTENANCE ENGINEERING

FUNCTIONAL SUPERVISOR: MONIR IBRAHIM
CALCULATED-DESIGNED BY: ROXANA DIANATI
CHECKED BY: DEBORAH WONG
REVISED BY
DATE REVISED

LAST REVISION 06-28-10
DATE PLOTTED => 18-AUG-2011
TIME PLOTTED => 13:48

Dist	COUNTY	ROUTE	POST MILES TOTAL PROJECT	SHEET No.	TOTAL SHEETS
07	LA	5	R73.2/R88.6	38	130

REGISTERED CIVIL ENGINEER 5-23-11 DATE

07-11-11
PLANS APPROVAL DATE

REGISTERED PROFESSIONAL ENGINEER DEBORAH WONG No. 58313 Exp. 6/30/12 CIVIL STATE OF CALIFORNIA

THE STATE OF CALIFORNIA OR ITS OFFICERS OR AGENTS SHALL NOT BE RESPONSIBLE FOR THE ACCURACY OR COMPLETENESS OF SCANNED COPIES OF THIS PLAN SHEET.

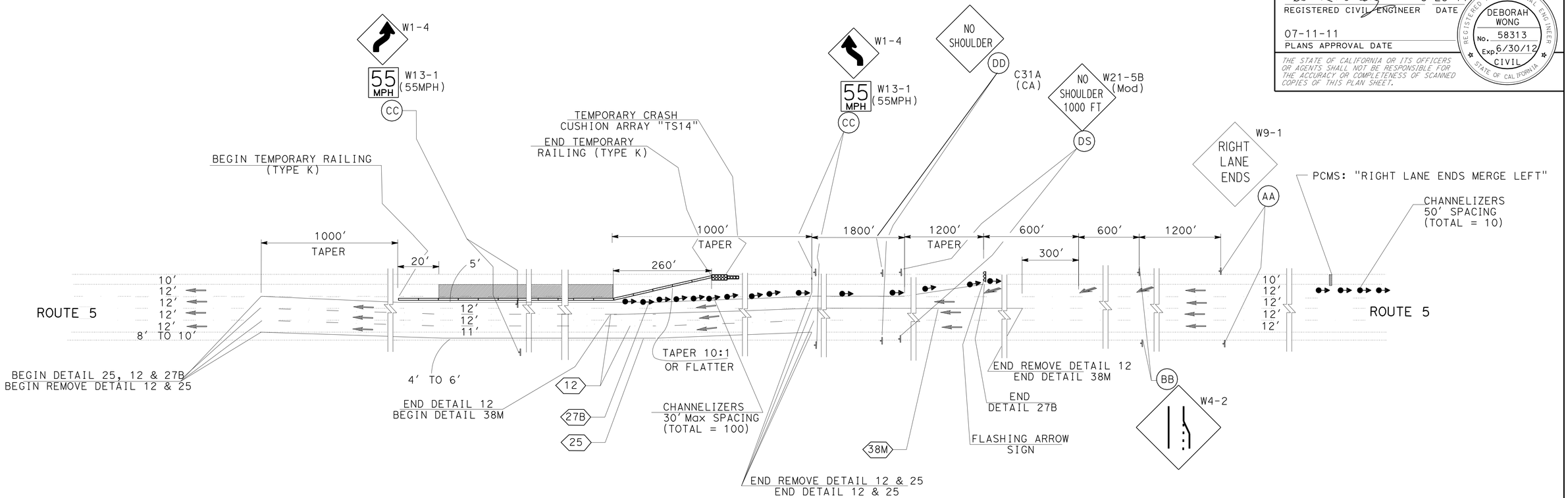

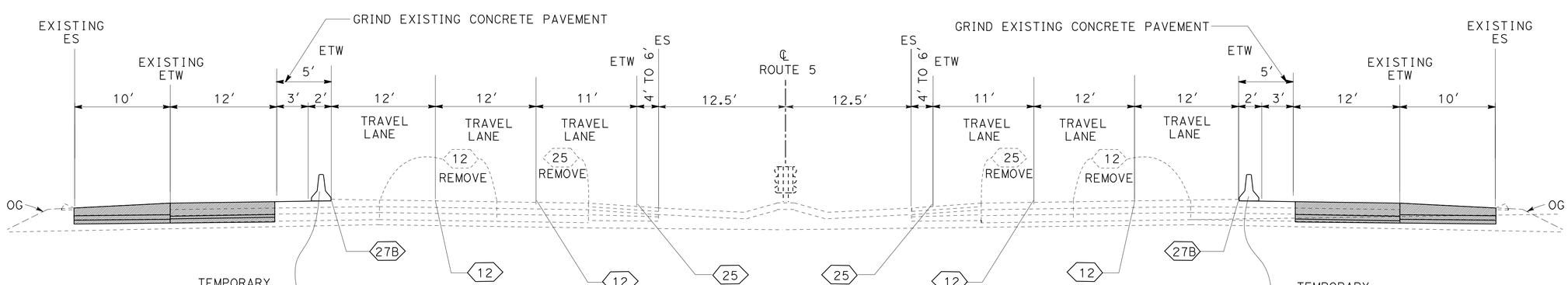

SOUTHBOUND

GRIND EXISTING CONCRETE PAVEMENT (4' STRIP ON LANE No. 3)
RECONSTRUCT LANE No. 4 AND OUTSIDE SHOULDER FOR PM R73.7/R88.6

NORTHBOUND

GRIND EXISTING CONCRETE PAVEMENT (4' STRIP ON LANE No. 3)
RECONSTRUCT LANE No. 4 AND OUTSIDE SHOULDER FOR PM R73.7/R88.6

TYPICAL CROSS SECTION

TRAFFIC HANDLING PLAN
(STAGE 3)

NO SCALE

TH-3

THIS PLAN ACCURATE FOR TRAFFIC HANDLING WORK ONLY.

STATE OF CALIFORNIA - DEPARTMENT OF TRANSPORTATION
Caltrans MAINTENANCE ENGINEERING

FUNCTIONAL SUPERVISOR: MONIR IBRAHIM
CALCULATED-DESIGNED BY: ROXANA DIANATI
CHECKED BY: DEBORAH WONG
REVISED BY
DATE REVISED

LAST REVISION 06-28-10
DATE PLOTTED => 18-AUG-2011
TIME PLOTTED => 13:48

Dist	COUNTY	ROUTE	POST MILES TOTAL PROJECT	SHEET No.	TOTAL SHEETS
07	LA	5	R73.2/R88.6	39	130

REGISTERED CIVIL ENGINEER 5-23-11 DATE

07-11-11
PLANS APPROVAL DATE

REGISTERED PROFESSIONAL ENGINEER DEBORAH WONG No. 58313 Exp. 6/30/12 CIVIL STATE OF CALIFORNIA

THE STATE OF CALIFORNIA OR ITS OFFICERS OR AGENTS SHALL NOT BE RESPONSIBLE FOR THE ACCURACY OR COMPLETENESS OF SCANNED COPIES OF THIS PLAN SHEET.

NOTE:

1. TEMPORARY CRASH CUSHION ARRAY SHALL NOT ENCROACH INTO GORE AREA WHERE THERE IS LESS THAN 8′ WIDE BETWEEN MAINLINE AND SHOULDER ETW.

2. EXTEND TEMPORARY RAILING (TYPE K) 20′ BEYOND RAMP EXIT NOSE.

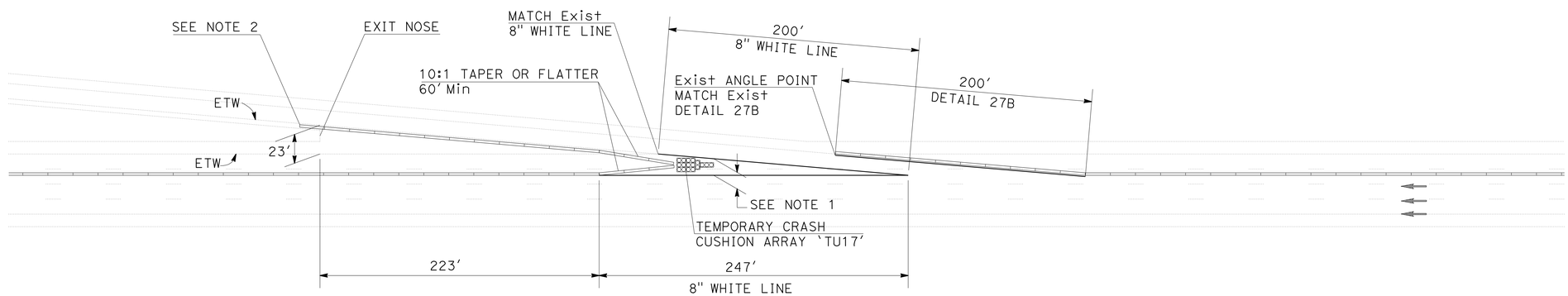

TYPICAL OFF-RAMP DETAIL
(STAGE 3)

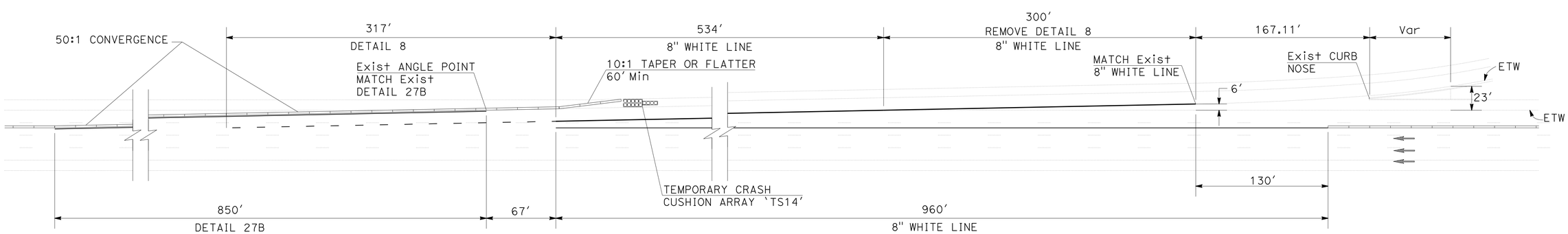

TYPICAL ON-RAMP DETAIL
(STAGE 3)

TRAFFIC HANDLING PLAN
(STAGE 3)

NO SCALE **TH-4**

THIS PLAN ACCURATE FOR TRAFFIC HANDLING WORK ONLY.

STATE OF CALIFORNIA - DEPARTMENT OF TRANSPORTATION
Caltrans MAINTENANCE ENGINEERING

FUNCTIONAL SUPERVISOR: MONIR IBRAHIM
CALCULATED-DESIGNED BY: QUAN HA
CHECKED BY: DEBORAH WONG
REVISED BY / DATE REVISED

LAST REVISION 06-28-10
DATE PLOTTED => 18-AUG-2011
TIME PLOTTED => 13:48

Dist	COUNTY	ROUTE	POST MILES TOTAL PROJECT	SHEET No.	TOTAL SHEETS
07	LA	5	R73.2/R88.6	40	130

REGISTERED CIVIL ENGINEER 5-23-11 DATE

07-11-11
PLANS APPROVAL DATE

REGISTERED PROFESSIONAL ENGINEER DEBORAH WONG No. 58313 Exp. 6/30/12 CIVIL STATE OF CALIFORNIA

THE STATE OF CALIFORNIA OR ITS OFFICERS OR AGENTS SHALL NOT BE RESPONSIBLE FOR THE ACCURACY OR COMPLETENESS OF SCANNED COPIES OF THIS PLAN SHEET.

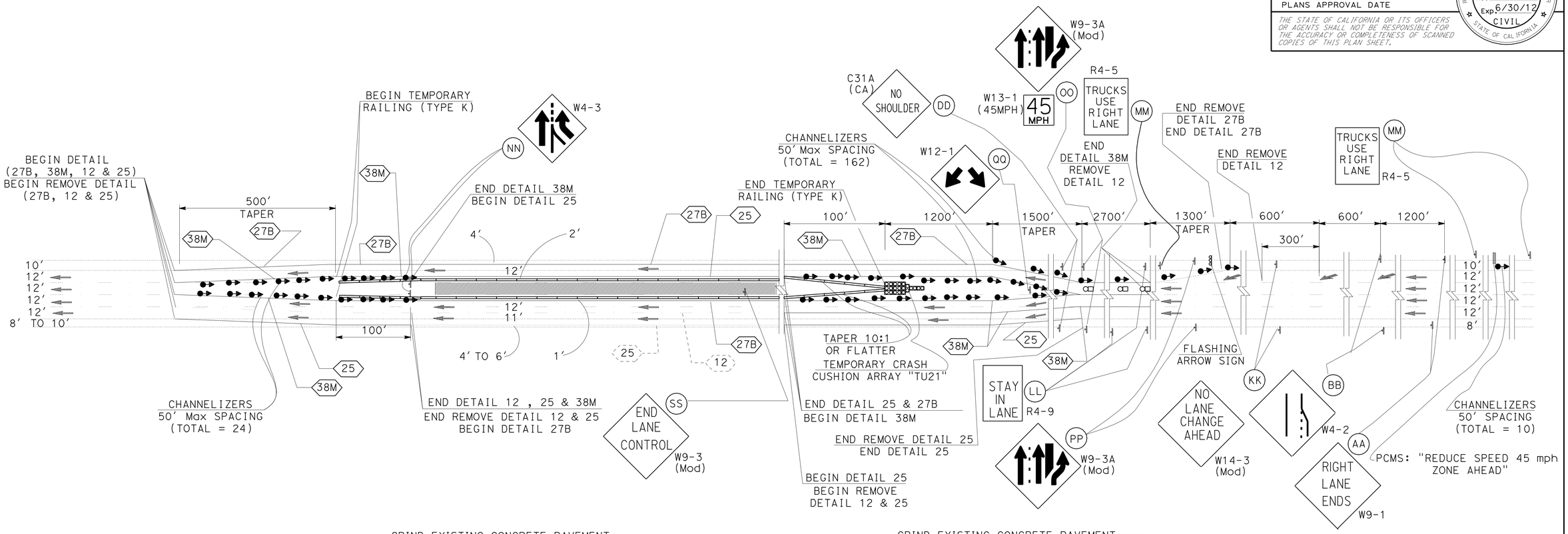

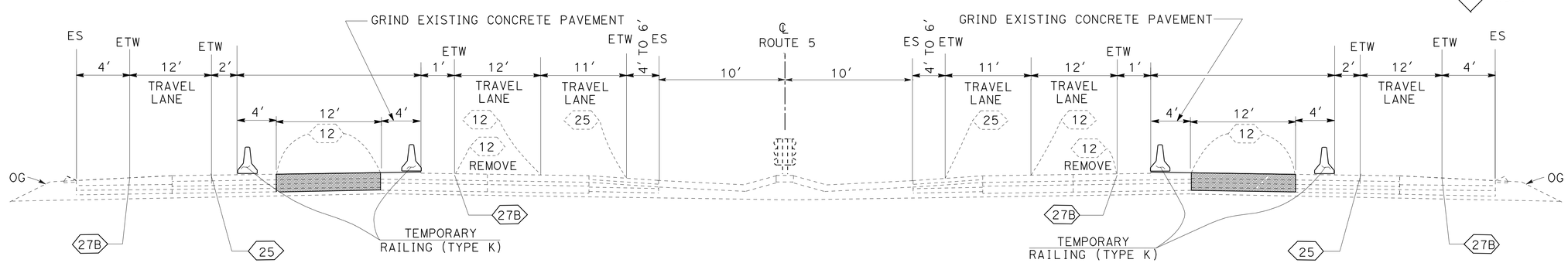

SOUTHBOUND

GRIND EXISTING CONCRETE PAVEMENT (4′ STRIP ON LANE No. 2)
RECONSTRUCT LANE No. 3 FOR PM R73.7/R88.6 AND LANE No. 3 BRIDGE WORK

NORTHBOUND

GRIND EXISTING CONCRETE PAVEMENT (4′ STRIP ON LANE No. 2)
RECONSTRUCT LANE No. 3 FOR PM R73.7/R88.6 AND LANE No. 3 BRIDGE WORK

TYPICAL CROSS SECTION

THIS PLAN ACCURATE FOR TRAFFIC HANDLING WORK ONLY.

TRAFFIC HANDLING PLAN
(STAGE 4)

NO SCALE

TH-5

STATE OF CALIFORNIA - DEPARTMENT OF TRANSPORTATION
Caltrans MAINTENANCE ENGINEERING

FUNCTIONAL SUPERVISOR: MONIR IBRAHIM
CALCULATED-DESIGNED BY: ROXANA DIANATI
CHECKED BY: DEBORAH WONG
REVISED BY
DATE REVISED

LAST REVISION 06-28-10
DATE PLOTTED => 18-AUG-2011
TIME PLOTTED => 13:48

Dist	COUNTY	ROUTE	POST MILES TOTAL PROJECT	SHEET No.	TOTAL SHEETS
07	LA	5	R73.2/R88.6	41	130

REGISTERED CIVIL ENGINEER 5-23-11 DATE

07-11-11
PLANS APPROVAL DATE

REGISTERED PROFESSIONAL ENGINEER DEBORAH WONG No. 58313 Exp. 6/30/12 CIVIL STATE OF CALIFORNIA

THE STATE OF CALIFORNIA OR ITS OFFICERS OR AGENTS SHALL NOT BE RESPONSIBLE FOR THE ACCURACY OR COMPLETENESS OF SCANNED COPIES OF THIS PLAN SHEET.

NOTE:

FOR MORE DETAIL, REFER TO STAGE 4, SHEET TH-5.

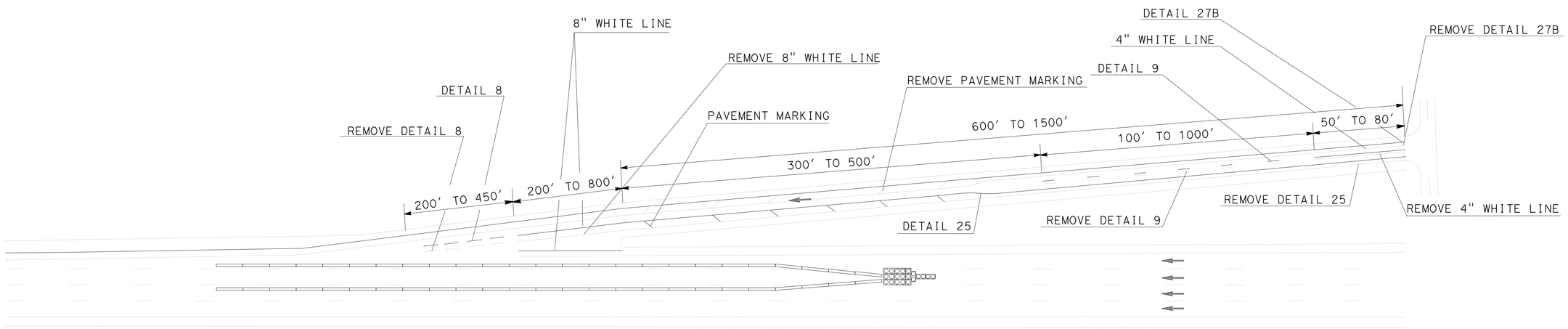

TYPICAL ON-RAMP DETAIL
(STAGE 4)

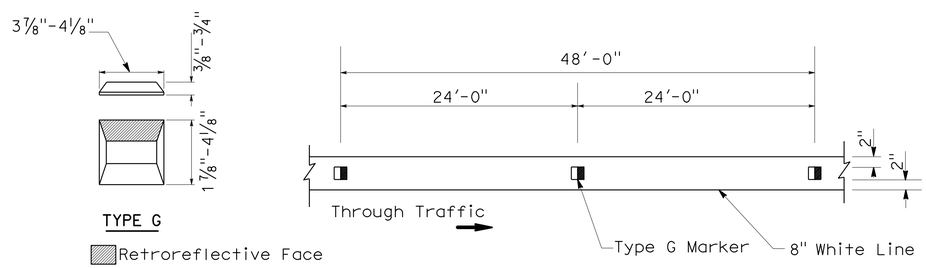

NOTE:

PLACE TYPE G MARKERS ON TOP OF 8" WIDE 2-COAT PAINT STRIPE

DETAIL 38M (MODIFIED)

THIS PLAN ACCURATE FOR TRAFFIC HANDLING WORK ONLY.

TRAFFIC HANDLING PLAN
(STAGE 4)

NO SCALE

TH-6

STATE OF CALIFORNIA - DEPARTMENT OF TRANSPORTATION
Caltrans MAINTENANCE ENGINEERING

FUNCTIONAL SUPERVISOR: MONIR IBRAHIM
CALCULATED-DESIGNED BY: ROXANA DIANATI
CHECKED BY: DEBORAH WONG
REVISED BY
DATE REVISED

LAST REVISION 06-28-10
DATE PLOTTED => 18-AUG-2011
TIME PLOTTED => 13:48

Dist	COUNTY	ROUTE	POST MILES TOTAL PROJECT	SHEET No.	TOTAL SHEETS
07	LA	5	R73.2/R88.6	42	130

REGISTERED CIVIL ENGINEER 5-23-11 DATE

07-11-11
PLANS APPROVAL DATE

REGISTERED PROFESSIONAL ENGINEER DEBORAH WONG No. 58313 Exp. 6/30/12 CIVIL STATE OF CALIFORNIA

THE STATE OF CALIFORNIA OR ITS OFFICERS OR AGENTS SHALL NOT BE RESPONSIBLE FOR THE ACCURACY OR COMPLETENESS OF SCANNED COPIES OF THIS PLAN SHEET.

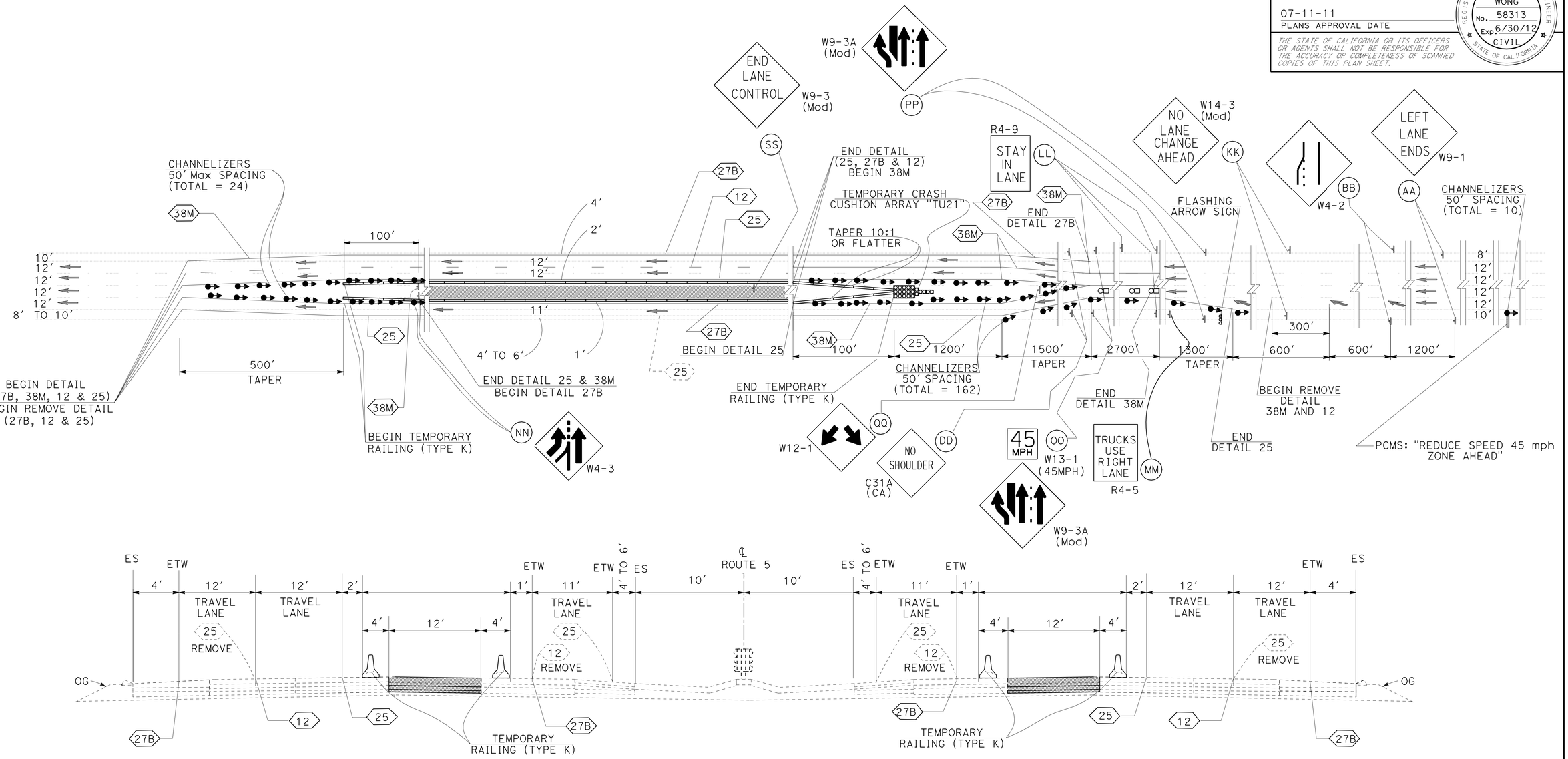

SOUTHBOUND

RECONSTRUCT LANE No. 2 FOR PM R73.7/R77.7 AND LANE No. 2 BRIDGE WORK

NORTHBOUND

RECONSTRUCT LANE No. 2 FOR PM R75.3/R75.4 AND LANE No. 2 BRIDGE WORK

TYPICAL CROSS SECTION

TRAFFIC HANDLING PLAN
(STAGE 5)

NO SCALE

TH-7

THIS PLAN ACCURATE FOR TRAFFIC HANDLING WORK ONLY.

REVISED BY	DATE REVISED

CALCULATED-DESIGNED BY	CHECKED BY
ROXANA DIANATI	DEBORAH WONG

FUNCTIONAL SUPERVISOR: MONIR IBRAHIM

STATE OF CALIFORNIA - DEPARTMENT OF TRANSPORTATION
Caltrans MAINTENANCE ENGINEERING

LAST REVISION 06-28-10 | DATE PLOTTED => 18-AUG-2011 | TIME PLOTTED => 13:48

Dist	COUNTY	ROUTE	POST MILES TOTAL PROJECT	SHEET No.	TOTAL SHEETS
07	LA	5	R73.2/R88.6	43	130

REGISTERED CIVIL ENGINEER 5-23-11 DATE

07-11-11
PLANS APPROVAL DATE

REGISTERED PROFESSIONAL ENGINEER DEBORAH WONG No. 58313 Exp. 6/30/12 CIVIL STATE OF CALIFORNIA

THE STATE OF CALIFORNIA OR ITS OFFICERS OR AGENTS SHALL NOT BE RESPONSIBLE FOR THE ACCURACY OR COMPLETENESS OF SCANNED COPIES OF THIS PLAN SHEET.

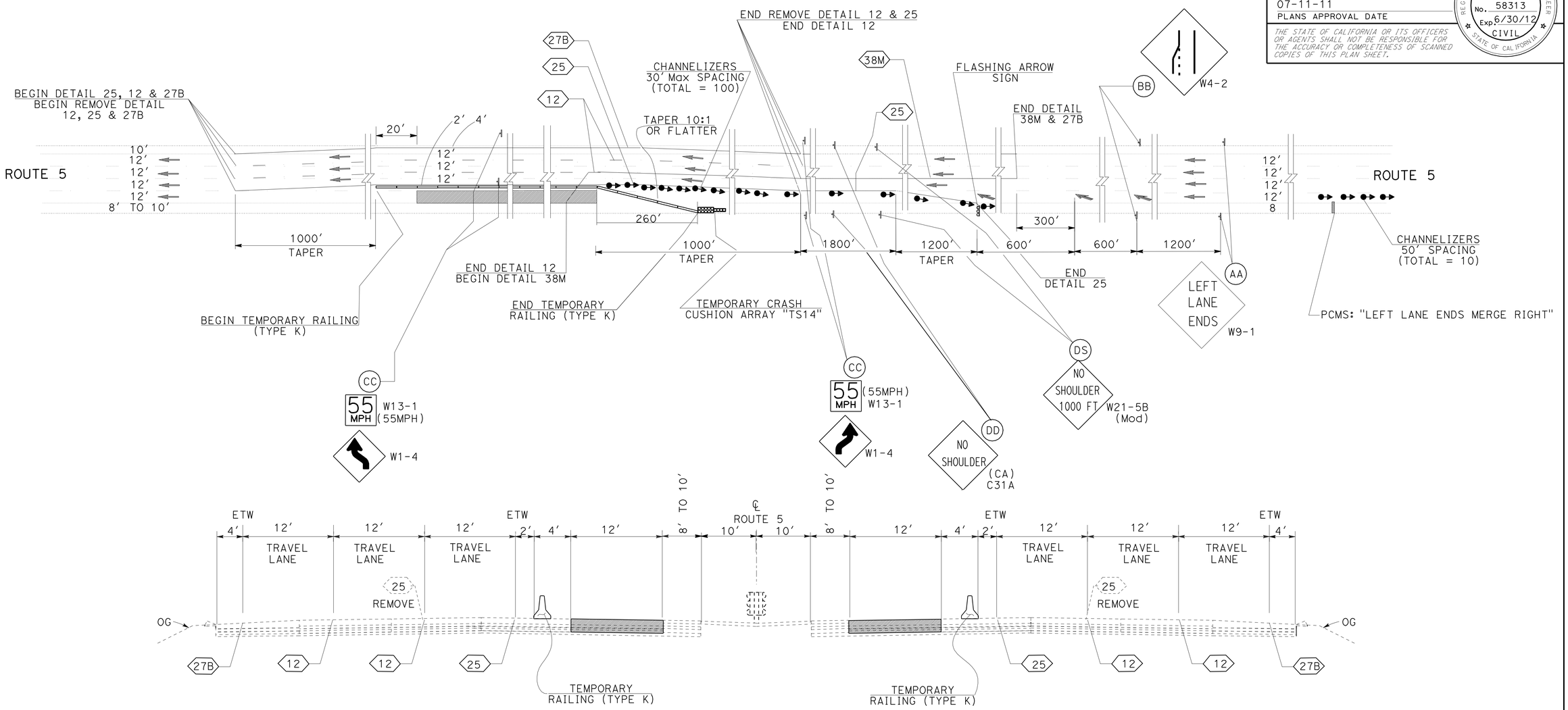

SOUTHBOUND

RECONSTRUCT LANE No. 1 FOR PM R73.7/R77.7 AND LANE No. 1 BRIDGE WORK
GRIND EXISTING CONCRETE PAVEMENT LANES No. 1 & 2 FROM PM R73.7 TO R88.6

NORTHBOUND

RECONSTRUCT LANE No. 1 FOR PM R75.3/R75.4 AND LANE No. 1 BRIDGE WORK
GRIND EXISTING CONCRETE PAVEMENT LANES No. 1 & 2 FROM PM R73.7 TO R75.3
GRIND EXISTING CONCRETE PAVEMENT LANES No. 1 & 2 FROM PM R75.4 TO R88.6

TYPICAL CROSS SECTION

TRAFFIC HANDLING PLAN
(STAGE 6)

NO SCALE

TH-8

THIS PLAN ACCURATE FOR TRAFFIC HANDLING WORK ONLY.

REVISED BY | DATE REVISED
ROXANA DIANATI | DEBORAH WONG
CALCULATED-DESIGNED BY | CHECKED BY
FUNCTIONAL SUPERVISOR: MONIR IBRAHIM

STATE OF CALIFORNIA - DEPARTMENT OF TRANSPORTATION
Caltrans MAINTENANCE ENGINEERING

LAST REVISION 06-28-10 | DATE PLOTTED => 18-AUG-2011 | TIME PLOTTED => 13:48

Dist	COUNTY	ROUTE	POST MILES TOTAL PROJECT	SHEET No.	TOTAL SHEETS
07	LA	5	R73.2/R88.6	44	130

REGISTERED CIVIL ENGINEER DATE 03/11/11

07-11-11
PLANS APPROVAL DATE

REGISTERED PROFESSIONAL ENGINEER DENNIS DO No. C68587 Exp. 9-30-11 CIVIL STATE OF CALIFORNIA

THE STATE OF CALIFORNIA OR ITS OFFICERS OR AGENTS SHALL NOT BE RESPONSIBLE FOR THE ACCURACY OR COMPLETENESS OF SCANNED COPIES OF THIS PLAN SHEET.

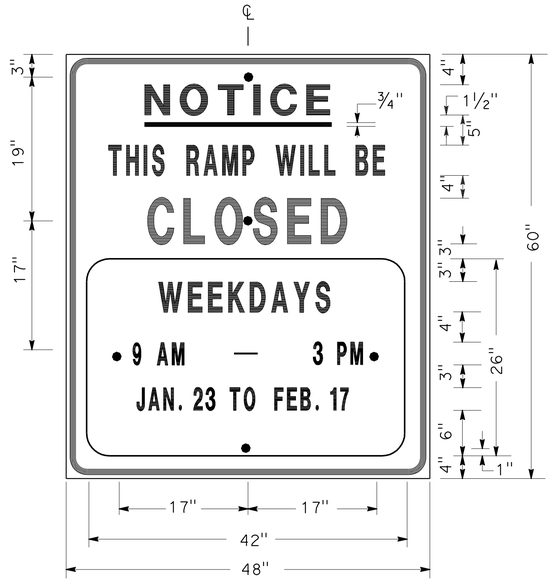

SIGN SP-1

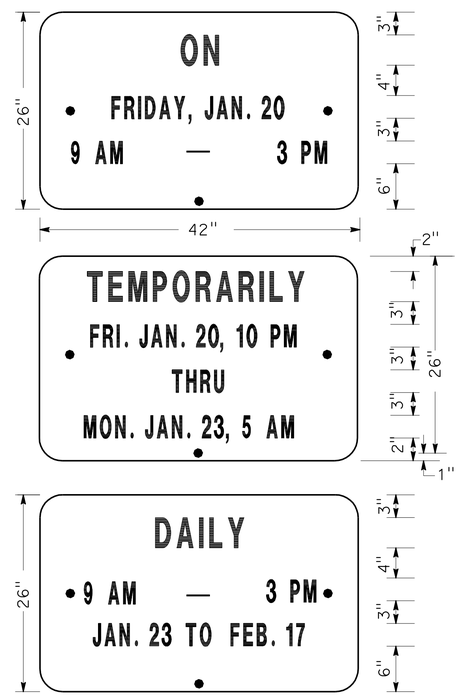

ALTERNATE OVERLAY PANELS (TYPICAL)

SPECIAL ADVANCE NOTICE PUBLICITY SIGN

NOTES: (SIGN SP-1)

1. SIGNS SHALL HAVE ORANGE RETROREFLECTORIZED BACKGROUND WITH BLACK BORDER AND LETTERS.
2. BOLT HOLES SHALL BE 3/8" DIAMETER.
3. BASE MATERIAL SHALL BE ALUMINUM (MINIMUM 0.06").
4. SIGNS SHALL BE MOUNTED WITH BOTTOMS OF SIGNS A MINIMUM OF 6' ABOVE GROUND.

SIZE	BORDER WIDTH	MARGIN WIDTH	LETTER SIZE					CORNER RADIUS
			LINE 1	LINE 2*	LINE 3	LINE 4	LINE 5,6 & 7*	
48"x60"	1 1/4"	3/4"	4E	4D	6E	4D		3"
42"x26"	OVERLAY						3D	1 1/2"
* CONDENSED SPACING IF NECESSARY								

SIGN SP-4

NOTES: (SIGN SP-4)

1. LETTERS - 6" SERIES C.
2. LETTERS AND BORDERS - BLACK ON RETROREFLECTORIZED WHITE BACKGROUND.
3. BASE MATERIAL SHALL BE ALUMINUM (MINIMUM 0.06").
4. SIGNS SHALL BE PLACED AT RAMP ENTRANCES IN ADDITION TO SIGNS POSTED IN ACCORDANCE WITH STANDARD PLAN T14.

SPECIAL SIGN FOR ENTRANCE RAMP CLOSURES

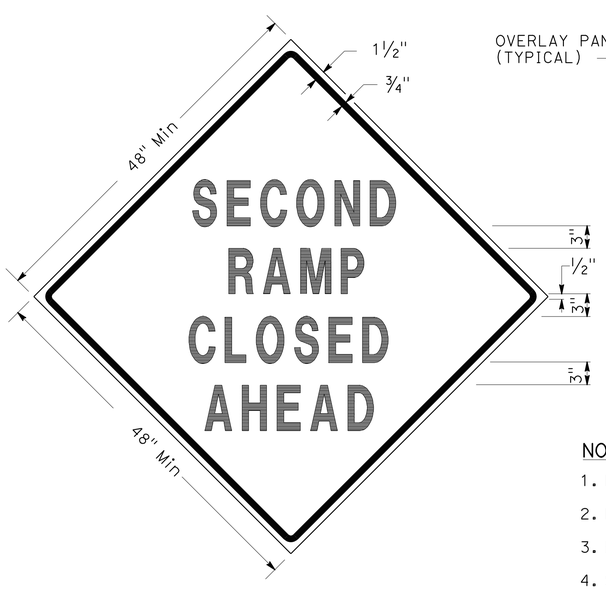

SIGN SP-3

SIGN SP-5

NOTES: (SIGNS SP-3 & SP-5)

1. LETTERS - 6" SERIES D.
2. LETTERS AND BORDERS - BLACK ON RETROREFLECTORIZED ORANGE BACKGROUND.
3. BASE MATERIAL SHALL BE ALUMINUM (MINIMUM 0.06").
4. SIGNS SHALL BE MOUNTED WITH BOTTOMS OF SIGNS A MINIMUM OF 6' ABOVE GROUND.

SPECIAL SIGN FOR EXIT RAMP CLOSURES

TRAFFIC HANDLING DETAILS
TRAFFIC CONTROL SYSTEM FOR RAMP CLOSURES, DETOUR SIGNS AND MISCELLANEOUS DETAILS
SHEET 1 OF 2

NO SCALE

THD-1

STATE OF CALIFORNIA - DEPARTMENT OF TRANSPORTATION
Caltrans DTM

CALCULATED-DESIGNED BY	JC	REVISED BY	ALBERT K YU
CHECKED BY	7/10	DATE REVISED	JOCELYN C CHIANG

FUNCTIONAL SUPERVISOR: MARTIN OREGEL

LAST REVISION 00-00-00 | DATE PLOTTED => 18-AUG-2011 | TIME PLOTTED => 13:48

Dist	COUNTY	ROUTE	POST MILES TOTAL PROJECT	SHEET No.	TOTAL SHEETS
07	LA	5	R73.2/R88.6	45	130

REGISTERED CIVIL ENGINEER DATE 03/11/11

07-11-11
PLANS APPROVAL DATE

REGISTERED PROFESSIONAL ENGINEER DENNIS DO No. C68587 Exp. 9-30-11 CIVIL STATE OF CALIFORNIA

THE STATE OF CALIFORNIA OR ITS OFFICERS OR AGENTS SHALL NOT BE RESPONSIBLE FOR THE ACCURACY OR COMPLETENESS OF SCANNED COPIES OF THIS PLAN SHEET.

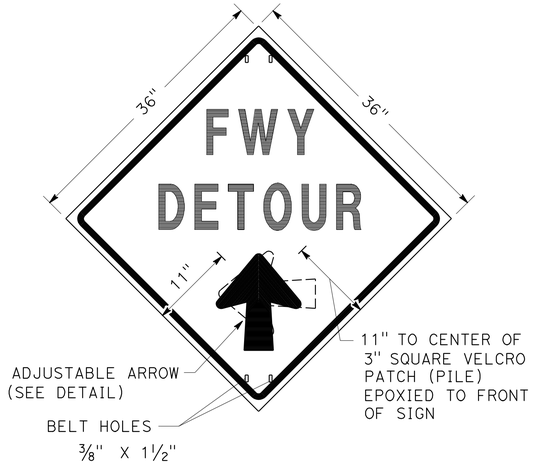

SIGN SP-2

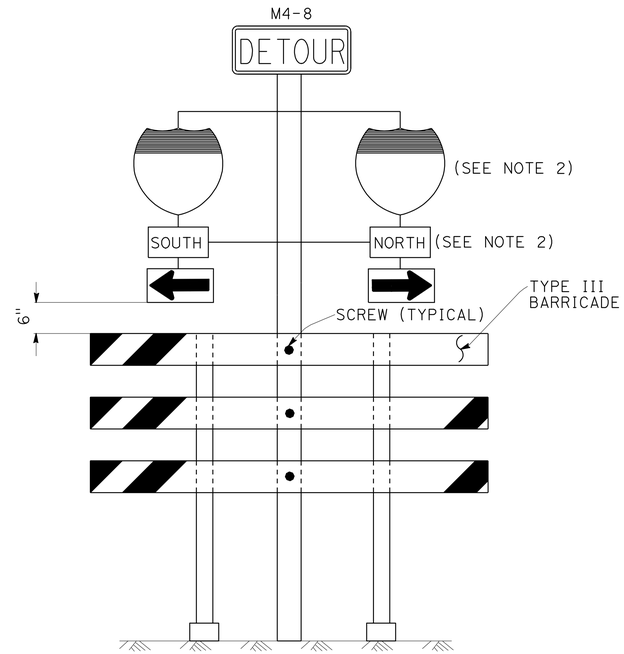

SIGN SP-6 (SEE NOTE 1)

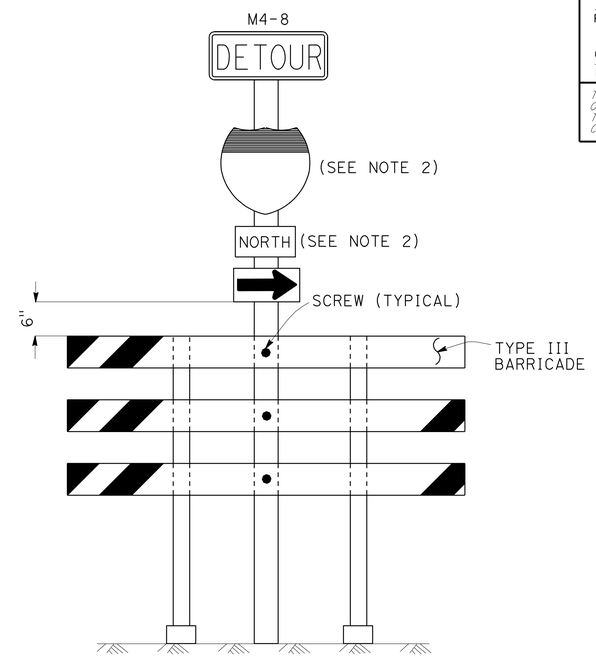

SIGN SP-7 (SEE NOTE 1)

NOTES: (SIGN SP-2)

1. LETTERS -6" SERIES E.
2. LETTERS, BORDER AND ARROW - BLACK ON RETROREFLECTORIZED ORANGE BACKGROUND.
3. BASE MATERIAL FOR SIGNS AND ARROWS SHALL BE ALUMINUM (MINIMUM 0.06").
4. BELTS (LUGGAGE STRAPS) SHALL BE 1" WIDE BY 48" LONG, MADE OF COTTON OR POLYPROPYLENE WEB MATERIAL.
5. SIGNS SHALL BE MOUNTED WITH BOTTOMS OF SIGNS A MINIMUM OF 6' ABOVE GROUND EXCEPT AS OTHERWISE SHOWN ON OTHER TRAFFIC HANDLING DETAILS PLANS.

ABBREVIATION

(CA) CALIFORNIA CODE

NOTES: (SIGNS SP-6 & SP-7)

1. IN LIEU OF PLACING SIGNS ON TYPE III BARRICADES, SIGNS, INCLUDING POSTS, MAY BE PLACED INTO THE GROUND OR FASTENED ONTO ELECTROLIERS.
2. USE APPROPRIATE ROUTE SHIELD [G26-2(CA), G27-2(CA), G28-2(CA)] AND CARDINAL DIRECTION [NORTH (M3-1), SOUTH (M3-3), EAST (M3-2), WEST (M3-4)]

SPECIAL PORTABLE FREEWAY DETOUR SIGNS

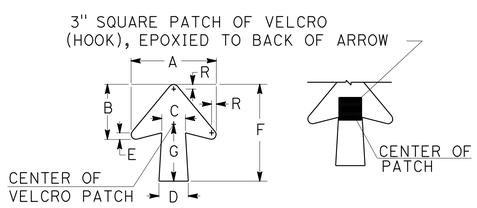

DIMENSIONS							
A	B	C	D	E	F	G	R
11 1/4"	7 1/4"	3 1/8"	4"	7/8"	13"	7 1/2"	5/8"

SPECIAL PORTABLE FREEWAY DETOUR SIGN

ADJUSTABLE ARROW DETAIL

TRAFFIC HANDLING DETAILS
TRAFFIC CONTROL SYSTEM FOR RAMP CLOSURES, DETOUR SIGNS AND MISCELLANEOUS DETAILS
SHEET 2 OF 2

NO SCALE

THD-2

STATE OF CALIFORNIA - DEPARTMENT OF TRANSPORTATION
Caltrans DTM

FUNCTIONAL SUPERVISOR: MARTIN OREGEL
CALCULATED-DESIGNED BY: ALBERT K YU
CHECKED BY: JOCELYN C CHIANG
REVISED BY: JC
DATE REVISED: 7/10

LAST REVISION 00-00-00
DATE PLOTTED => 18-AUG-2011
TIME PLOTTED => 13:49

Dist	COUNTY	ROUTE	POST MILES TOTAL PROJECT	SHEET No.	TOTAL SHEETS
07	LA	5	R73.2/R88.6	46	130

REGISTERED CIVIL ENGINEER DATE 03/11/11

07-11-11
PLANS APPROVAL DATE

REGISTERED PROFESSIONAL ENGINEER DENNIS DO No. C68587 Exp. 9-30-11 CIVIL STATE OF CALIFORNIA

THE STATE OF CALIFORNIA OR ITS OFFICERS OR AGENTS SHALL NOT BE RESPONSIBLE FOR THE ACCURACY OR COMPLETENESS OF SCANNED COPIES OF THIS PLAN SHEET.

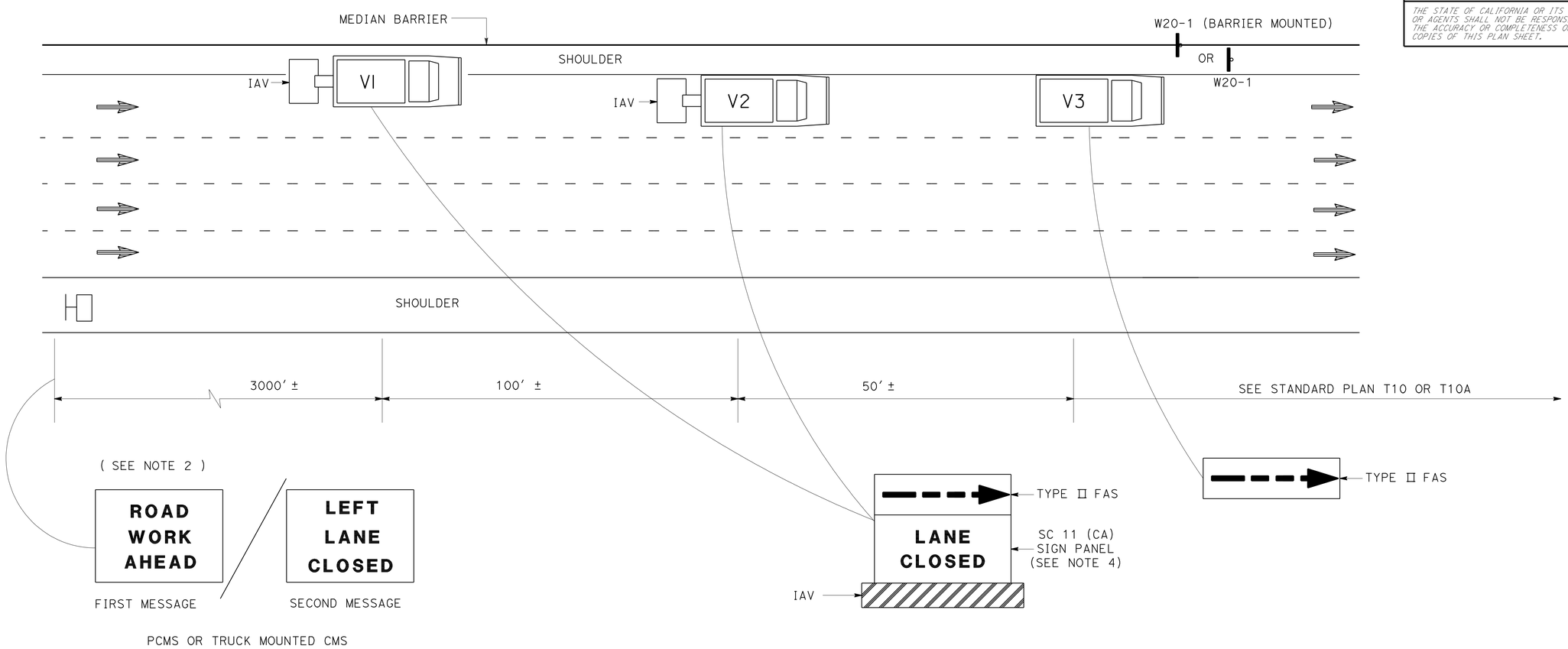

NOTES:

1. LANE CLOSURES SHALL NOT BE PLACED ON CREST VERTICAL CURVES OR ON HORIZONTAL CURVES.
2. PCMS SHALL BE ACTIVATED PRIOR TO TRAFFIC CONTROL ACTIVITIES ON THE LANE.
3. A MINIMUM SIGHT DISTANCE OF 1500′ SHALL BE PROVIDED IN ADVANCE OF PCMS.
4. VEHICLE-MOUNTED SIGN PANELS SHALL BE TYPE III OR IV RETROREFLECTORIZED SHEETING, BLACK ON WHITE OR BLACK ON ORANGE WITH 8" MINIMUM SERIES D LETTERS PER CALTRANS SIGN SPECIFICATIONS.

LEGEND

V1, V2	SHADOW VEHICLE
V3	WORK/APPLICATION VEHICLE
	PORTABLE CHANGEABLE MESSAGE SIGN (PCMS)
	DIRECTION OF TRAVEL
	CONSTRUCTION AREA SIGN

ABBREVIATIONS

FAS	FLASHING ARROW SIGN
IAV	IMPACT ATTENUATOR VEHICLE
CMS	CHANGEABLE MESSAGE SIGN
PCMS	PORTABLE CHANGEABLE MESSAGE SIGN
(CA)	CALIFORNIA CODE

TRAFFIC HANDLING DETAILS
TRAFFIC CONTROL SYSTEM
FOR MEDIAN SHOULDERS LESS THAN 8 FEET

NO SCALE

THD-3

STATE OF CALIFORNIA - DEPARTMENT OF TRANSPORTATION
Caltrans® DTM

FUNCTIONAL SUPERVISOR: MARTIN OREGEL
CALCULATED-DESIGNED BY: ALBERT K YU
CHECKED BY: JOCELYN C CHIANG
REVISED BY: JC
DATE REVISED: 7/10

LAST REVISION 00-00-00
DATE PLOTTED => 18-AUG-2011
TIME PLOTTED => 13:49

Dist	COUNTY	ROUTE	POST MILES TOTAL PROJECT	SHEET No.	TOTAL SHEETS
07	LA	5	R73.2/R88.6	47	130

REGISTERED CIVIL ENGINEER DATE 03/11/11

07-11-11
PLANS APPROVAL DATE

REGISTERED PROFESSIONAL ENGINEER DENNIS DO No. C68587 Exp. 9-30-11 CIVIL STATE OF CALIFORNIA

THE STATE OF CALIFORNIA OR ITS OFFICERS OR AGENTS SHALL NOT BE RESPONSIBLE FOR THE ACCURACY OR COMPLETENESS OF SCANNED COPIES OF THIS PLAN SHEET.

LEGEND:

- CONE
- TRAFFIC PLASTIC DRUM
- FLASHING ARROW SIGN
- PORTABLE SIGN
- DIRECTION OF TRAVEL
- PORTABLE CHANGEABLE MESSAGE SIGN (PCMS)

ABBREVIATIONS

(CA) CALIFORNIA CODE

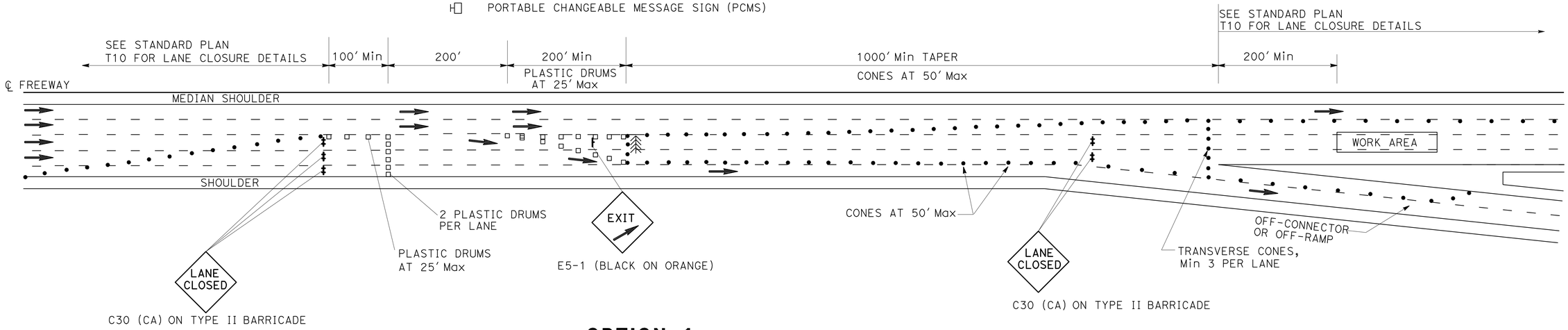

OPTION 1

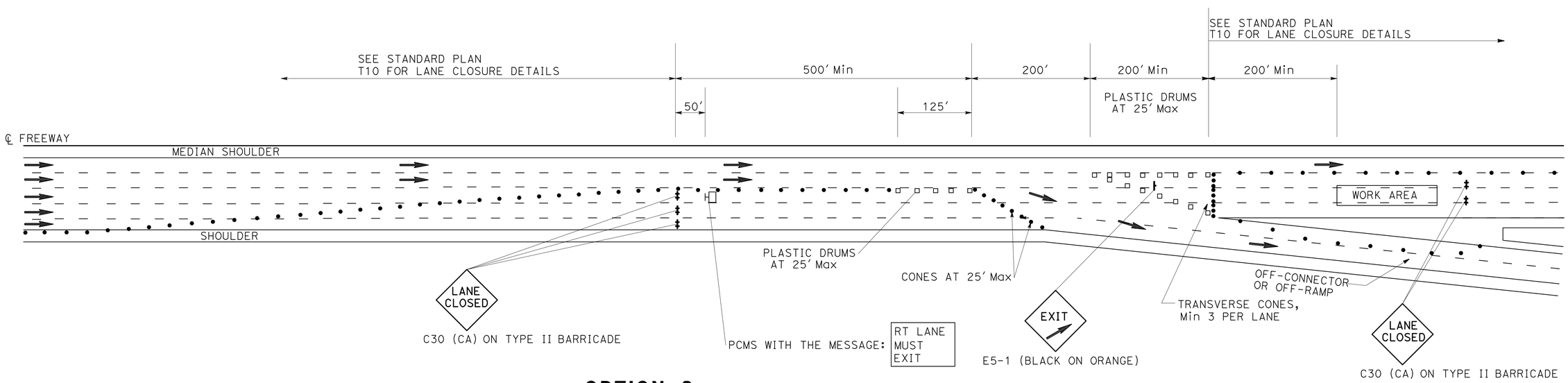

OPTION 2

TRAFFIC HANDLING DETAILS
TRAFFIC CONTROL SYSTEM FOR SLIP-RAMP AT OFF-CONNECTOR OR OFF-RAMP

NO SCALE

THD-4

REVISED BY	DATE REVISED
JC	7/10

ALBERT K YU
JOCELYN C CHIANG

CALCULATED-DESIGNED BY
CHECKED BY

FUNCTIONAL SUPERVISOR
MARTIN OREGEL

STATE OF CALIFORNIA - DEPARTMENT OF TRANSPORTATION
Caltrans
DTM

LAST REVISION 00-00-00
DATE PLOTTED => 18-AUG-2011
TIME PLOTTED => 13:49

Dist	COUNTY	ROUTE	POST MILES TOTAL PROJECT	SHEET No.	TOTAL SHEETS
07	LA	5	R73.2/R88.6	48	130

REGISTERED CIVIL ENGINEER 03/11/11 DATE

07-11-11
PLANS APPROVAL DATE

REGISTERED PROFESSIONAL ENGINEER DENNIS DO No. C68587 Exp. 9-30-11 CIVIL STATE OF CALIFORNIA

THE STATE OF CALIFORNIA OR ITS OFFICERS OR AGENTS SHALL NOT BE RESPONSIBLE FOR THE ACCURACY OR COMPLETENESS OF SCANNED COPIES OF THIS PLAN SHEET.

NOTES:

1. WORDING DISPLAYED ON PCMS WILL BE APPROVED BY THE ENGINEER.
2. EXACT LOCATIONS OF PCMS WILL BE DETERMINED BY THE ENGINEER.
3. CHANGE PCMS MESSAGE AT THE BEGINNING OF CURE PERIOD TO REFLECT NUMBER OF CLOSED LANES.

ABBREVIATIONS

PCMS PORTABLE CHANGEABLE MESSAGE SIGN

(CA) CALIFORNIA CODE

LEGEND:

- • CONE
- PORTABLE SIGN
- DIRECTION OF TRAVEL
- PORTABLE CHANGEABLE MESSAGE SIGN (PCMS)
- (CA) CALIFORNIA CODE

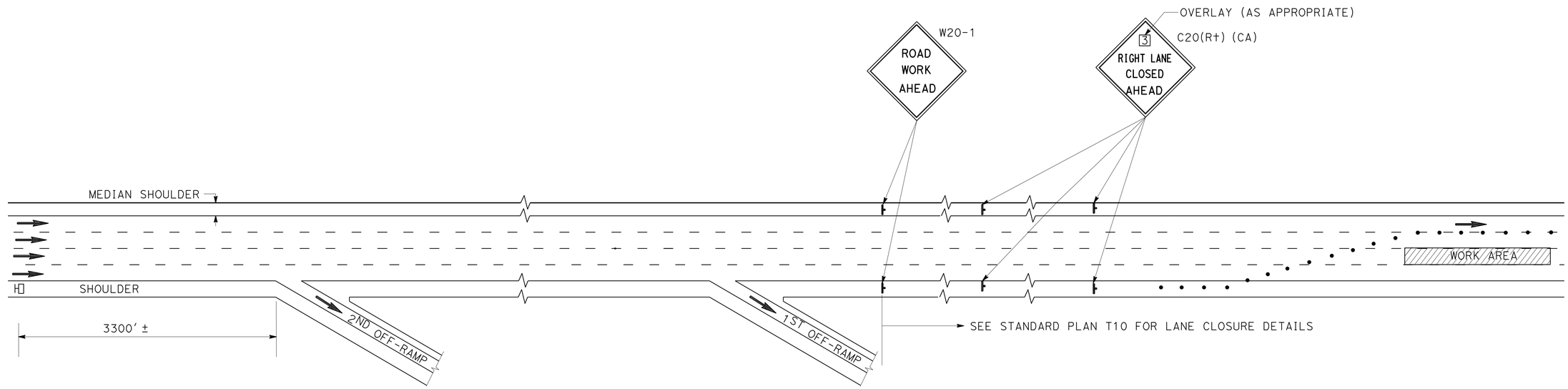

FIRST FLASH MESSAGE	X (NO OF LANES)RIGHT/LEFT	1ST LINE (TYPICAL)
	LANES	2ND LINE (TYPICAL)
	CLOSED	3RD LINE (TYPICAL)
SECOND FLASH MESSAGE	A ST	LIMIT OF CLOSURE (TYPICAL)
	TO	
	B DR	LIMIT OF CLOSURE (TYPICAL)

WORDING FOR PORTABLE CHANGEABLE MESSAGE SIGN

TRAFFIC HANDLING DETAILS
TRAFFIC CONTROL SYSTEM FOR CONCRETE PAVEMENT AND APPROACH SLAP REPLACEMENT

NO SCALE

THD-5

STATE OF CALIFORNIA - DEPARTMENT OF TRANSPORTATION
Caltrans DTM

FUNCTIONAL SUPERVISOR: MARTIN OREGEL
CALCULATED-DESIGNED BY: ALBERT K YU
CHECKED BY: JOCELYN C CHIANG
REVISED BY: JC
DATE REVISED: 7/10

LAST REVISION 00-00-00
DATE PLOTTED => 18-AUG-2011
TIME PLOTTED => 13:49

Dist	COUNTY	ROUTE	POST MILES TOTAL PROJECT	SHEET No.	TOTAL SHEETS
07	LA	5	R73.2/R88.6	49	130

REGISTERED CIVIL ENGINEER DATE 03/11/11

07-11-11
PLANS APPROVAL DATE

REGISTERED PROFESSIONAL ENGINEER DENNIS DO No. C68587 Exp. 9-30-11 CIVIL STATE OF CALIFORNIA

THE STATE OF CALIFORNIA OR ITS OFFICERS OR AGENTS SHALL NOT BE RESPONSIBLE FOR THE ACCURACY OR COMPLETENESS OF SCANNED COPIES OF THIS PLAN SHEET.

LEGEND:

- IAV V1 — TRAFFIC CONTROL CREW No. 1
- IAV V2 — TRAFFIC CONTROL CREW No. 2
- CHP — CALIFORNIA HIGHWAY PATROL CAR
- ● CONES FOR INITIAL LANE CLOSURE
- △ CONES FOR SECOND STAGE LANE CLOSURE
- 1 → DIRECTION OF TRAVEL FOR INITIAL LANE CLOSURE
- 2 → DIRECTION OF TRAVEL FOR SECOND STAGE LANE CLOSURE
- FLASHING ARROW SIGN
- PORTABLE SIGN
- PORTABLE CHANGEABLE MESSAGE SIGN (PCMS)

NOTES:

1. SEE STANDARD PLAN T10 FOR LANE CLOSURE DETAILS NOT SHOWN.
2. ACTIVATE PCMS ONLY DURING SECOND STAGE LANE CLOSURE INSTALLATION.
3. THE MESSAGE FOR PCMS IS: "SLOW - PREPARE/TO/STOP".

ABBREVIATIONS

(CA) CALIFORNIA CODE

PCMS PORTABLE CHANGEABLE MESSAGE SIGN

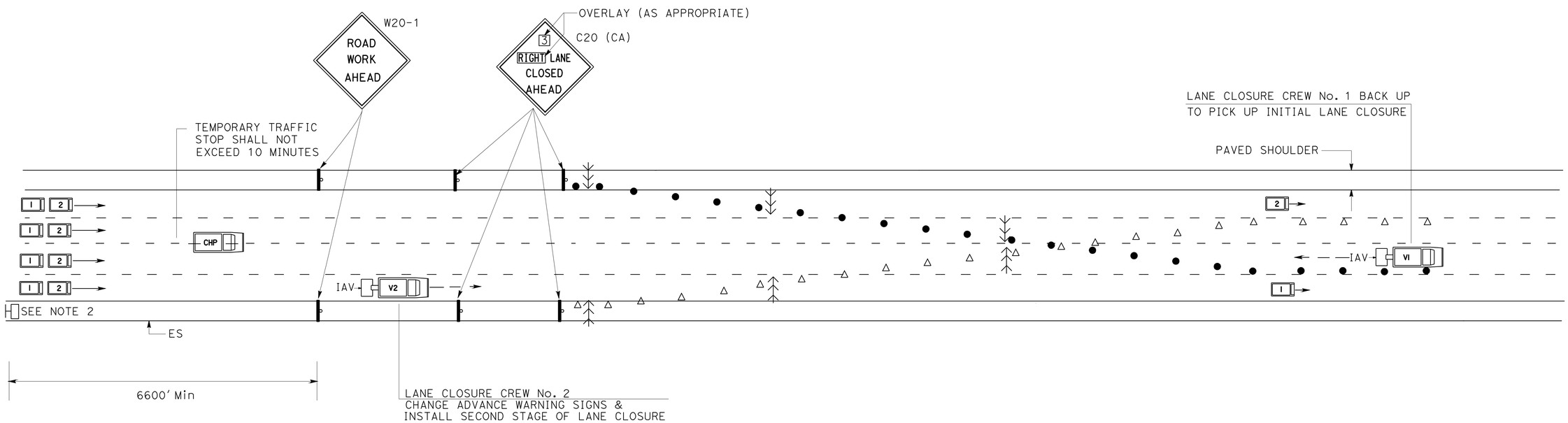

TRAFFIC HANDLING DETAILS
TRAFFIC CONTROL SYSTEM FOR "FLIP-FLOP" OPERATIONS

NO SCALE

THD-6

STATE OF CALIFORNIA - DEPARTMENT OF TRANSPORTATION
Caltrans DTM

FUNCTIONAL SUPERVISOR: MARTIN OREGEL
CALCULATED-DESIGNED BY: ALBERT K YU
CHECKED BY: JOCELYN C CHIANG
REVISED BY: JC
DATE REVISED: 7/10

LAST REVISION DATE PLOTTED => 18-AUG-2011
TIME PLOTTED => 13:49

Dist	COUNTY	ROUTE	POST MILES TOTAL PROJECT	SHEET No.	TOTAL SHEETS
07	LA	5	R73.2/R88.6	50	130

REGISTERED CIVIL ENGINEER DATE 03/11/11

07-11-11
PLANS APPROVAL DATE

REGISTERED PROFESSIONAL ENGINEER DENNIS DO No. C68587 Exp. 9-30-11 CIVIL STATE OF CALIFORNIA

THE STATE OF CALIFORNIA OR ITS OFFICERS OR AGENTS SHALL NOT BE RESPONSIBLE FOR THE ACCURACY OR COMPLETENESS OF SCANNED COPIES OF THIS PLAN SHEET.

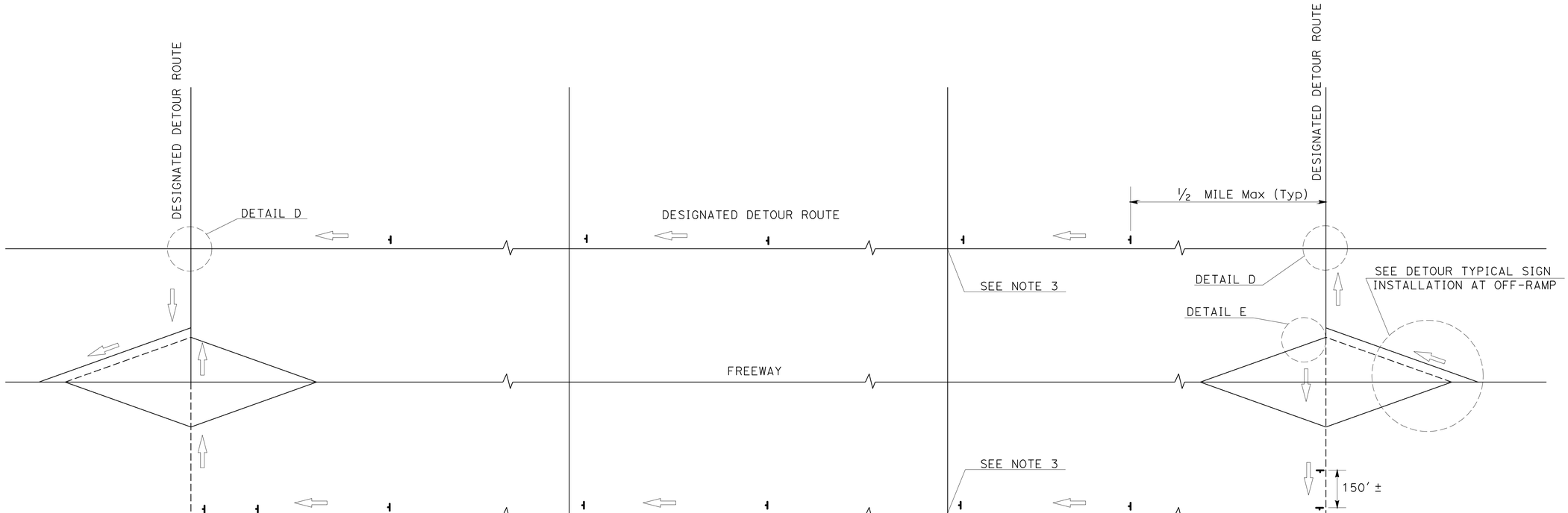

TYPICAL DETOUR SIGN INSTALLATION ALONG DESIGNATED DETOUR ROUTE

LEGEND

- TEMPORARY SIGN (SP-2)
- AND/OR DESIGNATED DETOUR ROUTE
- DIRECTION OF TRAVEL

NOTES:

1. SP-2 SIGNS SHALL NOT BE INSTALLED ON BARRICADES EXCEPT AS OTHERWISE SHOWN.
2. SIGN LOCATIONS ARE APPROXIMATE. EXACT LOCATIONS WILL BE DETERMINED BY THE ENGINEER.
3. SP-2 SIGNS SHALL BE POSTED AT SIGNALIZED INTERSECTIONS ALONG THE DESIGNATED DETOUR ROUTE OR ½ MILE MAXIMUM APART.

TRAFFIC HANDLING DETAILS
TRAFFIC CONTROL SYSTEM FOR DETOUR SIGN INSTALLATION ALONG DESIGNATED DETOUR ROUTE
SHEET 1 OF 2

NO SCALE

THD-7

STATE OF CALIFORNIA - DEPARTMENT OF TRANSPORTATION
Caltrans DTM

FUNCTIONAL SUPERVISOR: MARTIN OREGEL
CALCULATED-DESIGNED BY: ALBERT K YU
CHECKED BY: JOCELYN C CHIANG
REVISED BY: JC
DATE REVISED: 7/10

LAST REVISION 00-00-00
DATE PLOTTED => 18-AUG-2011
TIME PLOTTED => 13:49

Dist	COUNTY	ROUTE	POST MILES TOTAL PROJECT	SHEET No.	TOTAL SHEETS
07	LA	5	R73.2/R88.6	51	130

REGISTERED CIVIL ENGINEER 03/11/11 DATE

07-11-11
PLANS APPROVAL DATE

REGISTERED PROFESSIONAL ENGINEER DENNIS DO No. C68587 Exp. 9-30-11 CIVIL STATE OF CALIFORNIA

THE STATE OF CALIFORNIA OR ITS OFFICERS OR AGENTS SHALL NOT BE RESPONSIBLE FOR THE ACCURACY OR COMPLETENESS OF SCANNED COPIES OF THIS PLAN SHEET.

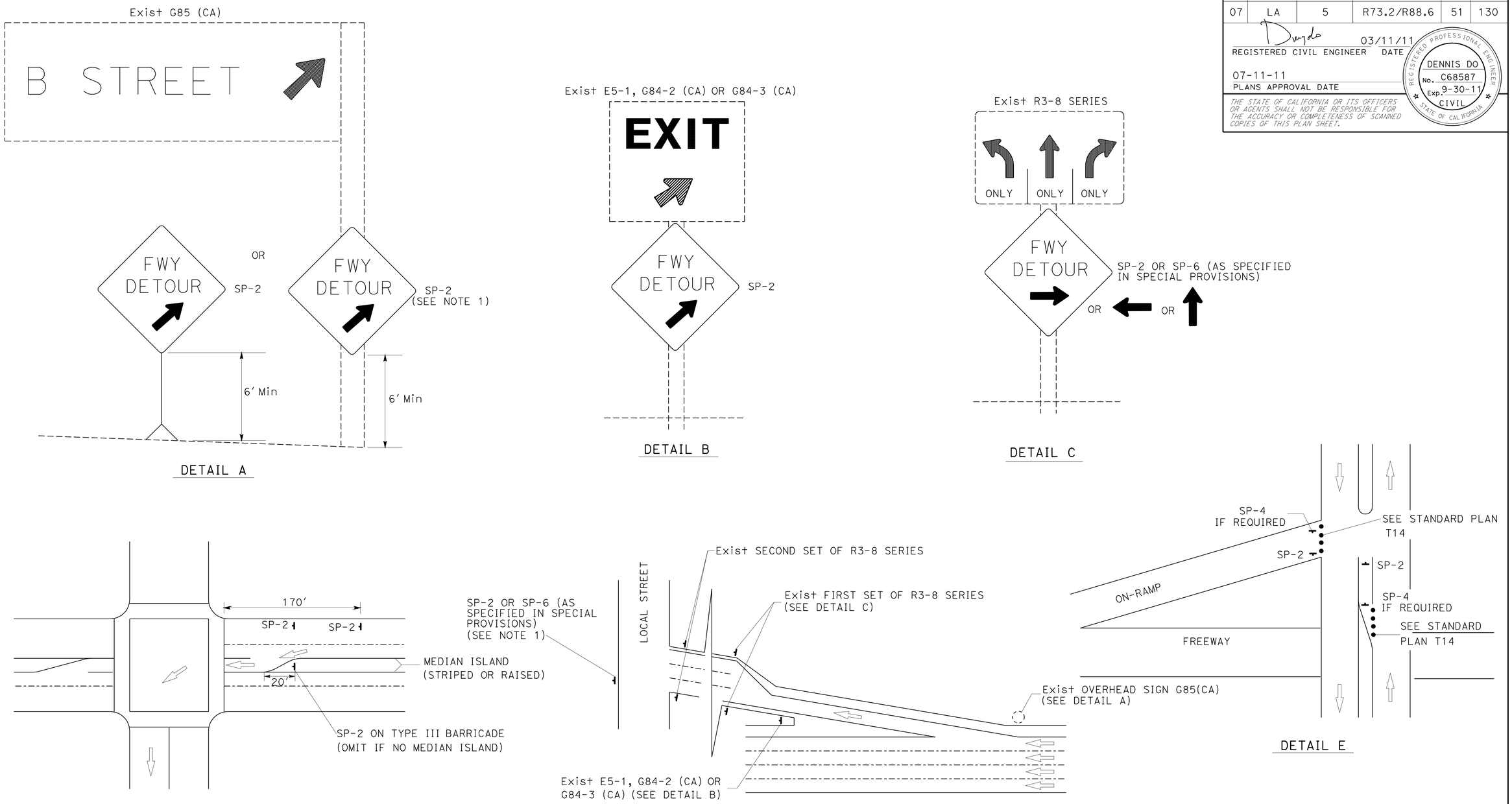

TYPICAL DETOUR SIGN INSTALLATION AT OFF-RAMP

NOTE:

1. TEMPORARY SIGNS MAY BE STRAPPED ON EXISTING ELECTROLIER, SIGNAL POSTS, OR SIGN POSTS.

ABBREVIATIONS

(CA) CALIFORNIA CODE

LEGENDS

- TRAFFIC CONE
- TEMPORARY SIGN
- DIRECTION OF TRAVEL
- EXISTING OVERHEAD SIGN

TRAFFIC HANDLING DETAILS
TRAFFIC CONTROL SYSTEM FOR DETOUR SIGN INSTALLATION ALONG DESIGNATED DETOUR ROUTE SHEET 2 OF 2

NO SCALE

THD-8

STATE OF CALIFORNIA - DEPARTMENT OF TRANSPORTATION
Caltrans DTM

FUNCTIONAL SUPERVISOR: XXXXXX

CALCULATED-DESIGNED BY: ALBERT K YU
CHECKED BY: JOCELYN C CHIANG
REVISED BY: JC
DATE REVISED: 7/10

LAST REVISION 00-00-00
DATE PLOTTED => 18-AUG-2011
TIME PLOTTED => 13:49

Dist	COUNTY	ROUTE	POST MILES TOTAL PROJECT	SHEET No.	TOTAL SHEETS
07	LA	5	R73.2/R88.6	52	130

REGISTERED CIVIL ENGINEER 5-23-11 DATE

07-11-11
PLANS APPROVAL DATE

REGISTERED PROFESSIONAL ENGINEER DEBORAH WONG No. 58313 Exp. 6/30/12 CIVIL STATE OF CALIFORNIA

THE STATE OF CALIFORNIA OR ITS OFFICERS OR AGENTS SHALL NOT BE RESPONSIBLE FOR THE ACCURACY OR COMPLETENESS OF SCANNED COPIES OF THIS PLAN SHEET.

NOTE:

REFER TO STAGES 4 AND 5, SHEETS TH-4 AND TH-6

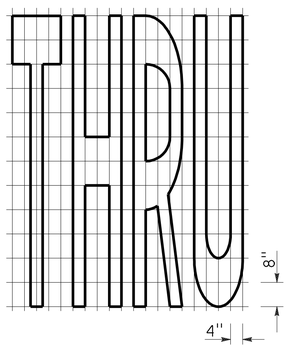

A=21 sq ft

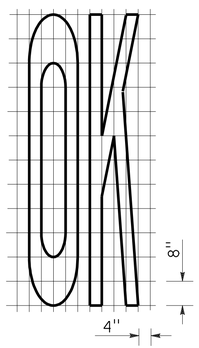

A=14 sq ft

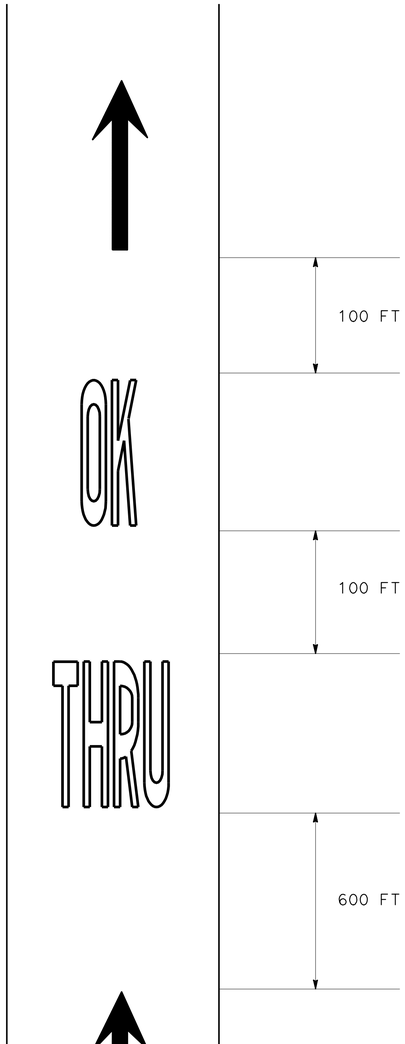

TRAFFIC HANDLING DETAILS

NO SCALE

THD-9

REVISED BY	DATE REVISED

CALCULATED-DESIGNED BY: ROXANA DIANATI
CHECKED BY: DEBORAH WONG

FUNCTIONAL SUPERVISOR: MONIR IBRAHIM

STATE OF CALIFORNIA - DEPARTMENT OF TRANSPORTATION
Caltrans® MAINTENANCE ENGINEERING

LAST REVISION 06-28-10 | DATE PLOTTED => 18-AUG-2011 | TIME PLOTTED => 13:49

Dist	COUNTY	ROUTE	POST MILES TOTAL PROJECT	SHEET No.	TOTAL SHEETS
07	LA	5	R73.2/R88.6	53	130

REGISTERED CIVIL ENGINEER 5-25-11 DATE

07-11-11
PLANS APPROVAL DATE

REGISTERED PROFESSIONAL ENGINEER DEBORAH WONG No. 58313 Exp. 6/30/12 CIVIL STATE OF CALIFORNIA

THE STATE OF CALIFORNIA OR ITS OFFICERS OR AGENTS SHALL NOT BE RESPONSIBLE FOR THE ACCURACY OR COMPLETENESS OF SCANNED COPIES OF THIS PLAN SHEET.

SEGMENT 1	SOUTHBOUND LOCATION	DETAIL No.	TEMPORARY PAVEMENT MARKER TYPE G	TEMPORARY PAVEMENT MARKER TYPE H	REMOVE PAVEMENT MARKER	TEMPORARY TRAFFIC STRIPE (PAINT) 8" SOLID	TEMPORARY TRAFFIC STRIPE (PAINT) 4" SOLID	TEMPORARY TRAFFIC STRIPE (PAINT) 4" (BROKEN 36-12)	TEMPORARY TRAFFIC STRIPE (PAINT) 4" (BROKEN 17-7)	REMOVE PAINTED TRAFFIC STRIPE	TEMPORARY PAVEMENT MARKING (PAINT)		REMOVE PAINTED PAVEMENT MARKING	TEMPORARY RAILING (TYPE K)	TEMPORARY CRASH CUSHION MODULE	CHANNELIZER (SURFACE MOUNTED)
			EA	EA	EA	LF	LF	LF	LF	LF	DESCRIPTION	SQFT	SQFT	LF	EA	EA
STAGE 1	PM R73.20 TO PM R76.20	25		453			21,690				TYPE VI ARROW	378	378	16,060	42	138
		12			331					5,423						
STAGE 2	PM R73.20 TO PM R73.70	25		96			4,570			4,570	TYPE VI ARROW	126	126	2,920	14	46
		12			56			4,570		660						
		27B					4,570			2,640						
STAGE 3	PM R73.70 TO PM R76.20	25		402			19,260			19,260	TYPE VI ARROW	378	378	13,320	42	300
		12	741		741			35,520		8,880						
		27B					28,260									
		38M	539		539	12,900				12,900						
STAGE 4	PM R73.70 TO PM R76.20	25		489			23,400				TYPE VI ARROW	378	378	26,800	91	558
		12			276					7,425	TYPE I ARROW	93	93			
		27B					50,400				"THRU" "OK"	105	105			
		38M	1,876		1,876	45,000				45,000						
	VISTA DEL LAGO ON RAMP PM R74.2	25		15	15		650			650	ARROW	31	31			
		8							400	165	DIAGONAL/CHEVRON	200	200			
		27B					1,500			1,500						
		8" SOLID	34		34	800				800						
		4" SOLID					60			60						
STAGE 5	PM R73.70 TO PM R76.20	25		418			20,000			20,000	TYPE VI ARROW	378	378	26,800	63	558
		12			276			13,800		6,750	TYPE I ARROW	31	31			
		27B					27,000				"THRU" "OK"	35	35			
		38M	601		601	14,400				14,400						
STAGE 6	PM R73.70 TO PM R76.20	25		590	590		28,260			28,260	TYPE VI ARROW	378	378	13,320	63	558
		12						22,320								
		27B					15,960			15,960						
		38M	539			12,900				5,500						
SUBTOTAL			4,329	2,462	5,334	86,000	245,580	76,210	400	200,802		2,511	2,511	99,220	315	2,158

TRAFFIC HANDLING QUANTITIES

THQ-1

REVISED BY | DATE REVISED
AMBACHEW YIRGU | DEBORAH WONG
CALCULATED DESIGNED BY | CHECKED BY
FUNCTIONAL SUPERVISOR: MONIR IBRAHIM

STATE OF CALIFORNIA DEPARTMENT OF TRANSPORTATION
Caltrans MAINTENANCE ENGINEERING

LAST REVISION 062810 | DATE PLOTTED => 18-AUG-2011 TIME PLOTTED => 13:49

Dist	COUNTY	ROUTE	POST MILES TOTAL PROJECT	SHEET No.	TOTAL SHEETS
07	LA	5	R73.2/R88.6	54	130

REGISTERED CIVIL ENGINEER 5-25-11 DATE

07-11-11
PLANS APPROVAL DATE

REGISTERED PROFESSIONAL ENGINEER DEBORAH WONG No. 58313 Exp. 6/30/12 CIVIL STATE OF CALIFORNIA

THE STATE OF CALIFORNIA OR ITS OFFICERS OR AGENTS SHALL NOT BE RESPONSIBLE FOR THE ACCURACY OR COMPLETENESS OF SCANNED COPIES OF THIS PLAN SHEET.

SEGMENT 2	SOUTHBOUND LOCATION	DETAIL No.	TEMPORARY PAVEMENT MARKER TYPE G	TEMPORARY PAVEMENT MARKER TYPE H	REMOVE PAVEMENT MARKER	TEMPORARY TRAFFIC STRIPE (PAINT) 8" SOLID	TEMPORARY TRAFFIC STRIPE (PAINT) 4" SOLID	TEMPORARY TRAFFIC STRIPE (PAINT) 4" (BROKEN 36-12)	TEMPORARY TRAFFIC STRIPE (PAINT) 4" (BROKEN 17-7)	REMOVE PAINTED TRAFFIC STRIPE	TEMPORARY PAVEMENT MARKING (PAINT) DESCRIPTION	TEMPORARY PAVEMENT MARKING (PAINT) SQFT	REMOVE PAINTED PAVEMENT MARKING	TEMPORARY RAILING (TYPE K)	TEMPORARY CRASH CUSHION MODULE	CHANNELIZER (SURFACE MOUNTED)
			EA	EA	EA	LF	LF	LF	LF	LF		SQFT	SQFT	LF	EA	EA
STAGE 1	PM R76.20 TO PM R78.10	25		291			13,932				TYPE VI ARROW	252	252	10,260	28	92
		12			210					3,483						
STAGE 3	PM R76.20 TO PM R78.10	25		294			14,072			14,072	TYPE VI ARROW	252	252	10,160	28	200
		12	546		546			26,144		6,536						
		27B					20,072									
		38M	359		359	8,600				8,600						
STAGE 4	PM R76.20 TO PM R78.10	25		352			16,832				TYPE VI ARROW	252	252	20,480	56	372
		12			210					5,258	TYPE I ARROW	62	62			
		27B					36,064				"THRU" "OK"	70	70			
		38M	1,876		1,876	45,000				45,000						
	SMOKEY BEAR ROAD ON RAMP PM R77.80	25		20	20		900			900	ARROW	93	93			
		8							400	165	DIAGONAL/CHEVRON	200	200			
		27B					1,800			1,800						
		8' SOLID	26		26	600				600						
		4' SOLID					80			80						
STAGE 5	PM R76.20 TO PM R77.70	25		308			14,720			14,720	TYPE VI ARROW	252	252	16,240	42	372
		12			166			8,520		4,110	TYPE I ARROW	31	31			
		27B					16,440				"THRU" "OK"	35	35			
		38M	601		601	14,400				14,400						
STAGE 6	PM R76.20 TO PM R77.70	25		271	271		12,940			12,940	TYPE VI ARROW	252	252	8,040	42	372
		12						10,960								
		27B					5,320			5,320						
		38M	359			8,600				5,500						
SUBTOTAL			3,767	1,535	4,284	77,200	153,172	45,624	400	143,484		1,751	1,751	65,180	196	1,408

SEGMENT 3	SOUTHBOUND LOCATION	DETAIL No.	TEMPORARY PAVEMENT MARKER TYPE G	TEMPORARY PAVEMENT MARKER TYPE H	REMOVE PAVEMENT MARKER	TEMPORARY TRAFFIC STRIPE (PAINT) 8" SOLID	TEMPORARY TRAFFIC STRIPE (PAINT) 4" SOLID	TEMPORARY TRAFFIC STRIPE (PAINT) 4" (BROKEN 36-12)	REMOVE PAINTED TRAFFIC STRIPE	TEMPORARY PAVEMENT MARKING (PAINT) DESCRIPTION	TEMPORARY PAVEMENT MARKING (PAINT) SQFT	REMOVE PAINTED PAVEMENT MARKING	TEMPORARY RAILING (TYPE K)	TEMPORARY CRASH CUSHION MODULE	CHANNELIZER (SURFACE MOUNTED)
			EA	EA	EA	LF	LF	LF	LF	DESCRIPTION	SQFT	SQFT	LF	EA	EA
STAGE 1	PM R78.10 TO PM R79.60	25		247			11,820			TYPE VI ARROW	252	252	8,140	28	92
		12			166				2,955						
STAGE 3	PM R78.10 TO PM R79.60	25		250			11,960		11,960	TYPE VI ARROW	252	252	8,040	28	200
		12	458		458			21,920	5,480						
		27B					17,960								
		38M	359		359	8,600			8,600						
STAGE 4	PM R78.10 TO PM R79.60	25		308			14,720			TYPE VI ARROW	252	252	16,240	56	372
		12			166				4,730	TYPE I ARROW	62	62			
		27B					31,840			"THRU" "OK"	70	70			
		38M	1,251		1,251	30,000			30,000						
SUBTOTAL			2,068	805	2,400	38,600	88,300	21,920	63,725		888	888	32,420	112	664

TRAFFIC HANDLING QUANTITIES

THQ-2

REVISED BY | DATE REVISED
AMBACHEW YIRGU | DEBORAH WONG
CALCULATED DESIGNED BY | CHECKED BY
FUNCTIONAL SUPERVISOR | MONIR IBRAHIM

STATE OF CALIFORNIA DEPARTMENT OF TRANSPORTATION
Caltrans MAINTENANCE ENGINEERING

LAST REVISION 062810
DATE PLOTTED => 18-AUG-2011
TIME PLOTTED => 13:49

Dist	COUNTY	ROUTE	POST MILES TOTAL PROJECT	SHEET No.	TOTAL SHEETS
07	LA	5	R73.2/R88.6	55	130

REGISTERED CIVIL ENGINEER 5-25-11 DATE

07-11-11
PLANS APPROVAL DATE

REGISTERED PROFESSIONAL ENGINEER DEBORAH WONG No. 58313 Exp. 6/30/12 CIVIL STATE OF CALIFORNIA

THE STATE OF CALIFORNIA OR ITS OFFICERS OR AGENTS SHALL NOT BE RESPONSIBLE FOR THE ACCURACY OR COMPLETENESS OF SCANNED COPIES OF THIS PLAN SHEET.

SEGMENT 4	SOUTHBOUND LOCATION	DETAIL No.	TEMPORARY PAVEMENT MARKER TYPE G	TEMPORARY PAVEMENT MARKER TYPE H	REMOVE PAVEMENT MARKER	TEMPORARY TRAFFIC STRIPE (PAINT) 8" SOLID	TEMPORARY TRAFFIC STRIPE (PAINT) 4" SOLID	TEMPORARY TRAFFIC STRIPE (PAINT) 4" (BROKEN 36-12)	TEMPORARY TRAFFIC STRIPE (PAINT) 4" (BROKEN 17-7)	REMOVE PAINTED TRAFFIC STRIPE	TEMPORARY PAVEMENT MARKING (PAINT) DESCRIPTION	TEMPORARY PAVEMENT MARKING (PAINT) SQFT	REMOVE PAINTED PAVEMENT MARKING	TEMPORARY RAILING (TYPE K)	TEMPORARY CRASH CUSHION MODULE	CHANNELIZER (SURFACE MOUNTED)
			EA	EA	EA	LF	LF	LF		LF		SQFT	SQFT	LF	EA	EA
STAGE 1	PM R79.60 TO PM R82.30	25		420			20,106				TYPE VI ARROW	378	378	14,480	42	138
		12			298				300	5,027						
STAGE 3	PM R79.60 TO PM R82.30	25		424			20,316			20,316	TYPE VI ARROW	378	378	14,380	42	300
		12	785		785			37,632		9,408						
		27B					29,316		300							
		38M	539		539	12,900				12,900						
STAGE 4	PM R79.60 TO PM R82.30	25		511			24,456				TYPE VI ARROW	378	378	28,920	91	558
		12			298					7,689	TYPE I ARROW	93	93			
		27B					52,512				"THRU" "OK"	105	105			
		38M	1,876		1,876	45,000				45,000						
	QUAIL LAKE ROAD ON RAMP PM R81.66	25		16	16		700			700	ARROW	62	62			
		8								124	DIAGONAL/CHEVRON	200	200			
		27B					1,550			1,550						
		8" SOLID	14		14	300				300						
		4" SOLID					70			70						
	SUBTOTAL		3,213	1,370	3,825	58,200	149,026	37,632		103,083		1,594	1,594	57,780	175	996

SEGMENT 5	SOUTHBOUND LOCATION	DETAIL No.	TEMPORARY PAVEMENT MARKER TYPE G	TEMPORARY PAVEMENT MARKER TYPE H	REMOVE PAVEMENT MARKER	TEMPORARY TRAFFIC STRIPE (PAINT) 8" SOLID	TEMPORARY TRAFFIC STRIPE (PAINT) 4" SOLID	TEMPORARY TRAFFIC STRIPE (PAINT) 4" (BROKEN 36-12)	REMOVE PAINTED TRAFFIC STRIPE	TEMPORARY PAVEMENT MARKING (PAINT) DESCRIPTION	TEMPORARY PAVEMENT MARKING (PAINT) SQFT	REMOVE PAINTED PAVEMENT MARKING	TEMPORARY RAILING (TYPE K)	TEMPORARY CRASH CUSHION MODULE	CHANNELIZER (SURFACE MOUNTED)
			EA	EA	EA	LF	LF	LF	LF	DESCRIPTION	SQFT	SQFT	LF	EA	EA
STAGE 1	PM R82.30 TO PM R84.10	25		280			13,404			TYPE VI ARROW	252	252	9,740	28	92
		12			199				3,351						
STAGE 3	PM R82.30 TO PM R84.10	25		283			13,544		13,544	TYPE VI ARROW	252	252	9,640	28	200
		12	524		524			25,088	6,272						
		27B					19,544								
		38M	359		359	8,600			8,600						
STAGE 4	PM R82.30 TO PM R84.10	25		341			16,304			TYPE VI ARROW	252	252	19,420	42	372
		12			199				5,126	TYPE I ARROW	62	62			
		27B					35,008			"THRU" "OK"	70	70			
		38M	1,251		1,251	30,000			30,000						
	SUBTOTAL		2,134	904	2,532	38,600	97,804	25,088	66,893		888	888	38,800	98	664

TRAFFIC HANDLING QUANTITIES

THQ-3

STATE OF CALIFORNIA DEPARTMENT OF TRANSPORTATION
Caltrans MAINTENANCE ENGINEERING

FUNCTIONAL SUPERVISOR: MONIR IBRAHIM
CALCULATED DESIGNED BY: AMBACHEW YIRGU
CHECKED BY: DEBORAH WONG
REVISED BY / DATE REVISED

DATE PLOTTED => 18-AUG-2011
TIME PLOTTED => 13:49
LAST REVISION 062810

Dist	COUNTY	ROUTE	POST MILES TOTAL PROJECT	SHEET No.	TOTAL SHEETS
07	LA	5	R73.2/R88.6	56	130

REGISTERED CIVIL ENGINEER DATE 5-25-11

07-11-11
PLANS APPROVAL DATE

REGISTERED PROFESSIONAL ENGINEER DEBORAH WONG No. 58313 Exp. 6/30/12 CIVIL STATE OF CALIFORNIA

THE STATE OF CALIFORNIA OR ITS OFFICERS OR AGENTS SHALL NOT BE RESPONSIBLE FOR THE ACCURACY OR COMPLETENESS OF SCANNED COPIES OF THIS PLAN SHEET.

SEGMENT 6	SOUTHBOUND LOCATION	DETAIL No.	TEMPORARY PAVEMENT MARKER TYPE G	TEMPORARY PAVEMENT MARKER TYPE H	REMOVE PAVEMENT MARKER	TEMPORARY TRAFFIC STRIPE (PAINT) 8" SOLID	TEMPORARY TRAFFIC STRIPE (PAINT) 4" SOLID	TEMPORARY TRAFFIC STRIPE (PAINT) 4" (BROKEN 36-12)	TEMPORARY TRAFFIC STRIPE (PAINT) 4" (BROKEN 17-7)	REMOVE PAINTED TRAFFIC STRIPE	TEMPORARY PAVEMENT MARKING (PAINT) DESCRIPTION	TEMPORARY PAVEMENT MARKING (PAINT) SQFT	REMOVE PAINTED PAVEMENT MARKING	TEMPORARY RAILING (TYPE K)	TEMPORARY CRASH CUSHION MODULE	CHANNELIZER (SURFACE MOUNTED)
			EA	EA	EA	LF	LF	LF	LF	LF		SQFT	SQFT	LF	EA	EA
STAGE 1	PM R84.10 TO PM R86.10	25		302			14,460				TYPE VI ARROW	252	252	10,780	28	92
		12			221					3,615						
STAGE 3	PM R84.10 TO PM R86.10	25		305			14,600			14,600	TYPE VI ARROW	252	252	10,680	28	200
		12	568		568			27,200		6,800						
		27B					20,600									
		38M	359		359	8,600				8,600						
STAGE 4	PM R84.10 TO PM R86.10	25		363			17,360				TYPE VI ARROW	252	252	21,520	70	372
		12			221					5,390	TYPE I ARROW	62	62			
		27B					37,120				"THRU" "OK"	70	70			
		38M	1,251		1,251	30,000				30,000						
	GORMAN ROAD ON RAMP PM R85.64	25		20	20		900			900	ARROW	62	62			
		8							700	288	DIAGONAL/CHEVRON	200	200			
		27B					2,000			2,000						
		8" SOLID	22		22	500				500						
		4" SOLID					70			70						
SUBTOTAL			2,200	990	2,662	39,100	107,110	27,200	700	72,763		1,150	1,150	42,980	126	664

SEGMENT 7	SOUTHBOUND LOCATION	DETAIL No.	TEMPORARY PAVEMENT MARKER TYPE G	TEMPORARY PAVEMENT MARKER TYPE H	REMOVE PAVEMENT MARKER	TEMPORARY TRAFFIC STRIPE (PAINT) 8" SOLID	TEMPORARY TRAFFIC STRIPE (PAINT) 4" SOLID	TEMPORARY TRAFFIC STRIPE (PAINT) 4" (BROKEN 36-12)	TEMPORARY TRAFFIC STRIPE (PAINT) 4" (BROKEN 17-7)	REMOVE PAINTED TRAFFIC STRIPE	TEMPORARY PAVEMENT MARKING (PAINT) DESCRIPTION	TEMPORARY PAVEMENT MARKING (PAINT) SQFT	REMOVE PAINTED PAVEMENT MARKING	TEMPORARY RAILING (TYPE K)	TEMPORARY CRASH CUSHION MODULE	CHANNELIZER (SURFACE MOUNTED)
			EA	EA	EA	LF	LF	LF	LF	LF		SQFT	SQFT	LF	EA	EA
STAGE 1	PM R86.10 TO PM R88.60	25		398			19,050				TYPE VI ARROW	378	378	13,420	42	138
		12			276					4,763						
STAGE 3	PM R86.10 TO PM R88.60	25		402			19,260			19,260	TYPE VI ARROW	378	378	13,320	42	300
		12	741		741			35,520		8,880						
		27B					28,260									
		38M	539		539	12,900				12,900						
STAGE 4	PM R86.10 TO PM R88.60	25		489			23,400				TYPE VI ARROW	378	378	26,800	77	558
		12			276					7,425	TYPE I ARROW	93	93			
		27B					50,400				"THRU" "OK"	105	105			
		38M	1,876		1,876	45,000				45,000						
	FRAZIER MOUNTAIN PARK ON RAMP PM R88.30	25		32	32		1,500			1,500	ARROW	62	62			
		8							1,200	494	DIAGONAL/CHEVRON	200	200			
		27B					2,400			2,400						
		8" SOLID	14		14	300				300						
		4" SOLID					90			90						
SUBTOTAL			3,169	1,321	3,753	58,200	144,360	35,520	1,200	103,012		1,594	1,594	53,540	161	996
SOUTHBOUND SUBTOTAL			30,267		24,790	1,653,446				753,762		10,376	10,376	389,920	1,183	7,550

TRAFFIC HANDLING QUANTITIES

THQ-4

REVISED BY | DATE REVISED
AMBACHEW YIRGU | DEBORAH WONG
CALCULATED DESIGNED BY | CHECKED BY
FUNCTIONAL SUPERVISOR | MONIR IBRAHIM
STATE OF CALIFORNIA DEPARTMENT OF TRANSPORTATION
Caltrans MAINTENANCE ENGINEERING

LAST REVISION 062810 | DATE PLOTTED => 18-AUG-2011 TIME PLOTTED => 13:49

Dist	COUNTY	ROUTE	POST MILES TOTAL PROJECT	SHEET No.	TOTAL SHEETS
07	LA	5	R73.2/R88.6	57	130

REGISTERED CIVIL ENGINEER 5-25-11 DATE

07-11-11
PLANS APPROVAL DATE

REGISTERED PROFESSIONAL ENGINEER DEBORAH WONG No. 58313 Exp. 6/30/12 CIVIL STATE OF CALIFORNIA

THE STATE OF CALIFORNIA OR ITS OFFICERS OR AGENTS SHALL NOT BE RESPONSIBLE FOR THE ACCURACY OR COMPLETENESS OF SCANNED COPIES OF THIS PLAN SHEET.

SEGMENT 1	NORTHBOUND LOCATION	DETAIL No.	TEMPORARY PAVEMENT MARKER TYPE G	TEMPORARY PAVEMENT MARKER TYPE H	REMOVE PAVEMENT MARKER	TEMPORARY TRAFFIC STRIPE (PAINT) 8" SOLID	TEMPORARY TRAFFIC STRIPE (PAINT) 4" SOLID	TEMPORARY TRAFFIC STRIPE (PAINT) 4" (BROKEN 36-12)	TEMPORARY TRAFFIC STRIPE (PAINT) 4" (BROKEN 17-7)	REMOVE PAINTED TRAFFIC STRIPE	TEMPORARY PAVEMENT MARKING (PAINT) DESCRIPTION	TEMPORARY PAVEMENT MARKING (PAINT) SQFT	REMOVE PAINTED PAVEMENT MARKING	TEMPORARY RAILING (TYPE K)	TEMPORARY CRASH CUSHION MODULE	CHANNELIZER (SURFACE MOUNTED)
			EA	EA	EA	LF	LF	LF	LF	LF		SQFT	SQFT	LF	EA	EA
STAGE 1	PM R73.20 TO PM R76.10	25		442			21,162				TYPE VI ARROW	378	378	15,540	42	138
		12			320					5,290						
STAGE 2	PM R73.20 TO PM R73.70	25		96			4,570			4,570	TYPE VI ARROW	126	126	2,920	14	46
		12			56			4,570		660						
		27B					4,570			2,640						
STAGE 3	PM R73.70 TO PM R76.10	25		391			18,732			18,732	TYPE VI ARROW	378	378	12,800	42	300
		12	719		719			34,464		8,616						
		27B					27,732									
		38M	539		539	12,900				12,900						
STAGE 4	PM R73.70 TO PM R76.10	25		477			22,872				TYPE VI ARROW	378	378	25,760	91	558
		12			265					7,293	TYPE I ARROW	93	93			
		27B					49,344				"THRU" "OK"	105	105			
		38M	1,876		1,876	45,000				45,000						
	VISTA DEL LAGO ON RAMP PM R74.6	25		16	16		700			700	ARROW	62	62			
		8							300	124	DIAGONAL/CHEVRON	200	200			
		27B					1,500			1,500						
		8" SOLID	22		22	500				500						
		4" SOLID					60			60						
STAGE 5	PM R75.30 TO PM R75.40	25		154			7,328			7,328	TYPE VI ARROW	126	126	1,460	21	186
		12			12			1,128		414	TYPE I ARROW	31	31			
		27B					1,656				"THRU" "OK"	35	35			
		38M	601		601	14,400				14,400						
STAGE 6	PM R75.30 TO PM R75.40	25		117	117		5,548			5,548	TYPE VI ARROW	126	126	660	21	186
		12						3,568								
		27B					5,320			5,320						
		38M	180			4,300				5,500						
SUBTOTAL			3,937	1,693	4,542	77,100	171,094	43,730	300	147,095		2,038	2,038	59,140	231	1,414

TRAFFIC HANDLING QUANTITIES

THQ-5

STATE OF CALIFORNIA DEPARTMENT OF TRANSPORTATION
Caltrans MAINTENANCE ENGINEERING

FUNCTIONAL SUPERVISOR: MONIR IBRAHIM
CALCULATED DESIGNED BY: AMBACHEW YIRGU
CHECKED BY: DEBORAH WONG
REVISED BY
DATE REVISED

LAST REVISION 062810
DATE PLOTTED => 18-AUG-2011
TIME PLOTTED => 13:49

Dist	COUNTY	ROUTE	POST MILES TOTAL PROJECT	SHEET No.	TOTAL SHEETS
07	LA	5	R73.2/R88.6	58	130

REGISTERED CIVIL ENGINEER 5-25-11 DATE

07-11-11
PLANS APPROVAL DATE

REGISTERED PROFESSIONAL ENGINEER DEBORAH WONG No. 58313 Exp. 6/30/12 CIVIL STATE OF CALIFORNIA

THE STATE OF CALIFORNIA OR ITS OFFICERS OR AGENTS SHALL NOT BE RESPONSIBLE FOR THE ACCURACY OR COMPLETENESS OF SCANNED COPIES OF THIS PLAN SHEET.

SEGMENT 2	NORTHBOUND LOCATION	DETAIL No.	TEMPORARY PAVEMENT MARKER TYPE G	TEMPORARY PAVEMENT MARKER TYPE H	REMOVE PAVEMENT MARKER	TEMPORARY TRAFFIC STRIPE (PAINT) 8" SOLID	TEMPORARY TRAFFIC STRIPE (PAINT) 4" SOLID	TEMPORARY TRAFFIC STRIPE (PAINT) 4" (BROKEN 36-12)	REMOVE PAINTED TRAFFIC STRIPE	TEMPORARY PAVEMENT MARKING (PAINT) DESCRIPTION	TEMPORARY PAVEMENT MARKING (PAINT) SQFT	REMOVE PAINTED PAVEMENT MARKING	TEMPORARY RAILING (TYPE K)	TEMPORARY CRASH CUSHION MODULE	CHANNELIZER (SURFACE MOUNTED)
			EA	EA	EA	LF	LF	LF	LF			SQFT	LF	EA	EA
STAGE 1	PM R76.10 TO PM R77.80	25		269			12,876			TYPE VI ARROW	252	252	9,200	28	92
		12			188				3,219						
STAGE 3	PM R76.10 TO PM R77.80	25		272			13,016		13,016	TYPE VI ARROW	252	252	9,100	28	200
		12	502		502			24,032	6,008						
		27B					19,016								
		38M	359		359	8,600			8,600						
STAGE 4	PM R76.10 TO PM R77.80	25		330			15,776			TYPE VI ARROW	252	252	18,360	42	372
		12			188				4,994	TYPE I ARROW	62	62			
		27B					33,952			"THRU" "OK"	70	70			
		38M	1,876		1,876	45,000			45,000						
SUBTOTAL			2,737	871	3,113	53,600	94,636	24,032	80,837		888	888	36,660	98	664

SEGMENT 3	NORTHBOUND LOCATION	DETAIL No.	TEMPORARY PAVEMENT MARKER TYPE G	TEMPORARY PAVEMENT MARKER TYPE H	REMOVE PAVEMENT MARKER	TEMPORARY TRAFFIC STRIPE (PAINT) 8" SOLID	TEMPORARY TRAFFIC STRIPE (PAINT) 4" SOLID	TEMPORARY TRAFFIC STRIPE (PAINT) 4" (BROKEN 36-12)	TEMPORARY TRAFFIC STRIPE (PAINT) 4" (BROKEN 17-7)	REMOVE PAINTED TRAFFIC STRIPE	TEMPORARY PAVEMENT MARKING (PAINT) DESCRIPTION	TEMPORARY PAVEMENT MARKING (PAINT) SQFT	REMOVE PAINTED PAVEMENT MARKING	TEMPORARY RAILING (TYPE K)	TEMPORARY CRASH CUSHION MODULE	CHANNELIZER (SURFACE MOUNTED)
			EA	EA	EA	LF	LF	LF	LF	LF			SQFT	LF	EA	EA
STAGE 1	PM R77.80 TO PM R79.60	25		280			13,404				TYPE VI ARROW	252	252	9,740	28	92
		12			199					3,351						
STAGE 3	PM R77.80 TO PM R79.60	25		283			13,544			13,544	TYPE VI ARROW	252	252	9,640	28	200
		12	524		524			25,088		6,272						
		27B					19,544									
		38M	359		359	8,600				8,600						
STAGE 4	PM R77.80 TO PM R79.60	25		341			16,304				TYPE VI ARROW	252	252	19,420	70	372
		12			199					5,126	TYPE I ARROW	62	62			
		27B					35,008				"THRU" "OK"	70	70			
		38M	1,876		1,876	45,000				45,000						
	SMOKEY BEAR ROAD ON RAMP PM R78.12	25		16	16		700			700	ARROW	62	62			
		8							300	124	DIAGONAL/CHEVRON	200	200			
		27B					1,500			1,500						
		8" SOLID	22		22	500				500						
		4" SOLID					60			60						
SUBTOTAL			2,781	920	3,194	54,100	100,064	25,088	300	84,777		1,150	1,150	38,800	126	664

TRAFFIC HANDLING QUANTITIES

THQ-6

REVISED BY | DATE REVISED
AMBACHEW YIRGU | DEBORAH WONG
CALCULATED DESIGNED BY | CHECKED BY
FUNCTIONAL SUPERVISOR | MONIR IBRAHIM
STATE OF CALIFORNIA DEPARTMENT OF TRANSPORTATION
Caltrans MAINTENANCE ENGINEERING

LAST REVISION 062810 | DATE PLOTTED => 18-AUG-2011 TIME PLOTTED => 13:49

Dist	COUNTY	ROUTE	POST MILES TOTAL PROJECT	SHEET No.	TOTAL SHEETS
07	LA	5	R73.2/R88.6	59	130

REGISTERED CIVIL ENGINEER 5-25-11 DATE

07-11-11
PLANS APPROVAL DATE

REGISTERED PROFESSIONAL ENGINEER DEBORAH WONG No. 58313 Exp. 6/30/12 CIVIL STATE OF CALIFORNIA

THE STATE OF CALIFORNIA OR ITS OFFICERS OR AGENTS SHALL NOT BE RESPONSIBLE FOR THE ACCURACY OR COMPLETENESS OF SCANNED COPIES OF THIS PLAN SHEET.

SEGMENT 4	NORTHBOUND LOCATION	DETAIL No.	TEMPORARY PAVEMENT MARKER TYPE G	TEMPORARY PAVEMENT MARKER TYPE H	REMOVE PAVEMENT MARKER	TEMPORARY TRAFFIC STRIPE (PAINT) 8" SOLID	TEMPORARY TRAFFIC STRIPE (PAINT) 4" SOLID	TEMPORARY TRAFFIC STRIPE (PAINT) 4" (BROKEN 36-12)	REMOVE PAINTED TRAFFIC STRIPE	TEMPORARY PAVEMENT MARKING (PAINT) DESCRIPTION	TEMPORARY PAVEMENT MARKING (PAINT) SQFT	REMOVE PAINTED PAVEMENT MARKING	TEMPORARY RAILING (TYPE K)	TEMPORARY CRASH CUSHION MODULE	CHANNELIZER (SURFACE MOUNTED)
			EA	EA	EA	LF	LF	LF	LF		SQFT	SQFT	LF	EA	EA
STAGE 1	PM R79.60 TO PM R81.40	25		280			13,404			TYPE VI ARROW	252	252	9,740	28	92
		12			199				3,351						
STAGE 3	PM R79.60 TO PM R81.40	25		283			13,544		13,544	TYPE VI ARROW	252	252	9,640	28	200
		12	524		524			25,088	6,272						
		27B					19,544								
		38M	359		359	8,600			8,600						
STAGE 4	PM R79.60 TO PM R81.40	25		341			16,304			TYPE VI ARROW	252	252	19,420	42	372
		12			199				5,126	TYPE I ARROW	62	62			
		27B					35,008			"THRU" "OK"	70	70			
		38M	1,876		1,876	45,000			45,000						
SUBTOTAL			2,759	904	3,157	53,600	97,804	25,088	81,893		888	888	38,800	98	664

SEGMENT 5	NORTHBOUND LOCATION	DETAIL No.	TEMPORARY PAVEMENT MARKER TYPE G	TEMPORARY PAVEMENT MARKER TYPE H	REMOVE PAVEMENT MARKER	TEMPORARY TRAFFIC STRIPE (PAINT) 8" SOLID	TEMPORARY TRAFFIC STRIPE (PAINT) 4" SOLID	TEMPORARY TRAFFIC STRIPE (PAINT) 4" (BROKEN 36-12)	TEMPORARY TRAFFIC STRIPE (PAINT) 4" (BROKEN 17-7)	REMOVE PAINTED TRAFFIC STRIPE	TEMPORARY PAVEMENT MARKING (PAINT) DESCRIPTION	TEMPORARY PAVEMENT MARKING (PAINT) SQFT	REMOVE PAINTED PAVEMENT MARKING	TEMPORARY RAILING (TYPE K)	TEMPORARY CRASH CUSHION MODULE	CHANNELIZER (SURFACE MOUNTED)
			EA	EA	EA	LF	LF	LF	LF	LF		SQFT	SQFT	LF	EA	EA
STAGE 1	PM R81.40 TO PM R83.70	25		376			17,994				TYPE VI ARROW	378	378	12,380	42	138
		12			254					4,499						
STAGE 3	PM R81.40 TO PM R83.70	25		380			18,204			18,204	TYPE VI ARROW	378	378	12,280	42	300
		12	697		697			33,408		8,352						
		27B					27,204									
		38M	539		539	12,900				12,900						
STAGE 4	PM R81.40 TO PM R83.70	25		467			22,344				TYPE VI ARROW	378	378	24,700	91	558
		12			254					7,161	TYPE I ARROW	93	93			
		27B					48,288				"THRU" "OK"	105	105			
		38M	1,876		1,876	45,000				45,000						
	QUAIL LAKE ROAD ON RAMP PM R81.94	25		18	18		800			800	ARROW	62	62			
		8							360	148	DIAGONAL/CHEVRON	200	200			
		27B					1,550			1,550						
		8" SOLID	18		18	400				400						
		4" SOLID					60			60						
SUBTOTAL			3,129	1,240	3,655	58,300	136,444	33,408	360	99,074		1,594	1,594	49,360	175	996

TRAFFIC HANDLING QUANTITIES

THQ-7

STATE OF CALIFORNIA DEPARTMENT OF TRANSPORTATION
Caltrans MAINTENANCE ENGINEERING

FUNCTIONAL SUPERVISOR: MONIR IBRAHIM
CALCULATED DESIGNED BY: AMBACHEW YIRGU
CHECKED BY: DEBORAH WONG
REVISED BY
DATE REVISED

LAST REVISION 062810
DATE PLOTTED => 18-AUG-2011
TIME PLOTTED => 13:49

Dist	COUNTY	ROUTE	POST MILES TOTAL PROJECT	SHEET No.	TOTAL SHEETS
07	LA	5	R73.2/R88.6	60	130

REGISTERED CIVIL ENGINEER 5-25-11 DATE

07-11-11
PLANS APPROVAL DATE

REGISTERED PROFESSIONAL ENGINEER DEBORAH WONG No. 58313 Exp. 6/30/12 CIVIL STATE OF CALIFORNIA

THE STATE OF CALIFORNIA OR ITS OFFICERS OR AGENTS SHALL NOT BE RESPONSIBLE FOR THE ACCURACY OR COMPLETENESS OF SCANNED COPIES OF THIS PLAN SHEET.

SEGMENT 6	NORTHBOUND LOCATION	DETAIL No.	TEMPORARY PAVEMENT MARKER TYPE G	TEMPORARY PAVEMENT MARKER TYPE H	REMOVE PAVEMENT MARKER	TEMPORARY TRAFFIC STRIPE (PAINT) 8" SOLID	TEMPORARY TRAFFIC STRIPE (PAINT) 4" SOLID	TEMPORARY TRAFFIC STRIPE (PAINT) 4" (BROKEN 36-12)	REMOVE PAINTED TRAFFIC STRIPE	TEMPORARY PAVEMENT MARKING (PAINT) DESCRIPTION	TEMPORARY PAVEMENT MARKING (PAINT) SQFT	REMOVE PAINTED PAVEMENT MARKING	TEMPORARY RAILING (TYPE K)	TEMPORARY CRASH CUSHION MODULE	CHANNELIZER (SURFACE MOUNTED)
			EA	EA	EA	LF	LF	LF	LF		SQFT	SQFT	LF	EA	EA
STAGE 1	PM R83.70 TO PM R85.60	25		291			13,932			TYPE VI ARROW	252	252	10,260	28	92
		12			210				3,483						
STAGE 3	PM R83.70 TO PM R85.60	25		294			14,072		14,072	TYPE VI ARROW	252	252	10,160	28	200
		12	546		546			26,144	6,536						
		27B					20,072								
		38M	359		359	8,600			8,600						
STAGE 4	PM R83.70 TO PM R85.60	25		352			16,832			TYPE VI ARROW	252	252	20,480	42	372
		12			210				5,258	TYPE I ARROW	62	62			
		27B					36,064			"THRU" "OK"	70	70			
		38M	1,876		1,876	45,000			45,000						
SUBTOTAL			2,781	937	3,201	53,600	100,972	26,144	82,949		888	888	40,900	98	664

SEGMENT 7	NORTHBOUND LOCATION	DETAIL No.	TEMPORARY PAVEMENT MARKER TYPE G	TEMPORARY PAVEMENT MARKER TYPE H	REMOVE PAVEMENT MARKER	TEMPORARY TRAFFIC STRIPE (PAINT) 8" SOLID	TEMPORARY TRAFFIC STRIPE (PAINT) 4" SOLID	TEMPORARY TRAFFIC STRIPE (PAINT) 4" (BROKEN 36-12)	TEMPORARY TRAFFIC STRIPE (PAINT) 4" (BROKEN 17-7)	REMOVE PAINTED TRAFFIC STRIPE	TEMPORARY PAVEMENT MARKING (PAINT) DESCRIPTION	TEMPORARY PAVEMENT MARKING (PAINT) SQFT	REMOVE PAINTED PAVEMENT MARKING	TEMPORARY RAILING (TYPE K)	TEMPORARY CRASH CUSHION MODULE	CHANNELIZER (SURFACE MOUNTED)
			EA	EA	EA	LF	LF	LF	LF	LF		SQFT	SQFT	LF	EA	EA
STAGE 1	PM R85.60 TO PM R87.60	25		302			14,460				TYPE VI ARROW	252	252	10,780	28	92
		12			221					3,615						
STAGE 3	PM R85.60 TO PM R87.60	25		305			14,600			14,600	TYPE VI ARROW	252	252	10,680	28	200
		12	568		568			27,200		6,800						
		27B					20,600									
		38M	359		359	8,600				8,600						
STAGE 4	PM R85.60 TO PM R87.60	25		363			17,360				TYPE VI ARROW	252	252	21,520	70	372
		12			221					5,390	TYPE I ARROW	62	62			
		27B					37,120				"THRU" "OK"	70	70			
		38M	1,876		1,876	45,000				45,000						
	GORMAN ROAD ON RAMP PM R86.04	25		25	25		1,150			1,150	ARROW	62	62			
		8							900	371	DIAGONAL/CHEVRON	200	200			
		27B					2,100			2,100						
		8" SOLID	26		26	600				600						
		4" SOLID					60			60						
SUBTOTAL			2,829	995	3,296	54,200	107,450	27,200	900	88,286		1,150	1,150	42,980	126	664

TRAFFIC HANDLING QUANTITIES

THQ-8

REVISED BY | DATE REVISED
AMBACHEW YIRGU | DEBORAH WONG
CALCULATED DESIGNED BY | CHECKED BY
FUNCTIONAL SUPERVISOR: MONIR IBRAHIM

STATE OF CALIFORNIA DEPARTMENT OF TRANSPORTATION
Caltrans MAINTENANCE ENGINEERING

LAST REVISION 062810 | DATE PLOTTED => 18-AUG-2011 | TIME PLOTTED => 13:49

Dist	COUNTY	ROUTE	POST MILES TOTAL PROJECT	SHEET No.	TOTAL SHEETS
07	LA	5	R73.2/R88.6	61	130

REGISTERED CIVIL ENGINEER 5-25-11 DATE

07-11-11
PLANS APPROVAL DATE

REGISTERED PROFESSIONAL ENGINEER DEBORAH WONG No. 58313 Exp. 6/30/12 CIVIL STATE OF CALIFORNIA

THE STATE OF CALIFORNIA OR ITS OFFICERS OR AGENTS SHALL NOT BE RESPONSIBLE FOR THE ACCURACY OR COMPLETENESS OF SCANNED COPIES OF THIS PLAN SHEET.

SEGMENT 8	NORTHBOUND LOCATION	DETAIL No.	TEMPORARY PAVEMENT MARKER TYPE G	TEMPORARY PAVEMENT MARKER TYPE H	REMOVE PAVEMENT MARKER	TEMPORARY TRAFFIC STRIPE (PAINT) 8" SOLID	TEMPORARY TRAFFIC STRIPE (PAINT) 4" SOLID	TEMPORARY TRAFFIC STRIPE (PAINT) 4" (BROKEN 36-12)	TEMPORARY TRAFFIC STRIPE (PAINT) 4" (BROKEN 17-7)	REMOVE PAINTED TRAFFIC STRIPE	TEMPORARY PAVEMENT MARKING (PAINT) DESCRIPTION	TEMPORARY PAVEMENT MARKING (PAINT) SQFT	REMOVE PAINTED PAVEMENT MARKING	TEMPORARY RAILING (TYPE K)	TEMPORARY CRASH CUSHION MODULE	CHANNELIZER (SURFACE MOUNTED)
			EA	EA	EA	LF	LF	LF		LF		SQFT	SQFT	LF	EA	EA
STAGE 1	PM R87.60 TO PM R88.60	25		152			7,230				TYPE VI ARROW	126	126	5,500	14	46
		12			111					1,808						
STAGE 3	PM R87.60 TO PM R88.60	25		153			7,300			7,300	TYPE VI ARROW	126	126	5,400	14	100
		12	284		284			13,600		3,400						
		27B					10,300									
		38M	180		180	4,300				4,300						
STAGE 4	PM R87.60 TO PM R88.60	25		182			8,680				TYPE VI ARROW	126	126	10,960	35	186
		12			111					2,695	TYPE I ARROW	31	31			
		27B					18,560				"THRU" "OK"	35	35			
		38M	626		626	15,000				15,000						
SUBTOTAL			1,091	487	1,313	19,300	52,070	13,600		34,503		444	444	21,860	63	332
NORTHBOUND SUBTOTAL			30,088		25,469	1,504,444				699,372		9,071	9,071	328,500	1,015	6,062
SOUTHBOUND SUBTOTAL			30,267		24,790	1,653,446				753,762		10,376	10,376	389,920	1,183	7,550
TOTAL			60,356		50,259(*)	3,157,890				1,453,134(*)		19,447	19,447	718,420	2,198	13,612

(*) SEE PDQ-3 FOR GRAND TOTAL

TRAFFIC HANDLING QUANTITIES

THQ-9

REVISED BY | DATE REVISED
AMBACHEW YIRGU | DEBORAH WONG
CALCULATED DESIGNED BY | CHECKED BY
FUNCTIONAL SUPERVISOR: MONIR IBRAHIM

STATE OF CALIFORNIA DEPARTMENT OF TRANSPORTATION
Caltrans MAINTENANCE ENGINEERING

LAST REVISION 062810
DATE PLOTTED => 18-AUG-2011
TIME PLOTTED => 13:49

Dist	COUNTY	ROUTE	POST MILES TOTAL PROJECT	SHEET No.	TOTAL SHEETS
07	LA	5	R73.2/R88.6	62	130

REGISTERED CIVIL ENGINEER 5-25-11 DATE

07-11-11
PLANS APPROVAL DATE

REGISTERED PROFESSIONAL ENGINEER DEBORAH WONG No. 58313 Exp. 6/30/12 CIVIL STATE OF CALIFORNIA

THE STATE OF CALIFORNIA OR ITS OFFICERS OR AGENTS SHALL NOT BE RESPONSIBLE FOR THE ACCURACY OR COMPLETENESS OF SCANNED COPIES OF THIS PLAN SHEET.

STATIONARY MOUNTED CONSTRUCTION AREA SIGNS (TRAFFIC HANDLING)

SIGN No.	SIGN CODE	SIGN MESSAGE	PANEL SIZE (N)	No. OF POSTS AND SIZE (N)	No. OF SIGNS (N)
AA	W9-1	LEFT/RIGHT LANE ENDS	48" X 48"	1 - 6" X 6"	52
BB	W4-2	LEFT LANE ENDS (SYMBOL)	48" X 48"	1 - 6" X 6"	52
CC	W1-4	DETOUR RIGHT/LEFT (SYMBOL)	48" X 48"	2 - 6" X 6"	16
CC	W13-1	55 MPH	48" X 48"	2 - 6" X 6"	8
DD	C13(CA)	NO SHOULDER	48" X 48"	1 - 6" X 6"	44
DS	W21-5B(Mod)	NO SHOULDER 1000 FT	48" X 48"	1 - 6" X 6"	8
KK	W14-3 (Mod)	NO LANE CHANGE AHEAD	48" X 48"	1 - 6" X 6"	36
LL	R4-9	STAY IN LANE	48" X 60"	1 - 6" X 6"	54
MM	R4-5	TRUCKS USE RIGHT LANE	48" X 48"	1 - 6" X 6"	45
NN	W4-3	MERGE LANE	48" X 48"	1 - 6" X 6"	36
OO	W13-1(55 MPH)	SPEED LIMIT (55 MPH)	48" X 48"	2 - 6" X 6"	36
OO	W9-3A	AS SHOWN ON PLAN	48" X 48"	2 - 6" X 6"	36
PP	W9-3A	AS SHOWN ON PLAN	60" X 60"	2 - 6" X 6"	36
QQ	W12-1	AS SHOWN ON PLAN	48" X 48"	1 - 4" X 6"	22
SS	W9-3 (Mod)	END LANE CONTROL	48" X 48"	1 - 6" X 6"	6
RR	W20-1	ROAD WORK AHEAD	48" X 48"	1 - 6" X 6"	9
TT	G20-2	END ROAD WORK	18" X 36"	1 - 6" X 6"	9

(N) NOT A SEPARATE PAYITEM, FOR INFORMATION ONLY

TRAFFIC HANDLING QUANTITIES

THQ-10

REVISED BY | DATE REVISED

AMBACHEW YIRGU | DEBORAH WONG

CALCULATED-DESIGNED BY | CHECKED BY

FUNCTIONAL SUPERVISOR: MONIR IBRAHIM

STATE OF CALIFORNIA - DEPARTMENT OF TRANSPORTATION
Caltrans MAINTENANCE ENGINEERING

LAST REVISION 06-28-10 | DATE PLOTTED => 18-AUG-2011 | TIME PLOTTED => 13:50

Dist	COUNTY	ROUTE	POST MILES TOTAL PROJECT	SHEET No.	TOTAL SHEETS
07	LA	5	R73.2/R88.6	63	130

REGISTERED CIVIL ENGINEER 5-25-11 DATE

07-11-11
PLANS APPROVAL DATE

REGISTERED PROFESSIONAL ENGINEER DEBORAH WONG No. 58313 Exp. 6/30/12 CIVIL STATE OF CALIFORNIA

THE STATE OF CALIFORNIA OR ITS OFFICERS OR AGENTS SHALL NOT BE RESPONSIBLE FOR THE ACCURACY OR COMPLETENESS OF SCANNED COPIES OF THIS PLAN SHEET.

PAVEMENT DELINEATION QUANTITIES

LOCATION	POST MILE	FACILITIES	PAINT TRAFFIC STRIPE (2-COAT)				PAINT PAVEMENT MARKING (2-COAT)				PAVEMENT MARKER (RETROREFLECTIVE-RECESSED)	
			Det 27B		Det 25A	Det 9						
			4" SOLID WHITE	4" SOLID WHITE	4" SOLID YELLOW	4" BROKEN WHITE (17-7)	LIMIT LINE	DIAGONA/CHEVRON	WORDS	ARROW	TYPE G	TYPE H
			LF	LF	LF	LF	SQFT	SQFT	SQFT	SQFT	EA	EA
1	R74.20	SB ON-RAMP FROM VISTA DEL LAGO ROAD	1,500		650			100		31		28
2	R74.34	NB OFF-RAMP TO VISTA DEL LAGO ROAD	1,000		550		30		97	138		24
3	R74.41	SB OFF-RAMP TO VISTA DEL LAGO ROAD	1,100		500			140	53	31		22
4	R74.60	NB ON-RAMP FROM VISTA DEL LAGO ROAD	1,500	60	700					62		30
5	R77.80	SB ON-RAMP FROM SMOKEY BEAR ROAD	1,800	120	900	100		200		93	5	39
6	R77.82	NB OFF-RAMP TO SMOKEY BEAR ROAD	1,300	120	900	300	30	200	44	152	14	39
7	R78.12	NB ON-RAMP FROM SMOKEY BEAR ROAD	1,500	65	650	120				93	6	28
8	R78.13	SB OFF-RAMP TO SMOKEY BEAR ROAD	1,300	60	800	100		150	97	149	5	34
9	R81.60	NB OFF-RAMP TO QUAIL LAKE ROAD	1,300	60	900	100	60	175	97	180	5	39
10	R81.66	SB ON-RAMP FROM QUAIL LAKE ROAD	1,400	60	600			150		62		26
11	R81.94	NB ON-RAMP FROM QUAIL LAKE ROAD	1,550	60	800			200		62		34
12	R81.97	SB OFF-RAMP TO QUAIL LAKE ROAD	1,550	50	1,000	135	54	200	97	205	7	43
13	R85.62	NB OFF-RAMP TO GORMAN ROAD	1,550	60	850	200	70	200	97	149	9	36
14	R85.64	SB ON-RAMP FROM GORMAN ROAD	1,900	70	850	160		180		62	8	36
15	R86.04	NB ON-RAMP FROM GORMAN ROAD	2,100	50	1,150	650		200		62	28	49
16	R86.06	SB OFF-RAMP TO GORMAN ROAD	1,800	75	1,300	200	70	120	97	149	9	55
17	R86.70	TRUCK BRAKE INSPECTION AREA OFF-RAMP	1,100		900							39
18	R87.20	TRUCK BRAKE INSPECTION AREA ON-RAMP	3,200		2,200							93
19	R88.30	SB ON-RAMP FROM FRAZIER MOUNTAIN PARK ROAD	2,400	80	1,500	1,000					43	64
20	R88.32	NB OFF-RAMP TO FRAZIER MOUNTAIN PARK ROAD	1,700	70	1,300	120	80	190	97	152	6	55
		SUBTOTAL	26,450	940	15,000	3,085	394	2,205	776	1,739	145	812
		TOTAL	48,275				5,407				956 (*)	

(*) SEE PDQ-3 FOR GRAND TOTAL

PAVEMENT DELINEATION QUANTITIES

PDQ-1

STATE OF CALIFORNIA - DEPARTMENT OF TRANSPORTATION
Caltrans MAINTENANCE ENGINEERING

FUNCTIONAL SUPERVISOR: MONIR IBRAHIM
CALCULATED-DESIGNED BY: AMBACHEW YIRGU
CHECKED BY: DEBORAH WONG
REVISED BY
DATE REVISED

LAST REVISION 06-28-10 | DATE PLOTTED => 18-AUG-2011 | TIME PLOTTED => 13:50

Dist	COUNTY	ROUTE	POST MILES TOTAL PROJECT	SHEET No.	TOTAL SHEETS
07	LA	5	R73.2/R88.6	64	130

REGISTERED CIVIL ENGINEER 5-25-11 DATE

07-11-11
PLANS APPROVAL DATE

REGISTERED PROFESSIONAL ENGINEER DEBORAH WONG No. 58313 Exp. 6/30/12 CIVIL STATE OF CALIFORNIA

THE STATE OF CALIFORNIA OR ITS OFFICERS OR AGENTS SHALL NOT BE RESPONSIBLE FOR THE ACCURACY OR COMPLETENESS OF SCANNED COPIES OF THIS PLAN SHEET.

PAVEMENT DELINEATION QUANTITIES

	SOUTHBOUND LOCATION	THERMOPLASTIC TRAFFIC STRIPE (RECESSED)					REMOVE PAINTED TRAFFIC STRIPE					PAVEMENT MARKER (RETROREFLECTIVE-RECESSED)		REMOVE PAVEMENT MARKER	
		Det 36	Det 8	Det 12	Det 25A	Det 27B	Det 36	Det 8	Det 12	Det 25A	Det 27B				
		8" SOLID WHITE	4" BROKEN WHITE (17-7)	4" BROKEN WHITE (36-12)	4" SOLID YELLOW	4" SOLID WHITE	8" SOLID WHITE	4" BROKEN WHITE (17-7)	4" BROKEN WHITE (36-12)	4" SOLID YELLOW	4" SOLID WHITE	TYPE H	TYPE G	TYPE H	TYPE G
		LF	LF	LF	LF	LF	LF	LF	LF	LF	LF	EA	EA	EA	EA
SEGMENT 1	PM R73.20 TO PM R76.20	2,000	800	47,520	15,840	15,840	4,000	329	11,880	15,840	15,840	331	1,075	331	1,075
SEGMENT 2	PM R76.20 TO PM R78.10	1,500	600	30,096	10,032	10,032	3,000	247	7,524	10,032	10,032	210	691	210	691
SEGMENT 3	PM R78.10 TO PM R79.60	1,500	600	23,760	7,920	7,920	3,000	247	5,940	7,920	7,920	166	560	166	560
SEGMENT 4	PM R79.60 TO PM R82.30	1,500	600	42,768	14,256	14,256	3,000	247	10,692	14,256	14,256	298	956	298	956
SEGMENT 5	PM R82.30 TO PM R84.10	1,500	600	28,512	9,504	9,504	3,000	247	7,128	9,504	9,504	199	658	199	658
SEGMENT 6	PM R84.10 TO PM R86.10	1,500	600	31,680	10,560	10,560	3,000	247	7,920	10,560	10,560	221	725	221	725
SEGMENT 7	PM R86.10 TO PM R88.60	4,400	1,200	39,600	13,200	13,200	8,800	494	9,900	13,200	13,200	683	952	276	952
	SUBTOTAL	13,900	5,000	243,936	81,312	81,312	27,800	2,059	60,984	81,312	81,312	2,108	5,617	1,701	5,617
	SOUTHBOUND SUBTOTAL	13,900	5,000	243,936	162,624		253,467					7,725		7,318	

PAVEMENT DELINEATION QUANTITIES

PDQ-2

REVISED BY | DATE REVISED

AMBACHEW YIRGU | DEBORAH WONG

CALCULATED-DESIGNED BY | CHECKED BY

FUNCTIONAL SUPERVISOR: MONIR IBRAHIM

STATE OF CALIFORNIA - DEPARTMENT OF TRANSPORTATION
Caltrans MAINTENANCE ENGINEERING

LAST REVISION 06-28-10 | DATE PLOTTED => 18-AUG-2011 TIME PLOTTED => 13:50

Dist	COUNTY	ROUTE	POST MILES TOTAL PROJECT	SHEET No.	TOTAL SHEETS
07	LA	5	R73.2/R88.6	65	130

REGISTERED CIVIL ENGINEER 5-25-11 DATE

07-11-11
PLANS APPROVAL DATE

REGISTERED PROFESSIONAL ENGINEER DEBORAH WONG No. 58313 Exp. 6/30/12 CIVIL STATE OF CALIFORNIA

THE STATE OF CALIFORNIA OR ITS OFFICERS OR AGENTS SHALL NOT BE RESPONSIBLE FOR THE ACCURACY OR COMPLETENESS OF SCANNED COPIES OF THIS PLAN SHEET.

PAVEMENT DELINEATION QUANTITIES

	NORTHBOUND LOCATION	THERMOPLASTIC TRAFFIC STRIPE (RECESSED)					REMOVE PAINTED TRAFFIC STRIPE					PAVEMENT MARKER (RETROREFLECTIVE-RECESSED)		REMOVE PAVEMENT MARKER	
		Det 36	Det 8	Det 12	Det 25A	Det 27B	Det 36	Det 8	Det 12	Det 25A	Det 27B				
		8" SOLID WHITE	4" BROKEN WHITE (17-7)	4" BROKEN WHITE (36-12)	4" SOLID YELLOW	4" SOLID WHITE	8" SOLID WHITE	4" BROKEN WHITE (17-7)	4" BROKEN WHITE (36-12)	4" SOLID YELLOW	4" SOLID WHITE	TYPE H	TYPE G	TYPE H	TYPE G
		LF	LF	LF	LF	LF	LF	LF	LF	LF	LF	EA	EA	EA	EA
SEGMENT 1	PM R73.20 TO PM R76.20	2,000	800	45,936	15,312	15,312	4,000	329	11,484	15,312	15,312	320	1,042	320	1,042
SEGMENT 2	PM R76.20 TO PM R78.10	1,000	600	26,928	8,976	8,976	2,000	247	6,732	8,976	8,976	188	605	188	605
SEGMENT 3	PM R78.10 TO PM R79.60	1,000	600	28,512	9,504	9,504	2,000	247	7,128	9,504	9,504	199	638	199	638
SEGMENT 4	PM R79.60 TO PM R82.30	700	600	28,512	9,504	9,504	1,400	247	7,128	9,504	9,504	199	625	199	625
SEGMENT 5	PM R82.30 TO PM R84.10	1,300	600	36,432	12,144	12,144	2,600	247	9,108	12,144	12,144	254	815	254	815
SEGMENT 6	PM R84.10 TO PM R86.10	1,000	600	30,096	10,032	10,032	2,000	247	7,524	10,032	10,032	210	671	210	671
SEGMENT 7	PM R86.10 TO PM R88.60	2,900	600	31,680	10,560	10,560	5,800	247	7,920	10,560	10,560	221	725	221	725
SEGMENT 8	PM R86.10 TO PM R88.60	2,500	500	15,840	5,280	5,280	5,000	206	3,960	5,280	5,280	111	436	111	436
	SUBTOTAL	12,400	4,900	243,936	81,312	81,312	24,800	2,018	60,984	81,312	81,312	1,702	5,556	1,702	5,556
	NORTHBOUND SUBTOTAL	12,400	4,900	243,936	162,624		250,426					7,258		7,258	
	SOUTHBOUND SUBTOTAL	13,900	5,000	243,936	162,624		253,467					7,725		7,318	
	(FROM THQ-9 AND PDQ-1) TOTAL	-	-	-	-		1,453,134					956		50,259	
	GRAND TOTAL	26,300	9,900	487,872	325,248		1,957,027					15,939		64,835	

PAVEMENT DELINEATION QUANTITIES

PDQ-3

STATE OF CALIFORNIA - DEPARTMENT OF TRANSPORTATION
Caltrans MAINTENANCE ENGINEERING

FUNCTIONAL SUPERVISOR: MONIR IBRAHIM
CALCULATED-DESIGNED BY: AMBACHEW YIRGU
CHECKED BY: DEBORAH WONG
REVISED BY
DATE REVISED

LAST REVISION 06-28-10
DATE PLOTTED => 18-AUG-2011
TIME PLOTTED => 13:50

Dist	COUNTY	ROUTE	POST MILES TOTAL PROJECT	SHEET No.	TOTAL SHEETS
07	LA	5	R73.2/R88.6	66	130

REGISTERED CIVIL ENGINEER 5-25-11 DATE

07-11-11
PLANS APPROVAL DATE

REGISTERED PROFESSIONAL ENGINEER DEBORAH WONG No. 58313 Exp. 6/30/12 CIVIL STATE OF CALIFORNIA

THE STATE OF CALIFORNIA OR ITS OFFICERS OR AGENTS SHALL NOT BE RESPONSIBLE FOR THE ACCURACY OR COMPLETENESS OF SCANNED COPIES OF THIS PLAN SHEET.

NOTES:

1. THE W1-2A SIGN IS SINGLE FACE, BLACK LEGEND ON RETROREFLECTIVE ASTM TYPE IV YELLOW BACKGROUND, WITH PREMIUM CLEAR PROTECTIVE FILM.

2. MILE POST MARKERS SHALL BE PLACED AT EVERY 0.5 MILE INTERVAL ON THE RIGHT SHOULDER BEHIND METAL BEAM GUARD RAILS AND/OR ASPHALT CONCRETE DIKE STARTING FROM PM R73.5 ON BOTH THE SOUTHBOUND AND NORTHBOUND DIRECTIONS.

ROADSIDE SIGN

POSTMILE	DIRECTION	SIGN CODE	SIGN SIZE (LENGTH X DEPTH) (N)	FURNISH SINGLE SHEET ALUMINUM (0.080"-FRAMED)	ROADSIDE SIGN TWO POST	POST SIZE (N)	POST LENGTH (N)		REMARK
							LT	RT	
			IN X IN	SQFT	EA	IN X IN	FT	FT	
R88.56	SB	W1-2A	96 X 96	64	1	6 X 8	22	28	LEFT, 55, ON RIGHT SHOULDER
TOTAL				64	1				

(N) NOT A SEPARATE PAY ITEM, FOR INFORMATION ONLY.

MILEPOST MARKERS

SIGN CODE	SIGN SIZE (LENGTH X DEPTH) (N)	POST LENGTH (METAL) (N)	MILEPOST MARKER
	IN X IN	IN	EA
G11-7(CA)	4 X 24	72	62
TOTAL			62

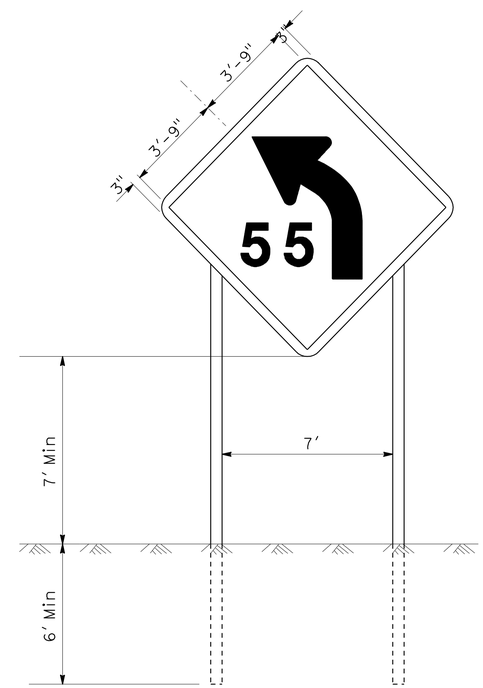

ROADSIDE SIGN W1-2A(CA)

SIGN DETAILS AND QUANTITIES

SQ-1

STATE OF CALIFORNIA - DEPARTMENT OF TRANSPORTATION
Caltrans MAINTENANCE ENGINEERING

FUNCTIONAL SUPERVISOR: MONIR IBRAHIM
CALCULATED-DESIGNED BY: AMBACHEW YIRGU
CHECKED BY: DEBORAH WONG
REVISED BY
DATE REVISED

LAST REVISION 06-15-11
DATE PLOTTED => 18-AUG-2011
TIME PLOTTED => 13:50

Dist	COUNTY	ROUTE	POST MILES TOTAL PROJECT	SHEET No.	TOTAL SHEETS
07	LA	5	R73.2/R88.6	67	130

REGISTERED CIVIL ENGINEER 5-18-11 DATE

07-11-11
PLANS APPROVAL DATE

REGISTERED PROFESSIONAL ENGINEER MICHAEL DUONG No. 73425 Exp. 12-31-12 CIVIL STATE OF CALIFORNIA

THE STATE OF CALIFORNIA OR ITS OFFICERS OR AGENTS SHALL NOT BE RESPONSIBLE FOR THE ACCURACY OR COMPLETENESS OF SCANNED COPIES OF THIS PLAN SHEET.

ROADWAY QUANTITIES

PM	DIRECTION	RAMP LOCATION	COLD PLANE AC PAVEMENT	HMA (TYPE A)	TACK COAT	JOINTED PLAIN CONCRETE PAVEMENT (RAPID STRENGTH CONCRETE)	LCB (RAPID SETTING)	CLASS 3 AGGREGATE BASE	ROADWAY EXCAVATION	SEAL ISOLATION JOINT	SEAL PAVEMENT JOINT
			SQYD	TON	TON	CY	CY	CY	CY	LF	LF
R74.2	SB	VISTA DEL LAGO Rd ON-RAMP	3,193	754.3	2.13						
R74.3	NB	VISTA DEL LAGO Rd OFF-RAMP	2,064	487.6	1.38						
R74.4	SB	VISTA DEL LAGO Rd OFF-RAMP	2,693	636.2	1.80						
R74.6	NB	VISTA DEL LAGO Rd ON-RAMP	3,371	796.4	2.25						
R77.8	NB	SMOKEY BEAR Rd OFF-RAMP	2,560	604.8	1.71	184.2	81.9	122.8	388.8		378
R77.8	SB	SMOKEY BEAR Rd ON-RAMP	3,854	910.5	2.57						
R78.1	NB	SMOKEY BEAR Rd ON-RAMP	2,666	629.8	1.78						
R78.1	SB	SMOKEY BEAR Rd OFF-RAMP	2,244	530.1	1.50	131.6	58.5	87.7	277.8		267
R81.6	NB	QUAIL LAKE Rd OFF-RAMP	2,442	576.9	1.63	142.7	63.4	95.1	301.3		267
R81.7	SB	QUAIL LAKE Rd ON-RAMP	2,436	575.5	1.62						
R81.9	NB	QUAIL LAKE Rd ON-RAMP	3,199	755.8	2.13						
R82.0	SB	QUAIL LAKE Rd OFF-RAMP	2,969	701.4	1.98	135.2	60.1	90.1	285.4		267
R85.6	NB	GORMAN Rd OFF-RAMP	2,794	660.1	1.86	129.7	57.6	86.4	273.7		222
R85.6	SB	GORMAN Rd ON-RAMP	3,136	740.9	2.09						
R86.0	NB	GORMAN Rd ON-RAMP	4,102	969.1	2.73						
R86.1	SB	GORMAN Rd OFF-RAMP	3,442	813.2	2.29	149.4	66.4	99.6	315.4		267
R86.7	SB	TRUCK BRAKE INSPECTION AREA OFF-RAMP	1,046	253.0	0.70	339.4	117.1	164.0	620.5	550	608
R87.2	SB	TRUCK BRAKE INSPECTION AREA ON-RAMP	2,118	500.4	1.41	444.6	177.8	248.9	871.1	960	853
R88.3	NB	FRAZIER MOUNTAIN PARK Rd OFF-RAMP	3,205	757.2	2.14	138.2	61.4	92.1	291.6		267
R88.3	SB	FRAZIER MOUNTAIN PARK Rd ON-RAMP	5,000	1,181.3	3.33						
		SUBTOTAL	58,534	13,834.5	39.00	1,795.0	744.2	1,086.7	3,625.6	1,510	3,396

SUMMARY OF QUANTITIES

Q-1

REVISED BY | DATE REVISED
MICHAEL DUONG | CHARLIE TRUONG
CALCULATED-DESIGNED BY | CHECKED BY
FUNCTIONAL SUPERVISOR: MONIR ABRAHIM
STATE OF CALIFORNIA - DEPARTMENT OF TRANSPORTATION
Caltrans MAINTENANCE ENGINEERING

LAST REVISION 00-00-00 | DATE PLOTTED => 18-AUG-2011 | TIME PLOTTED => 13:50

Dist	COUNTY	ROUTE	POST MILES TOTAL PROJECT	SHEET No.	TOTAL SHEETS
07	LA	5	R73.2/R88.6	68	130

REGISTERED CIVIL ENGINEER 5-19-11 DATE

07-11-11
PLANS APPROVAL DATE

REGISTERED PROFESSIONAL ENGINEER JEFFREY MILLER No. 69162 Exp. 6/30/12 CIVIL STATE OF CALIFORNIA

THE STATE OF CALIFORNIA OR ITS OFFICERS OR AGENTS SHALL NOT BE RESPONSIBLE FOR THE ACCURACY OR COMPLETENESS OF SCANNED COPIES OF THIS PLAN SHEET.

ROADWAY QUANTITIES

MAINLNE (POST MILE)	DIRECTION	NUMBER OF SLABS (N) No. 1 LANE	NUMBER OF SLABS (N) No. 2 LANE	INDIVIDUAL SLAB REPLACEMENT (RSC): INDIVIDUAL SLAB REPLACEMENT (RAPID STRENGTH CONCRETE)	INDIVIDUAL SLAB REPLACEMENT (RSC): REPLACE UNDERLYING BASE	INDIVIDUAL SLAB REPLACEMENT (RSC): DOWEL BAR (DRILL AND BOND)	JOINTED PLAIN CONCRETE PAVEMENT (RSC)	LEAN CONCRETE BASE (RAPID SETTING)	JOINTED PLAIN CONCRETE PAVEMENT	LEAN CONCRETE BASE	DOWEL BAR (N)	TIE BAR (N)	SEAL ISOLATION JOINT	SEAL PAVEMENT JOINT	HOT MIX ASPHALT (TYPE A)	PLACE HOT MIX ASPHALT (MISCELLANEOUS AREA)	TACK COAT	CLASS 3 AGGREGATE BASE	REMOVE CONCRETE PAVEMENT	ROADWAY EXCAVATION	ROADWAY EXCAVATION (TYPE Z-2) (AERIALLY DEPOSITED LEAD)	SHOULDER RUMBLE STRIP (CONCRETE PAVEMENT, GROUND-IN INDENTATIONS)	SHOULDER RUMBLE STRIP (HMA, GROUND-IN INDENTATIONS)	GRIND EXISTING CONCRETE PAVEMENT	COLD PLANE AC PAVEMENT
		EA	EA	CY	CY	EA	CY	CY	CY	CY	EA	EA	LF	LF	TON	SQYD	TON	CY	CY	CY	CY	STA	STA	SQYD	SQYD
R73.2/R73.7	NB									684					1,921.0	1,760	2.9	1,369.0		3,002.0		26	26		
R73.7/R75.3	NB	37	38	397		1,200	2,100	840.0	11,198	5,574	21,276	7,252	8,448	21,564	3,612.0	5,632	4.7	9,637.0	5,632	31,132.0		84	84	26,283	
R75.3/R75.4	NB								1,300	565	1,330	906		2,268	226.0	352	0.3	602.0	986	2,579.0		5	5	469	
R75.4/R78.2	NB	65	66	693		2,096	905	362.0	22,366	10,863	37,234	12,690	14,784	37,762	6,320.0	9,856	8.2	16,865.0	9,856	54,482.0		148	148	45,995	
R78.2/R80.8	NB	60	61	640		1,936	1,092	437.0	20,517	9,986	34,574	11,784	13,728	35,054	4,324.0		6.1	14,948.0	9,152	48,620.0	496	137	137	42,709	
R80.8/R82.7	NB	44	45	471		1,424	2,094	837.0	13,698	6,779	25,266	8,611	10,032	25,626	3,160.0		4.5	10,924.0	6,688	35,892.0		100	100	31,211	
R82.7/R83.1	NB	10	9	100	185	304			3,324	1,604	5,319	1,813	2,112	5,391	665.0		0.9	2,300.0	1,408	7,556.0		21	21	6,571	
R83.1/R84.7	NB	38	37	397		1,200			13,298	6,414	21,276	7,252	8,448	21,564	2,661.0		3.8	9,199.0	5,632	30,187.0	38	84	84	26,283	
R84.7/R86.1	NB	33	32	344		1,040	885	447.0	10,751	5,165	18,617	6,345	7,392	18,881	2,328.0		3.3	8,049.0	4,928	26,391.0	56	74	74	22,997	
R86.1/R86.9	NB	19	18	196		592	1,118	354.0	5,531	2,853	10,638	3,626	4,224	10,782	1,331.0		1.9	4,599.0	2,816	14,890.0	223	42	42	13,141	
R86.9/R87.8	NB	21	21	222		672			7,480	3,485	11,968	4,079	4,752	12,256	1,212.0		2.1	5,174.0	3,168	16,738.0		48	48	14,784	
R87.8/R88.6	NB	19	18	196		592	357	143.0	6,291	2,517	10,638	3,626	4,224	10,662	63.0			3,723.0	2,816	13,063.0		42	42	13,141	
NB SUBTOTAL		346	345	3,665	185	11,056	8,550	3,420.0	115,755	56,491	198,137	67,983	78,144	201,812	27,823.0	17,600	38.7	87,390.0	53,082	284,532.0	813	813	813	243,584	
R73.2/R73.7	SB									684					1,921.0	1,760	2.9	1,369.0		3,002.0		26	26		
R73.7/R77.7	SB						2,630	1,052.0	49,388	21,554	90,738	36,258		90,738	9,029.0	14,080	11.7	24,092.0	39,424	44,000.0		211	211		
R77.7/R78.2	SB	11	12	122		368	1,341	536.0	2,814	1,468	6,713	2,266	2,640	6,745	1,129.0	1,760	1.5	3,012.0	1,760	9,729.0		26	26	8,213	
R78.2/R80.8	SB	60	61	640		1,936			21,609	10,423	34,894	11,784	13,728	35,054	4,324.0		6.1	14,948.0	9,152	48,353.0		137	137	42,709	
R80.8/R82.7	SB	45	44	471		1,424	2,007	803.0	13,784	6,814	25,506	8,611	10,032	25,626	3,160.0		4.5	10,924.0	6,688	35,784.0	109	100	100	31,211	
R82.7/R83.1	SB	10	9	100		304			3,324	1,549	5,367	1,813	2,112	5,391	539.0		0.9	2,300.0	1,408	7,439.0		21	21	6,571	
R83.1/R84.7	SB	37	38	397	135	1,200			13,298	6,414	21,468	7,252	8,448	21,564	2,661.0		3.8	9,199.0	5,632	30,196.0	29	84	84	26,283	
R84.7/R86.1	SB	33	32	344		1,040	2,002	801.0	9,633	4,812	18,793	6,345	7,392	18,881	2,328.0		3.3	8,049.0	4,928	26,289.0	158	74	74	22,997	
R86.1/R86.9	SB	18	19	196		592	1,627	651.0	5,022	2,556	10,734	3,626	4,224	10,782	1,331.0		1.9	4,599.0	2,816	15,092.0	21	42	42	13,141	
R86.9/R87.8	SB	21	21	222		672	375	150.0	7,105	3,335	12,160	4,079	4,752	12,256	1,212.0		2.1	5,174.0	3,168	16,738.0		48	48	14,784	
R87.8/R88.6	SB	19	18	196		592	1,627	651.0	5,022	2,009	10,654	3,626	4,224	10,662	63.0			3,723.0	2,816	13,063.0		42	42	13,141	
SB SUBTOTAL		254	254	2,687	135	8,128	11,610	4,644.0	130,999	61,618	235,684	85,658	57,552	237,700	27,696.0	17,600	38.7	87,390.0	77,792	249,683.0	317	813	813	179,051	
NB SUBTOTAL		346	345	3,665	185	11,056	8,550	3,420.0	115,755	56,491	198,137	67,983	78,144	201,812	27,823.0	17,600	38.7	87,390.0	53,082	284,532.0	813	813	813	243,584	
SHEET Q-1 SUBTOTAL							1,795	744.2					1,510	3,396	13,834.5		39.0	1,086.7		3,625.6					58,534
SHEET DQ-3 SUBTOTAL													1,229												
GRAND TOTAL		600	599	6,342	320	19,184	21,955	8,808.2	246,755	118,109			138,435	442,907	69,353.5	35,200	116.4	175,866.7	130,874	537,840.6	1,130	1,626	1,626	422,635	58,534

SUMMARY OF QUANTITIES

Q-2

JEFFREY MILLER | REVISED BY
MICHAEL DUONG | DATE REVISED
CALCULATED-DESIGNED BY
CHECKED BY
FUNCTIONAL SUPERVISOR
DEBORAH WONG

STATE OF CALIFORNIA - DEPARTMENT OF TRANSPORTATION
Caltrans MAINTENANCE ENGINEERING

LAST REVISION 02-14-11 | DATE PLOTTED => 18-AUG-2011 | TIME PLOTTED => 13:50

Dist	COUNTY	ROUTE	POST MILES TOTAL PROJECT	SHEET No.	TOTAL SHEETS
07	LA	5	R73.2/R88.6	69	130

John T. Zaki 5-19-11
REGISTERED CIVIL ENGINEER DATE

07-11-11
PLANS APPROVAL DATE

REGISTERED PROFESSIONAL ENGINEER JOHN ZAKI No. C63665 Exp. 9-30-12 CIVIL STATE OF CALIFORNIA

THE STATE OF CALIFORNIA OR ITS OFFICERS OR AGENTS SHALL NOT BE RESPONSIBLE FOR THE ACCURACY OR COMPLETENESS OF SCANNED COPIES OF THIS PLAN SHEET.

METAL BEAM GUARD RAILING (STEEL POST) AND PLACE HOT MIX ASPHALT DIKE

POST MILE	DIRECTION	RAMP LOCATION	REMOVE METAL BEAM GUARD RAILING	LAYOUT TYPE (N)	METAL BEAM GUARD RAILING (STEEL POST)	ALTERNATIVE FLARED TERMINAL SYSTEM	ALTERNATIVE IN-LINE TERMINAL SYSTEM	END ANCHOR ASSEMBLY (TYPE SFT)	TRANSITION RAILING (TYPE WB)	END CAP (TYPE A)	END CAP (TYPE TC)	PLACE HMA DIKE TYPE A)	PLACE HMA DIKE (TYPE C)	PLACE HMA DIKE (TYPE E)	PLACE HMA DIKE (TYPE F)	REMOVE AC DIKE	HMA (TYPE B)
			LF		LF	EA	EA	EA	EA	EA	EA	LF	LF	LF	LF	LF	TON
R74.3	NB	VISTA DEL LAGO Rd OFF-RAMP	512.5	12A	437.5		1		1		1	1,025			45	1,070	29
R74.6	NB	VISTA DEL LAGO Rd ON-RAMP	362.5	12DD	362.5			1		1		655		190		845	23
R74.4	SB	VISTA DEL LAGO Rd OFF-RAMP										836		115		951	26
R74.2	SB	VISTA DEL LAGO Rd ON-RAMP												619		619	16
R77.8	NB	SMOKEY BEAR Rd OFF-RAMP										562				562	15
R78.1	NB	SMOKEY BEAR Rd ON-RAMP	125	16B	87.5	1		1				1,220				1,220	33
R78.1	SB	SMOKEY BEAR Rd OFF-RAMP										1,050				1,050	29
R77.8	SB	SMOKEY BEAR Rd ON-RAMP	887.5	11B	850	1						1,042	63		850	1,955	40
R81.6	NB	QUAIL LAKE Rd OFF-RAMP	287.5	12DD	287.5			1		1							
R81.9	NB	QUAIL LAKE Rd ON-RAMP	75	12A			1		1		1	1,215	75		25	1,315	34
R82.0	SB	QUAIL LAKE Rd OFF-RAMP	100	16A	50		1	1				1,211	75		50	1,336	34
R81.7	SB	QUAIL LAKE Rd ON-RAMP	100	12A	25		1		1		1	355	75		50	480	11
R85.6	NB	GORMAN Rd OFF-RAMP										1,250				1,250	34
R86.1	SB	GORMAN Rd OFF-RAMP										1,494				1,494	41
R85.64	SB	GORMAN Rd ON-RAMP										1,568				1,568	43
R88.3	NB	FRAZIER MOUNTAIN PARK Rd OFF-RAMP										1,475				1,475	40
R88.3	SB	FRAZIER MOUNTAIN PARK Rd ON-RAMP	462.5	11B	425	1						430				430	12
SUBTOTAL			2,912.5		2,525.0	3	4	4	3	2	3	15,388	288	924	1,020	17,620	461

(N) NOT A SEPARATE PAY ITEM, FOR INFORMATION ONLY.

NOTES:

1. EXACT LOCATIONS WILL BE DETERMINED BY THE ENGINEER.
2. SEE SHEETS Q-4 AND Q-6 FOR GRAND TOTAL.

SUMMARY OF QUANTITIES

Q-3

STATE OF CALIFORNIA - DEPARTMENT OF TRANSPORTATION
Caltrans MAINTENANCE ENGINEERING

FUNCTIONAL SUPERVISOR: DEBORAH WONG
CALCULATED-DESIGNED BY: JOHN ZAKI
CHECKED BY: JEFFREY MILLER
REVISED BY
DATE REVISED

LAST REVISION 02-14-11
DATE PLOTTED => 18-AUG-2011
TIME PLOTTED => 13:50

Dist	COUNTY	ROUTE	POST MILES TOTAL PROJECT	SHEET No.	TOTAL SHEETS
07	LA	5	R73.2/R88.6	70	130

REGISTERED CIVIL ENGINEER DATE 5-19-11

07-11-11
PLANS APPROVAL DATE

REGISTERED PROFESSIONAL ENGINEER JOHN ZAKI No. C63665 Exp. 9-30-12 CIVIL STATE OF CALIFORNIA

THE STATE OF CALIFORNIA OR ITS OFFICERS OR AGENTS SHALL NOT BE RESPONSIBLE FOR THE ACCURACY OR COMPLETENESS OF SCANNED COPIES OF THIS PLAN SHEET.

METAL BEAM GUARD RAILING (STEEL POST)

NORTHBOUND

MAINLINE (POST MILE)	REMOVE METAL BEAM GAURD RAILING	LAYOUT TYPE (N)	METAL BEAM GUARD RAILING(STEEL POST)	ALTERNATIVE FLARED TERMINAL SYSTEM	ALTERNATIVE IN-LINE TERMINAL SYSTEM	END ANCHOR ASSEMBLY (TYPE SFT)	TRANSITION RAILING (TYPE WB)	END CAP (TYPE A)	DELINEATOR (CLASS 2)
	LF		LF	EA	EA	EA	EA	EA	EA
R73.70 R†	2,201	11A	2,201						74
R74.20 R†	79	11B	35	1		1			2
R74.40 R†	140	12A	65		1		1	1	3
R74.80 R†	2,091	11A	2,035		1	1			69
R75.60 R†	1,510	11A	1,454		1	1			49
R76.10 R†	605	11A	549		1	1			19
R76.45 R†	766	11A	710		1	1			25
R76.83 R†	87	11A	31		1	1			2
R76.94 R†	269	11A	213		1	1			8
R77.15 R†	318	11A	262		1	1			10
R 77.51 R†	194	11A	138		1	1			6
R77.80 R†	73	11B	29	1		1			2
R77.96 R†	75	12A			1		1	1	
R80.35 R†	73	11B	29	1		1			2
R80.20 R†	89	11A	33		1	1			2
R80.79 R†	75	12A			1		1	1	
R81.40 R†	62.5	12B		1			1	1	
R 81.41 R†	275	11F	275			2			10
R81.76 R†	62.5	12B		1			1	1	
R82.24 R†	75	12A			1		1	1	
R83.60 R†	157	11A	107		1				5
R84.60 R†	191	11A	135		1	1			5
R85.16 R†	90	11A	34		1	1			2
R87.89 R†	77	11A	21		1	1			2
R88.57 R†	81	12A	6		1		1	1	
NB SUBTOTAL	9,716		8,360	5	18	17	7	7	297

(N) NOT A SEPARATE PAY ITEM, FOR INFORMATION ONLY.

NOTES:

1. EXACT LOCATIONS WILL BE DETERMINED BY THE ENGINEER.
2. DELINEATORS SPACING PER MUTCD SPECIFICATIONS.

SOUTHBOUND

MAINLINE (POST MILE)	REMOVE METAL BEAM GAURD RAILING	LAYOUT TYPE (N)	METAL BEAM GUARD RAILING (STEEL POST)	ALTERNATIVE FLARED TERMINAL SYSTEM	ALTERNATIVE IN-LINE TERMINAL SYSTEM	END ANCHOR ASSEMBLY (TYPE SFT)	TRANSITION RAILING (TYPE WB)	END CAP (TYPE A)	DELINEATOR (CLASS 2)	END CAP (TYPE TC)
	LF		LF	EA	EA	EA	EA	EA	EA	
R88.20 L†	2,190	11B	2,153	1					73	
R87.97 L†	1,163	11F	1,157			1			40	
R86.20 L†	90	11B	46	1		1			3	
R85.86 L†	77	12B	15	1			1	1		
R85.75 L†	140	11A	84		1	1			4	
R84.60 L†	214	11B	170	1		1			7	
R84.37 L†	113	11A	57		1	1			3	
R82.40 L†	99	11B	55	1		1			3	
R82.20 L†	128	12A	53		1		1	1	3	
R82.00 L†	102	11A	46		1	1			3	
R81.85 L†	151	11A	95		1	1			4	
R81.78 L†	63	12B	1	1			1	1		
R81.50 L†	102	12A	27		1		1	1	2	
R80.79 L†	140	12A	65		1		1	1	3	
R80.75 L†	180	11A	124		1	1			5	
R80.37 L†	192	11A	136		1	1			6	
R79.40 L†	107	11A	51		1	1			3	
R78.82 L†	89	11A	33		1	1			2	
R78.00 L†	89	12A	14		1		1	1		
R77.42 L†	1,955	11E	1,880	2					64	
R77.50 L†	3,294	11A	3,238		1	1			109	
R76.17 L†	291	11A	241		1				9	
R76.00 L†	2,736	11C	2,730			1			92	
R75.80 L†	2,099	11A	2,043		1	1			69	
R75.03 L†	2,390	11B	2,346	1		1			79	
R74.60 L†	550	11A	494		1	1			17	
R73.79 L†	77	12A	2				1	1		
R74.00 L†	1,584	12C	1559				1	1	53	
SB SUBTOTAL	20,405		18,911	9	17	17	8	8	653	
NB SUBTOTAL	9,716		8,360	5	18	17	7	7	297	
SHEET Q-3 SUBTOTAL	2,912.5		2,525	3	4	4	3	2		3
GRAND TOTAL	33,033.5		29,796	17	39	38	18	17	950	3

SUMMARY OF QUANTITIES

Q-4

STATE OF CALIFORNIA - DEPARTMENT OF TRANSPORTATION
Caltrans MAINTENANCE ENGINEERING

FUNCTIONAL SUPERVISOR: DEBORAH WONG
CALCULATED-DESIGNED BY: JOHN ZAKI
CHECKED BY: JEFFREY MILLER
REVISED BY
DATE REVISED

LAST REVISION 02-14-11 | DATE PLOTTED => 18-AUG-2011 | TIME PLOTTED => 13:50

Dist	COUNTY	ROUTE	POST MILES TOTAL PROJECT	SHEET No.	TOTAL SHEETS
07	LA	5	R73.2/R88.6	71	130

REGISTERED CIVIL ENGINEER DATE 5-19-11

07-11-11
PLANS APPROVAL DATE

REGISTERED PROFESSIONAL ENGINEER JOHN ZAKI No. C63665 Exp. 9-30-12 CIVIL STATE OF CALIFORNIA

THE STATE OF CALIFORNIA OR ITS OFFICERS OR AGENTS SHALL NOT BE RESPONSIBLE FOR THE ACCURACY OR COMPLETENESS OF SCANNED COPIES OF THIS PLAN SHEET.

PLACE HOT MIX ASPHALT DIKE NORTHBOUND MAINLINE

NORTHBOUND LOCATION (PM)	PLACE HMA DIKE (TYPE A)	PLACE HMA DIKE (TYPE C)	PLACE HMA DIKE (TYPE E)	PLACE HMA DIKE (TYPE F)	REMOVE AC DIKE	HMA (TYPE B)
	LF	LF	LF	LF	LF	TON
R 73.70/R 73.74 R†				235	235	3
R 74.20/R 74.30 R†		62.5		450.5	513	7
R 74.40/R 74.43 R†				150	150	2
R 74.45/R 74.54 R†				490	490	7
R 74.55/R 74.59 R†			193		193	5
R 74.80/R 74.88 R†		75		336	411	5
R 75.20/R 75.57 R†	1971				1,971	54
R 75.60/R 75.78 R†		75		851	926	12
R 75.80/R 75.99 R†	986				986	27
R 76.10/R 76.21 R†		75		530	605	8
R 76.22/R 76.44 R†	1170				1,170	32
R 76.45/R 76.60 R†		75		691	766	10
R 76.61/R 76.83 R†	1170				1,170	32
R 76.83/R 76.93 R†	425	75		12	512	12
R 76.94/R 76.99 R†		75		194	269	3
R 77.00/R 77.14 R†	714				714	20
R 77.15/R 77.21 R†		75		243	318	4
R 77.25/R 77.50 R†	1333				1,333	36
R 77.51/R 77.55 R†		75		119	194	2
R 77.56/R 77.68 R†	650				650	18
R 77.69/R 77.73 R†			195		195	5
R 77.74/R 77.78 R†			226		226	6
R 77.80/R 77.94 R†		62.5	682	10.5	755	19

NORTHBOUND LOCATION (PM)	PLACE HMA DIKE (TYPE A)	PLACE HMA DIKE (TYPE C)	PLACE HMA DIKE (TYPE E)	PLACE HMA DIKE (TYPE F)	REMOVE AC DIKE	HMA (TYPE B)
	LF	LF	LF	LF	LF	TON
R77.96/R 77.97 R†		75			75	1
R78.00/R 78.10 R†			550		550	14
R78.20/R 79.04 R†	4,450				4,450	122
R79.30/R 79.38 R†			405		405	11
R79.40/R 79.45 R†			263		263	7
R79.46/R 80.34 R†			4,660		4,660	123
R80.35/R 80.36 R†		62.5		10.5	73	1
R80.37/R 80.54 R†			872		872	23
R80.84/R 81.35 R†			2680		2,680	71
R81.97/R 82.10 R†			662		662	17
R82.11/R 82.23 R†			610		610	16
R82.24/R 82.25 R†		75			75	1
R82.82/R 83.48 R†			3,466		3,466	91
R83.60/R 84.57 R†		75	4,955	82	5,112	132
R84.70/R 85.15 R†			2,391		2,391	63
R85.16/R 85.26 R†	442	75		15	532	13
R85.60/R 85.78 R†	944				944	26
R85.80/R 86.01 R†	1,120				1,120	31
R86.20/R 87.88 R†	8,866				8,866	242
R87.89/R 87.90 R†		75		2	77	1
R87.91/R 88.02 R†	573				573	16
R88.03/R 88.24 R†	1,105				1,105	30
R88.57/R 88.59 R†		75		6	81	1
SUBTOTAL	25,919	1,237.5	22,810	4,427.5	54,394	1,378

NOTE:

1. EXACT LOCATIONS WILL BE DETERMINED BY THE ENGINEER.

SUMMARY OF QUANTITIES

Q-5

STATE OF CALIFORNIA - DEPARTMENT OF TRANSPORTATION
Caltrans MAINTENANCE ENGINEERING

FUNCTIONAL SUPERVISOR: DEBORAH WONG
CALCULATED-DESIGNED BY: JOHN ZAKI
CHECKED BY: JEFFREY MILLER
REVISED BY
DATE REVISED

LAST REVISION 02-14-11
DATE PLOTTED => 18-AUG-2011
TIME PLOTTED => 13:50

Dist	COUNTY	ROUTE	POST MILES TOTAL PROJECT	SHEET No.	TOTAL SHEETS
07	LA	5	R73.2/R88.6	72	130

REGISTERED CIVIL ENGINEER DATE 5-19-11

07-11-11
PLANS APPROVAL DATE

REGISTERED PROFESSIONAL ENGINEER JOHN ZAKI No. C63665 Exp. 9-30-12 CIVIL STATE OF CALIFORNIA

THE STATE OF CALIFORNIA OR ITS OFFICERS OR AGENTS SHALL NOT BE RESPONSIBLE FOR THE ACCURACY OR COMPLETENESS OF SCANNED COPIES OF THIS PLAN SHEET.

PLACE HOT MIX ASPHALT DIKE SOUTHBOUND MAINLINE

SOUTHBOUND LOCATION (PM)	PLACE HMA DIKE (TYPE A)	PLACE HMA DIKE (TYPE C)	PLACE HMA DIKE (TYPE E)	PLACE HMA DIKE (TYPE F)	REMOVE AC DIKE	HMA (TYPE B)
	LF	LF	LF	LF	LF	TON
R87.98/R88.20 L†		25		1138	1,163	15
R87.57/R87.97 L†	2,094				2,094	57
R87.15/R87.56 L†	2,155				2,155	59
R86.67/R87.14 L†			2,492		2,492	66
R86.58/R86.60 L†		62.5		27.5	90	1
R86.11/R86.20 L†			452		452	12
R85.89/R86.10 L†			1,134		1,134	30
R85.87/R85.88 L†		62.5		14.5	77	1
R85.81/R85.86 L†			242		242	6
R85.77/R85.80 L†		75		65	140	1
R85.67/R85.75 L†			403		403	11
R84.83/R85.66 L†			4,373		4,373	115
R84.61/R84.82 L†		62.5	905	151.5	1,119	26
R84.38/R84.60 L†	1,059	75		38	1,172	30
R82.63/R84.37 L†	9,162				9,162	250
R82.41/R82.62 L†			1,108		1,108	29
R82.38/R82.40 L†		75		53	128	1
R82.11/R82.20 L†			482		482	13
R82.06/R82.10 L†		75	130	27	232	4
R81.92/R82.00 L†			442		442	12
R81.87/R81.90 L†		75		76	151	2
R81.79/R81.85 L†		62.5	256	0.5	319	7
R81.68/R81.78 L†			510		510	13
R81.59/R81.66 L†			365		365	10
R81.53/R81.55 L†		75		27	102	1
R81.25/R81.50 L†			1,305		1,305	34
R81.11/R81.24 L†	683				683	19

SOUTHBOUND LOCATION (PM)	PLACE HMA DIKE (TYPE A)	PLACE HMA DIKE (TYPE C)	PLACE HMA DIKE (TYPE E)	PLACE HMA DIKE (TYPE F)	REMOVE AC DIKE	HMA (TYPE B)
	LF	LF	LF	LF	LF	TON
R81.03/R81.10L†			390		390	10
R80.81/R80.90L†		75	358	65	498	11
R80.76/R80.79L†		75		105	180	2
R80.43/R80.75L†			1,692		1692	45
R80.38/R80.42L†		75		117	192	2
R79.53/R80.37L†			4,422		4422	116
R78.86/R79.52L†			3,506		3506	92
R78.83/R78.85L†		75		14	89	1
R78.74/R78.82L†			437		437	12
R78.61/R78.73L†			632		632	17
R78.58/R78.60L†		75		14	89	1
R77.81/R78.00L†			1,021		1,021	27
R77.43/R77.80L†		100		1,855	1,955	26
R77.27/R77.42L†	796				796	22
R76.64/R77.26L†		75		3,219	3,294	44
R77.44/R77.50L†			294		294	8
R76.18/R76.70L†		25		2,711	2,736	36
R76.03/R76.17L†			753		753	20
R75.83/R76.00L†		75		825	900	12
R75.50/R75.80L†	1,585				1585	43
R75.04/R75.49L†		62.5		2,327.5	2,390	32
R74.93/R75.03L†			554		554	15
R74.70/R74.80L†		75		475	550	7
R74.37/R74.60L†			1,196		1,196	31
R74.35/R74.36L†		75		2	77	1
R73.80/R74.10L†		50		1,534	1,584	21
R73.20/R73.79L†				3,115	3,115	32
SB SUBTOTAL	17,534	1,637.5	29,854	17,996.5	67,022	1,509
SHEET Q-5 SUBTOTAL	25,919	1,237.5	22,810	4,427.5	54,394	1,378
SHEET Q-3 SUBTOTAL	15,388	288	924	1,020	17,620	461
GRAND TOTAL	58,841	3,163	53,588	23,444	139,036	3,348

NOTE:

1. EXACT LOCATIONS WILL BE DETERMINED BY THE ENGINEER.

SUMMARY OF QUANTITIES

Q-6

STATE OF CALIFORNIA - DEPARTMENT OF TRANSPORTATION
Caltrans MAINTENANCE ENGINEERING

FUNCTIONAL SUPERVISOR: DEBORAH WONG
CALCULATED-DESIGNED BY: JOHN ZAKI
CHECKED BY: JEFFREY MILLER
REVISED BY
DATE REVISED

LAST REVISION 02-14-11
DATE PLOTTED => 18-AUG-2011
TIME PLOTTED => 13:50

Dist	COUNTY	ROUTE	POST MILES TOTAL PROJECT	SHEET No.	TOTAL SHEETS
07	LA	5	R73.2/R88.6	73	130

REGISTERED CIVIL ENGINEER 5-16-11 DATE

07-11-11
PLANS APPROVAL DATE

REGISTERED PROFESSIONAL ENGINEER CHARLIE TRUONG No. 69881 Exp. 9/30/12 CIVIL STATE OF CALIFORNIA

THE STATE OF CALIFORNIA OR ITS OFFICERS OR AGENTS SHALL NOT BE RESPONSIBLE FOR THE ACCURACY OR COMPLETENESS OF SCANNED COPIES OF THIS PLAN SHEET.

TEMPORARY DRAINAGE INLET PROTECTION QUANTITIES FOR MAINLINE

PM	DIRECTION	TEMPORARY DRAINAGE INLET PROTECTION	
		MEDIAN	OUTSIDE SHOULDER
		EA	EA
R73.2/R74.0	NB	7	6
R74.0/R75.0	NB	6	4
R75.0/R76.0	NB		4
R76.0/R77.0	NB	1	10
R77.0/R78.0	NB	1	10
R78.0/R79.0	NB		8
R79.0/R80.0	NB		2
R80.0/R81.0	NB	1	4
R81.0/R82.0	NB	5	5
R82.0/R83.0	NB	4	
R83.0/R84.0	NB	2	
R84.0/R85.0	NB	5	
R85.0/R86.0	NB		8
R86.0/R87.0	NB		5
R87.0/R88.0	NB		5
R88.0/R88.6	NB		4
NB SUBTOTAL		32	75
NB TOTAL		107	

PM	DIRECTION	TEMPORARY DRAINAGE INLET PROTECTION	
		MEDIAN	OUTSIDE SHOULDER
		EA	EA
R73.2/R74.0	SB	1	7
R74.0/R75.0	SB	1	12
R75.0/R76.0	SB	4	3
R76.0/R77.0	SB	7	9
R77.0/R78.0	SB	3	11
R78.0/R79.0	SB	12	2
R79.0/R80.0	SB	7	0
R80.0/R81.0	SB	1	0
R81.0/R82.0	SB		4
R82.0/R83.0	SB		5
R83.0/R84.0	SB		12
R84.0/R85.0	SB		4
R85.0/R86.0	SB		7
R86.0/R87.0	SB		1
R87.0/R88.0	SB		6
R88.0/R88.6	SB		
SB SUBTOTAL		36	83
SB TOTAL		123	

TEMPORARY DRAINAGE INLET PROTECTION QUANTITIES FOR RAMP

LOCATION	TEMPORARY DRAINAGE INLET PROTECTION
	EA
NB OFF-RAMP TO VISTA DEL LAGO Rd	10
NB ON-RAMP FROM VISTA DEL LAGO Rd	1
SB OFF TO RAMP TO VISTA DEL LAGO Rd	2
SB ON-RAMP FROM VISTA DEL LAGO Rd	2
NB OFF-RAMP TO SMOKEY BEAR Rd	6
NB ON-RAMP FROM SMOKEY BEAR Rd	1
NB OFF-RAMP TO QUAIL LAKE Rd	1
NB OFF-RAMP TO GORMAN Rd	1
NB ON-RAMP FROM GORMAN Rd	2
SB OFF-RAMP TO GORMAN Rd	3
SB ON-RAMP FROM GORMAN Rd	1
NB OFF-RAMP TO FRAZIER MOUNTAIN PARK Rd	2
SB ON-RAMP FROM FRAZIER MOUNTAIN PARK Rd	1
RAMP TOTAL	33
NB TOTAL	107
SB TOTAL	123
GRAND TOTAL	259

SUMMARY OF QUANTITIES

Q-7

STATE OF CALIFORNIA - DEPARTMENT OF TRANSPORTATION
Caltrans MAINTENANCE ENGINEERING

FUNCTIONAL SUPERVISOR: DEBORAH WONG
CALCULATED-DESIGNED BY: CHARLIE TRUONG
CHECKED BY: JOHN ZAKI
REVISED BY
DATE REVISED

LAST REVISION 00-00-00
DATE PLOTTED => 18-AUG-2011
TIME PLOTTED => 13:50

Dist	COUNTY	ROUTE	POST MILES TOTAL PROJECT	SHEET No.	TOTAL SHEETS
07	LA	5	R73.2/R88.6	74	130

REGISTERED ELECTRICAL ENGINEER 5-16-11 DATE

07-11-11
PLANS APPROVAL DATE

REGISTERED PROFESSIONAL ENGINEER C.BURCIAGA No. E015302 Exp. 3/31/13 ELECTRICAL STATE OF CALIFORNIA

THE STATE OF CALIFORNIA OR ITS OFFICERS OR AGENTS SHALL NOT BE RESPONSIBLE FOR THE ACCURACY OR COMPLETENESS OF SCANNED COPIES OF THIS PLAN SHEET.

MODIFY RAMP METERING SYSTEM

PM	LOCATION	SEE DETAIL A THIS SHEET FOR TYPICAL LOCATION OF LOOP DETECTORS AND CONDUIT																		INSTALL CONDUITS	TOTAL LENGTH OF DLC	INSTALL PB	REMOVE PB	INSTALL STUBOUT
		1	2	3	4	5	6	7	8	9	10	11	12	13	14	15	16	17	18					
R77.61	SB ROUTE 5 S OF SMOKEY BEAR Rd	X	X	X	X	—	—	—	—	X	—	X	X	X	X	X	Y	Y	—	240′	1400′	3	5	5
R78.06	NB ROUTE 5 N OF SMOKEY BEAR Rd	—	—	—	—	X	X	X	X	X	X	X	X	X	X	X	—	Y	Y	240′	1400′	3	5	5
																		TOTAL		480′	2800′	6	10	10

X - INSTALL TYPE E INDUCTIVE LOOP DETECTOR. ABANDON INDUCTIVE LOOP DETECTOR AT SAME LOCATION.
Y - INSTALL 3"C, 36" BELOW ROADWAY. ABANDON CONDUIT.

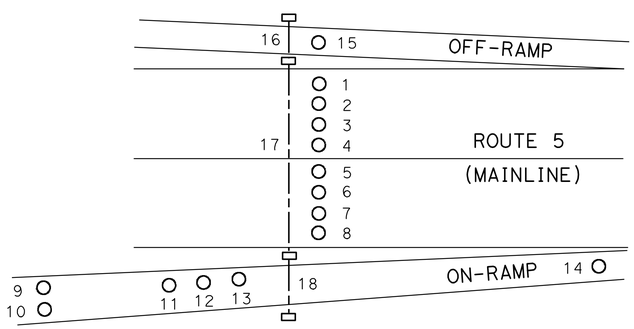

DETAIL A

DETAIL FOR TYPICAL LOOP DETECTOR AND CONDUIT INSTALLATION ON MAINLINE AND ON AND OFF RAMPS

GENERAL NOTES:

1. ABANDON STUB OUTS. NEW STUB OUTS SHALL BE 2".
2. PRIOR TO CONSTRUCTION, CONTRACTOR SHALL LOCATE EXISTING INDUCTIVE LOOP DETECTORS.
3. RC dlc, INSTALL NEW DLC FROM ADJACENT PULL BOX TO THE CONTROLLER CABINET.

MODIFY RAMP METERING SYSTEM

NO SCALE

E-1

STATE OF CALIFORNIA - DEPARTMENT OF TRANSPORTATION
Caltrans® TRAFFIC DESIGN

FUNCTIONAL SUPERVISOR: YI TSAU
CALCULATED-DESIGNED BY: FARIDA MAHMOOD
CHECKED BY: CECILIO BURCIAGA
REVISED BY
DATE REVISED

LAST REVISION 00-00-00
DATE PLOTTED => 18-AUG-2011
TIME PLOTTED => 13:50

Dist	COUNTY	ROUTE	POST MILES TOTAL PROJECT	SHEET No.	TOTAL SHEETS
07	LA	5	R73.2/R88.6	75	130

REGISTERED ELECTRICAL ENGINEER 5-16-11 DATE

07-11-11
PLANS APPROVAL DATE

REGISTERED PROFESSIONAL ENGINEER C.BURCIAGA No. E015302 Exp. 3/31/13 ELECTRICAL STATE OF CALIFORNIA

THE STATE OF CALIFORNIA OR ITS OFFICERS OR AGENTS SHALL NOT BE RESPONSIBLE FOR THE ACCURACY OR COMPLETENESS OF SCANNED COPIES OF THIS PLAN SHEET.

MODIFY TRAFFIC MONITORING STATION

PM	LOCATION	SEE DETAIL B THIS SHEET FOR TYPICAL LOCATION OF LOOP DETECTORS AND CONDUIT									INSTALL CONDUITS	TOTAL LENGTH OF DLC	INSTALL PB	REMOVE PB	INSTALL STUBOUT
		1	2	3	4	5	6	7	8	9					
R77.5	SB ROUTE 5 S OF SMOKEY BEAR Rd	X	X	X	X	—	—	—	—	—	—	400′	1	2	1
R77.5	NB ROUTE 5 S OF SMOKEY BEAR Rd	—	—	—	—	X	X	X	X	Y	200′	1000′	1	2	1
R79.2	SB ROUTE 5 N OF SMOKEY BEAR Rd	X	X	X	X	—	—	—	—	—	—	400′	1	2	1
R79.2	NB ROUTE 5 N OF SMOKEY BEAR Rd	—	—	—	—	X	X	X	X	Y	200′	1000′	1	2	1
										TOTAL	400′	2800′	4	8	4

X - INSTALL TYPE E INDUCTIVE LOOP DETECTOR. ABANDON INDUCTIVE LOOP DETECTOR AT SAME LOCATION.
Y - INSTALL 3"C, 36" BELOW ROADWAY. ABANDON CONDUIT.

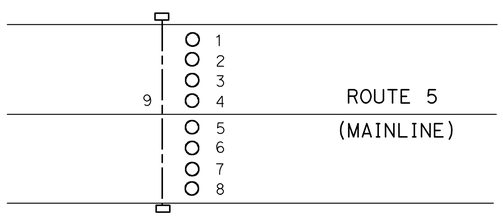

DETAIL B

DETAIL FOR TYPICAL LOOP DETECTOR AND CONDUIT INSTALLATION ON MAINLINE

GENERAL NOTES:

1. ABANDON STUB OUTS. NEW STUB OUTS SHALL BE 2".
2. PRIOR TO CONSTRUCTION, CONTRACTOR SHALL LOCATE EXISTING INDUCTIVE LOOP DETECTORS.
3. RC dlc, INSTALL NEW DLC FROM ADJACENT PULL BOX TO THE CONTROLLER CABINET.

MODIFY TRAFFIC MONITORING STATION

NO SCALE

E-2

REVISED BY | DATE REVISED
FARIDA MAHMOOD | CECILIO BURCIAGA
CALCULATED-DESIGNED BY | CHECKED BY
FUNCTIONAL SUPERVISOR
YI TSAU
STATE OF CALIFORNIA - DEPARTMENT OF TRANSPORTATION
Caltrans TRAFFIC DESIGN

LAST REVISION 04-01-11 | DATE PLOTTED => 18-AUG-2011 TIME PLOTTED => 13:50

Dist	COUNTY	ROUTE	POST MILES TOTAL PROJECT	SHEET No.	TOTAL SHEETS
07	LA	5	R73.2/R88.6	76	130

REGISTERED ELECTRICAL ENGINEER 5-16-11 DATE

07-11-11
PLANS APPROVAL DATE

REGISTERED PROFESSIONAL ENGINEER C.BURCIAGA No. E015302 Exp. 3/31/13 ELECTRICAL STATE OF CALIFORNIA

THE STATE OF CALIFORNIA OR ITS OFFICERS OR AGENTS SHALL NOT BE RESPONSIBLE FOR THE ACCURACY OR COMPLETENESS OF SCANNED COPIES OF THIS PLAN SHEET.

LIGHTING CONDUIT (REPLACE)

PM	LOCATION DESCRIPTION	SEE DETAIL C THIS SHEET FOR TYPICAL LOCATION OF CONDUIT				INSTALL CONDUITS	CONDUCTOR SIZES	INSTALL PB	REMOVE PB
		1	2	3	4				
R74.23	ROUTE 5 S OF VISTA DEL LAGO Rd	X	X	—	—	260′	5#6, 1#8G	3	3
R74.44	ROUTE 5 S OF VISTA DEL LAGO Rd	—	—	X	—	50′	2#6, 1#8G	2	2
R77.78	ROUTE 5 S OF SMOKEY BEAR Rd	X	—	—	X	240′	2#6, 1#8G	2	2
R77.81	ROUTE 5 S OF SMOKEY BEAR Rd	—	X	X	—	220′	4#6, 1#8G	3	3
R77.96	ROUTE 5 AT SMOKEY BEAR Rd	X	—	—	—	50′	4#6, 1#8G	2	2
R78.07	ROUTE 5 N OF SMOKEY BEAR Rd	—	X	X	—	200′	2#6, 1#8G	3	3
R78.08	ROUTE 5 N OF SMOKEY BEAR Rd	X	—	—	X	140′	4#6, 1#8G	2	2
R81.35	ROUTE 5 S OF QUAIL LAKE Rd	—	X	—	—	100′	2#6, 1#8G	2	2
R81.53	ROUTE 5 S OF QUAIL LAKE Rd	—	X	—	—	220′	4#6, 1#8G	2	2
R81.93	ROUTE 5 N OF QUAIL LAKE Rd	X	—	—	X	200′	4#6, 1#8G	3	3
R82.02	ROUTE 5 N OF QUAIL LAKE Rd	—	X	—	—	220′	2#6, 1#8G	2	2
R82.37	ROUTE 5 N OF QUAIL LAKE Rd	X	X	—	—	260′	2#6, 1#8G	4	4
R85.57	ROUTE 5 E OF GORMAN Rd	—	X	—	—	210′	2#6, 1#8G	2	2
R85.60	ROUTE 5 E OF GORMAN Rd	—	—	X	—	70′	4#6, 1#8G	2	2
R85.67	ROUTE 5 E OF GORMAN Rd	—	—	X	—	80′	4#6, 1#8G	2	2
R85.79	ROUTE 5 AT GORMAN Rd UC	—	—	X	—	120′	2#6, 1#8G	2	2
R86.04	ROUTE 5 W OF GORMAN Rd	X	—	—	—	80′	2#6, 1#8G	2	2
R86.07	ROUTE 5 W OF GORMAN Rd	—	X	—	—	210′	2#6, 1#8G	2	2
R86.46	ROUTE 5 W OF GORMAN Rd	—	X	—	—	180′	2#6, 1#8G	2	2
R87.13	ROUTE 5 S OF FRAZIER MOUNTAIN Rd	—	X	—	—	180′	2#6, 1#8G	2	2
R88.23	ROUTE 5 S OF FRAZIER MOUNTAIN Rd	—	X	—	—	200′	2#6, 1#8G	2	2
R88.27	ROUTE 5 S OF FRAZIER MOUNTAIN Rd	—	—	X	—	80′	4#6, 1#8G	2	2
					TOTAL	3570′	———	50	50

X - INSTALL 3"C, 36" BELOW ROADWAY. ABANDON EXISTING CONDUIT.

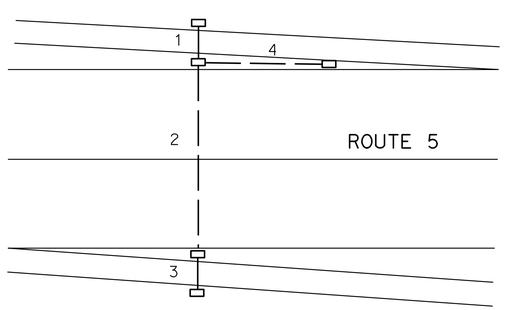

DETAIL C

DETAIL FOR TYPICAL CONDUIT INSTALLATION ON FREEWAY AND RAMPS

MODIFY LIGHTING

NO SCALE

E-3

STATE OF CALIFORNIA - DEPARTMENT OF TRANSPORTATION
Caltrans TRAFFIC DESIGN

FUNCTIONAL SUPERVISOR: YI TSAU
CALCULATED-DESIGNED BY: FARIDA MAHMOOD
CHECKED BY: CECILIO BURCIAGA
REVISED BY
DATE REVISED

LAST REVISION 04-01-11 | DATE PLOTTED => 18-AUG-2011 | TIME PLOTTED => 13:50

Dist	COUNTY	ROUTE	POST MILES TOTAL PROJECT	SHEET No.	TOTAL SHEETS
07	LA	5	R73.2/R88.6	77	130

REGISTERED ELECTRICAL ENGINEER 5-16-11 DATE

07-11-11
PLANS APPROVAL DATE

REGISTERED PROFESSIONAL ENGINEER C.BURCIAGA No. E015302 Exp. 3/31/13 ELECTRICAL STATE OF CALIFORNIA

THE STATE OF CALIFORNIA OR ITS OFFICERS OR AGENTS SHALL NOT BE RESPONSIBLE FOR THE ACCURACY OR COMPLETENESS OF SCANNED COPIES OF THIS PLAN SHEET.

FOR ACCURATE RIGHT OF WAY AND ACCESS DATA, CONTACT RIGHT OF WAY ENGINEERING AT THE DISTRICT OFFICE.

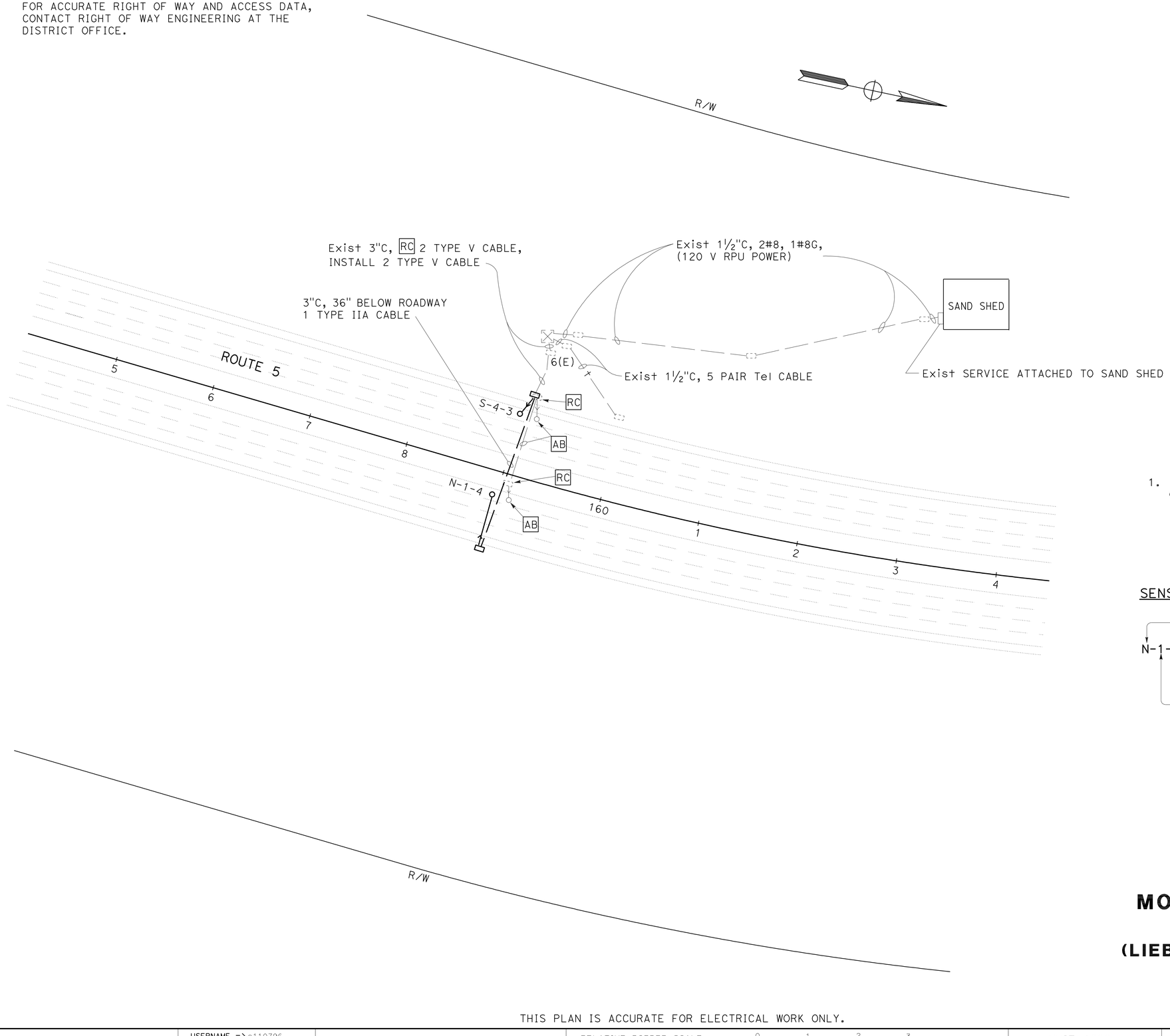

LEGEND: (THIS SHEET)

- ○ EXISTING PAVEMENT SURFACE SENSOR
- EXISTING RPU
- SHOULDER TERMINATION (SEE STD PLAN ES-5D)
- ● PAVEMENT SURFACE SENSOR

ABBREVIATIONS:

RPU - REMOTE PROCESSING UNIT
SLI - SENSOR LEAD-IN

GENERAL NOTE: (THIS SHEET)

1. SENSORS TO BE LOCATED IN WHEEL PATH UNLESS NOTED OTHERWISE ON PLANS OR AS DIRECTED BY THE ENGINEER.

SENSOR IDENTIFICATION: (THIS SHEET)

N-1-1

- FREEWAY DETECTOR DESIGNATION
  N-NORTHBOUND LANES (NB)
  S-SOUTHBOUND LANES (SB)
- NUMBER OF SENSOR
- NUMBER OF LANE FROM LEFT WITH RESPECT TO DIRECTION OF TRAFFIC:
  1 = FIRST LANE FROM LEFT
  2 = SECOND LANE FROM LEFT
  3 = THIRD LANE FROM LEFT
  4 = FOURTH LANE FROM LEFT

MODIFY ROADWAY WEATHER INFORMATION SYSTEM
(LIEBRE SAND SHED AREA PM R73.6)

SCALE: 1" = 50'

E-4

THIS PLAN IS ACCURATE FOR ELECTRICAL WORK ONLY.

REVISED BY | DATE REVISED
FARIDA MAHMOOD | CECILIO BURCIAGA
CALCULATED-DESIGNED BY | CHECKED BY
FUNCTIONAL SUPERVISOR: YI TSAU

STATE OF CALIFORNIA - DEPARTMENT OF TRANSPORTATION
Caltrans TRAFFIC DESIGN

LAST REVISION 03-24-11 | DATE PLOTTED => 18-AUG-2011 | TIME PLOTTED => 13:50

Dist	COUNTY	ROUTE	POST MILES TOTAL PROJECT	SHEET No.	TOTAL SHEETS
07	LA	5	R73.2/R88.6	78	130

REGISTERED ELECTRICAL ENGINEER 5-16-11 DATE

07-11-11
PLANS APPROVAL DATE

REGISTERED PROFESSIONAL ENGINEER C.BURCIAGA No. E015302 Exp. 3/31/13 ELECTRICAL STATE OF CALIFORNIA

THE STATE OF CALIFORNIA OR ITS OFFICERS OR AGENTS SHALL NOT BE RESPONSIBLE FOR THE ACCURACY OR COMPLETENESS OF SCANNED COPIES OF THIS PLAN SHEET.

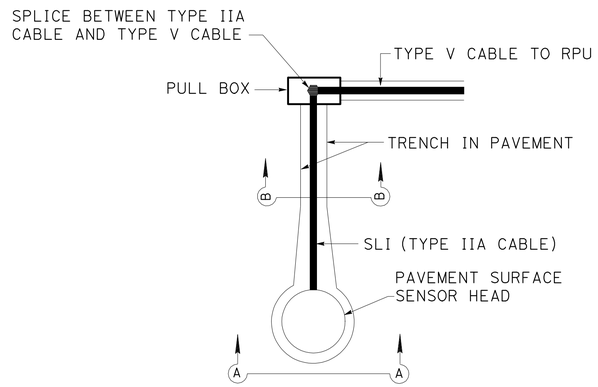

PAVEMENT SURFACE SENSOR

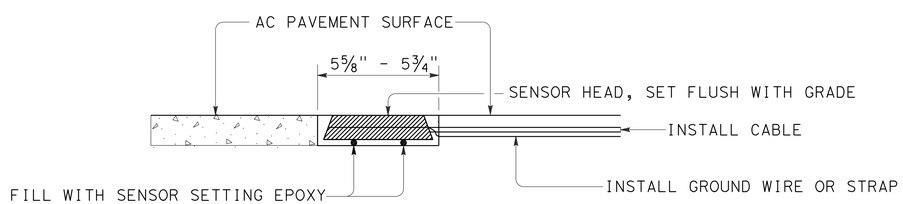

SECTION A-A

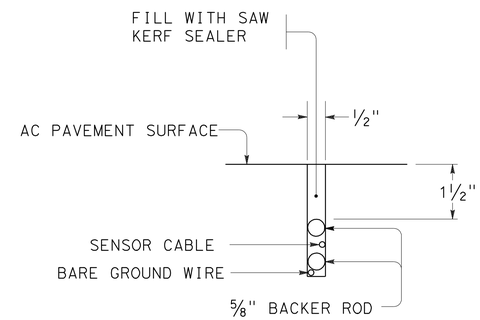

SECTION B-B (SAW KERF)

SENSOR INSTALLATION IN ROADWAY PAVING

MODIFY ROADWAY WEATHER INFORMATION SYSTEM (DETAILS)

NO SCALE

E-5

STATE OF CALIFORNIA - DEPARTMENT OF TRANSPORTATION
Caltrans® TRAFFIC DESIGN

FUNCTIONAL SUPERVISOR: Y1 TSAU
CALCULATED-DESIGNED BY: FARIDA MAHMOOD
CHECKED BY: CECILIO BURCIAGA
REVISED BY
DATE REVISED

LAST REVISION 03-24-11
DATE PLOTTED => 18-AUG-2011
TIME PLOTTED => 13:50

Dist	COUNTY	ROUTE	POST MILES TOTAL PROJECT	SHEET No.	TOTAL SHEETS
07	LA	5	R73.2/R88.6	79	130

Randell D. Hiatt
REGISTERED CIVIL ENGINEER

May 20, 2011
PLANS APPROVAL DATE

REGISTERED PROFESSIONAL ENGINEER Randell D. Hiatt No. C50200 Exp. 6-30-11 CIVIL STATE OF CALIFORNIA

The State of California or its officers or agents shall not be responsible for the accuracy or completeness of electronic copies of this plan sheet.

To accompany plans dated 07-11-11

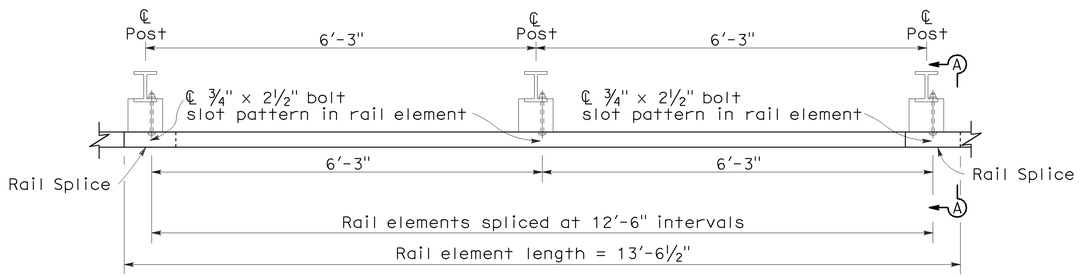

PLAN

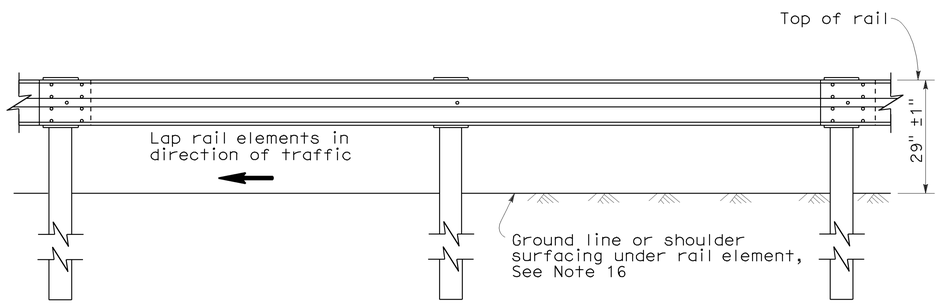

ELEVATION

METAL BEAM GUARD RAILING WITH STEEL POSTS AND NOTCHED WOOD OR NOTCHED RECYCLED PLASTIC BLOCKS

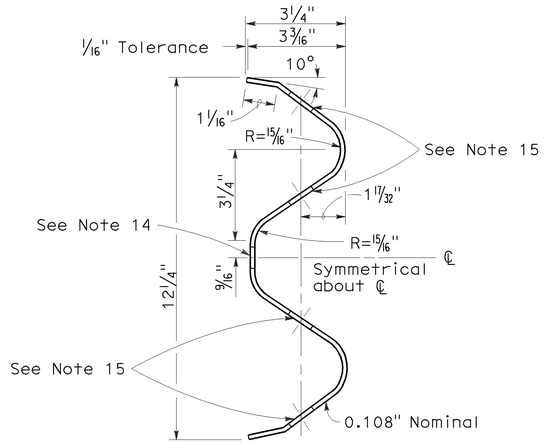

SECTION THRU RAIL ELEMENT

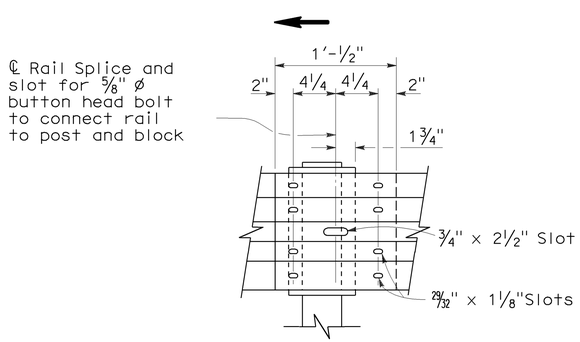

ELEVATION

RAIL ELEMENT SPLICE DETAIL

a) Connect the over lapped end of the rail elements with ⅝" ø x 1⅜" button head oval shoulder splice bolts inserted into the 29/32" x 1⅛" slots and bolted together with ⅝" ø recessed hex nuts. Recess of hex nut points toward rail element. A total of 8 bolts and nuts are to be used at each rail splice connection.

b) The ends of the rail elements are to be overlapped in the direction of traffic (see details).

c) Where end cap is to be attached to the end of a rail element, a total of 4 of the above described splice bolts and nuts are to be used.

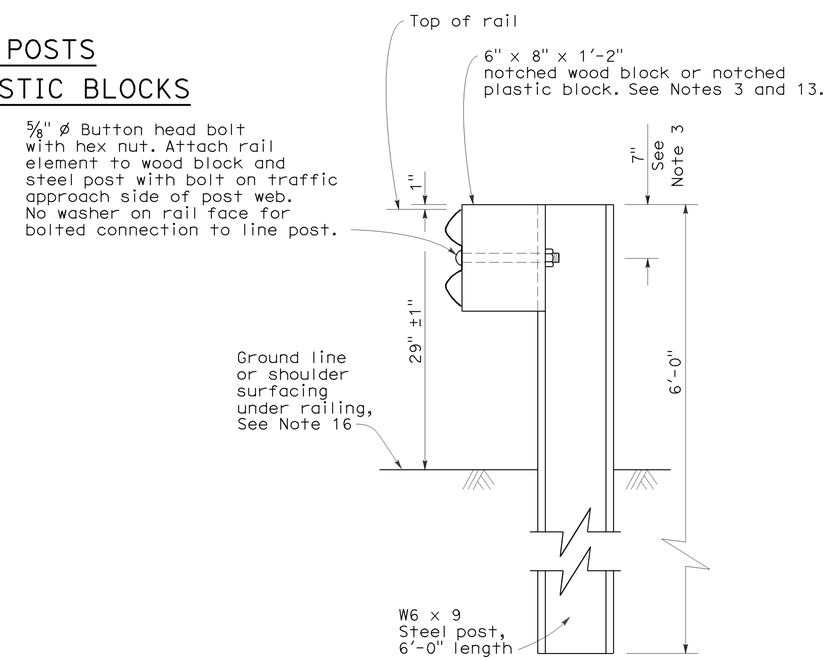

SECTION A-A

TYPICAL STEEL LINE POST INSTALLATION

See Note 4

NOTES:

1. For details of wood post installations, see Standard Plan A77A1.
2. For details of standard hardware used to construct guard railing, see Standard Plan A77B1.
3. For details of steel posts and notched wood blocks used to construct guard railing, see Standard Plan A77C2.
4. For additional installation details, see Standard Plan A77C3.
5. Guard railing post spacing to be 6'-3" center to center, except as otherwise noted.
6. For guard railing typical layouts, see the A77E, A77F and A77G Series of Standard Plans.
7. For terminal system end treatment details, see the A77L Series of Standard Plans. To connect railing to terminal system end treatment, transition the top of railing height at a ratio of 120:1 to terminal system end treatment height plus one 12'-6" standard railing section at the transitioned height for a horizontal connection to the end treatment.
8. For guard railing end anchor details, see Standard Plans A77H1 and A77I2.
9. For details of guard railing transition to bridge railing, see Standard Plan A77J4.
10. For additional details of guard railing connection to bridge railings, see Standard Plans A77J1, A77J2 and A77K1.
11. For dike positioning and guard railing delineation details, see Standard Plan A77C4.
12. Direction of adjacent traffic indicated by → .
13. Notched face of block faces steel post.
14. Slotted hole for bolted connection of rail element to block and post. See "Section Thru Rail Element".
15. Slotted holes for splice bolts to overlap ends of rail element. See "Section Thru Rail Element".
16. Install posts in soil.

STATE OF CALIFORNIA
DEPARTMENT OF TRANSPORTATION

METAL BEAM GUARD RAILING STANDARD RAILING SECTION (STEEL POST WITH NOTCHED WOOD OR NOTCHED RECYCLED PLASTIC BLOCK)

NO SCALE

RSP A77A2 DATED MAY 20, 2011 SUPERSEDES STANDARD PLAN A77A2 DATED MAY 1, 2006 - PAGE 42 OF THE STANDARD PLANS BOOK DATED MAY 2006.

REVISED STANDARD PLAN RSP A77A2

2006 REVISED STANDARD PLAN RSP A77A2

5-4-11

Dist	COUNTY	ROUTE	POST MILES TOTAL PROJECT	SHEET No.	TOTAL SHEETS
07	LA	5	R73.2/R88.6	80	130

Randell D. Hiatt
REGISTERED CIVIL ENGINEER

May 20, 2011
PLANS APPROVAL DATE

REGISTERED PROFESSIONAL ENGINEER
Randell D. Hiatt
No. C50200
Exp. 6-30-11
CIVIL
STATE OF CALIFORNIA

The State of California or its officers or agents shall not be responsible for the accuracy or completeness of electronic copies of this plan sheet.

To accompany plans dated 07-11-11

NOTES:

1. When necessary to place dike in front of face of guard railing, only Type C dike may be used. For dike details, see Standard Plan A87B.
2. For standard railing post embedment, see Standard Plans A77C3.
3. Guard railing delineation to be used where shown on the Project Plans.
4. When dike or curb is placed under guard railing, the maximum height of the dike or curb shall be 4". Mountable dike should not be used. For dike and curb details, see Standard Plans A87A and A87B.
5. For details of typical distance between the face of rail and hinge point, see Standard Plan A77C3.
6. For steel line posts, use 1/4 - 20 self-tapping screws in 0.22" diameter holes or 1/4" bolts in 9/32" diameter holes.

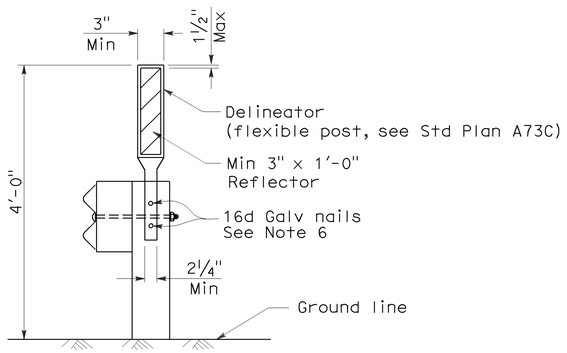

GUARD RAILING DELINEATION

See Note 3

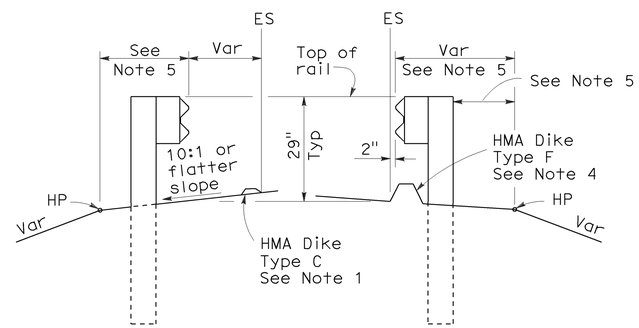

DIKE POSITIONING

See Note 1

STATE OF CALIFORNIA
DEPARTMENT OF TRANSPORTATION

METAL BEAM GUARD RAILING TYPICAL RAILING DELINEATION AND DIKE POSITIONING DETAILS

NO SCALE

RSP A77C4 DATED MAY 20, 2011 SUPERSEDES RSP A77C4 DATED JUNE 6, 2008 AND STANDARD PLAN A77C4 DATED MAY 1, 2006 - PAGE 47 OF THE STANDARD PLANS BOOK DATED MAY 2006.

REVISED STANDARD PLAN RSP A77C4

2006 REVISED STANDARD PLAN RSP A77C4

3-10-11

DIST	COUNTY	ROUTE	POST MILES TOTAL PROJECT	SHEET NO.	TOTAL SHEETS
07	LA	5	R73.2/R88.6	81	130

Randell D. Hiatt
REGISTERED CIVIL ENGINEER

June 6, 2008
PLANS APPROVAL DATE

REGISTERED PROFESSIONAL ENGINEER Randell D. Hiatt No. C50200 Exp. 6-30-09 CIVIL STATE OF CALIFORNIA

The State of California or its officers or agents shall not be responsible for the accuracy or completeness of electronic copies of this plan sheet.

To accompany plans dated 07-11-11

2006 REVISED STANDARD PLAN RSP A77E1

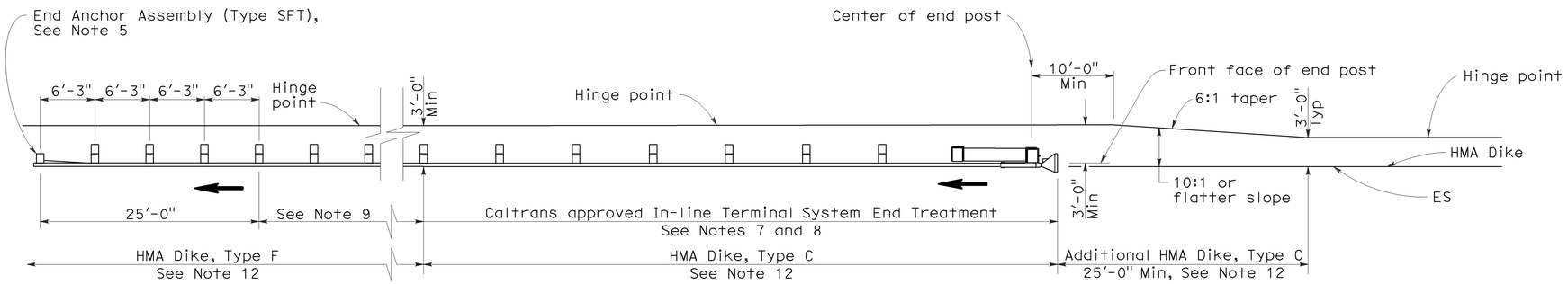

TYPE 11A LAYOUT

(EMBANKMENT GUARD INSTALLATION WITH IN-LINE END TREATMENT AT TRAFFIC APPROACH END OF RAILING)
See Note 6

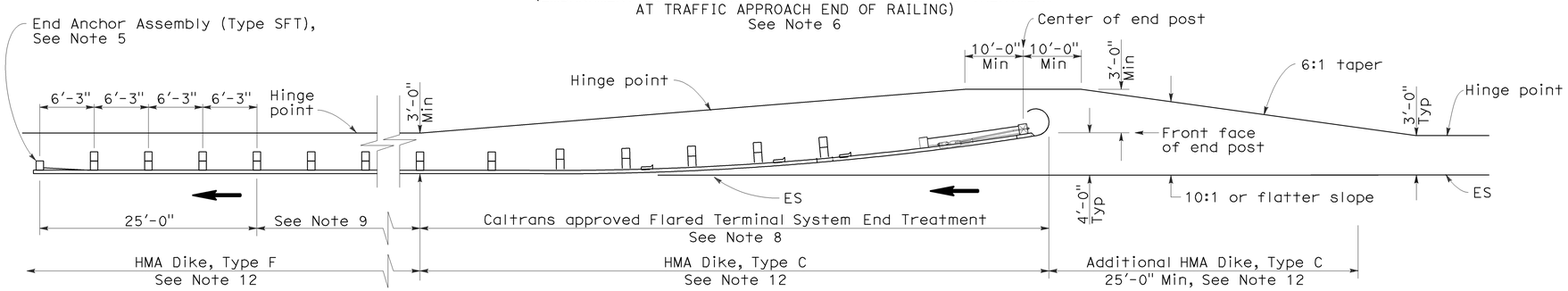

TYPE 11B LAYOUT

(EMBANKMENT GUARD RAILING INSTALLATION WITH FLARED END TREATMENT AT TRAFFIC APPROACH END OF RAILING)
See Note 6

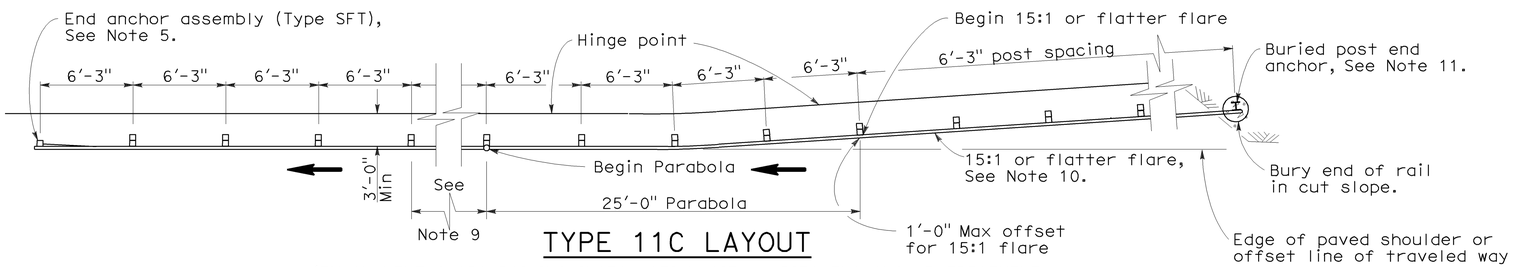

TYPE 11C LAYOUT

(EMBANKMENT GUARD RAILING INSTALLATION WITH BURIED END ANCHOR TREATMENT AT TRAFFIC APPROACH END OF RAILING)
See Notes 6 and 12

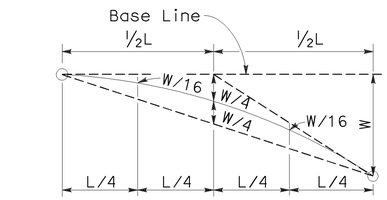

TYPICAL PARABOLIC LAYOUT

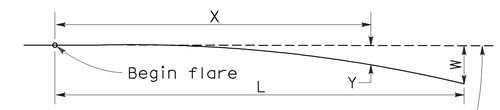

Base Line (Edge of paved shoulder or offset line of edge of traveled way)

$$Y = \frac{WX^2}{L^2}$$

Y = Offset from base line
W = Maximum offset
X = Distance along base line
L = Length of flare

PARABOLIC FLARE OFFSETS

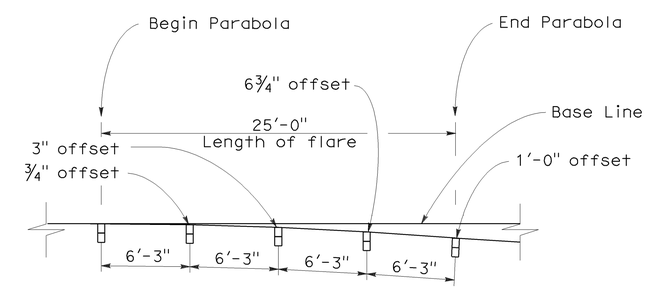

TYPICAL FLARE OFFSETS FOR 1 FOOT MAX END OFFSET

NOTES:

1. Line post, blocks and hardware to be used are shown on Standard Plans A77A1, A77A2, A77B1, A77C1, and A77C2.
2. Guard rail post spacing to be 6'-3" center to center, except as otherwise noted.
3. Except as noted, line posts are 6" x 8" x 6'-0" wood with 6" x 8" x 1'-2" wood blocks. W6 x 9 steel posts, 6'-0" in length, with 6" x 8" x 1'-2" notched wood blocks or recycled plastic blocks may be used for 6" x 8" x 6'-0" wood post with 6" x 8" x 1'-2" wood blocks where applicable and when specified.
4. Direction of adjacent traffic indicated by ⟶.
5. For End Anchor Assembly (Type SFT) details, see Standard Plan A77H1.
6. Layout Types 11A, 11B or 11C are typically used where guard railing is recommended to shield embankment slopes and a crashworthy end treatment is required for only one direction of traffic.
7. In-line Terminal System End Treatments are used where site conditions will not accommodate a flared end treatment.
8. The type of terminal system end treatment to be used will be shown on the Project Plans.
9. Dependent on site conditions (embankment height and side slope), construction of additional guard railing (length equal to multiples of 12'-6" with 6'-3" post spacing) may be advisable.
10. The 15:1 or flatter flare used with buried end anchors is based on the edge of the paved shoulder or offset line of edge of the traveled way. The length of guard railing within the 15:1 or flatter flare is based on site conditions and should be a length equal to multiples of 12'-6".
11. For details of the buried post end anchor used with Type 11C Layout, see Standard Plan A77I2.
12. Where placement of dike is required with guard railing installations, see Revised Standard Plan RSP A77C4 for dike positioning details.

STATE OF CALIFORNIA
DEPARTMENT OF TRANSPORTATION

METAL BEAM GUARD RAILING TYPICAL LAYOUTS FOR EMBANKMENTS

NO SCALE

RSP A77E1 DATED JUNE 6, 2008 SUPERSEDES STANDARD PLAN A77E1 DATED MAY 1, 2006 - PAGE 48 OF THE STANDARD PLANS BOOK DATED MAY 2006.

REVISED STANDARD PLAN RSP A77E1

12-10-07

DIST	COUNTY	ROUTE	POST MILES TOTAL PROJECT	SHEET NO.	TOTAL SHEETS
07	LA	5	R73.2/R88.6	82	130

Randell D. Hiatt
REGISTERED CIVIL ENGINEER

June 6, 2008
PLANS APPROVAL DATE

REGISTERED PROFESSIONAL ENGINEER
Randell D. Hiatt
No. C50200
Exp. 6-30-09
CIVIL
STATE OF CALIFORNIA

The State of California or its officers or agents shall not be responsible for the accuracy or completeness of electronic copies of this plan sheet.

To accompany plans dated 07-11-11

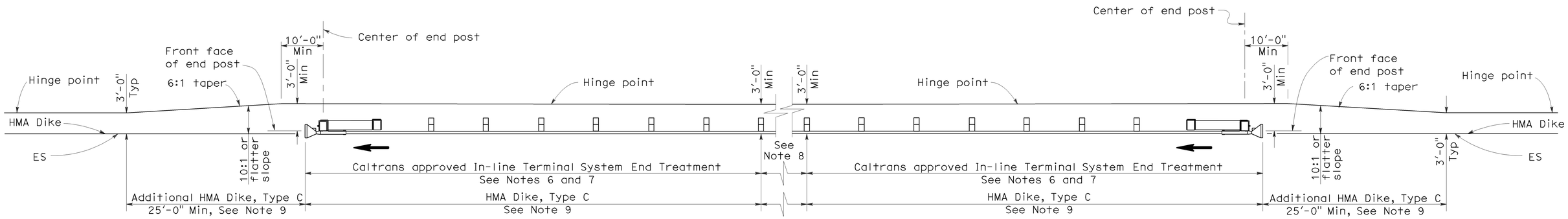

TYPE 11D LAYOUT

(EMBANKMENT GUARD RAILING INSTALLATION WITH IN-LINE END TREATMENT AT EACH END OF RAILING)
See Note 5

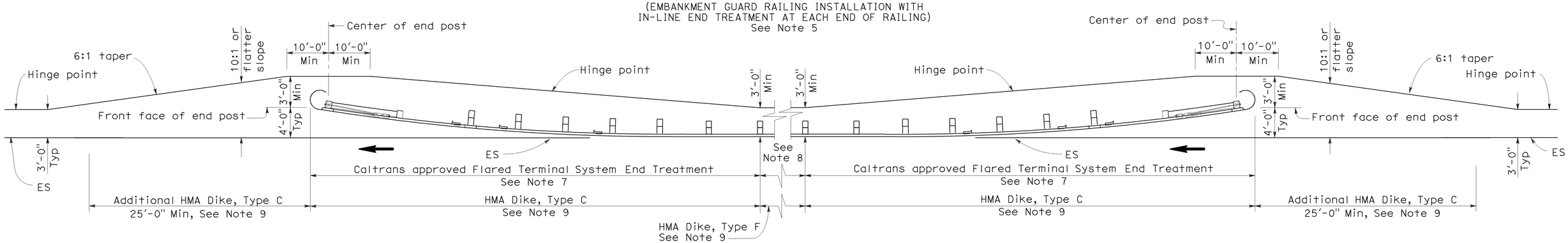

TYPE 11E LAYOUT

(EMBANKMENT GUARD RAILING INSTALLATION WITH FLARED END TREATMENT AT EACH END OF RAILING)
See Note 5

NOTES:

1. Line post, blocks and hardware to be used are shown on Standard Plans A77A1, A77A2, A77B1, A77C1 and A77C2.
2. Guard rail post spacing to be 6'-3" center to center, except as otherwise noted.
3. Except as noted, line posts are 6" x 8" x 6'-0" wood with 6" x 8" x 1'-2" wood blocks. W6 x 9 steel posts, 6'-0" in length, with 6" x 8" x 1'-2" notched wood blocks or plastic blocks may be used for 6" x 8" x 6'-0" wood post with 6" x 8" x 1'-2" wood blocks where applicable and when specified.
4. Direction of adjacent traffic indicated by ⟶.
5. Layout Types 11D through 11L, shown on the A77E Series of Revised Standard Plans, are typically used where guard railing is recommended to shield embankment slopes and a crashworthy end treatment is required for both directions of traffic.
6. In-line Terminal System End Treatments are used where site conditions will not accommodate a flared end treatment.
7. The type of terminal system end treatment to be used will be shown on the Project Plans.
8. Dependent on site conditions (embankment height and side slope), construction of additional guard railing (length equal to multiples of 12'-6" with 6'-3" post spacing) may be advisable.
9. Where placement of dike is required with guard railing installations, see Revised Standard Plan RSP A77C4 for dike positioning details.

STATE OF CALIFORNIA
DEPARTMENT OF TRANSPORTATION

METAL BEAM GUARD RAILING TYPICAL LAYOUTS FOR EMBANKMENTS

NO SCALE

RSP A77E2 DATED JUNE 6, 2008 SUPERSEDES STANDARD PLAN A77E2
DATED MAY 1, 2006 - PAGE 49 OF THE STANDARD PLANS BOOK DATED MAY 2006.

REVISED STANDARD PLAN RSP A77E2

2006 REVISED STANDARD PLAN RSP A77E2

12-10-07

DIST	COUNTY	ROUTE	POST MILES TOTAL PROJECT	SHEET NO.	TOTAL SHEETS
07	LA	5	R73.2/R88.6	83	130

Randell D. Hiatt
REGISTERED CIVIL ENGINEER

June 6, 2008
PLANS APPROVAL DATE

REGISTERED PROFESSIONAL ENGINEER
Randell D. Hiatt
No. C50200
Exp. 6-30-09
CIVIL
STATE OF CALIFORNIA

The State of California or its officers or agents shall not be responsible for the accuracy or completeness of electronic copies of this plan sheet.

To accompany plans dated 07-11-11

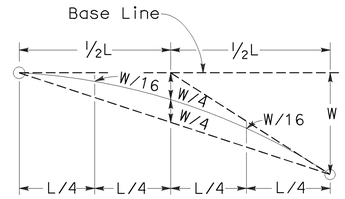

TYPICAL PARABOLIC LAYOUT

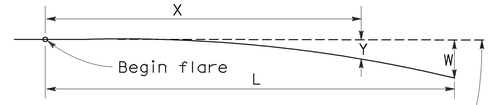

Base Line (Edge of paved shoulder or offset line of edge of traveled way)

$$Y = \frac{WX^2}{L^2}$$

Y = Offset from base line
W = Maximum offset
X = Distance along base line
L = Length of flare

PARABOLIC FLARE OFFSETS

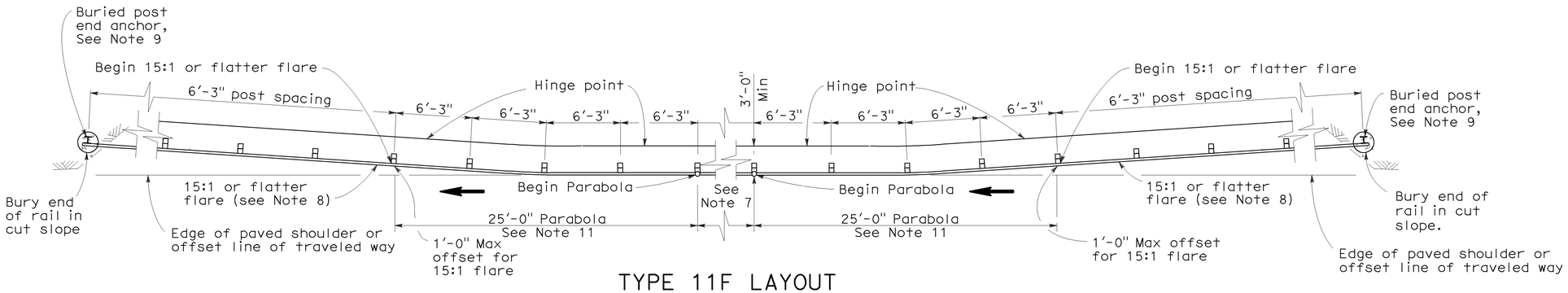

TYPE 11F LAYOUT

(EMBANKMENT GUARD RAILING INSTALLATION WITH A BURIED END ANCHOR TREATMENT AT EACH END OF RAILING)
See Notes 5 and 10

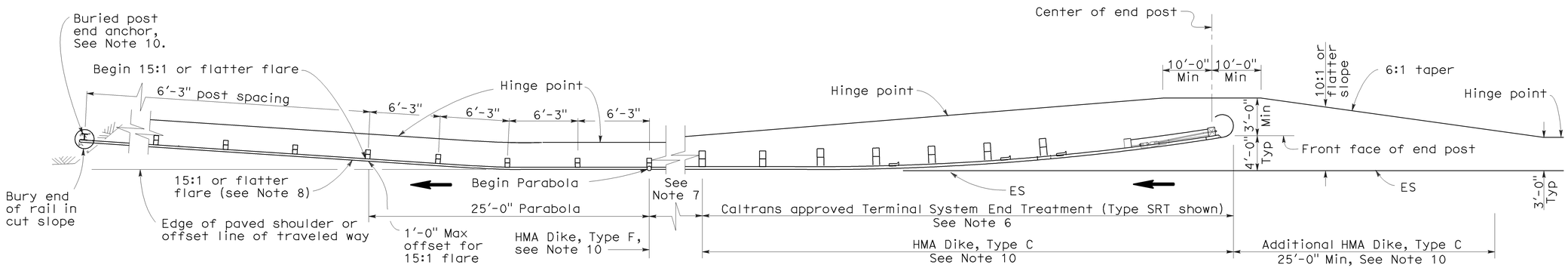

TYPE 11G LAYOUT

(EMBANKMENT GUARD RAILING INSTALLATION WITH FLARED END TREATMENT AND A BURIED END ANCHOR TREATMENT AT THE ENDS OF RAILING)
See Notes 5 and 10

NOTES:

1. Line post, blocks and hardware to be used are shown on Standard Plans A77A1, A77A2, A77B1, A77C1 and A77C2.
2. Guard rail post spacing to be 6'-3" center to center, except as otherwise noted.
3. Except as noted, line posts are 6" x 8" x 6'-0" wood with 6" x 8" x 1'-2" wood blocks. W6 x 9 steel posts, 6'-0" in length, with 6" x 8" x 1'-2" notched wood blocks or plastic blocks may be used for 6" x 8" x 6'-0" wood post with 6" x 8" x 1'-2" wood blocks where applicable and when specified.
4. Direction of adjacent traffic indicated by ⟶.
5. Layout Types 11D through 11L, shown on the A77E Series of Revised Standard Plans, are typically used where guard railing is recommended to shield embankment slopes and a crashworthy end treatment is required for both directions of traffic.
6. The type of terminal system end treatment to be used will be shown on the Project Plans.
7. Dependent on site conditions (embankment height and side slope), construction of additional guard railing (length equal to multiples of 12'-6" with 6'-3" post spacing) may be advisable.
8. The 15:1 or flatter flare used with buried end anchors is based on the edge of the paved shoulder or offset line of edge of the traveled way. The length of guard railing within the 15:1 or flatter flare is based on site conditions and should be a length equal to multiples of 12'-6".
9. For details of the buried post end anchor used with Type 11F and 11G Layouts, see Standard Plan A77I2.
10. Where placement of dike is required with guard railing installations, see Revised Standard Plan RSP A77C4 for dike positioning details.
11. For typical flare offsets for 25'-0" length parabola with maximum offset of 1'-0", see Revised Standard Plan RSP A77E1.

STATE OF CALIFORNIA
DEPARTMENT OF TRANSPORTATION

METAL BEAM GUARD RAILING TYPICAL LAYOUTS FOR EMBANKMENTS

NO SCALE

RSP A77E3 DATED JUNE 6, 2008 SUPERSEDES STANDARD PLAN A77E3 DATED MAY 1, 2006 - PAGE 50 OF THE STANDARD PLANS BOOK DATED MAY 2006.

REVISED STANDARD PLAN RSP A77E3

2006 REVISED STANDARD PLAN RSP A77E3

12-10-07

DIST	COUNTY	ROUTE	POST MILES TOTAL PROJECT	SHEET NO.	TOTAL SHEETS
07	LA	5	R73.2/R88.6	84	130

Randell D. Hiatt
REGISTERED CIVIL ENGINEER

June 6, 2008
PLANS APPROVAL DATE

REGISTERED PROFESSIONAL ENGINEER
Randell D. Hiatt
No. C50200
Exp. 6-30-09
CIVIL
STATE OF CALIFORNIA

The State of California or its officers or agents shall not be responsible for the accuracy or completeness of electronic copies of this plan sheet.

To accompany plans dated 07-11-11

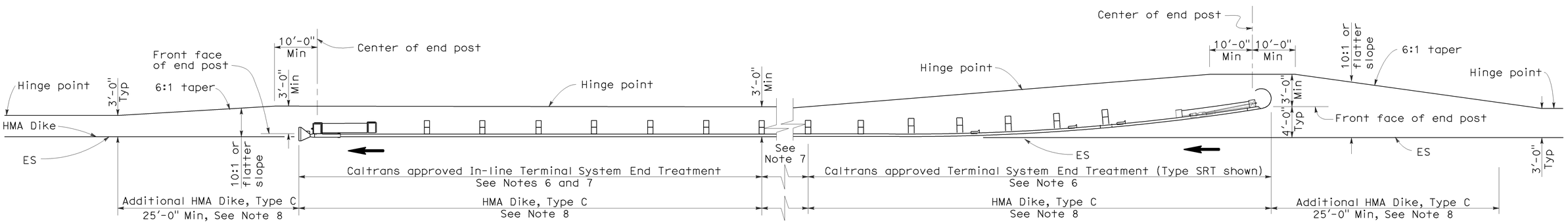

TYPE 11H LAYOUT

(EMBANKMENT GUARD RAILING INSTALLATION WITH FLARED END TREATMENT
AND AN IN-LINE TREATMENT AT THE ENDS OF RAILING)
See Notes 5 and 8

NOTES:

1. Line post, blocks and hardware to be used are shown on Standard Plans A77A1, A77A2, A77B1, A77C1 and A77C2.
2. Guard rail post spacing to be 6'-3" center to center, except as otherwise noted.
3. Except as noted, line posts are 6" x 8" x 6'-0" wood with 6" x 8" x 1'-2" wood blocks. W6 x 9 steel posts, 6'-0" in length, with 6" x 8" x 1'-2" notched wood blocks or plastic blocks may be used for 6" x 8" x 6'-0" wood post with 6" x 8" x 1'-2" wood blocks where applicable and when specified.
4. Direction of adjacent traffic indicated by ⟶.
5. Layout Types 11D through 11L, shown on the A77E Series of Revised Standard Plans, are typically used where guard railing is recommended to shield embankment slopes and a crashworthy end treatment is required for both directions of traffic.
6. The type of terminal system end treatment to be used will be shown on the Project Plans.
7. Dependent on site conditions (embankment height and side slope), construction of additional guard railing (length equal to multiples of 12'-6" with 6'-3" post spacing) may be advisable.
8. Where placement of dike is required with guard railing installations, see Revised Standard Plan RSP A77C4 for dike positioning details.

STATE OF CALIFORNIA
DEPARTMENT OF TRANSPORTATION

METAL BEAM GUARD RAILING TYPICAL LAYOUTS FOR EMBANKMENTS

NO SCALE

RSP A77E4 DATED JUNE 6, 2008 SUPERSEDES STANDARD PLAN A77E4
DATED MAY 1, 2006 - PAGE 51 OF THE STANDARD PLANS BOOK DATED MAY 2006.

REVISED STANDARD PLAN RSP A77E4

2006 REVISED STANDARD PLAN RSP A77E4

DIST	COUNTY	ROUTE	POST MILES TOTAL PROJECT	SHEET NO.	TOTAL SHEETS
07	LA	5	R73.2/R88.6	85	130

Randell D. Hiatt
REGISTERED CIVIL ENGINEER

June 6, 2008
PLANS APPROVAL DATE

REGISTERED PROFESSIONAL ENGINEER
Randell D. Hiatt
No. C50200
Exp. 6-30-09
CIVIL
STATE OF CALIFORNIA

The State of California or its officers or agents shall not be responsible for the accuracy or completeness of electronic copies of this plan sheet.

To accompany plans dated 07-11-11

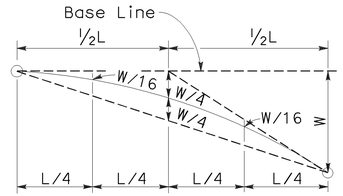

TYPICAL PARABOLIC LAYOUT

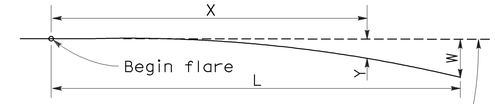

Base Line (Edge of paved shoulder or offset line of edge of traveled way)

$$Y = \frac{WX^2}{L^2}$$

Y = Offset from base line
W = Maximum offset
X = Distance along base line
L = Length of flare

PARABOLIC FLARE OFFSETS

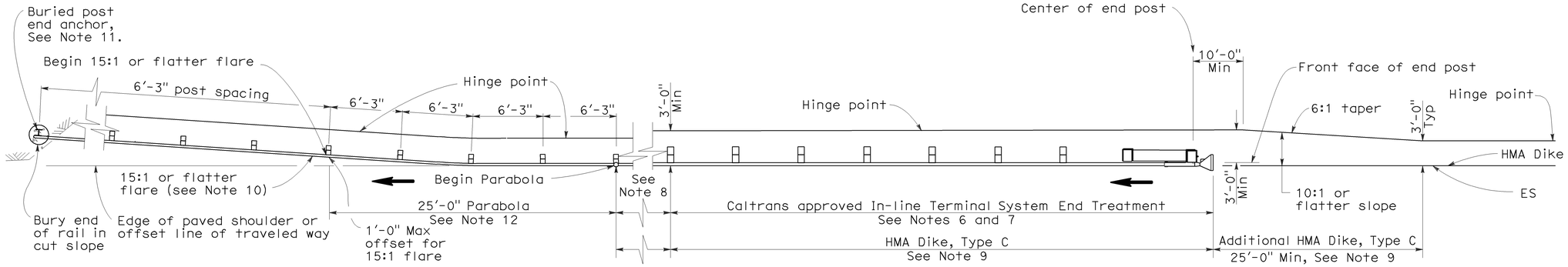

TYPE 11I LAYOUT

(EMBANKMENT GUARD RAILING INSTALLATION WITH IN-LINE END TREATMENT AND A BURIED END ANCHOR TREATMENT AT THE ENDS OF RAILING)
See Note 5

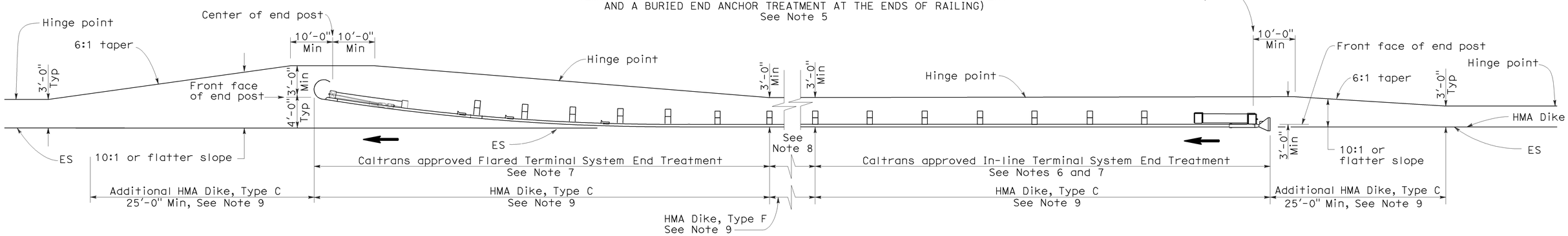

TYPE 11J LAYOUT

(EMBANKMENT GUARD RAILING INSTALLATION WITH IN-LINE END TREATMENT AND FLARED END TREATMENT AT THE ENDS OF RAILING)
See Note 5

NOTES:

1. Line post, blocks and hardware to be used are shown on Standard Plans A77A1, A77A2, A77B1, A77C1 and A77C2.
2. Guard rail post spacing to be 6'-3" center to center, except as otherwise noted.
3. Except as noted, line posts are 6" x 8" x 6'-0" wood with 6" x 8" x 1'-2" wood blocks. W6 x 9 steel posts, 6'-0" in length, with 6" x 8" x 1'-2" notched wood blocks or plastic blocks may be used for 6" x 8" x 6'-0" wood post with 6" x 8" x 1'-2" wood blocks where applicable and when specified.
4. Direction of adjacent traffic indicated by ⟶.
5. Layout Types 11D through 11L, shown on the A77E Series of Revised Standard Plans, are typically used where guard railing is recommended to shield embamkment slopes and a crashworthy end treatment is required for both directions of traffic.
6. In-line Terminal System End Treatments are used where site conditions will not accommodate a flared end treatment.
7. The type of terminal system end treatment to be used will be shown on the Project Plans.
8. Dependent on site conditions (embankment height and side slope), construction of additional guard railing (length equal to multiples of 12'-6" with 6'-3" post spacing) may be advisable.
9. Where placement of dike is required with guard railing installations, see Revised Standard Plan RSP A77C4 for dike positioning details.
10. The 15:1 or flatter flare used with buried end anchors is based on the edge of the paved shoulder or offset line of edge of the traveled way. The length of guard railing within the 15:1 or flatter flare is based on site conditions and should be a length equal to multiples of 12'-6".
11. For details of the buried post end anchor used with Type 11I Layout, see Standard Plan A77I2.
12. For typical flare offsets for 25'-0" length parabola with maximum offset of 1'-0", see Revised Standard Plan RSP A77E1.

STATE OF CALIFORNIA
DEPARTMENT OF TRANSPORTATION

METAL BEAM GUARD RAILING TYPICAL LAYOUTS FOR EMBANKMENTS

NO SCALE

RSP A77E5 DATED JUNE 6, 2008 SUPERSEDES STANDARD PLAN A77E5 DATED MAY 1, 2006 - PAGE 52 OF THE STANDARD PLANS BOOK DATED MAY 2006.

REVISED STANDARD PLAN RSP A77E5

2006 REVISED STANDARD PLAN RSP A77E5

12-10-07

DIST	COUNTY	ROUTE	POST MILES TOTAL PROJECT	SHEET NO.	TOTAL SHEETS
07	LA	5	R73.2/R88.6	86	130

Randell D. Hiatt
REGISTERED CIVIL ENGINEER

June 6, 2008
PLANS APPROVAL DATE

REGISTERED PROFESSIONAL ENGINEER
Randell D. Hiatt
No. C50200
Exp. 6-30-09
CIVIL
STATE OF CALIFORNIA

The State of California or its officers or agents shall not be responsible for the accuracy or completeness of electronic copies of this plan sheet.

To accompany plans dated 07-11-11

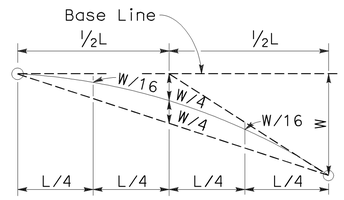

TYPICAL PARABOLIC LAYOUT

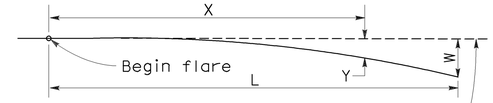

Base Line (Edge of paved shoulder or offset line of edge of traveled way)

$$Y = \frac{WX^2}{L^2}$$

Y = Offset from base line
W = Maximum offset
X = Distance along base line
L = Length of flare

PARABOLIC FLARE OFFSETS

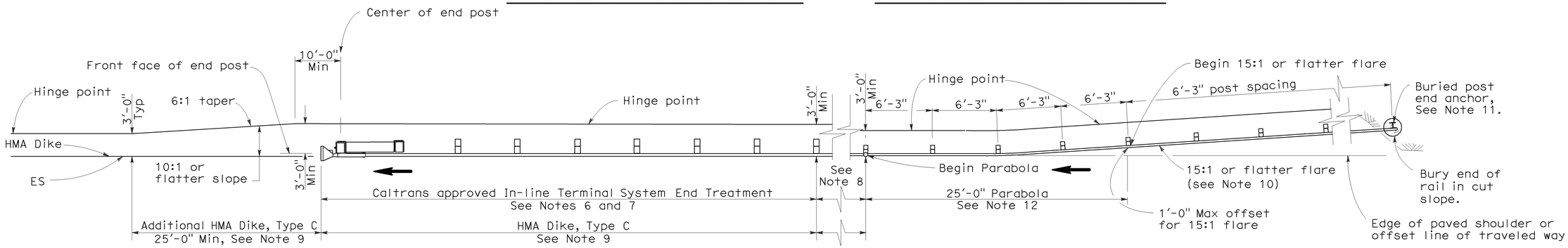

TYPE 11K LAYOUT

(EMBANKMENT GUARD RAILING INSTALLATION WITH A BURIED END ANCHOR TREATMENT AND AN IN-LINE END TREATMENT AT THE ENDS OF RAILING)
See Note 5

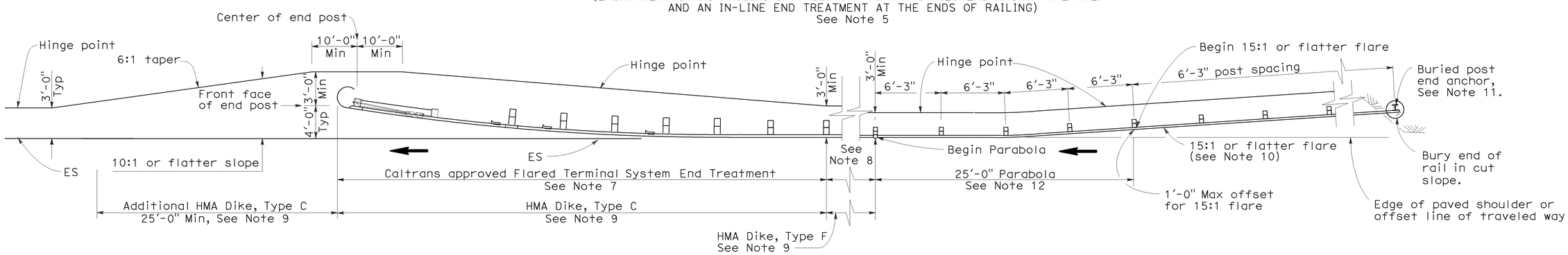

TYPE 11L LAYOUT

(EMBANKMENT GUARD RAILING INSTALLATION WITH A BURIED END ANCHOR TREATMENT AND A FLARED END TREATMENT AT THE ENDS OF RAILING)
See Note 5

NOTES:

1. Line post, blocks and hardware to be used are shown on Standard Plans A77A1, A77A2, A77B1, A77C1 and A77C2.
2. Guard rail post spacing to be 6'-3" center to center, except as otherwise noted.
3. Except as noted, line posts are 6" x 8" x 6'-0" wood with 6" x 8" x 1'-2" wood blocks. W6 x 9 steel posts, 6'-0" in length, with 6" x 8" x 1'-2" notched wood blocks or plastic blocks may be used for 6" x 8" x 6'-0" wood post with 6" x 8" x 1'-2" wood blocks where applicable and when specified.
4. Direction of adjacent traffic indicated by ⟶.
5. Layout Types 11D through 11L, shown on the A77E Series of Revised Standard Plans, are typically used where guard railing is recommended to shield embamkment slopes and a crashworthy end treatment is required for both directions of traffic.
6. In-line Terminal System End Treatments are used where site conditions will not accommodate a flared end treatment.
7. The type of terminal system end treatment to be used will be shown on the Project Plans.
8. Dependent on site conditions (embankment height and side slope), construction of additional guard railing (length equal to multiples of 12'-6" with 6'-3" post spacing) may be advisable.
9. Where placement of dike is required with guard railing installations, see Revised Standard Plan RSP A77C4 for dike positioning details.
10. The 15:1 or flatter flare used with buried end anchors is based on the edge of the paved shoulder or offset line of edge of the traveled way. The length of guard railing within the 15:1 or flatter flare is based on site conditions and should be a length equal to multiples of 12'-6".
11. For details of the buried post end anchor used with Type 11K and 11L Layouts, see Standard Plan A77I2.
12. For typical flare offsets for 25'-0" length parabola with maximum offset of 1'-0", see Revised Standard Plan RSP A77E1.

STATE OF CALIFORNIA
DEPARTMENT OF TRANSPORTATION

METAL BEAM GUARD RAILING TYPICAL LAYOUTS FOR EMBANKMENTS

NO SCALE

RSP A77E6 DATED JUNE 6, 2008 SUPERSEDES STANDARD PLAN A77E6
DATED MAY 1, 2006 - PAGE 53 OF THE STANDARD PLANS BOOK DATED MAY 2006.

REVISED STANDARD PLAN RSP A77E6

2006 REVISED STANDARD PLAN RSP A77E6

12-10-07

DIST	COUNTY	ROUTE	POST MILES TOTAL PROJECT	SHEET NO.	TOTAL SHEETS
07	LA	5	R73.2/R88.6	87	130

Randell D. Hiatt
REGISTERED CIVIL ENGINEER

June 6, 2008
PLANS APPROVAL DATE

REGISTERED PROFESSIONAL ENGINEER
Randell D. Hiatt
No. C50200
Exp. 6-30-09
CIVIL
STATE OF CALIFORNIA

The State of California or its officers or agents shall not be responsible for the accuracy or completeness of electronic copies of this plan sheet.

To accompany plans dated 07-11-11

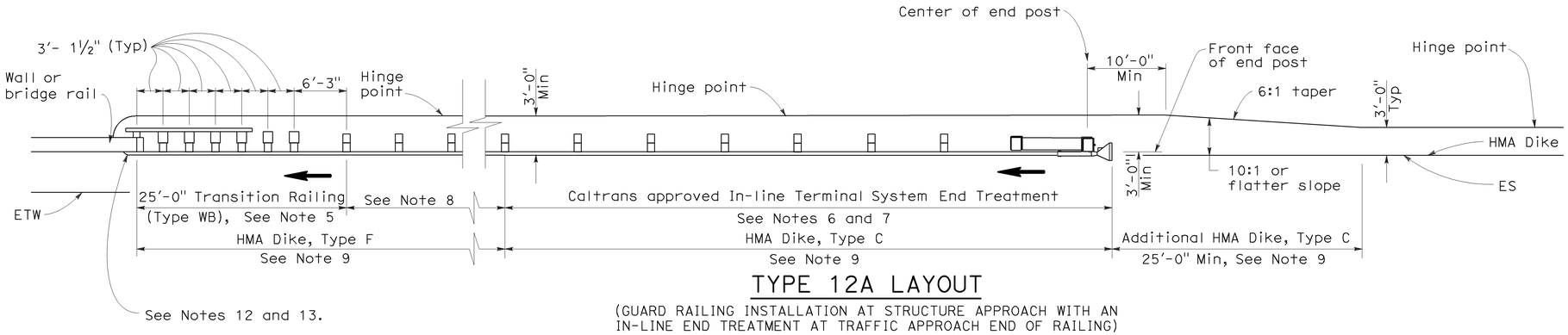

TYPE 12A LAYOUT

(GUARD RAILING INSTALLATION AT STRUCTURE APPROACH WITH AN IN-LINE END TREATMENT AT TRAFFIC APPROACH END OF RAILING)
See Notes 10

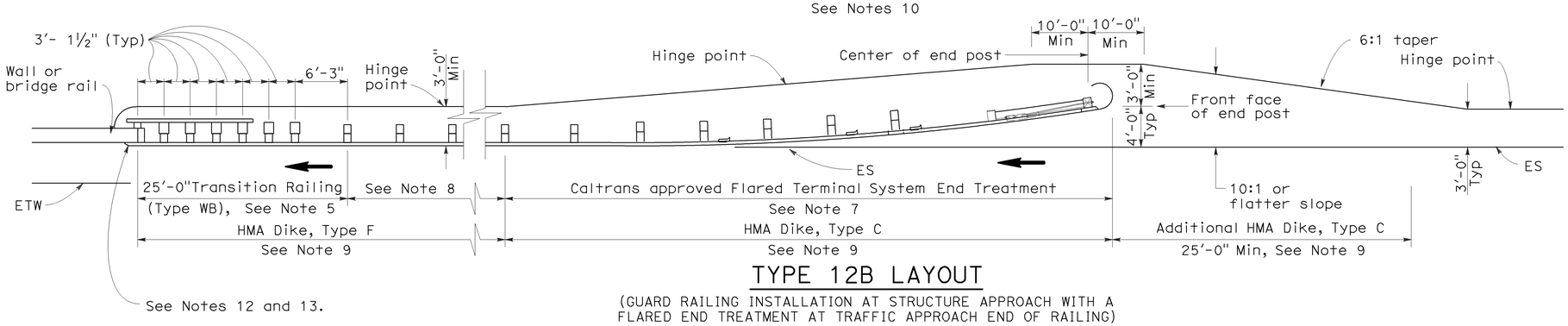

TYPE 12B LAYOUT

(GUARD RAILING INSTALLATION AT STRUCTURE APPROACH WITH A FLARED END TREATMENT AT TRAFFIC APPROACH END OF RAILING)
See Notes 10

NOTES:

1. Line post, blocks and hardware to be used are shown on Standard Plans A77A1, A77A2, A77B1, A77C1 and A77C2.
2. Guard rail post spacing to be 6'-3" center to center, except as otherwise noted.
3. Except as noted, line posts are 6" x 8" x 6'-0" wood with 6" x 8" x 1'-2" wood blocks. W6 x 9 steel posts, 6'-0" in length, with 6" x 8" x 1'-2" notched wood blocks or plastic blocks may be used for 6" x 8" x 6'-0" wood posts with 6" x 8" x 1'-2" wood blocks where applicable and when specified.
4. Direction of adjacent traffic indicated by ➡.
5. For Transition Railing (Type WB) details for Types 12A and 12B Layouts, see Standard Plan A77J4.
6. In-line Terminal System End Treatments are used where site conditions will not accommodate a flared end treatment.
7. The type of terminal system end treatment to be used will be shown on the Project Plans.
8. Dependent on site conditions (embankment height, side slopes, or other fixed objects), it may be advisable to construct additional guard railing (a length equal to multiples of 12'-6" with 6'-3" post spacing) between the transition railing and end treatment.
9. Where placement of dike is required with guard railing installations, see Revised Standard Plan RSP A77C4 for dike positioning details.
10. Type 12A or Type 12B Layouts are typically used:
    a. To the right of approaching traffic, at the end of a structure, on two-lane conventional highway where the roadbed width across the structure is less than 40 feet.
    b. To the left of approaching traffic, at the end of a structure, on two-lane conventional highway where the roadbed width across the structure is less than 40 feet.
    c. To the right of approaching traffic at the end of each structure on multilane freeways or expressways with separate adjacent or parallel bridges.
    d. To the right of approaching traffic at the end of the structure on multilane freeways or expressways with decked median on the bridge.
11. See Revised Standard Plan RSP A77F3 for typical layout used left of approaching traffic at the ends of each structure on multilane freeways or expressways with separate adjacent or parallel bridges.
12. For additional details of typical connections to bridge rail, see Connection Detail AA on Revised Standard Plans RSP A77J1 and RSP A77J2 and Connection Detail FF on Standard Plans A77K1 and A77K2.
13. For additional details of a typical connection to walls or abutments, see Standard Plan A77J3.

STATE OF CALIFORNIA
DEPARTMENT OF TRANSPORTATION

METAL BEAM GUARD RAILING TYPICAL LAYOUTS FOR STRUCTURE APPROACH

NO SCALE

RSP A77F1 DATED JUNE 6, 2008 SUPERSEDES STANDARD PLAN A77F1
DATED MAY 1, 2006 - PAGE 54 OF THE STANDARD PLANS BOOK DATED MAY 2006.

REVISED STANDARD PLAN RSP A77F1

2006 REVISED STANDARD PLAN RSP A77F1

DIST	COUNTY	ROUTE	POST MILES TOTAL PROJECT	SHEET NO.	TOTAL SHEETS
07	LA	5	R73.2/R88.6	88	130

Randell D. Hiatt
REGISTERED CIVIL ENGINEER

June 6, 2008
PLANS APPROVAL DATE

REGISTERED PROFESSIONAL ENGINEER
Randell D. Hiatt
No. C50200
Exp. 6-30-09
CIVIL
STATE OF CALIFORNIA

The State of California or its officers or agents shall not be responsible for the accuracy or completeness of electronic copies of this plan sheet.

To accompany plans dated 07-11-11

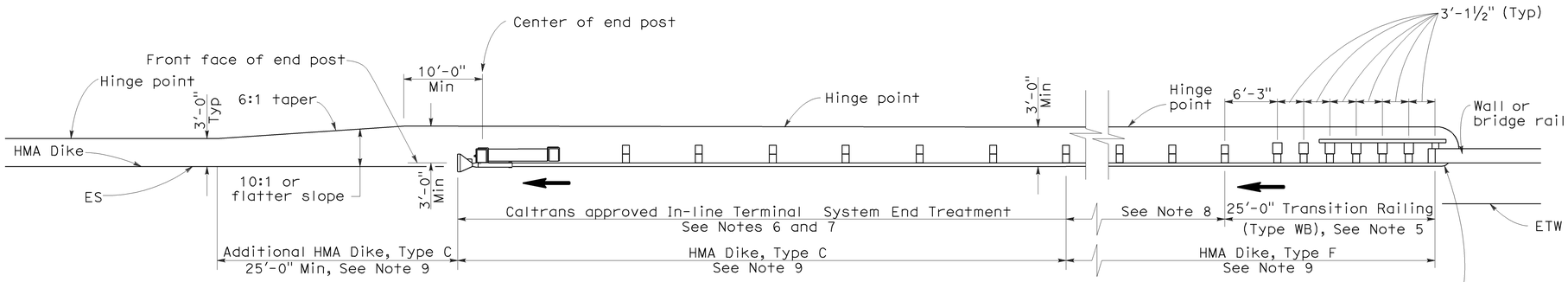

TYPE 12AA LAYOUT

(GUARD RAILING INSTALLATION AT STRUCTURE DEPARTURE WITH AN IN-LINE END TREATMENT AT TRAILING END OF RAILING)
See Notes 9 and 10

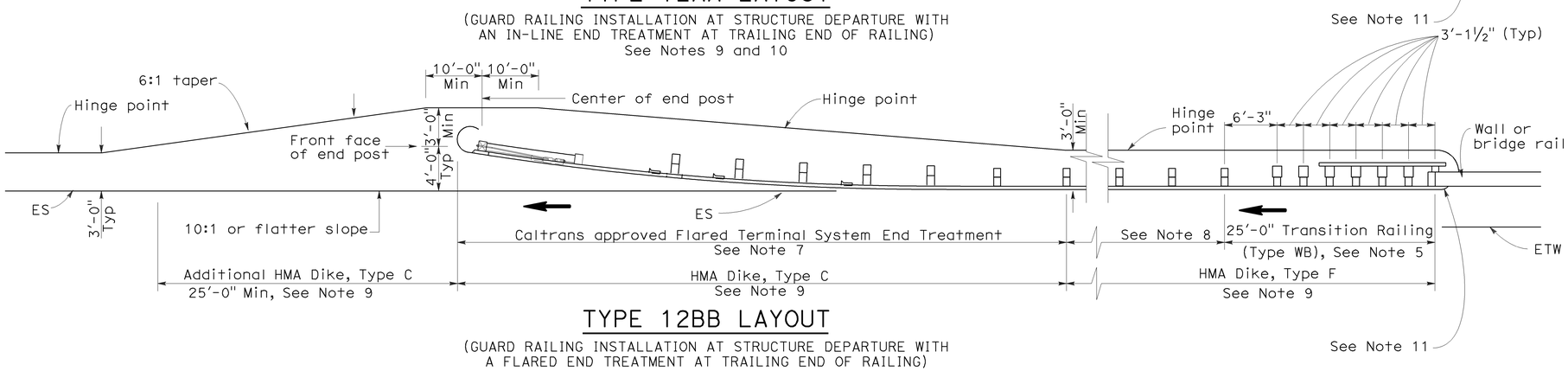

TYPE 12BB LAYOUT

(GUARD RAILING INSTALLATION AT STRUCTURE DEPARTURE WITH A FLARED END TREATMENT AT TRAILING END OF RAILING)
See Notes 9 and 10

NOTES:

1. Line post, blocks and hardware to be used are shown on Standard Plans A77A1, A77A2, A77B1, A77C1 and A77C2.
2. Guard rail post spacing to be 6'-3" center to center, except as otherwise noted.
3. Except as noted, line posts are 6" x 8" x 6'-0" wood with 6" x 8" x 1'-2" wood blocks. W6 x 9 steel posts, 6'-0" in length, with 6" x 8" x 1-2" notched wood blocks or notched recycled plastic blocks may be used for 6" x 8" x 6'-0" wood posts with 6" x 8" x 1'-2" wood blocks where applicable and when specified.
4. Direction of adjacent traffic indicated by ➡.
5. For Transition Railing (Type WB) details for Types 12AA and 12BB Layouts, see Standard Plan A77J4.
6. In-line Terminal System Treatments are used where site conditions will not accommodate a flared end treatment.
7. The type of terminal system to be used will be shown on the Project Plans.
8. Dependent on site conditions (embankment height, side slopes, other fixed objects), it may be advisable to construct additional guard railing (a length equal to multiples of 12'-6" with 6'-3" post spacing) between the transition railing and end treatments.
9. Where placement of dike is required with guard railing installations, see Revised Standard Plan RSP A77C4 for dike positioning details.
10. Type 12AA or Type 12BB Layouts are typically used to the right of traffic departing a structure on two-way conventional highways where the roadbed width across the structure is less than 40 feet.
11. For additional details of typical connections to bridge rail, see Connection Detail CC on Revised Standard Plan RSP A77J2 and Connection Detail HH on Standard Plans A77k2.

STATE OF CALIFORNIA
DEPARTMENT OF TRANSPORTATION

METAL BEAM GUARD RAILING TYPICAL LAYOUTS FOR STRUCTURE DEPARTURE

NO SCALE

RSP A77F4 DATED JUNE 6, 2008 SUPERSEDES STANDARD PLAN A77F4
DATED MAY 1, 2006 - PAGE 57 OF THE STANDARD PLANS BOOK DATED MAY 2006.

REVISED STANDARD PLAN RSP A77F4

2006 REVISED STANDARD PLAN RSP A77F4

12-10-07

DIST	COUNTY	ROUTE	POST MILES TOTAL PROJECT	SHEET NO.	TOTAL SHEETS
07	LA	5	R73.2/R88.6	89	130

Randell D. Hiatt
REGISTERED CIVIL ENGINEER

June 6, 2008
PLANS APPROVAL DATE

REGISTERED PROFESSIONAL ENGINEER Randell D. Hiatt No. C50200 Exp. 6-30-09 CIVIL STATE OF CALIFORNIA

The State of California or its officers or agents shall not be responsible for the accuracy or completeness of electronic copies of this plan sheet.

To accompany plans dated 07-11-11

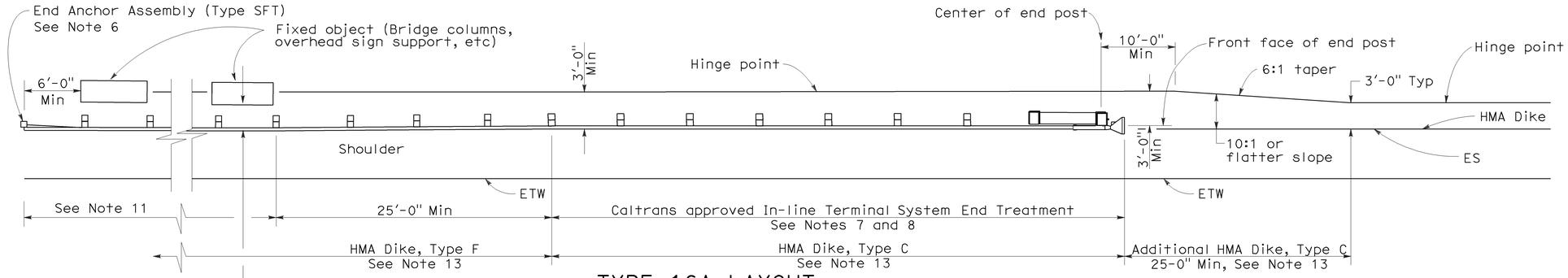

TYPE 16A LAYOUT

(GUARD RAILING INSTALLATION AT ROADSIDE FIXED OBJECT OR OBJECTS WITH AN IN-LINE END TREATMENT AT TRAFFIC APPROACH END OF RAILING)
See Notes 12 and 13

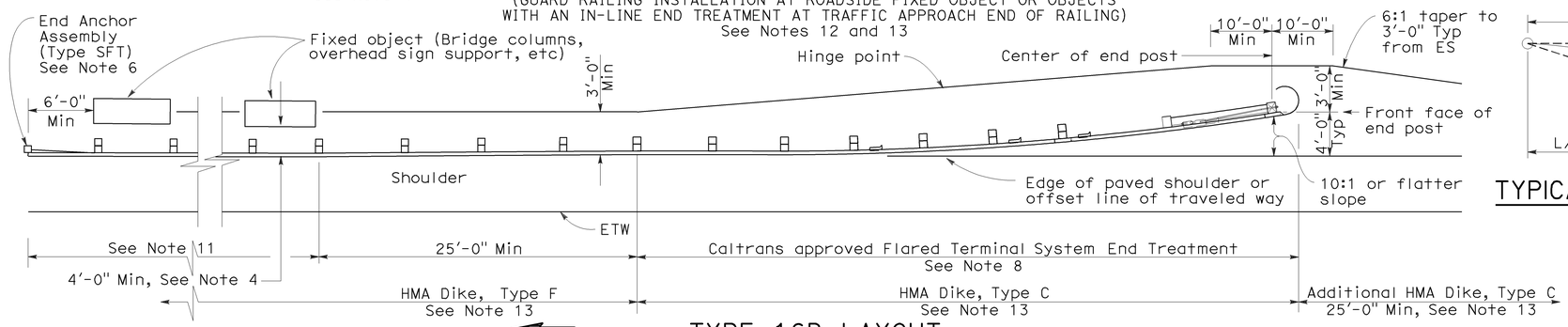

TYPE 16B LAYOUT

(GUARD RAILING INSTALLATION AT ROADSIDE FIXED OBJECT OR OBJECTS WITH A FLARED END TREATMENT AT TRAFFIC APPROACH END OF RAILING)
See Notes 12 and 13

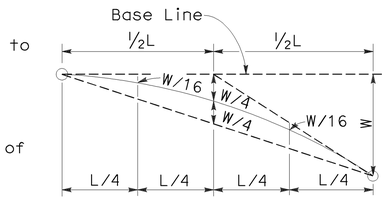

TYPICAL PARABOLIC LAYOUT

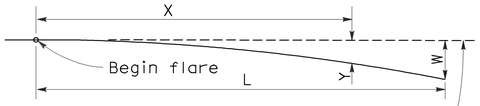

Base Line (Edge of paved shoulder or offset line of edge of traveled way)

$$Y = \frac{WX^2}{L^2}$$

Y = Offset from base line
W = Maximum offset
X = Distance along base line
L = Length of flare

PARABOLIC FLARE OFFSETS

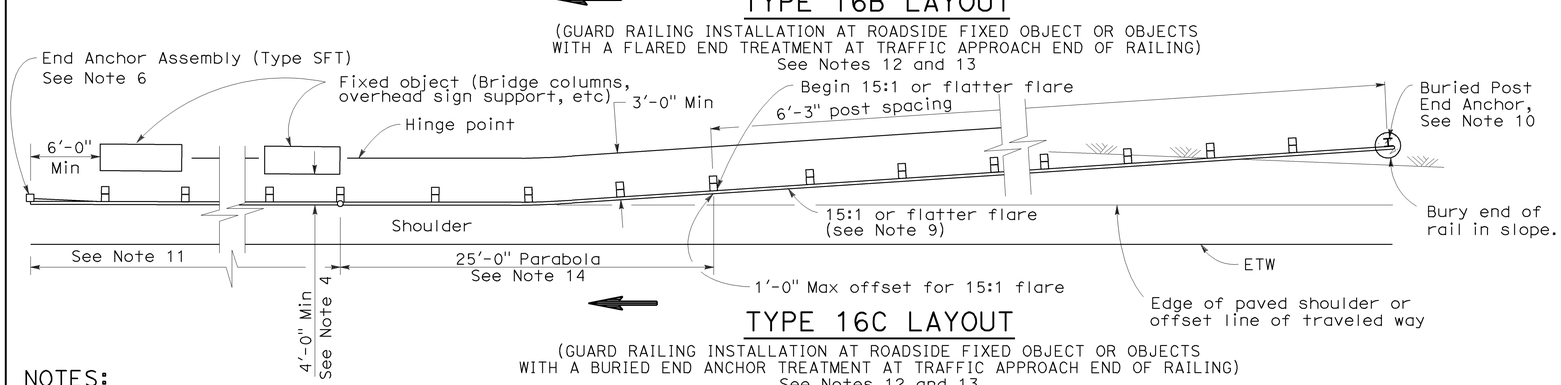

TYPE 16C LAYOUT

(GUARD RAILING INSTALLATION AT ROADSIDE FIXED OBJECT OR OBJECTS WITH A BURIED END ANCHOR TREATMENT AT TRAFFIC APPROACH END OF RAILING)
See Notes 12 and 13

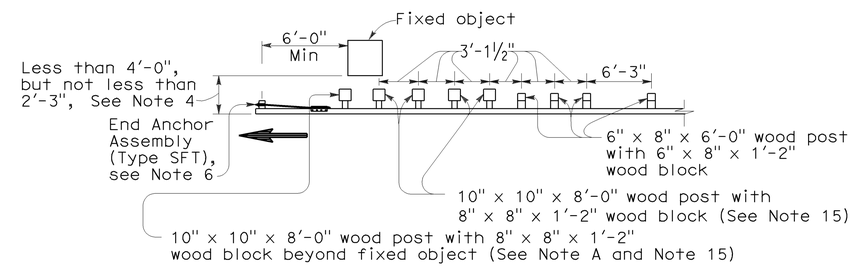

NOTE A: For a series of fixed objects (bridge columns, overhead sign supports, etc.) additional 10" x 10" x 8'-0" wood post with 8" x 8" x 1'-2" wood blocks at 3'-1½" center to center spacing are to be used between fixed objects.

STRENGTHENED RAILING SECTIONS FOR FIXED OBJECT

Use strengthened railing sections with Types 16A, 16B or 16C Layouts where minimum clearance between the face of the guard railing and fixed object(s) is less than 4'-0", but not less than 2'-3". See Note 4

NOTES:

1. Line post, blocks and hardware to be used are shown on Revised Standard Plans A77A1, A77A2, A77B1, A77C1 and A77C2.
2. Guard railing post spacing to be 6'-3" center to center, except as otherwise noted.
3. Except as noted, line posts are 6" x 8" x 6'-0" wood with 6" x 8" x 1'-2" wood blocks. W6 x 9 steel posts, 6'-0" in length, with 6" x 8" x 1'-2" notched wood blocks or notched recycled plastic blocks may be used for 6" x 8" x 6'-0" wood line posts with 6" x 8" x 1'-2" wood blocks where applicable and when specified.
4. A 4'-0" minimum clearance is required between the face of the railing and the face of a fixed object located directly behind standard guard railing sections with post spacing of 6'-3". Construct guard railing as shown in the detail "Strengthened Railing Sections for Fixed Objects" on this plan, where the clearance between the face of the railing and the face of a fixed object is less than 4'-0", but not less than 2'-3". Where the clearance is less than 2'-3", a concrete wall or barrier should be constructed to shield the fixed object(s).
5. Direction of adjacent traffic indicated by ⟶.
6. For End Anchor Assembly (Type SFT) details, see Standard Plan A77H1.
7. In-line Terminal System End Treatments are used where site conditions will not accommodate a flared end treatment.
8. The type of terminal system to be used will be shown on the Project Plans.
9. The 15:1 or flatter flare used with Type 16C Layout is based on the edge of the paved shoulder or offset line of edge of the traveled way. The length of guard railing within the 15:1 or flatter flare is based on site conditions and should be a length equal to multiples of 12'-6".
10. For details of the Buried Post End Anchor used with Type 16C Layout, see Standard Plan A77I2.
11. As site conditions dictate, construct additional guard railing to shield fixed object(s). Additional guard railing length equal to multiples of 12'-6". Post spacing at 6'-3" except as specified in Note 4.
12. Layout Types 16A, 16B or 16C are typically used where guard railing is recommended to shield roadside fixed object(s) and a crashworthy end treatment is required for only one direction of traffic.
13. Where placement of dike is required with guard railing, see Revised Standard Plan RSP A77C4 for dike positioning details.
14. For typical flare offsets for 25'-0" length parabola with maximum offset of 1'-0", see Revised Standard Plan RSP A77E1.
15. W6 x 15 steel post, 8'-0" in length, with 8" x 8" x 1'-2" notched wood block or notched recycled plastic blocks may be used in place of the 10" x 10" x 8'-0" wood post with 8" x 8" x 1'-2" wood block shown in the "Strengthened Railing Sections Detail".

STATE OF CALIFORNIA
DEPARTMENT OF TRANSPORTATION

METAL BEAM GUARD RAILING TYPICAL LAYOUTS FOR ROADSIDE FIXED OBJECTS

NO SCALE

RSP A77G3 DATED JUNE 6, 2008 SUPERSEDES STANDARD PLAN A77G3
DATED MAY 1, 2006 - PAGE 61 OF THE STANDARD PLANS BOOK DATED MAY 2006.

REVISED STANDARD PLAN RSP A77G3

2006 REVISED STANDARD PLAN RSP A77G3

12-10-07

DIST	COUNTY	ROUTE	POST MILES TOTAL PROJECT	SHEET NO.	TOTAL SHEETS
07	LA	5	R73.2/R88.6	90	130

Randell D. Hiatt
REGISTERED CIVIL ENGINEER

June 6, 2008
PLANS APPROVAL DATE

REGISTERED PROFESSIONAL ENGINEER
Randell D. Hiatt
No. C50200
Exp. 6-30-09
CIVIL
STATE OF CALIFORNIA

The State of California or its officers or agents shall not be responsible for the accuracy or completeness of electronic copies of this plan sheet.

To accompany plans dated 07-11-11

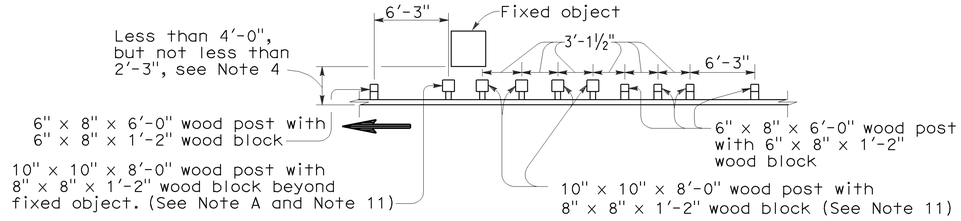

NOTE A: For a series of fixed objects (bridge columns, overhead sign supports, etc.) additional 10" x 10" x 8'-0" wood post with 8" x 8" x 1'-2" wood blocks at 3'-1½" center to center spacing are to be used between fixed object(s).

STRENGTHENED RAILING SECTIONS FOR FIXED OBJECT

Use strengthened railing sections with Layout Types 16D or 16E where minimum clearance between the guard railing and fixed object(s) is less than 4'-0", but not less than 2'-3". See Note 4.

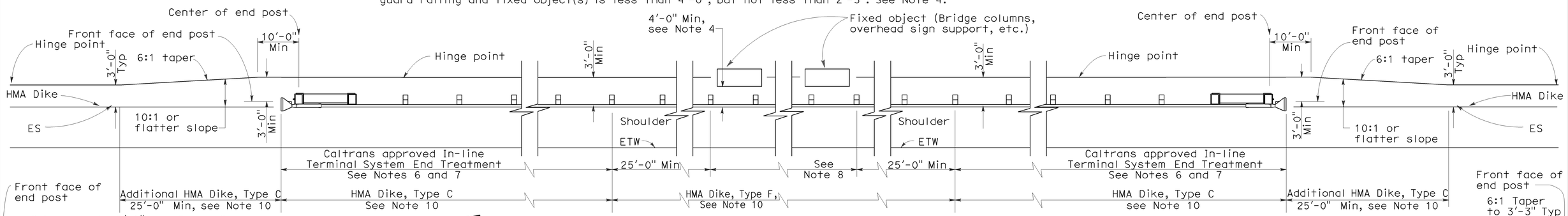

TYPE 16D LAYOUT

(GUARD RAILING INSTALLATION AT ROADSIDE FIXED OBJECT OR OBJECTS WITH AN IN-LINE END TREATMENT AT EACH END OF RAILING)
See Note 9

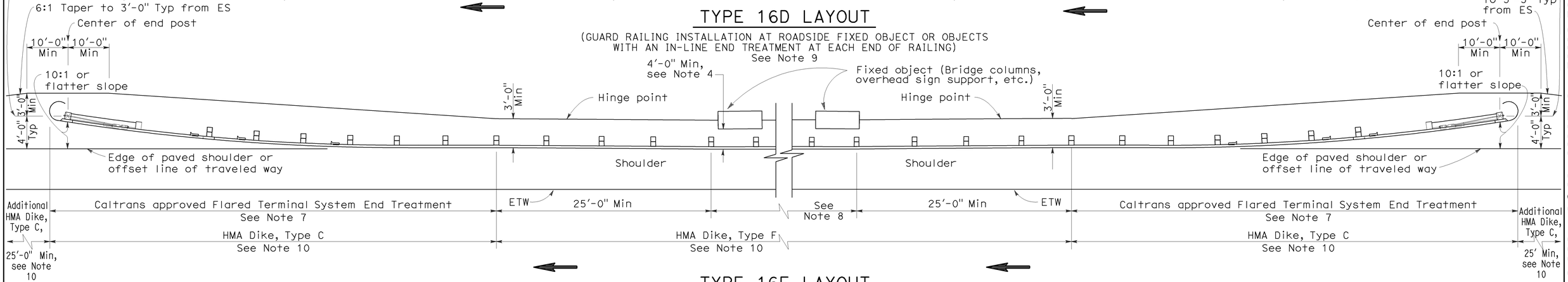

TYPE 16E LAYOUT

(GUARD RAILING INSTALLATION AT ROADSIDE FIXED OBJECT OR OBJECTS WITH A FLARED END TREATMENT AT EACH END OF RAILING)
See Note 9

NOTES:

1. Line post, blocks and hardware to be used are shown on Standard Plans A77A1, A77A2, A77B1, A77C1 and A77C2.
2. Guard railing post spacing to be 6'-3" center to center, except as otherwise noted.
3. Except as noted, line posts are 6" x 8" x 6'-0" wood with 6" x 8" x 1'-2" wood blocks. W6 x 9 steel posts, 6'-0" in length, with 6" x 8" x 1'-2" notched wood blocks or notched recycled plastic blocks may be used for 6" x 8" x 6'-0" wood line posts with 6" x 8" x 1'-2" wood blocks where applicable and when specified.
4. A 4'-0" minimum clearance is required between the face of the railing and the face of a fixed object located directly behind standard guard railing sections with post spacing at 6'-3". Construct guard railing as shown in the detail "Strengthened Railing Sections for Fixed Objects" on this plan, where the clearance between the face of the railing and the face of a fixed object is less than 4'-0", but not less than 2'-3". Where the clearance is less than 2'-3", a concrete wall or barrier should be constructed to shield the fixed object(s).
5. Direction of adjacent traffic indicated by ⟶ .
6. In-line Terminal System End Treatments are used where site conditions will not accommodate a flared end treatment.
7. The type of terminal system to be used will be shown on the Project Plans.
8. As site conditions dictate, construct additional guard railing to shield fixed object(s). Additional guard railing length equal to multiples of 12'-6". Post spacing at 6'-3", except as specified in Note 4.
9. Layout Types 16D through 16L, shown on the A77G Series of Revised Standard Plans, are typically used where guard railing is recommended to shield roadside fixed object(s) and a crashworthy end treatment is required for both directions of traffic.
10. Where placement of dike is required with guard railing, see Revised Standard Plan RSP A77C4 for dike positioning details.
11. W6 x 15 steel post, 8'-0" in length, with 8" x 8" x 1'-2" notched wood block or notched recycled plastic block may be used in place of the 10" x 10" x 8'-0" wood post with 8" x 8" x 1'-2" wood block shown in the "Strengthened Railing Sections Detail."

STATE OF CALIFORNIA
DEPARTMENT OF TRANSPORTATION

METAL BEAM GUARD RAILING TYPICAL LAYOUTS FOR ROADSIDE FIXED OBJECTS

NO SCALE

RSP A77G4 DATED JUNE 6, 2008 SUPERSEDES STANDARD PLAN A77G4
DATED MAY 1, 2006 - PAGE 62 OF THE STANDARD PLANS BOOK DATED MAY 2006.

REVISED STANDARD PLAN RSP A77G4

2006 REVISED STANDARD PLAN RSP A77G4

12-10-07

DIST	COUNTY	ROUTE	POST MILES TOTAL PROJECT	SHEET NO.	TOTAL SHEETS
07	LA	5	R73.2/R88.6	91	130

Randell D. Hiatt
REGISTERED CIVIL ENGINEER

June 6, 2008
PLANS APPROVAL DATE

REGISTERED PROFESSIONAL ENGINEER
Randell D. Hiatt
No. C50200
Exp. 6-30-09
CIVIL
STATE OF CALIFORNIA

The State of California or its officers or agents shall not be responsible for the accuracy or completeness of electronic copies of this plan sheet.

To accompany plans dated 07-11-11

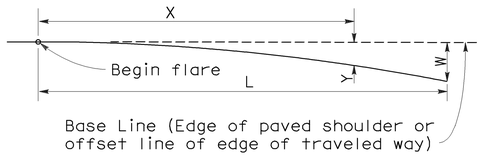

$$Y = \frac{WX^2}{L^2}$$

Y = Offset from base line
W = Maximum offset
X = Distance along base line
L = Length of flare

PARABOLIC FLARE OFFSETS

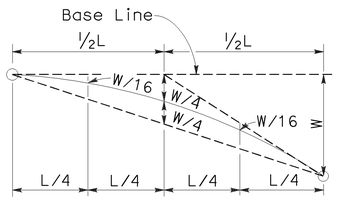

TYPICAL PARABOLIC LAYOUT

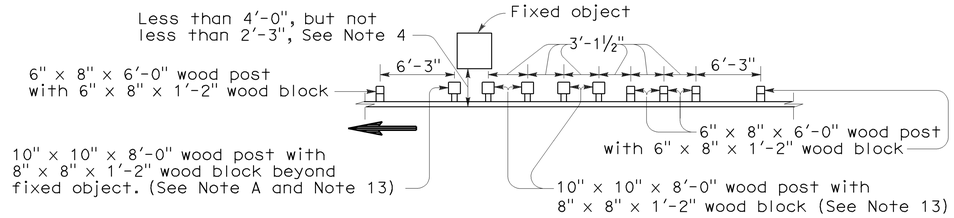

NOTE A: For a series of fixed objects (bridge columns, overhead sign supports, etc.) additional 10" x 10" x 8'-0" wood post with 8" x 8" x 1'-2" wood blocks at 3'-1½" center to center spacing are to be used between fixed object(s).

STRENGTHENED RAILING SECTIONS FOR FIXED OBJECT

Use strengthened railing sections with Layout Types 16F or 16G where minimum clearance between the face of the guard railing and fixed object(s) is less than 4'-0", but not less than 2'-3". See Note 4.

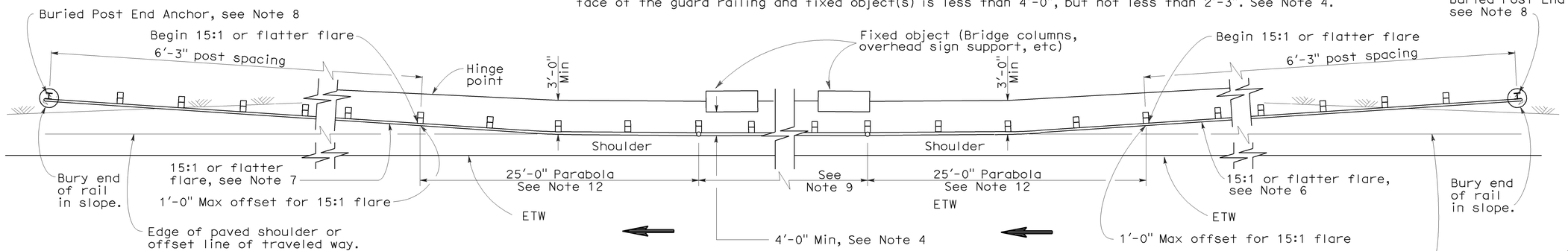

TYPE 16F LAYOUT

(GUARD RAILING INSTALLATION AT ROADSIDE FIXED OBJECT OR OBJECTS WITH A BURIED END ANCHOR TREATMENT AT EACH END OF RAILING)
See Notes 10 and 11

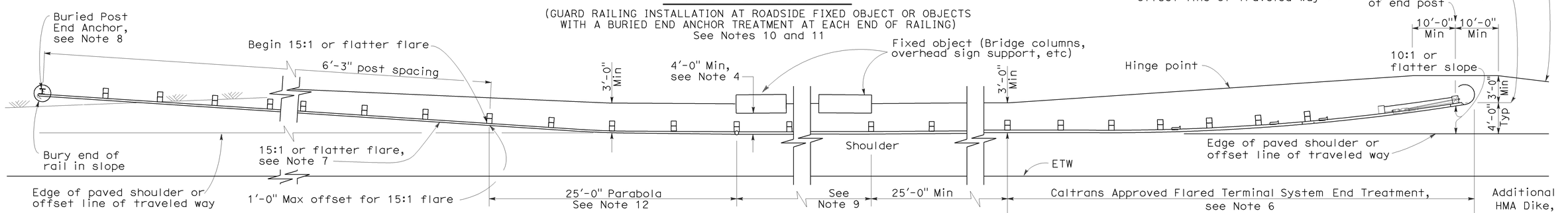

TYPE 16G LAYOUT

(GUARD RAILING INSTALLATION AT ROADSIDE FIXED OBJECT OR OBJECTS WITH A FLARED END TREATMENT AND A BURIED END ANCHOR TREATMENT AT THE ENDS OF RAILING)
See Notes 10 and 11

NOTES:

1. Line post, blocks and hardware to be used are shown on Standard Plans A77A1, A77A2, A77B1, A77C1 and A77C2.
2. Guard railing post spacing to be 6'-3" center to center, except as otherwise noted.
3. Except as noted, line posts are 6" x 8" x 6'-0" wood with 6" x 8" x 1'-2" wood blocks. W6 x 9 steel posts, 6'-0" in length, with 8" x 8" x 1'-2" notched wood blocks or notched recycled plastic blocks may be used for 6" x 8" x 6'-0" wood posts with 6" x 8" x 1'-2" wood blocks where applicable and when specified.
4. A 4'-0" minimum clearance is required between the face of the railing and the face of a fixed object located directly behind standard guard railing sections with post spacing at 6'-3". Construct guard railing as shown in the detail "Strengthened Railing Sections for Fixed Objects" on this plan, where the clearance between the face of the railing and the face of a fixed object is less than 4'-0", but not less than 2'-3". Where the clearance is less than 2'-3", a concrete wall or barrier should be constructed to shield the fixed object(s).
5. Direction of adjacent traffic indicated by ⟶.
6. The type of terminal system to be used will be shown on the Project Plans.
7. The 15:1 or flatter flare for the buried post anchor is based on the edge of the paved shoulder or offset line of edge of the traveled way. The length of guard railing within the 15:1 or flatter flare is based on site conditions and should be a length equal to multiples of 12'-6".
8. For details of the Buried Post End Anchor details, see Standard Plan A77I2.
9. As site conditions dictate, construct additional guard railing to shield fixed object(s). Additional guard railing length equal to multiples of 12'-6". Post spacing at 6'-3", except as specified in Note 4.
10. Layout Types 16D through 16L, shown on the A77G Series of Revised Standard Plans, are typically used on highways where guard railing is recommended to shield roadside fixed object(s) and a crashworthy end treatment is required for both directions of traffic.
11. Where placement of dike is required with guard railing, see Revised Standard Plan RSP A77C4 for dike positioning details.
12. For typical flare offsets for 25'-0" length parabola with maximum offset of 1'-0", see Revised Standard Plan RSP A77E1.
13. W6 x 15 steel post, 8'-0" in length, with 8" x 8" x 1'-2" notched wood block or notched recycled plastic blocks may be used in place of the 10" x 10" x 8'-0" wood post with 8" x 8" x 1'-2" wood block shown in the "Strengthened Railing Sections Detail".

STATE OF CALIFORNIA
DEPARTMENT OF TRANSPORTATION

METAL BEAM GUARD RAILING TYPICAL LAYOUTS FOR ROADSIDE FIXED OBJECTS

NO SCALE

RSP A77G5 DATED JUNE 6, 2008 SUPERSEDES STANDARD PLAN A77G5
DATED MAY 1, 2006 - PAGE 63 OF THE STANDARD PLANS BOOK DATED MAY 2006.

REVISED STANDARD PLAN RSP A77G5

2006 REVISED STANDARD PLAN RSP A77G5

12-10-07

DIST	COUNTY	ROUTE	POST MILES TOTAL PROJECT	SHEET NO.	TOTAL SHEETS
07	LA	5	R73.2/R88.6	92	130

Randell D. Hiatt
REGISTERED CIVIL ENGINEER

June 6, 2008
PLANS APPROVAL DATE

REGISTERED PROFESSIONAL ENGINEER
Randell D. Hiatt
No. C50200
Exp. 6-30-09
CIVIL
STATE OF CALIFORNIA

The State of California or its officers or agents shall not be responsible for the accuracy or completeness of electronic copies of this plan sheet.

To accompany plans dated 07-11-11

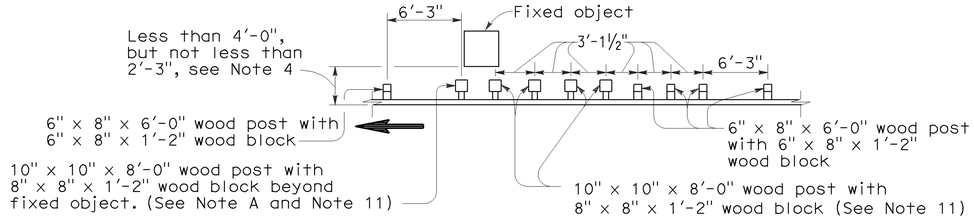

Note A. For a series of fixed objects (bridge columns, overhead sign supports, etc.) additional 10" x 10" x 8'-0" wood post with 8" x 8" x 1'-2" wood blocks at 3'-1½" center to center spacing are to be used between fixed object(s).

STRENGTHENED RAILING SECTIONS FOR FIXED OBJECT

Use strengthened railing sections with Layout Type 16H where minimum clearance between the face of the guard railing and fixed object(s) is less than 4'-0", but not less than 2'-3". See Note 4.

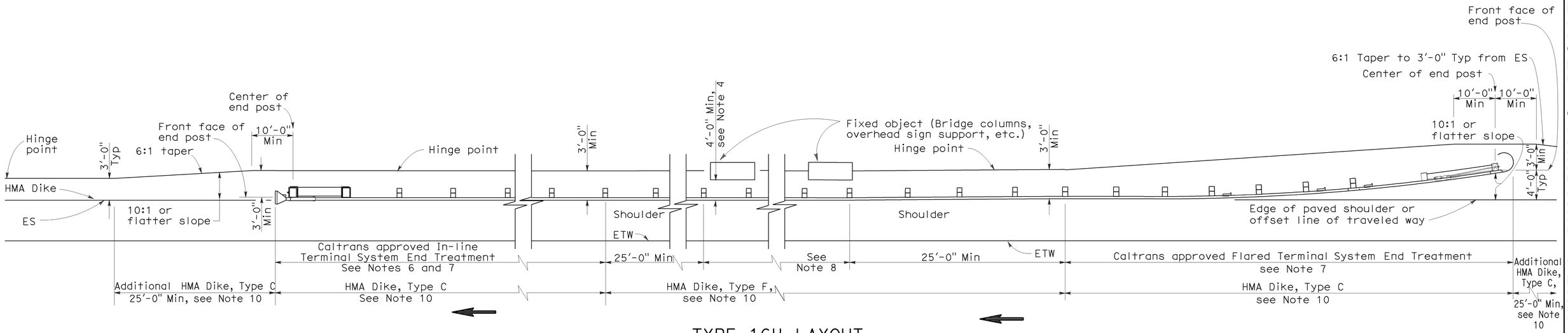

TYPE 16H LAYOUT

(GUARD RAILING INSTALLATION AT ROADSIDE FIXED OBJECT OR OBJECTS WITH A FLARED END TREATMENT AND AN IN-LINE TREATMENT AT THE ENDS OF RAILING)
See Note 9

NOTES:

1. Line post, blocks and hardware to be used are shown on Standard Plans A77A1, A77A2, A77B1, A77C1 and A77C2.
2. Guard railing post spacing to be 6'-3" center to center, except as otherwise noted.
3. Except as noted, line posts are 6" x 8" x 6'-0" wood with 6" x 8" x 1'-2" wood blocks. W6 x 9 steel posts, 6'-0" in length, with 6" x 8" x 1'-2" notched wood blocks or notched recycled plastic blocks may be used for 6" x 8" x 6'-0" wood posts with 6" x 8" x 1'-2" wood blocks where applicable and when specified.
4. A 4'-0" minimum clearance is required between the face of the railing and the face of a fixed object located directly behind standard guard railing sections with post spacing at 6'-3". Construct guard railing as shown in the detail "Strengthened Railing Sections for Fixed Objects" on this plan, where the clearance between the face of the railing and the face of a fixed object is less than 4'-0", but not less than 2'-3". Where the clearance is less than 2'-3", a concrete wall or barrier should be constructed to shield the fixed object(s).
5. Direction of adjacent traffic indicated by ⟶ .
6. In-line Terminal System End Treatments are used where site conditions will not accommodate a flared end treatment.
7. The type of terminal system to be used will be shown on the Project Plans.
8. As site conditions dictate, construct additional guard railing to shield fixed object(s). Additional guard railing length equal to multiples of 12'-6". Post spacing at 6'-3", except as specified in Note 4.
9. Layout Types 16D through 16L, shown on the A77G Series of Revised Standard PLans, typically used where guard railing is recommended to shield roadside fixed object(s) and a crashworthy end treatment is required for both directions of traffic.
10. Where placement of dike is required with guard railing, see Revised Standard Plan RSP A77C4 for dike positioning details.
11. W6 x 15 steel post, 8'-0" in length, with 8" x 8" x 1'-2" notched wood block or notched recycled plastic blocks may be used in place of the 10" x 10" x 8'-0" wood post with 8" x 8" x 1'-2" wood block shown in the "Strengthened Railing Sections Detail".

STATE OF CALIFORNIA
DEPARTMENT OF TRANSPORTATION

METAL BEAM GUARD RAILING TYPICAL LAYOUTS FOR ROADSIDE FIXED OBJECTS

NO SCALE

RSP A77G6 DATED JUNE 6, 2008 SUPERSEDES STANDARD PLAN A77G6
DATED MAY 1, 2006 - PAGE 64 OF THE STANDARD PLANS BOOK DATED MAY 2006.

REVISED STANDARD PLAN RSP A77G6

2006 REVISED STANDARD PLAN RSP A77G6

12-10-07

DIST	COUNTY	ROUTE	POST MILES TOTAL PROJECT	SHEET NO.	TOTAL SHEETS
07	LA	5	R73.2/R88.6	93	130

Randell D. Hiatt
REGISTERED CIVIL ENGINEER

June 6, 2008
PLANS APPROVAL DATE

REGISTERED PROFESSIONAL ENGINEER Randell D. Hiatt No. C50200 Exp. 6-30-09 CIVIL STATE OF CALIFORNIA

The State of California or its officers or agents shall not be responsible for the accuracy or completeness of electronic copies of this plan sheet.

To accompany plans dated 07-11-11

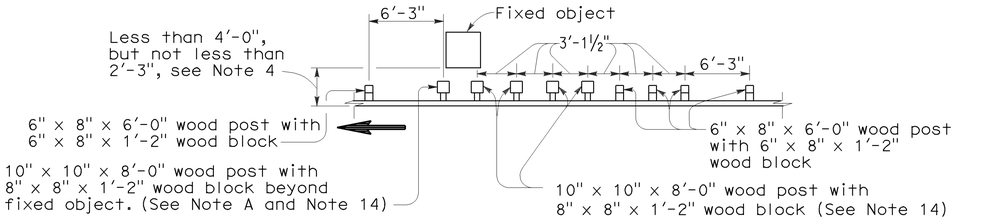

Note A. For a series of fixed objects (bridge columns, overhead sign supports, etc.) additional 10" x 10" x 8'-0" wood post with 8" x 8" x 1'-2" wood blocks at 3'-1½" center to center spacing are to be used between fixed object(s).

STRENGTHENED RAILING SECTIONS FOR FIXED OBJECT

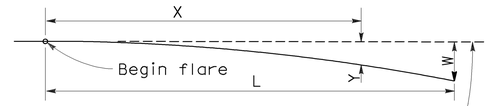

Base Line (Edge of paved shoulder or offset line of edge of traveled way)

$$Y = \frac{WX^2}{L^2}$$

Y = Offset from base line
W = Maximum offset
X = Distance along base line
L = Length of flare

PARABOLIC FLARE OFFSETS

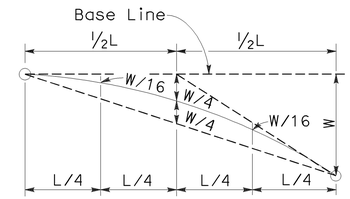

TYPICAL PARABOLIC LAYOUT

Use strengthened railing sections with Layout Types 16I or 16J Layouts where minimum clearance between the face of the guard railing and fixed object(s) is less than 4'-0", but not less than 2'-3". See Note 4.

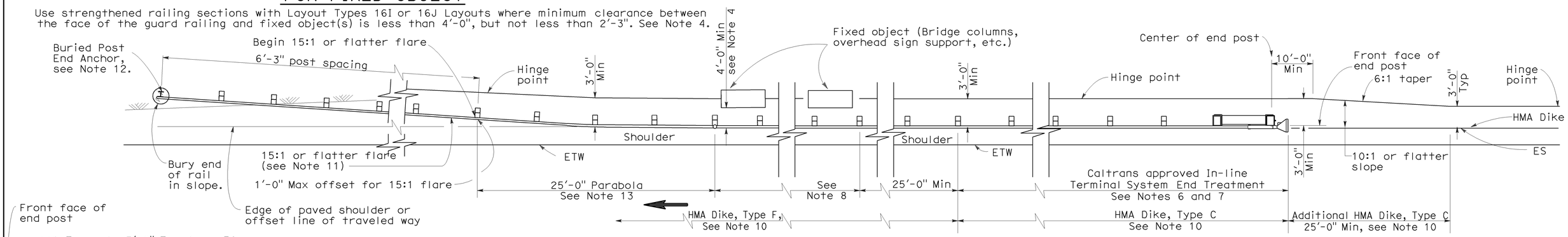

TYPE 16I LAYOUT

(GUARD RAILING INSTALLATION AT ROADSIDE FIXED OBJECT OR OBJECTS WITH AN IN-LINE END TREATMENT AND A BURIED END ANCHOR TREATMENT AT THE ENDS OF RAILING) See Note 9

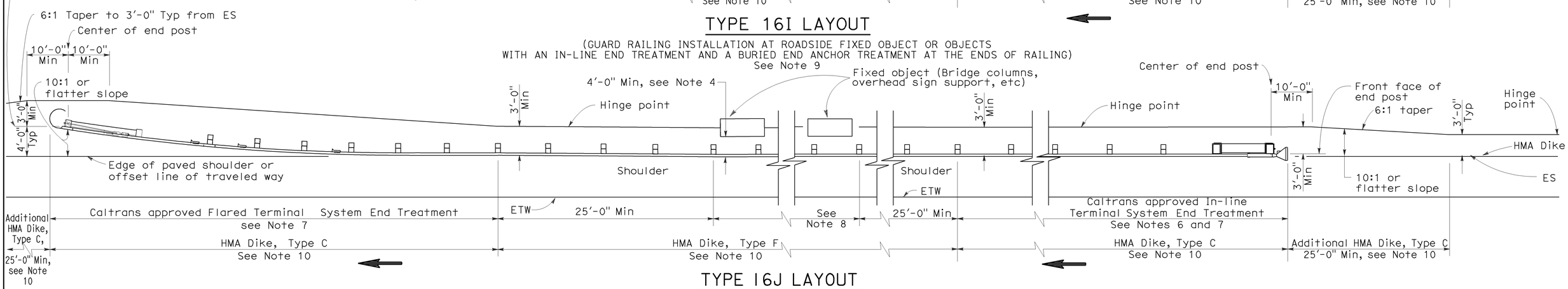

TYPE 16J LAYOUT

(GUARD RAILING INSTALLATION AT ROADSIDE FIXED OBJECT OR OBJECTS WITH AN IN-LINE END TREATMENT AND A FLARED END TREATMENT AT THE ENDS OF RAILING) See Note 9

NOTES:

1. Line post, blocks and hardware to be used are shown on Standard Plans A77A1, A77A2, A77B1, A77C1 and A77C2.
2. Guard railing post spacing to be 6'-3" center to center, except as otherwise noted.
3. Except as noted, line posts are 6" x 8" x 6'-0" wood with 6" x 8" x 1'-2" wood blocks. W6 x 9 steel posts, 6'-0" in length, with 6" x 8" x 1'-2" notched wood blocks or notched recycled plastic blocks may be used for 6" x 8" x 6'-0" wood posts with 6" x 8" x 1'-2" wood blocks where applicable and when specified.
4. A 4'-0" minimum clearance is required between the face of the railing and the face of a fixed object located directly behind standard guard railing sections with post spacing at 6'-3". Construct guard railing as shown in the detail "Strengthened Railing Sections for Fixed Objects" on this plan, where the clearance between the face of the railing and the face of a fixed object is less than 4'-0", but not less than 2'-3". Where the clearance is less than 2'-3", a concrete wall or barrier should be constructed to shield the fixed object(s).
5. Direction of adjacent traffic indicated by ➡.
6. In-line Terminal System End Treatments are used where site conditions will not accommodate a flared end treatment.
7. The type of terminal system to be used will be shown on the Project Plans.
8. As site conditions dictate, construct additional guard railing to shield fixed object(s). Additional guard railing length equal to multiples of 12'-6". Post spacing at 6'-3", except as specified in Note 4.
9. Layout Types 16D through 16L, shown on the A77G Series of Revised Standard Plans, are typically used where guard railing is recommended to shield roadside fixed object(s) and a crashworthy end treatment is required for both directions of traffic.
10. Where placement of dike is required with guard railing, see Revised Standard Plan RSP A77C4 for dike positioning details.
11. The 15:1 or flatter flare for the buried post anchor is based on the edge of the paved shoulder or offset line of edge of the traveled way. The length of guard railing within the 15:1 or flatter flare is based on site conditions and should be a length equal to multiples of 12'-6".
12. For details of Buried Post End Anchor details, see Standard Plan A77I2.
13. For typical flare offsets for 25'-0" length parabola with maximum offset of 1'-0", see Revised Standard RSP Plan A77E1.
14. W6 x 15 steel post, 8'-0" in length, with 8" x 8" x 1'-2" notched wood block or notched recycled plastic blocks may be used in place of the 10" x 10" x 8'-0" wood post with 8" x 8" x 1'-2" wood block shown in the "Strengthened Railing Sections Detail".

STATE OF CALIFORNIA
DEPARTMENT OF TRANSPORTATION

METAL BEAM GUARD RAILING TYPICAL LAYOUTS FOR ROADSIDE FIXED OBJECTS

NO SCALE

RSP A77G7 DATED JUNE 6, 2008 SUPERSEDES STANDARD PLAN A77G7 DATED MAY 1, 2006 - PAGE 65 OF THE STANDARD PLANS BOOK DATED MAY 2006.

REVISED STANDARD PLAN RSP A77G7

2006 REVISED STANDARD PLAN RSP A77G7

12-10-07

DIST	COUNTY	ROUTE	POST MILES TOTAL PROJECT	SHEET NO.	TOTAL SHEETS
07	LA	5	R73.2/R88.6	94	130

Randell D. Hiatt
REGISTERED CIVIL ENGINEER

June 6, 2008
PLANS APPROVAL DATE

REGISTERED PROFESSIONAL ENGINEER Randell D. Hiatt No. C50200 Exp. 6-30-09 CIVIL STATE OF CALIFORNIA

The State of California or its officers or agents shall not be responsible for the accuracy or completeness of electronic copies of this plan sheet.

To accompany plans dated 07-11-11

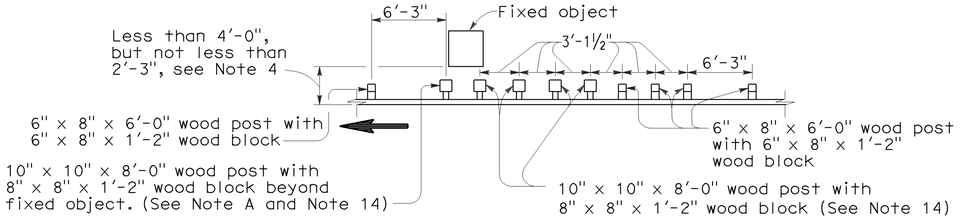

Note A. For a series of fixed objects (bridge columns, overhead sign supports, etc.) additional 10" x 10" x 8'-0" wood post with 8" x 8" x 1'-2" wood blocks at 3'-1½" center to center spacing are to be used between fixed object(s).

STRENGTHENED RAILING SECTIONS FOR FIXED OBJECT

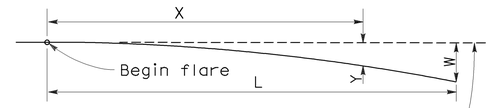

Base Line (Edge of paved shoulder or offset line of edge of traveled way)

$$Y = \frac{WX^2}{L^2}$$

Y = Offset from base line
W = Maximum offset
X = Distance along base line
L = Length of flare

PARABOLIC FLARE OFFSETS

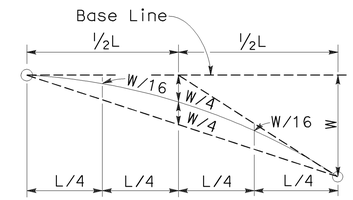

TYPICAL PARABOLIC LAYOUT

Use strengthened railing sections with Layout Types 16K or 16L Layouts where minimum clearance between the face of the guard railing and fixed object(s) is less than 4'-0", but not less than 2'-3". See Note 4.

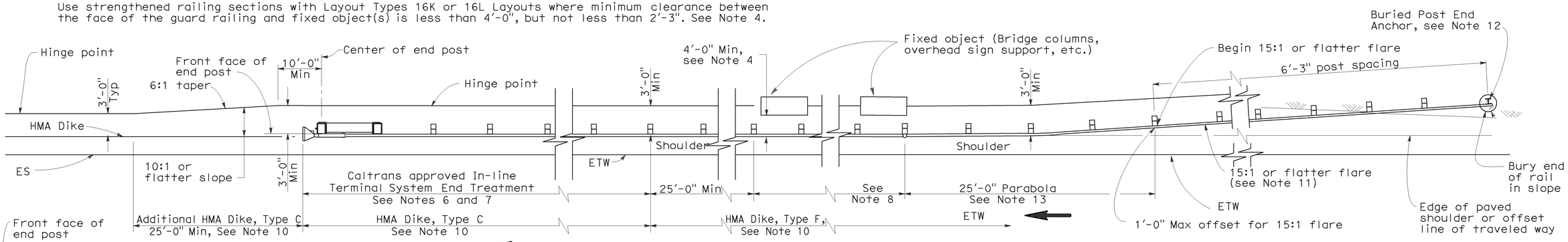

TYPE 16K LAYOUT

(GUARD RAILING INSTALLATION AT ROADSIDE FIXED OBJECT OR OBJECTS WITH A BURIED END ANCHOR TREATMENT AND AN IN-LINE END TREATMENT AT THE ENDS OF RAILING)
See Note 9

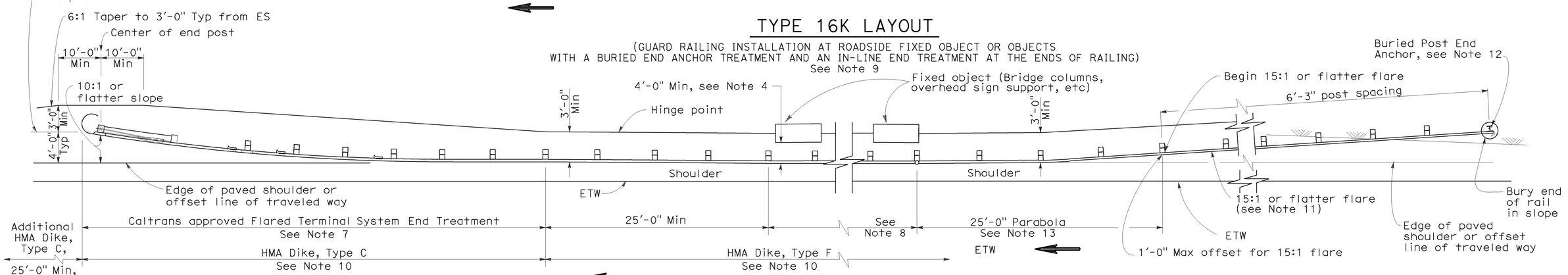

TYPE 16L LAYOUT

(GUARD RAILING INSTALLATION AT ROADSIDE FIXED OBJECT OR OBJECTS WITH A BURIED END ANCHOR TREATMENT AND A FLARED END TREATMENT AT THE ENDS OF RAILING)
See Note 9

NOTES:

1. Line post, blocks and hardware to be used are shown on Standard Plans A77A1, A77A2, A77B1, A77C1 and A77C2.
2. Guard railing post spacing to be 6'-3" center to center, except as otherwise noted.
3. Except as noted, line posts are 6" x 8" x 6'-0" wood with 6" x 8" x 1'-2" wood blocks. W6 x 9 steel posts, 6'-0" in length, with 6" x 8" x 1'-2" notched wood blocks or notched recycled plastic blocks may be used for 6" x 8" x 6'-0" wood posts with 6" x 8" x 1'-2" wood blocks where applicable and when specified.
4. A 4'-0" minimum clearance is required between the face of the railing and the face of a fixed object located directly behind standard guard railing sections with post spacing at 6'-3". Construct guard railing as shown in the detail "Strengthened Railing Sections for Fixed Objects" on this plan, where the clearance between the face of the railing and the face of a fixed object is less than 4'-0", but not less than 2'-3". Where the clearance is less than 2'-3", a concrete wall or barrier should be constructed to shield the fixed object(s).
5. Direction of adjacent traffic indicated by ⟶.
6. In-line Terminal System End Treatments are used where site conditions will not accommodate a flared end treatment.
7. The type of terminal system to be used will be shown on the Project Plans.
8. As site conditions dictate, construct additional guard railing to shield fixed object(s). Additional guard railing length equal to multiples of 12'-6". Post spacing at 6'-3", except as specified in Note 4.
9. Layout Types 16D through 16L, shown on the A77G Series of Revised Standard Plans are typically used where guard railing is recommended to shield roadside fixed object(s) and a crashworthy end treatment is required for both directions of traffic.
10. Where placement of dike is required with guard railing, see Revised Standard Plan RSP A77C4 for dike positioning details.
11. The 15:1 or flatter flare for the buried post anchor is based on the edge of the paved shoulder or offset line of edge of the traveled way. The length of guard railing within the 15:1 or flatter flare is based on site conditions and should be a length equal to multiples of 12'-6".
12. For details of Buried Post End Anchor details, see Standard Plan A77I2.
13. For typical flare offsets for 25'-0" length parabola with maximum offset of 1'-0", see Revised Standard RSP Plan A77E1.
14. W6 x 15 steel post, 8'-0" in length, with 8" x 8" x 1'-2" notched wood block or notched recycled plastic blocks may be used in place of the 10" x 10" x 8'-0" wood post with 8" x 8" x 1'-2" wood block shown in the "Strengthened Railing Sections Detail".

STATE OF CALIFORNIA
DEPARTMENT OF TRANSPORTATION

METAL BEAM GUARD RAILING TYPICAL LAYOUTS FOR ROADSIDE FIXED OBJECTS

NO SCALE

RSP A77G8 DATED JUNE 6, 2008 SUPERSEDES STANDARD PLAN A77G8 DATED MAY 1, 2006 - PAGE 66 OF THE STANDARD PLANS BOOK DATED MAY 2006.

REVISED STANDARD PLAN RSP A77G8

2006 REVISED STANDARD PLAN RSP A77G8

12-10-07

Dist	COUNTY	ROUTE	POST MILES TOTAL PROJECT	SHEET No.	TOTAL SHEETS
07	LA	5	R73.2/R88.6	95	130

Randell D. Hiatt
REGISTERED CIVIL ENGINEER

May 20, 2011
PLANS APPROVAL DATE

REGISTERED PROFESSIONAL ENGINEER
Randell D. Hiatt
No. C50200
Exp. 6-30-11
CIVIL
STATE OF CALIFORNIA

The State of California or its officers or agents shall not be responsible for the accuracy or completeness of electronic copies of this plan sheet.

To accompany plans dated 07-11-11

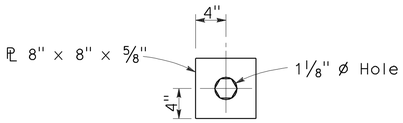

DETAIL A
CABLE CONNECTION
END PLATE

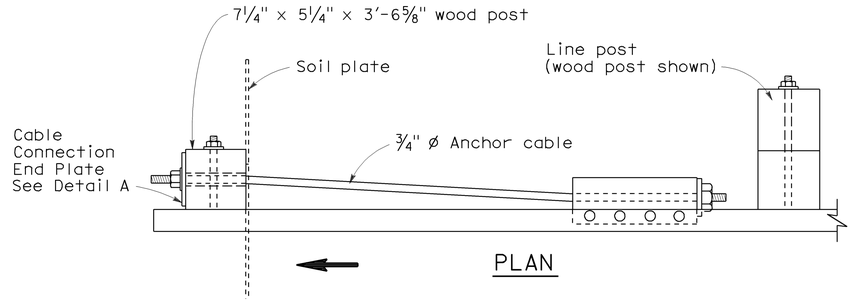

PLAN

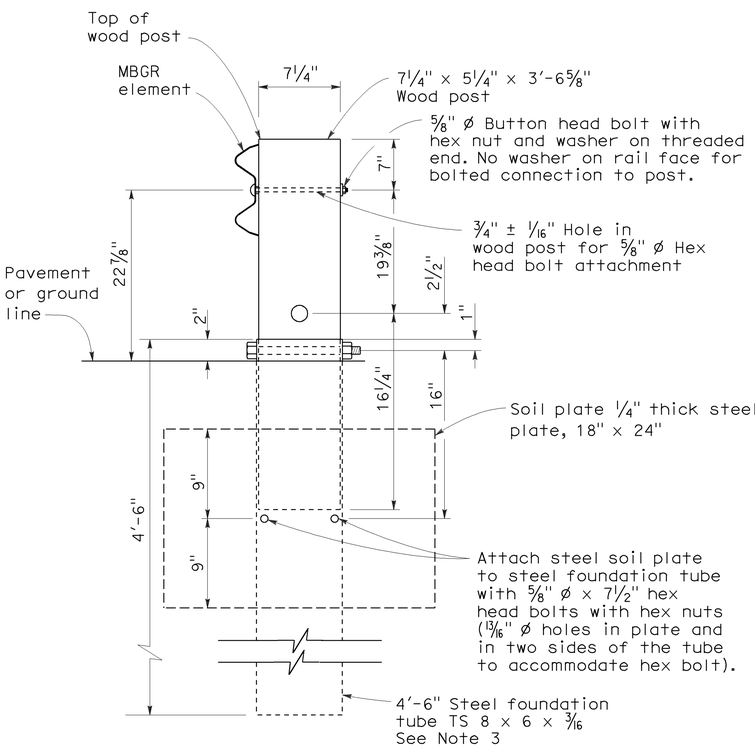

SECTION A-A

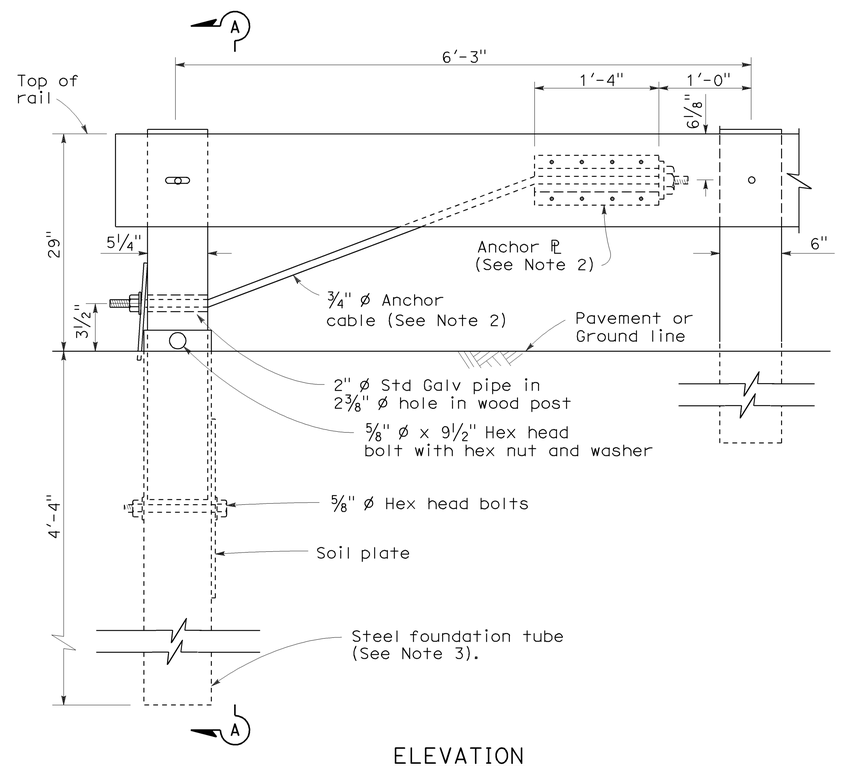

ELEVATION
END ANCHOR
ASSEMBLY (TYPE SFT)
See Note 1

NOTES:

1. See the A77E, A77F and A77G series of Standard Plans for typical use of End Anchor Assembly (Type SFT).
2. For details of the anchor plate and 3/4" cable, see Standard Plan A77H3.
3. A 6'-0" length steel foundation tube, TS 8 x 6 x 3/16, without a soil plate, may be furnished and installed in place of the 4'-6" length steel foundation tube and soil plate shown. Minimum embedment of the 6'-0" length tube shall be 5'-9". A 5/8" ø hex head bolt and nut shall be installed in the hole in the 6'-0" length tube to keep the wood post from dropping into the tube.
4. Direction of traffic indicated by ⟶.
5. Install line post, steel foundation tube and soil plate in soil.

STATE OF CALIFORNIA
DEPARTMENT OF TRANSPORTATION

METAL RAILING END ANCHOR ASSEMBLY (TYPE SFT)

NO SCALE

RSP A77H1 DATED MAY 20, 2011 SUPERSEDES STANDARD PLAN A77H1
DATED MAY 1, 2006 - PAGE 67 OF THE STANDARD PLANS BOOK DATED MAY 2006.

REVISED STANDARD PLAN RSP A77H1

2006 REVISED STANDARD PLAN RSP A77H1

Dist	COUNTY	ROUTE	POST MILES TOTAL PROJECT	SHEET No.	TOTAL SHEETS
07	LA	5	R73.2/R88.6	96	130

Randell D. Hiatt
REGISTERED CIVIL ENGINEER

May 20, 2011
PLANS APPROVAL DATE

REGISTERED PROFESSIONAL ENGINEER
Randell D. Hiatt
No. C50200
Exp. 6-30-11
CIVIL
STATE OF CALIFORNIA

The State of California or its officers or agents shall not be responsible for the accuracy or completeness of electronic copies of this plan sheet.

To accompany plans dated 07-11-11

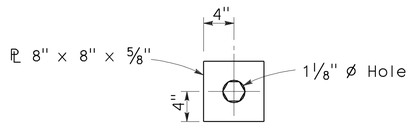

DETAIL A
CABLE CONNECTION
END PLATE

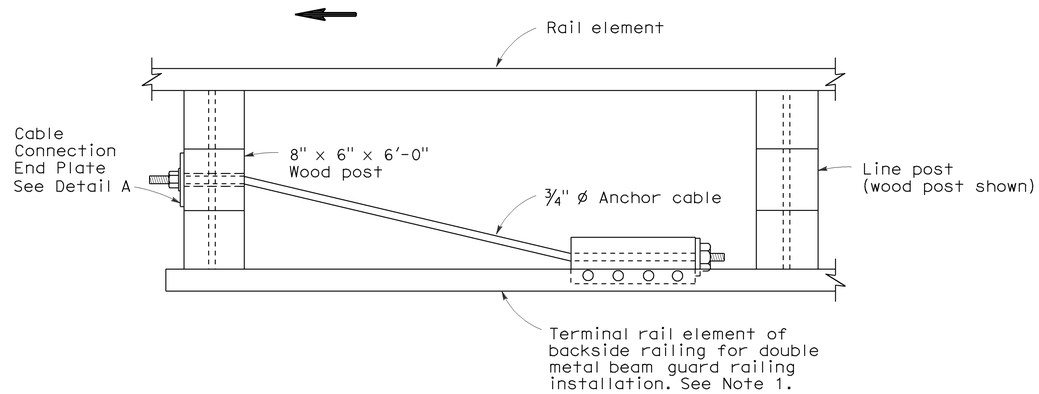

PLAN

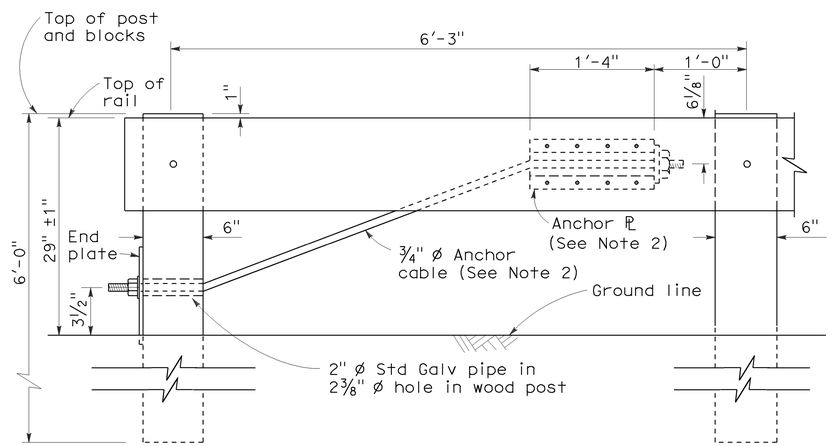

ELEVATION
RAIL TENSIONING
ASSEMBLY
See Note 1

NOTES:

1. See Standard Plan A77F3 and Standard Plan A77G1 for typical use of rail tensioning assembly.
2. For details of the anchor plate and 3/4" cable, see Standard Plan A77H3.
3. Direction of traffic indicated by ➡.

STATE OF CALIFORNIA
DEPARTMENT OF TRANSPORTATION

METAL RAILING
RAIL TENSIONING ASSEMBLY

NO SCALE

RSP A77H2 DATED MAY 20, 2011 SUPERSEDES STANDARD PLAN A77H2
DATED MAY 1, 2006 - PAGE 68 OF THE STANDARD PLANS BOOK DATED MAY 2006.

REVISED STANDARD PLAN RSP A77H2

2006 REVISED STANDARD PLAN RSP A77H2

3-10-11

Dist	COUNTY	ROUTE	POST MILES TOTAL PROJECT	SHEET No.	TOTAL SHEETS
07	LA	5	R73.2/R88.6	97	130

Randell D. Hiatt
REGISTERED CIVIL ENGINEER

May 20, 2011
PLANS APPROVAL DATE

REGISTERED PROFESSIONAL ENGINEER
Randell D. Hiatt
No. C50200
Exp. 6-30-11
CIVIL
STATE OF CALIFORNIA

The State of California or its officers or agents shall not be responsible for the accuracy or completeness of electronic copies of this plan sheet.

To accompany plans dated 07-11-11

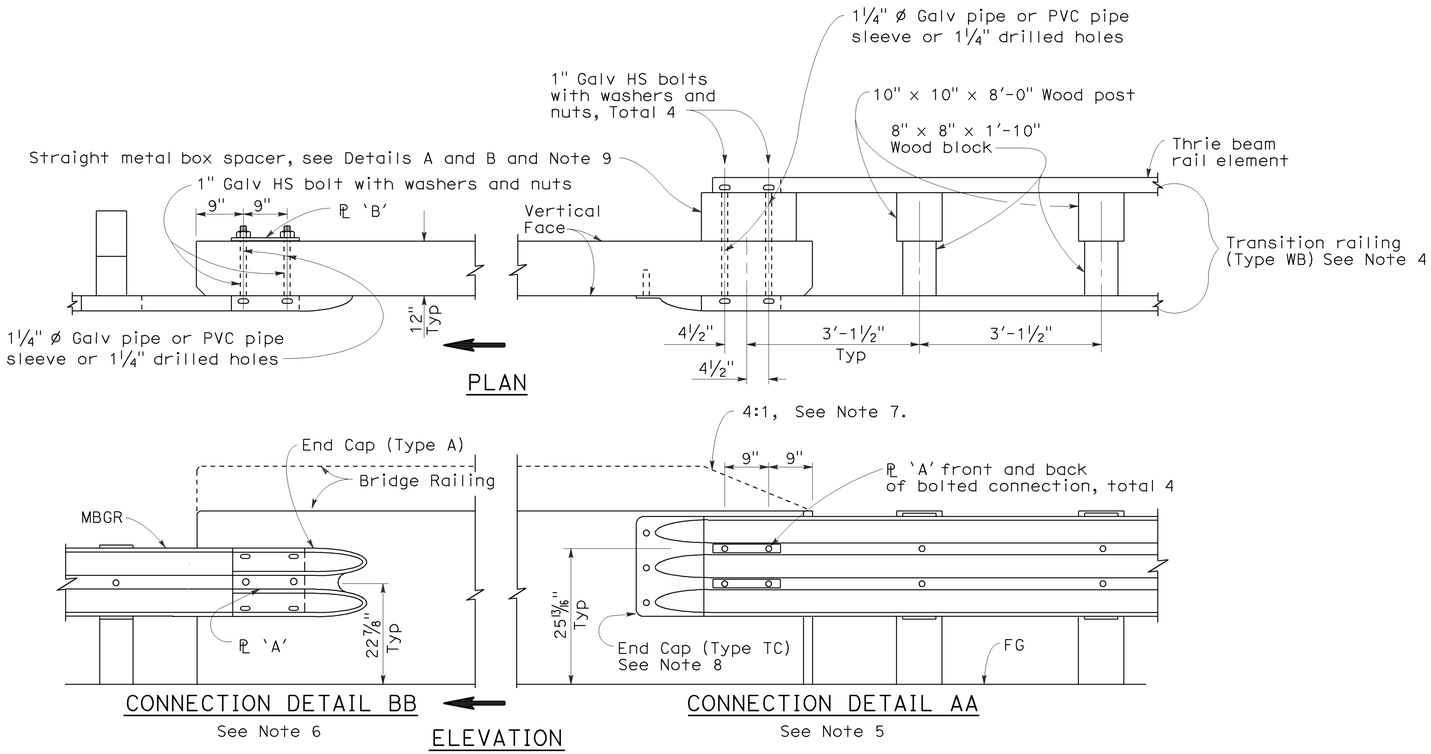

GUARD RAILING CONNECTION TO BRIDGE RAILING WITHOUT SIDEWALK

NOTES:

1. See Revised Standard Plan RSP A77J2 for additional connection details to bridges without sidewalks.
2. Additional details of posts, blocks and hardware are shown on Standard Plan A77B1, A77C1 and A77C2.
3. Direction of adjacent traffic indicated by ➡.
4. For additional details of Transition Railing (Type WB), see Standard Plan A77J4. Transition Railing (Type WB) transitions the 12 gage w-beam standard railing section of guard railing to a heavier gage nested thrie beam railing section which is connected to the concrete bridge railing.
5. For typical use of Connection Detail AA, see Layout Types 12A and 12B on Revised Standard Plan RSP A77F1, Layout Types 12C and 12D on Standard Plan A77F2, and Layout Type 12E on Revised Standard Plan RSP A77F3.
6. For typical use of Connection Detail BB, see Layout Type 12D (structure departure railing connection) on Standard Plan A77F2 and Layout Type 12DD on Standard Plan A77F5.
7. Where the height of the bridge railing exceeds the height of the thrie beam railing by more than 1" at Connection Detail AA, taper the top of the end of the bridge railing at 4:1 to match the top elevation of the thrie beam rail.
8. For details of End Cap (Type TC), see Standard Plan A77J4.
9. See Standard Plan A77J4 for additional details regarding depth dimension for straight metal box spacer.

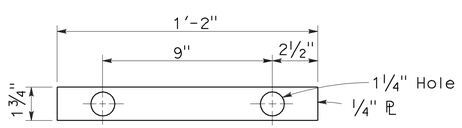

PLATE 'A'

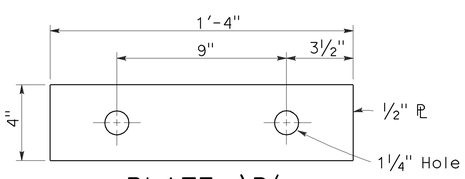

PLATE 'B'
(For backside of connection BB)

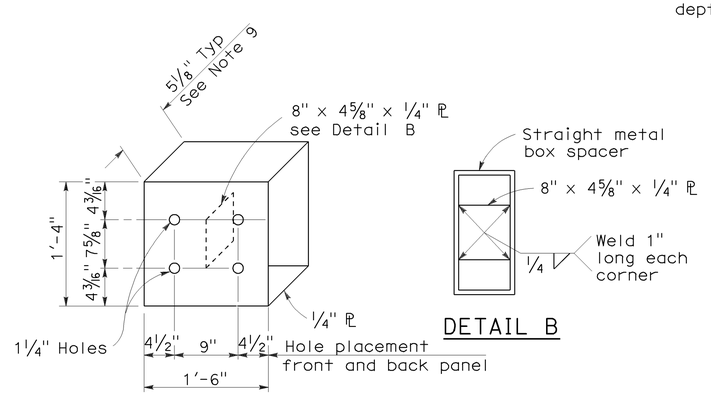

DETAIL A

DETAIL B

STRAIGHT METAL BOX SPACER

STATE OF CALIFORNIA
DEPARTMENT OF TRANSPORTATION

METAL BEAM GUARD RAILING CONNECTIONS TO BRIDGE RAILINGS WITHOUT SIDEWALKS DETAILS No.1

NO SCALE

RSP A77J1 DATED MAY 20, 2011 SUPERSEDES RSP A77J1 DATED JUNE 6, 2008 AND STANDARD PLAN A77J1 DATED MAY 1, 2006 - PAGE 72 OF THE STANDARD PLANS BOOK DATED MAY 2006.

REVISED STANDARD PLAN RSP A77J1

2006 REVISED STANDARD PLAN RSP A77J1

3-10-11

DIST	COUNTY	ROUTE	POST MILES TOTAL PROJECT	SHEET NO.	TOTAL SHEETS
07	LA	5	R73.2/R88.6	98	130

Randell D. Hiatt
REGISTERED CIVIL ENGINEER

June 6, 2008
PLANS APPROVAL DATE

REGISTERED PROFESSIONAL ENGINEER
Randell D. Hiatt
No. C50200
Exp. 6-30-09
CIVIL
STATE OF CALIFORNIA

The State of California or its officers or agents shall not be responsible for the accuracy or completeness of electronic copies of this plan sheet.

To accompany plans dated 07-11-11

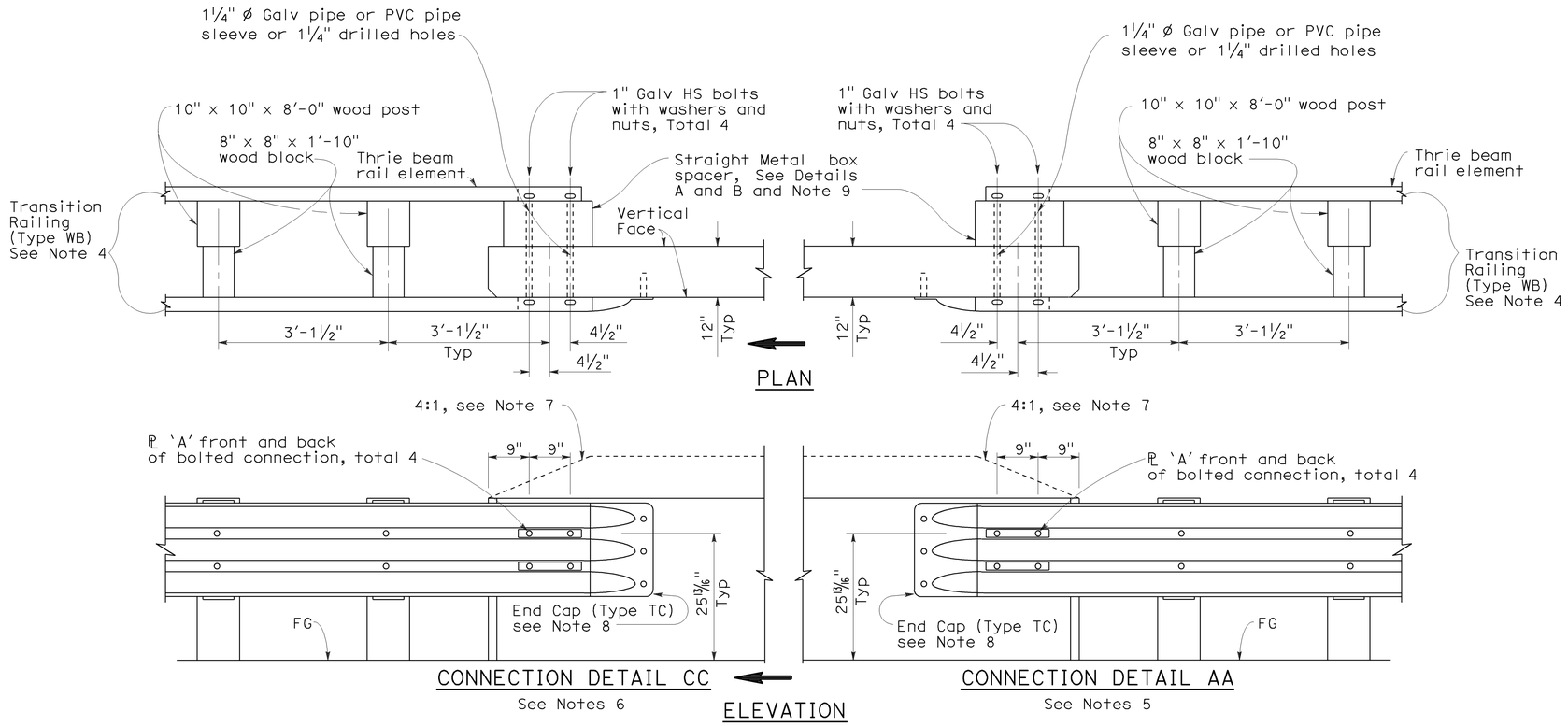

GUARD RAILING CONNECTION TO BRIDGE RAILING WITHOUT SIDEWALK

NOTES:

1. See Revised Standard Plan RSP A77J1 for additional connection details to bridges without sidewalks.
2. Additional details of posts, blocks and hardware are shown on Standard Plan A77B1, A77C1 and A77C2.
3. Direction of adjacent traffic indicated by ⟹.
4. For additional details of Transition Railing (Type WB), see Standard Plan A77J4. Transition Railing (Type WB) transitions the 12 gage w-beam standard railing section of guard railing to a heavier gage nested thrie beam railing section which is connected to the concrete bridge railing.
5. For typical use of Connection Detail AA, see Layout Types 12A and 12B on Revised Standard Plan RSP A77F1, Layout Types 12C and 12D on Standard Plan A77F2, and Layout Type 12E on Revised Standard Plan RSP A77F3.
6. For typical use of Connection Detail CC, see Layout Types 12AA and 12BB on Standard Plan A77F4 and Layout Type 12CC on Standard Plan A77F5.
7. Where the height of the bridge railing exceeds the height of the thrie beam railing by more than 1" at Connection Detail AA and connection Detail CC, taper the top of the end of the bridge railing at 4:1 to match the top elevation of the thrie beam railing.
8. For details of End Cap (Type TC), see Standard Plans A77J4.
9. See Standard Plans A77J4 for additional details regarding depth dimension for straight metal box spacer.

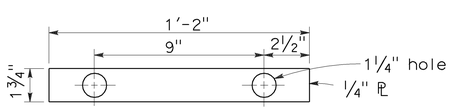

PLATE 'A'

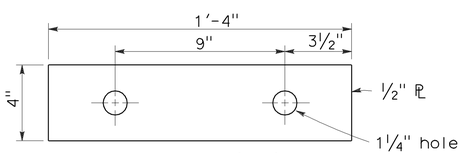

PLATE 'B'
(For backside of connection BB)

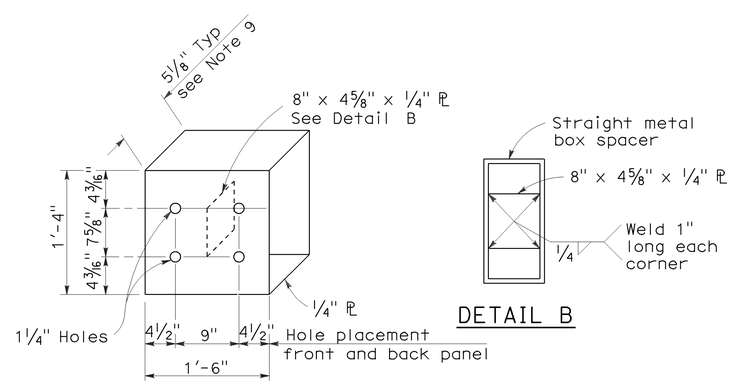

DETAIL A

DETAIL B

STRAIGHT METAL BOX SPACER

STATE OF CALIFORNIA
DEPARTMENT OF TRANSPORTATION

METAL BEAM GUARD RAILING CONNECTIONS TO BRIDGE RAILINGS WITHOUT SIDEWALKS DETAILS No.2

NO SCALE

RSP A77J2 DATED JUNE 6, 2008 SUPERSEDES STANDARD PLAN A77J2 DATED MAY 1, 2006 - PAGE 73 OF THE STANDARD PLANS BOOK DATED MAY 2006.

REVISED STANDARD PLAN RSP A77J2

2006 REVISED STANDARD PLAN RSP A77J2

12-10-07

Dist	COUNTY	ROUTE	POST MILES TOTAL PROJECT	SHEET No.	TOTAL SHEETS
07	LA	5	R73.2/R88.6	99	130

Randell D. Hiatt
REGISTERED CIVIL ENGINEER

May 20, 2011
PLANS APPROVAL DATE

REGISTERED PROFESSIONAL ENGINEER
Randell D. Hiatt
No. C50200
Exp. 6-30-11
CIVIL
STATE OF CALIFORNIA

The State of California or its officers or agents shall not be responsible for the accuracy or completeness of electronic copies of this plan sheet.

To accompany plans dated 07-11-11

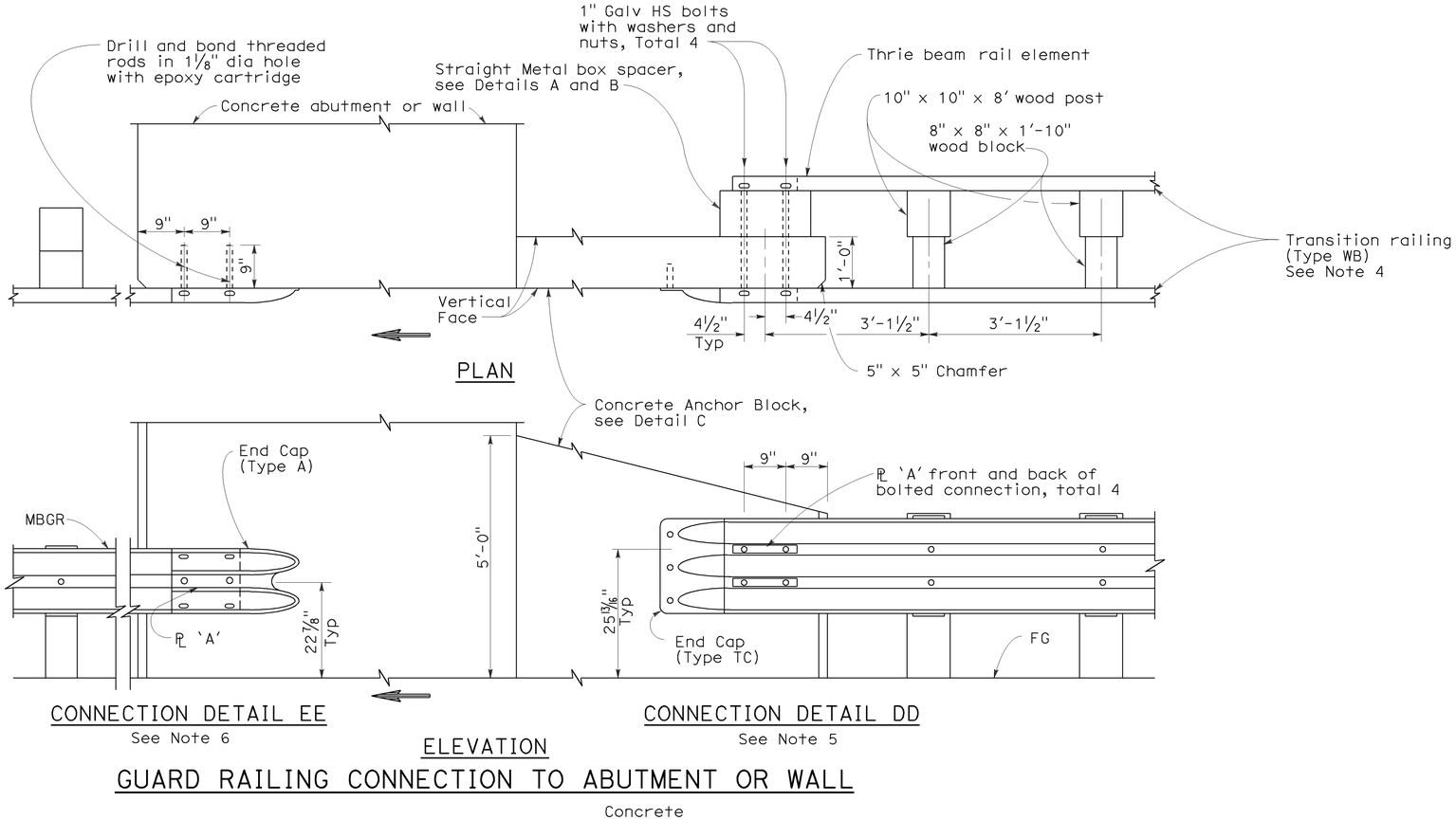

GUARD RAILING CONNECTION TO ABUTMENT OR WALL

NOTES:

1. These connection details apply to abutments and walls.
2. Additional details of posts, blocks and hardware are shown on Standard Plans A77B1, A77C1 and A77C2.
3. Direction of adjacent traffic indicated by ➡.
4. For additional details of Transition Railing (Type WB), see Standard Plan A77J4 Transition Railing (Type WB) transitions the 12 gage w-beam standard railing section of guard railing to a heavier gage nested thrie beam railing section which is connected to the concrete anchor block.
5. For typical use of Connection Details DD, See Layout Types 12A and 12B on Standard Plan A77F1 and Layout Types 12C and 12D on Standard Plan A77F2.
6. For typical use of Connection Detail EE, see Layout Type 12D on Standard Plan A77F2 and Layout Type 12DD on Standard Plan A77F5.

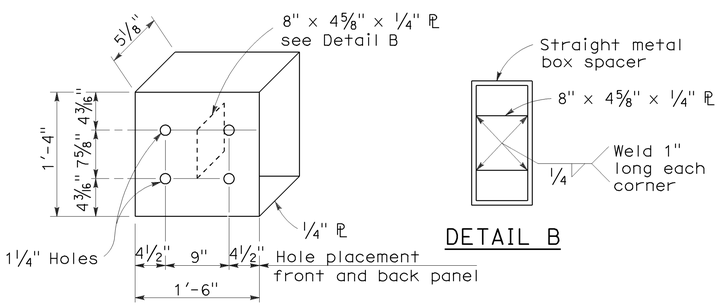

DETAIL A

STRAIGHT METAL BOX SPACER

DETAIL B

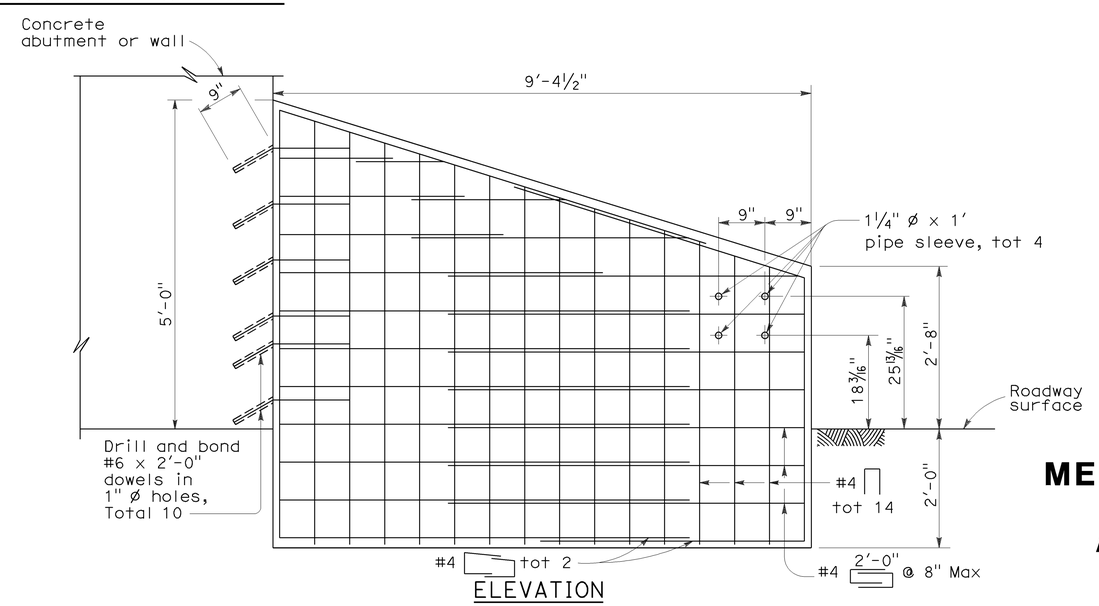

ELEVATION

ANCHOR BLOCK FOR TRANSITION RAILING CONNECTION

DETAIL C

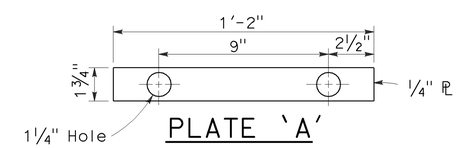

PLATE 'A'

STATE OF CALIFORNIA
DEPARTMENT OF TRANSPORTATION

METAL BEAM GUARD RAILING CONNECTIONS TO ABUTMENTS AND WALLS

NO SCALE

RSP A77J3 DATED MAY 20, 2011 SUPERSEDES STANDARD PLAN A77J3 DATED MAY 1, 2006 - PAGE 74 OF THE STANDARD PLANS BOOK DATED MAY 2006.

REVISED STANDARD PLAN RSP A77J3

2006 REVISED STANDARD PLAN RSP A77J3

3-10-11

Dist	COUNTY	ROUTE	POST MILES TOTAL PROJECT	SHEET No.	TOTAL SHEETS
07	LA	5	R73.2/R88.6	100	130

Randell D. Hiatt
REGISTERED CIVIL ENGINEER

May 20, 2011
PLANS APPROVAL DATE

REGISTERED PROFESSIONAL ENGINEER
Randell D. Hiatt
No. C50200
Exp. 6-30-11
CIVIL
STATE OF CALIFORNIA

To accompany plans dated 07-11-11

The State of California or its officers or agents shall not be responsible for the accuracy or completeness of electronic copies of this plan sheet.

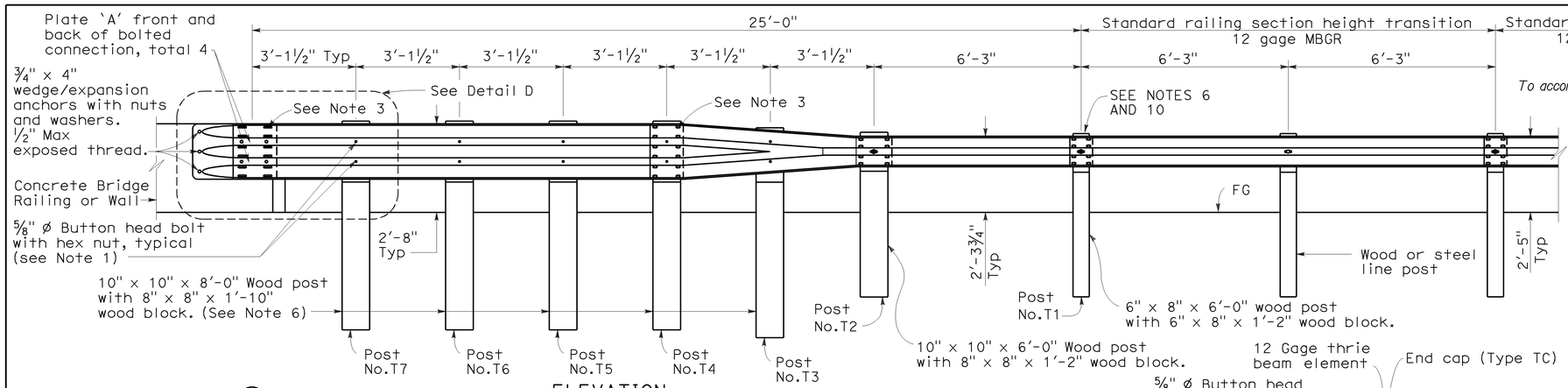

ELEVATION

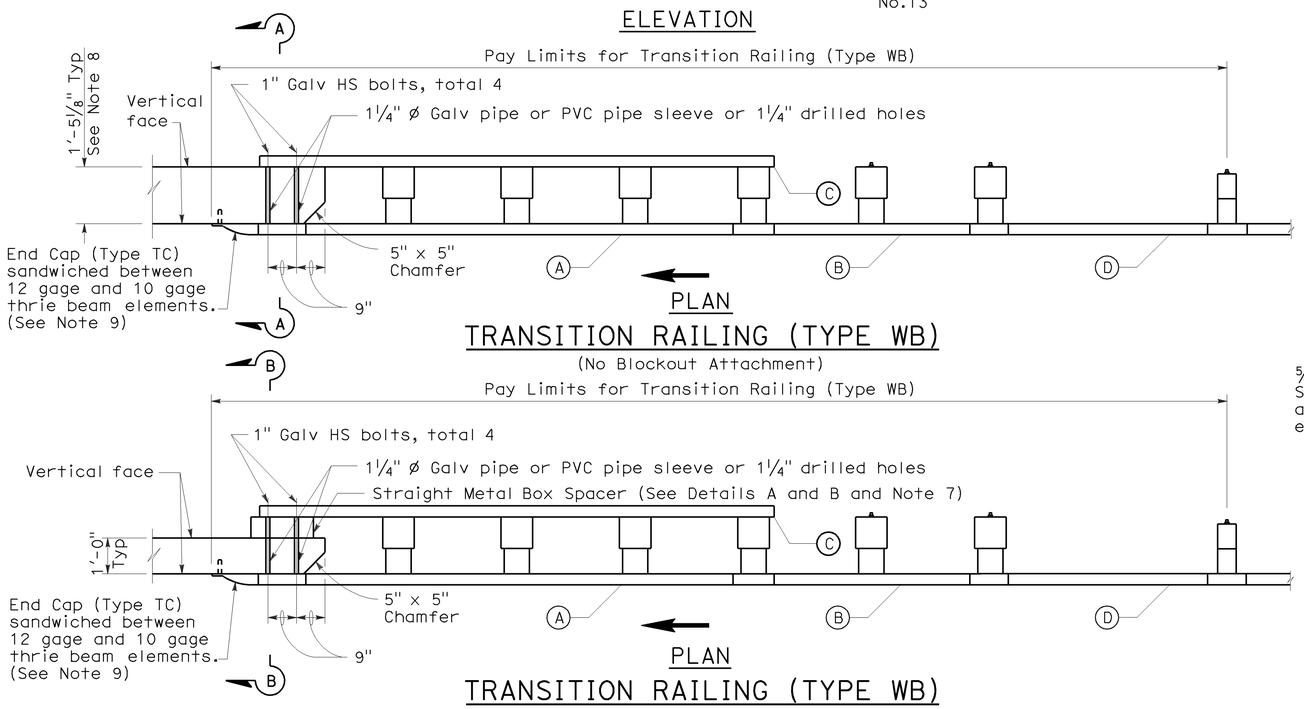

PLAN

TRANSITION RAILING (TYPE WB)

(No Blockout Attachment)

PLAN

TRANSITION RAILING (TYPE WB)

(Blockout Attachment)

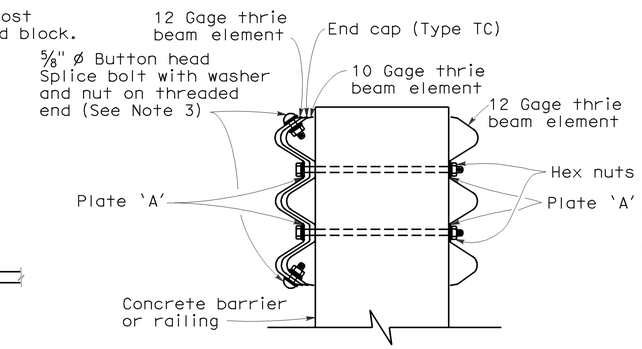

SECTION A-A

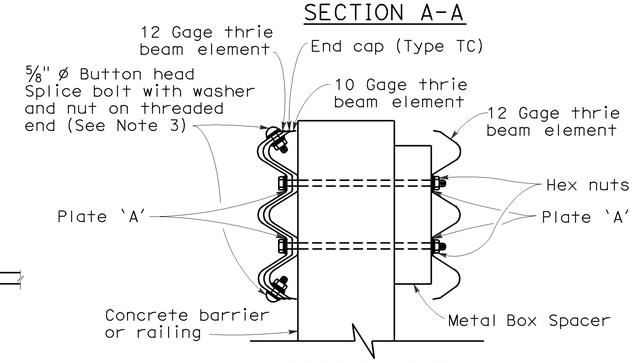

SECTION B-B

NOTES:

1. Use ⅝" ø Button head bolts and hex nuts for connections to posts. No washer on rail face for bolted connections to post.
2. The nested rail elements, end cap, and 'W' beam to thrie beam element may be spliced together prior to bolting the elements to the wood post and concrete barrier or railing.
3. Exterior splice bolt holes for rail element splices at Post No. T4 and the connection to the concrete barrier or railing shall be the standard 29/32" x 1⅛" slot size. Interior splice bolt holes at these locations may be increased up to 1¼" ø. Only the top 2 and the bottom 2 splice bolts with washers and nuts are required for rail splices at Post No. T4 and the connection to the concrete barrier or railing.
4. Direction of adjacent traffic indicated by ➡.
5. The top elevation of Posts No. T2 through No. T7 shall not project more than 1" above the top elevation of the rail element.
6. Typically, the railing connected to Transition Railing (Type WB) will be either standard railing section of metal beam guard railing with height transition ratio of 120:1 or an approved Caltrans end treatment attached to Post No. T1.
7. The depth of the metal box spacer varies from the 5⅛" to 1½" and is dependent on the width of the concrete railing or wall. The combined dimension for the depth of the metal box spacer plus the width of railing or wall is typically 17⅛". Where the space between the backside of the concrete railing or wall and the rear thrie beam element is less than 1½", metal plates similar to Plate 'A' are to be used as spacers.
8. Where the width of the concrete railing or wall is greater than 17⅛", wood blocks are to be used to fill the space created between the backside of Posts No. T4 through No. T7 and the rear thrie beam element. These wood blocks shall be 8" in width and 1'-2" in length. The dimension between the front thrie beam element and the rear thrie beam element is to match the width of the concrete railing or wall.
9. End cap may be installed over 12 gage and 10 gage thrie beam elements where transition railing is installed on the departure end of bridge railing.
10. Conform standard railing section height to 2'-3¾" at Post No. T1 using height transition ratio of 120:1.

LEGEND

(A) Nested thrie beam elements (one 12 gage element nested over one 10 gage element).

(B) One 10 gage "W" beam to thrie beam element.

(C) One 12 gage thrie beam element.

(D) One 10 gage "W" beam rail element (7'-3½" length)

10 gage = 0.135" thick

12 gage = 0.108" thick

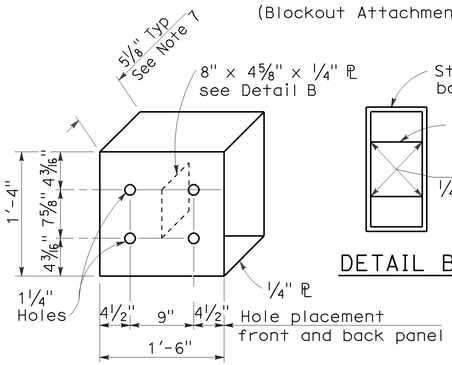

DETAIL A

STRAIGHT METAL BOX SPACER

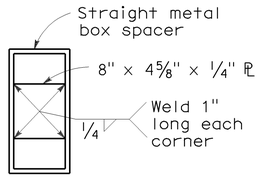

DETAIL B

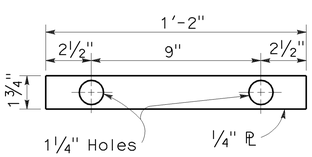

DETAIL C

PLATE 'A'

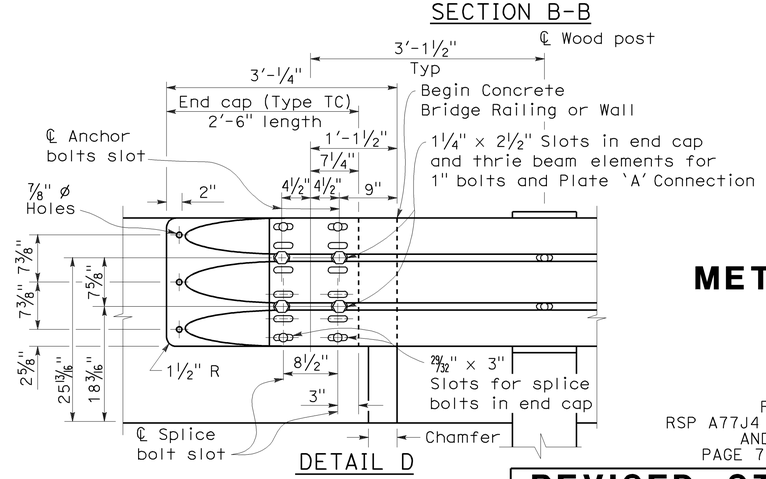

DETAIL D

STATE OF CALIFORNIA
DEPARTMENT OF TRANSPORTATION

METAL BEAM GUARD RAILING TRANSITION RAILING (TYPE WB)

NO SCALE

RSP A77J4 DATED MAY 20, 2011 SUPERSEDES
RSP A77J4 DATED JUNE 5, 2009, RSP A77J4 DATED JUNE 6, 2008
AND STANDARD PLAN A77J4 DATED MAY 1, 2006 -
PAGE 75 OF THE STANDARD PLANS BOOK DATED MAY 2006.

REVISED STANDARD PLAN RSP A77J4

2006 REVISED STANDARD PLAN RSP A77J4

5-14-09