Dist	COUNTY	ROUTE	POST MILES TOTAL PROJECT	SHEET No.	TOTAL SHEETS
07	LA	101	31.1/38.2	1	74

STATE OF CALIFORNIA
DEPARTMENT OF TRANSPORTATION

SARRA-Q101(182)E

PROJECT PLANS FOR CONSTRUCTION ON
STATE HIGHWAY
IN LOS ANGELES COUNTY
IN CALABASAS, AGOURA HILLS AND WESTLAKE VILLAGE
FROM 0.2 MILE WEST OF LAS VIRGENES ROAD OVERCROSSING TO LOS ANGELES COUNTY LINE

TO BE SUPPLEMENTED BY STANDARD PLANS DATED MAY 2006

INDEX OF PLANS

Sheet No.	Description
1	Title and Location Map
2-5	Typical Cross Sections
6-9	Construction Details
10	Erosion Control Plan, Details, Quantities
11-15	Drainage Plan, Profiles, Details, Quantities
16	Construction Area signs
17-44	Traffic Handling Plan, Details, Quantities
45-48	Pavement Delineation Plan, Details, Quantities
49-51	Summary of Quantities
52-57	Signal Lighting and Electrical Systems Plan, Details
58-70	Revised and New Standard Plans

Structure Plans

71-74	Route 101 Approach Slab Rehabilitation

THE STANDARD PLANS LIST APPLICABLE TO THIS CONTRACT IS INCLUDED IN THE NOTICE TO BIDDERS AND SPECIAL PROVISIONS BOOK.

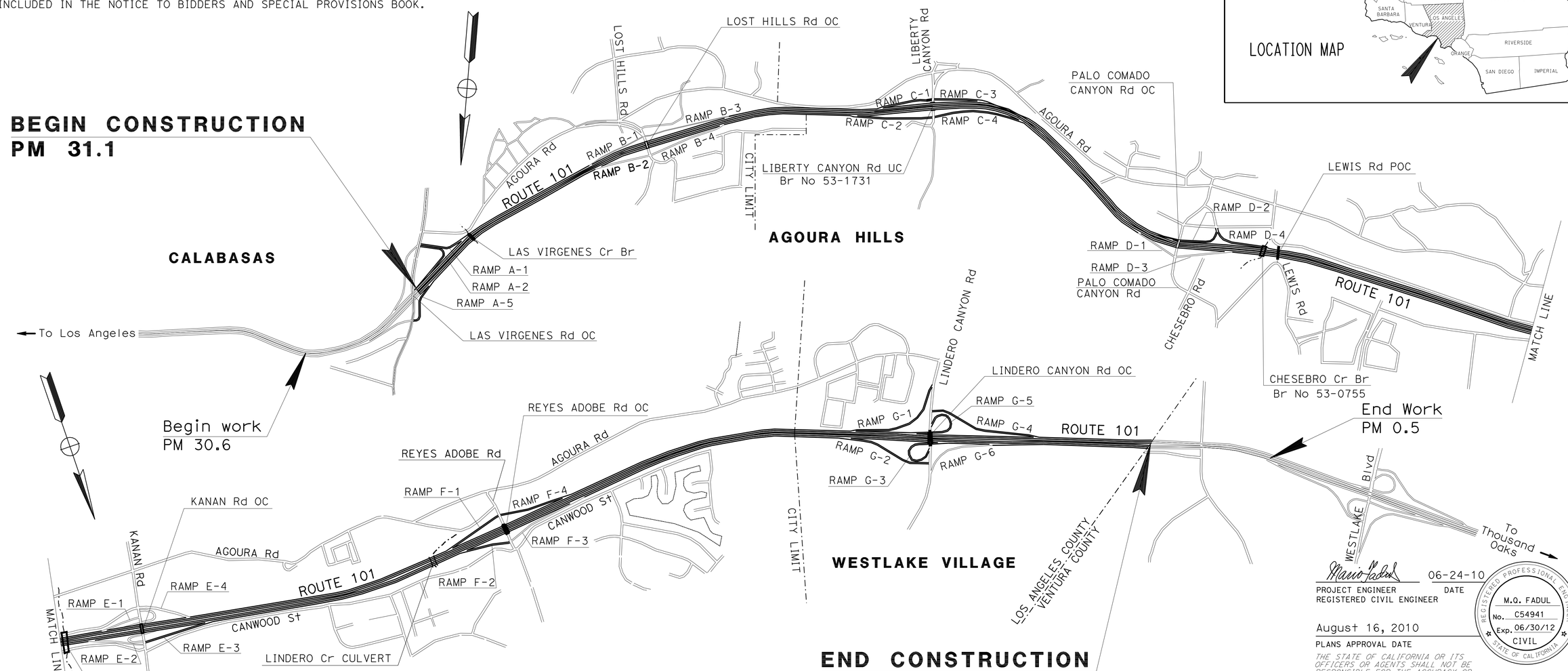

THE CONTRACTOR SHALL POSSESS THE CLASS (OR CLASSES) OF LICENSE AS SPECIFIED IN THE "NOTICE TO BIDDERS."

PROJECT MANAGER D. MIRAANEY

DESIGN ENGINEER M. Q. FADUL

PROJECT ENGINEER REGISTERED CIVIL ENGINEER — DATE 06-24-10

August 16, 2010
PLANS APPROVAL DATE

REGISTERED PROFESSIONAL ENGINEER — M.Q. FADUL No. C54941 Exp. 06/30/12 CIVIL — STATE OF CALIFORNIA

THE STATE OF CALIFORNIA OR ITS OFFICERS OR AGENTS SHALL NOT BE RESPONSIBLE FOR THE ACCURACY OR COMPLETENESS OF SCANNED COPIES OF THIS PLAN SHEET.

CONTRACT No.	07-252104
PROJECT ID	0700020105

LAST REVISION 08-25-10 — DATE PLOTTED => 25-AUG-2010 — TIME PLOTTED => 14:22

Dist	COUNTY	ROUTE	POST MILES TOTAL PROJECT	SHEET No.	TOTAL SHEETS
07	LA	101	31.1/38.2	2	74

REGISTERED CIVIL ENGINEER 06-24-10 DATE

08-16-10
PLANS APPROVAL DATE

REGISTERED PROFESSIONAL ENGINEER M.Q. FADUL No. C54941 Exp. 06/30/12 CIVIL STATE OF CALIFORNIA

THE STATE OF CALIFORNIA OR ITS OFFICERS OR AGENTS SHALL NOT BE RESPONSIBLE FOR THE ACCURACY OR COMPLETENESS OF SCANNED COPIES OF THIS PLAN SHEET.

NOTES:

1. DIMENSIONS OF THE STRUCTURAL SECTIONS ARE SUBJECT TO TOLERANCES SPECIFIED IN THE STANDARD SPECIFICATIONS.
2. SUPERELEVATION AS SHOWN OR AS DIRECTED BY THE ENGINEER.
3. EXISTING SURVEY MONUMENTS, COMMUNICATION PULL BOXES AND DRAINAGE INLETS/DRAINS TO REMAIN AND BE PROTECTED IN PLACE.
4. SHOULDER BACKING AS SHOWN OR AS DIRECTED BY THE ENGINEER.
5. SEE SUMMARY OF QUANTITIES Q-2 FOR LOCATION AND LIMITS OF SHOULDER BACKING WORK.

TYPICAL STRUCTURAL SECTIONS

1E
Exist
0.45′ AC (TYPE B)
0.75′ PCC
0.45′ CLASS A RM CTB
0.50′ CLASS 3 AB

2E
Exist
0.45′ AC (TYPE B)
0.65′ PCC
0.45′ CLASS A RM CTB
0.60′ CLASS 3 AB

3E
Exist
0.90′ & Var AC (TYPE B)
0.65′ CLASS 2 AB
0.60′ CLASS 4 AB

4E
Exist
0.75′ & Var AC (TYPE B)
0.55′ CLASS 2 AB
0.50′ & Var CLASS 4 AB

5E
Exist
0.35′ AC (TYPE B)
0.55′ CLASS 2 AB
0.80′ Class 4 AB

6E
Exist
0.25′ AC (TYPE B)
0′ TO 2.0′ CLASS 3 AB

7E
Exist
0.50′ AC (TYPE B)
0.65′ CLASS A RM CTB
0.25′ CLASS 3 AB
0.40′ CLASS 4 AS

8E
Exist
0.35′ AC (TYPE B)
0.65′ CLASS A RM CTB
0.25′ CLASS 3 AB
0.40′ CLASS 4 AS

ABBREVIATIONS:

RHMA-G - RUBBERIZED HOT MIX ASPHALT (GAP GRADED)
HMA-G - HOT MIX ASPHALT (TYPE B)
RSC - RAPID STRENGTH CONCRETE

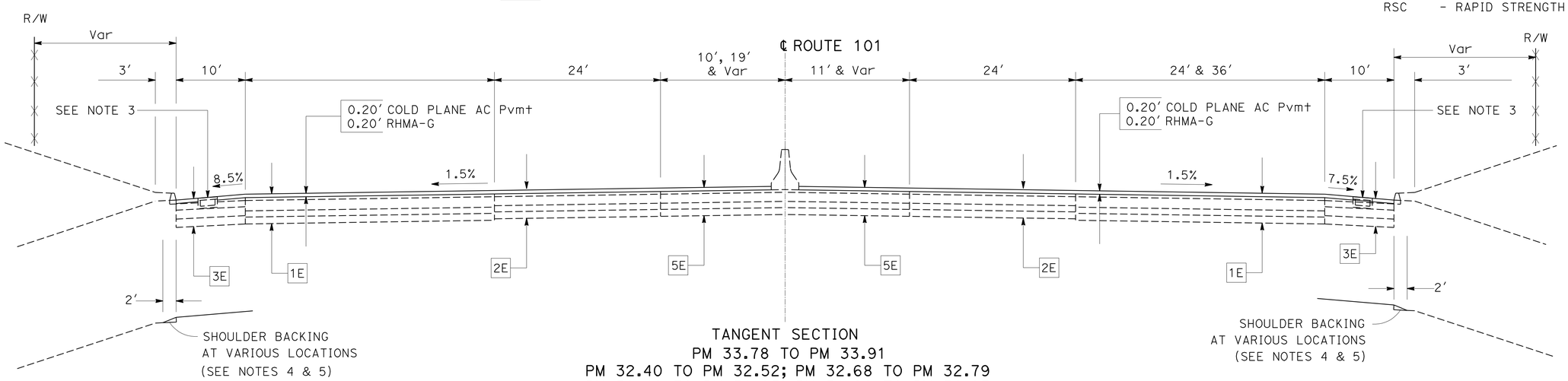

TANGENT SECTION
PM 33.78 TO PM 33.91
PM 32.40 TO PM 32.52; PM 32.68 TO PM 32.79
PM 31.42 TO PM 31.65; PM 31.92 TO PM 32.13

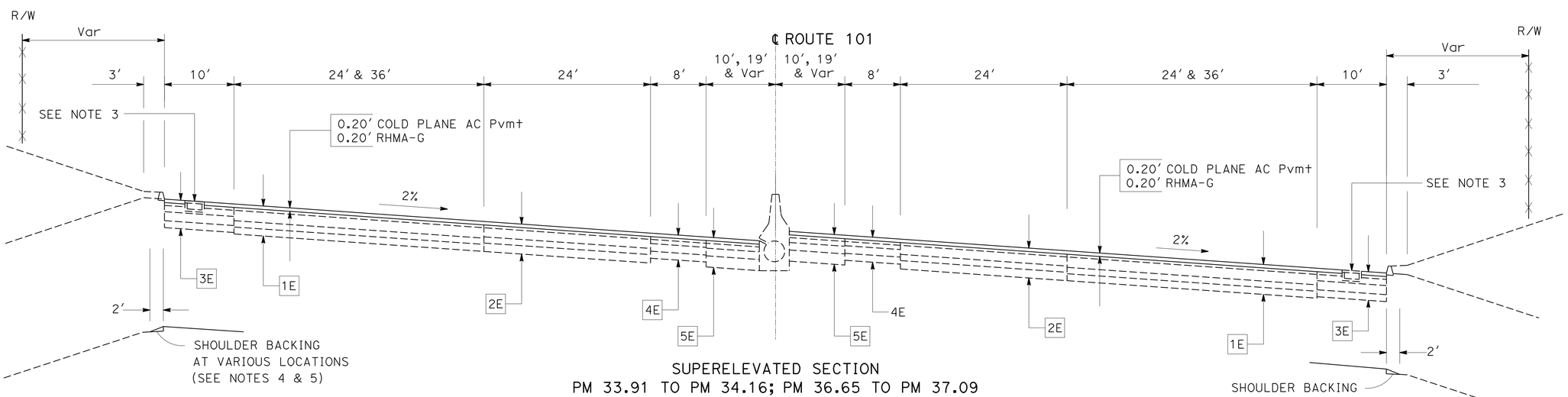

SUPERELEVATED SECTION
PM 33.91 TO PM 34.16; PM 36.65 TO PM 37.09
PM 32.13 TO PM 32.40; PM 32.79 TO PM 33.22
PM 31.05 TO PM 31.42; PM 31.65 TO PM 31.92

TYPICAL CROSS SECTIONS

NO SCALE

X-1

STATE OF CALIFORNIA - DEPARTMENT OF TRANSPORTATION
Caltrans
DESIGN

FUNCTIONAL SUPERVISOR: DEREK HIGA
CALCULATED-DESIGNED BY: MARIO FADUL
CHECKED BY: AINSLEY CHIANG
REVISED BY
DATE REVISED

LAST REVISION 00-00-00
DATE PLOTTED => 25-AUG-2010
TIME PLOTTED => 14:22

Dist	COUNTY	ROUTE	POST MILES TOTAL PROJECT	SHEET No.	TOTAL SHEETS
07	LA	101	31.1/38.2	3	74

REGISTERED CIVIL ENGINEER 06-24-10 DATE

08-16-10
PLANS APPROVAL DATE

REGISTERED PROFESSIONAL ENGINEER M.Q. FADUL No. C54941 Exp. 06/30/12 CIVIL STATE OF CALIFORNIA

THE STATE OF CALIFORNIA OR ITS OFFICERS OR AGENTS SHALL NOT BE RESPONSIBLE FOR THE ACCURACY OR COMPLETENESS OF SCANNED COPIES OF THIS PLAN SHEET.

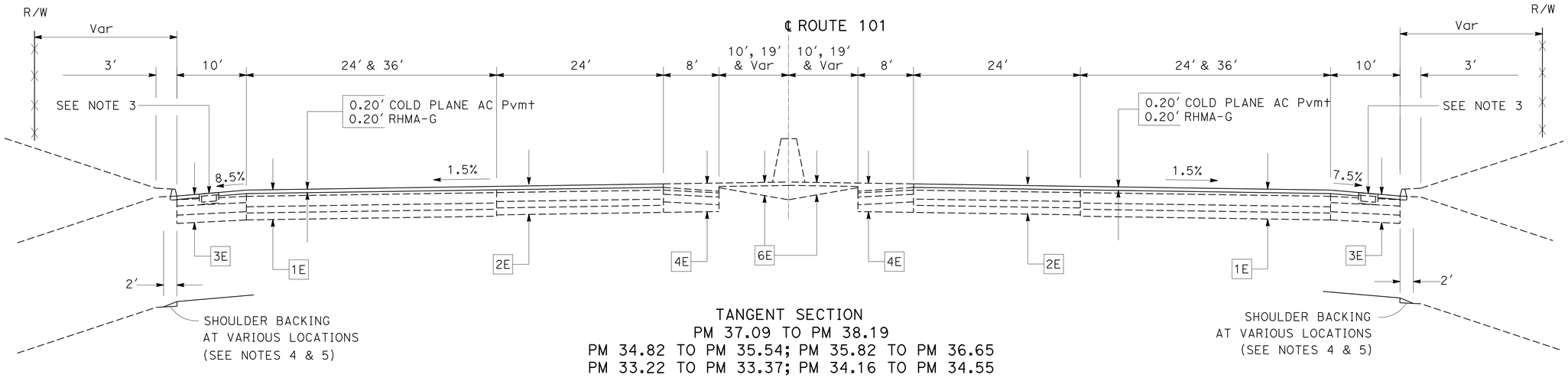

TANGENT SECTION
PM 37.09 TO PM 38.19
PM 34.82 TO PM 35.54; PM 35.82 TO PM 36.65
PM 33.22 TO PM 33.37; PM 34.16 TO PM 34.55

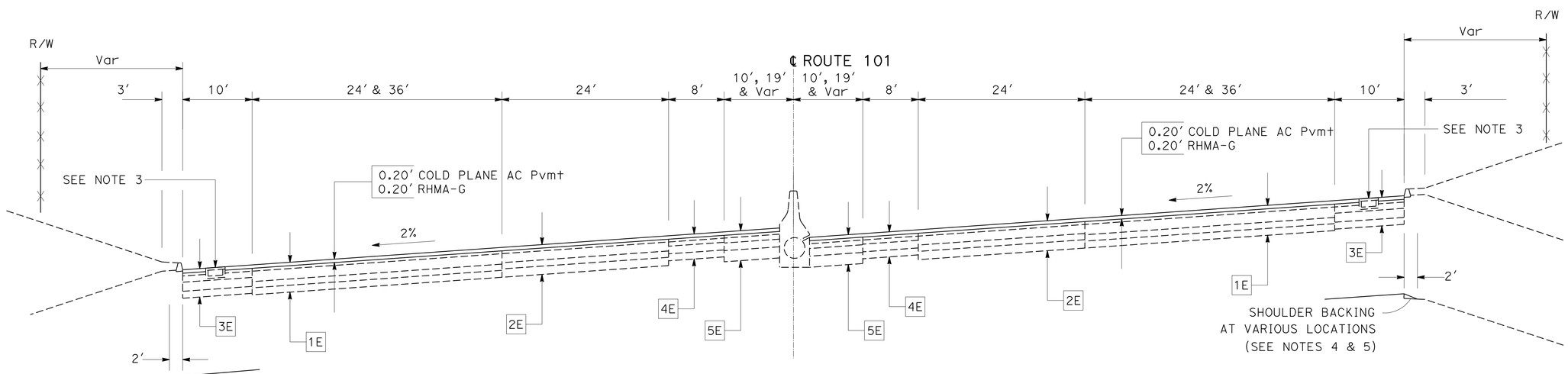

SUPERELEVATED SECTION
PM 34.55 TO PM 34.82; PM 35.54 TO PM 35.82
PM 32.52 TO PM 32.68; PM 33.37 TO PM 33.78

TYPICAL CROSS SECTIONS

NO SCALE

X-2

REVISED BY | DATE REVISED
MARIO FADUL | AINSLEY CHIANG
CALCULATED-DESIGNED BY | CHECKED BY
FUNCTIONAL SUPERVISOR: DEREK HIGA
STATE OF CALIFORNIA - DEPARTMENT OF TRANSPORTATION
DESIGN
Caltrans

LAST REVISION 00-00-00 | DATE PLOTTED => 25-AUG-2010 | TIME PLOTTED => 14:22

Dist	COUNTY	ROUTE	POST MILES TOTAL PROJECT	SHEET No.	TOTAL SHEETS
07	LA	101	31.1/38.2	4	74

REGISTERED CIVIL ENGINEER 06-24-10 DATE

08-16-10
PLANS APPROVAL DATE

REGISTERED PROFESSIONAL ENGINEER M.Q. FADUL No. C54941 Exp. 06/30/12 CIVIL STATE OF CALIFORNIA

THE STATE OF CALIFORNIA OR ITS OFFICERS OR AGENTS SHALL NOT BE RESPONSIBLE FOR THE ACCURACY OR COMPLETENESS OF SCANNED COPIES OF THIS PLAN SHEET.

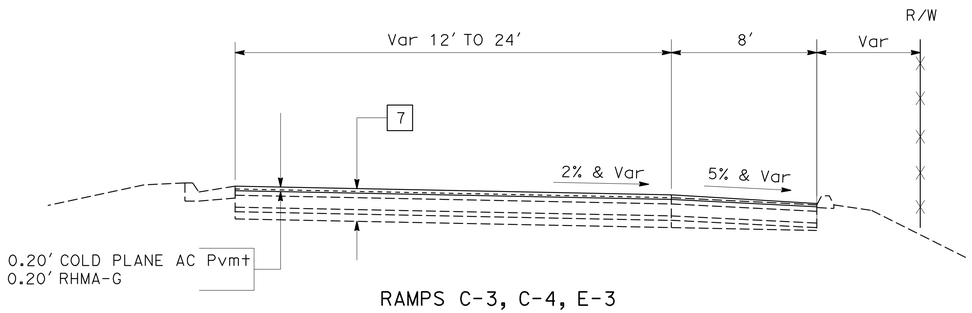

RAMPS C-3, C-4, E-3

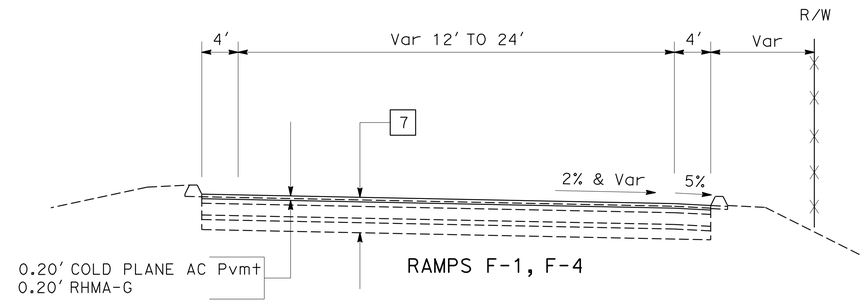

RAMPS F-1, F-4

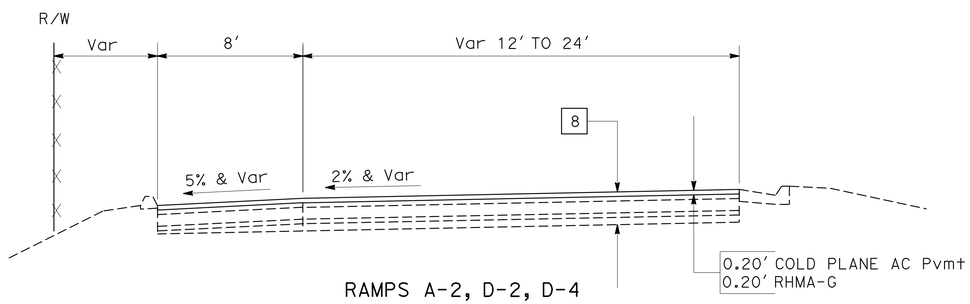

RAMPS A-2, D-2, D-4

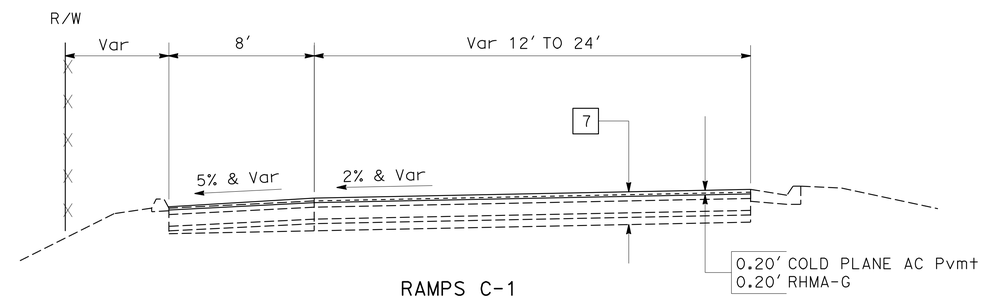

RAMPS C-1

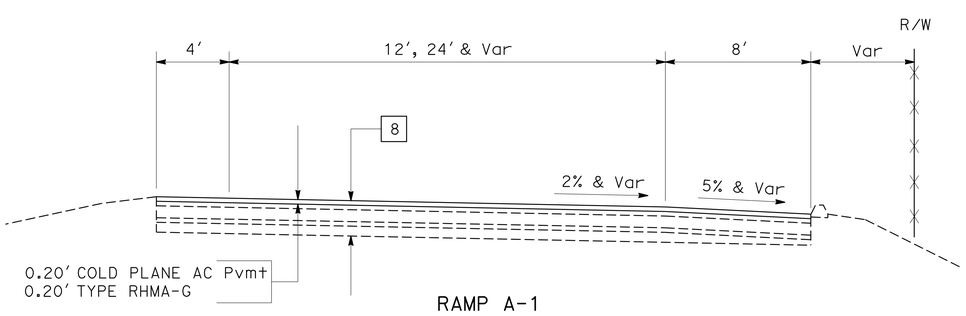

RAMP A-1

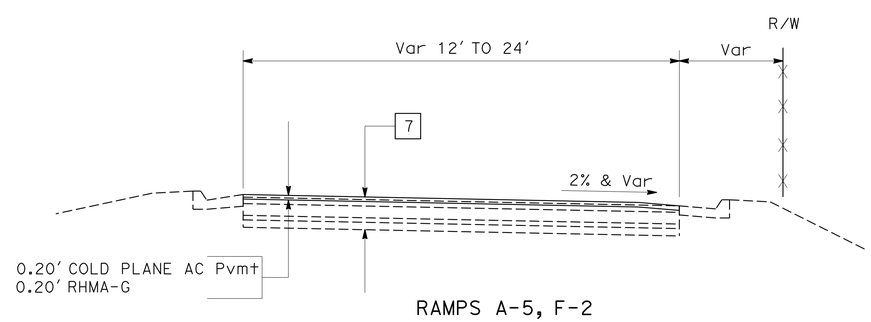

RAMPS A-5, F-2

TYPICAL CROSS SECTIONS

NO SCALE

X-3

STATE OF CALIFORNIA - DEPARTMENT OF TRANSPORTATION
Caltrans®
DESIGN

FUNCTIONAL SUPERVISOR: DEREK HIGA
CALCULATED-DESIGNED BY: MARIO FADUL
CHECKED BY: AINSLEY CHIANG
REVISED BY
DATE REVISED

LAST REVISION 00-00-00
DATE PLOTTED => 25-AUG-2010
TIME PLOTTED => 14:22

Dist	COUNTY	ROUTE	POST MILES TOTAL PROJECT	SHEET No.	TOTAL SHEETS
07	LA	101	31.1/38.2	5	74

REGISTERED CIVIL ENGINEER 06-24-10 DATE

08-16-10
PLANS APPROVAL DATE

REGISTERED PROFESSIONAL ENGINEER
M.Q. FADUL
No. C54941
Exp. 06/30/12
CIVIL
STATE OF CALIFORNIA

THE STATE OF CALIFORNIA OR ITS OFFICERS OR AGENTS SHALL NOT BE RESPONSIBLE FOR THE ACCURACY OR COMPLETENESS OF SCANNED COPIES OF THIS PLAN SHEET.

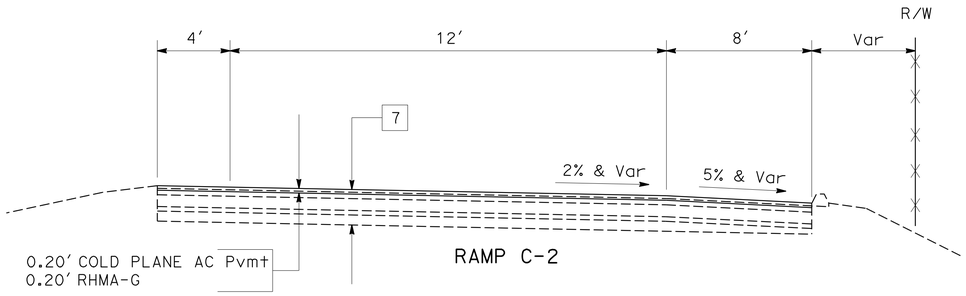

RAMP C-2

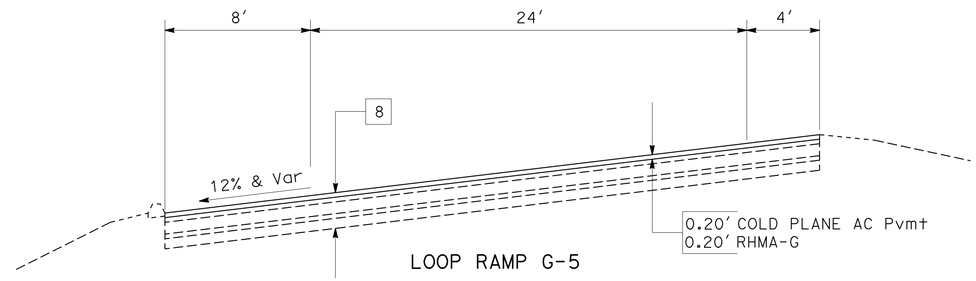

LOOP RAMP G-5

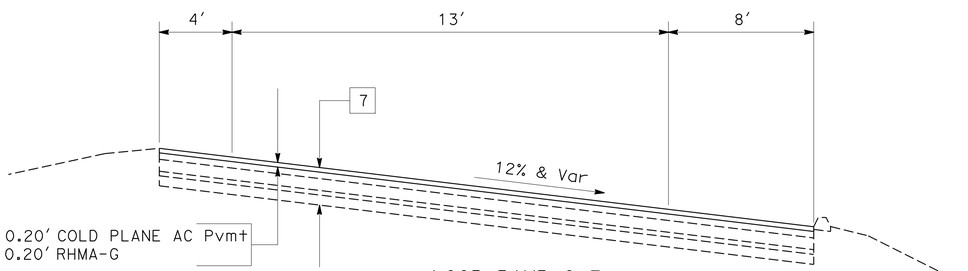

LOOP RAMP G-3

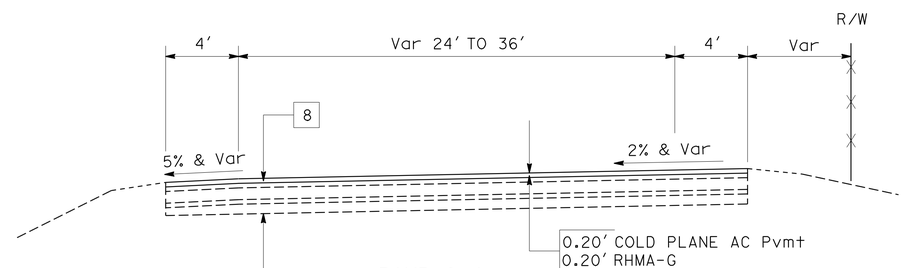

RAMP G-4

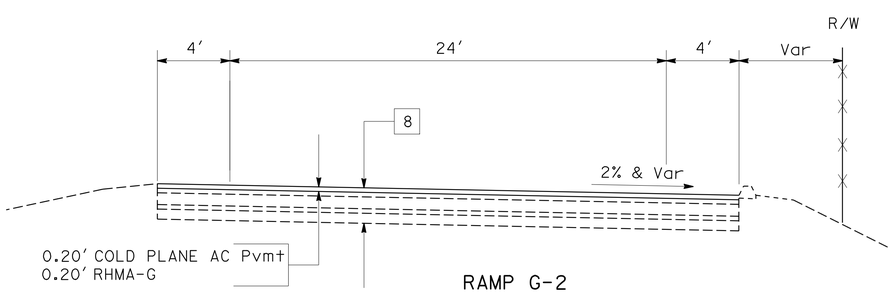

RAMP G-2

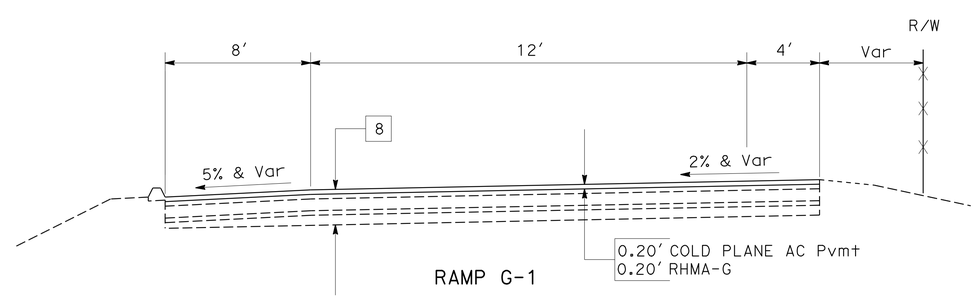

RAMP G-1

TYPICAL CROSS SECTIONS

NO SCALE

X-4

REVISED BY	DATE REVISED
MARIO FADUL	AINSLEY CHIANG
CALCULATED-DESIGNED BY	CHECKED BY
FUNCTIONAL SUPERVISOR	DEREK HIGA

STATE OF CALIFORNIA - DEPARTMENT OF TRANSPORTATION

DESIGN

Caltrans

LAST REVISION 00-00-00 | DATE PLOTTED => 25-AUG-2010 | TIME PLOTTED => 14:22

Dist	COUNTY	ROUTE	POST MILES TOTAL PROJECT	SHEET No.	TOTAL SHEETS
07	LA	101	31.1/38.2	6	74

REGISTERED CIVIL ENGINEER 06-24-10 DATE

08-16-10
PLANS APPROVAL DATE

REGISTERED PROFESSIONAL ENGINEER M.Q. FADUL No. C54941 Exp. 06/30/12 CIVIL STATE OF CALIFORNIA

THE STATE OF CALIFORNIA OR ITS OFFICERS OR AGENTS SHALL NOT BE RESPONSIBLE FOR THE ACCURACY OR COMPLETENESS OF SCANNED COPIES OF THIS PLAN SHEET.

NOTES:

1. FOR ACCURATE RIGHT OF WAY DATA, CONTACT RIGHT OF WAY ENGINEERING AT THE DISTRICT OFFICE.
2. EXACT PAVING LIMITS WILL BE DETERMINED BY THE ENGINEER.
3. EXISTING UTILITY FACILITIES HAVE NOT BEEN PLOTTED ON THESE PLANS.
4. EXISTING STRUCTURE FACILITIES ARE NOT SHOWN ON THESE PLAN.
5. OMIT COLD PLANING PCC PAVEMENT AND PCC RAMP TERMINI.
6. EXISTING DRAINAGE LIMITS HAVE NOT BEEN PLOTTED ON THESE PLANS.

LEGEND:

LIMIT OF RAMP COLD PLANE/OVERLAY

DIRECTION OF TRAFFIC

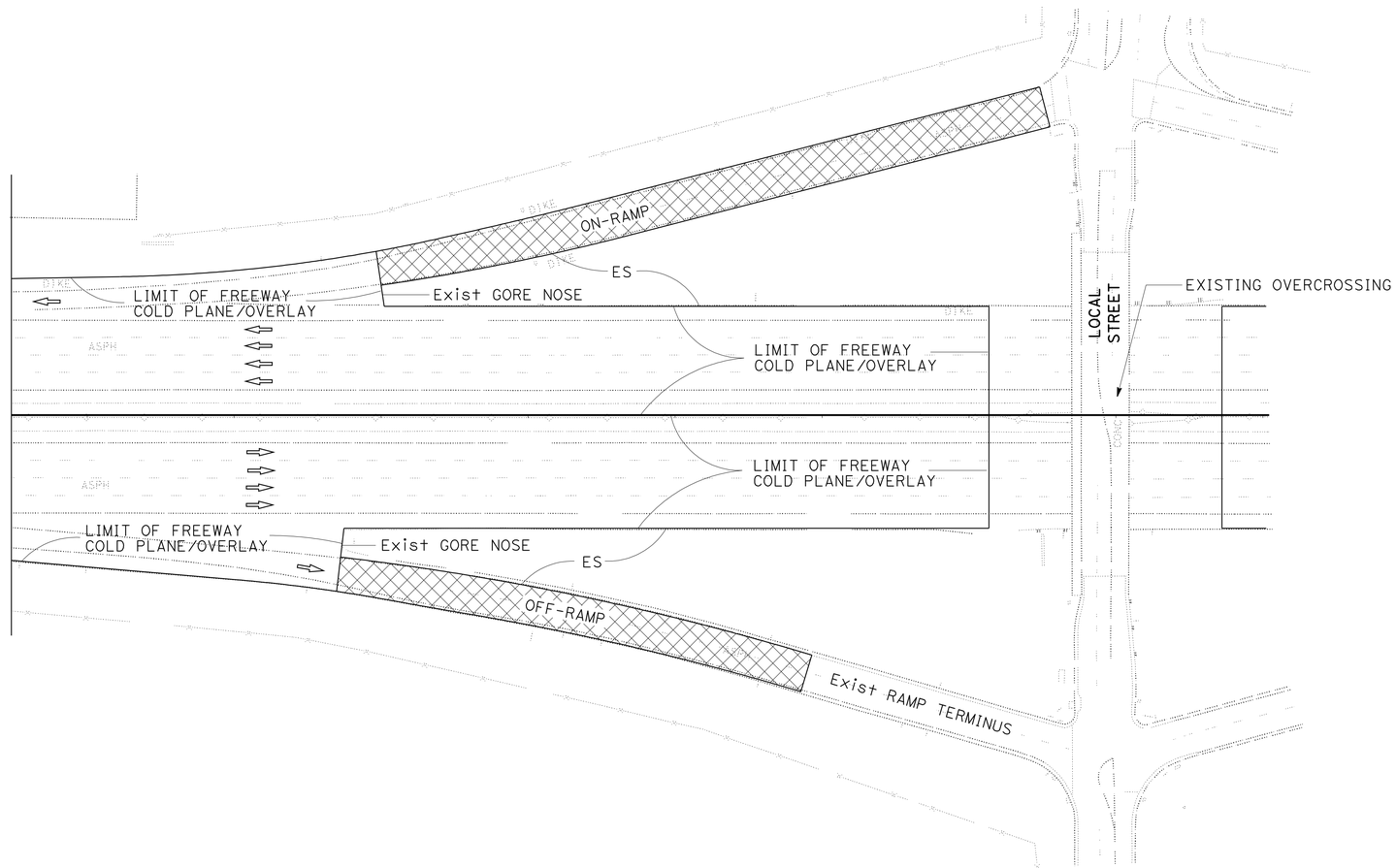

TYPICAL LIMITS OF COLD PLANE/OVERLAY

CONSTRUCTION DETAILS

NO SCALE

C-1

STATE OF CALIFORNIA - DEPARTMENT OF TRANSPORTATION
Caltrans
DESIGN

FUNCTIONAL SUPERVISOR: DEREK HIGA
CALCULATED-DESIGNED BY: MARIO FADUL
CHECKED BY: AINSLEY CHIANG
REVISED BY
DATE REVISED

LAST REVISION 00-00-00
DATE PLOTTED => 25-AUG-2010
TIME PLOTTED => 14:22

Dist	COUNTY	ROUTE	POST MILES TOTAL PROJECT	SHEET No.	TOTAL SHEETS
07	LA	101	31.1/38.2	7	74

REGISTERED CIVIL ENGINEER 06-24-10 DATE

08-16-10
PLANS APPROVAL DATE

REGISTERED PROFESSIONAL ENGINEER AINSLEY CHIANG No. C74005 Exp. 6/31/11 CIVIL STATE OF CALIFORNIA

THE STATE OF CALIFORNIA OR ITS OFFICERS OR AGENTS SHALL NOT BE RESPONSIBLE FOR THE ACCURACY OR COMPLETENESS OF SCANNED COPIES OF THIS PLAN SHEET.

NOTES:

1. DIRECTION OF ADJACENT TRAFFIC INDICATED BY ➡.
2. EXISTING UTILITY FACILITIES HAVE NOT BEEN PLOTTED ON THIS PLAN.

LEGEND:

PLACE HOT MIX ASPHALT (Misc AREA)

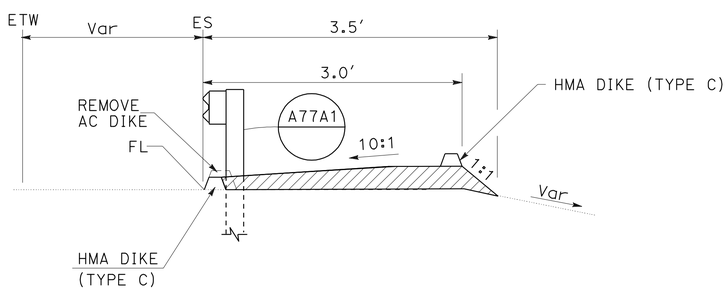

PLACE HMA (Misc AREA)

SECTION A-A

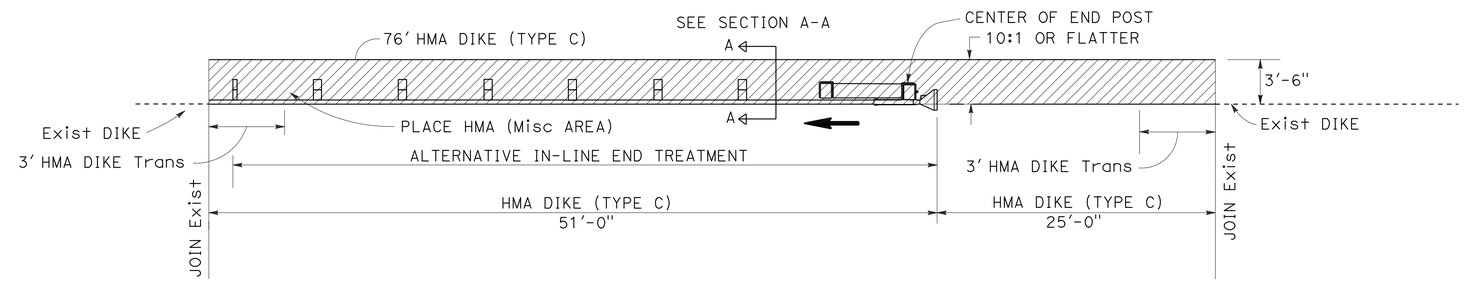

IN-LINE END TREATMENT

(EMBANKMENT GUARD INSTALLATION WITH IN-LINE END TREATMENT AT TRAFFIC APPROACH END OF RAILING)

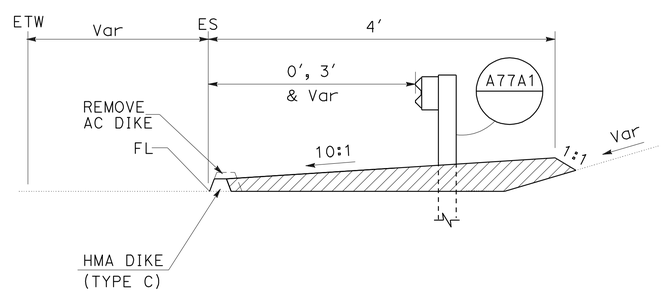

PLACE HMA (Misc AREA)

SECTION B-B

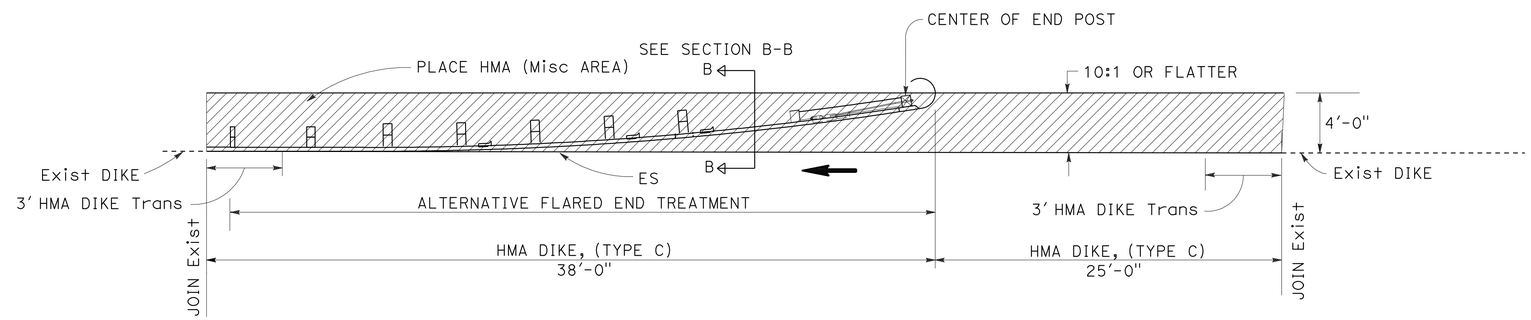

FLARED END TREATMENT

(EMBANKMENT GUARD RAILING INSTALLATION WITH FLARED END TREATMENT AT TRAFFIC APPROACH END OF RAILING)

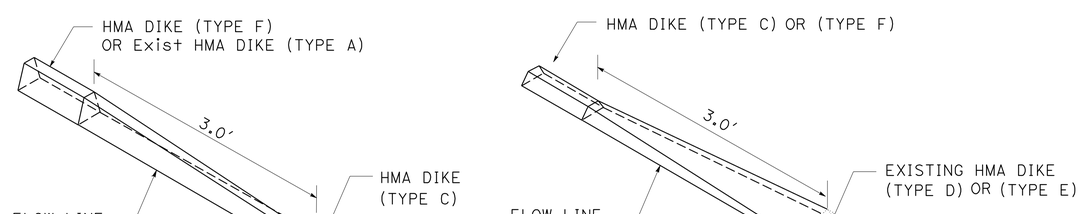

HMA DIKE TRANSITION

CONSTRUCTION DETAIL

NO SCALE

C-2

STATE OF CALIFORNIA - DEPARTMENT OF TRANSPORTATION
DESIGN
FUNCTIONAL SUPERVISOR: DEREK HIGA
CALCULATED-DESIGNED BY: AINSLEY CHIANG
CHECKED BY: KAZ KAYODA
REVISED BY
DATE REVISED

LAST REVISION 00-00-00
DATE PLOTTED => 25-AUG-2010
TIME PLOTTED => 14:22

Dist	COUNTY	ROUTE	POST MILES TOTAL PROJECT	SHEET No.	TOTAL SHEETS
07	LA	101	31.1/38.2	8	74

REGISTERED CIVIL ENGINEER 06-24-10 DATE

08-16-10
PLANS APPROVAL DATE

REGISTERED PROFESSIONAL ENGINEER AINSLEY CHIANG No. C74005 Exp. 6/31/11 CIVIL STATE OF CALIFORNIA

THE STATE OF CALIFORNIA OR ITS OFFICERS OR AGENTS SHALL NOT BE RESPONSIBLE FOR THE ACCURACY OR COMPLETENESS OF SCANNED COPIES OF THIS PLAN SHEET.

NOTES:

1) EXISTING UTILITY FACILITIES HAS NOT BEEN PLOTTED ON THIS PLAN.
2) SEE STANDARD PLAN A77G3 FOR STRENGTHENED RAILING SECTIONS FOR FIXED OBJECTS.

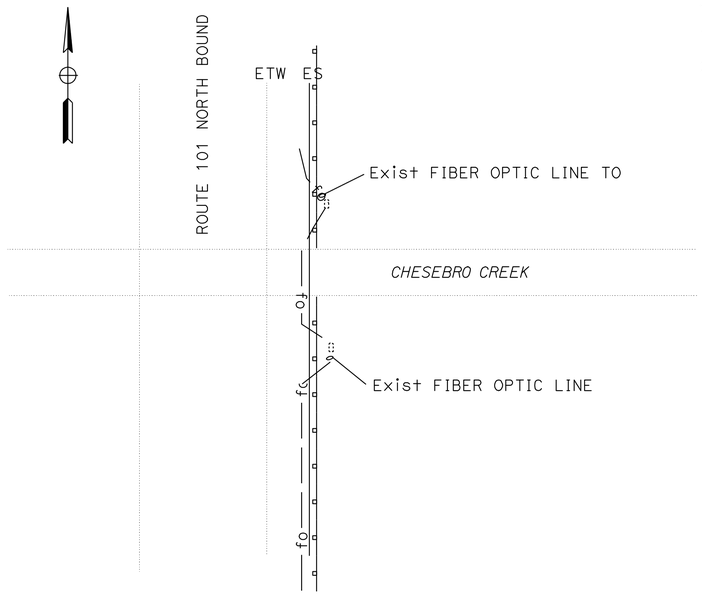

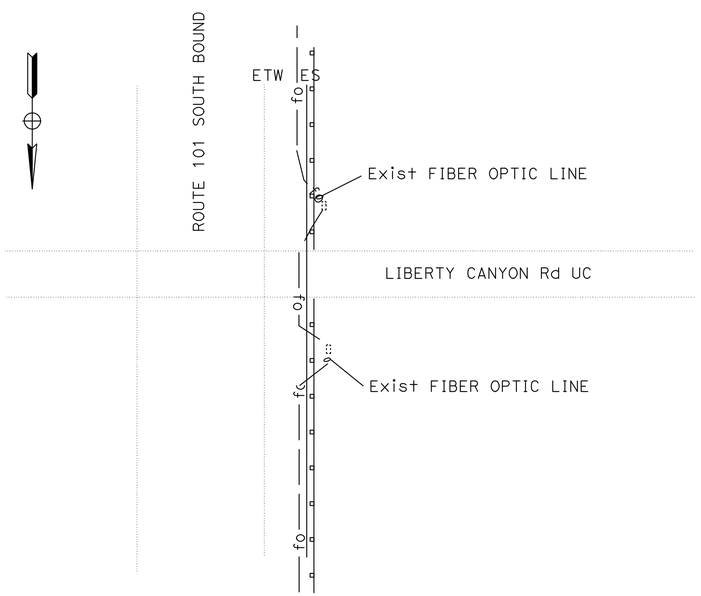

DETAIL A

MBGR LOCATIONS				
DIRECTION	LOCATION NO.	LOCATION PM	DESCRIPTION	REMARK
NB	1	31.18	END OF LAS VIRGENES Rd NB ON-RAMP (Rt)	
	2	31.95	LOST HILLS OC - ABUTMENT WALL	SEE NOTE 3
	3	32.17	END OF LOST HILLS NB ON-RAMP (Rt)	
	4	32.57	LIBERTY CANYON Rd EXIT OVERHEAD SIGN	
	5	32.82	LIBERTY CANYON Rd UC	
	6	33.72	PALO COMADO OC - ABUTMENT WALL	SEE NOTE 3
	7	33.95	CHESEBRO CREEK	
	8	34.32	KANAN Rd 1/2 MI OVERHEAD SIGN	
	9	35.65	REYES ADOBE Rd 1/2 MI OVERHEAD SIGN	
	10	36.05	REYES ADOBE Rd EXIT OVERHEAD SIGN	
	11	36.97	LINDERO CANYON 1/2 MI OVERHEAD SIGN	
	12	37.28	LINDERO CANYON Rd EXIT OVERHEAD SIGN	
	13	38.04	WESTLAKE VILLAGE/LAKE SHERWOOD NEXT EXIT OVERHEAD SIGN	
SB	1	36.36	REYES ADOBE Rd EXIT ONLY OVERHEAD SIGN	
	2	35.79	KANAN Rd 1/2 MI OVERHEAD SIGN	
	3	34.00	CHESEBRO Rd EXIT ONLY OVERHEAD SIGN	
	4	33.67	PALO COMADO OC - ABUTMENT WALL	STRAIGHTEN DIKE FLOWLINE, SEE NOTE 3
	5	33.28	LIBERTY CANYON Rd EXIT ONLY OVERHEAD SIGN	STRAIGHTEN DIKE FLOWLINE
	6	32.80	LIBERTY CANYON Rd UC	

CONSTRUCTION DETAILS

NO SCALE

C-3

STATE OF CALIFORNIA - DEPARTMENT OF TRANSPORTATION
Caltrans
DESIGN

FUNCTIONAL SUPERVISOR: DEREK HIGA
CALCULATED-DESIGNED BY: AINSLEY CHIANG
CHECKED BY: KAZ KAYODA
REVISED BY
DATE REVISED

LAST REVISION 00-00-00
DATE PLOTTED => 25-AUG-2010
TIME PLOTTED => 14:22

Dist	COUNTY	ROUTE	POST MILES TOTAL PROJECT	SHEET No.	TOTAL SHEETS
07	LA	101	31.1/38.2	9	74

REGISTERED CIVIL ENGINEER 06-24-10 DATE

08-16-10
PLANS APPROVAL DATE

REGISTERED PROFESSIONAL ENGINEER M.Q. FADUL No. C54941 Exp. 06/30/12 CIVIL STATE OF CALIFORNIA

THE STATE OF CALIFORNIA OR ITS OFFICERS OR AGENTS SHALL NOT BE RESPONSIBLE FOR THE ACCURACY OR COMPLETENESS OF SCANNED COPIES OF THIS PLAN SHEET.

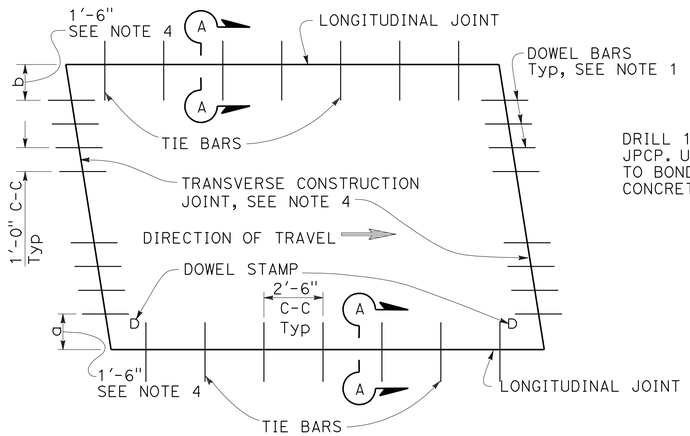

PLAN

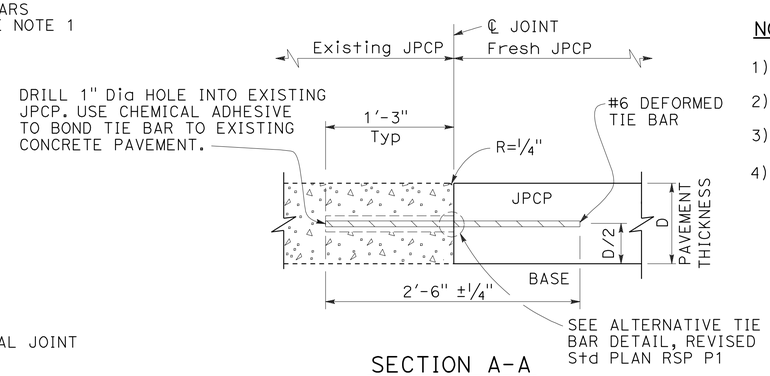

SECTION A-A

LONGITUDINAL JOINT

NOTES:

1) FOR DETAILS NOT SHOWN SEE RSP P10.
2) FOR DOWEL STAMP DETAIL SEE RSP P8.
3) TRAFFIC LANE LINES MATCH LONGITUDINAL JOINTS.
4) WHERE THE EXISTING OUTER SHOULDER PAVEMENT IS ASPHALT OR CONCRETE PAVEMENT, THE "a" DIMENSION SHALL BE 1'-0" AND THE "b" DIMENSION SHALL BE 2'-0".

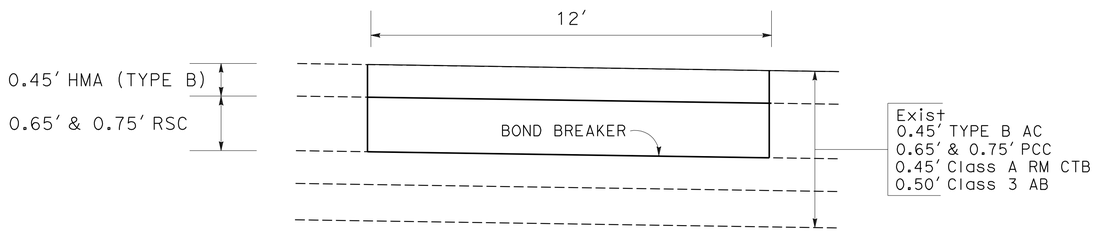

TYPICAL DETAIL FOR REPLACE CONCRETE PAVEMENT (RSC)

NO SCALE

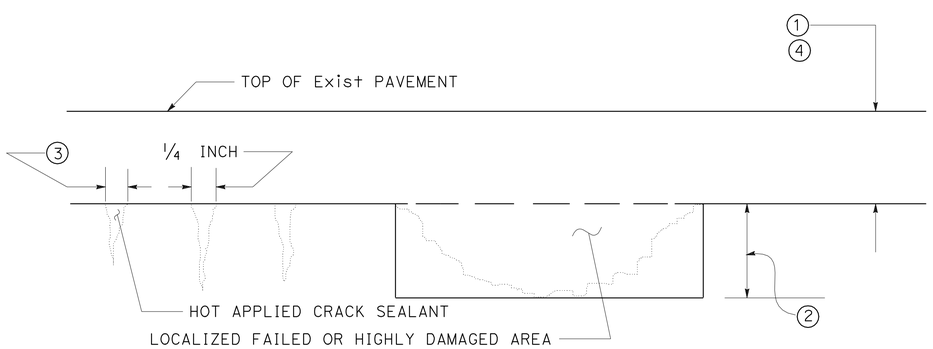

NOTES:

1. COLD PLANE THE PLANNED THICKNESS OF EXISTING AC PAVEMENT.
2. REMOVE LOCALIZED FAILED AREAS AND REPLACE WITH MINIMUM 0.15' HMA-B.
3. SEAL CRACKS GREATER THAN 1/4 INCH WITH HOT APPLIED CRACK SEALANT.
4. PLACE THE PLANNED THICKNESS OF RHMA-G AFTER CRACK SEALANT HAS BEEN APPLIED AND LOCALIZED FAILED AREAS HAVE BEEN REPAIRED.

CRACK TREATMENT & REPAIR FAILED AREAS

REPLACE CONCRETE PAVEMENT (RSC)

SLAB APPROXIMATE LOCATION		NUMBER OF SLABS (WEAKEND PLANE JOINT TO WEAKENED PLANE JOINT CONSTITUTES ONE SLAB)					SLAB SIZE (Avg)
		LANE #1	LANE #2	LANE #3	LANE #4	Aux LANE	
	PM	EA	EA	EA	EA	EA	FT
NORTHBOUND LANES	32.07				3		12'X15'
	32.13				4		12'X15'
	33.63			1			12'X15'
	33.67				3		12'X15'
	33.69				3		12'X15'
	33.74			2	2		12'X15'
	33.76				4		12'X15'
	33.88				3		12'X15'
	33.90				2		12'X15'
	33.95				1		12'X15'
	33.99				2		12'X15'
	34.52				2		12'X15'
	34.86		1		2		12'X15'
	34.88			2			12'X15'
	35.09				2		12'X15'
	35.11		2				12'X15'
	35.13				2		12'X15'
	36.18			2	2		12'X15'
	36.46				3		12'X15'
	37.57				3		12'X15'
	37.93	1	1	1	1	1	12'X50'
SOUTHBOUND LANES	32.79			2	2		12'X15'
	33.88				3		12'X15'
	33.97			1			12'X15'
	34.83				4		12'X15'
	35.04				1		12'X15'
	37.93	1	1	1	1	1	12'X50'
SUB TOTAL		2	5	12	55	2	
TOTAL				76			

CONSTRUCTION DETAILS

NO SCALE

C-4

STATE OF CALIFORNIA - DEPARTMENT OF TRANSPORTATION
Caltrans DESIGN
FUNCTIONAL SUPERVISOR DEREK HIGA
CALCULATED-DESIGNED BY JASON CHANG
CHECKED BY MARIO FADUL
REVISED BY
DATE REVISED

LAST REVISION 00-00-00
DATE PLOTTED => 25-AUG-2010
TIME PLOTTED => 14:22

Dist	COUNTY	ROUTE	POST MILES TOTAL PROJECT	SHEET No.	TOTAL SHEETS
07	LA	101	31.1/38.2	10	74

George Olguin
LICENSED LANDSCAPE ARCHITECT

08-16-10
PLANS APPROVAL DATE

LICENSED LANDSCAPE ARCHITECT
GEORGE OLGUIN
NO. 4333
George Olguin
Original signature
08-31-10
Renewal date
03-25-10
date
STATE OF CALIFORNIA

THE STATE OF CALIFORNIA OR ITS OFFICERS OR AGENTS SHALL NOT BE RESPONSIBLE FOR THE ACCURACY OR COMPLETENESS OF SCANNED COPIES OF THIS PLAN SHEET.

EROSION CONTROL (HYDROSEED) ①

LOCATION *	POST MILES	DIRECTION NB	DIRECTION ② SB	DIRECTION EB	DIRECTION WB	TREATMENT BMP	AREA SQFT
ROUTE 101	37.1		X			BIOSTRIP #281	9,516
LINDERO CANYON Rd ON-RAMP	37.4	X				BIOSTRIP #285	5,341
LINDERO CANYON Rd OFF-RAMP	37.7		X			BIOSTRIP #290	25,225
ROUTE 101	37.8		X			BIOSTRIP #292B	24,691
						TOTAL	64,773

APPLICABLE WHEN CIRCLED:

① - See Special Provisions.

② - At edge of shoulder.

* FOR EXACT LOCATION SEE DRAINAGE SHEETS.

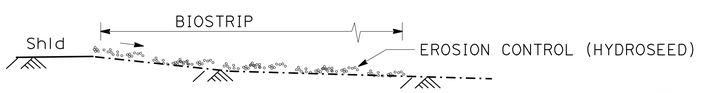

SECTION

EROSION CONTROL (HYDROSEED)
BIOSTRIP

NOTES:

1. EROSION CONTROL SHALL EXTEND 3' BEYOND OUTER EDGE OF BIOSTRIP FOOTPRINT.
2. SEE DRAINAGE SHEETS FOR BIOSTRIP DIMENSIONS.

EROSION CONTROL PLAN

EC-1

REVISED BY | DATE REVISED
YI SU | GEORGE OLGUIN
CALCULATED-DESIGNED BY | CHECKED BY
FUNCTIONAL SUPERVISOR
JENNIFER TAIRA
STATE OF CALIFORNIA - DEPARTMENT OF TRANSPORTATION
Caltrans® LANDSCAPE ARCHITECTURE

LAST REVISION 00-00-00 | DATE PLOTTED => 25-AUG-2010 | TIME PLOTTED => 14:22

Dist	COUNTY	ROUTE	POST MILES TOTAL PROJECT	SHEET No.	TOTAL SHEETS
07	LA	101	31.1/38.2	11	74

Paul Fong 07-06-10
REGISTERED CIVIL ENGINEER DATE

08-16-10
PLANS APPROVAL DATE

REGISTERED PROFESSIONAL ENGINEER
PAUL FONG
No. C67053
Exp. 9/30/10
CIVIL
STATE OF CALIFORNIA

THE STATE OF CALIFORNIA OR ITS OFFICERS OR AGENTS SHALL NOT BE RESPONSIBLE FOR THE ACCURACY OR COMPLETENESS OF SCANNED COPIES OF THIS PLAN SHEET.

NOTE:

1. FOR ACCURATE RIGHT OF WAY DATA, CONTACT RIGHT OF WAY ENGINEERING AT THE DISTRICT OFFICE.

LEGEND:

(X) DRAINAGE SYSTEM No.

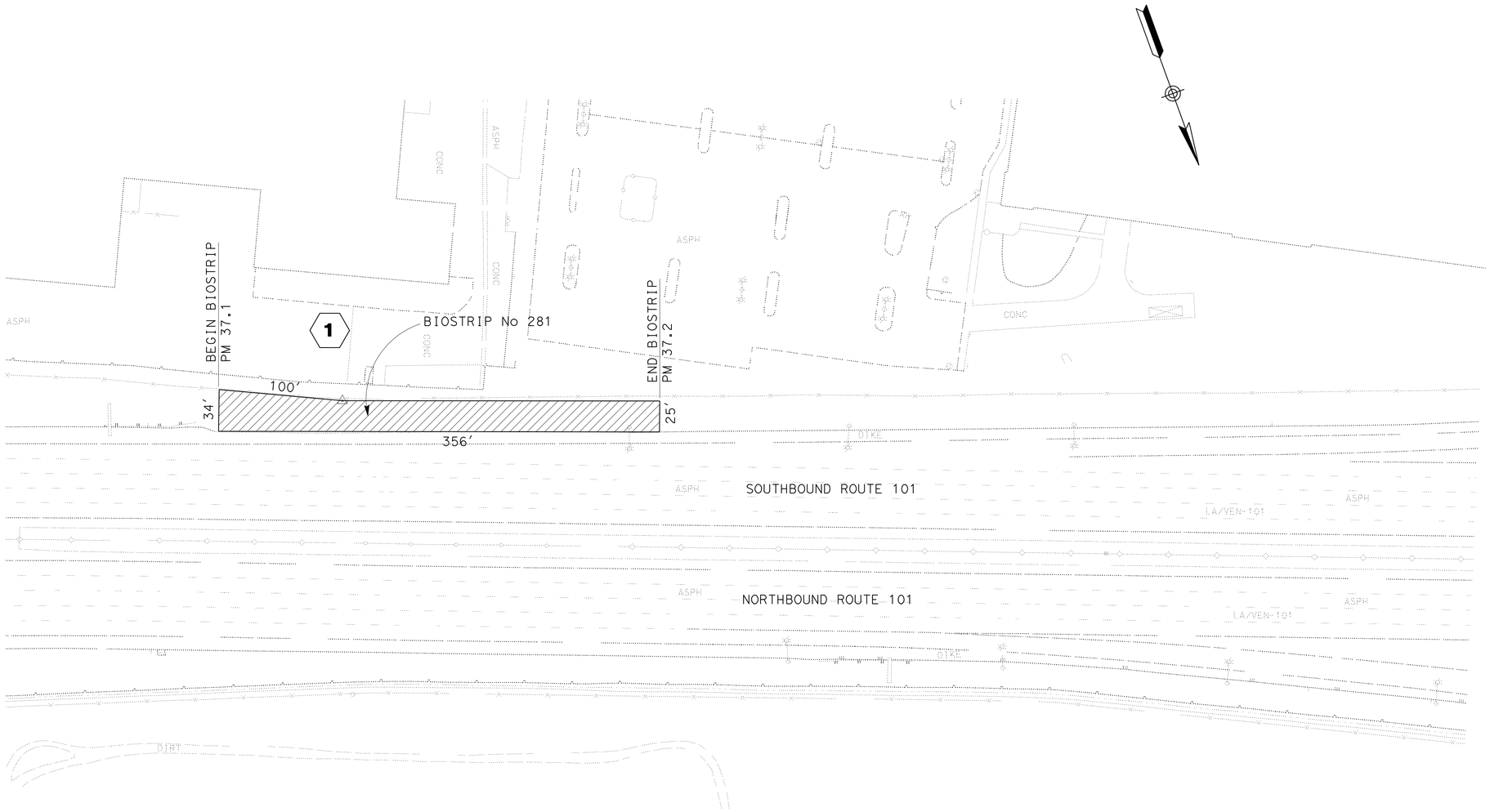

THIS PLAN ACURATE FOR DRAINAGE WORK ONLY

DRAINAGE PLAN

SCALE: 1" = 50'

D-1

REVISED BY	DATE REVISED

CALCULATED-DESIGNED BY: PAUL FONG
CHECKED BY: PRAKASH YADAV
FUNCTIONAL SUPERVISOR: DAVE BHALLA

STATE OF CALIFORNIA - DEPARTMENT OF TRANSPORTATION
Caltrans
HYDRAULICS

LAST REVISION 00-00-00
DATE PLOTTED => 25-AUG-2010
TIME PLOTTED => 14:22

Dist	COUNTY	ROUTE	POST MILES TOTAL PROJECT	SHEET No.	TOTAL SHEETS
07	LA	101	31.1/38.2	12	74

Paul Fong 07-06-10
REGISTERED CIVIL ENGINEER DATE

08-16-10
PLANS APPROVAL DATE

REGISTERED PROFESSIONAL ENGINEER
PAUL FONG
No. C67053
Exp. 9/30/10
CIVIL
STATE OF CALIFORNIA

THE STATE OF CALIFORNIA OR ITS OFFICERS OR AGENTS SHALL NOT BE RESPONSIBLE FOR THE ACCURACY OR COMPLETENESS OF SCANNED COPIES OF THIS PLAN SHEET.

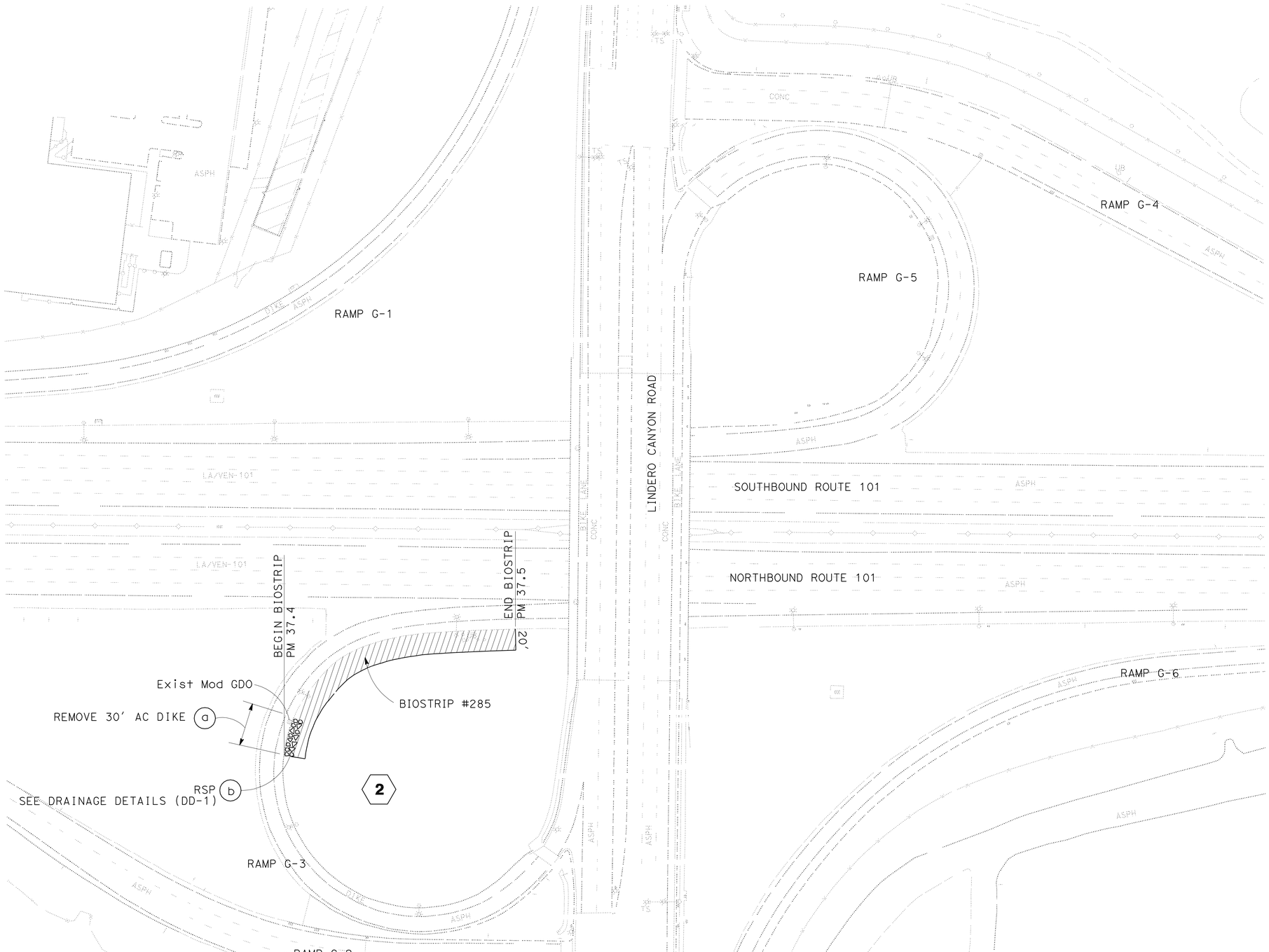

LEGEND:

X — DRAINAGE SYSTEM No.

× — DRAINAGE UNIT

THIS PLAN ACURATE FOR DRAINAGE WORK ONLY

DRAINAGE PLAN

SCALE: 1" = 50'

D-2

STATE OF CALIFORNIA - DEPARTMENT OF TRANSPORTATION
Caltrans
HYDRAULICS

FUNCTIONAL SUPERVISOR: DAVE BHALLA
CALCULATED-DESIGNED BY: PAUL FONG
CHECKED BY: PRAKASH YADAV
REVISED BY
DATE REVISED

LAST REVISION 00-00-00
DATE PLOTTED => 25-AUG-2010
TIME PLOTTED => 14:23

Dist	COUNTY	ROUTE	POST MILES TOTAL PROJECT	SHEET No.	TOTAL SHEETS
07	LA	101	31.1/38.2	13	74

Paul Fong 07-06-10
REGISTERED CIVIL ENGINEER DATE

08-16-10
PLANS APPROVAL DATE

REGISTERED PROFESSIONAL ENGINEER
PAUL FONG
No. C67053
Exp 9/30/10
CIVIL
STATE OF CALIFORNIA

THE STATE OF CALIFORNIA OR ITS OFFICERS OR AGENTS SHALL NOT BE RESPONSIBLE FOR THE ACCURACY OR COMPLETENESS OF SCANNED COPIES OF THIS PLAN SHEET.

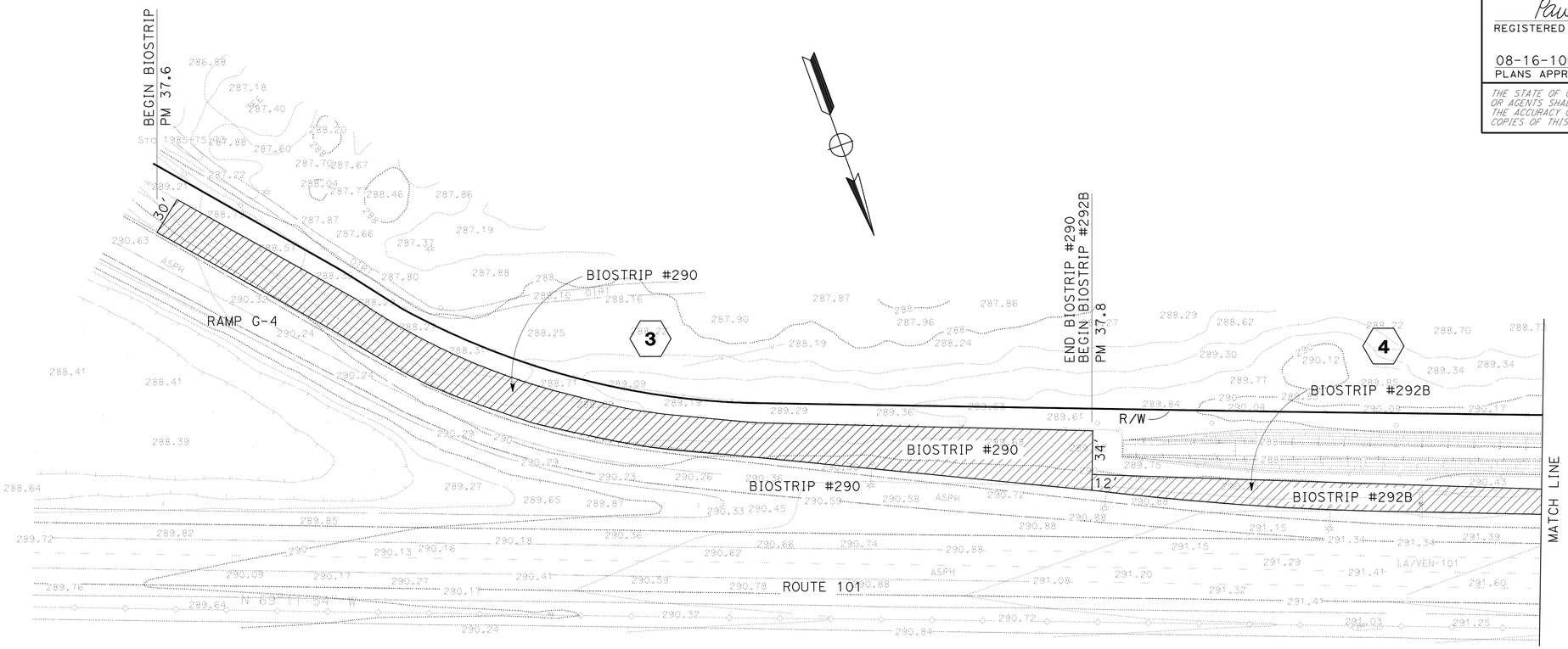

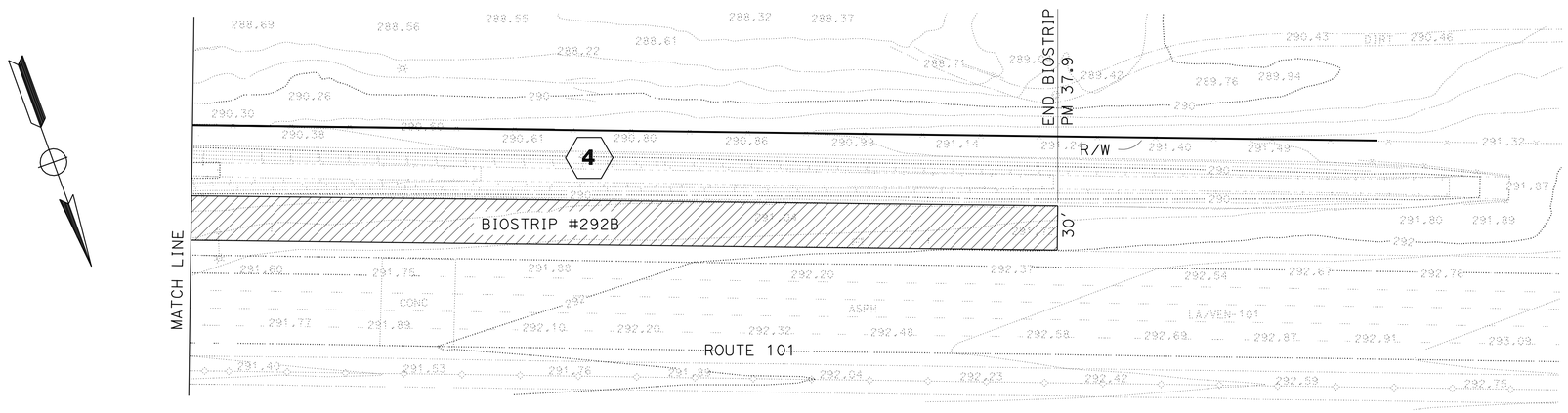

LEGEND:

(X) DRAINAGE SYSTEM No.

DRAINAGE PLAN

SCALE: 1" = 50'

D-3

THIS PLAN ACURATE FOR DRAINAGE WORK ONLY

STATE OF CALIFORNIA - DEPARTMENT OF TRANSPORTATION
Caltrans
HYDRAULICS

FUNCTIONAL SUPERVISOR: DAVE BHALLA

CALCULATED-DESIGNED BY: PAUL FONG
CHECKED BY: PRAKASH YADAV

REVISED BY | DATE REVISED

LAST REVISION 00-00-00 | DATE PLOTTED => 25-AUG-2010 | TIME PLOTTED => 14:23

Dist	COUNTY	ROUTE	POST MILES TOTAL PROJECT	SHEET No.	TOTAL SHEETS
07	LA	101	31.1/38.2	14	74

Paul Fong 07-06-10
REGISTERED CIVIL ENGINEER DATE

08-16-10
PLANS APPROVAL DATE

REGISTERED PROFESSIONAL ENGINEER
PAUL FONG
No. C67053
Exp. 9/30/10
CIVIL
STATE OF CALIFORNIA

THE STATE OF CALIFORNIA OR ITS OFFICERS OR AGENTS SHALL NOT BE RESPONSIBLE FOR THE ACCURACY OR COMPLETENESS OF SCANNED COPIES OF THIS PLAN SHEET.

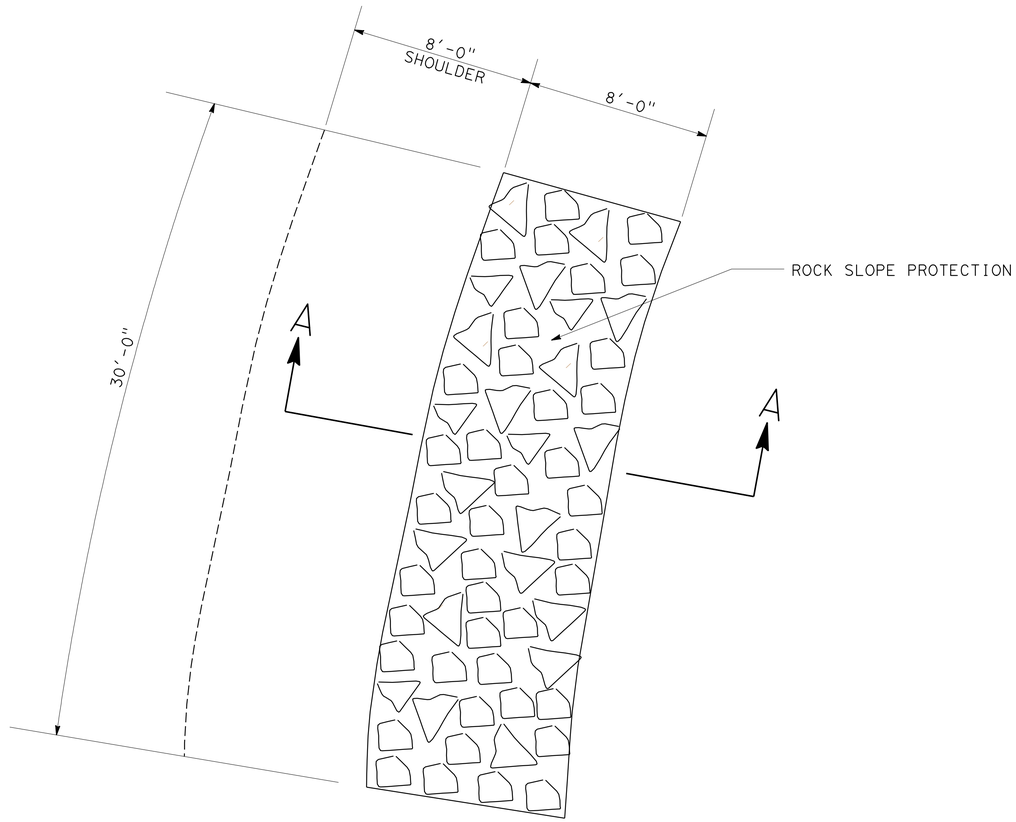

PLAN

DRAINAGE SYSTEM No. 2

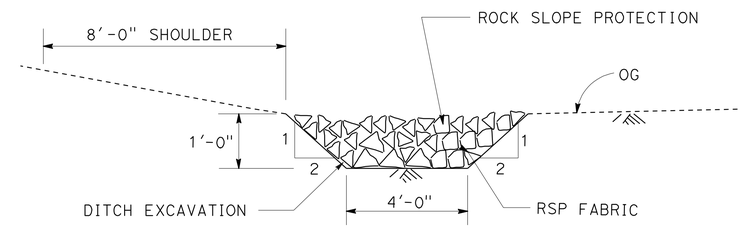

SECTION A-A

ROCK SLOPE PROTECTION DETAIL

(FACING, METHOD B)

DRAINAGE DETAILS

NO SCALE

DD-1

STATE OF CALIFORNIA - DEPARTMENT OF TRANSPORTATION
Caltrans
HYDRAULICS

FUNCTIONAL SUPERVISOR: DAVE BHALLA
CALCULATED-DESIGNED BY: PAUL FONG
CHECKED BY: PRAKASH YADAV
REVISED BY
DATE REVISED

LAST REVISION 00-00-00
DATE PLOTTED => 25-AUG-2010
TIME PLOTTED => 14:23

Dist	COUNTY	ROUTE	POST MILES TOTAL PROJECT	SHEET No.	TOTAL SHEETS
07	LA	101	31.1/38.2	15	74

Paul Fong 07-06-10
REGISTERED CIVIL ENGINEER DATE

08-16-10
PLANS APPROVAL DATE

REGISTERED PROFESSIONAL ENGINEER PAUL FONG No. C67053 Exp 9/30/10 CIVIL STATE OF CALIFORNIA

THE STATE OF CALIFORNIA OR ITS OFFICERS OR AGENTS SHALL NOT BE RESPONSIBLE FOR THE ACCURACY OR COMPLETENESS OF SCANNED COPIES OF THIS PLAN SHEET.

DRAINAGE QUANTITIES

DRAINAGE SHEET NO	⬡ DRAINAGE SYSTEM NO	○ DRAINAGE UNIT NO	HEIGHT OF INLET "H" OR "V" FT	REMOVE AC DIKE LF	DITCH EXCAVATION CY	ROCK SLOPE PROTECTION (FACING, METHOD B) CY	ROCK SLOPE PROTECTION FABRIC SQYD	DESCRIPTION	STATION	DRAINAGE SHEET NO	⬡ DRAINAGE SYSTEM NO	○ DRAINAGE UNIT NO
D-2	2	a		30.0				REMOVE AC DIKE		D-2	2	a
		b			10.0	10.0	30.0	ROCK SLOPE PROTECTION (FACING, METHOD B)				b
SHEET TOTAL				30.0	10.0	10.0	30.0					
TOTAL				SEE Q-3	10.0	10.0	30.0					

DRAINAGE QUANTITIES

DQ-1

STATE OF CALIFORNIA - DEPARTMENT OF TRANSPORTATION
Caltrans
HYDRAULICS

FUNCTIONAL SUPERVISOR: DAVE BHALLA
CALCULATED-DESIGNED BY: PAUL FONG
CHECKED BY: PRAKASH YADAV
REVISED BY
DATE REVISED

LAST REVISION 00-00-00
DATE PLOTTED => 25-AUG-2010
TIME PLOTTED => 14:23

Dist	COUNTY	ROUTE	POST MILES TOTAL PROJECT	SHEET No.	TOTAL SHEETS
07	LA	101	31.1/38.2	16	74

REGISTERED CIVIL ENGINEER 06-24-10 DATE

08-16-10
PLANS APPROVAL DATE

REGISTERED PROFESSIONAL ENGINEER M.Q. FADUL No. C54941 Exp. 06/30/12 CIVIL STATE OF CALIFORNIA

THE STATE OF CALIFORNIA OR ITS OFFICERS OR AGENTS SHALL NOT BE RESPONSIBLE FOR THE ACCURACY OR COMPLETENESS OF SCANNED COPIES OF THIS PLAN SHEET.

STATIONARY CONSTRUCTION AREA SIGNS

NOTES:

1. LOCATIONS OF CONSTRUCTION AREA SIGNS SHOWN ARE APPROXIMATE. EXACT LOCATIONS WILL BE DETERMINED BY THE ENGINEER.
2. FOR SIGN "C40" (TRAFFIC FINES DOUBLED IN CONSTRUCTION ZONES), ALL LETTERS SHALL BE BLACK ON WHITE BACKGROUND.
3. SIGN CODES PER 2010 MUTCD (MANUAL ON UNIFORM TRAFFIC CONTROL DEVICES) AND CALIFORNIA SUPPLEMENT.
4. EXISTING UTILITY FACILITIES HAS NOT BEEN PLOTTED ON THIS PLAN.

SIGN LETTER	SIGN CODE		PANEL SIZE	SIGN MESSAGE	NUMBER OF POSTS AND SIZE	NUMBER OF SIGNS
	FEDERAL	CALIFORNIA				
A	W20-1	C23	72" x 72"	ROAD WORK AHEAD	1 - 6" x 6"	2
B	W20-1	C23	36" x 36"	ROAD WORK AHEAD	1 - 4" x 6"	20
C		C40	144" x 60"	TRAFFIC FINES DOUBLED IN CONSTRUCTION ZONES	2 - 6" x 8"	2
D	G20-2	C14	36" x 18"	END ROAD WORK	1 - 4" x 4"	14
E	G20-2	C14	48" x 24"	END ROAD WORK	1 - 4" x 6"	2
F			132" x 84"	PROJECT FUNDING IDENTIFICATION SIGN	2 - 6" x 8"	2
G			120" x 108"	RECOVERY ACT SIGN	2 - 6" x 8"	2

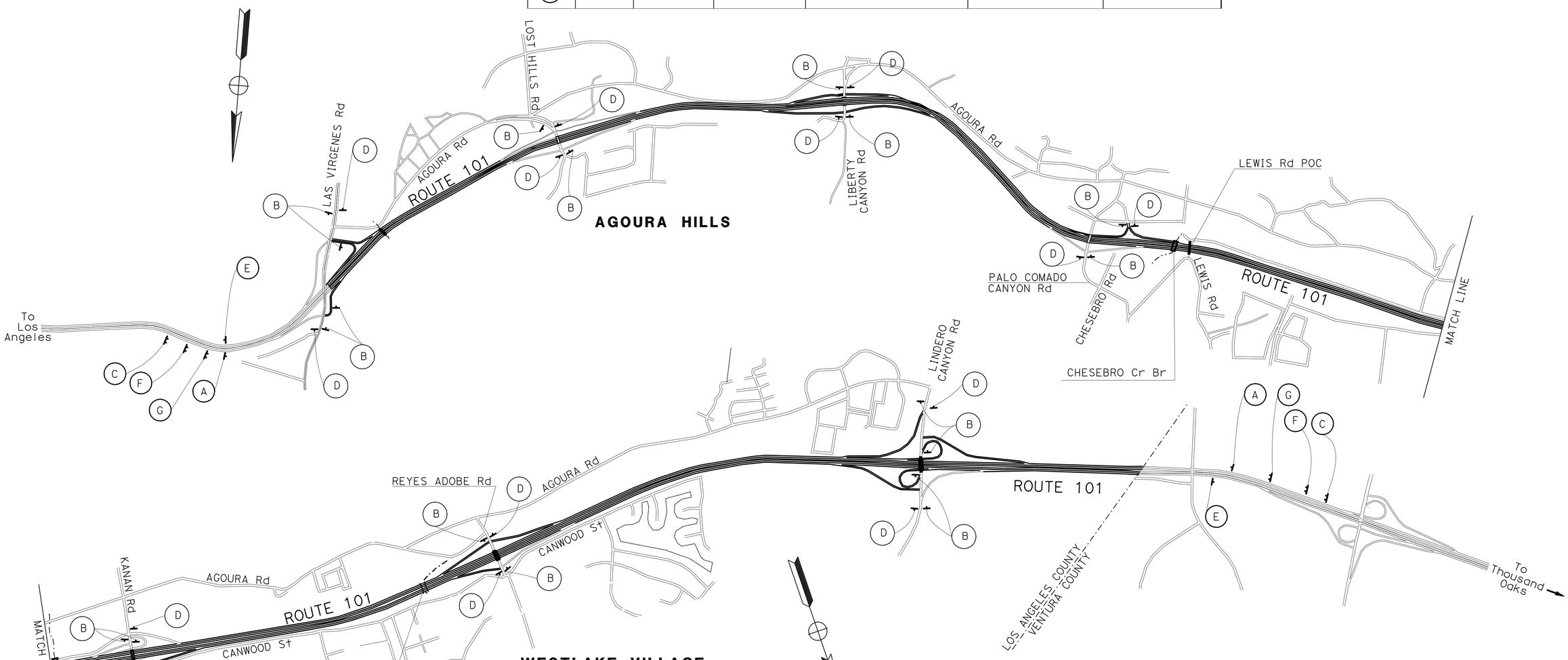

CONSTRUCTION AREA SIGNS

NO SCALE

CS-1

THIS PLAN ACCURATE FOR CONSTRUCTION AREA SIGN WORK ONLY.

STATE OF CALIFORNIA - DEPARTMENT OF TRANSPORTATION
DESIGN
FUNCTIONAL SUPERVISOR: DEREK HIGA
CALCULATED-DESIGNED BY: JASON CHANG
CHECKED BY: MARIO FADUL
REVISED BY
DATE REVISED

LAST REVISION 00-00-00 | DATE PLOTTED => 25-AUG-2010 | TIME PLOTTED => 14:23

Dist	COUNTY	ROUTE	POST MILES TOTAL PROJECT	SHEET No.	TOTAL SHEETS
07	LA	101	31.1/38.2	17	74

REGISTERED CIVIL ENGINEER 5/20/10 DATE

08-16-10
PLANS APPROVAL DATE

REGISTERED PROFESSIONAL ENGINEER ALBERT K. YU No. 43220 Exp. 3/31/12 CIVIL STATE OF CALIFORNIA

THE STATE OF CALIFORNIA OR ITS OFFICERS OR AGENTS SHALL NOT BE RESPONSIBLE FOR THE ACCURACY OR COMPLETENESS OF SCANNED COPIES OF THIS PLAN SHEET.

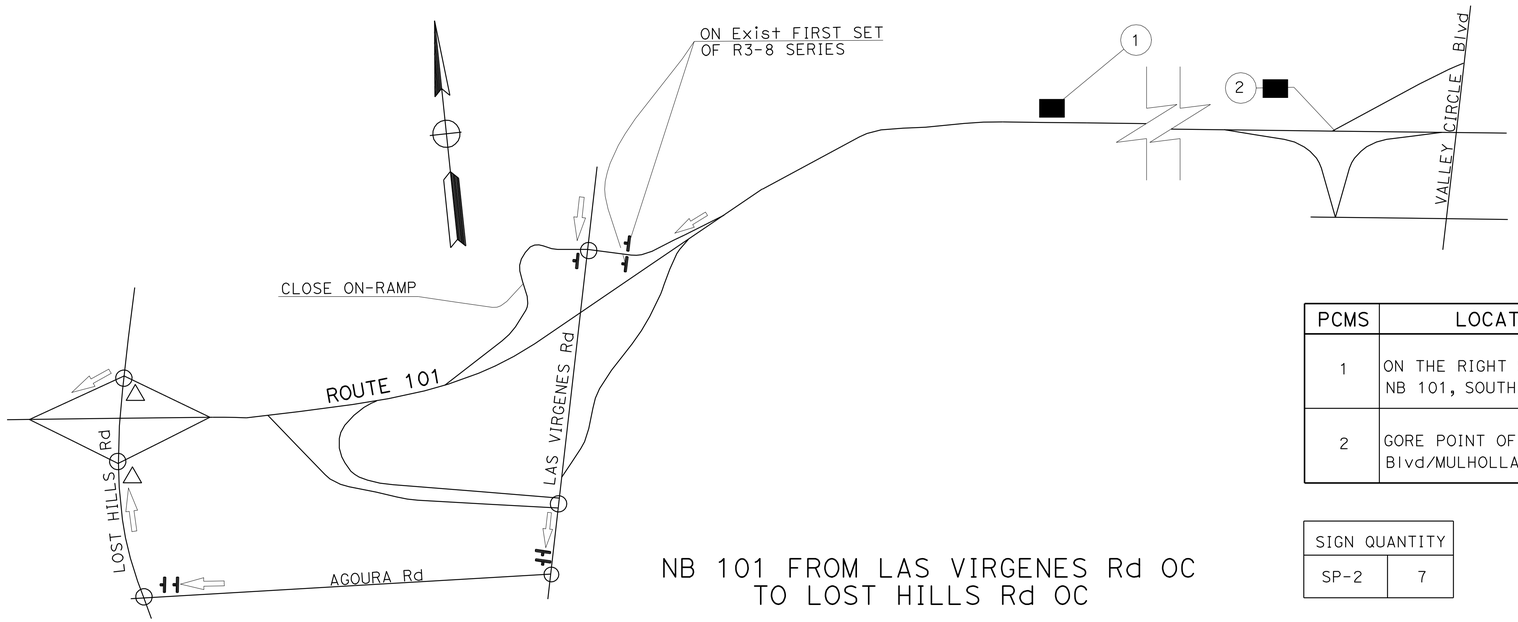

NB 101 FROM LAS VIRGENES Rd OC TO LOST HILLS Rd OC

PCMS	LOCATION	MESSAGE		COMMENT
1	ON THE RIGHT SHOULDER OF NB 101, SOUTH OF MUREAU Rd OC	SLOW/TRAFFIC/AHEAD		SIGN IS REQUIRED FOR THE FIRST TWO HOURS OF CLOSURE
2	GORE POINT OF VALLEY CIRCLE Blvd/MULHOLLAND Dr ON-RAMP	1ST FLASH	FREEWAY/CLOSED/AHEAD	
		2ND FLASH	LAS VRGN/TO LOST/HILLS	

SIGN QUANTITY	
SP-2	7

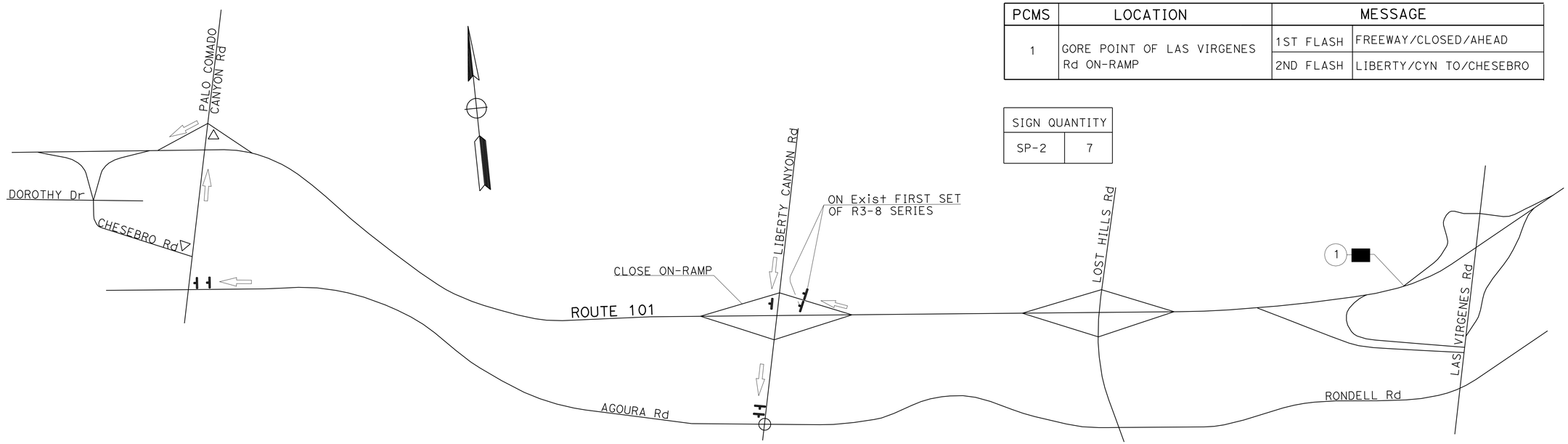

NB 101 FROM LIBERTY CANYON Rd UC TO CHESEBRO Rd

PCMS	LOCATION	MESSAGE	
1	GORE POINT OF LAS VIRGENES Rd ON-RAMP	1ST FLASH	FREEWAY/CLOSED/AHEAD
		2ND FLASH	LIBERTY/CYN TO/CHESEBRO

SIGN QUANTITY	
SP-2	7

NOTES:

1. SIGN LOCATIONS ARE APPROXIMATE. EXACT LOCATIONS WILL BE DETERMINED BY THE ENGINEER.
2. SEE THD-24 FOR SIGN SP-2 DETAILS.
3. DETOUR SIGNS SHALL BE REMOVED AT THE END OF EACH CLOSURE.

LEGEND

- SIGN SP-2
- DIRECTION OF TRAVEL
- PORTABLE CHANGEABLE MESSAGE SIGN (PCMS)
- EXISTING SIGNALIZED INTERSECTION
- EXISTING Fwy GUIDE SIGN

TRAFFIC HANDLING DETAILS
FULL FREEWAY CLOSURE DETOUR FOR WORK SHIFT CLOSURES

NO SCALE

THD-1

STATE OF CALIFORNIA - DEPARTMENT OF TRANSPORTATION
DTM
Caltrans

FUNCTIONAL SUPERVISOR: JOHN YANG
CALCULATED-DESIGNED BY: ALBERT K YU
CHECKED BY: JOCELYN C CHIANG
REVISED BY: JC
DATE REVISED: 12/09

LAST REVISION: 00-00-00
DATE PLOTTED => 25-AUG-2010
TIME PLOTTED => 14:23

Dist	COUNTY	ROUTE	POST MILES TOTAL PROJECT	SHEET No.	TOTAL SHEETS
07	LA	101	31.1/38.2	18	74

REGISTERED CIVIL ENGINEER 5/20/10 DATE

08-16-10
PLANS APPROVAL DATE

REGISTERED PROFESSIONAL ENGINEER ALBERT K. YU No. 43220 Exp. 3/31/12 CIVIL STATE OF CALIFORNIA

THE STATE OF CALIFORNIA OR ITS OFFICERS OR AGENTS SHALL NOT BE RESPONSIBLE FOR THE ACCURACY OR COMPLETENESS OF SCANNED COPIES OF THIS PLAN SHEET.

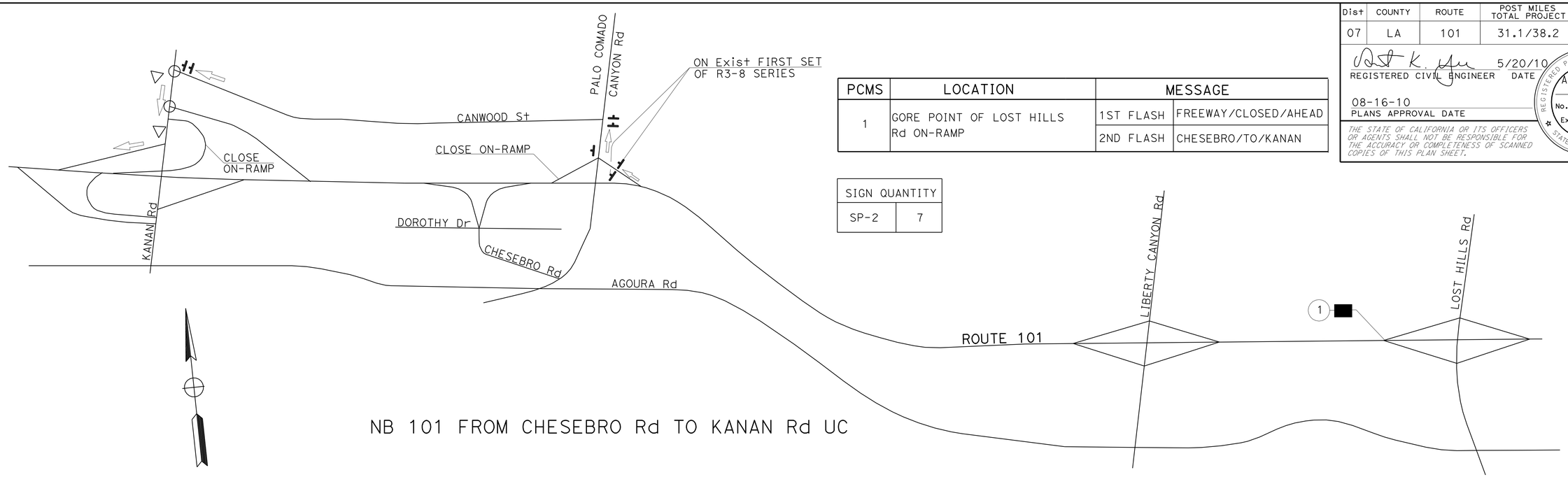

PCMS	LOCATION	MESSAGE	
1	GORE POINT OF LOST HILLS Rd ON-RAMP	1ST FLASH	FREEWAY/CLOSED/AHEAD
		2ND FLASH	CHESEBRO/TO/KANAN

SIGN QUANTITY	
SP-2	7

NB 101 FROM CHESEBRO Rd TO KANAN Rd UC

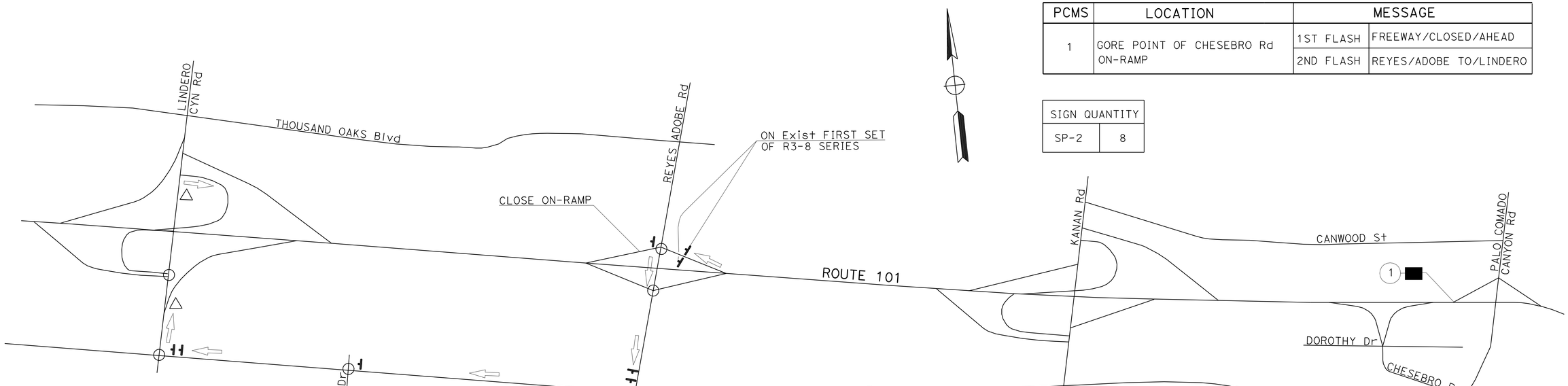

PCMS	LOCATION	MESSAGE	
1	GORE POINT OF CHESEBRO Rd ON-RAMP	1ST FLASH	FREEWAY/CLOSED/AHEAD
		2ND FLASH	REYES/ADOBE TO/LINDERO

SIGN QUANTITY	
SP-2	8

NB 101 FROM REYES ADOBE Rd TO LINDERO CANYON Rd OC

NOTES:

1. SIGN LOCATIONS ARE APPROXIMATE. EXACT LOCATIONS WILL BE DETERMINED BY THE ENGINEER.
2. SEE THD-24 FOR SIGN SP-2 DETAILS.
3. DETOUR SIGNS SHALL BE REMOVED AT THE END OF EACH CLOSURE.

LEGEND

- SIGN SP-2
- DIRECTION OF TRAVEL
- PORTABLE CHANGEABLE MESSAGE SIGN (PCMS)
- EXISTING SIGNALIZED INTERSECTION
- EXISTING Fwy GUIDE SIGN

TRAFFIC HANDLING DETAILS
FULL FREEWAY CLOSURE DETOUR FOR WORK SHIFT CLOSURES

NO SCALE

THD-2

STATE OF CALIFORNIA - DEPARTMENT OF TRANSPORTATION
Caltrans DTM

FUNCTIONAL SUPERVISOR: JOHN YANG
CALCULATED-DESIGNED BY: ALBERT K YU
CHECKED BY: JOCELYN C CHIANG
REVISED BY: JC
DATE REVISED: 12/09

LAST REVISION DATE PLOTTED => 25-AUG-2010
00-00-00 TIME PLOTTED => 14:23

Dist	COUNTY	ROUTE	POST MILES TOTAL PROJECT	SHEET No.	TOTAL SHEETS
07	LA	101	31.1/38.2	19	74

REGISTERED CIVIL ENGINEER 5/20/10 DATE

08-16-10
PLANS APPROVAL DATE

REGISTERED PROFESSIONAL ENGINEER ALBERT K. YU No. 43220 Exp. 3/31/12 CIVIL STATE OF CALIFORNIA

THE STATE OF CALIFORNIA OR ITS OFFICERS OR AGENTS SHALL NOT BE RESPONSIBLE FOR THE ACCURACY OR COMPLETENESS OF SCANNED COPIES OF THIS PLAN SHEET.

PCMS	LOCATION	MESSAGE	
1	GORE POINT OF KANAN Rd ON-RAMP	1ST FLASH	FREEWAY/CLOSED/AHEAD
		2ND FLASH	LINDERO/TO/WESTLAKE

SIGN QUANTITY	
SP-2	8

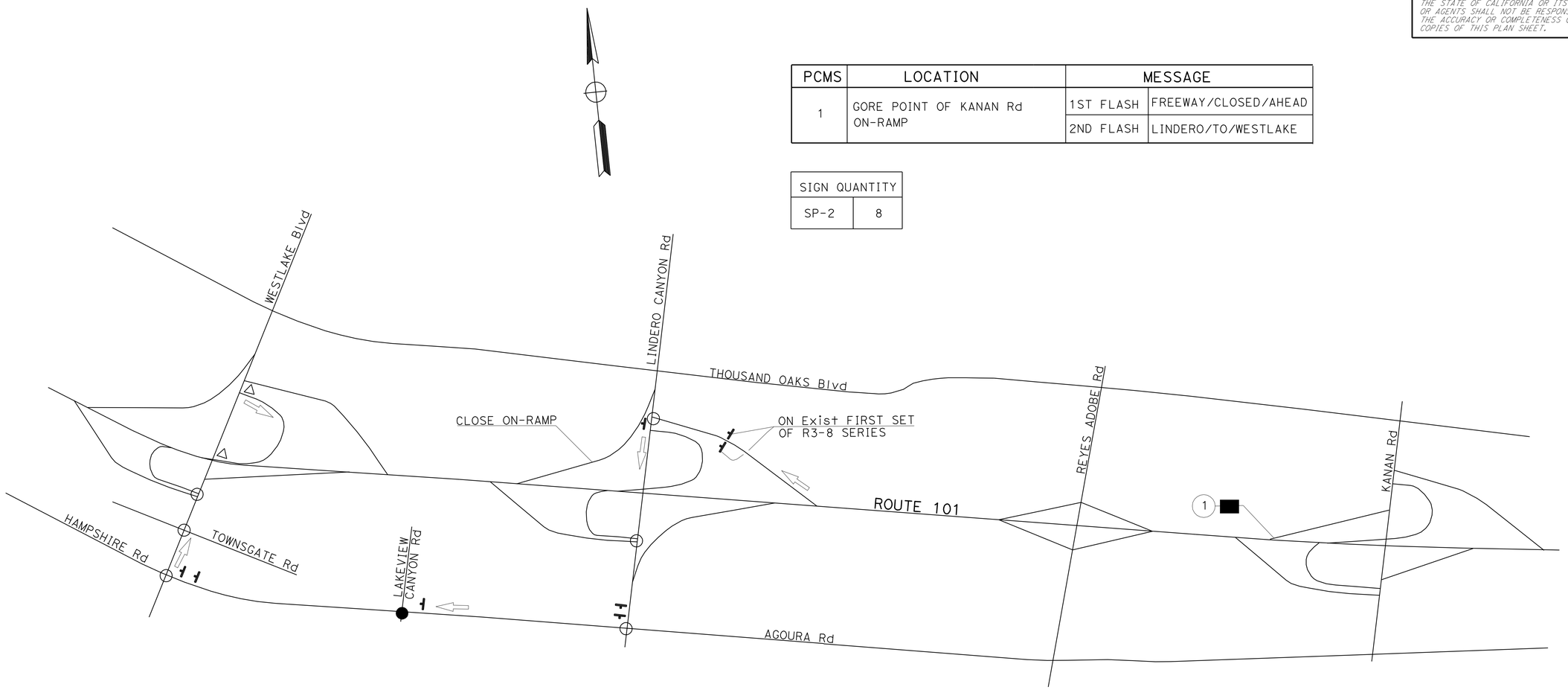

NB 101 AT NORTH OF LINDERO CANYON Rd TO WESTLAKE Blvd

NOTES:

1. SIGN LOCATIONS ARE APPROXIMATE. EXACT LOCATIONS WILL BE DETERMINED BY THE ENGINEER.
2. SEE THD-24 FOR SIGN SP-2 DETAILS.
3. DETOUR SIGNS SHALL BE REMOVED AT THE END OF EACH CLOSURE.

LEGEND

- SIGN SP-2
- DIRECTION OF TRAVEL
- PORTABLE CHANGEABLE MESSAGE SIGN (PCMS)
- EXISTING SIGNALIZED INTERSECTION
- EXISTING Fwy GUIDE SIGN

TRAFFIC HANDLING DETAILS
FULL FREEWAY CLOSURE DETOUR FOR WORK SHIFT CLOSURES

NO SCALE

THD-3

STATE OF CALIFORNIA - DEPARTMENT OF TRANSPORTATION
Caltrans DTM

FUNCTIONAL SUPERVISOR: JOHN YANG
CALCULATED-DESIGNED BY: ALBERT K YU
CHECKED BY: JOCELYN C CHIANG
REVISED BY: JC
DATE REVISED: 12/09

LAST REVISION
DATE PLOTTED => 25-AUG-2010
TIME PLOTTED => 14:23

Dist	COUNTY	ROUTE	POST MILES TOTAL PROJECT	SHEET No.	TOTAL SHEETS
07	LA	101	31.1/38.2	20	74

REGISTERED CIVIL ENGINEER 5/20/10 DATE

08-16-10
PLANS APPROVAL DATE

REGISTERED PROFESSIONAL ENGINEER ALBERT K. YU No. 43220 Exp. 3/31/12 CIVIL STATE OF CALIFORNIA

THE STATE OF CALIFORNIA OR ITS OFFICERS OR AGENTS SHALL NOT BE RESPONSIBLE FOR THE ACCURACY OR COMPLETENESS OF SCANNED COPIES OF THIS PLAN SHEET.

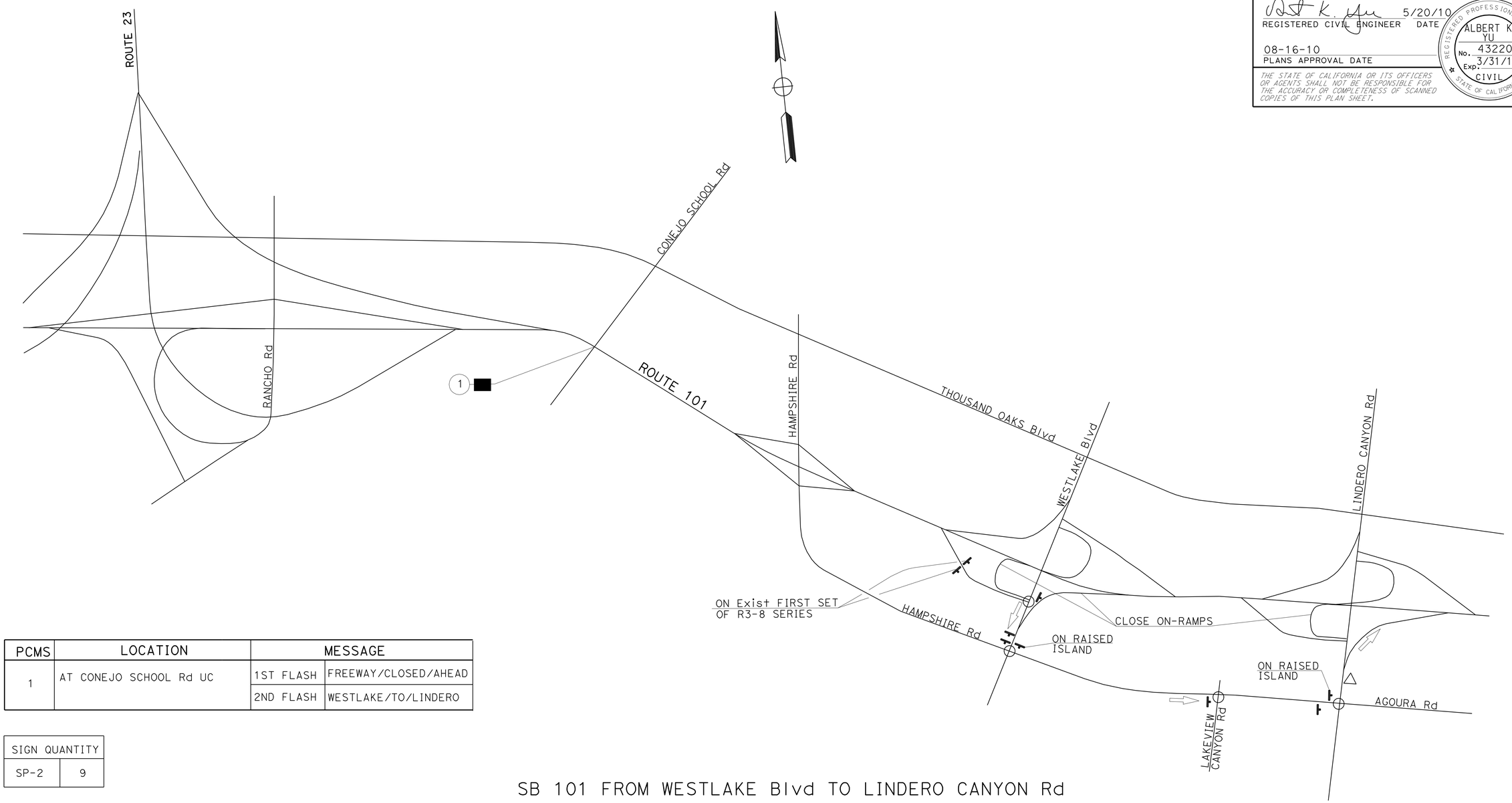

PCMS	LOCATION	MESSAGE	
1	AT CONEJO SCHOOL Rd UC	1ST FLASH	FREEWAY/CLOSED/AHEAD
		2ND FLASH	WESTLAKE/TO/LINDERO

SIGN QUANTITY	
SP-2	9

SB 101 FROM WESTLAKE Blvd TO LINDERO CANYON Rd

NOTES:

1. SIGN LOCATIONS ARE APPROXIMATE. EXACT LOCATIONS WILL BE DETERMINED BY THE ENGINEER.
2. SEE THD-24 FOR SIGN SP-2 DETAILS.
3. DETOUR SIGNS SHALL BE REMOVED AT THE END OF EACH CLOSURE.

LEGEND

- SIGN SP-2
- DIRECTION OF TRAVEL
- PORTABLE CHANGEABLE MESSAGE SIGN (PCMS)
- EXISTING SIGNALIZED INTERSECTION
- EXISTING Fwy GUIDE SIGN

TRAFFIC HANDLING DETAILS
FULL FREEWAY CLOSURE DETOUR FOR WORK SHIFT CLOSURES

NO SCALE

THD-4

STATE OF CALIFORNIA - DEPARTMENT OF TRANSPORTATION
Caltrans DTM

FUNCTIONAL SUPERVISOR: JOHN YANG
CALCULATED-DESIGNED BY: ALBERT K YU
CHECKED BY: JOCELYN C CHIANG
REVISED BY: JC
DATE REVISED: 12/09

LAST REVISION 00-00-00 | DATE PLOTTED => 25-AUG-2010 | TIME PLOTTED => 14:23

Dist	COUNTY	ROUTE	POST MILES TOTAL PROJECT	SHEET No.	TOTAL SHEETS
07	LA	101	31.1/38.2	21	74

REGISTERED CIVIL ENGINEER 5/20/10 DATE

08-16-10
PLANS APPROVAL DATE

REGISTERED PROFESSIONAL ENGINEER ALBERT K. YU No. 43220 Exp. 3/31/12 CIVIL STATE OF CALIFORNIA

THE STATE OF CALIFORNIA OR ITS OFFICERS OR AGENTS SHALL NOT BE RESPONSIBLE FOR THE ACCURACY OR COMPLETENESS OF SCANNED COPIES OF THIS PLAN SHEET.

PCMS	LOCATION	MESSAGE	
1	GORE POINT OF HAMPSHIRE Rd ON-RAMP	1ST FLASH	FREEWAY/CLOSED/AHEAD
		2ND FLASH	LINDERO/TO REYES/ADOBE

SIGN QUANTITY	
SP-2	9

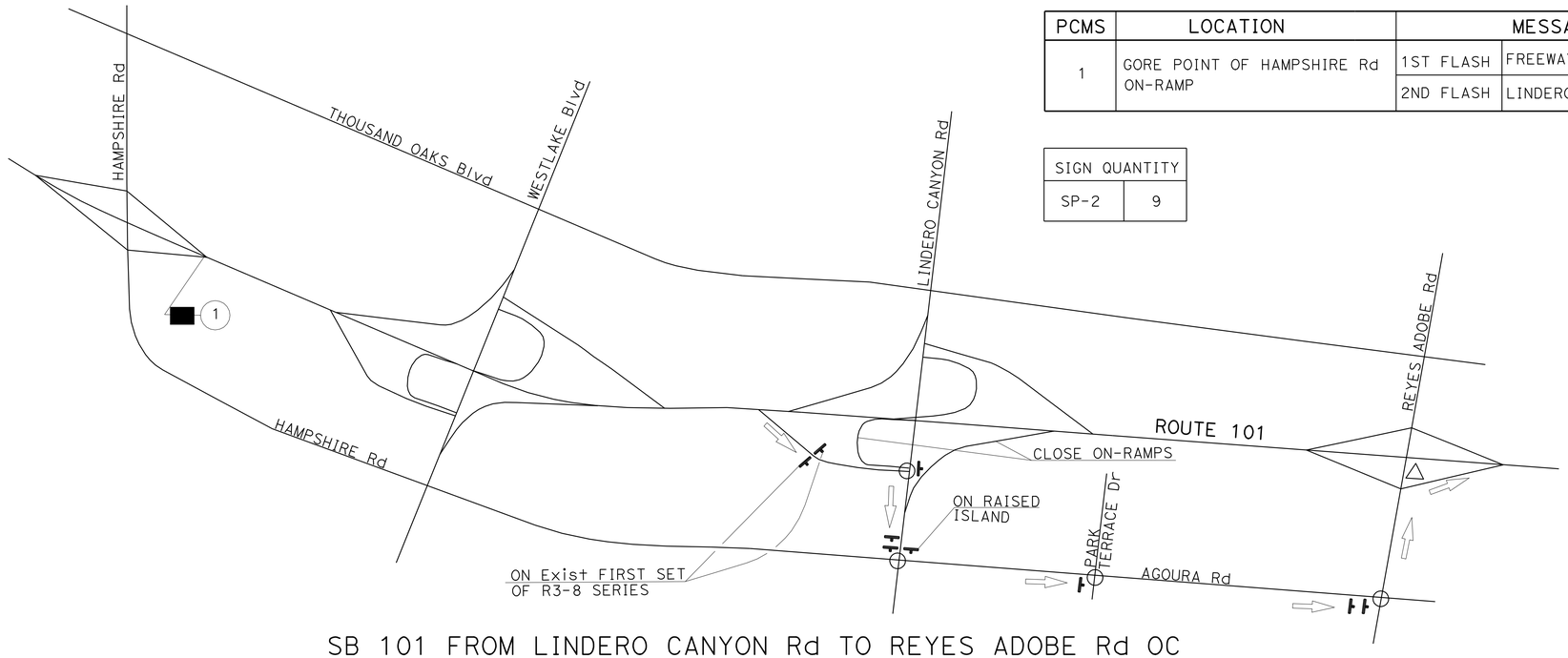

SB 101 FROM LINDERO CANYON Rd TO REYES ADOBE Rd OC

PCMS	LOCATION	MESSAGE	
1	GORE POINT OF LINDERO CANYON Rd ON-RAMP	1ST FLASH	FREEWAY/CLOSED/AHEAD
		2ND FLASH	KANAN/TO/CHESEBRO

SIGN QUANTITY	
SP-2	8

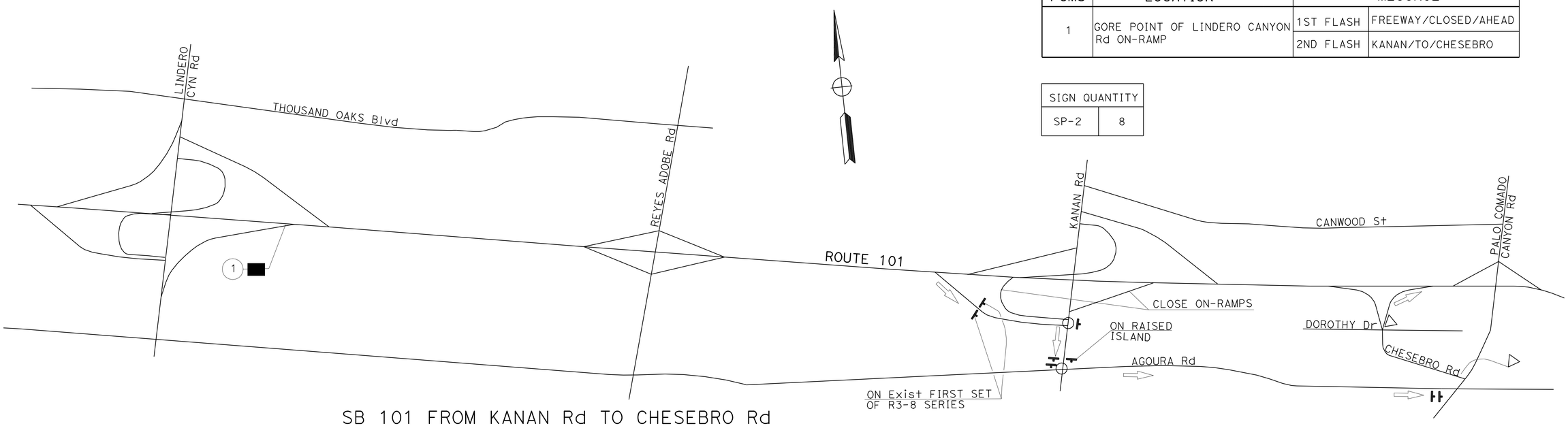

SB 101 FROM KANAN Rd TO CHESEBRO Rd

NOTES:

1. SIGN LOCATIONS ARE APPROXIMATE. EXACT LOCATIONS WILL BE DETERMINED BY THE ENGINEER.
2. SEE THD-24 FOR SIGN SP-2 DETAILS.
3. DETOUR SIGNS SHALL BE REMOVED AT THE END OF EACH CLOSURE.

LEGEND

- SIGN SP-2
- DIRECTION OF TRAVEL
- PORTABLE CHANGEABLE MESSAGE SIGN (PCMS)
- EXISTING SIGNALIZED INTERSECTION
- EXISTING Fwy GUIDE SIGN

TRAFFIC HANDLING DETAILS
FULL FREEWAY CLOSURE DETOUR FOR WORK SHIFT CLOSURES

NO SCALE

THD-5

STATE OF CALIFORNIA - DEPARTMENT OF TRANSPORTATION
DTM
Caltrans

FUNCTIONAL SUPERVISOR: JOHN YANG
CALCULATED-DESIGNED BY: ALBERT K YU
CHECKED BY: JOCELYN C CHIANG
REVISED BY: JC
DATE REVISED: 12/09

LAST REVISION 00-00-00
DATE PLOTTED => 25-AUG-2010
TIME PLOTTED => 14:23

Dist	COUNTY	ROUTE	POST MILES TOTAL PROJECT	SHEET No.	TOTAL SHEETS
07	LA	101	31.1/38.2	22	74

REGISTERED CIVIL ENGINEER 5/20/10 DATE

08-16-10
PLANS APPROVAL DATE

REGISTERED PROFESSIONAL ENGINEER ALBERT K. YU No. 43220 Exp. 3/31/12 CIVIL STATE OF CALIFORNIA

THE STATE OF CALIFORNIA OR ITS OFFICERS OR AGENTS SHALL NOT BE RESPONSIBLE FOR THE ACCURACY OR COMPLETENESS OF SCANNED COPIES OF THIS PLAN SHEET.

PCMS	LOCATION	MESSAGE	
1	GORE POINT OF CHESEBRO Rd ON-RAMP	1ST FLASH	FREEWAY/CLOSED/AHEAD
		2ND FLASH	AT/LIBERTY/CYN

SIGN QUANTITY	
SP-2	3

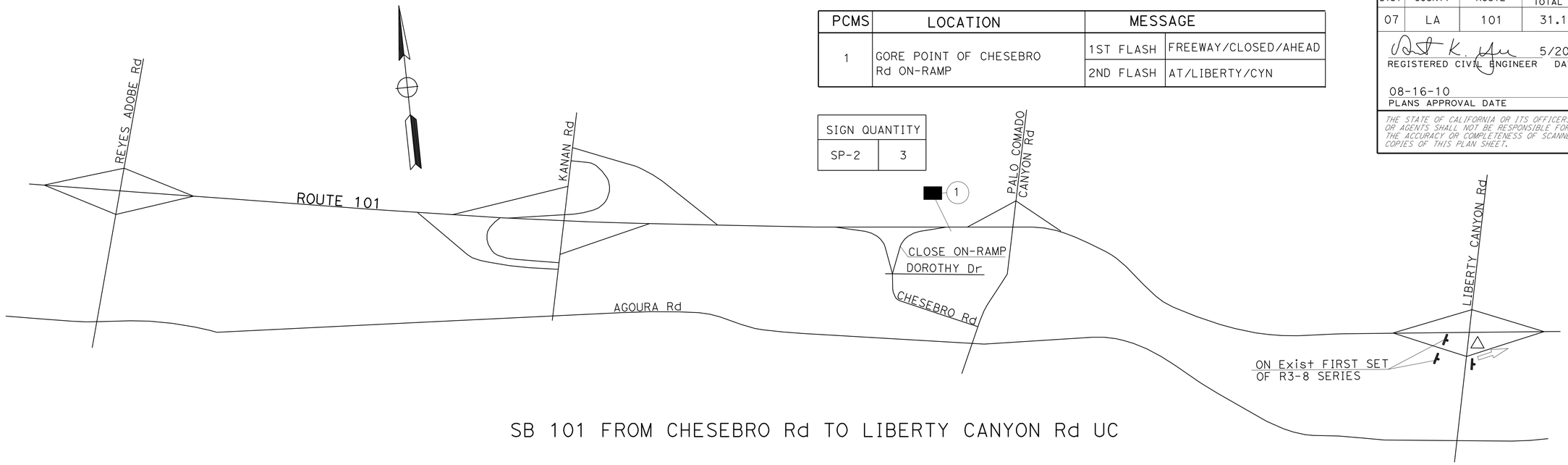

SB 101 FROM CHESEBRO Rd TO LIBERTY CANYON Rd UC

PCMS	LOCATION	MESSAGE	
1	GORE POINT OF CHESEBRO Rd ON-RAMP	1ST FLASH	FREEWAY/CLOSED/AHEAD
		2ND FLASH	LST HILL/TO LAS/VIRGENES

SIGN QUANTITY	
SP-2	9

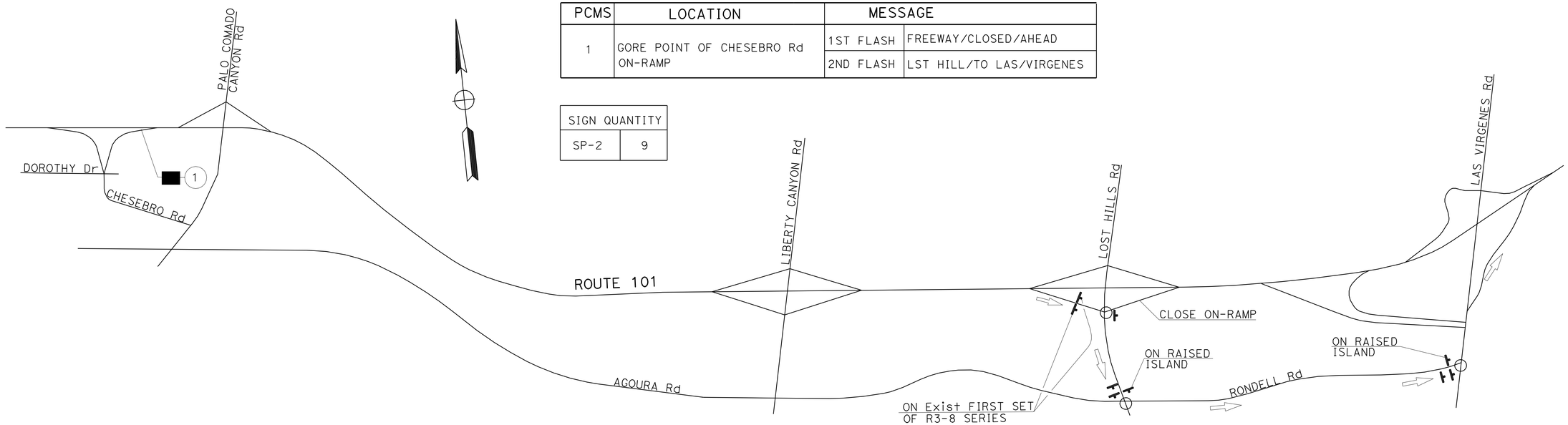

SB 101 FROM LOST HILLS Rd TO LAS VIRGENES Rd OC

NOTES:

1. SIGN LOCATIONS ARE APPROXIMATE. EXACT LOCATIONS WILL BE DETERMINED BY THE ENGINEER.
2. SEE THD-24 FOR SIGN SP-2 DETAILS.
3. DETOUR SIGNS SHALL BE REMOVED AT THE END OF EACH CLOSURE.

LEGEND

- SIGN SP-2
- DIRECTION OF TRAVEL
- PORTABLE CHANGEABLE MESSAGE SIGN (PCMS)
- EXISTING SIGNALIZED INTERSECTION
- EXISTING Fwy GUIDE SIGN

TRAFFIC HANDLING DETAILS
FULL FREEWAY CLOSURE DETOUR FOR WORK SHIFT CLOSURES

NO SCALE

THD-6

STATE OF CALIFORNIA - DEPARTMENT OF TRANSPORTATION
Caltrans DTM

FUNCTIONAL SUPERVISOR: JOHN YANG
CALCULATED-DESIGNED BY: ALBERT K YU
CHECKED BY: JOCELYN C CHIANG
REVISED BY: JC
DATE REVISED: 12/09

LAST REVISION 00-00-00
DATE PLOTTED => 25-AUG-2010
TIME PLOTTED => 14:23

Dist	COUNTY	ROUTE	POST MILES TOTAL PROJECT	SHEET No.	TOTAL SHEETS
07	LA	101	31.1/38.2	23	74

REGISTERED CIVIL ENGINEER 5/20/10 DATE

08-16-10
PLANS APPROVAL DATE

REGISTERED PROFESSIONAL ENGINEER ALBERT K. YU No. 43220 Exp. 3/31/12 CIVIL STATE OF CALIFORNIA

THE STATE OF CALIFORNIA OR ITS OFFICERS OR AGENTS SHALL NOT BE RESPONSIBLE FOR THE ACCURACY OR COMPLETENESS OF SCANNED COPIES OF THIS PLAN SHEET.

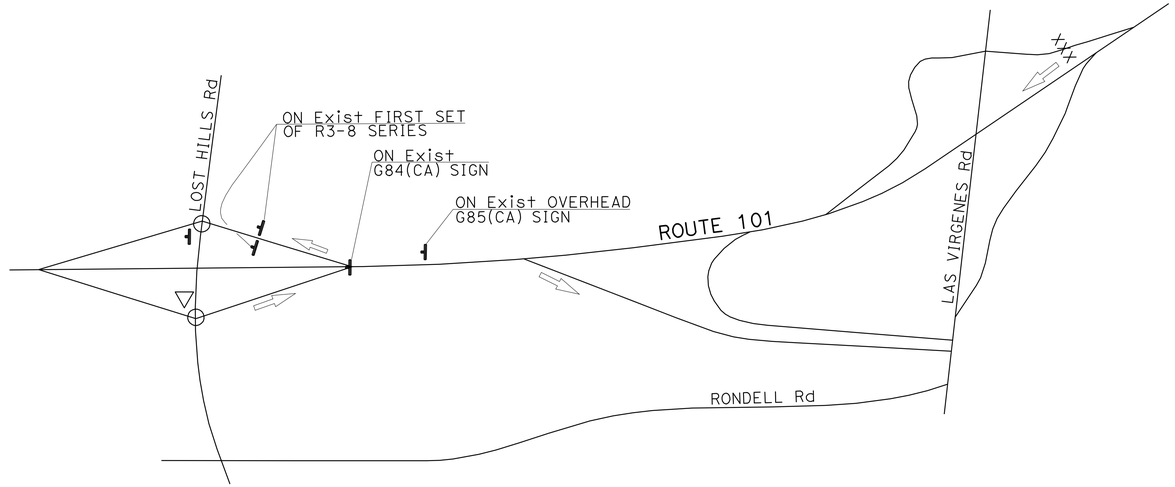

NB OFF-RAMP TO LAS VIRGENES Rd

SIGN QUANTITY	
SP-2	5

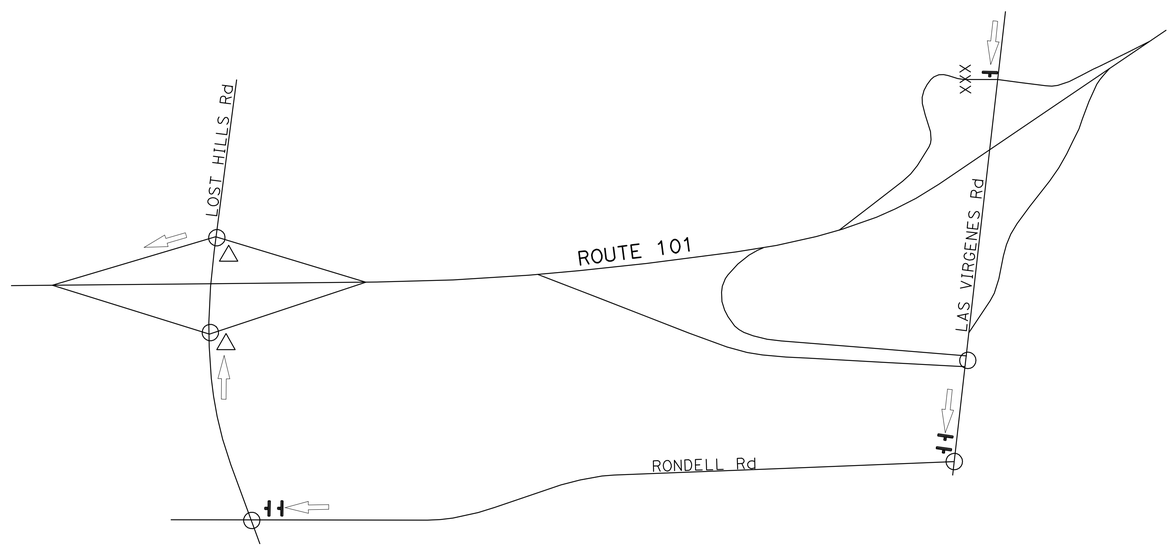

NB ON-RAMP FROM LAS VIRGENES Rd

SIGN QUANTITY	
SP-2	5

NOTES:

1. SIGN LOCATIONS ARE APPROXIMATE. EXACT LOCATIONS WILL BE DETERMINED BY THE ENGINEER.
2. SEE THD-24 FOR SIGN SP-2 DETAILS.
3. DETOUR SIGNS SHALL BE REMOVED AT THE END OF EACH CLOSURE.

LEGEND

- SIGN SP-2
- DIRECTION OF TRAVEL
- EXISTING SIGNALIZED INTERSECTION
- XXX RAMP CLOSURE
- EXISTING Fwy GUIDE SIGN

TRAFFIC HANDLING DETAILS
RAMP DETOUR
FOR WORK SHIFT CLOSURES
AT LAS VIRGENES Rd

NO SCALE

THD-7

STATE OF CALIFORNIA - DEPARTMENT OF TRANSPORTATION
Caltrans DTM

FUNCTIONAL SUPERVISOR: JOHN YANG
CALCULATED-DESIGNED BY: ALBERT K YU
CHECKED BY: JOCELYN C CHIANG
REVISED BY: JC
DATE REVISED: 12/09

LAST REVISION: 00-00-00
DATE PLOTTED => 25-AUG-2010
TIME PLOTTED => 14:23

Dist	COUNTY	ROUTE	POST MILES TOTAL PROJECT	SHEET No.	TOTAL SHEETS
07	LA	101	31.1/38.2	24	74

REGISTERED CIVIL ENGINEER 5/20/10 DATE

08-16-10
PLANS APPROVAL DATE

REGISTERED PROFESSIONAL ENGINEER ALBERT K. YU No. 43220 Exp. 3/31/12 CIVIL STATE OF CALIFORNIA

THE STATE OF CALIFORNIA OR ITS OFFICERS OR AGENTS SHALL NOT BE RESPONSIBLE FOR THE ACCURACY OR COMPLETENESS OF SCANNED COPIES OF THIS PLAN SHEET.

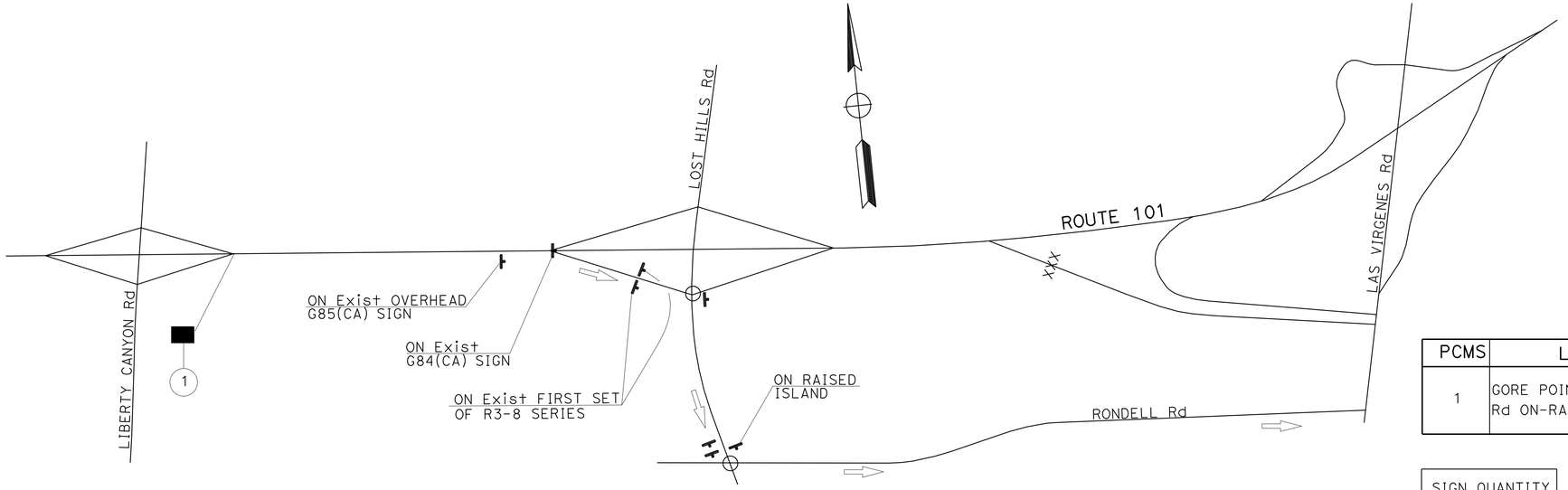

PCMS	LOCATION	MESSAGE	
1	GORE POINT OF LIBERTY CANYON Rd ON-RAMP	1ST FLASH	LAS/VIRGENES/CLOSED
		2ND FLASH	DETOUR/USE LOST/HILLS

SIGN QUANTITY	
SP-2	8

SB OFF-RAMP TO LAS VIRGENES Rd

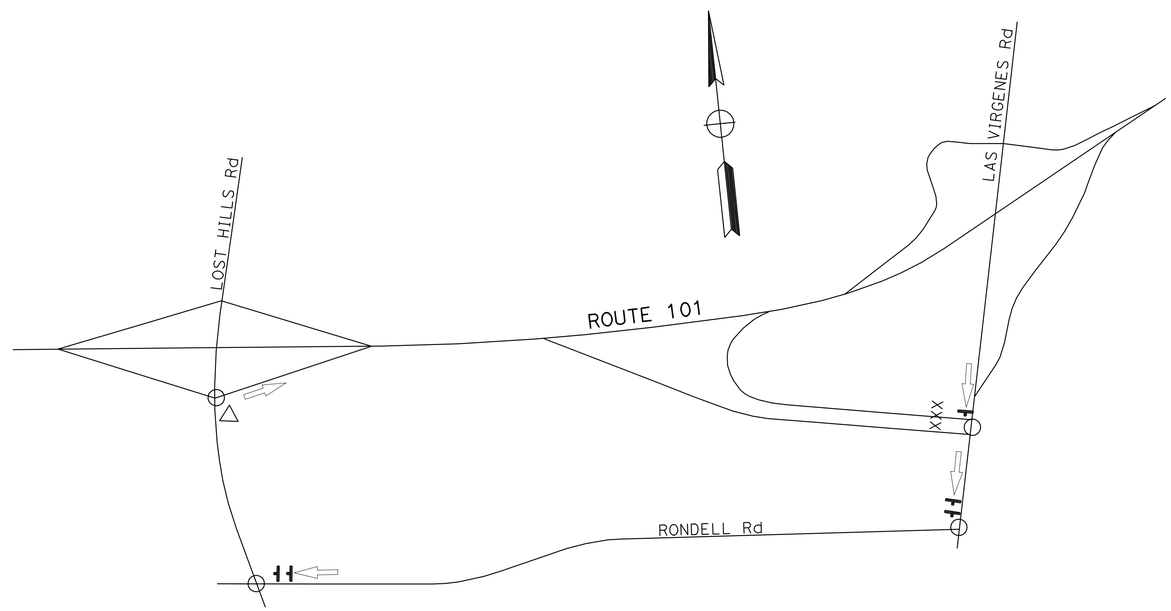

SIGN QUANTITY	
SP-2	5

SB ON-RAMP FROM SB LAS VIRGENES Rd

NOTES:

1. SIGN LOCATIONS ARE APPROXIMATE. EXACT LOCATIONS WILL BE DETERMINED BY THE ENGINEER.
2. SEE THD-24 FOR SIGN SP-2 DETAILS.
3. DETOUR SIGNS SHALL BE REMOVED AT THE END OF EACH CLOSURE.

LEGEND

- SIGN SP-2
- DIRECTION OF TRAVEL
- PORTABLE CHANGEABLE MESSAGE SIGN (PCMS)
- EXISTING SIGNALIZED INTERSECTION
- XXX RAMP CLOSURE
- EXISTING Fwy GUIDE SIGN

TRAFFIC HANDLING DETAILS
RAMP DETOUR
FOR WORK SHIFT CLOSURES AT LAS VIRGENES Rd

NO SCALE

THD-8

STATE OF CALIFORNIA - DEPARTMENT OF TRANSPORTATION

DTM

FUNCTIONAL SUPERVISOR: JOHN YANG

CALCULATED-DESIGNED BY: ALBERT K YU

CHECKED BY: JOCELYN C CHIANG

REVISED BY: JC

DATE REVISED: 12/09

LAST REVISION 00-00-00

DATE PLOTTED => 25-AUG-2010

TIME PLOTTED => 14:23

Dist	COUNTY	ROUTE	POST MILES TOTAL PROJECT	SHEET No.	TOTAL SHEETS
07	LA	101	31.1/38.2	25	74

REGISTERED CIVIL ENGINEER 5/20/10 DATE

08-16-10
PLANS APPROVAL DATE

REGISTERED PROFESSIONAL ENGINEER ALBERT K. YU No. 43220 Exp. 3/31/12 CIVIL STATE OF CALIFORNIA

THE STATE OF CALIFORNIA OR ITS OFFICERS OR AGENTS SHALL NOT BE RESPONSIBLE FOR THE ACCURACY OR COMPLETENESS OF SCANNED COPIES OF THIS PLAN SHEET.

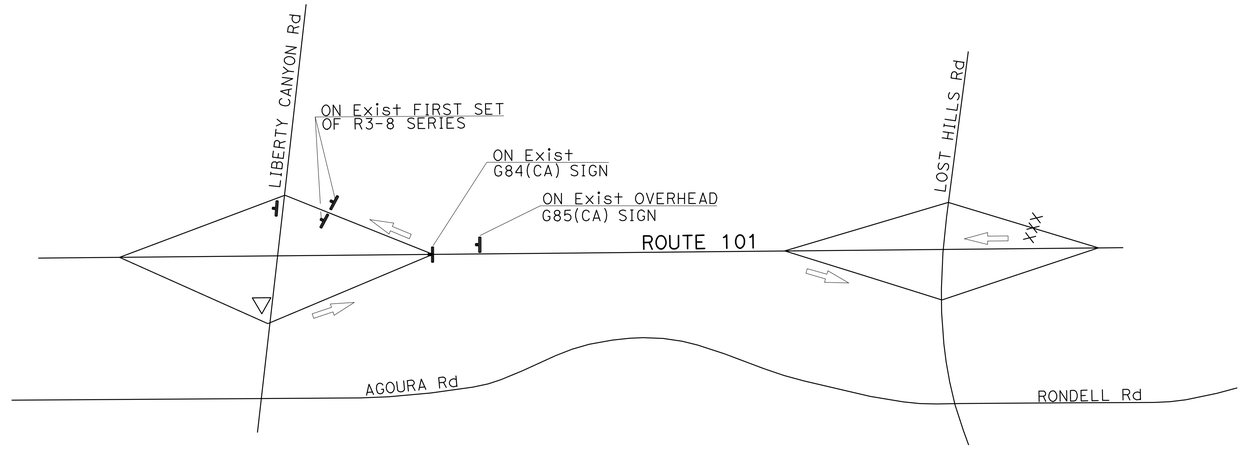

SIGN QUANTITY	
SP-2	5

NB OFF-RAMP TO LOST HILLS Rd

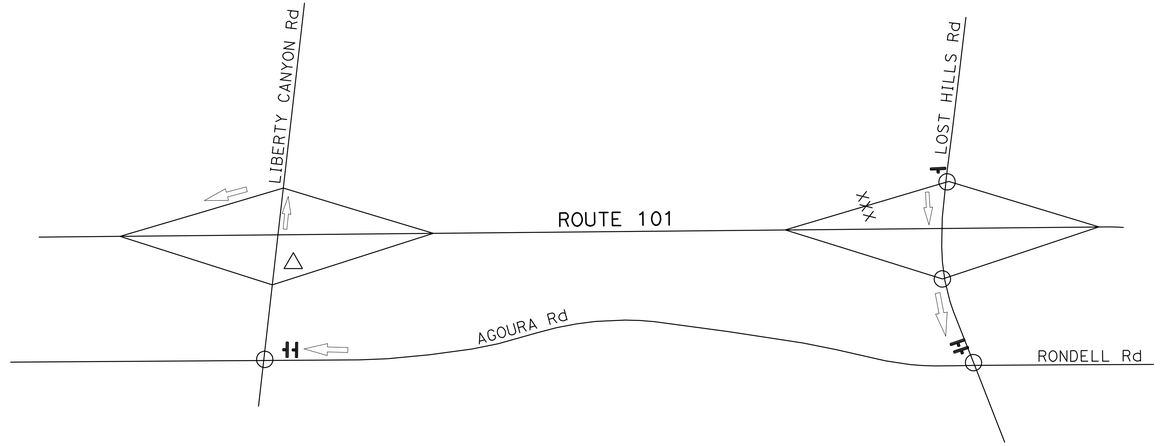

SIGN QUANTITY	
SP-2	5

NB ON-RAMP FROM LOST HILLS Rd

NOTES:

1. SIGN LOCATIONS ARE APPROXIMATE. EXACT LOCATIONS WILL BE DETERMINED BY THE ENGINEER.
2. SEE THD-24 FOR SIGN SP-2 DETAILS.
3. DETOUR SIGNS SHALL BE REMOVED AT THE END OF EACH CLOSURE.

LEGEND

- SIGN SP-2
- DIRECTION OF TRAVEL
- EXISTING SIGNALIZED INTERSECTION
- XXX RAMP CLOSURE
- EXISTING Fwy GUIDE SIGN

TRAFFIC HANDLING DETAILS
RAMP DETOUR
FOR WORK SHIFT CLOSURES AT LOST HILLS Rd

NO SCALE

THD-9

STATE OF CALIFORNIA - DEPARTMENT OF TRANSPORTATION	DTM	Caltrans	
FUNCTIONAL SUPERVISOR	JOHN YANG		
CALCULATED-DESIGNED BY	ALBERT K YU	REVISED BY	JC
CHECKED BY	JOCELYN C CHIANG	DATE REVISED	12/09

LAST REVISION 00-00-00 | DATE PLOTTED => 25-AUG-2010 | TIME PLOTTED => 14:23

Dist	COUNTY	ROUTE	POST MILES TOTAL PROJECT	SHEET No.	TOTAL SHEETS
07	LA	101	31.1/38.2	26	74

REGISTERED CIVIL ENGINEER 5/20/10 DATE

08-16-10
PLANS APPROVAL DATE

REGISTERED PROFESSIONAL ENGINEER ALBERT K. YU No. 43220 Exp. 3/31/12 CIVIL STATE OF CALIFORNIA

THE STATE OF CALIFORNIA OR ITS OFFICERS OR AGENTS SHALL NOT BE RESPONSIBLE FOR THE ACCURACY OR COMPLETENESS OF SCANNED COPIES OF THIS PLAN SHEET.

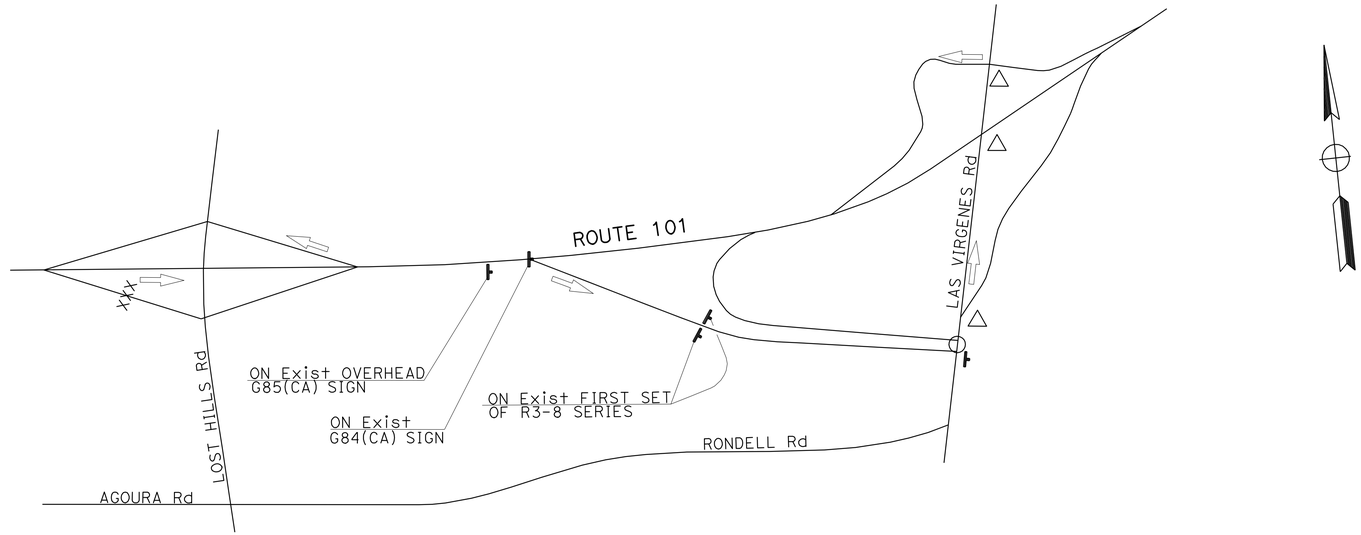

SB OFF-RAMP TO LOST HILLS Rd

SIGN QUANTITY	
SP-2	5

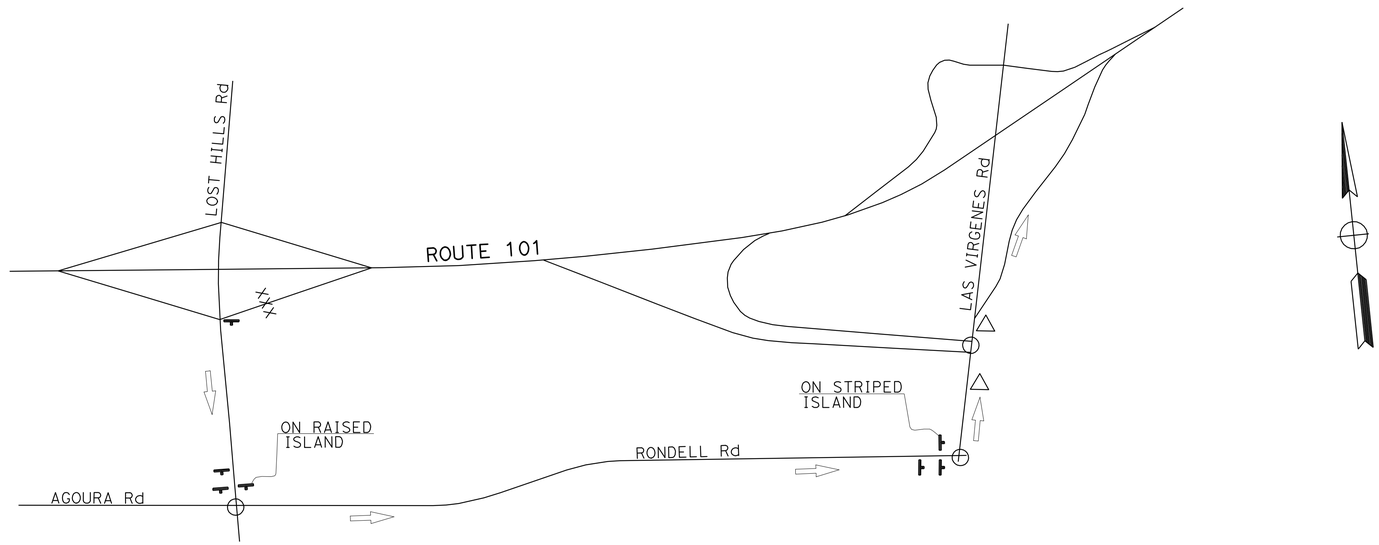

SB ON-RAMP FROM LOST HILLS Rd

SIGN QUANTITY	
SP-2	7

NOTES:

1. SIGN LOCATIONS ARE APPROXIMATE. EXACT LOCATIONS WILL BE DETERMINED BY THE ENGINEER.
2. SEE THD-24 FOR SIGN SP-2 DETAILS.
3. DETOUR SIGNS SHALL BE REMOVED AT THE END OF EACH CLOSURE.

LEGEND

- SIGN SP-2
- DIRECTION OF TRAVEL
- EXISTING SIGNALIZED INTERSECTION
- XXX RAMP CLOSURE
- EXISTING Fwy GUIDE SIGN

TRAFFIC HANDLING DETAILS
RAMP DETOUR
FOR WORK SHIFT CLOSURES
AT LOST HILLS Rd

NO SCALE

THD-10

CALCULATED-DESIGNED BY	ALBERT K YU	REVISED BY	JC
CHECKED BY	JOCELYN C CHIANG	DATE REVISED	12/09
FUNCTIONAL SUPERVISOR	JOHN YANG		

STATE OF CALIFORNIA - DEPARTMENT OF TRANSPORTATION

Caltrans DTM

LAST REVISION 00-00-00 | DATE PLOTTED => 25-AUG-2010 | TIME PLOTTED => 14:24

Dist	COUNTY	ROUTE	POST MILES TOTAL PROJECT	SHEET No.	TOTAL SHEETS
07	LA	101	31.1/38.2	27	74

REGISTERED CIVIL ENGINEER 5/20/10 DATE

08-16-10
PLANS APPROVAL DATE

REGISTERED PROFESSIONAL ENGINEER ALBERT K. YU No. 43220 Exp. 3/31/12 CIVIL STATE OF CALIFORNIA

THE STATE OF CALIFORNIA OR ITS OFFICERS OR AGENTS SHALL NOT BE RESPONSIBLE FOR THE ACCURACY OR COMPLETENESS OF SCANNED COPIES OF THIS PLAN SHEET.

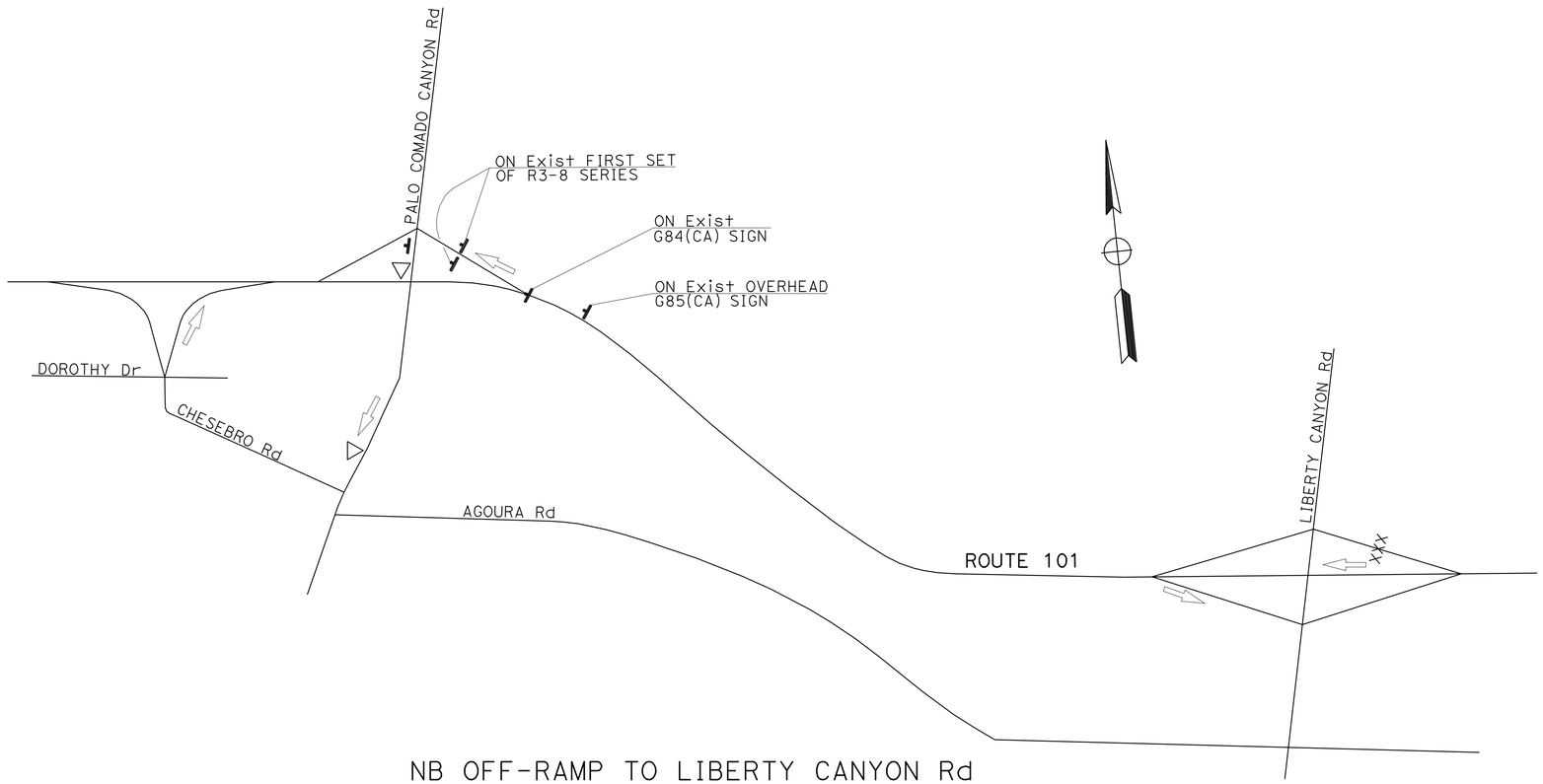

NB OFF-RAMP TO LIBERTY CANYON Rd

SIGN QUANTITY	
SP-2	5

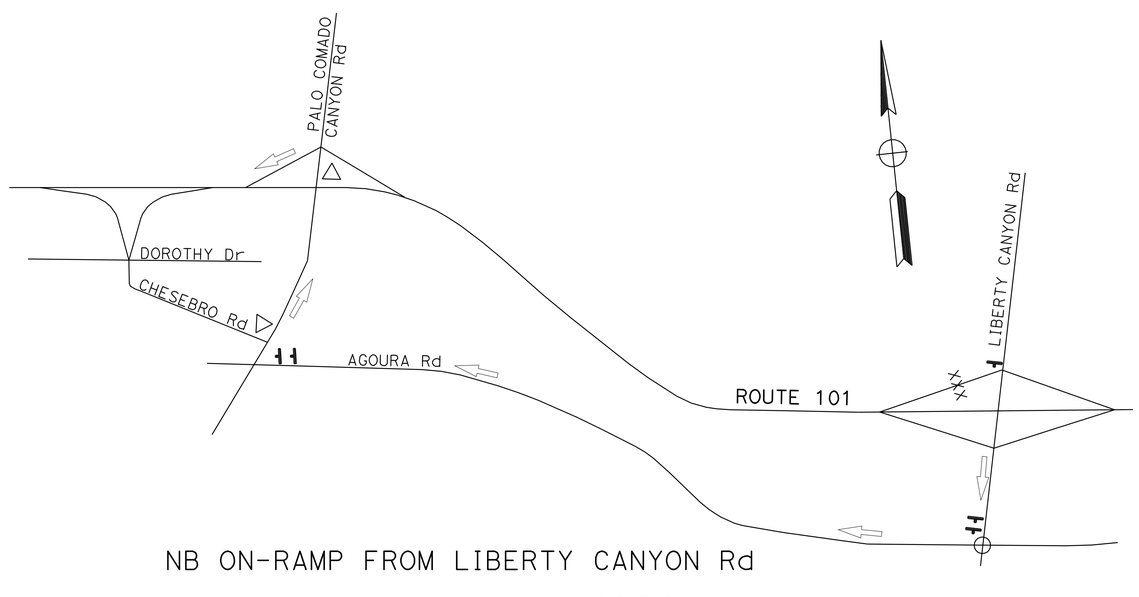

NB ON-RAMP FROM LIBERTY CANYON Rd

SIGN QUANTITY	
SP-2	5

NOTES:

1. SIGN LOCATIONS ARE APPROXIMATE. EXACT LOCATIONS WILL BE DETERMINED BY THE ENGINEER.
2. SEE THD-24 FOR SIGN SP-2 DETAILS.
3. DETOUR SIGNS SHALL BE REMOVED AT THE END OF EACH CLOSURE.

LEGEND

- SIGN SP-2
- DIRECTION OF TRAVEL
- EXISTING SIGNALIZED INTERSECTION
- XXX RAMP CLOSURE
- EXISTING Fwy GUIDE SIGN

TRAFFIC HANDLING DETAILS
RAMP DETOUR
FOR WORK SHIFT CLOSURES
AT LIBERTY CANYON Rd

NO SCALE

THD-11

REVISED BY	JC
DATE REVISED	12/09
CALCULATED-DESIGNED BY	ALBERT K YU
CHECKED BY	JOCELYN C CHIANG
FUNCTIONAL SUPERVISOR	JOHN YANG

STATE OF CALIFORNIA - DEPARTMENT OF TRANSPORTATION
Caltrans DTM

LAST REVISION 00-00-00
DATE PLOTTED => 25-AUG-2010
TIME PLOTTED => 14:24

Dist	COUNTY	ROUTE	POST MILES TOTAL PROJECT	SHEET No.	TOTAL SHEETS
07	LA	101	31.1/38.2	28	74

REGISTERED CIVIL ENGINEER 5/20/10 DATE

08-16-10
PLANS APPROVAL DATE

REGISTERED PROFESSIONAL ENGINEER ALBERT K. YU No. 43220 Exp. 3/31/12 CIVIL STATE OF CALIFORNIA

THE STATE OF CALIFORNIA OR ITS OFFICERS OR AGENTS SHALL NOT BE RESPONSIBLE FOR THE ACCURACY OR COMPLETENESS OF SCANNED COPIES OF THIS PLAN SHEET.

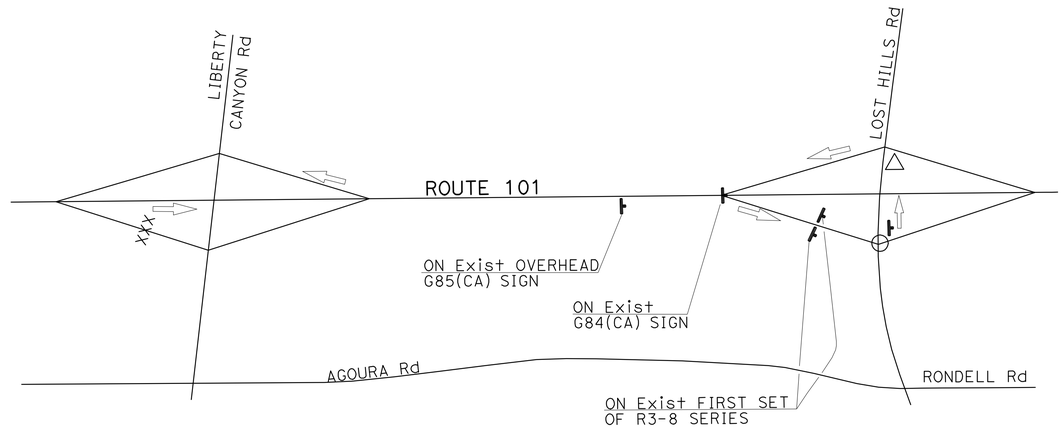

SB OFF-RAMP TO LIBERTY CANYON Rd

SIGN QUANTITY	
SP-2	5

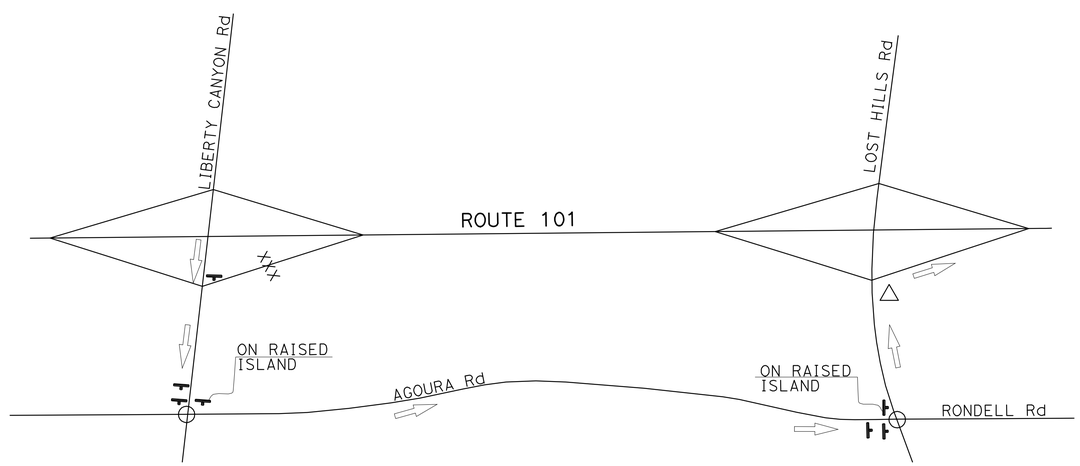

SB ON-RAMP FROM LIBERTY CANYON Rd

SIGN QUANTITY	
SP-2	7

NOTES:

1. SIGN LOCATIONS ARE APPROXIMATE. EXACT LOCATIONS WILL BE DETERMINED BY THE ENGINEER.
2. SEE THD-24 FOR SIGN SP-2 DETAILS.
3. DETOUR SIGNS SHALL BE REMOVED AT THE END OF EACH CLOSURE.

LEGEND

- SIGN SP-2
- DIRECTION OF TRAVEL
- EXISTING SIGNALIZED INTERSECTION
- XXX RAMP CLOSURE
- EXISTING Fwy GUIDE SIGN

TRAFFIC HANDLING DETAILS
RAMP DETOUR FOR WORK SHIFT CLOSURES AT LIBERTY CANYON Rd

NO SCALE

THD-12

CALCULATED-DESIGNED BY	JC	REVISED BY	ALBERT K YU
CHECKED BY	12/09	DATE REVISED	JOCELYN C CHIANG

FUNCTIONAL SUPERVISOR: JOHN YANG

STATE OF CALIFORNIA - DEPARTMENT OF TRANSPORTATION

Caltrans DTM

LAST REVISION 00-00-00 | DATE PLOTTED => 25-AUG-2010 | TIME PLOTTED => 14:24

Dist	COUNTY	ROUTE	POST MILES TOTAL PROJECT	SHEET No.	TOTAL SHEETS
07	LA	101	31.1/38.2	29	74

REGISTERED CIVIL ENGINEER 5/20/10 DATE

08-16-10
PLANS APPROVAL DATE

REGISTERED PROFESSIONAL ENGINEER ALBERT K. YU No. 43220 Exp. 3/31/12 CIVIL STATE OF CALIFORNIA

THE STATE OF CALIFORNIA OR ITS OFFICERS OR AGENTS SHALL NOT BE RESPONSIBLE FOR THE ACCURACY OR COMPLETENESS OF SCANNED COPIES OF THIS PLAN SHEET.

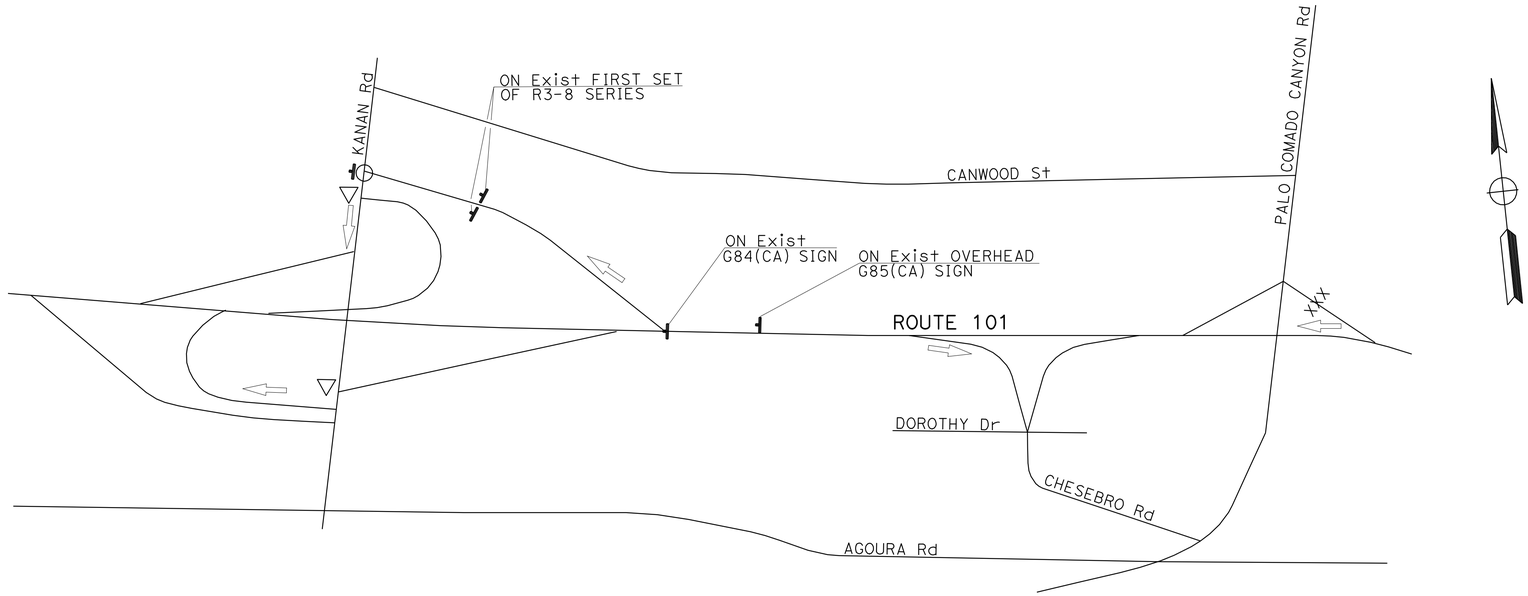

NB OFF-RAMP TO CHESEBRO Rd

SIGN QUANTITY	
SP-2	5

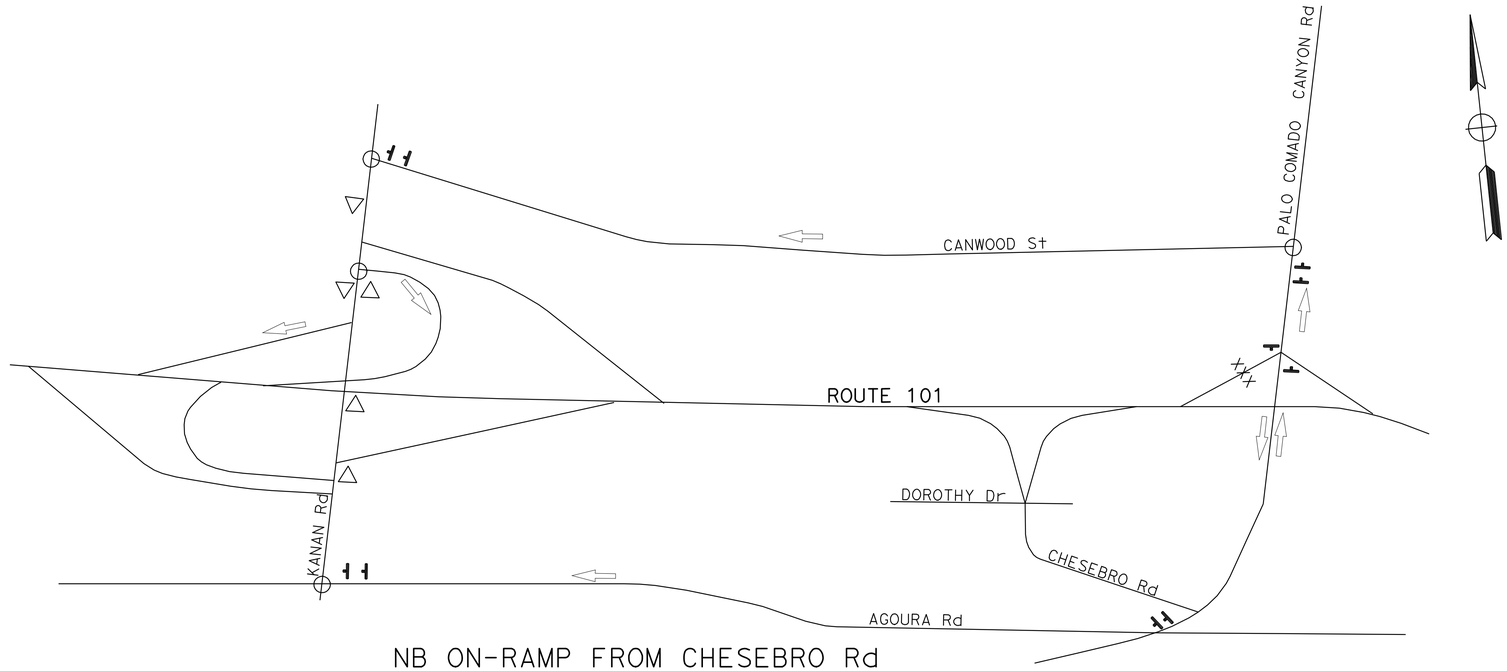

NB ON-RAMP FROM CHESEBRO Rd

SIGN QUANTITY	
SP-2	10

NOTES:

1. SIGN LOCATIONS ARE APPROXIMATE. EXACT LOCATIONS WILL BE DETERMINED BY THE ENGINEER.
2. SEE THD-24 FOR SIGN SP-2 DETAILS.
3. DETOUR SIGNS SHALL BE REMOVED AT THE END OF EACH CLOSURE.

LEGEND

- SIGN SP-2
- DIRECTION OF TRAVEL
- EXISTING SIGNALIZED INTERSECTION
- XXX RAMP CLOSURE
- EXISTING Fwy GUIDE SIGN

TRAFFIC HANDLING DETAILS
RAMP DETOUR FOR WORK SHIFT CLOSURES AT CHESEBRO Rd

NO SCALE

THD-13

STATE OF CALIFORNIA - DEPARTMENT OF TRANSPORTATION
Caltrans DTM

FUNCTIONAL SUPERVISOR: JOHN YANG
CALCULATED-DESIGNED BY: ALBERT K YU
CHECKED BY: JOCELYN C CHIANG
REVISED BY: JC
DATE REVISED: 12/09

LAST REVISION 00-00-00 | DATE PLOTTED => 25-AUG-2010 | TIME PLOTTED => 14:24

BORDER LAST REVISED 7/2/2010 | USERNAME => s110796 | DGN FILE => 725210me013.dgn | RELATIVE BORDER SCALE IS IN INCHES 0 1 2 3 | UNIT 1863 | PROJECT NUMBER & PHASE 07000201051

Dist	COUNTY	ROUTE	POST MILES TOTAL PROJECT	SHEET No.	TOTAL SHEETS
07	LA	101	31.1/38.2	30	74

REGISTERED CIVIL ENGINEER 5/20/10 DATE

08-16-10
PLANS APPROVAL DATE

REGISTERED PROFESSIONAL ENGINEER ALBERT K. YU No. 43220 Exp. 3/31/12 CIVIL STATE OF CALIFORNIA

THE STATE OF CALIFORNIA OR ITS OFFICERS OR AGENTS SHALL NOT BE RESPONSIBLE FOR THE ACCURACY OR COMPLETENESS OF SCANNED COPIES OF THIS PLAN SHEET.

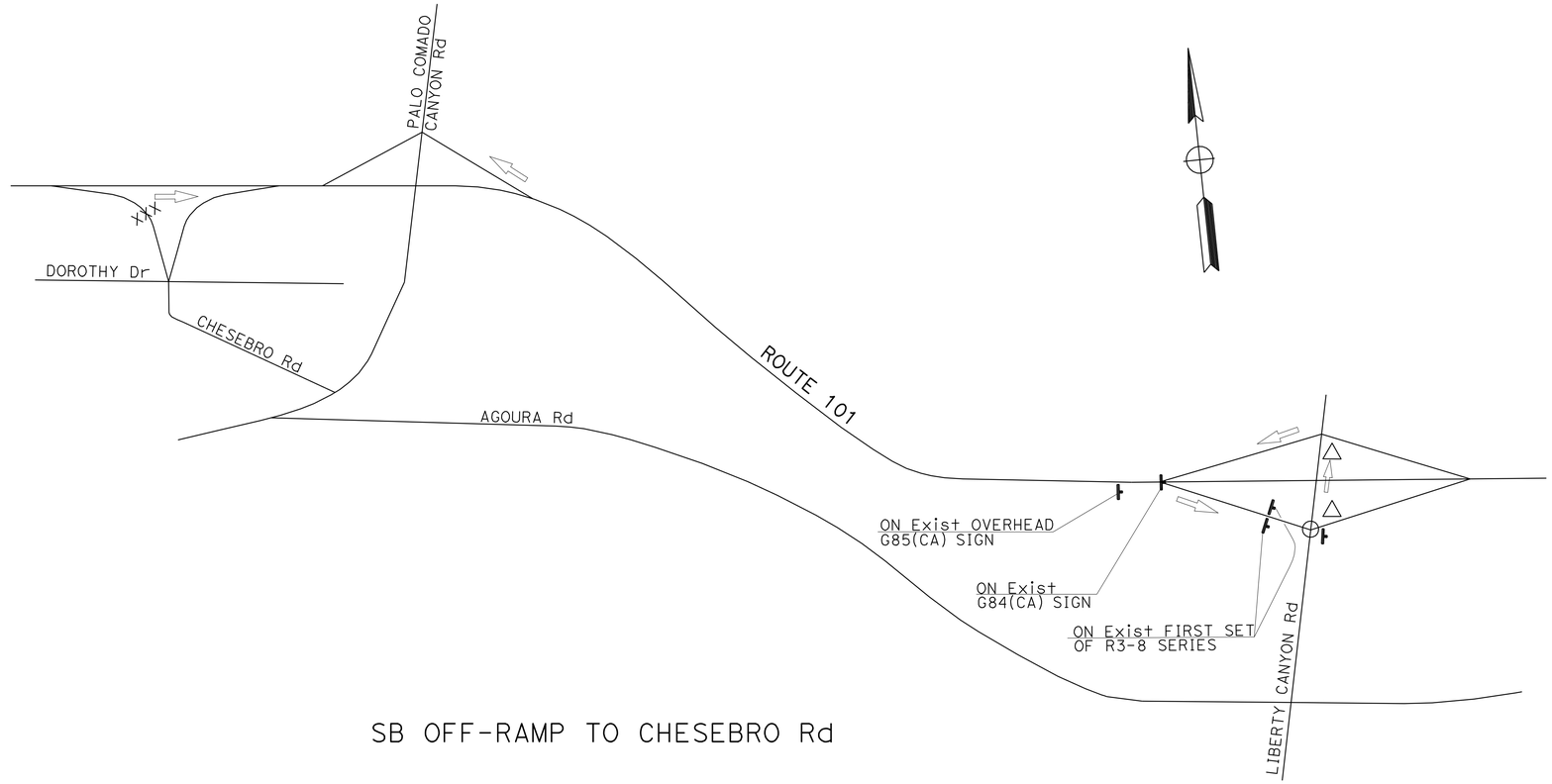

SB OFF-RAMP TO CHESEBRO Rd

SIGN QUANTITY	
SP-2	5

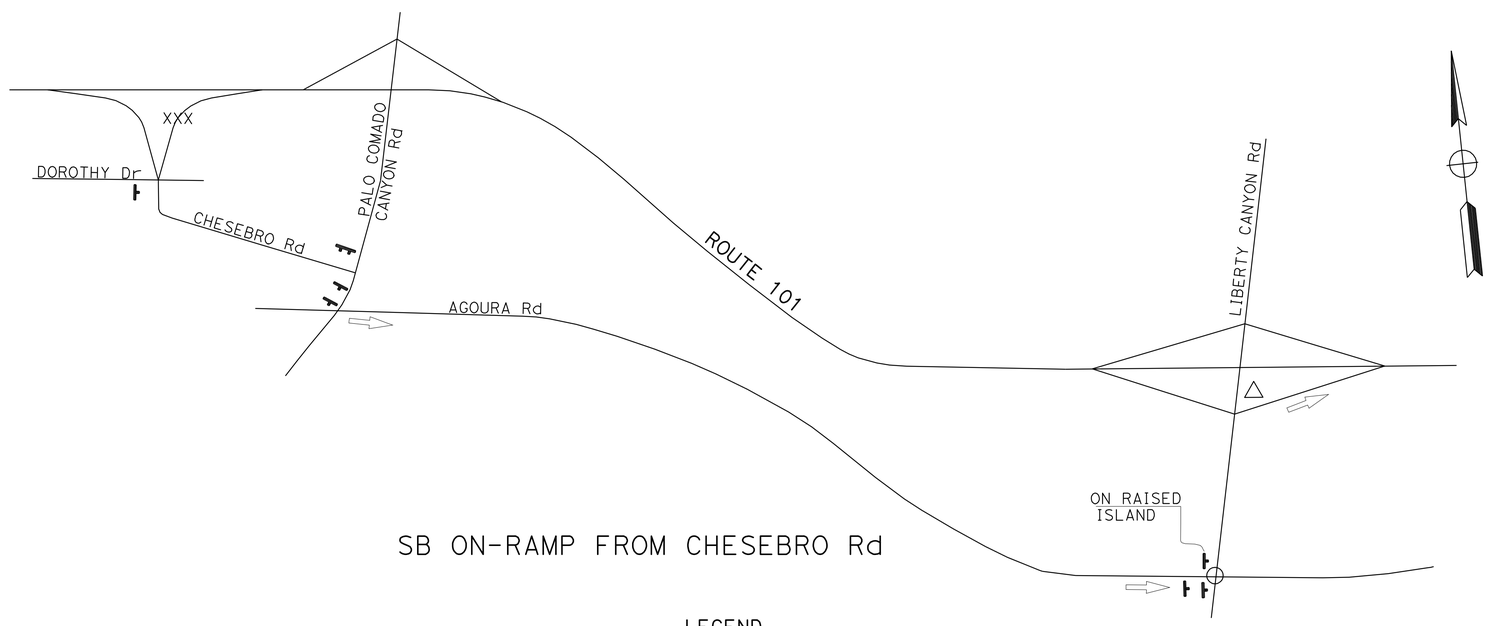

SB ON-RAMP FROM CHESEBRO Rd

SIGN QUANTITY	
SP-2	6
W20-3	1

NOTES:

1. SIGN LOCATIONS ARE APPROXIMATE. EXACT LOCATIONS WILL BE DETERMINED BY THE ENGINEER.
2. SEE THD-24 FOR SIGN SP-2 DETAILS.
3. DETOUR SIGNS SHALL BE REMOVED AT THE END OF EACH CLOSURE.

LEGEND

- SIGN SP-2
- SIGN W20-3
- DIRECTION OF TRAVEL
- EXISTING SIGNALIZED INTERSECTION
- XXX RAMP CLOSURE
- EXISTING Fwy GUIDE SIGN

TRAFFIC HANDLING DETAILS
RAMP DETOUR
FOR WORK SHIFT CLOSURES
AT CHESEBRO Rd

NO SCALE

THD-14

STATE OF CALIFORNIA - DEPARTMENT OF TRANSPORTATION
Caltrans DTM

FUNCTIONAL SUPERVISOR: JOHN YANG
CALCULATED-DESIGNED BY: ALBERT K YU
CHECKED BY: JOCELYN C CHIANG
REVISED BY: JC
DATE REVISED: 12/09

LAST REVISION 00-00-00
DATE PLOTTED => 25-AUG-2010
TIME PLOTTED => 14:24

Dist	COUNTY	ROUTE	POST MILES TOTAL PROJECT	SHEET No.	TOTAL SHEETS
07	LA	101	31.1/38.2	31	74

REGISTERED CIVIL ENGINEER 5/20/10 DATE

08-16-10
PLANS APPROVAL DATE

REGISTERED PROFESSIONAL ENGINEER ALBERT K. YU No. 43220 Exp. 3/31/12 CIVIL STATE OF CALIFORNIA

THE STATE OF CALIFORNIA OR ITS OFFICERS OR AGENTS SHALL NOT BE RESPONSIBLE FOR THE ACCURACY OR COMPLETENESS OF SCANNED COPIES OF THIS PLAN SHEET.

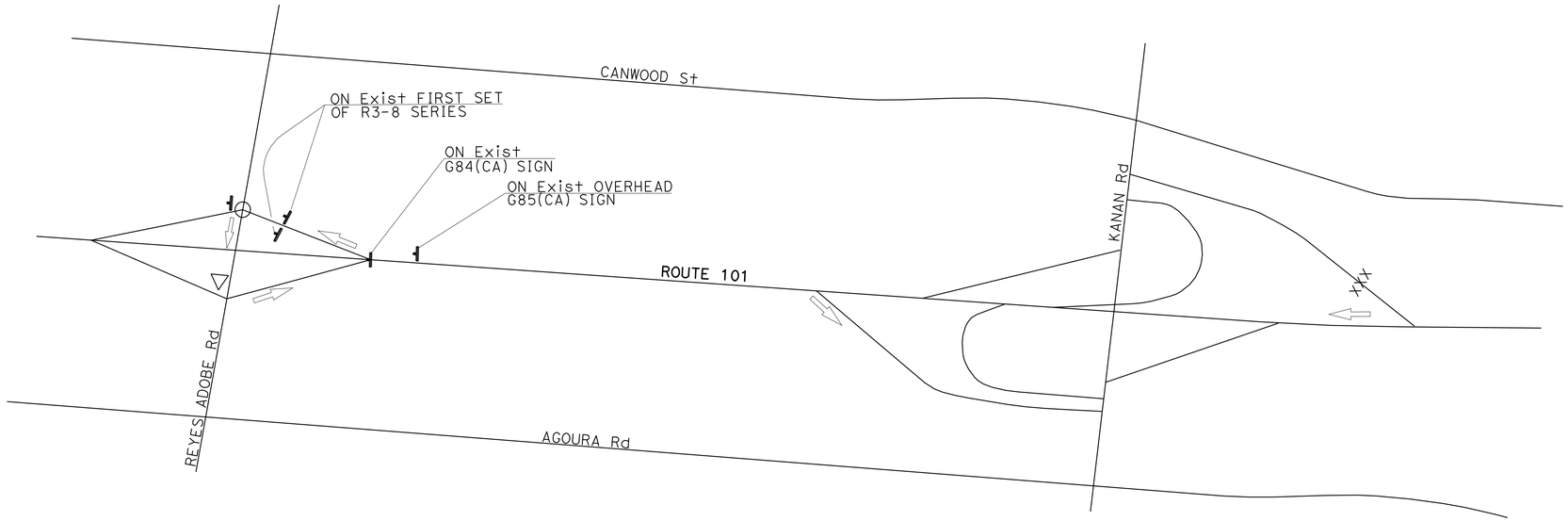

NB OFF-RAMP TO KANAN Rd

SIGN QUANTITY	
SP-2	5

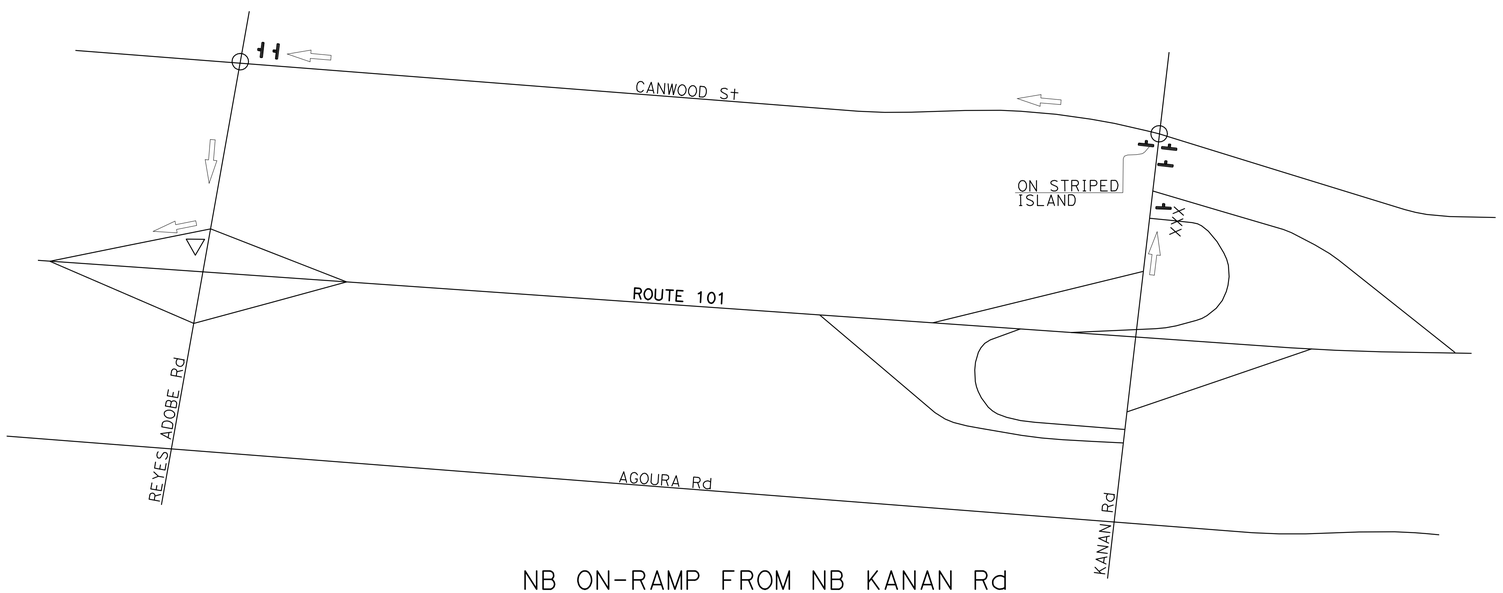

NB ON-RAMP FROM NB KANAN Rd

SIGN QUANTITY	
SP-2	6

NOTES:

1. SIGN LOCATIONS ARE APPROXIMATE. EXACT LOCATIONS WILL BE DETERMINED BY THE ENGINEER.
2. SEE THD-24 FOR SIGN SP-2 DETAILS.
3. DETOUR SIGNS SHALL BE REMOVED AT THE END OF EACH CLOSURE.

LEGEND

- SIGN SP-2
- DIRECTION OF TRAVEL
- EXISTING SIGNALIZED INTERSECTION
- XXX RAMP CLOSURE
- EXISTING Fwy GUIDE SIGN

TRAFFIC HANDLING DETAILS
RAMP DETOUR
FOR WORK SHIFT CLOSURES
AT KANAN Rd

NO SCALE

THD-15

REVISED BY	DATE REVISED
JC	12/09

ALBERT K YU
JOCELYN C CHIANG

CALCULATED-DESIGNED BY
CHECKED BY

FUNCTIONAL SUPERVISOR
JOHN YANG

STATE OF CALIFORNIA - DEPARTMENT OF TRANSPORTATION
Caltrans
DTM

LAST REVISION 00-00-00
DATE PLOTTED => 25-AUG-2010
TIME PLOTTED => 14:24

Dist	COUNTY	ROUTE	POST MILES TOTAL PROJECT	SHEET No.	TOTAL SHEETS
07	LA	101	31.1/38.2	32	74

REGISTERED CIVIL ENGINEER 5/20/10 DATE

08-16-10
PLANS APPROVAL DATE

REGISTERED PROFESSIONAL ENGINEER ALBERT K. YU No. 43220 Exp. 3/31/12 CIVIL STATE OF CALIFORNIA

THE STATE OF CALIFORNIA OR ITS OFFICERS OR AGENTS SHALL NOT BE RESPONSIBLE FOR THE ACCURACY OR COMPLETENESS OF SCANNED COPIES OF THIS PLAN SHEET.

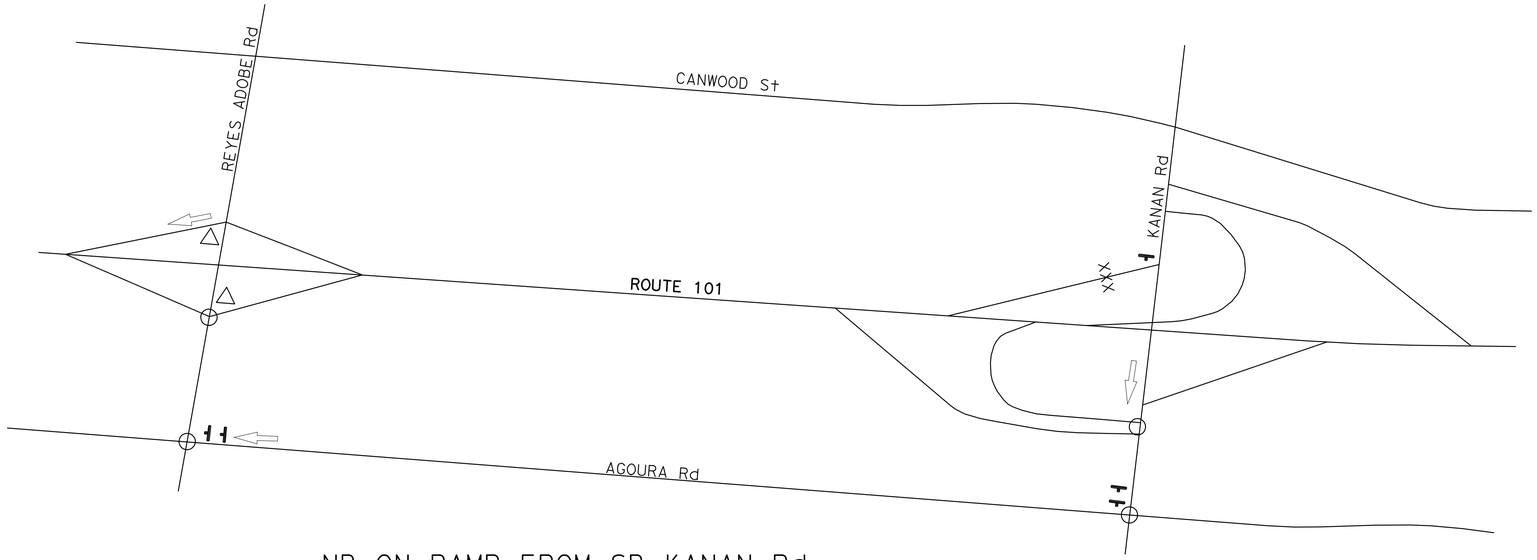

NB ON-RAMP FROM SB KANAN Rd

SIGN QUANTITY	
SP-2	5

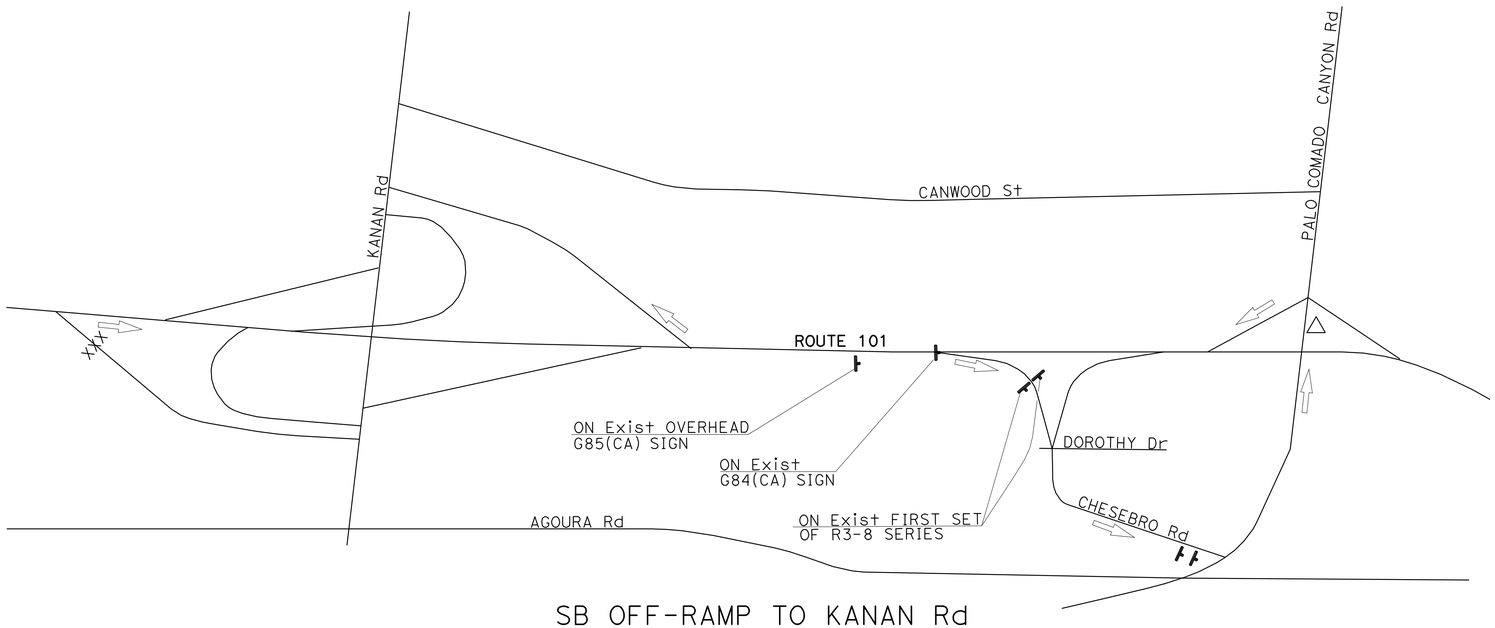

SB OFF-RAMP TO KANAN Rd

SIGN QUANTITY	
SP-2	6

NOTES:

1. SIGN LOCATIONS ARE APPROXIMATE. EXACT LOCATIONS WILL BE DETERMINED BY THE ENGINEER.
2. SEE THD-24 FOR SIGN SP-2 DETAILS.
3. DETOUR SIGNS SHALL BE REMOVED AT THE END OF EACH CLOSURE.

LEGEND

- SIGN SP-2
- DIRECTION OF TRAVEL
- EXISTING SIGNALIZED INTERSECTION
- XXX RAMP CLOSURE
- EXISTING Fwy GUIDE SIGN

TRAFFIC HANDLING DETAILS
RAMP DETOUR
FOR WORK SHIFT CLOSURES
AT KANAN Rd

NO SCALE

THD-16

STATE OF CALIFORNIA - DEPARTMENT OF TRANSPORTATION
DTM
Caltrans

FUNCTIONAL SUPERVISOR: JOHN YANG
CALCULATED-DESIGNED BY: ALBERT K YU
CHECKED BY: JOCELYN C CHIANG
REVISED BY: JC
DATE REVISED: 12/09

LAST REVISION 00-00-00
DATE PLOTTED => 25-AUG-2010
TIME PLOTTED => 14:24

Dist	COUNTY	ROUTE	POST MILES TOTAL PROJECT	SHEET No.	TOTAL SHEETS
07	LA	101	31.1/38.2	33	74

REGISTERED CIVIL ENGINEER 5/20/10 DATE

08-16-10
PLANS APPROVAL DATE

REGISTERED PROFESSIONAL ENGINEER ALBERT K. YU No. 43220 Exp. 3/31/12 CIVIL STATE OF CALIFORNIA

THE STATE OF CALIFORNIA OR ITS OFFICERS OR AGENTS SHALL NOT BE RESPONSIBLE FOR THE ACCURACY OR COMPLETENESS OF SCANNED COPIES OF THIS PLAN SHEET.

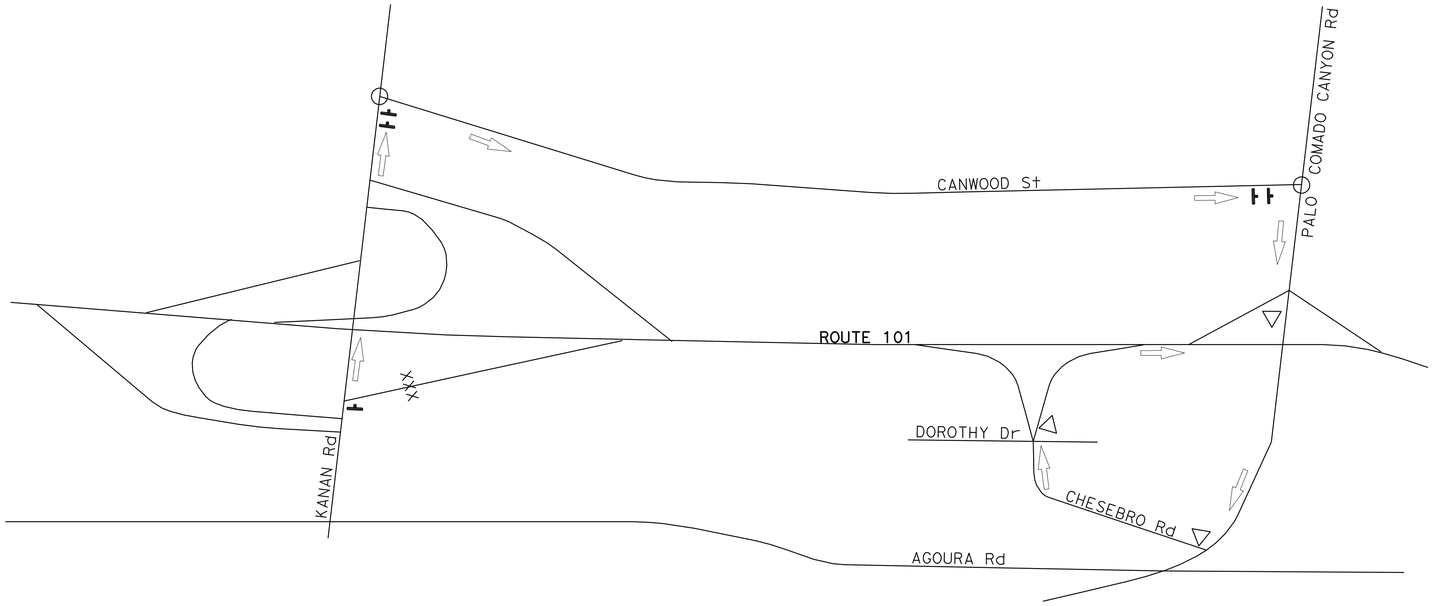

SB ON-RAMP FROM NB KANAN Rd

SIGN QUANTITY	
SP-2	5

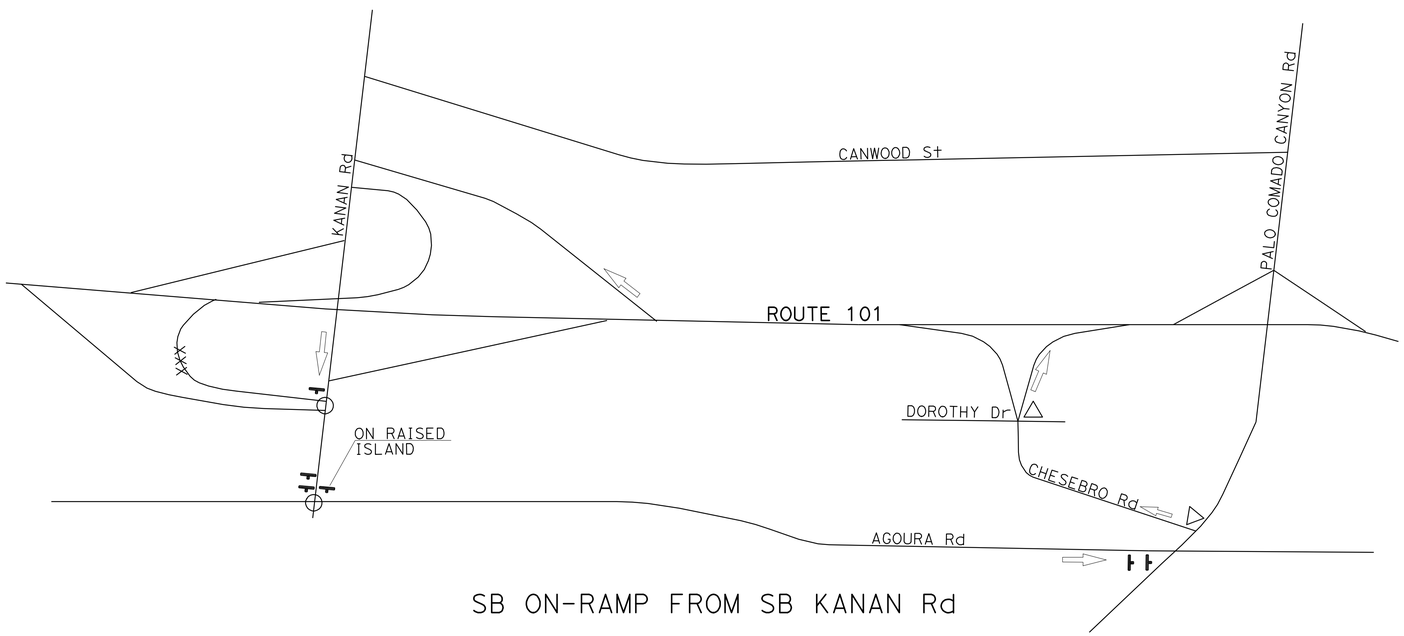

SB ON-RAMP FROM SB KANAN Rd

SIGN QUANTITY	
SP-2	6

NOTES:

1. SIGN LOCATIONS ARE APPROXIMATE. EXACT LOCATIONS WILL BE DETERMINED BY THE ENGINEER.
2. SEE THD-24 FOR SIGN SP-2 DETAILS.
3. DETOUR SIGNS SHALL BE REMOVED AT THE END OF EACH CLOSURE.

LEGEND

- SIGN SP-2
- DIRECTION OF TRAVEL
- EXISTING SIGNALIZED INTERSECTION
- XXX RAMP CLOSURE
- EXISTING Fwy GUIDE SIGN

TRAFFIC HANDLING DETAILS
RAMP DETOUR FOR WORK SHIFT CLOSURES AT KANAN Rd

NO SCALE

THD-17

STATE OF CALIFORNIA - DEPARTMENT OF TRANSPORTATION
Caltrans DTM

FUNCTIONAL SUPERVISOR: JOHN YANG
CALCULATED-DESIGNED BY: ALBERT K YU
CHECKED BY: JOCELYN C CHIANG
REVISED BY: JC
DATE REVISED: 12/09

LAST REVISION DATE PLOTTED => 25-AUG-2010
00-00-00 TIME PLOTTED => 14:24

Dist	COUNTY	ROUTE	POST MILES TOTAL PROJECT	SHEET No.	TOTAL SHEETS
07	LA	101	31.1/38.2	34	74

REGISTERED CIVIL ENGINEER 5/20/10 DATE

08-16-10
PLANS APPROVAL DATE

REGISTERED PROFESSIONAL ENGINEER ALBERT K. YU No. 43220 Exp. 3/31/12 CIVIL STATE OF CALIFORNIA

THE STATE OF CALIFORNIA OR ITS OFFICERS OR AGENTS SHALL NOT BE RESPONSIBLE FOR THE ACCURACY OR COMPLETENESS OF SCANNED COPIES OF THIS PLAN SHEET.

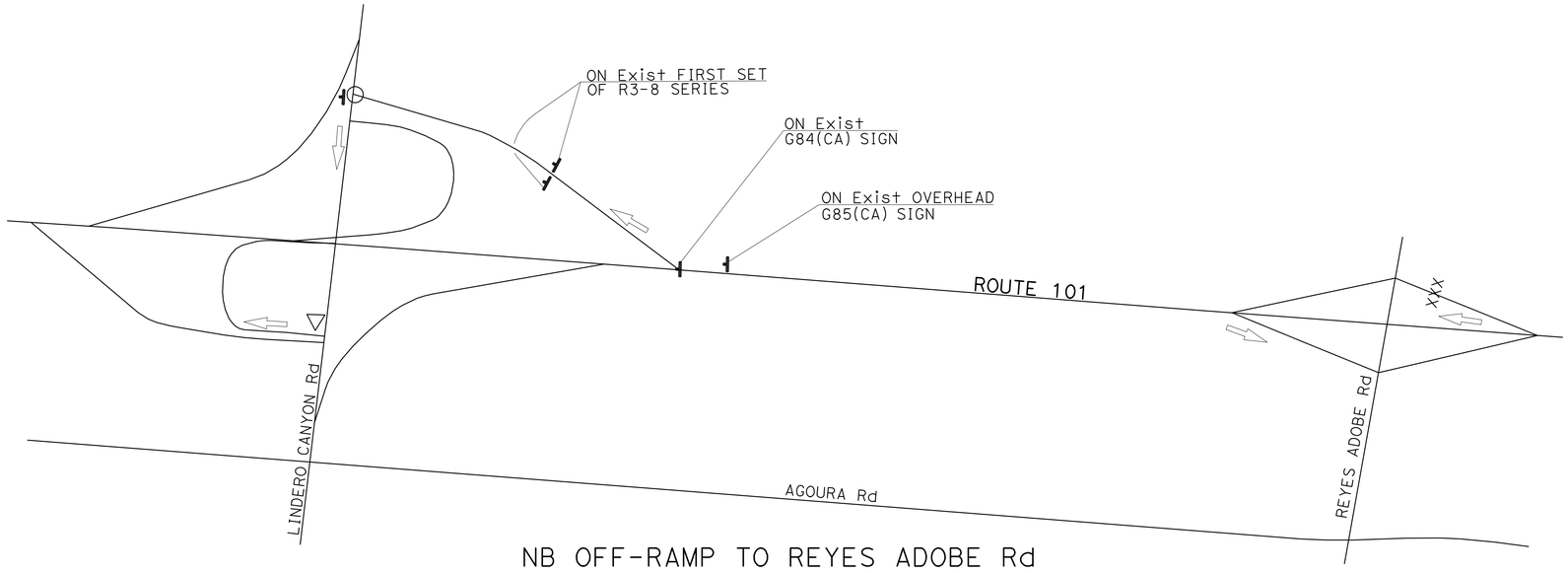

NB OFF-RAMP TO REYES ADOBE Rd

SIGN QUANTITY	
SP-2	5

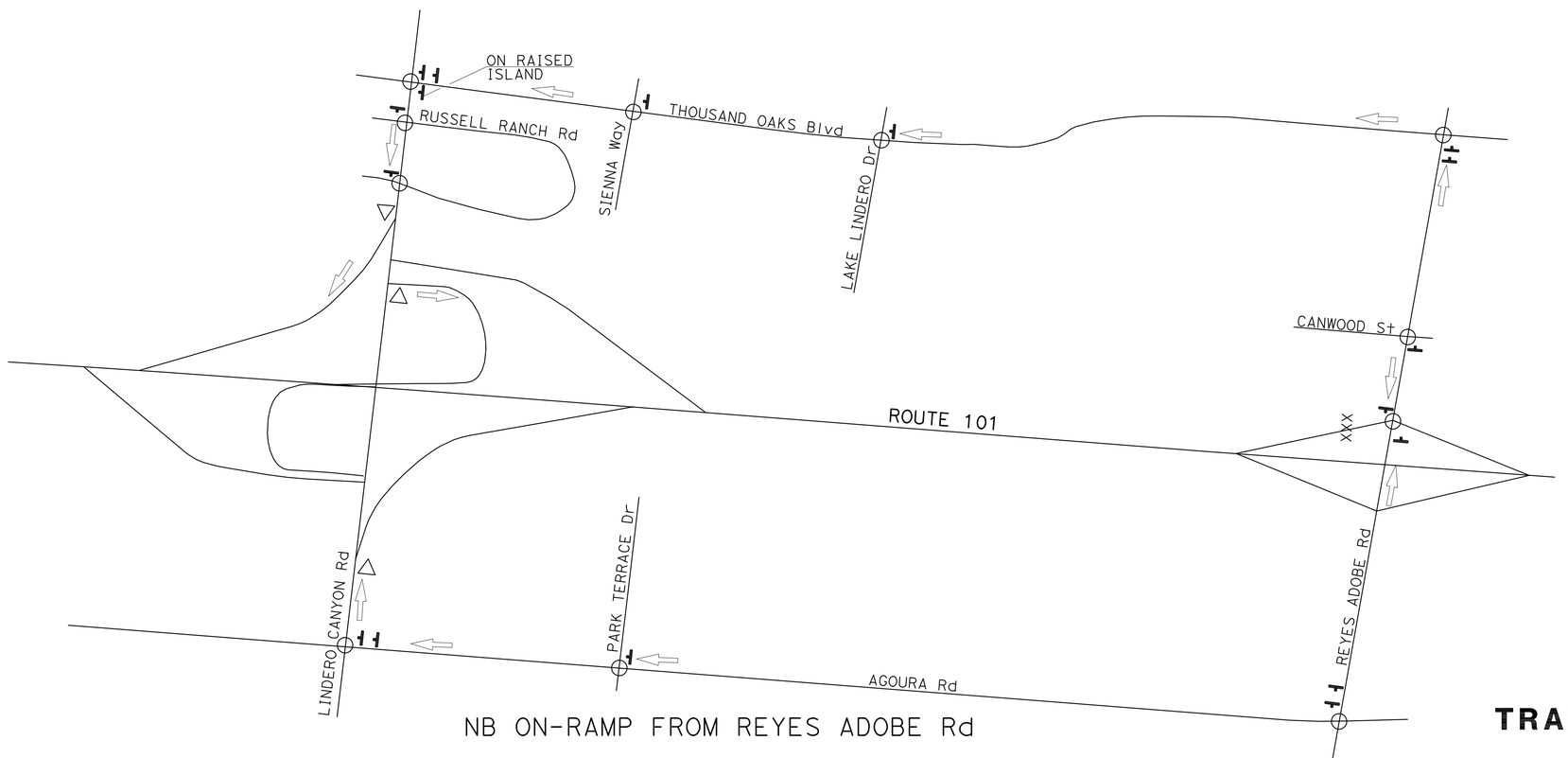

NB ON-RAMP FROM REYES ADOBE Rd

SIGN QUANTITY	
SP-2	17

NOTES:

1. SIGN LOCATIONS ARE APPROXIMATE. EXACT LOCATIONS WILL BE DETERMINED BY THE ENGINEER.
2. SEE THD-24 FOR SIGN SP-2 DETAILS.
3. DETOUR SIGNS SHALL BE REMOVED AT THE END OF EACH CLOSURE.

LEGEND

- SIGN SP-2
- DIRECTION OF TRAVEL
- EXISTING SIGNALIZED INTERSECTION
- XXX RAMP CLOSURE
- EXISTING Fwy GUIDE SIGN

TRAFFIC HANDLING DETAILS
RAMP DETOUR
FOR WORK SHIFT CLOSURES AT REYES ADOBE Rd

NO SCALE

THD-18

CALCULATED-DESIGNED BY	ALBERT K YU	REVISED BY	JC
CHECKED BY	JOCELYN C CHIANG	DATE REVISED	12/09
FUNCTIONAL SUPERVISOR	JOHN YANG		

STATE OF CALIFORNIA - DEPARTMENT OF TRANSPORTATION
Caltrans
DTM

LAST REVISION 00-00-00
DATE PLOTTED => 25-AUG-2010
TIME PLOTTED => 14:24

Dist	COUNTY	ROUTE	POST MILES TOTAL PROJECT	SHEET No.	TOTAL SHEETS
07	LA	101	31.1/38.2	35	74

REGISTERED CIVIL ENGINEER 5/20/10 DATE

08-16-10
PLANS APPROVAL DATE

REGISTERED PROFESSIONAL ENGINEER ALBERT K. YU No. 43220 Exp. 3/31/12 CIVIL STATE OF CALIFORNIA

THE STATE OF CALIFORNIA OR ITS OFFICERS OR AGENTS SHALL NOT BE RESPONSIBLE FOR THE ACCURACY OR COMPLETENESS OF SCANNED COPIES OF THIS PLAN SHEET.

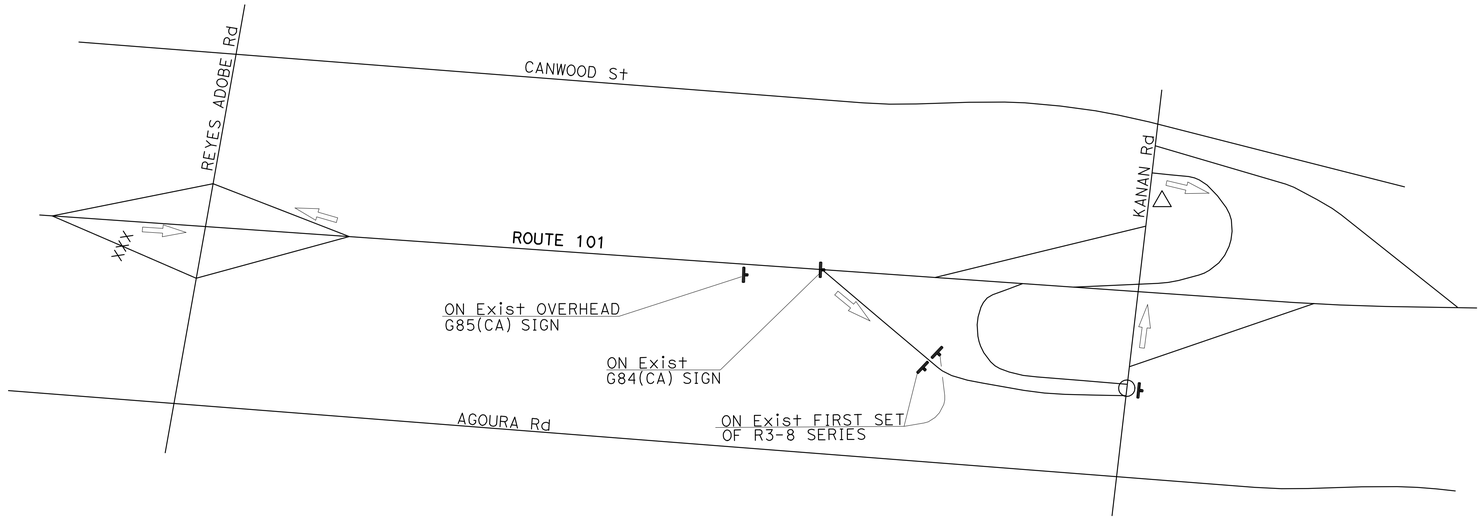

SB OFF-RAMP TO REYES ADOBE Rd

SIGN QUANTITY	
SP-2	5

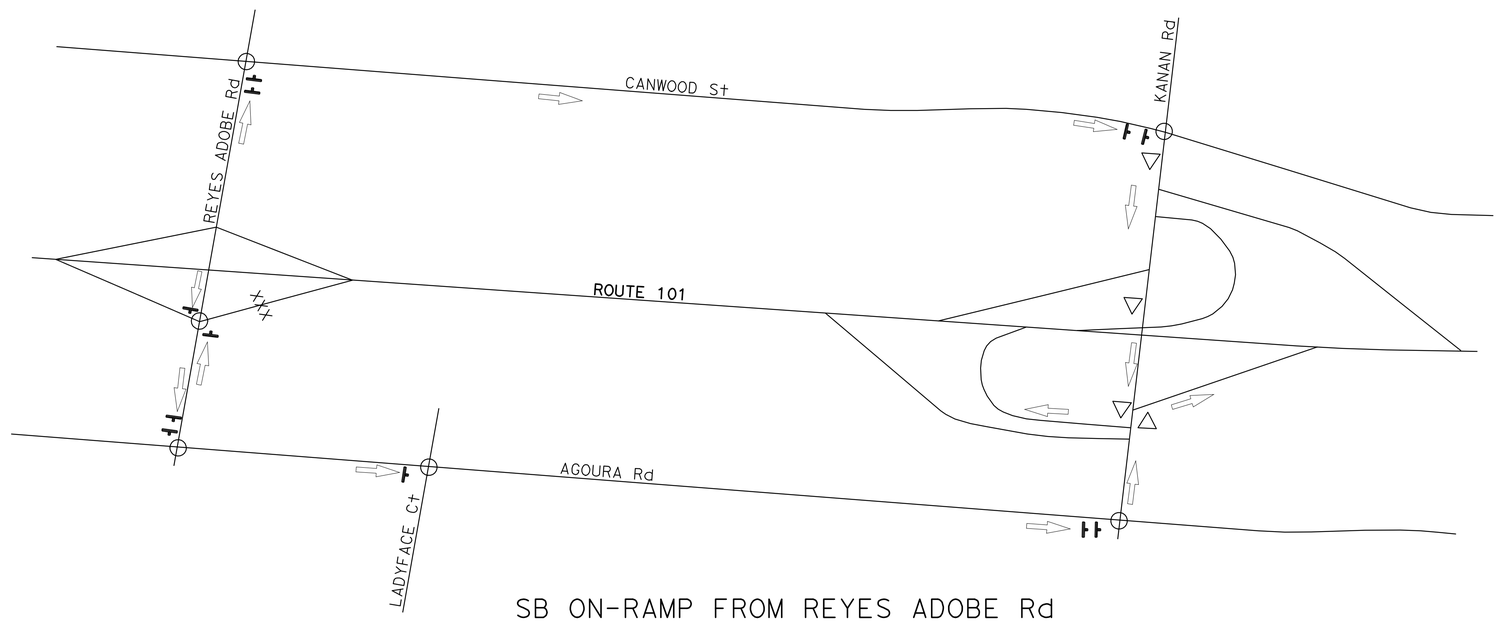

SB ON-RAMP FROM REYES ADOBE Rd

SIGN QUANTITY	
SP-2	11

NOTES:

1. SIGN LOCATIONS ARE APPROXIMATE. EXACT LOCATIONS WILL BE DETERMINED BY THE ENGINEER.
2. SEE THD-24 FOR SIGN SP-2 DETAILS.
3. DETOUR SIGNS SHALL BE REMOVED AT THE END OF EACH CLOSURE.

LEGEND

- SIGN SP-2
- DIRECTION OF TRAVEL
- EXISTING SIGNALIZED INTERSECTION
- XXX RAMP CLOSURE
- EXISTING Fwy GUIDE SIGN

TRAFFIC HANDLING DETAILS
RAMP DETOUR
FOR WORK SHIFT CLOSURES
AT REYES ADOBE Rd

NO SCALE

THD-19

STATE OF CALIFORNIA - DEPARTMENT OF TRANSPORTATION
Caltrans DTM

FUNCTIONAL SUPERVISOR: JOHN YANG
CALCULATED-DESIGNED BY: ALBERT K YU
CHECKED BY: JOCELYN C CHIANG
REVISED BY: JC
DATE REVISED: 12/09

LAST REVISION: 00-00-00
DATE PLOTTED => 25-AUG-2010
TIME PLOTTED => 14:24

Dist	COUNTY	ROUTE	POST MILES TOTAL PROJECT	SHEET No.	TOTAL SHEETS
07	LA	101	31.1/38.2	36	74

REGISTERED CIVIL ENGINEER 5/20/10 DATE

08-16-10
PLANS APPROVAL DATE

REGISTERED PROFESSIONAL ENGINEER ALBERT K. YU No. 43220 Exp. 3/31/12 CIVIL STATE OF CALIFORNIA

THE STATE OF CALIFORNIA OR ITS OFFICERS OR AGENTS SHALL NOT BE RESPONSIBLE FOR THE ACCURACY OR COMPLETENESS OF SCANNED COPIES OF THIS PLAN SHEET.

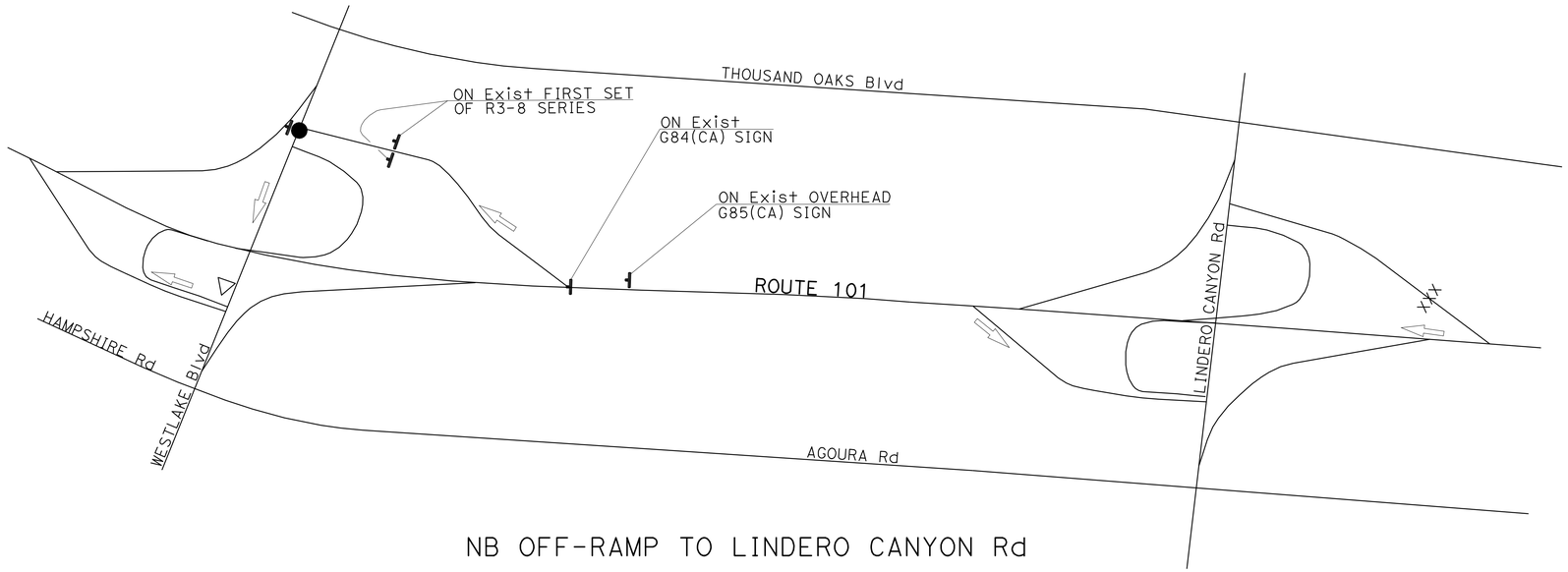

NB OFF-RAMP TO LINDERO CANYON Rd

SIGN QUANTITY	
SP-2	5

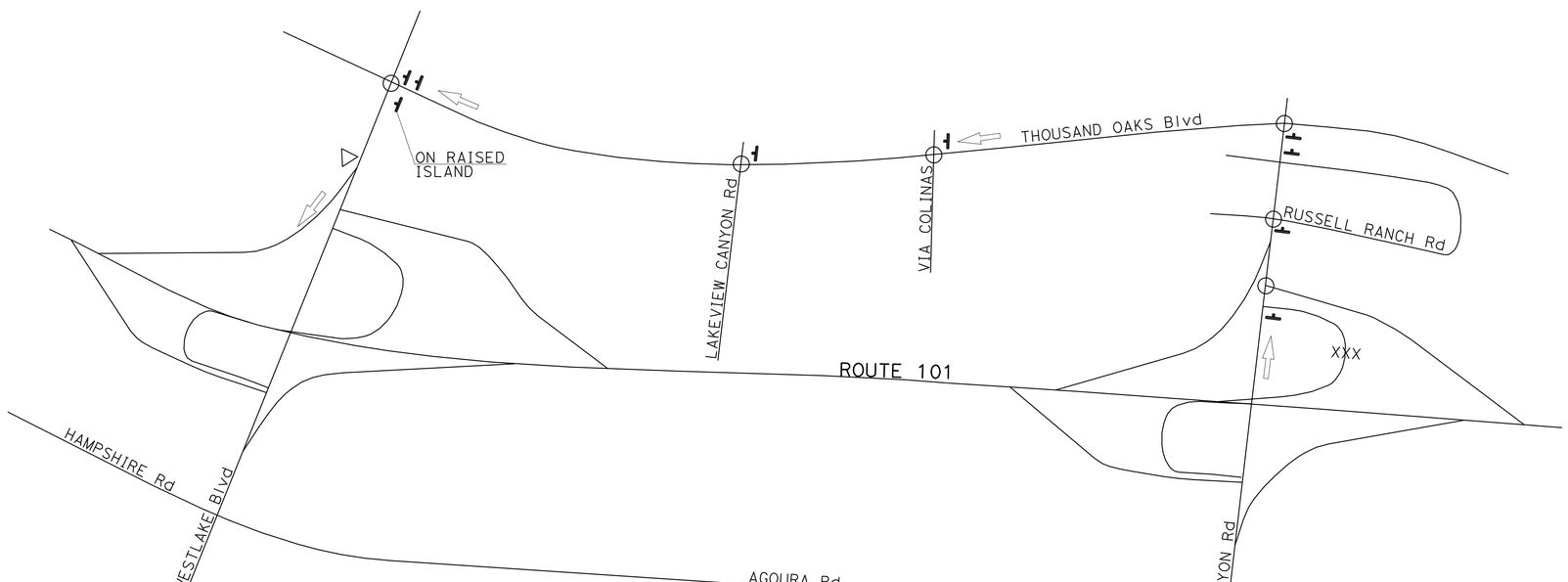

NB ON-RAMP FROM NB LINDERO CANYON Rd

SIGN QUANTITY	
SP-2	9

NOTES:

1. SIGN LOCATIONS ARE APPROXIMATE. EXACT LOCATIONS WILL BE DETERMINED BY THE ENGINEER.
2. SEE THD-24 FOR SIGN SP-2 DETAILS.
3. DETOUR SIGNS SHALL BE REMOVED AT THE END OF EACH CLOSURE.

LEGEND

- SIGN SP-2
- DIRECTION OF TRAVEL
- EXISTING SIGNALIZED INTERSECTION
- XXX RAMP CLOSURE
- EXISTING Fwy GUIDE SIGN

TRAFFIC HANDLING DETAILS
RAMP DETOUR
FOR WORK SHIFT CLOSURES
AT LINDERO CANYON Rd

NO SCALE

THD-20

STATE OF CALIFORNIA - DEPARTMENT OF TRANSPORTATION
Caltrans DTM

FUNCTIONAL SUPERVISOR: JOHN YANG
CALCULATED-DESIGNED BY: ALBERT K YU
CHECKED BY: JOCELYN C CHIANG
REVISED BY: JC
DATE REVISED: 12/09

LAST REVISION: DATE PLOTTED => 25-AUG-2010 TIME PLOTTED => 14:24
00-00-00

Dist	COUNTY	ROUTE	POST MILES TOTAL PROJECT	SHEET No.	TOTAL SHEETS
07	LA	101	31.1/38.2	37	74

REGISTERED CIVIL ENGINEER 5/20/10 DATE

08-16-10
PLANS APPROVAL DATE

REGISTERED PROFESSIONAL ENGINEER ALBERT K. YU No. 43220 Exp. 3/31/12 CIVIL STATE OF CALIFORNIA

THE STATE OF CALIFORNIA OR ITS OFFICERS OR AGENTS SHALL NOT BE RESPONSIBLE FOR THE ACCURACY OR COMPLETENESS OF SCANNED COPIES OF THIS PLAN SHEET.

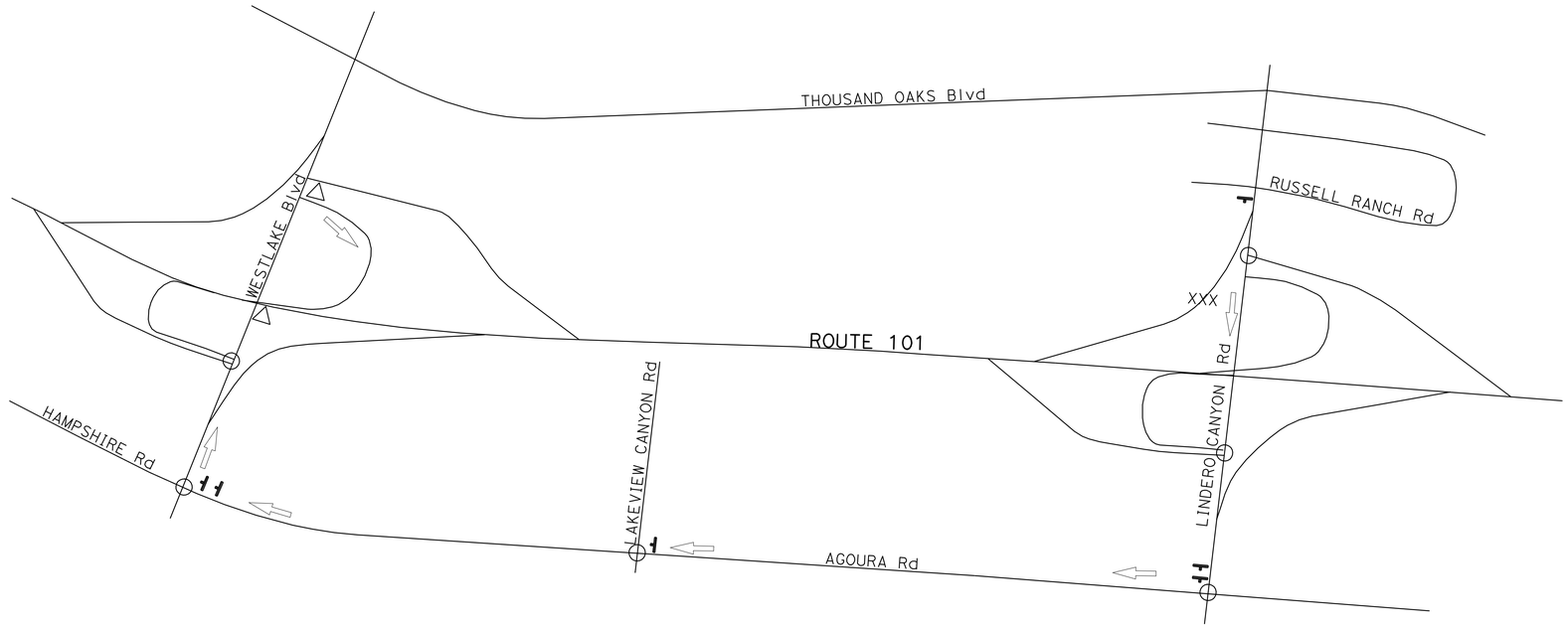

NB ON-RAMP FROM SB LINDERO CANYON Rd

SIGN QUANTITY	
SP-2	6

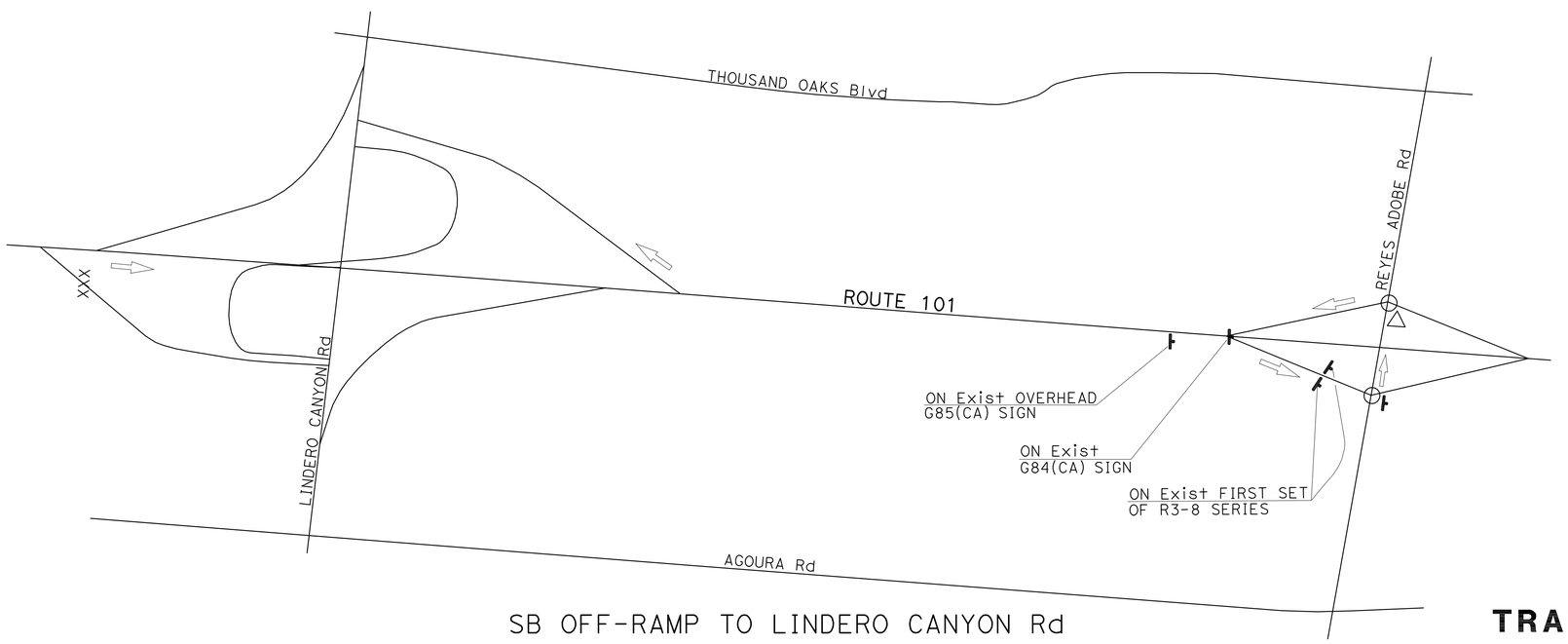

SB OFF-RAMP TO LINDERO CANYON Rd

SIGN QUANTITY	
SP-2	5

NOTES:

1. SIGN LOCATIONS ARE APPROXIMATE. EXACT LOCATIONS WILL BE DETERMINED BY THE ENGINEER.
2. SEE THD-24 FOR SIGN SP-2 DETAILS.
3. DETOUR SIGNS SHALL BE REMOVED AT THE END OF EACH CLOSURE.

LEGEND

- SIGN SP-2
- DIRECTION OF TRAVEL
- EXISTING SIGNALIZED INTERSECTION
- XXX RAMP CLOSURE
- EXISTING Fwy GUIDE SIGN

TRAFFIC HANDLING DETAILS
RAMP DETOUR
FOR WORK SHIFT CLOSURES
AT LINDERO CANYON Rd

NO SCALE

THD-21

CALCULATED-DESIGNED BY	JC
CHECKED BY	
REVISED BY	
DATE REVISED	12/09
FUNCTIONAL SUPERVISOR	JOHN YANG
	ALBERT K YU
	JOCELYN C CHIANG

STATE OF CALIFORNIA - DEPARTMENT OF TRANSPORTATION
Caltrans DTM

LAST REVISION 00-00-00 | DATE PLOTTED => 25-AUG-2010 | TIME PLOTTED => 14:24

Dist	COUNTY	ROUTE	POST MILES TOTAL PROJECT	SHEET No.	TOTAL SHEETS
07	LA	101	31.1/38.2	38	74

REGISTERED CIVIL ENGINEER 5/20/10 DATE

08-16-10
PLANS APPROVAL DATE

REGISTERED PROFESSIONAL ENGINEER ALBERT K. YU No. 43220 Exp. 3/31/12 CIVIL STATE OF CALIFORNIA

THE STATE OF CALIFORNIA OR ITS OFFICERS OR AGENTS SHALL NOT BE RESPONSIBLE FOR THE ACCURACY OR COMPLETENESS OF SCANNED COPIES OF THIS PLAN SHEET.

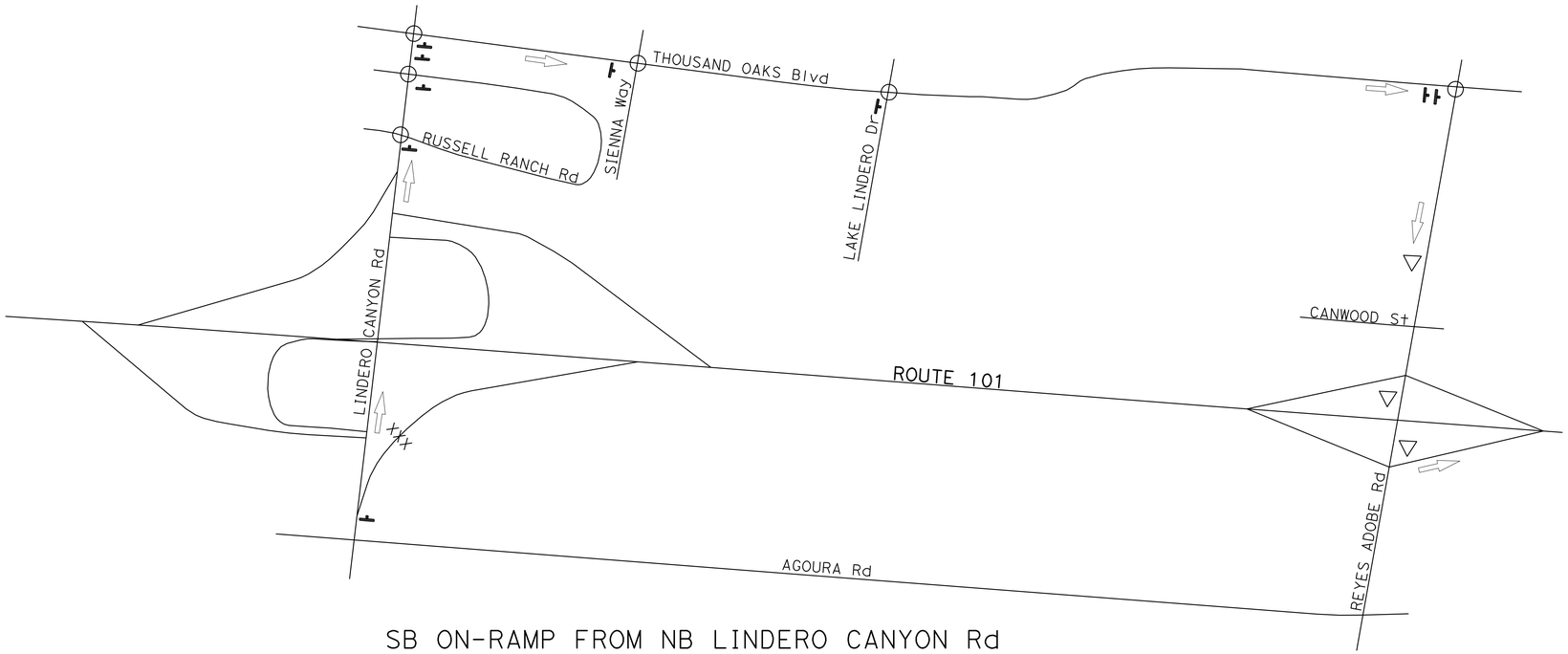

SB ON-RAMP FROM NB LINDERO CANYON Rd

SIGN QUANTITY	
SP-2	9

SB ON-RAMP FROM SB LINDERO CANYON Rd

SIGN QUANTITY	
SP-2	7

NOTES:

1. SIGN LOCATIONS ARE APPROXIMATE. EXACT LOCATIONS WILL BE DETERMINED BY THE ENGINEER.
2. SEE THD-24 FOR SIGN SP-2 DETAILS.
3. DETOUR SIGNS SHALL BE REMOVED AT THE END OF EACH CLOSURE.

LEGEND

- SIGN SP-2
- DIRECTION OF TRAVEL
- EXISTING SIGNALIZED INTERSECTION
- XXX RAMP CLOSURE
- EXISTING Fwy GUIDE SIGN

TRAFFIC HANDLING DETAILS
RAMP DETOUR
FOR WORK SHIFT CLOSURES
AT LINDERO CANYON Rd

NO SCALE

THD-22

REVISED BY	JC
DATE REVISED	12/09
CALCULATED-DESIGNED BY	ALBERT K YU
CHECKED BY	JOCELYN C CHIANG
FUNCTIONAL SUPERVISOR	JOHN YANG

STATE OF CALIFORNIA - DEPARTMENT OF TRANSPORTATION
Caltrans DTM

LAST REVISION 00-00-00 | DATE PLOTTED => 25-AUG-2010 | TIME PLOTTED => 14:24

Dist	COUNTY	ROUTE	POST MILES TOTAL PROJECT	SHEET No.	TOTAL SHEETS
07	LA	101	31.1/38.2	39	74

REGISTERED CIVIL ENGINEER 5/20/10 DATE

08-16-10
PLANS APPROVAL DATE

REGISTERED PROFESSIONAL ENGINEER ALBERT K. YU No. 43220 Exp. 3/31/12 CIVIL STATE OF CALIFORNIA

THE STATE OF CALIFORNIA OR ITS OFFICERS OR AGENTS SHALL NOT BE RESPONSIBLE FOR THE ACCURACY OR COMPLETENESS OF SCANNED COPIES OF THIS PLAN SHEET.

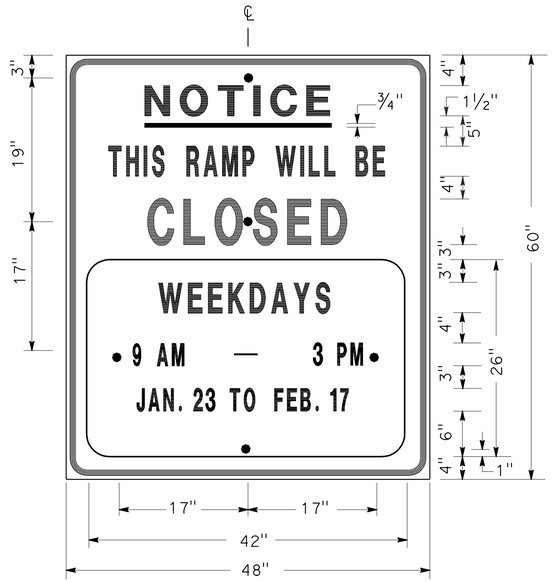

SIGN SP-1

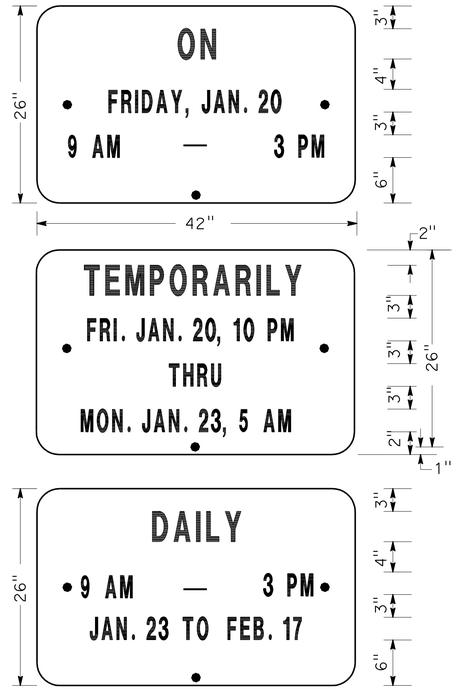

ALTERNATE OVERLAY PANELS (TYPICAL)

SPECIAL ADVANCE NOTICE PUBLICITY SIGN

NOTES: (SIGN SP-1)

1. SIGNS SHALL HAVE ORANGE RETROREFLECTORIZED BACKGROUND WITH BLACK BORDER AND LETTERS.
2. BOLT HOLES SHALL BE 3/8" DIAMETER.
3. BASE MATERIAL SHALL BE ALUMINUM (MINIMUM 0.06").
4. SIGNS SHALL BE MOUNTED WITH BOTTOMS OF SIGNS A MINIMUM OF 6' ABOVE GROUND.

SIZE	BORDER WIDTH	MARGIN WIDTH	LETTER SIZE					CORNER RADIUS
			LINE 1	LINE 2*	LINE 3	LINE 4	LINE 5,6 & 7*	
48"x60"	1 1/4"	3/4"	4E	4D	6E	4D		3"
42"x26"	OVERLAY						3D	1 1/2"
* CONDENSED SPACING IF NECESSARY								

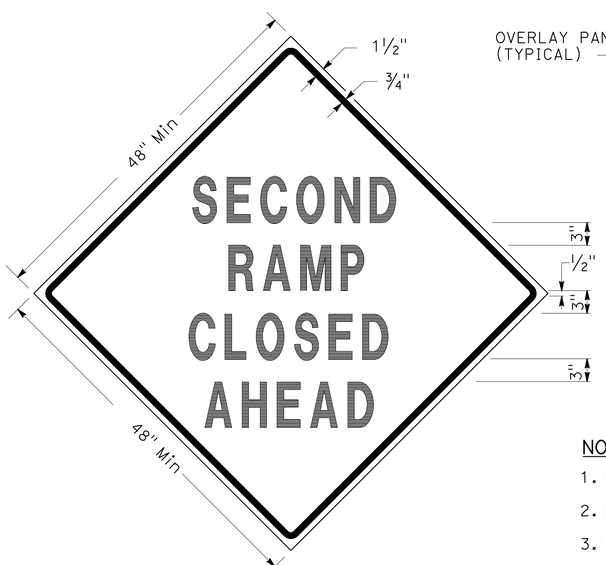

SIGN SP-3

SIGN SP-5

NOTES: (SIGNS SP-3 & SP-5)

1. LETTERS - 6" SERIES D.
2. LETTERS AND BORDERS - BLACK ON RETROREFLECTORIZED ORANGE BACKGROUND.
3. BASE MATERIAL SHALL BE ALUMINUM (MINIMUM 0.06").
4. SIGNS SHALL BE MOUNTED WITH BOTTOMS OF SIGNS A MINIMUM OF 6' ABOVE GROUND.

SPECIAL SIGN FOR EXIT RAMP CLOSURES

SIGN SP-4

NOTES: (SIGN SP-4)

1. LETTERS - 6" SERIES C.
2. LETTERS AND BORDERS - BLACK ON RETROREFLECTORIZED WHITE BACKGROUND.
3. BASE MATERIAL SHALL BE ALUMINUM (MINIMUM 0.06").
4. SIGNS SHALL BE PLACED AT RAMP ENTRANCES IN ADDITION TO SIGNS POSTED IN ACCORDANCE WITH STANDARD PLAN T14.

SPECIAL SIGN FOR ENTRANCE RAMP CLOSURES

TRAFFIC HANDLING DETAILS
TRAFFIC CONTROL SYSTEM FOR RAMP CLOSURES, DETOUR SIGNS AND MISCELLANEOUS DETAILS
SHEET 1 OF 2

NO SCALE

THD-23

CALCULATED-DESIGNED BY	JC
CHECKED BY	
REVISED BY	ALBERT K YU
DATE REVISED	12/09
FUNCTIONAL SUPERVISOR	JOCELYN C CHIANG
	JOHN YANG

STATE OF CALIFORNIA - DEPARTMENT OF TRANSPORTATION
Caltrans DTM

LAST REVISION 00-00-00 | DATE PLOTTED => 25-AUG-2010 | TIME PLOTTED => 14:24

Dist	COUNTY	ROUTE	POST MILES TOTAL PROJECT	SHEET No.	TOTAL SHEETS
07	LA	101	31.1/38.2	40	74

REGISTERED CIVIL ENGINEER 5/20/10 DATE

08-16-10
PLANS APPROVAL DATE

REGISTERED PROFESSIONAL ENGINEER ALBERT K. YU No. 43220 Exp. 3/31/12 CIVIL STATE OF CALIFORNIA

THE STATE OF CALIFORNIA OR ITS OFFICERS OR AGENTS SHALL NOT BE RESPONSIBLE FOR THE ACCURACY OR COMPLETENESS OF SCANNED COPIES OF THIS PLAN SHEET.

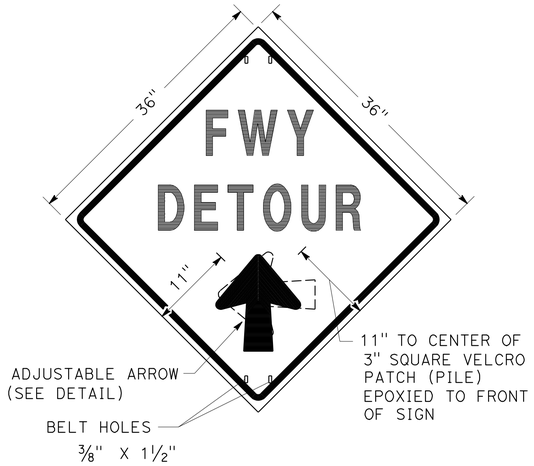

SIGN SP-2

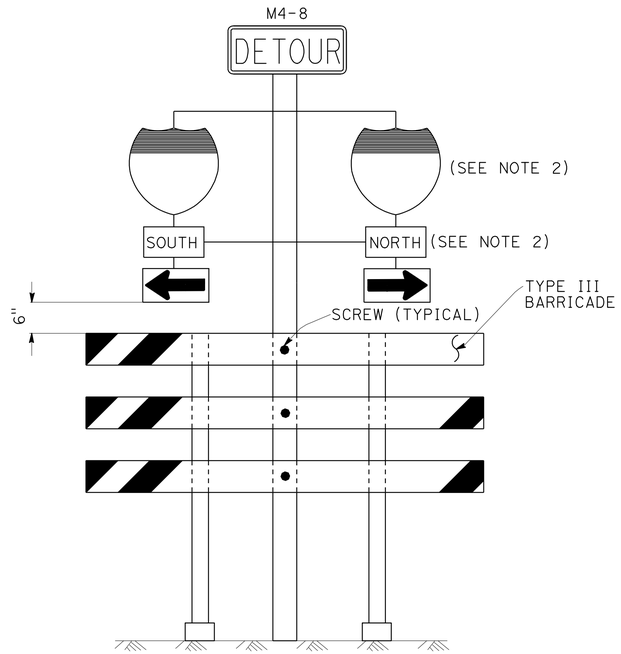

SIGN SP-6 (SEE NOTE 1)

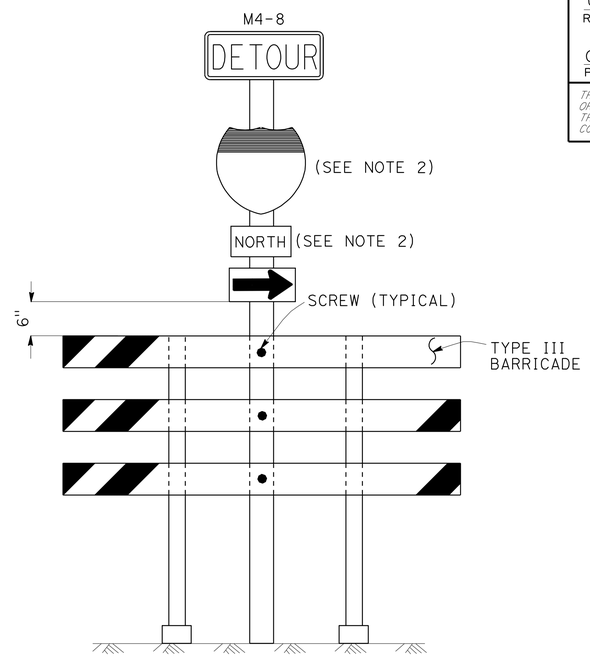

SIGN SP-7 (SEE NOTE 1)

NOTES: (SIGN SP-2)

1. LETTERS -6" SERIES E.
2. LETTERS, BORDER AND ARROW - BLACK ON RETROREFLECTORIZED ORANGE BACKGROUND.
3. BASE MATERIAL FOR SIGNS AND ARROWS SHALL BE ALUMINUM (MINIMUM 0.06").
4. BELTS (LUGGAGE STRAPS) SHALL BE 1" WIDE BY 48" LONG, MADE OF COTTON OR POLYPROPYLENE WEB MATERIAL.
5. SIGNS SHALL BE MOUNTED WITH BOTTOMS OF SIGNS A MINIMUM OF 6' ABOVE GROUND EXCEPT AS OTHERWISE SHOWN ON OTHER TRAFFIC HANDLING DETAILS PLANS.

ABBREVIATION

(CA) CALIFORNIA CODE

NOTES: (SIGNS SP-6 & SP-7)

1. IN LIEU OF PLACING SIGNS ON TYPE III BARRICADES, SIGNS, INCLUDING POSTS, MAY BE PLACED INTO THE GROUND OR FASTENED ONTO ELECTROLIERS.
2. USE APPROPRIATE ROUTE SHIELD [G26-2(CA), G27-2(CA), G28-2(CA)] AND CARDINAL DIRECTION [NORTH (M3-1), SOUTH (M3-3), EAST (M3-2), WEST (M3-4)]

SPECIAL PORTABLE FREEWAY DETOUR SIGNS

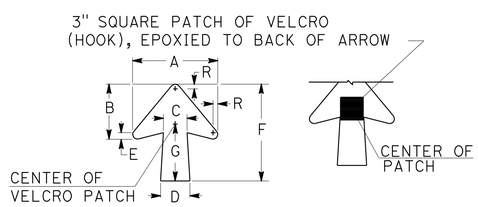

DIMENSIONS							
A	B	C	D	E	F	G	R
11 1/4"	7 1/4"	3 1/8"	4"	7/8"	13"	7 1/2"	5/8"

SPECIAL PORTABLE FREEWAY DETOUR SIGN

ADJUSTABLE ARROW DETAIL

TRAFFIC HANDLING DETAILS
TRAFFIC CONTROL SYSTEM FOR RAMP CLOSURES, DETOUR SIGNS AND MISCELLANEOUS DETAILS
SHEET 2 OF 2

NO SCALE

THD-24

STATE OF CALIFORNIA - DEPARTMENT OF TRANSPORTATION
Caltrans DTM

FUNCTIONAL SUPERVISOR: JOHN YANG
CALCULATED-DESIGNED BY: ALBERT K YU
CHECKED BY: JOCELYN C CHIANG
REVISED BY: JC
DATE REVISED: 12/09

LAST REVISION 00-00-00
DATE PLOTTED => 25-AUG-2010
TIME PLOTTED => 14:25

Dist	COUNTY	ROUTE	POST MILES TOTAL PROJECT	SHEET No.	TOTAL SHEETS
07	LA	101	31.1/38.2	41	74

REGISTERED CIVIL ENGINEER 5/20/10 DATE

08-16-10
PLANS APPROVAL DATE

REGISTERED PROFESSIONAL ENGINEER ALBERT K. YU No. 43220 Exp. 3/31/12 CIVIL STATE OF CALIFORNIA

THE STATE OF CALIFORNIA OR ITS OFFICERS OR AGENTS SHALL NOT BE RESPONSIBLE FOR THE ACCURACY OR COMPLETENESS OF SCANNED COPIES OF THIS PLAN SHEET.

NOTES:

1. WORDING DISPLAYED ON PCMS WILL BE APPROVED BY THE ENGINEER.
2. EXACT LOCATIONS OF PCMS WILL BE DETERMINED BY THE ENGINEER.
3. CHANGE PCMS MESSAGE AT THE BEGINNING OF CURE PERIOD TO REFLECT NUMBER OF CLOSED LANES.

ABBREVIATIONS

PCMS PORTABLE CHANGEABLE MESSAGE SIGN

(CA) CALIFORNIA CODE

LEGEND

- • CONE
- PORTABLE SIGN
- DIRECTION OF TRAVEL
- PORTABLE CHANGEABLE MESSAGE SIGN (PCMS)
- (CA) CALIFORNIA CODE

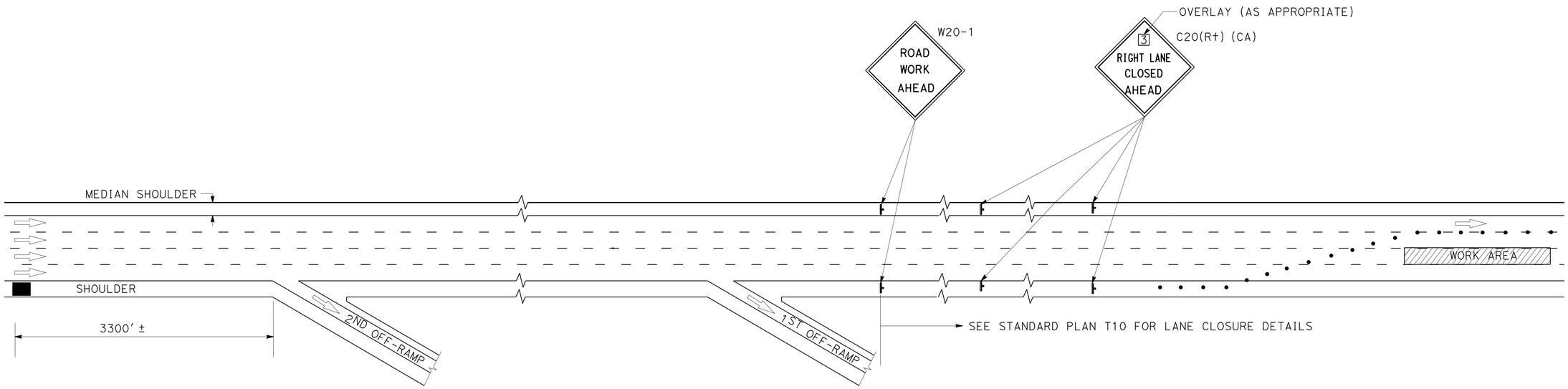

FIRST FLASH MESSAGE	X (NO OF LANES)RIGHT/LEFT	1ST LINE (TYPICAL)
	LANES	2ND LINE (TYPICAL)
	CLOSED	3RD LINE (TYPICAL)
SECOND FLASH MESSAGE	A ST	LIMIT OF CLOSURE (TYPICAL)
	TO	
	B DR	LIMIT OF CLOSURE (TYPICAL)

WORDING FOR PORTABLE CHANGEABLE MESSAGE SIGN

TRAFFIC HANDLING DETAILS
TRAFFIC CONTROL SYSTEM FOR CONCRETE PAVEMENT AND APPROACH SLAB REPLACEMENT

NO SCALE

THD-25

REVISED BY	DATE REVISED
JC	12/09

CALCULATED-DESIGNED BY: ALBERT K YU
CHECKED BY: JOCELYN C CHIANG
FUNCTIONAL SUPERVISOR: JOHN YANG

STATE OF CALIFORNIA - DEPARTMENT OF TRANSPORTATION
Caltrans
DTM

LAST REVISION 00-00-00
DATE PLOTTED => 25-AUG-2010
TIME PLOTTED => 14:25

Dist	COUNTY	ROUTE	POST MILES TOTAL PROJECT	SHEET No.	TOTAL SHEETS
07	LA	101	31.1/38.2	42	74

REGISTERED CIVIL ENGINEER DATE 5/20/10

08-16-10
PLANS APPROVAL DATE

REGISTERED PROFESSIONAL ENGINEER ALBERT K. YU No. 43220 Exp. 3/31/12 CIVIL STATE OF CALIFORNIA

THE STATE OF CALIFORNIA OR ITS OFFICERS OR AGENTS SHALL NOT BE RESPONSIBLE FOR THE ACCURACY OR COMPLETENESS OF SCANNED COPIES OF THIS PLAN SHEET.

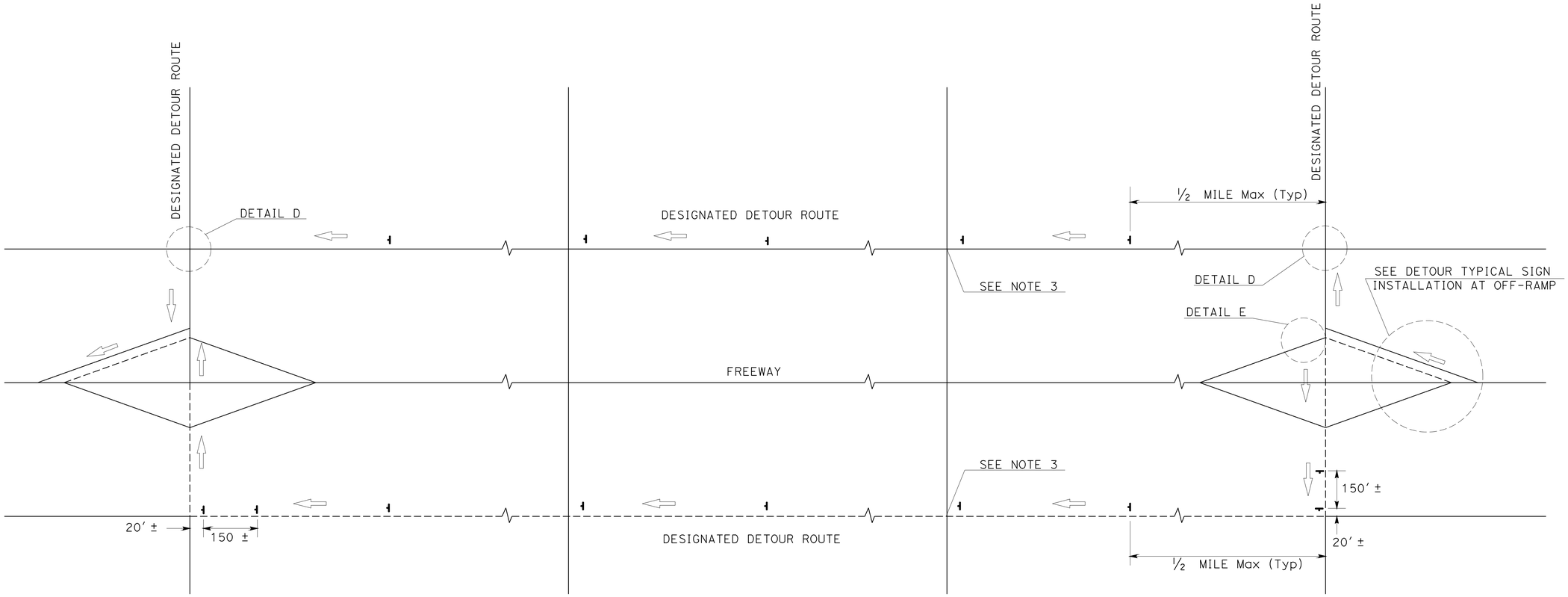

TYPICAL DETOUR SIGN INSTALLATION ALONG DESIGNATED DETOUR ROUTE

LEGEND

- SIGN SP-2
- AND/OR DESIGNATED DETOUR ROUTE
- DIRECTION OF TRAVEL

NOTES:

1. SP-2 SIGNS SHALL NOT BE INSTALLED ON BARRICADES EXCEPT AS OTHERWISE SHOWN.
2. SIGN LOCATIONS ARE APPROXIMATE. EXACT LOCATIONS WILL BE DETERMINED BY THE ENGINEER.
3. SP-2 SIGNS SHALL BE POSTED AT SIGNALIZED INTERSECTIONS ALONG THE DESIGNATED DETOUR ROUTE OR 1/2 MILE MAXIMUM APART.

TRAFFIC HANDLING DETAILS
TRAFFIC CONTROL SYSTEM FOR DETOUR SIGN INSTALLATION ALONG DESIGNATED DETOUR ROUTE
SHEET 1 OF 2

NO SCALE

THD-26

CALCULATED-DESIGNED BY	ALBERT K YU
CHECKED BY	JOCELYN C CHIANG
REVISED BY	JC
DATE REVISED	12/09
FUNCTIONAL SUPERVISOR	JOHN YANG

STATE OF CALIFORNIA - DEPARTMENT OF TRANSPORTATION
Caltrans DTM

LAST REVISION 00-00-00 | DATE PLOTTED => 25-AUG-2010 | TIME PLOTTED => 14:25

Dist	COUNTY	ROUTE	POST MILES TOTAL PROJECT	SHEET No.	TOTAL SHEETS
07	LA	101	31.1/38.2	43	74

REGISTERED CIVIL ENGINEER 5/20/10 DATE

08-16-10
PLANS APPROVAL DATE

REGISTERED PROFESSIONAL ENGINEER ALBERT K. YU No. 43220 Exp. 3/31/12 CIVIL STATE OF CALIFORNIA

THE STATE OF CALIFORNIA OR ITS OFFICERS OR AGENTS SHALL NOT BE RESPONSIBLE FOR THE ACCURACY OR COMPLETENESS OF SCANNED COPIES OF THIS PLAN SHEET.

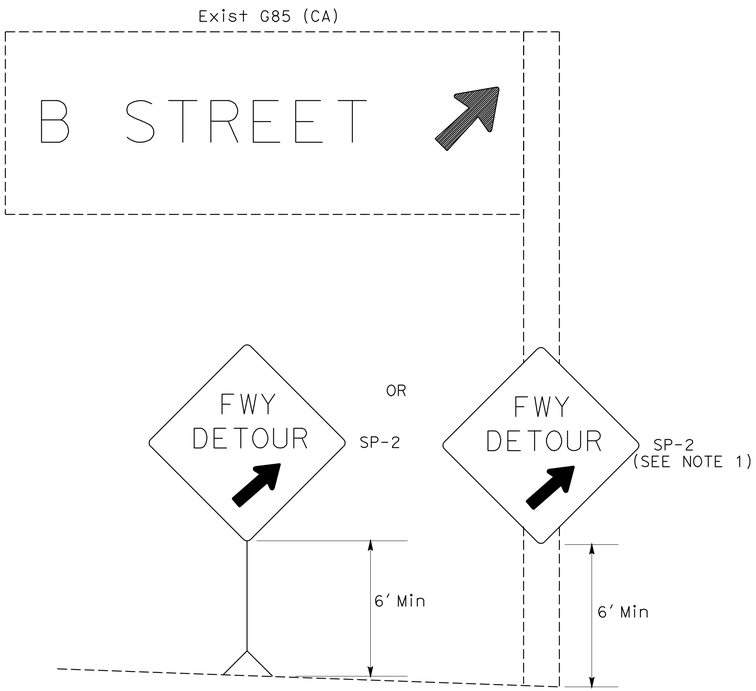

DETAIL A (SEE NOTE 2)

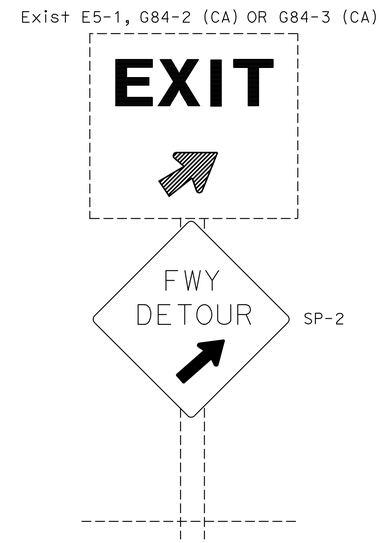

DETAIL B (SEE NOTE 2)

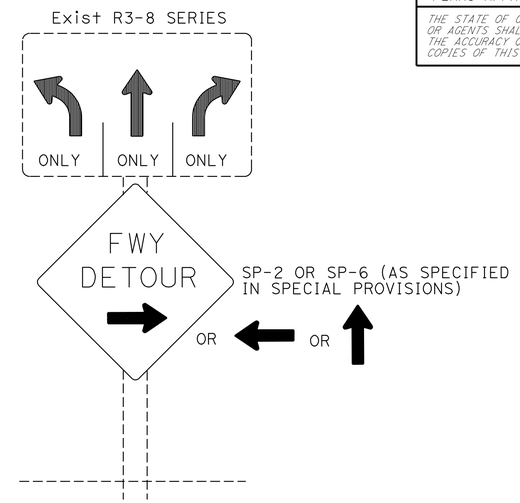

DETAIL C (SEE NOTE 3)

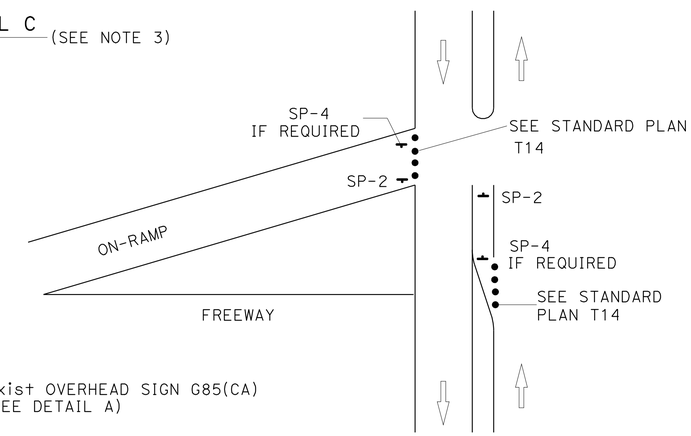

DETAIL E

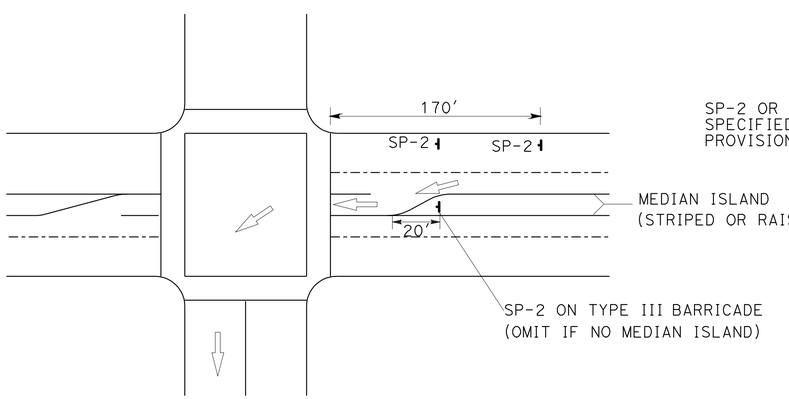

DETAIL D

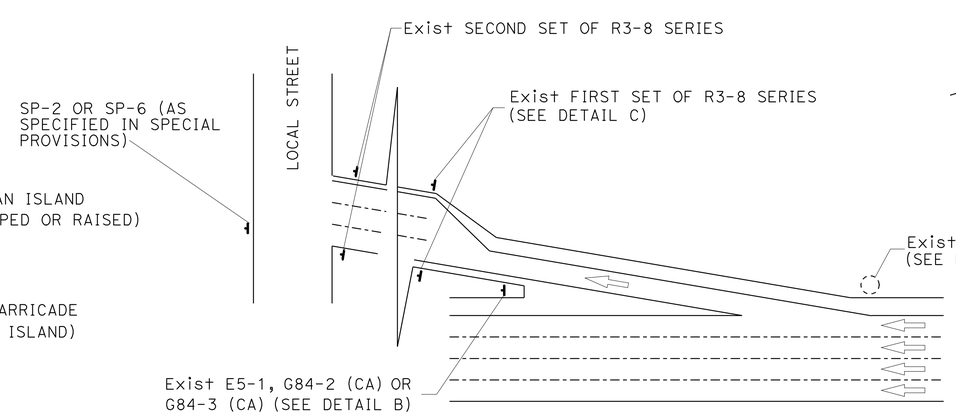

TYPICAL DETOUR SIGN INSTALLATION AT OFF-RAMP

NOTES:

1. SP-2 MAY BE STRAPPED ON EXISTING ELECTROLIER SIGNAL POSTS OR SIGN POSTS.
2. OMIT DETAIL A AND DETAIL B FOR FULL FREEWAY CLOSURES.
3. SEE TRAFFIC HANDLING DETAILS PLAN-TRAFFIC CONTROL SYSTEM FOR RAMP CLOSURES, DETOUR SIGNS AND MISCELLANEOUS DETAILS SHEET 2 OF 2 FOR SP-6.

ABBREVIATIONS

(CA) CALIFORNIA CODE

LEGENDS

- CONE
- PORTABLE SIGN
- DIRECTION OF TRAVEL
- EXISTING OVERHEAD SIGN

TRAFFIC HANDLING DETAILS
TRAFFIC CONTROL SYSTEM FOR DETOUR SIGN INSTALLATION ALONG DESIGNATED DETOUR ROUTE
SHEET 2 OF 2

NO SCALE

THD-27

STATE OF CALIFORNIA - DEPARTMENT OF TRANSPORTATION
DTM
Caltrans

FUNCTIONAL SUPERVISOR: JOHN YANG
CALCULATED-DESIGNED BY: ALBERT K YU
CHECKED BY: JOCELYN C CHIANG
REVISED BY: JC
DATE REVISED: 12/09

LAST REVISION 00-00-00
DATE PLOTTED => 25-AUG-2010
TIME PLOTTED => 14:25

Dist	COUNTY	ROUTE	POST MILES TOTAL PROJECT	SHEET No.	TOTAL SHEETS
07	LA	101	31.1/38.2	44	74

REGISTERED CIVIL ENGINEER 5/20/10 DATE

08-16-10
PLANS APPROVAL DATE

REGISTERED PROFESSIONAL ENGINEER ALBERT K. YU No. 43220 Exp. 3/31/12 CIVIL STATE OF CALIFORNIA

THE STATE OF CALIFORNIA OR ITS OFFICERS OR AGENTS SHALL NOT BE RESPONSIBLE FOR THE ACCURACY OR COMPLETENESS OF SCANNED COPIES OF THIS PLAN SHEET.

LEGEND

- CONE
- TEMPORARY SIGN
- DIRECTION OF TRAVEL
- PORTABLE CHANGEABLE MESSAGE SIGN (PCMS)
- WORK AREA

NOTES:

1. SEE STANDARD PLANS FOR LANE CLOSURE DEETAILS NOT SHOWN.
2. PCMS SHALL BE PLACED ON THE TANGENT SECTION OF THE FREEWAY.
3. PCMS MAYBE USED IN PLACE OF SPECIAL SIGNS. THE MESSAGE SHALL BE "END/SHOULDER/LANE-AHEAD" AND "END/SHOULDER/LANE" RESPECTIVELY.

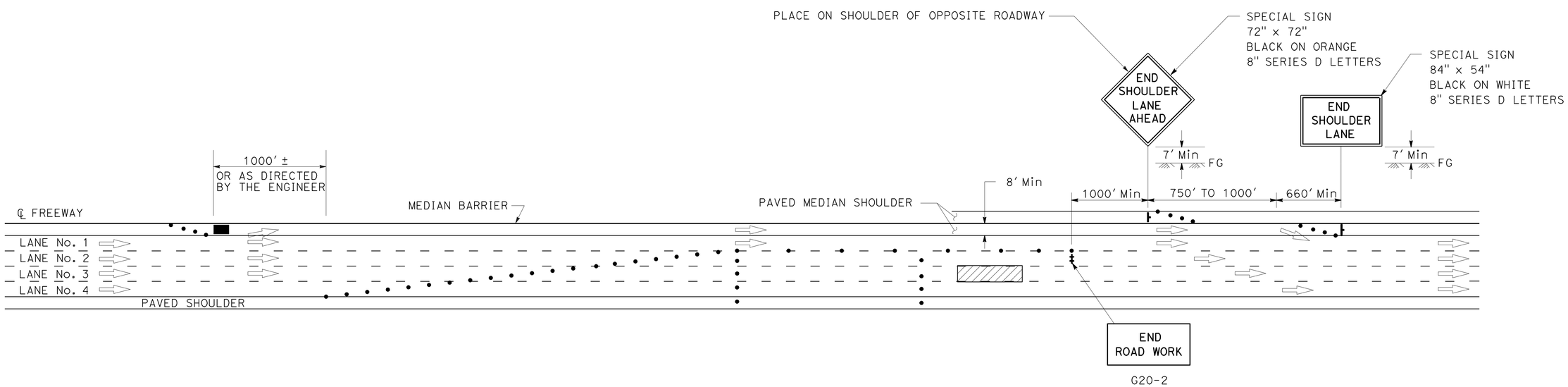

FIRST FLASH MESSAGE	**OK TO/DRIVE/SHOULDER**
SECOND FLASH MESSAGE	**NO/TRUCKS**

WORDING FOR PORTABLE CHANGEABLE MESSAGE SIGN

TRAFFIC HANDLING DETAILS
TRAFFIC CONTROL SYSTEM FOR MEDIAN SHOULDERS TO BE USED AS A TRAFFIC LANE

NO SCALE

THD-28

STATE OF CALIFORNIA - DEPARTMENT OF TRANSPORTATION
Caltrans DTM
FUNCTIONAL SUPERVISOR: JOHN YANG
CALCULATED-DESIGNED BY: ALBERT K YU
CHECKED BY: JOCELYN C CHIANG
REVISED BY: JC
DATE REVISED: 12/09

LAST REVISION 00-00-00
DATE PLOTTED => 25-AUG-2010
TIME PLOTTED => 14:25

Dist	COUNTY	ROUTE	POST MILES TOTAL PROJECT	SHEET No.	TOTAL SHEETS
07	LA	101	31.1/38.2	45	74

REGISTERED CIVIL ENGINEER 06-24-10 DATE

08-16-10
PLANS APPROVAL DATE

REGISTERED PROFESSIONAL ENGINEER M.Q. FADUL No. C54941 Exp. 06/30/12 CIVIL STATE OF CALIFORNIA

THE STATE OF CALIFORNIA OR ITS OFFICERS OR AGENTS SHALL NOT BE RESPONSIBLE FOR THE ACCURACY OR COMPLETENESS OF SCANNED COPIES OF THIS PLAN SHEET.

NOTE:

1. THERMOPLASTIC STRIPING SHALL BE PLACED ON TOP OF TYPE A MARKERS.

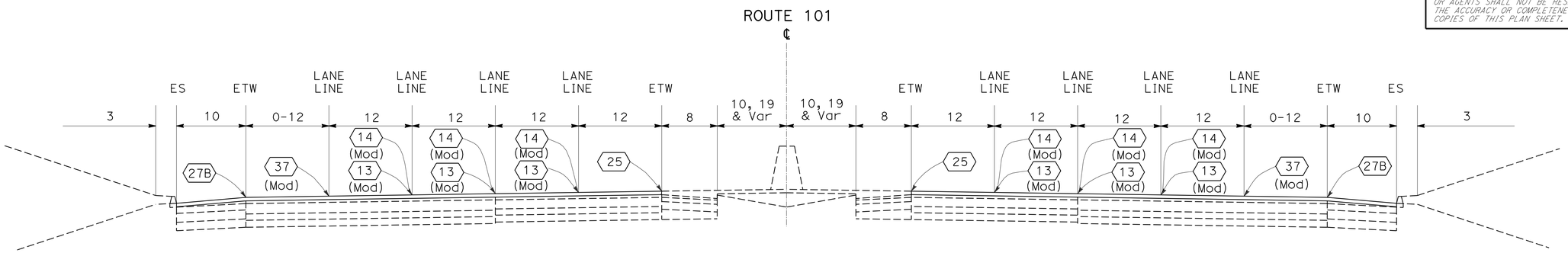

ROUTE 101
TYPICAL SECTION
NO SCALE

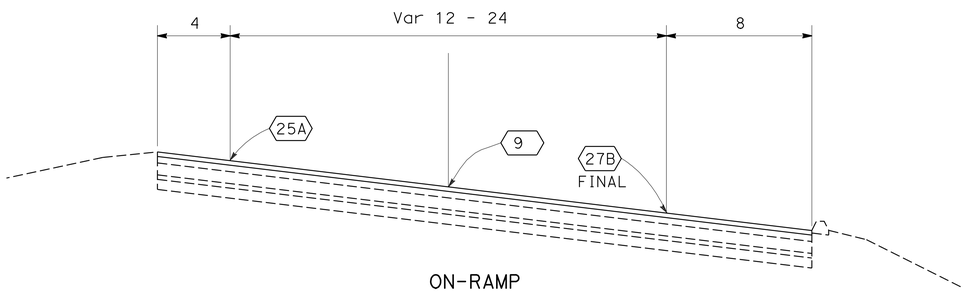

ON-RAMP
TYPICAL SECTION
NO SCALE

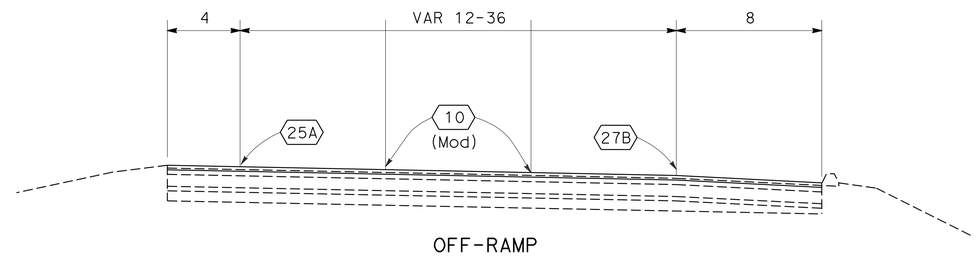

OFF-RAMP
TYPICAL SECTION
NO SCALE

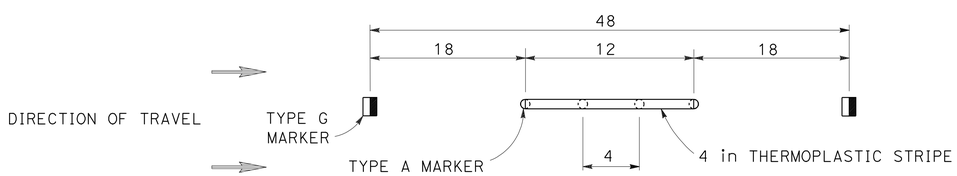

DETAIL 13 (Mod)

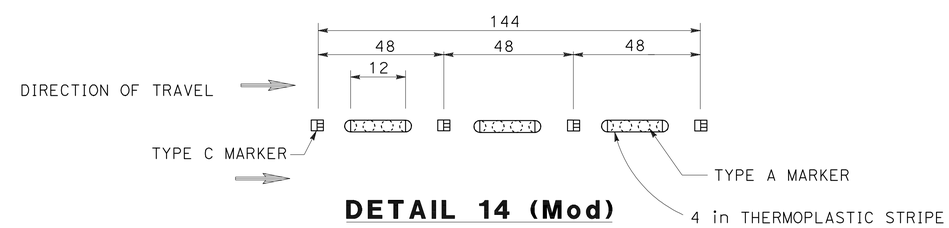

DETAIL 14 (Mod)

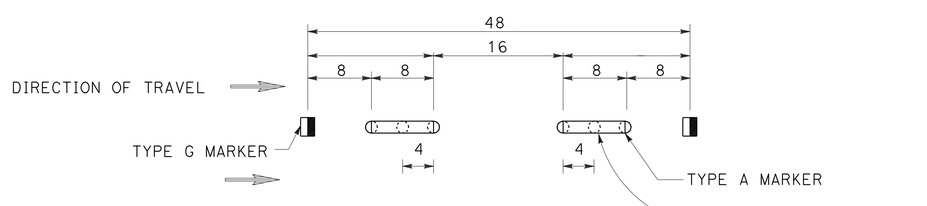

DETAIL 10 (Mod)

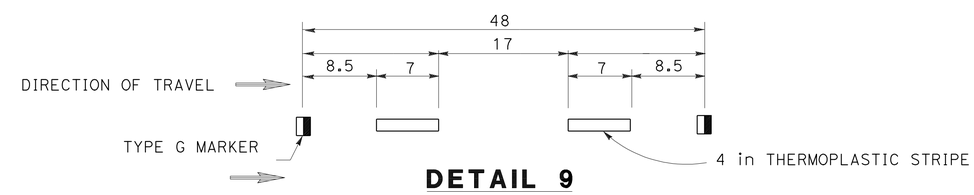

DETAIL 9

ALL DIMENSIONS ARE IN FEET
UNLESS OTHERWISE SHOWN

PAVEMENT DELINEATION DETAILS

NO SCALE

PDD-1

STATE OF CALIFORNIA - DEPARTMENT OF TRANSPORTATION
DESIGN
FUNCTIONAL SUPERVISOR: DEREK HIGA
CALCULATED-DESIGNED BY: JASON CHANG
CHECKED BY: MARIO FADUL
REVISED BY
DATE REVISED

LAST REVISION 00-00-00
DATE PLOTTED => 25-AUG-2010
TIME PLOTTED => 14:25

Dist	COUNTY	ROUTE	POST MILES TOTAL PROJECT	SHEET No.	TOTAL SHEETS
07	LA	101	31.1/38.2	46	74

REGISTERED CIVIL ENGINEER 06-24-10 DATE

08-16-10
PLANS APPROVAL DATE

REGISTERED PROFESSIONAL ENGINEER M.Q. FADUL No. C54941 Exp. 06/30/12 CIVIL STATE OF CALIFORNIA

THE STATE OF CALIFORNIA OR ITS OFFICERS OR AGENTS SHALL NOT BE RESPONSIBLE FOR THE ACCURACY OR COMPLETENESS OF SCANNED COPIES OF THIS PLAN SHEET.

PAVEMENT DELINEATION QUANTITIES

LOCATION/DIRECTION		REMOVE PAVEMENT MARKER	PAVEMENT MARKER				THERMOPLASTIC TRAFFIC STRIPE												THERMOPLASTIC PAVEMENT MARKNG					
			RETRO REFLECTIVE			NON-REFLECTIVE	4" WHITE (BROKEN 36-12)		4" SOLID WHITE	4"SOLID YELLOW		8" WHITE (BROKEN 12-3)	8" SOLID WHITE				4" WHITE (BROKEN 17-7)		ARROW		WORDS			CHEVRON
			TYPE G	TYPE H	TYPE C	TYPE A	Det 13 (Mod)	Det 14 (Mod)	Det 27B	Det 25	Det 25A	Det 37	Det 38B	Det 36	Det 36A	Det 36B	Det 9	Det 10 (Mod)			SIGNAL	AHEAD	STOP	
		EA	EA	EA	EA	EA	LF	LF	LF	LF	LF	LF	LF	LF	LF	LF	LF	LF	TYPE	SQFT	SQFT	SQFT	SQFT	SQFT
ROUTE 101 NORTHBOUND	PM 31.0 - 31.2	365	90	21	20	234	2,331	432	1,156	921		521				235								
	PM 31.2 - 31.4	438	141	20	8	269	3,186		1,062	1,062		1,062												
	PM 31.4 - 31.7	678	206	36	20	416	4,554	432	1,662	1,662		1,662												
	PM 31.7 - 31.9	410	119	24		267	3,202		1,050	1,067			123	878										
	PM 31.9 - 32.2	568	154	33		381	4,555		1,580	1,518		625				313								
	PM 32.2 - 32.4	404	118	21	20	245	2,438	432	957	957		957												
	PM 32.4 - 32.5	405	149	20	8	228	2,723		908	908		400	307	800										
	PM 32.5 - 32.7	261	72	16		173	2,050		83	683				600										
	PM 32.7 - 32.8	216	42	14		160	1,881		627	627														
	PM 32.8 - 33.1	652	189	36	8	419	4,992		1,300	1,663		900				500								
	PM 33.1 - 33.2	156	52	9		95	1,105		368	368		368												
	PM 33.2 - 33.5	654	208	34	20	392	4,224	432	1,552	1,552		1,100	500											
	PM 33.5 - 33.7	512	127	31		354	4,222		1.500	1,408			200	400							32	31		
	PM 33.7 - 33.9	347	99	20		228	2,695		898	898		300				600								
	PM 33.9 - 34.1	514	158	28	8	320	3,801		1,267	1,267		1,267												
	PM 34.1 - 34.6	927	304	51	8	564	6,734		2,389	2,389		2,389												
	PM 34.6 - 34.8	485	145	25	20	295	3,030	432	1,154	1,154		800	281											
	PM 34.8 - 35.6	1,549	445	85	8	1,011	12,099		4,550	4,033		1,550	400	874		300								
	PM 35.6 - 35.8	504	156	27	8	313	3,243	432	1,225	1,225		1,225												
	PM 35.8 - 36.2	767	227	41	20	479	5,244	432	2,300	1,892		800	300	802							32			
	PM 36.2 - 36.7	1,071	312	59	8	692	8,265		2,755	2,755		1,637				600								
	PM 36.7 - 37.1	905	284	48	8	565	6,270	432	2,234	2,234		2,234												
	PM 37.1 - 37.5	844	235	46	20	543	6,036	432	2,156	2,156		500	250	1,166				200			32	31		
	PM 37.5 - 38.2	1,328	382	73	8	865	10,308		3,436	3,436		2,007				600		111						
TOTAL		1,4960	4,414	818	220	9,508	109,188	3,888	38,169	37,835		22,304	2,361	5,520		3,148		311			96	62		
SUBTOTAL THIS SHEET		14,960	5,452			9,508	113,076		76,004			22,304	1,1029				311			158				

PAVEMENT DELINEATION QUANTITIES

PDQ-1

STATE OF CALIFORNIA - DEPARTMENT OF TRANSPORTATION
Caltrans
DESIGN

FUNCTIONAL SUPERVISOR: DEREK HIGA
CALCULATED-DESIGNED BY: JASON CHANG
CHECKED BY: ANTOINE NADER
REVISED BY
DATE REVISED

LAST REVISION 00-00-00
DATE PLOTTED => 25-AUG-2010
TIME PLOTTED => 14:25

Dist	COUNTY	ROUTE	POST MILES TOTAL PROJECT	SHEET No.	TOTAL SHEETS
07	LA	101	31.1/38.2	47	74

REGISTERED CIVIL ENGINEER 06-24-10 DATE

08-16-10
PLANS APPROVAL DATE

REGISTERED PROFESSIONAL ENGINEER M.Q. FADUL No. C54941 Exp. 06/30/12 CIVIL STATE OF CALIFORNIA

THE STATE OF CALIFORNIA OR ITS OFFICERS OR AGENTS SHALL NOT BE RESPONSIBLE FOR THE ACCURACY OR COMPLETENESS OF SCANNED COPIES OF THIS PLAN SHEET.

LOCATION/DIRECTION		REMOVE PAVEMENT MARKER	PAVEMENT MARKER				THERMOPLASTIC TRAFFIC STRIPE												THERMOPLASTIC PAVEMENT MARKNG					
			RETRO REFLECTIVE			NON-REFLECTIVE	4" WHITE (BROKEN 36-12)		4" SOLID WHITE	4"SOLID YELLOW		8" WHITE (BROKEN 12-3)	8" SOLID WHITE				4" WHITE (BROKEN 17-7)		ARROW		WORDS			CHEVRON
			TYPE G	TYPE H	TYPE C	TYPE A	Det 13 (Mod)	Det 14 (Mod)	Det 27B	Det 25	Det 25A	Det 37	Det 38B	Det 36	Det 36A	Det 36B	Det 9	Det 10 (Mod)			SIGNAL	AHEAD	STOP	
		EA	EA	EA	EA	EA	LF	LF	LF	LF	LF	LF	LF	LF	LF	LF	LF	LF	TYPE	SQFT	SQFT	SQFT	SQFT	SQFT
ROUTE 101 SOUTHBOUND	PM 31.0 - 31.2	357	68	21		268	2,763		921	921								296						
	PM 31.2 - 31.4	412	117	23		272	3,150		1,061	1,062			158	612	153			6						132
	PM 31.4 - 31.7	686	214	36	20	416	4,554	432	1,662	1,662		1,662												
	PM 31.7 - 31.9	386	87	24	8	267	3,202		1,288	1,067		200				383								
	PM 31.9 - 32.2	580	158	33	8	381	4,554		1,518	1,518		100	360	696										
	PM 32.2 - 32.4	396	118	21	12	245	2,438	432	957	957		957												
	PM 32.4 - 32.5	373	125	20		228	2,723		900	908		350				950								
	PM 32.5 - 32.7	232	45	16			2,050		683	683														
	PM 32.7 - 32.8	213	42	14		157	1,881		627	627														
	PM 32.8 - 33.1	665	193	36	20	416	4,557	432	1,862	1,663		700	424	396					V	33		31	22	
	PM 33.1 - 33.2	152	51	9		92	1,105		368	368		368												
	PM 33.2 - 33.5	628	198	34	8	388	4,656		1,552	1,552		1,552												
	PM 33.5 - 33.7	559	164	31	12	352	3,792	432	1,442	1,408		1,100				300								
	PM 33.7 - 33.9	314	69	20		225	2,695		898	898				232										
	PM 33.9 - 34.1	521	168	28	8	317	3,801		1,267	1,267		330	398	692										
	PM 34.1 - 34.6	967	298	51	20	598	6,734	432	2,389	2,389		2,389												
	PM 34.6 - 34.8	472	146	25	12	289	3,030	432	1,154	1,154		1,070	84											
	PM 34.8 - 35.6	1,565	452	85	20	1,008	11,668	432	4,286	4,033		1,845	600	600		600								
	PM 35.6 - 35.8	499	157	27	8	307	3,675		1,225	1,225		1,225												
	PM 35.8 - 36.2	708	182	41	12	473	5,244	432	1,892	1,892		875				625								
	PM 36.2 - 36.7	1,091	323	59	20	689	7,833	432	2,755	2,755		1,400	311	770										
	PM 36.7 - 37.1	905	278	48	20	559	6,270	432	2,234	2,234		2,234												
	PM 37.1 - 37.5	900	307	46	8	539	6,468		2,200	2,156		2,156					224							
	PM 37.5 - 38.2	1,350	398	73	20	859	9,879	432	3,655	3,436		1,900	314	954	600	220					32	31		
TOTAL		1,4931	4,358	821	236	9,345	108,722	4,752	38,796	37,835		22,413	2,649	4,952	753	3,078	224	302		33	32	62	22	132
SUBTOTAL THIS SHEET		1,4931	5,415			9,345	113,474		76,631			22,413	11,432				526			281				

PAVEMENT DELINEATION QUANTITIES

PDQ-2

STATE OF CALIFORNIA - DEPARTMENT OF TRANSPORTATION
Caltrans
DESIGN

FUNCTIONAL SUPERVISOR: DEREK HIGA
CALCULATED-DESIGNED BY: JASON CHANG
CHECKED BY: ANTOINE NADER
REVISED BY
DATE REVISED

LAST REVISION 00-00-00
DATE PLOTTED => 25-AUG-2010
TIME PLOTTED => 14:25

Dist	COUNTY	ROUTE	POST MILES TOTAL PROJECT	SHEET No.	TOTAL SHEETS
07	LA	101	31.1/38.2	48	74

REGISTERED CIVIL ENGINEER 06-24-10 DATE

08-16-10
PLANS APPROVAL DATE

REGISTERED PROFESSIONAL ENGINEER M.Q. FADUL No. C54941 Exp 06/30/12 CIVIL STATE OF CALIFORNIA

THE STATE OF CALIFORNIA OR ITS OFFICERS OR AGENTS SHALL NOT BE RESPONSIBLE FOR THE ACCURACY OR COMPLETENESS OF SCANNED COPIES OF THIS PLAN SHEET.

	LOCATION/DIRECTION		REMOVE PAVEMENT MARKER	PAVEMENT MARKER				THERMOPLASTIC TRAFFIC STRIPE												THERMOPLASTIC PAVEMENT MARKNG					
				RETRO REFLECTIVE			NON-REFLECTIVE	4" WHITE (BROKEN 36-12)		4" SOLID WHITE	4"SOLID YELLOW		8" WHITE (BROKEN 12-3)	8" SOLID WHITE				4" WHITE (BROKEN 17-7)		ARROW		WORDS			CHEVRON
				TYPE G	TYPE H	TYPE C	TYPE A	Det 13 (Mod)	Det 14 (Mod)	Det 27B	Det 25	Det 25A	Det 37	Det 38B	Det 36	Det 36A	Det 36B	Det 9	Det 10 (Mod)			SIGNAL	AHEAD	STOP	
			EA	EA	EA	EA	EA	LF	LF	LF	LF	LF	LF	LF	LF	LF	LF	LF	LF	TYPE	SQFT	SQFT	SQFT	SQFT	SQFT
RAMPS	A-5	N/B ON RAMP FROM LAS VIRGENES Rd	24	5	19					491		424						149		I 18′	50				
	A-5	N/B ON RAMP FROM LAS VIRGENES Rd																		VI	84				
	C-2	N/B OFF RAMP TO LIBERTY CANYON Rd	41	9	32					742		742						387					62	44	
	C-4	N/B ON RAMP FROM LIBERTY CANYON Rd	55	6	19		30			434		433							233	I 24′	62				
	C-4	N/B ON RAMP FROM LIBERTY CANYON Rd																		VI	84				
	E-3	N/B ON RAMP FROM KANAN Rd	36	7	29					672		670						264		I 24′	62				
	E-3	N/B ON RAMP FROM KANAN Rd																		VI	126				
	F-2	N/B OFF RAMP TO REYES ADOBE Rd	21	6	15					323		328						240					31		
	G-2	N/B OFF RAMP TO LINDERO CANYON Rd	170	21	33		116			772		765							924						
	G-3	N/B ON RAMP FROM N/B LINDERO CANYON Rd	24		24					449		532								I 18′	25				
	A-1	S/B OFF RAMP TO LAS VIRGENES Rd	38	10	28					626		645						434		V	66	32	31		30
	A-2	S/B ON RAMP FROM LAS VIRGENES Rd	41	3	26		12			584		602							89	I 18′	50				115
	C-1	S/B ON RAMP FROM LIBERTY CANYON Rd	165	18	49		98			1,144		1,148							781	I 24′	62				
	C-1	S/B ON RAMP FROM LIBERTY CANYON Rd																		VI	126				
	C-3	S/B OFF RAMP TO LIBERTY CANYON Rd	26	4	8		14			169		155							106	2L	45		31	22	
	C-3	S/B OFF RAMP TO LIBERTY CANYON Rd																		3R	42				
	D-2	S/B ON RAMP FROM PALO COMADO CANYON Rd	12		12					215		258								I 24′	31				
	D-4	S/B OFF RAMP TO PALO COMADO CANYON Rd	23	5	18					371		403						193		V	66		31	22	
	F-1	S/B ON RAMP FROM REYES ADOBE Rd	28	7	21					425		468						275		I 18′	50				20
	F-1	S/B ON RAMP FROM REYES ADOBE Rd																		VI	84				
	F-4	S/B OFF RAMP TO REYES ADOBE Rd	23	7	16					351		354						253				32	31		
	G-1	S/B ON RAMP FROM N/B LINDERO CANYON	47		47					1,063		1,095													
	G-4	S/B OFF RAMP TO LINDERO CANYON Rd	194	24	34		136			793		792							1,081			32	31		
	G-5	S/B ON RAMP FROM S/B LINDERO CANYON Rd	92	11	23		58			398		518							457	I 18′	50				117
	G-5	S/B ON RAMP FROM S/B LINDERO CANYON Rd																		VI	84				
		TOTAL	1,060	143	453		464			10,022		10,332						2,195	3,671		1,249	96	248	88	282
		SUBTOTAL THIS SHEET	1,060		596		464			20,354								5,866			1,963				
		SUBTOTAL SHEET PDQ-1	14,960		5,452		9,508	11,3076		76,004			22,304		11,029			111			158				
		SUBTOTAL SHEET PDQ-2	14,931		5,415		9,345	113,474		76,631			22,413		11,432			526			281				
		TOTAL	30,951		7,105		1,9317	214,882		172,989			44,717		22,461			6,503			2,402				

PAVEMENT DELINEATION QUANTITIES

PDQ-3

STATE OF CALIFORNIA - DEPARTMENT OF TRANSPORTATION
Caltrans® DESIGN

FUNCTIONAL SUPERVISOR: DEREK HIGA
CALCULATED-DESIGNED BY: JASON CHANG
CHECKED BY: ANTOINE NADER
REVISED BY / DATE REVISED

LAST REVISION 00-00-00 | DATE PLOTTED => 25-AUG-2010 | TIME PLOTTED => 14:25

Dist	COUNTY	ROUTE	POST MILES TOTAL PROJECT	SHEET No.	TOTAL SHEETS
07	LA	101	31.1/38.2	49	74

REGISTERED CIVIL ENGINEER DATE 06-24-10

08-16-10
PLANS APPROVAL DATE

REGISTERED PROFESSIONAL ENGINEER M.Q. FADUL No. C54941 Exp. 06/30/12 CIVIL STATE OF CALIFORNIA

THE STATE OF CALIFORNIA OR ITS OFFICERS OR AGENTS SHALL NOT BE RESPONSIBLE FOR THE ACCURACY OR COMPLETENESS OF SCANNED COPIES OF THIS PLAN SHEET.

ROADWAY QUANTITIES

LOCATION/DIRECTION (FREEWAY/RAMPS)			COLD PLANE ASPHALT CONCRETE PAVEMENT	RUBBERIZED HOT MIX ASPHALT (TYPE G)	REPLACE AC SURFACING (REPAIR FAILED AREAS)	TACK COAT
			SQYD	TON	CY	TON
ROUTE 101	NORTHBOUND	LAS VIRGENES Rd OC TO LOST HILLS Rd OC	38,559	5,205	128.5	6.6
		LOST HILLS Rd OC TO LIBERTY CANYON Rd UC	38,417	5,186	128.1	6.5
		LIBERTY CANYON Rd OC TO PALO COMADO Rd UC	42,333	5,715	141.1	7.2
		PALO COMADO Rd OC TO CHESEBRO Cr Br	10,511	1,419	35.0	1.8
		CHESEBRO Cr Br TO PM 34.15	12,371	1,670	41.2	2.1
		PM 34.15 TO MEDEA Cr Br	26,310	3,552	87.7	4.5
		MEDEA Cr Br TO KANAN Rd OC	7,007	946	23.4	1.2
		KANAN Rd OC TO REYES ADOBE Rd OC	45,597	6,156	152.0	7.8
		REYES ADOBE Rd OC TO LINDERO CANYON Rd OC	54,779	7,395	182.6	9.3
		LINDERO CANYON Rd OC TO Ven COUNTY LINE	26,219	3,539	87.4	4.5
	SOUTHBOUND	LAS VIRGENES Rd OC TO LOST HILLS Rd OC	38,027	5,134	126.8	6.5
		LOST HILLS Rd OC TO LIBERTY CANYON Rd UC	38,777	5,235	129.3	6.6
		LIBERTY CANYON Rd OC TO PALO COMADO Rd UC	42,656	5,759	142.2	7.3
		PALO COMADO Rd OC TO CHESEBRO Cr Br	10,277	1,387	34.3	1.7
		CHESEBRO Cr Br TO PM 34.15	12,333	1,665	41.1	2.1
		PM 34.15 TO MEDEA Cr Br	26,025	3,513	86.7	4.4
		MEDEA Cr Br TO KANAN Rd OC	7,023	948	23.4	1.2
		KANAN Rd OC TO REYES ADOBE Rd OC	45,466	6,138	151.6	7.7
		REYES ADOBE Rd OC TO LINDERO CANYON Rd OC	56,359	7,608	187.9	9.6
		LINDERO CANYON Rd OC TO Ven COUNTY LINE	26,528	3,581	88.4	4.5
RAMPS	A-5	NB ON FROM LAS VIRGENES Rd	1,286	174	5	0.2
	A-2	SB ON FROM LAS VIRGENES Rd	1,997	270	7	0.3
	A-1	SB OFF TO LAS VIRGENES Rd	2,275	307	8	0.4
	C-1	SB ON FROM LIBERTY CANYON Rd	4,309	582	15	0.7
	C-2	NB OFF TO LIBERTY CANYON Rd	2,480	335	9	0.4
	C-3	SB OFF TO LIBERTY CANYON Rd	630	85	2	0.1
	C-4	NB ON FROM LIBERTY CANYON Rd	1,651	223	6	0.3
	D-2	SB ON FROM PALO COMADO CANYON Rd	902	122	3	0.2
	D-4	SB OFF TO PALO COMADO CANYON Rd	1,376	186	5	0.2
	E-3	NB ON FROM KANAN Rd	2,037	275	7	0.3
	F-1	SB ON FROM REYES ADOBE Rd	1,419	191	5	0.2
	F-2	NB OFF TO REYES ADOBE Rd	1,006	136	4	0.2
	F-4	SB OFF TO REYES ADOBE Rd	1,078	146	4	0.2
	G-1	SB ON FROM LINDERO CANYON Rd	3,103	419	11	0.5
	G-2	NB OFF TO LINDERO CANYON Rd	3,305	446	11	0.6
	G-3	NB ON FROM LINDERO CANYON Rd	1,307	176	5	0.2
	G-4	SB OFF TO LINDERO CANYON Rd	3,386	457	12	0.6
	G-5	SB ON FROM LINDERO CANYON Rd	1,816	245	6	0.3
GRAND TOTAL			640,937	86,526	2,144	109

CRACK TREATMENT

ROUTE	DIRECTION	LOCATION	CRACK TREATMENT
			LNMI(LANE MILES)
101	SB	MAINLINE	36
101	SB	RAMPS	1
101	NB	MAINLINE	36
101	NB	RAMPS	1
TOTAL			74

Temp WATER POLLUTION CONTROL DEVICE

LOCATION	TEMPORARY GRAVEL BAG BERM	TEMPORARY DRAINAGE INLET PROTECTION
	LF	EA
PM 31.1 TO PM 38.2	51,000	420
TOTAL	51,000	420

SUMMARY OF QUANTITIES

Q-1

STATE OF CALIFORNIA - DEPARTMENT OF TRANSPORTATION
Caltrans® DESIGN

FUNCTIONAL SUPERVISOR: DEREK HIGA
CALCULATED-DESIGNED BY: JASON CHANG
CHECKED BY: KAZ KAYODA
REVISED BY
DATE REVISED

LAST REVISION 00-00-00
DATE PLOTTED => 25-AUG-2010
TIME PLOTTED => 14:25

Dist	COUNTY	ROUTE	POST MILES TOTAL PROJECT	SHEET No.	TOTAL SHEETS
07	LA	101	31.1/38.2	50	74

REGISTERED CIVIL ENGINEER 06-24-10 DATE

08-16-10
PLANS APPROVAL DATE

REGISTERED PROFESSIONAL ENGINEER M.Q. FADUL No. C54941 Exp 06/30/12 CIVIL STATE OF CALIFORNIA

THE STATE OF CALIFORNIA OR ITS OFFICERS OR AGENTS SHALL NOT BE RESPONSIBLE FOR THE ACCURACY OR COMPLETENESS OF SCANNED COPIES OF THIS PLAN SHEET.

LEGEND:

RSC RAPID STRENGTH CONCRETE
(N) NOT A SEPARATE PAY ITEM, FOR INFORMATION ONLY.

NOTE:

WEAKENED PLANE JOINT TO WEAKENED PLANE JOINT CONSTITUTES ONE SLAB.

IMPORTED MATERIAL (SHOULDER BACKING)

DIRECTION	LOCATION	BEG (PM)	END (PM)	TON
NORTHBOUND	MAINLINE	31.12	31.21	5
	MAINLINE	31.55	31.72	9
	MAINLINE	32.03	32.22	10
	MAINLINE	32.50	32.71	11
	MAINLINE	32.59	32.77	9
	MAINLINE	32.80	32.86	3
	MAINLINE	32.80	33.10	15
	MAINLINE	33.11	33.32	11
	MAINLINE	33.33	33.47	7
	MAINLINE	33.49	33.56	4
	MAINLINE	34.17	34.38	11
	MAINLINE	35.57	35.66	5
	MAINLINE	35.72	35.76	2
	MAINLINE	35.85	36.06	11
	MAINLINE	36.36	36.65	14
	MAINLINE	37.35	37.44	5
	RIGHT OF RAMP G-2 ℄			6
	LEFT OF RAMP G-3 ℄			4
	RIGHT OF RAMP G-3 ℄			7
SOUTHBOUND	LEFT OF RAMP A-2 ℄			8
	LEFT SIDE FROM RAMP A-1 TO RAMP B-1 ℄			31
	MAINLINE	32.14	33.56	69
	MAINLINE	32.56	32.77	11
	MAINLINE	32.82	32.88	3
	MAINLINE	32.82	33.28	22
	MAINLINE	33.35	33.66	15
	LEFT OF RAMP D-4 ℄			5
	MAINLINE	33.90	33.96	3
	MAINLINE	33.98	34.11	7
	MAINLINE	34.13	34.60	23
	MAINLINE	35.32	35.72	20
	MAINLINE	35.87	36.10	11
	MAINLINE	36.61	36.91	15
	LEFT OF RAMP G-1 ℄			20
	LEFT OF RAMP G-5 ℄			12
	RIGHT OF RAMP G-4 ℄			8
	LEFT OF RAMP G-4 ℄			16
TOTAL				448

REPLACE CONCRETE PAVEMENT (RSC)

SLAB APPROXIMATE LOCATION		NUMBER OF SLABS (N) LANE #1 2E	LANE #2 2E	LANE #3 1E	LANE #4 1E	Aux LANE 1E	SLAB SIZE (Avg)	REPLACE Conc Pvmt (RSC)	LEAN Conc BASE RAPID SETTING	HMA (TYPE B)	SEAL LONGITUDINAL ISOLATION JOINT	SEAL PAVEMENT JOINT	TIE BAR	DOWEL BAR
	PM	EA	EA	EA	EA	EA	FT	CY	CY	TON	LF	LF	EA	EA
NORTHBOUND LANES	32.07				3		12'X15'	15.0	0.8	19	45	117	36	60
	32.13				4		12'X15'	20.0	1.0	25	60	156	48	80
	33.63			1			12'X15'	5.0	0.3	6		54	12	20
	33.67				3		12'X15'	15.0	0.8	19	45	117	36	60
	33.69				3		12'X15'	15.0	0.8	19	45	117	36	60
	33.74			2	2		12'X15'	20.0	1.0	25	30	186	48	80
	33.76				4		12'X15'	20.0	1.0	25	60	156	48	80
	33.88				3		12'X15'	15.0	0.8	19	45	117	36	60
	33.90				2		12'X15'	10.0	0.5	13	30	78	24	40
	33.95				1		12'X15'	5.0	0.3	6	15	39	12	20
	33.99				2		12'X15'	10.0	0.5	13	30	78	24	40
	34.52				2		12'X15'	10.0	0.5	13	30	78	24	40
	34.86		1		2		12'X15'	15.0	0.8	19	30	132	36	60
	34.88			2			12'X15'	10.0	0.5	13		108	24	40
	35.09				2		12'X15'	10.0	0.5	13	30	78	24	40
	35.11		2				12'X15'	9.0	0.5	13		108	24	40
	35.13				2		12'X15'	10.0	0.5	13	30	78	24	40
	36.18			2	2		12'X15'	20.0	1.0	25	30	186	48	80
	36.46				3		12'X15'	15.0	0.8	19	45	117	36	60
	37.57				3		12'X15'	15.0	0.8	19	45	117	36	60
	37.93	1	1	1	1	1	12'X50'	81.0	50	104	50	750	168	100
SOUTHBOUND LANES	32.79			2	2		12'X15'	20.0	1.0	25	30	186	48	80
	33.88				3		12'X15'	15.0	0.8	19	45	117	36	60
	33.97			1			12'X15'	5.0	0.3	6		54	12	20
	34.83				4		12'X15'	20.0	1.0	25	60	156	48	80
	35.04				1		12'X15'	5.0	0.3	6	15	39	12	20
	37.93	1	1	1	1	1	12'X50'	81.0	50	104	50	750	168	100
SUB TOTAL		2	5	12	55	2		491.0	118	625	895	4,269	1,202	1,520
TOTAL		76						491.0	118	SEE Sht Q-3	895	4,269	1,202	1,520

SUMMARY OF QUANTITIES

Q-2

STATE OF CALIFORNIA - DEPARTMENT OF TRANSPORTATION
Caltrans® DESIGN
FUNCTIONAL SUPERVISOR DEREK HIGA
CALCULATED-DESIGNED BY JASON CHANG CHECKED BY MARIO FADUL
REVISED BY DATE REVISED

LAST REVISION 00-00-00 DATE PLOTTED => 25-AUG-2010 TIME PLOTTED => 14:25

Dist	COUNTY	ROUTE	POST MILES TOTAL PROJECT	SHEET No.	TOTAL SHEETS
07	LA	101	31.1/38.2	51	74

REGISTERED CIVIL ENGINEER 06-24-10 DATE

08-16-10
PLANS APPROVAL DATE

REGISTERED PROFESSIONAL ENGINEER AINSLEY CHIANG No. C74005 Exp. 6/31/11 CIVIL STATE OF CALIFORNIA

THE STATE OF CALIFORNIA OR ITS OFFICERS OR AGENTS SHALL NOT BE RESPONSIBLE FOR THE ACCURACY OR COMPLETENESS OF SCANNED COPIES OF THIS PLAN SHEET.

METAL BEAM GUARD RAILING

DIRECTION	LOCATION NO.	LOCATION PM	DESCRIPTION	(N) REMOVE TERMINAL SECTION EA	REMOVE METAL BEAM GUARD RAILING LF	REMOVE AC DIKE LF	ALTERNATIVE FLARED TERMINAL END SECTION EA	ALTERNATIVE IN-LINE TERMINAL END SECTION EA	TRANSITION RAILING (TYPE WB) EA	END CAP (TYPE TC) EA	END ANCHOR ASSEMBLY (TYPE SFT) EA	MBGR (WOOD POST) LF	GUARD RAILING DELINEATOR EA	HMA DIKE TYPE C LF	HMA DIKE TYPE F LF	HMA (TYPE B) TON	PLACE HMA (Misc AREA) SQYD
NORTHBOUND ROUTE 101	1	31.18	END OF LAS VIRGENES Rd NB ON-RAMP (R+)	1		78		1					8	156		5	19
	2	31.95	LOST HILLS OC - STRUCTURE COLUMNS	1	72	72	1				1	66	19	126	72	14	16
	3	32.17	END OF LOST HILLS NB ON-RAMP (R+)	1		78		1					8	156		5	19
	4	32.57	LIBERTY CANYON Rd EXIT OVERHEAD SIGN	1	63	63	1				1	56	17	126	63	12	16
	5	32.82	LIBERTY CANYON Rd UC	1		100		1	1	1		31	13	156		10	19
	6	33.72	PALO COMADO OC - STRUCTURE COLUMNS	1	72	72	1				1	66	19	126	72	14	16
	7	33.95	CHESEBRO CREEK BRIDGE	1		100	1		1	1		13	10	126	38	9	16
	8	34.32	KANAN Rd ½ MI OVERHEAD SIGN	1	63	63	1				1	56	17	126	63	12	16
	9	35.65	REYES ADOBE Rd ½ MI OVERHEAD SIGN	1	76			1			1	25	12				
	10	36.05	REYES ADOBE Rd EXIT OVERHEAD SIGN	1	63	100		1			1	56	17	156	63	13	19
	11	36.97	LINDERO CANYON ½ MI OVERHEAD SIGN	1	63	63	1				1	56	17	126	63	12	16
	12	37.28	LINDERO CANYON Rd EXIT OVERHEAD SIGN	1	63	63	1				1	56	17	126	63	12	16
	13	38.04	WESTLAKE VILLAGE/LAKE SHERWOOD NEXT EXIT OVERHEAD SIGN	1	63	63	1				1	56	17	126	63	12	16
SOUTHBOUND ROUTE 101	1	36.36	REYES ADOBE Rd EXIT ONLY OVERHEAD SIGN	1	63	63	1				1	56	17	126	63	12	16
	2	35.79	KANAN Rd ½ MI OVERHEAD SIGN	1	76	100		1			1	13	10	150	25	9	23
	3	34.00	CHESEBRO Rd EXIT ONLY OVERHEAD SIGN	1	76		1				1	25	12				
	4	33.67	PALO COMADO OC - STRUCTURE COLUMNS	1	72	72	1				1	66	19	126	72	13	16
	5	33.28	LIBERTY CANYON Rd EXIT ONLY OVERHEAD SIGN	1		63	1						8	126		4	16
	6	32.80	LIBERTY CANYON Rd UC	1				1	1	1			8				
SUBTOTAL THIS SHEET				19	885	1,213	12	7	3	3	13	697	264	2,160	758	168	275
FROM SHEET Q-2			REPLACE Conc Pvmt (RSC)													625	
FROM SHEET DQ-1			BIOSTRIP @RAMP G-3			30											
			TOTAL		885	1,243	12	7	3	3	13	697	264	2,160	758	793	275

SUMMARY OF QUANTITIES

Q-3

STATE OF CALIFORNIA - DEPARTMENT OF TRANSPORTATION
Caltrans® DESIGN

FUNCTIONAL SUPERVISOR: DEREK HIGA
CALCULATED-DESIGNED BY: AINSLEY CHANG
CHECKED BY: KAZ KAYODA
REVISED BY
DATE REVISED

LAST REVISION 00-00-00
DATE PLOTTED => 25-AUG-2010
TIME PLOTTED => 14:25

Dist	COUNTY	ROUTE	POST MILES TOTAL PROJECT	SHEET No.	TOTAL SHEETS
07	LA	101	31.1/38.2	52	74

REGISTERED CIVIL ENGINEER 7/02/10 DATE

08-16-10
PLANS APPROVAL DATE

REGISTERED PROFESSIONAL ENGINEER VUONG HONG No. E16613 Exp. 6/30/12 CIVIL STATE OF CALIFORNIA

THE STATE OF CALIFORNIA OR ITS OFFICERS OR AGENTS SHALL NOT BE RESPONSIBLE FOR THE ACCURACY OR COMPLETENESS OF SCANNED COPIES OF THIS PLAN SHEET.

GENERAL NOTES: (ALL SHEETS)

1. THE CONTRACTOR SHALL IDENTIFY ALL EXISTING LOOPS BEFORE CONSTRUCTION.
2. RC EXISTING PULL BOXES. INSTALL POLYMER BASED TYPE PULL BOXES AT THE SAME LOCATIONS. SEE SHEET E-6 FOR DETAILS.
3. INSTALL NEW STUBOUTS.
4. NEW INDUCTIVE LOOPS MUST BE OF TYPE 'E' LOOPS ACCORDING TO STANDARD PLANS ES-5A AND 5B UNLESS OTHERWISE NOTED ON PLAN.
5. CUT AND TERMINATE ALL LOOPS TO THE SHOULDER, REUSE EXISTING dlc's UNLESS OTHERWISE NOTED ON PLANS.

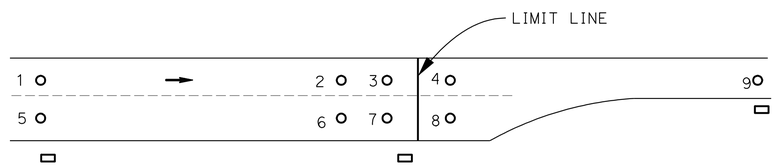

TYPICAL ON RAMP LOOPS

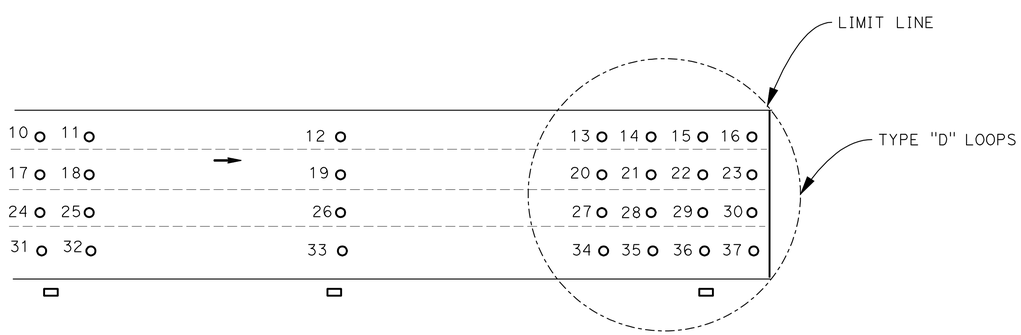

TYPICAL OFF RAMP LOOPS

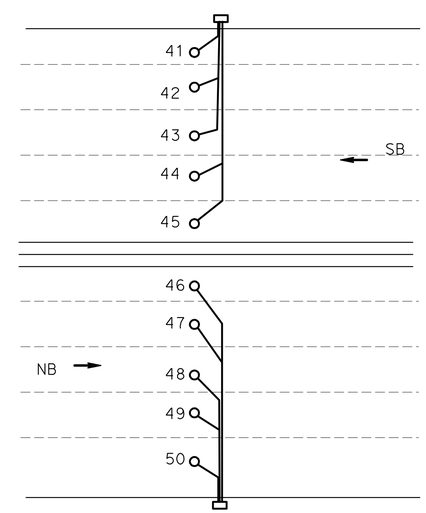

TYPICAL MAIN LINE LOOPS

INDUCTIVE LOOP DETECTOR

NO SCALE

E-1

STATE OF CALIFORNIA - DEPARTMENT OF TRANSPORTATION
Caltrans TRAFFIC DESIGN

FUNCTIONAL SUPERVISOR: OSWALD ELIZONDO
CALCULATED-DESIGNED BY: VUONG HONG
CHECKED BY: OSWALD ELIZONDO
REVISED BY
DATE REVISED

LAST REVISION 00-00-00
DATE PLOTTED => 25-AUG-2010
TIME PLOTTED => 14:25

Dist	COUNTY	ROUTE	POST MILES TOTAL PROJECT	SHEET No.	TOTAL SHEETS
07	LA	101	31.1/38.2	53	74

REGISTERED CIVIL ENGINEER DATE 7/02/10

08-16-10
PLANS APPROVAL DATE

REGISTERED PROFESSIONAL ENGINEER VUONG HONG No. E16613 Exp. 6/30/12 CIVIL STATE OF CALIFORNIA

THE STATE OF CALIFORNIA OR ITS OFFICERS OR AGENTS SHALL NOT BE RESPONSIBLE FOR THE ACCURACY OR COMPLETENESS OF SCANNED COPIES OF THIS PLAN SHEET.

SUMMARY OF INDUCTIVE LOOPS

PM	LOCATIONS	QUANTITY			LOOP LOCATIONS (SEE DETAILS SHEET E-1)																					
		STUB-OUTS	PULL BOX	LOOPS																						
31.0	SB 101 ON RAMP SB LAS VIRGENES CANYON Rd	2	2	5	1	5	2	3	4																	
31.8	SB 101 ON RAMP NB LAS VIRGENES CANYON Rd	2	2	4	1	2	3	4																		
31.3	SB OFF RAMP AT LAS VIRGENES CANYON Rd	2	2	9	10	13*	14*	15*	16*	20*	21*	22*	23*													
31.2	SB MAIN LINE AT LAS VIRGENES CANYON Rd	2	2	4	42	43	44	45																		
31.1	NB ON RAMP AT LAS VIRGENES CANYON Rd	3	3	6	1	5	2	3	4	9																
30.9	NB OFF RAMP AT LAS VIRGENES CANYON Rd	5	5	22	10	17	24	12	19	26	13*	14*	15*	16*	20*	21*	22*	23*	27*	28*	29*	30*	34*	35*	36*	37*
31.7	NB MAIN LINE AT LAS VIRGENES CANYON Rd	1	1	4	46	47	48	49																		
31.8	SB MAIN LINE AT LAS VIRGENES CANYON Rd	2	2	4	42	43	44	45																		
31.9	SB ON RAMP AT LOS HILLS Rd	2	2	5	1	5	2	3	4																	
32.1	NB ON RAMP AT LOS HILLS Rd	2	2	5	1	5	2	3	4																	
32.1	SB MAIN LINE AT LOS HILLS Rd	1	1	4	42	43	44	45																		
32.3	NB MAIN LINE AT LOS HILLS Rd	1	1	4	46	47	48	49																		
32.6	SB ON RAMP AT LIBERTY CANYON Rd	2	2	5	1	5	2	3	4																	
32.8	SB OFF RAMP AT LIBERTY CANYON Rd	1	1	1	10																					
32.0	SB MAIN LINE AT LIBERTY CANYON Rd	1	1	4	42	43	44	45																		
33.0	NB ON RAMP AT LIBERTY CANYON Rd	2	2	5	1	5	2	3	4																	
32.6	NB OFF RAMP AT LIBERTY CANYON Rd	1	1	1	10																					
33.3	NB MAIN LINE AT LIBERTY CANYON Rd	1	1	4	46	47	48	49																		
33.8	SB ON RAMP AT CHESSEBRO Rd	2	2	5	1	5	2	3	4																	
33.8	SB OFF RAMP AT CHESSEBRO Rd	1	1	2	12	19																				
33.6	SB MAIN LINE AT CHESSEBRO Rd	1	1	4	42	43	44	45																		
33.8	NB ON RAMP AT CHESSEBRO Rd	2	2	5	1	5	2	3	4																	
33.6	NB OFF RAMP AT CHESSEBRO Rd	1	1	1	12																					
33.6	NB MAIN LINE AT CHESSEBRO Rd	1	1	4	46	47	48	49																		

NOTE:
* = TYPE "D" LOOPS

INDUCTIVE LOOP DETECTOR

E-2

REVISED BY | DATE REVISED
VUONG HONG | OSWALD ELIZONDO
CALCULATED-DESIGNED BY | CHECKED BY
FUNCTIONAL SUPERVISOR: OSWALD ELIZONDO
STATE OF CALIFORNIA - DEPARTMENT OF TRANSPORTATION
Caltrans TRAFFIC DESIGN

LAST REVISION 00-00-00 | DATE PLOTTED => 25-AUG-2010 | TIME PLOTTED => 14:26

Dist	COUNTY	ROUTE	POST MILES TOTAL PROJECT	SHEET No.	TOTAL SHEETS
07	LA	101	31.1/38.2	54	74

REGISTERED CIVIL ENGINEER 7/02/10 DATE

08-16-10
PLANS APPROVAL DATE

REGISTERED PROFESSIONAL ENGINEER VUONG HONG No. E16613 Exp. 6/30/12 CIVIL STATE OF CALIFORNIA

THE STATE OF CALIFORNIA OR ITS OFFICERS OR AGENTS SHALL NOT BE RESPONSIBLE FOR THE ACCURACY OR COMPLETENESS OF SCANNED COPIES OF THIS PLAN SHEET.

SUMMARY OF INDUCTIVE LOOPS

PM	LOCATIONS	QUANTITY			LOOPS LOCATIONS (SEE DETAILS SHEET E-1)							
		STUB-OUTS	PULL BOX	LOOPS								
34.9	SB ON RAMP AT NB KANAN Rd	2	2	5	1	5	2	3	4			
34.7	SB MAIN LINE AT KANAN Rd	1	1	4	42	43	44	45				
35.2	SB MAIN LINE AT KANAN Rd	1	1	5	41	42	43	44	45			
34.9	NB MAIN LINE AT KANAN Rd	1	1	4	46	47	48	49				
36.0	NB MAIN LINE AT KANAN Rd	1	1	5	46	47	48	49	50			
36.1	SB OFF RAMP AT REYES ADOBE Rd	2	2	4	15*	16*	22*	23*				
36.6	SB MAIN LINE AT REYES ADOBE Rd	1	1	4	42	43	44	45				
36.3	NB ON RAMP AT REYES ADOBE Rd	2	2	5	1	5	2	3	4			
36.1	NB OFF RAMP AT REYES ADOBE Rd	2	2	5	10	15*	16*	22*	23*			
36.7	NB MAIN LINE AT REYES ADOBE Rd	2	2	8	46	47	48	49				
37.2	SB ON RAMP AT NB LINDERO Rd	2	2	4	1	2	3	4				
37.2	SB ON RAMP AT SB LINDERO Rd	2	2	9	1	2	3	4	5	6	7	8
36.6	SB MAIN LINE AT LINDERO Rd	1	1	4	42	43	44	45				
37.6	SB MAIN LINE AT LINDERO Rd	1	1	5	41	42	43	44	45			
37.6	SB OFF RAMP AT LINDERO Rd	1	1	3	16*	23*	30*					
37.2	NB ON RAMP AT NB LINDERO Rd	2	2	4	1	2	3	4				
37.1	NB OFF RAMP AT LINDERO Rd	2	2	3	12	19	26					
37.0	NB MAIN LINE AT LINDERO Rd	1	1	4	46	47	48	49				
38.0	NB MAIN LINE AT LINDERO Rd	1	1	5	46	47	48	49	50			

NOTE:

* = TYPE "D" LOOPS

THIS PLAN IS ACCURATE FOR ELECTRICAL WORK ONLY.

INDUCTIVE LOOP DETECTOR

E-3

STATE OF CALIFORNIA - DEPARTMENT OF TRANSPORTATION
Caltrans® TRAFFIC DESIGN

FUNCTIONAL SUPERVISOR: OSWALD ELIZONDO
CALCULATED-DESIGNED BY: VUONG HONG
CHECKED BY: OSWALD ELIZONDO
REVISED BY
DATE REVISED

LAST REVISION 00-00-00
DATE PLOTTED => 25-AUG-2010
TIME PLOTTED => 14:26

Dist	COUNTY	ROUTE	POST MILES TOTAL PROJECT	SHEET No.	TOTAL SHEETS
07	LA	101	31.1/38.2	55	74

REGISTERED CIVIL ENGINEER 7/02/10 DATE

08-16-10
PLANS APPROVAL DATE

REGISTERED PROFESSIONAL ENGINEER VUONG HONG No. E16613 Exp. 6/30/12 CIVIL STATE OF CALIFORNIA

THE STATE OF CALIFORNIA OR ITS OFFICERS OR AGENTS SHALL NOT BE RESPONSIBLE FOR THE ACCURACY OR COMPLETENESS OF SCANNED COPIES OF THIS PLAN SHEET.

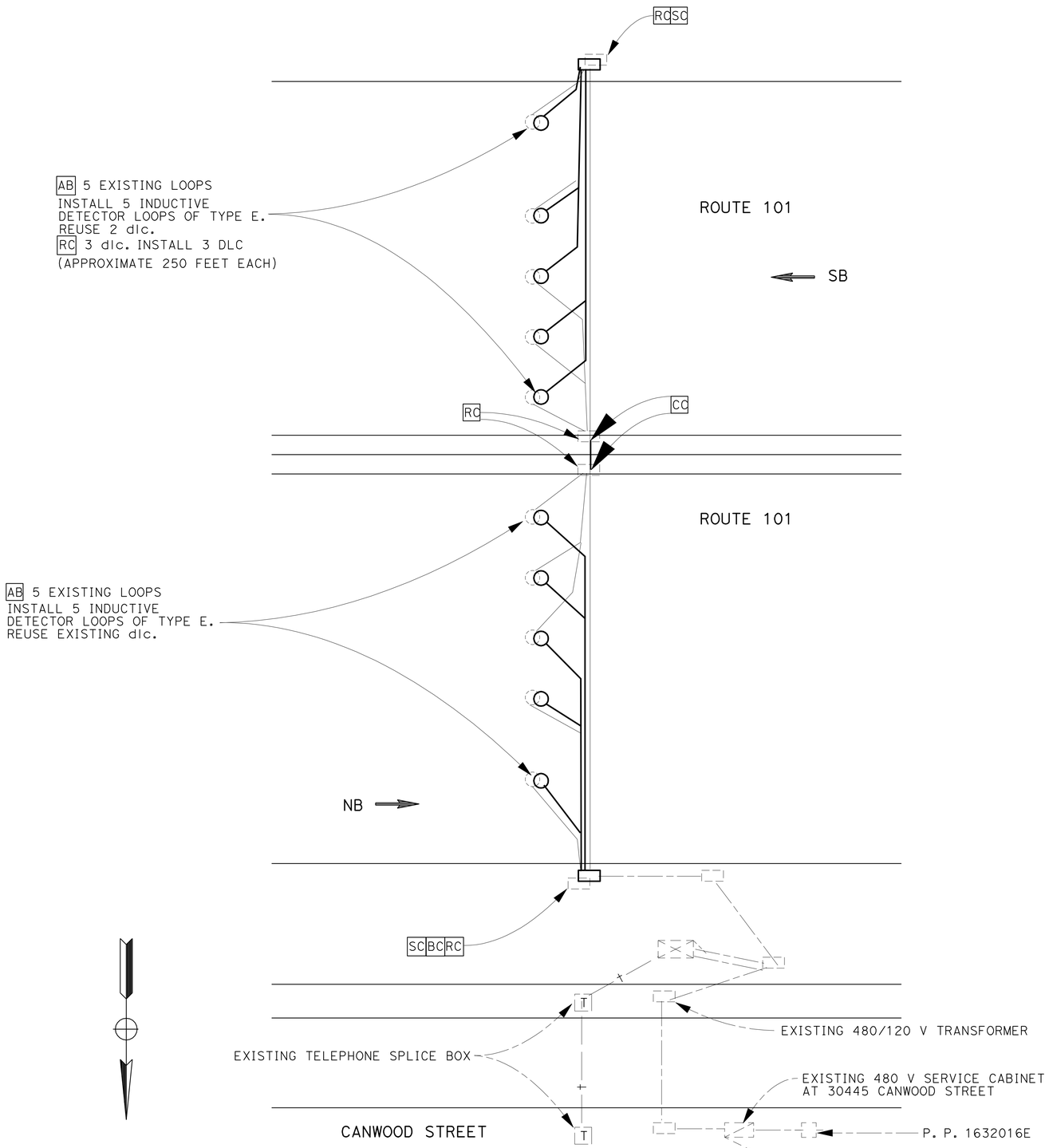

LOCATION 4

LA-101-36.2
N/O REYES ADOBE ROAD OC
(COUNT STATION 203)

THIS PLAN IS ACCURATE FOR ELECTRICAL WORK ONLY.

INDUCTIVE LOOP DETECTOR

NO SCALE

E-4

STATE OF CALIFORNIA - DEPARTMENT OF TRANSPORTATION
Caltrans® **TRAFFIC DESIGN**

FUNCTIONAL SUPERVISOR: OSWALD ELIZONDO
CALCULATED-DESIGNED BY: VUONG HONG
CHECKED BY: OSWALD ELIZONDO
REVISED BY
DATE REVISED

LAST REVISION 00-00-00 | DATE PLOTTED => 25-AUG-2010 | TIME PLOTTED => 14:26

Dist	COUNTY	ROUTE	POST MILES TOTAL PROJECT	SHEET No.	TOTAL SHEETS
07	LA	101	31.1/38.2	56	74

REGISTERED CIVIL ENGINEER 7/02/10 DATE

08-16-10
PLANS APPROVAL DATE

REGISTERED PROFESSIONAL ENGINEER VUONG HONG No. E16613 Exp. 6/30/12 CIVIL STATE OF CALIFORNIA

THE STATE OF CALIFORNIA OR ITS OFFICERS OR AGENTS SHALL NOT BE RESPONSIBLE FOR THE ACCURACY OR COMPLETENESS OF SCANNED COPIES OF THIS PLAN SHEET.

CONDUIT AND CONDUCTOR SCHEDULE

AWG OR CABLE	CONDUCTOR RUN	1	2	3	4	5	6	7	8	9	10	11
#6	RAMP METERING SERVICE	2(E)	2(E)	2(E)	2(E)		2(E)	2(E)	2(E)	2(E)	2(E)	2(E)
#14	FLASHING BEACONS			2	2	2	2	2	2	2	2	2
	METER ON						2	2	2	2		
#10	COMMON			1	1	1	1	1	1	1	1	1
TEL	TELEPHONE CABLE		1(E)	1(E)	1(E)							
#6G	GROUND			1	1	1	1	1	1	1	1	1
DLC	DEMAND	1(E)		1(E)	1(E)							
	PASSAGE	1(E)		1(E)	1(E)							
	QUEU		1(E)	1(E)	1(E)							
	MAIN LINE	4(E)		4(E)	4(E)							
	CONDUIT SIZE	2"(E)	2"(E)	3"(E)	2-3"(E)	2"	3"(E)	2-3"(E)	3"(E)	2"(E)	3"(E)	2"(E)

(E) = EXISTING.

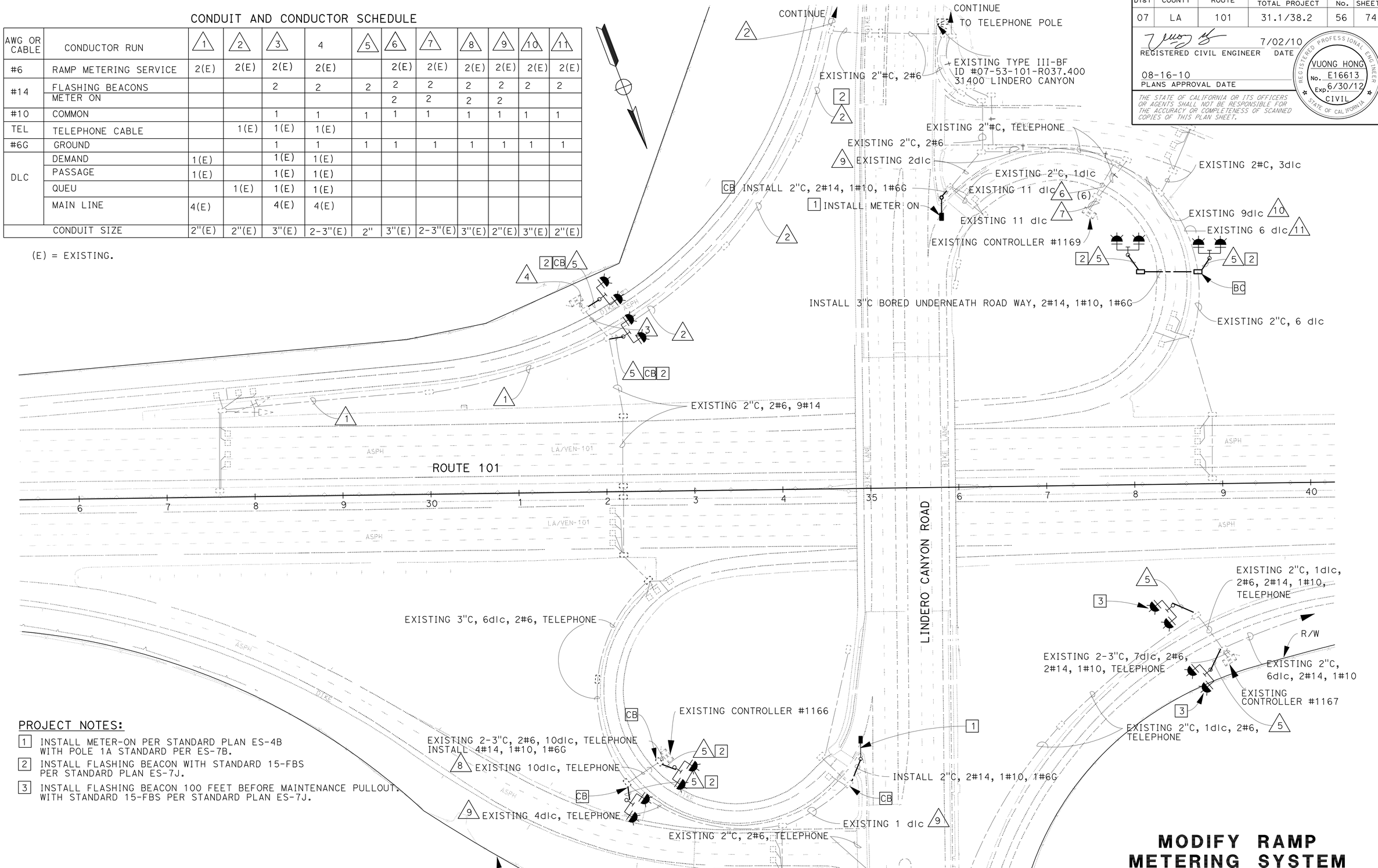

PROJECT NOTES:

1. INSTALL METER-ON PER STANDARD PLAN ES-4B WITH POLE 1A STANDARD PER ES-7B.
2. INSTALL FLASHING BEACON WITH STANDARD 15-FBS PER STANDARD PLAN ES-7J.
3. INSTALL FLASHING BEACON 100 FEET BEFORE MAINTENANCE PULLOUT. WITH STANDARD 15-FBS PER STANDARD PLAN ES-7J.

FOR ACCURATE RIGHT OF WAY AND ACCESS DATA, SEE RIGHT OF WAY RECORD MAPS AT DISTRICT OFFICE.

THIS PLAN IS ACCURATE FOR ELECTRICAL WORK ONLY

MODIFY RAMP METERING SYSTEM

SCALE 1" = 50'

E-5

REVISED BY | DATE REVISED
VUONG HONG | OSWALD ELIZONDO
CALCULATED-DESIGNED BY | CHECKED BY
FUNCTIONAL SUPERVISOR: OSWALD ELIZONDO
STATE OF CALIFORNIA - DEPARTMENT OF TRANSPORTATION
Caltrans TRAFFIC DESIGN

LAST REVISION 00-00-00 | DATE PLOTTED => 25-AUG-2010 | TIME PLOTTED => 14:26

Dist	COUNTY	ROUTE	POST MILES TOTAL PROJECT	SHEET No.	TOTAL SHEETS
07	LA	101	31.1/38.2	57	74

REGISTERED CIVIL ENGINEER 7-02-10 DATE

08-16-10
PLANS APPROVAL DATE

REGISTERED PROFESSIONAL ENGINEER VUONG HONG No. E16613 Exp. 6/30/12 CIVIL STATE OF CALIFORNIA

THE STATE OF CALIFORNIA OR ITS OFFICERS OR AGENTS SHALL NOT BE RESPONSIBLE FOR THE ACCURACY OR COMPLETENESS OF SCANNED COPIES OF THIS PLAN SHEET.

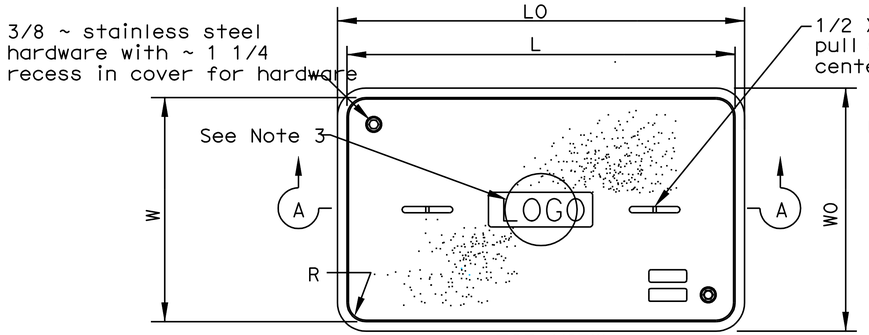

TOP VIEW

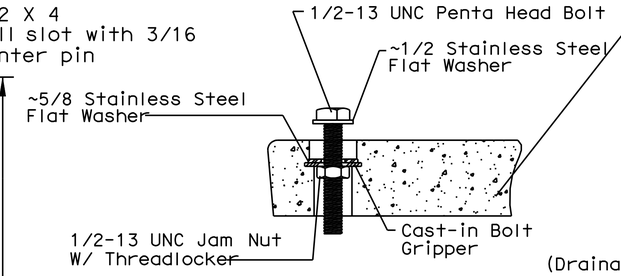

SECTION OF COVER BOLTDOWN
See Note 4

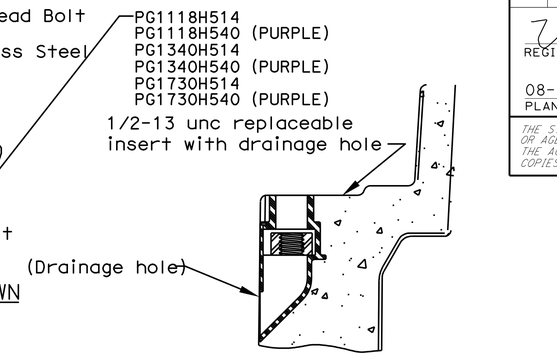

SECTION OF REPLACEABLE INSERT

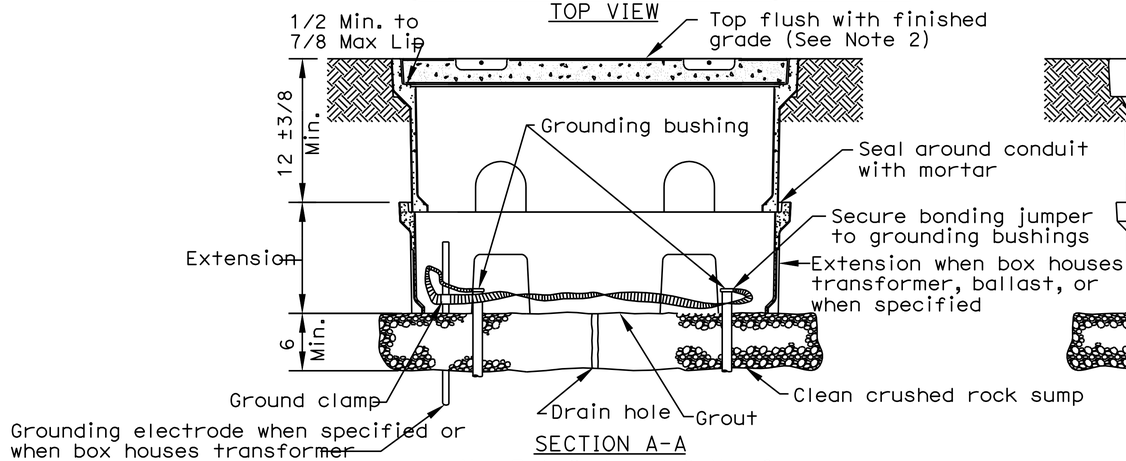

SECTION A-A
No. 3 1/2, No. 5 & No. 6
NON-DELIBERATE TRAFFIC PULL BOX
INSTALLATION DETAILS

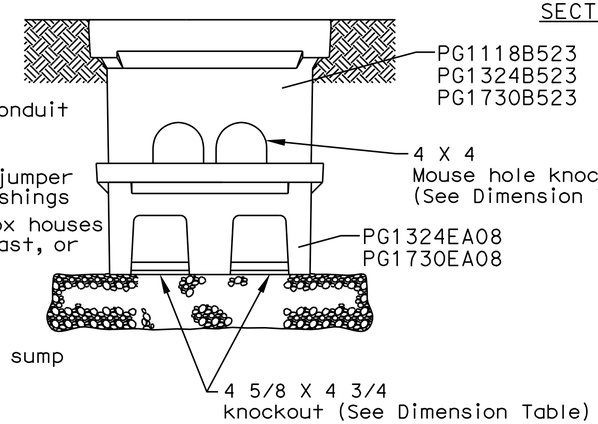

No. 5 and No. 6 pull box.

DIMENSION TABLE

PULL BOX	CONCRETE BOX Minimum * Thickness	CONCRETE BOX Minimum Depth Box and Extension	CONCRETE BOX LO (mm)	CONCRETE BOX WO (mm)	NON-PCC BOX Minimum * Thickness	NON-PCC BOX Minimum Depth Box and Extension	CONCRETE OR NON-PCC BOX LO	WO	L **	W **	R	Edge Thickness	Edge Taper	Extension Knockouts Side	Extension Knockouts End	Pull Box Knockouts Side	Pull Box Knockouts End
No. 3 1/2	1	No Extension	18	13	1	No Extension	20 1/4	13 5/16	18 1/8	11 1/4	1 1/4	1/2	1/8	n/a	n/a	n/a	n/a
No. 5	1	22	26 1/4	16 3/4	3/4	20	24 15/16	15 7/16	23 1/4	13 3/4	1 3/8	5/8	1/8	2	1	2	1
No. 6	1 9/16	24	33 5/8	20 5/8	3/4	20	32 1/4	19 1/4	30 1/2	17 1/2	1 3/8	5/8	1/8	2	2	2	2

* Excluding conduit web ** Top dimension

NOTES ON PULL BOXES:

1. All non-deliberate traffic pull boxes and covers must be made of polymer concrete with fiberglass reinforcement. The box must have continuous fiberglass cloth reinforcement on the inside and outside perimeters. The covers must have a minimum of two layers of fiberglass cloth reinforcement.
2. All non-deliberate traffic pull boxes and covers must comply with all test provisions of ANSI/SCTE 77 2007 "Specification for Underground Enclosure Integrity", and must meet the Tier 22 application. Markings showing the Tier 22 rating must be labeled or stenciled on the inside and outside of the box, and on the underside of the cover.
3. Top of pull boxes must be flush with surrounding grade or top of adjacent curb, except that in unpaved areas where pull box is not immediately adjacent to and protected by a concrete foundation, pole or other surrounding grade. Where practicable, pull boxes shown in the vicinity of curbs must be placed adjacent to the back of curb, and pull boxes shown adjacent to standards must be placed on side of foundation facing away from traffic, unless otherwise noted. When a pull box is installed in sidewalk area, the depth of the pull box must be adjusted so that the top of the pull box is flush with the sidewalk.
4. Electronic marker must be cast in cover.

Covers must be secured to pull box using 1/2-13 UNC s.s. penta head bolts. Bolts must be captive.

Fasteners must be capable of withstanding a torque of 56 ft lbs and a pull-out strength of 750 lbs. The pull-out test must be performed with the cover in place and the fasteners torqued to 56 ft lbs. Fasteners, inserts and cover must not me damaged by the performance of this test.

Pull box covers must be marked as follows: "SERVICE" Service circuits between service point and service disconnect; "SPRINKLER-CONTROL" Sprinkler control circuits, 50 v or less; "CALTRANS" On all pull boxes, except pull boxes marked "SPRINKLER-CONTROL"; and "TELEPHONE" Telephone service.

No. 3 1/2 pull box.

1) "TRAFFIC SIGNAL" Traffic signal circuits with or without street or sign lighting circuits.
2) "STREET LIGHTING" Street or sign lighting circuits where voltage is under 600 V.
3) "STREET LIGHTING-HIGH VOLTAGE" Street or sign lighting circuits where voltage is above 600 V.
4) "IRRIGATION" Circuits to irrigation controller 120 V or more. and must be purple in color.
5) "RAMP METER" Ramp meter circuits.
6) "COUNT STATION" Count or speed monitor circuits.
7) "COMMUNICATION" Communication circuits.
8) "TOS COMMUNICATIONS" TOS communication line.
9) "TOS POWER" TOS power.
10) "TDC POWER" Telephone demarcation cabinet power.
11) "CCTV" Closed circuit television circuits.
12) "TMS" Traffic monitoring station circuits.
13) "CMS" Changeable message sign circuits.
14) "HAR" Highway advisory radio circuits.

8. The nominal dimensions of the opening in which the cover sets must be the same as the cover dimensions except the length and width dimensions must be 1/8 or greater.
9. Covers and boxes must be interchangeable with California standard male and female gages. When interchanged with a standard male or female gage, the top surfaces must be flush within 1/8. Top outside edge of concrete covers and pull boxes must have a 1/8 minimum radius.
10. Pull box must not be installed within the boundaries of new or existing curb ramps.
11. Pull boxes for electroliers, post and signal standards must be located ± 5 feet from the station of the adjacent electrolier, post or signal standard. Pull boxes must be placed adjacent to back of curb or edge of shoulder except where this is impractical, a box maybe placed in another suitable protected and accessible location.
12. Pull boxes must be furnished with replaceable insert and must have a drainage hole directly below the insert.

INDUCTIVE LOOP DETECTOR (PULL BOX DETAILS)

NO SCALE

E-6

STATE OF CALIFORNIA - DEPARTMENT OF TRANSPORTATION
Caltrans TRAFFIC DESIGN

FUNCTIONAL SUPERVISOR: OSWALD ELIZONDO
CALCULATED-DESIGNED BY: VUONG HONG
CHECKED BY: OSWALD ELIZONDO
REVISED BY
DATE REVISED

LAST REVISION 00-00-00
DATE PLOTTED => 25-AUG-2010
TIME PLOTTED => 14:26

DIST	COUNTY	ROUTE	POST MILES TOTAL PROJECT	SHEET NO.	TOTAL SHEETS
07	LA	101	31.1/38.2	58	74

Randell D. Hiatt
REGISTERED CIVIL ENGINEER

June 6, 2008
PLANS APPROVAL DATE

REGISTERED PROFESSIONAL ENGINEER Randell D. Hiatt No. C50200 Exp. 6-30-09 CIVIL STATE OF CALIFORNIA

The State of California or its officers or agents shall not be responsible for the accuracy or completeness of electronic copies of this plan sheet.

To accompany plans dated 08-16-10

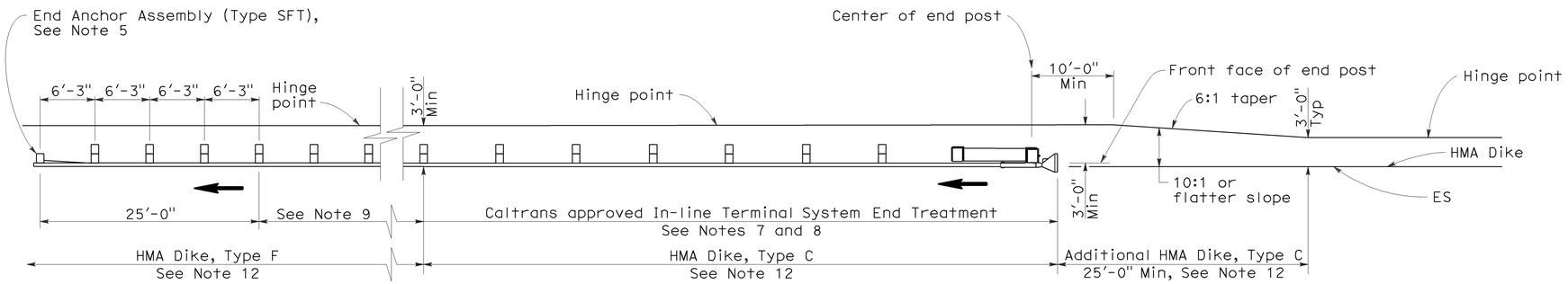

TYPE 11A LAYOUT

(EMBANKMENT GUARD INSTALLATION WITH IN-LINE END TREATMENT AT TRAFFIC APPROACH END OF RAILING)
See Note 6

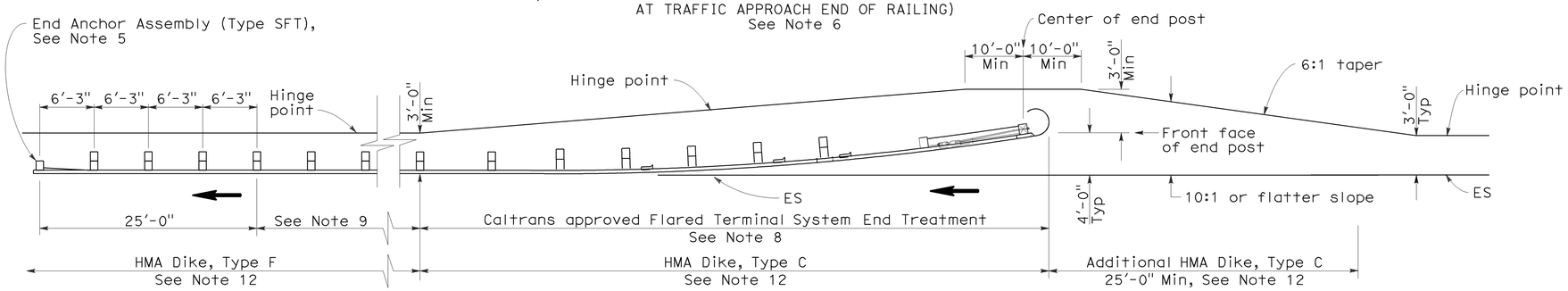

TYPE 11B LAYOUT

(EMBANKMENT GUARD RAILING INSTALLATION WITH FLARED END TREATMENT AT TRAFFIC APPROACH END OF RAILING)
See Note 6

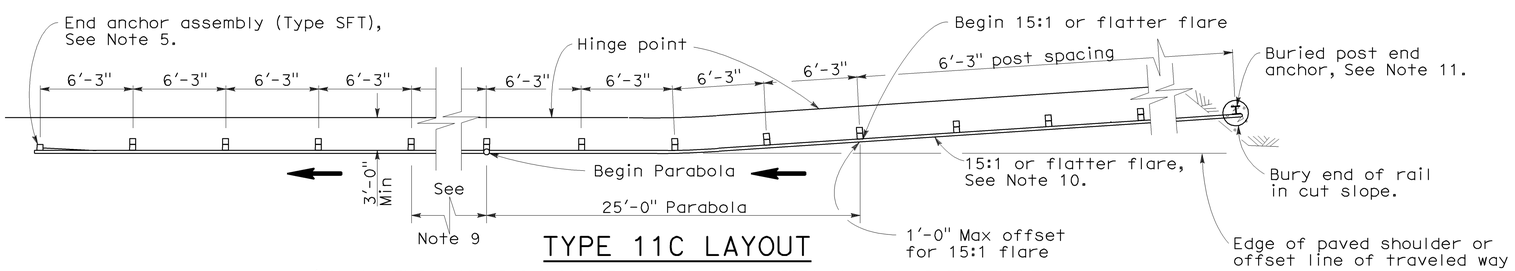

TYPE 11C LAYOUT

(EMBANKMENT GUARD RAILING INSTALLATION WITH BURIED END ANCHOR TREATMENT AT TRAFFIC APPROACH END OF RAILING)
See Notes 6 and 12

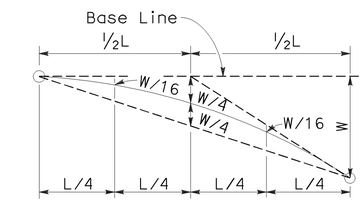

TYPICAL PARABOLIC LAYOUT

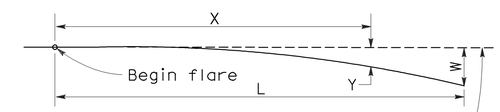

Base Line (Edge of paved shoulder or offset line of edge of traveled way)

$$Y = \frac{WX^2}{L^2}$$

Y = Offset from base line
W = Maximum offset
X = Distance along base line
L = Length of flare

PARABOLIC FLARE OFFSETS

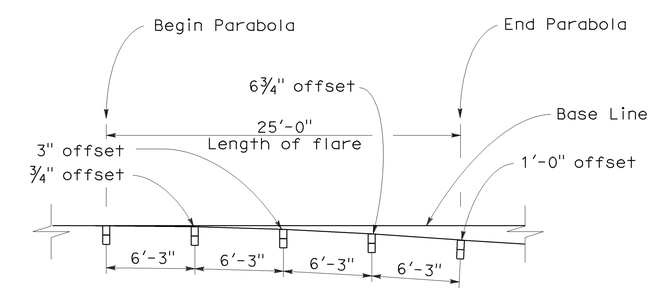

TYPICAL FLARE OFFSETS FOR 1 FOOT MAX END OFFSET

NOTES:

1. Line post, blocks and hardware to be used are shown on Standard Plans A77A1, A77A2, A77B1, A77C1, and A77C2.
2. Guard rail post spacing to be 6'-3" center to center, except as otherwise noted.
3. Except as noted, line posts are 6" x 8" x 6'-0" wood with 6" x 8" x 1'-2" wood blocks. W6 x 9 steel posts, 6'-0" in length, with 6" x 8" x 1'-2" notched wood blocks or recycled plastic blocks may be used for 6" x 8" x 6'-0" wood post with 6" x 8" x 1'-2" wood blocks where applicable and when specified.
4. Direction of adjacent traffic indicated by ⟶.
5. For End Anchor Assembly (Type SFT) details, see Standard Plan A77H1.
6. Layout Types 11A, 11B or 11C are typically used where guard railing is recommended to shield embankment slopes and a crashworthy end treatment is required for only one direction of traffic.
7. In-line Terminal System End Treatments are used where site conditions will not accommodate a flared end treatment.
8. The type of terminal system end treatment to be used will be shown on the Project Plans.
9. Dependent on site conditions (embankment height and side slope), construction of additional guard railing (length equal to multiples of 12'-6" with 6'-3" post spacing) may be advisable.
10. The 15:1 or flatter flare used with buried end anchors is based on the edge of the paved shoulder or offset line of edge of the traveled way. The length of guard railing within the 15:1 or flatter flare is based on site conditions and should be a length equal to multiples of 12'-6".
11. For details of the buried post end anchor used with Type 11C Layout, see Standard Plan A77I2.
12. Where placement of dike is required with guard railing installations, see Revised Standard Plan RSP A77C4 for dike positioning details.

STATE OF CALIFORNIA
DEPARTMENT OF TRANSPORTATION

METAL BEAM GUARD RAILING TYPICAL LAYOUTS FOR EMBANKMENTS

NO SCALE

RSP A77E1 DATED JUNE 6, 2008 SUPERSEDES STANDARD PLAN A77E1 DATED MAY 1, 2006 - PAGE 48 OF THE STANDARD PLANS BOOK DATED MAY 2006.

REVISED STANDARD PLAN RSP A77E1

2006 REVISED STANDARD PLAN RSP A77E1

12-10-07

DIST	COUNTY	ROUTE	POST MILES TOTAL PROJECT	SHEET NO.	TOTAL SHEETS
07	LA	101	31.1/38.2	59	74

Randell D. Hiatt
REGISTERED CIVIL ENGINEER

June 6, 2008
PLANS APPROVAL DATE

REGISTERED PROFESSIONAL ENGINEER
Randell D. Hiatt
No. C50200
Exp. 6-30-09
CIVIL
STATE OF CALIFORNIA

The State of California or its officers or agents shall not be responsible for the accuracy or completeness of electronic copies of this plan sheet.

To accompany plans dated 08-16-10

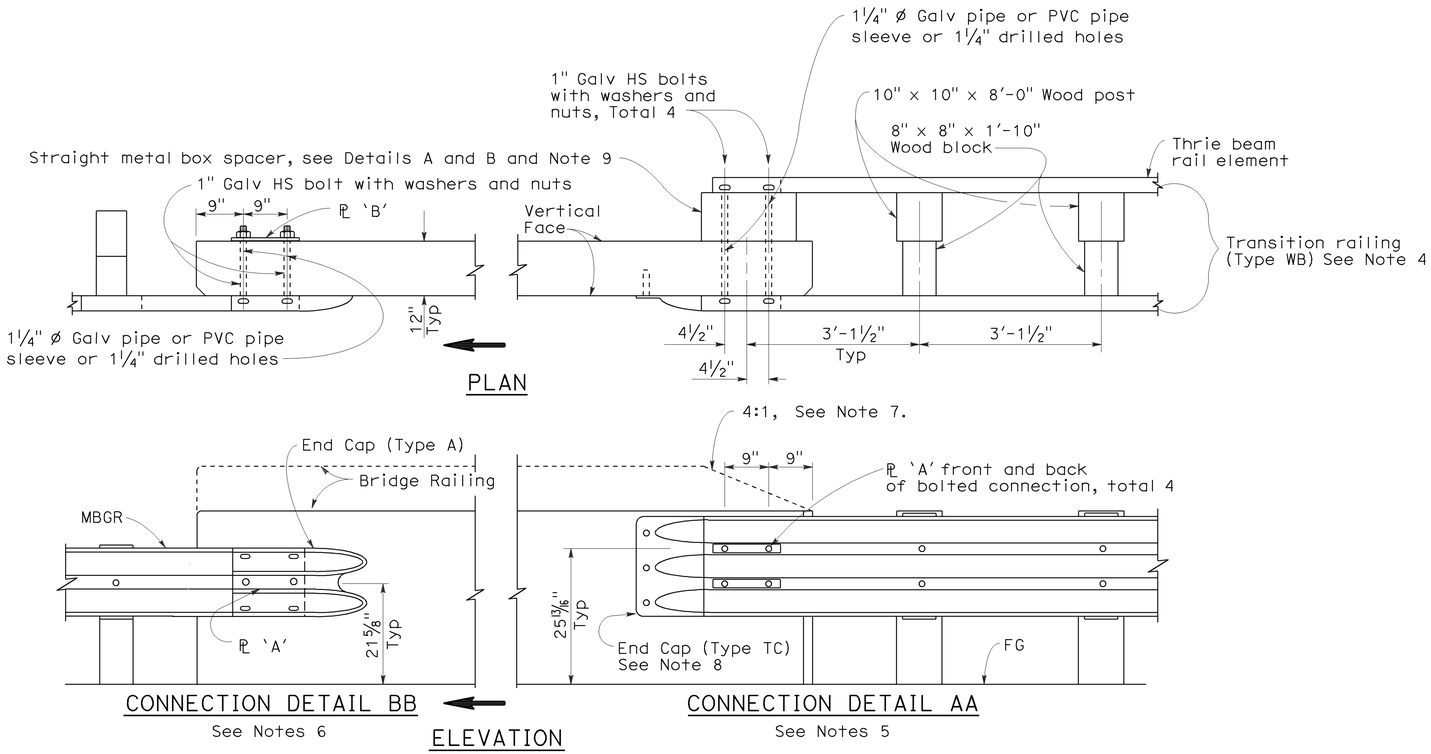

GUARD RAILING CONNECTION TO BRIDGE RAILING WITHOUT SIDEWALK

NOTES:

1. See Revised Standard Plan RSP A77J2 for additional connection details to bridges without sidewalks.
2. Additional details of posts, blocks and hardware are shown on Standard Plan A77B1, A77C1 and A77C2.
3. Direction of adjacent traffic indicated by ➡.
4. For additional details of Transition Railing (Type WB), see Standard Plan A77J4. Transition Railing (Type WB) transitions the 12 gage w-beam standard railing section of guard railing to a heavier gage nested thrie beam railing section which is connected to the concrete bridge railing.
5. For typical use of Connection Detail AA, see Layout Types 12A and 12B on Revised Standard Plan RSP A77F1, Layout Types 12C and 12D on Standard Plan A77F2, and Layout Type 12E on Revised Standard Plan RSP A77F3.
6. For typical use of Connection Detail BB, see Layout Type 12D (structure departure railing connection) on Standard Plan A77F2 and Layout Type 12DD on Standard Plan A77F5.
7. Where the height of the bridge railing exceeds the height of the thrie beam railing by more than 1" at Connection Detail AA, taper the top of the end of the bridge railing at 4:1 to match the top elevation of the thrie beam rail.
8. For details of End Cap (Type TC), see Standard Plan A77J4.
9. See Standard Plan A77J4 for additional details regarding depth dimension for straight metal box spacer.

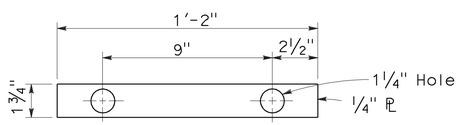

PLATE 'A'

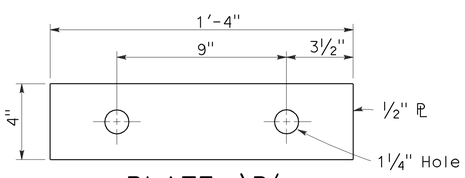

PLATE 'B'
(For backside of connection BB)

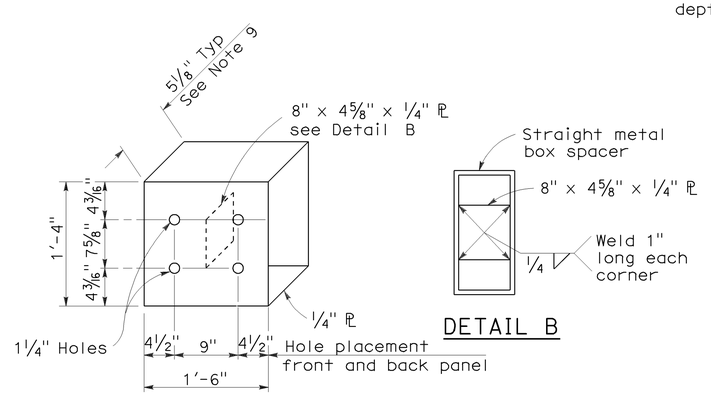

DETAIL A

DETAIL B

STRAIGHT METAL BOX SPACER

STATE OF CALIFORNIA
DEPARTMENT OF TRANSPORTATION

METAL BEAM GUARD RAILING CONNECTIONS TO BRIDGE RAILINGS WITHOUT SIDEWALKS DETAILS No.1

NO SCALE

RSP A77J1 DATED JUNE 6, 2008 SUPERSEDES STANDARD PLAN A77J1
DATED MAY 1, 2006 - PAGE 72 OF THE STANDARD PLANS BOOK DATED MAY 2006.

REVISED STANDARD PLAN RSP A77J1

2006 REVISED STANDARD PLAN RSP A77J1

12-10-07

DIST	COUNTY	ROUTE	POST MILES TOTAL PROJECT	SHEET NO.	TOTAL SHEETS
07	LA	101	31.1/38.2	60	74

Randell D. Hiatt
REGISTERED CIVIL ENGINEER

June 6, 2008
PLANS APPROVAL DATE

REGISTERED PROFESSIONAL ENGINEER
Randell D. Hiatt
No. C50200
Exp. 6-30-09
CIVIL
STATE OF CALIFORNIA

The State of California or its officers or agents shall not be responsible for the accuracy or completeness of electronic copies of this plan sheet.

To accompany plans dated 08-16-10

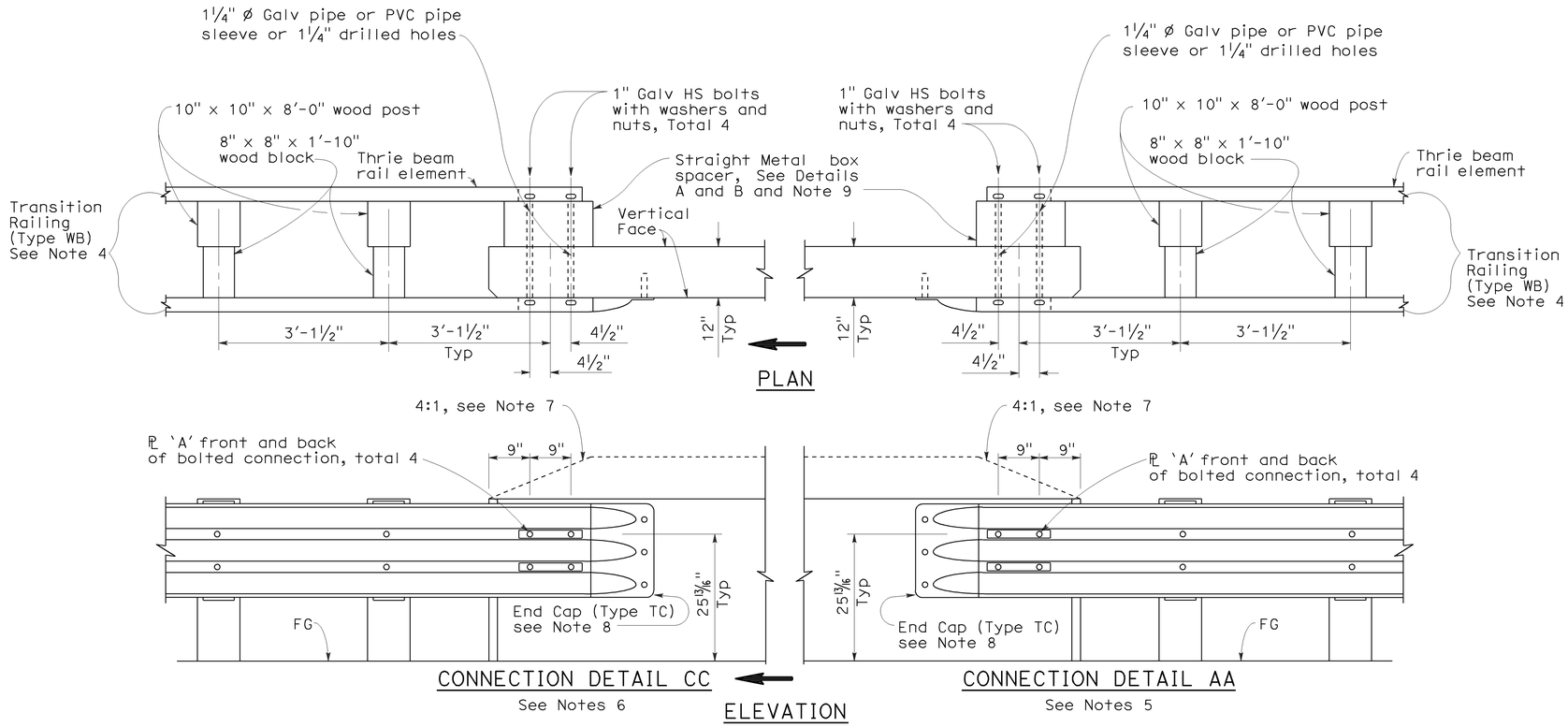

GUARD RAILING CONNECTION TO BRIDGE RAILING WITHOUT SIDEWALK

NOTES:

1. See Revised Standard Plan RSP A77J1 for additional connection details to bridges without sidewalks.
2. Additional details of posts, blocks and hardware are shown on Standard Plan A77B1, A77C1 and A77C2.
3. Direction of adjacent traffic indicated by ⟹.
4. For additional details of Transition Railing (Type WB), see Standard Plan A77J4. Transition Railing (Type WB) transitions the 12 gage w-beam standard railing section of guard railing to a heavier gage nested thrie beam railing section which is connected to the concrete bridge railing.
5. For typical use of Connection Detail AA, see Layout Types 12A and 12B on Revised Standard Plan RSP A77F1, Layout Types 12C and 12D on Standard Plan A77F2, and Layout Type 12E on Revised Standard Plan RSP A77F3.
6. For typical use of Connection Detail CC, see Layout Types 12AA and 12BB on Standard Plan A77F4 and Layout Type 12CC on Standard Plan A77F5.
7. Where the height of the bridge railing exceeds the height of the thrie beam railing by more than 1" at Connection Detail AA and connection Detail CC, taper the top of the end of the bridge railing at 4:1 to match the top elevation of the thrie beam railing.
8. For details of End Cap (Type TC), see Standard Plans A77J4.
9. See Standard Plans A77J4 for additional details regarding depth dimension for straight metal box spacer.

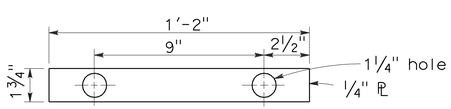

PLATE 'A'

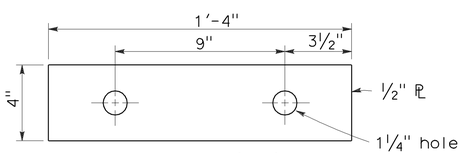

PLATE 'B'
(For backside of connection BB)

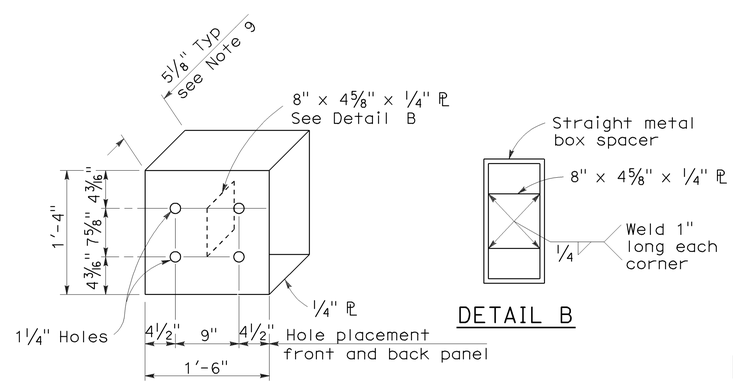

DETAIL A

DETAIL B

STRAIGHT METAL BOX SPACER

STATE OF CALIFORNIA
DEPARTMENT OF TRANSPORTATION

METAL BEAM GUARD RAILING CONNECTIONS TO BRIDGE RAILINGS WITHOUT SIDEWALKS DETAILS No.2

NO SCALE

RSP A77J2 DATED JUNE 6, 2008 SUPERSEDES STANDARD PLAN A77J2 DATED MAY 1, 2006 - PAGE 73 OF THE STANDARD PLANS BOOK DATED MAY 2006.

REVISED STANDARD PLAN RSP A77J2

2006 REVISED STANDARD PLAN RSP A77J2

12-10-07

DIST	COUNTY	ROUTE	POST MILES TOTAL PROJECT	SHEET NO.	TOTAL SHEETS
07	LA	101	31.1/38.2	61	74

William K. Farnbach
REGISTERED CIVIL ENGINEER

May 15, 2009
PLANS APPROVAL DATE

REGISTERED PROFESSIONAL ENGINEER William K. Farnbach No. C49042 Exp. 9-30-10 CIVIL STATE OF CALIFORNIA

The State of California or its officers or agents shall not be responsible for the accuracy or completeness of electronic copies of this plan sheet.

To accompany plans dated 08-16-10

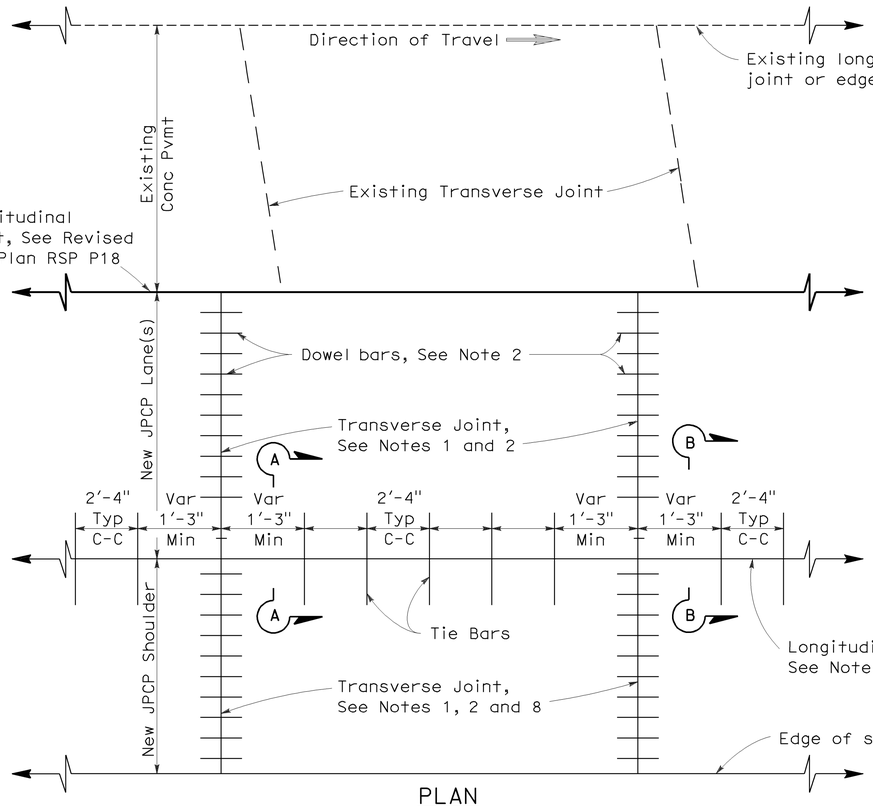

PLAN

LANE/SHOULDER ADDITION OR RECONSTRUCTION

See Notes 6 and 7

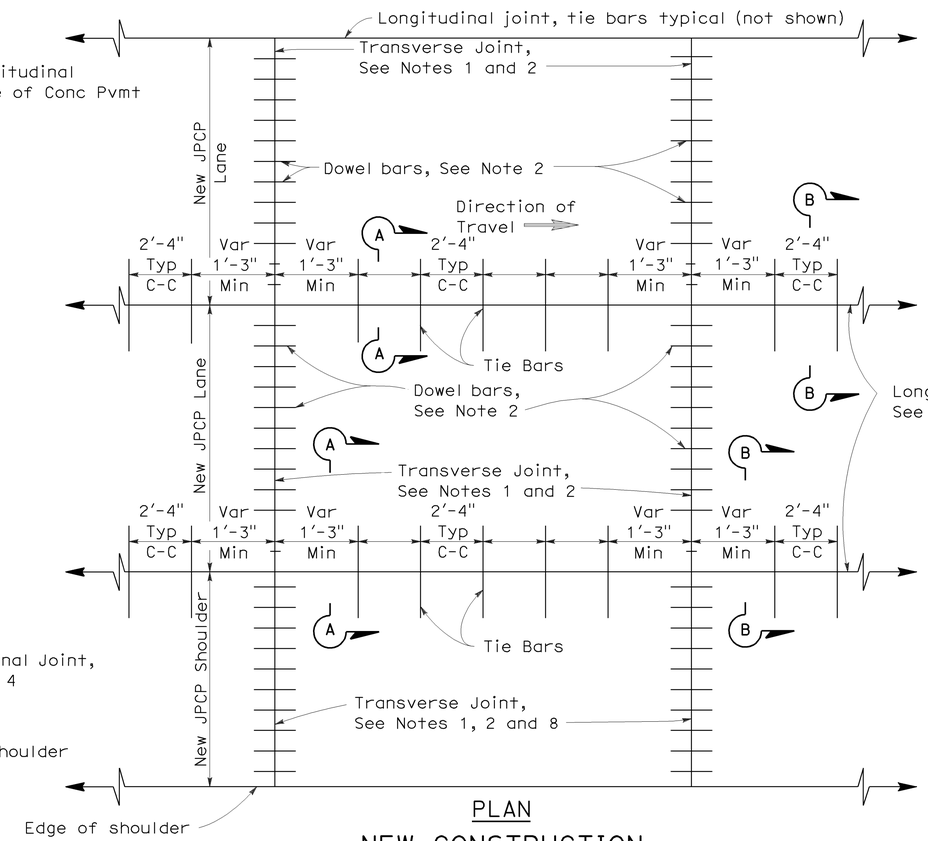

PLAN

NEW CONSTRUCTION

See Notes 6 and 7

NOTES:

1. Transverse joints shall be constructed at right angles to the longitudinal pavement joints in new jointed plain concrete pavement and spaced at successive repeated intervals of 12', 15', 13' and 14'.
2. For transverse joint and dowel bar details not shown, See Revised Standard Plan RSP P10.
3. Construct longitudinal contraction joints as shown in Section A-A when more than one lane or shoulder widths are placed at one time. If constructing one lane at a time, use longitudinal construction joint, as shown in Section B-B.
4. For additional longitudinal joint details, see Revised Standard Plan RSP P18.
5. If fresh concrete is placed adjacent to existing concrete, the top corner of the new hardened concrete does not need to be rounded to the 1/4" radius as shown.
6. Joint spacing patterns do not apply to intersections.
7. Details can also apply to inside widening.
8. Dowel bars may be omitted from shoulders when the shoulder cross slope is not the same as the adjacent traffic lane.

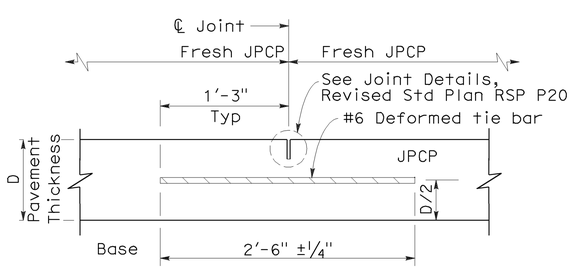

SECTION A-A

LONGITUDINAL CONTRACTION JOINT

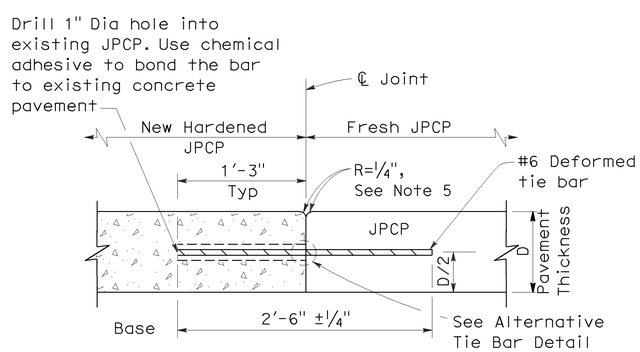

SECTION B-B

LONGITUDINAL CONSTRUCTION JOINT

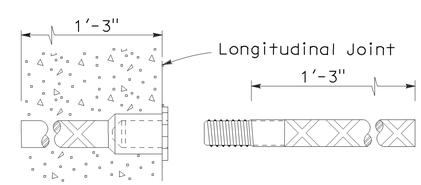

ALTERNATIVE TIE BAR SPLICE DETAIL

(Splice Coupler)

TIE BAR DETAILS

STATE OF CALIFORNIA
DEPARTMENT OF TRANSPORTATION

JOINTED PLAIN CONCRETE PAVEMENT

NO SCALE

RSP P1 DATED MAY 15, 2009 SUPERSEDES STANDARD PLAN P1
DATED MAY 1, 2006 - PAGE 119 OF THE STANDARD PLANS BOOK DATED MAY 2006.

REVISED STANDARD PLAN RSP P1

2006 REVISED STANDARD PLAN RSP P1

5-8-09

DIST	COUNTY	ROUTE	POST MILES TOTAL PROJECT	SHEET NO.	TOTAL SHEETS
07	LA	101	31.1/38.2	62	74

William K. Farnbach
REGISTERED CIVIL ENGINEER

May 15, 2009
PLANS APPROVAL DATE

REGISTERED PROFESSIONAL ENGINEER
William K. Farnbach
No. C49042
Exp. 9-30-10
CIVIL
STATE OF CALIFORNIA

The State of California or its officers or agents shall not be responsible for the accuracy or completeness of electronic copies of this plan sheet.

To accompany plans dated 08-16-10

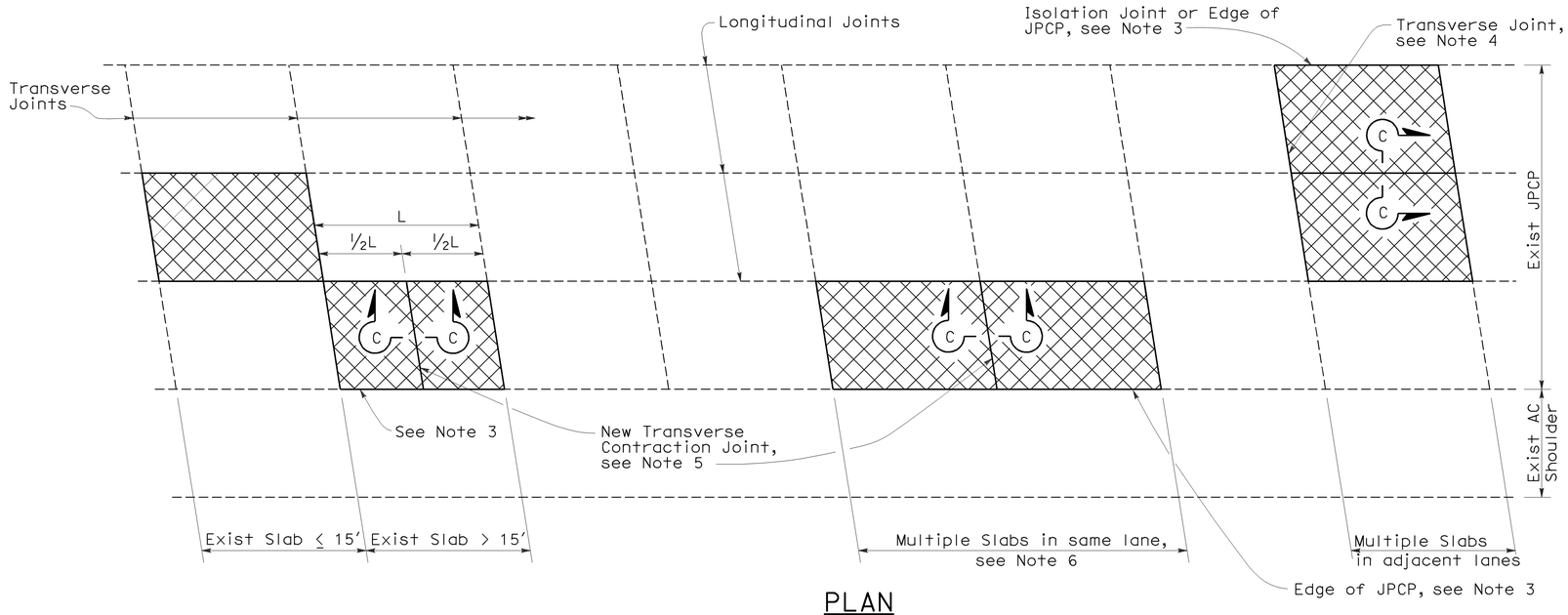

PLAN

NOTES:

1. For details not shown, see Revised Standard Plan RSP P10.
2. Where the existing outer shoulder pavement is asphalt concrete pavement, the "a" dimension shall be 1′-0" and the "b" dimension shall be 2′-0".
3. Side forms shall be used where edge of pavement is adjacent to asphalt concrete.
4. For detail, see Transverse Construction Joint for existing concrete pavement detail on Revised Standard Plan RSP P10.
5. Transverse joint to match skew of existing joint. Omit dowel bars.
6. This Standard Plan only applicable when replacing multiple slabs in the same lane is less than 100′.

LEGEND

Replace Concrete Pavement (See Slab Layout Detail)

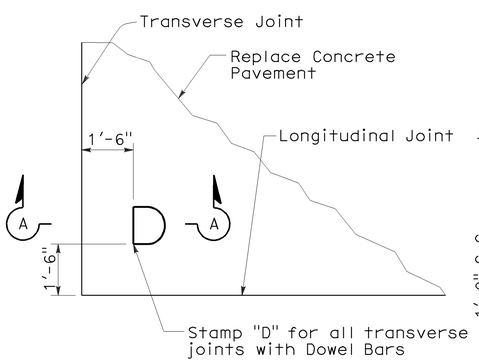

DOWEL STAMP DETAIL

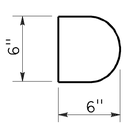

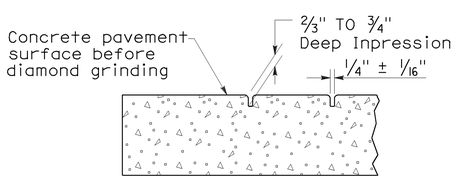

SECTION A-A

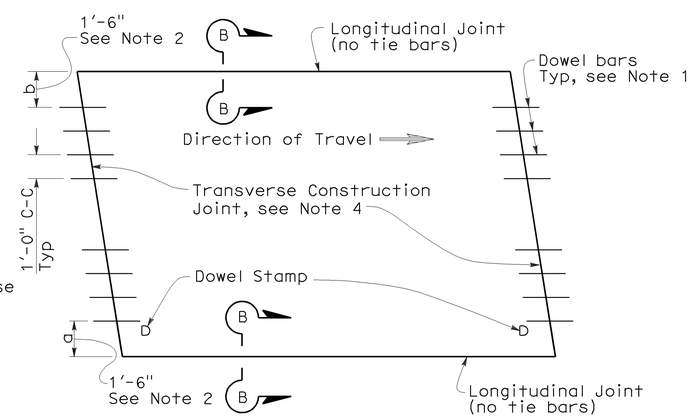

TYPE I
(traffic lane lines match longitudinal joints)

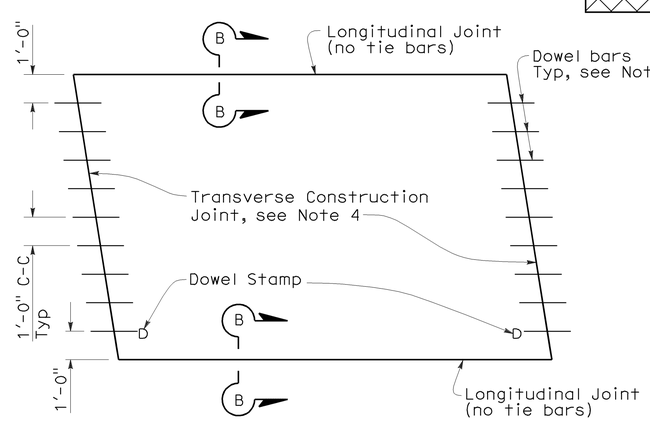

TYPE II
(traffic lane lines do not match longitudinal joints)

SLAB LAYOUT

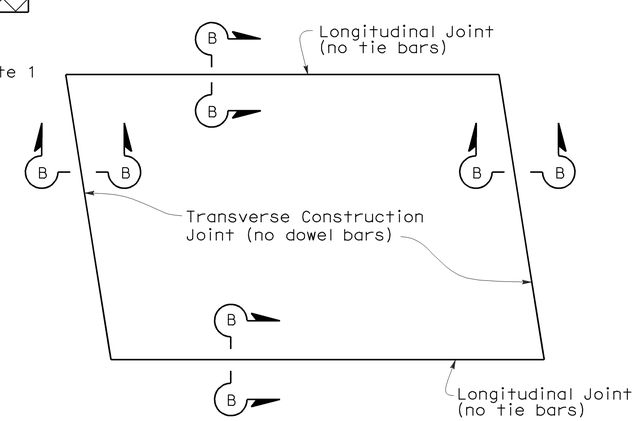

TYPE III
(for short term repairs < 5 yrs design life or for slab replacements with a cracking and seating operation)

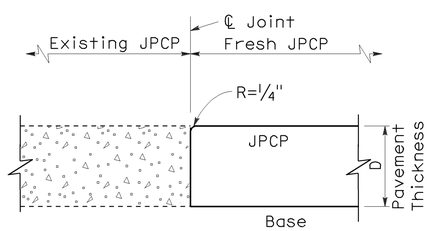

SECTION B-B

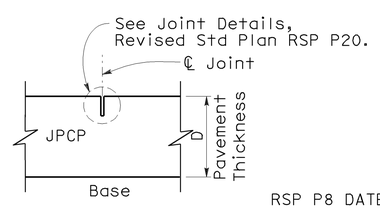

SECTION C-C

STATE OF CALIFORNIA
DEPARTMENT OF TRANSPORTATION

JOINTED PLAIN CONCRETE PAVEMENT-INDIVIDUAL SLAB REPLACEMENT

NO SCALE

RSP P8 DATED MAY 15, 2009 SUPERSEDES RSP P8 DATED SEPTEMBER 1, 2006 AND STANDARD PLAN P8 DATED MAY 1, 2006 - PAGE 123 OF THE STANDARD PLANS BOOK DATED MAY 2006.

REVISED STANDARD PLAN RSP P8

2006 REVISED STANDARD PLAN RSP P8

5-8-09

DIST	COUNTY	ROUTE	POST MILES TOTAL PROJECT	SHEET NO.	TOTAL SHEETS
07	LA	101	31.1/38.2	63	74

William K. Farnbach
REGISTERED CIVIL ENGINEER

May 15, 2009
PLANS APPROVAL DATE

REGISTERED PROFESSIONAL ENGINEER William K. Farnbach No. C49042 Exp. 9-30-10 CIVIL STATE OF CALIFORNIA

The State of California or its officers or agents shall not be responsible for the accuracy or completeness of electronic copies of this plan sheet.

To accompany plans dated 08-16-10

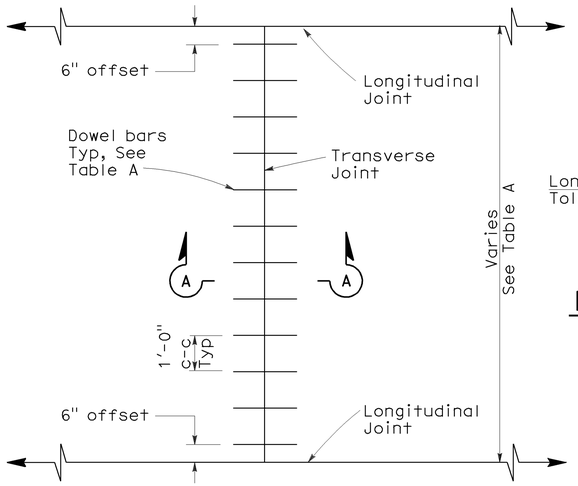

TRANSVERSE JOINT DOWEL BAR LAYOUT

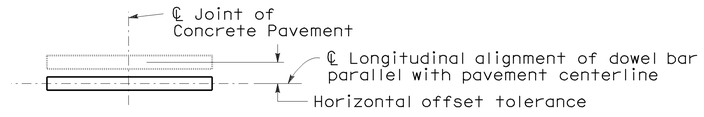

PLAN

HORIZONTAL OFFSET TOLERANCE

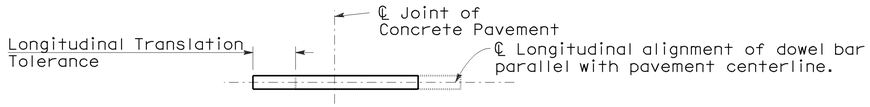

PLAN

LONGITUDINAL TRANSLATION TOLERANCE

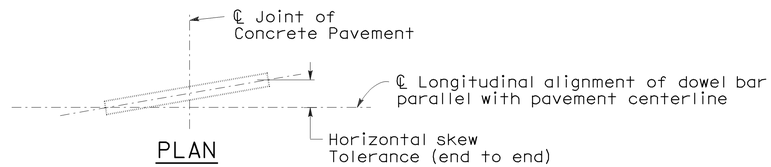

PLAN

HORIZONTAL SKEW TOLERANCE

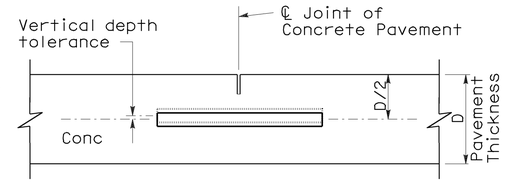

ELEVATION

VERTICAL DEPTH TOLERANCE

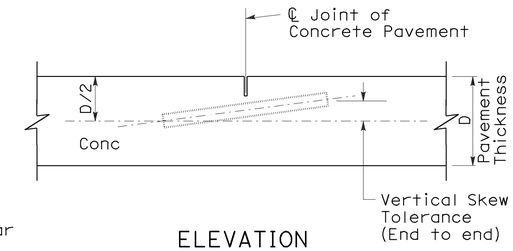

ELEVATION

VERTICAL SKEW TOLERANCE

NOTES:

1. See Revised Standard Plan RSP P1 for typical dowel bar placement and locations.
2. 1½" Dia smooth dowel bars are to be used with a pavement thickness, D, equal to or greater than 0.70 feet. For pavement thickness, D, less than 0.70 feet, use 1¼" Dia smooth dowel bars.
3. For widths not shown, see Project Plans.
4. If fresh concrete pavement is placed adjacent to existing concrete pavement, the top corner of the existing concrete pavement does not need to be rounded to the ¼" radius, as shown.

TABLE A (See Note 3)

Dowel Bar Transverse Spacing Table	
Width between Longitudinal Joints	Number of Dowels between Longitudinal Joints
14'-0"	14
13'-0"	13
12'-0"	12
11'-0"	11
10'-0"	10
8'-0"	8
5'-0"	5
4'-0"	4

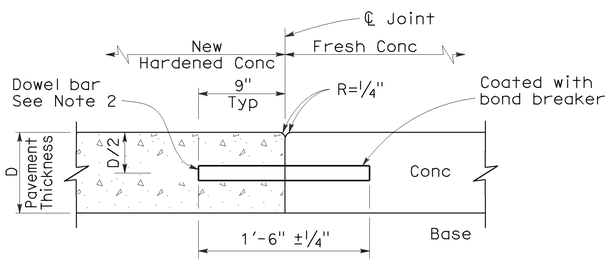

SECTION A-A

TRANSVERSE CONSTRUCTION JOINT DETAIL

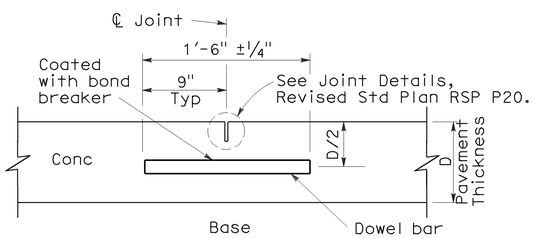

TRANSVERSE CONTRACTION JOINT

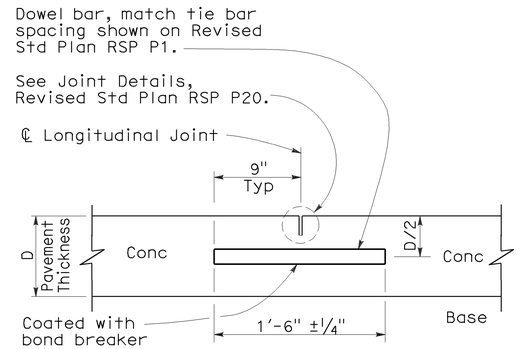

LONGITUDINAL CONTRACTION JOINT WITH DOWEL BARS

(See Revised Std Plan RSP P18)

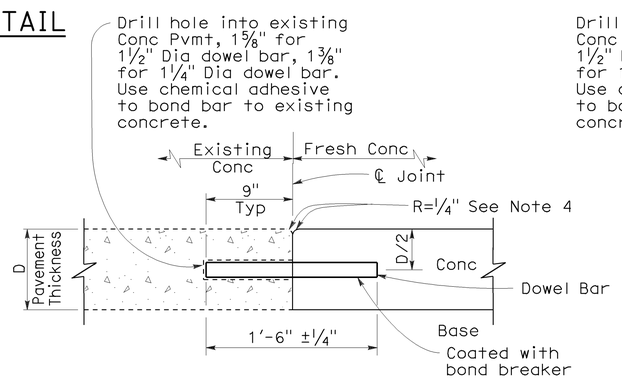

TRANSVERSE CONSTRUCTION JOINT FOR EXISTING CONCRETE PAVEMENT

(Drill and bond locations)

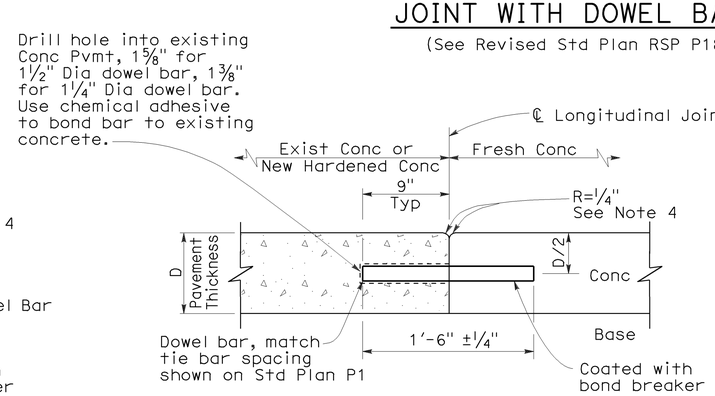

LONGITUDINAL CONSTRUCTION JOINT WITH DOWEL BARS

(See Revised Std Plan RSP P18)

STATE OF CALIFORNIA
DEPARTMENT OF TRANSPORTATION

CONCRETE PAVEMENT-DOWEL BAR DETAILS

NO SCALE

RSP P10 DATED MAY 15, 2009 SUPERSEDES STANDARD PLAN P10 DATED MAY 1, 2006 - PAGE 124 OF THE STANDARD PLANS BOOK DATED MAY 2006.

REVISED STANDARD PLAN RSP P10

2006 REVISED STANDARD PLAN RSP P10

5-8-09

DIST	COUNTY	ROUTE	POST MILES TOTAL PROJECT	SHEET NO.	TOTAL SHEETS
07	LA	101	31.1/38.2	64	74

William K. Farnbach
REGISTERED CIVIL ENGINEER

May 15, 2009
PLANS APPROVAL DATE

REGISTERED PROFESSIONAL ENGINEER
William K. Farnbach
No. C49042
Exp. 9-30-10
CIVIL
STATE OF CALIFORNIA

The State of California or its officers or agents shall not be responsible for the accuracy or completeness of electronic copies of this plan sheet.

To accompany plans dated 08-16-10

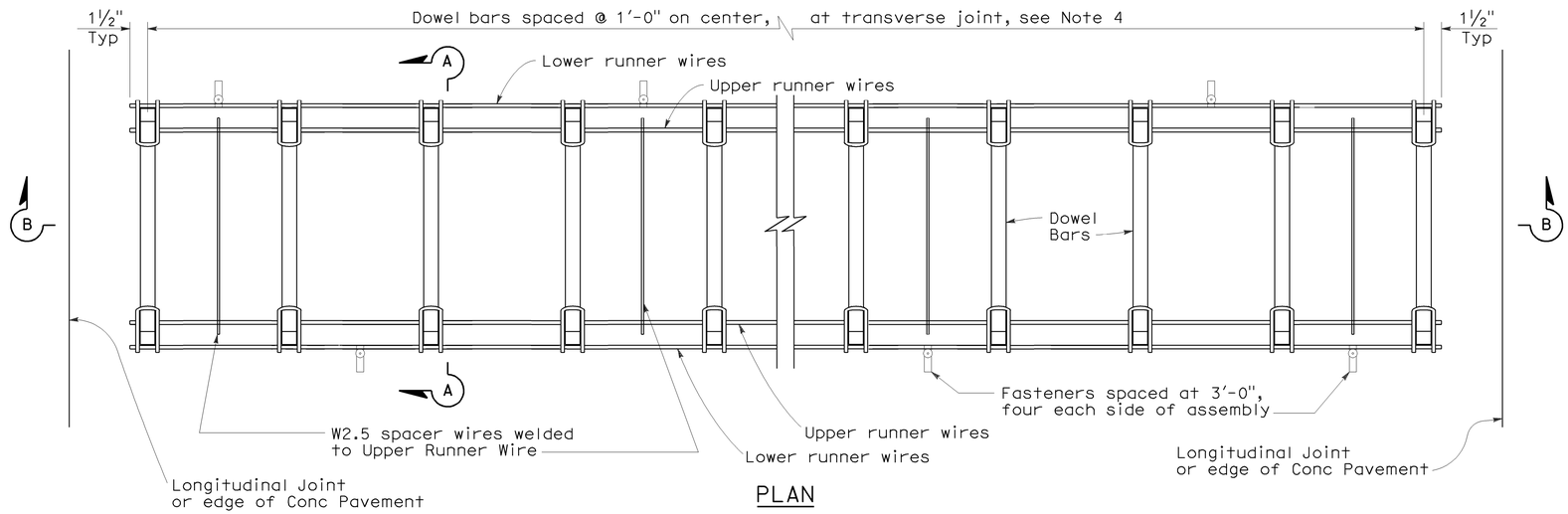

PLAN

DOWEL BAR BASKET (TRANSVERSE JOINT)

See Note 1

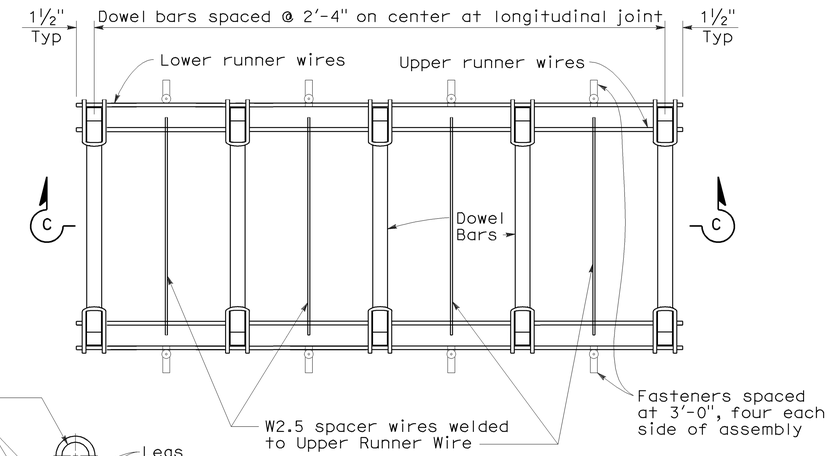

PLAN

DOWEL BAR BASKET (LONGITUDINAL JOINT)

See Note 1

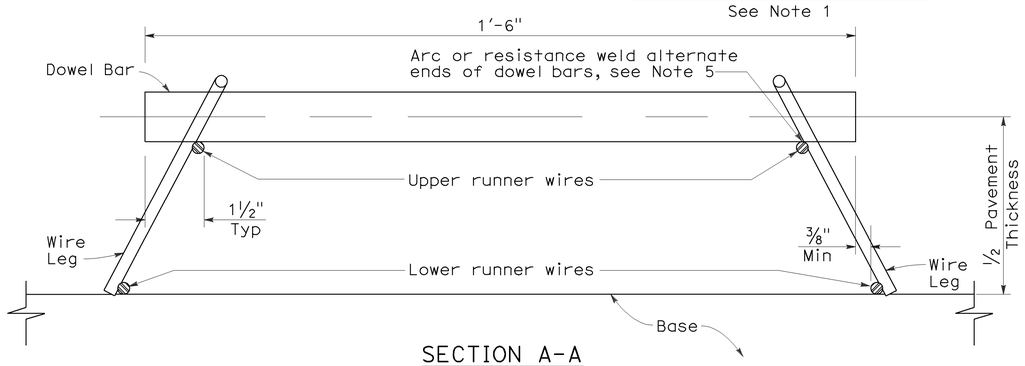

SECTION A-A

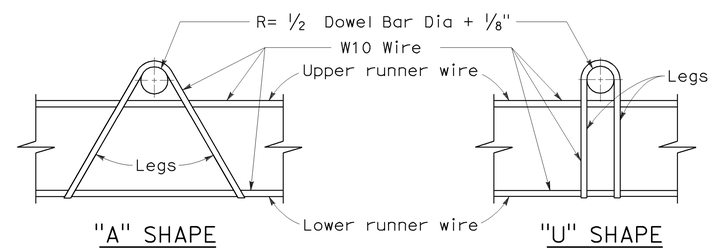

ASSEMBLY FRAME DETAILS

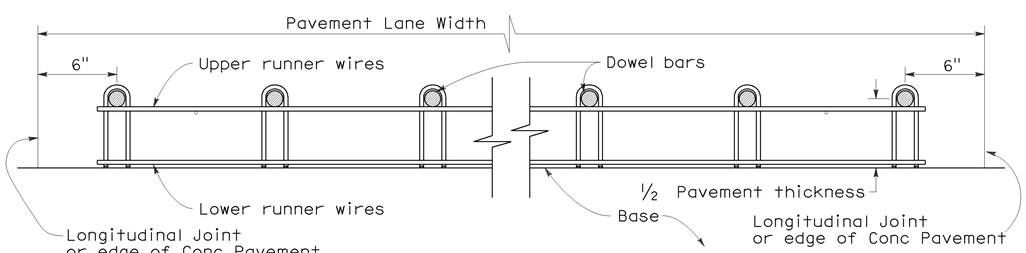

SECTION B-B

See Note 1

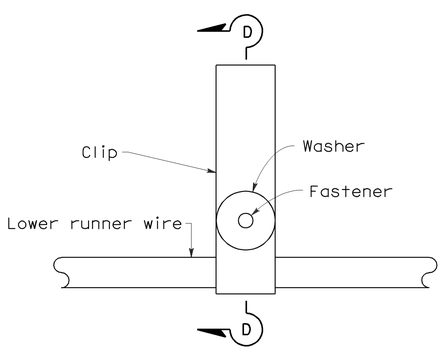

PLAN

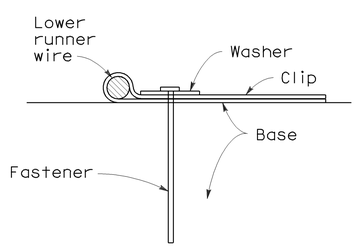

SECTION D-D

FASTENER DETAIL

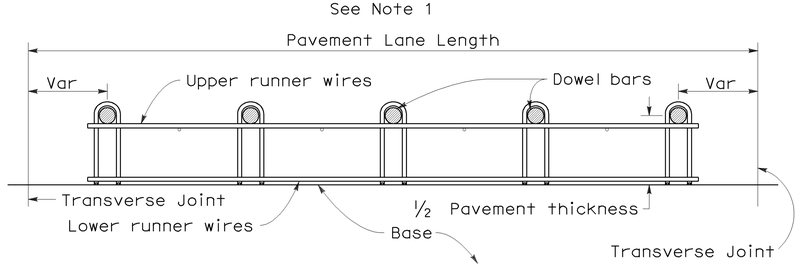

SECTION C-C

See Notes 1 and 4

NOTES:

1. "U" frame shape assembly shown. "U" frame shape or "A" frame shape are acceptable.
2. Wire sizes shown are minimum required.
3. All wire intersections are to be resistance welded.
4. Use tie bar spacing for longitudinal dowel bar locations. See Revised Std Plans RSPs P1, P2, and P3 for tie bar requirements.
5. Weld may be at top or bottom of dowel bar.

STATE OF CALIFORNIA
DEPARTMENT OF TRANSPORTATION

CONCRETE PAVEMENT-DOWEL BAR BASKET DETAILS

NO SCALE

RSP P12 DATED MAY 15, 2009 SUPERSEDES RSP P12 DATED NOVEMBER 17, 2006 AND STANDARD PLAN P12 DATED MAY 1, 2006 - PAGE 125 OF THE STANDARD PLANS BOOK DATED MAY 2006.

REVISED STANDARD PLAN RSP P12

2006 REVISED STANDARD PLAN RSP P12

5-8-09

DIST	COUNTY	ROUTE	POST MILES TOTAL PROJECT	SHEET NO.	TOTAL SHEETS
07	LA	101	31.1/38.2	65	74

Randell D. Hiatt
REGISTERED CIVIL ENGINEER

June 6, 2008
PLANS APPROVAL DATE

REGISTERED PROFESSIONAL ENGINEER
Randell D. Hiatt
No. C50200
Exp. 6-30-09
CIVIL
STATE OF CALIFORNIA

The State of California or its officers or agents shall not be responsible for the accuracy or completeness of electronic copies of this plan sheet.

To accompany plans dated 08-16-10

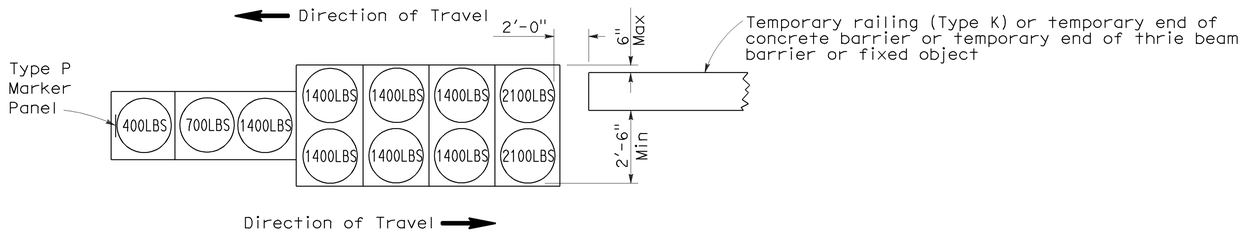

ARRAY 'TB11'

Approach speed less than 45 mph

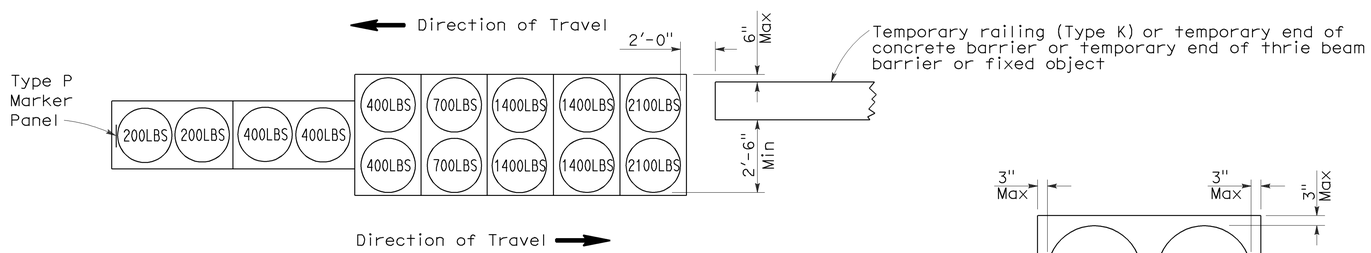

ARRAY 'TB14'

Approach speed 45 mph or more

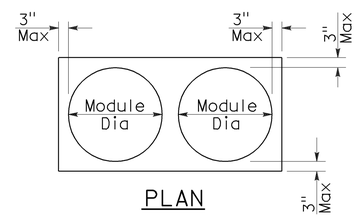

PLAN

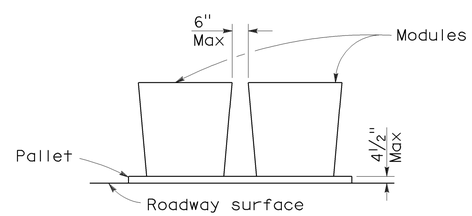

ELEVATION

CRASH CUSHION PALLET DETAIL

See Note 7

NOTES:

1. (XXX) Indicates sand filled module location and weight of sand in pounds for each module. Module spacing is based on the greater diameter of the module.
2. All sand weights are nominal.
3. Temporary crash cushion arrays shall not encroach on the traveled way.
4. Place the Type P marker panel so that the bottom of the panel rests upon the pallet.
5. Refer to Standard Plan A73B for marker details.
6. Approach speeds indicated conform to NCHRP 350 Report criteria.
7. Use of pallets is optional.

STATE OF CALIFORNIA
DEPARTMENT OF TRANSPORTATION

TEMPORARY CRASH CUSHION, SAND FILLED (BIDIRECTIONAL)

NO SCALE

RSP T1B DATED JUNE 6, 2008 SUPERSEDES STANDARD PLAN T1B
DATED MAY 1, 2006 - PAGE 212 OF THE STANDARD PLANS BOOK DATED MAY 2006.

REVISED STANDARD PLAN RSP T1B

2006 REVISED STANDARD PLAN RSP T1B

5-15-08

DIST	COUNTY	ROUTE	POST MILES TOTAL PROJECT	SHEET NO.	TOTAL SHEETS
07	LA	101	31.1/38.2	66	74

Randell D. Hiatt
REGISTERED CIVIL ENGINEER

June 6, 2008
PLANS APPROVAL DATE

REGISTERED PROFESSIONAL ENGINEER
Randell D. Hiatt
No. C50200
Exp. 6-30-09
CIVIL
STATE OF CALIFORNIA

The State of California or its officers or agents shall not be responsible for the accuracy or completeness of electronic copies of this plan sheet.

To accompany plans dated 08-16-10

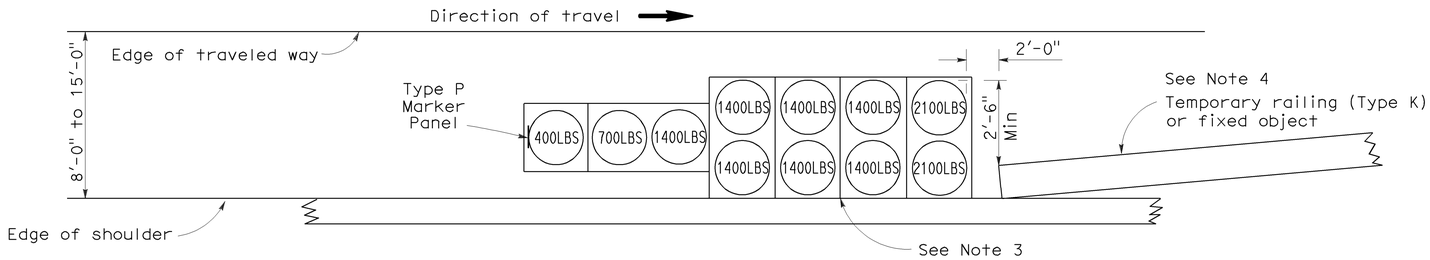

ARRAY 'TS11'

Approach speed less than 45 mph
See Note 9

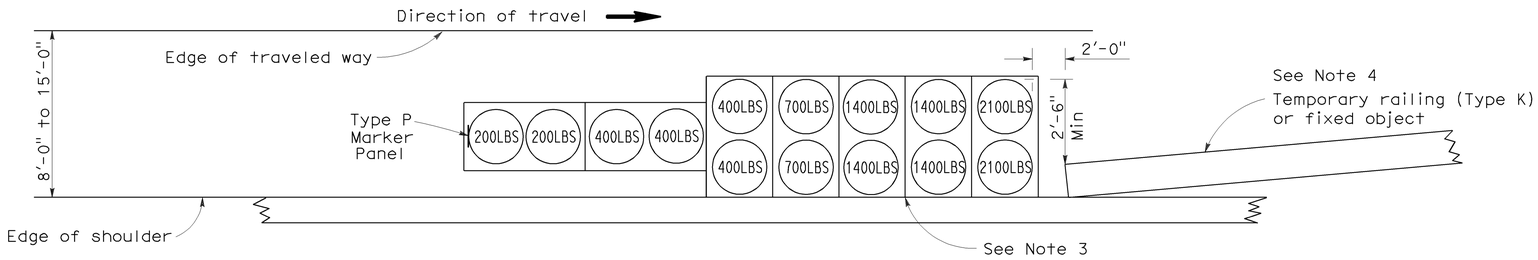

ARRAY 'TS14'

Approach speed 45 mph or more
See Note 9

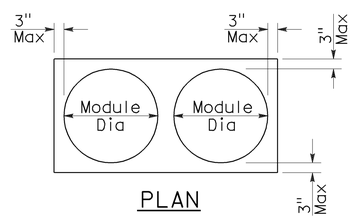

PLAN

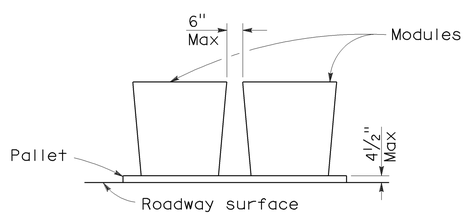

ELEVATION

CRASH CUSHION PALLET DETAIL

See Note 11

NOTES:

1. (XXX) Indicates sand filled module location and weight of sand in pounds for each module. Module spacing is based on the greater diameter of the module.
2. All sand weights are nominal.
3. The temporary crash cushion arrays shown on this plan shall be used only in locations where there will be traffic on one side of the temporary crash cushion array.
4. If the fixed object or approach end of the temporary railing is less than 15'-0" from the edge of traveled way, a temporary crash cushion is required in a construction or work zone.
5. Temporary crash cushion arrays shall not encroach on the traveled way.
6. Arrays for median shoulders shall conform to details shown on this plan for outside shoulders.
7. Place the Type P marker panel so that the bottom of the panel rests upon the pallet and faces traffic.
8. Refer to Standard Plan A73B for marker details.
9. For shoulder widths less than 8'-0", appropriate approved crash cushion protection, other than sand filled modules, shall be provided at fixed objects and at approach ends of temporary railing. The specific type of crash cushion shall be as shown on the project plans or as specified in the Special Provisions, or if not shown on the project plans or specified in the Special Provisions, shall be as approved by the Engineer.
10. Approach speeds indicated conform to NCHRP 350 Report criteria.
11. Use of pallets is optional.

STATE OF CALIFORNIA
DEPARTMENT OF TRANSPORTATION

TEMPORARY CRASH CUSHION, SAND FILLED (SHOULDER INSTALLATIONS)

NO SCALE

RSP T2 DATED JUNE 6, 2008 SUPERSEDES STANDARD PLAN T2
DATED MAY 1, 2006 - PAGE 213 OF THE STANDARD PLANS BOOK DATED MAY 2006.

REVISED STANDARD PLAN RSP T2

2006 REVISED STANDARD PLAN RSP T2

5-15-08

DIST	COUNTY	ROUTE	POST MILES TOTAL PROJECT	SHEET NO.	TOTAL SHEETS
07	LA	101	31.1/38.2	67	74

LICENSED LANDSCAPE ARCHITECT

August 15, 2008
PLANS Approval DATE

The State of California or its officers or agents shall not be responsible for the accuracy or completeness of electronic copies of this plan sheet.

LICENSED LANDSCAPE ARCHITECT Robert B. Schott 3635 Signature 11-04-08 Renewal Date 08-11-08 Date STATE OF CALIFORNIA

To accompany plans dated 08-16-10

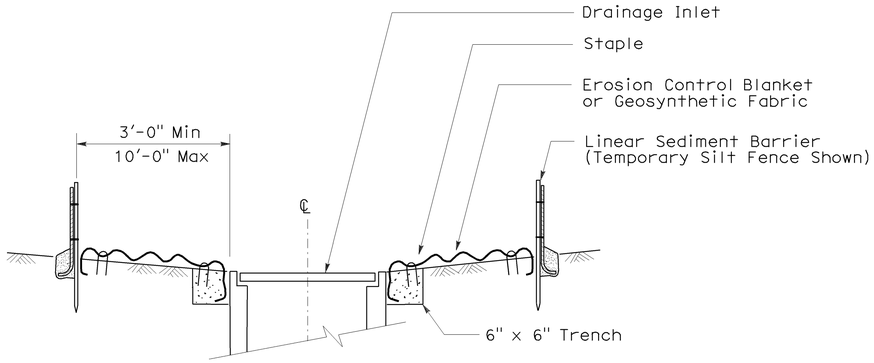

SECTION A-A

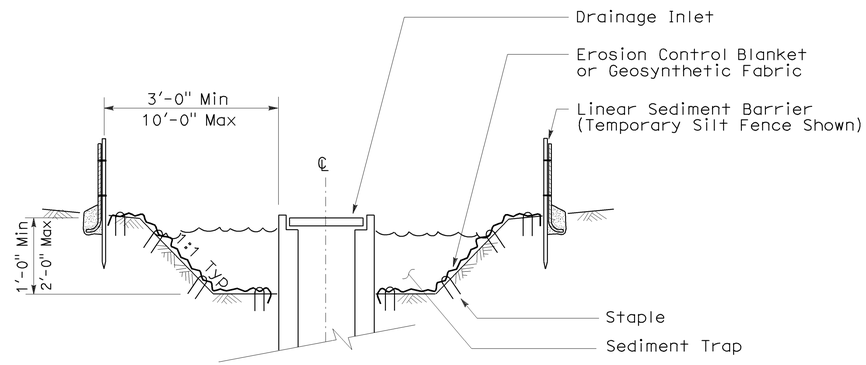

SECTION B-B

NOTES:

1. See Standard Plan T51 for Temporary Silt Fence.
2. Dimensions may vary to fit field conditions.

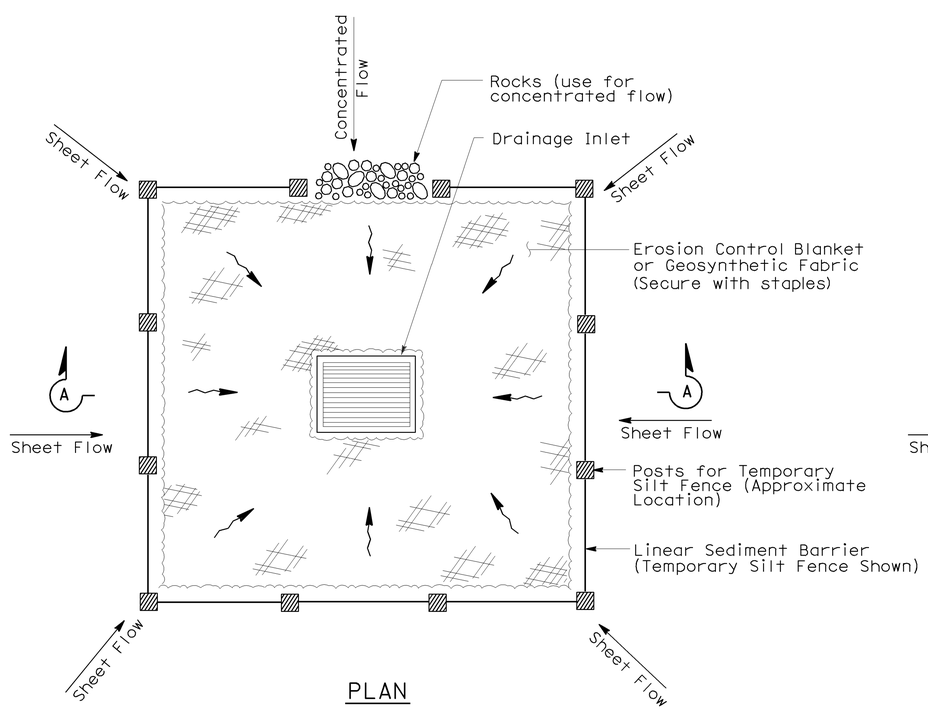

PLAN

TEMPORARY DRAINAGE INLET PROTECTION (TYPE 1)

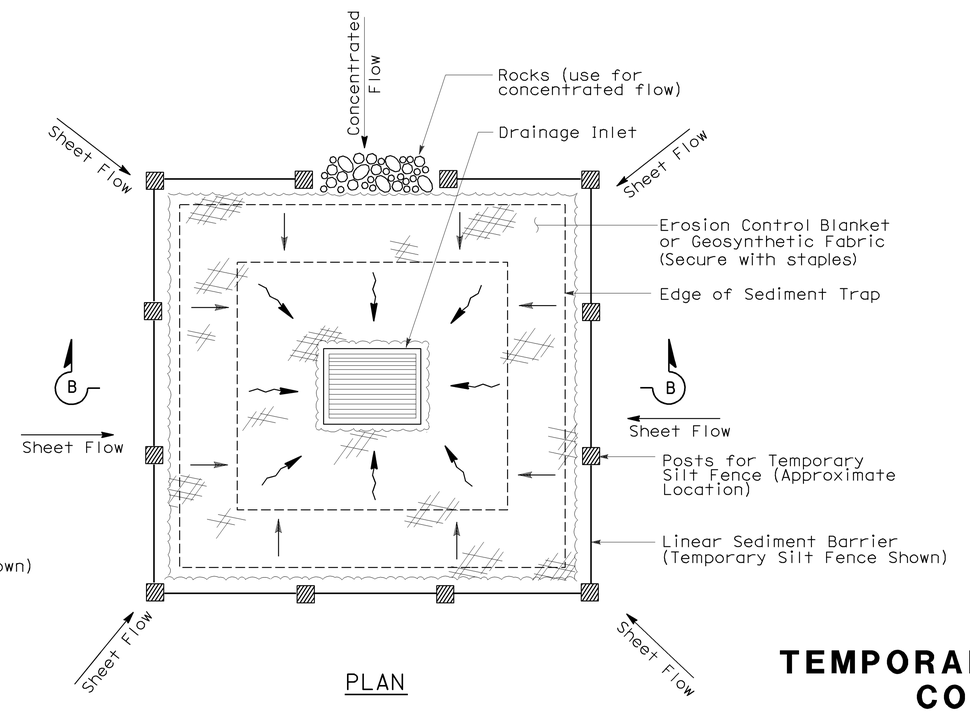

PLAN

TEMPORARY DRAINAGE INLET PROTECTION (TYPE 2) (EXCAVATED SEDIMENT TRAP)

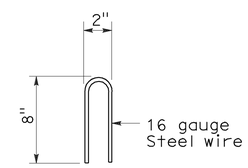

STAPLE DETAIL

STATE OF CALIFORNIA
DEPARTMENT OF TRANSPORTATION

TEMPORARY WATER POLLUTION CONTROL DETAILS (TEMPORARY DRAINAGE INLET PROTECTION)

NO SCALE

Nsp t61 dated august 15, 2008 supplements the standard plans book dated may 2006.

NEW STANDARD PLAN NSP T61

2006 NEW STANDARD PLAN NSP T61

7-11-08

DIST	COUNTY	ROUTE	POST MILES TOTAL PROJECT	SHEET NO.	TOTAL SHEETS
07	LA	101	31.1/38.2	68	74

LICENSED LANDSCAPE ARCHITECT

August 15, 2008
PLANS APPROVAL DATE

The State of California or its officers or agents shall not be responsible for the accuracy or completeness of electronic copies of this plan sheet.

LICENSED LANDSCAPE ARCHITECT Robert B. Schott 3635 Signature 11-04-08 Renewal Date 08-11-08 Date STATE OF CALIFORNIA

To accompany plans dated 08-16-10

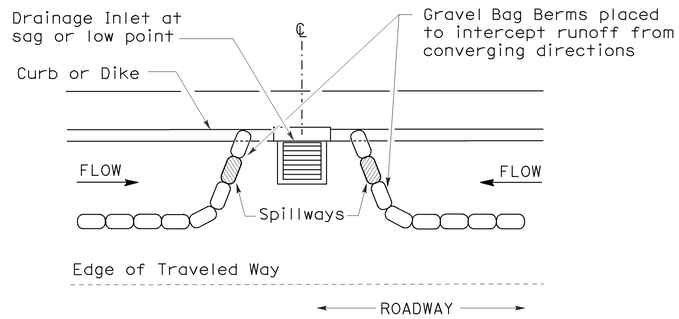

PLAN

CONFIGURATION FOR SAG POINT INLET (GRAVEL BAG BERM)

GRAVEL BAG BERM (TYPE 3A) SPACING TABLE

SLOPE OF ROADWAY (PERCENT)	1 to 3.9	4 to 5.9	6 to 7.9	8 to 10	10+
INTERVAL BETWEEN BERM	100′	75′	50′	25′	12′

For slope of less than 1%, install barriers only if erosion/sediment is prevalent

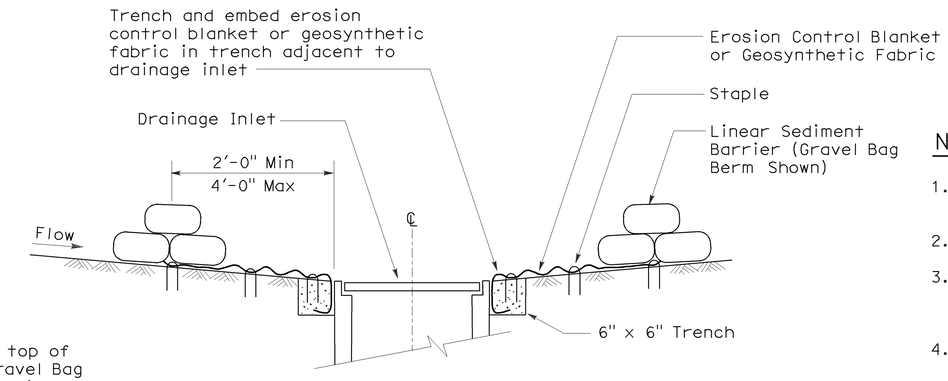

SECTION A-A

NOTES:

1. Place safety cones adjacent to drainage inlet protection.
2. Dimensions may vary to fit field conditions.
3. Install a minimum of 3 gravel bag berms upstream of each drainage inlet to be protected.
4. Position erosion control blanket or geosynthetic fabric at edge of concrete apron and secure in trench.
5. Erosion control blanket or geosynthetic fabric is not required if the area adjacent to the drainage inlet is vegetated or paved.

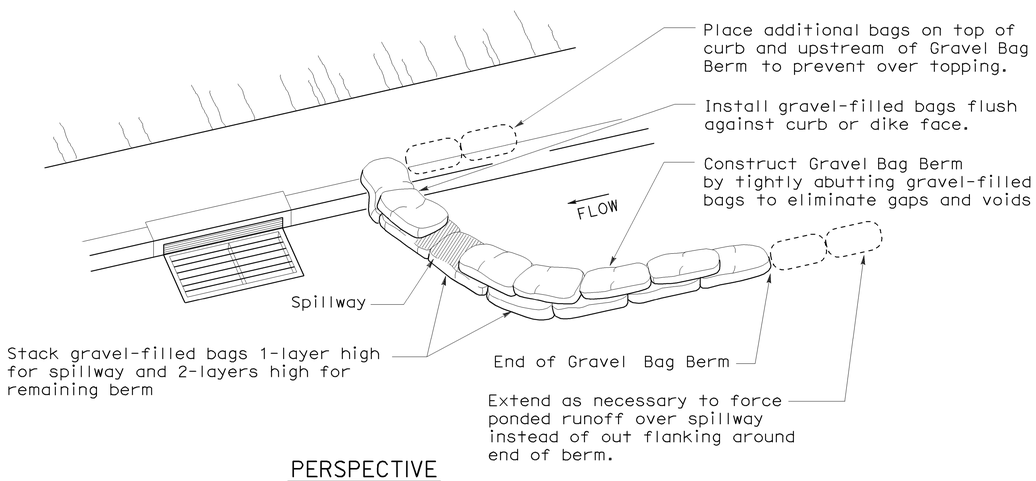

PERSPECTIVE

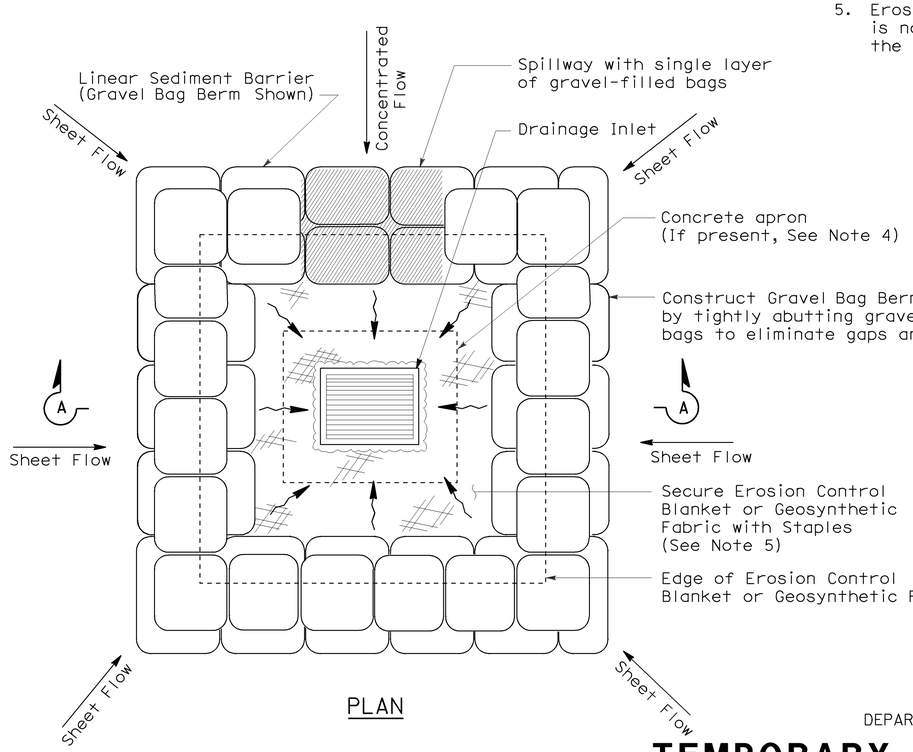

PLAN

TEMPORARY DRAINAGE INLET PROTECTION (TYPE 3B)

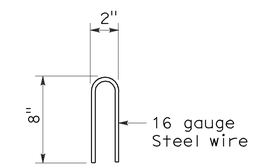

STAPLE DETAIL

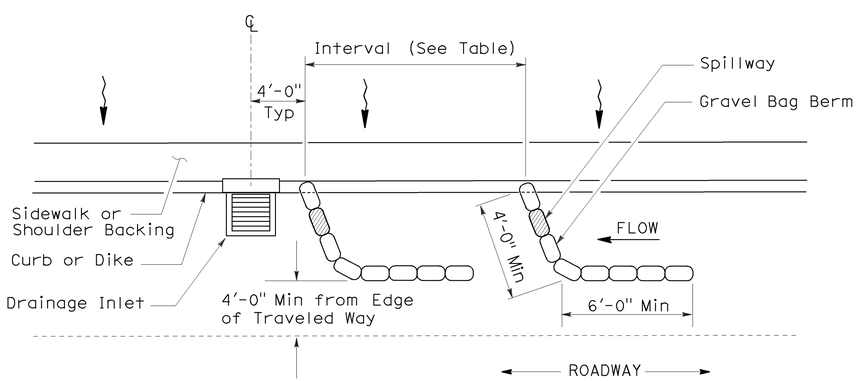

PLAN

TEMPORARY DRAINAGE INLET PROTECTION (TYPE 3A) (GRAVEL BAG BERM)

STATE OF CALIFORNIA
DEPARTMENT OF TRANSPORTATION

TEMPORARY WATER POLLUTION CONTROL DETAILS (TEMPORARY DRAINAGE INLET PROTECTION)

NO SCALE

NSP T62 DATED AUGUST 15, 2008 SUPPLEMENTS THE STANDARD PLANS BOOK DATED MAY 2006.

NEW STANDARD PLAN NSP T62

2006 NEW STANDARD PLAN NSP T62

7-11-08

DIST	COUNTY	ROUTE	POST MILES TOTAL PROJECT	SHEET NO.	TOTAL SHEETS
07	LA	101	31.1/38.2	69	74

Robert B. Schott
LICENSED LANDSCAPE ARCHITECT

August 15, 2008
PLANS APPROVAL DATE

LICENSED LANDSCAPE ARCHITECT Robert B. Schott 3635 Signature 11-04-08 Renewal Date 08-11-08 Date STATE OF CALIFORNIA

The State of California or its officers or agents shall not be responsible for the accuracy or completeness of electronic copies of this plan sheet.

To accompany plans dated 08-16-10

FLEXIBLE SEDIMENT BARRIER SPACING TABLE

SLOPE OF ROADWAY (PERCENT)	0 to 0.9	1 to 1.9	2 to 2.9	3 to 4	5+
INTERVAL BETWEEN BARRIERS	50′	35′	30′	25′	20′
ANGLE FROM FACE OF CURB	70°	70°	70°	45°	45°
SUGGESTED BARRIER LENGTH	6′	6′	6′	6′	6′

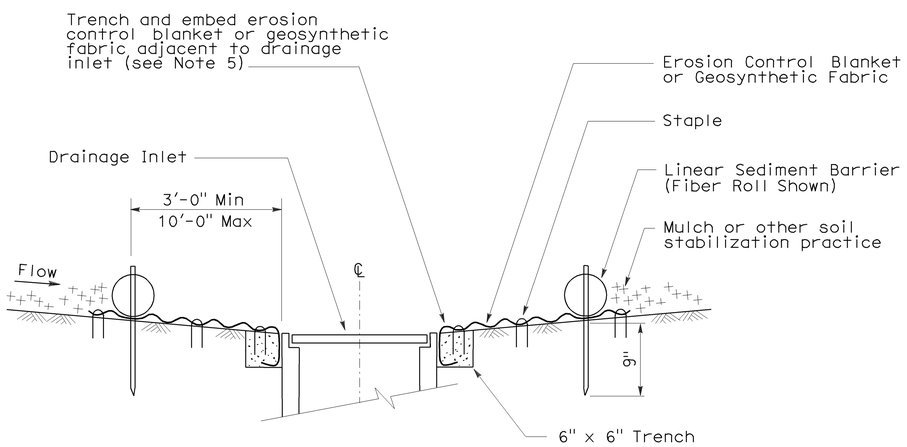

SECTION A-A

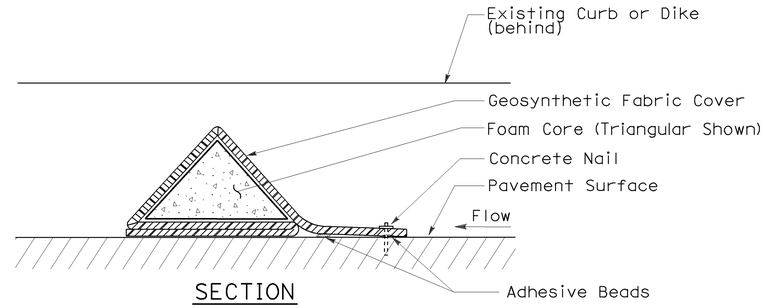

SECTION

FLEXIBLE SEDIMENT BARRIER DETAIL (FOAM BARRIER SHOWN)

NOTES:

1. See Standard Plan T51 for Temporary Silt Fence.
2. Dimensions may vary to fit field conditions.
3. Install a minimum of 3 flexible sediment barriers upstream of each drainage inlet to be protected.
4. Position erosion control blanket or geosynthetic fabric at edge of concrete apron and secure in trench.
5. Erosion control blanket or geosynthetic fabric is not required if the area adjacent to the drainage inlet is vegetated.

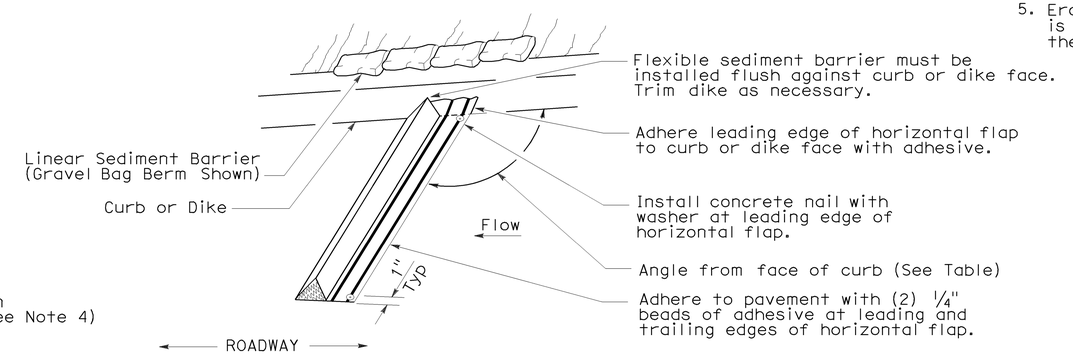

PERSPECTIVE

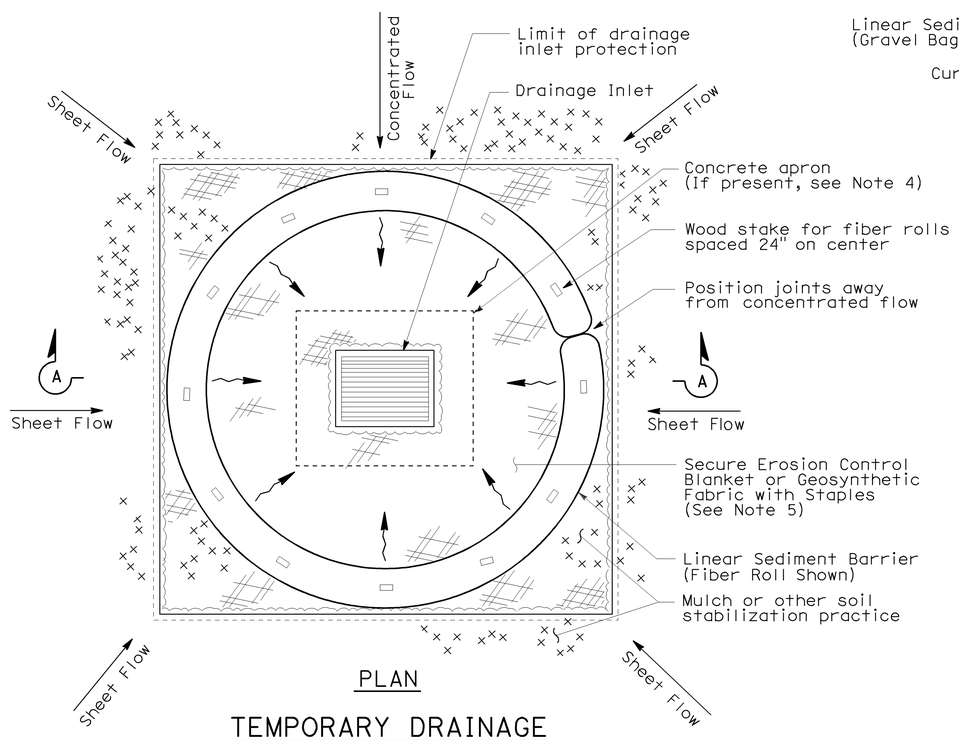

PLAN

TEMPORARY DRAINAGE INLET PROTECTION (TYPE 4A)

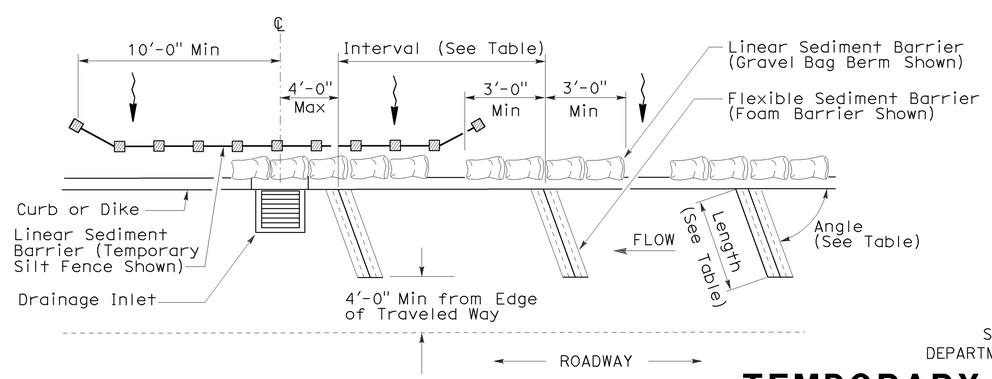

PLAN

TEMPORARY DRAINAGE INLET PROTECTION (TYPE 4B) FLEXIBLE SEDIMENT BARRIER

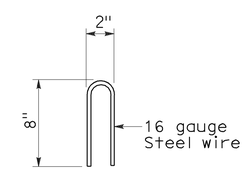

STAPLE DETAIL

STATE OF CALIFORNIA
DEPARTMENT OF TRANSPORTATION

TEMPORARY WATER POLLUTION CONTROL DETAILS (TEMPORARY DRAINAGE INLET PROTECTION)

NO SCALE

NSP T63 DATED AUGUST 15, 2008 SUPPLEMENTS THE STANDARD PLANS BOOK DATED MAY 2006.

NEW STANDARD PLAN NSP T63

2006 NEW STANDARD PLAN NSP T63

7-11-08

DIST	COUNTY	ROUTE	POST MILES TOTAL PROJECT	SHEET NO.	TOTAL SHEETS
07	LA	101	31.1/38.2	70	74

LICENSED LANDSCAPE ARCHITECT

August 15, 2008
PLANS APPROVAL DATE

The State of California or its officers or agents shall not be responsible for the accuracy or completeness of electronic copies of this plan sheet.

LICENSED LANDSCAPE ARCHITECT — Robert B. Schott — 3635 — Signature — 11-04-08 Renewal Date — 08-11-08 Date — STATE OF CALIFORNIA

To accompany plans dated 08-16-10

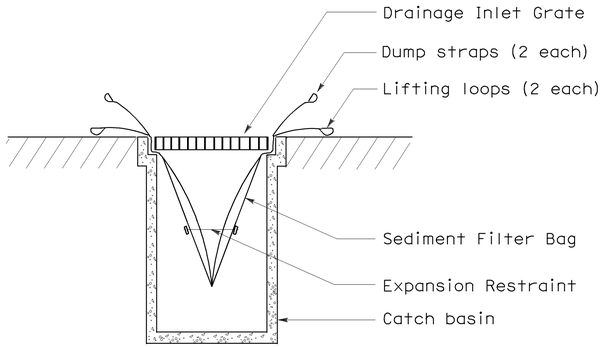

SECTION B-B

SEDIMENT FILTER BAG DETAIL

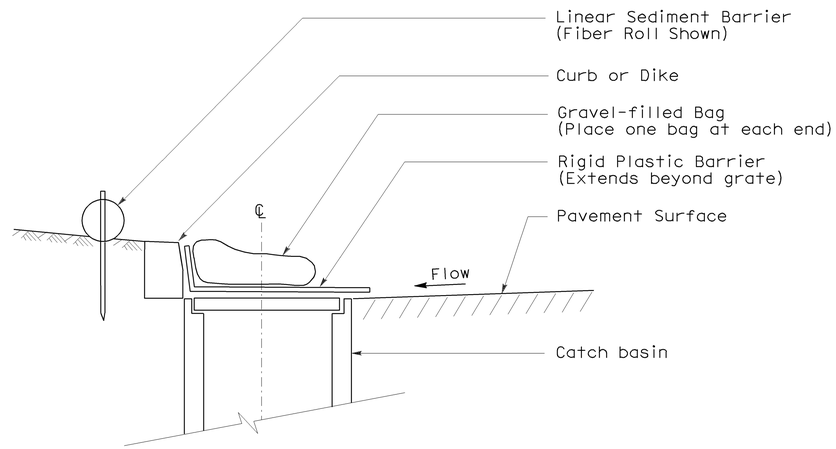

SECTION

TEMPORARY DRAINAGE INLET PROTECTION (TYPE 6A) (CATCH BASIN WITH GRATE)

NOTES:

1. See Standard Plan T51 for Temporary Silt Fence.
2. Dimensions may vary to fit field conditions.

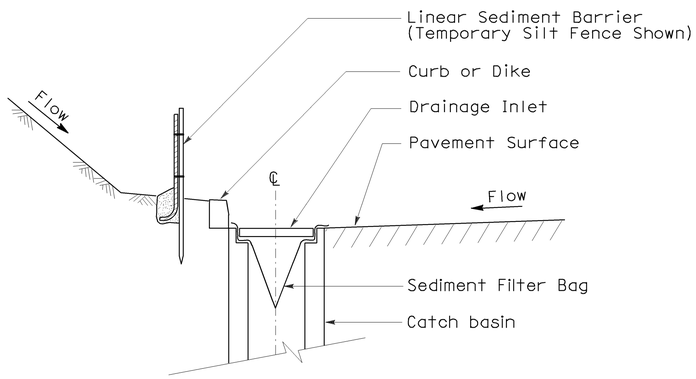

SECTION A-A

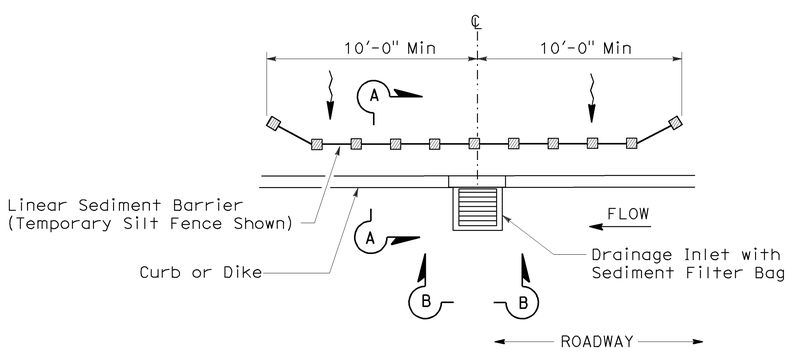

PLAN

TEMPORARY DRAINAGE INLET PROTECTION (TYPE 5) (SEDIMENT FILTER BAG)

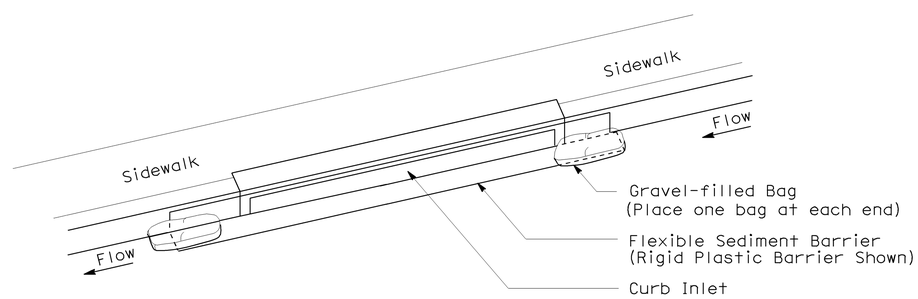

PERSPECTIVE

TEMPORARY DRAINAGE INLET PROTECTION (TYPE 6B) (CURB INLET WITHOUT GRATE)

STATE OF CALIFORNIA
DEPARTMENT OF TRANSPORTATION

TEMPORARY WATER POLLUTION CONTROL DETAILS (TEMPORARY DRAINAGE INLET PROTECTION)

NO SCALE

NSP T64 DATED AUGUST 15, 2008 SUPPLEMENTS
THE STANDARD PLANS BOOK DATED MAY 2006.

NEW STANDARD PLAN NSP T64

2006 NEW STANDARD PLAN NSP T64

7-11-08

DIST	COUNTY	ROUTE	POST MILES TOTAL PROJECT	SHEET No	TOTAL SHEETS
07	LA	101	31.1/38.2	71	74

REGISTERED CIVIL ENGINEER 5-13-10 DATE

08-16-10
PLANS APPROVAL DATE

REGISTERED PROFESSIONAL ENGINEER K.R. ANDURLEKAR No. 64053 Exp. 09/30/2010 CIVIL STATE OF CALIFORNIA

The State of California or its officers or agents shall not be responsible for the accuracy or completeness of electronic copies of this plan sheet.

To get to the Caltrans web site, go to: http://www.dot.ca.gov

LEGEND

Remove & Replace existing Approach Slab

Remove & Replace existing Joint Seal

NOTES:

1. Existing paving notch extension to remain undamaged.
2. All existing Paving Notches found to be less than 6 in. wide shall be retrofitted. For details see 'Section A-A' & 'Detail C' on "STRUCTURE APPROACH TYPE R(30D)" sheet.
3. Unless otherwise shown, abutments with a skew at the paving notch of 30°00' or less shall have a parallel (non-stepped) approach slab. Skews greater than 30°00' shall use the "Stepped" style approach slab. The longitudinal joints in the steps shall be formed coincident with the actual existing Lane Lines as the Contractor finds at the bridge site. Lane Lines indicated on this plan sheet are approximate and may not accurately depict the actual lanestriping at the site.
4. Locations of utilities shown are approximate. Contractor to verify exact locations of utilities and shall remain undamaged during construction.

(5) See 'Section C-C' on "STRUCTURE APPROACH TYPE R (30D)" sheet

(6) Exist barrier railing Type 9

(7) Exist concrete barrier Type 50 A

(8) Exist double metal beam barrier

01 - LIBERTY CANYON RD UC BR. NO. 53-1731

QUANTITIES

AGGREGATE BASE (APPROACH SLAB)	30	CY
STRUCTURAL CONCRETE, APPROACH SLAB (TYPE R)	302	CY
JOINT SEAL (MR 1/2")	136	LF
JOINT SEAL (MR 1 1/2")	136	LF

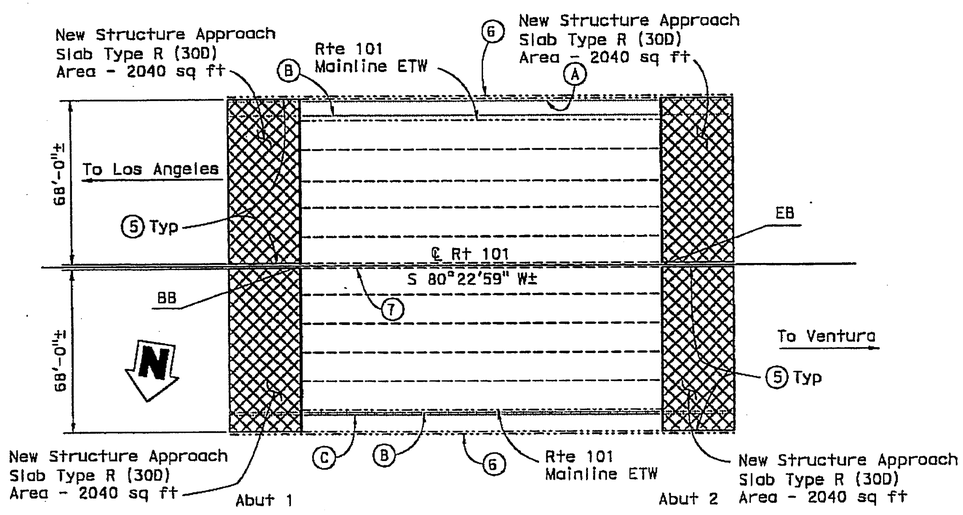

STRUCTURE TYPE - CIP/PS BOX GIRDER
ABUTMENT TYPE - DIAPHRAGM

(A) - 2"ø communication conduits

(B) - 4"ø supply line

(C) - 2"ø sprinkler conduit

PLAN - LIBERTY CANYON ROAD UC
BR NO. 53-1731 PM 32.78
1"=30'-0"

02 - CHESEBRO CREEK BRIDGE BR. NO. 53-0755

QUANTITIES

AGGREGATE BASE (APPROACH SLAB)	43	CY
STRUCTURAL CONCRETE, APPROACH SLAB (TYPE R)	430	CY
JOINT SEAL (MR 1/2")	387	LF

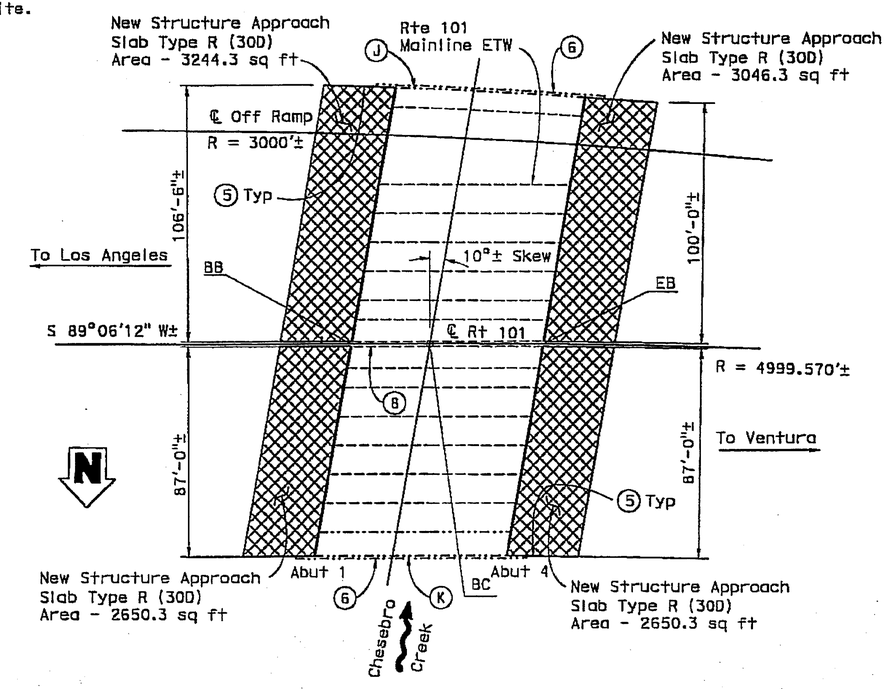

STRUCTURE TYPE - CIP RC SLAB
ABUTMENT TYPE - DIAPHRAGM

(J) - 2"ø communication conduits

(K) - 2"ø sprinkler control conduit

PLAN - CHESEBRO CREEK BRIDGE
BR NO. 53-0755 PM 33.91
1"=30'-0"

NOTE:
THE CONTRACTOR SHALL VERIFY ALL CONTROLLING FIELD DIMENSIONS BEFORE ORDERING OR FABRICATING ANY MATERIAL.

RAMIN RASHEDI, DESIGN ENGINEER	DESIGN	BY K.R.Andurlekar	CHECKED Y. Yoon	LOAD & RESISTANCE FACTOR DESIGN	LIVE LOADING: HL93 W/"LOW-BOY"; PERMIT DESIGN VEHICLE
	DETAILS	BY T.Bittermann	CHECKED Y. Yoon	LAYOUT	BY K.R.Andurlekar; CHECKED Y. Yoon
	QUANTITIES	BY K.R.Andurlekar	CHECKED A. Picazo	SPECIFICATIONS	BY R. Franti; PLANS AND SPECS COMPARED R. Franti

ORIGINAL SCALE IN INCHES FOR REDUCED PLANS 5 1 2 3

STATE OF CALIFORNIA
DEPARTMENT OF TRANSPORTATION

DIVISION OF ENGINEERING SERVICES
STRUCTURE DESIGN
DESIGN BRANCH 11

CU 07262
EA 252101

BRIDGE NO. Various
POST MILE Varies

RTE 101 APPROACH SLAB REHAB
GENERAL PLAN NO. 1/2

DISREGARD PRINTS BEARING EARLIER REVISION DATES

REVISION DATES: 3-30-10 4-30-10 5-20-10 5-12-10

SHEET 1 OF 4

FILE => 53-1731-d-gp01.dgn

STRUCTURES DESIGN GENERAL PLAN SHEET (ENG) 1941 (REV.07-24-06)

USERNAME => tbittermann DATE PLOTTED => 24-MAY-2010 TIME PLOTTED => 13:28

DIST	COUNTY	ROUTE	POST MILES TOTAL PROJECT	SHEET No	TOTAL SHEETS
07	LA	101	31.1/38.2	72	74

REGISTERED CIVIL ENGINEER DATE 5-13-10

08-16-10
PLANS APPROVAL DATE

REGISTERED PROFESSIONAL ENGINEER K.R. ANDURLEKAR No. 54053 Exp. 09/30/2010 CIVIL STATE OF CALIFORNIA

The State of California or its officers or agents shall not be responsible for the accuracy or completeness of electronic copies of this plan sheet.

To get to the Caltrans web site, go to: http://www.dot.ca.gov

GENERAL NOTES
LOAD AND RESISTANCE FACTOR DESIGN

DESIGN: "AASHTO LRFD BRIDGE DESIGN SPECIFICATIONS"
4th Edition and the Caltrans Amendment, preface dated December 2008

STANDARD PLANS
Dated May 2006

A10A	ACRONYMS AND ABBREVIATIONS (SHEET 1 OF 2)
A10B	ACRONYMS AND ABBREVIATIONS (SHEET 1 OF 2)
B6-21	JOINT SEALS (MAXIMUM MOVEMENT RATING = 2")

Standard Plan Sheet No.
Detail No.

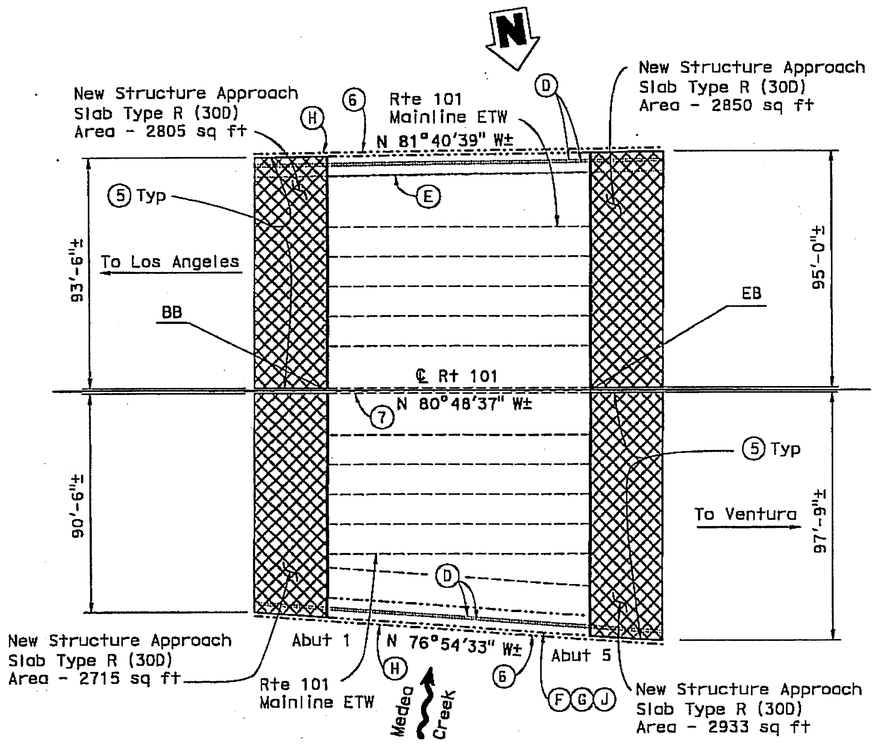

STRUCTURE TYPE - CIP RC SLAB
ABUTMENT TYPE - DIAPHRAGM

(D) - 4"Ø communication conduits
(E) - 2"Ø communication conduit
(F) - 2"Ø sprinkler control conduit
(G) - 3"Ø conduit
(H) - water supply line NPS 3
(J) - 2" Ø conduit for Hwy Lighting

PLAN - MEDEA CREEK BRIDGE
BR NO. 53-0002 R/L PM 34.82
1"=30'-0"

03 - MEDEA CREEK BRIDGE BR. NO. 53-0002 L/R

QUANTITIES

AGGREGATE BASE (APPROACH SLAB)	42	CY
STRUCTURAL CONCRETE, APPROACH SLAB (TYPE R)	418	CY
JOINT SEAL (MR 1/2")	377	LF

INDEX TO PLANS

Sheet No.	Title
1	GENERAL PLAN NO. 1
2	GENERAL PLAN NO. 2
3	JOINT SEAL DETAILS
4	STRUCTURE APPROACH TYPE R(30D)

LEGEND

Remove & Replace existing Approach Slab
Remove & Replace existing Joint Seal

NOTES:

1. Existing paving notch extension to remain undamaged
2. All existing Paving Notches found to be less than 6 in. wide shall be retrofitted. For details see 'Section A-A' & 'Detail C' on "STRUCTURE APPROACH TYPE R(30D)" sheet.
3. Unless otherwise shown, abutments with a skew at the paving notch of 30°00' or less shall have a parallel (non-stepped) approach slab. Skews greater than 30°00' shall use the "Stepped" style approach slab. The longitudinal joints in the steps shall be formed coincident with the actual existing Lane Lines as the Contractor finds at the bridge site. Lane Lines indicated on this plan sheet are approximate and may not accurately depict the actual lane striping at the site.
4. Locations of utilities shown are approximate. Contractor to verify exact locations of utilities and shall remain undamaged during construction.

(5) See 'Section C-C' on "STRUCTURE APPROACH TYPE R (30D)" sheet
(6) Exist concrete barrier Type 732
(7) Exist concrete barrier Type 50

NOTE:
THE CONTRACTOR SHALL VERIFY ALL CONTROLLING FIELD DIMENSIONS BEFORE ORDERING OR FABRICATING ANY MATERIAL.

RAMIN RASHEDI
DESIGN ENGINEER

	BY	CHECKED
DESIGN	K.R.Andurlekar	Y. Yoon
DETAILS	T.Bittermann	Y. Yoon
QUANTITIES	K.R.Andurlekar	A. Picazo

LOAD & RESISTANCE FACTOR DESIGN — LIVE LOADING: HL93 W/"LOW-BOY"; PERMIT DESIGN VEHICLE
LAYOUT: K.R.Andurlekar — CHECKED: Y. Yoon
SPECIFICATIONS: R. Frantl — PLANS AND SPECS COMPARED: R. Frantl

ORIGINAL SCALE IN INCHES FOR REDUCED PLANS 0 1 2 3

STATE OF CALIFORNIA
DEPARTMENT OF TRANSPORTATION

DIVISION OF ENGINEERING SERVICES
STRUCTURE DESIGN
DESIGN BRANCH 11

CU 07262
EA 252101

BRIDGE NO. Various
POST MILE Varies

RTE 101 APPROACH SLAB REHAB
GENERAL PLAN NO. 2/2

DISREGARD PRINTS BEARING EARLIER REVISION DATES — REVISION DATES 5-10-10 5-04-10 4-12-10 5-06-10 5-12-10

SHEET 2 OF 4

FILE => 53-1731-a-gp02.dgn

STRUCTURES DESIGN GENERAL PLAN SHEET (ENGLISH) (REV.07-24-06)

USERNAME => tbitterm DATE PLOTTED => 24-MAY-2010 TIME PLOTTED => 13:28

DIST	COUNTY	ROUTE	POST MILES TOTAL PROJECT	SHEET No	TOTAL SHEETS
07	LA	101	31.1/38.2	73	74

REGISTERED CIVIL ENGINEER 5-13-10 DATE

08-16-10
PLANS APPROVAL DATE

REGISTERED PROFESSIONAL ENGINEER K.R. ANDURLEKAR No. 64053 Exp. 09/30/2010 CIVIL STATE OF CALIFORNIA

The State of California or its officers or agents shall not be responsible for the accuracy or completeness of electronic copies of this plan sheet.

To get to the Caltrans web site, go to: http://www.dot.ca.gov

JOINT SEAL TABLE

Bridge Name	Bridge Number	Location	Min "MR" (in)	Approx Length (ft) ±
LIBERTY CANYON RD UC	53-1731	ABUT 1	1½"	136'-0"
		ABUT 2	½"	136'-0"
CHESEBRO CREEK BRIDGE	53-0755	ABUT 1	½"	197'-0"
		ABUT 4	½"	190'-0"
MEDEA CREEK BRIDGE	53-0002 R/L	ABUT 1	½"	184'-0"
		ABUT 5	½"	193'-0"

JOINT SEAL OPENING

'a' dimension (in)			
Temp F	MR=½"	MR=1"	MR=1½"
24	1"	2"	2⅜"
46	⅞"	1⅝"	2"
67	¾"	1⅜"	1⅝"
89	⅝"	1⅛"	1¼"
110	½"	¾"	¾"

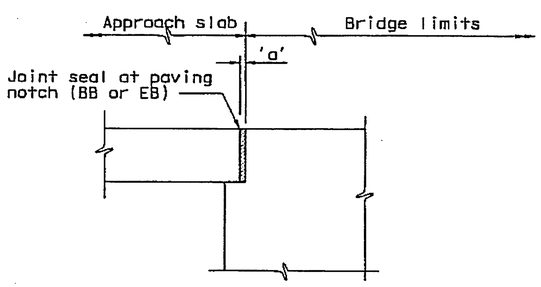

EXIST DIAPHRAGM ABUTMENT

NO SCALE

NOTES:

The following notes apply to Joint Seal Type B:

1. Seal must satisfy both minimum Movement Rating (MR) and minimum W1 requirements.
2. Minimum W1 is the calculated maximum width of the joint based on field measurements. After the joints have been cleaned, minmum W1 is to be recalculated by the Engineer.
3. W1 shall be the smaller of the values determined as follows:
   A. 0.85 times the manufacturer's designated minimum uncompressed width of seal.
   B. The width of seal on the third successive test cycle of the pressure deflection test, when compressed to an average pressure of 3 psi.
4. Bend Type B joint seal 6 in. up into curb or rail on the low side of the deck where deck joint matches sidewalk, curb or barrier rail joint.
5. For details not shown, see B6-21

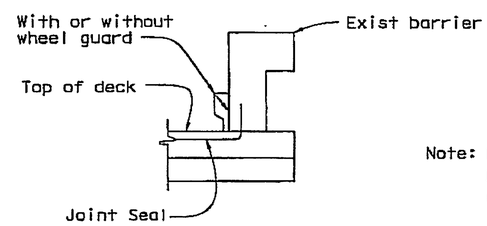

Note: Details shown for illustration purposes only. For use only where deck joint matches the sidewalk, curb or barrier rail joint.

JOINT SEAL AT LOW SIDE OF DECK

NO SCALE

NOTE:
THE CONTRACTOR SHALL VERIFY ALL CONTROLLING FIELD DIMENSIONS BEFORE ORDERING OR FABRICATING ANY MATERIAL.

	BY	CHECKED
DESIGN	K.R.Andurlekar	Y. Yoon
DETAILS	T. Bittermann	Y. Yoon
QUANTITIES	K.R.Andurlekar	A. Picazo

STATE OF CALIFORNIA
DEPARTMENT OF TRANSPORTATION

DIVISION OF ENGINEERING SERVICES
STRUCTURE DESIGN
DESIGN BRANCH 11

BRIDGE NO. Various
POST MILE Varies

RTE 101 APPROACH SLAB REHAB
JOINT SEAL DETAILS

STRUCTURES DESIGN DETAIL SHEET (ENGLISH) (REV. 10/25/05)

ORIGINAL SCALE IN INCHES FOR REDUCED PLANS 0 1 2 3

CU 07262
EA 252101

DISREGARD PRINTS BEARING EARLIER REVISION DATES → 4-1-10 5-12-10

REVISION DATES

SHEET 3 OF 4

FILE => 53-1731-b-intslats.dgn

TIME PLOTTED => 15:05
DATE PLOTTED => 13-MAY-2010

DIST.	COUNTY	ROUTE	MILE POST TOTAL PROJECT	SHEET NO.	TOTAL SHEETS
07	LA	101	31.1/38.2	74	74

REGISTERED ENGINEER - CIVIL 5-13-10

08-16-10
PLANS APPROVAL DATE

The State of California or its officers or agents shall not be responsible for the accuracy or completeness of electronic copies of this plan sheet.

REGISTERED PROFESSIONAL ENGINEER K.R. ANDURLEKAR No. 54053 Exp. 09/30/2010 CIVIL STATE OF CALIFORNIA

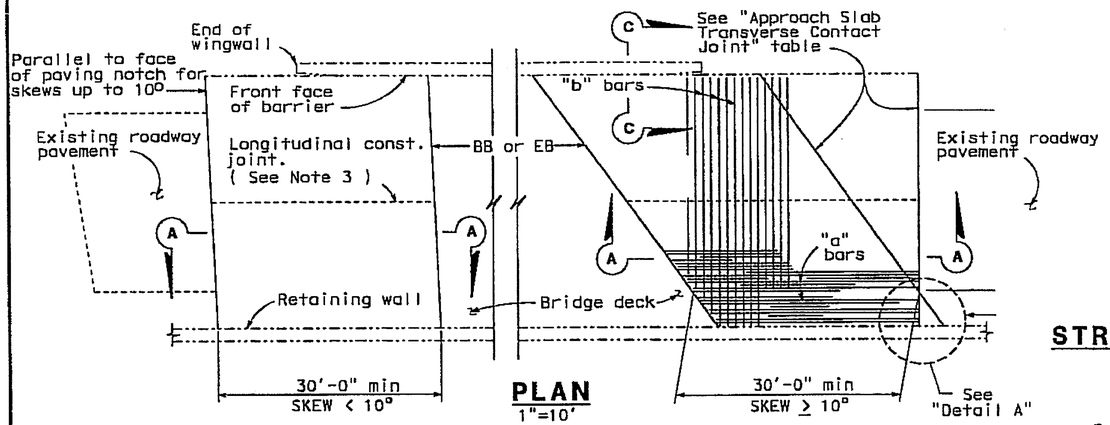

PLAN
1"=10'

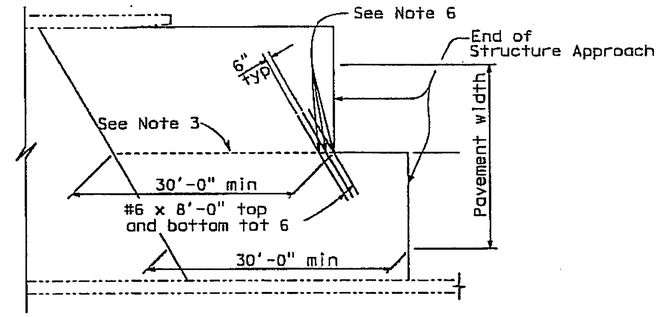

STRUCTURE APPROACH - END STAGGER DETAIL
No Scale

APPROACH SLAB TRANSVERSE CONTACT JOINT		
APPROACH SKEW	WITH AC ROADWAY PAVEMENT	WITH PCC ROADWAY PAVEMENT
< 10°	Parallel to face of paving notch	Parallel to face of paving notch
10° - 45°	Parallel to face of P N use (Detail A)	Stagger lines 24' to 36' apart
> 45°	Parallel to face of P N use (Detail A)	Stagger at each lane line

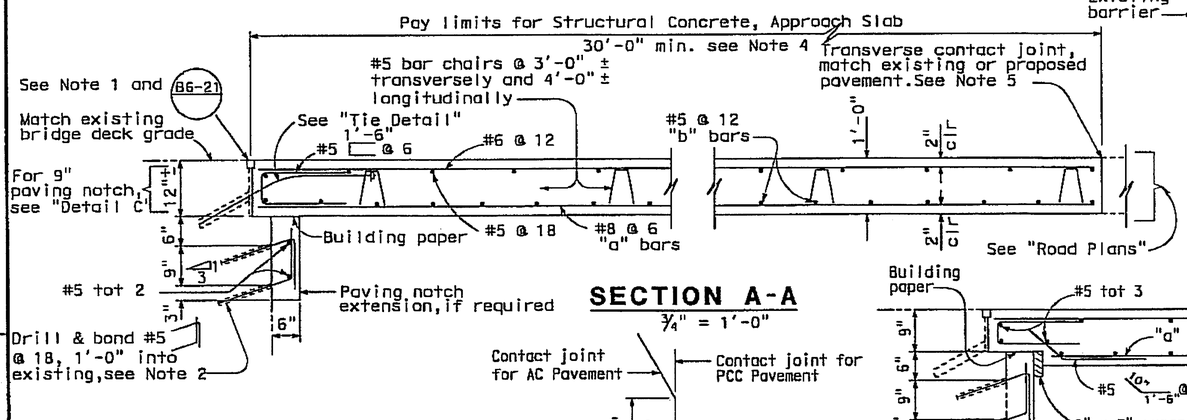

SECTION A-A
¾" = 1'-0"

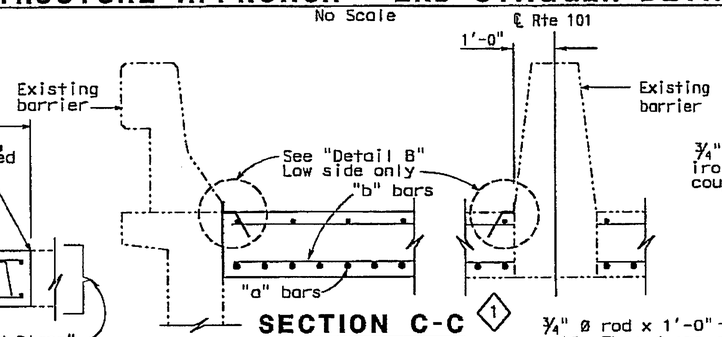

SECTION C-C
¾" = 1'-0"

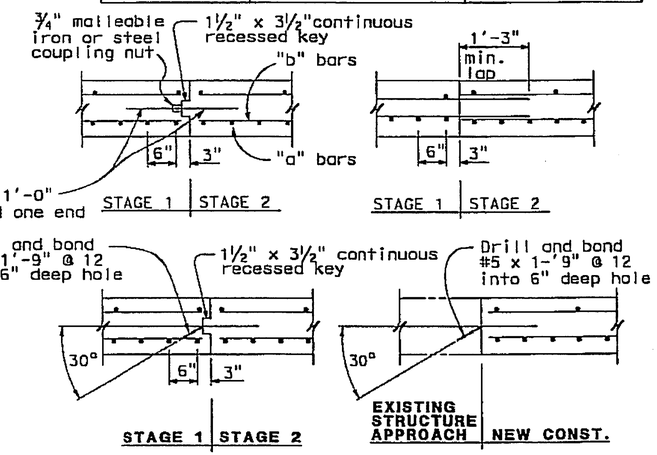

LONGITUDINAL CONSTRUCTION JOINT ALTERNATIVES
¾" = 1'-0"

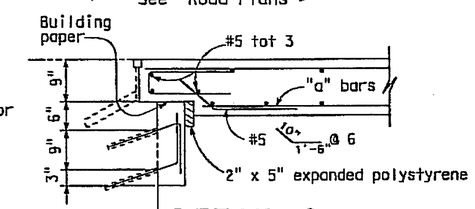

DETAIL C
¾" = 1'-0"

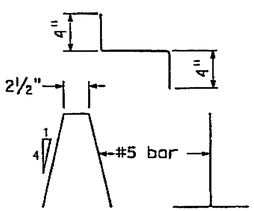

BAR CHAIR DETAIL
1½" = 1'-0"

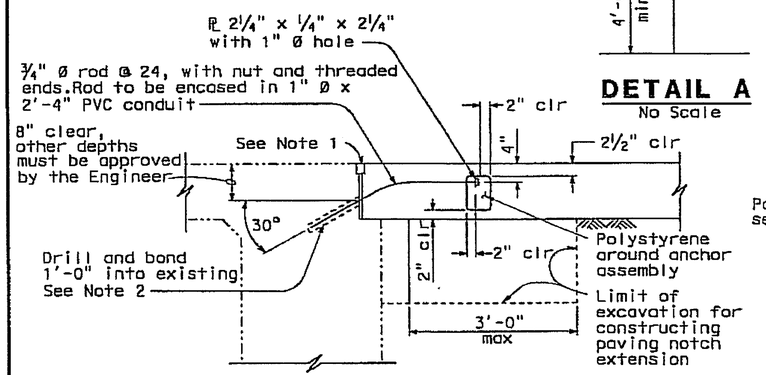

TIE DETAIL
¾" = 1'-0"

NOTE:
THE CONTRACTOR SHALL VERIFY ALL CONTROLLING FIELD DIMENSIONS BEFORE ORDERING OR FABRICATING ANY MATERIAL.

DETAIL A
No Scale

NOTE: For details not shown, see "Section A-A".

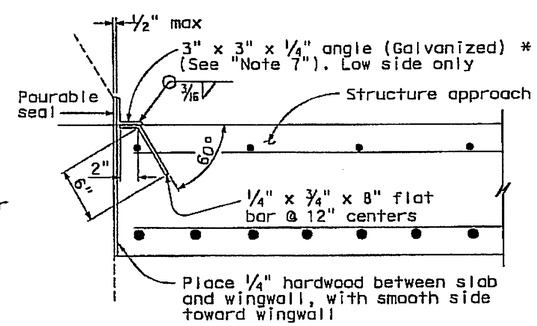

*(TO BE USED WITH TYPE 25 OR TYPE 27 OR TYPE 9 CONCRETE BARRIER) ◇1

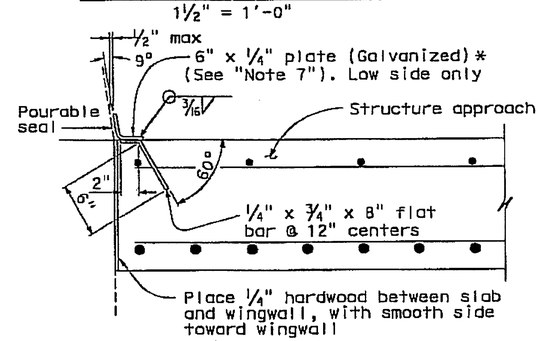

*(TO BE USED WITH TYPE 732 OR TYPE 736 OR TYPE 50 CONCRETE BARRIER) ◇1

DETAIL B
1½" = 1'-0"

NOTES:

1. For details not shown or noted, see Structure Plans. Adjust bar reinforcement to clear a sawcut for sealed joint, when required.
2. Space to avoid existing prestress anchorages and main reinforcement.
3. Longitudinal construction joints, when permitted by the Engineer, shall be located on lane lines.
4. Transverse contact joint shall be a minimum of 5'-0" from an existing or constructed weakened plane joint.
5. For transverse contact joint with new PCC paving, refer to Standard Plan P10.
6. Couplers are required for stage construction.
7. End angle or plate at beginning of barrier transition, end of wingwall or end of structure approach as applicable.

◇1 Revised detail

STANDARD DRAWING				
RELEASE DATE 3/14/05	DESIGN	BY M.TRAFFALIS	CHECKED E.THORKILDSEN	RELEASED BY
FILE NO. xs3-140e	DETAILS	BY R.YEE	CHECKED E.THORKILDSEN	
	SUBMITTED	BY M.HA	DRAWING DATE 8/92	OFFICE CHIEF

DS DSD 2147A (ENGLISH) (REV. X/XX/XX)

ORIGINAL SCALE IN INCHES FOR REDUCED PLANS 0 1 2 3

STATE OF CALIFORNIA DEPARTMENT OF TRANSPORTATION

DIVISION OF ENGINEERING SERVICES

CU 07262
EA 252101

BRIDGE NO. Various
MILE POST Varies

RTE 101 APPROACH SLAB REHAB
STRUCTURE APPROACH TYPE R(30D)

DISREGARD PRINTS BEARING EARLIER REVISION DATES
REVISION DATES (PRELIMINARY STAGE ONLY) 3-23-10 4-05-10 5-05-10 5-12-10

SHEET 4 OF 4

USERNAME => LGoldthw

53-1731-c-apr.d

DATE PLOTTED => 13-MAY-2010 TIME PLOTTED => 15:05