Dist	COUNTY	ROUTE	POST MILES TOTAL PROJECT	SHEET No.	TOTAL SHEETS
07	LA	5	R46.3/R50.0	101	456

Paul Fong 01-18-11
REGISTERED CIVIL ENGINEER DATE

4-25-11
PLANS APPROVAL DATE

REGISTERED PROFESSIONAL ENGINEER
PAUL FONG
No. C67053
Exp. 9/30/12
CIVIL
STATE OF CALIFORNIA

THE STATE OF CALIFORNIA OR ITS OFFICERS OR AGENTS SHALL NOT BE RESPONSIBLE FOR THE ACCURACY OR COMPLETENESS OF SCANNED COPIES OF THIS PLAN SHEET.

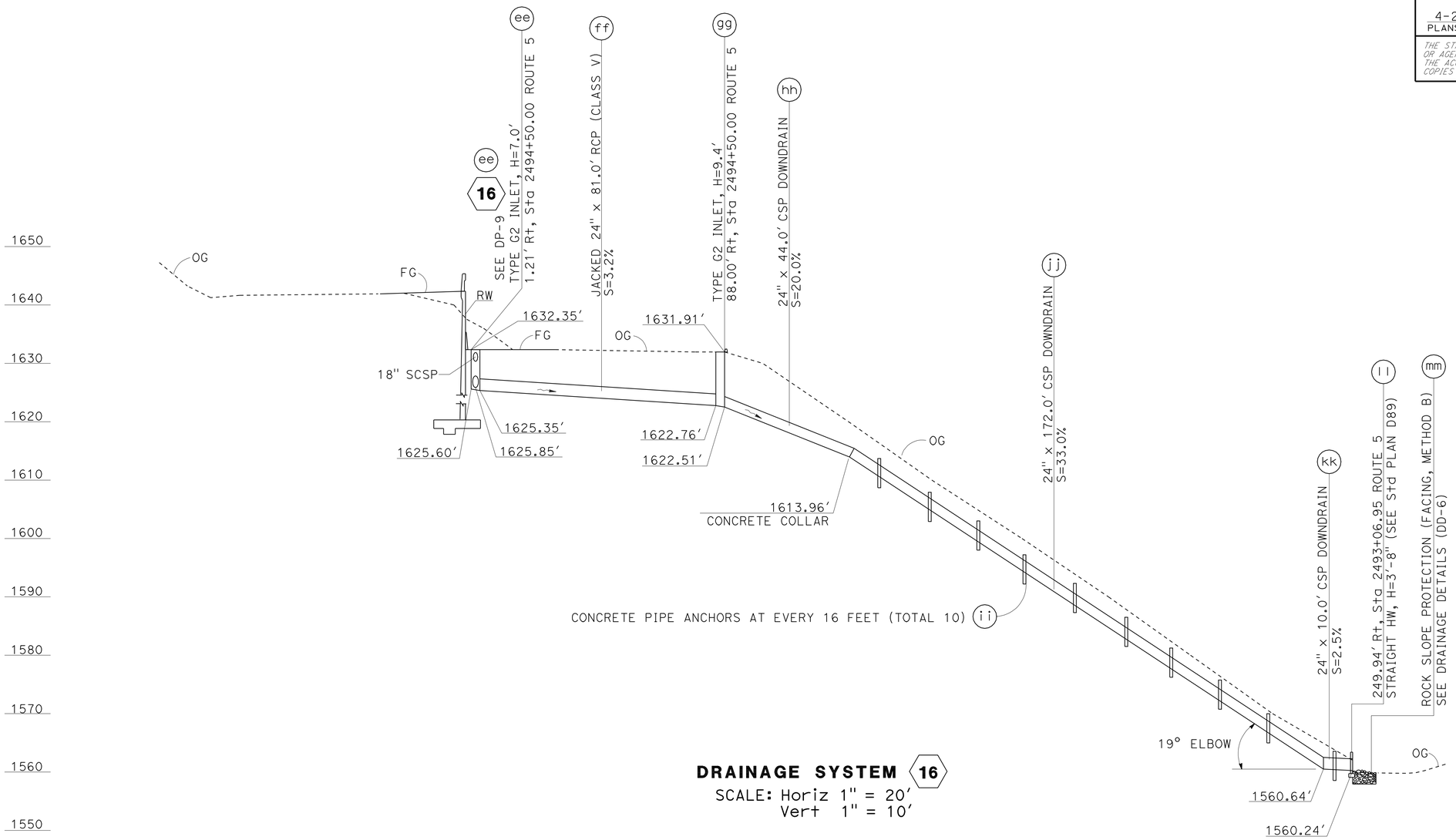

DRAINAGE SYSTEM 16

SCALE: Horiz 1" = 20'
Vert 1" = 10'

DRAINAGE PROFILE

DP-10

STATE OF CALIFORNIA - DEPARTMENT OF TRANSPORTATION			
Caltrans® HYDRAULICS	FUNCTIONAL SUPERVISOR: DAVE BHALLA	PAUL FONG / PRAKASH YADAV	CALCULATED-DESIGNED BY / CHECKED BY / REVISED BY / DATE REVISED

LAST REVISION
DATE PLOTTED => 26-APR-2011
TIME PLOTTED => 08:02

Dist	COUNTY	ROUTE	POST MILES TOTAL PROJECT	SHEET No.	TOTAL SHEETS
07	LA	5	R46.3/R50.0	102	456

Paul Fong 01-18-11
REGISTERED CIVIL ENGINEER DATE

4-25-11
PLANS APPROVAL DATE

REGISTERED PROFESSIONAL ENGINEER
PAUL FONG
No. C67053
Exp. 9/30/12
CIVIL
STATE OF CALIFORNIA

THE STATE OF CALIFORNIA OR ITS OFFICERS OR AGENTS SHALL NOT BE RESPONSIBLE FOR THE ACCURACY OR COMPLETENESS OF SCANNED COPIES OF THIS PLAN SHEET.

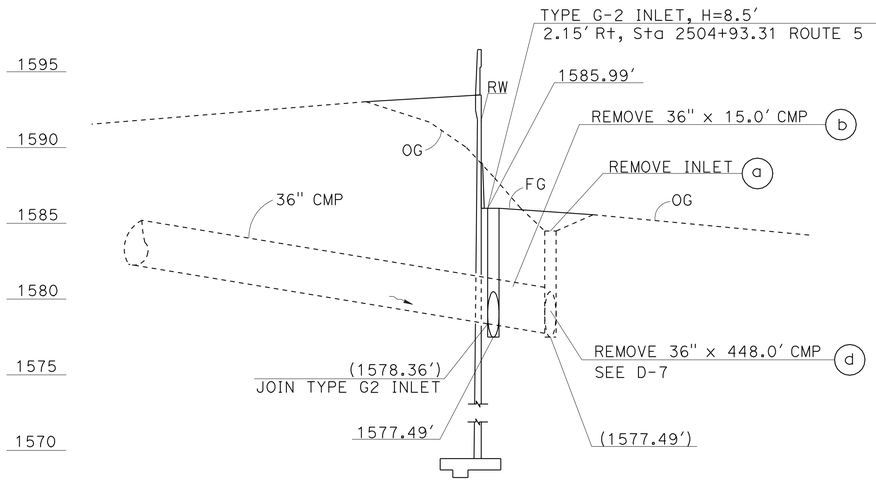

DRAINAGE SYSTEM 19
SCALE: Horiz 1" = 20′
Vert 1" = 5′

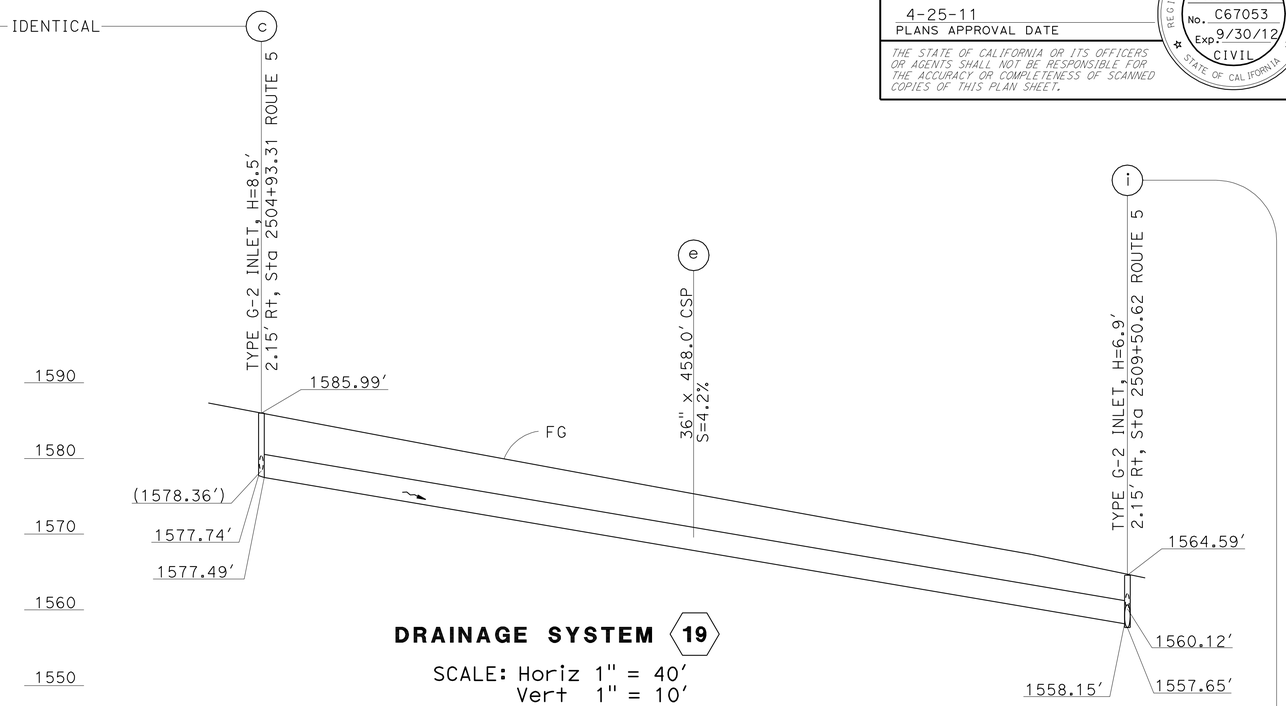

DRAINAGE SYSTEM 19
SCALE: Horiz 1" = 40′
Vert 1" = 10′

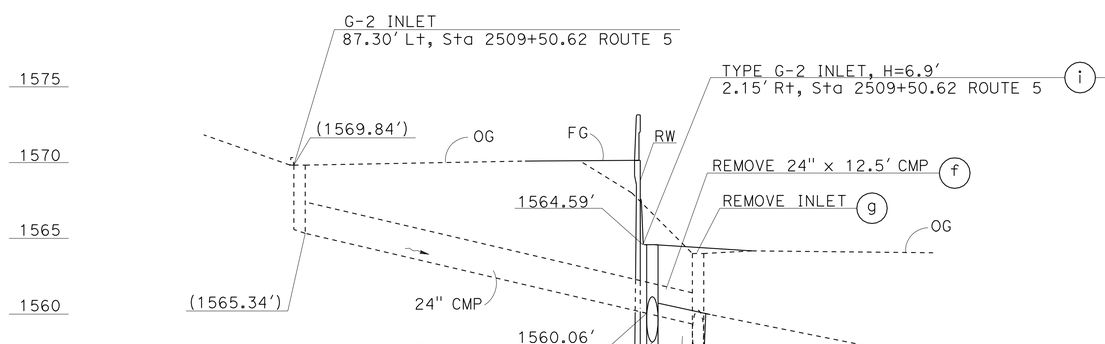

DRAINAGE SYSTEM 19
SCALE: Horiz 1" = 20′
Vert 1" = 5′

DRAINAGE PROFILE
DP-11

STATE OF CALIFORNIA - DEPARTMENT OF TRANSPORTATION
Caltrans
HYDRAULICS

FUNCTIONAL SUPERVISOR: DAVE BHALLA
CALCULATED-DESIGNED BY: PAUL FONG
CHECKED BY: PRAKASH YADAV
REVISED BY
DATE REVISED

LAST REVISION
DATE PLOTTED => 26-APR-2011
TIME PLOTTED => 08:02

Dist	COUNTY	ROUTE	POST MILES TOTAL PROJECT	SHEET No.	TOTAL SHEETS
07	LA	5	R46.3/R50.0	103	456

Paul Fong 01-18-11
REGISTERED CIVIL ENGINEER DATE

4-25-11
PLANS APPROVAL DATE

REGISTERED PROFESSIONAL ENGINEER
PAUL FONG
No. C67053
Exp. 9/30/12
CIVIL
STATE OF CALIFORNIA

THE STATE OF CALIFORNIA OR ITS OFFICERS OR AGENTS SHALL NOT BE RESPONSIBLE FOR THE ACCURACY OR COMPLETENESS OF SCANNED COPIES OF THIS PLAN SHEET.

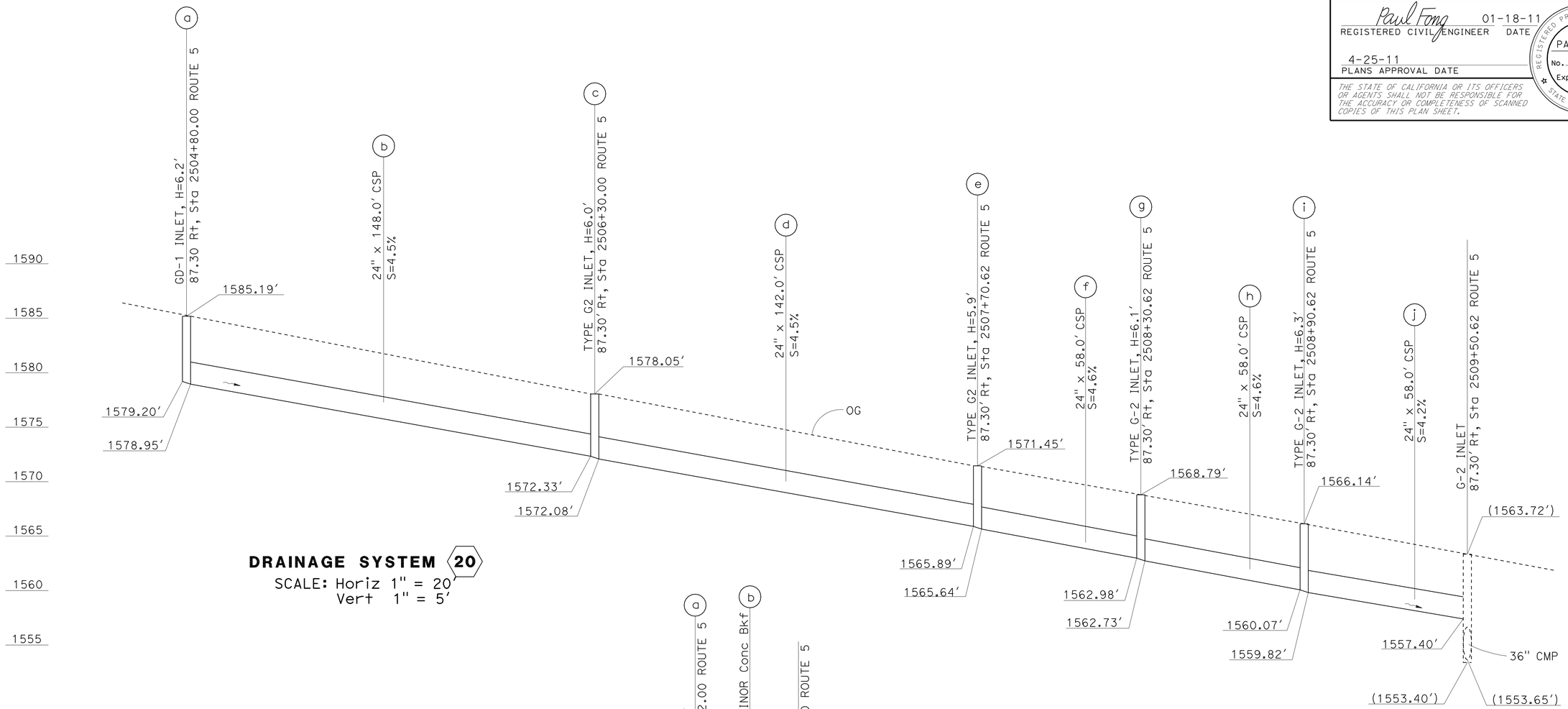

DRAINAGE SYSTEM 20
SCALE: Horiz 1" = 20′
Vert 1" = 5′

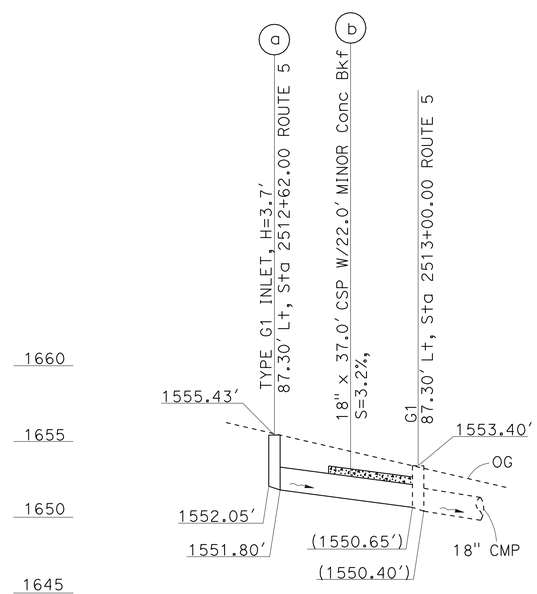

DRAINAGE SYSTEM 21
SCALE: Horiz 1" = 20′
Vert 1" = 5′

DRAINAGE PROFILE
DP-12

STATE OF CALIFORNIA - DEPARTMENT OF TRANSPORTATION
Caltrans
HYDRAULICS

FUNCTIONAL SUPERVISOR: DAVE BHALLA
CALCULATED-DESIGNED BY: PAUL FONG
CHECKED BY: PRAKASH YADAV
REVISED BY
DATE REVISED

LAST REVISION
DATE PLOTTED => 26-APR-2011
TIME PLOTTED => 08:02

Dist	COUNTY	ROUTE	POST MILES TOTAL PROJECT	SHEET No.	TOTAL SHEETS
07	LA	5	R46.3/R50.0	104	456

REGISTERED CIVIL ENGINEER 01-20-11 DATE

4-25-11
PLANS APPROVAL DATE

REGISTERED PROFESSIONAL ENGINEER PRAKASH YADAV No. C68479 Exp 9/30/11 CIVIL STATE OF CALIFORNIA

THE STATE OF CALIFORNIA OR ITS OFFICERS OR AGENTS SHALL NOT BE RESPONSIBLE FOR THE ACCURACY OR COMPLETENESS OF SCANNED COPIES OF THIS PLAN SHEET.

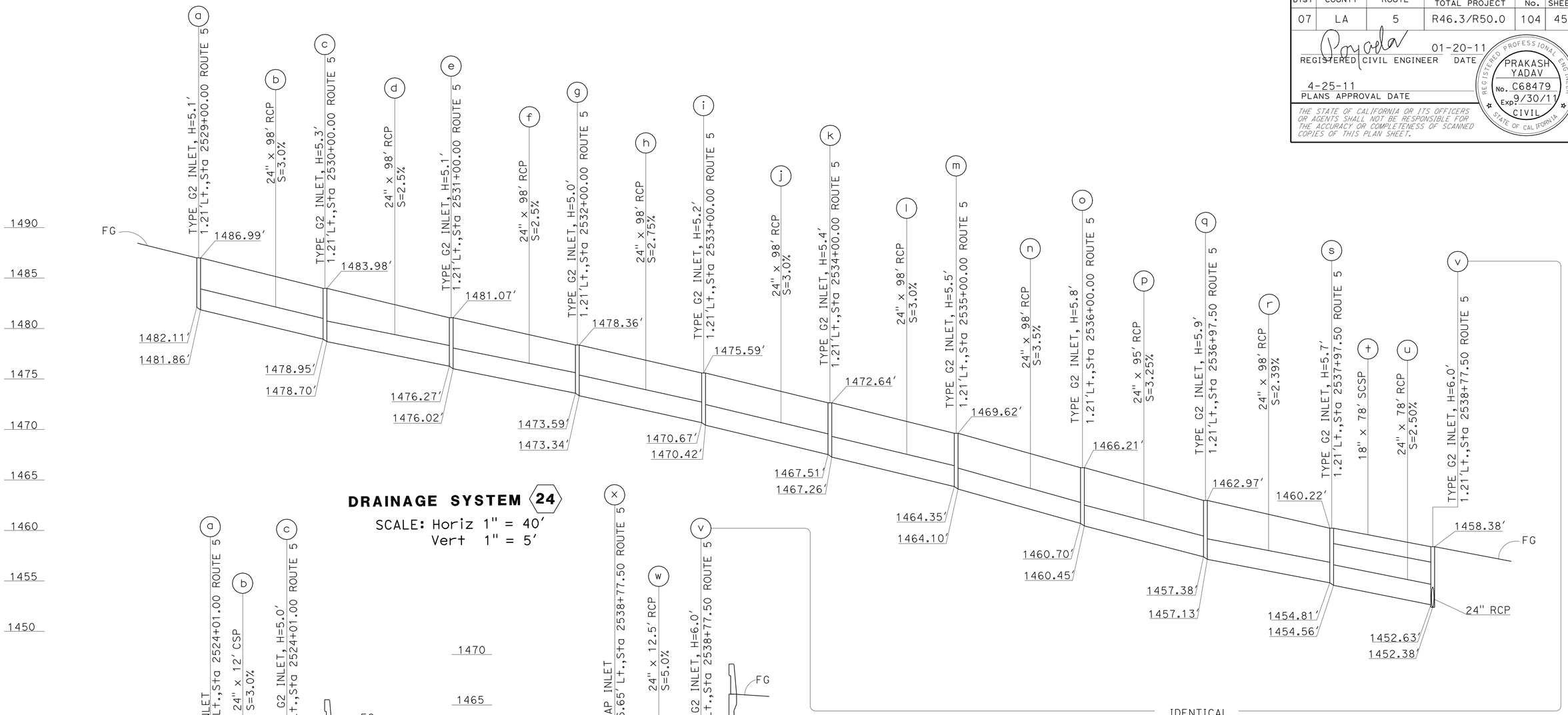

DRAINAGE SYSTEM 24

SCALE: Horiz 1" = 40′
Vert 1" = 5′

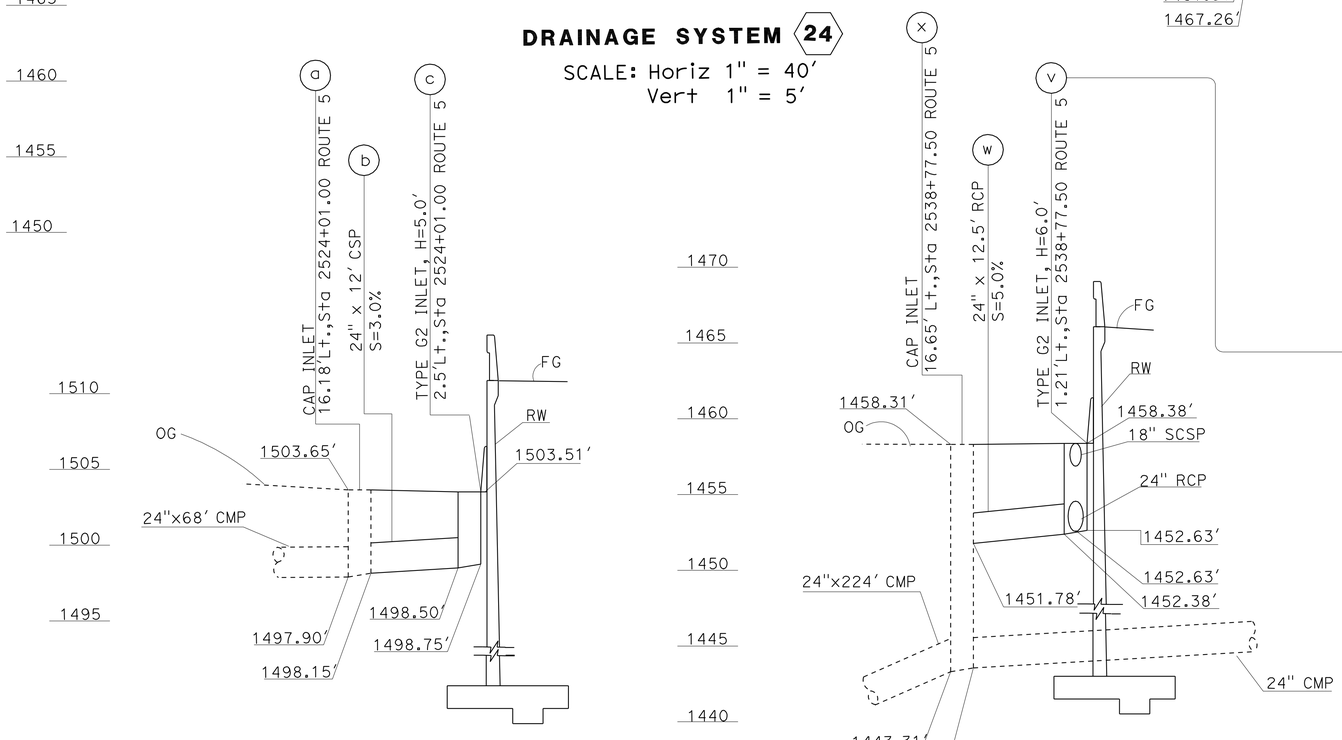

DRAINAGE SYSTEM 23

SCALE: Horiz 1" = 10′
Vert 1" = 5′

DRAINAGE SYSTEM 24

SCALE: Horiz 1" = 10′
Vert 1" = 5′

DRAINAGE PROFILE
DP-13

REVISED BY	PRAKASH YADAV
DATE REVISED	PAUL FONG
CALCULATED-DESIGNED BY	
CHECKED BY	
FUNCTIONAL SUPERVISOR	DAVE BHALLA

STATE OF CALIFORNIA - DEPARTMENT OF TRANSPORTATION
HYDRAULICS
Caltrans

LAST REVISION DATE PLOTTED => 26-APR-2011
TIME PLOTTED => 08:02

Dist	COUNTY	ROUTE	POST MILES TOTAL PROJECT	SHEET No.	TOTAL SHEETS
07	LA	5	R46.3/R50.0	105	456

REGISTERED CIVIL ENGINEER 01-20-11 DATE

4-25-11
PLANS APPROVAL DATE

REGISTERED PROFESSIONAL ENGINEER PRAKASH YADAV No. C68479 Exp. 9/30/11 CIVIL STATE OF CALIFORNIA

THE STATE OF CALIFORNIA OR ITS OFFICERS OR AGENTS SHALL NOT BE RESPONSIBLE FOR THE ACCURACY OR COMPLETENESS OF SCANNED COPIES OF THIS PLAN SHEET.

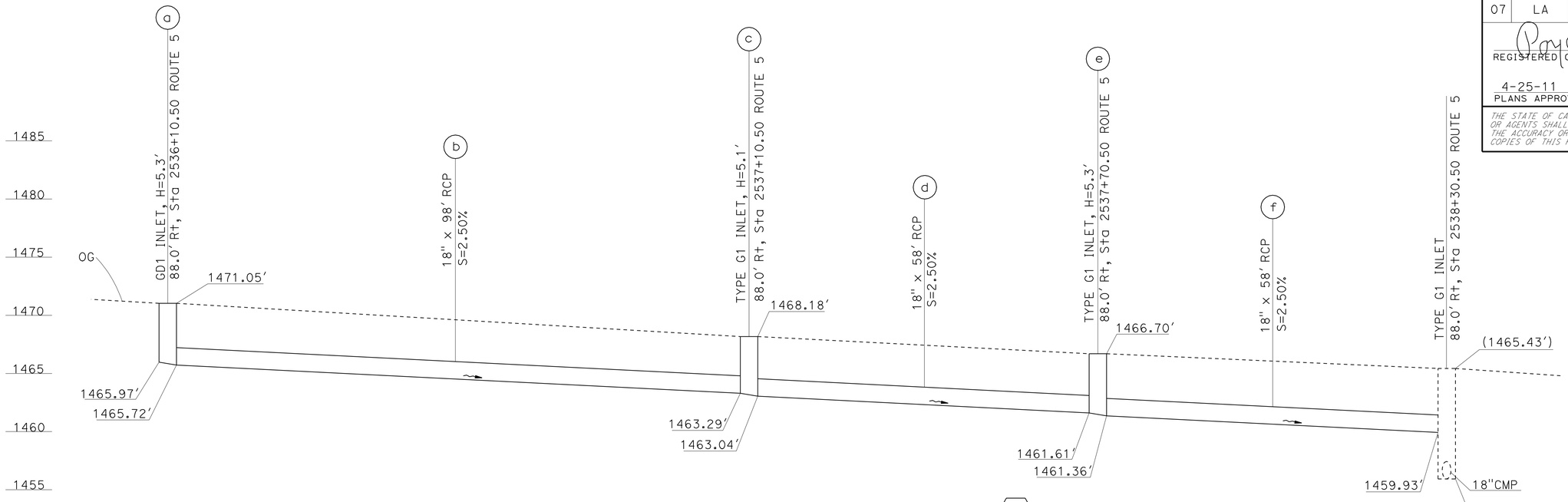

DRAINAGE SYSTEM 25

SCALE: Horiz 1" = 10′
Vert 1" = 5′

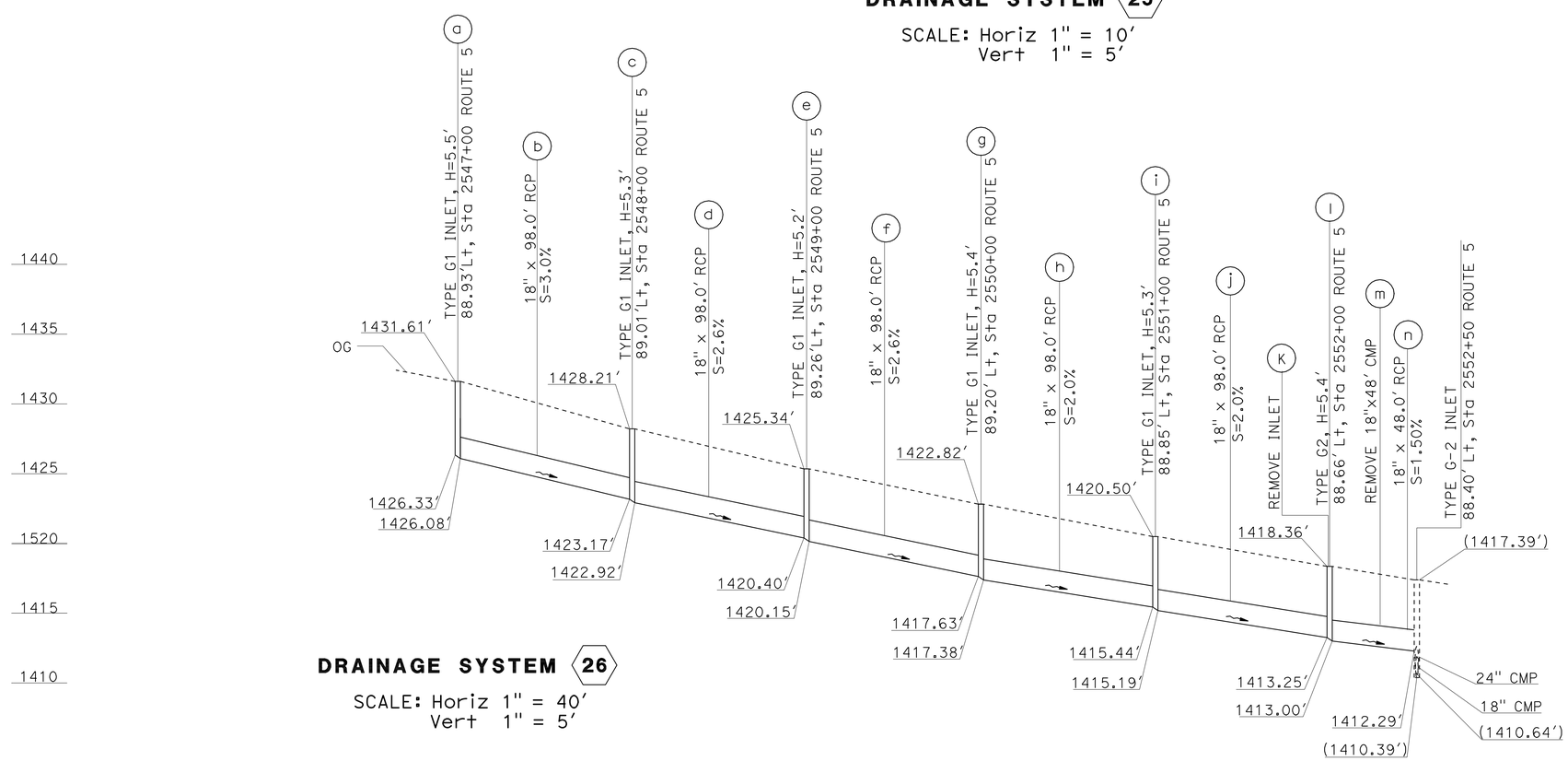

DRAINAGE SYSTEM 26

SCALE: Horiz 1" = 40′
Vert 1" = 5′

DRAINAGE PROFILE
DP-14

STATE OF CALIFORNIA - DEPARTMENT OF TRANSPORTATION
HYDRAULICS
Caltrans

FUNCTIONAL SUPERVISOR: DAVE BHALLA
CALCULATED-DESIGNED BY: PRAKASH YADAV
CHECKED BY: PAUL FONG
REVISED BY
DATE REVISED

LAST REVISION
DATE PLOTTED => 26-APR-2011
TIME PLOTTED => 08:02

Dist	COUNTY	ROUTE	POST MILES TOTAL PROJECT	SHEET No.	TOTAL SHEETS
07	LA	5	R46.3/R50.0	106	456

REGISTERED CIVIL ENGINEER 01-20-11 DATE

4-25-11
PLANS APPROVAL DATE

REGISTERED PROFESSIONAL ENGINEER PRAKASH YADAV No. C68479 Exp. 9/30/11 CIVIL STATE OF CALIFORNIA

THE STATE OF CALIFORNIA OR ITS OFFICERS OR AGENTS SHALL NOT BE RESPONSIBLE FOR THE ACCURACY OR COMPLETENESS OF SCANNED COPIES OF THIS PLAN SHEET.

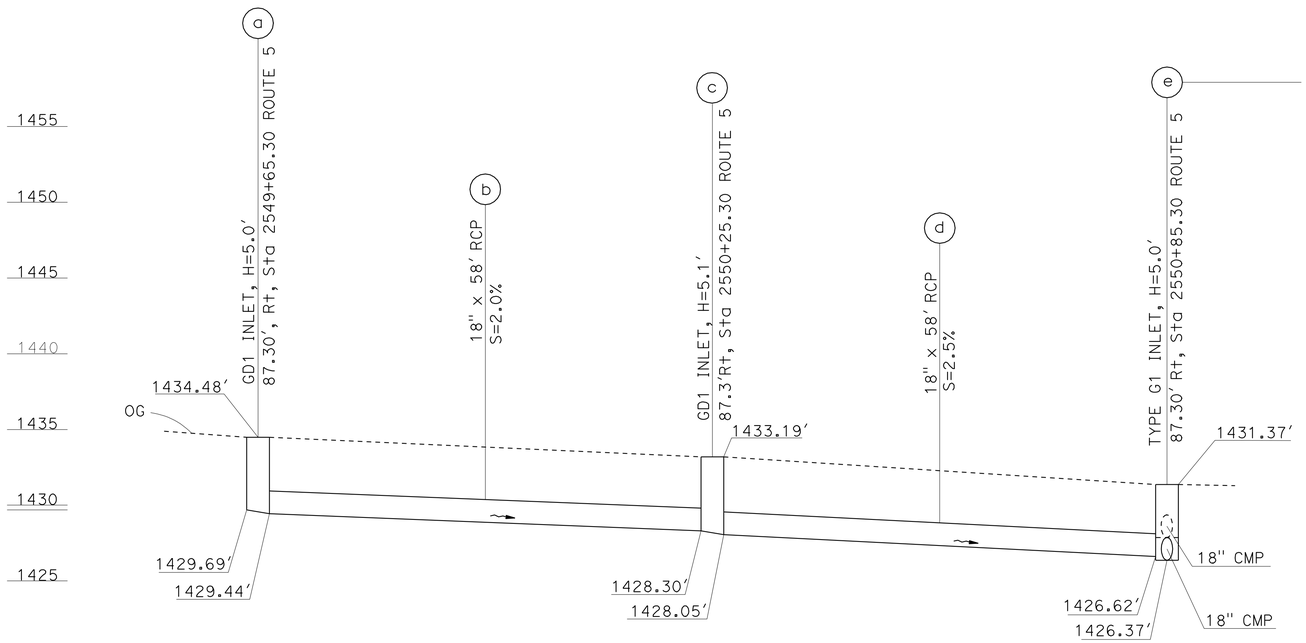

DRAINAGE SYSTEM (27)

SCALE: Horiz 1" = 10′
Vert 1" = 5′

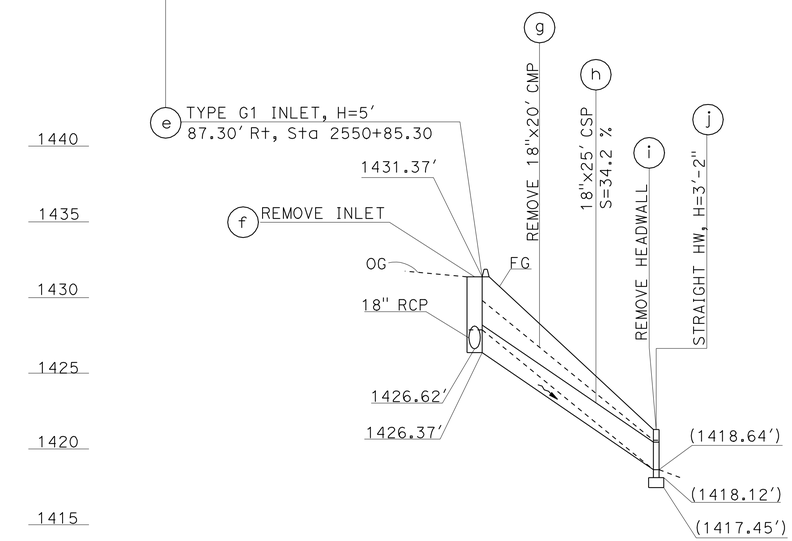

DRAINAGE SYSTEM (27)

SCALE: Horiz 1" = 10′
Vert 1" = 5′

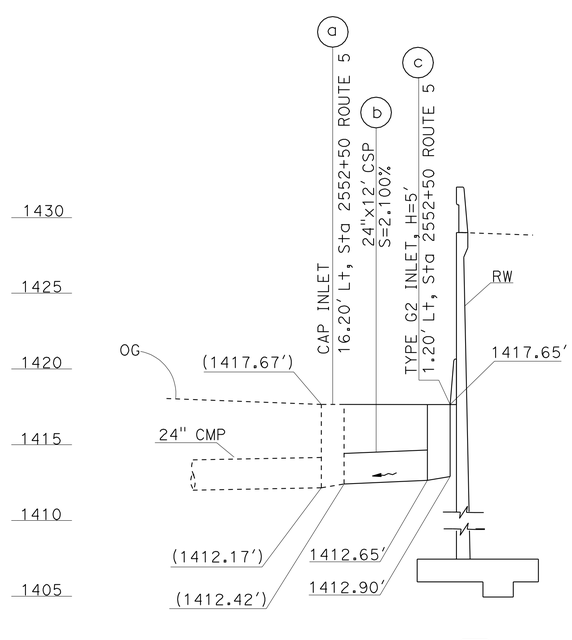

DRAINAGE SYSTEM (28)

SCALE: Horiz 1" = 10′
Vert 1" = 5′

DRAINAGE PROFILE
DP-15

STATE OF CALIFORNIA - DEPARTMENT OF TRANSPORTATION
Caltrans
HYDRAULICS

FUNCTIONAL SUPERVISOR: DAVE BHALLA
CALCULATED-DESIGNED BY: PRAKASH YADAV
CHECKED BY: PAUL FONG
REVISED BY
DATE REVISED

LAST REVISION
DATE PLOTTED => 26-APR-2011
TIME PLOTTED => 08:02

Dist	COUNTY	ROUTE	POST MILES TOTAL PROJECT	SHEET No.	TOTAL SHEETS
07	LA	5	R46.3/R50.0	107	456

REGISTERED CIVIL ENGINEER 01-20-11 DATE

4-25-11
PLANS APPROVAL DATE

REGISTERED PROFESSIONAL ENGINEER PRAKASH YADAV No. C68479 Exp. 9/30/11 CIVIL STATE OF CALIFORNIA

THE STATE OF CALIFORNIA OR ITS OFFICERS OR AGENTS SHALL NOT BE RESPONSIBLE FOR THE ACCURACY OR COMPLETENESS OF SCANNED COPIES OF THIS PLAN SHEET.

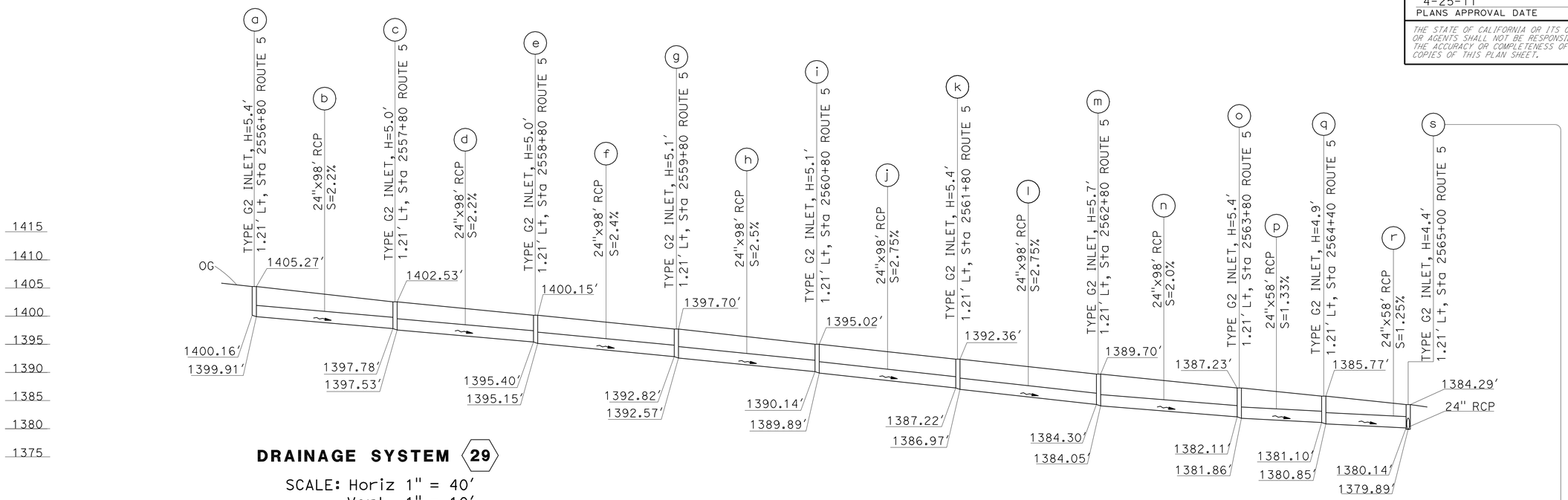

DRAINAGE SYSTEM 29

SCALE: Horiz 1" = 40'
Vert 1" = 10'

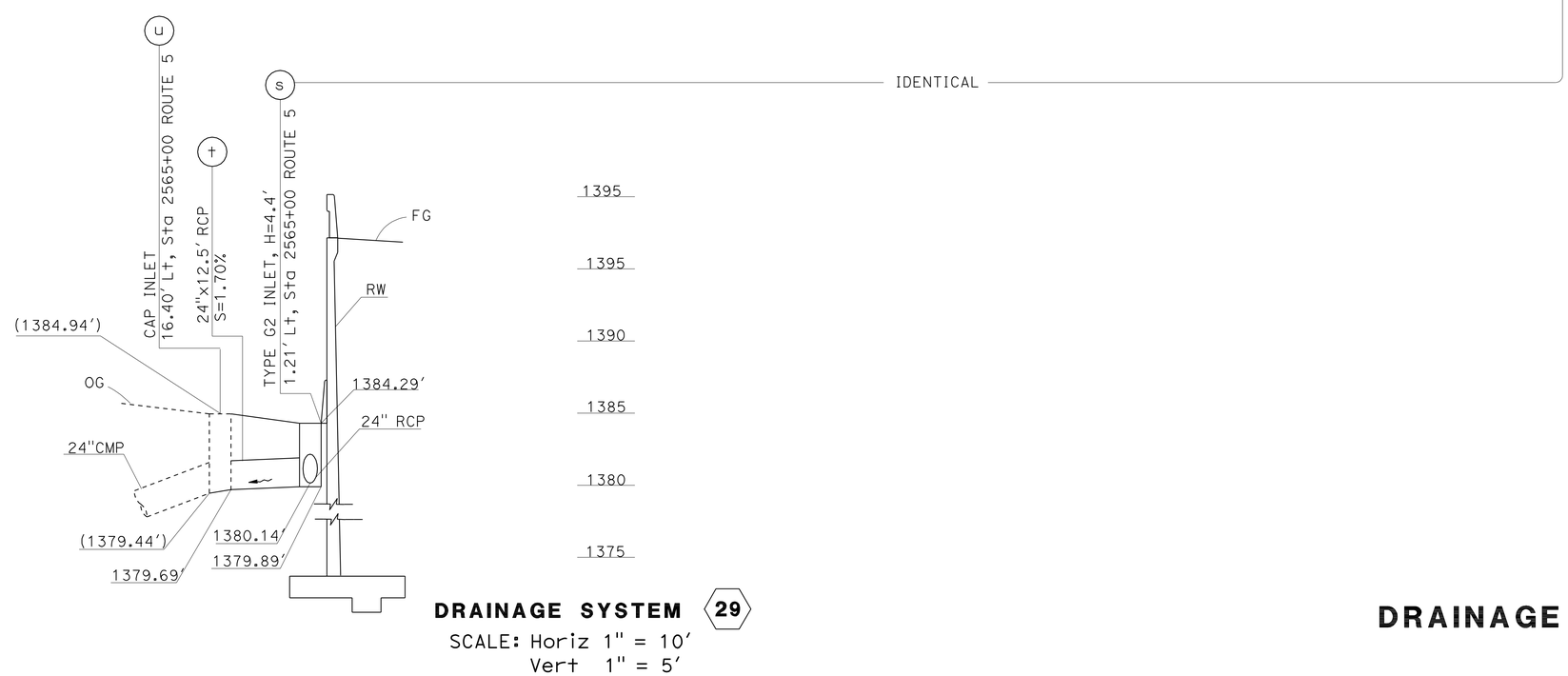

DRAINAGE SYSTEM 29

SCALE: Horiz 1" = 10'
Vert 1" = 5'

DRAINAGE PROFILE
DP-16

STATE OF CALIFORNIA - DEPARTMENT OF TRANSPORTATION
Caltrans
HYDRAULICS

FUNCTIONAL SUPERVISOR: DAVE BHALLA
CALCULATED-DESIGNED BY: PRAKASH YADAV
CHECKED BY: PAUL FONG
REVISED BY
DATE REVISED

LAST REVISION
DATE PLOTTED => 26-APR-2011
TIME PLOTTED => 08:03

Dist	COUNTY	ROUTE	POST MILES TOTAL PROJECT	SHEET No.	TOTAL SHEETS
07	LA	5	R46.3/R50.0	108	456

REGISTERED CIVIL ENGINEER 01-20-11 DATE

4-25-11
PLANS APPROVAL DATE

REGISTERED PROFESSIONAL ENGINEER PRAKASH YADAV No. C68479 Exp. 9/30/11 CIVIL STATE OF CALIFORNIA

THE STATE OF CALIFORNIA OR ITS OFFICERS OR AGENTS SHALL NOT BE RESPONSIBLE FOR THE ACCURACY OR COMPLETENESS OF SCANNED COPIES OF THIS PLAN SHEET.

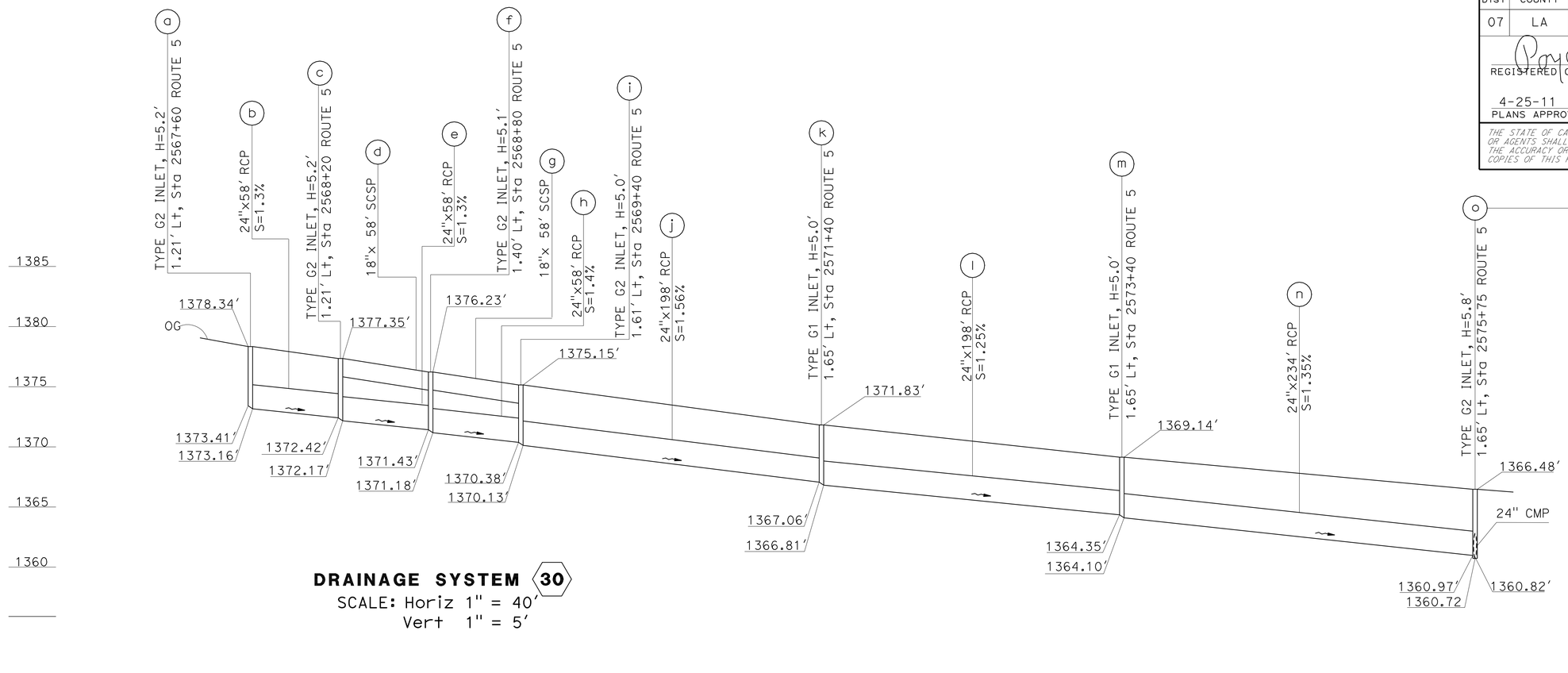

DRAINAGE SYSTEM 30
SCALE: Horiz 1" = 40′
Vert 1" = 5′

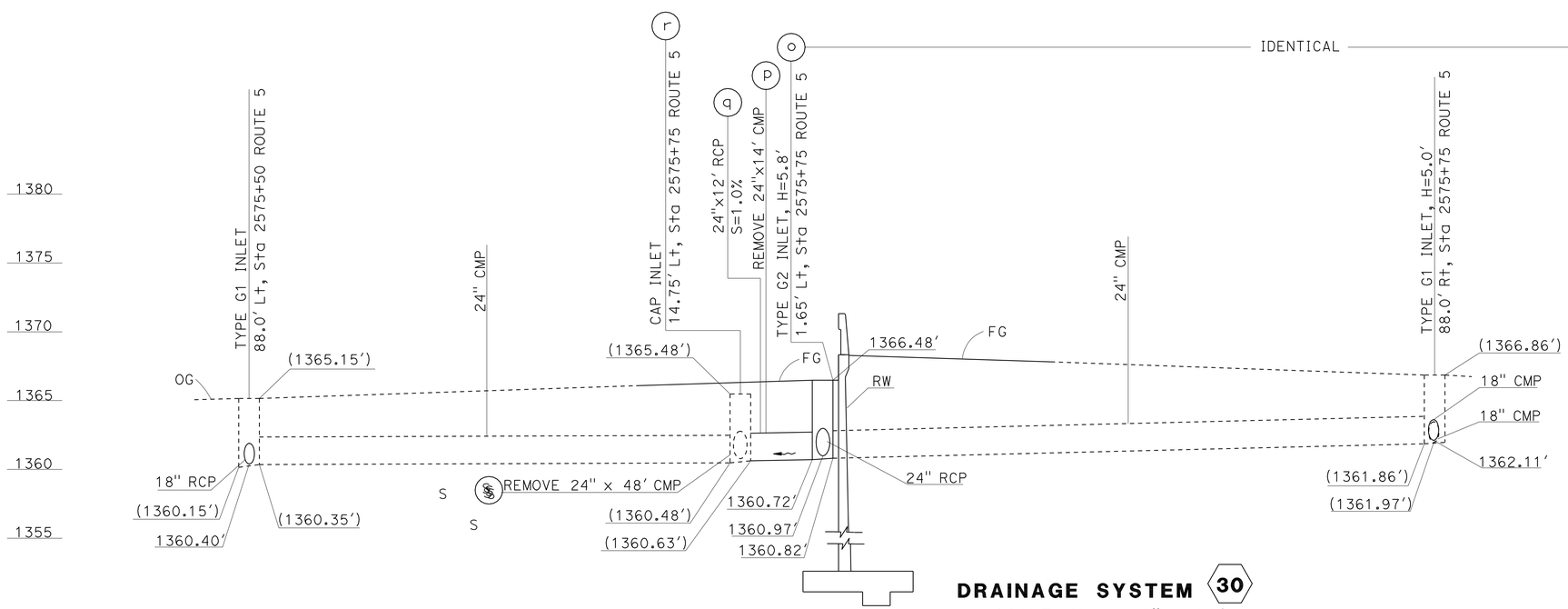

DRAINAGE SYSTEM 30
SCALE: Horiz 1" = 10′
Vert 1" = 5′

DRAINAGE PROFILE
DP-17

REVISED BY	DATE REVISED

CALCULATED-DESIGNED BY: PRAKASH YADAV
CHECKED BY: PAUL FONG
FUNCTIONAL SUPERVISOR: DAVE BHALLA

STATE OF CALIFORNIA - DEPARTMENT OF TRANSPORTATION
Caltrans
HYDRAULICS

LAST REVISION
DATE PLOTTED => 26-APR-2011
TIME PLOTTED => 08:03

Dist	COUNTY	ROUTE	POST MILES TOTAL PROJECT	SHEET No.	TOTAL SHEETS
07	LA	5	R46.3/R50.0	109	456

REGISTERED CIVIL ENGINEER 01-20-11 DATE

4-25-11
PLANS APPROVAL DATE

REGISTERED PROFESSIONAL ENGINEER PRAKASH YADAV No. C68479 Exp. 9/30/11 CIVIL STATE OF CALIFORNIA

THE STATE OF CALIFORNIA OR ITS OFFICERS OR AGENTS SHALL NOT BE RESPONSIBLE FOR THE ACCURACY OR COMPLETENESS OF SCANNED COPIES OF THIS PLAN SHEET.

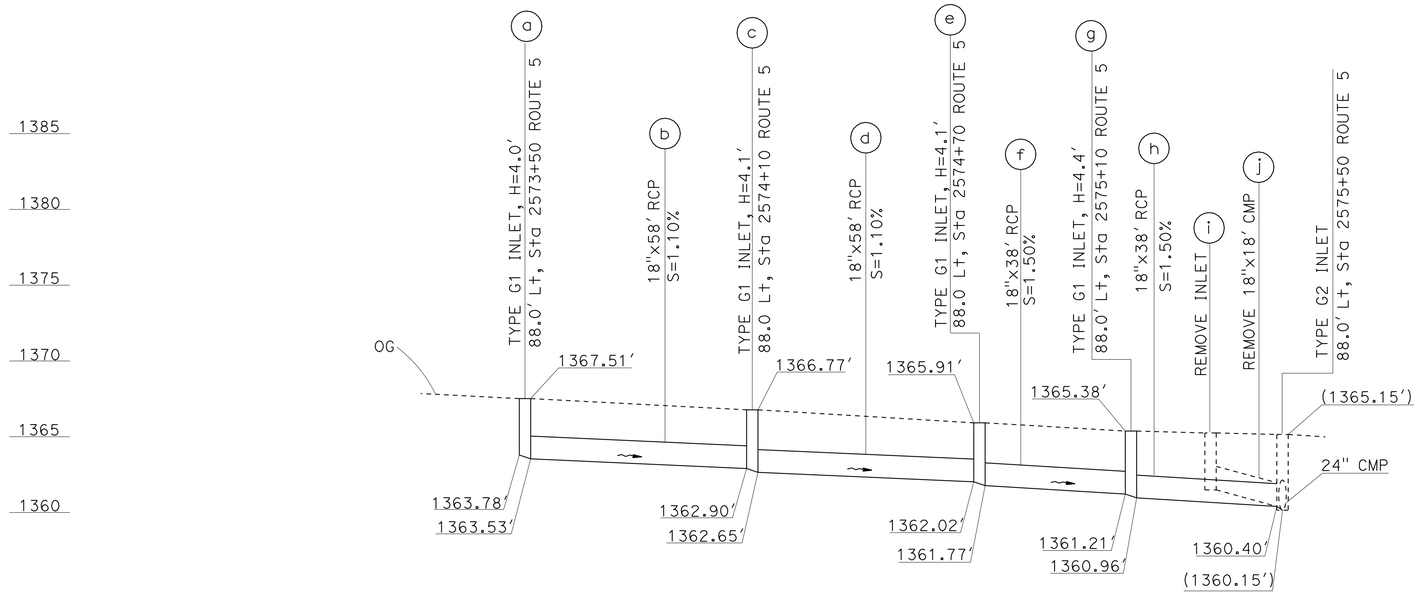

DRAINAGE SYSTEM 31

SCALE: Horiz 1" = 20′
Vert 1" = 5′

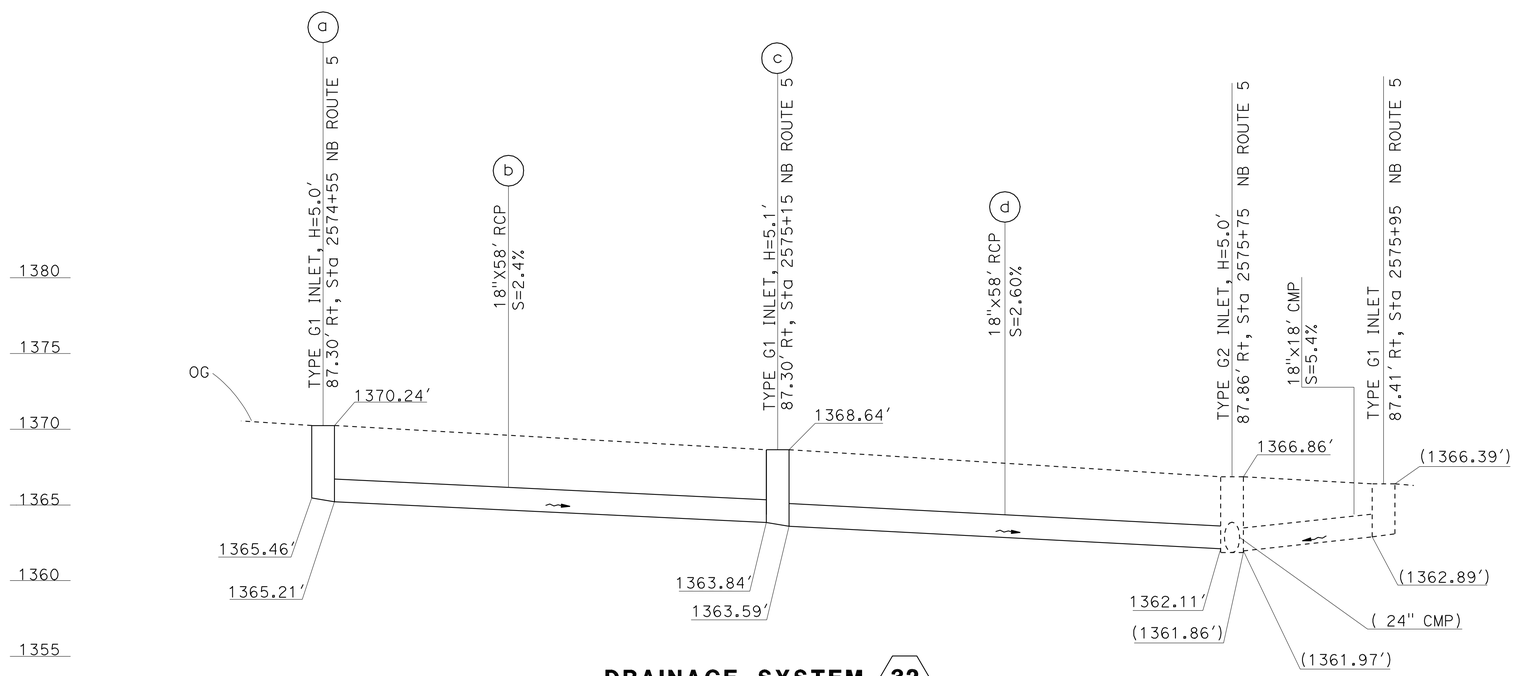

DRAINAGE SYSTEM 32

SCALE: Horiz 1" = 10′
Vert 1" = 5′

DRAINAGE PROFILE
DP-18

STATE OF CALIFORNIA - DEPARTMENT OF TRANSPORTATION
Caltrans
HYDRAULICS

FUNCTIONAL SUPERVISOR: DAVE BHALLA
CALCULATED-DESIGNED BY: PRAKASH YADAV
CHECKED BY: PAUL FONG
REVISED BY
DATE REVISED

LAST REVISION DATE PLOTTED => 26-APR-2011
TIME PLOTTED => 08:03

Dist	COUNTY	ROUTE	POST MILES TOTAL PROJECT	SHEET No.	TOTAL SHEETS
07	LA	5	R46.3/R50.0	110	456

Paul Fong 01-18-11
REGISTERED CIVIL ENGINEER DATE

4-25-11
PLANS APPROVAL DATE

REGISTERED PROFESSIONAL ENGINEER PAUL FONG No. C67053 Exp. 9/30/12 CIVIL STATE OF CALIFORNIA

THE STATE OF CALIFORNIA OR ITS OFFICERS OR AGENTS SHALL NOT BE RESPONSIBLE FOR THE ACCURACY OR COMPLETENESS OF SCANNED COPIES OF THIS PLAN SHEET.

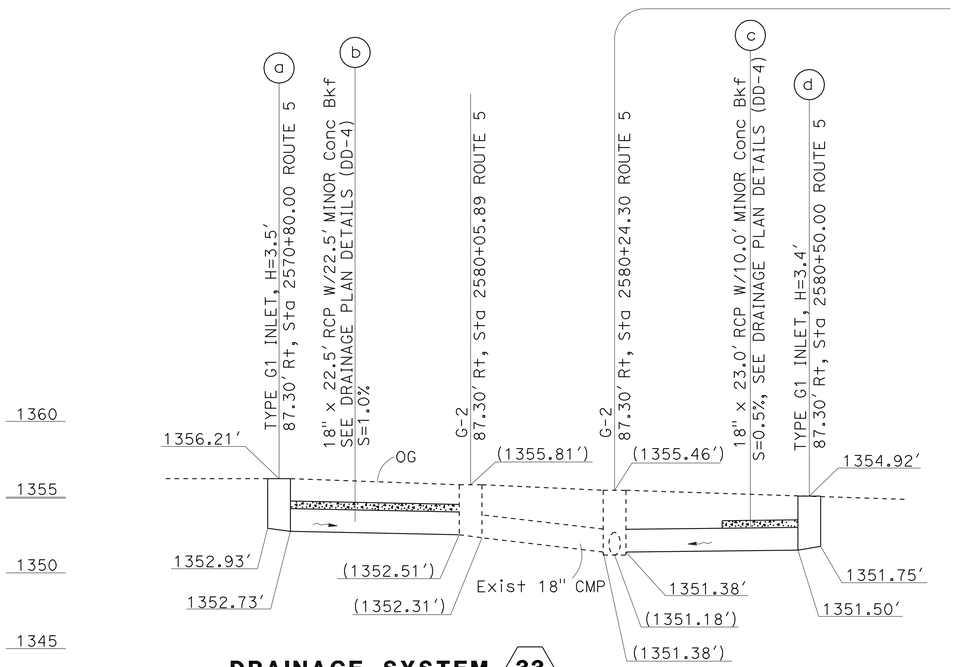

DRAINAGE SYSTEM 33

SCALE: Horiz 1" = 10′
Vert 1" = 5′

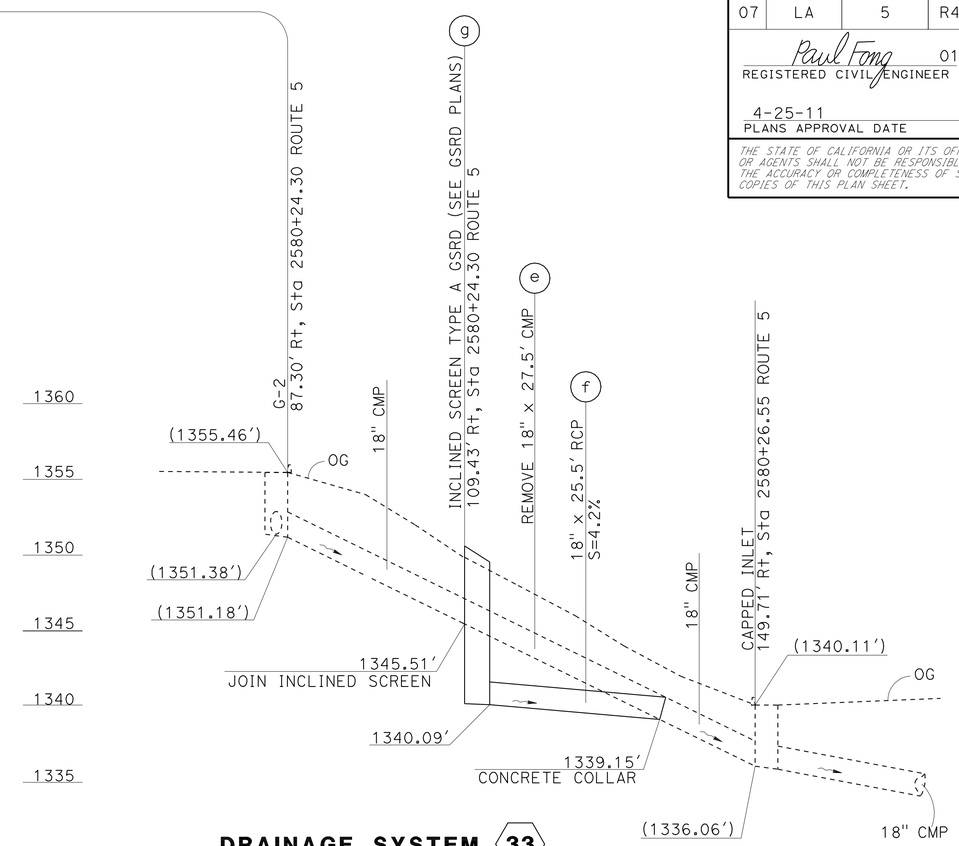

DRAINAGE SYSTEM 33

SCALE: Horiz 1" = 10′
Vert 1" = 5′

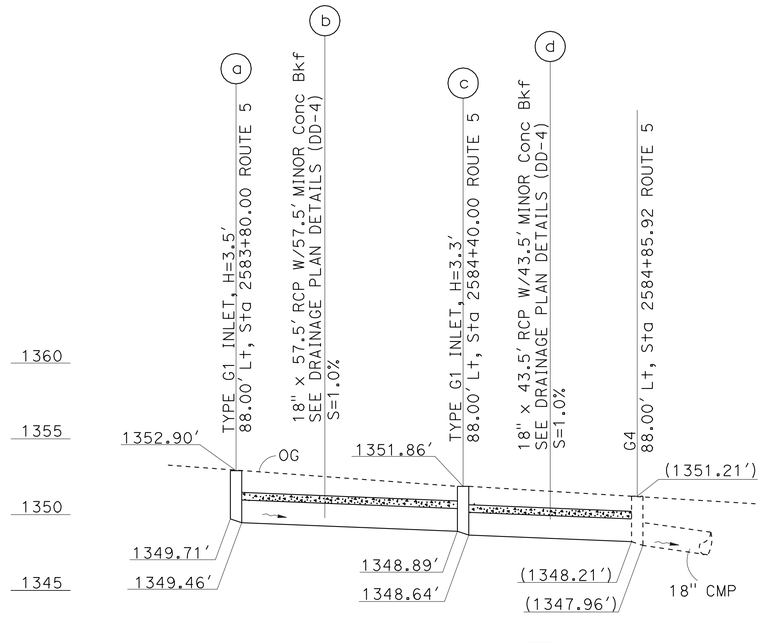

DRAINAGE SYSTEM 34

SCALE: Horiz 1" = 20′
Vert 1" = 5′

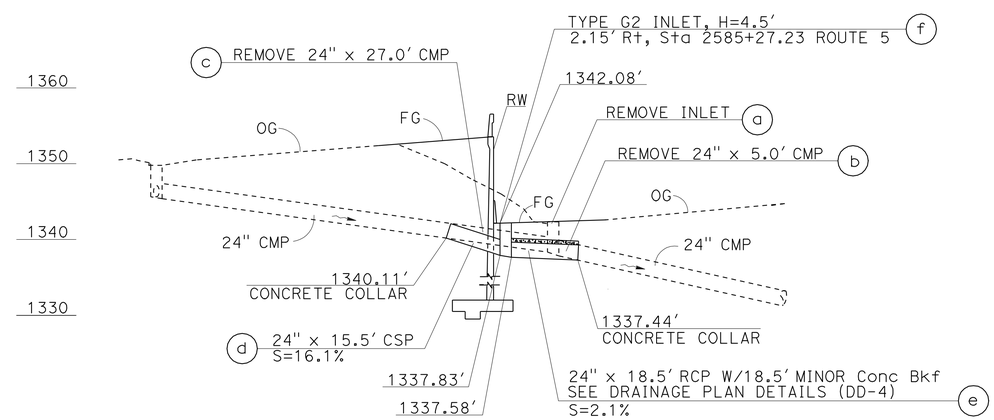

DRAINAGE SYSTEM 35

SCALE: Horiz 1" = 20′
Vert 1" = 10′

DRAINAGE PROFILE

DP-19

STATE OF CALIFORNIA - DEPARTMENT OF TRANSPORTATION
Caltrans® HYDRAULICS

FUNCTIONAL SUPERVISOR: DAVE BHALLA
CALCULATED-DESIGNED BY: PAUL FONG
CHECKED BY: PRAKASH YADAV
REVISED BY
DATE REVISED

LAST REVISION
DATE PLOTTED => 26-APR-2011
TIME PLOTTED => 08:03

Dist	COUNTY	ROUTE	POST MILES TOTAL PROJECT	SHEET No.	TOTAL SHEETS
07	LA	5	R46.3/R50.0	111	456

Paul Fong 01-18-11
REGISTERED CIVIL ENGINEER DATE

4-25-11
PLANS APPROVAL DATE

REGISTERED PROFESSIONAL ENGINEER
PAUL FONG
No. C67053
Exp. 9/30/12
CIVIL
STATE OF CALIFORNIA

THE STATE OF CALIFORNIA OR ITS OFFICERS OR AGENTS SHALL NOT BE RESPONSIBLE FOR THE ACCURACY OR COMPLETENESS OF SCANNED COPIES OF THIS PLAN SHEET.

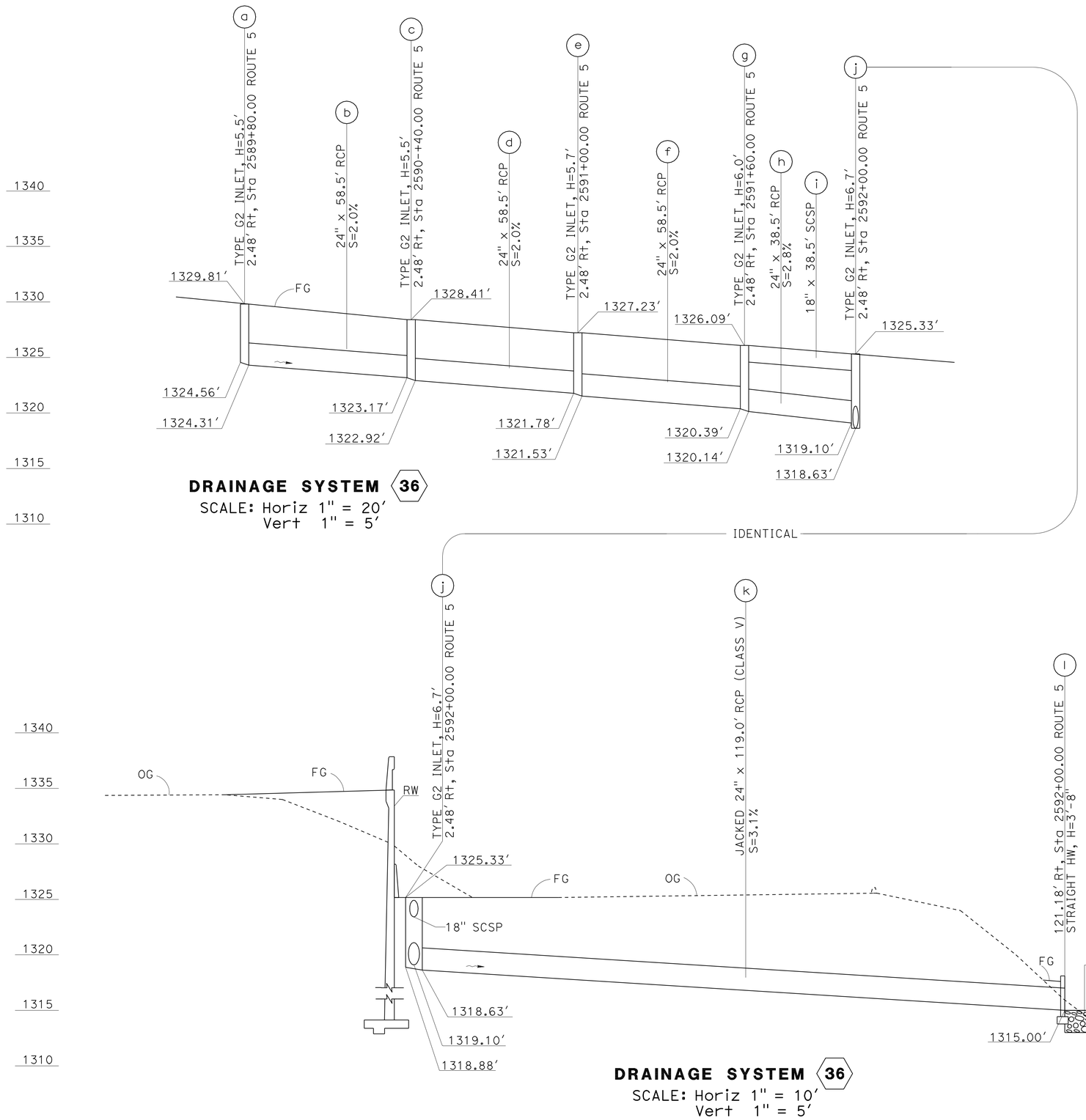

DRAINAGE SYSTEM 36
SCALE: Horiz 1" = 20′
Vert 1" = 5′

DRAINAGE SYSTEM 36
SCALE: Horiz 1" = 10′
Vert 1" = 5′

DRAINAGE PROFILE
DP-20

STATE OF CALIFORNIA - DEPARTMENT OF TRANSPORTATION
Caltrans
HYDRAULICS

FUNCTIONAL SUPERVISOR: DAVE BHALLA
CALCULATED-DESIGNED BY: PAUL FONG
CHECKED BY: PRAKASH YADAV
REVISED BY
DATE REVISED

LAST REVISION
DATE PLOTTED => 26-APR-2011
TIME PLOTTED => 08:03

Dist	COUNTY	ROUTE	POST MILES TOTAL PROJECT	SHEET No.	TOTAL SHEETS
07	LA	5	R46.3/R50.0	112	456

Paul Fong 01-18-11
REGISTERED CIVIL ENGINEER DATE

4-25-11
PLANS APPROVAL DATE

REGISTERED PROFESSIONAL ENGINEER
PAUL FONG
No. C67053
Exp. 9/30/12
CIVIL
STATE OF CALIFORNIA

THE STATE OF CALIFORNIA OR ITS OFFICERS OR AGENTS SHALL NOT BE RESPONSIBLE FOR THE ACCURACY OR COMPLETENESS OF SCANNED COPIES OF THIS PLAN SHEET.

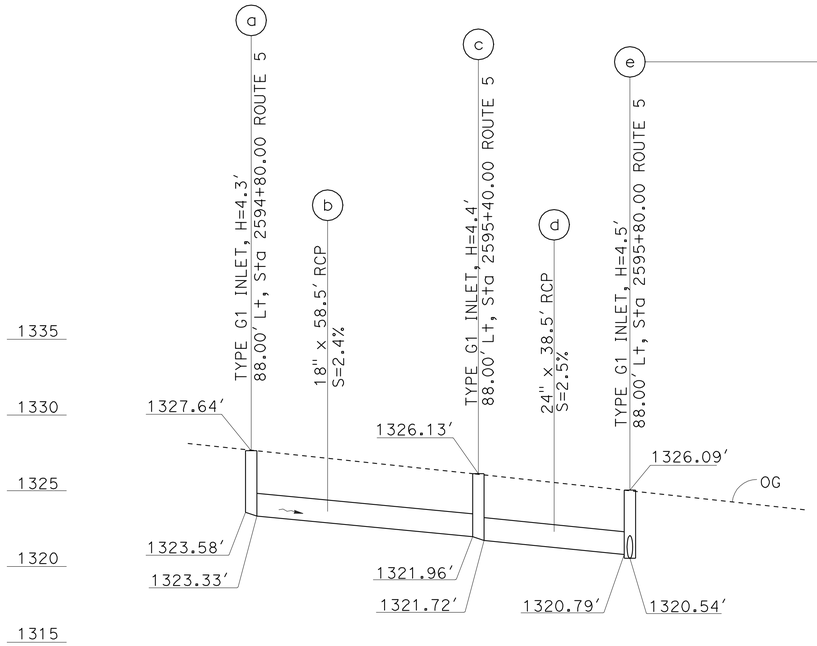

DRAINAGE SYSTEM 37

SCALE: Horiz 1" = 20′
Vert 1" = 5′

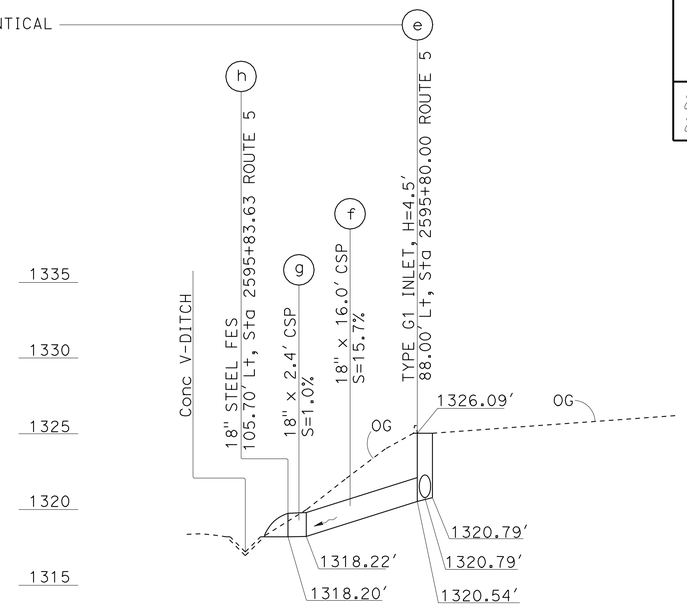

DRAINAGE SYSTEM 37

SCALE: Horiz 1" = 10′
Vert 1" = 5′

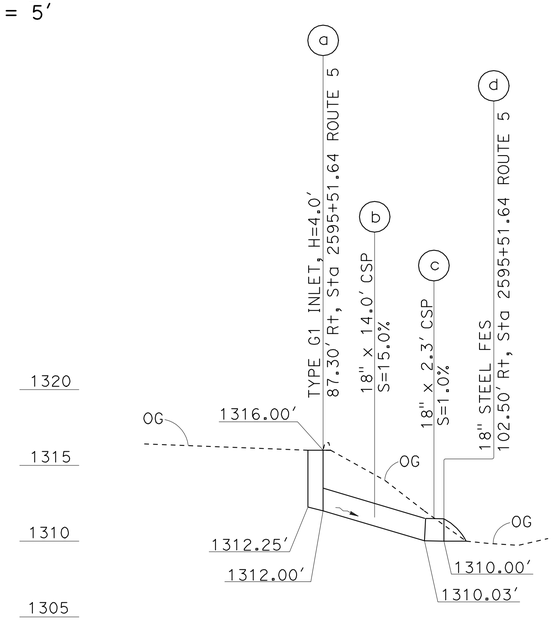

DRAINAGE SYSTEM 38

SCALE: Horiz 1" = 10′
Vert 1" = 5′

DRAINAGE PROFILE

DP-21

REVISED BY	DATE REVISED

PAUL FONG — CALCULATED-DESIGNED BY
PRAKASH YADAV — CHECKED BY
DAVE BHALLA

STATE OF CALIFORNIA - DEPARTMENT OF TRANSPORTATION
Caltrans
HYDRAULICS

LAST REVISION
DATE PLOTTED => 26-APR-2011
TIME PLOTTED => 08:03

Dist	COUNTY	ROUTE	POST MILES TOTAL PROJECT	SHEET No.	TOTAL SHEETS
07	LA	5	R46.3/R50.0	113	456

Paul Fong 01-18-11
REGISTERED CIVIL ENGINEER DATE

4-25-11
PLANS APPROVAL DATE

REGISTERED PROFESSIONAL ENGINEER
PAUL FONG
No. C67053
Exp. 9/30/12
CIVIL
STATE OF CALIFORNIA

THE STATE OF CALIFORNIA OR ITS OFFICERS OR AGENTS SHALL NOT BE RESPONSIBLE FOR THE ACCURACY OR COMPLETENESS OF SCANNED COPIES OF THIS PLAN SHEET.

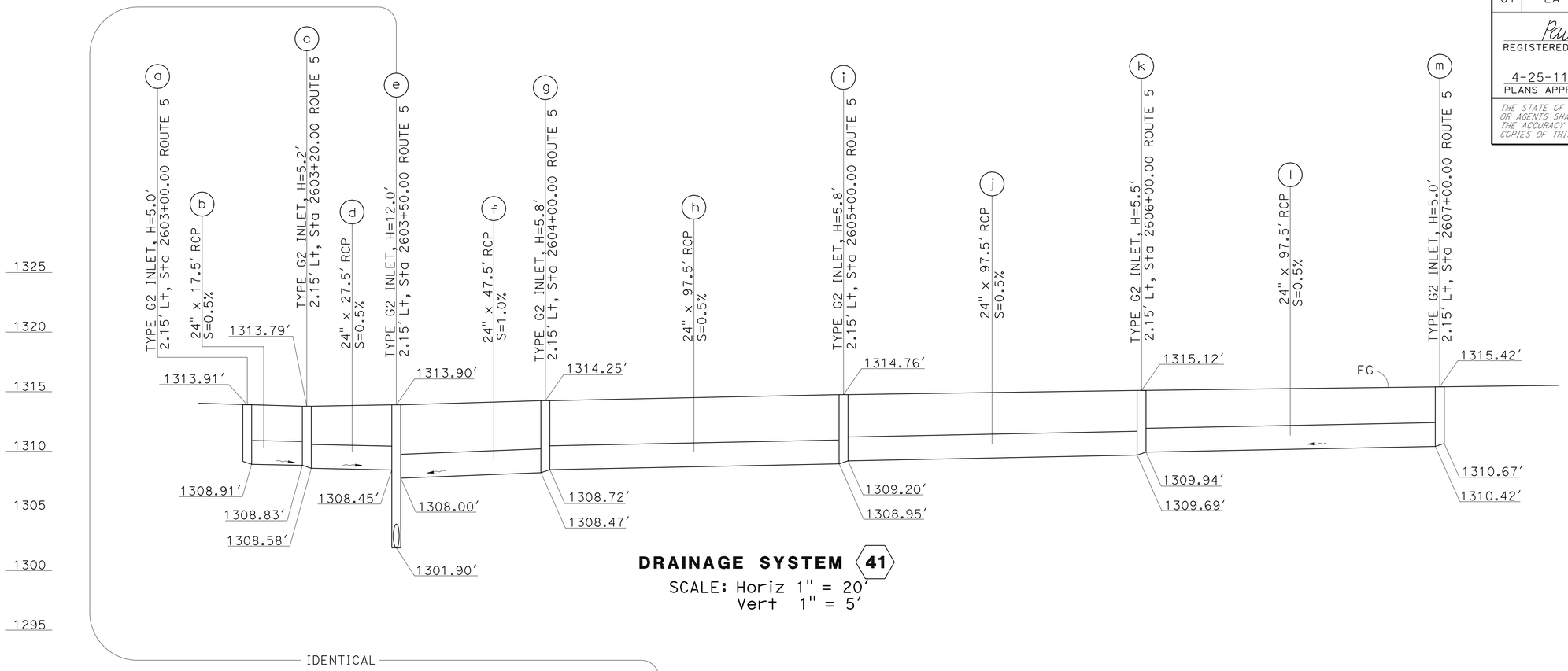

DRAINAGE SYSTEM (41)

SCALE: Horiz 1" = 20′
Vert 1" = 5′

IDENTICAL

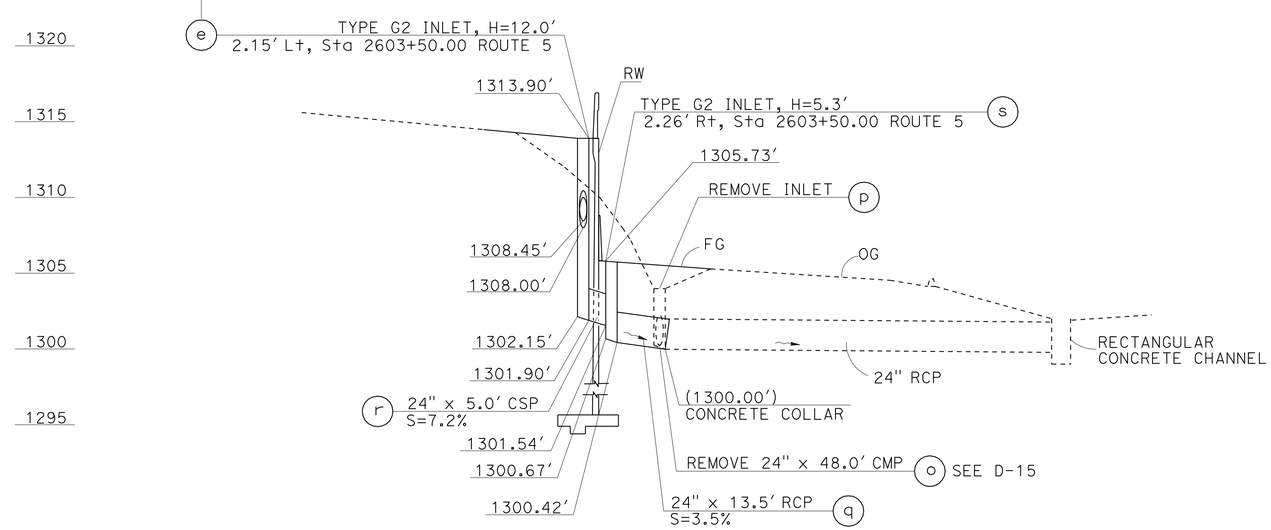

DRAINAGE SYSTEM (41)

SCALE: Horiz 1" = 20′
Vert 1" = 5′

DRAINAGE PROFILE
DP-22

STATE OF CALIFORNIA - DEPARTMENT OF TRANSPORTATION
Caltrans
HYDRAULICS

FUNCTIONAL SUPERVISOR: DAVE BHALLA
CALCULATED-DESIGNED BY: PAUL FONG
CHECKED BY: PRAKASH YADAV
REVISED BY
DATE REVISED

LAST REVISION
DATE PLOTTED => 26-APR-2011
TIME PLOTTED => 08:03

Dist	COUNTY	ROUTE	POST MILES TOTAL PROJECT	SHEET No.	TOTAL SHEETS
07	LA	5	R46.3/R50.0	114	456

Paul Fong 01-18-11
REGISTERED CIVIL ENGINEER DATE

4-25-11
PLANS APPROVAL DATE

REGISTERED PROFESSIONAL ENGINEER PAUL FONG No. C67053 Exp. 9/30/12 CIVIL STATE OF CALIFORNIA

THE STATE OF CALIFORNIA OR ITS OFFICERS OR AGENTS SHALL NOT BE RESPONSIBLE FOR THE ACCURACY OR COMPLETENESS OF SCANNED COPIES OF THIS PLAN SHEET.

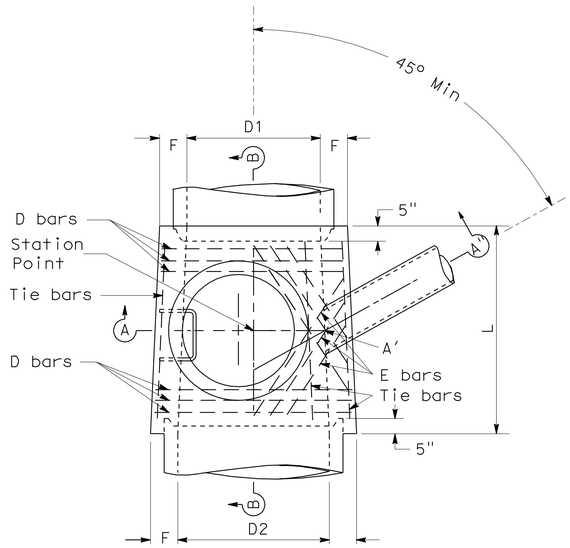

PLAN

(Shaft not shown)

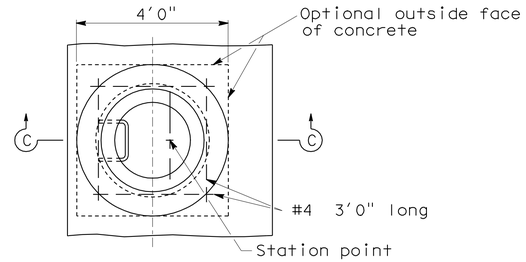

DETAIL N

(Shaft not shown)

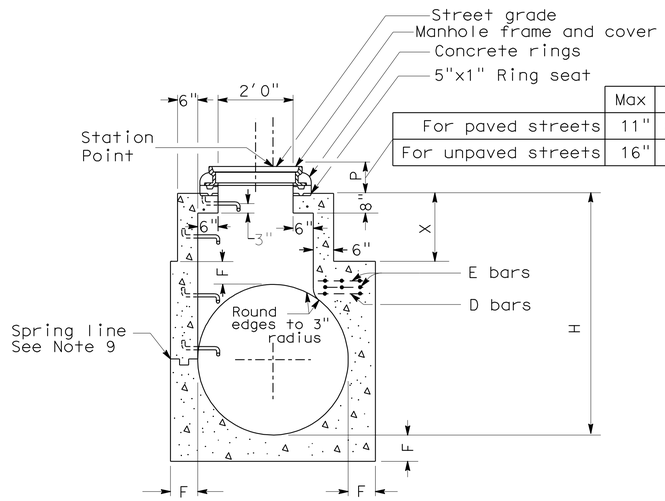

SECTION C-C

(See note 10)

	Max	Min
For paved streets	11"	8 1/2"
For unpaved streets	16"	15"

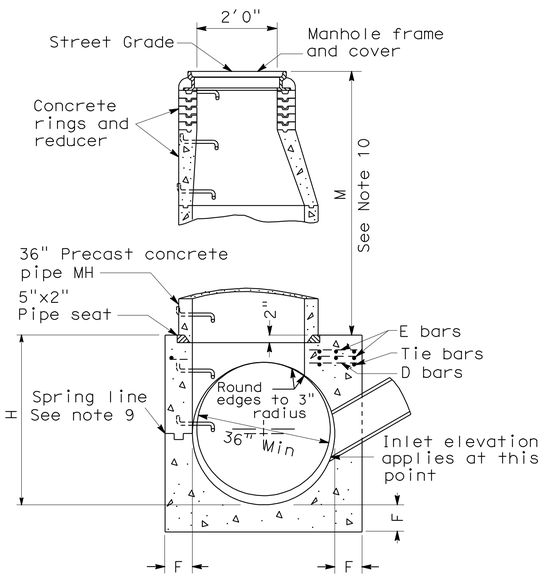

SECTION A-A'-A"

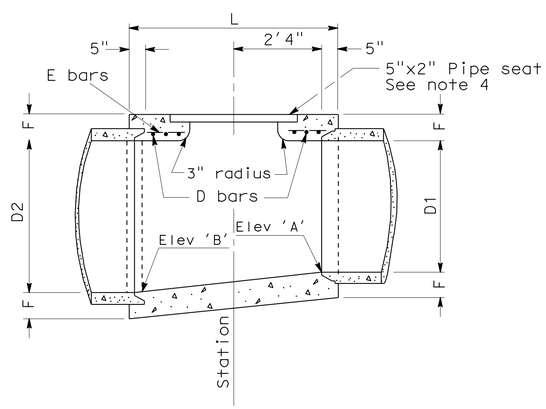

SECTION B-B

NOTES:

1. Values for Elev 'A', Elev 'B', 'H', 'L', 'M' or 'P' and 'X' are shown on the drainage plan.
2. Center of manhole shaft shall be located over centerline of storm drain when diameter 'D1' is 48" or less, in which case place E bar symmetrically around shaft at 45° with centerline.
3. Length 'L' shall be 5'-6" unless shown otherwise on drainage plan.
4. Thickness of 'F' shall vary when necessary to provide level pipeseat, but shall not be less than tabular values for 'F' shown on this plan.
5. Reinforcing steel shall be 1 1/2" clear from face of concrete unless shown otherwise. Sizes and lengths are shown in table below.
6. Unless otherwise shown, steps shall be placed 12" on centers. The lowest step shall be not more than 16" above the ledge at side of manhole floor.
7. Rings, reducer, and pipe for access shaft shall be seated in 1:2 cement mortar and neatly pointed or wiped inside the shaft.
8. Floor of manhole shall be steel-troweled to spring line.
9. Body of manhole shall be poured in one continous operation, except that the contractor shall have the option of placing at the spring line a construction joint with a longitudinal keyway.
10. Section C-C: When depth of manhole from street grade to top of box is less than 2'-10 1/2" for paved streets or 3'-6" for unpaved streets, construct monolithic shaft as per section. When diameter 'D' is 48" or less, center of shaft shall be located as per note 2.
11. Manhole frame and cover per Standard Plan B7-11 detail 'U45'.
12. Step detail per Standard Plans D74C.
13. D bars shall be placed 3" C-C. E bars shall be spaced 4" C-C. Tie bars shall be #3 spaced 18" C-C or less.
14. When 'L' greater than 5'-6" is specified on drainage plan, continue D bars at 6" C-C.
15. Lengths shown in table are for longest bars. Where shorter bars are required, bend or cut to meet field requirements.

TABLE OF VALUES FOR F	
D2	F
36"	6 1/2"
39"	7"
42"	7 1/2"
45"	7 3/4"
48"	8"
51"	8 1/2"
54"	9"
57"	9 1/4"
60"	9 1/2"
63"	10"
66"	10 1/4"
69"	10 3/4"
72"	11"
78"	11 3/4"
84"	12 1/2"
90"	13 1/4"
96"	14"

STEEL TABLE						
D bars				E bars		
D2	No Req	Size	Length	No Req	Size	Length
36"	6	#4	3'-10"	4	#4	2'-9"
39"	6	"	4'-2"	4	"	2'-11"
42"	6	#5	4'-6"	4	"	3'-2"
45"	6	"	4'-10"	4	"	3'-5"
48"	6	"	5'-1"	4	"	3'-7"
51"	6	"	5'-5"	6	"	4'-9"
54"	6	"	5'-9"	6	"	5'-1"
57"	6	"	6'-1"	6	"	5'-6"
60"	6	"	6'-4"	6	"	5'-11"
63"	6	"	6'-8"	6	"	6'-3"
66"	6	"	7'-0"	8	"	6'-8"
69"	6	"	7'-4"	8	"	6'-8"
72"	6	"	7'-7"	8	"	6'-8"
78"	6	"	8'-3"	8	"	6'-8"
84"	6	"	8'-10"	10	"	6'-8"
90"	6	#6	9'-6"	10	"	6'-8"
96"	6	"	10'-1"	10	"	6'-8"

MANHOLE NO 2 (MH NO 2)

DRAINAGE DETAILS

NO SCALE

DD-1

STATE OF CALIFORNIA - DEPARTMENT OF TRANSPORTATION
Caltrans
HYDRAULICS

FUNCTIONAL SUPERVISOR: DAVE BHALLA
CALCULATED-DESIGNED BY: PAUL FONG
CHECKED BY: PRAKASH YADAV
REVISED BY
DATE REVISED

LAST REVISION
DATE PLOTTED => 26-APR-2011
TIME PLOTTED => 08:03

Dist	COUNTY	ROUTE	POST MILES TOTAL PROJECT	SHEET No.	TOTAL SHEETS
07	LA	5	R46.3/R50.0	115	456

REGISTERED CIVIL ENGINEER Paul Fong 01-18-11 DATE

4-25-11
PLANS APPROVAL DATE

REGISTERED PROFESSIONAL ENGINEER PAUL FONG No. C67053 Exp. 9/30/12 CIVIL STATE OF CALIFORNIA

THE STATE OF CALIFORNIA OR ITS OFFICERS OR AGENTS SHALL NOT BE RESPONSIBLE FOR THE ACCURACY OR COMPLETENESS OF SCANNED COPIES OF THIS PLAN SHEET.

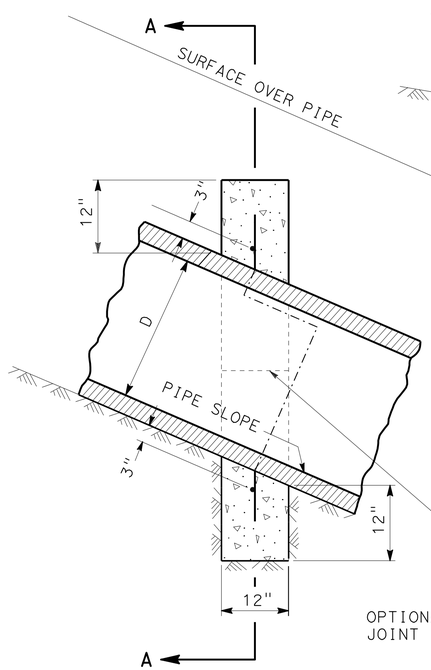

SECTION B-B

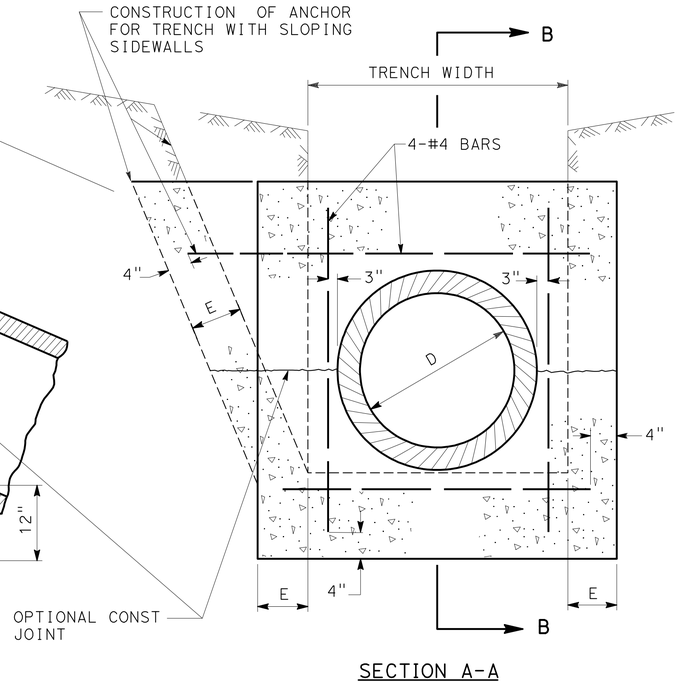

SECTION A-A

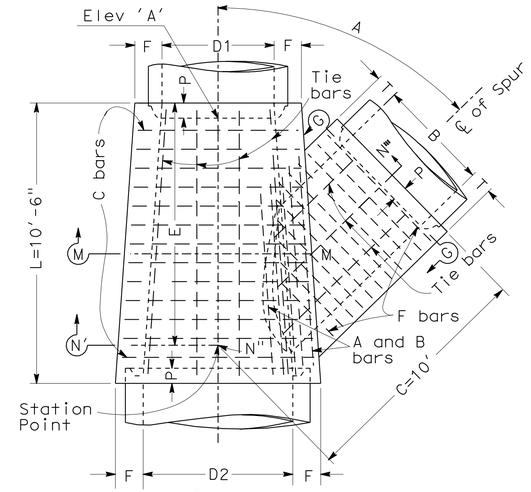

PLAN

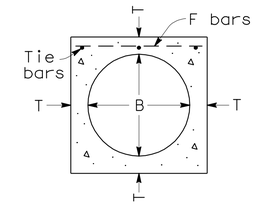

SECTION G-G

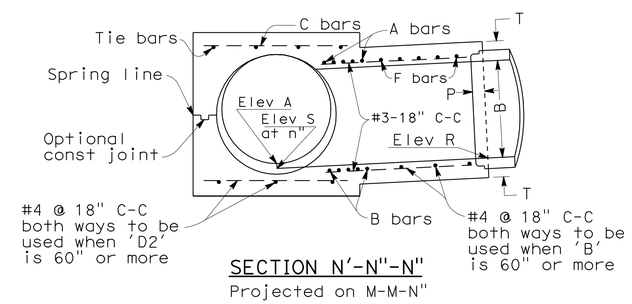

SECTION N'-N"-N"
Projected on M-M-N"

TABLE OF VALUES FOR F AND T			
D2 or B	F or T	D2 or B	F or T
12"	4"	63"	10"
15"	4 1/4"	66"	10 1/4"
18"	4 1/2"	69"	10 3/4"
21"	5"	72"	11"
24"	5 1/4"	78"	11 3/4"
27"	5 1/2"	84"	12 1/2"
30"	6"	90"	13 1/4"
33"	6 1/4"	96"	14"
36"	6 1/2"	102"	15 1/2"
39"	7"	108"	16"
42"	7 1/2"	114"	16 1/2"
45"	7 3/4"	120"	17"
48"	8"	126"	17"
51"	8 1/2"	132"	17 1/2"
54"	9"	138"	17 1/2"
57"	9 1/4"	144"	18"
60"	9 1/2"		

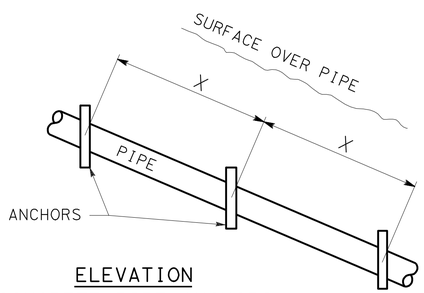

ELEVATION
CONCRETE PIPE ANCHORS

PIPE SLOPE	X DISTANCE
1:1	12'
1½:1	14'
2:1	16'
2½:1	18'
3:1	20'

NOTES

1- PIPE ANCHORS REQUIRED ON ALL SLOPES OF 3:1 OR STEEPER.
2- ALL REINFORCING STEEL SHALL BE NUMBER 4 BARS.
3- "E" SHALL BE 8 INCHES UNLESS OTHERWISE SPECIFIED.

CONCRETE PIPE ANCHORS

NOTES:

1. VALUES for 'A', 'B', 'C', 'D1', 'D2', 'E', 'L', Elev 'A', Elev 'B', Elev 'R' and Elev 'S' are shown on Drainage Plans.
2. EMBEDMENT 'P' shall be 5" for pipe diameters 12" to 96" and 8" for pipe diameters 102" to 144".
3. FLOOR of structure shall be steel troweled to spring line.
4. REINFORCEMENT STEEL shall be 1½" clear from face of concrete unless otherwise shown. A and B bars need not be longer than the outside diagonal width of the lateral spur.
5. STEEL SCHEDULE:

Dia B or D2	A or B bars	C or F bars
12" to 39"	#5 @ 3"	#4 @ 6"
42" to 84"	#6 @ 3"	#5 @ 6"
90" to 144"	#7 @ 3"	#6 @ 6"
Tie bars - #3 @ 18" C-C		

6. ELEVATION 'S' applies at center of main line on prolongation of invert of spur.
7. JUNCTION STRUCTURE shall be poured in one continuous operation, except that the Contractor shall have the option of placing at the spring line a construction joint with a longitudinal keyway.
8. LATERALS - Where laterals enter both sides of structure, they shall be designated on the Drainage Plan as a right or left, facing in the direction of stationing.

JUNCTION STRUCTURE NO 2 (JS 2)

DRAINAGE DETAILS

NO SCALE

DD-2

STATE OF CALIFORNIA - DEPARTMENT OF TRANSPORTATION
Caltrans HYDRAULICS
FUNCTIONAL SUPERVISOR DAVE BHALLA
CALCULATED-DESIGNED BY PAUL FONG
CHECKED BY PRAKASH YADAV
REVISED BY
DATE REVISED

LAST REVISION DATE PLOTTED => 26-APR-2011 TIME PLOTTED => 08:03

Dist	COUNTY	ROUTE	POST MILES TOTAL PROJECT	SHEET No.	TOTAL SHEETS
07	LA	5	R46.3/R50.0	116	456

Paul Fong 01-18-11
REGISTERED CIVIL ENGINEER DATE

4-25-11
PLANS APPROVAL DATE

REGISTERED PROFESSIONAL ENGINEER
PAUL FONG
No. C67053
Exp. 9/30/12
CIVIL
STATE OF CALIFORNIA

THE STATE OF CALIFORNIA OR ITS OFFICERS OR AGENTS SHALL NOT BE RESPONSIBLE FOR THE ACCURACY OR COMPLETENESS OF SCANNED COPIES OF THIS PLAN SHEET.

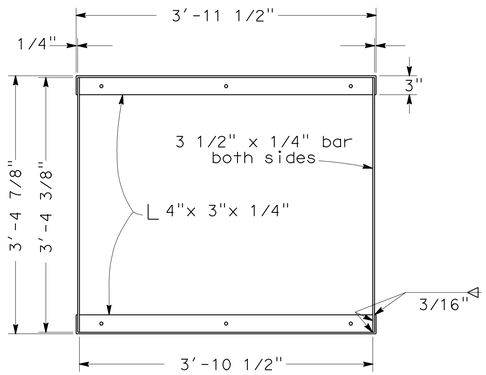

GRATE FRAME DETAIL

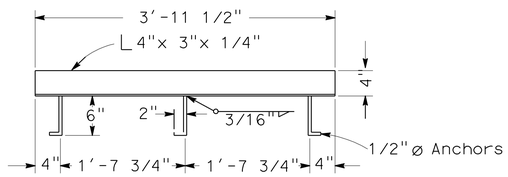

ANCHOR PLACEMENT DETAIL

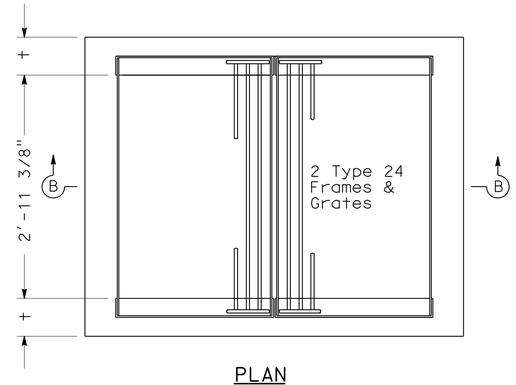

PLAN

For grate, frame and anchor placement details see Standard Plans RSP D77A and RSP D77B.

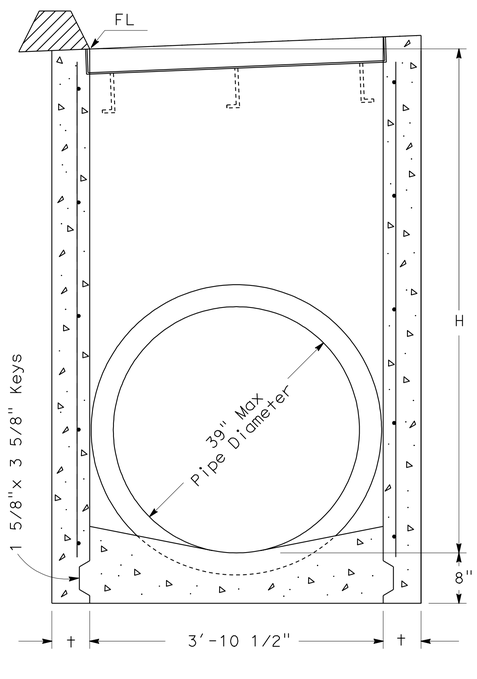

SECTION A-A

(For pipe diameters 39" or less)

GD-1

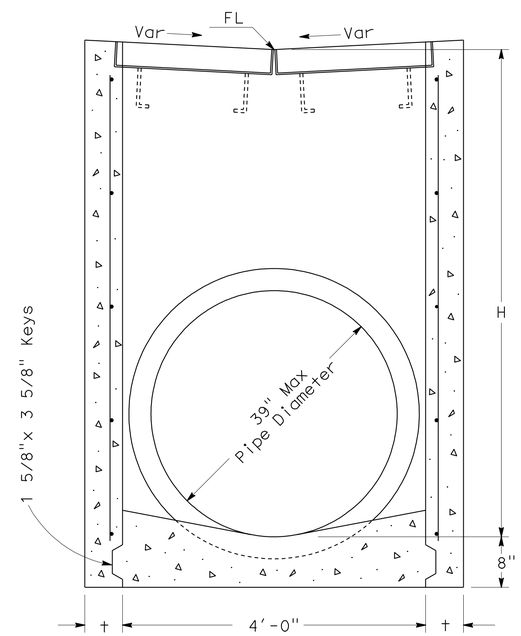

SECTION B-B

(For pipe diameters 39" or less)

GD-3

DRAINAGE INLETS

NOTES:

1. 'H' is the difference in elevation between the outlet pipe flow line and the flow line of the grates.
2. Steps - None required when 'H' is 3'-6" or less. Install one step 16"± above floor when 'H' is more than 3'-6" and less than 5'-0". Where 'H' is more than 5'-0" steps shall be evenly spaced @ 12"± intervals from 16"± above floor to within 12"± of the top of the box. Place steps in wall without pipe openings. See Standard Plan D74C for step detail.
3. Pipe(s) can be placed in any wall.
4. Reinforcing steel not required in walls when H=6' or less.
5. Reinforcing steel in walls shall be #4 bars @ 18"± centers placed 1 1/2" clear to inside of box.

MISCELLANEOUS IRON & STEEL

Inlet Type	Grate Type	Weight
GD-1 & GD-2	24 - 12	580
	24 - 10C	379
	24 - 10S	433
	24 - 12X	453
	24 - 13	351
GD-3	24 - 12	652

H	t
8'-0" or less	6"
8'1" to 20'- 0"	8"

DRAINAGE DETAILS

NO SCALE

DD-3

STATE OF CALIFORNIA - DEPARTMENT OF TRANSPORTATION
Caltrans
HYDRAULICS

FUNCTIONAL SUPERVISOR: DAVE BHALLA
CALCULATED-DESIGNED BY: PAUL FONG
CHECKED BY: PRAKASH YADAV
REVISED BY
DATE REVISED

LAST REVISION
DATE PLOTTED => 26-APR-2011
TIME PLOTTED => 07:29

Dist	COUNTY	ROUTE	POST MILES TOTAL PROJECT	SHEET No.	TOTAL SHEETS
07	LA	5	R46.3/R50.0	117	456

Paul Fong 01-18-11
REGISTERED CIVIL ENGINEER DATE

4-25-11
PLANS APPROVAL DATE

REGISTERED PROFESSIONAL ENGINEER
PAUL FONG
No. C67053
Exp. 9/30/12
CIVIL
STATE OF CALIFORNIA

THE STATE OF CALIFORNIA OR ITS OFFICERS OR AGENTS SHALL NOT BE RESPONSIBLE FOR THE ACCURACY OR COMPLETENESS OF SCANNED COPIES OF THIS PLAN SHEET.

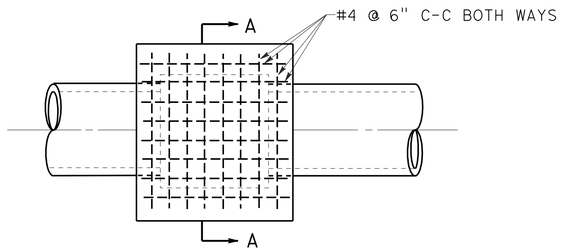

PLAN
CAP INLET DETAIL

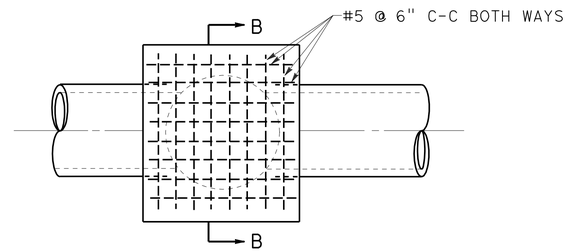

PLAN
CAP MANHOLE DETAIL

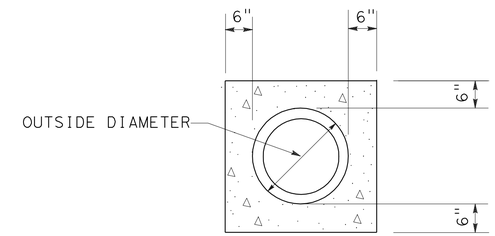

MINOR CONCRETE (BACKFILL)

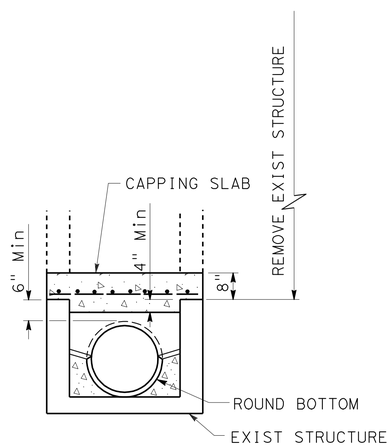

SECTION A-A

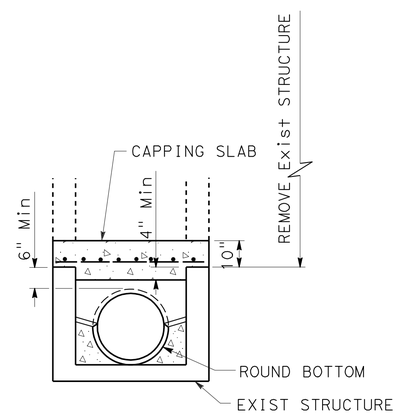

SECTION B-B

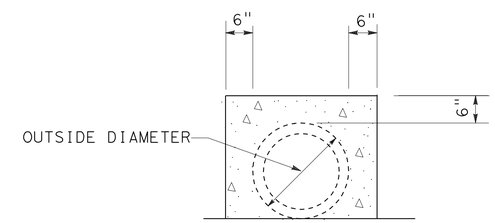

MINOR CONCRETE (BACKFILL)
(EXISTING PIPE ENCASEMENT)

DRAINAGE DETAILS

NO SCALE

DD-4

STATE OF CALIFORNIA - DEPARTMENT OF TRANSPORTATION
Caltrans
HYDRAULICS

CALCULATED-DESIGNED BY: PAUL FONG
CHECKED BY: PRAKASH YADAV
REVISED BY
DATE REVISED
DAVE BHALLA

LAST REVISION
DATE PLOTTED => 26-APR-2011
TIME PLOTTED => 07:29

Dist	COUNTY	ROUTE	POST MILES TOTAL PROJECT	SHEET No.	TOTAL SHEETS
07	LA	5	R46.3/R50.0	118	456

Paul Fong 01-18-11
REGISTERED CIVIL ENGINEER DATE

4-25-11
PLANS APPROVAL DATE

REGISTERED PROFESSIONAL ENGINEER PAUL FONG No. C67053 Exp. 9/30/12 CIVIL STATE OF CALIFORNIA

THE STATE OF CALIFORNIA OR ITS OFFICERS OR AGENTS SHALL NOT BE RESPONSIBLE FOR THE ACCURACY OR COMPLETENESS OF SCANNED COPIES OF THIS PLAN SHEET.

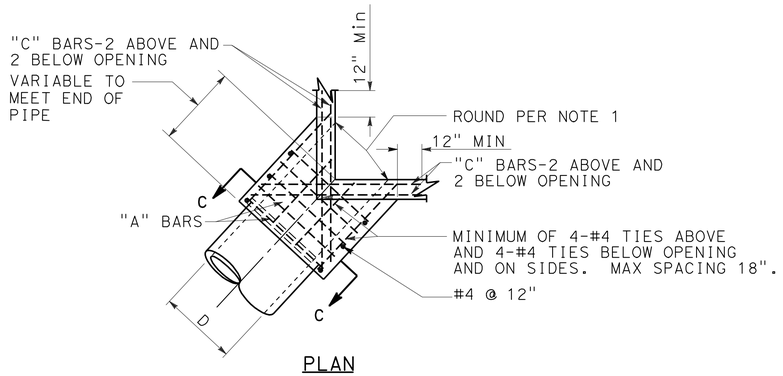

PLAN

CORNER CONNECTION

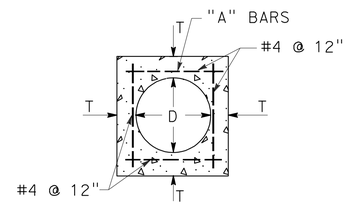

SECTION C-C

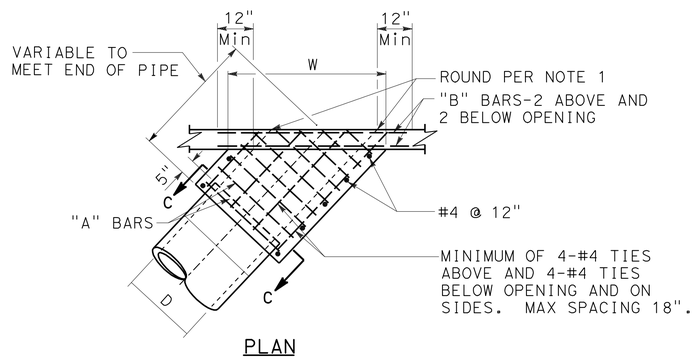

PLAN

SIDE CONNECTION

D	T	"A"	"B"-"C"
12"	4-½"	#4 @ 6"	#5
15"	4-½"		
18"	5"		
21"	5-½"		
24"	6"		
27"	6-½"		
30"	7"		
33"	7"		
36"	7-½"		
39"	8"		
42"	8"		
45"	8"	#5 @ 6"	#6
48"	8"		
51"	8"		
54"	8"		
57"	10"		
60"	10"		
63"	10"		
66"	11"		
69"	11"		
72"	11"		

NOTES:

1. ROUND EDGE OF OUTLET TO 3" RADIUS.
2. REINFORCEMENT SHALL BE 1½" CLEAR FROM THE FACE OF CONCRETE.
3. IN CONNECTING TO AN EXISTING STRUCTURE BREAK OUT PORTIONS OF THE EXISTING STRUCTURE SIX INCHES OUTSIDE ITS INTERSECTION WITH THE NEW CONNECTION. BEND ENDS OF #4 BARS OVER CONNECTION OPENING AS REQUIRED.

MONOLITHIC CONNECTION

FOR PIPES 12" TO 72" INCLUSIVE

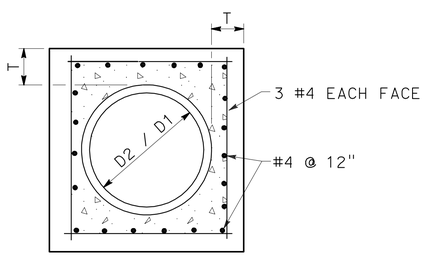

SECTION B-B

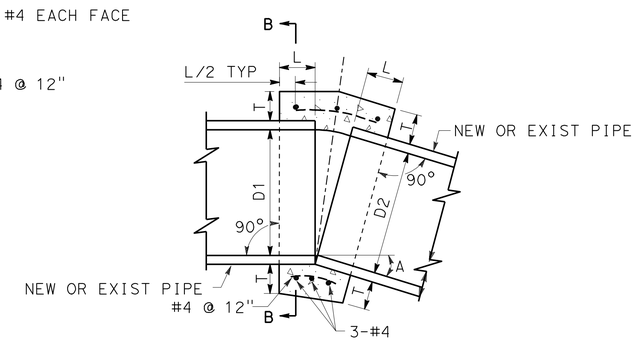

CONCRETE COLLAR

D	L	T
12"	1.0'	4"
18"	1.0'	5"
24"	1.0'	6"
36"	1.5'	8"
48"	1.5'	10"
54"	1.5'	10"
60"	1.75'	11"
66"	1.75'	11"
72"	2.0'	12"

NOTES:

1. WHERE PIPES OF DIFFERENT DIAMETERS ARE JOINED WITH A CONCRETE COLLAR, `L' AND `T' SHALL BE THOSE OF THE LARGER PIPE. D=D1 OR D2, WHICHEVER IS GREATER.
2. FOR PIPE SIZE NOT LISTED USE NEXT SIZE LARGER.
3. OMIT REINFORCING ON PIPES 24" AND LESS IN DIAMETER AND ON ALL PIPES WHERE ANGLE A IS LESS THAN 10°.
4. JOIN PIPES AT INVERTS.
5. REINFORCEMENT SHALL BE PLACED 1½" CLEAR FROM OUTSIDE DIAMETER OF PIPE.

DRAINAGE DETAILS

NO SCALE

DD-5

STATE OF CALIFORNIA - DEPARTMENT OF TRANSPORTATION
Caltrans
HYDRAULICS
FUNCTIONAL SUPERVISOR: DAVE BHALLA
CALCULATED-DESIGNED BY: PAUL FONG
CHECKED BY: PRAKASH YADAV
REVISED BY
DATE REVISED

LAST REVISION
DATE PLOTTED => 26-APR-2011
TIME PLOTTED => 07:29

Dist	COUNTY	ROUTE	POST MILES TOTAL PROJECT	SHEET No.	TOTAL SHEETS
07	LA	5	R46.3/R50.0	119	456

Paul Fong 01-18-11
REGISTERED CIVIL ENGINEER DATE

4-25-11
PLANS APPROVAL DATE

REGISTERED PROFESSIONAL ENGINEER
PAUL FONG
No. C67053
Exp. 9/30/12
CIVIL
STATE OF CALIFORNIA

THE STATE OF CALIFORNIA OR ITS OFFICERS OR AGENTS SHALL NOT BE RESPONSIBLE FOR THE ACCURACY OR COMPLETENESS OF SCANNED COPIES OF THIS PLAN SHEET.

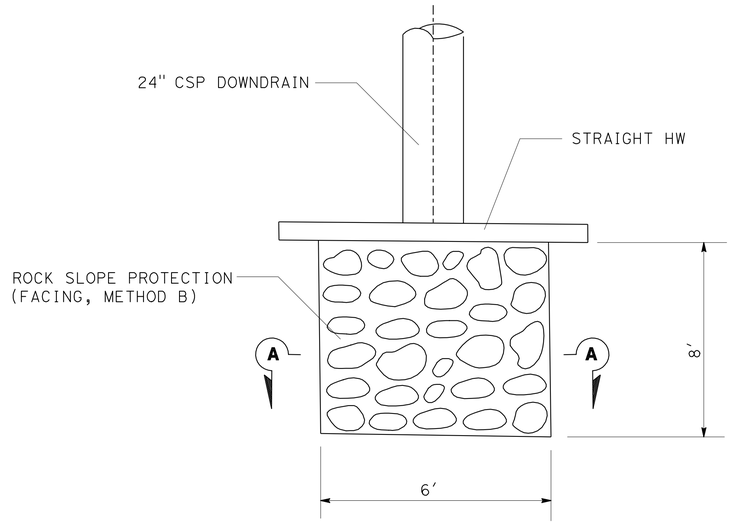

PLAN

DRAINAGE SYSTEM 13 16

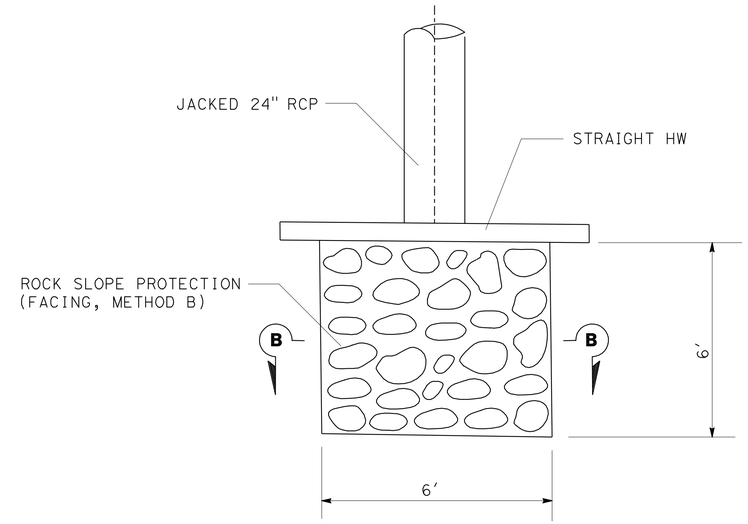

PLAN

DRAINAGE SYSTEM 36

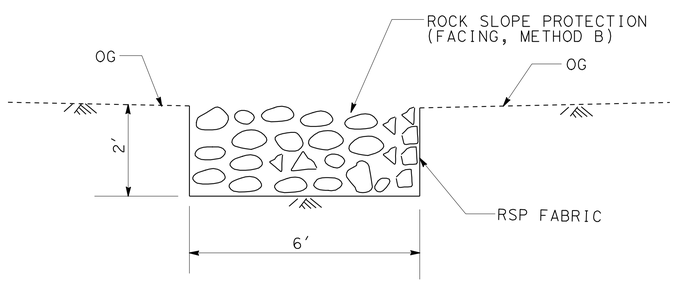

SECTION A-A

ROCK SLOPE PROTECTION DETAIL
(FACING, METHOD B)

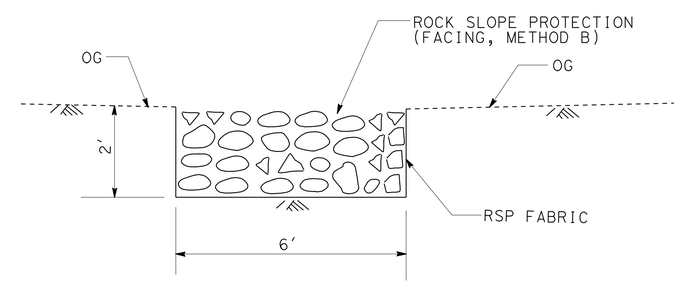

SECTION B-B

ROCK SLOPE PROTECTION DETAIL
(FACING, METHOD B)

DRAINAGE DETAILS

NO SCALE

DD-6

STATE OF CALIFORNIA - DEPARTMENT OF TRANSPORTATION
Caltrans
HYDRAULICS

FUNCTIONAL SUPERVISOR: DAVE BHALLA
CALCULATED-DESIGNED BY: PAUL FONG
CHECKED BY: PRAKASH YADAV
REVISED BY
DATE REVISED

LAST REVISION
DATE PLOTTED => 26-APR-2011
TIME PLOTTED => 07:29

Dist	COUNTY	ROUTE	POST MILES TOTAL PROJECT	SHEET No.	TOTAL SHEETS
07	LA	5	R46.3/R50.0	120	456

Paul Fong 01-18-11
REGISTERED CIVIL ENGINEER DATE

4-25-11
PLANS APPROVAL DATE

REGISTERED PROFESSIONAL ENGINEER
PAUL FONG
No. C67053
Exp. 9/30/12
CIVIL
STATE OF CALIFORNIA

THE STATE OF CALIFORNIA OR ITS OFFICERS OR AGENTS SHALL NOT BE RESPONSIBLE FOR THE ACCURACY OR COMPLETENESS OF SCANNED COPIES OF THIS PLAN SHEET.

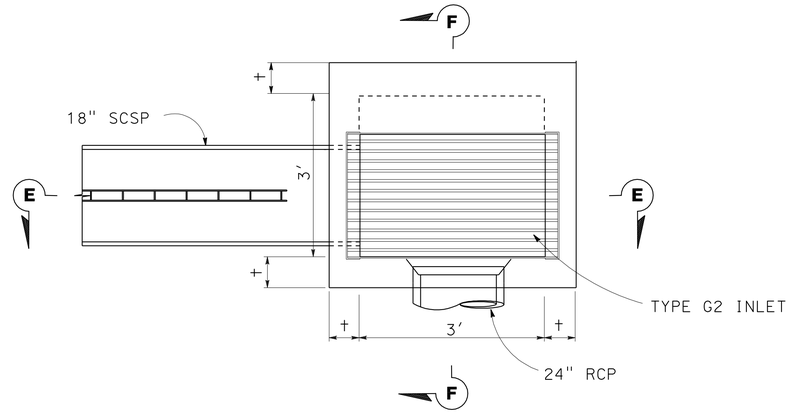

PLAN

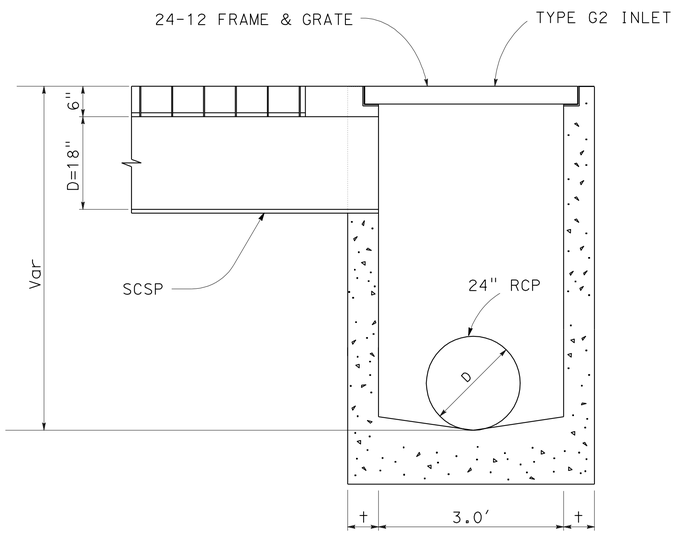

SECTION E-E

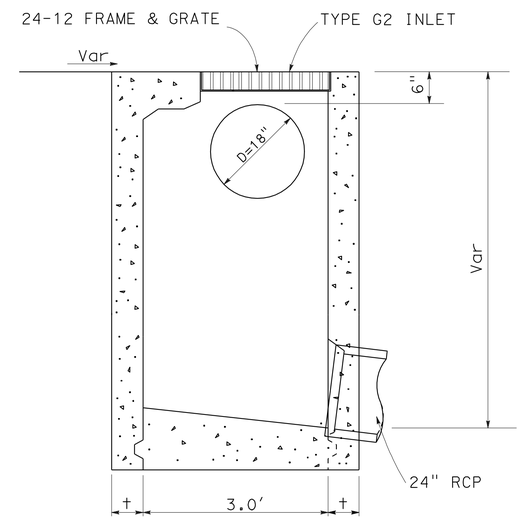

SECTION F-F

MODIFIED SCSP CONNECTION
TO TYPE G2 INLET STRUCTURES

DRAINAGE DETAILS

NO SCALE

DD-7

STATE OF CALIFORNIA - DEPARTMENT OF TRANSPORTATION
Caltrans
HYDRAULICS
FUNCTIONAL SUPERVISOR: DAVE BHALLA
CALCULATED-DESIGNED BY: PAUL FONG
CHECKED BY: PRAKASH YADAV
REVISED BY
DATE REVISED

LAST REVISION
DATE PLOTTED => 26-APR-2011
TIME PLOTTED => 07:29

Dist	COUNTY	ROUTE	POST MILES TOTAL PROJECT	SHEET No.	TOTAL SHEETS
07	LA	5	R46.3/R50.0	121	456

Paul Fong 01-18-11
REGISTERED CIVIL ENGINEER DATE

4-25-11
PLANS APPROVAL DATE

REGISTERED PROFESSIONAL ENGINEER PAUL FONG No. C67053 Exp. 9/30/12 CIVIL STATE OF CALIFORNIA

THE STATE OF CALIFORNIA OR ITS OFFICERS OR AGENTS SHALL NOT BE RESPONSIBLE FOR THE ACCURACY OR COMPLETENESS OF SCANNED COPIES OF THIS PLAN SHEET.

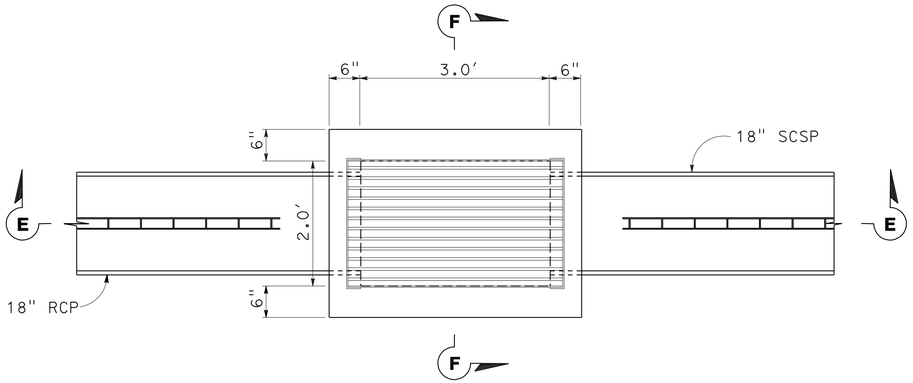

PLAN

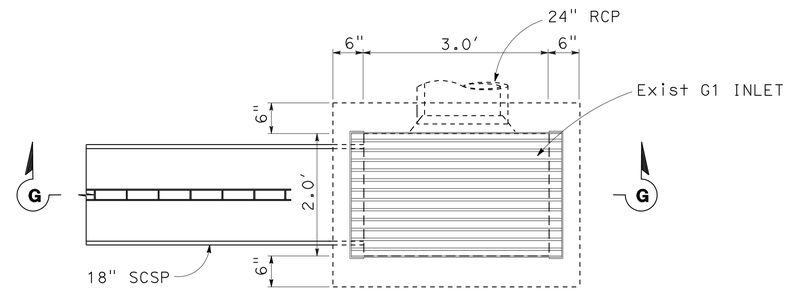

PLAN

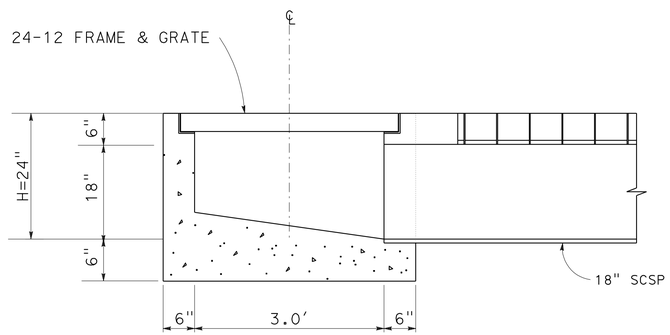

SECTION E-E

BEGINNING CLEANOUT
CASE 1

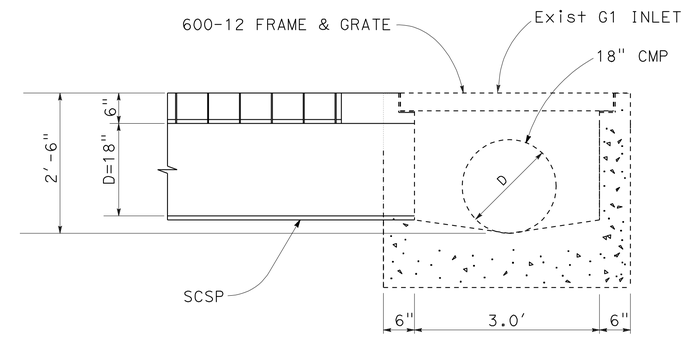

SECTION G-G

MODIFIED SCSP CONNECTION TO EXISTING TYPE G1 INLET STRUCTURES
CASE 4

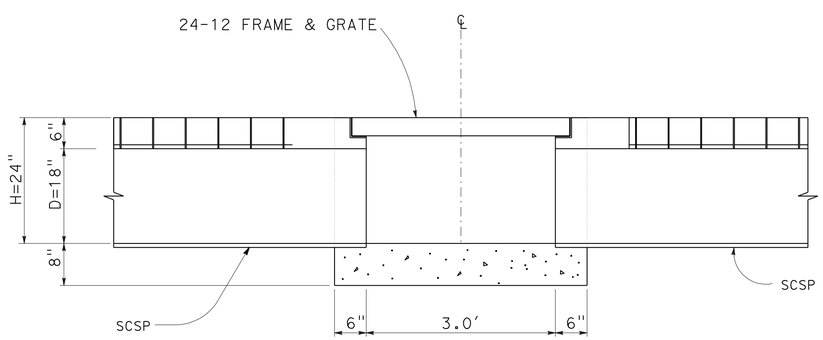

SECTION E-E

INTERMEDIATE CLEANOUT
CASE 2

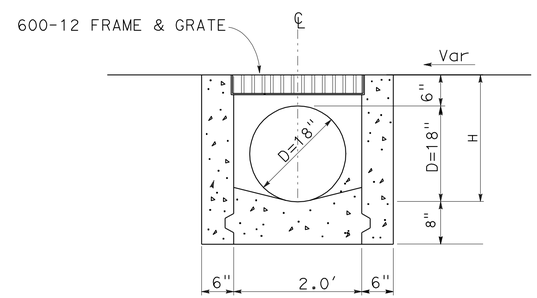

SECTION F-F

INTERMEDIATE CLEANOUT
CASE 3

CL1 INLET

DRAINAGE DETAILS

NO SCALE

DD-8

STATE OF CALIFORNIA - DEPARTMENT OF TRANSPORTATION
Caltrans®
HYDRAULICS
FUNCTIONAL SUPERVISOR: DAVE BHALLA
CALCULATED-DESIGNED BY: PAUL FONG
CHECKED BY: PRAKASH YADAV
REVISED BY
DATE REVISED

LAST REVISION
DATE PLOTTED => 26-APR-2011
TIME PLOTTED => 07:30

Dist	COUNTY	ROUTE	POST MILES TOTAL PROJECT	SHEET No.	TOTAL SHEETS
07	LA	5	R46.3/R50.0	122	456

Paul Fong 01-18-11
REGISTERED CIVIL ENGINEER DATE

4-25-11
PLANS APPROVAL DATE

REGISTERED PROFESSIONAL ENGINEER
PAUL FONG
No. C67053
Exp. 9/30/12
CIVIL
STATE OF CALIFORNIA

THE STATE OF CALIFORNIA OR ITS OFFICERS OR AGENTS SHALL NOT BE RESPONSIBLE FOR THE ACCURACY OR COMPLETENESS OF SCANNED COPIES OF THIS PLAN SHEET.

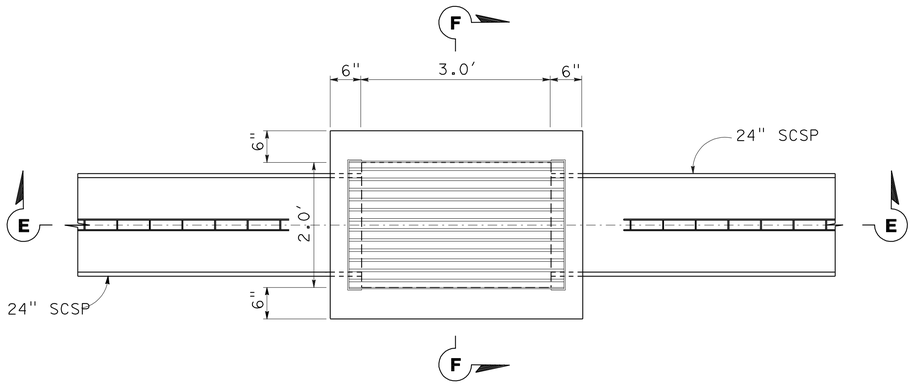

PLAN

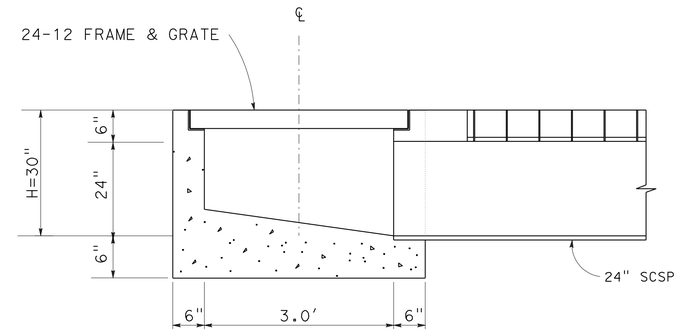

SECTION E-E

BEGINNING CLEANOUT
CASE 1

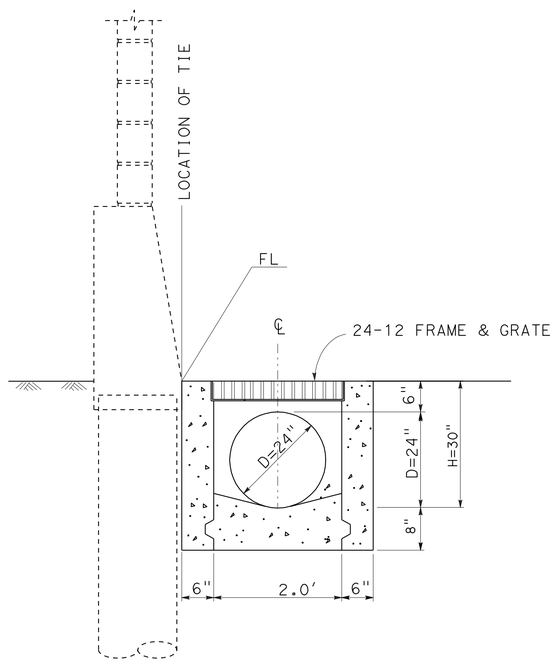

SECTION F-F

Exist SOUNDWALL ON CIDH PILE

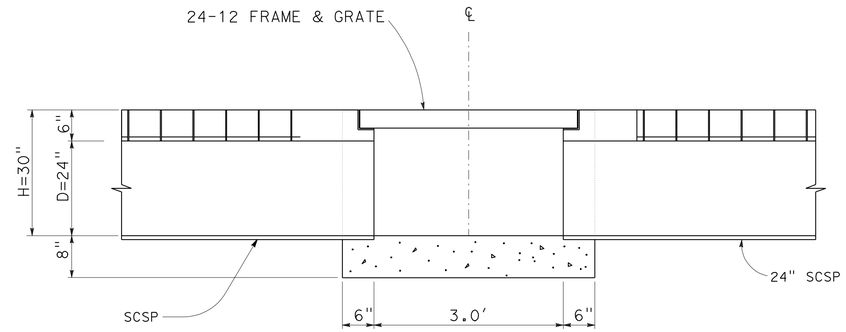

SECTION E-E

INTERMEDIATE CLEANOUT
CASE 2

CL1 INLET

DRAINAGE DETAILS

NO SCALE

DD-9

STATE OF CALIFORNIA - DEPARTMENT OF TRANSPORTATION
Caltrans
HYDRAULICS

FUNCTIONAL SUPERVISOR: DAVE BHALLA
CALCULATED-DESIGNED BY: PAUL FONG
CHECKED BY: PRAKASH YADAV
REVISED BY
DATE REVISED

LAST REVISION
DATE PLOTTED => 26-APR-2011
TIME PLOTTED => 07:30

Dist	COUNTY	ROUTE	POST MILES TOTAL PROJECT	SHEET No.	TOTAL SHEETS
07	LA	5	R46.3/R50.0	123	456

Paul Fong 01-18-11
REGISTERED CIVIL ENGINEER DATE

4-25-11
PLANS APPROVAL DATE

REGISTERED PROFESSIONAL ENGINEER
PAUL FONG
No. C67053
Exp. 9/30/12
CIVIL
STATE OF CALIFORNIA

THE STATE OF CALIFORNIA OR ITS OFFICERS OR AGENTS SHALL NOT BE RESPONSIBLE FOR THE ACCURACY OR COMPLETENESS OF SCANNED COPIES OF THIS PLAN SHEET.

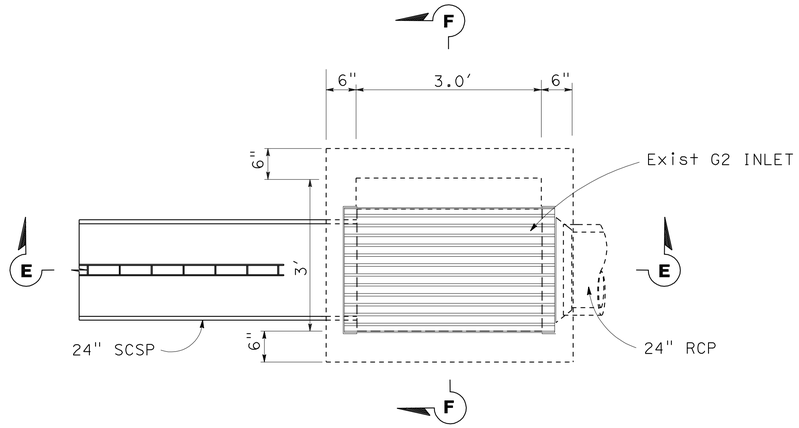

PLAN

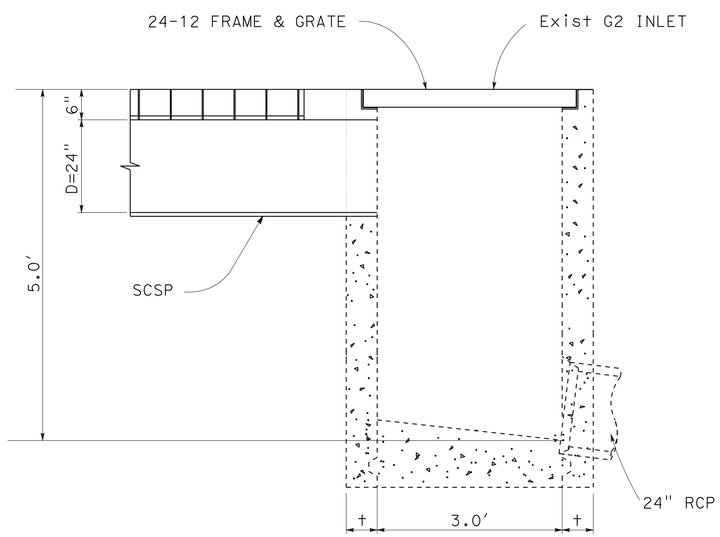

SECTION E-E

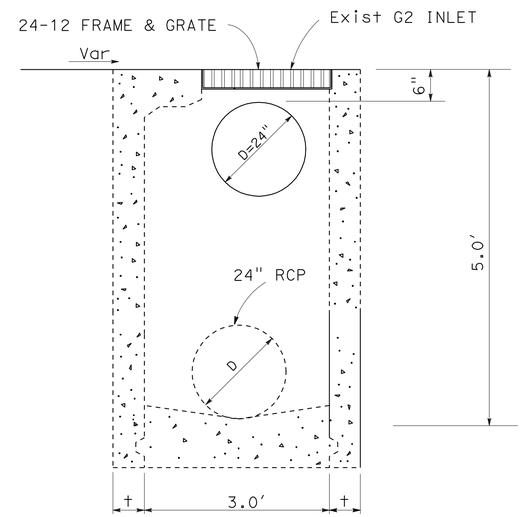

SECTION F-F

MODIFIED SCSP CONNECTION TO
EXISTING TYPE G2 INLET STRUCTURES
CASE 5

DRAINAGE DETAILS

NO SCALE

DD-10

STATE OF CALIFORNIA - DEPARTMENT OF TRANSPORTATION
Caltrans
HYDRAULICS

FUNCTIONAL SUPERVISOR: DAVE BHALLA
CALCULATED-DESIGNED BY: PAUL FONG
CHECKED BY: PRAKASH YADAV
REVISED BY
DATE REVISED

LAST REVISION
DATE PLOTTED => 26-APR-2011
TIME PLOTTED => 07:30

Dist	COUNTY	ROUTE	POST MILES TOTAL PROJECT	SHEET No.	TOTAL SHEETS
07	LA	5	R46.3/R50.0	124	456

Paul Fong 01-18-11
REGISTERED CIVIL ENGINEER DATE

4-25-11
PLANS APPROVAL DATE

REGISTERED PROFESSIONAL ENGINEER
PAUL FONG
No. C67053
Exp. 9/30/12
CIVIL
STATE OF CALIFORNIA

THE STATE OF CALIFORNIA OR ITS OFFICERS OR AGENTS SHALL NOT BE RESPONSIBLE FOR THE ACCURACY OR COMPLETENESS OF SCANNED COPIES OF THIS PLAN SHEET.

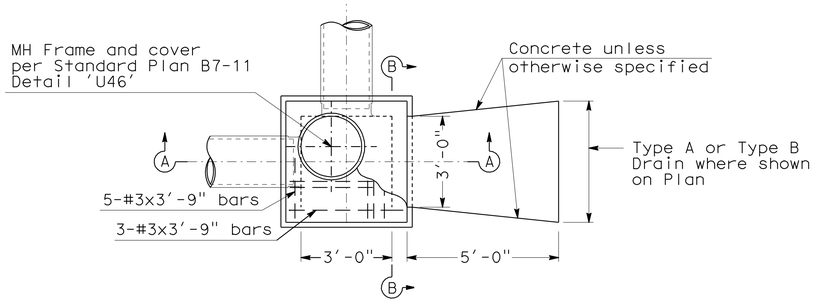

PLAN

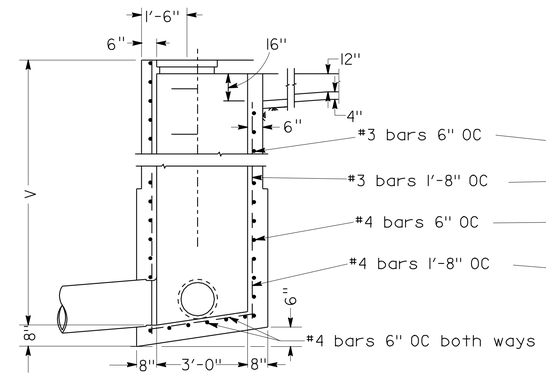

SECTION A-A

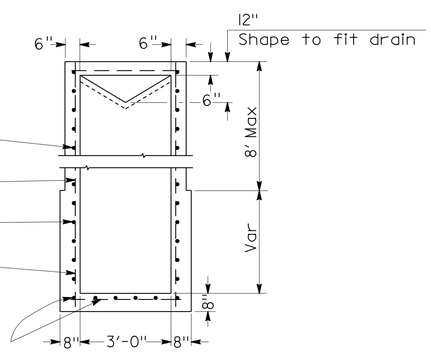

SECTION B-B

JUNCTION CHAMBER NO 3-C (JC 3-C)

NOTES:

1. CONNECTION pipes may be placed in any position around the walls provided they point in the proper direction and the position is otherwise consistent with the Drainage Plan.
2. EXPOSED SURFACE of the Junction Chamber shall conform in slope, grade, color, finish and scoring adjacent to the Junction Chamber. Where no sidewalk exists, the top shall be finished to conform to standard sidewalk slopeand finish, and scoring lines shall conform as nearly as possible to 20" squares.
3. FLOOR of chamber shall be given a steel-troweled finish and shall slope from all directions to outlet.
4. MANHOLE shall be placed in corner nearest outlet.
5. OUTLET pipe shall be connected to Junction Chamber with Monolithic Connection.
6. REINFORCING steel not required in walls when V=6' or less.
7. STEPS: None required where V=3'-6" or less.
   Install one step 16"± above floor when V is more than 3'-6" and less than 5'-0".
   Where V is more than 5'-0" steps shall be evenly spaced at 12"± intervals from 16"± above floor to within 12"± of the top of the box.

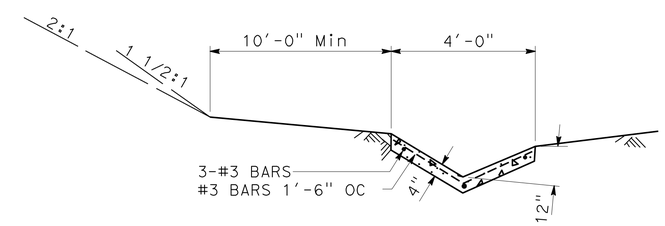

TYPE B DRAIN

DRAINAGE DETAILS

NO SCALE

DD-11

STATE OF CALIFORNIA - DEPARTMENT OF TRANSPORTATION
Caltrans
HYDRAULICS
FUNCTIONAL SUPERVISOR: DAVE BHALLA
CALCULATED-DESIGNED BY: PAUL FONG
CHECKED BY: PRAKASH YADAV
REVISED BY
DATE REVISED

LAST REVISION
DATE PLOTTED => 26-APR-2011
TIME PLOTTED => 07:30

Dist	COUNTY	ROUTE	POST MILES TOTAL PROJECT	SHEET No.	TOTAL SHEETS
07	LA	5	R46.3/R50.0	125	456

Paul Fong 01-18-11
REGISTERED CIVIL ENGINEER DATE

4-25-11
PLANS APPROVAL DATE

REGISTERED PROFESSIONAL ENGINEER
PAUL FONG
No. C67053
Exp. 9/30/12
CIVIL
STATE OF CALIFORNIA

THE STATE OF CALIFORNIA OR ITS OFFICERS OR AGENTS SHALL NOT BE RESPONSIBLE FOR THE ACCURACY OR COMPLETENESS OF SCANNED COPIES OF THIS PLAN SHEET.

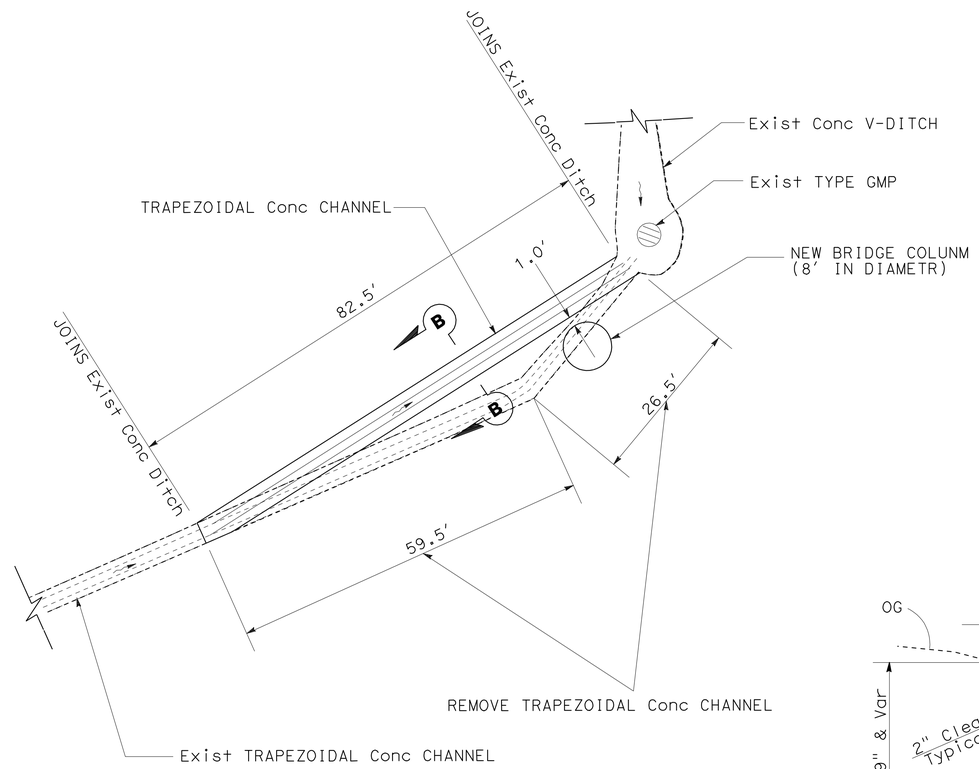

TRAPEZOIDAL CONCRETE CHANNEL PLAN

DRAINAGE SYSTEM 22

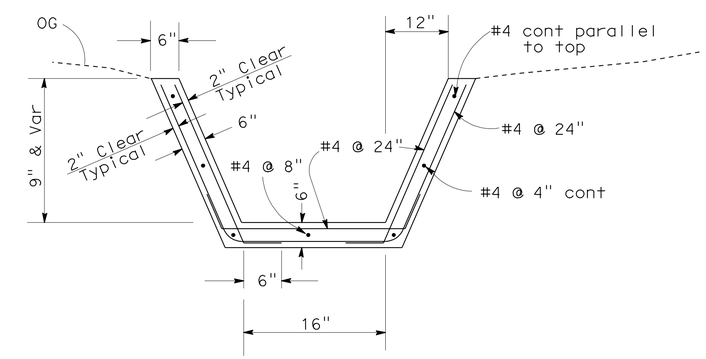

SECTION B-B

S = 2.7%
S = LONGITUDINAL SLOPE

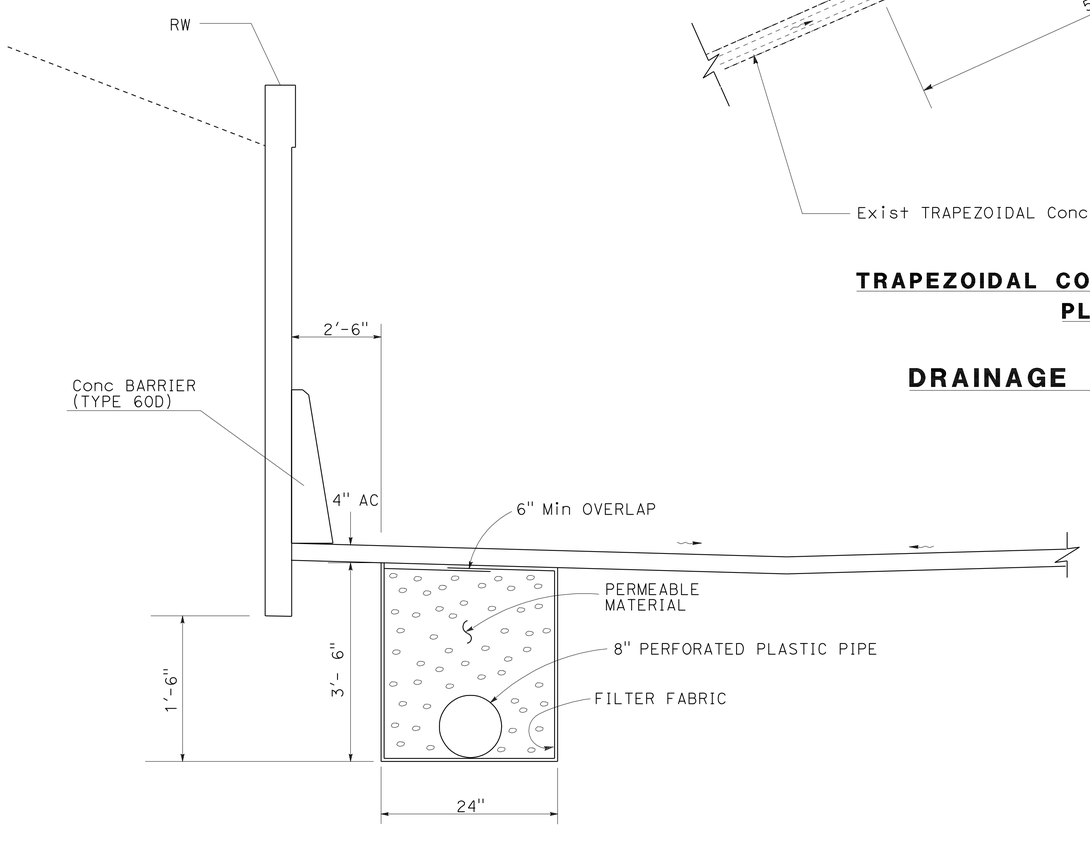

UNDERDRAIN DETAIL

DRAINAGE DETAILS

NO SCALE

DD-12

REVISED BY	DATE REVISED

CALCULATED-DESIGNED BY	CHECKED BY
PAUL FONG	PRAKASH YADAV

FUNCTIONAL SUPERVISOR: DAVE BHALLA

STATE OF CALIFORNIA - DEPARTMENT OF TRANSPORTATION
Caltrans®
HYDRAULICS

LAST REVISION
DATE PLOTTED => 26-APR-2011
TIME PLOTTED => 07:30

Dist	COUNTY	ROUTE	POST MILES TOTAL PROJECT	SHEET No.	TOTAL SHEETS
07	LA	5	R46.3/R50.0	126	456

Paul Fong 01-18-11
REGISTERED CIVIL ENGINEER DATE

4-25-11
PLANS APPROVAL DATE

REGISTERED PROFESSIONAL ENGINEER
PAUL FONG
No. C67053
Exp. 9/30/12
CIVIL
STATE OF CALIFORNIA

THE STATE OF CALIFORNIA OR ITS OFFICERS OR AGENTS SHALL NOT BE RESPONSIBLE FOR THE ACCURACY OR COMPLETENESS OF SCANNED COPIES OF THIS PLAN SHEET.

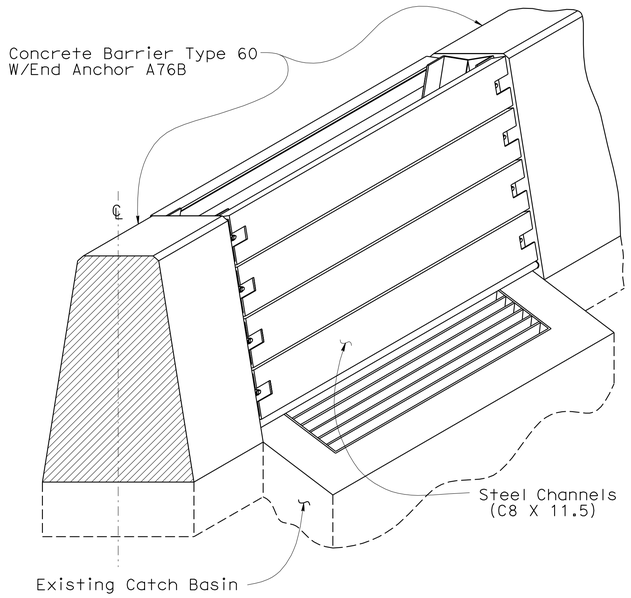

PICTORIAL VIEW

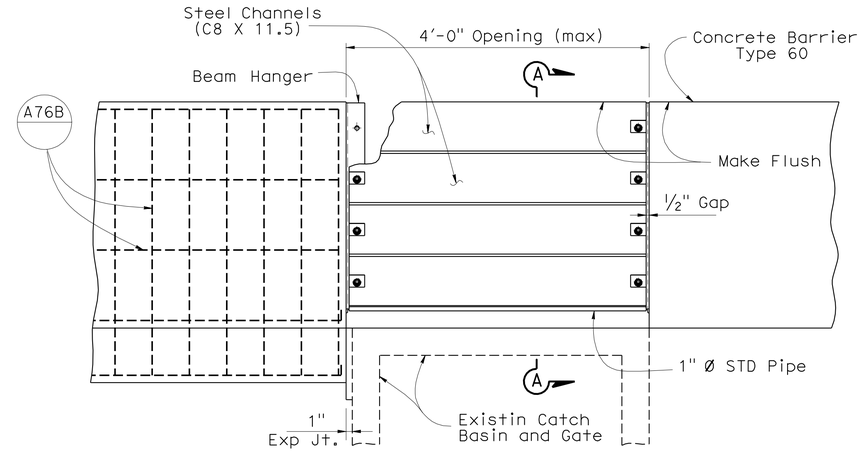

ELEVATION

NOTES:

1. All beams, hangers and connections are to conform to AISC standard shapes and sizes.
2. All parts shall be galvanized after fabrication.
3. Strict adherance to quality during construction is required to assure that flush fit requirements are met.
4. For details not shown see standard plan RSP A76A.

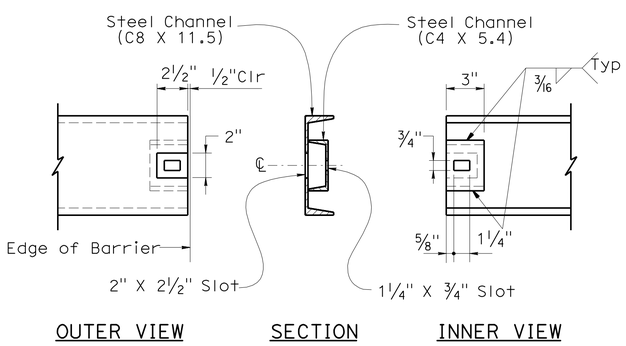

SLOT DETAIL

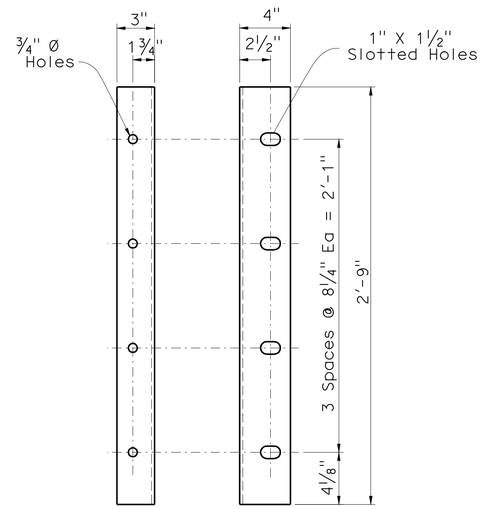

BEAM HANGER ANGLES

(L4 X 3 X 1/4)

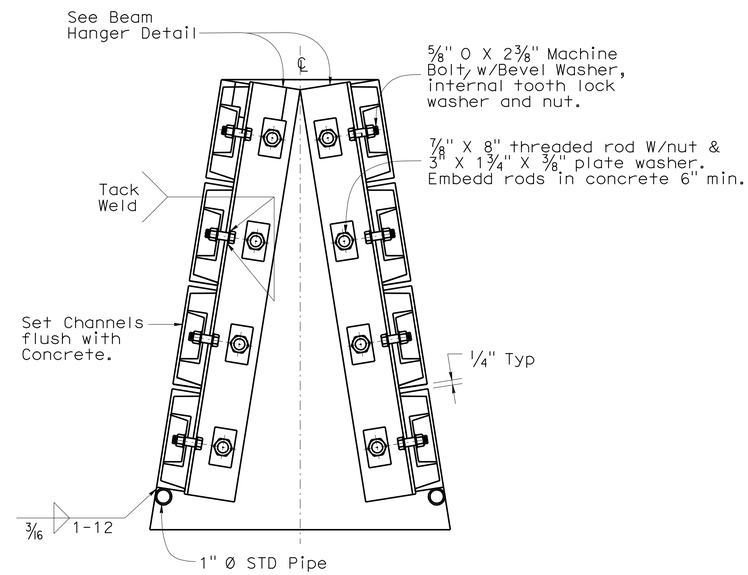

SECTION A-A

CONCRETE BARRIER TYPE 60 &
STEEL CHANNEL CLOSURE DETAILS

DRAINAGE DETAILS

NO SCALE

DD-13

STATE OF CALIFORNIA - DEPARTMENT OF TRANSPORTATION
Caltrans
HYDRAULICS

FUNCTIONAL SUPERVISOR: DAVE BHALLA
CALCULATED-DESIGNED BY: PAUL FONG
CHECKED BY: PRAKASH YADAV
REVISED BY
DATE REVISED

LAST REVISION
DATE PLOTTED => 26-APR-2011
TIME PLOTTED => 11:35

Dist	COUNTY	ROUTE	POST MILES TOTAL PROJECT	SHEET No.	TOTAL SHEETS
07	LA	5	R46.3/R50.0	127	456

Paul Fong 01-18-11
REGISTERED CIVIL ENGINEER DATE

4-25-11
PLANS APPROVAL DATE

REGISTERED PROFESSIONAL ENGINEER
PAUL FONG
No. C67053
Exp. 9/30/12
CIVIL
STATE OF CALIFORNIA

THE STATE OF CALIFORNIA OR ITS OFFICERS OR AGENTS SHALL NOT BE RESPONSIBLE FOR THE ACCURACY OR COMPLETENESS OF SCANNED COPIES OF THIS PLAN SHEET.

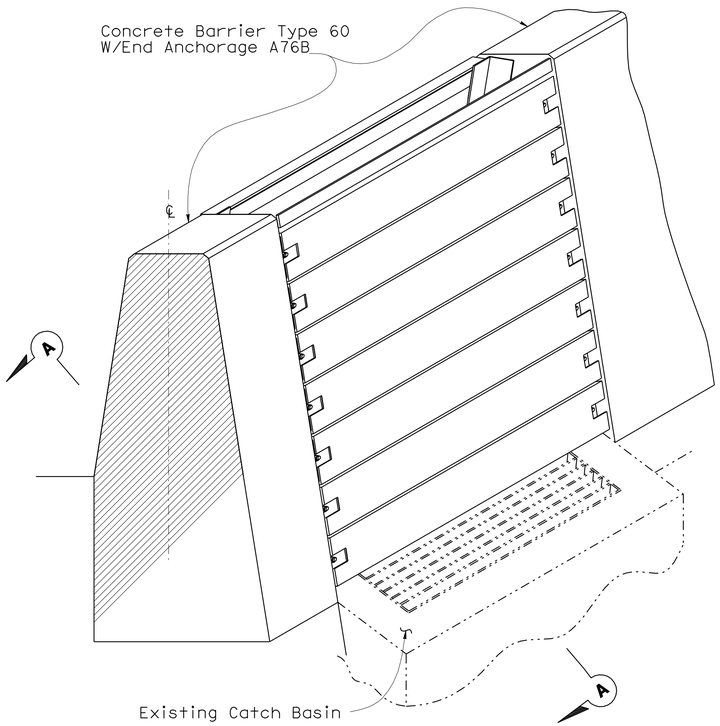

CONCRETE BARRIER TYPE 60C
& STEEL CHANNEL CLOSURE

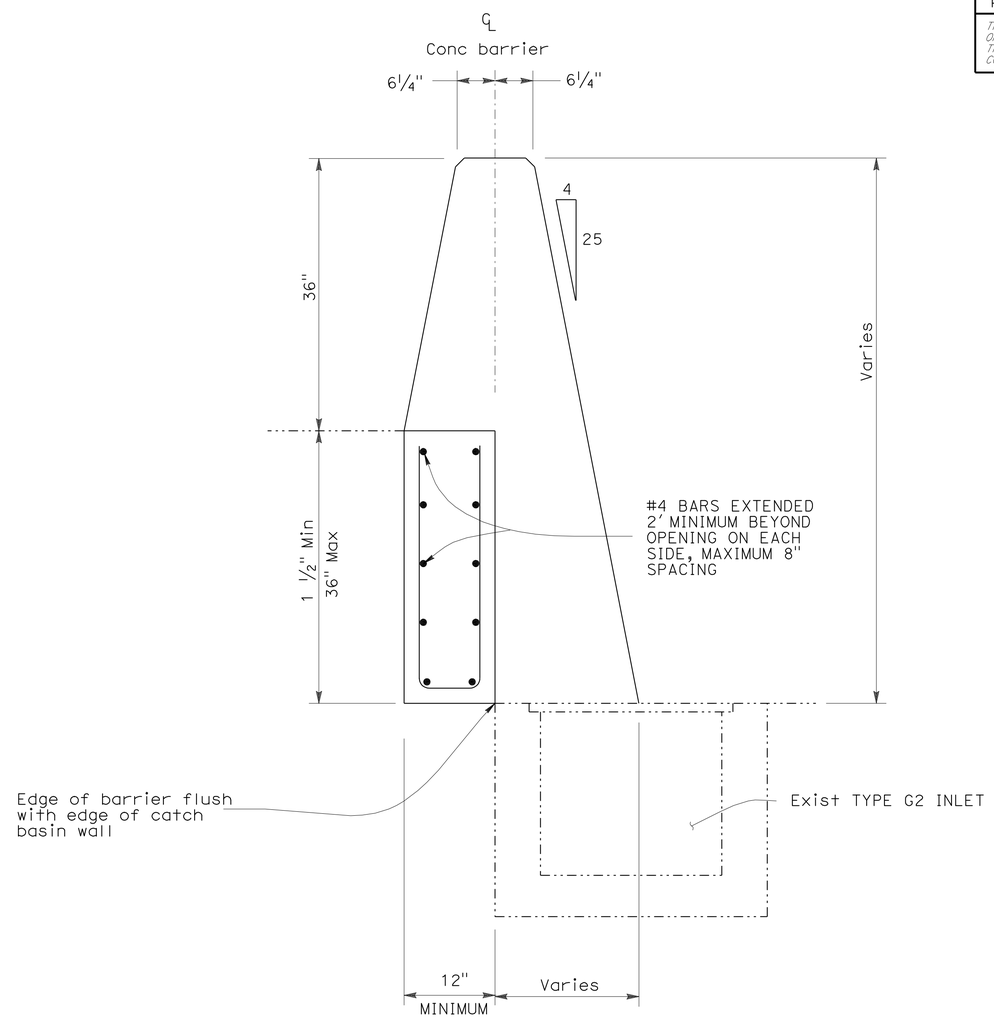

SECTION A-A

MODIFIED CONCRETE BARRIER TYPE 60C
TO EXISTING TYPE G2 INLET STRUCTURES

DRAINAGE DETAILS

NO SCALE

DD-14

STATE OF CALIFORNIA - DEPARTMENT OF TRANSPORTATION
Caltrans
HYDRAULICS

FUNCTIONAL SUPERVISOR: DAVE BHALLA
CALCULATED-DESIGNED BY: PAUL FONG
CHECKED BY: PRAKASH YADAV
REVISED BY
DATE REVISED

LAST REVISION
DATE PLOTTED => 26-APR-2011
TIME PLOTTED => 11:35

Dist	COUNTY	ROUTE	POST MILES TOTAL PROJECT	SHEET No.	TOTAL SHEETS
07	LA	5	R46.3/R50.0	128	456

Paul Fong 01-18-11
REGISTERED CIVIL ENGINEER DATE

4-25-11
PLANS APPROVAL DATE

REGISTERED PROFESSIONAL ENGINEER PAUL FONG No. C67053 Exp. 9/30/12 CIVIL STATE OF CALIFORNIA

THE STATE OF CALIFORNIA OR ITS OFFICERS OR AGENTS SHALL NOT BE RESPONSIBLE FOR THE ACCURACY OR COMPLETENESS OF SCANNED COPIES OF THIS PLAN SHEET.

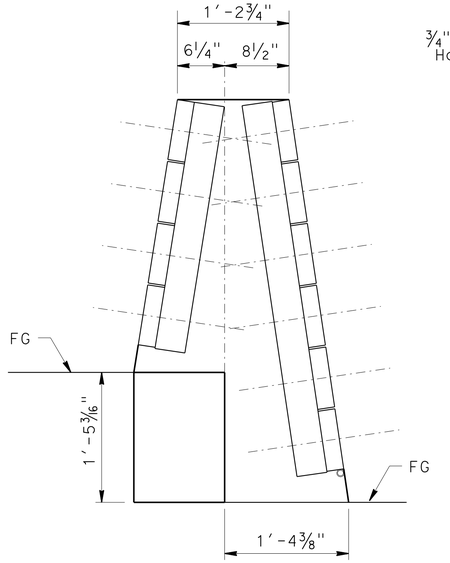

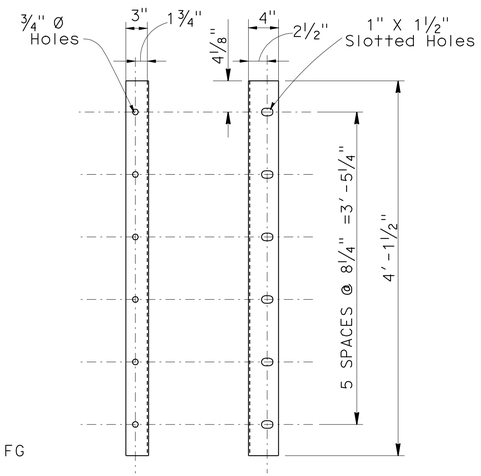

BEAM HANGER ANGLES

(L4 X 3 X 1/4)

1.52' @ Sta 2437 + 12.10

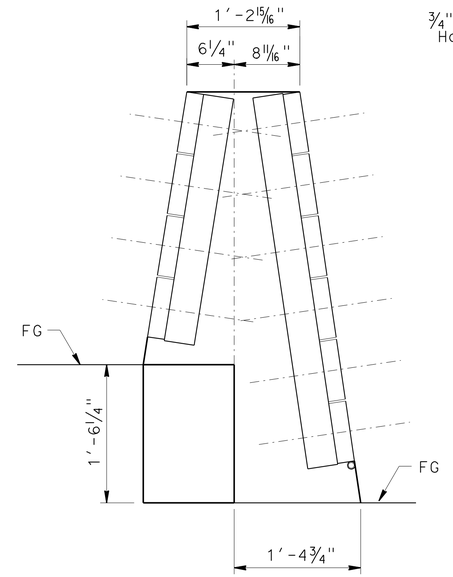

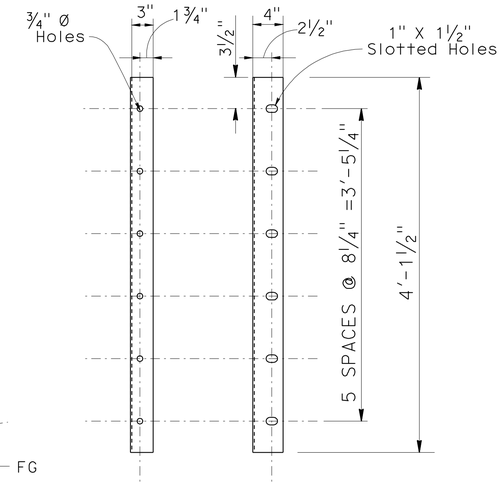

BEAM HANGER ANGLES

(L4 X 3 X 1/4)

1.43' @ Sta 2438 + 86.30

NOTES:

1. All beams, hangers, and connections are to conform to AISC standard shapes and sizes.
2. All parts shall be galvanized after fabrication.
3. Strict adherence to quality during construction is required to assure that flush fit requirements are met.
4. For details not shown, see "Standard Plans, sheets RSP A76A and A76B" and DD-13 and DD-14, BARRIER - CONCRETE TYPE 60, STEEL CHANNEL CLOSURE DETAIL".

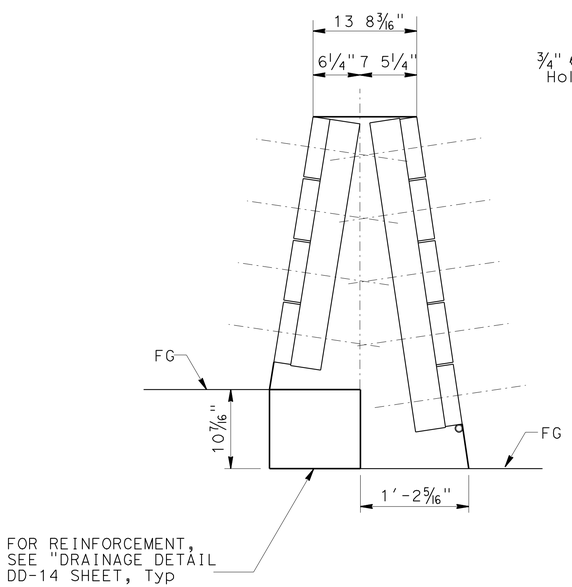

0.87' @ Sta 2442 + 60.81

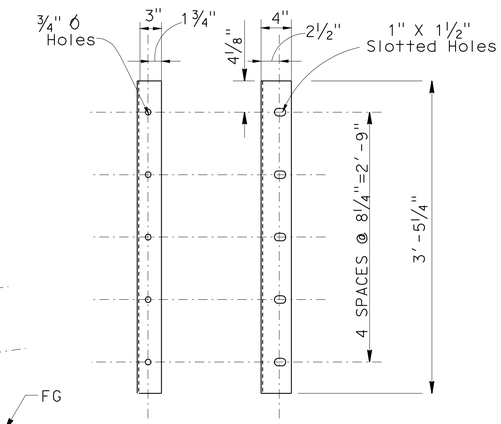

BEAM HANGER ANGLES

(L4 X 3 X 1/4)

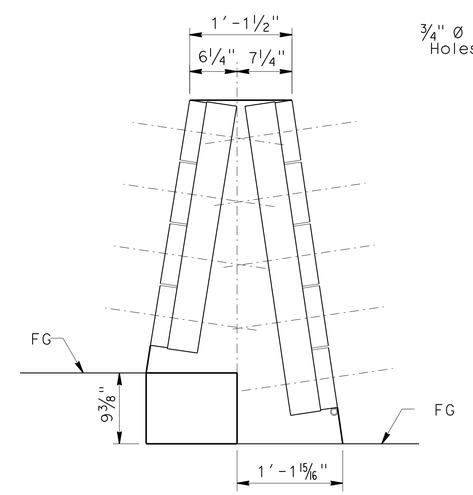

0.78' @ Sta 2446 + 00.00

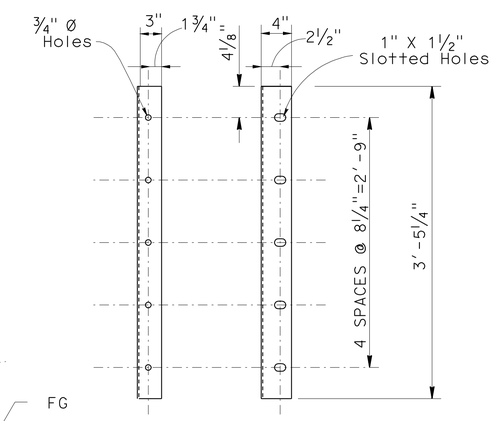

BEAM HANGER ANGLES

(L4 X 3 X 1/4)

CHANNEL STEEL CLOSURE MODIFICATIONS

DRAINAGE DETAILS

NO SCALE

DD-15

STATE OF CALIFORNIA - DEPARTMENT OF TRANSPORTATION
Caltrans
HYDRAULICS
FUNCTIONAL SUPERVISOR: DAVE BHALLA
CALCULATED-DESIGNED BY: PRAKASH YADAV
CHECKED BY: PAUL FONG
REVISED BY
DATE REVISED

LAST REVISION
DATE PLOTTED => 26-APR-2011
TIME PLOTTED => 11:35

Dist	COUNTY	ROUTE	POST MILES TOTAL PROJECT	SHEET No.	TOTAL SHEETS
07	LA	5	R46.3/R50.0	129	456

Paul Fong 01-18-11
REGISTERED CIVIL ENGINEER DATE

4-25-11
PLANS APPROVAL DATE

REGISTERED PROFESSIONAL ENGINEER
PAUL FONG
No. C67053
Exp. 9/30/12
CIVIL
STATE OF CALIFORNIA

THE STATE OF CALIFORNIA OR ITS OFFICERS OR AGENTS SHALL NOT BE RESPONSIBLE FOR THE ACCURACY OR COMPLETENESS OF SCANNED COPIES OF THIS PLAN SHEET.

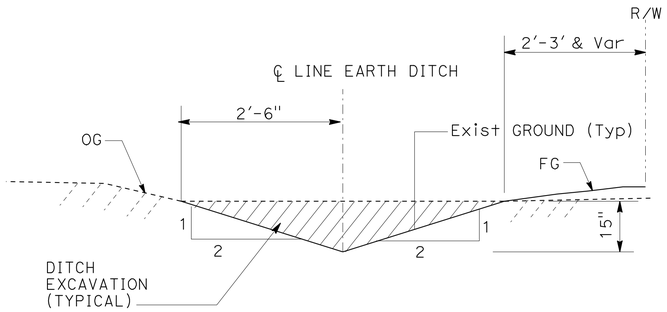

L = 1015.0'
S = 3.2% & Var
L = LENGTH OF EARTH DITCH
S = LONGITUDINAL SLOPE

SECTION A-A

DRAINAGE SYSTEM 10 (D)

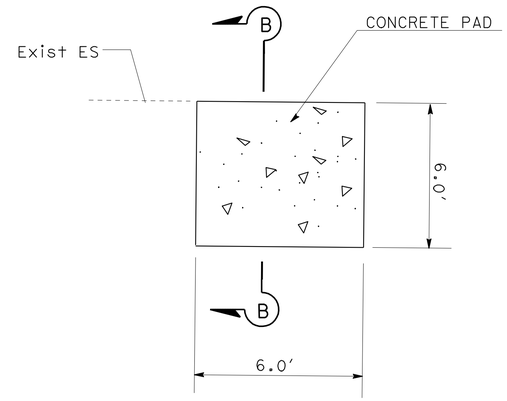

PLAN

DRAINAGE SYSTEM 40

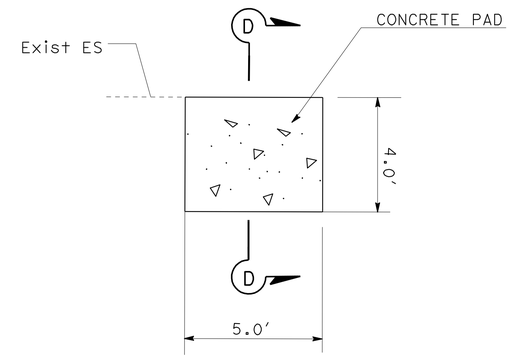

PLAN

DRAINAGE SYSTEM 42

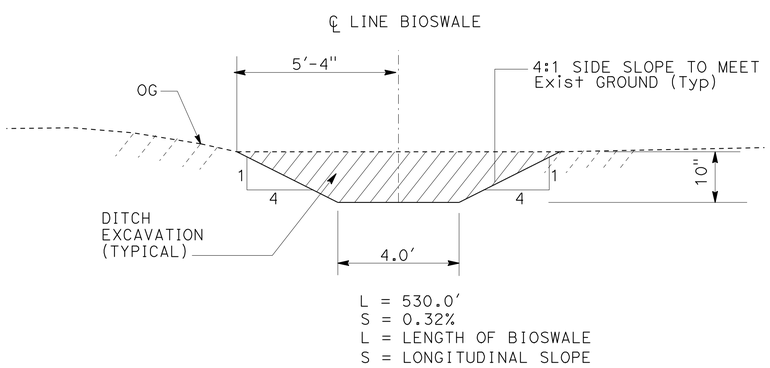

L = 530.0'
S = 0.32%
L = LENGTH OF BIOSWALE
S = LONGITUDINAL SLOPE

SECTION C-C

DRAINAGE SYSTEM 43

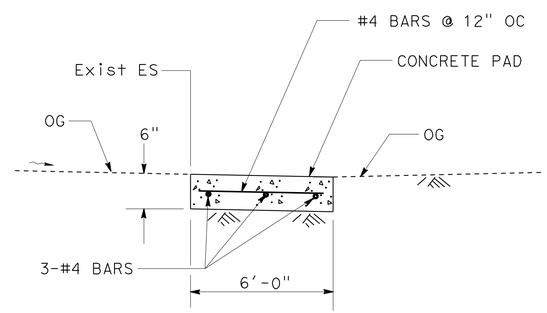

SECTION B-B

CONCRETE PAD DETAIL

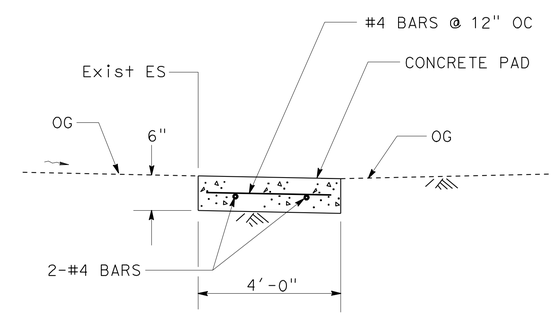

SECTION D-D

CONCRETE PAD DETAIL

DRAINAGE DETAILS

NO SCALE

DD-16

STATE OF CALIFORNIA - DEPARTMENT OF TRANSPORTATION
Caltrans
HYDRAULICS

FUNCTIONAL SUPERVISOR: DAVE BHALLA
CALCULATED-DESIGNED BY: PAUL FONG
CHECKED BY: PRAKASH YADAV
REVISED BY
DATE REVISED

LAST REVISION
DATE PLOTTED => 26-APR-2011
TIME PLOTTED => 11:35

Dist	COUNTY	ROUTE	POST MILES TOTAL PROJECT	SHEET No.	TOTAL SHEETS
07	LA	5	R46.3/R50.0	130	456

Timothy G Sobelman 6-19-09
REGISTERED CIVIL ENGINEER DATE

4-25-11
PLANS APPROVAL DATE

REGISTERED PROFESSIONAL ENGINEER TIMOTHY B. SOBELMAN No. 59249 Exp. 6-30-11 CIVIL STATE OF CALIFORNIA

THE STATE OF CALIFORNIA OR ITS OFFICERS OR AGENTS SHALL NOT BE RESPONSIBLE FOR THE ACCURACY OR COMPLETENESS OF SCANNED COPIES OF THIS PLAN SHEET.

B0-1
1-3

GENERAL NOTES:

Designation:
Types of Gross Solids Removal Devices (GSRDs) are Linear Radial (LR) and Inclined Screen. The Linear Radial has either a standard or high velocity configuration noted as Linear Radial or Linear Radial (HV). All GSRD BMP Detail Drawings are applicable for velocities up to 20 fps.

Special Reinforcement Coverage:
GSRD BMP Detail Drawings are not to be used in a corrosive environment or where there is a severe abrasive flow condition or in freeze-thaw locations.

Special Design:
Required for ground water conditions above bottom of GSRD, surcharge loads exceeding HS20 truck load, design bearing pressures or sizes greater than those on this plan.

Traffic Loading:
No traffic load is allowed over GSRDs. As determined by the Engineer, barriers or MBGR shall be provided between GSRDs and traffic lanes.

DESIGN NOTES:

Specifications:
Design:
Bridge Design Specification April 2000 (LFD)
(1996 AASHTO) with interims and revisions by Caltrans

Wall (LFD) : 1.5 D + 1.5 E and 1.5D + W
Footing (LFD): 1.5 D + 1.5 E
Where D = Dead Load
E = Earth Load

Capacity reduction factor is included.

Earth Load:
125 lb/ft vertical,

Water Load:
62.4 lb/ft horizontal,

Equivalent Fluid Pressure =
100 lb/ft horizontal (Case I).

Earth pressure for 2:1 unlimited slope determined from Rankine's formula with ø = 33°42′ (Case II).

CONSTRUCTION NOTES:

Expansion joints:
Inverts - No expansion joints shall be permitted.
Walls - Place ½" expansion joint filler vertically at 26′-0" centers with strip water stop.

Construction Joints:
Temporary joints may be permitted if normal (or radial) to ℄ of GSRD. Otherwise, the contractor is to submit a proposal for consideration.

Backfill:
See Standard Specifications, except the difference in backfill shall not exceed 4 ft between side walls and shall not exceed the lesser of wall height "H" or 4 ft between inlet and outlet walls.

Earthwork:
Excavation and Backfill with Cut and Exposed conditions -

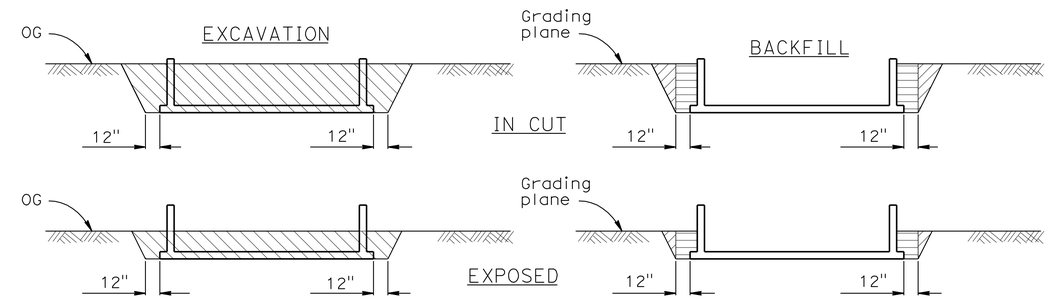

LINEAR RADIAL

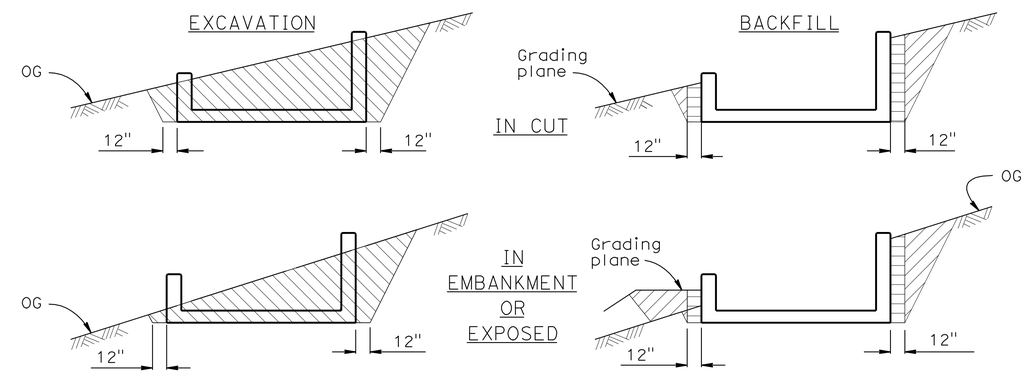

INCLINED SCREEN

DESIGN FLOW

LINEAR RADIAL ✳			
GSRD Type	Total Screen Length	Flow Rate (cfs)	Debris Area (acres)
LR-1	5′-0"	3.54	0.79
LR-2	10′-0"	7.07	1.58
LR-3	15′-0"	10.96	2.25
LR-4	20′-0"	014.49	3.16
LR-5	25′-0"	18.38	3.95
LR-6	30′-0"	21.91	4.74

✳ When maximum inlet velocity exceeds 8.2 ft/sec, High Velocity (HV) details, are required.

INCLINED SCREEN			
GSRD Type	Total Screen Length	Flow Rate (cfs)	Debris Area (acres)
2-A	3′-4"	5.83	2.21
2-B	5′-0"	8.74	3.31
2-C	6′-8"	11.65	4.41
2-D	8′-4"	14.57	5.52
2-E	10′-0"	17.48	6.63
2-F	11′-8"	20.39	7.74

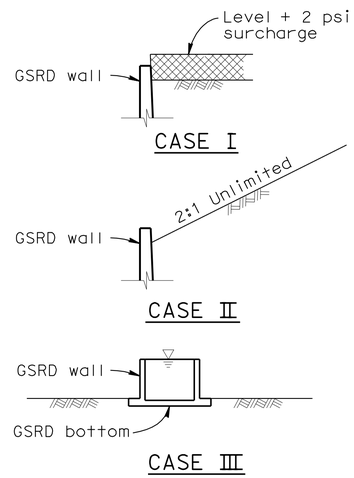

DETAIL OF DESIGN LOADING CASES

CASE I Level + 2′-0" surcharge, GSRD empty
CASE II 2:1 Unlimited slope, GSRD empty
CASE III GSRD full of water, no soil pressure

Grating (LL) Load :
0.5 psi

Unit Stresses:
f'_c = 3.6 ksi, and 4.0 ksi for Inclined Screen
f_y = 60 ksi (bar reinforcing)

Design Soil Bearing Pressure (Service Load) = 20 psi

LEGEND:

- Structure excavation (culvert)
- Structure backfill (culvert) 90% relative compaction
- Roadway embankment
- Original ground, OG

NOTES:

1. Slope or shore excavation sides as necessary.
2. Dimensions shown are minimum.
3. Use Structure Backfill (culvert) except where slurry backfill is required around outlet pipes.

GROSS SOLIDS REMOVAL DEVICE GENERAL NOTES

NO SCALE

DD-17

STATE OF CALIFORNIA - DEPARTMENT OF TRANSPORTATION
DIVISION OF DESIGN
OFFICE OF STORM WATER MANAGEMENT
Caltrans

FUNCTIONAL SUPERVISOR: TIMOTHY B. SOBELMAN
CALCULATED-DESIGNED BY: D. WANG
CHECKED BY: L. HE
REVISED BY
DATE REVISED

LAST REVISION
DATE PLOTTED => 26-APR-2011
TIME PLOTTED => 11:35

Dist	COUNTY	ROUTE	POST MILES TOTAL PROJECT	SHEET No.	TOTAL SHEETS
07	LA	5	R46.3/R50.0	131	456

Timothy B Sobelman 6-19-09
REGISTERED CIVIL ENGINEER DATE

4-25-11
PLANS APPROVAL DATE

REGISTERED PROFESSIONAL ENGINEER TIMOTHY B. SOBELMAN No. 59249 Exp. 6-30-11 CIVIL STATE OF CALIFORNIA

THE STATE OF CALIFORNIA OR ITS OFFICERS OR AGENTS SHALL NOT BE RESPONSIBLE FOR THE ACCURACY OR COMPLETENESS OF SCANNED COPIES OF THIS PLAN SHEET.

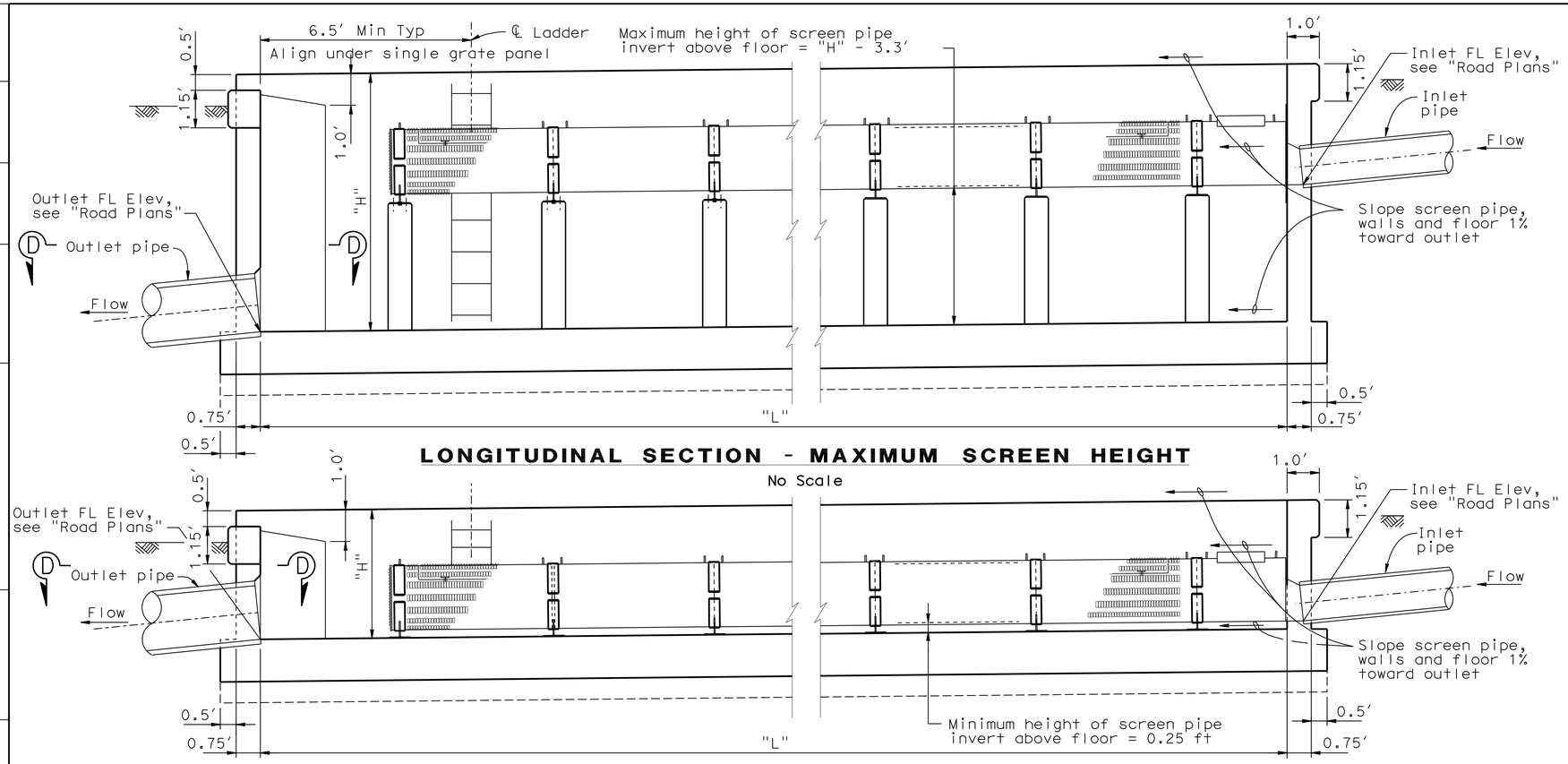

LONGITUDINAL SECTION - MAXIMUM SCREEN HEIGHT

No Scale

LONGITUDINAL SECTION - MINIMUM SCREEN HEIGHT

No Scale

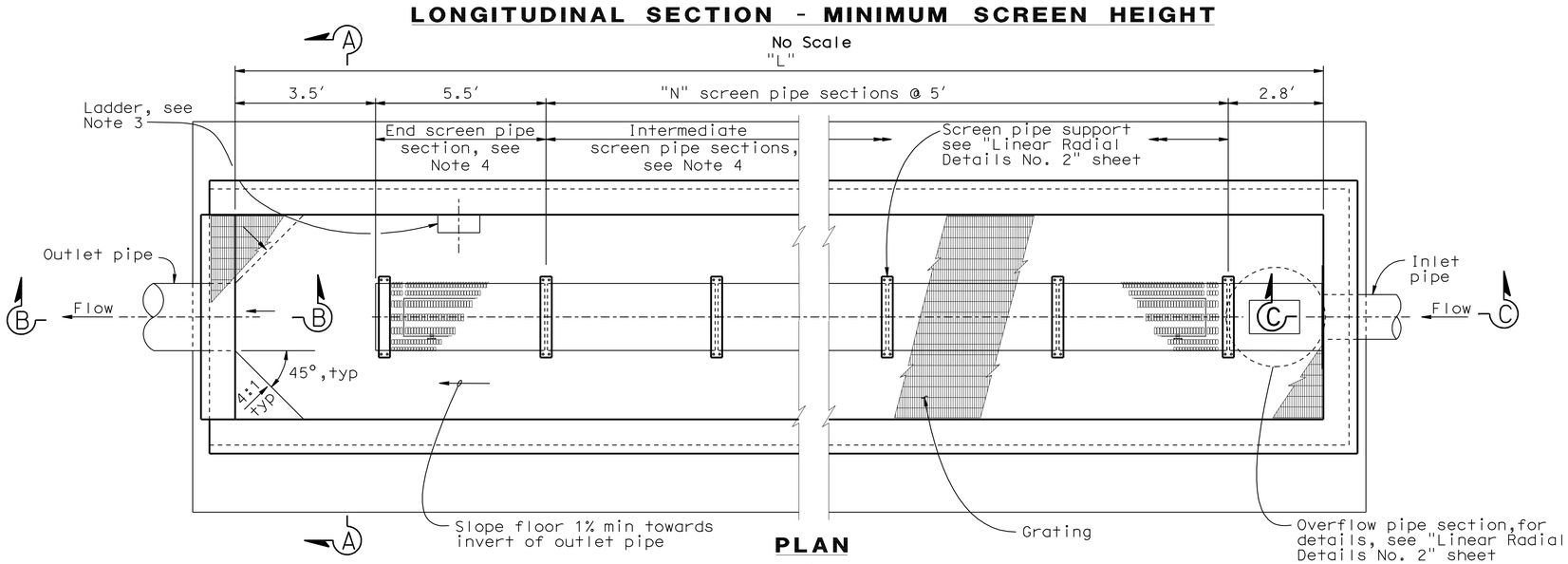

PLAN

No Scale

NOTES:

1. For typical section, see "Linear Radial - Details No. 1" on DD-19.
2. For Section B-B, C-C and D-D, see "Linear Radial - Details No. 1" on DD-19.
3. For ladder details see "Miscellaneous Details No. 1" ON DD-30.
4. For end screen and intermediate screen pipe details, see "Linear Radial - Details No. 3" on DD-21.
5. For "N", "H" and other design data, see "Road Plans".
6. For High Velocity details, see "Linear Radial (HV) - Layout" on DD-23.
7. For Grating details, see "Linear Radial Details No. 4" on DD-22.
8. For inlet and outlet pipe details not shown, see "Road Plans"

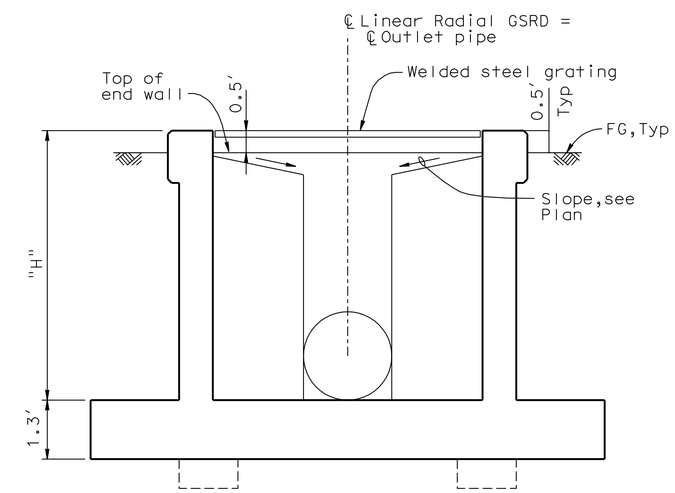

SECTION A-A

No Scale

GROSS SOLIDS REMOVAL DEVICE
LINEAR RADIAL - LAYOUT

NO SCALE

DD-18

STATE OF CALIFORNIA - DEPARTMENT OF TRANSPORTATION
DIVISION OF DESIGN
OFFICE OF STORM WATER MANAGEMENT
Caltrans

FUNCTIONAL SUPERVISOR: TIMOTHY B. SOBELMAN
CALCULATED-DESIGNED BY: D. WANG
CHECKED BY: L. HE
REVISED BY
DATE REVISED

LAST REVISION
DATE PLOTTED => 26-APR-2011
TIME PLOTTED => 11:35

Dist	COUNTY	ROUTE	POST MILES TOTAL PROJECT	SHEET No.	TOTAL SHEETS
07	LA	5	R46.3/R50.0	132	456

Timothy B Sobelman 6-19-09
REGISTERED CIVIL ENGINEER DATE

4-25-11
PLANS APPROVAL DATE

REGISTERED PROFESSIONAL ENGINEER TIMOTHY B. SOBELMAN No. 59249 Exp. 6-30-11 CIVIL STATE OF CALIFORNIA

THE STATE OF CALIFORNIA OR ITS OFFICERS OR AGENTS SHALL NOT BE RESPONSIBLE FOR THE ACCURACY OR COMPLETENESS OF SCANNED COPIES OF THIS PLAN SHEET.

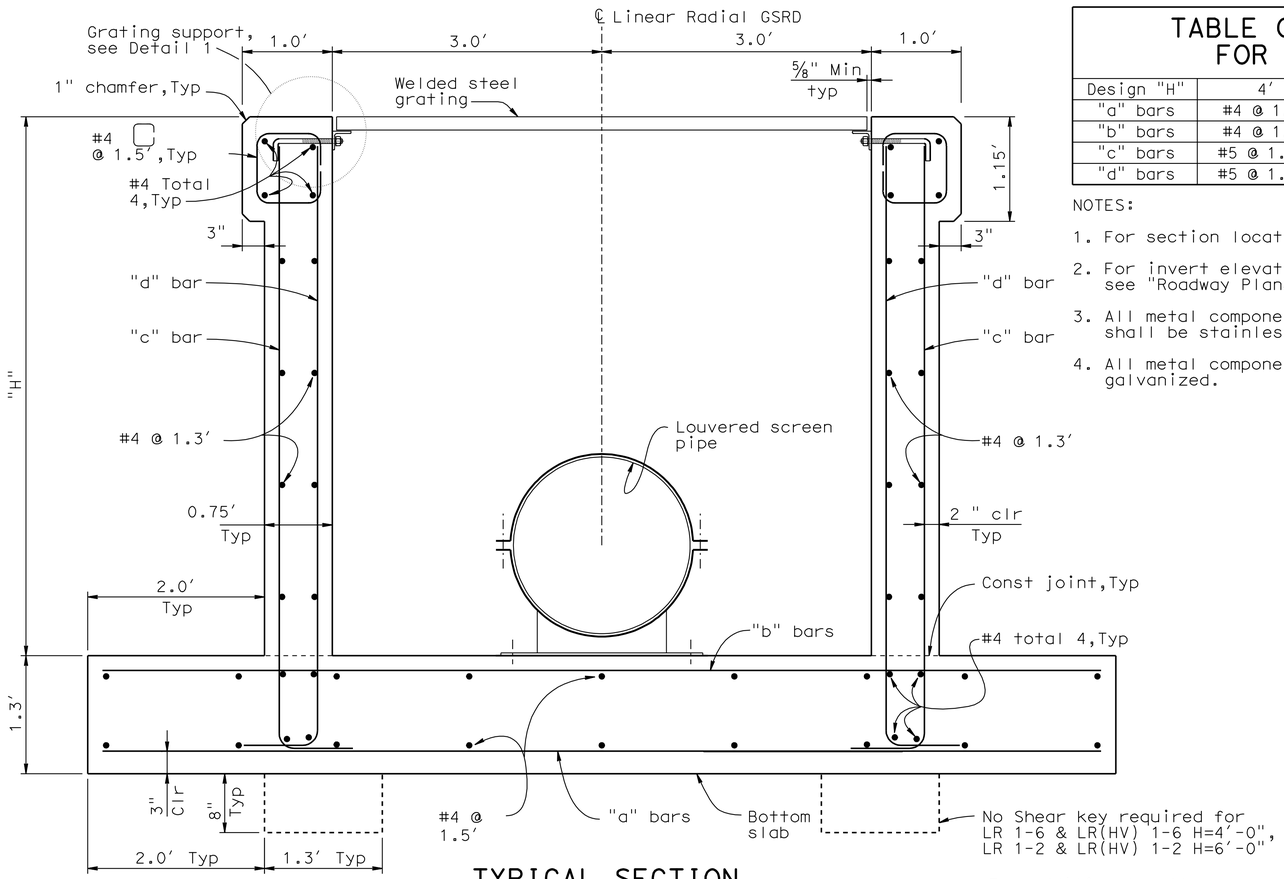

TYPICAL SECTION

No Scale

TABLE OF REINFORCING STEEL FOR LINEAR RADIAL GSRD

Design "H"	4′	6′	8′
"a" bars	#4 @ 1.5′	#5 @ 1.0′	#5 @ 0.65′
"b" bars	#4 @ 1.5′	#4 @ 1.5′	#5 @ 1.3′
"c" bars	#5 @ 1.15′	#5 @ 0.75	#5 @ 0.3′
"d" bars	#5 @ 1.15′	#5 @ 1.15′	#5 @ 1.0′

NOTES:

1. For section locations, see "Linear Radial - Layout" sheet.
2. For invert elevation differential between inlet and outlet, see "Roadway Plans".
3. All metal components of screen pipe including connections to concrete shall be stainless steel.
4. All metal components of grating including connections to wall shall be galvanized.

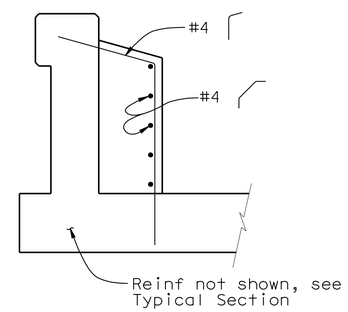

VIEW E-E

No Scale
(Outlet end only)

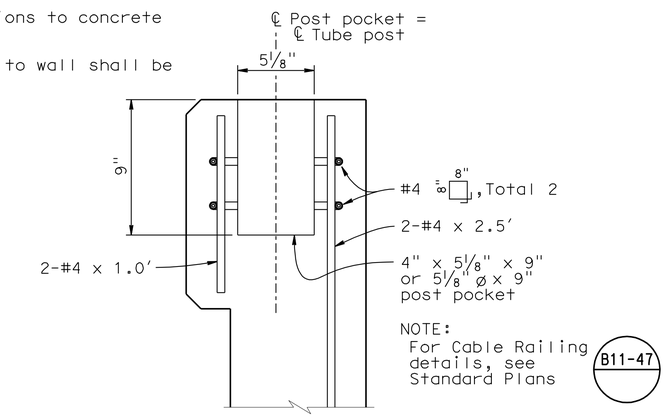

POST ANCHORAGE DETAIL (OPTIONAL)

No Scale

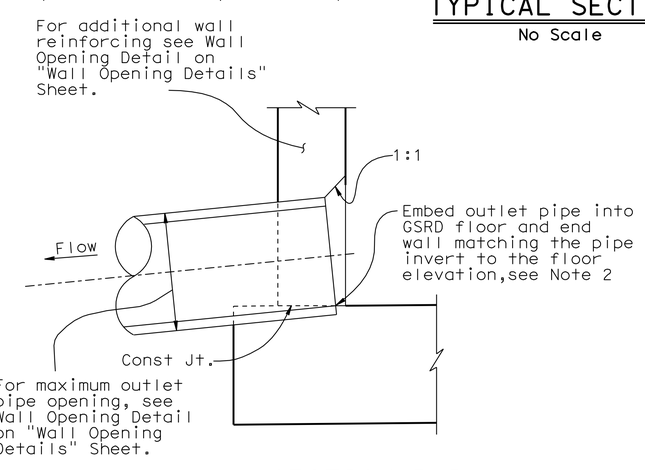

SECTION B-B

No Scale

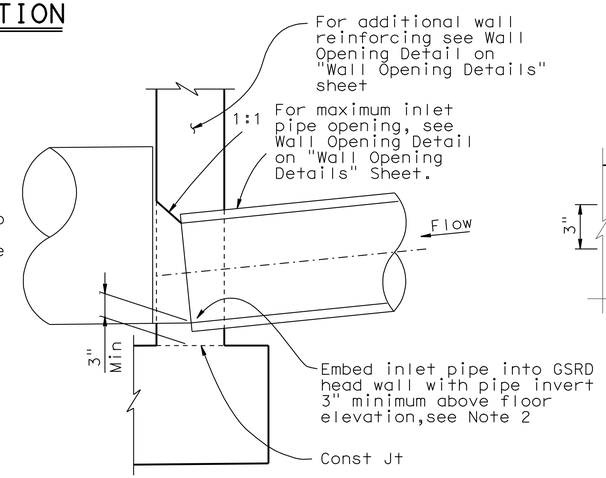

SECTION C-C

No Scale

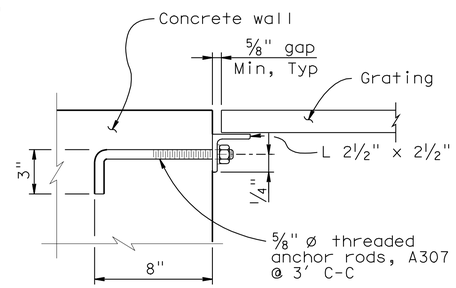

DETAIL 1

No Scale

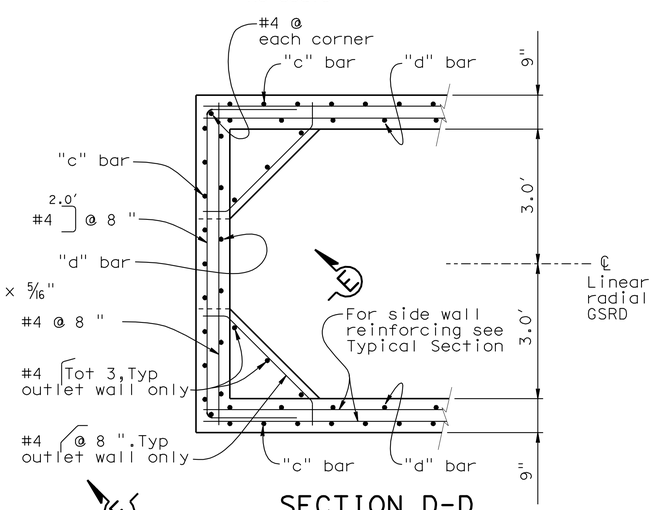

SECTION D-D

No Scale

NOTE: Outlet wall shown, inlet wall similar.

GROSS SOLIDS REMOVAL DEVICE
LINEAR RADIAL - DETAILS No. 1

NO SCALE

DD-19

STATE OF CALIFORNIA - DEPARTMENT OF TRANSPORTATION
DIVISION OF DESIGN
OFFICE OF STORM WATER MANAGEMENT

Caltrans

FUNCTIONAL SUPERVISOR: TIMOTHY B. SOBELMAN
CALCULATED-DESIGNED BY: D. WANG
CHECKED BY: L. HE
REVISED BY
DATE REVISED

LAST REVISION
DATE PLOTTED => 26-APR-2011
TIME PLOTTED => 11:36

Dist	COUNTY	ROUTE	POST MILES TOTAL PROJECT	SHEET No.	TOTAL SHEETS
07	LA	5	R46.3/R50.0	133	456

Timothy B Sobelman 6-19-09
REGISTERED CIVIL ENGINEER DATE

4-25-11
PLANS APPROVAL DATE

REGISTERED PROFESSIONAL ENGINEER TIMOTHY B. SOBELMAN No. 59249 Exp. 6-30-11 CIVIL STATE OF CALIFORNIA

THE STATE OF CALIFORNIA OR ITS OFFICERS OR AGENTS SHALL NOT BE RESPONSIBLE FOR THE ACCURACY OR COMPLETENESS OF SCANNED COPIES OF THIS PLAN SHEET.

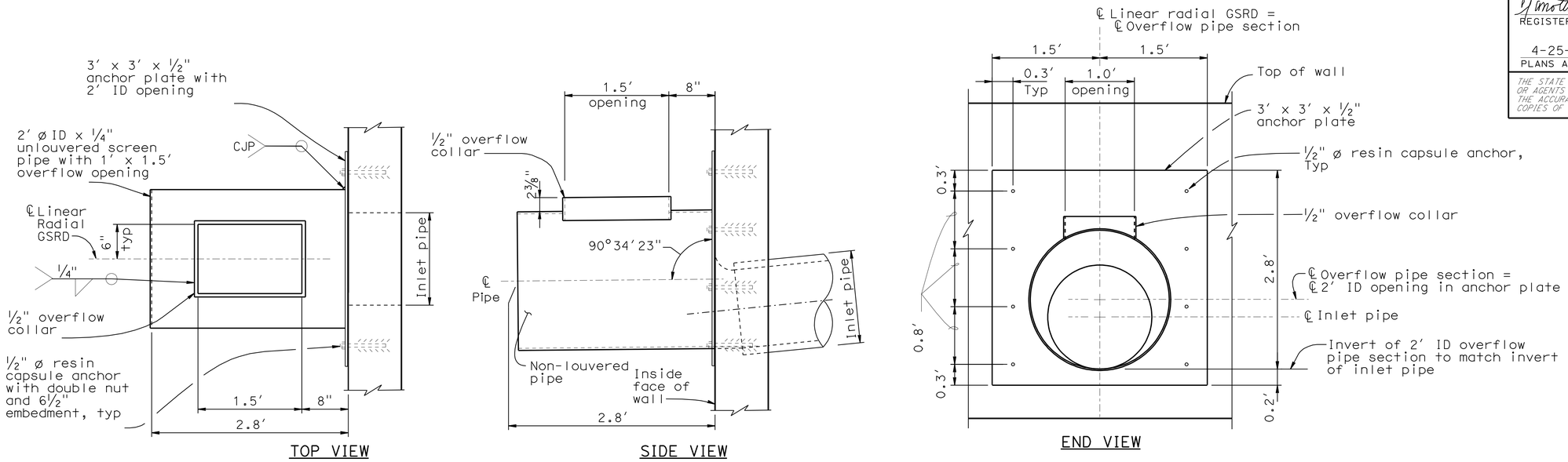

OVERFLOW PIPE SECTION DETAILS

NO SCALE

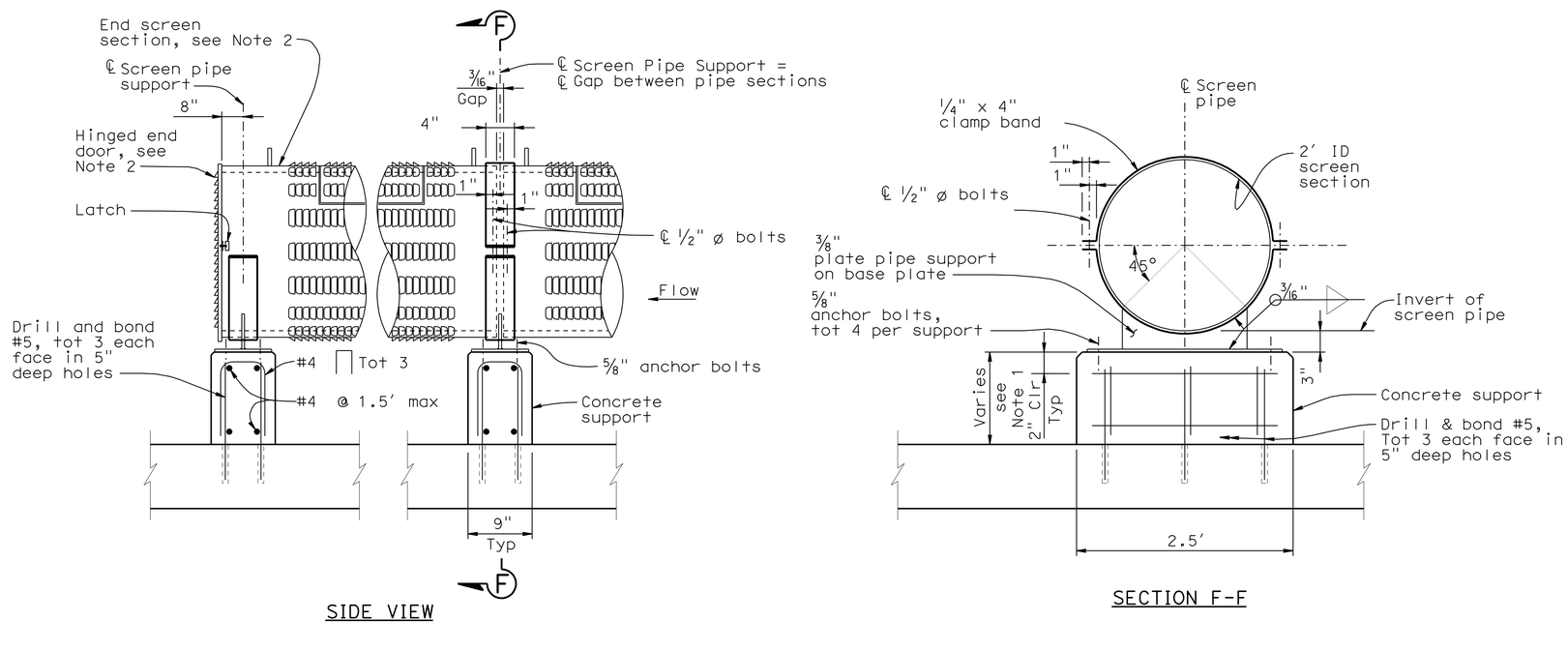

SCREEN PIPE SUPPORT

NO SCALE

NOTES:

1. If inlet invert height above floor is at the minimum 3 inch height, use anchor bolts to mount the pipe support base plate to the floor. Otherwise, construct concrete support as shown.
2. For End Screen and Intermediate Screen pipe details, see "Linear Radial - Details No. 3" sheet.
3. All metal components of screen pipe including connections to concrete shall be stainless steel.

GROSS SOLIDS REMOVAL DEVICE LINEAR RADIAL - DETAILS No. 2

NO SCALE

DD-20

REVISED BY	DATE REVISED	D. WANG	L. HE	CALCULATED-DESIGNED BY	CHECKED BY	FUNCTIONAL SUPERVISOR	TIMOTHY B. SOBELMAN

STATE OF CALIFORNIA - DEPARTMENT OF TRANSPORTATION
DIVISION OF DESIGN
OFFICE OF STORM WATER MANAGEMENT
Caltrans

LAST REVISION 00-00-00 | DATE PLOTTED => 26-APR-2011 | TIME PLOTTED => 11:36

Dist	COUNTY	ROUTE	POST MILES TOTAL PROJECT	SHEET No.	TOTAL SHEETS
07	LA	5	R46.3/R50.0	134	456

Timothy B Sobelman 6-19-09
REGISTERED CIVIL ENGINEER DATE

4-25-11
PLANS APPROVAL DATE

REGISTERED PROFESSIONAL ENGINEER TIMOTHY B. SOBELMAN No. 59249 Exp. 6-30-11 CIVIL STATE OF CALIFORNIA

THE STATE OF CALIFORNIA OR ITS OFFICERS OR AGENTS SHALL NOT BE RESPONSIBLE FOR THE ACCURACY OR COMPLETENESS OF SCANNED COPIES OF THIS PLAN SHEET.

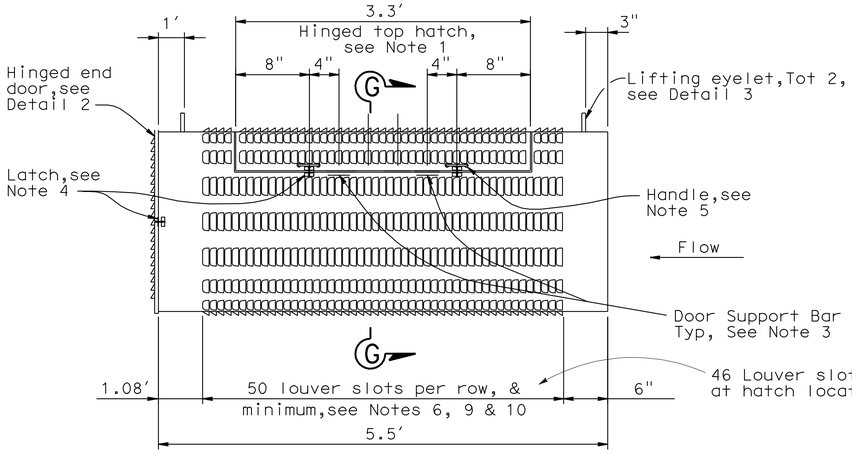

END SCREEN DETAIL

No Scale

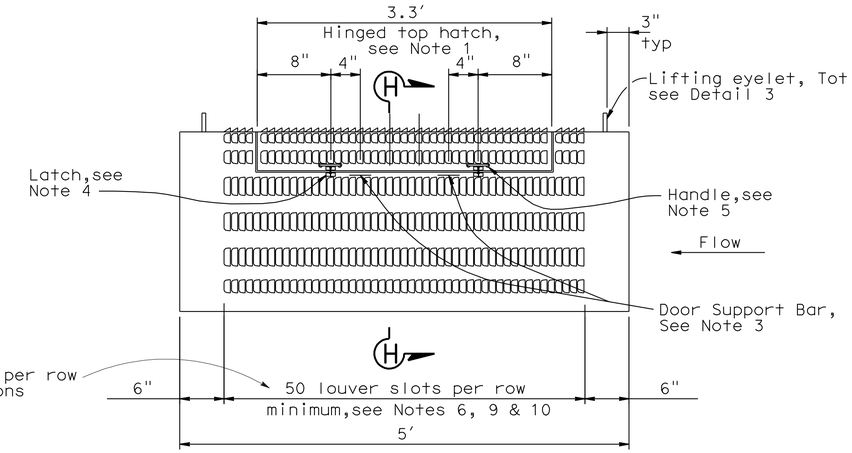

INTERMEDIATE SCREEN DETAIL

No Scale

NOTES:

1. Provide 1"x3/16" stainless steel bar at all cut edges to provide a seat and support for all doors when closed.
2. Provide stainless steel 1/4" thick heavy duty hinges 4"x4" thick with 5/8" Dia pin. Use fillet weld at cover and frame. Total two each door, evenly spaced.
3. Attach 2- 1"x1"x3" stainless steel bars (or fabricator equivalent design) to support doors when in an open position. Mechanical Stops can be welded on hinges.
4. Provide latch. Latch shall have threaded U-bolt for adjustment. Latch to have 3/8" total adjustability and 1 3/16" drawing movement and be rated at 360 LB.
5. Provide stainless steel handles at locations indicated.
6. The aperature size of each louver slot shall be 3/16" wide x 2 1/2" long.
7. End door to secured to end screen with 3/8" Dia x 10 " continuous bolt with lock nut through flat bars.
8. All metal components of screen pipe shall be stainless steel.
9. Louver slot apertures shall meet the following requirements:

Width (in)			% of Total
0.189	-	0.209	90
0.181	-	0.209	95
0.169	-	0.209	100

Length (in)			% of Total
2.250	-	2.750	90
2.000	-	3.000	100

10. A Certificate of Compliance conforming to the provisions in Section 6-1.07, "Certificate of Compliance," shall be furnished to Engineer, prior to installing Linear Radial GSRD device, certifying that louver slot apertures being furnished conforms to above requirements

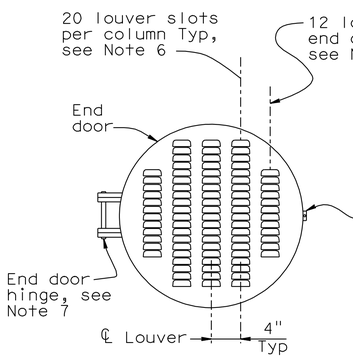

DETAIL 2

NO SCALE

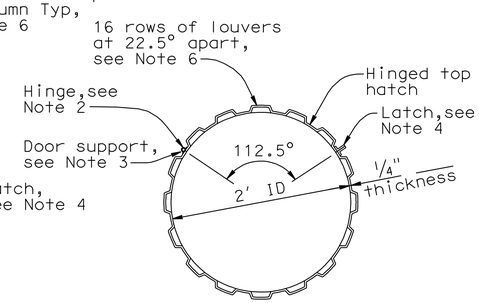

SECTION G-G

NO SCALE

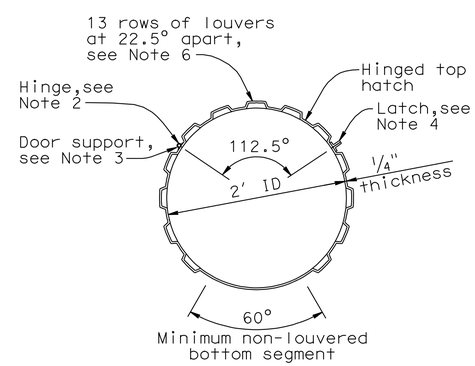

SECTION H-H

NO SCALE

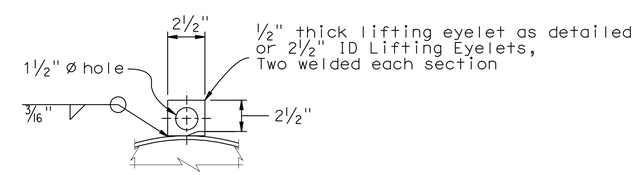

DETAIL 3

GROSS SOLIDS REMOVAL DEVICE LINEAR RADIAL - DETAILS No. 3

NO SCALE

DD-21

STATE OF CALIFORNIA - DEPARTMENT OF TRANSPORTATION
Caltrans
DIVISION OF DESIGN
OFFICE OF STORM WATER MANAGEMENT

FUNCTIONAL SUPERVISOR: TIMOTHY B. SOBELMAN
CALCULATED-DESIGNED BY: D. WANG
CHECKED BY: L. HE
REVISED BY
DATE REVISED

LAST REVISION 00-00-00
DATE PLOTTED => 26-APR-2011
TIME PLOTTED => 11:36

Dist	COUNTY	ROUTE	POST MILES TOTAL PROJECT	SHEET No.	TOTAL SHEETS
07	LA	5	R46.3/R50.0	135	456

Timothy B Sobelman 6-19-09
REGISTERED CIVIL ENGINEER DATE

4-25-11
PLANS APPROVAL DATE

REGISTERED PROFESSIONAL ENGINEER TIMOTHY B. SOBELMAN No. 59249 Exp. 6-30-11 CIVIL STATE OF CALIFORNIA

THE STATE OF CALIFORNIA OR ITS OFFICERS OR AGENTS SHALL NOT BE RESPONSIBLE FOR THE ACCURACY OR COMPLETENESS OF SCANNED COPIES OF THIS PLAN SHEET.

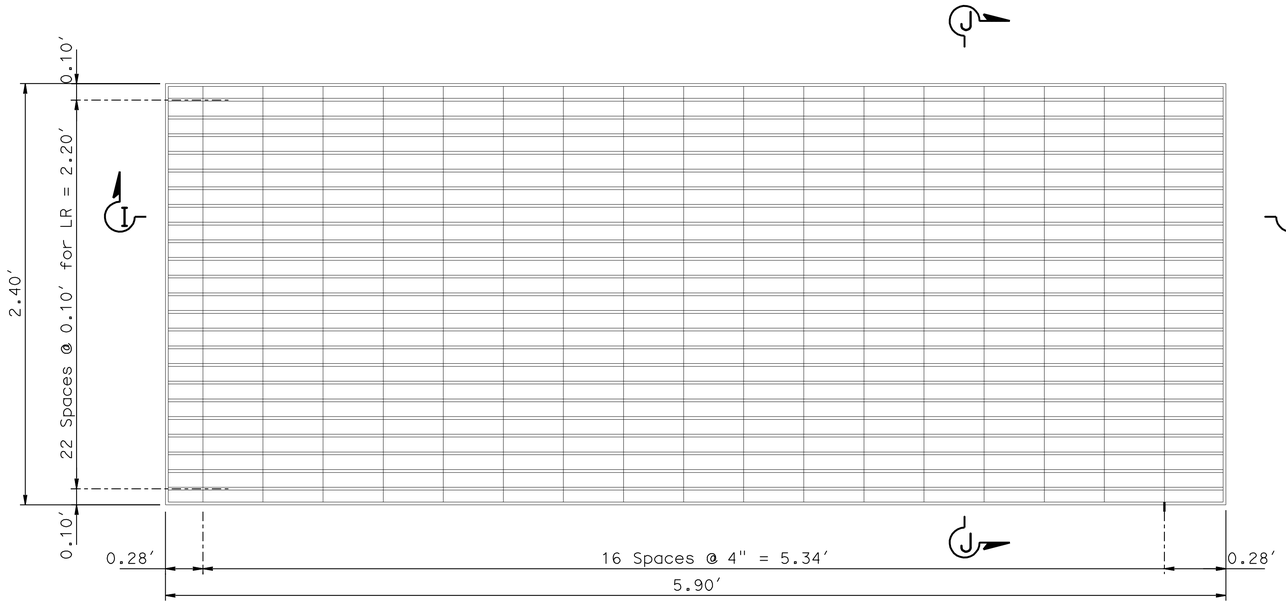

GRATE PANEL
No Scale

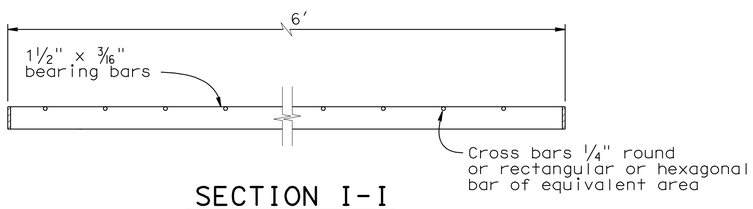

SECTION I-I
No Scale

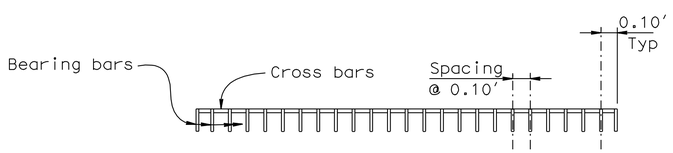

SECTION J-J
No Scale

SCREEN PIPE SECTIONS	LR # OF GRATES (N)	LR(HV) # OF GRATES (N)
1	7	8
2	9	10
3	11	12
4	13	14
5	15	16
6	17	18

(N) NOT A SEPARATE PAY ITEM,
FOR INFORMATION ONLY

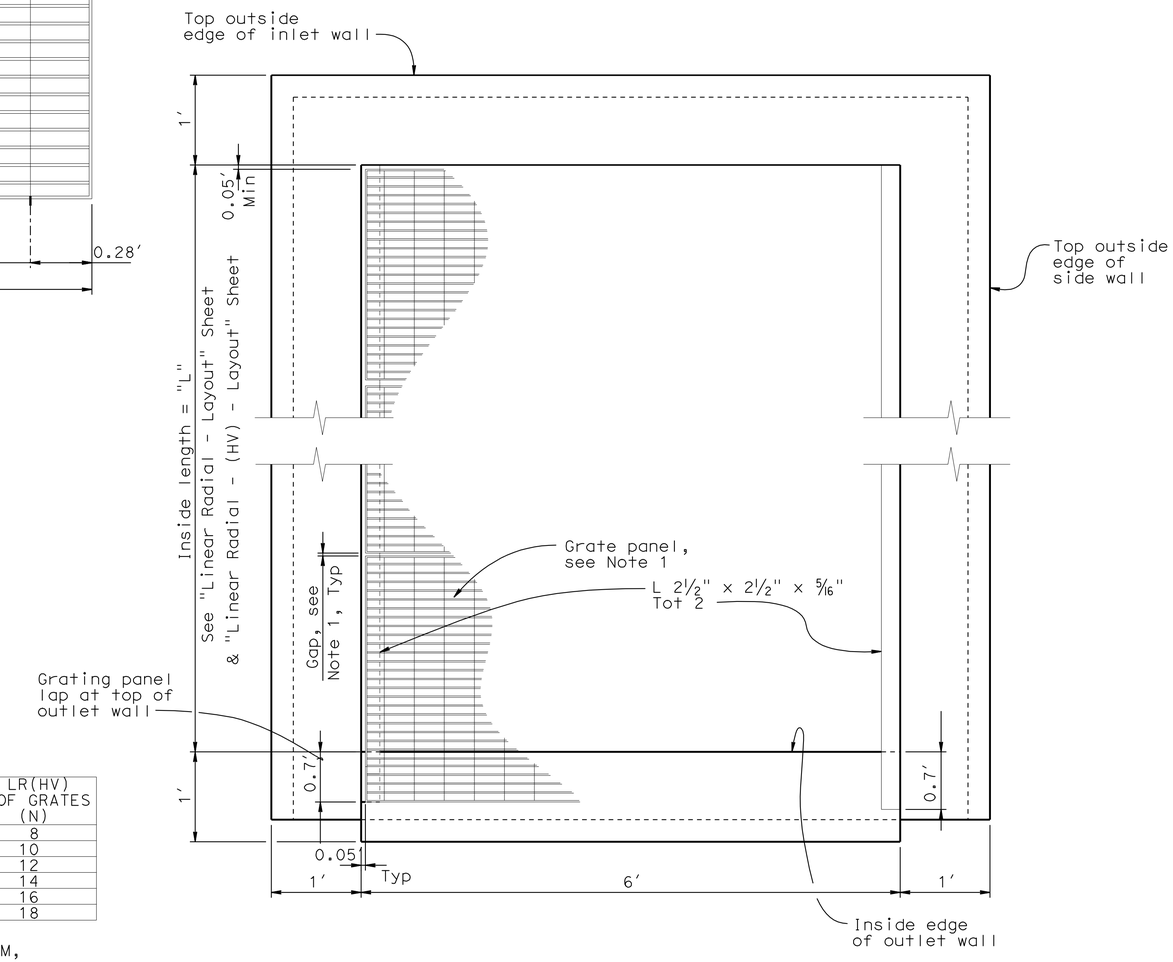

GRATE LAYOUT
(see Note 1)
No Scale

NOTES:

1. Gap between grate panels shall be equal, 7/8" Min, 9/16" Max. (Average = 0.10′)
2. All metal components of grating shall be galvanized.

GROSS SOLIDS REMOVAL DEVICE
LINEAR RADIAL - DETAILS No. 4

NO SCALE

DD-22

STATE OF CALIFORNIA - DEPARTMENT OF TRANSPORTATION
DIVISION OF DESIGN
OFFICE OF STORM WATER MANAGEMENT
Caltrans

FUNCTIONAL SUPERVISOR: TIMOTHY B. SOBELMAN
CALCULATED-DESIGNED BY: D. WANG
CHECKED BY: L. HE
REVISED BY
DATE REVISED

LAST REVISION 00-00-00 | DATE PLOTTED => 26-APR-2011 | TIME PLOTTED => 11:36

Dist	COUNTY	ROUTE	POST MILES TOTAL PROJECT	SHEET No.	TOTAL SHEETS
07	LA	5	R46.3/R50.0	136	456

Timothy B Sobelman 6-19-09
REGISTERED CIVIL ENGINEER DATE

4-25-11
PLANS APPROVAL DATE

REGISTERED PROFESSIONAL ENGINEER TIMOTHY B. SOBELMAN No. 59249 Exp. 6-30-11 CIVIL STATE OF CALIFORNIA

THE STATE OF CALIFORNIA OR ITS OFFICERS OR AGENTS SHALL NOT BE RESPONSIBLE FOR THE ACCURACY OR COMPLETENESS OF SCANNED COPIES OF THIS PLAN SHEET.

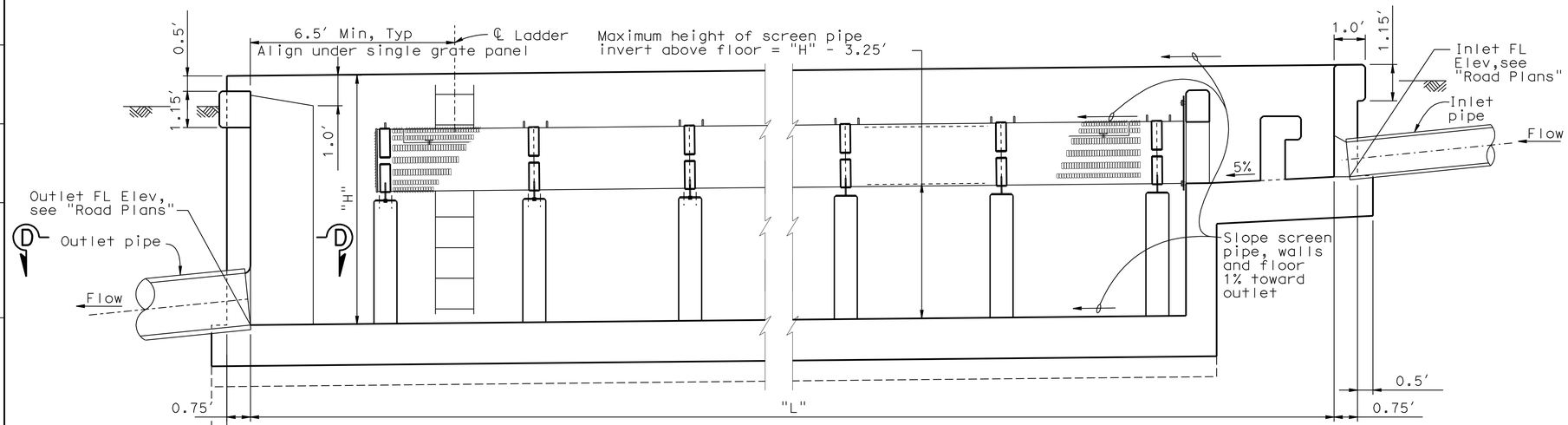

LONGITUDINAL SECTION - MAXIMUM SCREEN HEIGHT

NO SCALE

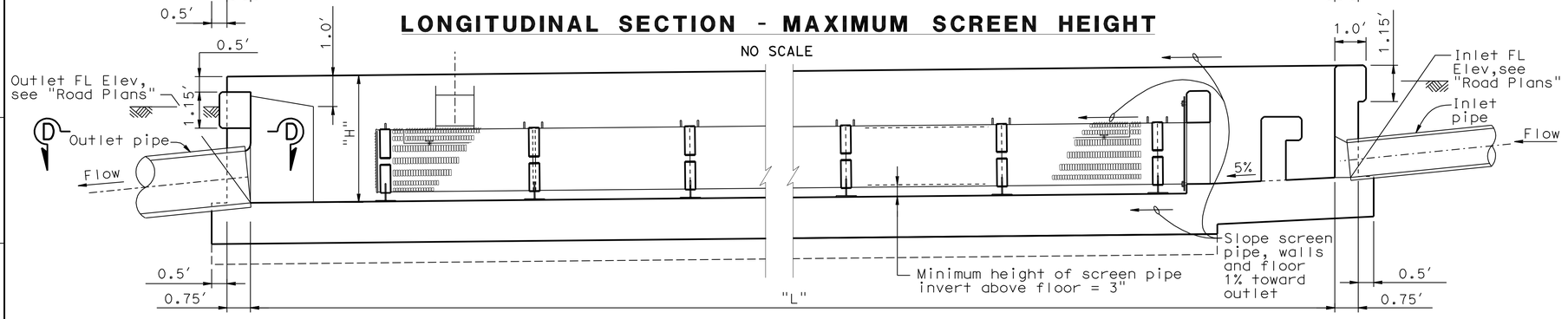

LONGITUDINAL SECTION - MINIMUM SCREEN HEIGHT

NO SCALE

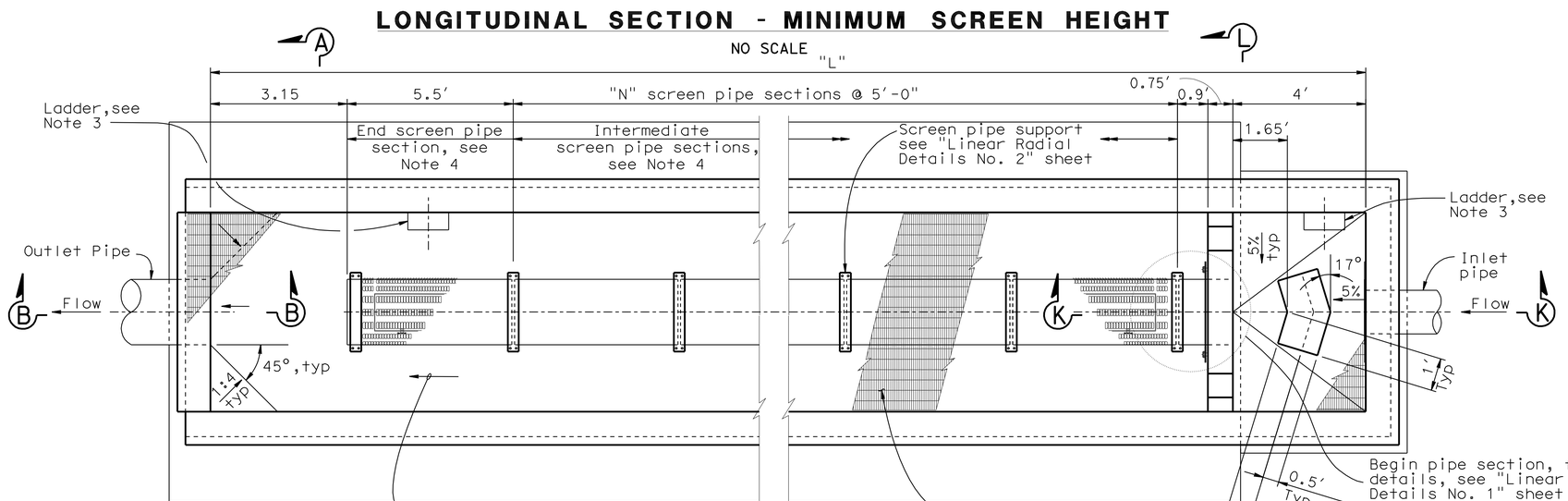

PLAN

NO SCALE

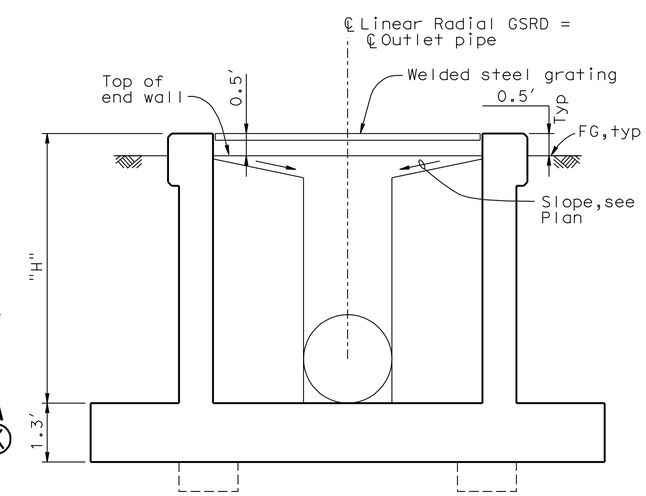

SECTION A-A

NO SCALE

NOTES:

1. For Typical Section, see "Linear Radial - Details No. 1" on DD-19.
2. For Section B-B and D-D, see "Linear Radial - Details No. 1" on DD-19.
3. For ladder details see "Miscellaneous Details No. 1" on DD-30.
4. For end screen and intermediate screen pipe details, see "Linear Radial - Details No. 3" on DD-21.
5. For "N", "H" and other design data, see "Roadway Plans".
6. For Section K-K and L-L, see "Linear Radial (HV) - Details No. 1" on DD-30.
7. For Grating details, see "Linear Radial Details No. 4" on DD-22.
8. For inlet and outlet pipe details not shown, see "Road Plans".

GROSS SOLIDS REMOVAL DEVICE LINEAR RADIAL - (HV) - LAYOUT

NO SCALE

DD-23

REVISED BY | DATE REVISED
D. WANG | L. HE
CALCULATED-DESIGNED BY | CHECKED BY
FUNCTIONAL SUPERVISOR
TIMOTHY B. SOBELMAN

STATE OF CALIFORNIA - DEPARTMENT OF TRANSPORTATION
DIVISION OF DESIGN
OFFICE OF STORM WATER MANAGEMENT
Caltrans

LAST REVISION 00-00-00
DATE PLOTTED => 26-APR-2011
TIME PLOTTED => 11:36

Dist	COUNTY	ROUTE	POST MILES TOTAL PROJECT	SHEET No.	TOTAL SHEETS
07	LA	5	R46.3/R50.0	137	456

Timothy B Sobelman 6-19-09
REGISTERED CIVIL ENGINEER DATE

4-25-11
PLANS APPROVAL DATE

REGISTERED PROFESSIONAL ENGINEER TIMOTHY B. SOBELMAN No. 59249 Exp. 6-30-11 CIVIL STATE OF CALIFORNIA

THE STATE OF CALIFORNIA OR ITS OFFICERS OR AGENTS SHALL NOT BE RESPONSIBLE FOR THE ACCURACY OR COMPLETENESS OF SCANNED COPIES OF THIS PLAN SHEET.

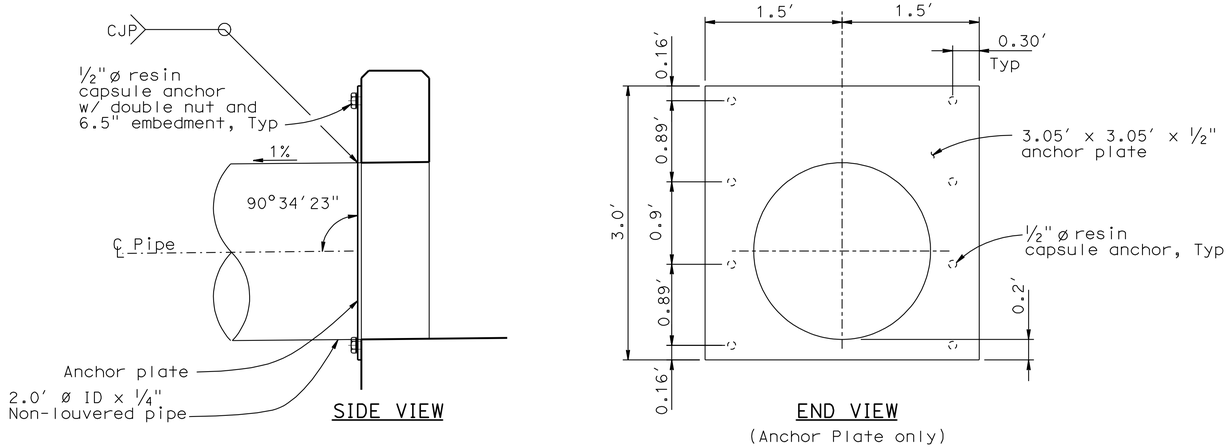

ANCHOR PLATE DETAILS

NO SCALE

NOTES:

1. For location of sections K-K and L-L, see "Linear Radial (HV) - Layout" sheet.
2. For bottom slab details and grating support not shown, see Typical Section on "Linear Radial Details No. 1" sheet.
3. All metal components of screen pipe including connections to concrete shall be stainless steel.
4. All metal components of grating including connections to wall shall be galvanized.

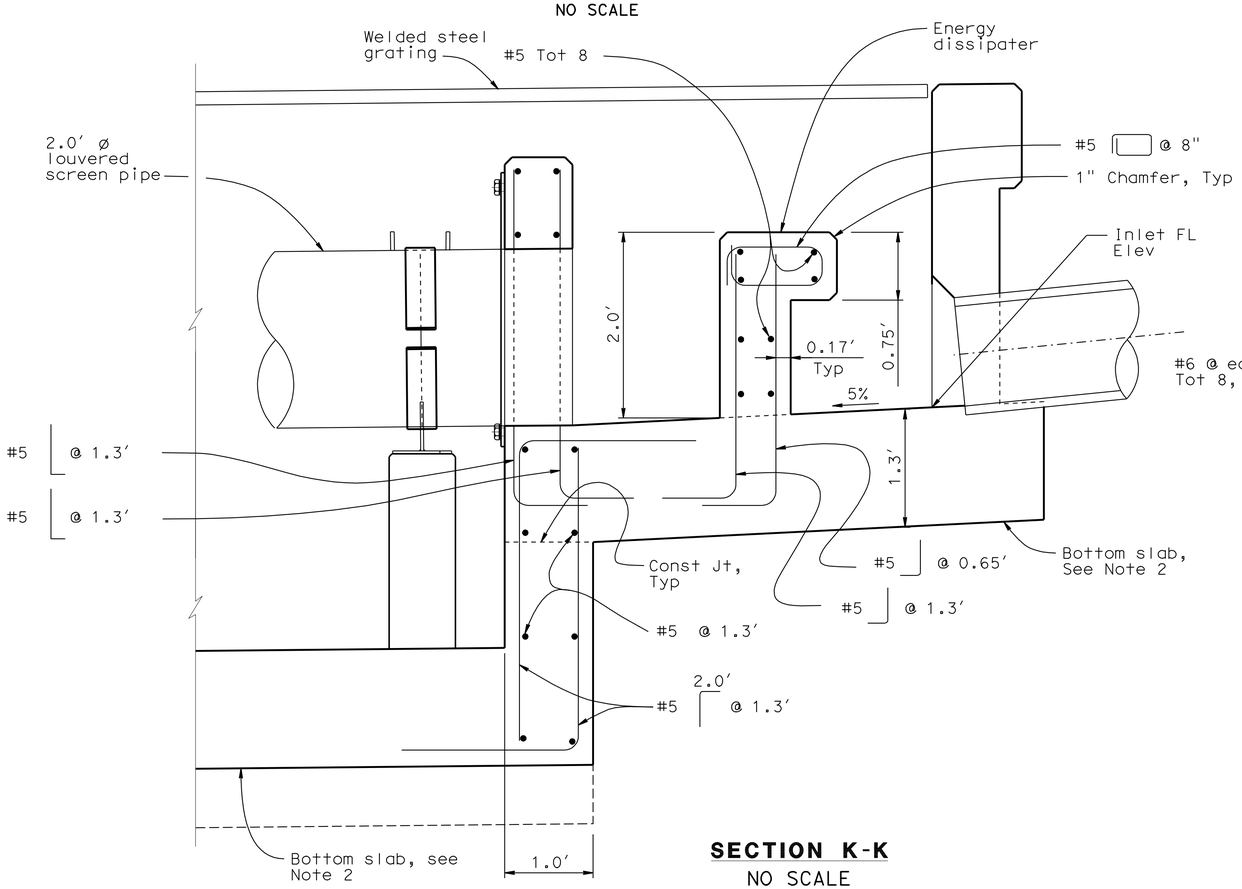

SECTION K-K

NO SCALE

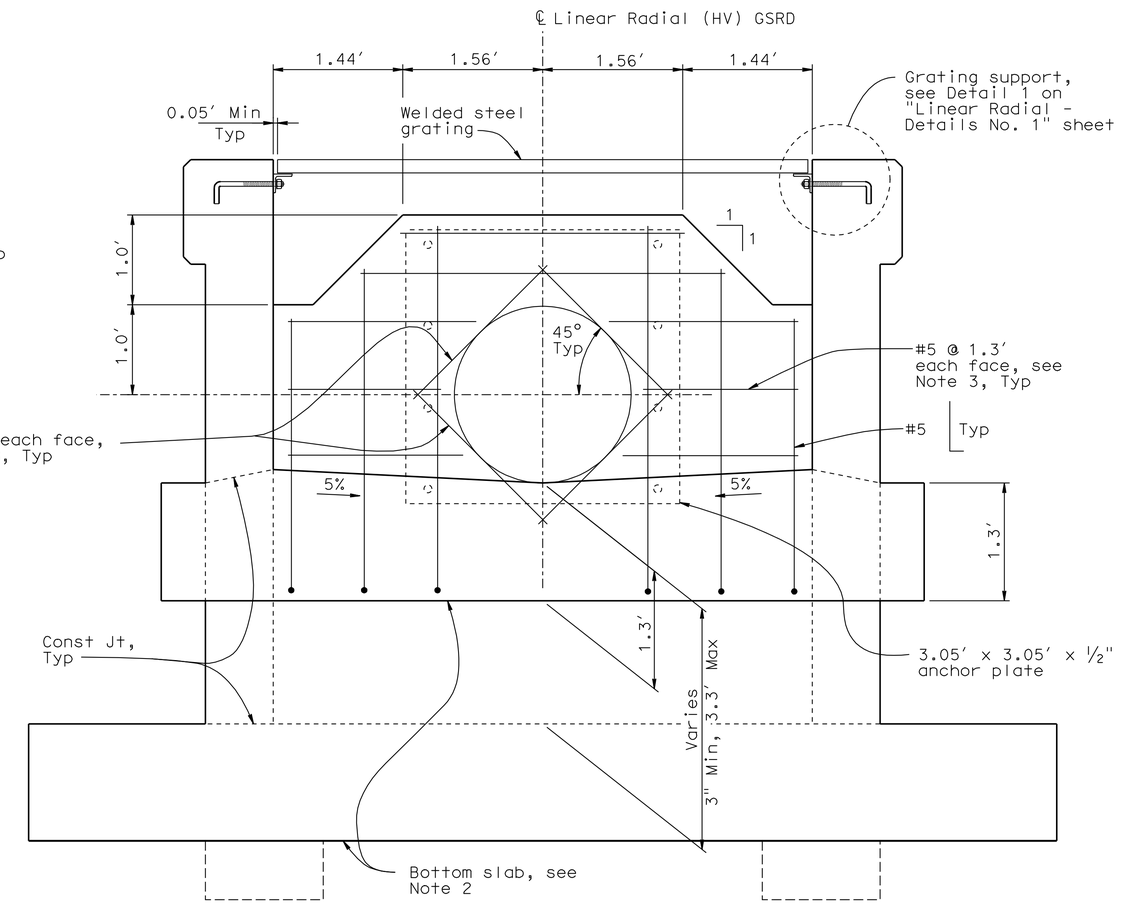

SECTION L-L

NO SCALE

GROSS SOLIDS REMOVAL DEVICE
LINEAR RADIAL (HV) - DETAILS No. 1

NO SCALE

DD-24

STATE OF CALIFORNIA - DEPARTMENT OF TRANSPORTATION
DIVISION OF DESIGN
OFFICE OF STORM WATER MANAGEMENT
Caltrans

FUNCTIONAL SUPERVISOR: TIMOTHY B. SOBELMAN
CALCULATED-DESIGNED BY: D. WANG
CHECKED BY: L. HE
REVISED BY
DATE REVISED

LAST REVISION 00-00-00
DATE PLOTTED => 26-APR-2011
TIME PLOTTED => 11:36

Dist	COUNTY	ROUTE	POST MILES TOTAL PROJECT	SHEET No.	TOTAL SHEETS
07	LA	5	R46.3/R50.0	138	456

Timothy B Sobelman 6-19-09
REGISTERED CIVIL ENGINEER DATE

4-25-11
PLANS APPROVAL DATE

REGISTERED PROFESSIONAL ENGINEER TIMOTHY B. SOBELMAN No. 59249 Exp. 6-30-11 CIVIL STATE OF CALIFORNIA

THE STATE OF CALIFORNIA OR ITS OFFICERS OR AGENTS SHALL NOT BE RESPONSIBLE FOR THE ACCURACY OR COMPLETENESS OF SCANNED COPIES OF THIS PLAN on DD-19.

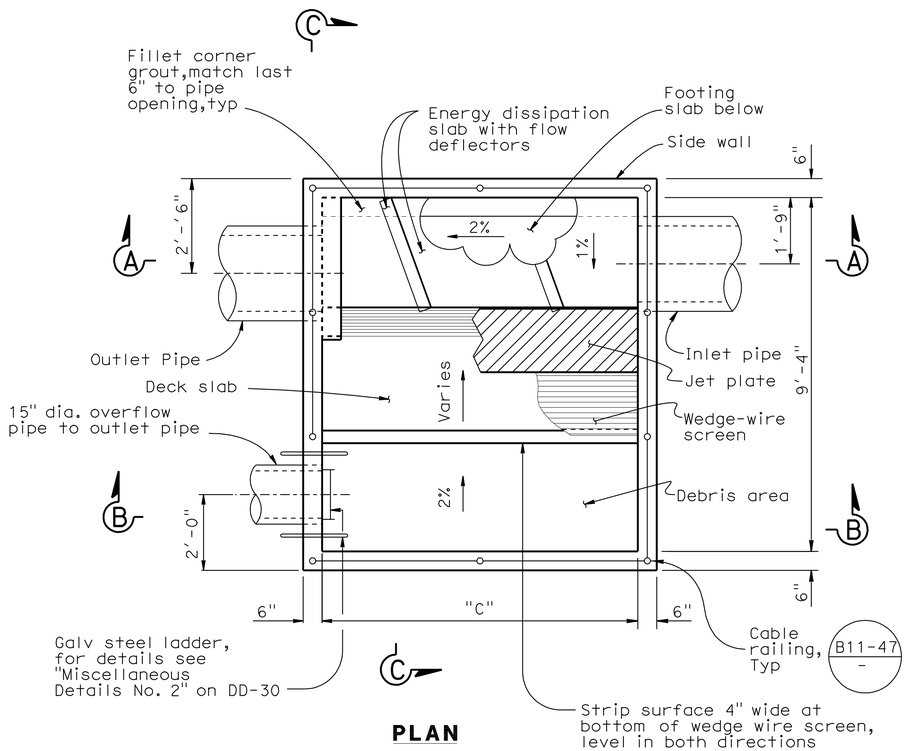

PLAN
NO SCALE

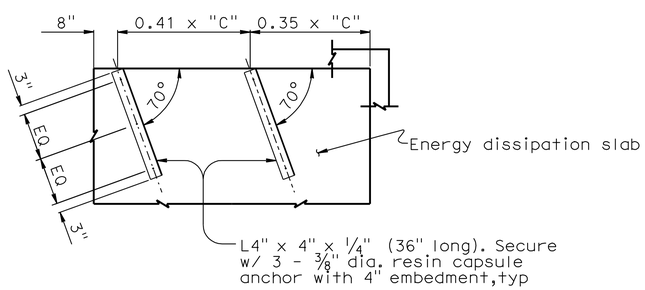

DEFLECTOR PLAN
NO SCALE

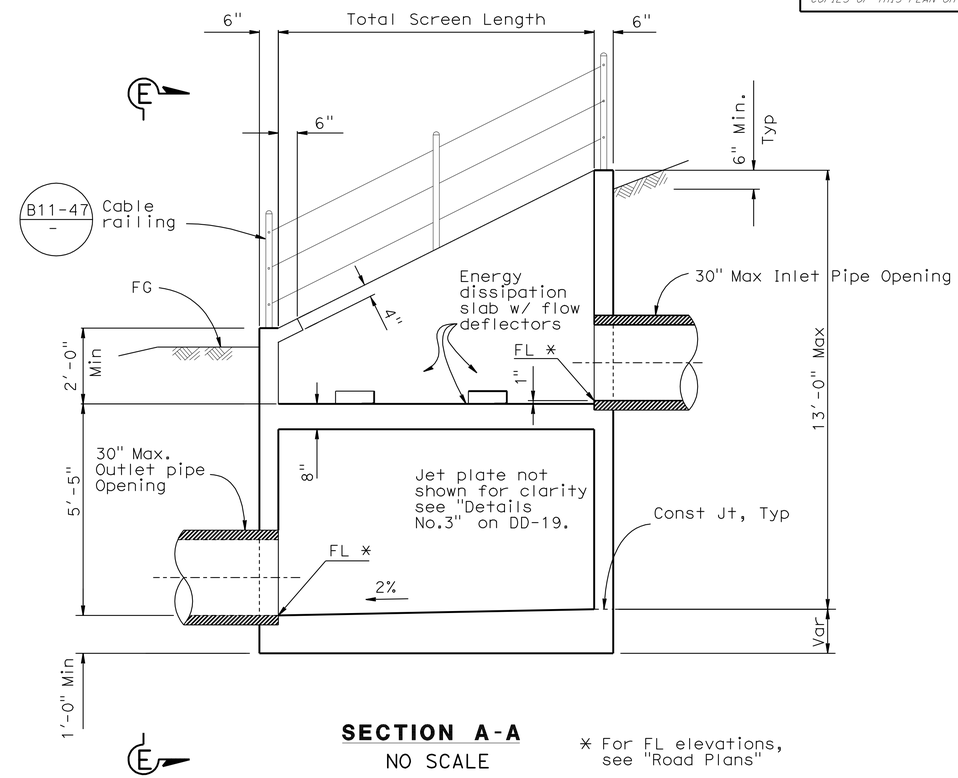

SECTION A-A
NO SCALE

* For FL elevations, see "Road Plans"

NOTES:

1. See "Road Plans" for additional details.
2. Inlet and outlet pipe opening sizes are shown on "Road Plans." The overflow and outlet piping shall be connected via standard elbows and tees.
3. For Sections B-B & C-C see Gross Solids Removal Device Inclined Screen Detail No. 1" on DD-26.
4. For reinforcing details see Gross Solids Removal Device Inclined Screen Detail No. 3" on DD-28.
5. For inlet and outlet pipe details not shown, see "Road Plans."

GROSS SOLIDS REMOVAL DEVICE INCLINED SCREEN - LAUYOUT

NO SCALE

DD-25

STATE OF CALIFORNIA - DEPARTMENT OF TRANSPORTATION
Caltrans
DIVISION OF DESIGN
OFFICE OF STORM WATER MANAGEMENT

FUNCTIONAL SUPERVISOR: TIMOTHY B. SOBELMAN
CALCULATED-DESIGNED BY: D. WANG
CHECKED BY: L. HE
REVISED BY
DATE REVISED

LAST REVISION 00-00-00
DATE PLOTTED => 26-APR-2011
TIME PLOTTED => 11:36

Dist	COUNTY	ROUTE	POST MILES TOTAL PROJECT	SHEET No.	TOTAL SHEETS
07	LA	5	R46.3/R50.0	139	456

REGISTERED CIVIL ENGINEER 6-19-09 DATE

4-25-11
PLANS APPROVAL DATE

REGISTERED PROFESSIONAL ENGINEER TIMOTHY B. SOBELMAN No. 59249 Exp. 6-30-11 CIVIL STATE OF CALIFORNIA

THE STATE OF CALIFORNIA OR ITS OFFICERS OR AGENTS SHALL NOT BE RESPONSIBLE FOR THE ACCURACY OR COMPLETENESS OF SCANNED COPIES OF THIS PLAN SHEET.

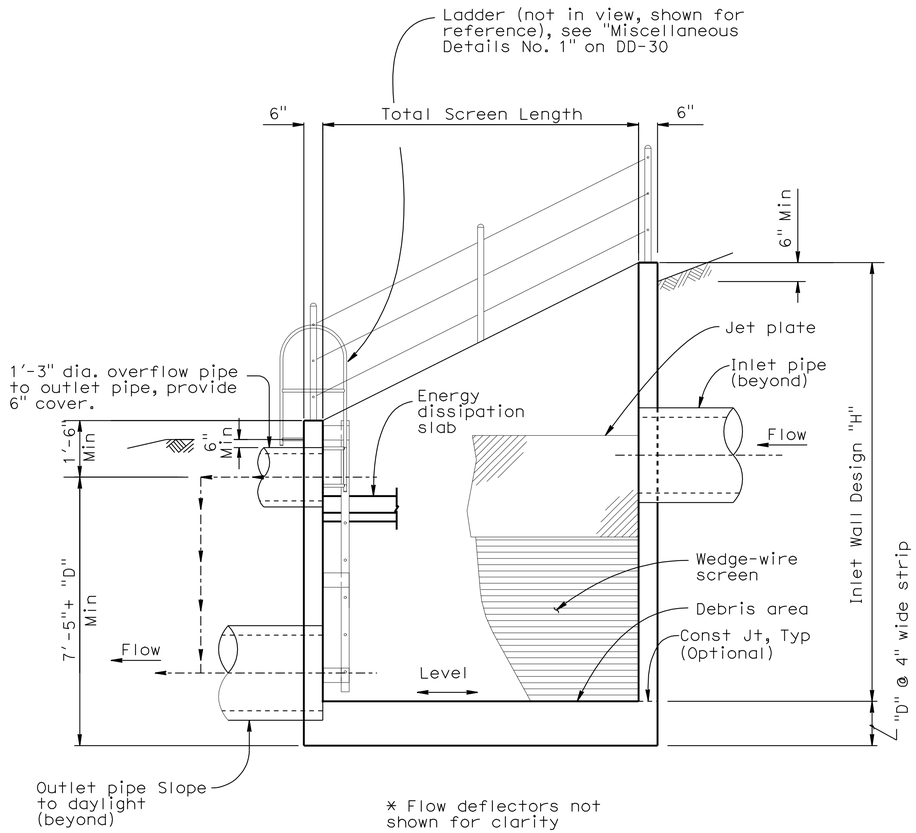

* Flow deflectors not shown for clarity

SECTION B-B

NOT TO SCALE

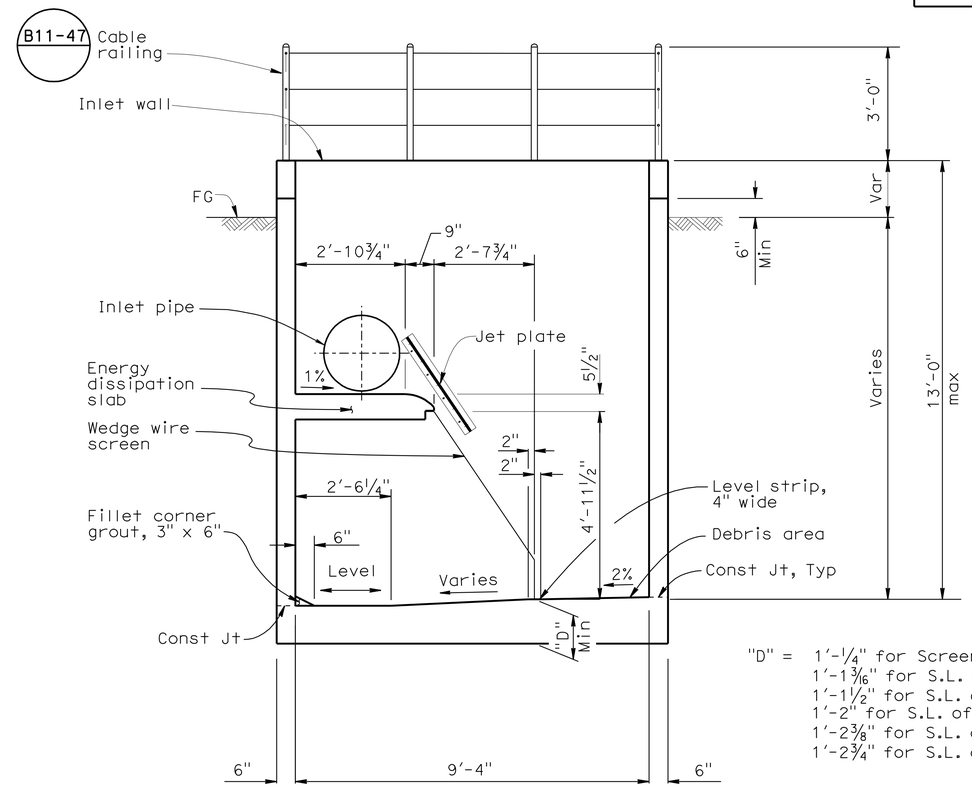

"D" = 1'-¼" for Screen Length (S.L.) of 3'-4⅛".
1'-1 3/16" for S.L. of 5'-0"
1'-1½" for S.L. of 6'-8"
1'-2" for S.L. of 8'-4"
1'-2⅜" for S.L. of 10'-0"
1'-2¾" for S.L. of 11'-8⅛"

* Flow deflectors not shown for clarity

SECTION C-C

NOT TO SCALE

NOTES:

1. See "Road Plans" for additional details.
2. For Section B-B & C-C locations, see "Type 2 - Layout" on DD-25.
3. Inlet and outlet piping opening sizes are shown on the "Road Plans." The overflow and outlet piping shall be connected via standard elbows and tees.
4. For inlet and outlet pipe details not shown, see "Road Plans".

GROSS SOLIDS REMOVAL DEVICE
INCLINED SCREEN - DETAILS No. 1

NO SCALE

DD-26

REVISED BY	DATE REVISED
D. WANG	L. HE

CALCULATED-DESIGNED BY / CHECKED BY

FUNCTIONAL SUPERVISOR: TIMOTHY B. SOBELMAN

STATE OF CALIFORNIA - DEPARTMENT OF TRANSPORTATION
DIVISION OF DESIGN
OFFICE OF STORM WATER MANAGEMENT
Caltrans

LAST REVISION 00-00-00 | DATE PLOTTED => 26-APR-2011 | TIME PLOTTED => 11:37

Dist	COUNTY	ROUTE	POST MILES TOTAL PROJECT	SHEET No.	TOTAL SHEETS
07	LA	5	R46.3/R50.0	140	456

Timothy B Sobelman 6-19-09
REGISTERED CIVIL ENGINEER DATE

4-25-11
PLANS APPROVAL DATE

REGISTERED PROFESSIONAL ENGINEER TIMOTHY B. SOBELMAN No. 59249 Exp. 6-30-11 CIVIL STATE OF CALIFORNIA

THE STATE OF CALIFORNIA OR ITS OFFICERS OR AGENTS SHALL NOT BE RESPONSIBLE FOR THE ACCURACY OR COMPLETENESS OF SCANNED COPIES OF THIS PLAN SHEET.

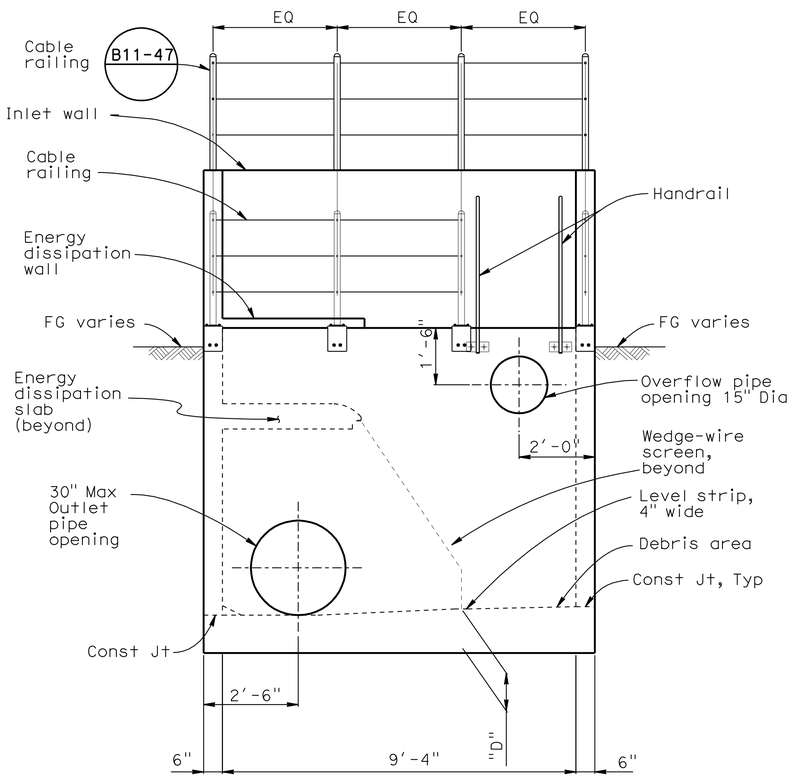

* Jet plate and flow deflectors not shown for clarity

VIEW E-E
NO SCALE

NOTE:

For Section D-D & View E-E locations, see "Type 2 - Layout" sheet.

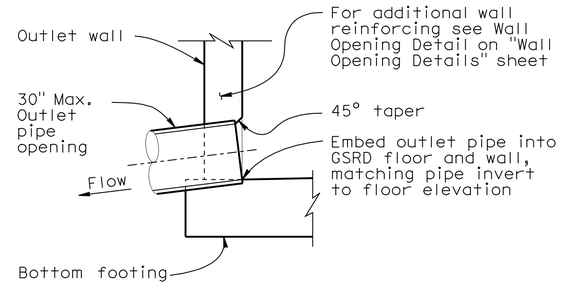

OUTLET DETAIL
PIPE EXIT AT WALL - INCLINED SCREEN
NO SCALE

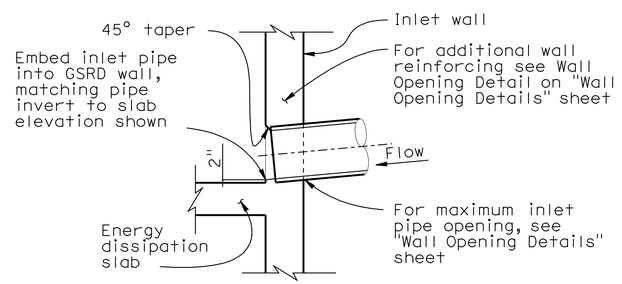

INLET DETAIL
PIPE ENTRANCE AT WALL - INCLINED SCREEN
NO SCALE

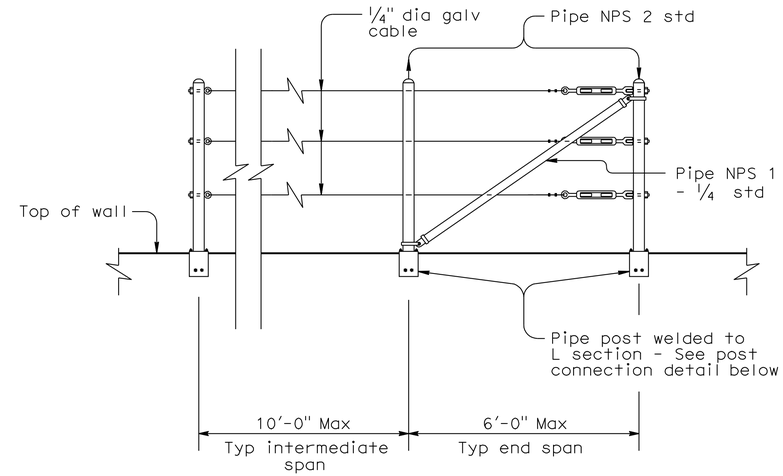

CABLE RAILING
NO SCALE

*** Refer to Standard Plan B11-47 for additional information

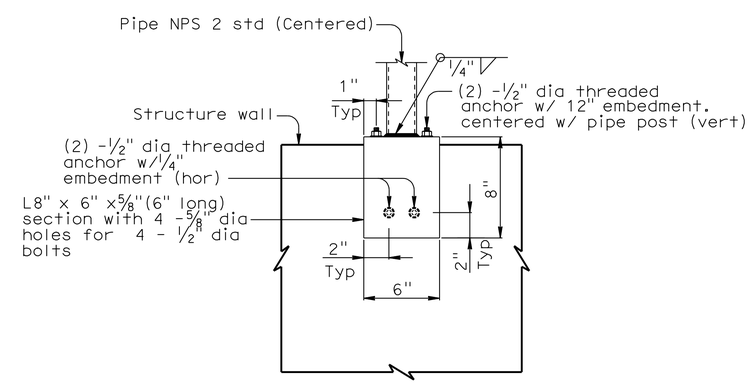

POST ANCHORAGE
NO SCALE

GROSS SOLIDS REMOVAL DEVICE
INCLINED SCREEN - DETAILS No. 3

NO SCALE

DD-27

STATE OF CALIFORNIA - DEPARTMENT OF TRANSPORTATION
Caltrans
DIVISION OF DESIGN
OFFICE OF STORM WATER MANAGEMENT

FUNCTIONAL SUPERVISOR: TIMOTHY B. SOBELMAN
CALCULATED-DESIGNED BY: D. WANG
CHECKED BY: L. HE
REVISED BY
DATE REVISED

LAST REVISION 00-00-00
DATE PLOTTED => 26-APR-2011
TIME PLOTTED => 11:37

Dist	COUNTY	ROUTE	POST MILES TOTAL PROJECT	SHEET No.	TOTAL SHEETS
07	LA	5	R46.3/R50.0	141	456

Timothy B Sobelman 6-19-09
REGISTERED CIVIL ENGINEER DATE

4-25-11
PLANS APPROVAL DATE

REGISTERED PROFESSIONAL ENGINEER TIMOTHY B. SOBELMAN No. 59249 Exp. 6-30-11 CIVIL STATE OF CALIFORNIA

THE STATE OF CALIFORNIA OR ITS OFFICERS OR AGENTS SHALL NOT BE RESPONSIBLE FOR THE ACCURACY OR COMPLETENESS OF SCANNED COPIES OF THIS PLAN SHEET.

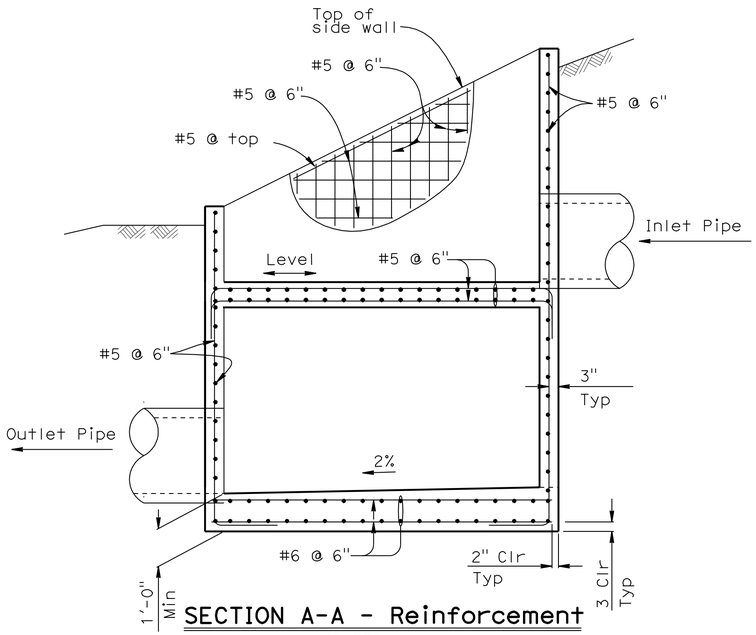

SECTION A-A - Reinforcement
NO SCALE

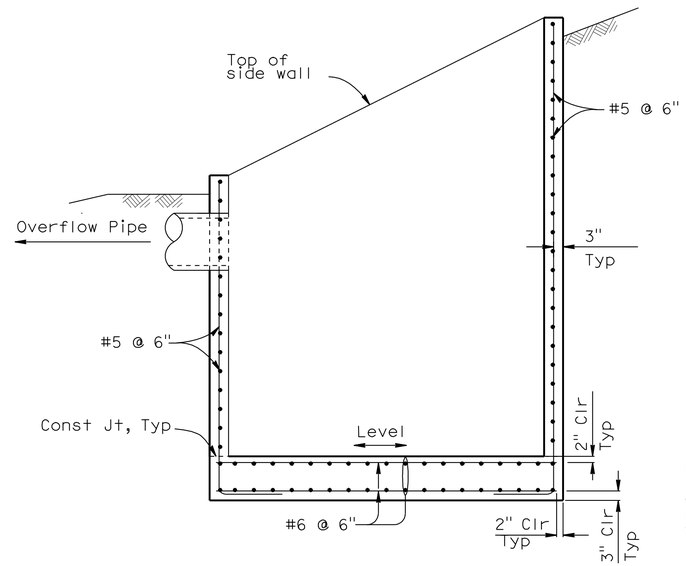

SECTION B-B - Reinforcement
NO SCALE

NOTES:

1. For additional reinforcing at openings, see "Wall Opening Details" sheet.
2. For section locations, see "Inclined Screen - Layout" sheet.

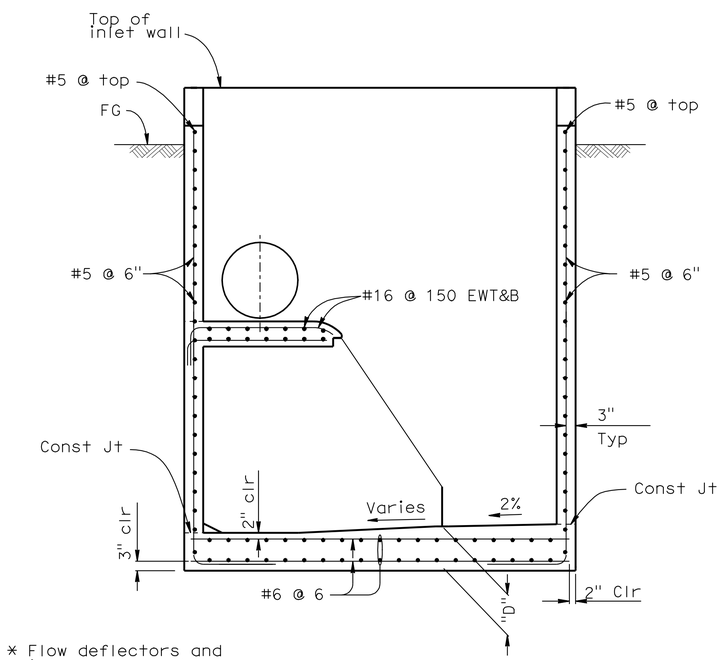

* Flow deflectors and jet plate not shown for clarity

SECTION C-C - REINF
NO SCALE

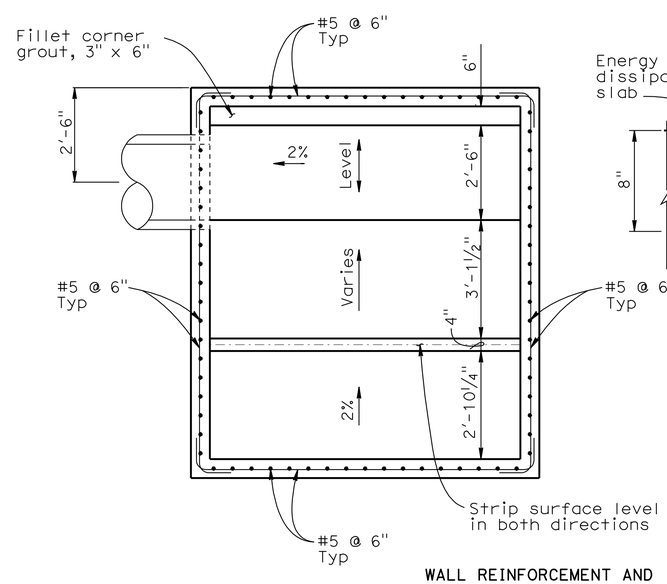

WALL REINFORCEMENT AND GRADES AT FOOTING SLAB

VIEW F-F
NO SCALE

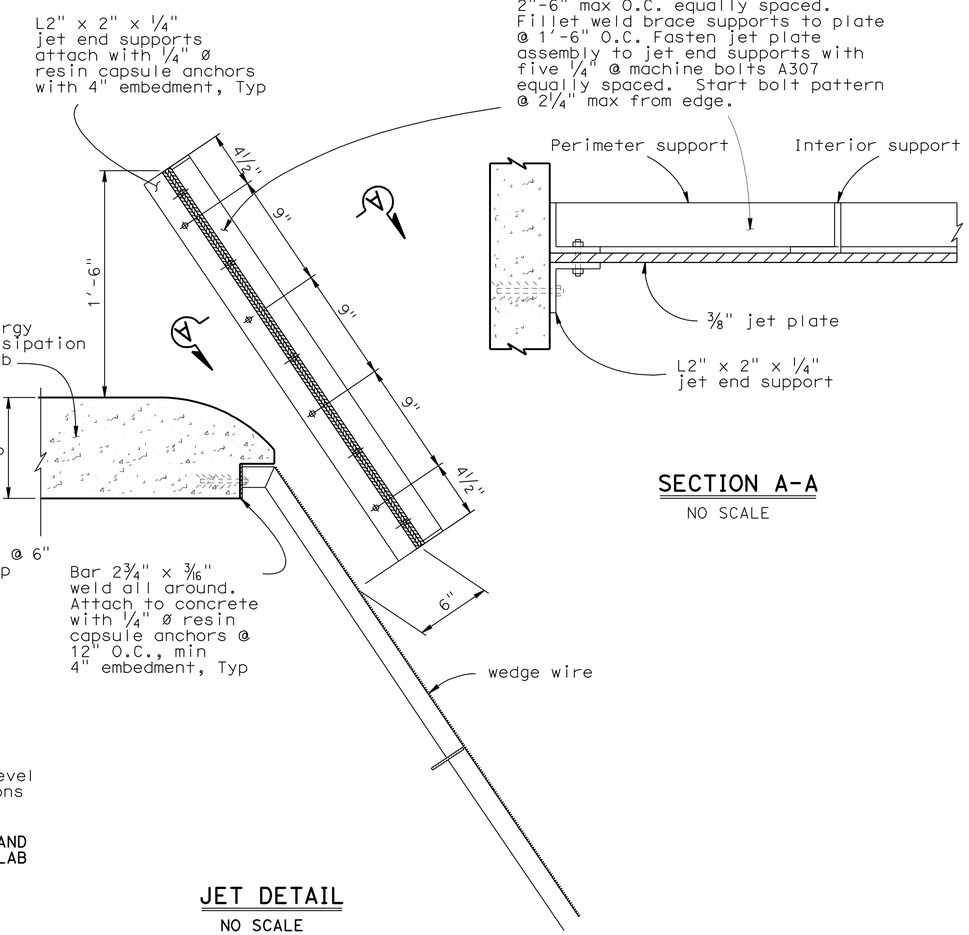

SECTION A-A
NO SCALE

JET DETAIL
NO SCALE

GROSS SOLIDS REMOVAL DEVICE
INCLINED SCREEN - DETAILS No. 3

NO SCALE

DD-28

STATE OF CALIFORNIA - DEPARTMENT OF TRANSPORTATION
Caltrans
DIVISION OF DESIGN
OFFICE OF STORM WATER MANAGEMENT

FUNCTIONAL SUPERVISOR: TIMOTHY B. SOBELMAN

CALCULATED-DESIGNED BY: D. WANG
CHECKED BY: L. HE
REVISED BY
DATE REVISED

LAST REVISION 00-00-00
DATE PLOTTED => 26-APR-2011
TIME PLOTTED => 11:37

Dist	COUNTY	ROUTE	POST MILES TOTAL PROJECT	SHEET No.	TOTAL SHEETS
07	LA	5	R46.3/R50.0	142	456

Timothy B Sobelman 6-19-09
REGISTERED CIVIL ENGINEER DATE

4-25-11
PLANS APPROVAL DATE

REGISTERED PROFESSIONAL ENGINEER
TIMOTHY B. SOBELMAN
No. 59249
Exp. 6-30-11
CIVIL
STATE OF CALIFORNIA

THE STATE OF CALIFORNIA OR ITS OFFICERS OR AGENTS SHALL NOT BE RESPONSIBLE FOR THE ACCURACY OR COMPLETENESS OF SCANNED COPIES OF THIS PLAN SHEET.

NOTE:

All metal components of screen, including all connections shall be stainless steel unless otherwise noted.

Reference Detail on DD-19 for Jet and Deflectors

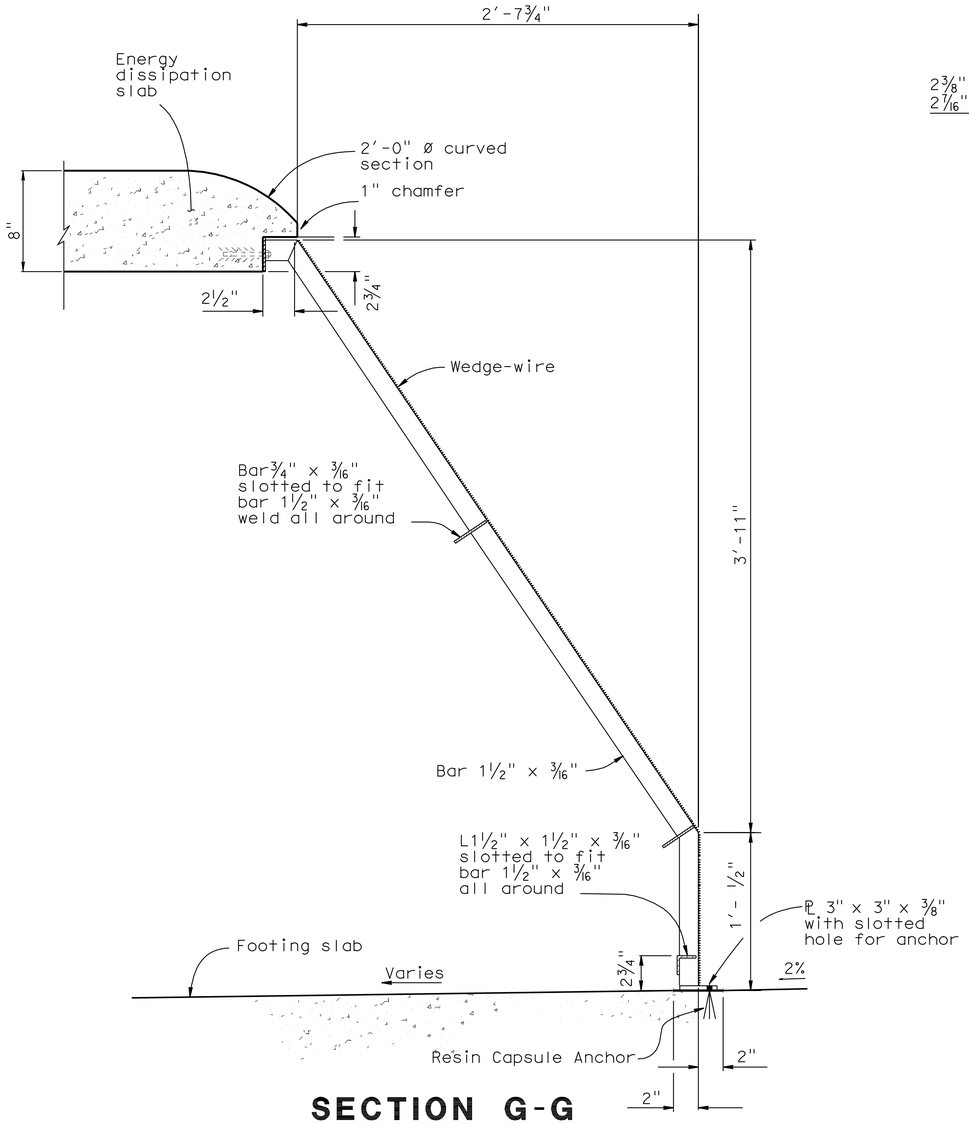

SECTION G-G

NO SCALE

For additional information see INCLINED SCREEN - DETAILS NO.3 /JET DETAIL

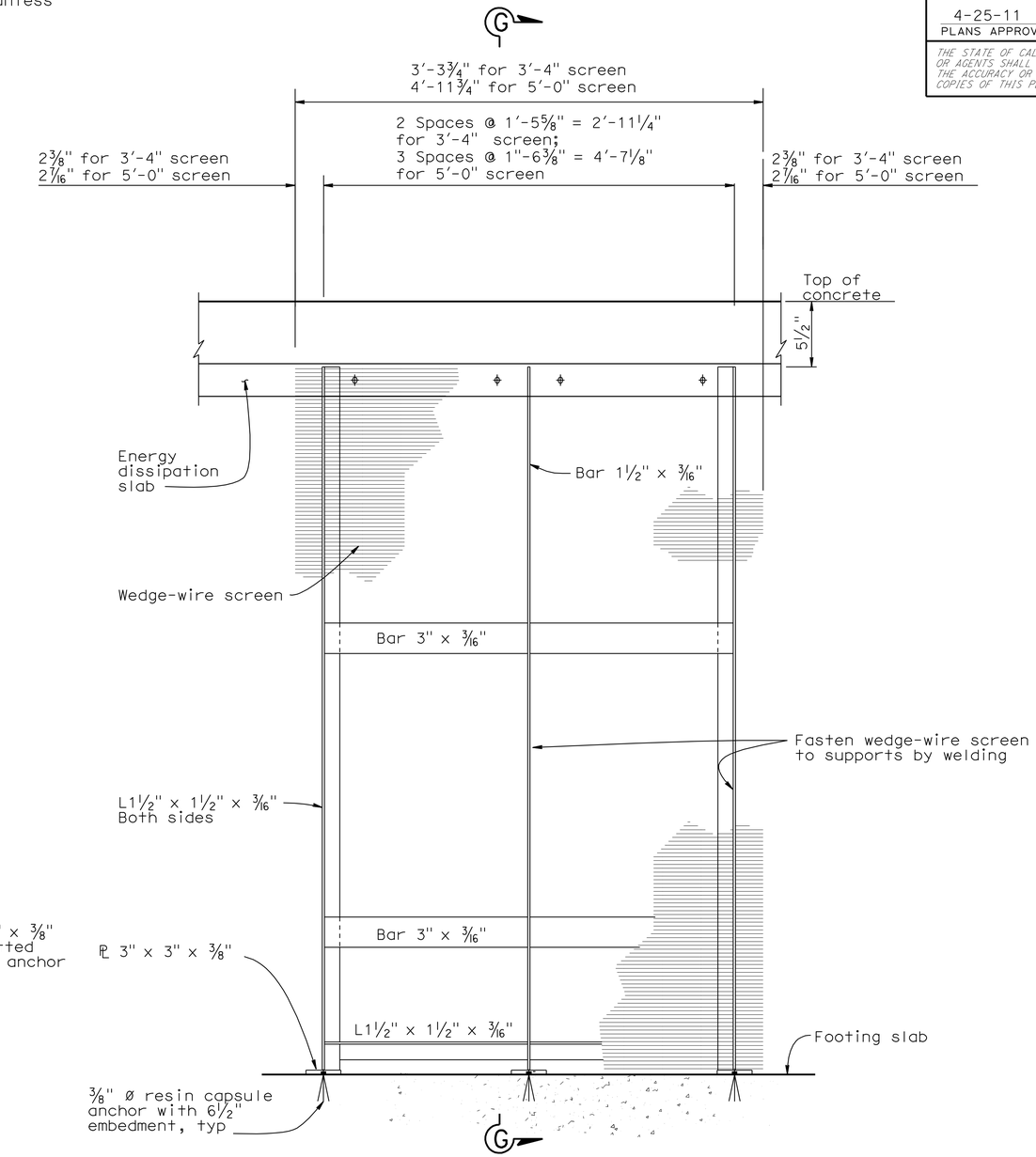

ELEVATION

NO SCALE

GROSS SOLIDS REMOVAL DEVICE INCLINED SCREEN DETAILS

NO SCALE

DD-29

STATE OF CALIFORNIA - DEPARTMENT OF TRANSPORTATION
Caltrans®
DIVISION OF DESIGN
OFFICE OF STORM WATER MANAGEMENT

FUNCTIONAL SUPERVISOR: TIMOTHY B. SOBELMAN
CALCULATED-DESIGNED BY: D. WANG
CHECKED BY: L. HE
REVISED BY
DATE REVISED

LAST REVISION 00-00-00
DATE PLOTTED => 26-APR-2011
TIME PLOTTED => 11:37

Dist	COUNTY	ROUTE	POST MILES TOTAL PROJECT	SHEET No.	TOTAL SHEETS
07	LA	5	R46.3/R50.0	143	456

Timothy B Sobelman 6-19-09
REGISTERED CIVIL ENGINEER DATE

4-25-11
PLANS APPROVAL DATE

REGISTERED PROFESSIONAL ENGINEER TIMOTHY B. SOBELMAN No. 59249 Exp. 6-30-11 CIVIL STATE OF CALIFORNIA

THE STATE OF CALIFORNIA OR ITS OFFICERS OR AGENTS SHALL NOT BE RESPONSIBLE FOR THE ACCURACY OR COMPLETENESS OF SCANNED COPIES OF THIS PLAN SHEET.

NOTES:

1. The distance between rungs shall not exceed 12" and shall be uniform throughout the length of wall.
2. The ladder may be constructed in one length at the Contractor's option on concrete walls.
3. All metal components of ladder and handrail including connections shall be galvanized after fabrication. See Standard Specifications or Special Provisions.
4. When ladder rails need to be spliced, see Standard Plan D75C for Ladder Splice Plate details.
5. Grind exposed corners 3/16" radius.

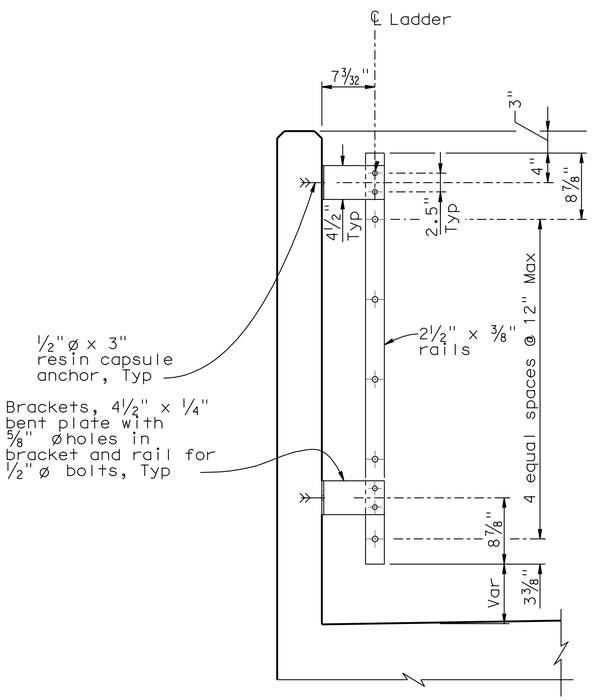

LADDER SECTION
NO SCALE
NOTE: Handrail not shown for clarity.

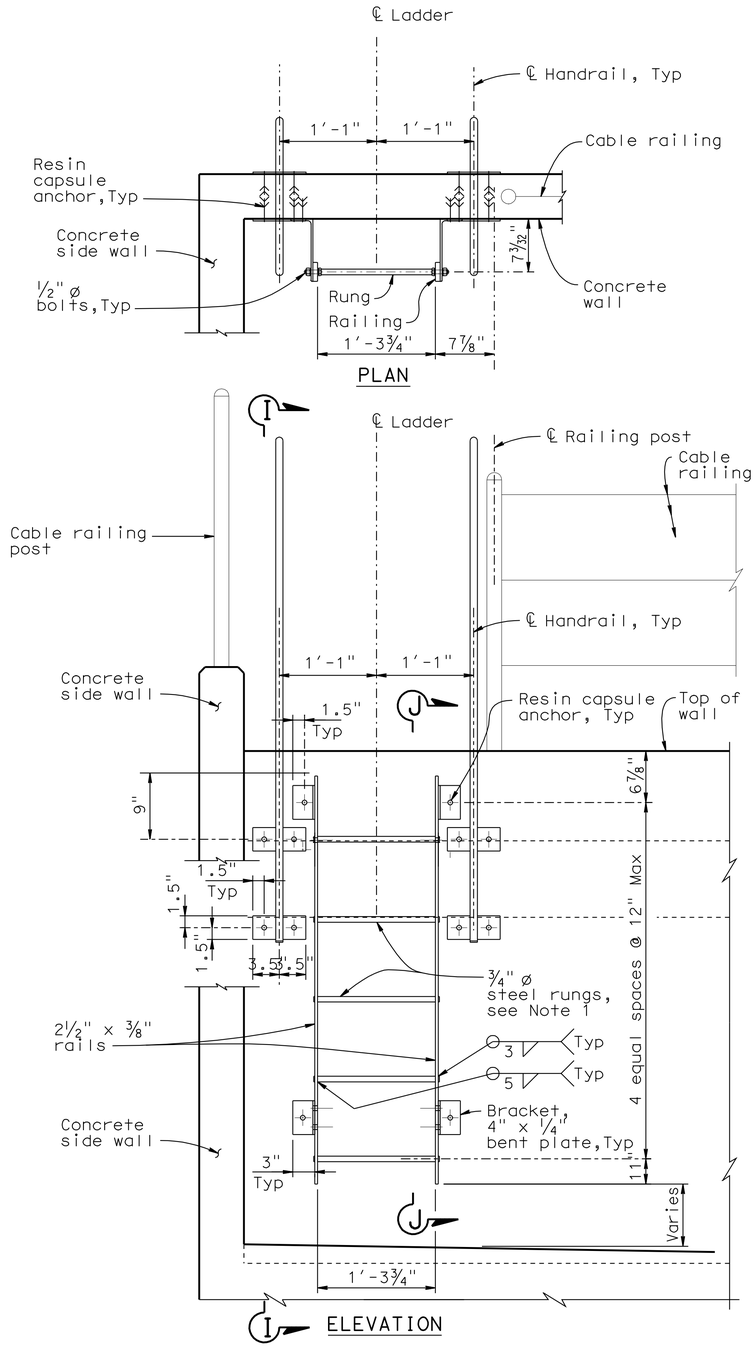

LADDER - INCLINED SCREEN GSRD

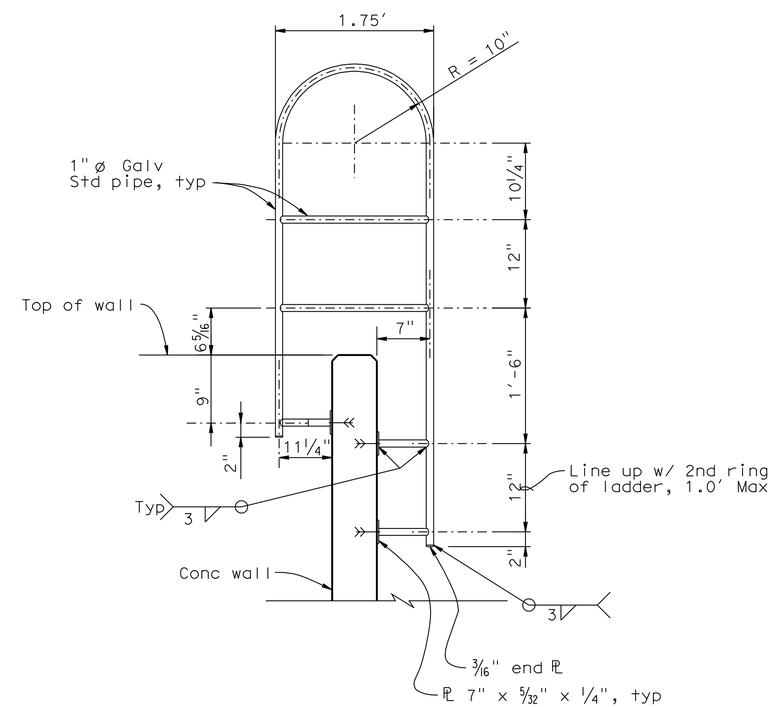

SECTION I - I
NO SCALE

GROSS SOLIDS REMOVAL DEVICE MISCELLANEOUS DETAILS

NO SCALE

DD-30

REVISED BY	DATE REVISED

CALCULATED-DESIGNED BY	CHECKED BY
D. WANG	L. HE

FUNCTIONAL SUPERVISOR: TIMOTHY B. SOBELMAN

STATE OF CALIFORNIA - DEPARTMENT OF TRANSPORTATION
DIVISION OF DESIGN
OFFICE OF STORM WATER MANAGEMENT
Caltrans

LAST REVISION 00-00-00 | DATE PLOTTED => 26-APR-2011 | TIME PLOTTED => 11:37

Dist	COUNTY	ROUTE	POST MILES TOTAL PROJECT	SHEET No.	TOTAL SHEETS
07	LA	5	R46.3/R50.0	144	456

Timothy B Sobelman 6-19-09
REGISTERED CIVIL ENGINEER DATE

4-25-11
PLANS APPROVAL DATE

REGISTERED PROFESSIONAL ENGINEER TIMOTHY B. SOBELMAN No. 59249 Exp. 6-30-11 CIVIL STATE OF CALIFORNIA

THE STATE OF CALIFORNIA OR ITS OFFICERS OR AGENTS SHALL NOT BE RESPONSIBLE FOR THE ACCURACY OR COMPLETENESS OF SCANNED COPIES OF THIS PLAN SHEET.

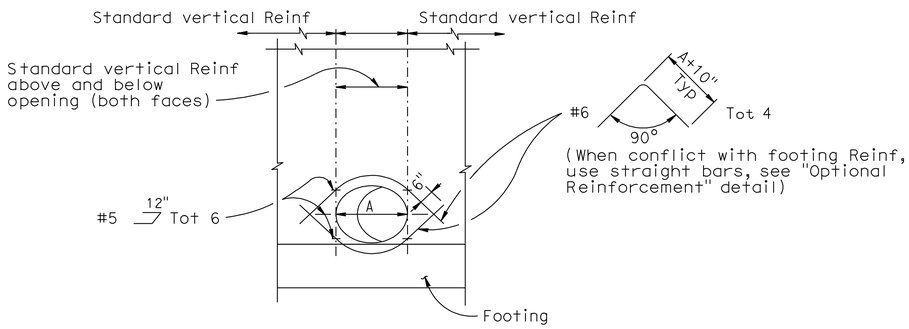

LINEAR RADIAL WALL OPENING

To be used at Linear Radial inlet and outlet pipe locations

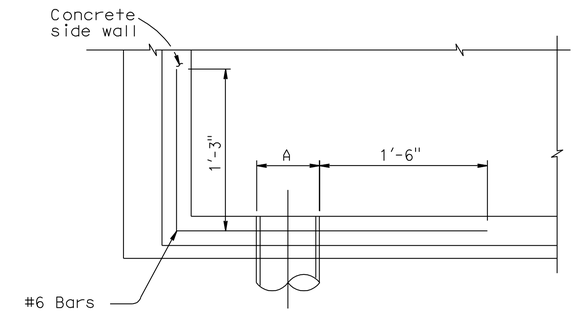

SECTION L-L

No Scale
(Only specified horizontal bars are shown)

NOTES:

1. In all opening locations, horizontal reinforcement to be standard except as shown.
2. All reinforcement to clear opening by 2" minimum.

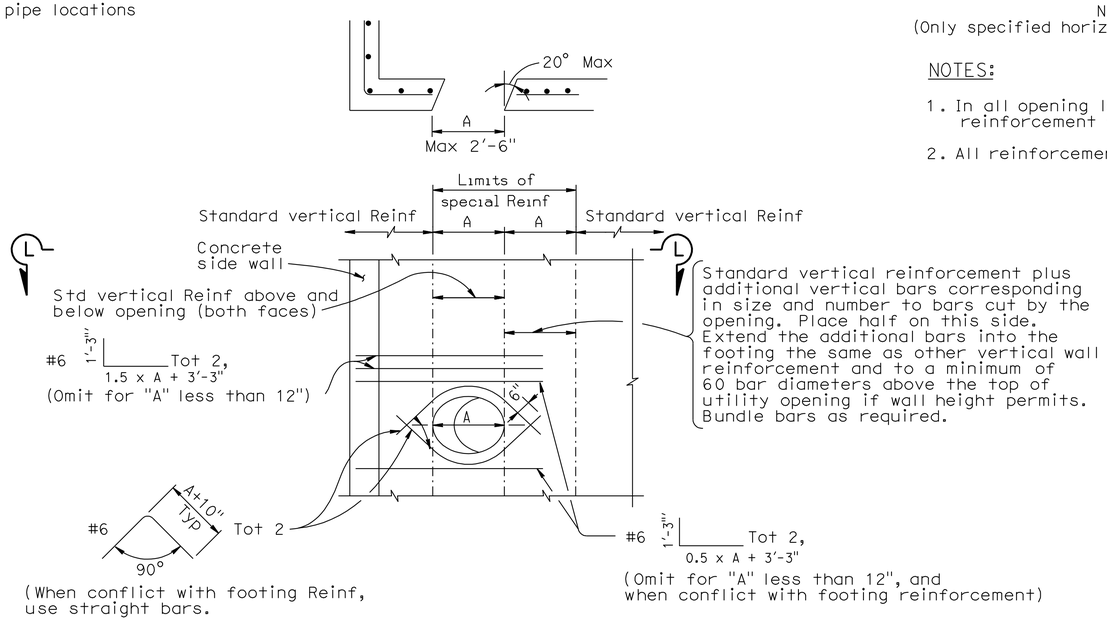

INCLINED SCREEN WALL OPENING

No Scale
To be used at inlet and outlet pipe locations

GROSS SOLIDS REMOVAL DEVICE WALL OPENING DETAILS

NO SCALE

DD-31

REVISED BY	DATE REVISED

CALCULATED-DESIGNED BY	CHECKED BY
D. WANG	L. HE

FUNCTIONAL SUPERVISOR: TIMOTHY B. SOBELMAN

STATE OF CALIFORNIA - DEPARTMENT OF TRANSPORTATION
Caltrans
DIVISION OF DESIGN
OFFICE OF STORM WATER MANAGEMENT

LAST REVISION 00-00-00 | DATE PLOTTED => 26-APR-2011 | TIME PLOTTED => 11:37

NOTE: (N) NOT A SEPARATE PAY ITEM, FOR INFORMATION ONLY.

Dist	COUNTY	ROUTE	POST MILES TOTAL PROJECT	SHEET No.	TOTAL SHEETS
07	LA	5	R46.3/R50.0	145	456

Paul Fong 01-18-11
REGISTERED CIVIL ENGINEER DATE

4-25-11
PLANS APPROVAL DATE

REGISTERED PROFESSIONAL ENGINEER PAUL FONG No. C67053 Exp. 9/30/12 CIVIL STATE OF CALIFORNIA

THE STATE OF CALIFORNIA OR ITS OFFICERS OR AGENTS SHALL NOT BE RESPONSIBLE FOR THE ACCURACY OR COMPLETENESS OF SCANNED COPIES OF THIS PLAN SHEET.

DRAINAGE SHEET No	DRAINAGE SYSTEM No ⬡	DRAINAGE UNIT No ○	HEIGHT OF INLET "H" OR "V" (N) FT	MINOR CONCRETE (MINOR STRUCTURE) CY	MISCELLANEOUS IRON AND STEEL LB	MINOR CONCRETE (BACKFILL) CY	DITCH EXCAVATION CY	ROCK SLOPE PROTECTION (FACING, METHOD B) CY	ROCK SLOPE PROTECTION FABRIC SY	18" STEEL FLARED END SECTION EA	INCLINED SCREEN TYPE A GSRD EA	REMOVE INLET EA	REMOVE CONCRETE CY	CAP INLET EA	CAP MANHOLE EA	REMOVE PIPE LF	ABANDON CULVERT LF	8" CSP RISER (.064" THICK) LF	12" REINFORCED CONCRETE PIPE LF	18" SLOTTED CORRUGATED STEEL PIPE (0.079" THICK) LF	24" SLOTTED CORRUGATED STEEL PIPE (.109" THICK) LF	18" CORRUGATED STEEL PIPE (0.109" THICK) LF	18" REINFORCED CONCRETE PIPE LF	24" CORRUGATED STEEL PIPE (0.109" THICK) LF	24" REINFORCED CONCRETE PIPE LF	JACKED 24" RCP (CLASS V) LF	36" CORRUGATED STEEL PIPE (0.109" THICK) LF	42" REINFORCED CONCRETE PIPE LF	45" REINFORCED CONCRETE PIPE LF	24" CORRUGATED STEEL PIPE DOWNDRAIN (0.109" THICK) LF	8" PERFORATED PLASTIC PIPE UNDERDRAIN LF	8" NON-PERFORATED PLASTIC PIPE UNDERDRAIN LF	FILTER FABRIC SQYD	PERMEABLE MATERIAL CY	MANHOLE FRAME & COVER (N) EA	TYPE 24-12 FRAME & GRATE (N) EA	CONCRETE COLLAR (N) EA	STEEL CHANNEL CLOSURE (N) EA	MAXIMUM COVER (N) FT	DESCRIPTION	STATION
D-1	1	a														9.0																							4.5	REMOVE 48" RCP	
		b		10.0																																				JUNCTION STRUCTURE No. 2	98.85' Lt, 2431+86.77 ROUTE 5
		c																										58.0											15.0	42" RCP	
		d	17.5	18.0	458																															1				MANHOLE No. 2	147.40' Lt, 2432+19.90 ROUTE 5
		e																										228.0											14.0	42" RCP	
		f	16.4	17.0	458																															1				MANHOLE No. 2	194.08' Lt, 2434+38.21 ROUTE 5
D-2	1	g																											222.5										14.0	45" RCP	
		h	16.6	17.0	458																															1				MANHOLE No. 2	233.64' Lt, 2436+69.45 ROUTE 5
D-1	2	a				4.0																	32.5																2.3	18" RCP W/22.0' MINOR Conc Bkf	
		b	3.8	1.6	652																																2			GD-3 INLET	116.39' Lt, 2433+00.00 ROUTE 5
		c																					20.0																2.3	18" RCP	
		d	3.7	1.6	652																																2			GD-3 INLET	116.39' Lt, 2433+20.00 ROUTE 5
		e																					40.0																2.4	18" RCP	
		f	3.9	1.6	652																																2			GD-3 INLET	116.39' Lt, 2433+60.00 ROUTE 5
D-1	3	a																														9.0								8" NON-PERFORATED PLASTIC PIPE UNDERDRAIN	
		b					290.0																								1265.0		1480.0	270.0						8" PERFORATED PLASTIC PIPE UNDERDRAIN	2433+05.85 TO 2445+60.00 ROUTE 5
D-2	3	c																3.2																						8" CSP RISER (VERTICAL)	
SHEET TOTAL				66.8	3330	4.0	290.0									9.0		3.2					92.5					286.0	222.5		1265.0	9.0	1480.0	270.0	3	6					

DRAINAGE QUANTITIES
DQ-1

PAUL FONG — REVISED BY — DATE REVISED
PRAKASH YADAV — CALCULATED-DESIGNED BY — CHECKED BY
DAVE BHALLA — FUNCTIONAL SUPERVISOR
STATE OF CALIFORNIA - DEPARTMENT OF TRANSPORTATION
Caltrans® HYDRAULICS

LAST REVISION — DATE PLOTTED => 26-APR-2011 — TIME PLOTTED => 11:37

NOTE: (N) NOT A SEPARATE PAY ITEM, FOR INFORMATION ONLY.

Dist	COUNTY	ROUTE	POST MILES TOTAL PROJECT	SHEET No.	TOTAL SHEETS
07	LA	5	R46.3/R50.0	146	456

Paul Fong 01-18-11
REGISTERED CIVIL ENGINEER DATE

4-25-11
PLANS APPROVAL DATE

REGISTERED PROFESSIONAL ENGINEER PAUL FONG No. C67053 Exp. 9/30/12 CIVIL STATE OF CALIFORNIA

THE STATE OF CALIFORNIA OR ITS OFFICERS OR AGENTS SHALL NOT BE RESPONSIBLE FOR THE ACCURACY OR COMPLETENESS OF SCANNED COPIES OF THIS PLAN SHEET.

DRAINAGE SHEET No	DRAINAGE SYSTEM No	DRAINAGE UNIT No	HEIGHT OF INLET "H" OR "V" (N)	MINOR CONCRETE (MINOR STRUCTURE)	MISCELLANEOUS IRON AND STEEL	MINOR CONCRETE (BACKFILL)	DITCH EXCAVATION	ROCK SLOPE PROTECTION (FACING, METHOD B)	ROCK SLOPE PROTECTION FABRIC	18" STEEL FLARED END SECTION	INCLINED SCREEN TYPE A GSRD	REMOVE INLET	REMOVE CONCRETE	CAP INLET	CAP MANHOLE	REMOVE PIPE	ABANDON CULVERT	8" CSP RISER (.064" THICK)	12" REINFORCED CONCRETE PIPE	18" SLOTTED CORRUGATED STEEL PIPE (.079" THICK)	24" SLOTTED CORRUGATED STEEL PIPE (0.109" THICK)	18" CORRUGATED STEEL PIPE (0.109" THICK)	18" REINFORCED CONCRETE PIPE	24" CORRUGATED STEEL PIPE (0.109" THICK)	24" REINFORCED CONCRETE PIPE	JACKED 24" RCP (CLASS V)	36" CORRUGATED STEEL PIPE (0.109" THICK)	42" REINFORCED CONCRETE PIPE	45" REINFORCED CONCRETE PIPE	24" CORRUGATED STEEL PIPE DOWNDRAIN (0.109" THICK)	8" PERFORATED PLASTIC PIPE UNDERDRAIN	8" NON-PERFORATED PLASTIC PIPE UNDERDRAIN	FILTER FABRIC	PERMEABLE MATERIAL	MANHOLE FRAME & COVER (N)	TYPE 24-12 FRAME & GRATE (N)	CONCRETE COLLAR (N)	STEEL CHANNEL CLOSURE (N)	MAXIMUM COVER (N)	DESCRIPTION	STATION
			FT	CY	LB	CY	CY	CY	SY	EA	EA	EA	CY	EA	EA	LF	LF	LF	LF	LF	LF	LF	LF	LF	LF	LF	LF	LF	LF	LF	LF	LF	SQYD	CY	EA	EA	EA	EA	FT		
D-2	3	d																													13.5									8" NON-PERFORATED PLASTIC PIPE UNDERDRAIN	
		e																3.2																						8" CSP RISER (VERTICAL)	
		f																3.2																						8" CSP RISER (VERTICAL)	
		g																3.2																						8" CSP RISER (VERTICAL)	
		h																4.6																						8" CSP RISER (TERMINAL)	
		i																													52.0									8" NON-PERFORATED PLASTIC PIPE UNDERDRAIN	
		j																													34.0									8" NON-PERFORATED PLASTIC PIPE UNDERDRAIN	
D-2	4	a													1																									CAP MANHOLE No. 4	88.50' Lt, 2435+58.80 ROUTE 5
		b														5.5																							9.5	REMOVE 42" RCP	
		c														156.0																							28.0	REMOVE 42" RCP	
		d	8.0	8.0	458																													1						MANHOLE No. 2	114.00' Lt, 2435+87.07 ROUTE 5
		e																						12.5															4.6	24" RCP	
		f	5.8	2.2	652																														2					GD-3 INLET	125.88' Lt, 2436+00.00 ROUTE 5
		g																						58.0															3.8	24" RCP	
		h	5.5	2.1	652																														2					GD-3 INLET	126.48' Lt, 2436+60.00 ROUTE 5
		i																						78.0															3.8	24" RCP	
		j	5.6	2.1	652																														2					GD-3 INLET	125.24' Lt, 2437+40.00 ROUTE 5
		k																						98.0															3.9	24" RCP	
		l	5.8	2.2	652																														2					GD-3 INLET	125.24' Lt, 2438+40.00 ROUTE 5
SHEET TOTAL			16.6	3066											1	161.5		14.2						246.5							99.5			1	8						

DRAINAGE QUANTITIES
DQ-2

PAUL FONG — REVISED BY — DATE REVISED
PRAKASH YADAV — CALCULATED-DESIGNED BY — CHECKED BY
DAVE BHALLA — FUNCTIONAL SUPERVISOR
STATE OF CALIFORNIA - DEPARTMENT OF TRANSPORTATION
Caltrans
HYDRAULICS

LAST REVISION — DATE PLOTTED => 26-APR-2011 — TIME PLOTTED => 11:37

NOTE: (N) NOT A SEPARATE PAY ITEM, FOR INFORMATION ONLY.

Dist	COUNTY	ROUTE	POST MILES TOTAL PROJECT	SHEET No.	TOTAL SHEETS
07	LA	5	R46.3/R50.0	147	456

Paul Fong 01-18-11
REGISTERED CIVIL ENGINEER DATE

4-25-11
PLANS APPROVAL DATE

REGISTERED PROFESSIONAL ENGINEER PAUL FONG No. C67053 Exp. 9/30/12 CIVIL STATE OF CALIFORNIA

THE STATE OF CALIFORNIA OR ITS OFFICERS OR AGENTS SHALL NOT BE RESPONSIBLE FOR THE ACCURACY OR COMPLETENESS OF SCANNED COPIES OF THIS PLAN SHEET.

DRAINAGE SHEET No	DRAINAGE SYSTEM No (⬡)	DRAINAGE UNIT No (○)	HEIGHT OF INLET "H" OR "V" (N) FT	MINOR CONCRETE (MINOR STRUCTURE) CY	MISCELLANEOUS IRON AND STEEL LB	MINOR CONCRETE (BACKFILL) CY	DITCH EXCAVATION CY	ROCK SLOPE PROTECTION (FACING, METHOD B) CY	ROCK SLOPE PROTECTION FABRIC SY	18" STEEL FLARED END SECTION EA	INCLINED SCREEN TYPE A GSRD EA	REMOVE INLET EA	REMOVE CONCRETE CY	CAP INLET EA	CAP MANHOLE EA	REMOVE PIPE LF	ABANDON CULVERT LF	8" CSP RISER (.064" THICK) LF	12" REINFORCED CONCRETE PIPE LF	18" SLOTTED CORRUGATED STEEL PIPE (0.079" THICK) LF	24" SLOTTED CORRUGATED STEEL PIPE (0.109" THICK) LF	18" CORRUGATED STEEL PIPE (0.109" THICK) LF	18" REINFORCED CONCRETE PIPE LF	24" CORRUGATED STEEL PIPE (0.109" THICK) LF	24" REINFORCED CONCRETE PIPE LF	JACKED 24" RCP (CLASS V) LF	36" CORRUGATED STEEL PIPE (0.109" THICK) LF	42" REINFORCED CONCRETE PIPE LF	45" REINFORCED CONCRETE PIPE LF	24" CORRUGATED STEEL PIPE DOWNDRAIN (0.109" THICK) LF	8" PERFORATED PLASTIC PIPE UNDERDRAIN LF	8" NON-PERFORATED PLASTIC PIPE UNDERDRAIN LF	FILTER FABRIC SQYD	PERMEABLE MATERIAL CY	MANHOLE FRAME & COVER (N) EA	TYPE 24-12 FRAME & GRATE (N) EA	CONCRETE COLLAR (N) EA	STEEL CHANNEL CLOSURE (N) EA	MAXIMUM COVER (N) FT	DESCRIPTION	STATION
D-2	4	m																							98.0														3.9	24" RCP	
		n	5.9	2.3	652																															2				GD-3 INLET	125.24' Lt, 2439+40.00 ROUTE 5
		o																							98.0														3.9	24" RCP	
		p	5.9	2.3	652																															2				GD-3 INLET	125.24' Lt, 2440+40.00 ROUTE 5
D-2	5	a															8.0																							ABANDON 18" RCP	
		b										1																												REMOVE INLET	
		c														16.0																							3.3	REMOVE 18" RCP	
		d										1																												REMOVE INLET	
D-2	6	a										1																												REMOVE INLET	
		b														16.0																							3.3	REMOVE 18" RCP	
		c										1																												REMOVE INLET	
		d														6.0																							3.3	REMOVE 18" RCP	
		e															78.0																							ABANDON 24" CMP	
D-2	7	a																																				1		STEEL CHANNEL CLOSURE	2437+12.10 ROUTE 5
		b																																				1		STEEL CHANNEL CLOSURE	2438+86.30 ROUTE 5
		c																																				1		STEEL CHANNEL CLOSURE	2442+60.81 ROUTE 5
SHEET TOTAL			4.6	1304								4				38.0	86.0								196.0											4		3			

DRAINAGE QUANTITIES
DQ-3

STATE OF CALIFORNIA - DEPARTMENT OF TRANSPORTATION
Caltrans HYDRAULICS

PAUL FONG — REVISED BY
PRAKASH YADAV — DATE REVISED
CALCULATED-DESIGNED BY
CHECKED BY
FUNCTIONAL SUPERVISOR
DAVE BHALLA

LAST REVISION DATE PLOTTED => 26-APR-2011 TIME PLOTTED => 11:38

NOTE: (N) NOT A SEPARATE PAY ITEM, FOR INFORMATION ONLY.

Dist	COUNTY	ROUTE	POST MILES TOTAL PROJECT	SHEET No.	TOTAL SHEETS
07	LA	5	R46.3/R50.0	148	456

Paul Fong 01-18-11
REGISTERED CIVIL ENGINEER DATE

4-25-11
PLANS APPROVAL DATE

REGISTERED PROFESSIONAL ENGINEER PAUL FONG No. C67053 Exp. 9/30/12 CIVIL STATE OF CALIFORNIA

THE STATE OF CALIFORNIA OR ITS OFFICERS OR AGENTS SHALL NOT BE RESPONSIBLE FOR THE ACCURACY OR COMPLETENESS OF SCANNED COPIES OF THIS PLAN SHEET.

DRAINAGE SHEET No	DRAINAGE SYSTEM No ⬡	DRAINAGE UNIT No ○	HEIGHT OF INLET "H" OR "V" (N) FT	MINOR CONCRETE (MINOR STRUCTURE) CY	MISCELLANEOUS IRON AND STEEL LB	MINOR CONCRETE (BACKFILL) CY	DITCH EXCAVATION CY	ROCK SLOPE PROTECTION (FACING, METHOD B) CY	ROCK SLOPE PROTECTION FABRIC SY	18" STEEL FLARED END SECTION EA	INCLINED SCREEN TYPE A GSRD EA	REMOVE INLET EA	REMOVE CONCRETE CY	CAP INLET EA	CAP MANHOLE EA	REMOVE PIPE LF	ABANDON CULVERT LF	8" CSP RISER (.064" THICK) LF	12" REINFORCED CONCRETE PIPE LF	18" SLOTTED CORRUGATED STEEL PIPE (0.079" THICK) LF	24" SLOTTED CORRUGATED STEEL PIPE (0.109" THICK) LF	18" CORRUGATED STEEL PIPE (0.109" THICK) LF	18" REINFORCED CONCRETE PIPE LF	24" CORRUGATED STEEL PIPE (0.109" THICK) LF	24" REINFORCED CONCRETE PIPE LF	JACKED 24" RCP (CLASS V) LF	36" CORRUGATED STEEL PIPE (0.109" THICK) LF	42" REINFORCED CONCRETE PIPE LF	45" REINFORCED CONCRETE PIPE LF	24" CORRUGATED STEEL PIPE DOWNDRAIN (0.109" THICK) LF	8" PERFORATED PLASTIC PIPE UNDERDRAIN LF	8" NON-PERFORATED PLASTIC PIPE UNDERDRAIN LF	FILTER FABRIC SQYD	PERMEABLE MATERIAL CY	MANHOLE FRAME & COVER (N) EA	TYPE 24-12 FRAME & GRATE (N) EA	CONCRETE COLLAR (N) EA	STEEL CHANNEL CLOSURE (N) EA	MAXIMUM COVER (N) FT	DESCRIPTION	STATION
D-2	7	d																																			1		STEEL CHANNEL CLOSURE	2446+00.00 ROUTE 5
D-3	8	a	5.0	1.8	326																															1			TYPE G2 INLET	1.26' L+, 2451+80.00 ROUTE 5
		b																							98.0													4.3	24" RCP	
		c																		98.0																			18" SCSP	
		d	6.3	2.2	326																															1			TYPE G2 INLET	1.26' L+, 2452+80.00 ROUTE 5
		e																							98.0													4.5	24" RCP	
		f	6.5	2.2	326																															1			TYPE G2 INLET	1.26' L+, 2453+80.00 ROUTE 5
		g																							98.0													4.5	24" RCP	
		h	6.5	2.2	326																															1			TYPE G2 INLET	1.26' L+, 2454+80.00 ROUTE 5
		i																							98.0													4.6	24" RCP	
		j	6.6	2.2	326																															1			TYPE G2 INLET	1.26' L+, 2455+80.00 ROUTE 5
		k																							98.0													5.0	24" RCP	
		l	7.0	2.3	326																															1			TYPE G2 INLET	1.26' L+, 2456+80.00 ROUTE 5
		m																							98.0													6.0	24" RCP	
		n	8.0	2.6	326																															1			TYPE G2 INLET	1.26' L+, 2457+80.00 ROUTE 5
		o																							3.5													1.7	24" RCP	
		p	5.2	1.9	326																															1			TYPE G2 INLET	2.08' R+, 2457+80.00 ROUTE 5
		q										1																											REMOVE INLET	
		r																							6.0												1	3.2	24" RCP	
SHEET TOTAL			17.4	2608								1								98.0					597.5											8	1	1		

DRAINAGE QUANTITIES
DQ-4

PAUL FONG — REVISED BY — DATE REVISED
PRAKASH YADAV — CALCULATED-DESIGNED BY — CHECKED BY
DAVE BHALLA — FUNCTIONAL SUPERVISOR
STATE OF CALIFORNIA - DEPARTMENT OF TRANSPORTATION
Caltrans HYDRAULICS

LAST REVISION — DATE PLOTTED => 26-APR-2011 TIME PLOTTED => 11:38

NOTE: (N) NOT A SEPARATE PAY ITEM, FOR INFORMATION ONLY.

Dist	COUNTY	ROUTE	POST MILES TOTAL PROJECT	SHEET No.	TOTAL SHEETS
07	LA	5	R46.3/R50.0	149	456

Paul Fong 01-18-11
REGISTERED CIVIL ENGINEER DATE

4-25-11
PLANS APPROVAL DATE

REGISTERED PROFESSIONAL ENGINEER PAUL FONG No. C67053 Exp. 9/30/12 CIVIL STATE OF CALIFORNIA

THE STATE OF CALIFORNIA OR ITS OFFICERS OR AGENTS SHALL NOT BE RESPONSIBLE FOR THE ACCURACY OR COMPLETENESS OF SCANNED COPIES OF THIS PLAN SHEET.

DRAINAGE SHEET No	DRAINAGE SYSTEM No ⬡	DRAINAGE UNIT No ○	HEIGHT OF INLET "H" OR "V" (N) FT	MINOR CONCRETE (MINOR STRUCTURE) CY	MISCELLANEOUS IRON AND STEEL LB	MINOR CONCRETE (BACKFILL) CY	DITCH EXCAVATION CY	ROCK SLOPE PROTECTION (FACING, METHOD B) CY	ROCK SLOPE PROTECTION FABRIC SY	18" STEEL FLARED END SECTION EA	INCLINED SCREEN TYPE A GSRD EA	REMOVE INLET EA	REMOVE CONCRETE CY	CAP INLET EA	CAP MANHOLE EA	REMOVE PIPE LF	ABANDON CULVERT LF	8" CSP RISER (.064" THICK) LF	12" REINFORCED CONCRETE PIPE LF	18" SLOTTED CORRUGATED STEEL PIPE (0.079" THICK) LF	24" SLOTTED CORRUGATED STEEL PIPE (0.109" THICK) LF	18" CORRUGATED STEEL PIPE (0.109" THICK) LF	18" REINFORCED CONCRETE PIPE LF	24" CORRUGATED STEEL PIPE (0.109" THICK) LF	24" REINFORCED CONCRETE PIPE LF	JACKED 24" RCP (CLASS V) LF	36" CORRUGATED STEEL PIPE (0.109" THICK) LF	42" REINFORCED CONCRETE PIPE LF	45" REINFORCED CONCRETE PIPE LF	24" CORRUGATED STEEL PIPE DOWNDRAIN (0.109" THICK) LF	8" PERFORATED PLASTIC PIPE UNDERDRAIN LF	8" NON-PERFORATED PLASTIC PIPE UNDERDRAIN LF	FILTER FABRIC SQYD	PERMEABLE MATERIAL CY	MANHOLE FRAME & COVER (N) EA	TYPE 24-12 FRAME & GRATE (N) EA	CONCRETE COLLAR (N) EA	STEEL CHANNEL CLOSURE (N) EA	MAXIMUM COVER (N) FT	DESCRIPTION	STATION
D-3	9	a	3.8	1.6	580																													2				GD-1 INLET	88.0' Rt, 2457+20.00 ROUTE 5
		b																					32.5														2.5	18" RCP	
D-4	10	a					120.0																															EARTH DITCH EXCAVATION	
		b																	2.5																		1.0	12" RCP	
		c		0.8	50																																	L HEADWALL, H=2'-8"	152.37' Rt, 2470+36.06 ROUTE 5
		d														50.0																					1.5	REMOVE 12" CORRUGATED PLASTIC PIPE	
D-4	11	a											3.0																									REMOVE Conc OVERSIDE DRAIN	
D-4	12	a	6.1	2.3	580																													2				GD-1INLET	88.00' Rt, 2465+60.00 ROUTE 5
		b																						139.0													4.1	24" CSP	
		c	6.1	2.3	580																													2				GD-1INLET	88.00' Rt, 2467+00.00 ROUTE 5
		d																						139.0													4.1	24" CSP	
		e	6.3	2.3	580																													2				GD-1INLET	86.50' Rt, 2468+40.00 ROUTE 5
		f																						139.0													4.3	24" CSP	
		g	6.3	2.3	580																													2				GD-1INLET	85.93' Rt, 2469+80.00 ROUTE 5
		h																						139.0													4.3	24" CSP	
		i	6.5	2.4	580																													2				GD-1INLET	86.31' Rt, 2471+20.00 ROUTE 5
		j																							119.0												4.5	24" CSP	
		k	6.7	2.4	580																													2				GD-1INLET	86.50' Rt, 2472+40.00 ROUTE 5
SHEET TOTAL			16.4	4110			120.0						3.0			50.0			2.5				32.5	556.0	119.0									14					

DRAINAGE QUANTITIES
DQ-5

STATE OF CALIFORNIA - DEPARTMENT OF TRANSPORTATION
Caltrans HYDRAULICS

FUNCTIONAL SUPERVISOR: DAVE BHALLA
CALCULATED-DESIGNED BY: PAUL FONG
CHECKED BY: PRAKASH YADAV
REVISED BY
DATE REVISED

LAST REVISION
DATE PLOTTED => 26-APR-2011
TIME PLOTTED => 11:38

NOTE: (N) NOT A SEPARATE PAY ITEM, FOR INFORMATION ONLY.

Dist	COUNTY	ROUTE	POST MILES TOTAL PROJECT	SHEET No.	TOTAL SHEETS
07	LA	5	R46.3/R50.0	150	456

REGISTERED CIVIL ENGINEER Paul Fong 01-18-11 DATE

4-25-11
PLANS APPROVAL DATE

REGISTERED PROFESSIONAL ENGINEER PAUL FONG No. C67053 Exp. 9/30/12 CIVIL STATE OF CALIFORNIA

THE STATE OF CALIFORNIA OR ITS OFFICERS OR AGENTS SHALL NOT BE RESPONSIBLE FOR THE ACCURACY OR COMPLETENESS OF SCANNED COPIES OF THIS PLAN SHEET.

DRAINAGE SHEET No	DRAINAGE SYSTEM No ⬡	DRAINAGE UNIT No ○	HEIGHT OF INLET "H" OR "V" (N)	MINOR CONCRETE (MINOR STRUCTURE)	MISCELLANEOUS IRON AND STEEL	MINOR CONCRETE (BACKFILL)	DITCH EXCAVATION	ROCK SLOPE PROTECTION (FACING, METHOD B)	ROCK SLOPE PROTECTION FABRIC	18" STEEL FLARED END SECTION	INCLINED SCREEN TYPE A GSRD	REMOVE INLET	REMOVE CONCRETE	CAP INLET	CAP MANHOLE	REMOVE PIPE	ABANDON CULVERT	8" CSP RISER (.064" THCIK)	12" REINFORCED CONCRETE PIPE	18" SLOTTED CORRUGATED STEEL PIPE (0.079" THCIK)	24" SLOTTED CORRUGATED STEEL PIPE (0.109" THICK)	18" CORRUGATED STEEL PIPE (0.109" THICK)	18" REINFORCED CONCRETE PIPE	24" CORRUGATED STEEL PIPE (0.109" THICK)	24" REINFORCED CONCRETE PIPE	JACKED 24" RCP (CLASS V)	36" CORRUGATED STEEL PIPE (0.109" THICK)	42" REINFORCED CONCRETE PIPE	45" REINFORCED CONCRETE PIPE	24" CORRUGATED STEEL PIPE DOWNDRAIN (0.109" THICK)	8" PERFORATED PLASTIC PIPE UNDERDRAIN	8" NON-PERFORATED PLASTIC PIPE UNDERDRAIN	FILTER FABRIC	PERMEABLE MATERIAL	MANHOLE FRAME & COVER (N)	TYPE 24-12 FRAME & GRATE (N)	CONCRETE COLLAR (N)	STEEL CHANNEL CLOSURE (N)	MAXIMUM COVER (N)	DESCRIPTION	STATION
			FT	CY	LB	CY	CY	CY	SY	EA	EA	EA	CY	EA	EA	LF	LF	LF	LF	LF	LF	LF	LF	LF	LF	LF	LF	LF	LF	LF	LF	LF	SQYD	CY	EA	EA	EA	EA	FT		
D-5	12	l																							78.0														4.7	24" RCP	
		m	6.1	2.3	326																															1				TYPE G2 INLET	87.70' Rt, 2473+20.00 ROUTE 5
		n																							78.0														4.1	24" RCP	
		o	5.5	2.0	326																															1				TYPE G2 INLET	87.48' Rt, 2474+00.00 ROUTE 5
		p																							78.0														3.5	24" RCP	
		q										1																												REMOVE INLET	
		r	5.2	1.9	326																															1				TYPE G2 INLET	87.60' Rt, 2474+80.00 ROUTE 5
		s																							58.0														3.2	24" RCP	
		t	5.0	1.8	326																															1				TYPE G2 INLET	87.70' Rt, 2475+40.00 ROUTE 5
		u																							44.0														3.2	24" RCP	
		v														122.0																							3.0	REMOVE 18" CMP	
		w	5.2	1.9	326																															1				TYPE G2 INLET	87.50' Rt, 2475+86.50 ROUTE 5
		x										1																												REMOVE INLET	
		y																							36.0														3.5	24" RCP	
		z														22.0																							3.9	REMOVE 18" CMP	
D-4	13	a	5.5	2.0	326																															1				TYPE G2 INLET	1.26' Lt, 2462+60.00 ROUTE 5
		b																							98.0														3.7	24" RCP	
		c	5.7	2.0	326																															1				TYPE G2 INLET	1.26' Lt, 2463+60.00 ROUTE 5
		d																							98.0														3.8	24" RCP	
SHEET TOTAL				13.9	2282							2				144.0									568.0											7					

DRAINAGE QUANTITIES

DQ-6

PAUL FONG — REVISED BY — DATE REVISED

PRAKASH YADAV — CALCULATED-DESIGNED BY — CHECKED BY

DAVE BHALLA — FUNCTIONAL SUPERVISOR

STATE OF CALIFORNIA - DEPARTMENT OF TRANSPORTATION

Caltrans® HYDRAULICS

LAST REVISION — DATE PLOTTED => 26-APR-2011 TIME PLOTTED => 11:38

NOTE: (N) NOT A SEPARATE PAY ITEM, FOR INFORMATION ONLY.

Dist	COUNTY	ROUTE	POST MILES TOTAL PROJECT	SHEET No.	TOTAL SHEETS
07	LA	5	R46.3/R50.0	151	456

Paul Fong 01-18-11
REGISTERED CIVIL ENGINEER DATE

4-25-11
PLANS APPROVAL DATE

REGISTERED PROFESSIONAL ENGINEER PAUL FONG No. C67053 Exp. 9/30/12 CIVIL STATE OF CALIFORNIA

THE STATE OF CALIFORNIA OR ITS OFFICERS OR AGENTS SHALL NOT BE RESPONSIBLE FOR THE ACCURACY OR COMPLETENESS OF SCANNED COPIES OF THIS PLAN SHEET.

DRAINAGE SHEET No	DRAINAGE SYSTEM No ⬡	DRAINAGE UNIT No ○	HEIGHT OF INLET "H" OR "V" (N) FT	MINOR CONCRETE (MINOR STRUCTURE) CY	MISCELLANEOUS IRON AND STEEL LB	MINOR CONCRETE (BACKFILL) CY	DITCH EXCAVATION CY	ROCK SLOPE PROTECTION (FACING, METHOD B) CY	ROCK SLOPE PROTECTION FABRIC SY	18" STEEL FLARED END SECTION EA	INCLINED SCREEN TYPE A GSRD EA	REMOVE INLET EA	REMOVE CONCRETE CY	CAP INLET EA	CAP MANHOLE EA	REMOVE PIPE LF	ABANDON CULVERT LF	8" CSP RISER (.064" THICK) LF	12" REINFORCED CONCRETE PIPE LF	18" SLOTTED CORRUGATED STEEL PIPE (0.079" THICK) LF	24" SLOTTED CORRUGATED STEEL PIPE (0.109" THICK) LF	18" CORRUGATED STEEL PIPE (0.109" THICK) LF	18" REINFORCED CONCRETE PIPE LF	24" CORRUGATED STEEL PIPE (0.109 THICK) LF	24" REINFORCED CONCRETE PIPE LF	JACKED 24" RCP (CLASS V) LF	36" CORRUGATED STEEL PIPE (0.109" THICK) LF	42" REINFORCED CONCRETE PIPE LF	45" REINFORCED CONCRETE PIPE LF	24" CORRUGATED STEEL PIPE DOWNDRAIN (0.109" THICK) LF	8" PERFORATED PLASTIC PIPE UNDERDRAIN LF	8" NON-PERFORATED PLASTIC PIPE UNDERDRAIN LF	FILTER FABRIC SQYD	PERMEABLE MATERIAL CY	MANHOLE FRAME & COVER (N) EA	TYPE 24-12 FRAME & GRATE (N) EA	CONCRETE COLLAR (N) EA	STEEL CHANNEL CLOSURE (N) EA	MAXIMUM COVER (N) FT	DESCRIPTION	STATION
D-4	13	e	5.8	2.1	326																													1				TYPE G2 INLET	1.26' Lt, 2464+60.00 ROUTE 5
		f																						98.0													3.8	24" RCP	
		g	5.7	2.0	326																													1				TYPE G2 INLET	1.26' Lt, 2465+60.00 ROUTE 5
		h																						98.0													3.8	24" RCP	
		i	5.8	2.1	326																													1				TYPE G2 INLET	1.26' Lt, 2466+60.00 ROUTE 5
		j																						98.0													3.8	24" RCP	
		k	5.8	2.1	326																													1				TYPE G2 INLET	1.26' Lt, 2467+60.00 ROUTE 5
		l																						98.0													3.8	24" RCP	
		m	5.8	2.1	326																													1				TYPE G2 INLET	1.26' Lt, 2468+60.00 ROUTE 5
		n																						98.0													3.8	24" RCP	
		o	5.7	2.0	326																													1				TYPE G2 INLET	1.26' Lt, 2469+60.00 ROUTE 5
		p																						98.0													3.8	24" RCP	
		q	5.8	2.1	326																													1				TYPE G2 INLET	1.26' Lt, 2470+60.00 ROUTE 5
		r																						98.0													3.8	24" RCP	
D-5	13	s	5.7	2.0	326																													1				TYPE G2 INLET	1.26' Lt, 2471+60.00 ROUTE 5
		t																						98.0													3.8	24" RCP	
		u	5.8	2.1	326																													1				TYPE G2 INLET	1.26' Lt, 2472+60.00 ROUTE 5
		v																						98.0													3.8	24" RCP	
		w	5.7	2.0	326																													1				TYPE G2 INLET	1.26' Lt, 2473+60.00 ROUTE 5
SHEET TOTAL				20.6	3260																			882.0											10					

DRAINAGE QUANTITIES
DQ-7

STATE OF CALIFORNIA - DEPARTMENT OF TRANSPORTATION
Caltrans HYDRAULICS

PAUL FONG — REVISED BY
PRAKASH YADAV — DATE REVISED
CALCULATED-DESIGNED BY
CHECKED BY
FUNCTIONAL SUPERVISOR
DAVE BHALLA

LAST REVISION
DATE PLOTTED => 26-APR-2011
TIME PLOTTED => 11:38

NOTE: (N) NOT A SEPARATE PAY ITEM, FOR INFORMATION ONLY.

Dist	COUNTY	ROUTE	POST MILES TOTAL PROJECT	SHEET No.	TOTAL SHEETS
07	LA	5	R46.3/R50.0	152	456

Paul Fong 01-18-11
REGISTERED CIVIL ENGINEER DATE

4-25-11
PLANS APPROVAL DATE

REGISTERED PROFESSIONAL ENGINEER PAUL FONG No. C67053 Exp. 9/30/12 CIVIL STATE OF CALIFORNIA

THE STATE OF CALIFORNIA OR ITS OFFICERS OR AGENTS SHALL NOT BE RESPONSIBLE FOR THE ACCURACY OR COMPLETENESS OF SCANNED COPIES OF THIS PLAN SHEET.

DRAINAGE SHEET No	DRAINAGE SYSTEM No	DRAINAGE UNIT No	HEIGHT OF INLET "H" OR "V" (N)	MINOR CONCRETE (MINOR STRUCTURE)	MISCELLANEOUS IRON AND STEEL	MINOR CONCRETE (BACKFILL)	DITCH EXCAVATION	ROCK SLOPE PROTECTION (FACING, METHOD B)	ROCK SLOPE PROTECTION FABRIC	18" STEEL FLARED END SECTION	INCLINED SCREEN TYPE A GSRD	REMOVE INLET	REMOVE CONCRETE	CAP INLET	CAP MANHOLE	REMOVE PIPE	ABANDON CULVERT	8" CSP RISER (.064" THICK)	12" REINFORCED CONCRETE PIPE	18" SLOTTED CORRUGATED STEEL PIPE (0.079" THICK)	24" SLOTTED CORRUGATED STEEL PIPE (0.109" THICK)	18" CORRUGATED STEEL PIPE (0.109" THICK)	18" REINFORCED CONCRETE PIPE	24" CORRUGATED STEEL PIPE (0.109" THICK)	24" REINFORCED CONCRETE PIPE	JACKED 24" RCP (CLASS V)	36" CORRUGATED STEEL PIPE (0.109" THICK)	42" REINFORCED CONCRETE PIPE	45" REINFORCED CONCRETE PIPE	24" CORRUGATED STEEL PIPE DOWNDRAIN (0.109" THICK)	8" PERFORATED PLASTIC PIPE UNDERDRAIN	8" NON-PERFORATED PLASTIC PIPE UNDERDRAIN	FILTER FABRIC	PERMEABLE MATERIAL	MANHOLE FRAME & COVER (N)	TYPE 24-12 FRAME & GRATE (N)	CONCRETE COLLAR (N)	STEEL CHANNEL CLOSURE (N)	MAXIMUM COVER (N)	DESCRIPTION	STATION
	⬡	○	FT	CY	LB	CY	CY	CY	SY	EA	EA	EA	CY	EA	EA	LF	LF	LF	LF	LF	LF	LF	LF	LF	LF	LF	LF	LF	LF	LF	LF	LF	SQYD	CY	EA	EA	EA	EA	FT		
D-5	13	x																							98.0														3.8	24" RCP	
		y	5.8	2.1	326																															1				TYPE G2 INLET	1.26' Lt, 2474+60.00 ROUTE 5
		z																							98.0														3.8	24" RCP	
		aa	6.7	2.3	326																															1				TYPE G2 INLET	1.26' Lt, 2475+60.00 ROUTE 5
		bb																							63.0														5.7	24" RCP	
		cc										1																												REMOVE INLET	
		dd															68.0																							ABANDON 24" CMP	
		ee														37.0																							2.0	REMOVE 24" CMP	
		ff														4.0																							3.6	REMOVE 24" CMP	
		gg																					16.0														1		5.7	24" CSP	
		hh	8.9	3.8	326																															1				TYPE G2 INLET	1.26' Lt, 2476+25.36 ROUTE 5
		ii																							52.5														8.0	24" RCP	
		jj																		52.5																				18" SCSP	
		kk	10.0	4.2	326																															1				TYPE G2 INLET	1.26' Lt, 2476+80.00 ROUTE 5
		ll																							37.5														8.5	24" RCP	
		mm																		37.5																				18" SCSP	
		nn	17.0	7.0	326																															1				TYPE G2 INLET	1.26' Lt, 2477+20.00 ROUTE 5
		oo																							4.5														3.0	24" RCP	
		pp	7.0	2.3	326																															1				TYPE G2 INLET	1.54' Lt, 2477+20.00 ROUTE 5
SHEET TOTAL				21.7	1956							1				41.0	68.0			90.0			16.0	353.5											6	1				

DRAINAGE QUANTITIES

DQ-8

PAUL FONG — REVISED BY — DATE REVISED
PRAKASH YADAV — CALCULATED-DESIGNED BY — CHECKED BY
DAVE BHALLA — FUNCTIONAL SUPERVISOR
STATE OF CALIFORNIA - DEPARTMENT OF TRANSPORTATION
Caltrans
HYDRAULICS

LAST REVISION — DATE PLOTTED => 26-APR-2011 — TIME PLOTTED => 11:38

NOTE: (N) NOT A SEPARATE PAY ITEM, FOR INFORMATION ONLY.

Dist	COUNTY	ROUTE	POST MILES TOTAL PROJECT	SHEET No.	TOTAL SHEETS
07	LA	5	R46.3/R50.0	153	456

REGISTERED CIVIL ENGINEER Paul Fong 01-18-11 DATE

PLANS APPROVAL DATE 4-25-11

REGISTERED PROFESSIONAL ENGINEER PAUL FONG No. C67053 Exp. 9/30/12 CIVIL STATE OF CALIFORNIA

THE STATE OF CALIFORNIA OR ITS OFFICERS OR AGENTS SHALL NOT BE RESPONSIBLE FOR THE ACCURACY OR COMPLETENESS OF SCANNED COPIES OF THIS PLAN SHEET.

DRAINAGE SHEET No	DRAINAGE SYSTEM No	DRAINAGE UNIT No	HEIGHT OF INLET "H" OR "V" (N)	MINOR CONCRETE (MINOR STRUCTURE)	MISCELLANEOUS IRON AND STEEL	MINOR CONCRETE (BACKFILL)	DITCH EXCAVATION	ROCK SLOPE PROTECTION (FACING, METHOD B)	ROCK SLOPE PROTECTION FABRIC	18" STEEL FLARED END SECTION	INCLINED SCREEN TYPE A CSRD	REMOVE INLET	REMOVE CONCRETE	CAP INLET	CAP MANHOLE	REMOVE PIPE	ABANDON CULVERT	8" CSP RISER (.064" THICK)	12" REINFORCED CONCRETE PIPE	18" SLOTTED CORRUGATED STEEL PIPE (0.079" THICK)	24" SLOTTED CORRUGATED STEEL PIPE (0.109" THICK)	18" CORRUGATED STEEL PIPE (0.109" THICK)	18" REINFORCED CONCRETE PIPE	24" CORRUGATED STEEL PIPE (0.109" THICK)	24" REINFORCED CONCRETE PIPE	JACKED 24" RCP (CLASS V)	36" CORRUGATED STEEL PIPE (0.109" THICK)	42" REINFORCED CONCRETE PIPE	45" REINFORCED CONCRETE PIPE	24" CORRUGATED STEEL PIPE DOWNDRAIN (0.109" THICK)	8" PERFORATED PLASTIC PIPE UNDERDRAIN	8" NON-PERFORATED PLASTIC PIPE UNDERDRAIN	FILTER FABRIC	PERMEABLE MATERIAL	MANHOLE FRAME & COVER (N)	TYPE 24-12 FRAME & GRATE (N)	CONCRETE COLLAR (N)	STEEL CHANNEL CLOSURE (N)	MAXIMUM COVER (N)	DESCRIPTION	STATION
			FT	CY	LB	CY	CY	CY	SY	EA	EA	EA	CY	EA	EA	LF	LF	LF	LF	LF	LF	LF	LF	LF	LF	LF	LF	LF	LF	LF	LF	LF	SQYD	CY	EA	EA	EA	EA	FT		
D-5	13	qq																							79.0														8.1	JACKED 24" RCP	
		rr	10.1	4.3	326																															1				TYPE G2 INLET	87.38' Rt, 2477+20.00 ROUTE 5
		ss																					25.5																3.7	18" RCP	
		tt	5.0	1.9	326																																			TYPE G2 INLET	
		uu		12.7																																				10 CONCRETE PIPE ANCHORS	
		vv																												172.0									8.1	24" CSP DOWNDRAIN	
		ww																												10.0									2.5	24" CSP DOWNDRAIN	
		xx		1.2	75																																			STRAIGHT HW, H=3'-8"	252.24' Rt, 2477+20.00 ROUTE 5
		yy						4.0	12.0																															RSP (FACING, METHOD B)	
D-5	14	a										1																												REMOVE INLET	
		b																						2.5												1		2.0	2.5' x 24" RCP	
		c	3.9	2.0																														1					JUNCTION CHAMBER 3-C	95.87' Lt, 2476+25.36 ROUTE 5
		d		1.0																																			Conc V-DITCH (TYPE B DRAIN)	
D-5	15	a	5.5	2.0	326																															1				TYPE G2 INLET	88.35' Rt, 2483+00.00 ROUTE 5
		b																					98.0															4.0	18" RCP	
		c	5.0	1.8	326																															1				TYPE G2 INLET	88.37' Rt, 2484+00.00 ROUTE 5
D-6	15	d				12.0																	98.0															3.5	18" RCP W/30.0' MNOR Conc Bkf	
SHEET TOTAL			26.9	1379		12.0		4.0	12.0			1											221.5		2.5	79.0				182.0					1	3	1				

DRAINAGE QUANTITIES

DQ-9

PAUL FONG — REVISED BY — DATE REVISED

PRAKASH YADAV — CALCULATED-DESIGNED BY — CHECKED BY

DAVE BHALLA — FUNCTIONAL SUPERVISOR

STATE OF CALIFORNIA - DEPARTMENT OF TRANSPORTATION

Caltrans® HYDRAULICS

LAST REVISION — DATE PLOTTED => 26-APR-2011 TIME PLOTTED => 11:38

Dist	COUNTY	ROUTE	POST MILES TOTAL PROJECT	SHEET No.	TOTAL SHEETS
07	LA	5	R46.3/R50.0	154	456

Paul Fong 01-18-11
REGISTERED CIVIL ENGINEER DATE

4-25-11
PLANS APPROVAL DATE

REGISTERED PROFESSIONAL ENGINEER PAUL FONG No. C67053 Exp. 9/30/12 CIVIL STATE OF CALIFORNIA

THE STATE OF CALIFORNIA OR ITS OFFICERS OR AGENTS SHALL NOT BE RESPONSIBLE FOR THE ACCURACY OR COMPLETENESS OF SCANNED COPIES OF THIS PLAN SHEET.

NOTE: (N) NOT A SEPARATE PAY ITEM, FOR INFORMATION ONLY.

DRAINAGE SHEET No	DRAINAGE SYSTEM No ⬡	DRAINAGE UNIT No ○	HEIGHT OF INLET "H" OR "V" (N)	MINOR CONCRETE (MINOR STRUCTURE)	MISCELLANEOUS IRON AND STEEL	MINOR CONCRETE (BACKFILL)	DITCH EXCAVATION	ROCK SLOPE PROTECTION (FACING, METHOD B)	ROCK SLOPE PROTECTION FABRIC	18" STEEL FLARED END SECTION	INCLINED SCREEN TYPE A GSRD	REMOVE INLET	REMOVE CONCRETE	CAP INLET	CAP MANHOLE	REMOVE PIPE	ABANDON CULVERT	8" CSP RISER (.064" THICK)	12" REINFORCED CONCRETE PIPE	18" SLOTTED CORRUGATED STEEL PIPE (0.079" THICK)	24" SLOTTED CORRUGATED STEEL PIPE (0.109" THICK)	18" CORRUGATED STEEL PIPE (.109" THICK)	18" REINFORCED CONCRETE PIPE	24" CORRUGATED STEEL PIPE (0.109" THICK)	24" REINFORCED CONCRETE PIPE	JACKED 24" RCP (CLASS V)	36" CORRUGATED STEEL PIPE (0.109" THICK)	42" REINFORCED CONCRETE PIPE	45" REINFORCED CONCRETE PIPE	24" CORRUGATED STEEL PIPE DOWNDRAIN (0.109" THICK)	8" PERFORATED PLASTIC PIPE UNDERDRAIN	8" NON-PERFORATED PLASTIC PIPE UNDERDRAIN	FILTER FABRIC	PERMEABLE MATERIAL	MANHOLE FRAME & COVER (N)	TYPE 24-12 FRAME & GRATE (N)	CONCRETE COLLAR (N)	STEEL CHANNEL CLOSURE (N)	MAXIMUM COVER (N)	DESCRIPTION	STATION
			FT	CY	LB	CY	CY	CY	SY	EA	EA	EA	CY	EA	EA	LF	LF	LF	LF	LF	LF	LF	LF	LF	LF	LF	LF	LF	LF	LF	LF	LF	LF	SQYD	CY	EA	EA	EA	EA	FT		
D-5	16	a	5.8	2.0	326																																1				TYPE G2 INLET	
		b																							98.0															4.0	24" RCP	
		c	6.0	2.2	326																																1				TYPE G2 INLET	1.21' Rt, 2484+00.00 ROUTE 5
D-5	16	d																							98.0															5.0	24" RCP	
D-6	16	e	7.0	2.3	326																																1				TYPE G2 INLET	1.21' Rt, 2485+00.00 ROUTE 5
		f														20.0																								7.0	REMOVE 24" CMP	
		g														4.0																								6.2	REMOVE 24" CMP	
		h														8.0																								6.4	REMOVE 24" CMP	
		i		1.2																																					CONCRETE PIPE ANCHOR	
		j																						23.0														1		14.0	24" CSP	
		k																							98.0															5.0	24" RCP	
		l	6.0	2.1	326																																1				TYPE G2 INLET	1.21' Rt, 2486+00.00 ROUTE 5
		m																							98.0															4.2	24" RCP	
		n	6.2	2.1	326																																1				TYPE G2 INLET	1.21' Rt, 2487+00.00 ROUTE 5
		o																							98.0															4.2	24" RCP	
		p	6.1	2.1	326																																1				TYPE G2 INLET	1.21' Rt, 2488+00.00 ROUTE 5
		q																							98.0															4.1	24" RCP	
		r	5.7	2.0	326																																1				TYPE G2 INLET	1.21' Rt, 2489+00.00 ROUTE 5
		s																							98.0															3.7	24" RCP	
SHEET TOTAL				16.0	2282											32.0								23.0	686.0												7	1				

DRAINAGE QUANTITIES
DQ-10

STATE OF CALIFORNIA - DEPARTMENT OF TRANSPORTATION
Caltrans® HYDRAULICS

FUNCTIONAL SUPERVISOR: DAVE BHALLA
CALCULATED-DESIGNED BY: PAUL FONG
CHECKED BY: PRAKASH YADAV
REVISED BY
DATE REVISED

LAST REVISION
DATE PLOTTED => 26-APR-2011
TIME PLOTTED => 11:38

NOTE: (N) NOT A SEPARATE PAY ITEM, FOR INFORMATION ONLY.

Dist	COUNTY	ROUTE	POST MILES TOTAL PROJECT	SHEET No.	TOTAL SHEETS
07	LA	5	R46.3/R50.0	155	456

Paul Fong 01-18-11
REGISTERED CIVIL ENGINEER DATE

4-25-11
PLANS APPROVAL DATE

REGISTERED PROFESSIONAL ENGINEER PAUL FONG No. C67053 Exp. 9/30/12 CIVIL STATE OF CALIFORNIA

THE STATE OF CALIFORNIA OR ITS OFFICERS OR AGENTS SHALL NOT BE RESPONSIBLE FOR THE ACCURACY OR COMPLETENESS OF SCANNED COPIES OF THIS PLAN SHEET.

DRAINAGE SHEET No	DRAINAGE SYSTEM No ⬡	DRAINAGE UNIT No ○	HEIGHT OF INLET "H" OR "V" (N)	MINOR CONCRETE (MINOR STRUCTURE)	MISCELLANEOUS IRON AND STEEL	MINOR CONCRETE (BACKFILL)	DITCH EXCAVATION	ROCK SLOPE PROTECTION (FACING, METHOD B)	ROCK SLOPE PROTECTION FABRIC	18" STEEL FLARED END SECTION	INCLINED SCREEN TYPE A GSRD	REMOVE INLET	REMOVE CONCRETE	CAP INLET	CAP MANHOLE	REMOVE PIPE	ABANDON CULVERT	8" CSP RISER (.064" THICK)	12" REINFORCED CONCRETE PIPE	18" SLOTTED CORRUGATED STEEL PIPE (0.079" THICK)	24" SLOTTED CORRUGATED STEEL PIPE (0.109" THICK)	18" CORRUGATED STEEL PIPE (0.109" THICK)	18" REINFORCED CONCRETE PIPE	24" CORRUGATED STEEL PIPE (0.109" THICK)	24" REINFORCED CONCRETE PIPE	JACKED 24" RCP (CLASS V)	36" CORRUGATED STEEL PIPE (0.109" THICK)	42" REINFORCED CONCRETE PIPE	45" REINFORCED CONCRETE PIPE	24" CORRUGATED STEEL PIPE DOWNDRAIN (0.109" THICK)	8" PERFORATED PLASTIC PIPE UNDERDRAIN	8" NON-PERFORATED PLASTIC PIPE UNDERDRAIN	FILTER FABRIC	PERMEABLE MATERIAL	MANHOLE FRAME & COVER (N)	TYPE 24-12 FRAME & GRATE (N)	CONCRETE COLLAR (N)	STEEL CHANNEL CLOSURE (N)	MAXIMUM COVER (N)	DESCRIPTION	STATION
			FT	CY	LB	CY	CY	CY	SY	EA	EA	EA	CY	EA	EA	LF	LF	LF	LF	LF	LF	LF	LF	LF	LF	LF	LF	LF	LF	LF	LF	LF	SQYD	CY	EA	EA	EA	EA	FT		
D-6	16	t	5.7	2.0	326																															1				TYPE G2 INLET	1.21' Rt, 2490+00.00 ROUTE 5
		u																						98.0														3.7	24" RCP	
		v	5.6	2.0	326																															1				TYPE G2 INLET	1.21' Rt, 2491+00.00 ROUTE 5
		w																						98.0														3.6	24" RCP	
		x	5.6	2.0	326																															1				TYPE G2 INLET	1.21' Rt, 2492+00.00 ROUTE 5
D-6	16	y																						98.0														3.8	24" RCP	
		z	5.8	2.1	326																															1				TYPE G2 INLET	1.21' Rt, 2493+00.00 ROUTE 5
		aa																						98.0														4.3	24" RCP	
		bb	6.3	2.2	326																															1				TYPE G2 INLET	1.21' Rt, 2494+00.00 ROUTE 5
		cc																						48.0														5.0	24" RCP	
		dd																		48.0																			18"SCSP	
		ee	7.0	2.3	326																															1				TYPE G2 INLET	1.21' Rt, 2494+50.00 ROUTE 5
		ff																							81.0														7.4	JACKED 24" RCP	
		gg	9.4	4.0	326																															1				TYPE G2 INLET	
		hh																											44.0										7.4	24" CSP DOWNDRAIN	
		ii		12.7																																				10 CONCRETE PIPE ANCHORS	
		jj																											172.0										1.8	24" CSP DOWNDRAIN	
		kk																											10.0										1.8	24" CSP DOWNDRAIN	
		ll		1.2	75																																			STRAIGHT HW, H=3'-8"	249.94' Rt, 2493+06.95 ROUTE 5
SHEET TOTAL				30.5	2357															48.0					440.0	81.0				226.0						7					

DRAINAGE QUANTITIES
DQ-11

STATE OF CALIFORNIA - DEPARTMENT OF TRANSPORTATION
Caltrans® HYDRAULICS

FUNCTIONAL SUPERVISOR: DAVE BHALLA
CALCULATED-DESIGNED BY: PAUL FONG
CHECKED BY: PRAKASH YADAV
REVISED BY
DATE REVISED

LAST REVISION
DATE PLOTTED => 26-APR-2011
TIME PLOTTED => 11:38

NOTE: (N) NOT A SEPARATE PAY ITEM, FOR INFORMATION ONLY.

Dist	COUNTY	ROUTE	POST MILES TOTAL PROJECT	SHEET No.	TOTAL SHEETS
07	LA	5	R46.3/R50.0	156	456

Paul Fong 01-18-11
REGISTERED CIVIL ENGINEER DATE

4-25-11
PLANS APPROVAL DATE

REGISTERED PROFESSIONAL ENGINEER PAUL FONG No. C67053 Exp. 9/30/12 CIVIL STATE OF CALIFORNIA

THE STATE OF CALIFORNIA OR ITS OFFICERS OR AGENTS SHALL NOT BE RESPONSIBLE FOR THE ACCURACY OR COMPLETENESS OF SCANNED COPIES OF THIS PLAN SHEET.

DRAINAGE SHEET No	DRAINAGE SYSTEM No ⬡	DRAINAGE UNIT No ○	HEIGHT OF INLET "H" OR "V" (N) FT	MINOR CONCRETE (MINOR STRUCTURE) CY	MISCELLANEOUS IRON AND STEEL LB	MINOR CONCRETE (BACKFILL) CY	DITCH EXCAVATION CY	ROCK SLOPE PROTECTION (FACING, METHOD B) CY	ROCK SLOPE PROTECTION FABRIC SY	18" STEEL FLARED END SECTION EA	INCLINED SCREEN TYPE A GSRD EA	REMOVE INLET EA	REMOVE CONCRETE CY	CAP INLET EA	CAP MANHOLE EA	REMOVE PIPE LF	ABANDON CULVERT LF	8" CSP RISER (.064" THICK) LF	12" REINFORCED CONCRETE PIPE LF	18" SLOTTED CORRUGATED STEEL PIPE (0.079" THICK) LF	24" SLOTTED CORRUGATED STEEL PIPE (0.109" THICK) LF	18" CORRUGATED STEEL PIPE (0.109" THICK) LF	18" REINFORCED CONCRETE PIPE LF	24" CORRUGATED STEEL PIPE (0.109" THICK) LF	24" REINFORCED CONCRETE PIPE LF	JACKED 24" RCP (CLASS V) LF	36" CORRUGATED STEEL PIPE (0.109" THICK) LF	42" REINFORCED CONCRETE PIPE LF	45" REINFORCED CONCRETE PIPE LF	24" CORRUGATED STEEL PIPE DOWNDRAIN (0.109" THICK) LF	8" PERFORATED PLASTIC PIPE UNDERDRAIN LF	8" NON-PERFORATED PLASTIC PIPE UNDERDRAIN LF	FILTER FABRIC SQYD	PERMEABLE MATERIAL CY	MANHOLE FRAME & COVER (N) EA	TYPE 24-12 FRAME & GRATE (N) EA	CONCRETE COLLAR (N) EA	STEEL CHANNEL CLOSURE (N) EA	MAXIMUM COVER (N) FT	DESCRIPTION	STATION
D-6	16	mm						4.0	12.0																														RSP (FACING, METHOD B)	
D-6	17	a										1																											REMOVE INLET	
		b														656.0																						3.8	REMOVE 24" CMP	
		c										1																											REMOVE INLET	
		d														14.0																						1.5	REMOVE 24" CMP	
		e															58.0																						ABANDON 24" CMP	
D-6	17	f															115.0																						ABANDON 24" CMP	
D-6	18	a	2.0	0.6	326																																		CLI INLET (CASE 1)	88.1' Lt, 2489+60.00 ROUTE 5
		b																		98.0																			18" SCSP	
		c	2.0	0.6	326																																		CLI INLET (CASE 2)	88.1' Lt, 2490+60.00 ROUTE 5
		d																		90.0																			18" SCSP	
D-7	19	a										1																											REMOVE INLET	
		b														15.0																						2.5	REMOVE 36" CMP	
		c	8.5	3.7	326																													1					TYPE G2 INLET	2.15' Rt, 2504+93.31 ROUTE 5
		d														448.0																						3.5	REMOVE 36" CMP	
		e																								458.0												5.5	36" CSP	
		f														12.5																						3.5	REMOVE 36" CMP	
SHEET TOTAL				4.9	978			4.0	12.0			3				1145.5	173.0			188.0						458.0								1				

DRAINAGE QUANTITIES
DQ-12

STATE OF CALIFORNIA - DEPARTMENT OF TRANSPORTATION
Caltrans HYDRAULICS

FUNCTIONAL SUPERVISOR: DAVE BHALLA
CALCULATED-DESIGNED BY: PAUL FONG
CHECKED BY: PRAKASH YADAV
REVISED BY
DATE REVISED

LAST REVISION
DATE PLOTTED => 26-APR-2011
TIME PLOTTED => 11:38

NOTE: (N) NOT A SEPARATE PAY ITEM, FOR INFORMATION ONLY.

Dist	COUNTY	ROUTE	POST MILES TOTAL PROJECT	SHEET No.	TOTAL SHEETS
07	LA	5	R46.3/R50.0	157	456

Paul Fong 01-18-11
REGISTERED CIVIL ENGINEER DATE

4-25-11
PLANS APPROVAL DATE

REGISTERED PROFESSIONAL ENGINEER PAUL FONG No. C67053 Exp. 9/30/12 CIVIL STATE OF CALIFORNIA

THE STATE OF CALIFORNIA OR ITS OFFICERS OR AGENTS SHALL NOT BE RESPONSIBLE FOR THE ACCURACY OR COMPLETENESS OF SCANNED COPIES OF THIS PLAN SHEET.

DRAINAGE SHEET No	DRAINAGE SYSTEM No	DRAINAGE UNIT No	HEIGHT OF INLET "H" OR "V" (N)	MINOR CONCRETE (MINOR STRUCTURE)	MISCELLANEOUS IRON AND STEEL	MINOR CONCRETE (BACKFILL)	DITCH EXCAVATION	ROCK SLOPE PROTECTION (FACING, METHOD B)	ROCK SLOPE PROTECTION FABRIC	18" STEEL FLARED END SECTION	INCLINED SCREEN TYPE A GSRD	REMOVE INLET	REMOVE CONCRETE	CAP INLET	CAP MANHOLE	REMOVE PIPE	ABANDON CULVERT	8" CSP RISER (.064" THICK)	12" REINFORCED CONCRETE PIPE	18" SLOTTED CORRUGATED STEEL PIPE (0.079" THICK)	24" SLOTTED CORRUGATED STEEL PIPE (0.109" THICK)	18" CORRUGATED STEEL PIPE (0.109" THICK)	18" REINFORCED CONCRETE PIPE	24" CORRUGATED STEEL PIPE (0.109" THICK)	24" REINFORCED CONCRETE PIPE	JACKED 24" RCP (CLASS V)	36" CORRUGATED STEEL PIPE (0.109" THICK)	42" REINFORCED CONCRETE PIPE	45" REINFORCED CONCRETE PIPE	24" CORRUGATED STEEL PIPE DOWNDRAIN (0.109" THICK)	8" PERFORATED PLASTIC PIPE UNDERDRAIN	8" NON-PERFORATED PLASTIC PIPE UNDERDRAIN	FILTER FABRIC	PERMEABLE MATERIAL	MANHOLE FRAME & COVER (N)	TYPE 24-12 FRAME & GRATE (N)	CONCRETE COLLAR (N)	STEEL CHANNEL CLOSURE (N)	MAXIMUM COVER (N)	DESCRIPTION	STATION
	⬡	○	FT	CY	LB	CY	CY	CY	SY	EA	EA	EA	CY	EA	EA	LF	LF	LF	LF	LF	LF	LF	LF	LF	LF	LF	LF	LF	LF	LF	LF	LF	SQYD	CY	EA	EA	EA	EA	FT		
D-7	19	g										1																												REMOVE INLET	
		h																								12.5													4.5	36" CSP	
		i	6.9	2.3	326																															1				TYPE G2 INLET	2.15' Rt, 2509+50.62 ROUTE 5
D-7	20	a	6.2	2.3	580																															2				GD-1 INLET	87.30' Rt, 2504+80.00 ROUTE 5
		b																					148.0																4.2	24" CSP	
		c	6.0	2.2	580																															2				GD-1 INLET	87.30' Rt, 2506+30.00 ROUTE 5
		d																					142.0																4.0	24" CSP	
		e	5.9	2.1	326																															1				TYPE G2 INLET	87.30' Rt, 2507+70.62 ROUTE 5
		f																					58.0																4.1	24" CSP	
		g	6.1	2.1	326																															1				TYPE G2 INLET	87.30' Rt, 2508+30.62 ROUTE 5
		h																					58.0																4.3	24" CSP	
		i	6.3	2.2	326																															1				TYPE G2 INLET	87.30' Rt, 2508+90.62 ROUTE 5
		j																					58.0																4.3	24" CSP	
D-8	21	a	3.7	1.1	326																															1				TYPE G1 INLET	87.30' Lt, 2521+62.00 ROUTE 5
		b				3.7																37.0																2.2	18" CSP W/22.0' MINOR Conc Bkf	
D-8	22	a											6.5																											REMOVE 86.0' TRAPEZOIDAL Conc CHANNEL	
		b		6.0			12.0																																	82.5' TRAPEZOIDAL Conc CHANNEL	
SHEET TOTAL			20.3	2790		3.7	12.0					1	6.5									37.0		464.0			12.5									9					

DRAINAGE QUANTITIES
DQ-13

STATE OF CALIFORNIA - DEPARTMENT OF TRANSPORTATION
Caltrans HYDRAULICS

FUNCTIONAL SUPERVISOR: DAVE BHALLA
CALCULATED-DESIGNED BY: PAUL FONG
CHECKED BY: PRAKASH YADAV
REVISED BY
DATE REVISED

LAST REVISION
DATE PLOTTED => 26-APR-2011
TIME PLOTTED => 11:38

NOTE: (N) NOT A SEPARATE PAY ITEM, FOR INFORMATION ONLY.

Dist	COUNTY	ROUTE	POST MILES TOTAL PROJECT	SHEET No.	TOTAL SHEETS
07	LA	5	R46.3/R50.0	158	456

REGISTERED CIVIL ENGINEER 01-20-11 DATE

4-25-11
PLANS APPROVAL DATE

REGISTERED PROFESSIONAL ENGINEER PRAKASH YADAV No. C68479 Exp. 9/30/11 CIVIL STATE OF CALIFORNIA

THE STATE OF CALIFORNIA OR ITS OFFICERS OR AGENTS SHALL NOT BE RESPONSIBLE FOR THE ACCURACY OR COMPLETENESS OF SCANNED COPIES OF THIS PLAN SHEET.

DRAINAGE SHEET No	DRAINAGE SYSTEM No ⬡	DRAINAGE UNIT No ○	HEIGHT OF INLET "H" OR "V" (N) FT	MINOR CONCRETE (MINOR STRUCTURE) CY	MISCELLANEOUS IRON AND STEEL LB	MINOR CONCRETE (BACKFILL) CY	DITCH EXCAVATION CY	ROCK SLOPE PROTECTION (FACING, METHOD B) CY	ROCK SLOPE PROTECTION FABRIC SQYD	18" STEEL FLARED END SECTION EA	INCLINED SCREEN TYPE A GSRD EA	REMOVE INLET EA	REMOVE CONCRETE CY	CAP INLET EA	CAP MANHOLE EA	REMOVE PIPE LF	ABANDON CULVERT LF	8" CSP RISER(0.064" THICK) LF	12" REINFORCED CONCRETE PIPE LF	18" SLOTTED CORRUGATED STEEL PIPE (0.079" THICK) LF	24" SLOTTED CORRUGATED STEEL PIPE (0.109"THICK) LF	18" CORRUGATED STEEL PIPE (0.109"THICK) LF	18" REINFORCED CONCRETE PIPE LF	24" CORRUGATED STEEL PIPE (0.109 THICK) LF	24" REINFORCED CONCRETE PIPE LF	JACKED 24" RCP (CLASS V) LF	36" CORRUGATED STEEL PIPE (0.109"THICK) LF	42" REINFORCED CONCRETE PIPE LF	45" REINFORCED CONCRETE PIPE LF	24"CORRUGATEDSTEELPIPE DOWNDRAIN (0.109"THICK) LF	8" PERFORATED PLASTIC PIPE UNDERDRAIN LF	8" NON-PERFORATED PLASTIC PIPE UNDERDRAIN LF	FILTER FABRIC SQYD	PERMEABLE MATERIAL CY	MANHOLE FRAME & GRATE (N) EA	TYPE 24-12 FRAME & GRATE (N) EA	CONCRETE COLLAR (N) EA	STEEL CHANNELE CLOSURE (N) EA	MAXIMUM COVER (N) FT	DESCRIPTION	STATION
D-9	23	a												1																											CAP INLET	16.18' Lt.2524+01 ROUTE 5
		b																						12.0																3.0	24"CSP	
		c	5.0	1.8	326																																	1			TYPE G2 INLET	2.5' Lt.2524+01 ROUTE 5
D-9	24	a	5.1	1.9	326																																	1			TYPE G2 INLET	1.21'Lt. 2529+00 ROUTE 5
		b																							98.0															3.3	24"RCP	
		c	5.3	1.9	326																																	1			TYPE G2 INLET	1.21' Lt. 2530+00 ROUTE 5
		d																							98.0															3.3	24"RCP	
		e	5.1	1.9	326																																	1			TYPE G2 INLET	1.21' Lt.2531+00 ROUTE 5
		f																							98.0															3.1	24" RCP	
		g	5.0	1.8	326																																	1			TYPE G2 INLET	1.21' Lt.2532+00 ROUTE 5
		h																							98.0															3.2	24" RCP	
		i	5.2	1.9	326																																	1			TYPE G2 INLET	1.21' Lt.2533+00 ROUTE 5
		j																							98.0															3.4	24"RCP	
		k	5.4	1.9	326																																	1			TYPE G2 INLET	1.21' Lt. 2534+00 ROUTE 5
		l																							98.0															3.5	24" RCP	
		m	5.5	2.0	326																																	1			TYPE G2 INLET	1.21' Lt. 2535+00 ROUTE 5
		n																							98.0															3.8	24" RCP	
		o	5.8	2.0	326																																	1			TYPE G2 INLET	1.21' Lt. 2536+00 ROUTE 5
		p																							95.0															3.9	24" RCP	
SHEET TOTAL				17.1	2934									1										12.0	781.0													9				

DRAINAGE QUANTITIES
DQ-14

STATE OF CALIFORNIA - DEPARTMENT OF TRANSPORTATION
Caltrans
HYDRAULICS

FUNCTIONAL SUPERVISOR: DAVE BHALLA
CALCULATED-DESIGNED BY: PRAKASH YADAV
CHECKED BY: PAUL FONG
REVISED BY
DATE REVISED

LAST REVISION
DATE PLOTTED => 26-APR-2011
TIME PLOTTED => 11:38

NOTE: (N) NOT A SEPARATE PAY ITEM, FOR INFORMATION ONLY.

Dist	COUNTY	ROUTE	POST MILES TOTAL PROJECT	SHEET No.	TOTAL SHEETS
07	LA	5	R46.3/R50.0	159	456

REGISTERED CIVIL ENGINEER 01-20-11 DATE

4-25-11
PLANS APPROVAL DATE

REGISTERED PROFESSIONAL ENGINEER PRAKASH YADAV No. C68479 Exp. 9/30/11 CIVIL STATE OF CALIFORNIA

THE STATE OF CALIFORNIA OR ITS OFFICERS OR AGENTS SHALL NOT BE RESPONSIBLE FOR THE ACCURACY OR COMPLETENESS OF SCANNED COPIES OF THIS PLAN SHEET.

DRAINAGE SHEET No	DRAINAGE SYSTEM No	DRAINAGE UNIT No	HEIGHT OF INLET "H" OR "V" (N)	MINOR CONCRETE (MINOR STRUCTURE)	MISCELLANEOUS IRON AND STEEL	MINOR CONCRETE (BACKFILL)	DITCH EXCAVATION	ROCK SLOPE PROTECTION (FACING, METHOD B)	ROCK SLOPE PROTECTION FABRIC	18" STEEL FLARED END SECTION	INCLINED SCREEN TYPE A GSRD	REMOVE INLET	REMOVE CONCRETE	CAP INLET	CAP MANHOLE	REMOVE PIPE	ABANDON CULVERT	8" CSP RISER(.064" THICK)	12" REINFORCED CONCRETE PIPE	18" SLOTTED CORRUGATED STEEL PIPE (0.079" THICK)	24" SLOTTED CORRUGATED STEEL PIPE (0.109"THICK)	18" CORRUGATED STEEL PIPE (0.109"THICK)	18" REINFORCED CONCRETE PIPE	24" CORRUGATED STEEL PIPE (0.109 THICK)	24" REINFORCED CONCRETE PIPE	JACKED 24" RCP (CLASS V)	36" CORRUGATED STEEL PIPE (0.109"THICK)	42" REINFORCED CONCRETE PIPE	45" REINFORCED CONCRETE PIPE	24"CORRUGATEDSTEELPIPE DOWNDRAIN (0.109"THICK)	8" PERFORATED PLASTIC PIPE UNDERDRAIN	8" NON-PERFORATED PLASTIC PIPE UNDERDRAIN	FILTER FABRIC	PERMEABLE MATERIAL	MANHOLE FRAME & GRATE (N)	TYPE 24-12 FRAME & GRATE (N)	CONCRETE COLLAR (N)	STEEL CHANNEL CLOSURE(N)	MAXIMUM COVER (N)	DESCRIPTION	STATION
			FT	CY	LB	CY	CY	CY	SQYD	EA	EA	EA	CY	EA	EA	LF	LF	LF	LF	LF	LF	LF	LF	LF	LF	LF	LF	LF	LF	LF	LF	LF	SQYD	CY	EA	EA	EA	EA	FT		
D-10	24	q	5.9	2.1	326																															1				TYPE G2 INLET	1.21'L+. 2536+97.5 ROUTE 5
		r																						98.0															3.9	24"RCP	
		s	5.7	2.0	326																															1				TYPE G2 INLET	1.21'L+. 2537+97.5 ROUTE 5
		t																		78.0																				18"SCSP	
		u																						78.0															4.0	24"RCP	
		v	6.0	2.1	326																															1				TYPE G2 INLET	1.21'L+. 2538+77.5 ROUTE 5
		w																						12.5															4.0	24" RCP	
		x												1																										CAP INLET	16.65'L+.2538+77.5 ROUTE 5
D-9	25	a	5.3	2.0	580																															2				TYPE GD1 INLET	88.0' R+. 2536+10.5 ROUTE 5
D-10	25	b																					98.0															3.8	18" RCP	
		c	5.1	1.4	326																															1				TYPE G1 INLET	88.0' R+. 2537+10.5 ROUTE 5
		d																					58.0															3.9	18" RCP	
		e	5.3	1.5	326																															1				TYPE G1 INLET	88.0' R+. 2537+70.5 ROUTE 5
		f																					58.0															4.0	18" RCP	
D-10	26	a	5.5	1.5	326																															1				TYPE G1 INLET	88.93' L+. 2547+00 ROUTE 5
		b																					98.0															4.0	18" RCP	
		c	5.3	1.5	326																															1				TYPE G1 INLET	89.01' L+. 2548+00 ROUTE 5
		d																					98.0															3.8	18" RCP	
SHEET TOTAL			14.1	2862										1						78.0			410.0		188.5											9					

DRAINAGE QUANTITIES
DQ-15

PRAKASH YADAV — REVISED BY — DATE REVISED
PAUL FONG — CALCULATED-DESIGNED BY — CHECKED BY
DAVE BHALLA — FUNCTIONAL SUPERVISOR
STATE OF CALIFORNIA - DEPARTMENT OF TRANSPORTATION
Caltrans
HYDRAULICS

LAST REVISION — DATE PLOTTED => 26-APR-2011 — TIME PLOTTED => 11:39

NOTE: (N) NOT A SEPARATE PAY ITEM, FOR INFORMATION ONLY.

Dist	COUNTY	ROUTE	POST MILES TOTAL PROJECT	SHEET No.	TOTAL SHEETS
07	LA	5	R46.3/R50.0	160	456

REGISTERED CIVIL ENGINEER 01-20-11 DATE

4-25-11
PLANS APPROVAL DATE

REGISTERED PROFESSIONAL ENGINEER PRAKASH YADAV No. C68479 Exp. 9/30/11 CIVIL STATE OF CALIFORNIA

THE STATE OF CALIFORNIA OR ITS OFFICERS OR AGENTS SHALL NOT BE RESPONSIBLE FOR THE ACCURACY OR COMPLETENESS OF SCANNED COPIES OF THIS PLAN SHEET.

DRAINAGE SHEET No	DRAINAGE SYSTEM No	DRAINAGE UNIT No	HEIGHT OF INLET "H" OR "V" (N)	MINOR CONCRETE (MINOR STRUCTURE)	MISCELLANEOUS IRON AND STEEL	MINOR CONCRETE (BACKFILL)	DITCH EXCAVATION	ROCK SLOPE PROTECTION (FACING, METHOD B)	ROCK SLOPE PROTECTION FABRIC	18" STEEL FLARED END SECTION	INCLINED SCREEN TYPE A GSRD	REMOVE INLET	REMOVE CONCRETE	CAP INLET	CAP MANHOLE	REMOVE PIPE	ABANDON CULVERT	8" CSP RISER(.064" THICK)	12" REINFORCED CONCRETE PIPE	18" SLOTTED CORRUGATED STEEL PIPE (0.079"THICK)	24" SLOTTED CORRUGATED STEEL PIPE (0.109" THICK)	18" CORRUGATED STEEL PIPE (0.109"THICK)	18" REINFORCED CONCRETE PIPE	24" CORRUGATED STEEL PIPE (0.109"THICK)	24" REINFORCED CONCRETE PIPE	JACKED 24" RCP (CLASS V)	36" CORRUGATED STEEL PIPE (0.109"THICK)	42" REINFORCED CONCRETE PIPE	45" REINFORCED CONCRETE PIPE	24"CORRUGATEDSTEELPIPEDOWNDRAIN (0.109"THICK)	8" PERFORATED PLASTIC PIPE UNDERDRAIN	8" NON-PERFORATED PLASTIC PIPE UNDERDRAIN	FILTER FABRIC	PERMEABLE MATERIAL	MANHOLE FRAME & GRATE (N)	TYPE 24-12 FRAME & GRATE (N)	CONCRETE COLLAR (N)	STEEL CHANNEL CLOSURE (N)	MAXIMUM COVER (N)	DESCRIPTION	STATION
			FT	CY	LB	CY	CY	CY	SQYD	EA	EA	EA	CY	EA	EA	LF	LF	LF	LF	LF	LF	LF	LF	LF	LF	LF	LF	LF	LF	LF	LF	LF	SQYD	CY	EA	EA	EA	EA	FT		
D-10	26	e	5.2	1.4	326																															1				TYPE G1 INLET	89.26'Lt. 2549+00 ROUTE 5
		f																				98.0																4.0	18"RCP	
D-11	26	g	5.4	1.5	326																															1				TYPE G1 INLET	89.2'Lt. 2550+00 ROUTE 5
		h																				98.0																4.0	18"RCP	
		i	5.3	1.5	326																															1				TYPE G1 INLET	89.85'Lt. 2551+00 ROUTE 5
		j																				98.0																3.9	18"RCP	
		k										1																												REMOVE INLET	
		l	5.4	1.9	326																															1				TYPE G2 INLET	88.66'Lt. 2552+00 ROUTE 5
		m														48.0																						5.5	REMOVE PIPE	
		n																				48.0																3.9	18" RCP	
D-11	27	a	5.0	1.9	580																															2				TYPE GD1 INLET	87.3'Rt. 2549+65.3 ROUTE 5
		b																				58.0																3.7	18" RCP	
		c	5.1	2.0	580																															2				TYPE GD1 INLET	87.3'Rt. 2550+25.3 ROUTE 5
		d																				58.0																3.7	18" RCP	
		e	5.0	1.4	326																															1				TYPE G1 INLET	87.3'Rt. 2550+85.3 ROUTE 5
		f										1																												REMOVE INLET	
		g														20.0																						3.5	REMOVE PIPE	
		h																			25.0																	3.5	18" CSP	
SHEET TOTAL				11.6	2790							2				68.0					25.0	458.0														9					

DRAINAGE QUANTITIES

DQ-16

PRAKASH YADAV — REVISED BY
PAUL FONG — DATE REVISED
CALCULATED-DESIGNED BY
CHECKED BY
DAVE BHALLA — FUNCTIONAL SUPERVISOR
STATE OF CALIFORNIA - DEPARTMENT OF TRANSPORTATION
Caltrans
HYDRAULICS

LAST REVISION
DATE PLOTTED => 26-APR-2011
TIME PLOTTED => 11:39

NOTE: (N) NOT A SEPARATE PAY ITEM, FOR INFORMATION ONLY.

Dist	COUNTY	ROUTE	POST MILES TOTAL PROJECT	SHEET No.	TOTAL SHEETS
07	LA	5	R46.3/R50.0	161	456

REGISTERED CIVIL ENGINEER 01-20-11 DATE

4-25-11
PLANS APPROVAL DATE

REGISTERED PROFESSIONAL ENGINEER PRAKASH YADAV No. C68479 Exp. 9/30/11 CIVIL STATE OF CALIFORNIA

THE STATE OF CALIFORNIA OR ITS OFFICERS OR AGENTS SHALL NOT BE RESPONSIBLE FOR THE ACCURACY OR COMPLETENESS OF SCANNED COPIES OF THIS PLAN SHEET.

DRAINAGE SHEET No	DRAINAGE SYSTEM No	DRAINAGE UNIT No	HEIGHT OF INLET "H" OR "V" (N)	MINOR CONCRETE (MINOR STRUCTURE)	MISCELLANEOUS IRON AND STEEL	MINOR CONCRETE (BACKFILL)	DITCH EXCAVATION	ROCK SLOPE PROTECTION (FACING, METHOD B)	ROCK SLOPE PROTECTION FABRIC	18" STEEL FLARED END SECTION	INCLINED SCREEN TYPE A GSRD	REMOVE INLET	REMOVE CONCRETE	CAP INLET	CAP MANHOLE	REMOVE PIPE	ABANDON CULVERT	8" CSP RISER(.064"THICK)	12" REINFORCED CONCRETE PIPE	18" SLOTTED CORRUGATED STEEL PIPE (0.079"THICK)	24" SLOTTED CORRUGATED STEEL PIPE (0.109" THICK)	18" CORRUGATED STEEL PIPE (0.109"THICK)	18" REINFORCED CONCRETE PIPE	24" CORRUGATED STEEL PIPE (0.109"THICK)	24" REINFORCED CONCRETE PIPE	JACKED 24" RCP (CLASS V)	36" CORRUGATED STEEL PIPE (0.109"THICK)	42" REINFORCED CONCRETE PIPE	45" REINFORCED CONCRETE PIPE	24"CORRUGATEDSTEELPIPEDOWNDRAIN (0.109"THICK)	8" PERFORATED PLASTIC PIPE UNDERDRAIN	8" NON-PERFORATED PLASTIC PIPE UNDERDRAIN	FILTER FABRIC	PERMEABLE MATERIAL	MANHOLE FRAME & GRATE (N)	TYPE 24-12 FRAME & GRATE (N)	CONCRETE COLLAR (N)	STEEL CHANNEL CLOSURE (N)	MAXIMUM COVER (N)	DESCRIPTION	STATION
			FT	CY	LB	CY	CY	CY	SQYD	EA	EA	EA	CY	EA	EA	LF	LF	LF	LF	LF	LF	LF	LF	LF	LF	LF	LF	LF	LF	LF	LF	LF	SQYD	CY	EA	EA	EA	EA	FT		
D-11	27	i											0.91																											REMOVE HEAD WALL	
		j		0.9	50																																			STRAIGHT HW, H=3'-2"	
D-11	28	a												1																										CAP INLET	
		b																						12.0															3.0	24" CSP	
		c	5.0	1.8	326																															1				TYPE G2 INLET	1.20'Lt. 2552+50 ROUTE 5
D-11	29	a	5.4	1.9	326																															1				TYPE G2 INLET	1.21'Lt. 2556+80 ROUTE 5
		b																							98.0														3.4	24" RCP	
		c	5.0	1.8	326																															1				TYPE G2 INLET	1.21'Lt. 2557+80 ROUTE 5
		d																							98.0														3.0	24" RCP	
		e	5.0	1.8	326																															1				TYPE G2 INLET	1.21'Lt. 2558+80 ROUTE 5
		f																							98.0														3.1	24" RCP	
		g	5.1	1.9	326																															1				TYPE G2 INLET	1.21'Lt. 2559+80 ROUTE 5
		h																							98.0														3.1	24" RCP	
		i	5.1	1.9	326																															1				TYPE G2 INLET	1.21'Lt. 2560+80 ROUTE 5
		j																							98.0														3.4	24" RCP	
		k	5.4	1.9	326																															1				TYPE G2 INLET	1.21'Lt. 2561+80 ROUTE 5
		l																							98.0														3.7	24" RCP	
SHEET TOTAL				13.9	2332								0.91	1										12.0	588.0											7					

DRAINAGE QUANTITIES

DQ-17

STATE OF CALIFORNIA - DEPARTMENT OF TRANSPORTATION
Caltrans HYDRAULICS

FUNCTIONAL SUPERVISOR: DAVE BHALLA
CALCULATED-DESIGNED BY: PRAKASH YADAV
CHECKED BY: PAUL FONG
REVISED BY
DATE REVISED

LAST REVISION
DATE PLOTTED => 26-APR-2011
TIME PLOTTED => 11:39

NOTE: (N) NOT A SEPARATE PAY ITEM, FOR INFORMATION ONLY.

Dist	COUNTY	ROUTE	POST MILES TOTAL PROJECT	SHEET No.	TOTAL SHEETS
07	LA	5	R46.3/R50.0	162	456

REGISTERED CIVIL ENGINEER 01-20-11 DATE

4-25-11
PLANS APPROVAL DATE

REGISTERED PROFESSIONAL ENGINEER PRAKASH YADAV No. C68479 Exp. 9/30/11 CIVIL STATE OF CALIFORNIA

THE STATE OF CALIFORNIA OR ITS OFFICERS OR AGENTS SHALL NOT BE RESPONSIBLE FOR THE ACCURACY OR COMPLETENESS OF SCANNED COPIES OF THIS PLAN SHEET.

DRAINAGE SHEET No	DRAINAGE SYSTEM No	DRAINAGE UNIT No	HEIGHT OF INLET "H" OR "V" (N)	MINOR CONCRETE (MINOR STRUCTURE)	MISCELLANEOUS IRON AND STEEL	MINOR CONCRETE (BACKFILL)	DITCH EXCAVATION	ROCK SLOPE PROTECTION (FACING, METHOD B)	ROCK SLOPE PROTECTION FABRIC	18" STEEL FLARED END SECTION	INCLINED SCREEN TYPE A GSRD	REMOVE INLET	REMOVE CONCRETE	CAP INLET	CAP MANHOLE	REMOVE PIPE	ABANDON CULVERT	8"CSP RISER(.064" THICK)	12" REINFORCED CONCRETE PIPE	18" SLOTTED CORRUGATED STEEL PIPE (.079"THICK)	24" SLOTTED CORRUGATED STEEL PIPE (0.109" THICK)	18" CORRUGATED STEEL PIPE (0.109"THICK)	18" REINFORCED CONCRETE PIPE	24" CORRUGATED STEEL PIPE (0.109"THICK)	24" REINFORCED CONCRETE PIPE	JACKED 24" RCP (CLASS V)	36" CORRUGATED STEEL PIPE (0.109"THICK)	42" REINFORCED CONCRETE PIPE	45" REINFORCED CONCRETE PIPE	24"CORRUGATEDSTEELPIPEDOWNDRAIN (0.109"THICK)	8" PERFORATED PLASTIC PIPE UNDERDRAIN	8" NON-PERFORATED PLASTIC PIPE UNDERDRAIN	FILTER FABRIC	PERMEABLE MATERIAL	MANHOLE FRAME & GRATE (N)	TYPE 24-12 FRAME & GRATE (N)	CONCRETE COLLAR (N)	STEEL CHANNEL CLOSURE (N)	MAXIMUM COVER (N)	DESCRIPTION	STATION
	⬡	○	FT	CY	LB	CY	CY	CY	SQYD	EA	EA	EA	CY	EA	EA	LF	LF	LF	LF	LF	LF	LF	LF	LF	LF	LF	LF	LF	LF	LF	LF	LF	SQYD	CY	EA	EA	EA	EA	FT		
D-12	29	m	5.7	2.0	326																															1				TYPE G2 INLET	1.21'Lt. 2562+80 ROUTE 5
		n																						98.0															3.7	24" RCP	
		o	5.4	1.9	326																															1				TYPE G2 INLET	1.21'Lt. 2563+80 ROUTE 5
		p																						58.0															3.4	24" RCP	
		q	4.9	1.8	326																															1				TYPE G2 INLET	1.21'Lt. 2564+40 ROUTE 5
		r																						58.0															3.0	24" RCP	
		s	4.4	1.7	326																															1				TYPE G2 INLET	1.21'Lt. 2565+00 ROUTE 5
		t																						12.5															2.4	24" RCP	
		u												1																										CAP INLET	
D-12	30	a	5.2	1.9	326																															1				TYPE G2 INLET	1.21'Lt. 2567+60 ROUTE 5
		b																						58.0															3.2	24" RCP	
		c	5.2	1.9	326																															1				TYPE G2 INLET	1.21'Lt. 2568+20 ROUTE 5
		d																		58.0																				18" SCSP	
		e																						58.0															3.2	24" RCP	
		f	5.1	1.9	326																															1				TYPE G2 INLET	1.40'Lt. 2568+80 ROUTE 5
		g																		58.0																				18" SCSP	
		h																						58.0															3.1	24" RCP	
		i	5.0	1.8	326																															1				TYPE G2 INLET	1.61'Lt. 2569+40 ROUTE 5
SHEET TOTAL			14.9	2608										1						116.0				400.5												8					

DRAINAGE QUANTITIES
DQ-18

PRAKASH YADAV — REVISED BY
PAUL FONG — DATE REVISED
CALCULATED-DESIGNED BY
CHECKED BY
FUNCTIONAL SUPERVISOR
DAVE BHALLA

STATE OF CALIFORNIA - DEPARTMENT OF TRANSPORTATION
Caltrans
HYDRAULICS

LAST REVISION — DATE PLOTTED => 26-APR-2011 TIME PLOTTED => 11:39

NOTE: (N) NOT A SEPARATE PAY ITEM, FOR INFORMATION ONLY.

Dist	COUNTY	ROUTE	POST MILES TOTAL PROJECT	SHEET No.	TOTAL SHEETS
07	LA	5	R46.3/R50.0	163	456

REGISTERED CIVIL ENGINEER 01-20-11 DATE

4-25-11
PLANS APPROVAL DATE

REGISTERED PROFESSIONAL ENGINEER PRAKASH YADAV No. C68479 Exp. 9/30/11 CIVIL STATE OF CALIFORNIA

THE STATE OF CALIFORNIA OR ITS OFFICERS OR AGENTS SHALL NOT BE RESPONSIBLE FOR THE ACCURACY OR COMPLETENESS OF SCANNED COPIES OF THIS PLAN SHEET.

DRAINAGE SHEET No	DRAINAGE SYSTEM No	DRAINAGE UNIT No	HEIGHT OF INLET "H" OR "V" (N)	MINOR CONCRETE (MINOR STRUCTURE)	MISCELLANEOUS IRON AND STEEL	MINOR CONCRETE (BACKFILL)	DITCH EXCAVATION	ROCK SLOPE PROTECTION (FACING, METHOD B)	ROCK SLOPE PROTECTION FABRIC	18" STEEL FLARED END SECTION	INCLINED SCREEN TYPE A GSRD	REMOVE INLET	REMOVE CONCRETE	CAP INLET	CAP MANHOLE	REMOVE PIPE	ABANDON CULVERT	8" CSP RISER(.064"THICK)	12" REINFORCED CONCRETE PIPE	18" SLOTTED CORRUGATED STEEL PIPE (0.079"THICK)	24" SLOTTED CORRUGATED STEEL PIPE (0.109"THICK)	18" CORRUGATED STEEL PIPE (0.109"THICK)	18" REINFORCED CONCRETE PIPE	24" CORRUGATED STEEL PIPE (0.109"THICK)	24" REINFORCED CONCRETE PIPE	JACKED 24" RCP (CLASS V)	36" CORRUGATED STEEL PIPE (0.109"THICK)	42" REINFORCED CONCRETE PIPE	45" REINFORCED CONCRETE PIPE	24"CORRUGATEDSTEELPIPEDOWNDRAIN (0.109"THICK)	8" PERFORATED PLASTIC PIPE UNDERDRAIN	8" NON-PERFORATED PLASTIC PIPE UNDERDRAIN	FILTER FABRIC	PERMEABLE MATERIAL	MANHOLE FRAME & GRATE (N)	TYPE 24-12 FRAME & GRATE (N)	CONCRETE COLLAR (N)	STEEL CHANNEL CLOSURE (N)	MAXIMUM COVER (N)	DESCRIPTION	STATION
			FT	CY	LB	CY	CY	CY	SQYD	EA	EA	EA	CY	EA	EA	LF	LF	LF	LF	LF	LF	LF	LF	LF	LF	LF	LF	LF	LF	LF	LF	LF	SQYD	CY	EA	EA	EA	EA	FT		
D-12	30	j																							198.0														3.0	24"RCP	
		k	5.0	1.4	326																															1				TYPE G1 INLET	1.65'Lt. 2571+40 ROUTE 5
		l																							198.0														3.0	24"RCP	
		m	5.0	1.4	326																															1				TYPE G1 INLET	1.65'Lt. 2573+40 ROUTE 5
		n																							234.0														3.8	24" RCP	
		o	5.8	2.0	326																															1				TYPE G2 INLET	1.65'Lt. 2575+75 ROUTE 5
		p														14.0																							3.0	REMOVE PIPE	
		q																							12.0														3.8	24" RCP	
		r												1																										CAP INLET	
		s														48.0																							3.0	REMOVE PIPE	
		t										1																												REMOVE INLET	
		u														48.0																							3.5	REMOVE PIPE	
		v										1																												REMOVE INLET	
D-12	31	a	4.0	1.2	326																															1				TYPE G1 INLET	88.0'Lt. 2573+50 ROUTE 5
		b																					58.0																2.6	18" RCP	
		c	4.1	1.2	326																															1				TYPE G1 INLET	88.0'Lt. 2574+10 ROUTE 5
		d																					58.0																2.7	18" RCP	
		e	4.1	1.2	326																															1				TYPE G1 INLET	88.0'Lt. 2574+70 ROUTE 5
SHEET TOTAL			8.4	1956								2		1		110.0							116.0		642.0											6					

DRAINAGE QUANTITIES

DQ-19

PRAKASH YADAV — REVISED BY
PAUL FONG — DATE REVISED
CALCULATED-DESIGNED BY
CHECKED BY
FUNCTIONAL SUPERVISOR
DAVE BHALLA

STATE OF CALIFORNIA - DEPARTMENT OF TRANSPORTATION
Caltrans
HYDRAULICS

LAST REVISION
DATE PLOTTED => 26-APR-2011
TIME PLOTTED => 11:39

NOTE: (N) NOT A SEPARATE PAY ITEM, FOR INFORMATION ONLY.

Dist	COUNTY	ROUTE	POST MILES TOTAL PROJECT	SHEET No.	TOTAL SHEETS
07	LA	5	R46.3/R50.0	164	456

REGISTERED CIVIL ENGINEER 01-20-11 DATE

4-25-11
PLANS APPROVAL DATE

REGISTERED PROFESSIONAL ENGINEER PRAKASH YADAV No. C68479 Exp. 9/30/11 CIVIL STATE OF CALIFORNIA

THE STATE OF CALIFORNIA OR ITS OFFICERS OR AGENTS SHALL NOT BE RESPONSIBLE FOR THE ACCURACY OR COMPLETENESS OF SCANNED COPIES OF THIS PLAN SHEET.

DRAINAGE SHEET No	DRAINAGE SYSTEM No	DRAINAGE UNIT No	HEIGHT OF INLET "H" OR "V" (N)	MINOR CONCRETE (MINOR STRUCTURE)	MISCELLANEOUS IRON AND STEEL	MINOR CONCRETE (BACKFILL)	DITCH EXCAVATION	ROCK SLOPE PROTECTION (FACING, METHOD B)	ROCK SLOPE PROTECTION FABRIC	18" STEEL FLARED END SECTION	INCLINED SCREEN TYPE A GSRD	REMOVE INLET	REMOVE CONCRETE	CAP INLET	CAP MANHOLE	REMOVE PIPE	ABANDON CULVERT	8"CSP RISER(.064"THICK)	12" REINFORCED CONCRETE PIPE	18" SLOTTED CORRUGATED STEEL PIPE (0.079'THICK)	24" SLOTTED CORRUGATED STEEL PIPE (0.109"THICK)	18" CORRUGATED STEEL PIPE (0.109"THICK)	18" REINFORCED CONCRETE PIPE	24" CORRUGATED STEEL PIPE (0.109"THICK)	24" REINFORCED CONCRETE PIPE	JACKED 24" RCP (CLASS V)	36" CORRUGATED STEEL PIPE (0.109"THICK)	42" REINFORCED CONCRETE PIPE	45" REINFORCED CONCRETE PIPE	24"CORRUGATEDSTEELPIPEDOWNDRAIN (0.109"THICK)	8" PERFORATED PLASTIC PIPE UNDERDRAIN	8" NON-PERFORATED PLASTIC PIPE UNDERDRAIN	FILTER FABRIC	PERMEABLE MATERIAL	MANHOLE FRAME & GRATE (N)	TYPE 24-12 FRAME & GRATE (N)	CONCRETE COLLAR (N)	STEEL CHANNEL CLOSURE (N)	MAXIMUM COVER (N)	DESCRIPTION	STATION
			FT	CY	LB	CY	CY	CY	SQYD	EA	EA	EA	CY	EA	EA	LF	LF	LF	LF	LF	LF	LF	LF	LF	LF	LF	LF	LF	LF	LF	LF	LF	SQYD	CY	EA	EA	EA	EA	FT		
D-12	31	f																					38.0																3.0	18" RCP	
		g	4.4	1.3	326																															1				TYPE G1 INLET	88.0'Lt. 2575+10 ROUTE 5
		h																					38.0																3.0	18" RCP	
		i										1																												REMOVE INLET	
		j														18.0																							3.5	REMOVE PIPE	
D-12	32	a	5.0	1.4	326																															1				TYPE G1 INLET	87.3'Rt. 2574+55 ROUTE 5
		b																					58.0																3.6	18" RCP	
		c	5.1	1.4	326																															1				TYPE G1 INLET	87.3'Rt. 2575+15 ROUTE 5
		d																					58.0																3.6	18" RCP	
D-13	33	a	3.5	1.1	326																															1				TYPE G1 INLET	87.30' Rt, 2570+80.00 ROUTE 5
		b				4.0																	22.5																2.0	18" RCP W/22.5' MINOR Conc Bkf	
		c				1.8																	23.0																2.8	18" RCP W/10.0' MINOR Conc Bkf	
		d	3.4	1.1	326																															1				TYPE G1 INLET	87.30' Rt, 2580+60.00 ROUTE 5
		e														27.5																							2.8	REMOVE 18" CMP	
		f																					25.5														1		8.4	18" RCP	
		g									1																													INCLINED SCREEN (TYPE 2-A)	109.43' Rt, 2580+24.30 ROUTE 5
SHEET TOTAL				6.3	1630	5.8					1	1				45.5							263.0													5	1				

DRAINAGE QUANTITIES
DQ-20

STATE OF CALIFORNIA - DEPARTMENT OF TRANSPORTATION
Caltrans HYDRAULICS

FUNCTIONAL SUPERVISOR: DAVE BHALLA
CALCULATED-DESIGNED BY: PRAKASH YADAV
CHECKED BY: PAUL FONG
REVISED BY / DATE REVISED

LAST REVISION DATE PLOTTED => 26-APR-2011 TIME PLOTTED => 11:39

NOTE: (N) NOT A SEPARATE PAY ITEM, FOR INFORMATION ONLY.

Dist	COUNTY	ROUTE	POST MILES TOTAL PROJECT	SHEET No.	TOTAL SHEETS
07	LA	5	R46.3/R50.0	165	456

Paul Fong 01-18-11
REGISTERED CIVIL ENGINEER DATE

4-25-11
PLANS APPROVAL DATE

REGISTERED PROFESSIONAL ENGINEER PAUL FONG No. C67053 Exp. 9/30/12 CIVIL STATE OF CALIFORNIA

THE STATE OF CALIFORNIA OR ITS OFFICERS OR AGENTS SHALL NOT BE RESPONSIBLE FOR THE ACCURACY OR COMPLETENESS OF SCANNED COPIES OF THIS PLAN SHEET.

DRAINAGE SHEET No	DRAINAGE SYSTEM No (⬡)	DRAINAGE UNIT No (○)	HEIGHT OF INLET "H" OR "V" (N) FT	MINOR CONCRETE (MINOR STRUCTURE) CY	MISCELLANEOUS IRON AND STEEL LB	MINOR CONCRETE (BACKFILL) CY	DITCH EXCAVATION CY	ROCK SLOPE PROTECTION (FACING, METHOD B) CY	ROCK SLOPE PROTECTION FABRIC SY	18" STEEL FLARED END SECTION EA	INCLINED SCREEN TYPE A GSRD EA	REMOVE INLET EA	REMOVE CONCRETE CY	CAP INLET EA	CAP MANHOLE EA	REMOVE PIPE LF	ABANDON CULVERT LF	8" CSP RISER (.064" THICK) LF	12" REINFORCED CONCRETE PIPE LF	18" SLOTTED CORRUGATED STEEL PIPE (0.079" THICK) LF	24" SLOTTED CORRUGATED STEEL PIPE (0.109" THICK) LF	18" CORRUGATED STEEL PIPE (0.109" THICK) LF	18" REINFORCED CONCRETE PIPE LF	24" CORRUGATED STEEL PIPE (0.109" THICK) LF	24" REINFORCED CONCRETE PIPE LF	JACKED 24" RCP (CLASS V) LF	36" CORRUGATED STEEL PIPE (0.109" THICK) LF	42" REINFORCED CONCRETE PIPE LF	45" REINFORCED CONCRETE PIPE LF	24" CORRUGATED STEEL PIPE DOWNDRAIN (0.109" THICK) LF	8" PERFORATED PLASTIC PIPE UNDERDRAIN LF	8" NON-PERFORATED PLASTIC PIPE UNDERDRAIN LF	FILTER FABRIC SQYD	PERMEABLE MATERIAL CY	MANHOLE FRAME & COVER (N) EA	TYPE 24-12 FRAME & GRATE (N) EA	CONCRETE COLLAR (N) EA	STEEL CHANNEL CLOSURE (N) EA	MAXIMUM COVER (N) FT	DESCRIPTION	STATION
D-13	34	a	3.5	1.1	326																													1				TYPE GI INLET	88.80' Lt, 2583+80.00 ROUTE 5
		b				9.6																	57.5														2.0	18" RCP W/57.5' MINOR Conc Bkf	
		c	3.3	1.1	326																													1				TYPE GI INLET	88.80' Lt, 2584+40.00 ROUTE 5
		d				7.3																	43.5														1.8	18" RCP W/43.5' MINOR Conc Bkf	
D-13	35	a										1																										REMOVE INLET	
		b														5.0																					1.6	REMOVE 24" CMP	
		c														27.0																					3.8	REMOVE 24" CMP	
		d																						15.5											1		12.0	24" CSP	
		e				3.1																			18.5										1		3.0	24" RCP W/MINOR Conc Bkf	
		f	4.5	1.7	326																													1				TYPE G2 INLET	2.15' Lt, 2585+27.23 ROUTE 5
D-14	36	a	5.5	2.0	326																													1				TYPE G2 INLET	2.48' Rt, 2589+80.00 ROUTE 5
		b																							58.5												3.5	24" RCP	
		c	5.5	2.0	326																													1			3.5	TYPE G2 INLET	2.48' Rt, 2590+40.00 ROUTE 5
		d																							58.5												3.7	24" RCP	
		e	5.7	2.0	326																													1				TYPE G2 INLET	2.48' Rt, 2591+00.00 ROUTE 5
		f																							58.5												4.0	24" RCP	
		g	6.0	2.1	326																													1				TYPE G2 INLET	2.48' Rt, 2591+60.00 ROUTE 5
SHEET TOTAL			12.0	2282	20.0							1				32.0							101.0	15.5	194.0									7	2				

DRAINAGE QUANTITIES
DQ-21

STATE OF CALIFORNIA - DEPARTMENT OF TRANSPORTATION
Caltrans
HYDRAULICS

PAUL FONG — REVISED BY
PRAKASH YADAV — DATE REVISED
CALCULATED-DESIGNED BY
CHECKED BY
FUNCTIONAL SUPERVISOR
DAVE BHALLA

LAST REVISION DATE PLOTTED => 26-APR-2011
TIME PLOTTED => 11:39

NOTE: (N) NOT A SEPARATE PAY ITEM, FOR INFORMATION ONLY.

Dist	COUNTY	ROUTE	POST MILES TOTAL PROJECT	SHEET No.	TOTAL SHEETS
07	LA	5	R46.3/R50.0	166	456

Paul Fong 01-18-11
REGISTERED CIVIL ENGINEER DATE

4-25-11
PLANS APPROVAL DATE

REGISTERED PROFESSIONAL ENGINEER PAUL FONG No. C67053 Exp. 9/30/12 CIVIL STATE OF CALIFORNIA

THE STATE OF CALIFORNIA OR ITS OFFICERS OR AGENTS SHALL NOT BE RESPONSIBLE FOR THE ACCURACY OR COMPLETENESS OF SCANNED COPIES OF THIS PLAN SHEET.

DRAINAGE SHEET No	DRAINAGE SYSTEM No ⬡	DRAINAGE UNIT No ○	HEIGHT OF INLET "H" OR "V" (N) FT	MINOR CONCRETE (MINOR STRUCTURE) CY	MISCELLANEOUS IRON AND STEEL LB	MINOR CONCRETE (BACKFILL) CY	DITCH EXCAVATION CY	ROCK SLOPE PROTECTION (FACING, METHOD B) CY	ROCK SLOPE PROTECTION FABRIC SY	18" STEEL FLARED END SECTION EA	INCLINED SCREEN TYPE A GSRD EA	REMOVE INLET EA	REMOVE CONCRETE CY	CAP INLET EA	CAP MANHOLE EA	REMOVE PIPE LF	ABANDON CULVERT LF	8" CSP RISER (.064" THICK) LF	12" REINFORCED CONCRETE PIPE LF	18" SLOTTED CORRUGATED STEEL PIPE (0.079" THICK) LF	24" SLOTTED CORRUGATED STEEL PIPE (0.109" THICK) LF	18" CORRUGATED STEEL PIPE (0.109" THICK) LF	18" REINFORCED CONCRETE PIPE LF	24" CORRUGATED STEEL PIPE (0.109" THICK) LF	24" REINFORCED CONCRETE PIPE LF	JACKED 24" RCP (CLASS V) LF	36" CORRUGATED STEEL PIPE (0.109" THICK) LF	42" REINFORCED CONCRETE PIPE LF	45" REINFORCED CONCRETE PIPE LF	24" CORRUGATED STEEL PIPE DOWNDRAIN (0.109" THICK) LF	8" PERFORATED PLASTIC PIPE UNDERDRAIN LF	8" NON-PERFORATED PLASTIC PIPE UNDERDRAIN LF	FILTER FABRIC SQYD	PERMEABLE MATERIAL CY	MANHOLE FRAME & COVER (N) EA	TYPE 24-12 FRAME & GRATE (N) EA	CONCRETE COLLAR (N) EA	STEEL CHANNEL CLOSURE (N) EA	MAXIMUM COVER (N) FT	DESCRIPTION	STATION
D-14	36	h																							38.5														4.7	24" RCP	
		i																			38.5																			24" SCSP	
		j	6.7	2.3	326																																1			TYPE G2 INLET	2.48' Rt, 2592+00.00 ROUTE 5
		k																								119.0													7.0	JACKED 24" RCP	
		l		1.2	75																																			STRAIGHT HW, H=3'-8"	121.18' Rt, 2592+00.00 ROUTE 5
		m						3.0	6.0																															RSP (FACING, METHOD B)	
		n										1																												REMOVE INLET	
		o															116.0																							ABANDON 24" CMP	
D-14	37	a	4.3	1.2	326																																1			TYPE GI INLET	88.00' Lt, 2594+80.00 ROUTE 5
		b																					58.5																2.9	18" RCP	
		c	4.4	1.2	326																																1			TYPE GI INLET	88.00' Lt, 2594+80.00 ROUTE 5
		d																					38.5																3.0	18" RCP	
		e	4.5	1.3	326																																1			TYPE GI INLET	88.00' Lt, 2595+80.00 ROUTE 5
		f																				16.0																	3.0	18" CSP	
		g																				2.4																		18" CSP	
D-14	37	h								1																														18" FES	105.70' Lt, 2595+83.63 ROUTE 5
SHEET TOTAL				7.2	1379			3.0	6.0	1		1					116.0				38.5	18.4	97.0		38.5	119.0											4				

DRAINAGE QUANTITIES
DQ-22

STATE OF CALIFORNIA - DEPARTMENT OF TRANSPORTATION
Caltrans HYDRAULICS

FUNCTIONAL SUPERVISOR: DAVE BHALLA
CALCULATED-DESIGNED BY: PAUL FONG
CHECKED BY: PRAKASH YADAV
REVISED BY
DATE REVISED

LAST REVISION
DATE PLOTTED => 26-APR-2011
TIME PLOTTED => 11:39

NOTE: (N) NOT A SEPARATE PAY ITEM, FOR INFORMATION ONLY.

Dist	COUNTY	ROUTE	POST MILES TOTAL PROJECT	SHEET No.	TOTAL SHEETS
07	LA	5	R46.3/R50.0	167	456

Paul Fong 01-18-11
REGISTERED CIVIL ENGINEER DATE

4-25-11
PLANS APPROVAL DATE

REGISTERED PROFESSIONAL ENGINEER PAUL FONG No. C67053 Exp. 9/30/12 CIVIL STATE OF CALIFORNIA

THE STATE OF CALIFORNIA OR ITS OFFICERS OR AGENTS SHALL NOT BE RESPONSIBLE FOR THE ACCURACY OR COMPLETENESS OF SCANNED COPIES OF THIS PLAN SHEET.

DRAINAGE SHEET No	DRAINAGE SYSTEM No (⬡)	DRAINAGE UNIT No (○)	HEIGHT OF INLET "H" OR "V" (N)	MINOR CONCRETE (MINOR STRUCTURE)	MISCELLANEOUS IRON AND STEEL	MINOR CONCRETE (BACKFILL)	DITCH EXCAVATION	ROCK SLOPE PROTECTION (FACING, METHOD B)	ROCK SLOPE PROTECTION FABRIC	18" STEEL FLARED END SECTION	INCLINED SCREEN TYPE A GSRD	REMOVE INLET	REMOVE CONCRETE	CAP INLET	CAP MANHOLE	REMOVE PIPE	ABANDON CULVERT	8" CSP RISER (.064" THICK)	12" REINFORCED CONCRETE PIPE	18" SLOTTED CORRUGATED STEEL PIPE (0.079" THICK)	24" SLOTTED CORRUGATED STEEL PIPE (0.109" THICK)	18" CORRUGATED STEEL PIPE (0.109" THICK)	18" REINFORCED CONCRETE PIPE	24" CORRUGATED STEEL PIPE (0.109" THICK)	24" REINFORCED CONCRETE PIPE	JACKED 24" RCP (CLASS V)	36" CORRUGATED STEEL PIPE (0.109" THICK)	42" REINFORCED CONCRETE PIPE	45" REINFORCED CONCRETE PIPE	24" CORRUGATED STEEL PIPE DOWNDRAIN (0.109" THICK)	8" PERFORATED PLASTIC PIPE UNDERDRAIN	8" NON-PERFORATED PLASTIC PIPE UNDERDRAIN	FILTER FABRIC	PERMEABLE MATERIAL	MANHOLE FRAME & COVER (N)	TYPE 24-12 FRAME & GRATE (N)	CONCRETE COLLAR (N)	STEEL CHANNEL CLOSURE (N)	MAXIMUM COVER (N)	DESCRIPTION	STATION
			FT	CY	LB	CY	CY	CY	SY	EA	EA	EA	CY	EA	EA	LF	LF	LF	LF	LF	LF	LF	LF	LF	LF	LF	LF	LF	LF	LF	LF	LF	SQYD	CY	EA	EA	EA	EA	FT		
D-14	38	a	4.0	1.2	326.0																															1				TYPE GI INLET	87.30' Lt, 2595+51.64 ROUTE 5
		b																				14.0																	2.5	18" CSP	
		c																				2.3																		18" CSP	
		d								1																														18" FES	
D-14	39	a										1																												REMOVE INLET	
		b															6.0																							ABANDON 18" CMP	
		c				10.0																																		26.0' MINOR Conc Bkf (Exist 48" RCP ENCASEMENT)	
D-14	40	a		0.7																																				6' x 6' x 6" Conc PAD	
D-15	41	a	5.0	1.8	326																															1				TYPE G2 INLET	2.15' Lt, 2603+00.00 ROUTE 5
		b																							17.5														3.2	24" RCP	
		c	5.2	1.9	326																															1				TYPE G2 INLET	2.15' Lt, 2603+20.00 ROUTE 5
		d																							27.5														3.5	24" RCP	
		e	12.0	4.9	326																															1				TYPE G2 INLET	2.15' Lt, 2603+50.00 ROUTE 5
		f																							47.5														4.0	24" RCP	
		g	5.8	2.1	326																															1				TYPE G2 INLET	2.15' Lt, 2604+00.00 ROUTE 5
		h																							97.5														3.8	24" RCP	
SHEET TOTAL				12.6	1630	10.0				1		1					6.0					16.3			190.0											5					

DRAINAGE QUANTITIES
DQ-23

STATE OF CALIFORNIA - DEPARTMENT OF TRANSPORTATION
Caltrans HYDRAULICS

PAUL FONG — CALCULATED-DESIGNED BY
PRAKASH YADAV — CHECKED BY
DAVE BHALLA — FUNCTIONAL SUPERVISOR
REVISED BY — DATE REVISED

LAST REVISION — DATE PLOTTED => 26-APR-2011 TIME PLOTTED => 11:39

NOTE: (N) NOT A SEPARATE PAY ITEM, FOR INFORMATION ONLY.

Dist	COUNTY	ROUTE	POST MILES TOTAL PROJECT	SHEET No.	TOTAL SHEETS
07	LA	5	R46.3/R50.0	168	456

Paul Fong 01-18-11
REGISTERED CIVIL ENGINEER DATE

4-25-11
PLANS APPROVAL DATE

REGISTERED PROFESSIONAL ENGINEER PAUL FONG No. C67053 Exp. 9/30/12 CIVIL STATE OF CALIFORNIA

THE STATE OF CALIFORNIA OR ITS OFFICERS OR AGENTS SHALL NOT BE RESPONSIBLE FOR THE ACCURACY OR COMPLETENESS OF SCANNED COPIES OF THIS PLAN SHEET.

DRAINAGE SHEET No	DRAINAGE SYSTEM No	DRAINAGE UNIT No	HEIGHT OF INLET "H" OR "V" (N)	MINOR CONCRETE (MINOR STRUCTURE)	MISCELLANEOUS IRON AND STEEL	MINOR CONCRETE (BACKFILL)	DITCH EXCAVATION	ROCK SLOPE PROTECTION (FACING, METHOD B)	ROCK SLOPE PROTECTION FABRIC	18" STEEL FLARED END SECTION	INCLINED SCREEN TYPE A GSRD	REMOVE INLET	REMOVE CONCRETE	CAP INLET	CAP MANHOLE	REMOVE PIPE	ABANDON CULVERT	8" CSP RISER (.064" THICK)	12" REINFORCED CONCRETE PIPE	18" SLOTTED CORRUGATED STEEL PIPE (0.079" THICK)	24" SLOTTED CORRUGATED STEEL PIPE (0.109" THICK)	18" CORRUGATED STEEL PIPE (0.109" THICK)	18" REINFORCED CONCRETE PIPE	24" CORRUGATED STEEL PIPE (0.109" THICK)	24" REINFORCED CONCRETE PIPE	JACKED 24" RCP (CLASS V)	36" CORRUGATED STEEL PIPE (0.109" THICK)	42" REINFORCED CONCRETE PIPE	45" REINFORCED CONCRETE PIPE	24" CORRUGATED STEEL PIPE DOWNDRAIN (0.109" THICK)	8" PERFORATED PLASTIC PIPE UNDERDRAIN	8" NON-PERFORATED PLASTIC PIPE UNDERDRAIN	FILTER FABRIC	PERMEABLE MATERIAL	MANHOLE FRAME & COVER (N)	TYPE 24-12 FRAME & GRATE (N)	CONCRETE COLLAR (N)	STEEL CHANNEL CLOSURE (N)	MAXIMUM COVER (N)	DESCRIPTION	STATION
	⬡	○	FT	CY	LB	CY	CY	CY	SY	EA	EA	EA	CY	EA	EA	LF	LF	LF	LF	LF	LF	LF	LF	LF	LF	LF	LF	LF	LF	LF	LF	LF	LF	SQYD	CY	EA	EA	EA	EA	FT		
D-15	41	i	5.8	2.1	326																															1				TYPE G2 INLET	2.15' Lt, 2605+00.00 ROUTE 5
		j																						97.5															3.6	24" RCP	
		k	5.5	2.0	326																															1				TYPE G2 INLET	2.15' Lt, 2606+00.00 ROUTE 5
		l																						97.5															3.2	24" RCP	
		m	5.0	1.8	326																															1				TYPE G2 INLET	2.15' Lt, 2607+00.00 ROUTE 5
		n										1																												REMOVE INLET	
		o														48.0																							2.0	REMOVE 48" CMP	
		p										1																												REMOVE INLET	
		q																							13.5												1		3.3	24" RCP	
		r																						5.0															2.2	24" CSP	
		s	5.3	1.9	326																															1				TYPE G2 INLET	2.26' Lt, 2603+50.00 ROUTE 5
D-15	42	a		0.4																																				4' x 5' x 6" Conc PAD	
D-15	43	a					120.0																																	EARTH DITCH BIOSWALE	
D-16	44	a	2.5	0.6	326																															1				CL I INLET (CASE No. 1)	100.85' Rt, 2618+80.00 ROUTE 5
		b																			117.5																			24" SCSP	
		c	2.5	0.6	326																															1				CL I INLET (CASE No. 2)	100.82' Rt, 2620+00.00 ROUTE 5
SHEET TOTAL			9.4	1956			120.0					2				48.0					117.5			5.0	208.5											6	1				

DRAINAGE QUANTITIES
DQ-24

STATE OF CALIFORNIA - DEPARTMENT OF TRANSPORTATION
Caltrans HYDRAULICS

FUNCTIONAL SUPERVISOR: DAVE BHALLA
CALCULATED-DESIGNED BY: PAUL FONG
CHECKED BY: PRAKASH YADAV
REVISED BY
DATE REVISED

LAST REVISION
DATE PLOTTED => 26-APR-2011
TIME PLOTTED => 11:39

NOTE: (N) NOT A SEPARATE PAY ITEM, FOR INFORMATION ONLY.

Dist	COUNTY	ROUTE	POST MILES TOTAL PROJECT	SHEET No.	TOTAL SHEETS
07	LA	5	R46.3/R50.0	169	456

Paul Fong 01-18-11
REGISTERED CIVIL ENGINEER DATE

4-25-11
PLANS APPROVAL DATE

REGISTERED PROFESSIONAL ENGINEER PAUL FONG No. C67053 Exp. 9/30/12 CIVIL STATE OF CALIFORNIA

THE STATE OF CALIFORNIA OR ITS OFFICERS OR AGENTS SHALL NOT BE RESPONSIBLE FOR THE ACCURACY OR COMPLETENESS OF SCANNED COPIES OF THIS PLAN SHEET.

DRAINAGE SHEET No	DRAINAGE SYSTEM No	DRAINAGE UNIT No	HEIGHT OF INLET "H" OR "V" (N)	MINOR CONCRETE (MINOR STRUCTURE)	MISCELLANEOUS IRON AND STEEL	MINOR CONCRETE (BACKFILL)	DITCH EXCAVATION	ROCK SLOPE PROTECTION (FACING, METHOD B)	ROCK SLOPE PROTECTION FABRIC	18" STEEL FLARED END SECTION	INCLINED SCREEN TYPE A GSRD	REMOVE INLET	REMOVE CONCRETE	CAP INLET	CAP MANHOLE	REMOVE PIPE	ABANDON CULVERT	8" CSP RISER (.064" THICK)	12" REINFORCED CONCRETE PIPE	18" SLOTTED CORRUGATED STEEL PIPE (0.079" THICK)	24" SLOTTED CORRUGATED STEEL PIPE (0.109" THICK)	18" CORRUGATED STEEL PIPE (0.109" THICK)	18" REINFORCED CONCRETE PIPE	24" CORRUGATED STEEL PIPE (0.109" THICK)	24" REINFORCED CONCRETE PIPE	JACKED 24" RCP (CLASS V)	36" CORRUGATED STEEL PIPE (0.109" THICK)	42" REINFORCED CONCRETE PIPE	45" REINFORCED CONCRETE PIPE	24" CORRUGATED STEEL PIPE DOWNDRAIN (0.109" THICK)	8" PERFORATED PLASTIC PIPE UNDERDRAIN	8" NON-PERFORATED PLASTIC PIPE UNDERDRAIN	FILTER FABRIC	PERMEABLE MATERIAL	MANHOLE FRAME & COVER (N)	TYPE 24-12 FRAME & GRATE (N)	CONCRETE COLLAR (N)	STEEL CHANNEL CLOSURE (N)	MAXIMUM COVER (N)	DESCRIPTION	STATION
	⬡	○	FT	CY	LB	CY	CY	CY	SY	EA	EA	EA	CY	EA	EA	LF	LF	LF	LF	LF	LF	LF	LF	LF	LF	LF	LF	LF	LF	LF	LF	LF	LF	SQYD	CY	EA	EA	EA	EA	FT		
D-16	44	d																			117.5																				24" SCSP	
		e	2.5	0.6	326																																1				CL I INLET (CASE No. 2)	100.78' Rt, 2621+20.00 ROUTE 5
		f																			117.5																				24" SCSP	
		g	2.5	0.6	326																																1				CL I INLET (CASE No. 2)	100.83' Rt, 2622+40.00 ROUTE 5
		h																			117.5																				24" SCSP	
		i	2.5	0.6	326																																1				CL I INLET (CASE No. 2)	100.87' Rt, 2623+60.00 ROUTE 5
		j																			117.5																				24" SCSP	
		k	2.5	0.6	326																																1				CL I INLET (CASE No. 2)	100.85' Rt, 2624+80.00 ROUTE 5
		l																			117.5																				24" SCSP	
		m	2.5	0.6	326																																1				CL I INLET (CASE No. 2)	100.84' Rt, 2626+00.00 ROUTE 5
D-17	44	n																			80.0																				24" SCSP	
SHEET TOTAL				3.0	1630																667.5																5					
TOTAL				407.10	57691	55.5	542.0	11.0	30.0	2	1	23	10.4	5	1	1924.5	449.0	17.4	2.5	618.0	823.5	96.7	1791.5	1103.5	7322.0	279.0	470.5	286.0	222.5	408.0	1265	108.5	1480	270.0	5	170	8	4				

* FOR TOTAL QUANTITY, SEE SHEET Q-2

DRAINAGE QUANTITIES
DQ-25

STATE OF CALIFORNIA - DEPARTMENT OF TRANSPORTATION
Caltrans HYDRAULICS

FUNCTIONAL SUPERVISOR: DAVE BHALLA
CALCULATED-DESIGNED BY: PAUL FONG
CHECKED BY: PRAKASH YADAV
REVISED BY
DATE REVISED

LAST REVISION DATE PLOTTED => 26-APR-2011
TIME PLOTTED => 11:39

Dist	COUNTY	ROUTE	POST MILES TOTAL PROJECT	SHEET No.	TOTAL SHEETS
07	LA	5	R46.3/R50.0	170	456

Zewdie Senbetu 1-18-11
REGISTERED CIVIL ENGINEER DATE

4-25-11
PLANS APPROVAL DATE

REGISTERED PROFESSIONAL ENGINEER
ZEWDIE SENBETU
No. 63554
Exp. 9/30/12
CIVIL
STATE OF CALIFORNIA

THE STATE OF CALIFORNIA OR ITS OFFICERS OR AGENTS SHALL NOT BE RESPONSIBLE FOR THE ACCURACY OR COMPLETENESS OF SCANNED COPIES OF THIS PLAN SHEET.

NOTE:

1. UTILITY OWNERSHIP ON THIS PROJECT OR AS SHOWN:

   GAS - SOUTHERN CALIFORNIA GAS COMPANY (SCG)
   ELECTRICAL - SOUTHERN CALIFORNIA EDISON (SCE)
   WATER - NEWHALL COMPANY WATER DISTRICT (NWHL CO WTR DIST)
   OIL - EXXON-MOBILE, CHEVRON GAS, MOBIL OIL
   TELEPHONE - AMERICAN TELEPHONE & TELEGRAPH (AT&T)
   , CA PACIFIC BELL (CA PAC BELL)
   FIBER OPTIC - AT&T, QWEST

ABBREVIATIONS:

BU	BURRIED
SO	SOUTHERN
CA	CALIFORNIA
CATV	CABLE TELEVISION
CO	COMPANY
CSG	CASING
DU	DUCTS
HDPE	HIGH DENSITY POLYETHYLENE
V	VOLT
VA	VOLT AMPERE
KVA	KILIVOLT AMPERE
M	MAIN, MEDIUM PRESSURE
MCD	MULTIPLE CONCRETE DUCT
WTR	WATER
TWC	TIME WARNER CABLE
PPSI	PACIFIC PIPELINE SYSTEM INC.

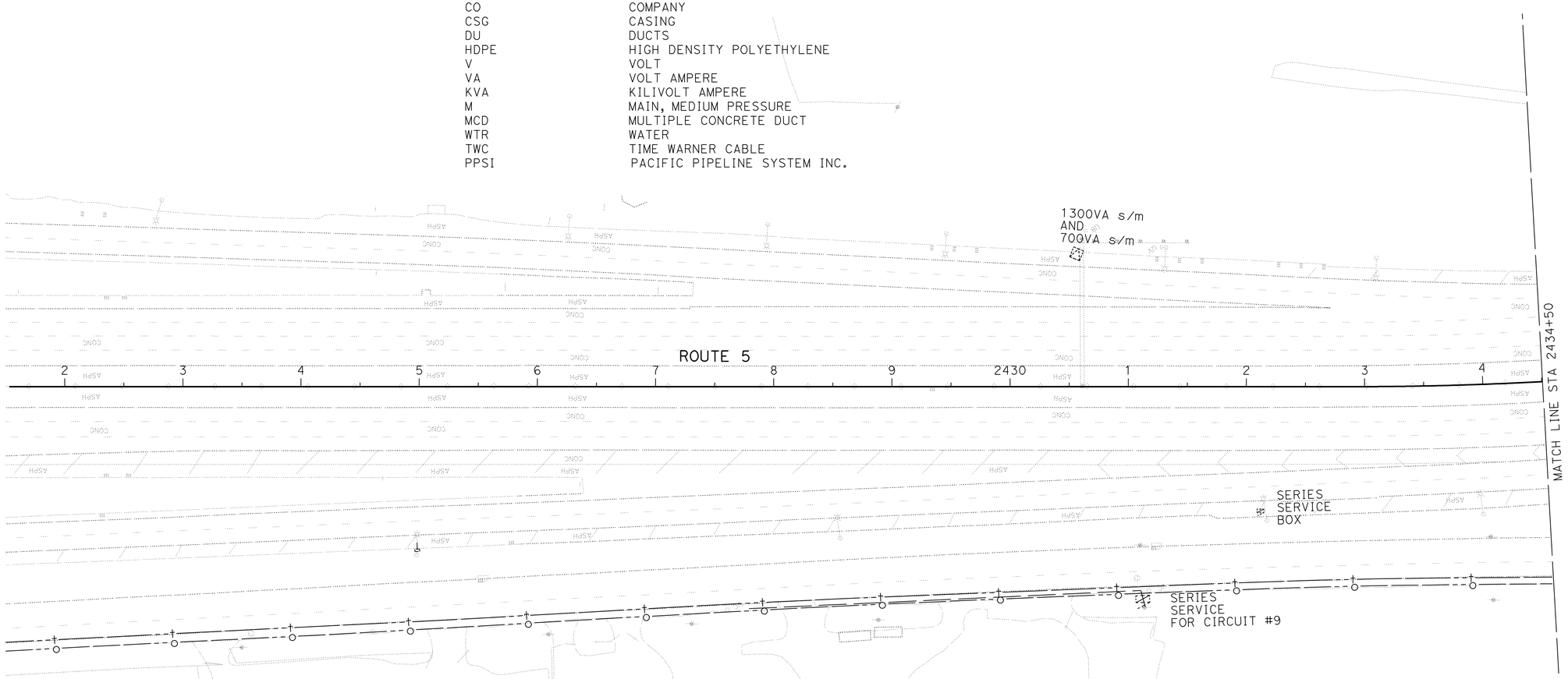

THIS PLAN ACCURATE FOR UTILITY INFORMATION ONLY

UTILITY

SCALE: 1" = 50'

U-1

STATE OF CALIFORNIA - DEPARTMENT OF TRANSPORTATION
Caltrans ENGINEERING SERVICES

FUNCTIONAL SUPERVISOR: PARVIZ YEGANEH
CALCULATED-DESIGNED BY: O. BLACKSTOCK
CHECKED BY: ZEWDIE SENBETU
REVISED BY: CTT
DATE REVISED: 01-13-11

LAST REVISION 01-13-11
DATE PLOTTED => 26-APR-2011
TIME PLOTTED => 07:20

Dist	COUNTY	ROUTE	POST MILES TOTAL PROJECT	SHEET No.	TOTAL SHEETS
07	LA	5	R46.3/R50.0	171	456

Zewdie Senbetu 1-18-11
REGISTERED CIVIL ENGINEER DATE

4-25-11
PLANS APPROVAL DATE

REGISTERED PROFESSIONAL ENGINEER
ZEWDIE SENBETU
No. 63554
Exp. 9/30/12
CIVIL
STATE OF CALIFORNIA

THE STATE OF CALIFORNIA OR ITS OFFICERS OR AGENTS SHALL NOT BE RESPONSIBLE FOR THE ACCURACY OR COMPLETENESS OF SCANNED COPIES OF THIS PLAN SHEET.

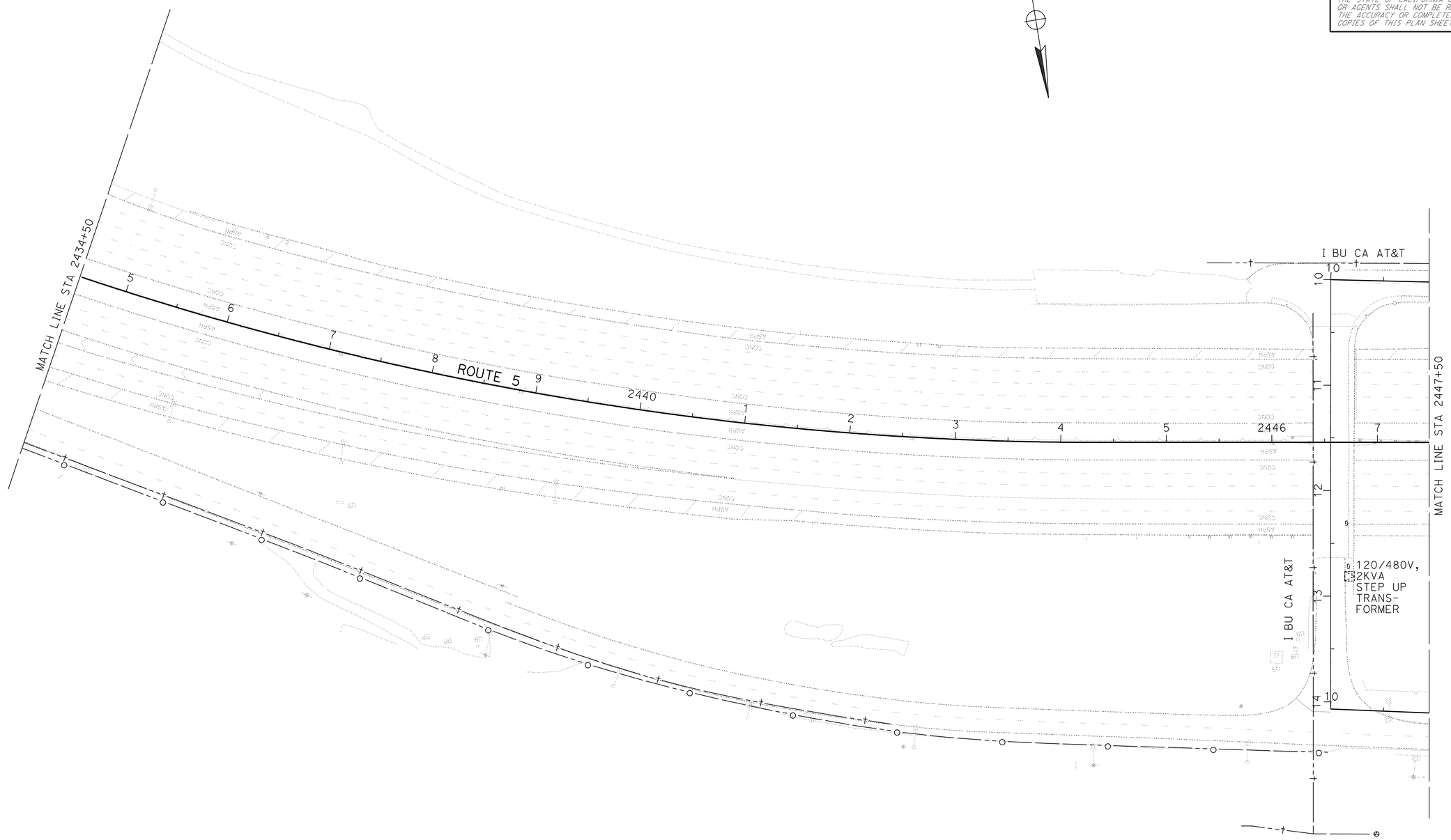

THIS PLAN ACCURATE FOR UTILITY INFORMATION ONLY

UTILITY

SCALE: 1" = 50'

U-2

STATE OF CALIFORNIA - DEPARTMENT OF TRANSPORTATION
Caltrans ENGINEERING SERVICES

FUNCTIONAL SUPERVISOR: PARVIZ YEGANEH
CALCULATED-DESIGNED BY: O. BLACKSTOCK
CHECKED BY: ZEWDIE SENBETU
REVISED BY: CTT
DATE REVISED: 01-13-11

LAST REVISION 01-13-11
DATE PLOTTED => 26-APR-2011
TIME PLOTTED => 07:21

Dist	COUNTY	ROUTE	POST MILES TOTAL PROJECT	SHEET No.	TOTAL SHEETS
07	LA	5	R46.3/R50.0	172	456

Zewdie Senbetu 1-18-11
REGISTERED CIVIL ENGINEER DATE

4-25-11
PLANS APPROVAL DATE

REGISTERED PROFESSIONAL ENGINEER
ZEWDIE SENBETU
No. 63554
Exp. 9/30/12
CIVIL
STATE OF CALIFORNIA

THE STATE OF CALIFORNIA OR ITS OFFICERS OR AGENTS SHALL NOT BE RESPONSIBLE FOR THE ACCURACY OR COMPLETENESS OF SCANNED COPIES OF THIS PLAN SHEET.

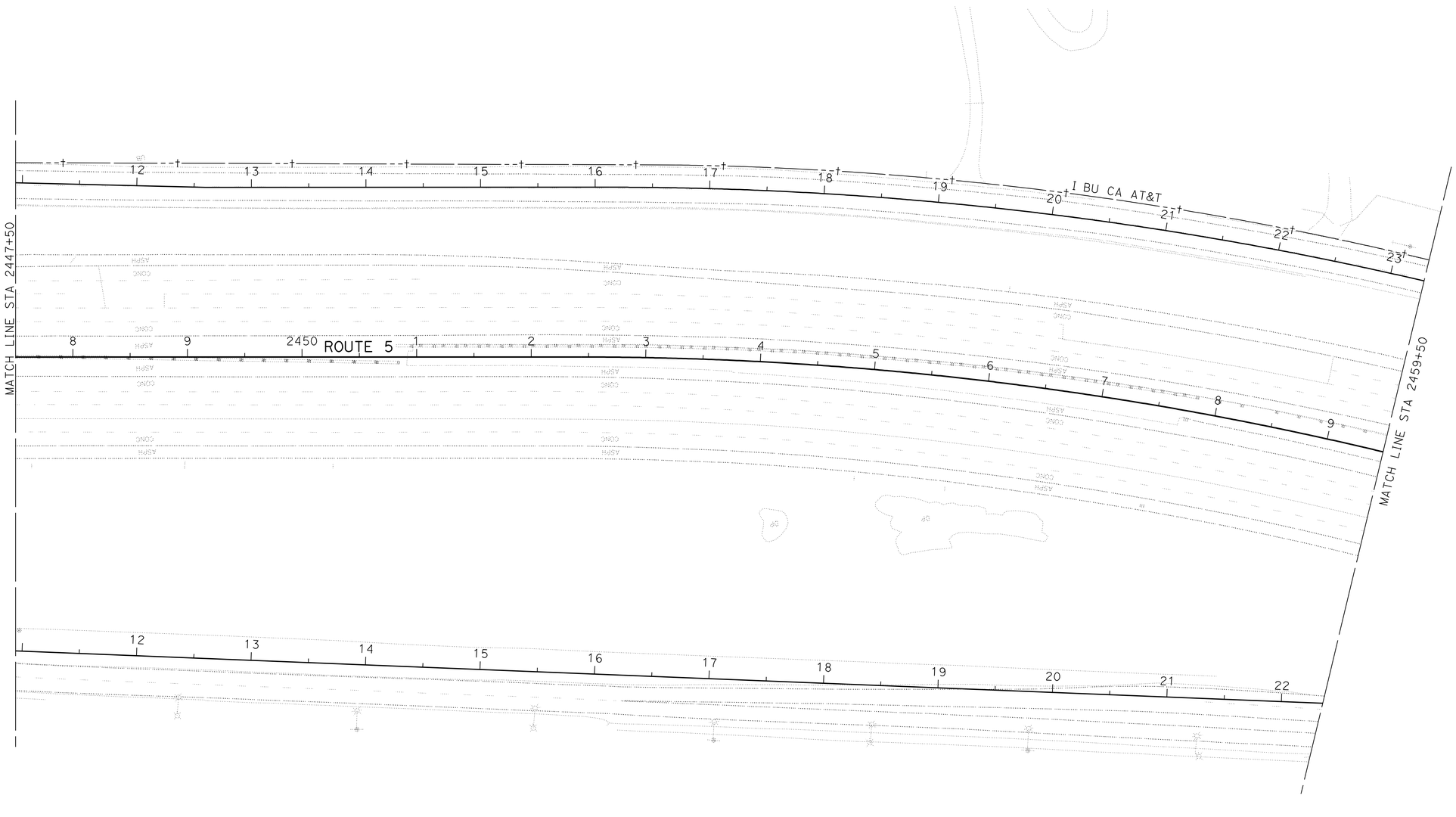

UTILITY

SCALE: 1" = 50'

U-3

THIS PLAN ACCURATE FOR UTILITY INFORMATION ONLY

STATE OF CALIFORNIA - DEPARTMENT OF TRANSPORTATION
Caltrans ENGINEERING SERVICES

FUNCTIONAL SUPERVISOR: PARVIZ YEGANEH
CALCULATED-DESIGNED BY: O. BLACKSTOCK
CHECKED BY: ZEWDIE SENBETU
REVISED BY: CTT
DATE REVISED: 01-13-11

LAST REVISION 01-13-11
DATE PLOTTED => 26-APR-2011
TIME PLOTTED => 07:21

Dist	COUNTY	ROUTE	POST MILES TOTAL PROJECT	SHEET No.	TOTAL SHEETS
07	LA	5	R46.3/R50.0	173	456

Zewdie Senbetu 1-18-11
REGISTERED CIVIL ENGINEER DATE

4-25-11
PLANS APPROVAL DATE

REGISTERED PROFESSIONAL ENGINEER
ZEWDIE SENBETU
No. 63554
Exp. 9/30/12
CIVIL
STATE OF CALIFORNIA

THE STATE OF CALIFORNIA OR ITS OFFICERS OR AGENTS SHALL NOT BE RESPONSIBLE FOR THE ACCURACY OR COMPLETENESS OF SCANNED COPIES OF THIS PLAN SHEET.

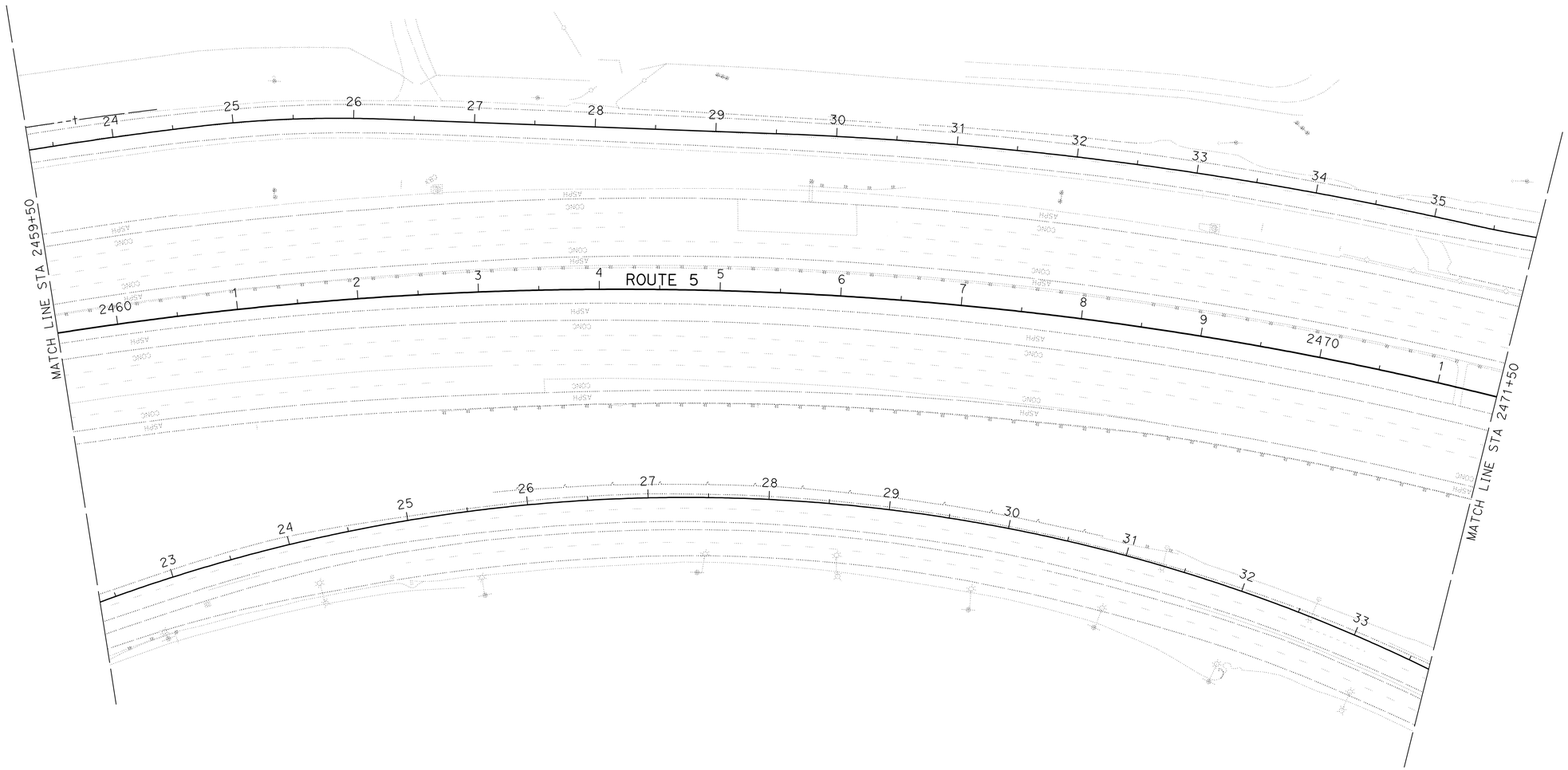

THIS PLAN ACCURATE FOR UTILITY INFORMATION ONLY

UTILITY

SCALE: 1" = 50'

U-4

STATE OF CALIFORNIA - DEPARTMENT OF TRANSPORTATION
Caltrans® ENGINEERING SERVICES

FUNCTIONAL SUPERVISOR: PARVIZ YEGANEH

CALCULATED-DESIGNED BY: O. BLACKSTOCK
CHECKED BY: ZEWDIE SENBETU

REVISED BY: CTT
DATE REVISED: 01-13-11

LAST REVISION 01-13-11 | DATE PLOTTED => 26-APR-2011 | TIME PLOTTED => 07:21

Dist	COUNTY	ROUTE	POST MILES TOTAL PROJECT	SHEET No.	TOTAL SHEETS
07	LA	5	R46.3/R50.0	174	456

Zewdie Senbetu 1-18-11
REGISTERED CIVIL ENGINEER DATE

4-25-11
PLANS APPROVAL DATE

REGISTERED PROFESSIONAL ENGINEER
ZEWDIE SENBETU
No. 63554
Exp. 9/30/12
CIVIL
STATE OF CALIFORNIA

THE STATE OF CALIFORNIA OR ITS OFFICERS OR AGENTS SHALL NOT BE RESPONSIBLE FOR THE ACCURACY OR COMPLETENESS OF SCANNED COPIES OF THIS PLAN SHEET.

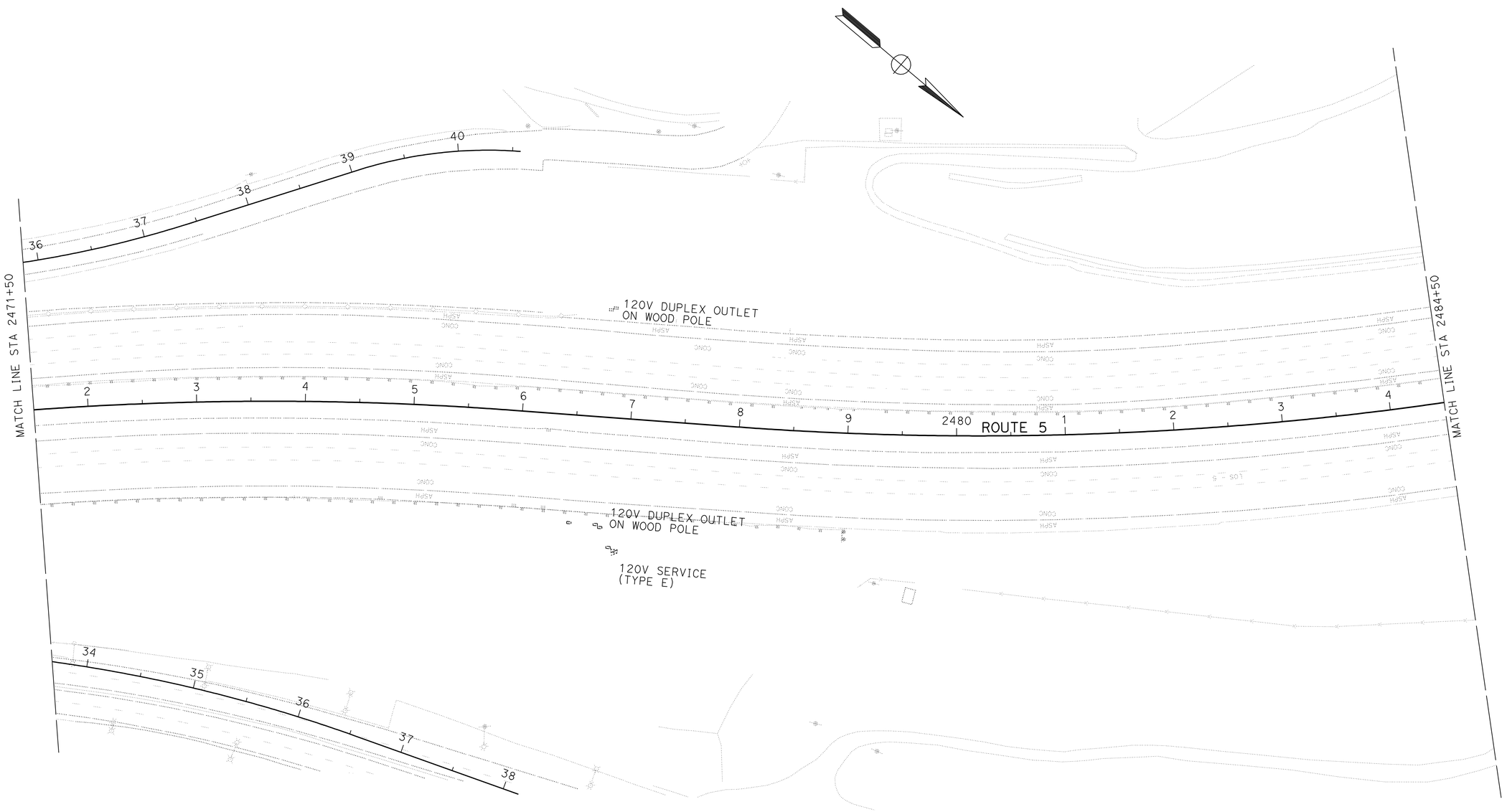

THIS PLAN ACCURATE FOR UTILITY INFORMATION ONLY

UTILITY

SCALE: 1" = 50'

U-5

STATE OF CALIFORNIA - DEPARTMENT OF TRANSPORTATION
Caltrans® ENGINEERING SERVICES

FUNCTIONAL SUPERVISOR: PARVIZ YEGANEH
CALCULATED-DESIGNED BY: O. BLACKSTOCK
CHECKED BY: ZEWDIE SENBETU
REVISED BY: CTT
DATE REVISED: 01-13-11

LAST REVISION 01-13-11 | DATE PLOTTED => 26-APR-2011 | TIME PLOTTED => 07:21

Dist	COUNTY	ROUTE	POST MILES TOTAL PROJECT	SHEET No.	TOTAL SHEETS
07	LA	5	R46.3/R50.0	175	456

Zewdie Senbetu 1-18-11
REGISTERED CIVIL ENGINEER DATE

4-25-11
PLANS APPROVAL DATE

REGISTERED PROFESSIONAL ENGINEER
ZEWDIE SENBETU
No. 63554
Exp. 9/30/12
CIVIL
STATE OF CALIFORNIA

THE STATE OF CALIFORNIA OR ITS OFFICERS OR AGENTS SHALL NOT BE RESPONSIBLE FOR THE ACCURACY OR COMPLETENESS OF SCANNED COPIES OF THIS PLAN SHEET.

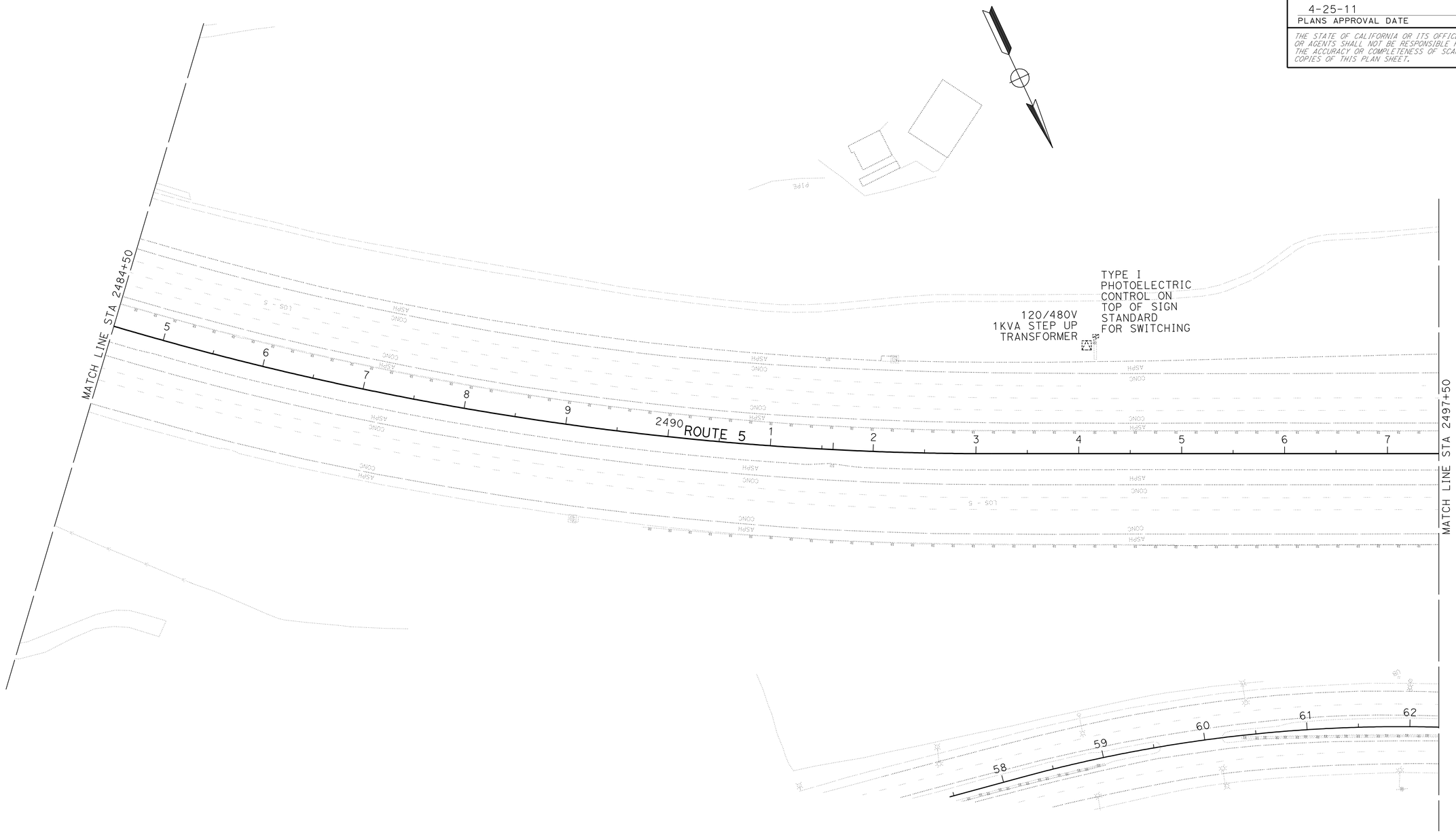

UTILITY

SCALE: 1" = 50'

U-6

THIS PLAN ACCURATE FOR UTILITY INFORMATION ONLY

STATE OF CALIFORNIA - DEPARTMENT OF TRANSPORTATION
Caltrans ENGINEERING SERVICES

FUNCTIONAL SUPERVISOR: PARVIZ YEGANEH
CALCULATED-DESIGNED BY: O. BLACKSTOCK
CHECKED BY: ZEWDIE SENBETU
REVISED BY: CTT
DATE REVISED: 01-13-11

LAST REVISION 01-13-11
DATE PLOTTED => 26-APR-2011
TIME PLOTTED => 07:21

Dist	COUNTY	ROUTE	POST MILES TOTAL PROJECT	SHEET No.	TOTAL SHEETS
07	LA	5	R46.3/R50.0	176	456

Zewdie Senbetu 1-18-11
REGISTERED CIVIL ENGINEER DATE

4-25-11
PLANS APPROVAL DATE

REGISTERED PROFESSIONAL ENGINEER
ZEWDIE SENBETU
No. 63554
Exp. 9/30/12
CIVIL
STATE OF CALIFORNIA

THE STATE OF CALIFORNIA OR ITS OFFICERS OR AGENTS SHALL NOT BE RESPONSIBLE FOR THE ACCURACY OR COMPLETENESS OF SCANNED COPIES OF THIS PLAN SHEET.

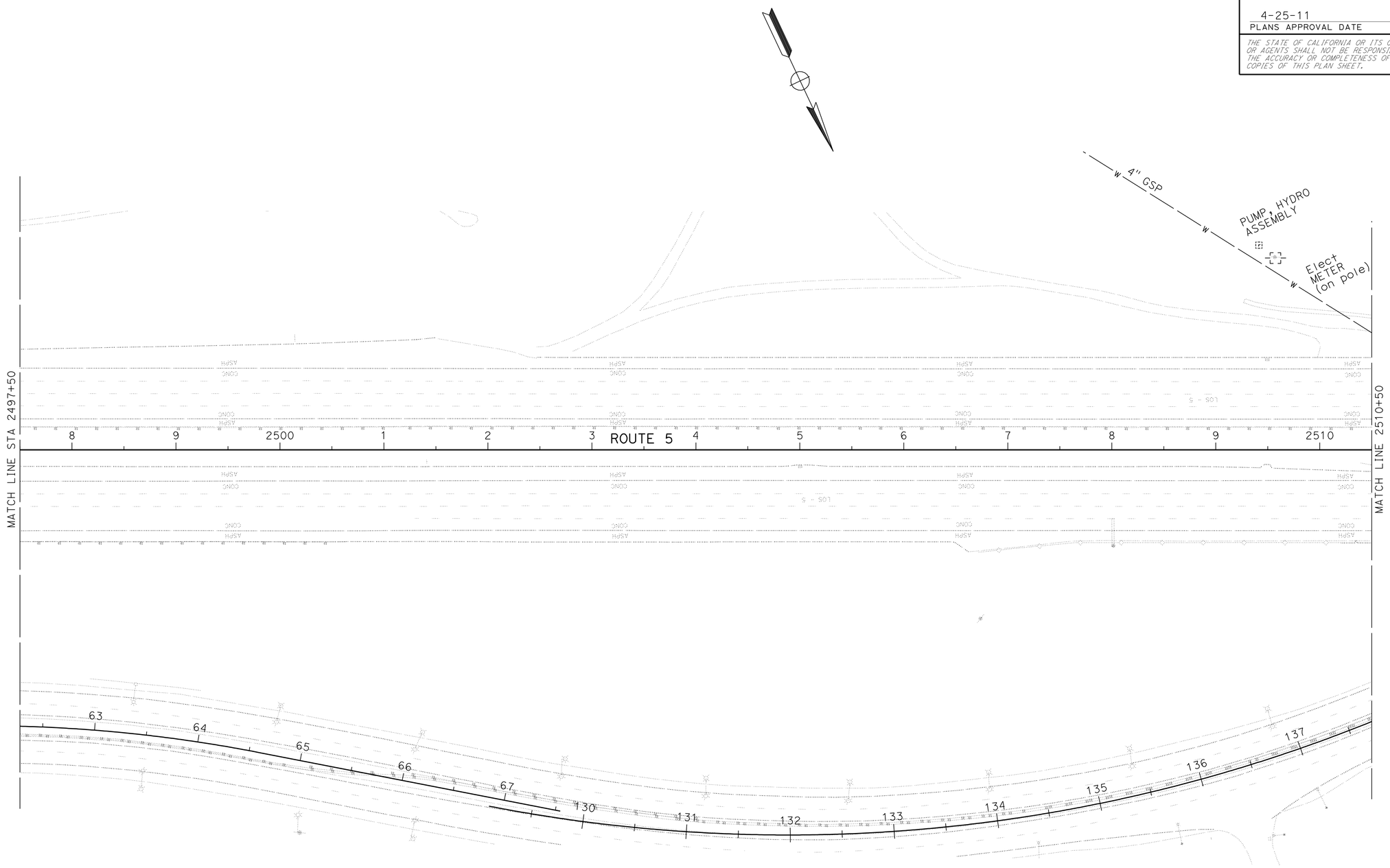

UTILITY

SCALE: 1" = 50'

U-7

THIS PLAN ACCURATE FOR UTILITY INFORMATION ONLY

STATE OF CALIFORNIA - DEPARTMENT OF TRANSPORTATION
Caltrans® ENGINEERING SERVICES

FUNCTIONAL SUPERVISOR: PARVIZ YEGANEH
CALCULATED-DESIGNED BY: O. BLACKSTOCK
CHECKED BY: ZEWDIE SENBETU
REVISED BY: CTT
DATE REVISED: 01-13-11

LAST REVISION 01-13-11
DATE PLOTTED => 26-APR-2011
TIME PLOTTED => 07:21

Dist	COUNTY	ROUTE	POST MILES TOTAL PROJECT	SHEET No.	TOTAL SHEETS
07	LA	5	R46.3/R50.0	177	456

Zewdie Senbetu 1-18-11
REGISTERED CIVIL ENGINEER DATE

4-25-11
PLANS APPROVAL DATE

REGISTERED PROFESSIONAL ENGINEER ZEWDIE SENBETU No. 63554 Exp. 9/30/12 CIVIL STATE OF CALIFORNIA

THE STATE OF CALIFORNIA OR ITS OFFICERS OR AGENTS SHALL NOT BE RESPONSIBLE FOR THE ACCURACY OR COMPLETENESS OF SCANNED COPIES OF THIS PLAN SHEET.

UTILITY LOCATION DATA

No. ⬠	STATION	OFFSET	NORTHING	EASTING	ELEV	DESCRIPTION	METHOD
1	2514+53.40	85.29 R+	1950296.60	6398136.51	1466.86	3" GAS LINE 53" DEPTH	POTHOLING
2	2514+79.31	142.93 R+	1950359.80	6398137.52	1468.76	3" GAS LINE 65" DEPTH	POTHOLING
3	2515+44.77	46.35 R+	1950300.13	6398037.26	1464.36	3" GAS LINE 49" DEPTH	POTHOLING
4	2516+00.56	24.01 R+	1950303.59	6397977.26	1462.83	AT&T/TWC	POTHOLING
5	2516+59.84	11.70 L+	1950296.41	6397908.43	1461.10	QWEST 50" DEPTH 54" DIA AT&T/TWC 7' DIA 1' DEPTH	POTHOLING
6	2516+72.15	23.37 R+	1950333.39	6397912.17	1461.13	16" EXXON-MOBILE 3' DEPTH	POTHOLING
7	2517+70.72	20.12 L+	1950335.85	6397804.46	1458.29	16" EXXON-MOBILE 3'-10" DEPTH	POTHOLING
8	2513+17.92	108.23 R+	1950259.87	6398268.92	1470.76	AT&T DUCTS 2'-1" DEPTH	POTHOLING
9	2516+81.51	48.99 L+	1950271.85	6397872.98	1460.52	AT&T DUCTS 3'-3" DEPTH	POTHOLING

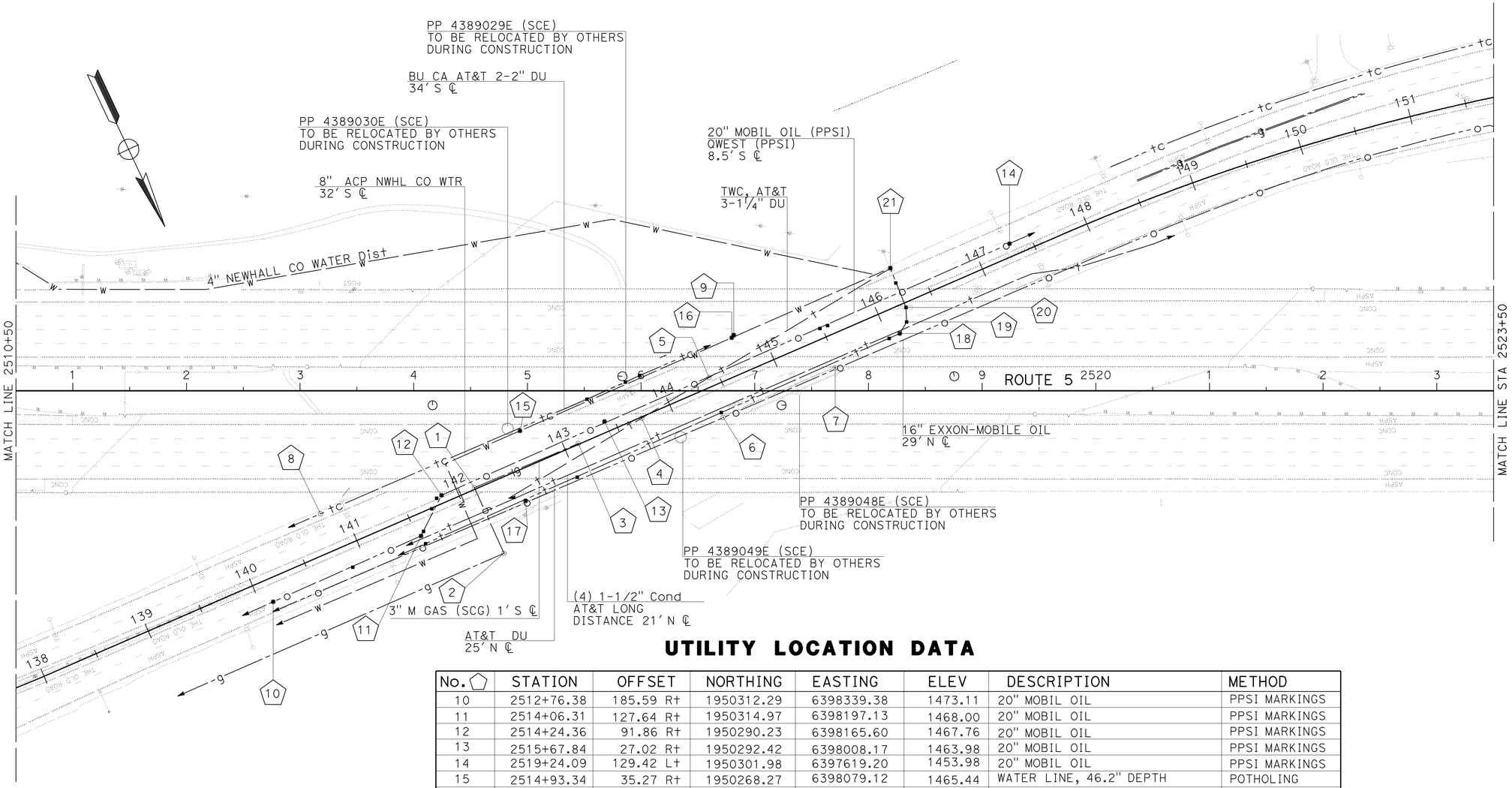

UTILITY LOCATION DATA

No. ⬠	STATION	OFFSET	NORTHING	EASTING	ELEV	DESCRIPTION	METHOD
10	2512+76.38	185.59 R+	1950312.29	6398339.38	1473.11	20" MOBIL OIL	PPSI MARKINGS
11	2514+06.31	127.64 R+	1950314.97	6398197.13	1468.00	20" MOBIL OIL	PPSI MARKINGS
12	2514+24.36	91.86 R+	1950290.23	6398165.60	1467.76	20" MOBIL OIL	PPSI MARKINGS
13	2515+67.84	27.02 R+	1950292.42	6398008.17	1463.98	20" MOBIL OIL	PPSI MARKINGS
14	2519+24.09	129.42 L+	1950301.98	6397619.20	1453.98	20" MOBIL OIL	PPSI MARKINGS
15	2514+93.34	35.27 R+	1950268.27	6398079.12	1465.44	WATER LINE, 46.2" DEPTH	POTHOLING
16	2516+79.68	46.61 L+	1950273.22	6397875.65	1460.65	WATER LINE, 51" DEPTH	POTHOLING
17	2514+98.37	96.76 R+	1950326.08	6398100.67	1465.97	AT&T DU	AT&T MARKINGS
18	2518+27.65	50.45 L+	1950332.55	6397740.04	1465.44	AT&T DU	AT&T MARKINGS
19	2518+33.67	60.56 L+	1950325.95	6397730.30	1456.44	AT&T DU	AT&T MARKINGS
20	2518+33.03	73.25 L+	1950314.19	6397725.49	1456.43	AT&T DU	AT&T MARKINGS
21	2518+19.20	107.93 L+	1950276.92	6397723.30	1456.79	AT&T DU	AT&T MARKINGS

THIS PLAN ACCURATE FOR UTILITY INFORMATION ONLY

UTILITY

SCALE: 1" = 50'

U-8

STATE OF CALIFORNIA - DEPARTMENT OF TRANSPORTATION
Caltrans® ENGINEERING SERVICES

FUNCTIONAL SUPERVISOR: PARVIZ YEGANEH
CALCULATED-DESIGNED BY: O. BLACKSTOCK
CHECKED BY: ZEWDIE SENBETU
REVISED BY: CTT
DATE REVISED: 01-13-11

LAST REVISION 01-13-11 | DATE PLOTTED => 26-APR-2011 | TIME PLOTTED => 07:21

Dist	COUNTY	ROUTE	POST MILES TOTAL PROJECT	SHEET No.	TOTAL SHEETS
07	LA	5	R46.3/R50.0	178	456

Zewdie Senbetu 1-18-11
REGISTERED CIVIL ENGINEER DATE

4-25-11
PLANS APPROVAL DATE

REGISTERED PROFESSIONAL ENGINEER
ZEWDIE SENBETU
No. 63554
Exp. 9/30/12
CIVIL
STATE OF CALIFORNIA

THE STATE OF CALIFORNIA OR ITS OFFICERS OR AGENTS SHALL NOT BE RESPONSIBLE FOR THE ACCURACY OR COMPLETENESS OF SCANNED COPIES OF THIS PLAN SHEET.

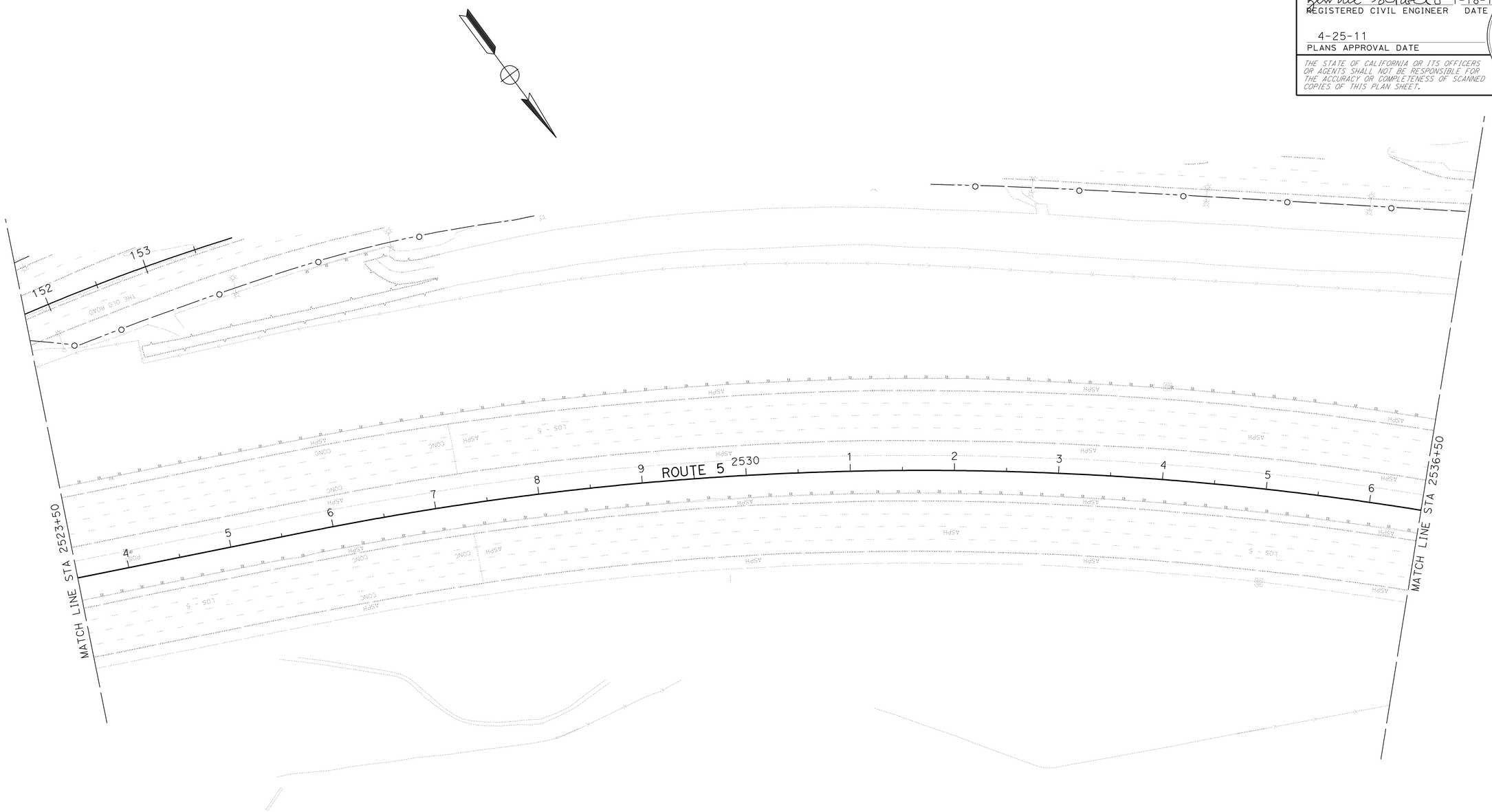

THIS PLAN ACCURATE FOR UTILITY INFORMATION ONLY

UTILITY

SCALE: 1" = 50'

U-9

STATE OF CALIFORNIA - DEPARTMENT OF TRANSPORTATION
Caltrans® ENGINEERING SERVICES

FUNCTIONAL SUPERVISOR: PARVIZ YEGANEH

CALCULATED-DESIGNED BY: O. BLACKSTOCK
CHECKED BY: ZEWDIE SENBETU

REVISED BY: CTT
DATE REVISED: 01-13-11

LAST REVISION 01-13-11 | DATE PLOTTED => 26-APR-2011 | TIME PLOTTED => 07:21

Dist	COUNTY	ROUTE	POST MILES TOTAL PROJECT	SHEET No.	TOTAL SHEETS
07	LA	5	R46.3/R50.0	179	456

Zewdie Senbetu 1-18-11
REGISTERED CIVIL ENGINEER DATE

4-25-11
PLANS APPROVAL DATE

REGISTERED PROFESSIONAL ENGINEER
ZEWDIE SENBETU
No. 63554
Exp. 9/30/12
CIVIL
STATE OF CALIFORNIA

THE STATE OF CALIFORNIA OR ITS OFFICERS OR AGENTS SHALL NOT BE RESPONSIBLE FOR THE ACCURACY OR COMPLETENESS OF SCANNED COPIES OF THIS PLAN SHEET.

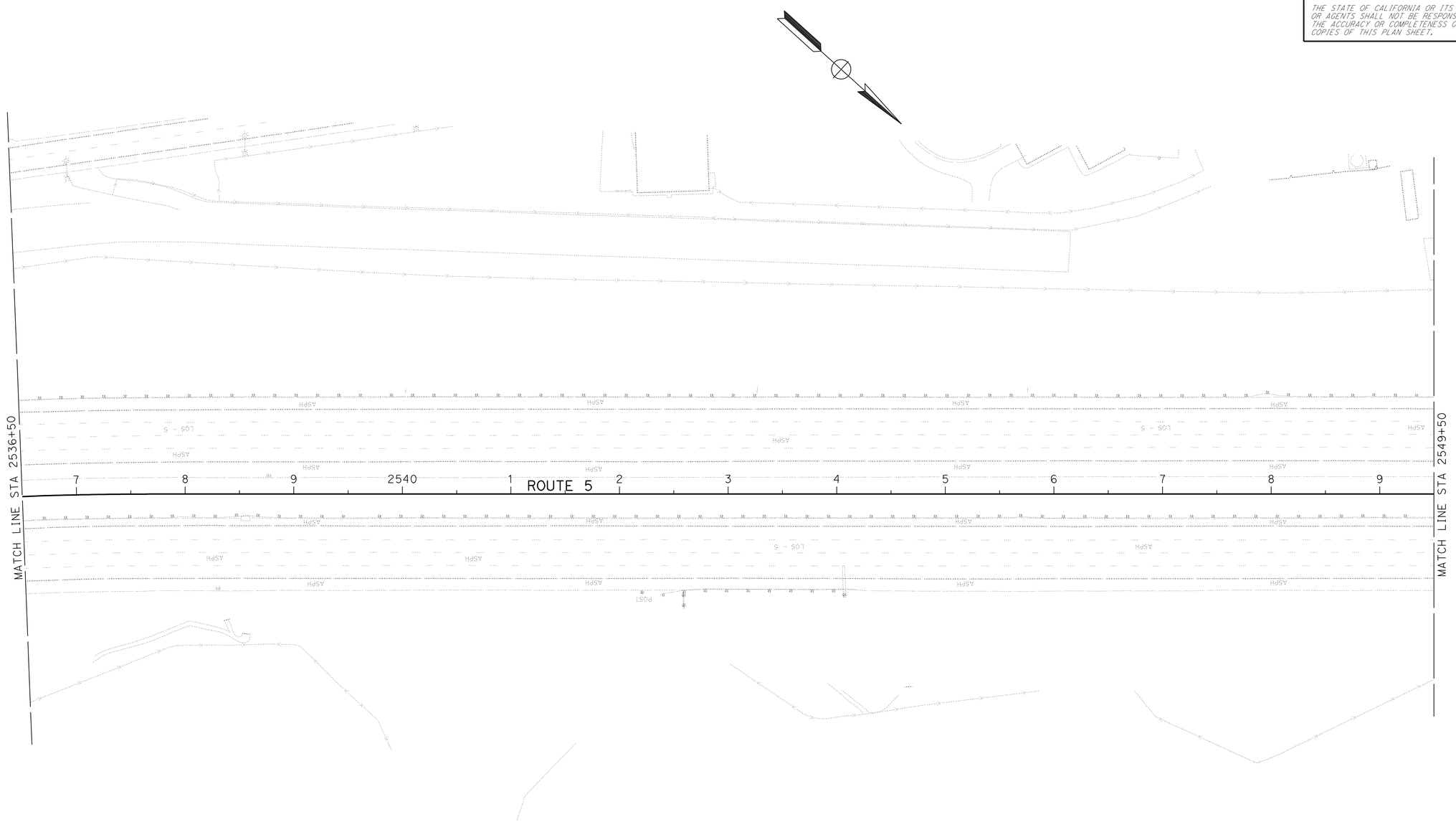

THIS PLAN ACCURATE FOR UTILITY INFORMATION ONLY

UTILITY

SCALE: 1" = 50'

U-10

CALCULATED-DESIGNED BY	O. BLACKSTOCK
CHECKED BY	ZEWDIE SENBETU
REVISED BY	CTT
DATE REVISED	01-13-11
FUNCTIONAL SUPERVISOR	PARVIZ YEGANEH

STATE OF CALIFORNIA - DEPARTMENT OF TRANSPORTATION
Caltrans® ENGINEERING SERVICES

LAST REVISION 01-13-11 | DATE PLOTTED => 26-APR-2011 | TIME PLOTTED => 07:21

Dist	COUNTY	ROUTE	POST MILES TOTAL PROJECT	SHEET No.	TOTAL SHEETS
07	LA	5	R46.3/R50.0	180	456

Zewdie Senbetu 1-18-11
REGISTERED CIVIL ENGINEER DATE

4-25-11
PLANS APPROVAL DATE

REGISTERED PROFESSIONAL ENGINEER
ZEWDIE SENBETU
No. 63554
Exp. 9/30/12
CIVIL
STATE OF CALIFORNIA

THE STATE OF CALIFORNIA OR ITS OFFICERS OR AGENTS SHALL NOT BE RESPONSIBLE FOR THE ACCURACY OR COMPLETENESS OF SCANNED COPIES OF THIS PLAN SHEET.

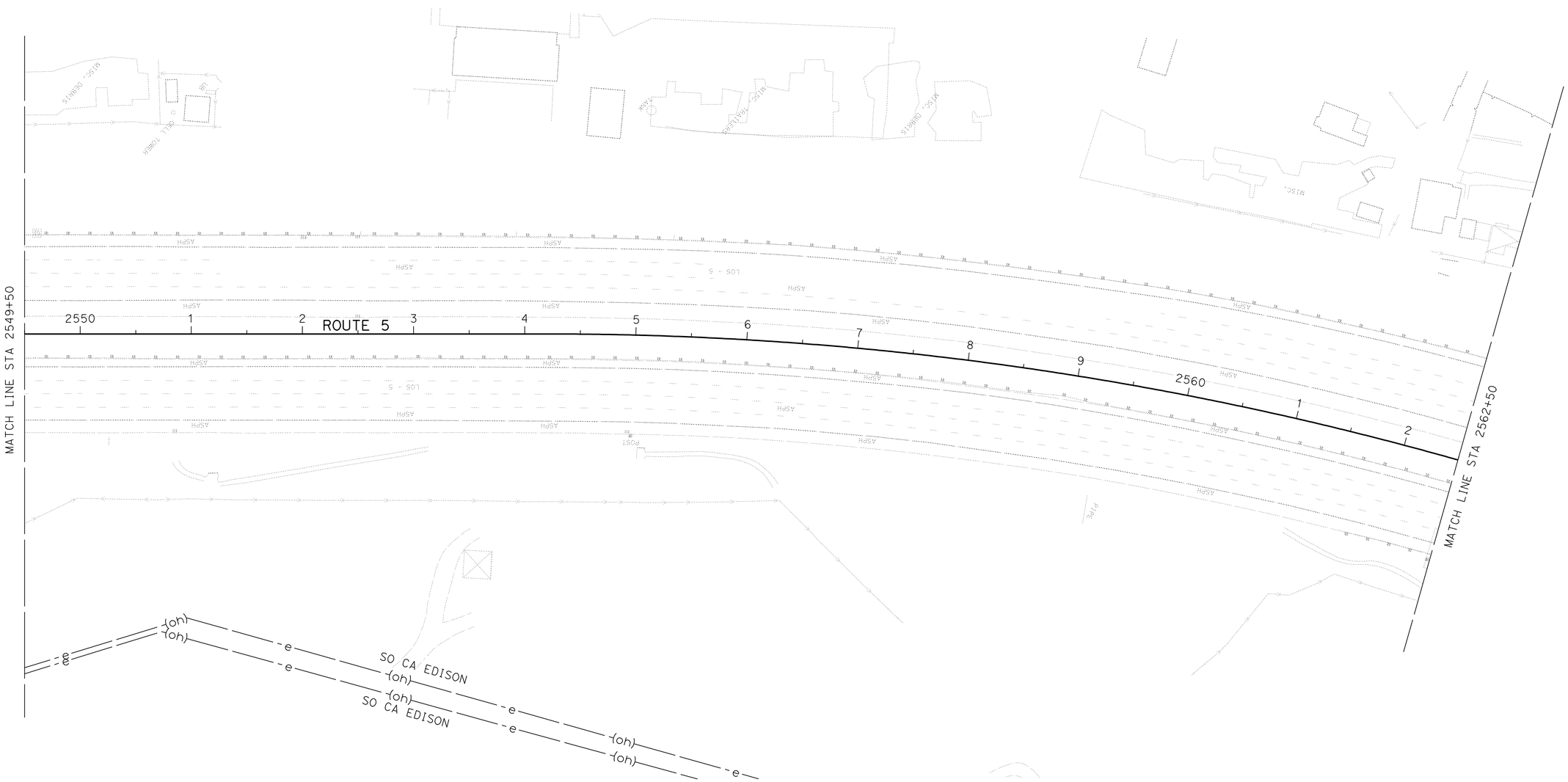

UTILITY

SCALE: 1" = 50'

U-11

THIS PLAN ACCURATE FOR UTILITY INFORMATION ONLY

REVISED BY	CTT
DATE REVISED	01-13-11
O. BLACKSTOCK	
ZEWDIE SENBETU	
CALCULATED-DESIGNED BY	
CHECKED BY	
FUNCTIONAL SUPERVISOR	
PARVIZ YEGANEH	

STATE OF CALIFORNIA - DEPARTMENT OF TRANSPORTATION
Caltrans® ENGINEERING SERVICES

LAST REVISION 01-13-11
DATE PLOTTED => 26-APR-2011
TIME PLOTTED => 07:21

Dist	COUNTY	ROUTE	POST MILES TOTAL PROJECT	SHEET No.	TOTAL SHEETS
07	LA	5	R46.3/R50.0	181	456

Zewdie Senbetu 1-18-11
REGISTERED CIVIL ENGINEER DATE

4-25-11
PLANS APPROVAL DATE

REGISTERED PROFESSIONAL ENGINEER
ZEWDIE SENBETU
No. 63554
Exp. 9/30/12
CIVIL
STATE OF CALIFORNIA

THE STATE OF CALIFORNIA OR ITS OFFICERS OR AGENTS SHALL NOT BE RESPONSIBLE FOR THE ACCURACY OR COMPLETENESS OF SCANNED COPIES OF THIS PLAN SHEET.

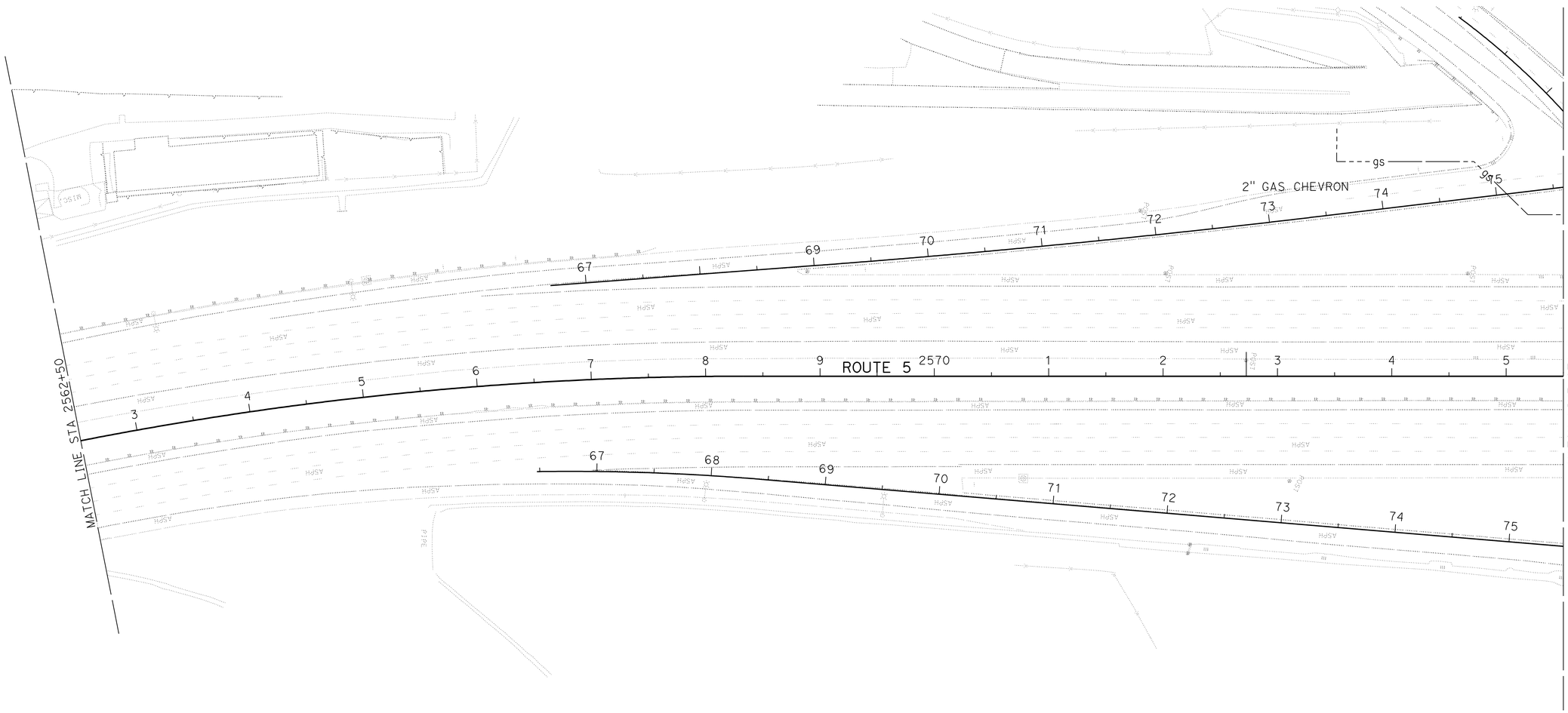

UTILITY

SCALE: 1" = 50'

U-12

THIS PLAN ACCURATE FOR UTILITY INFORMATION ONLY

STATE OF CALIFORNIA - DEPARTMENT OF TRANSPORTATION
Caltrans ENGINEERING SERVICES

FUNCTIONAL SUPERVISOR: PARVIZ YEGANEH
CALCULATED-DESIGNED BY: O. BLACKSTOCK
CHECKED BY: ZEWDIE SENBETU
REVISED BY: CTT
DATE REVISED: 01-13-11

LAST REVISION 01-13-11
DATE PLOTTED => 26-APR-2011
TIME PLOTTED => 07:21

Dist	COUNTY	ROUTE	POST MILES TOTAL PROJECT	SHEET No.	TOTAL SHEETS
07	LA	5	R46.3/R50.0	182	456

Zewdie Senbetu 1-18-11
REGISTERED CIVIL ENGINEER DATE

4-25-11
PLANS APPROVAL DATE

REGISTERED PROFESSIONAL ENGINEER ZEWDIE SENBETU No. 63554 Exp. 9/30/12 CIVIL STATE OF CALIFORNIA

THE STATE OF CALIFORNIA OR ITS OFFICERS OR AGENTS SHALL NOT BE RESPONSIBLE FOR THE ACCURACY OR COMPLETENESS OF SCANNED COPIES OF THIS PLAN SHEET.

UTILITY LOCATION DATA

No. ⬠	STATION	OFFSET	NORTHING	EASTING	ELEV	DESCRIPTION	METHOD
22	2576+84.95	105.56 R+	1954649.01	6394027.60	1342.98	4" SO CA GAS PIPE 4' DEPTH	POTHOLING
23	2578+13.78	100.33 R+	1954827.28	6394192.55	1341.05	4" SO CA GAS PIPE 4' DEPTH	POTHOLING
24	2576+28.89	168.14 L+	1954578.51	6393981.90	1341.65	1 BU CA AT&T	AT&T MARKING
25	2578+42.61	167.65 R+	1954872.73	6394249.97	1339.91	1 BU CA AT&T	AT&T MARKING
26	2576+33.60	170.78 L+	1954582.36	6393978.11	1341.82	TIME WARNER CABLE TV	TWC MARKING
27	2578+46.45	165.65 R+	1954875.91	6394247.03	1339.82	TIME WARNER CABLE TV	TWC MARKING
28	2576+43.61	176.32 L+	1954590.57	6393970.14	1342.07	1 BU CA AT&T	AT&T MARKING
29	2578+51.26	162.97 R+	1954879.85	6394243.19	1339.73	1 BU CA AT&T	AT&T MARKING

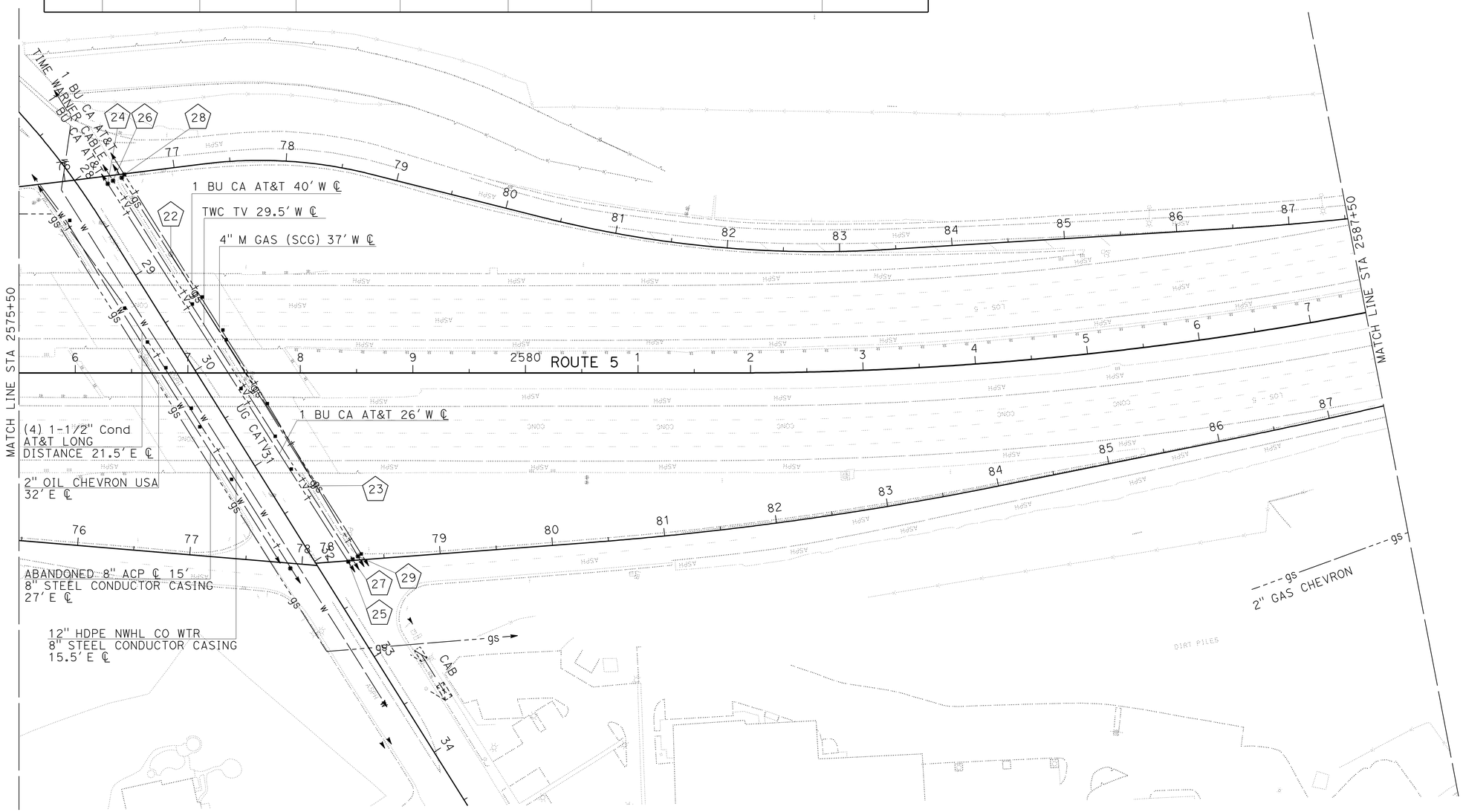

THIS PLAN ACCURATE FOR UTILITY INFORMATION ONLY

UTILITY

SCALE: 1" = 50'

U-13

STATE OF CALIFORNIA - DEPARTMENT OF TRANSPORTATION
Caltrans ENGINEERING SERVICES

FUNCTIONAL SUPERVISOR: PARVIZ YEGANEH
CALCULATED-DESIGNED BY: O. BLACKSTOCK
CHECKED BY: ZEWDIE SENBETU
REVISED BY: CTT
DATE REVISED: 01-13-11

LAST REVISION 01-13-11
DATE PLOTTED => 26-APR-2011
TIME PLOTTED => 07:21

Dist	COUNTY	ROUTE	POST MILES TOTAL PROJECT	SHEET No.	TOTAL SHEETS
07	LA	5	R46.3/R50.0	183	456

Zewdie Senbetu 1-18-11
REGISTERED CIVIL ENGINEER DATE

4-25-11
PLANS APPROVAL DATE

REGISTERED PROFESSIONAL ENGINEER
ZEWDIE SENBETU
No. 63554
Exp. 9/30/12
CIVIL
STATE OF CALIFORNIA

THE STATE OF CALIFORNIA OR ITS OFFICERS OR AGENTS SHALL NOT BE RESPONSIBLE FOR THE ACCURACY OR COMPLETENESS OF SCANNED COPIES OF THIS PLAN SHEET.

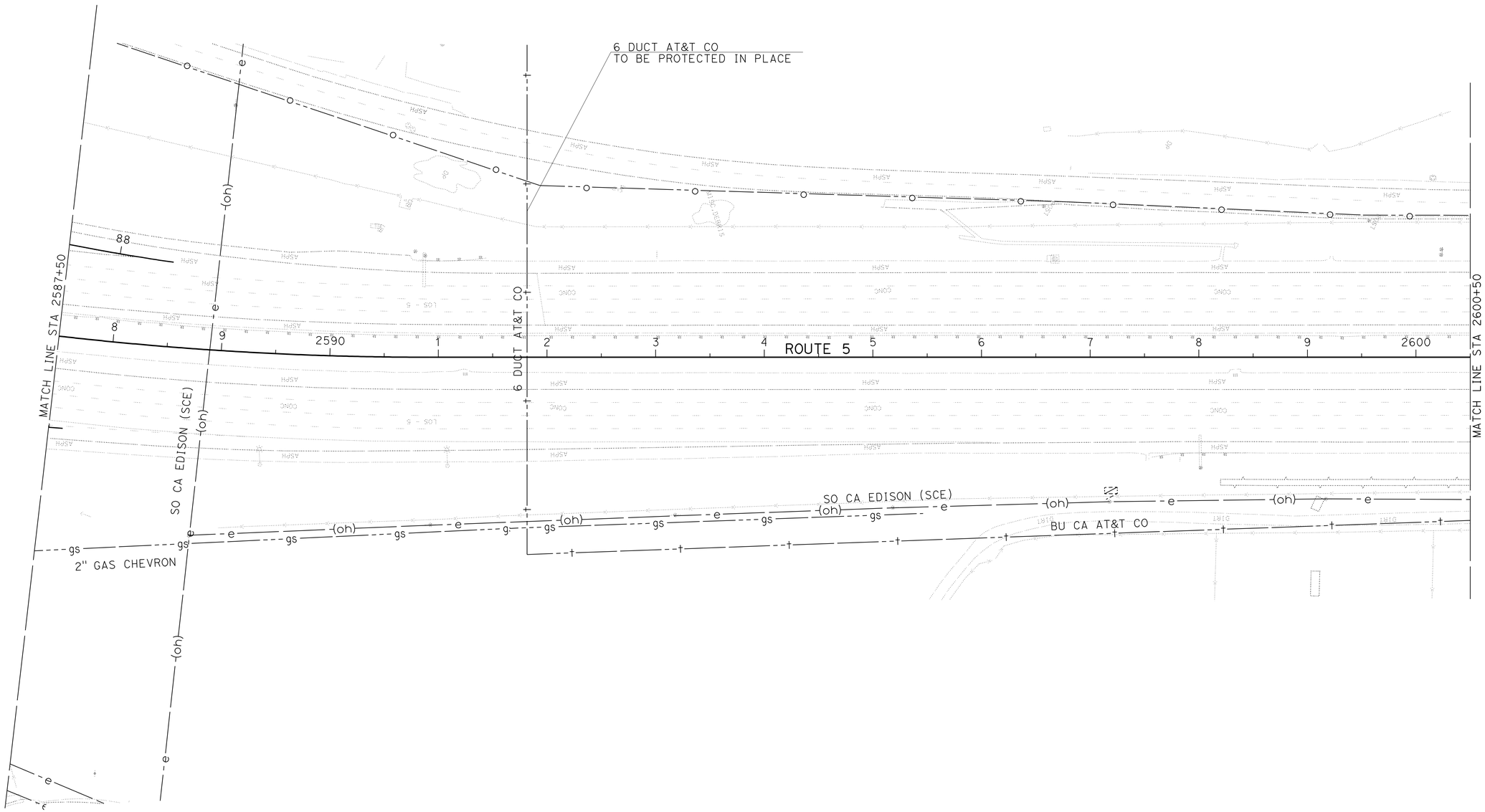

THIS PLAN ACCURATE FOR UTILITY INFORMATION ONLY

UTILITY

SCALE: 1" = 50'

U-14

STATE OF CALIFORNIA - DEPARTMENT OF TRANSPORTATION
Caltrans® ENGINEERING SERVICES

FUNCTIONAL SUPERVISOR: PARVIZ YEGANEH
CALCULATED-DESIGNED BY: O. BLACKSTOCK
CHECKED BY: ZEWDIE SENBETU
REVISED BY: CTT
DATE REVISED: 01-13-11

LAST REVISION 01-13-11 | DATE PLOTTED => 26-APR-2011 | TIME PLOTTED => 07:21

Dist	COUNTY	ROUTE	POST MILES TOTAL PROJECT	SHEET No.	TOTAL SHEETS
07	LA	5	R46.3/R50.0	184	456

Zewdie Senbetu 1-18-11
REGISTERED CIVIL ENGINEER DATE

4-25-11
PLANS APPROVAL DATE

REGISTERED PROFESSIONAL ENGINEER
ZEWDIE SENBETU
No. 63554
Exp. 9/30/12
CIVIL
STATE OF CALIFORNIA

THE STATE OF CALIFORNIA OR ITS OFFICERS OR AGENTS SHALL NOT BE RESPONSIBLE FOR THE ACCURACY OR COMPLETENESS OF SCANNED COPIES OF THIS PLAN SHEET.

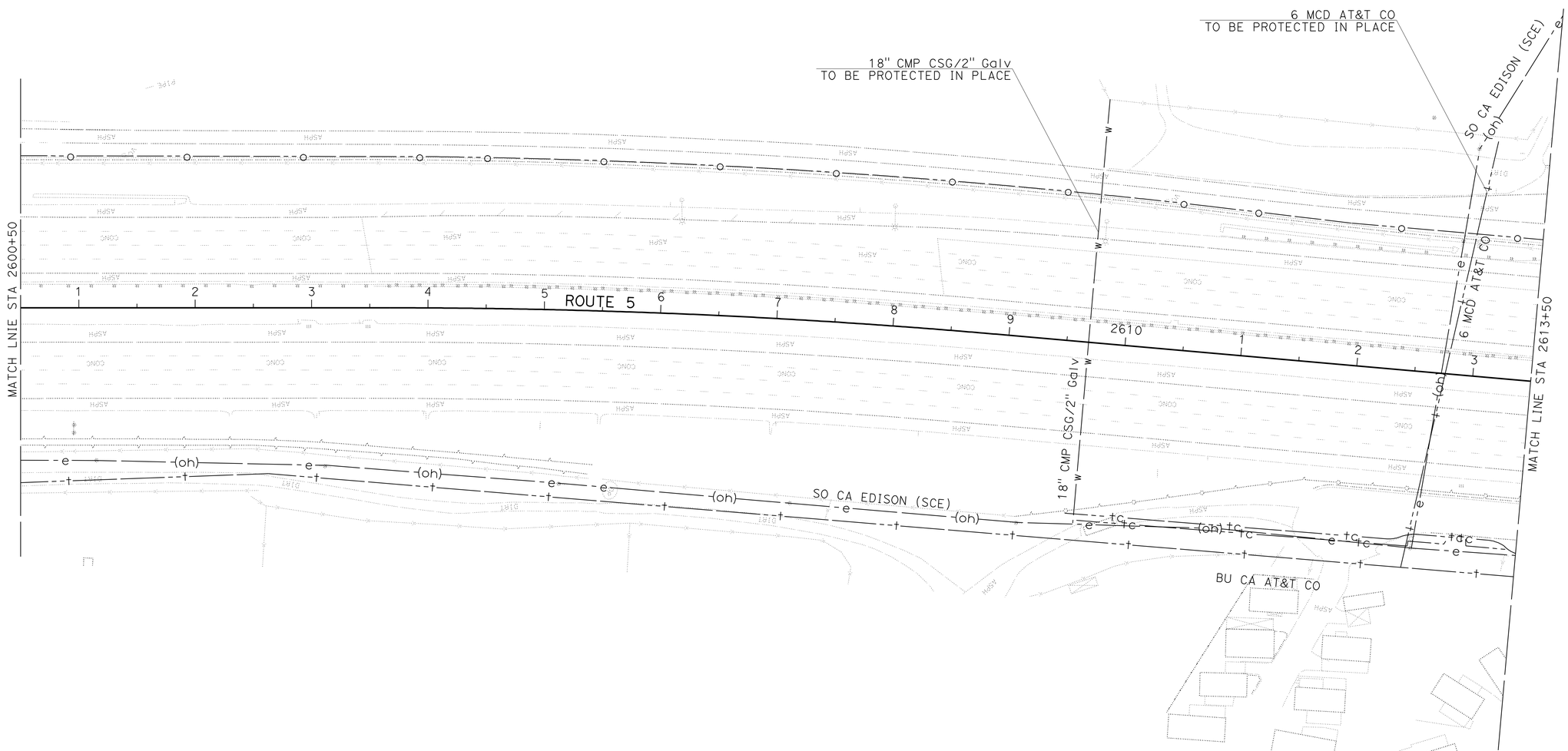

THIS PLAN ACCURATE FOR UTILITY INFORMATION ONLY

UTILITY

SCALE: 1" = 50'

U-15

STATE OF CALIFORNIA - DEPARTMENT OF TRANSPORTATION
Caltrans® ENGINEERING SERVICES

FUNCTIONAL SUPERVISOR: PARVIZ YEGANEH
CALCULATED-DESIGNED BY: O. BLACKSTOCK
CHECKED BY: ZEWDIE SENBETU
REVISED BY: CTT
DATE REVISED: 01-13-11

LAST REVISION 01-13-11
DATE PLOTTED => 26-APR-2011
TIME PLOTTED => 07:22

Dist	COUNTY	ROUTE	POST MILES TOTAL PROJECT	SHEET No.	TOTAL SHEETS
07	LA	5	R46.3/R50.0	185	456

Zewdie Senbetu 1-18-11
REGISTERED CIVIL ENGINEER DATE

4-25-11
PLANS APPROVAL DATE

REGISTERED PROFESSIONAL ENGINEER
ZEWDIE SENBETU
No. 63554
Exp. 9/30/12
CIVIL
STATE OF CALIFORNIA

THE STATE OF CALIFORNIA OR ITS OFFICERS OR AGENTS SHALL NOT BE RESPONSIBLE FOR THE ACCURACY OR COMPLETENESS OF SCANNED COPIES OF THIS PLAN SHEET.

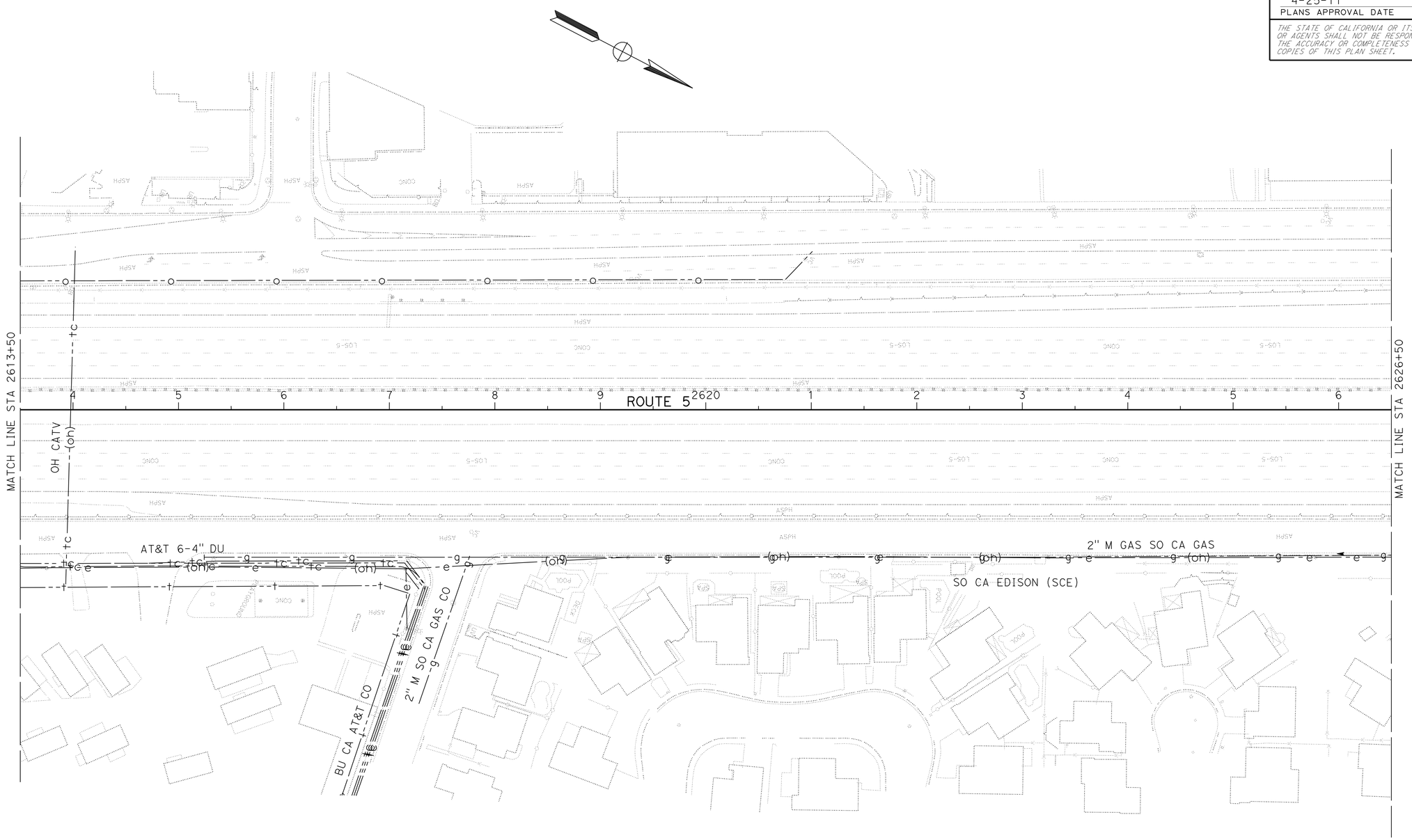

THIS PLAN ACCURATE FOR UTILITY INFORMATION ONLY

UTILITY

SCALE: 1" = 50'

U-16

REVISED BY	DATE REVISED
CTT	01-13-11

CALCULATED-DESIGNED BY: O. BLACKSTOCK
CHECKED BY: ZEWDIE SENBETU
FUNCTIONAL SUPERVISOR: PARVIZ YEGANEH

STATE OF CALIFORNIA - DEPARTMENT OF TRANSPORTATION
Caltrans® ENGINEERING SERVICES

LAST REVISION 01-13-11 | DATE PLOTTED => 26-APR-2011 | TIME PLOTTED => 07:22

Dist	COUNTY	ROUTE	POST MILES TOTAL PROJECT	SHEET No.	TOTAL SHEETS
07	LA	5	R46.3/R50.0	186	456

Zewdie Senbetu 1-18-11
REGISTERED CIVIL ENGINEER DATE

4-25-11
PLANS APPROVAL DATE

REGISTERED PROFESSIONAL ENGINEER
ZEWDIE SENBETU
No. 63554
Exp. 9/30/12
CIVIL
STATE OF CALIFORNIA

THE STATE OF CALIFORNIA OR ITS OFFICERS OR AGENTS SHALL NOT BE RESPONSIBLE FOR THE ACCURACY OR COMPLETENESS OF SCANNED COPIES OF THIS PLAN SHEET.

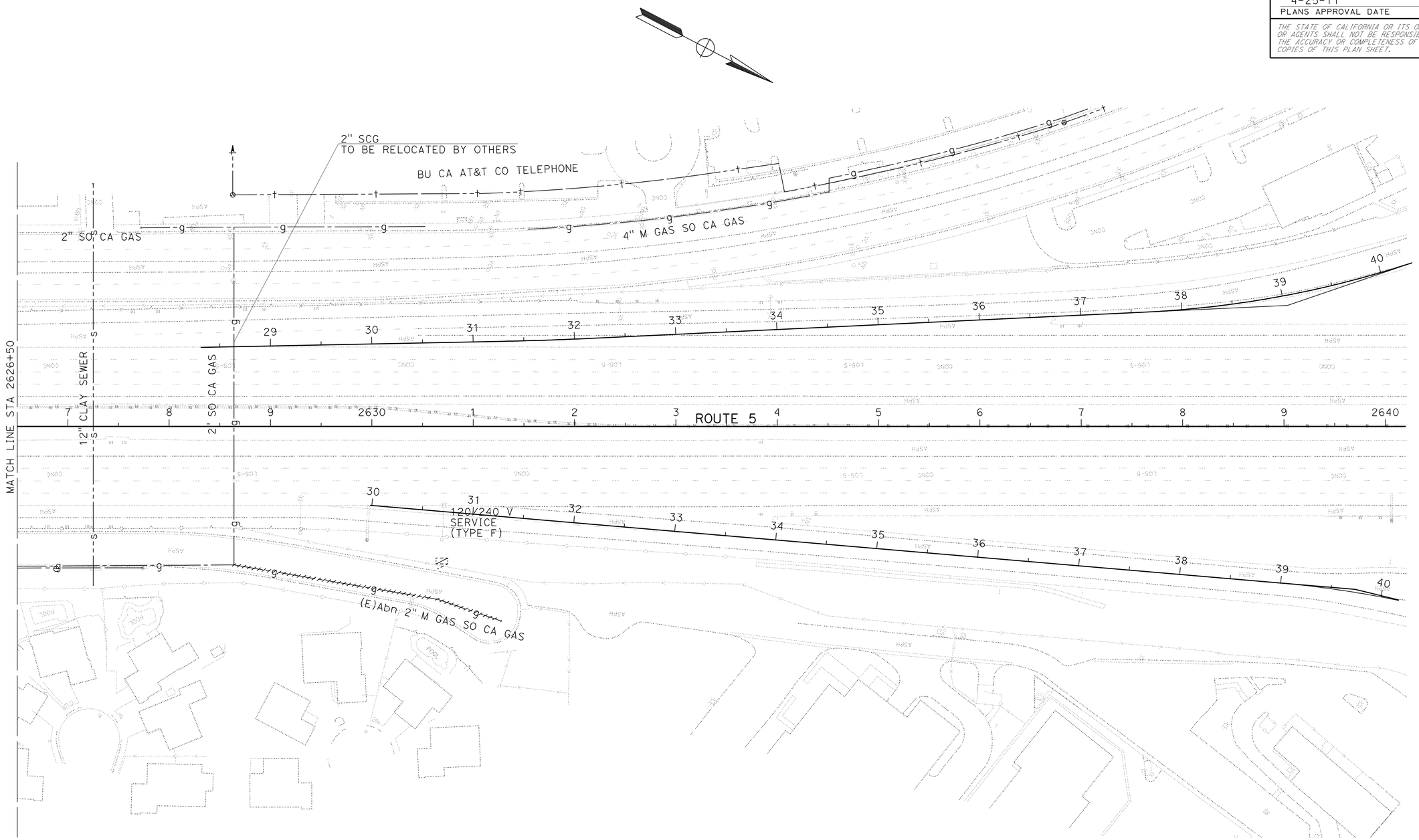

UTILITY

SCALE: 1" = 50'

U-17

THIS PLAN ACCURATE FOR UTILITY INFORMATION ONLY

STATE OF CALIFORNIA - DEPARTMENT OF TRANSPORTATION
Caltrans ENGINEERING SERVICES

FUNCTIONAL SUPERVISOR: PARVIZ YEGANEH
CALCULATED-DESIGNED BY: O. BLACKSTOCK
CHECKED BY: ZEWDIE SENBETU
REVISED BY: CTT
DATE REVISED: 01-13-11

LAST REVISION 01-13-11
DATE PLOTTED => 26-APR-2011
TIME PLOTTED => 07:22

Dist	COUNTY	ROUTE	POST MILES TOTAL PROJECT	SHEET No.	TOTAL SHEETS
07	LA	5	R46.3/R50.0	187	456

REGISTERED CIVIL ENGINEER 01-11-11 DATE

4-25-11
PLANS APPROVAL DATE

REGISTERED PROFESSIONAL ENGINEER AMIR AWN ELSHARIEF No. 72560 Exp. 6/30/12 CIVIL STATE OF CALIFORNIA

THE STATE OF CALIFORNIA OR ITS OFFICERS OR AGENTS SHALL NOT BE RESPONSIBLE FOR THE ACCURACY OR COMPLETENESS OF SCANNED COPIES OF THIS PLAN SHEET.

STATIONARY MOUNTED CONSTRUCTION AREA SIGNS

Sign No.	SIGN CODE FED	SIGN CODE CALIF	PANEL SIZE	POST SIZE 4"x4"	POST SIZE 4"x6"	POST SIZE 6"x6"	No. OF POST ONE POST	No. OF POST TWO POST	No. of SIGNS	SIGN MESSAGE
A	W20-1		60" x 60"		X			X	3	ROAD WORK AHEAD
B	G20-2	C14	48" x 24"		X			X	2	END ROAD WORK
C		C40	108" x 42"		X			X	2	TRAFFIC FINES DOUBLED IN CONSTRUCTION ZONES
D	W21-5a		30" x 30"	X			X		4	RIGHT SHOULDER CLOSED
E	W20-1	C23	48" x 48"			X	X		12	ROAD WORK AHEAD
F	G20-2	C14	36" x 18"	X			X		4	END ROAD WORK
G		C17	24" x 24"	X			X		2	ROAD WORK SPEED LIMIT 30

NOTES:

1. LOCATION OF CONSTRUCTION AREA SIGNS ARE APPROXIMATE. EXACT LOCATIONS TO BE DETERMINED BY THE ENGINEER.
2. FOR ADDITIONAL CONSTRUCTION AREA SIGNS, SEE STAGE CONSTRUCTION PLANS.

LEGEND:

CONSTRUCTION AREA SIGN (ONE POST)

CONSTRUCTION AREA SIGN (TWO POST)

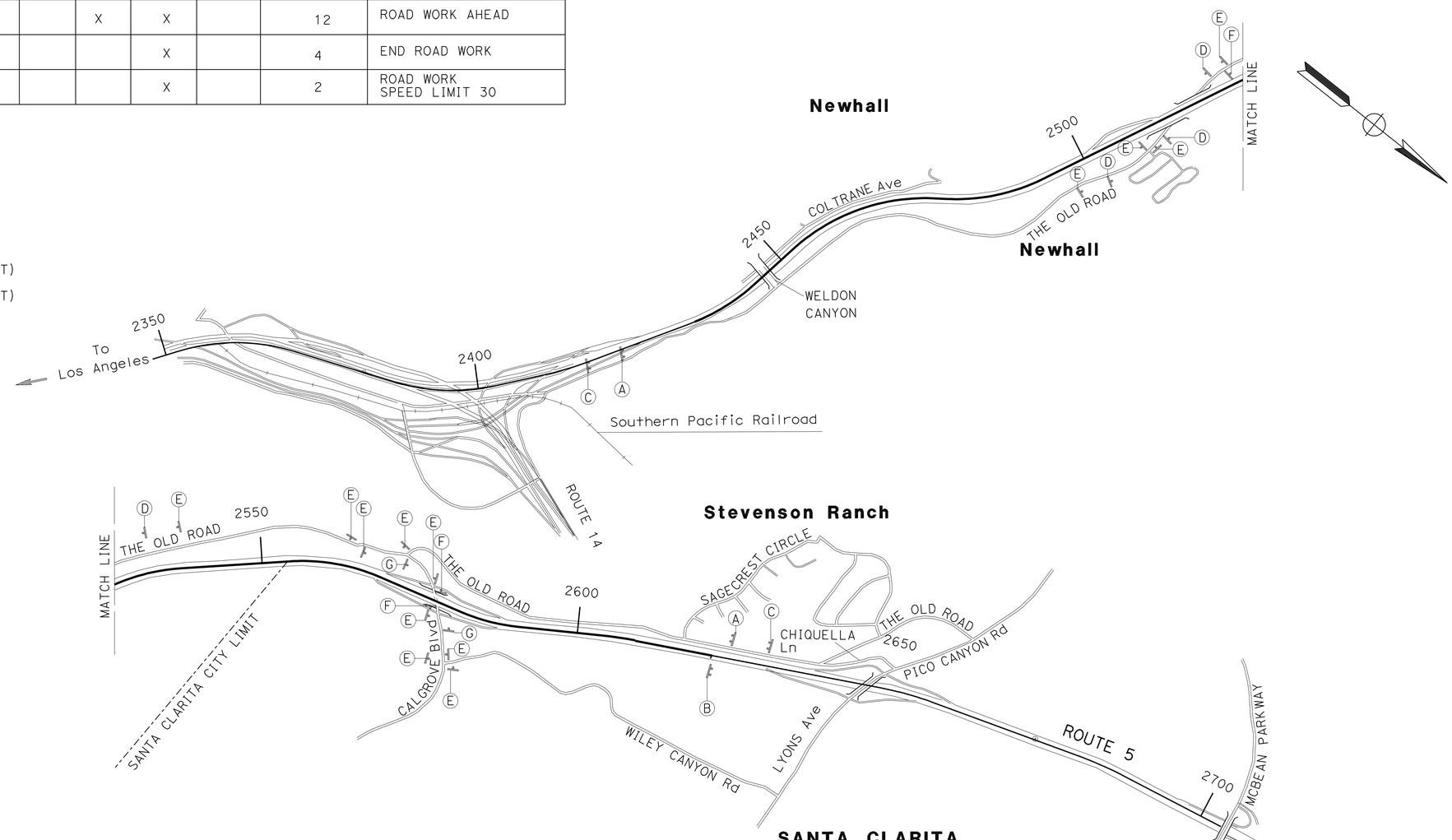

THIS PLAN ACCURATE FOR CONSTRUCTION AREA SIGN WORK ONLY

CONSTRUCTION AREA SIGNS

NO SCALE

CS-1

STATE OF CALIFORNIA - DEPARTMENT OF TRANSPORTATION
Caltrans
DESIGN

FUNCTIONAL SUPERVISOR: CELINA AVILES
CALCULATED-DESIGNED BY: O. BLACKSTOCK
CHECKED BY: AMIR ELSHARIEF
REVISED BY
DATE REVISED

LAST REVISION 04-07-10
DATE PLOTTED => 26-APR-2011
TIME PLOTTED => 10:04

Dist	COUNTY	ROUTE	POST MILES TOTAL PROJECT	SHEET No.	TOTAL SHEETS
07	LA	5	R46.3/R50.0	188	456

REGISTERED CIVIL ENGINEER 01-18-11 DATE

4-25-11
PLANS APPROVAL DATE

REGISTERED PROFESSIONAL ENGINEER AMIR AWN ELSHARIEF No. 72560 Exp 6/30/12 CIVIL STATE OF CALIFORNIA

THE STATE OF CALIFORNIA OR ITS OFFICERS OR AGENTS SHALL NOT BE RESPONSIBLE FOR THE ACCURACY OR COMPLETENESS OF SCANNED COPIES OF THIS PLAN SHEET.

NOTES:

1. REMOVE ALL CONFLICTING STRIPING AND PAVEMENT MARKERS
2. STAGE CONSTRUCTION STRIPING AND MARKINGS SHALL BE 2 COATS PAINT
3. IF TEMPORARY RAILING (TYPE K) IS PLACED LESS THAN 2'-0" FROM THE EXCAVATION, IT SHALL BE ANCHORED PER STANDARD PLAN T3
4. SEE SIGN PLANS FOR ADDITIONAL ROADSIDE AND OVERHEAD SIGNS TO BE MAINTAINED, RELOCATED OR INSTALLED
5. FOR ADDITIONAL CONSTRUCTION AREA SIGNS, SEE CONSTRUCTION AREA SIGNS PLAN.

LEGEND:

- MAINLINE CONSTRUCTION AREA BEHIND TEMPORARY RAILING (TYPE K)
- LOCAL ROAD CONSTRUCTION AREA BEHIND TEMPORARY RAILING (TYPE K)
- TEMPORARY RAILING (TYPE K)
- TEMPORARY CRASH CUSHIONS
- CHANNELIZER (SURFACE MOUNTED)
- Det — PAVEMENT DELINEATION DETAIL NUMBER PER STANDARD PLANS OR PD SHEETS
- TRAFFIC DIRECTION
- TEMPORARY TRAFFIC SIGN
- XX — STRIPING DETAIL

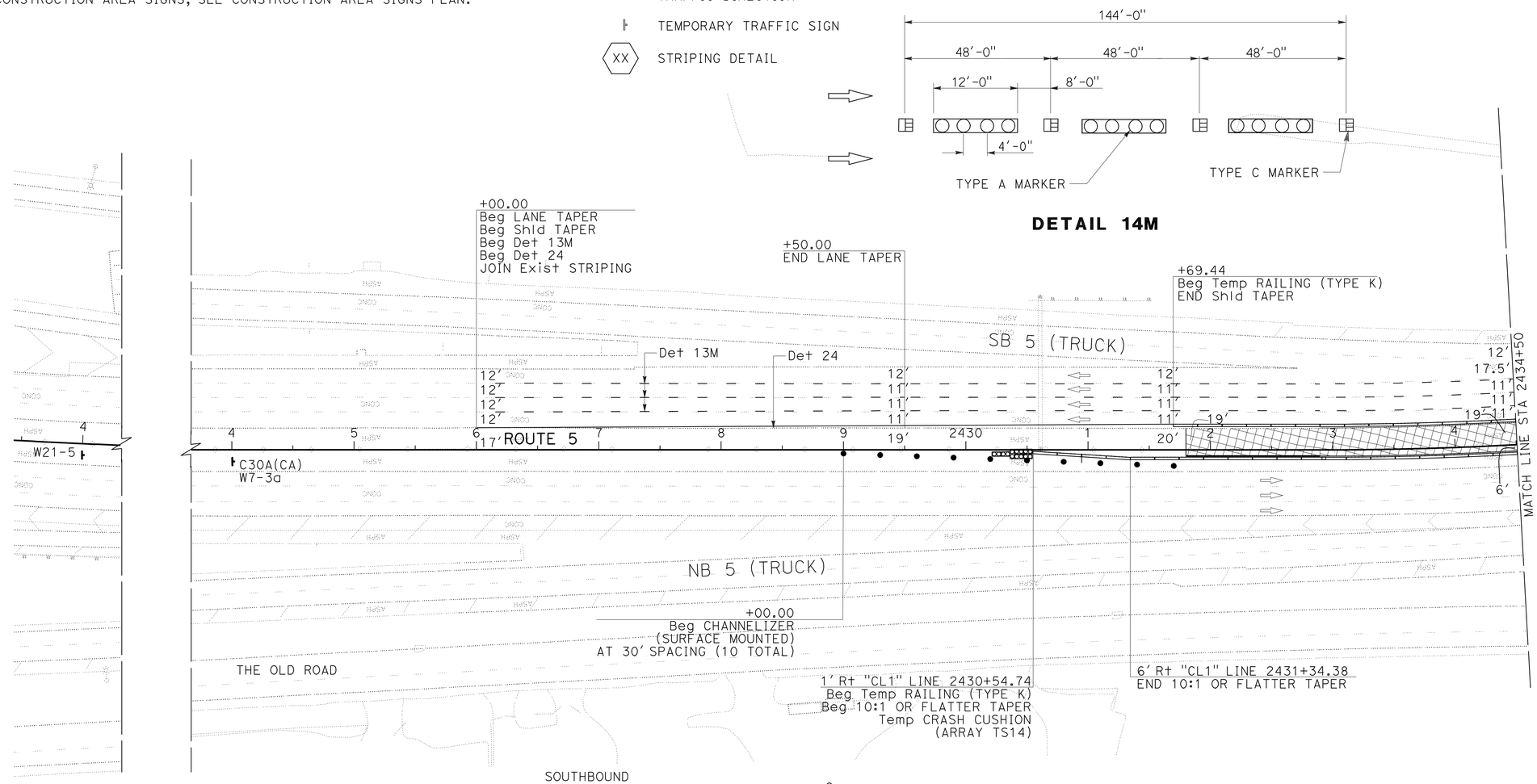

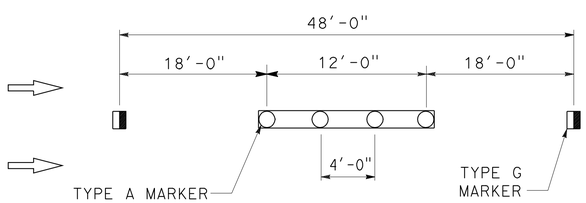

DETAIL 13M

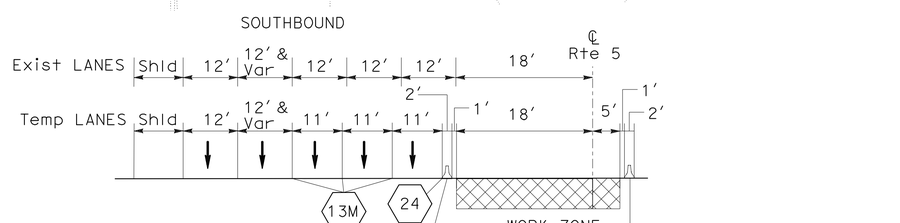

TYPICAL
STA 2431+80.00 TO STA 2445+00.00
NO SCALE

THIS PLAN ACCURATE FOR STAGE CONSTRUCTION AND TRAFFIC HANDLING WORK ONLY

STAGE 1
STAGE CONSTRUCTION AND TRAFFIC HANDLING PLAN

SCALE: 1" = 50'

SC-1

STATE OF CALIFORNIA - DEPARTMENT OF TRANSPORTATION
Caltrans
DESIGN

FUNCTIONAL SUPERVISOR: CELINA AVILES
CALCULATED-DESIGNED BY: DAN PHAM
CHECKED BY: AMIR ELSHARIEF
REVISED BY
DATE REVISED

LAST REVISION 01-14-11
DATE PLOTTED => 26-APR-2011
TIME PLOTTED => 09:55

Dist	COUNTY	ROUTE	POST MILES TOTAL PROJECT	SHEET No.	TOTAL SHEETS
07	LA	5	R46.3/R50.0	189	456

REGISTERED CIVIL ENGINEER 01-18-11 DATE

4-25-11
PLANS APPROVAL DATE

REGISTERED PROFESSIONAL ENGINEER
AMIR AWN ELSHARIEF
No. 72560
Exp. 6/30/12
CIVIL
STATE OF CALIFORNIA

THE STATE OF CALIFORNIA OR ITS OFFICERS OR AGENTS SHALL NOT BE RESPONSIBLE FOR THE ACCURACY OR COMPLETENESS OF SCANNED COPIES OF THIS PLAN SHEET.

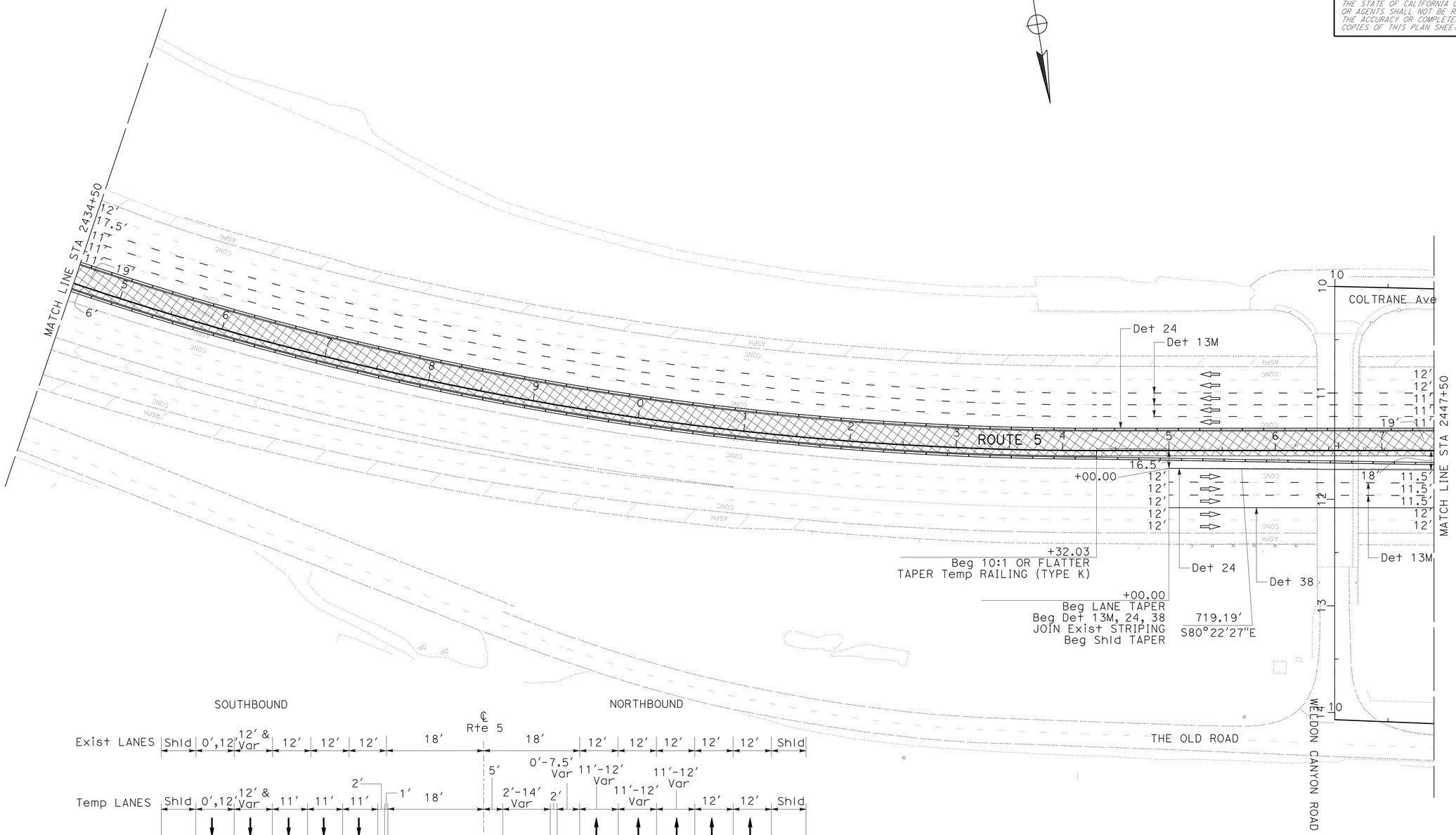

THIS PLAN ACCURATE FOR STAGE CONSTRUCTION AND TRAFFIC HANDLING WORK ONLY

STAGE 1
STAGE CONSTRUCTION AND TRAFFIC HANDLING PLAN

SCALE: 1" = 50′ **SC-2**

REVISED BY	DATE REVISED

CALCULATED-DESIGNED BY	CHECKED BY
DAN PHAM	AMIR ELSHARIEF

FUNCTIONAL SUPERVISOR: CELINA AVILES

STATE OF CALIFORNIA - DEPARTMENT OF TRANSPORTATION
Caltrans
DESIGN

LAST REVISION 01-14-11
DATE PLOTTED => 26-APR-2011
TIME PLOTTED => 09:55

Dist	COUNTY	ROUTE	POST MILES TOTAL PROJECT	SHEET No.	TOTAL SHEETS
07	LA	5	R46.3/R50.0	190	456

REGISTERED CIVIL ENGINEER 01-18-11 DATE

4-25-11
PLANS APPROVAL DATE

REGISTERED PROFESSIONAL ENGINEER AMIR AWN ELSHARIEF No. 72560 Exp 6/30/12 CIVIL STATE OF CALIFORNIA

THE STATE OF CALIFORNIA OR ITS OFFICERS OR AGENTS SHALL NOT BE RESPONSIBLE FOR THE ACCURACY OR COMPLETENESS OF SCANNED COPIES OF THIS PLAN SHEET.

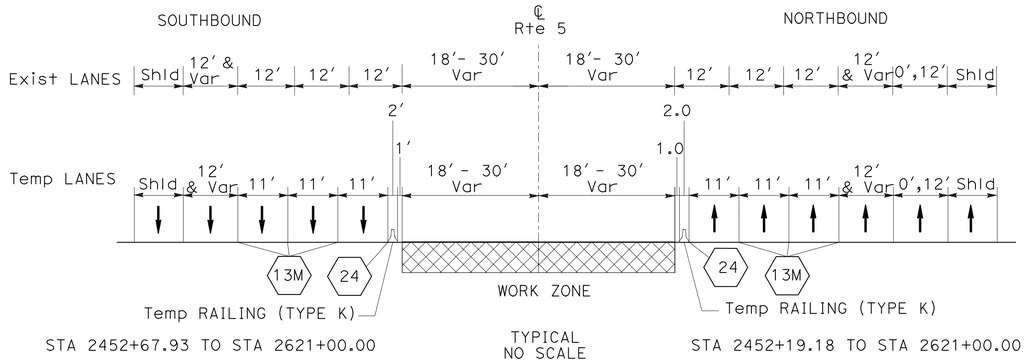

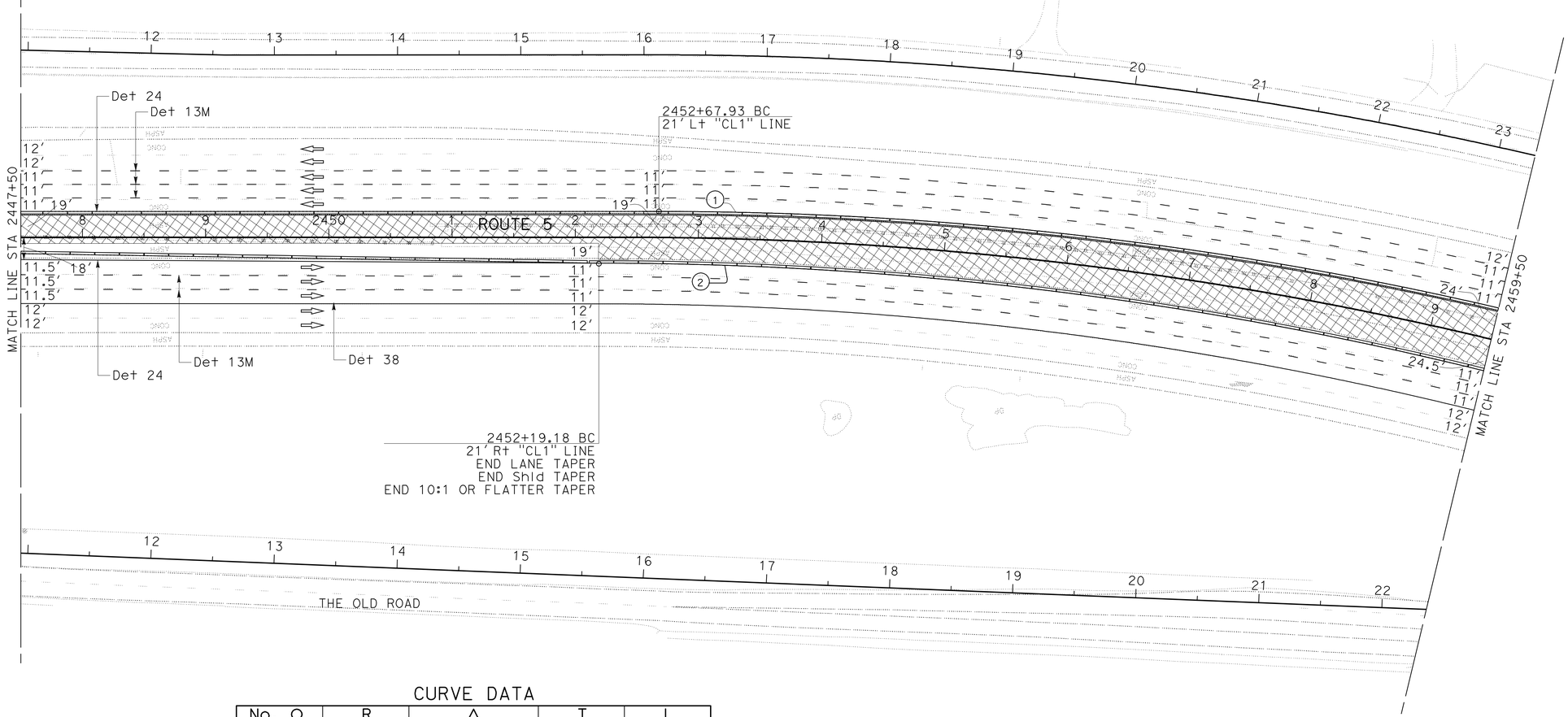

CURVE DATA

No. O	R	Δ	T	L
1	3003.00'	44°48'57"	1238.23'	2348.89'
2	2997.00'	44°48'57"	1235.75'	2344.20'

THIS PLAN ACCURATE FOR STAGE CONSTRUCTION AND TRAFFIC HANDLING WORK ONLY

STAGE 1
STAGE CONSTRUCTION AND TRAFFIC HANDLING PLAN

SCALE: 1" = 50'

SC-3

STATE OF CALIFORNIA - DEPARTMENT OF TRANSPORTATION
Caltrans
DESIGN

FUNCTIONAL SUPERVISOR: CELINA AVILES
CALCULATED-DESIGNED BY: DAN PHAM
CHECKED BY: AMIR ELSHARIEF
REVISED BY
DATE REVISED

LAST REVISION 01-14-11
DATE PLOTTED => 26-APR-2011
TIME PLOTTED => 09:55

Dist	COUNTY	ROUTE	POST MILES TOTAL PROJECT	SHEET No.	TOTAL SHEETS
07	LA	5	R46.3/R50.0	191	456

REGISTERED CIVIL ENGINEER 01-18-11 DATE

4-25-11
PLANS APPROVAL DATE

REGISTERED PROFESSIONAL ENGINEER
AMIR AWN ELSHARIEF
No. 72560
Exp. 6/30/12
CIVIL
STATE OF CALIFORNIA

THE STATE OF CALIFORNIA OR ITS OFFICERS OR AGENTS SHALL NOT BE RESPONSIBLE FOR THE ACCURACY OR COMPLETENESS OF SCANNED COPIES OF THIS PLAN SHEET.

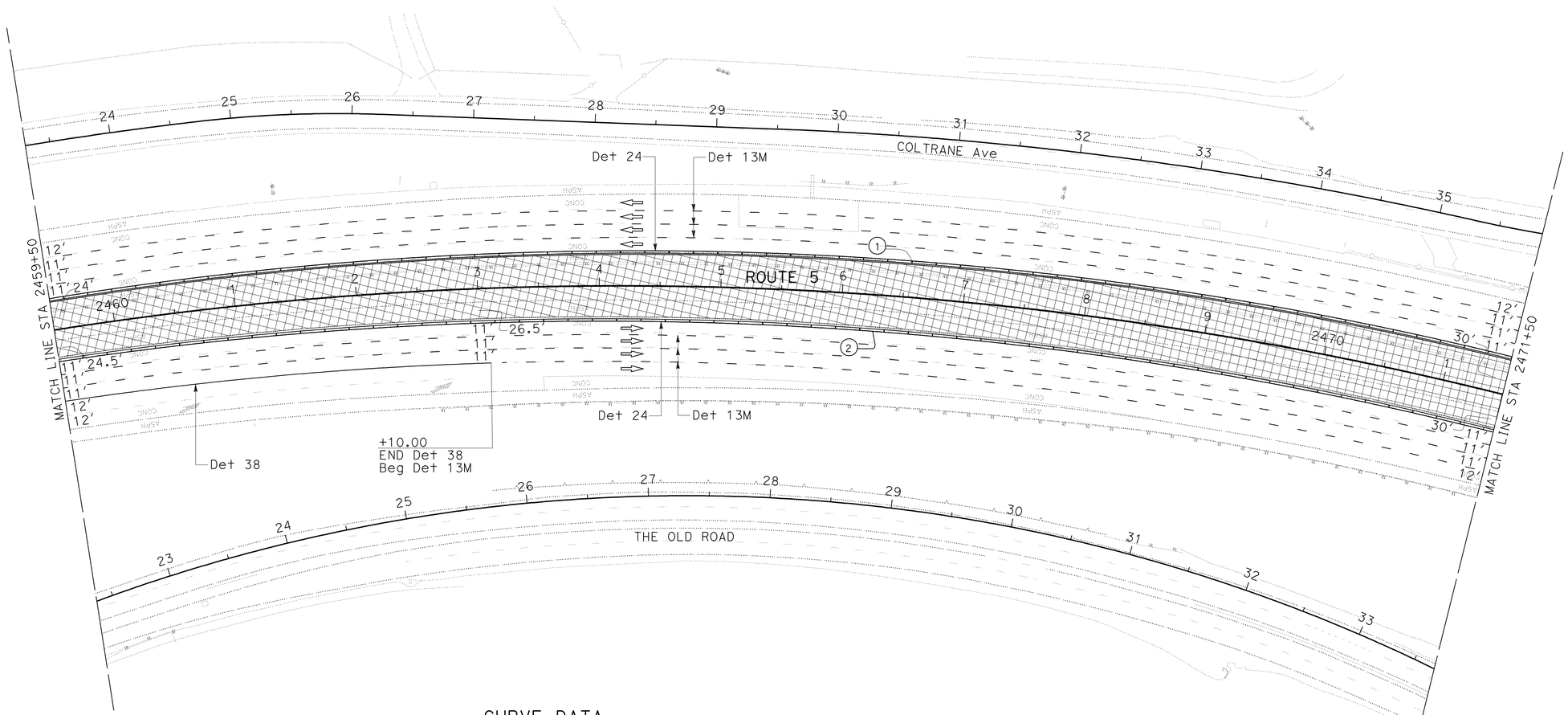

CURVE DATA

No. O	R	Δ	T	L
1	3003.00′	44°48′57″	1238.23′	2348.89′
2	2997.00′	44°48′57″	1235.75′	2344.20′

THIS PLAN ACCURATE FOR STAGE CONSTRUCTION AND TRAFFIC HANDLING WORK ONLY

STAGE 1
STAGE CONSTRUCTION AND TRAFFIC HANDLING PLAN

SCALE: 1" = 50′ **SC-4**

STATE OF CALIFORNIA - DEPARTMENT OF TRANSPORTATION
Caltrans DESIGN

FUNCTIONAL SUPERVISOR: CELINA AVILES
CALCULATED-DESIGNED BY: DAN PHAM
CHECKED BY: AMIR ELSHARIEF
REVISED BY
DATE REVISED

LAST REVISION 01-14-11
DATE PLOTTED => 26-APR-2011
TIME PLOTTED => 09:55

Dist	COUNTY	ROUTE	POST MILES TOTAL PROJECT	SHEET No.	TOTAL SHEETS
07	LA	5	R46.3/R50.0	192	456

REGISTERED CIVIL ENGINEER 01-18-11 DATE

4-25-11
PLANS APPROVAL DATE

REGISTERED PROFESSIONAL ENGINEER
AMIR AWN ELSHARIEF
No. 72560
Exp 6/30/12
CIVIL
STATE OF CALIFORNIA

THE STATE OF CALIFORNIA OR ITS OFFICERS OR AGENTS SHALL NOT BE RESPONSIBLE FOR THE ACCURACY OR COMPLETENESS OF SCANNED COPIES OF THIS PLAN SHEET.

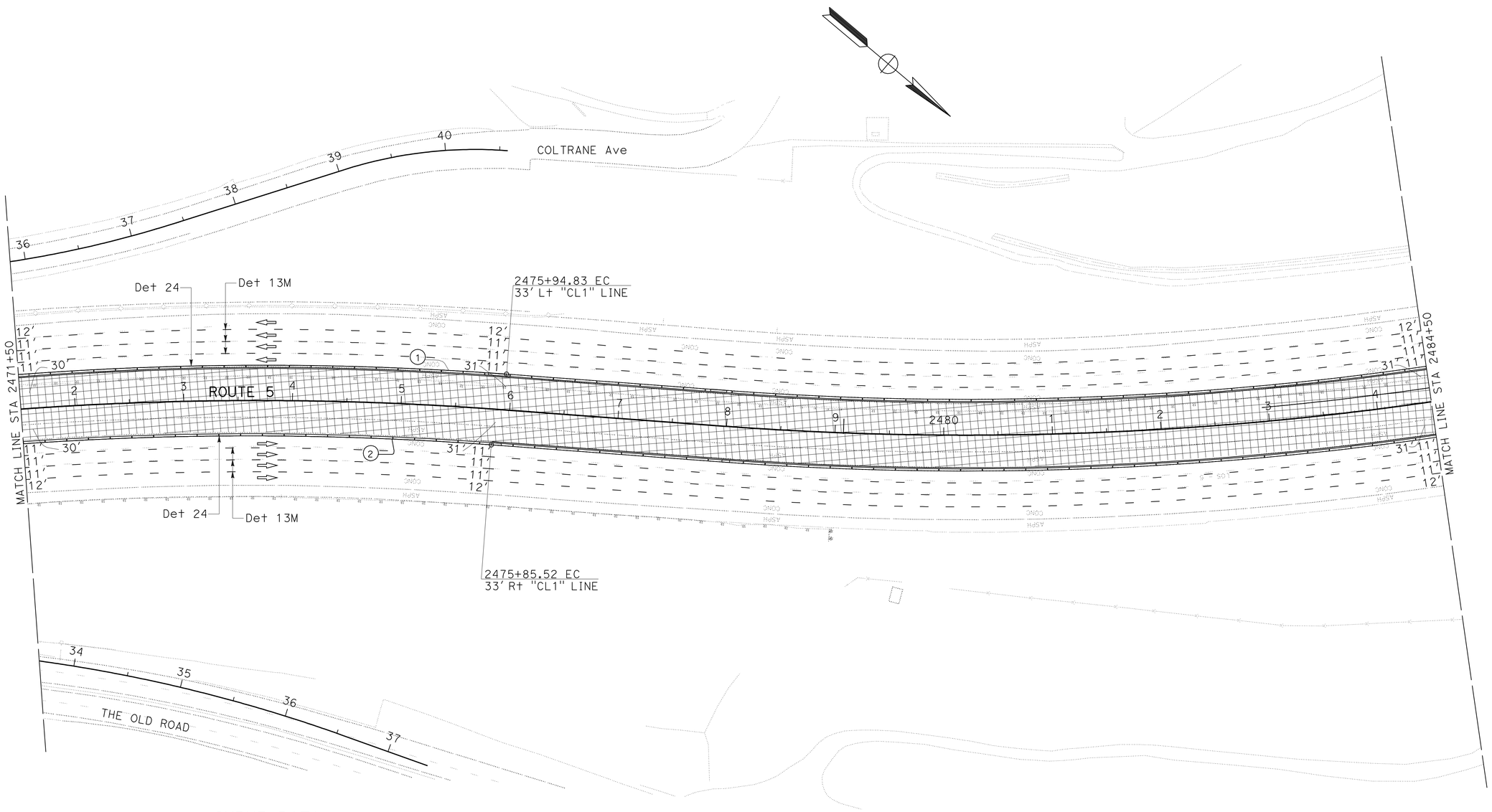

CURVE DATA

No. O	R	Δ	T	L
1	3003.00'	44°48'57"	1238.23'	2348.89'
2	2997.00'	44°48'57"	1235.75'	2344.20'

THIS PLAN ACCURATE FOR STAGE CONSTRUCTION AND TRAFFIC HANDLING WORK ONLY

STAGE 1
STAGE CONSTRUCTION AND TRAFFIC HANDLING PLAN

SCALE: 1" = 50'

SC-5

STATE OF CALIFORNIA - DEPARTMENT OF TRANSPORTATION
Caltrans®
DESIGN

FUNCTIONAL SUPERVISOR: CELINA AVILES
CALCULATED-DESIGNED BY: DAN PHAM
CHECKED BY: AMIR ELSHARIEF
REVISED BY
DATE REVISED

LAST REVISION 01-14-11
DATE PLOTTED => 26-APR-2011
TIME PLOTTED => 09:55

Dist	COUNTY	ROUTE	POST MILES TOTAL PROJECT	SHEET No.	TOTAL SHEETS
07	LA	5	R46.3/R50.0	193	456

REGISTERED CIVIL ENGINEER 01-18-11 DATE

4-25-11
PLANS APPROVAL DATE

REGISTERED PROFESSIONAL ENGINEER
AMIR AWN ELSHARIEF
No. 72560
Exp. 6/30/12
CIVIL
STATE OF CALIFORNIA

THE STATE OF CALIFORNIA OR ITS OFFICERS OR AGENTS SHALL NOT BE RESPONSIBLE FOR THE ACCURACY OR COMPLETENESS OF SCANNED COPIES OF THIS PLAN SHEET.

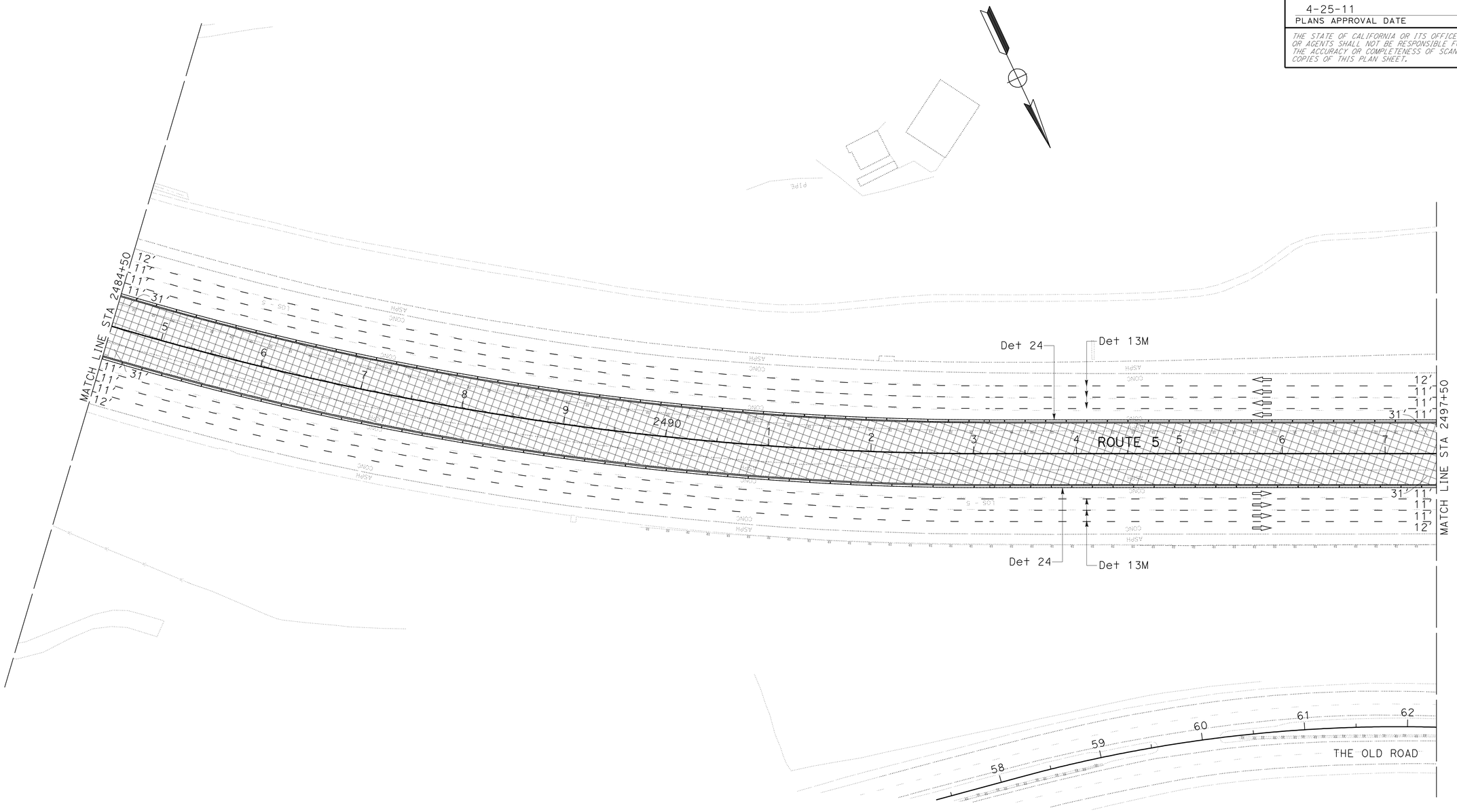

THIS PLAN ACCURATE FOR STAGE CONSTRUCTION AND TRAFFIC HANDLING WORK ONLY

STAGE 1
STAGE CONSTRUCTION AND TRAFFIC HANDLING PLAN

SCALE: 1" = 50'

SC-6

STATE OF CALIFORNIA - DEPARTMENT OF TRANSPORTATION
Caltrans
DESIGN

FUNCTIONAL SUPERVISOR: CELINA AVILES
CALCULATED-DESIGNED BY: DAN PHAM
CHECKED BY: AMIR ELSHARIEF
REVISED BY
DATE REVISED

LAST REVISION 01-14-11
DATE PLOTTED => 26-APR-2011
TIME PLOTTED => 09:56

Dist	COUNTY	ROUTE	POST MILES TOTAL PROJECT	SHEET No.	TOTAL SHEETS
07	LA	5	R46.3/R50.0	194	456

REGISTERED CIVIL ENGINEER DATE 01-18-11

4-25-11
PLANS APPROVAL DATE

REGISTERED PROFESSIONAL ENGINEER AMIR AWN ELSHARIEF No. 72560 Exp. 6/30/12 CIVIL STATE OF CALIFORNIA

THE STATE OF CALIFORNIA OR ITS OFFICERS OR AGENTS SHALL NOT BE RESPONSIBLE FOR THE ACCURACY OR COMPLETENESS OF SCANNED COPIES OF THIS PLAN SHEET.

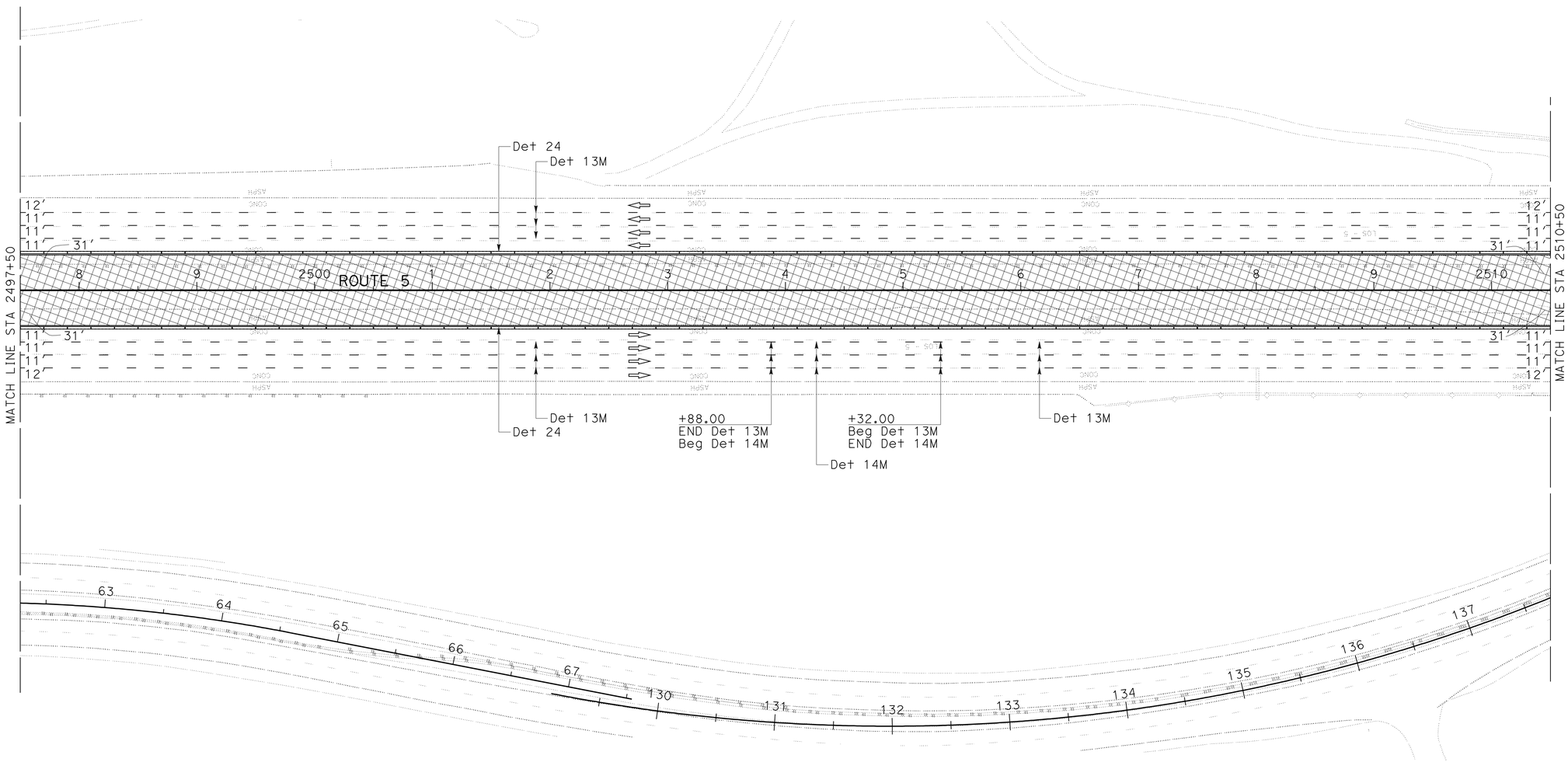

THIS PLAN ACCURATE FOR STAGE CONSTRUCTION AND TRAFFIC HANDLING WORK ONLY

STAGE 1
STAGE CONSTRUCTION AND TRAFFIC HANDLING PLAN

SCALE: 1" = 50'

SC-7

STATE OF CALIFORNIA - DEPARTMENT OF TRANSPORTATION
Caltrans
DESIGN

FUNCTIONAL SUPERVISOR: CELINA AVILES
CALCULATED-DESIGNED BY: DAN PHAM
CHECKED BY: AMIR ELSHARIEF
REVISED BY
DATE REVISED

LAST REVISION 01-14-11
DATE PLOTTED => 26-APR-2011
TIME PLOTTED => 09:56

Dist	COUNTY	ROUTE	POST MILES TOTAL PROJECT	SHEET No.	TOTAL SHEETS
07	LA	5	R46.3/R50.0	195	456

REGISTERED CIVIL ENGINEER 01-18-11 DATE

4-25-11
PLANS APPROVAL DATE

REGISTERED PROFESSIONAL ENGINEER
AMIR AWN ELSHARIEF
No. 72560
Exp. 6/30/12
CIVIL
STATE OF CALIFORNIA

THE STATE OF CALIFORNIA OR ITS OFFICERS OR AGENTS SHALL NOT BE RESPONSIBLE FOR THE ACCURACY OR COMPLETENESS OF SCANNED COPIES OF THIS PLAN SHEET.

NOTE: SEE SHEET SC-9 FOR WORK ON LOCAL ROAD.

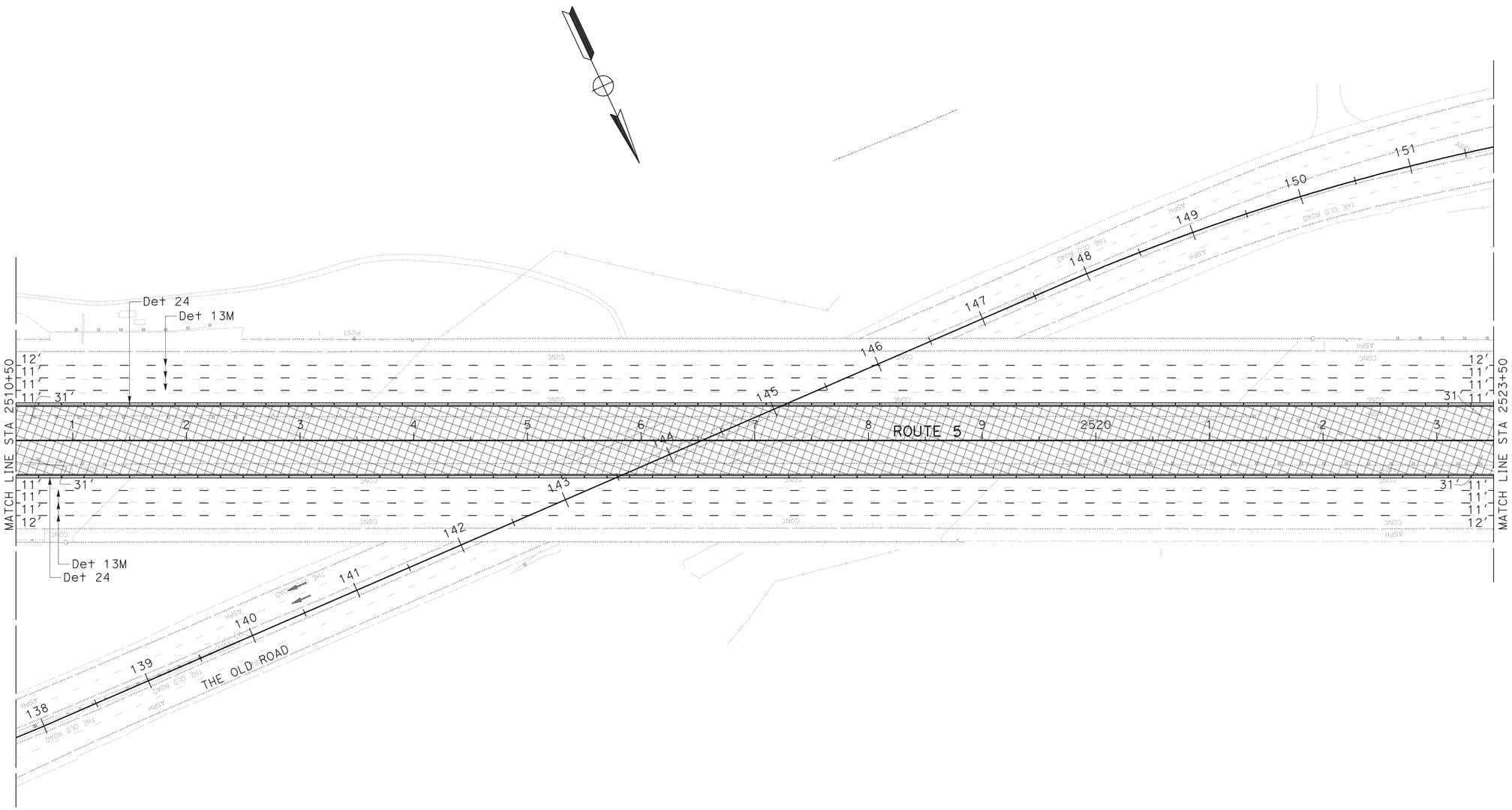

THIS PLAN ACCURATE FOR STAGE CONSTRUCTION AND TRAFFIC HANDLING WORK ONLY

STAGE 1
STAGE CONSTRUCTION AND TRAFFIC HANDLING PLAN

SCALE: 1" = 50'

SC-8

STATE OF CALIFORNIA - DEPARTMENT OF TRANSPORTATION
Caltrans
DESIGN

FUNCTIONAL SUPERVISOR: CELINA AVILES
CALCULATED-DESIGNED BY: DAN PHAM
CHECKED BY: AMIR ELSHARIEF
REVISED BY
DATE REVISED

LAST REVISION 01-14-11
DATE PLOTTED => 26-APR-2011
TIME PLOTTED => 09:56

Dist	COUNTY	ROUTE	POST MILES TOTAL PROJECT	SHEET No.	TOTAL SHEETS
07	LA	5	R46.3/R50.0	196	456

REGISTERED CIVIL ENGINEER 01-18-11 DATE

4-25-11
PLANS APPROVAL DATE

REGISTERED PROFESSIONAL ENGINEER AMIR AWN ELSHARIEF No. 72560 Exp 6/30/12 CIVIL STATE OF CALIFORNIA

THE STATE OF CALIFORNIA OR ITS OFFICERS OR AGENTS SHALL NOT BE RESPONSIBLE FOR THE ACCURACY OR COMPLETENESS OF SCANNED COPIES OF THIS PLAN SHEET.

NOTE: SEE SHEET SC-8 FOR WORK ON MAINLINE.

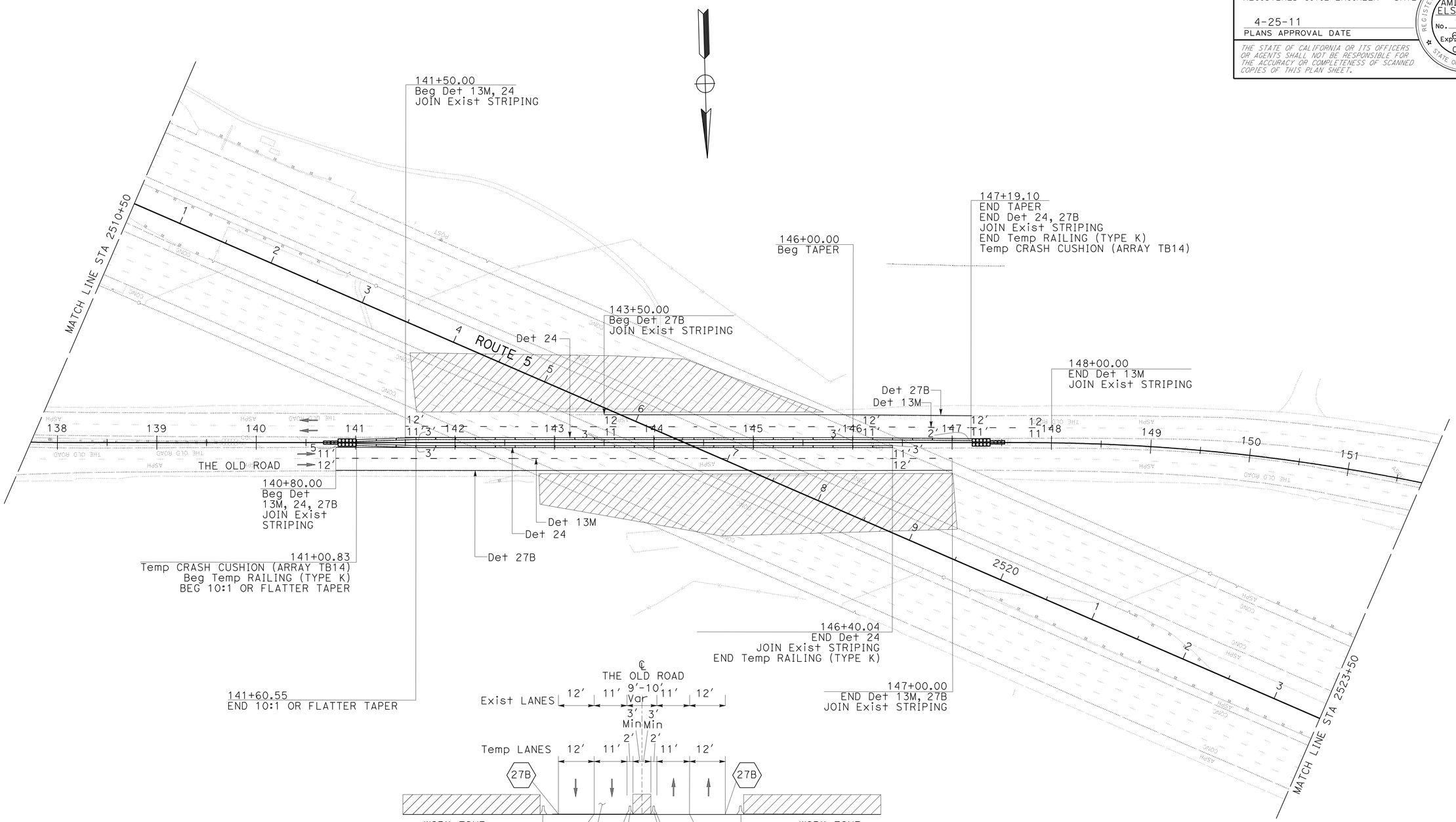

THIS PLAN ACCURATE FOR STAGE CONSTRUCTION AND TRAFFIC HANDLING WORK ONLY

STAGE 1
STAGE CONSTRUCTION AND TRAFFIC HANDLING PLAN

SCALE: 1" = 50'

SC-9

STATE OF CALIFORNIA - DEPARTMENT OF TRANSPORTATION
Caltrans
DESIGN

FUNCTIONAL SUPERVISOR: CELINA AVILES
CALCULATED-DESIGNED BY: DAN PHAM
CHECKED BY: AMIR ELSHARIEF
REVISED BY
DATE REVISED

LAST REVISION 01-14-11
DATE PLOTTED => 26-APR-2011
TIME PLOTTED => 10:02

Dist	COUNTY	ROUTE	POST MILES TOTAL PROJECT	SHEET No.	TOTAL SHEETS
07	LA	5	R46.3/R50.0	197	456

REGISTERED CIVIL ENGINEER 01-18-11 DATE

4-25-11
PLANS APPROVAL DATE

REGISTERED PROFESSIONAL ENGINEER
AMIR AWN ELSHARIEF
No. 72560
Exp. 6/30/12
CIVIL
STATE OF CALIFORNIA

THE STATE OF CALIFORNIA OR ITS OFFICERS OR AGENTS SHALL NOT BE RESPONSIBLE FOR THE ACCURACY OR COMPLETENESS OF SCANNED COPIES OF THIS PLAN SHEET.

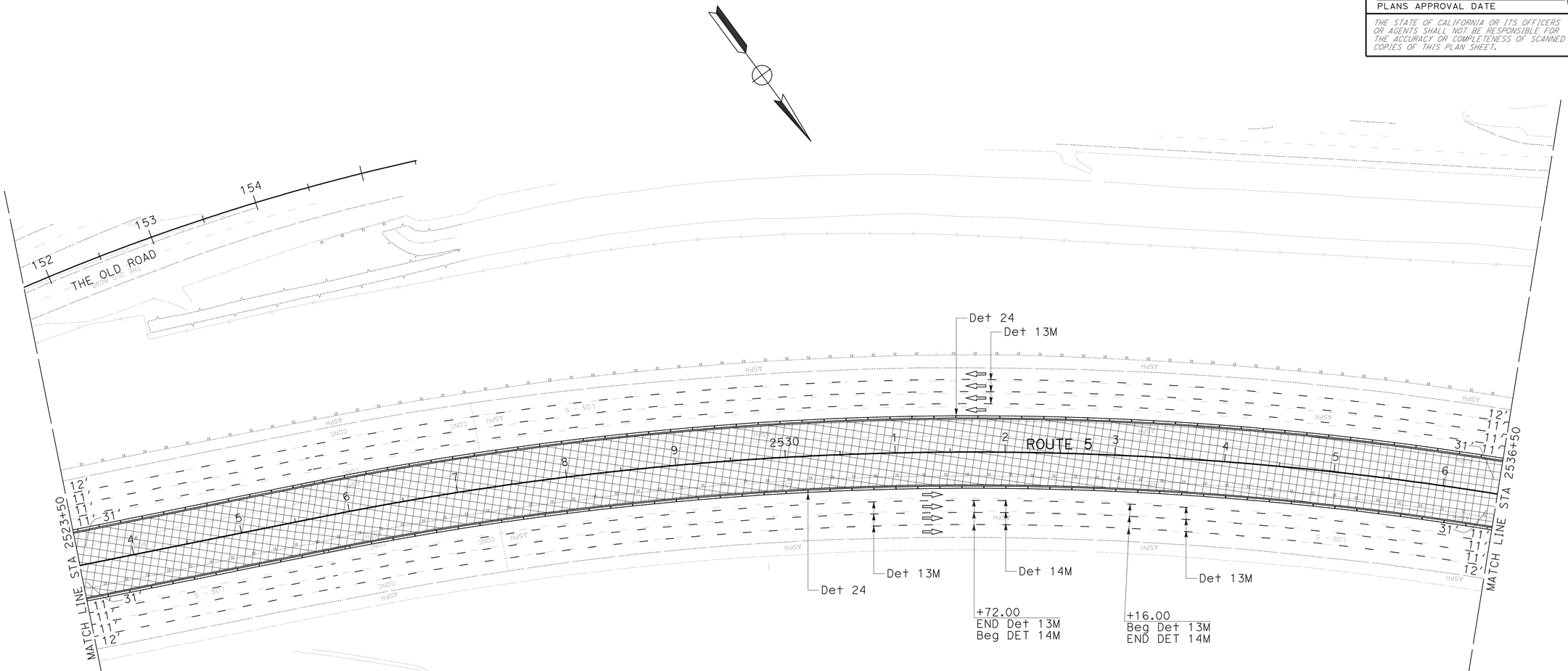

THIS PLAN ACCURATE FOR STAGE CONSTRUCTION AND TRAFFIC HANDLING WORK ONLY

STAGE 1
STAGE CONSTRUCTION AND TRAFFIC HANDLING PLAN

SCALE: 1" = 50'

SC-10

REVISED BY	DATE REVISED

CALCULATED-DESIGNED BY	CHECKED BY
DAN PHAM	AMIR ELSHARIEF

FUNCTIONAL SUPERVISOR: CELINA AVILES

STATE OF CALIFORNIA - DEPARTMENT OF TRANSPORTATION
Caltrans
DESIGN

LAST REVISION 01-14-11
DATE PLOTTED => 26-APR-2011
TIME PLOTTED => 09:56

Dist	COUNTY	ROUTE	POST MILES TOTAL PROJECT	SHEET No.	TOTAL SHEETS
07	LA	5	R46.3/R50.0	198	456

REGISTERED CIVIL ENGINEER 01-18-11 DATE

4-25-11
PLANS APPROVAL DATE

REGISTERED PROFESSIONAL ENGINEER
AMIR AWN ELSHARIEF
No. 72560
Exp. 6/30/12
CIVIL
STATE OF CALIFORNIA

THE STATE OF CALIFORNIA OR ITS OFFICERS OR AGENTS SHALL NOT BE RESPONSIBLE FOR THE ACCURACY OR COMPLETENESS OF SCANNED COPIES OF THIS PLAN SHEET.

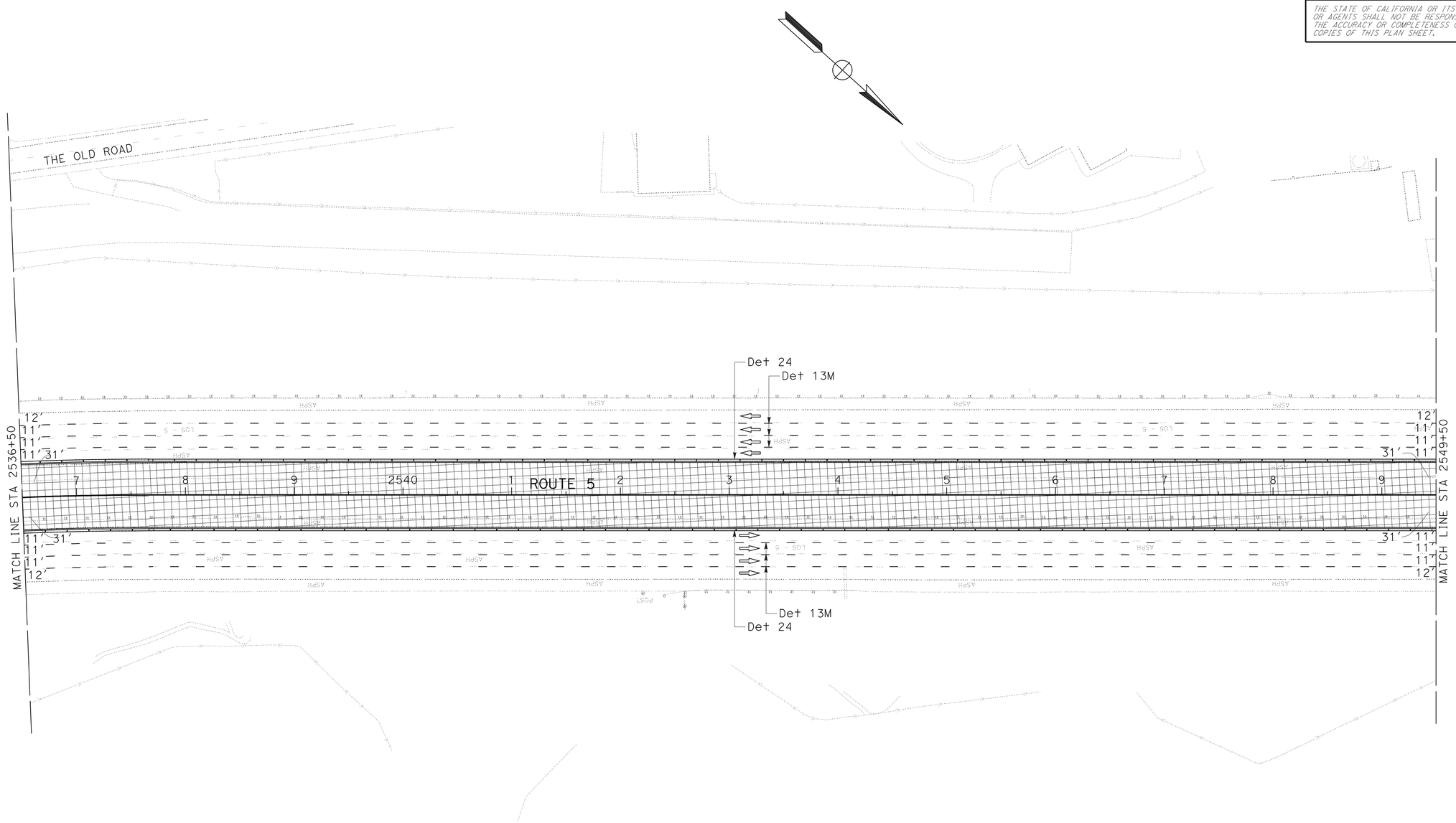

THIS PLAN ACCURATE FOR STAGE CONSTRUCTION AND TRAFFIC HANDLING WORK ONLY

STAGE 1
STAGE CONSTRUCTION AND TRAFFIC HANDLING PLAN

SCALE: 1" = 50'

SC-11

REVISED BY	DATE REVISED

DAN PHAM
AMIR ELSHARIEF

CALCULATED-DESIGNED BY
CHECKED BY

FUNCTIONAL SUPERVISOR
CELINA AVILES

STATE OF CALIFORNIA - DEPARTMENT OF TRANSPORTATION
Caltrans
DESIGN

LAST REVISION 01-14-11
DATE PLOTTED => 26-APR-2011
TIME PLOTTED => 09:56

Dist	COUNTY	ROUTE	POST MILES TOTAL PROJECT	SHEET No.	TOTAL SHEETS
07	LA	5	R46.3/R50.0	199	456

REGISTERED CIVIL ENGINEER 01-18-11 DATE

4-25-11
PLANS APPROVAL DATE

REGISTERED PROFESSIONAL ENGINEER
AMIR AWN ELSHARIEF
No. 72560
Exp. 6/30/12
CIVIL
STATE OF CALIFORNIA

THE STATE OF CALIFORNIA OR ITS OFFICERS OR AGENTS SHALL NOT BE RESPONSIBLE FOR THE ACCURACY OR COMPLETENESS OF SCANNED COPIES OF THIS PLAN SHEET.

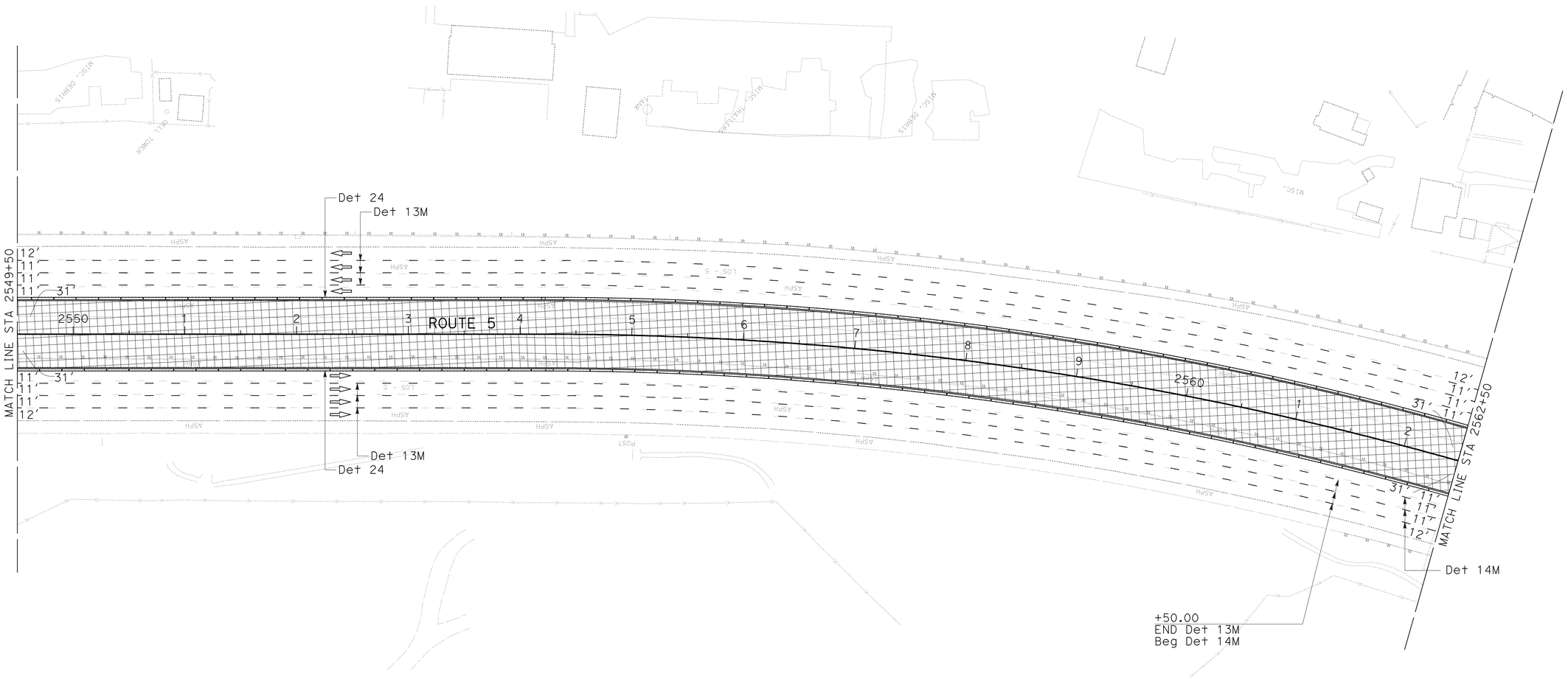

THIS PLAN ACCURATE FOR STAGE CONSTRUCTION AND TRAFFIC HANDLING WORK ONLY

STAGE 1
STAGE CONSTRUCTION AND TRAFFIC HANDLING PLAN

SCALE: 1" = 50'

SC-12

REVISED BY	DATE REVISED

CALCULATED-DAN PHAM
DESIGNED BY AMIR ELSHARIEF
CHECKED BY

FUNCTIONAL SUPERVISOR CELINA AVILES

STATE OF CALIFORNIA - DEPARTMENT OF TRANSPORTATION
Caltrans
DESIGN

LAST REVISION 01-14-11
DATE PLOTTED => 26-APR-2011
TIME PLOTTED => 09:56

Dist	COUNTY	ROUTE	POST MILES TOTAL PROJECT	SHEET No.	TOTAL SHEETS
07	LA	5	R46.3/R50.0	200	456

REGISTERED CIVIL ENGINEER 01-18-11 DATE

4-25-11
PLANS APPROVAL DATE

REGISTERED PROFESSIONAL ENGINEER
AMIR AWN ELSHARIEF
No. 72560
Exp. 6/30/12
CIVIL
STATE OF CALIFORNIA

THE STATE OF CALIFORNIA OR ITS OFFICERS OR AGENTS SHALL NOT BE RESPONSIBLE FOR THE ACCURACY OR COMPLETENESS OF SCANNED COPIES OF THIS PLAN SHEET.

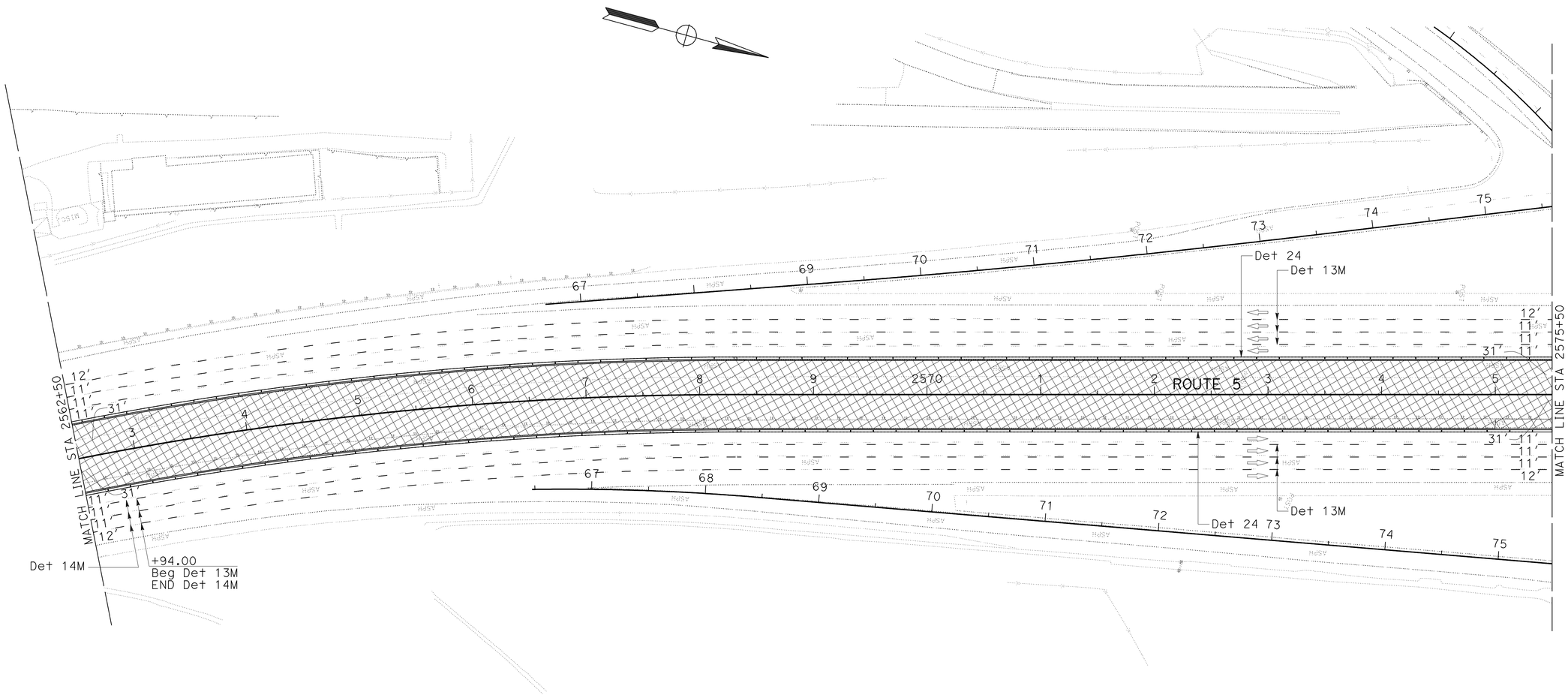

THIS PLAN ACCURATE FOR STAGE CONSTRUCTION AND TRAFFIC HANDLING WORK ONLY

STAGE 1
STAGE CONSTRUCTION AND TRAFFIC HANDLING PLAN

SCALE: 1" = 50'

SC-13

STATE OF CALIFORNIA - DEPARTMENT OF TRANSPORTATION
Caltrans
DESIGN

FUNCTIONAL SUPERVISOR: CELINA AVILES
CALCULATED-DESIGNED BY: DAN PHAM
CHECKED BY: AMIR ELSHARIEF
REVISED BY
DATE REVISED

LAST REVISION 01-14-11
DATE PLOTTED => 26-APR-2011
TIME PLOTTED => 13:14