DIST	COUNTY	ROUTE	KILOMETER POST TOTAL PROJECT	SHEET No	TOTAL SHEETS
07	LA	5	2.9/4.9	1001	1082

Daniel L. Texler 01-26-10
REGISTERED CIVIL ENGINEER DATE

6-21-10
PLANS APPROVAL DATE

REGISTERED PROFESSIONAL ENGINEER
Daniel L. Texler
No. 49792
Exp. 9-30-10
CIVIL
STATE OF CALIFORNIA

The State of California or its officers or agents shall not be responsible for the accuracy or completeness of electronic copies of this plan sheet.

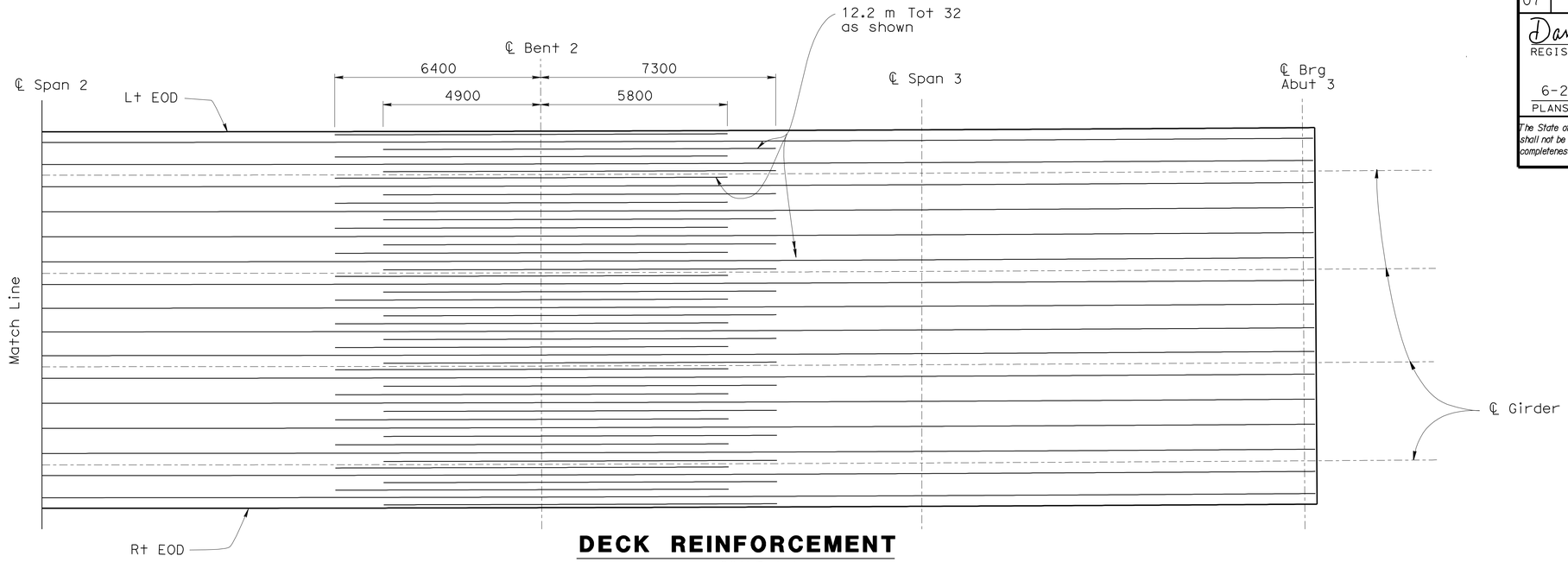

DECK REINFORCEMENT

SCALE 1:80

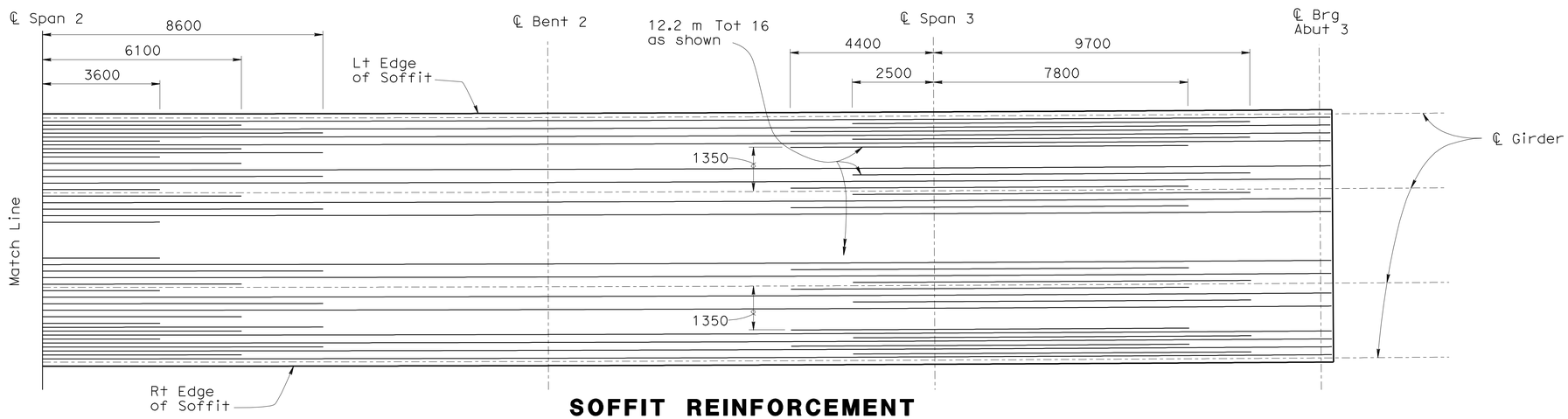

SOFFIT REINFORCEMENT

SCALE 1:80

NOTES:

1. All reinforcement are #36 unless noted
2. Reinforcement are evenly spaced in limits shown
3. All #36 Cont bars shall be lap spliced with two times the standard lap length

Caltrans Metric

	BY	CHECKED
DESIGN	Phu Nguyen	D. Menzmer
DETAILS	L. Goldthwait	D. Menzmer
QUANTITIES	M. Okimura	D. Menzmer

STATE OF CALIFORNIA
DEPARTMENT OF TRANSPORTATION

DIVISION OF ENGINEERING SERVICES
STRUCTURE DESIGN
DESIGN BRANCH 11

BRIDGE NO. 53-3018S
KILOMETER POST 3.875

CARMENITA ROAD NB ON-RAMP
ADDITIONAL GIRDER REINFORCEMENT NO. 2

ALL DIMENSIONS ARE IN MILLIMETERS UNLESS OTHERWISE SHOWN

ORIGINAL SCALE IN MILLIMETERS FOR REDUCED PLANS 0 10 20 30 40 50 60 70 80 90 100

CU 07225
EA 2159C1

DISREGARD PRINTS BEARING EARLIER REVISION DATES

REVISION DATES: 10-29-08, 6-16-09

SHEET 18 OF 26

FILE => 53-3018s-k-girrf02.dgn

STRUCTURES DESIGN DETAIL SHEET (METRIC) (REV.03-17-04)

USERNAME => trienard DATE PLOTTED => 23-FEB-2011 TIME PLOTTED => 08:18

DIST	COUNTY	ROUTE	KILOMETER POST TOTAL PROJECT	SHEET No	TOTAL SHEETS
07	LA	5	2.9/4.9	1002	1082

Daniel L. Texler 01-26-10
REGISTERED CIVIL ENGINEER DATE

6-21-10
PLANS APPROVAL DATE

REGISTERED PROFESSIONAL ENGINEER
Daniel L. Texler
No. 49792
Exp. 9-30-10
CIVIL
STATE OF CALIFORNIA

The State of California or its officers or agents shall not be responsible for the accuracy or completeness of electronic copies of this plan sheet.

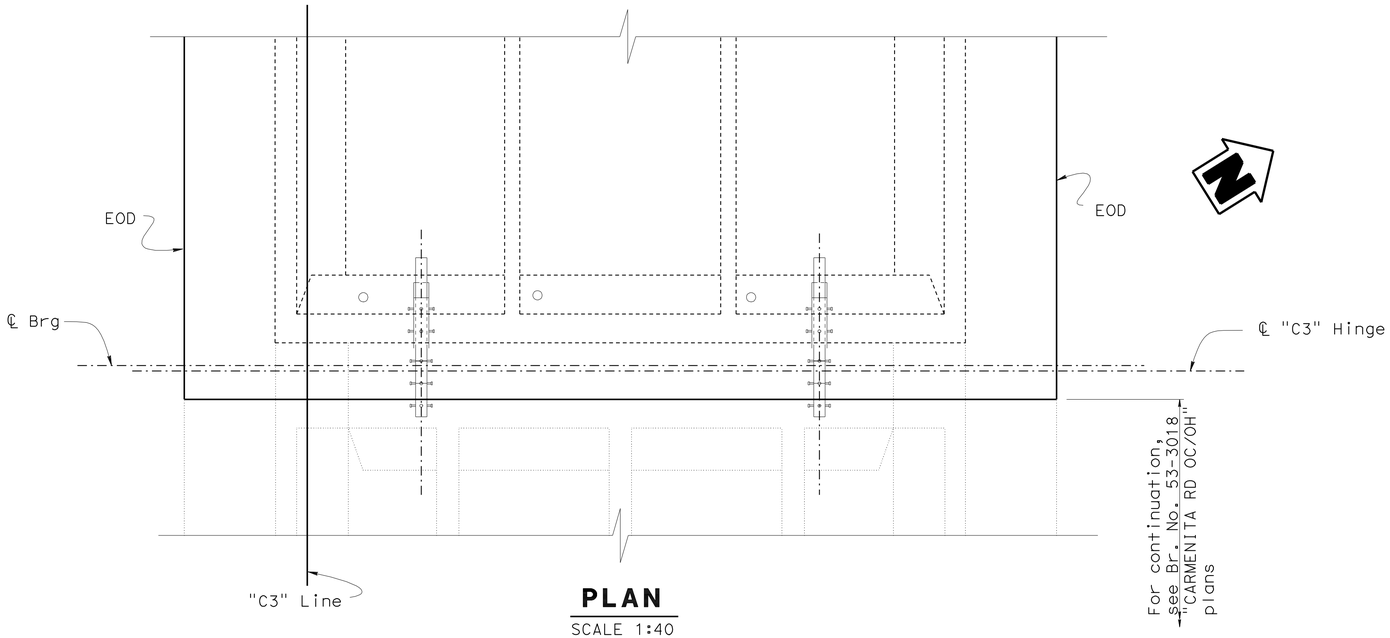

PLAN
SCALE 1:40

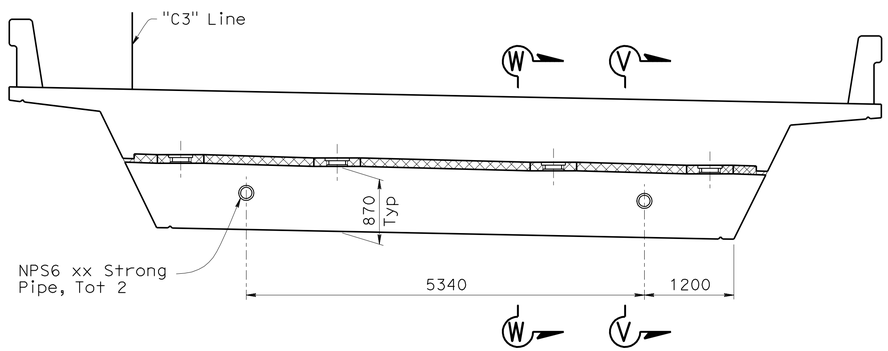

ELEVATION
SCALE 1:40

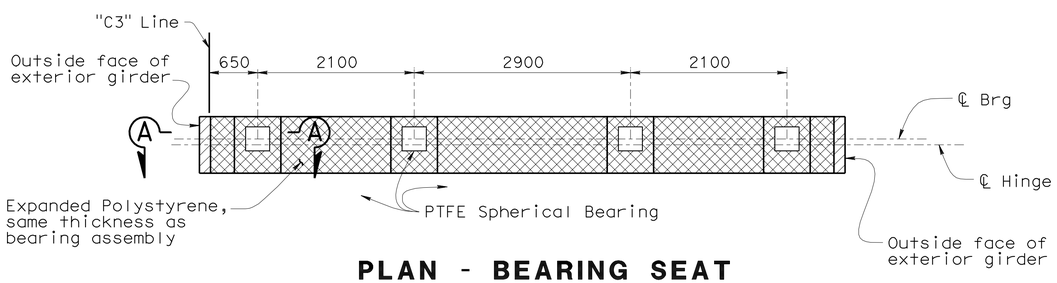

PLAN - BEARING SEAT
SCALE 1:40

NOTES:

1. See Bridge Details B0-13/13-1 & B0-13/13-2
2. For 'Section V-V', see "HINGE DETAILS NO. 1" sheet.
3. For 'Section W-W', see "HINGE DETAILS NO. 2" sheet.
4. Expanded polystyrene to be removed 150 from visible surface.
5. For bearing pad details, see "PTFE/SPHERICAL EXPANSION BEARING DETAILS NO. 1" sheets

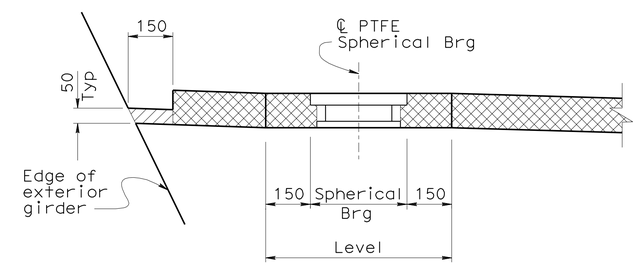

SECTION A-A
SCALE 1:10

LEGEND:

Indicates expanded polystyrene, 50 mm thickness.

Indicates expanded polystyrene, same thickness as bearing

Caltrans Metric	DESIGN	BY Phu Nguyen	CHECKED D. Menzmer	STATE OF CALIFORNIA DEPARTMENT OF TRANSPORTATION	DIVISION OF ENGINEERING SERVICES STRUCTURE DESIGN DESIGN BRANCH 11
	DETAILS	BY Pauline Tong	CHECKED D. Menzmer		
	QUANTITIES	BY M. Okimura	CHECKED D. Menzmer		

BRIDGE NO. 53-3018S
KILOMETER POST 3.875

CARMENITA ROAD NB ON-RAMP
HINGE LAYOUT

ALL DIMENSIONS ARE IN MILLIMETERS UNLESS OTHERWISE SHOWN

ORIGINAL SCALE IN MILLIMETERS FOR REDUCED PLANS 0 10 20 30 40 50 60 70 80 90 100

CU 07225
EA 2159C1

DISREGARD PRINTS BEARING EARLIER REVISION DATES 1-17-09

REVISION DATES

SHEET 19 OF 26

FILE => 53-3018s-m-hnglyt.dgn

STRUCTURES DESIGN DETAIL SHEET (METRIC) (REV.03-17-04)

USERNAME => trright DATE PLOTTED => 22-JUN-2010 TIME PLOTTED => 17:38

DIST	COUNTY	ROUTE	KILOMETER POST TOTAL PROJECT	SHEET No	TOTAL SHEETS
07	LA	5	2.9/4.9	1003	1082

Daniel L. Texler 01-26-10
REGISTERED CIVIL ENGINEER DATE

6-21-10
PLANS APPROVAL DATE

REGISTERED PROFESSIONAL ENGINEER Daniel L. Texler No. 49792 Exp. 9-30-10 CIVIL STATE OF CALIFORNIA

The State of California or its officers or agents shall not be responsible for the accuracy or completeness of electronic copies of this plan sheet.

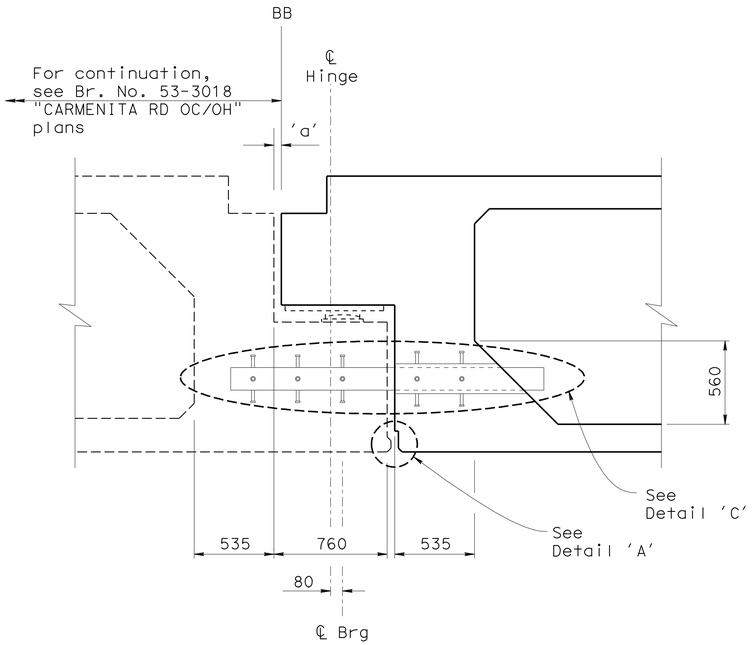

SECTION V-V
SCALE 1:20

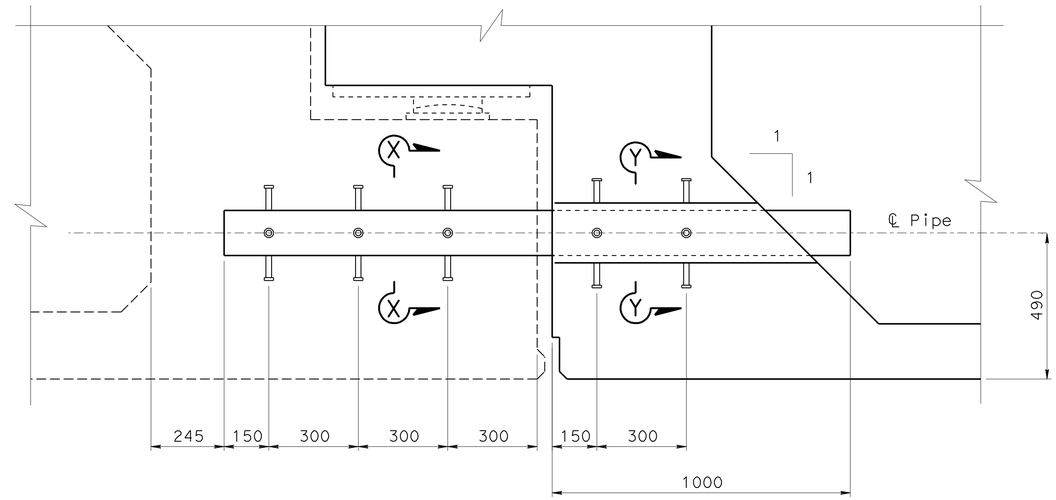

DETAIL C
SCALE 1:10

NOTES:

1. For location of 'Section V-V' and NPS6 xx strong pipe layout, see "HINGE LAYOUT" sheet
2. Details for Br. No. 53-3018 shown for information only.

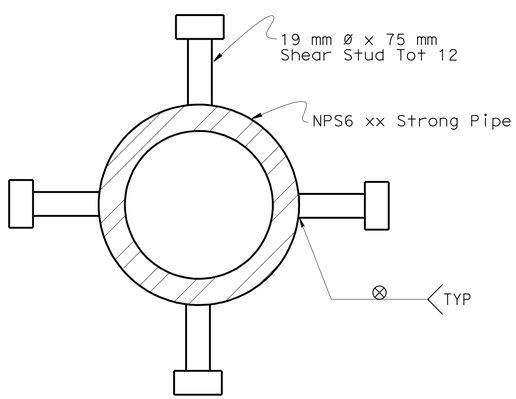

SECTION X-X
SCALE 1:2.5

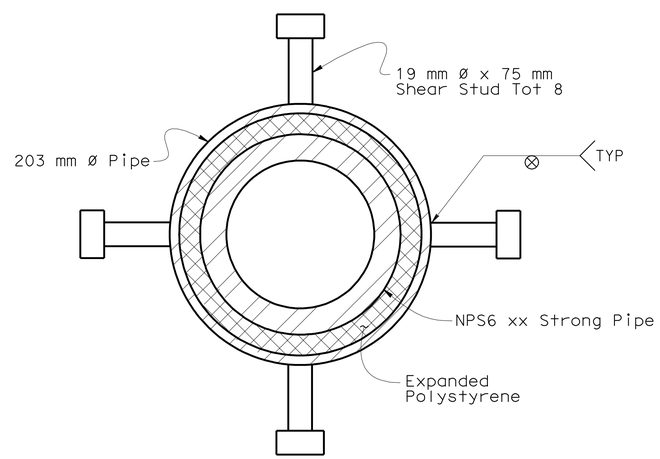

SECTION Y-Y
SCALE 1:2.5

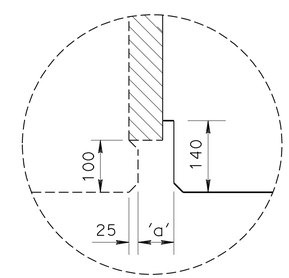

DETAIL A
No Scale

DESIGN	BY Phu Nguyen	CHECKED D. Menzmer	
DETAILS	BY Pauline Tong	CHECKED D. Menzmer	
QUANTITIES	BY M. Okimura	CHECKED D. Menzmer	

STATE OF CALIFORNIA
DEPARTMENT OF TRANSPORTATION

DIVISION OF ENGINEERING SERVICES
STRUCTURE DESIGN
DESIGN BRANCH 11

BRIDGE NO. 53-3018S
KILOMETER POST 3.875

CARMENITA ROAD NB ON-RAMP
HINGE DETAILS NO. 1

ALL DIMENSIONS ARE IN MILLIMETERS UNLESS OTHERWISE SHOWN

ORIGINAL SCALE IN MILLIMETERS FOR REDUCED PLANS 0 10 20 30 40 50 60 70 80 90 100

CU 07225
EA 2159C1

DISREGARD PRINTS BEARING EARLIER REVISION DATES

REVISION DATES: 1-28-09 2-26-09 6-11-09

SHEET 20 OF 26

FILE => 53-3018s-mm-hngdet01.dgn

STRUCTURES DESIGN DETAIL SHEET (METRIC) (REV.03-17-04)

USERNAME => trrichf DATE PLOTTED => 22-JUN-2010 TIME PLOTTED => 17:38

DIST	COUNTY	ROUTE	KILOMETER POST TOTAL PROJECT	SHEET No	TOTAL SHEETS
07	LA	5	2.9/4.9	1004	1082

Daniel L. Texler 01-26-10
REGISTERED CIVIL ENGINEER DATE

6-21-10
PLANS APPROVAL DATE

REGISTERED PROFESSIONAL ENGINEER Daniel L. Texler No. 49792 Exp. 9-30-10 CIVIL STATE OF CALIFORNIA

The State of California or its officers or agents shall not be responsible for the accuracy or completeness of electronic copies of this plan sheet.

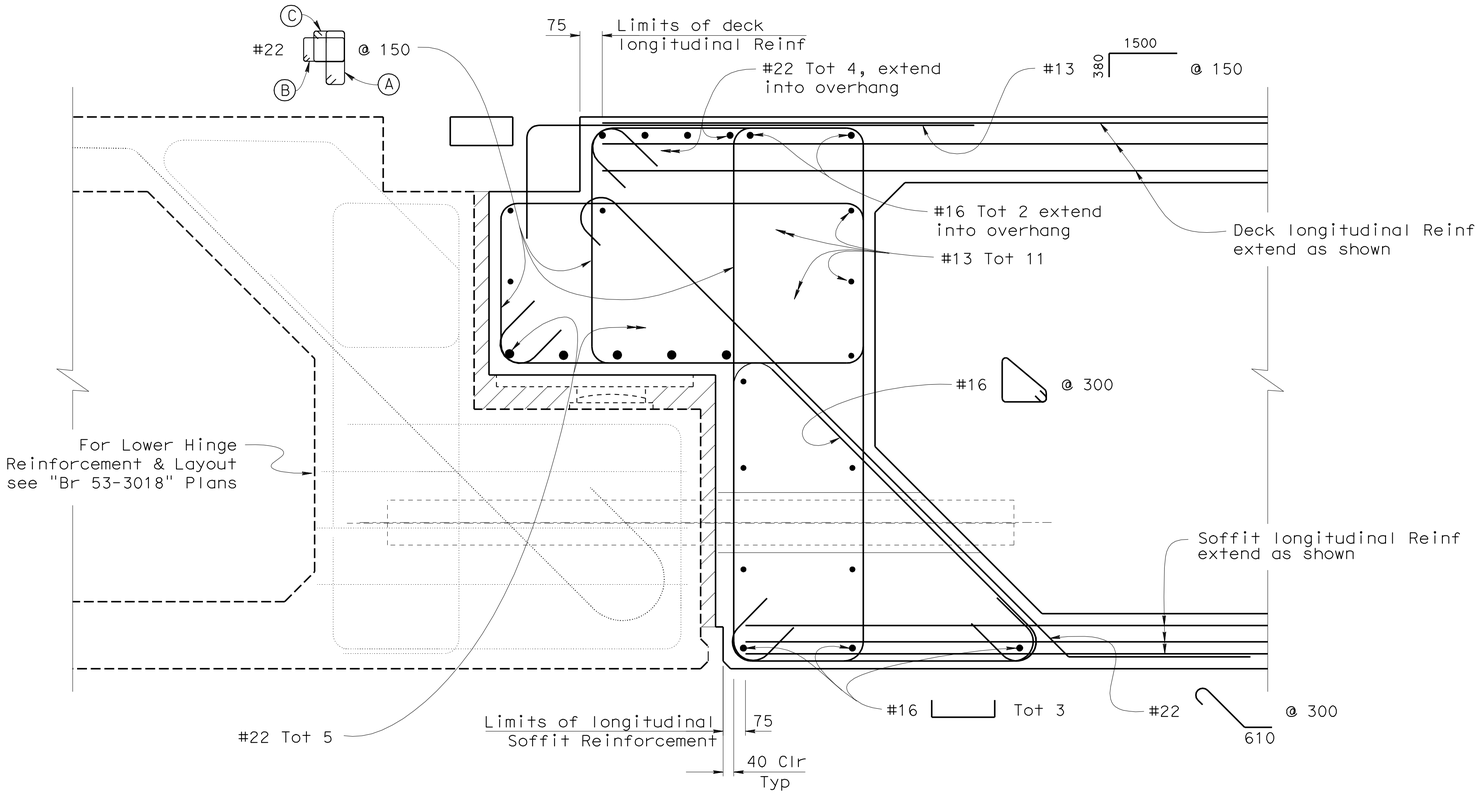

SECTION W-W

SCALE 1:10

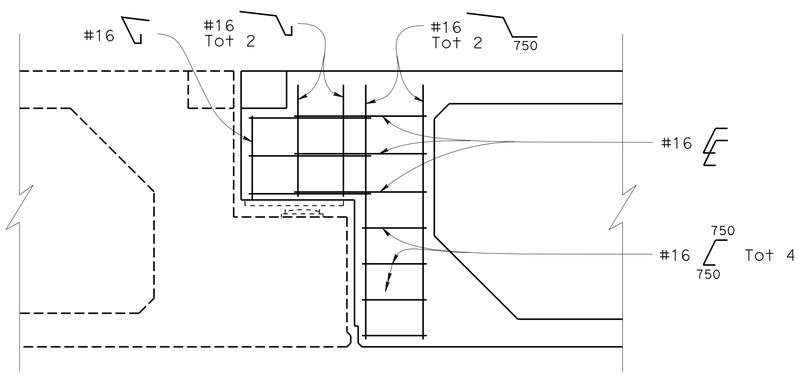

HINGE SIDE REINFORCEMENT

SCALE 1:20

NOTES:

1. For location of 'Section W-W', see "HINGE LAYOUT" sheet.
2. Hinge Seat shown for information only. For details, see Bridge No. 53-3018 "CARMENITA ROAD OC/OH" plans.

Denotes Expanded Polystyrene

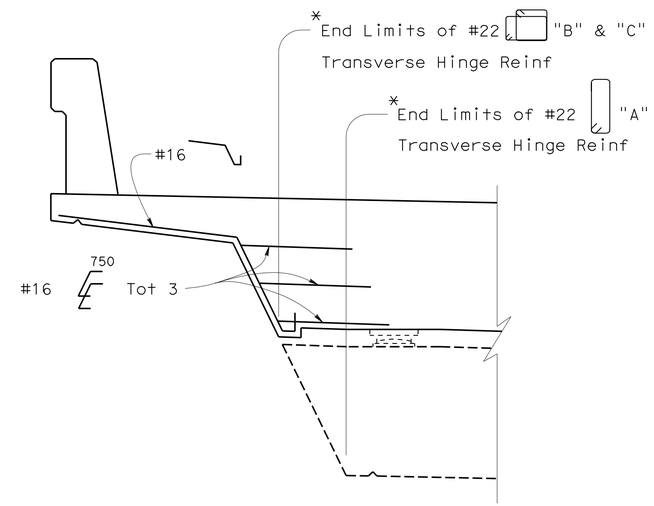

SIDE REINFORCEMENT

SCALE 1:20

* See Section W-W for location of #22 Transverse Hinge Reinf

DESIGN	BY Phu Nguyen	CHECKED D. Menzmer	
DETAILS	BY Pauline Tong	CHECKED D. Menzmer	
QUANTITIES	BY M. Okimura	CHECKED D. Menzmer	

STATE OF CALIFORNIA
DEPARTMENT OF TRANSPORTATION

DIVISION OF ENGINEERING SERVICES
STRUCTURE DESIGN
DESIGN BRANCH 11

BRIDGE NO. 53-3018S
KILOMETER POST 3.875

CARMENITA ROAD NB ON-RAMP
HINGE DETAILS NO. 2

Caltrans Metric

ALL DIMENSIONS ARE IN MILLIMETERS UNLESS OTHERWISE SHOWN

ORIGINAL SCALE IN MILLIMETERS FOR REDUCED PLANS 0 10 20 30 40 50 60 70 80 90 100

CU 07225
EA 2159C1

DISREGARD PRINTS BEARING EARLIER REVISION DATES

REVISION DATES: 1-21-09 2-05-09 6-17-09

SHEET 21 OF 26

FILE => 53-3018s-mm-hngdet02.dgn

STRUCTURES DESIGN DETAIL SHEET (METRIC) (REV.03-17-04)

USERNAME => trrlcnf DATE PLOTTED => 22-JUN-2010 TIME PLOTTED => 17:38

DIST.	COUNTY	ROUTE	KILOMETER POST TOTAL PROJECT	SHEET NO.	TOTAL SHEETS
07	LA	5	2.9/4.9	1005	1082

Caltrans Metric

Daniel L. Texler 01-26-10
REGISTERED ENGINEER - CIVIL

6-21-10
PLANS APPROVAL DATE

REGISTERED PROFESSIONAL ENGINEER Daniel L. Texler No. 49792 Exp. 9-30-10 CIVIL STATE OF CALIFORNIA

The State of California or its officers or agents shall not be responsible for the accuracy or completeness of electronic copies of this plan sheet.

EXPANSION BEARING TABLE

LOCATION	MAXIMUM VERTICAL LOAD (kN)	MINIMUM DEAD LOAD (kN)	DESIGN ROTATION (Radians)	CONCAVE PLATE						CONVEX PLATE		MASONRY PLATE			SOLE PLATE			ASSEMBLY HEIGHT
				WIDTH / LENGTH	FLAT PTFE AREA (m^2)	DIAMETER	SPHERICAL RADIUS	MINIMUM THICKNESS	MAXIMUM THICKNESS	DIAMETER	MAXIMUM THICKNESS	WIDTH	LENGTH	THICKNESS	WIDTH	LENGTH	THICKNESS	
				L_{cp}	A_{PTFE}	D_m	R_{act}	T_{min}	T_{max}	C_m	H_{act}	W_{mp}	L_{mp}	T_{mp}	W_{sp}	L_{sp}	T_{sp}	A_h
Hinge	635	405	.035	222	.029	192	405	19	36	222	35	280	280	22	324	660	39	115

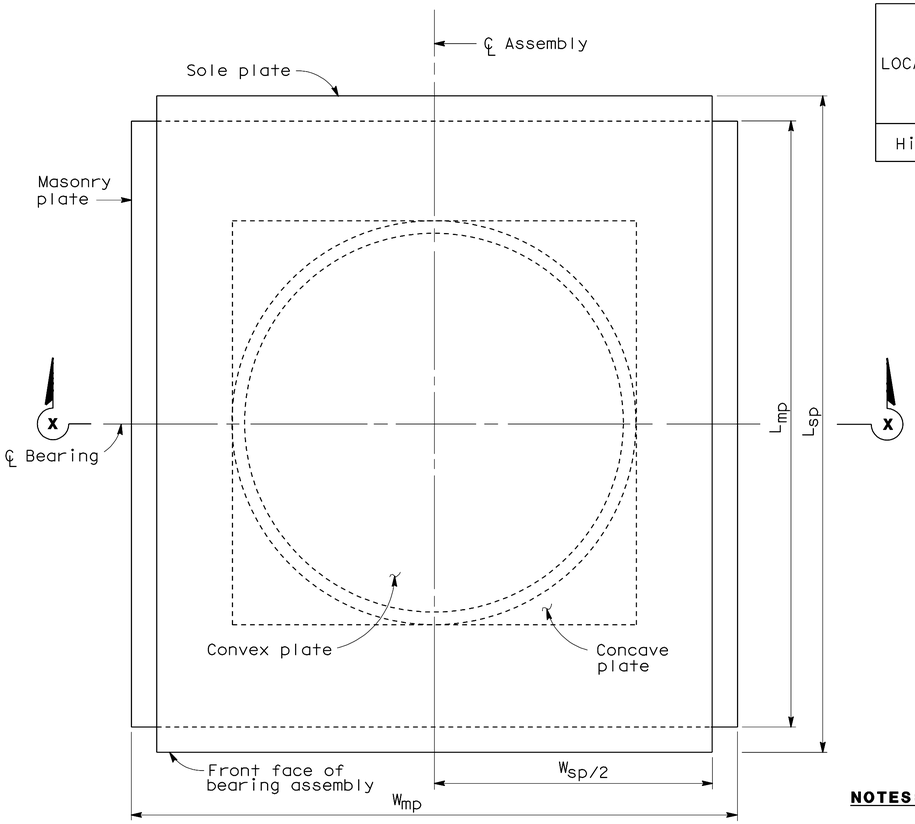

PLAN

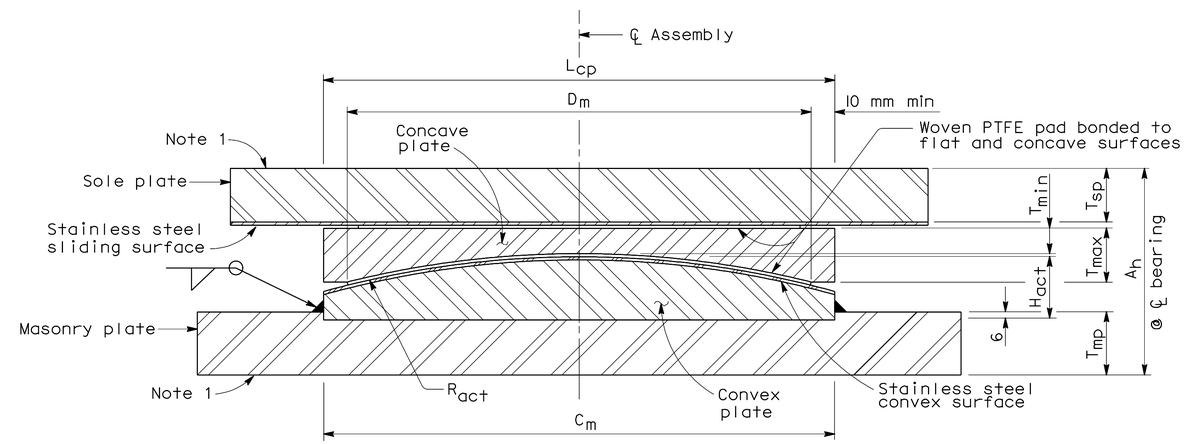

SECTION X-X

NOTES:

1. Anchorage method not shown.
2. All units in millimeters unless otherwise noted.
3. All dimensions shown are steel only unless otherwise noted.
4. H_{act} includes stainless steel.
5. A_h includes PTFE, substratum and stainless steel, (Varies).
6. R_{act} is to sliding surface.

NO SCALE

ALL DIMENSIONS ARE IN MILLIMETERS UNLESS OTHERWISE SHOWN

DATE PLOTTED => 22-JUN-2010 TIME PLOTTED => 17:38

STANDARD DRAWING

RELEASE DATE 4/9/97	DESIGN BY ROBERTO LACALLE	CHECKED ROD SIMMONS	RELEASED BY
	DETAILS BY R. YEE	CHECKED ROD SIMMONS	
FILE NO. xs9-010	SUBMITTED BY ROBERTO LACALLE	DRAWING DATE 11/93	OFFICE CHIEF

DS OSD 2147A (METRIC) (REV. 2/25/97)

ORIGINAL SCALE IN MILLIMETERS FOR REDUCED PLANS 0 10 20 30 40 50 60 70 80 90 100

STATE OF CALIFORNIA DEPARTMENT OF TRANSPORTATION

DIVISION OF ENGINEERING SERVICES

CU 07225
EA 2159C1

BRIDGE NO. 53-3018S
KILOMETER POST 3.875

CARMENITA ROAD NB ON-RAMP

PTFE/SPHERICAL EXPANSION BEARING DETAILS NO. 1

DISREGARD PRINTS BEARING EARLIER REVISION DATES

REVISION DATES (PRELIMINARY STAGE ONLY)

SHEET 22 OF 26

USERNAME => trrichf

53-3018s-n-ptfe01.

DIST	COUNTY	ROUTE	KILOMETER POST TOTAL PROJECT	SHEET No	TOTAL SHEETS
07	LA	5	2.9/4.9	1006	1082

Daniel L. Texler 01-26-10
REGISTERED CIVIL ENGINEER

6-21-10
PLANS APPROVAL DATE

REGISTERED PROFESSIONAL ENGINEER
Daniel L. Texler
No. 49792
Exp. 9-30-10
CIVIL
STATE OF CALIFORNIA

The State of California or its officers or agents shall not be responsible for the accuracy or completeness of electronic copies of this plan sheet.

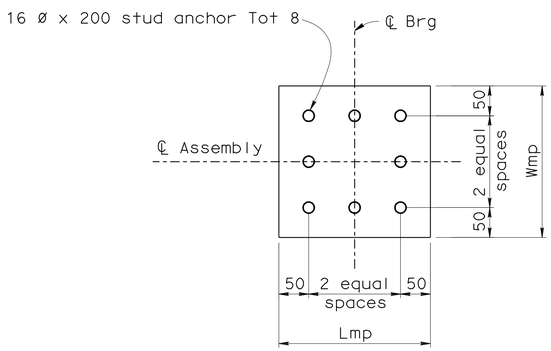

PLAN-MASONRY PLATE AT HINGE

SCALE 1:5

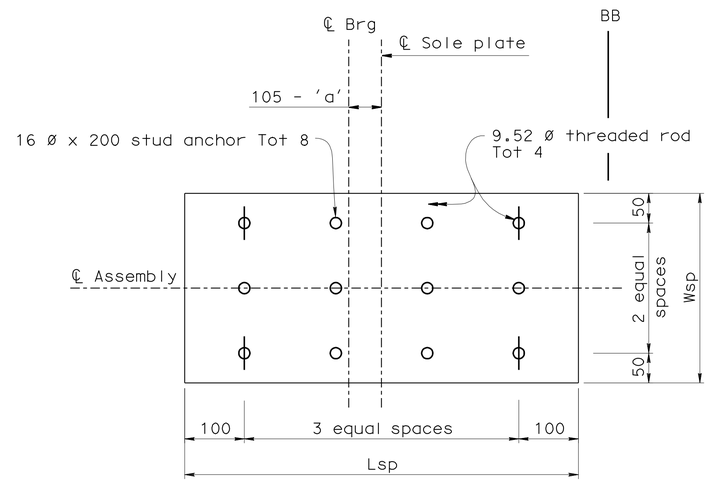

NOTE:

For dimension 'a', see "JOINT SEAL ASSEMBLY (MAXIMUM MOVEMENT RATING = 100 mm)" sheet

PLAN-SOLE PLATE AT HINGE

SCALE 1:5

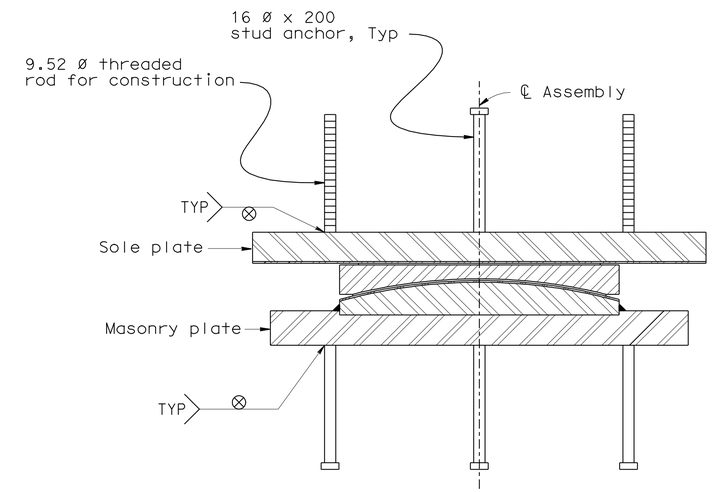

ANCHORAGE DETAIL

NO SCALE

Caltrans Metric

ALL DIMENSIONS ARE IN MILLIMETERS UNLESS OTHERWISE SHOWN

ORIGINAL SCALE IN MILLIMETERS FOR REDUCED PLANS 0 10 20 30 40 50 60 70 80 90 100

	BY	CHECKED
DESIGN	Phu Nguyen	D. Menzmer
DETAILS	Pauline Tong	D. Menzmer
QUANTITIES	M. Okimura	D. Menzmer

STATE OF CALIFORNIA
DEPARTMENT OF TRANSPORTATION

DIVISION OF ENGINEERING SERVICES
STRUCTURE DESIGN
DESIGN BRANCH 11

CU 07225
EA 2159C1

BRIDGE NO. 53-3018S
KILOMETER POST 3.875

CARMENITA ROAD NB ON-RAMP
PTFE/SPHERICAL EXPANSION BEARING DETAILS NO. 2

DISREGARD PRINTS BEARING EARLIER REVISION DATES

REVISION DATES (PRELIMINARY STAGE ONLY): ~~1-12-09~~ ~~6-11-09~~ 6-17-09

SHEET 23 OF 26

FILE => 53-3018s-n-ptfe02.dgn

USERNAME => ttrrlchf DATE PLOTTED => 22-JUN-2010 TIME PLOTTED => 17:38

DIST.	COUNTY	ROUTE	KILOMETER POST TOTAL PROJECT	SHEET NO.	TOTAL SHEETS
07	LA	5	2.9/4.9	1007	1082

Caltrans Metric

Daniel L. Texler 01-26-10
REGISTERED ENGINEER - CIVIL

6-21-10
PLANS APPROVAL DATE

The State of California or its officers or agents shall not be responsible for the accuracy or completeness of electronic copies of this plan sheet.

REGISTERED PROFESSIONAL ENGINEER Daniel L. Texler No. 49792 Exp. 9-30-10 CIVIL STATE OF CALIFORNIA

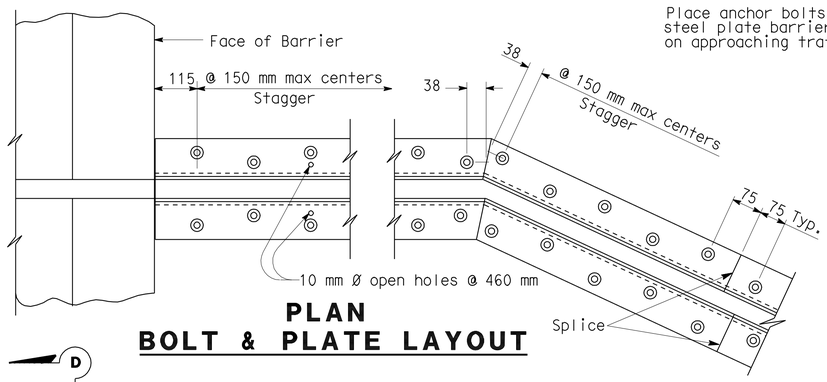

PLAN
BOLT & PLATE LAYOUT

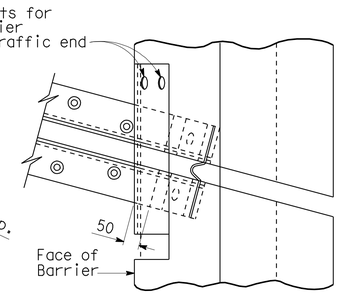

SKEW ≤ 20°

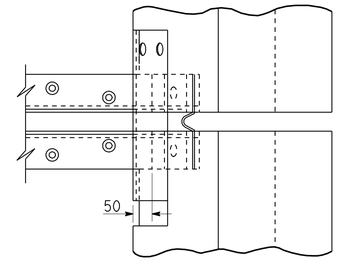

SKEW > 20°

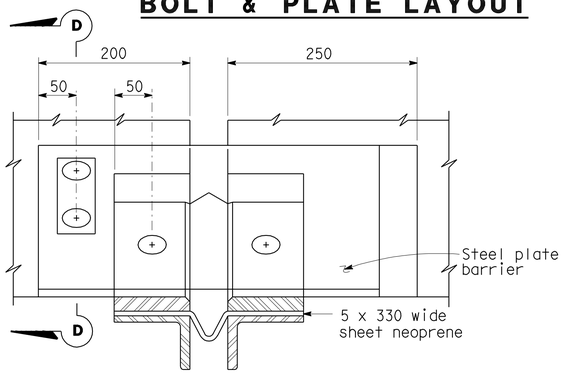

VIEW B-B

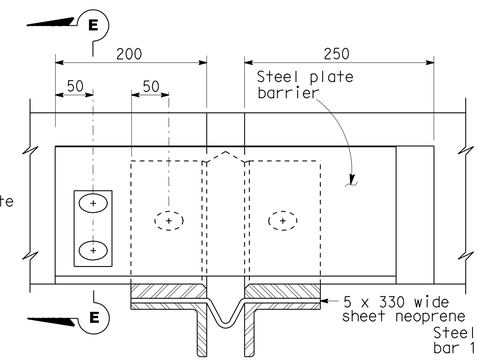

VIEW C-C

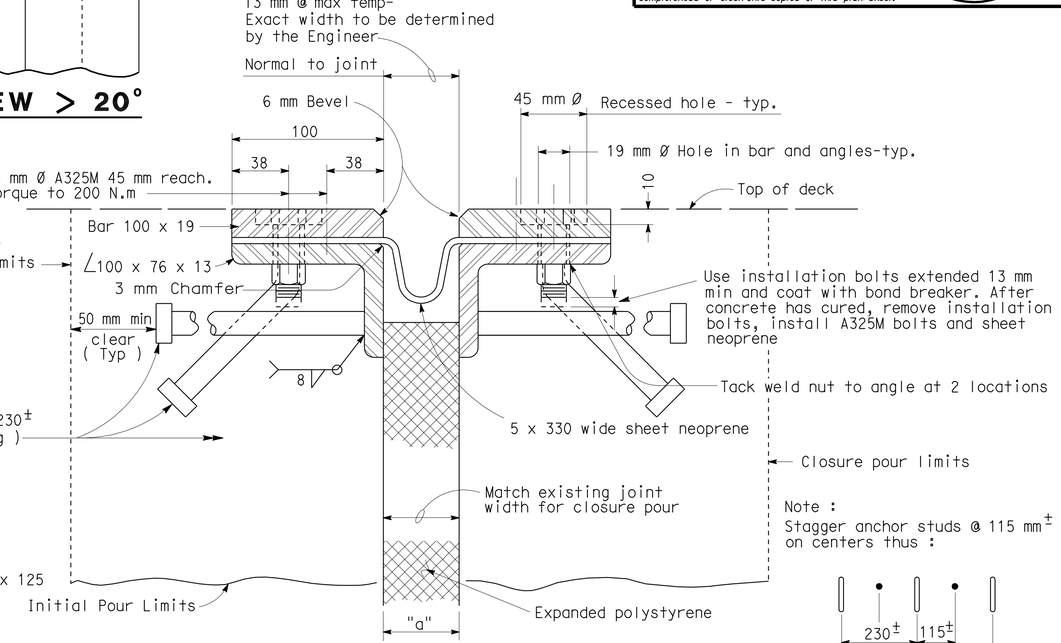

SECTION A-A

Note :
Stagger anchor studs @ 115 mm± on centers thus :

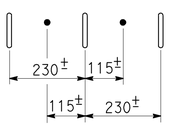

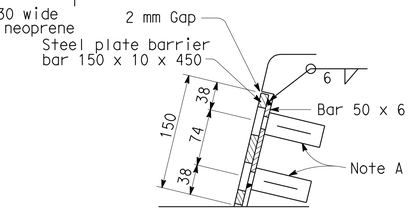

SECTION E-E

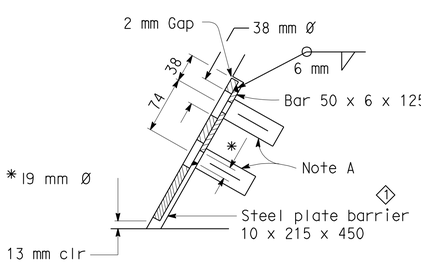

SECTION D-D

Joint Information			"a" Dimensions		
Location	Movement Rating (MR)	Skew	Winter	Spring & Fall	Summer
Hinge	75	0	65	50	35

NOTES:

Full penetration butt welds may be substituted for fillet welds on all anchor studs.

Alternate types of anchor studs may be permitted subject to the approval by the Engineer.

Joint seal assembly to be used in conjunction with closure pour. (See other sheets for limits). Closure pour shall not be placed until final deck surface is within the tolerance specified.

Use joint at crown of roadway, at any change in transverse slope in deck and at changes in horizontal direction. Place other joints at or near lanes. All metal parts to be painted or galvanized after fabrication.

Sheet neoprene shall be fabricated in one continuous piece or joints shall be vulcanized. Neoprene shall be fabricated to bend around corners. 25 mm holes in neoprene sheets shall be drilled or punched so that the neoprene is not distorted at the time of installation.

NOTE A

Insert assembly or expansion anchorage for 16 x 45 A325M bolt.

NOTE B

Use the Sidewalk Detail at all sidewalk joints. Use the Barrier Detail at both sides if the roadway is crowned or if the difference in elevation between the ends of the seal is 150 mm or less.

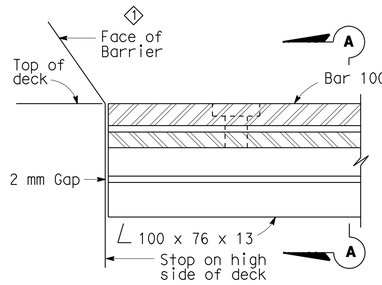

HIGH SIDE BARRIER DETAIL

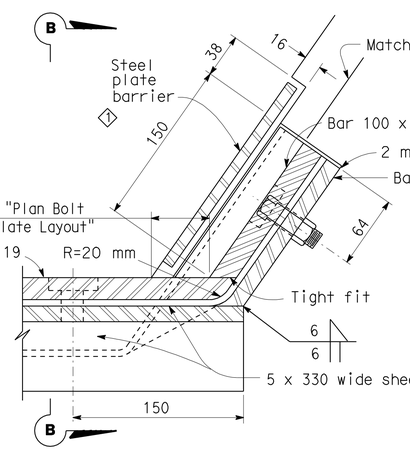

LOW SIDE BARRIER DETAIL
(See Note B)

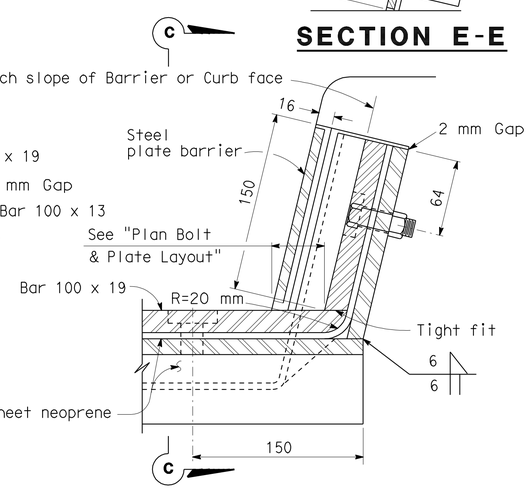

SIDEWALK DETAIL
(See Note B)

NO SCALE

ALL DIMENSIONS ARE IN MILLIMETERS UNLESS OTHERWISE SHOWN

STANDARD DRAWING					
RELEASE DATE 4/1/97	DESIGN	BY H. HERR	CHECKED R. LACALLE	RELEASED BY	
FILE NO. xs8-010	DETAILS	BY R. YEE	CHECKED R. LACALLE		
	SUBMITTED	BY C.W. PURKISS	DRAWING DATE 9/93	OFFICE CHIEF	

1 Modify Face of Barrier

STATE OF CALIFORNIA
DEPARTMENT OF TRANSPORTATION

DIVISION OF ENGINEERING SERVICES

BRIDGE NO. 53-3018S
KILOMETER POST 3.875

CARMENITA ROAD NB ON-RAMP
JOINT SEAL ASSEMBLY (MAXIMUM MOVEMENT RATING = 100 mm)

DS OSD 2147A (METRIC) (REV. 2/25/97)

ORIGINAL SCALE IN MILLIMETERS FOR REDUCED PLANS 0 10 20 30 40 50 60 70 80 90 100

CU 07225
EA 2159C1

DISREGARD PRINTS BEARING EARLIER REVISION DATES

REVISION DATES (PRELIMINARY STAGE ONLY)

SHEET 24 OF 26

USERNAME => trrichf

53-3018s-p-jtseal.

DATE PLOTTED => 22-JUN-2010 TIME PLOTTED => 17:39

DIST.	COUNTY	ROUTE	KILOMETER POST TOTAL PROJECT	SHEET NO.	TOTAL SHEETS
07	LA	5	2.9/4.9	1008	1082

Caltrans Metric

Daniel L. Texler 01-26-10
REGISTERED ENGINEER - CIVIL
6-21-10
PLANS APPROVAL DATE

REGISTERED PROFESSIONAL ENGINEER Daniel L. Texler No. 49792 Exp. 9-30-10 CIVIL STATE OF CALIFORNIA

The State of California or its officers or agents shall not be responsible for the accuracy or completeness of electronic copies of this plan sheet.

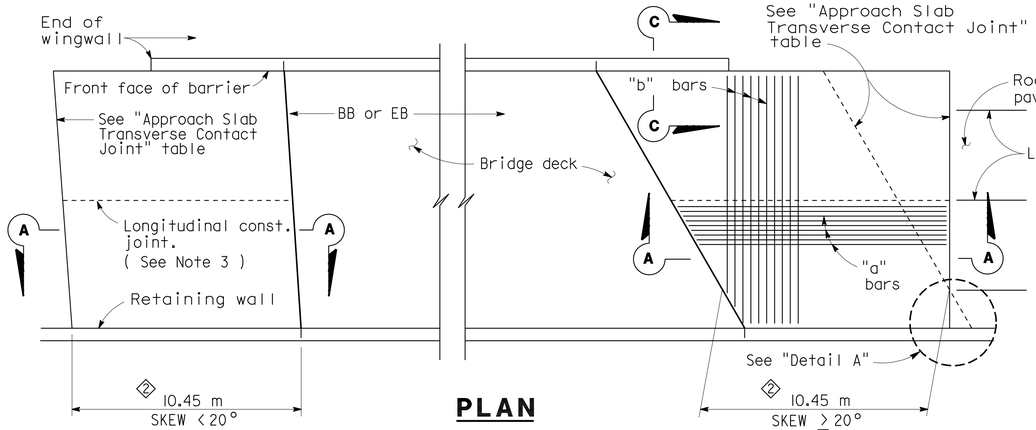

PLAN

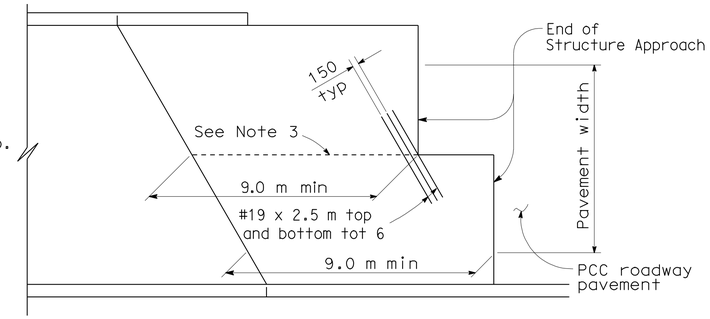

STRUCTURE APPROACH - END STAGGER DETAIL

APPROACH SLAB TRANSVERSE CONTACT JOINT		
APPROACH SKEW	WITH AC ROADWAY PAVEMENT	WITH PCC ROADWAY PAVEMENT
< 20°	Parallel to face of paving notch	Parallel to face of paving notch
20°- 45°	Parallel to face of P N use (Detail A)	Stagger lines 7.2 m to 10.8 m apart.
> 45°	Parallel to face of P N use (Detail A)	Stagger at each lane line.

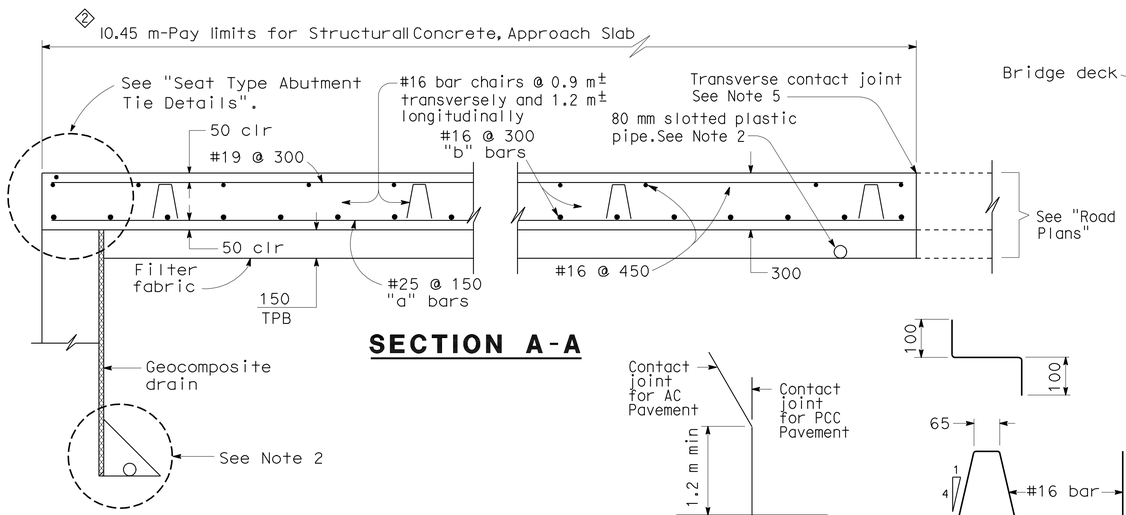

SECTION A-A

DETAIL A

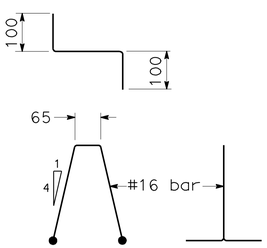

BAR CHAIR DETAIL

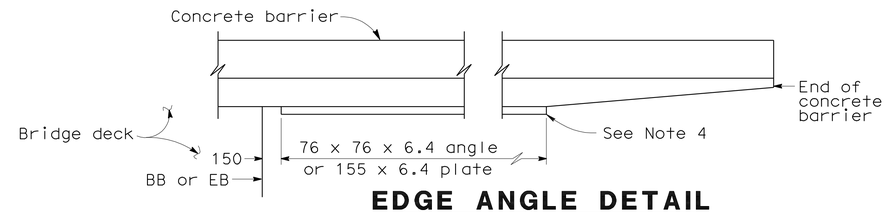

EDGE ANGLE DETAIL

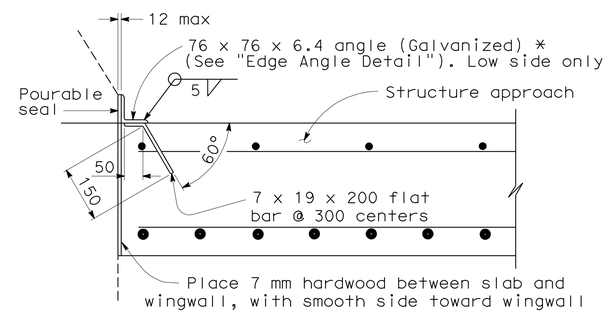

*(TO BE USED WITH TYPE 25 OR TYPE 27 CONCRETE BARRIER)

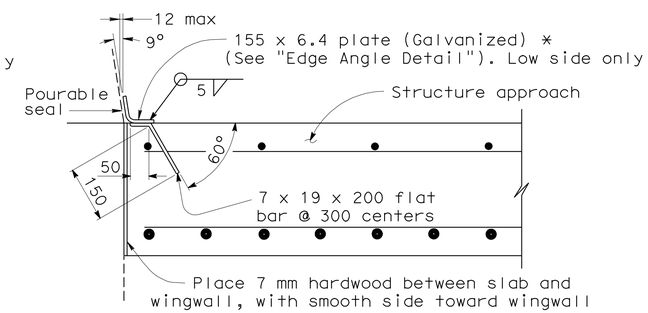

*(TO BE USED WITH TYPE 732 OR TYPE 736 CONCRETE BARRIER)

DETAIL B

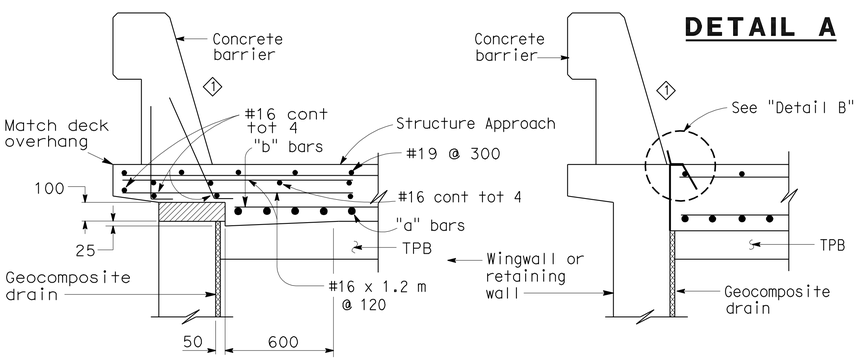

TYPE E-1 TYPE E-2

SECTION C-C

(Type E-1 to be used,unless otherwise shown on plans)

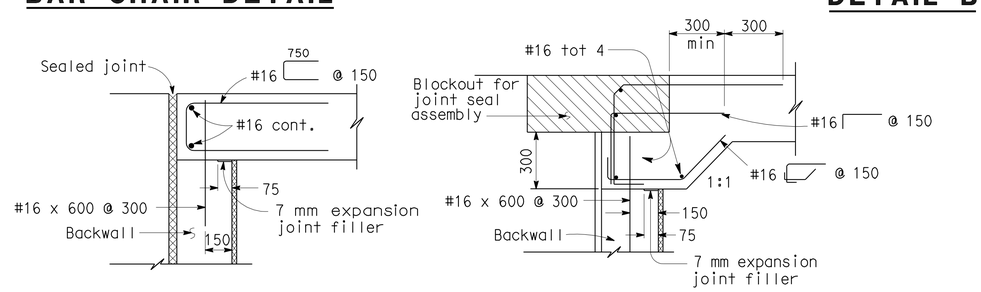

MR ≤ 50 mm MR > 50 mm

SEAT TYPE ABUTMENT TIE DETAILS (SEE NOTE 1)

NOTES:

1. For details not shown,see Structure Plans. For MR ≤ 50 mm,adjust bar reinforcement to clear a sawcut for sealed joint,when required.
2. For drainage details,see "Structure Approach Drainage Details" sheet.
3. Longitudinal construction joints,when permitted by the Engineer, shall be located on lane lines.
4. End angle or plate at beginning of barrier transition, end of wingwall or end of structure approach as applicable.
5. For transverse contact joint with new PCC paving, refer to Standard Plan P10.
6. At the contractor's option, approach slab transverse reinforcement may be placed parallel to paving notch. Spacing of transverse reinforcement is measured along ℄ roadway.

Remove all polystyrene.

ALL DIMENSIONS ARE IN MILLIMETERS UNLESS OTHERWISE SHOWN

NO SCALE

STANDARD DRAWING				
RELEASE DATE 3/14/05	DESIGN	BY M. TRAFFALIS	CHECKED E. THORKILDSEN	RELEASED BY
FILE NO. xs3-120	DETAILS	BY R. YEE	CHECKED E. THORKILDSEN	OFFICE CHIEF
	SUBMITTED	BY M. HA	DRAWING DATE 4/98	

1 Modify Barrier Face
2 Modify Approach Slab length

STATE OF CALIFORNIA DEPARTMENT OF TRANSPORTATION

DIVISION OF ENGINEERING SERVICES

CU 07225
EA 2159C1

BRIDGE NO. 53-3018S
KILOMETER POST 3.875

CARMENITA ROAD NB ON-RAMP

STRUCTURE APPROACH TYPE N(9S) MOD

DS OSD 2147A (METRIC) (REV. 2/25/97)

ORIGINAL SCALE IN MILLIMETERS FOR REDUCED PLANS 0 10 20 30 40 50 60 70 80 90 100

DISREGARD PRINTS BEARING EARLIER REVISION DATES

REVISION DATES (PRELIMINARY STAGE ONLY)

SHEET 25 OF 26

USERNAME => trrichf

DATE PLOTTED => 22-JUN-2010 TIME PLOTTED => 17:39

53-3018s-u-sacn9s.

DIST.	COUNTY	ROUTE	KILOMETER POST TOTAL PROJECT	SHEET NO.	TOTAL SHEETS
07	LA	5	2.9/4.9	1009	1082

Caltrans Metric

Daniel L. Texler 01-26-10
REGISTERED ENGINEER - CIVIL

6-21-10
PLANS APPROVAL DATE

REGISTERED PROFESSIONAL ENGINEER Daniel L. Texler No. 49792 Exp. 9-30-10 CIVIL STATE OF CALIFORNIA

The State of California or its officers or agents shall not be responsible for the accuracy or completeness of electronic copies of this plan sheet.

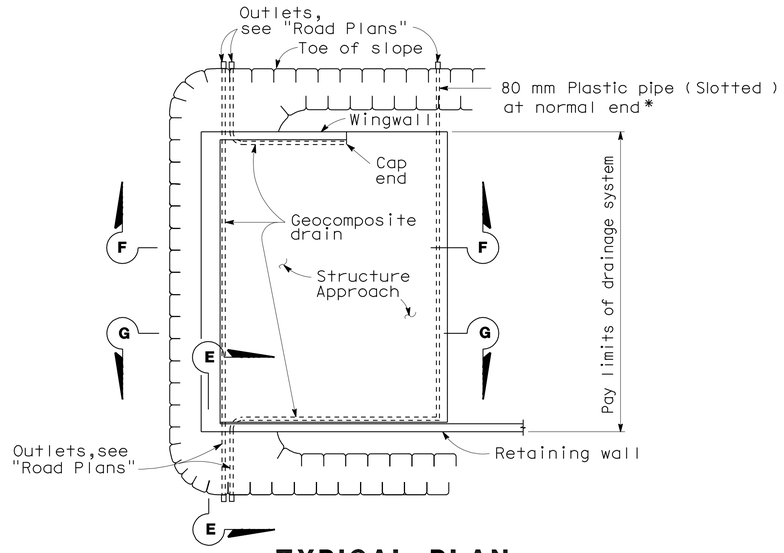

TYPICAL PLAN

*For pipe layout at staggered end, see "Detail B".

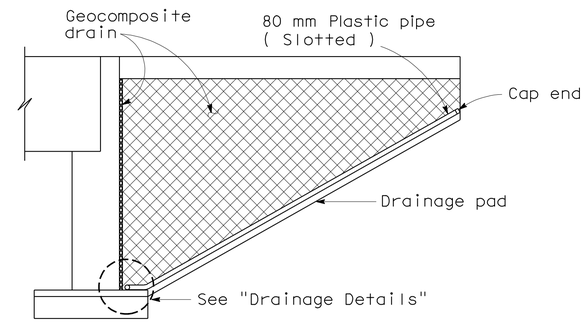

CANTILEVER WINGWALL SECTION F-F

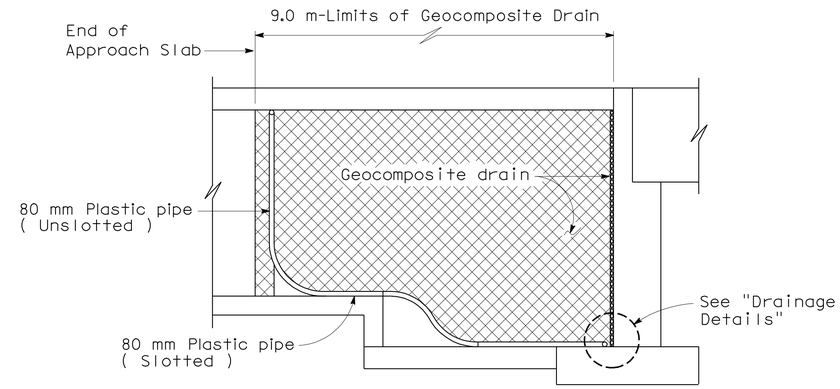

RETAINING WALL WINGWALL SECTION G-G

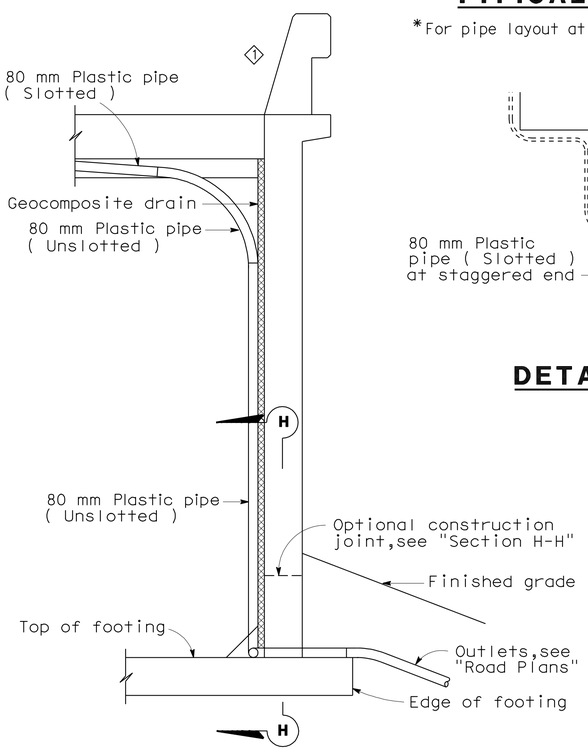

SECTION E-E

NOTE: Bends and junctions in 80 mm plastic pipe are 750 mm radius min.

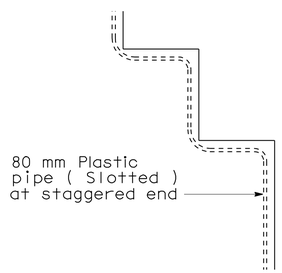

DETAIL B

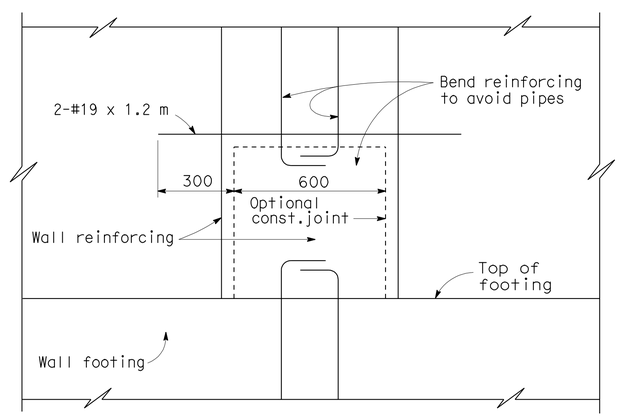

SECTION H-H

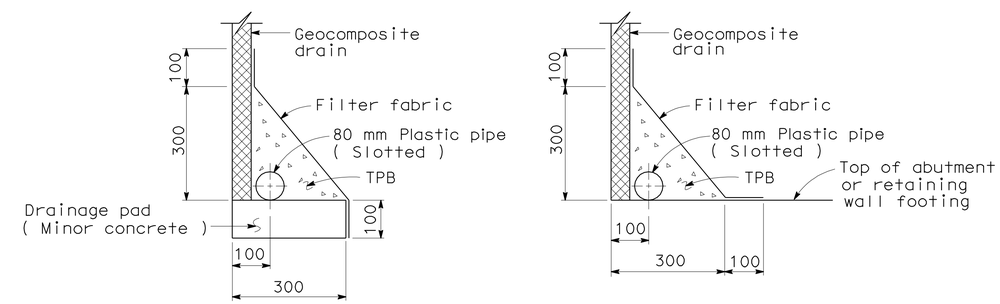

WITHOUT FOOTING **WITH FOOTING**

DRAINAGE DETAILS

ALL DIMENSIONS ARE IN MILLIMETERS UNLESS OTHERWISE SHOWN

NO SCALE

STANDARD DRAWING					
RELEASE DATE 4/23/98	DESIGN	BY M. TRAFFALIS	CHECKED E. THORKILDSEN	RELEASED BY	
FILE NO. xs3-110	DETAILS	BY R. YEE	CHECKED E. THORKILDSEN	OFFICE CHIEF	
	SUBMITTED	BY M. HA	DRAWING DATE 4/98		

1 Modify Barrier Face

STATE OF CALIFORNIA DEPARTMENT OF TRANSPORTATION

DIVISION OF ENGINEERING SERVICES

BRIDGE NO. 53-3018S

KILOMETER POST 3.875

CARMENITA ROAD NB ON-RAMP

STRUCTURE APPROACH DRAINAGE DETAILS

DS OSD 2147A (METRIC) (REV. 2/25/97)

ORIGINAL SCALE IN MILLIMETERS FOR REDUCED PLANS 0 10 20 30 40 50 60 70 80 90 100

CU 07225
EA 2159C1

DISREGARD PRINTS BEARING EARLIER REVISION DATES

REVISION DATES (PRELIMINARY STAGE ONLY)

SHEET 26 OF 26

USERNAME => trrichf

53-3018s-u-sadd.dg

DATE PLOTTED => 22-JUN-2010 TIME PLOTTED => 17:33

DIST	COUNTY	ROUTE	KILOMETER POST TOTAL PROJECT	SHEET No	TOTAL SHEETS
07	LA	5	2.9/4.9	1010	1082

Daniel L. Texler 01-26-10
REGISTERED CIVIL ENGINEER DATE

6-21-10
PLANS APPROVAL DATE

REGISTERED PROFESSIONAL ENGINEER Daniel L. Texler No. 49792 Exp. 9-30-10 CIVIL STATE OF CALIFORNIA

The State of California or its officers or agents shall not be responsible for the accuracy or completeness of electronic copies of this plan sheet.

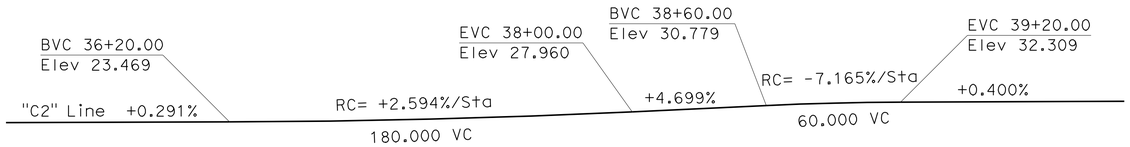

PROFILE GRADE

No Scale

NOTES:

1. Paint 'BR NO. 53-3019K'
2. Paint 'CARMENITA RD NB OFF-RAMP'
3. Paint 'C2 BENT NO. __'
4. Structure Approach Type N(9S)
5. Conc Barrier Type 736 Mod, install utility conduits as req'd, (not shown) for size and other data, see "ROAD PLANS"

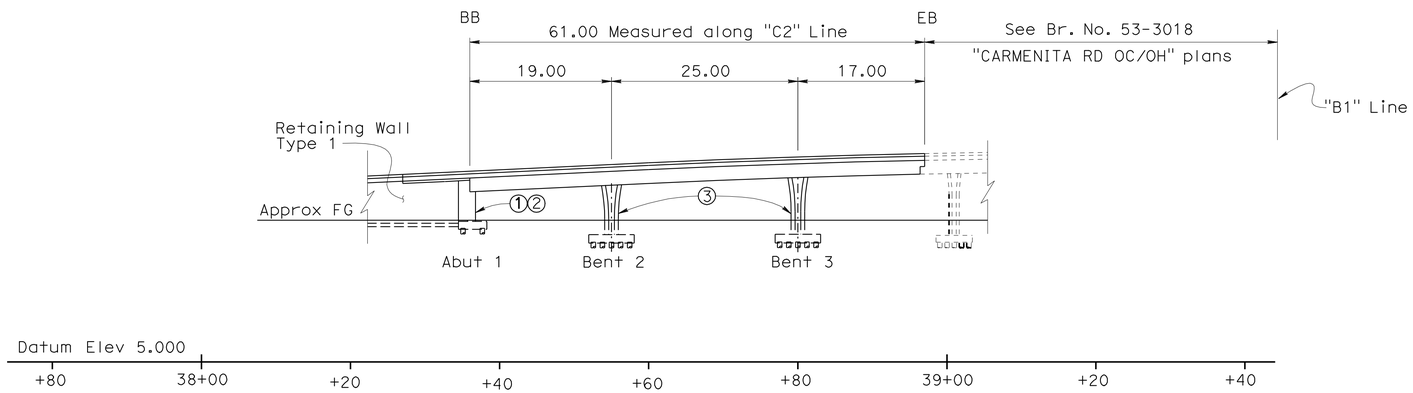

ELEVATION

SCALE 1:400

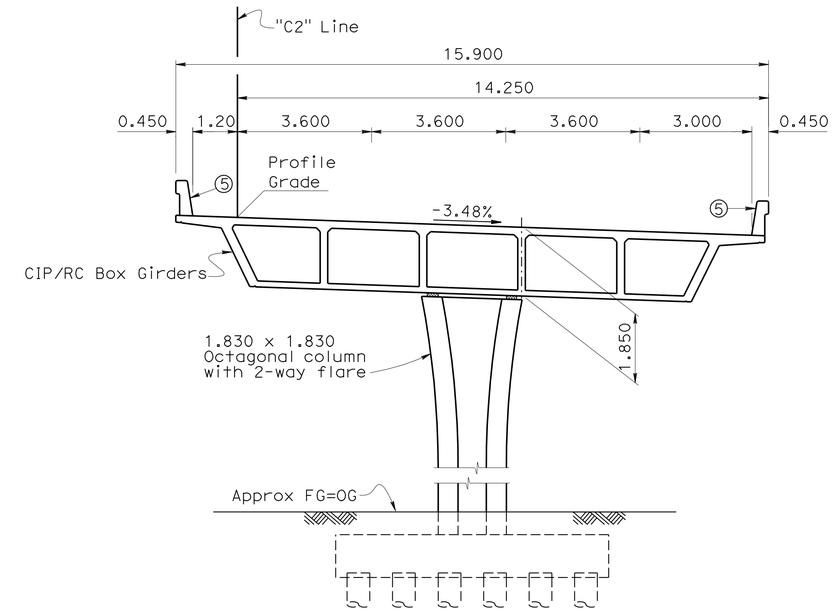

TYPICAL SECTION

SCALE 1:80

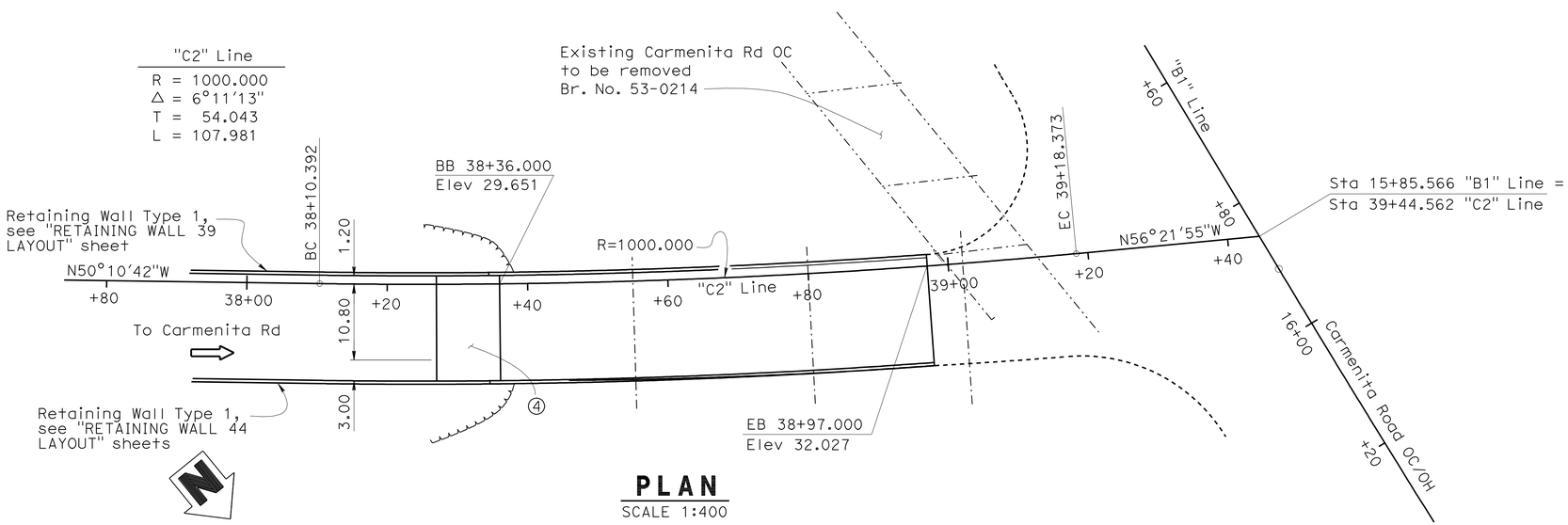

PLAN

SCALE 1:400

QUANTITIES

STRUCTURE EXCAVATION (BRIDGE)	655	m^3
STRUCTURE EXCAVATION (CONTAMINATED)	312	m^3
STRUCTURE EXCAVATION (RETAINING WALL)	1272	m^3
STRUCTURE BACKFILL (BRIDGE)	393	m^3
STRUCTURE BACKFILL (RETAINING WALL)	1081	m^3
FURNISH STEEL PIPE PILING (610 MM)	1355	m
DRIVE STEEL PIPE PILE (610 MM)	73	EA
FURNISH PILING (CLASS 400) (ALTERNATIVE V)	1969	m
DRIVE PILE (CLASS 400) (ALTERNATIVE V)	135	EA
760 mm PILE CASING	1040	m
STRUCTURAL CONCRETE, BRIDGE FOOTING	267	m^3
STRUCTURAL CONCRETE, BRIDGE	687	m^3
STRUCTURAL CONCRETE, RETAINING WALL	464	m^3
STRUCTURAL CONCRETE, APPROACH SLAB (TYPE N)	43	m^3
ARCHITECTURAL TREATMENT	587	m^2
PTFE SPHERICAL BEARING	5	EA
JOINT SEAL (MR 30 MM)	15	m
JOINT SEAL ASSEMBLY (MR 60 MM)	15	m
BAR REINFORCING STEEL (BRIDGE)	164 644	kg
BAR REINFORCING STEEL (RETAINING WALL)	19 343	kg
HEADED BAR REINFORCING	208	EA
MISCELLANEOUS METAL (BRIDGE)	396	Kg
CONCRETE BARRIER (TYPE 736 MODIFIED)	140	m
CONCRETE BARRIER (TYPE 736A MODIFIED)	182	m

NOTES: FOR LIMITS OF STRUCTURE EXCAVATION (CONTAMINATED), SEE "ROAD PLANS".

Caltrans Metric

	BY	CHECKED		
DESIGN	Bill Kemp	D. Menzmer	LOAD FACTOR DESIGN	LIVE LOADING: HS20-44 AND ALTERNATIVE AND PERMIT DESIGN LOAD
DETAILS	Jaime Ramirez	D. Menzmer	LAYOUT	BY Bill Kemp / CHECKED
QUANTITIES	M. Okimura	D. Menzmer	SPECIFICATIONS	BY M. Pan / PLANS AND SPECS COMPARED

DESIGN ENGINEER

ALL DIMENSIONS ARE IN METERS UNLESS OTHERWISE SHOWN

ORIGINAL SCALE IN MILLIMETERS FOR REDUCED PLANS 0 10 20 30 40 50 60 70 80 90 100

STATE OF CALIFORNIA
DEPARTMENT OF TRANSPORTATION

DIVISION OF ENGINEERING SERVICES
STRUCTURE DESIGN
DESIGN BRANCH 11

CU 07225
EA 2159C1

BRIDGE NO. 53-3019K
KILOMETER POST 3.88

CARMENITA ROAD NB OFF-RAMP
GENERAL PLAN

DISREGARD PRINTS BEARING EARLIER REVISION DATES

REVISION DATES: 4-03-08 1-7-10 1-11-10 8-1-08 1-20-09 5-13-09 6-10-09 7-13-09 12-28-09

SHEET 1 OF 28

FILE => 53-3019k-a-gp.dgn

STRUCTURES DESIGN GENERAL PLAN SHEET (METRIC) (REV.03-17-04)

USERNAME => trstrk DATE PLOTTED => 15-FEB-2011 TIME PLOTTED => 11:03

DIST	COUNTY	ROUTE	KILOMETER POST TOTAL PROJECT	SHEET No	TOTAL SHEETS
07	LA	5	2.9/4.9	1011	1082

Daniel L. Texler 5/24/10
REGISTERED CIVIL ENGINEER DATE

6-21-10
PLANS APPROVAL DATE

REGISTERED PROFESSIONAL ENGINEER
Daniel L. Texler
No. 49792
Exp. 9-30-10
CIVIL
STATE OF CALIFORNIA

The State of California or its officers or agents shall not be responsible for the accuracy or completeness of electronic copies of this plan sheet.

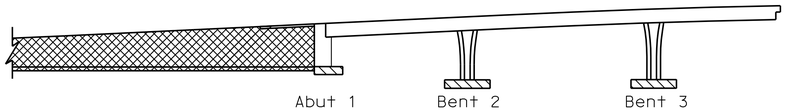

Structural Concrete, Bridge
Structural Concrete, Bridge Footing
Structural Concrete, Retaining Wall

CONCRETE STRENGTH AND TYPE LIMITS

No Scale

GENERAL NOTES
LOAD FACTOR DESIGN

DESIGN: CALTRANS BRIDGE DESIGN SPECIFICATIONS
LFD Version April 2000 (1996 AASHTO with Interims and Revision by Caltrans)

SEISMIC DESIGN: CALTRANS SEISMIC DESIGN CRITERIA (SDC)
Version 1.4, June 2006

DEAD LOAD: Includes 1675 Pa for Future Wearing Surface

LIVE LOADING: HS20-44 and Alternative and Permit Design Load

SEISMIC LOADING: Site Specific ARS Curve as shown

REINFORCED CONCRETE: f_y = 414 MPa
f'_c = 25 MPa
n = 8

Transverse Deck Slabs (Working Stress Design):
f_s = 140 MPa
f_c = 8 MPa
n = 10

STRUCTURAL STEEL: Steel Pipe Piles
ASTM-A252 M, Grade 3
f_y = 310 MPa
f_u = 455 MPa

STRUCTURAL STEEL: Steel Pipe: Shear Keys
ASTM-A53/A53M, Grade B
f_y = 240 MPa
f_u = 415 MPa

RAILING LOAD: 240 kN Traffic Collision Load (LFD) applied laterally at the top of barrier and distributed over a longitutional distance of 3.008 meters.

INDEX TO PLANS

SHEET No.	TITLE
1	GENERAL PLAN
2	INDEX TO PLANS
3	DECK CONTOURS
4	FOUNDATION PLAN
5	PILE DATA
6	PILE DETAILS
7	ABUTMENT LAYOUT
8	ABUTMENT DETAILS
9	RETAINING WALL 39 LAYOUT
10	RETAINING WALL 44 LAYOUT No. 1
11	RETAINING WALL 44 LAYOUT No. 2
12	RETAINING WALL 44 LAYOUT No. 3
13	RETAINING WALL DETAILS
14	BENT DETAILS No. 1
15	BENT DETAILS No. 2
16	FOOTING LAYOUT
17	TYPICAL SECTION
18	GIRDER LAYOUT
19	ADDITIONAL GIRDER REINFORCEMENT No. 1
20	ADDITIONAL GIRDER REINFORCEMENT No. 2
21	HINGE DETAILS No. 1
22	HINGE DETAILS No. 2
23	HINGE DETAILS No. 3
24	PTFE/SPHERICAL EXPANSION BEARING DETAIL No. 1
25	PTFE/SPHERICAL EXPANSION BEARING DETAIL No. 2
26	JOINT SEAL ASSEMBLY (MAXIMUM MOVEMENT RATING = 100 mm)
27	STRUCTURE APPROACH TYPE N(9S)
28	STRUCTURE APPROACH DRAINAGE DETAILS

STANDARD PLANS DATED JULY 2004

A10A	ACRONYMS AND ABBREVIATIONS (A-L)
A10B	ACRONYMS AND ABBREVIATIONS (M-Z)
A10C	SYMBOLS (SHEET 1 OF 2)
A10D	SYMBOLS (SHEET 2 OF 2)
A62B	LIMITS OF PAYMENT FOR EXCAVATION AND BACKFILL - BRIDGE
B0-1	BRIDGE DETAILS
B0-3	BRIDGE DETAILS
B0-5	BRIDGE DETAILS
B0-13	BRIDGE DETAILS
B2-5	PILE DETAILS CLASS 400 CLASS 625 ALTERNATIVE "V"
B3-1	RETAINING WALL TYPE 1 - H=1200 THROUGH 9100 mm
B3-8	RETAINING WALL DETAILS No. 1
RSP B6-21	JOINT SEALS (MAXIMUM MOVEMENT RATING = 50 mm)
B7-1	BOX GIRDER DETAILS
B11-56	CONCRETE BARRIER TYPE 736

STANDARD PLAN SHEET No.
DETAIL No.

Caltrans Metric

	BY	CHECKED
DESIGN	Bill Kemp	D. Menzmer
DETAILS	Pauline Tong	D. Menzmer
QUANTITIES	M. Okimura	D. Menzmer

STATE OF CALIFORNIA
DEPARTMENT OF TRANSPORTATION

DIVISION OF ENGINEERING SERVICES
STRUCTURE DESIGN
DESIGN BRANCH 11

BRIDGE NO. 53-3019K
KILOMETER POST 3.88

CARMENITA ROAD NB OFF-RAMP
INDEX TO PLANS

ALL DIMENSIONS ARE IN MILLIMETERS UNLESS OTHERWISE SHOWN

ORIGINAL SCALE IN MILLIMETERS FOR REDUCED PLANS 0 10 20 30 40 50 60 70 80 90 100

CU 07225
EA 2159C1

DISREGARD PRINTS BEARING EARLIER REVISION DATES

REVISION DATES: 10-5-06 1-23-09 5-14-09 5-18-09 6-10-09 6-30-09 12-16-09 12-28-09 1-06-10 5-20-10

SHEET 2 OF 28

FILE => 53-3019k-b-itp.dgn

STRUCTURES DESIGN DETAIL SHEET (METRIC) (REV.03-17-04)

USERNAME => trrichf DATE PLOTTED => 22-JUN-2010 TIME PLOTTED => 17:40

DIST	COUNTY	ROUTE	KILOMETER POST TOTAL PROJECT	SHEET No	TOTAL SHEETS
07	LA	5	2.9/4.9	1012	1082

Daniel L. Texler 01-26-10
REGISTERED CIVIL ENGINEER DATE

6-21-10
PLANS APPROVAL DATE

REGISTERED PROFESSIONAL ENGINEER
Daniel L. Texler
No. 49792
Exp. 9-30-10
CIVIL
STATE OF CALIFORNIA

The State of California or its officers or agents shall not be responsible for the accuracy or completeness of electronic copies of this plan sheet.

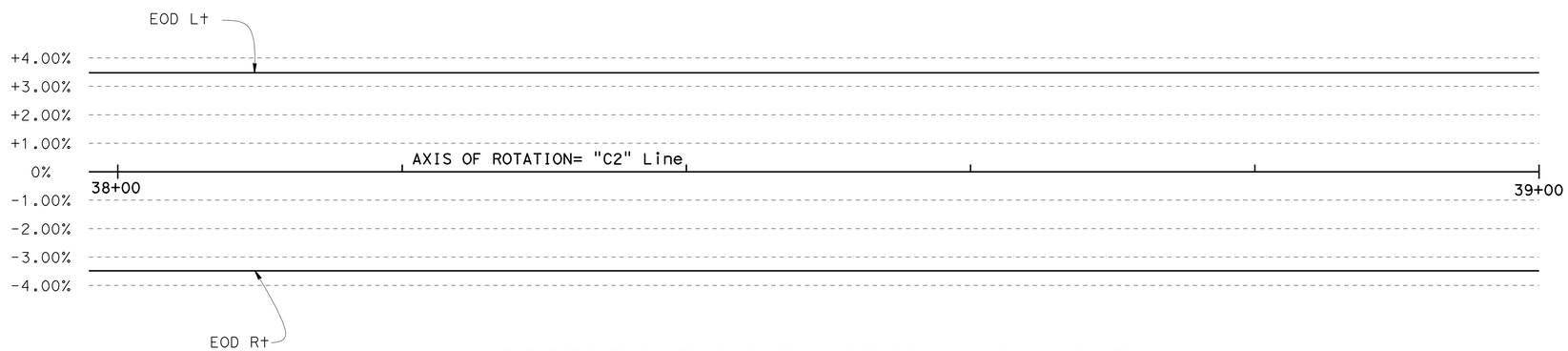

SUPERELEVATION DIAGRAM - C2 LINE

No Scale

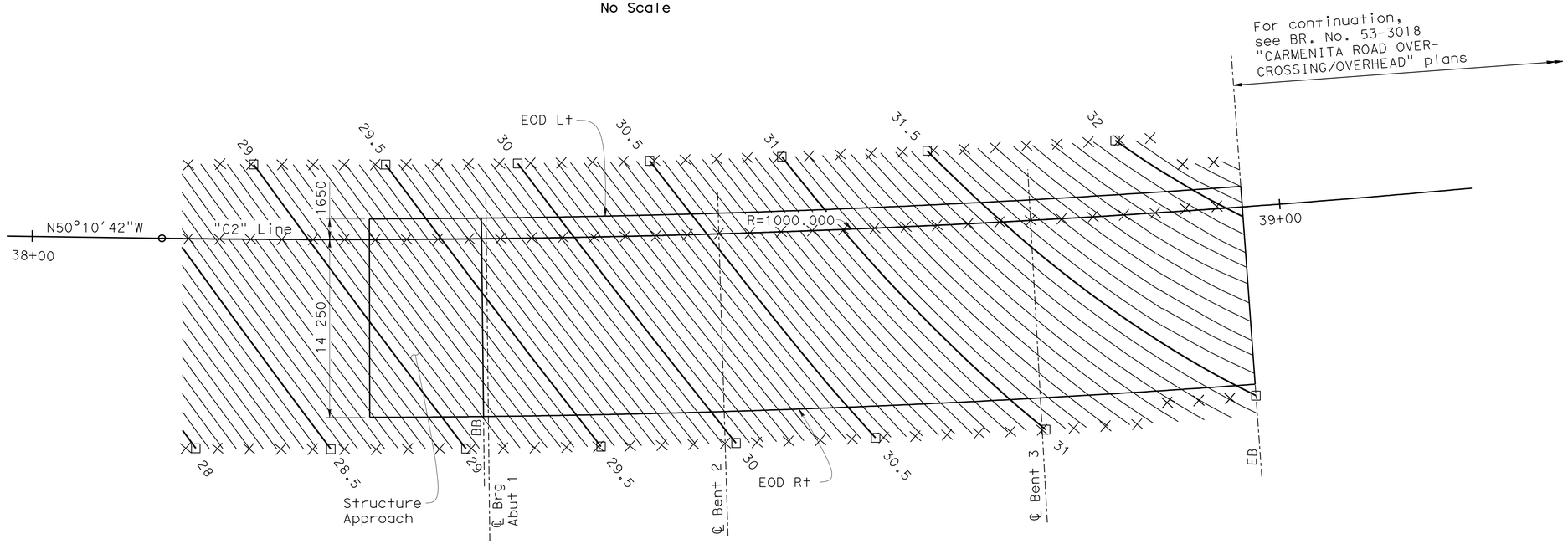

NOTES:

1. Contours are at 0.05 m intervals
2. □ Indicates even and half meter contours
3. X Indicates 2.5 m intervals along Station Line
4. Contours do not include camber
5. Contours shall conform to mainline deck transition.

PLAN

SCALE 1:200

Caltrans Metric

	BY	CHECKED
DESIGN	Bill Kemp	D. Menzmer
DETAILS	Pauline Tong	D. Menzmer
QUANTITIES	M. Okimura	D. Menzmer

STATE OF CALIFORNIA
DEPARTMENT OF TRANSPORTATION

DIVISION OF ENGINEERING SERVICES
STRUCTURE DESIGN
DESIGN BRANCH 11

BRIDGE NO. 53-3019K
KILOMETER POST 3.88

CARMENITA ROAD NB OFF-RAMP
DECK CONTOURS

ALL DIMENSIONS ARE IN METERS UNLESS OTHERWISE SHOWN

ORIGINAL SCALE IN MILLIMETERS FOR REDUCED PLANS 0 10 20 30 40 50 60 70 80 90 100

CU 07225
EA 2159C1

DISREGARD PRINTS BEARING EARLIER REVISION DATES

REVISION DATES: 10-5-06 3-6-07 3-16-07 8-8-07 8-5-08 1-21-09 6-10-09

SHEET 3 OF 28

FILE => 53-3019k-c-dc.dgn

STRUCTURES DESIGN DETAIL SHEET (METRIC) (REV.03-17-04)

USERNAME => trrright DATE PLOTTED => 22-JUN-2010 TIME PLOTTED => 17:40

DIST	COUNTY	ROUTE	KILOMETER POST TOTAL PROJECT	SHEET No	TOTAL SHEETS
07	LA	5	2.9/4.9	1013	1082

Caltrans Metric

Daniel L. Texler 01-26-10
REGISTERED CIVIL ENGINEER DATE

6-21-10
PLANS APPROVAL DATE

The State of California or its officers or agents shall not be responsible for the accuracy or completeness of electronic copies of this plan sheet.

REGISTERED PROFESSIONAL ENGINEER
Daniel L. Texler
No. 49792
Exp. 9-30-10
CIVIL
STATE OF CALIFORNIA

No.	R	Δ	T	L
1	1000.000	06°11'13"	54.043	107.981

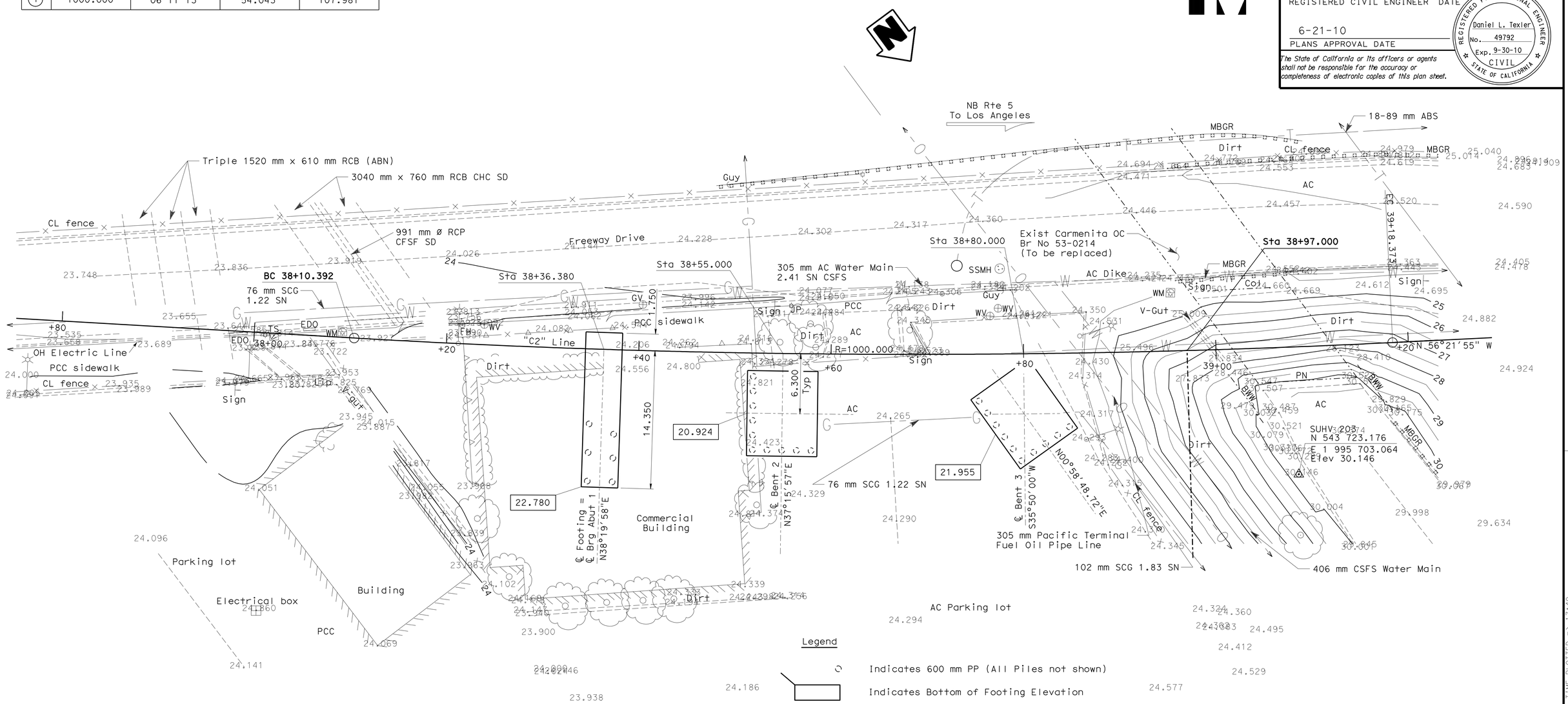

SURVEY CONTROL

SUHV 203

Fd 60 d Nail NE Carmenita Bridge
13.251 Rt. "C2" Line
Sta. 39+08.097
N 543 723.176
E 1 995 703.064
Elev 30.146

SUHV 1477

Fd Spk + CDH Washer (not shown)
64.150 Lt. "C2" Line
Sta. 38+00.954
N 543 598.098
E 1 995 739.755
Elev 24.629

NOTES:

1. Underground utilities as shown are approximate
2. Bent 3 Footing to be oriented parallel to the Pacific Terminal Fuel Oil Pipe Line

ALL DIMENSIONS ARE IN METERS UNLESS OTHERWISE SHOWN

PRELIMINARY INVESTIGATION SECTION

SCALE	VERT. DATUM NAVD88	PHOTOGRAMMETRY AS OF:			
1:200	HORZ. DATUM NAD83	SURVEYED	BY T. Phung	DRAFTED	BY C. Pham
ALIGNMENT TIES	Dist Traverse sheet	FIELD CHECKED	BY S. Alivio	CHECKED	BY S. Alivio

	BY	CHECKED
DESIGN	Bill Kemp	D. Menzmer
DETAILS	Pauline Tong	D. Menzmer
QUANTITIES	M. Okimura	D. Menzmer

STATE OF CALIFORNIA
DEPARTMENT OF TRANSPORTATION

DIVISION OF STRUCTURES
STRUCTURE DESIGN 11

BRIDGE NO. 53-3019K
KILOMETER POST 3.88

CARMENITA ROAD NB OFF-RAMP
FOUNDATION PLAN

STRUCTURES FOUNDATION PLAN SHEET (METRIC) (REV.12-1-01)

ORIGINAL SCALE IN MILLIMETERS FOR REDUCED PLANS 0 10 20 30 40 50 60 70 80 90 100

CU 07225
EA 2159C1

DISREGARD PRINTS BEARING EARLIER REVISION DATES

REVISION DATES (PRELIMINARY STAGE ONLY): 4-24-08 5-1-08 7-24-08 8-1-08 1-28-09 5-13-09 6-01-09 6-10-09

SHEET 4 OF 28

FILE => 53-3019k-e-fp.dgn

USERNAME => trrrcht DATE PLOTTED => 22-JUN-2010 TIME PLOTTED => 17:40

DIST	COUNTY	ROUTE	KILOMETER POST TOTAL PROJECT	SHEET No	TOTAL SHEETS
07	LA	5	2.9/4.9	1014	1082

Daniel L. Texler 01-26-10
REGISTERED CIVIL ENGINEER DATE

6-21-10
PLANS APPROVAL DATE

REGISTERED PROFESSIONAL ENGINEER Daniel L. Texler No. 49792 Exp. 9-30-10 CIVIL STATE OF CALIFORNIA

The State of California or its officers or agents shall not be responsible for the accuracy or completeness of electronic copies of this plan sheet.

PILE DATA TABLE

Location	Pile Type	Design Loading (kN)	Nominal Resistance (kN)		Cut-off Elevation (m)	Design Tip Elevation (m) see Note 3			Specified Tip Elev (m)	Nominal Driving Resistance (kH) see Note 2
			Compression	Tension		Compression	Tension	Lateral		
Abut 1	610x12.7 Open Ended Pipe Pile	675	N/A	N/A	22.905	3.0	N/A	5.0	3.0	3350
Bent 2	610x12.7 Open Ended Pipe Pile	N/A	1350	1100	21.049	3.3	5.0	5.0	3.3	3250
Bent 3	610x12.7 Open Ended Pipe Pile	N/A	1350	1100	22.080	3.3	5.0	5.0	3.3	3250

DESIGN TIP ELEVATION ADJUSTMENT TABLE

Pile Casing Tip Elevation (expressed as a depth below exist ground in meters)	14.6	16.0	17.5	19.0	20.5	22.0	23.5	25.0	26.5
	DTE Adjustment (m)								
Nominal Resistance less than 1450 kN or Design Loading less than 725 kN	0.0	-1.0	-2.3	-3.7	-5.0	-6.1	-6.9	-7.6	-8.4
Nominal Resistance greater than 1450 kN or Design Loading greater than 725 kN	0.0	-1.5	-3.0	-4.6	-6.1	-6.9	-7.6	-8.4	-9.1

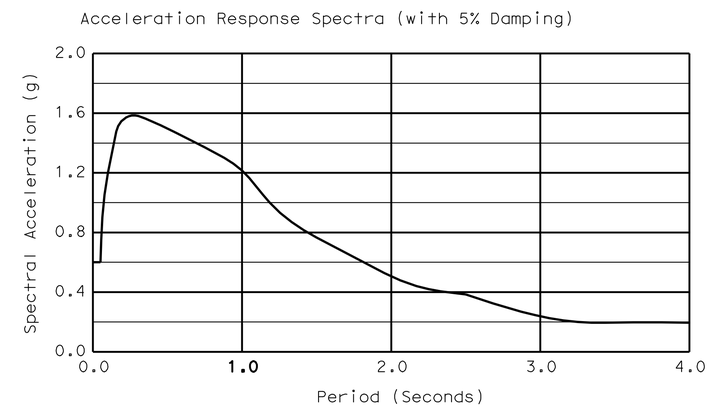

SITE SPECIFIC ARS CURVE

NOTES:

1. For Typical Pipe Pile Installation Procedure, see "PILE DETAILS" sheet
2. "Nominal Driving Resistance" shall only be applicable to piles installed without a Temp Steel Casing
3. Where pile installations require a Pile Casing and the Tip Elevation of the steel casing will be more than 14.6 meters below the exist ground surface, the "Specified Tip Elevation" value shown in the Pile Data Table shall be modified by adding to it the appropriate "DTE Adjustment" value from the Design Tip Elevation Adjustment Table

Caltrans Metric

	BY	CHECKED
DESIGN	D. Texler	D. Menzmer
DETAILS	T. Bittermann	D. Menzmer
QUANTITIES	M. Okimura	D. Menzmer

STATE OF CALIFORNIA
DEPARTMENT OF TRANSPORTATION

DIVISION OF ENGINEERING SERVICES
STRUCTURE DESIGN
DESIGN BRANCH 11

BRIDGE NO. 53-3019K
KILOMETER POST 3.88

CARMENITA ROAD NB OFF-RAMP
PILE DATA

ALL DIMENSIONS ARE IN MILLIMETERS UNLESS OTHERWISE SHOWN

ORIGINAL SCALE IN MILLIMETERS FOR REDUCED PLANS 0 10 20 30 40 50 60 70 80 90 100

CU 07225
EA 2159C1

DISREGARD PRINTS BEARING EARLIER REVISION DATES 12-30-09 1-6-10

REVISION DATES

SHEET 5 OF 28

FILE => 53-3019k-fa-piledata.dgn

STRUCTURES DESIGN DETAIL SHEET (METRIC) (REV.03-17-04)

USERNAME => trrright DATE PLOTTED => 22-JUN-2010 TIME PLOTTED => 17:40

DIST	COUNTY	ROUTE	KILOMETER POST TOTAL PROJECT	SHEET No	TOTAL SHEETS
07	LA	5	2.9/4.9	1015	1082

Daniel L. Texler 5/24/10
REGISTERED CIVIL ENGINEER DATE

6-21-10
PLANS APPROVAL DATE

REGISTERED PROFESSIONAL ENGINEER
Daniel L. Texler
No. 49792
Exp. 9-30-10
CIVIL
STATE OF CALIFORNIA

The State of California or its officers or agents shall not be responsible for the accuracy or completeness of electronic copies of this plan sheet.

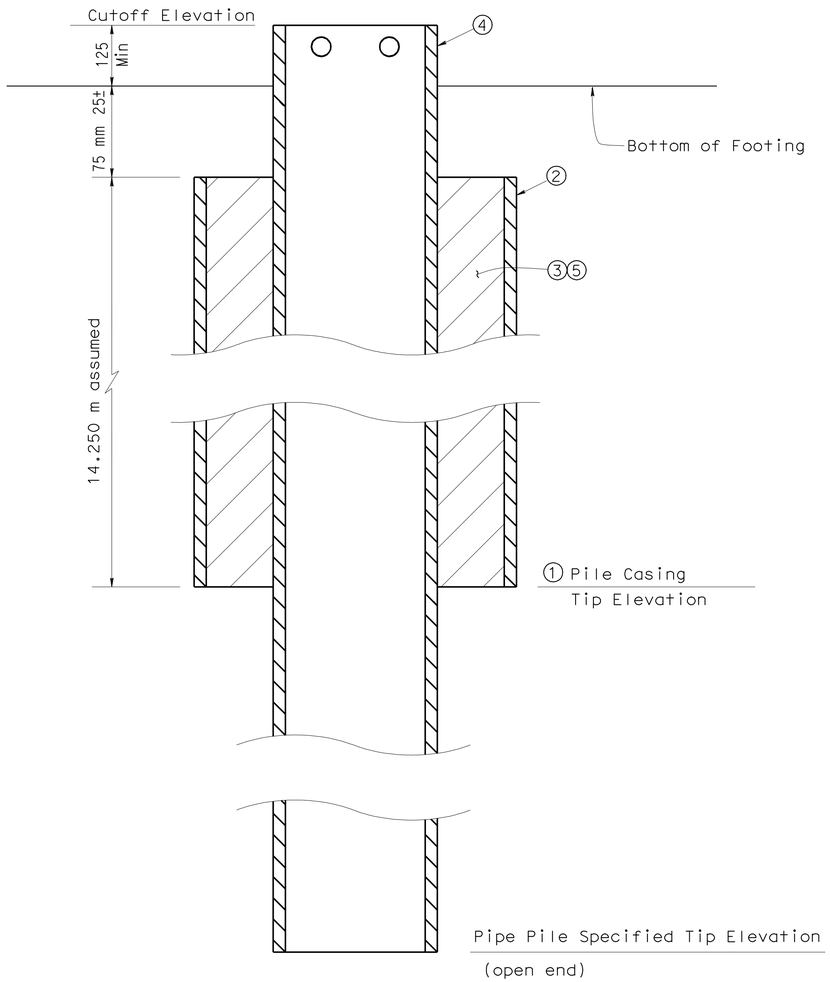

TYPICAL PIPE PILE INSTALLATION

INSTALLATION NOTES:

① Determine required Pile Casing Tip Elevation

② Install Pile Casing, 760 mm ø

③ Remove soil and debris from interior space of Pile Casing

④ Drive 610 mm ø Pipe Pile

⑤ Fill space between Pipe Pile & Pile Casing with grout

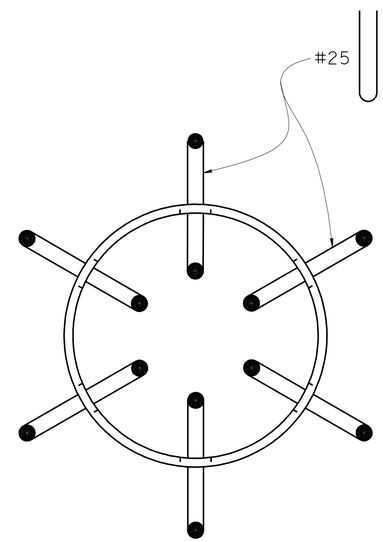

PLAN

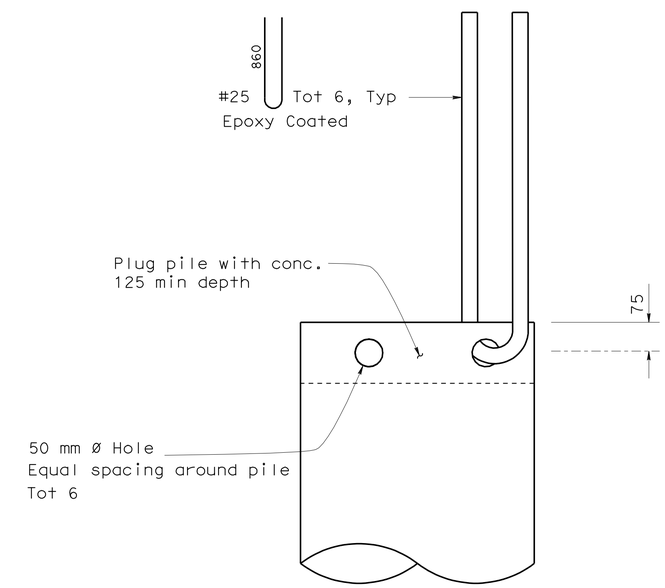

ELEVATION

TYPICAL PIPE PILE ANCHOR

NO SCALE

Caltrans Metric

	BY	CHECKED
DESIGN	D. Texler	D. Menzmer
DETAILS	T. Bittermann	D. Menzmer
QUANTITIES	M. Okimura	D. Menzmer

STATE OF CALIFORNIA
DEPARTMENT OF TRANSPORTATION

DIVISION OF ENGINEERING SERVICES
STRUCTURE DESIGN
DESIGN BRANCH 11

BRIDGE NO. 53-3019K
KILOMETER POST 3.88

CARMENITA ROAD NB OFF-RAMP
PILE DETAILS

ALL DIMENSIONS ARE IN MILLIMETERS UNLESS OTHERWISE SHOWN

ORIGINAL SCALE IN MILLIMETERS FOR REDUCED PLANS 0 10 20 30 40 50 60 70 80 90 100

CU 07225
EA 2159C1

DISREGARD PRINTS BEARING EARLIER REVISION DATES

REVISION DATES: ~~12-30-09~~ ~~5-06-10~~ 5/18/10

SHEET 6 OF 28

FILE => 53-3019k-fb-piledet.dgn

STRUCTURES DESIGN DETAIL SHEET (METRIC) (REV.03-17-04)

USERNAME => ttrrlchf DATE PLOTTED => 22-JUN-2010 TIME PLOTTED => 17:40

DIST	COUNTY	ROUTE	KILOMETER POST TOTAL PROJECT	SHEET No	TOTAL SHEETS
07	LA	5	2.9/4.9	1016	1082

Daniel L. Texler 5/24/10
REGISTERED CIVIL ENGINEER DATE

6-21-10
PLANS APPROVAL DATE

REGISTERED PROFESSIONAL ENGINEER Daniel L. Texler No. 49792 Exp. 9-30-10 CIVIL STATE OF CALIFORNIA

The State of California or its officers or agents shall not be responsible for the accuracy or completeness of electronic copies of this plan sheet.

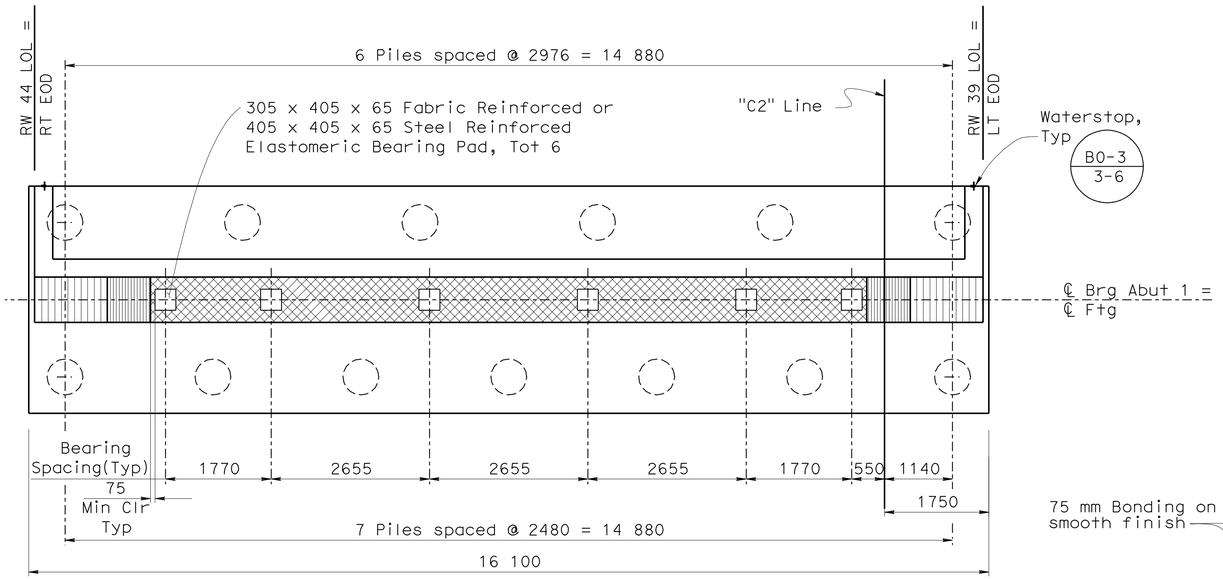

PLAN
1:50

LEGEND:

◌ Indicates Vertical Pile

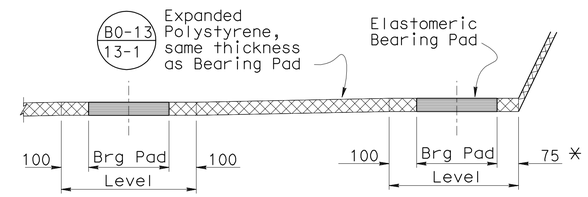

BEARING PAD DETAIL
No Scale

✳ Exterior Bearing Pad only

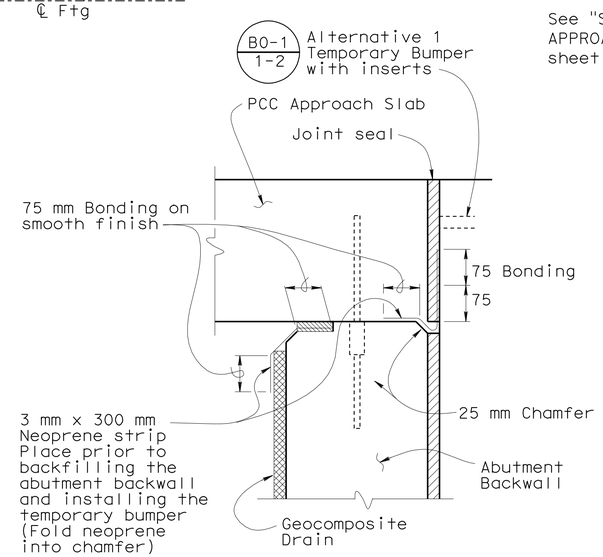

JOINT PROTECTION DETAIL
No Scale

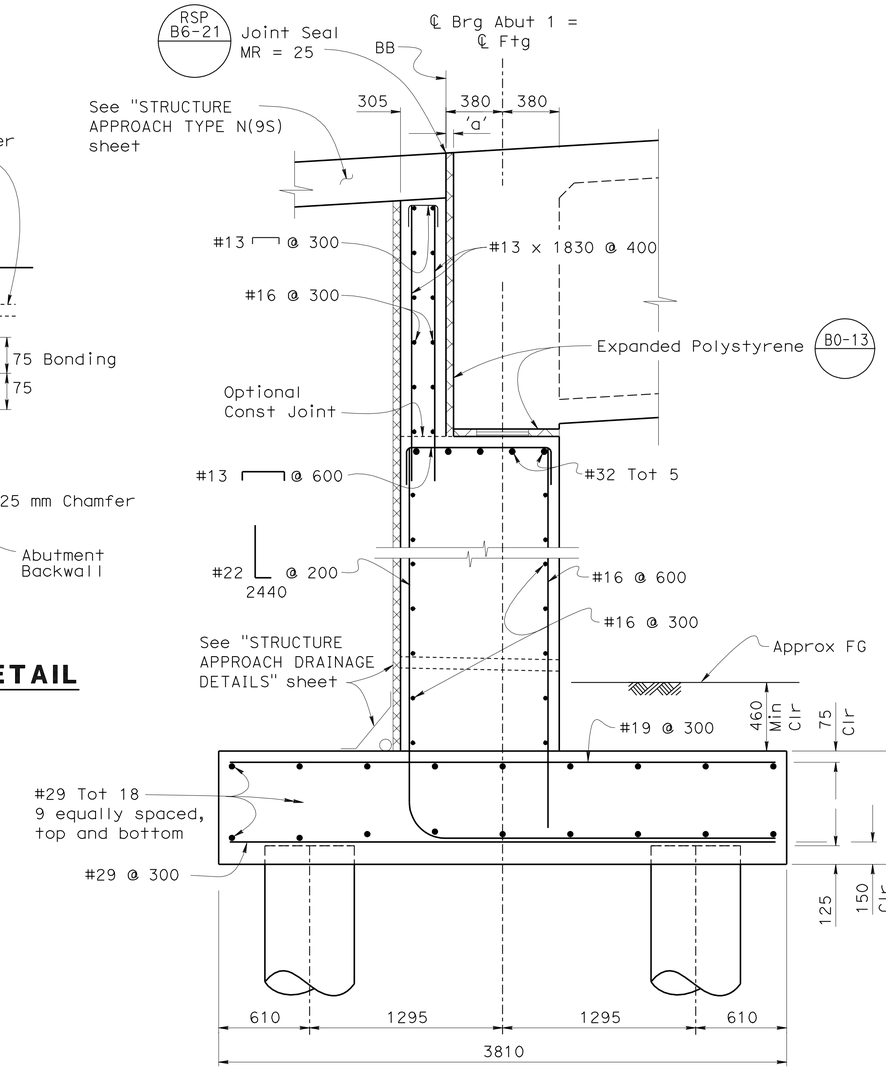

ABUTMENT TYPICAL SECTION
1:20

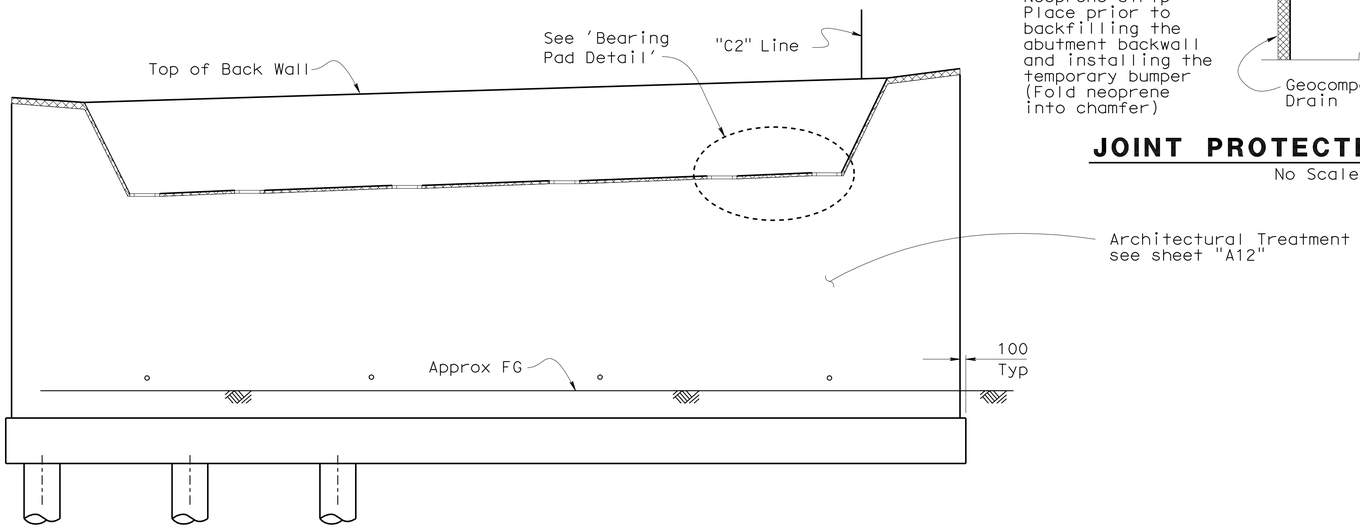

All Piles Not Shown

ELEVATION
1:50

DESIGN	BY Bill Kemp	CHECKED D. Menzmer	
DETAILS	BY Pauline Tong	CHECKED D. Menzmer	
QUANTITIES	BY M. Okimura	CHECKED D. Menzmer	

STATE OF CALIFORNIA
DEPARTMENT OF TRANSPORTATION

DIVISION OF ENGINEERING SERVICES
STRUCTURE DESIGN
DESIGN BRANCH 11

BRIDGE NO. 53-3019K
KILOMETER POST 3.88

CARMENITA ROAD NB OFF-RAMP
ABUTMENT LAYOUT

Caltrans Metric

ALL DIMENSIONS ARE IN MILLIMETERS UNLESS OTHERWISE SHOWN

ORIGINAL SCALE IN MILLIMETERS FOR REDUCED PLANS 0 10 20 30 40 50 60 70 80 90 100

CU 07225
EA 2159C1

DISREGARD PRINTS BEARING EARLIER REVISION DATES

REVISION DATES: 7-1-08 7-15-08 8-1-08 1-20-09 6-18-09 7-02-09 1-7-10 5-20-10

SHEET 7 OF 28

FILE => 53-3019k-fd-abtlyt.dgn

STRUCTURES DESIGN DETAIL SHEET (METRIC) (REV.03-17-04)

USERNAME => trmikest DATE PLOTTED => 16-FEB-2011 TIME PLOTTED => 08:33

DIST	COUNTY	ROUTE	KILOMETER POST TOTAL PROJECT	SHEET No	TOTAL SHEETS
07	LA	5	2.9/4.9	1017	1082

Daniel L. Texler 01-26-10
REGISTERED CIVIL ENGINEER DATE

6-21-10
PLANS APPROVAL DATE

REGISTERED PROFESSIONAL ENGINEER Daniel L. Texler No. 49792 Exp. 9-30-10 CIVIL STATE OF CALIFORNIA

The State of California or its officers or agents shall not be responsible for the accuracy or completeness of electronic copies of this plan sheet.

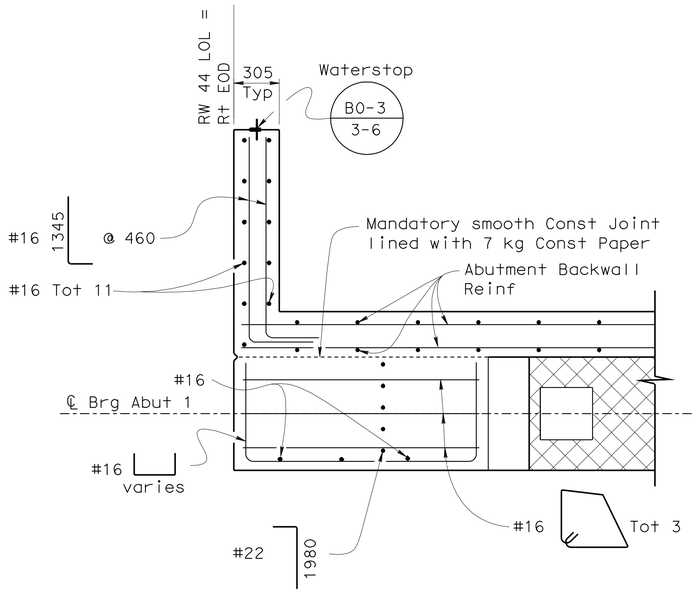

SECTION D-D

1:20

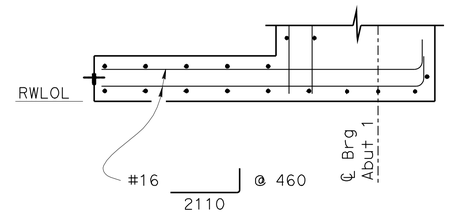

SECTION E-E

1:20

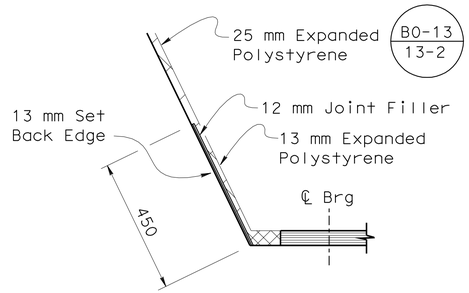

DETAIL C

No Scale

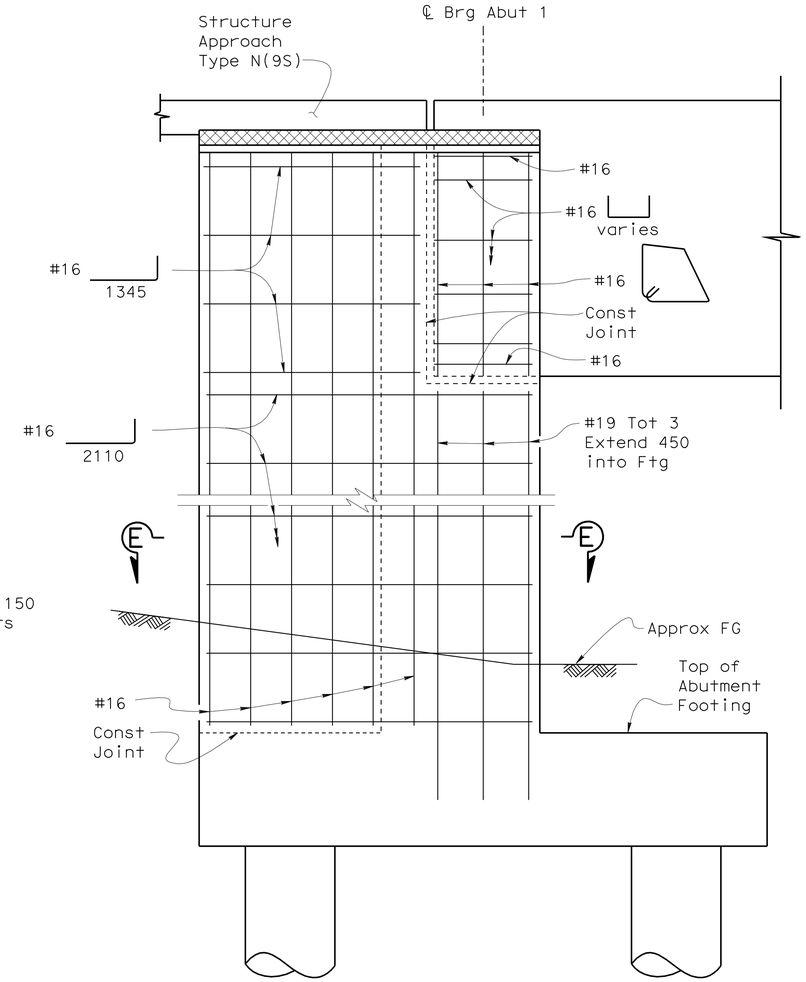

STUBWALL ELEVATION

1:20

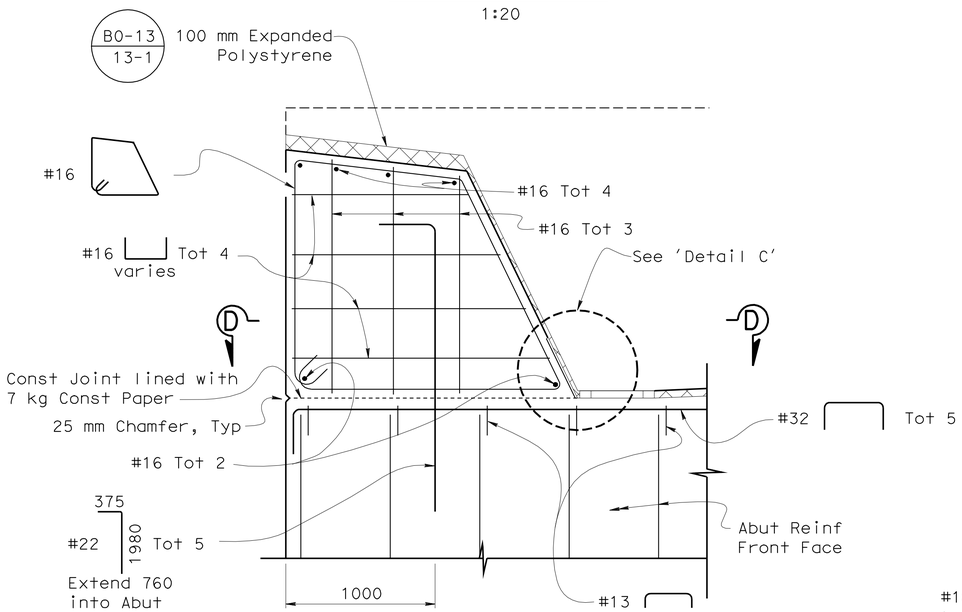

ABUTMENT SHEAR KEY DETAIL

1:20

Right shear key shown, left shear key similar

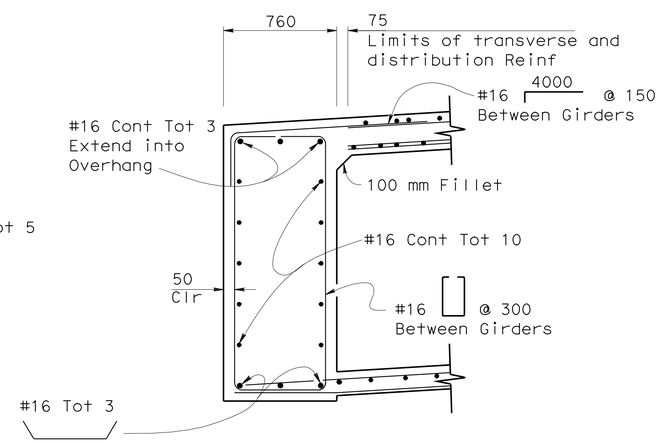

END DIAPHRAGM DETAIL

1:20

DESIGN	BY Bill Kemp	CHECKED D. Menzmer	
DETAILS	BY Pauline Tong	CHECKED D. Menzmer	
QUANTITIES	BY M. Okimura	CHECKED D. Menzmer	

STATE OF CALIFORNIA
DEPARTMENT OF TRANSPORTATION

DIVISION OF ENGINEERING SERVICES
STRUCTURE DESIGN
DESIGN BRANCH 11

BRIDGE NO. 53-3019K
KILOMETER POST 3.88

CARMENITA ROAD NB OFF-RAMP
ABUTMENT DETAILS

ALL DIMENSIONS ARE IN MILLIMETERS UNLESS OTHERWISE SHOWN

ORIGINAL SCALE IN MILLIMETERS FOR REDUCED PLANS 0 10 20 30 40 50 60 70 80 90 100

CU 07225
EA 2159C1

DISREGARD PRINTS BEARING EARLIER REVISION DATES

REVISION DATES: 12-1-06 | 1-16-08 | 8-1-08 | 1-29-09 | 6-11-09 | 6-22-07 | 6-26-07 | 6-26-07 | 8-04-07

SHEET 8 OF 28

FILE => 53-3019k-fe-abutdet.dgn

STRUCTURES DESIGN DETAIL SHEET (METRIC) (REV.03-17-04)

USERNAME => trrlcnf DATE PLOTTED => 22-JUN-2010 TIME PLOTTED => 17:41

DIST	COUNTY	ROUTE	KILOMETER POST TOTAL PROJECT	SHEET No	TOTAL SHEETS
07	LA	5	2.9/4.9	1018	1082

Daniel L. Texler 5/24/10
REGISTERED CIVIL ENGINEER DATE

6-21-10
PLANS APPROVAL DATE

REGISTERED PROFESSIONAL ENGINEER Daniel L. Texler No. 49792 Exp. 9-30-10 CIVIL STATE OF CALIFORNIA

The State of California or its officers or agents shall not be responsible for the accuracy or completeness of electronic copies of this plan sheet.

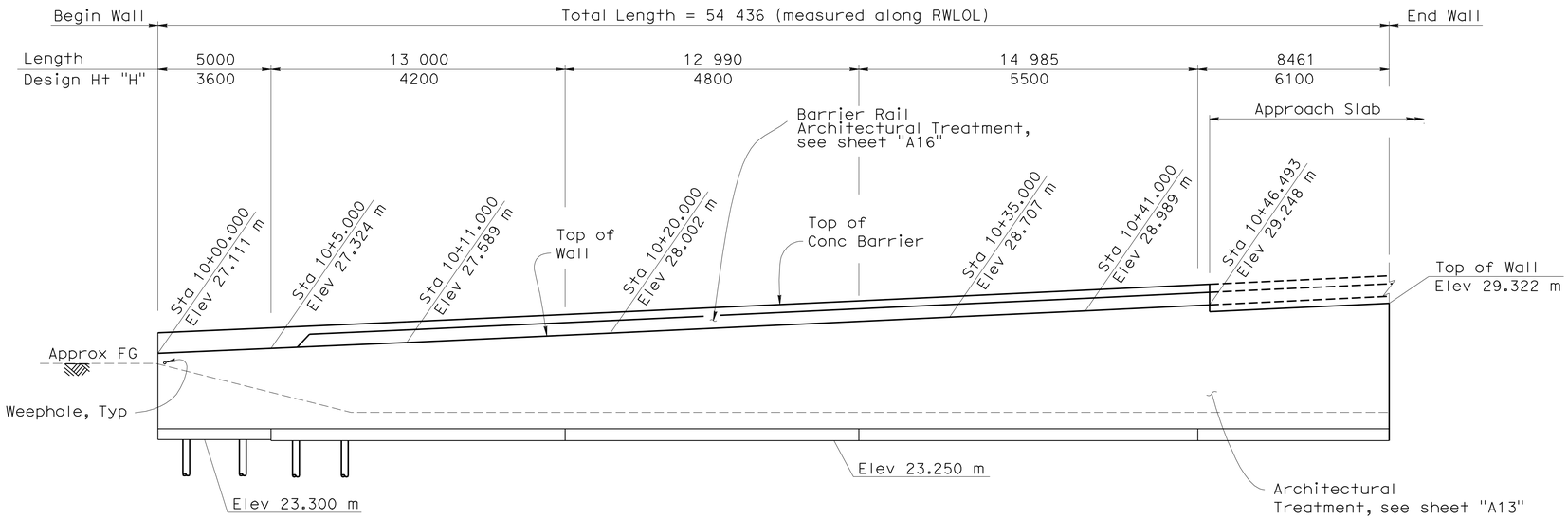

Note: All Piles not shown

MIRROR ELEVATION

1:125

B0-3 / 3-2 B0-3 / 3-3 B0-3 / 3-4

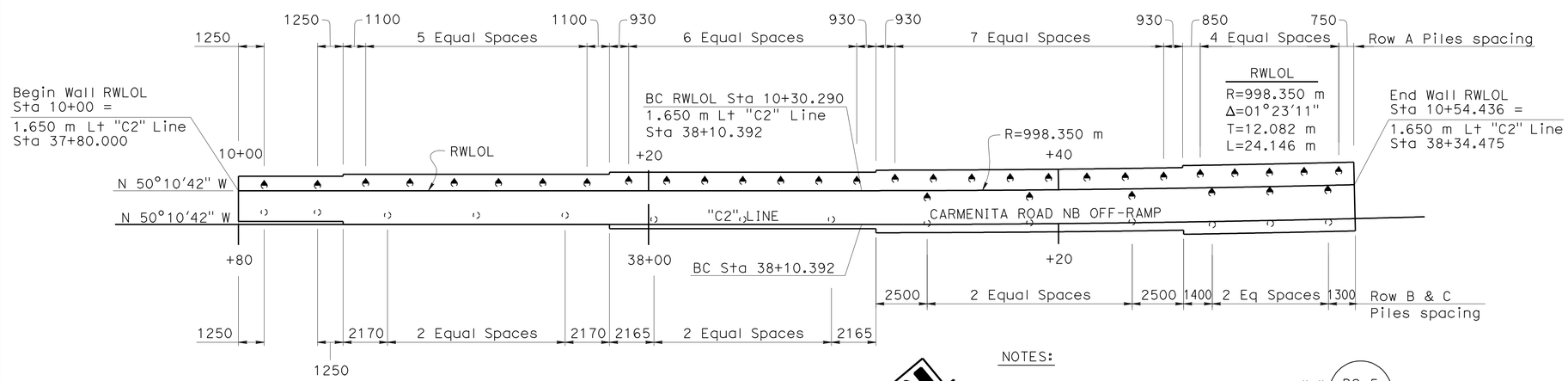

PLAN

1:125

LEGEND:

- Indicates Vertical Piles
- Indicates Battered 1:3 Piles

NOTES:

Piles are Class 400, Alternative "V" closed-end with 60° conical tip (B2-5)

Pile Tip shall be 14.0 m below bottom of wall footings

Pile spacing measured along RWLOL

Install utility conduits as req'd, (not shown) for size and other data, see "ROAD PLANS"

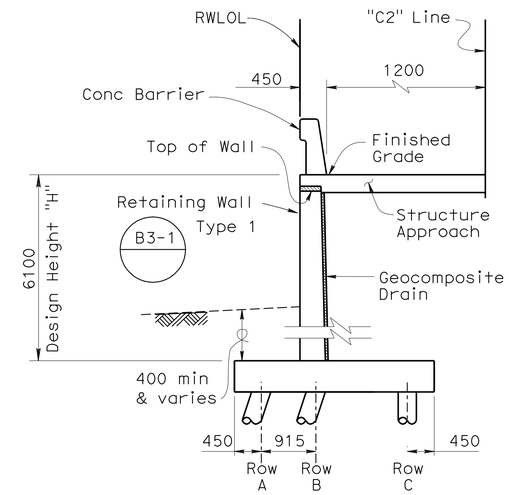

SECTION AT APPROACH SLAB

1:50

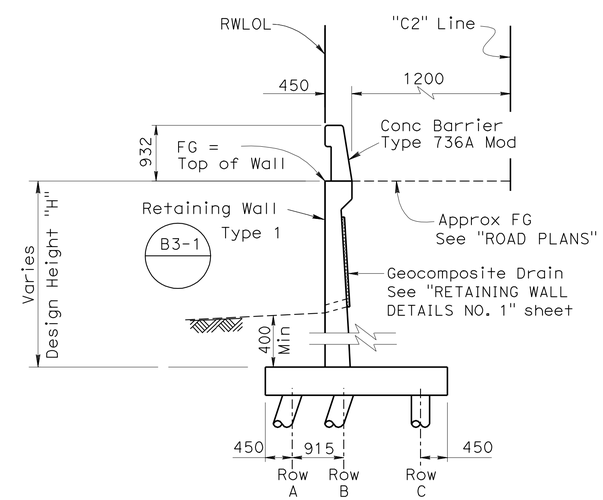

TYPICAL SECTION

1:50

Caltrans Metric	DESIGN	BY Bill Kemp	CHECKED D. Menzmer	STATE OF CALIFORNIA DEPARTMENT OF TRANSPORTATION	DIVISION OF ENGINEERING SERVICES STRUCTURE DESIGN DESIGN BRANCH 11
	DETAILS	BY Pauline Tong	CHECKED D. Menzmer		
	QUANTITIES	BY M. Okimura	CHECKED D. Menzmer		

BRIDGE NO. 53-3019K
KILOMETER POST 3.88

CARMENITA ROAD NB OFF-RAMP
RETAINING WALL 39 LAYOUT

ALL DIMENSIONS ARE IN MILLIMETERS UNLESS OTHERWISE SHOWN

ORIGINAL SCALE IN MILLIMETERS FOR REDUCED PLANS 0 10 20 30 40 50 60 70 80 90 100

CU 07225
EA 2159C1

DISREGARD PRINTS BEARING EARLIER REVISION DATES

REVISION DATES: 9-2-08 7-13-09 8-14-09 12-28-09 1/7/10 5/14/09 5/20/09 6-11-09 7-04-09

SHEET 9 OF 28

FILE => 53-3019k-ff-rw39lyt.dgn

STRUCTURES DESIGN DETAIL SHEET (METRIC) (REV.03-17-04)

USERNAME => trrright DATE PLOTTED => 22-JUN-2010 TIME PLOTTED => 17:41

DIST	COUNTY	ROUTE	KILOMETER POST TOTAL PROJECT	SHEET No	TOTAL SHEETS
07	LA	5	2.9/4.9	1019	1082

Daniel L. Texler 01-26-10
REGISTERED CIVIL ENGINEER DATE

6-21-10
PLANS APPROVAL DATE

REGISTERED PROFESSIONAL ENGINEER Daniel L Texler No. 49792 Exp. 9-30-10 CIVIL STATE OF CALIFORNIA

The State of California or its officers or agents shall not be responsible for the accuracy or completeness of electronic copies of this plan sheet.

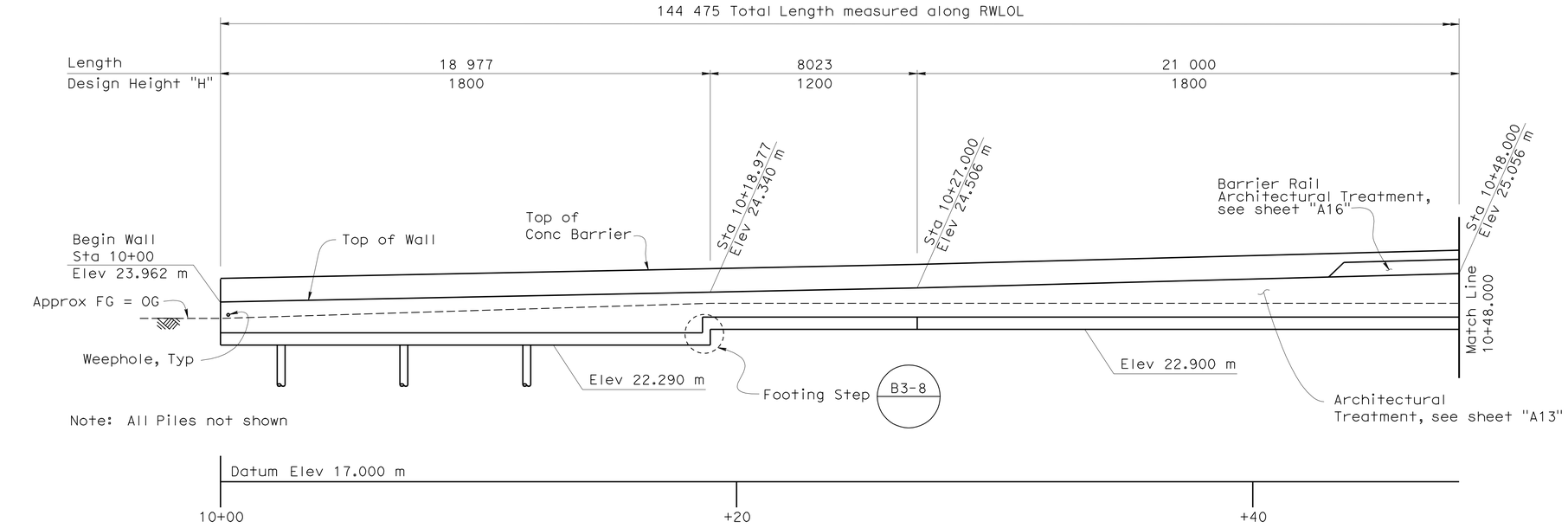

ELEVATION

1:100

B0-3 3-2 | B0-3 3-3 | B0-3 3-4

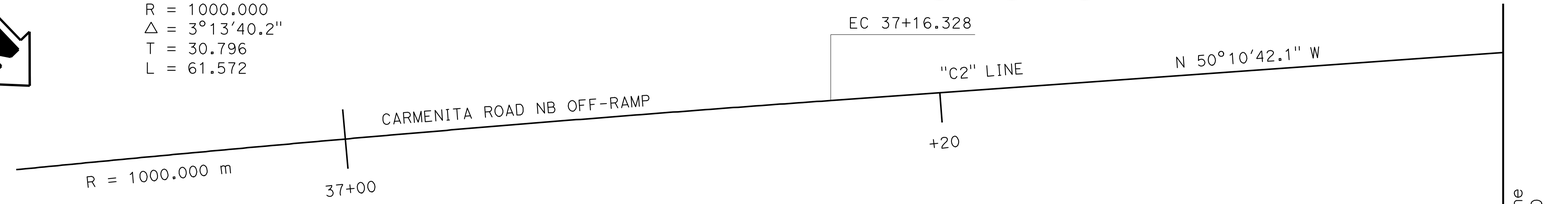

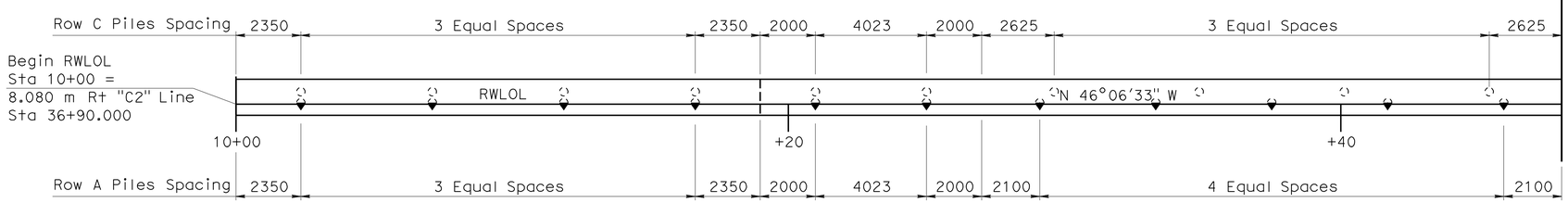

LEGEND:

- Indicates Vertical Piles
- Indicates Battered 1:3 Piles

NOTES:

Piles are Class 400, Alternative "V" closed-end with 60° conical tip (B2-5)

Pile Tip shall be 14.0 m below bottom of wall footings

Pile spacing measured along RWLOL

Install utility conduits as req'd, (not shown) for size and other data, see "ROAD PLANS"

PLAN

1:100

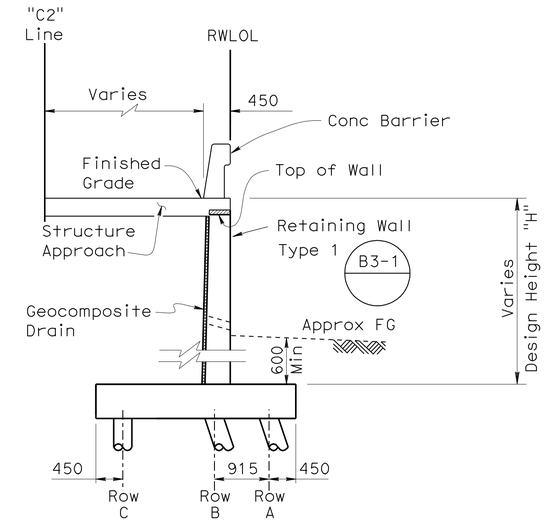

SECTION AT APPROACH SLAB

1:50

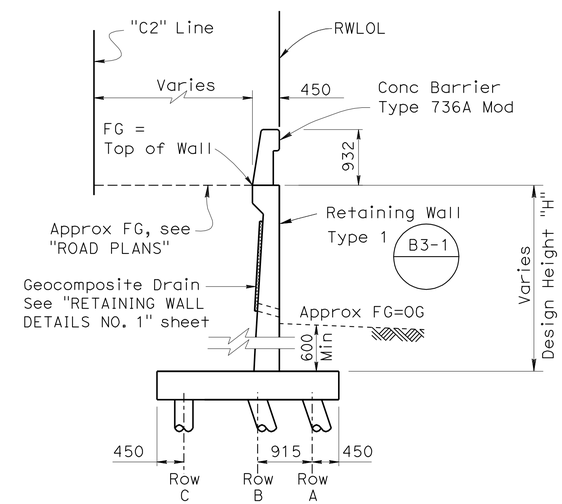

TYPICAL SECTION

1:50

DESIGN	BY Bill Kemp	CHECKED D. Menzmer	
DETAILS	BY Pauline Tong	CHECKED D. Menzmer	
QUANTITIES	BY M. Okimura	CHECKED D. Menzmer	

STATE OF CALIFORNIA
DEPARTMENT OF TRANSPORTATION

DIVISION OF ENGINEERING SERVICES
STRUCTURE DESIGN
DESIGN BRANCH 11

BRIDGE NO. 53-3019K
KILOMETER POST 3.88

CARMENITA ROAD NB OFF-RAMP
RETAINING WALL 44 LAYOUT NO. 1

Caltrans Metric

ALL DIMENSIONS ARE IN MILLIMETERS UNLESS OTHERWISE SHOWN

ORIGINAL SCALE IN MILLIMETERS FOR REDUCED PLANS 0 10 20 30 40 50 60 70 80 90 100

CU 07225
EA 2159C1

DISREGARD PRINTS BEARING EARLIER REVISION DATES

REVISION DATES: ~~2-28-01~~ ~~12/28/09~~ 1/1/10 ~~5/20/09~~ ~~6-12-09~~ ~~6-19-09~~ ~~7-01-09~~ ~~7-13-09~~ ~~8/14/09~~

SHEET 10 OF 28

FILE => 53-3019k-ff-rw44lyt1.dgn

STRUCTURES DESIGN DETAIL SHEET (METRIC) (REV.03-17-04)

USERNAME => trrene DATE PLOTTED => 22-JUN-2010 TIME PLOTTED => 15:37

DIST	COUNTY	ROUTE	KILOMETER POST TOTAL PROJECT	SHEET No	TOTAL SHEETS
07	LA	5	2.9/4.9	1020	1082

Daniel L. Texler 01-26-10
REGISTERED CIVIL ENGINEER DATE

6-21-10
PLANS APPROVAL DATE

REGISTERED PROFESSIONAL ENGINEER Daniel L Texler No. 49792 Exp. 9-30-10 CIVIL STATE OF CALIFORNIA

The State of California or its officers or agents shall not be responsible for the accuracy or completeness of electronic copies of this plan sheet.

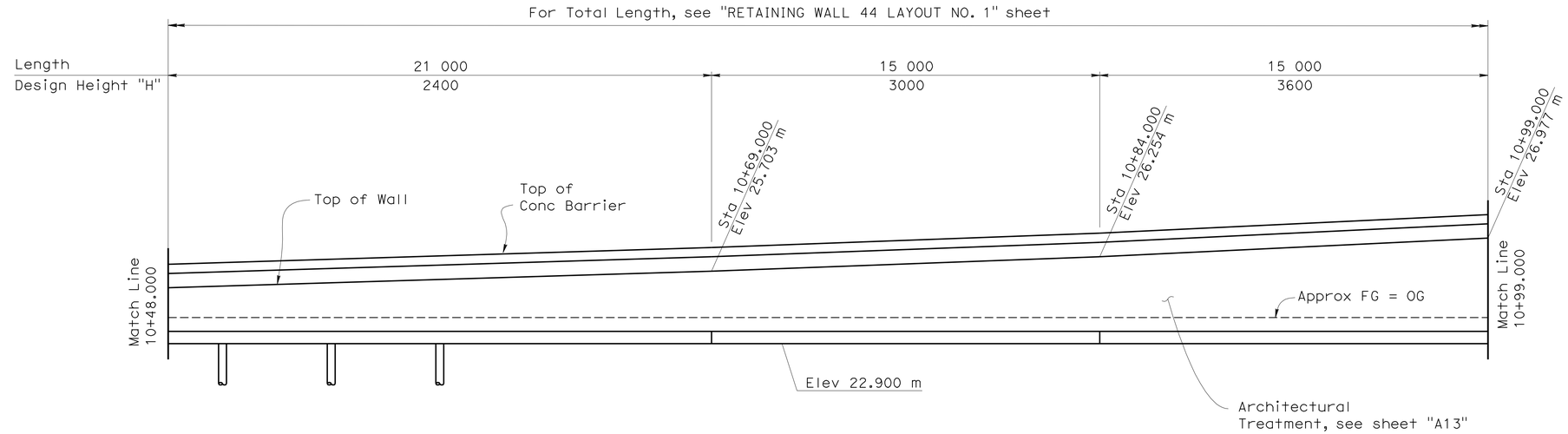

Note: All Piles not shown

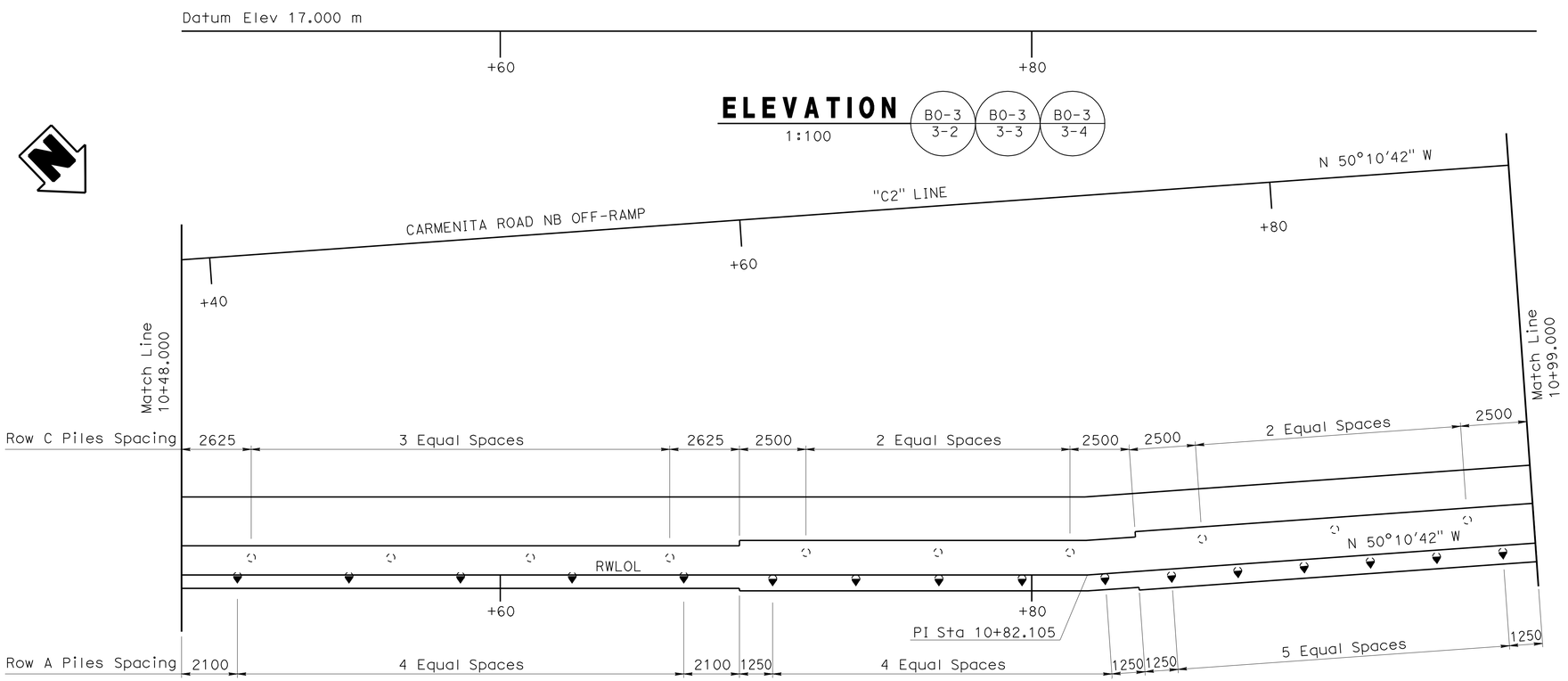

LEGEND:

Indicates Vertical Piles

Indicates Battered 1:3 Piles

NOTES:

Piles are Class 400, Alternative "V" closed-end with 60° conical tip (B2-5)

Pile Tip shall be 14.0 m below bottom of wall footings

Pile spacing measured along RWLOL

Install utility conduits as req'd, (not shown) for size and other data, see "ROAD PLANS"

Caltrans Metric

	BY	CHECKED
DESIGN	Bill Kemp	D. Menzmer
DETAILS	Pauline Tong	D. Menzmer
QUANTITIES	M. Okimura	D. Menzmer

STATE OF CALIFORNIA
DEPARTMENT OF TRANSPORTATION

DIVISION OF ENGINEERING SERVICES
STRUCTURE DESIGN
DESIGN BRANCH 11

CU 07225
EA 2159C1

BRIDGE NO. 53-3019K
KILOMETER POST 3.88

CARMENITA ROAD NB OFF-RAMP
RETAINING WALL 44 LAYOUT NO. 2

ALL DIMENSIONS ARE IN MILLIMETERS UNLESS OTHERWISE SHOWN

ORIGINAL SCALE IN MILLIMETERS FOR REDUCED PLANS 0 10 20 30 40 50 60 70 80 90 100

DISREGARD PRINTS BEARING EARLIER REVISION DATES

REVISION DATES: 2-28-07 11-8-08 5-14-09 5-20-09 5-28-09 7-01-09 1-7-10 9-28-08 10-26-08

SHEET 11 OF 28

FILE => 53-3019k-ff-rw44lyt2.dgn

STRUCTURES DESIGN DETAIL SHEET (METRIC) (REV.03-17-04)

USERNAME => trrene DATE PLOTTED => 22-JUN-2010 TIME PLOTTED => 16:37

DIST	COUNTY	ROUTE	KILOMETER POST TOTAL PROJECT	SHEET No	TOTAL SHEETS
07	LA	5	2.9/4.9	1021	1082

Daniel L. Texler 01-26-10
REGISTERED CIVIL ENGINEER DATE

6-21-10
PLANS APPROVAL DATE

REGISTERED PROFESSIONAL ENGINEER Daniel L Texler No. 49792 Exp. 9-30-10 CIVIL STATE OF CALIFORNIA

The State of California or its officers or agents shall not be responsible for the accuracy or completeness of electronic copies of this plan sheet.

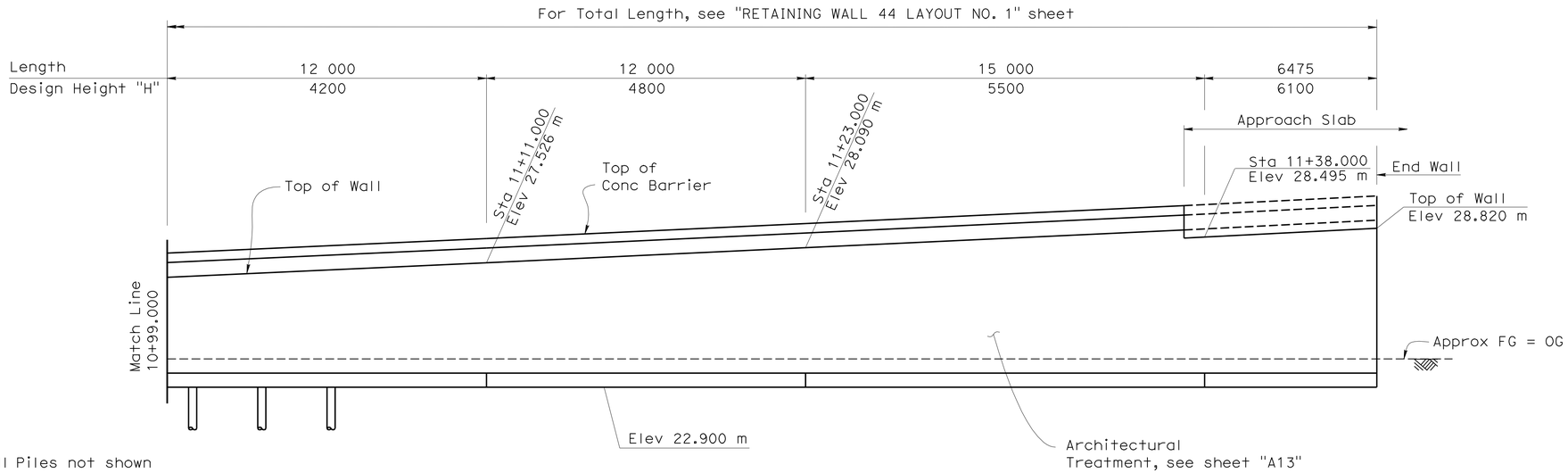

Note: All Piles not shown

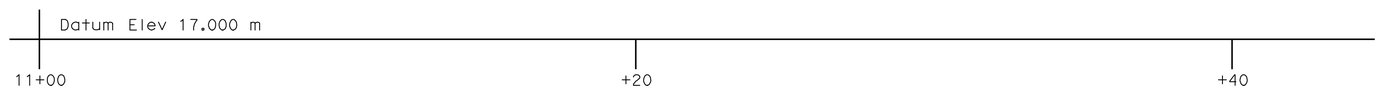

ELEVATION

1:100

B0-3 / 3-2 | B0-3 / 3-3 | B0-3 / 3-4

LEGEND:

- Indicates Vertical Piles
- Indicates Battered 1:3 Piles

NOTES:

Piles are Class 400, Alternative "V" closed-end with 60° conical tip (B2-5)

Pile Tip shall be 14.0 m below bottom of wall footings

Pile spacing measured along RWLOL

Install utility conduits as req'd, (not shown) for size and other data, see "ROAD PLANS"

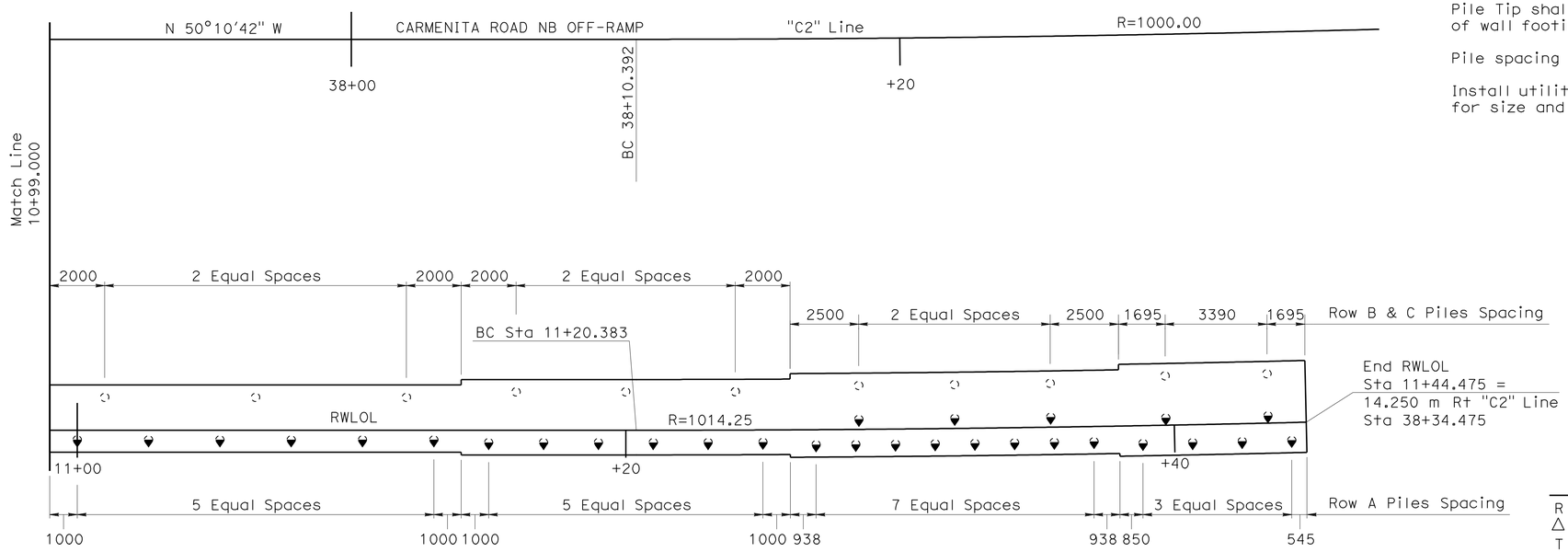

PLAN

1:100

RWLOL
R = 1014.25 m
Δ = 1°21'40"
T = 12.053 m
L = 24.092 m

Caltrans Metric

	BY	CHECKED
DESIGN	Bill Kemp	D. Menzmer
DETAILS	Pauline Tong	D. Menzmer
QUANTITIES	M. Okimura	D. Menzmer

STATE OF CALIFORNIA
DEPARTMENT OF TRANSPORTATION

DIVISION OF ENGINEERING SERVICES
STRUCTURE DESIGN
DESIGN BRANCH 11

BRIDGE NO. 53-3019K
KILOMETER POST 3.88

CARMENITA ROAD NB OFF-RAMP
RETAINING WALL 44 LAYOUT NO. 3

ALL DIMENSIONS ARE IN MILLIMETERS UNLESS OTHERWISE SHOWN

ORIGINAL SCALE IN MILLIMETERS FOR REDUCED PLANS 0 10 20 30 40 50 60 70 80 90 100

CU 07225
EA 2159C1

DISREGARD PRINTS BEARING EARLIER REVISION DATES

REVISION DATES: 9-28-08 | 10-20-08 | 5/14/09 | 5/20/09 | 6/17/09 | 7/01/09 | 1/7/10

SHEET 12 OF 28

FILE => 53-3019k-ff-rw44lyt3.dgn

STRUCTURES DESIGN DETAIL SHEET (METRIC) (REV.03-17-04)

USERNAME => trrene DATE PLOTTED => 22-JUN-2010 TIME PLOTTED => 15:37

DIST	COUNTY	ROUTE	KILOMETER POST TOTAL PROJECT	SHEET No	TOTAL SHEETS
07	LA	5	2.9/4.9	1022	1082

Daniel L. Texler 01-26-10
REGISTERED CIVIL ENGINEER DATE

6-21-10
PLANS APPROVAL DATE

REGISTERED PROFESSIONAL ENGINEER
Daniel L.Texler
No. 49792
Exp. 9-30-10
CIVIL
STATE OF CALIFORNIA

The State of California or its officers or agents shall not be responsible for the accuracy or completeness of electronic copies of this plan sheet.

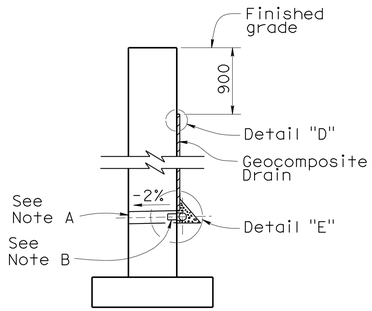

WALL SECTION

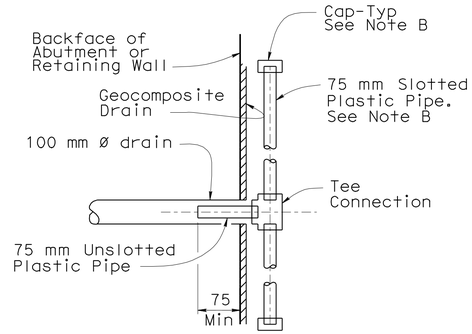

SECTION K-K

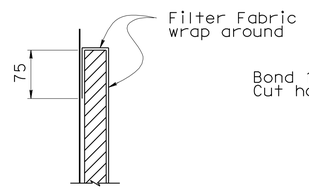

DETAIL "D"

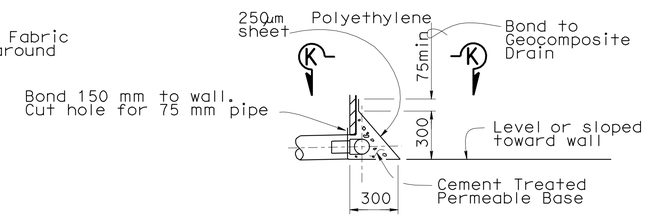

DETAIL "E"

WEEP HOLE AND GEOCOMPOSITE DRAIN

NO SCALE

Notes:

A. 100 mm ø drains at intermediate sag points and at 7.600 m center to center (2.750 m c-c for Type 3 and 2.800 m c-c for Type 4 retaining walls). For walls adjacent to sidewalks or curbs, provide 100 mm ø cast iron or asbestos cement pipe under the sidewalk to discharge through curb face. Exposed wall drains shall be located 75 mm ± above finished grade.

B. Geocomposite drain, cement treated permeable base, and 75 mm ø slotted plastic pipe continuous behind retaining wall or abutment. Cap ends of pipe. Provide "Tee" connection at each 100 mm ø drain.

C. Connect the low end of plastic pipe to the main outlet pipe as applicable.

Caltrans Metric

	BY	CHECKED
DESIGN	Bill Kemp	D. Menzmer
DETAILS	Pauline Tong	D. Menzmer
QUANTITIES	M. Okimura	D. Menzmer

STATE OF CALIFORNIA
DEPARTMENT OF TRANSPORTATION

DIVISION OF ENGINEERING SERVICES
STRUCTURE DESIGN
DESIGN BRANCH 11

BRIDGE NO. 53-3019K
KILOMETER POST 3.88

CARMENITA ROAD NB OFF-RAMP
RETAINING WALL DETAILS

ALL DIMENSIONS ARE IN MILLIMETERS UNLESS OTHERWISE SHOWN

ORIGINAL SCALE IN MILLIMETERS FOR REDUCED PLANS 0 10 20 30 40 50 60 70 80 90 100

CU 07225
EA 2159C1

DISREGARD PRINTS BEARING EARLIER REVISION DATES 9-23-08 1-26-09 1-7-10

REVISION DATES

SHEET 13 OF 28

FILE => 53-3019k-ff-rwdet.dgn

STRUCTURES DESIGN DETAIL SHEET (METRIC) (REV.03-17-04)

USERNAME => trrene DATE PLOTTED => 22-JUN-2010 TIME PLOTTED => 16:38

DIST	COUNTY	ROUTE	KILOMETER POST TOTAL PROJECT	SHEET No	TOTAL SHEETS
07	LA	5	2.9/4.9	1023	1082

Daniel L. Texler 01-26-10
REGISTERED CIVIL ENGINEER DATE

6-21-10
PLANS APPROVAL DATE

REGISTERED PROFESSIONAL ENGINEER Daniel L. Texler No. 49792 Exp. 9-30-10 CIVIL STATE OF CALIFORNIA

The State of California or its officers or agents shall not be responsible for the accuracy or completeness of electronic copies of this plan sheet.

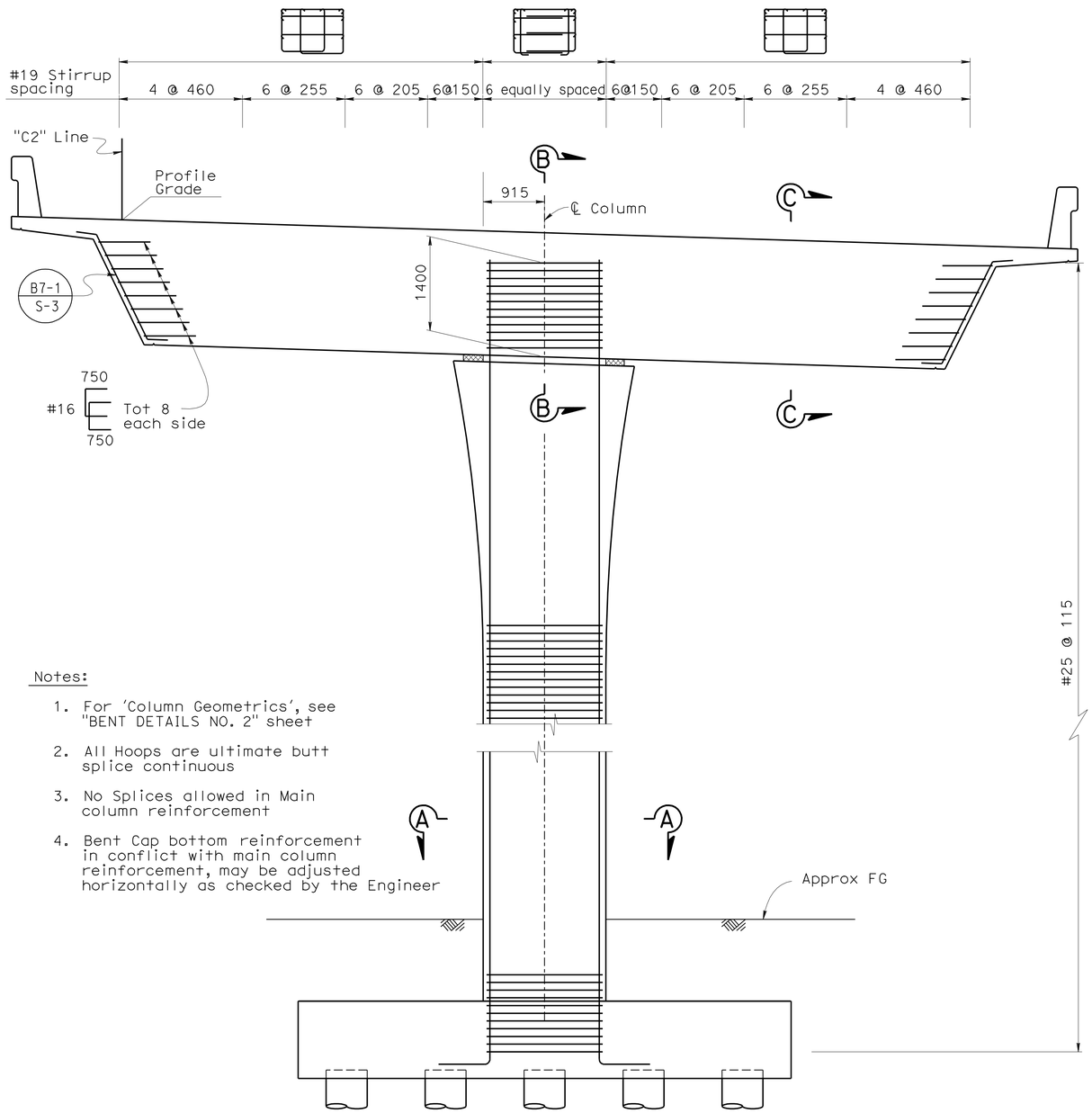

Notes:

1. For 'Column Geometrics', see "BENT DETAILS NO. 2" sheet
2. All Hoops are ultimate butt splice continuous
3. No Splices allowed in Main column reinforcement
4. Bent Cap bottom reinforcement in conflict with main column reinforcement, may be adjusted horizontally as checked by the Engineer

ELEVATION
1:40

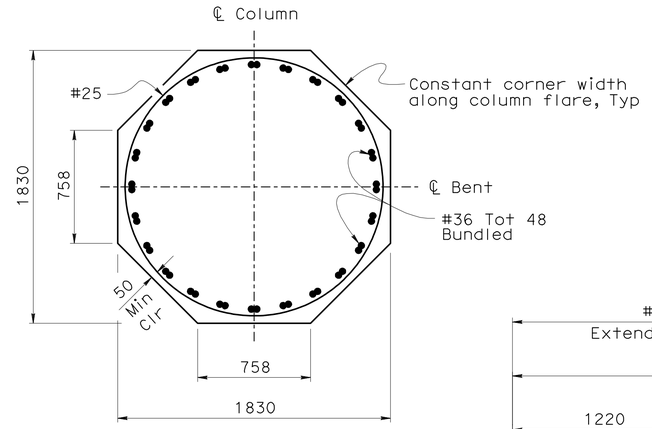

SECTION A-A
1:20

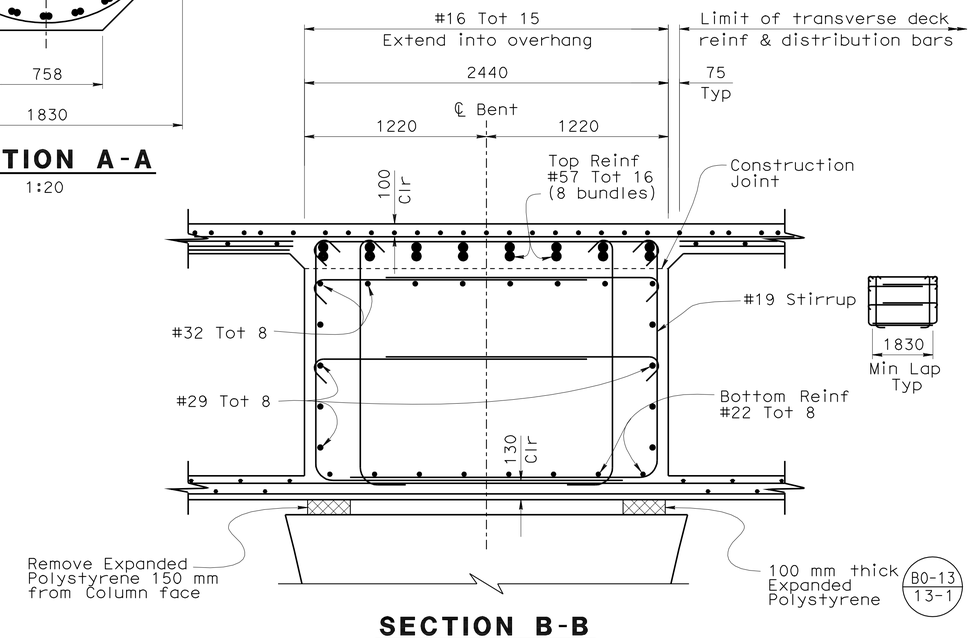

SECTION B-B
1:20

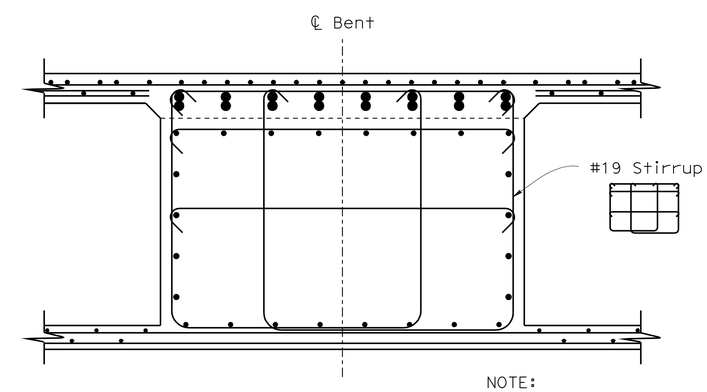

SECTION C-C
1:20

NOTE:
Reinforcement similar to 'Section B-B' except as shown

DESIGN	BY Bill Kemp	CHECKED D. Menzmer	
DETAILS	BY Pauline Tong	CHECKED D. Menzmer	
QUANTITIES	BY M. Okimura	CHECKED D. Menzmer	

STATE OF CALIFORNIA
DEPARTMENT OF TRANSPORTATION

DIVISION OF ENGINEERING SERVICES
STRUCTURE DESIGN
DESIGN BRANCH 11

BRIDGE NO. 53-3019K
KILOMETER POST 3.88

CARMENITA ROAD NB OFF-RAMP
BENT DETAILS NO. 1

Caltrans Metric

ALL DIMENSIONS ARE IN MILLIMETERS UNLESS OTHERWISE SHOWN

ORIGINAL SCALE IN MILLIMETERS FOR REDUCED PLANS 0 10 20 30 40 50 60 70 80 90 100

CU 07225
EA 2159C1

DISREGARD PRINTS BEARING EARLIER REVISION DATES

REVISION DATES: 6-26-08 7-17-08 8-1-08 1-20-09 6-01-09 6-11-09

SHEET 14 OF 28

FILE => 53-3019k-h-bntdet01.dgn

STRUCTURES DESIGN DETAIL SHEET (METRIC) (REV.03-17-04)

USERNAME => trrene DATE PLOTTED => 22-JUN-2010 TIME PLOTTED => 15:38

DIST	COUNTY	ROUTE	KILOMETER POST TOTAL PROJECT	SHEET No	TOTAL SHEETS
07	LA	5	2.9/4.9	1024	1082

Daniel L. Texler 01-26-10
REGISTERED CIVIL ENGINEER DATE

6-21-10
PLANS APPROVAL DATE

REGISTERED PROFESSIONAL ENGINEER Daniel L. Texler No. 49792 Exp. 9-30-10 CIVIL STATE OF CALIFORNIA

The State of California or its officers or agents shall not be responsible for the accuracy or completeness of electronic copies of this plan sheet.

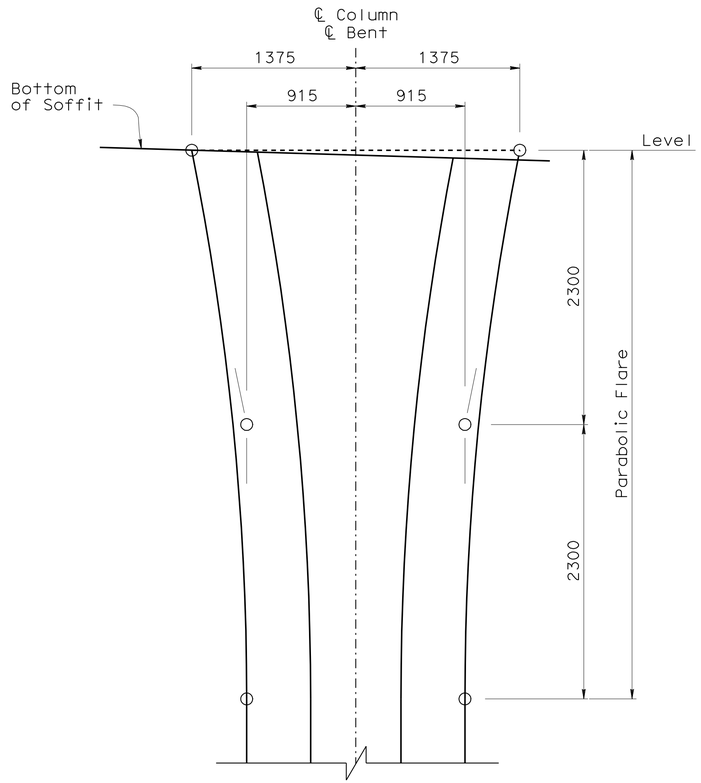

COLUMN GEOMETRY
1:25

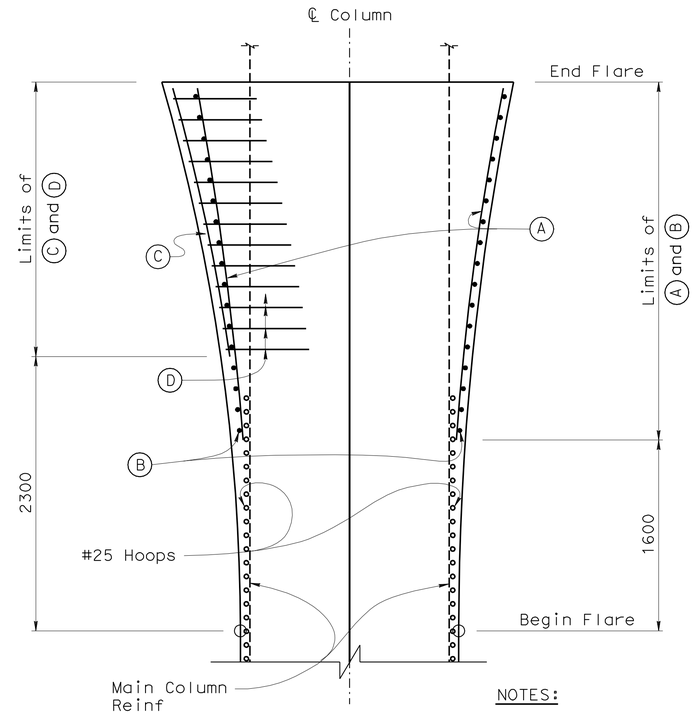

SECTION R-R
1:25

NOTES:

1. Column geometry and reinforcement is symmetric about ℄ Column & ℄ Bent

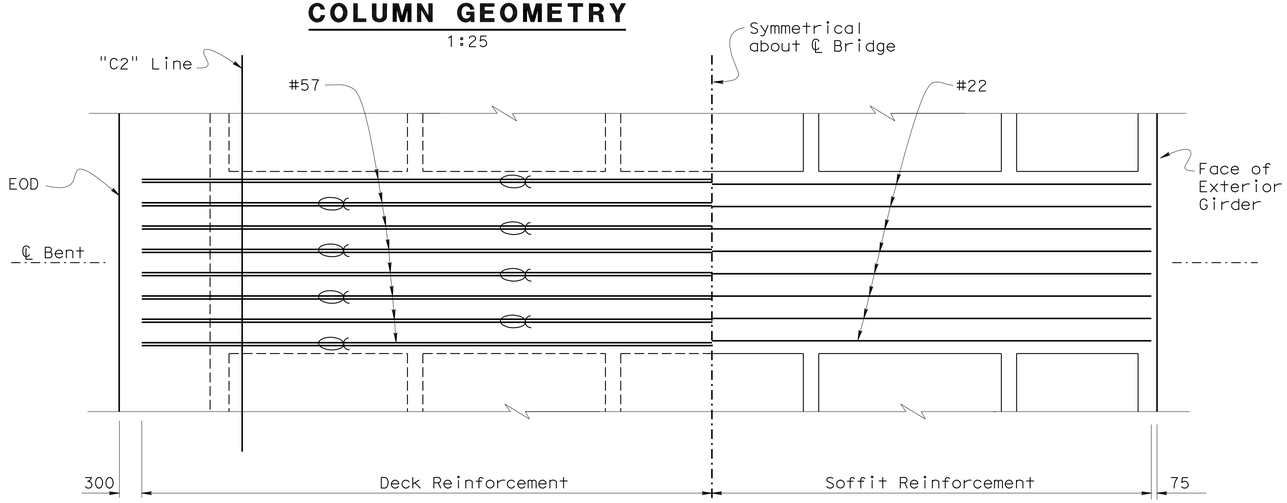

PLAN
1:40

Legend:

Indicates Bundled Bars

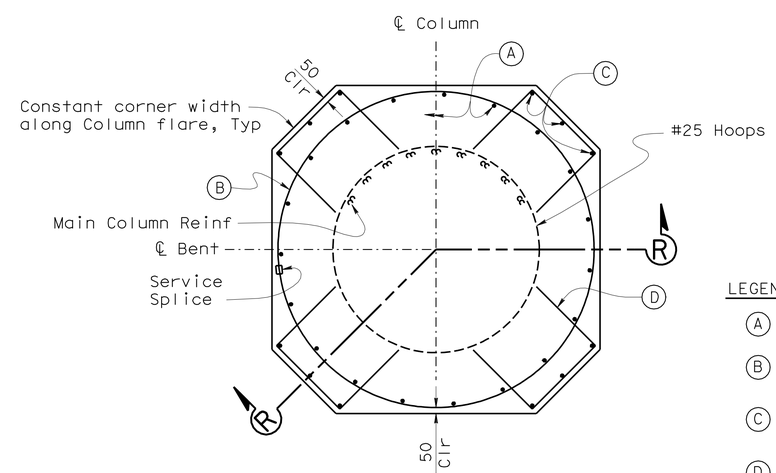

COLUMN FLARE REINFORCEMENT
1:25

LEGEND:

(A) = #19 / Tot 19

(B) = #25 Hoops @ 175, stagger splices

(C) = #19 / Tot 12

(D) = #19 700 700 @ 175

DESIGN	BY Bill Kemp	CHECKED D. Menzmer	
DETAILS	BY Pauline Tong	CHECKED D. Menzmer	
QUANTITIES	BY M. Okimura	CHECKED D. Menzmer	

STATE OF CALIFORNIA
DEPARTMENT OF TRANSPORTATION

DIVISION OF ENGINEERING SERVICES
STRUCTURE DESIGN
DESIGN BRANCH 11

BRIDGE NO. 53-3019K
KILOMETER POST 3.88

CARMENITA ROAD NB OFF-RAMP
BENT DETAILS NO. 2

ALL DIMENSIONS ARE IN MILLIMETERS UNLESS OTHERWISE SHOWN

ORIGINAL SCALE IN MILLIMETERS FOR REDUCED PLANS 0 10 20 30 40 50 60 70 80 90 100

CU 07225
EA 2159C1

DISREGARD PRINTS BEARING EARLIER REVISION DATES

REVISION DATES: 7-16-08 8-1-08 1-23-09 6-19-09 12-28-09

SHEET 15 OF 28

FILE => 53-3019k-h-bntdet02.dgn

STRUCTURES DESIGN DETAIL SHEET (METRIC) (REV.03-17-04)

USERNAME => trrene DATE PLOTTED => 22-JUN-2010 TIME PLOTTED => 15:38

DIST	COUNTY	ROUTE	KILOMETER POST TOTAL PROJECT	SHEET No	TOTAL SHEETS
07	LA	5	2.9/4.9	1025	1082

Daniel L. Texler 01-26-10
REGISTERED CIVIL ENGINEER DATE

6-21-10
PLANS APPROVAL DATE

REGISTERED PROFESSIONAL ENGINEER
Daniel L Texler
No. 49792
Exp. 9-30-10
CIVIL
STATE OF CALIFORNIA

The State of California or its officers or agents shall not be responsible for the accuracy or completeness of electronic copies of this plan sheet.

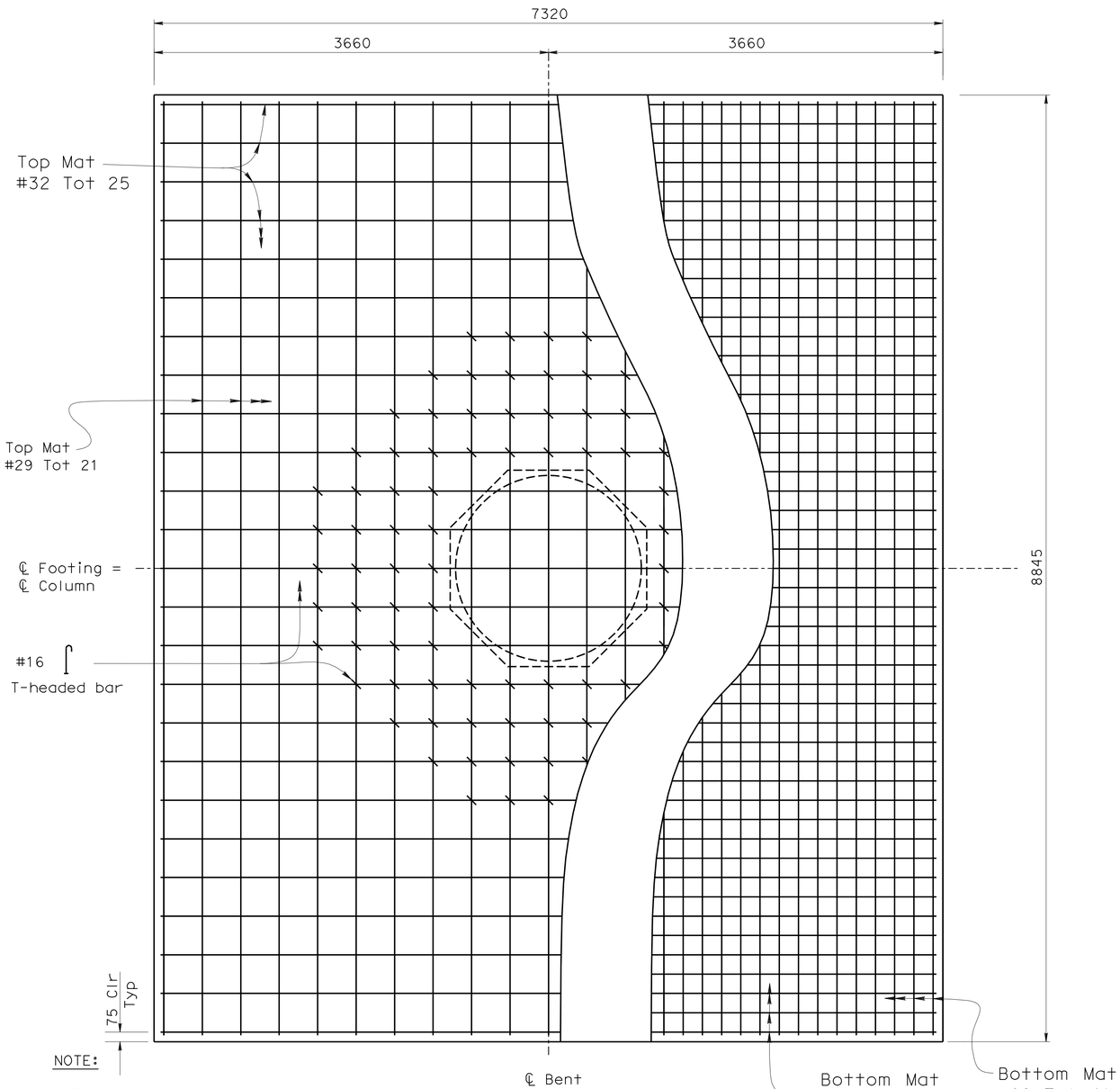

NOTE:

Details are symmetrical about ℄ Bent and ℄ Footing

Bars may be manipulated as required to clear main Column Reinf

TYPICAL FOOTING PLAN

1:25

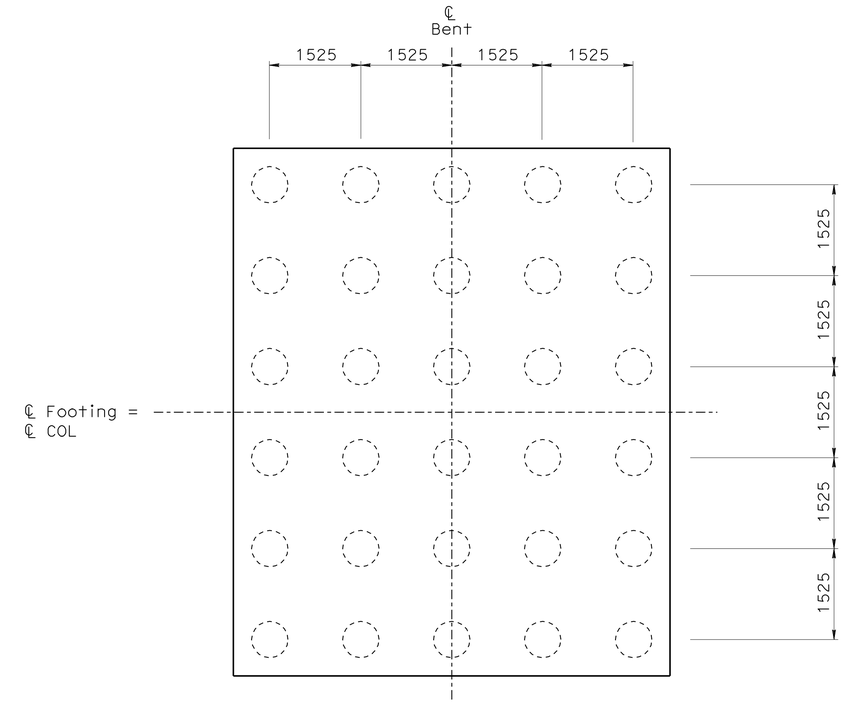

PILE LAYOUT

1:50

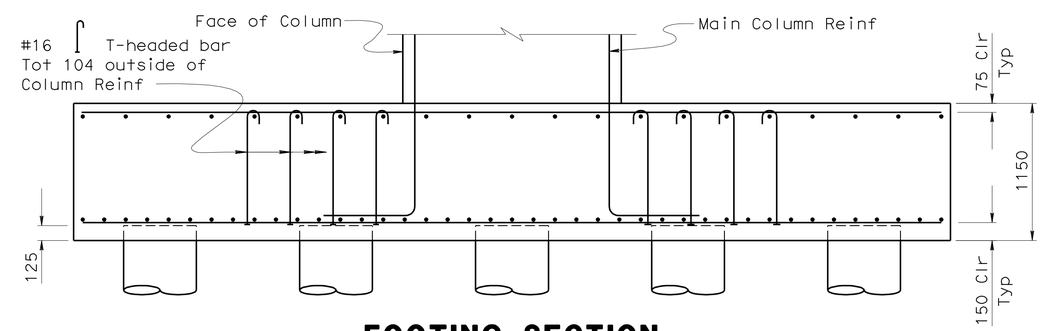

FOOTING SECTION

1:25

DESIGN	BY Bill Kemp	CHECKED D. Menzmer	
DETAILS	BY Pauline Tong	CHECKED D. Menzmer	
QUANTITIES	BY M. Okimura	CHECKED D. Menzmer	

STATE OF CALIFORNIA
DEPARTMENT OF TRANSPORTATION

DIVISION OF ENGINEERING SERVICES
STRUCTURE DESIGN
DESIGN BRANCH 11

BRIDGE NO. 53-3019K
KILOMETER POST 3.88

CARMENITA ROAD NB OFF-RAMP
FOOTING LAYOUT

Caltrans Metric

ALL DIMENSIONS ARE IN MILLIMETERS UNLESS OTHERWISE SHOWN

ORIGINAL SCALE IN MILLIMETERS FOR REDUCED PLANS 0 10 20 30 40 50 60 70 80 90 100

CU 07225
EA 2159C1

DISREGARD PRINTS BEARING EARLIER REVISION DATES

REVISION DATES: 6-23-08 7-24-08 8-1-08 1-16-09 1-21-09 6-24-09 6-11-09 6/15/09 12/28/09

SHEET 16 OF 28

FILE => 53-3019k-h-bntftg.dgn

STRUCTURES DESIGN DETAIL SHEET (METRIC) (REV.03-17-04)

USERNAME => ttrene DATE PLOTTED => 22-JUN-2010 TIME PLOTTED => 15:38

DIST	COUNTY	ROUTE	KILOMETER POST TOTAL PROJECT	SHEET No	TOTAL SHEETS
07	LA	5	2.9/4.9	1026	1082

Daniel L. Texler 01-26-10
REGISTERED CIVIL ENGINEER DATE

6-21-10
PLANS APPROVAL DATE

REGISTERED PROFESSIONAL ENGINEER Daniel L Texler No. 49792 Exp. 9-30-10 CIVIL STATE OF CALIFORNIA

The State of California or its officers or agents shall not be responsible for the accuracy or completeness of electronic copies of this plan sheet.

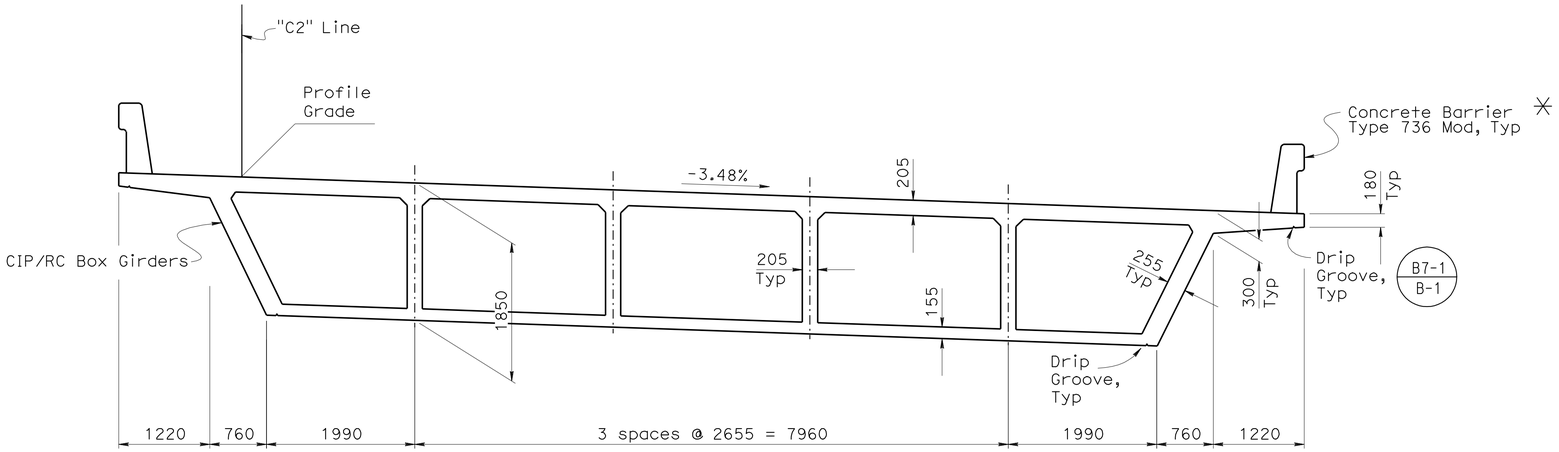

TYPICAL SECTION

1:40

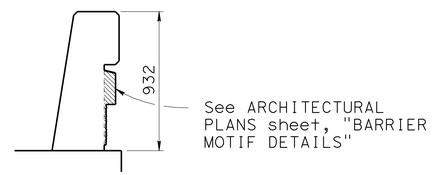

CONCRETE BARRIER ✳ TYPE 736 MOD & TYPE 736A MOD

1:20

For Reinforcement & other details not shown, see B11-56

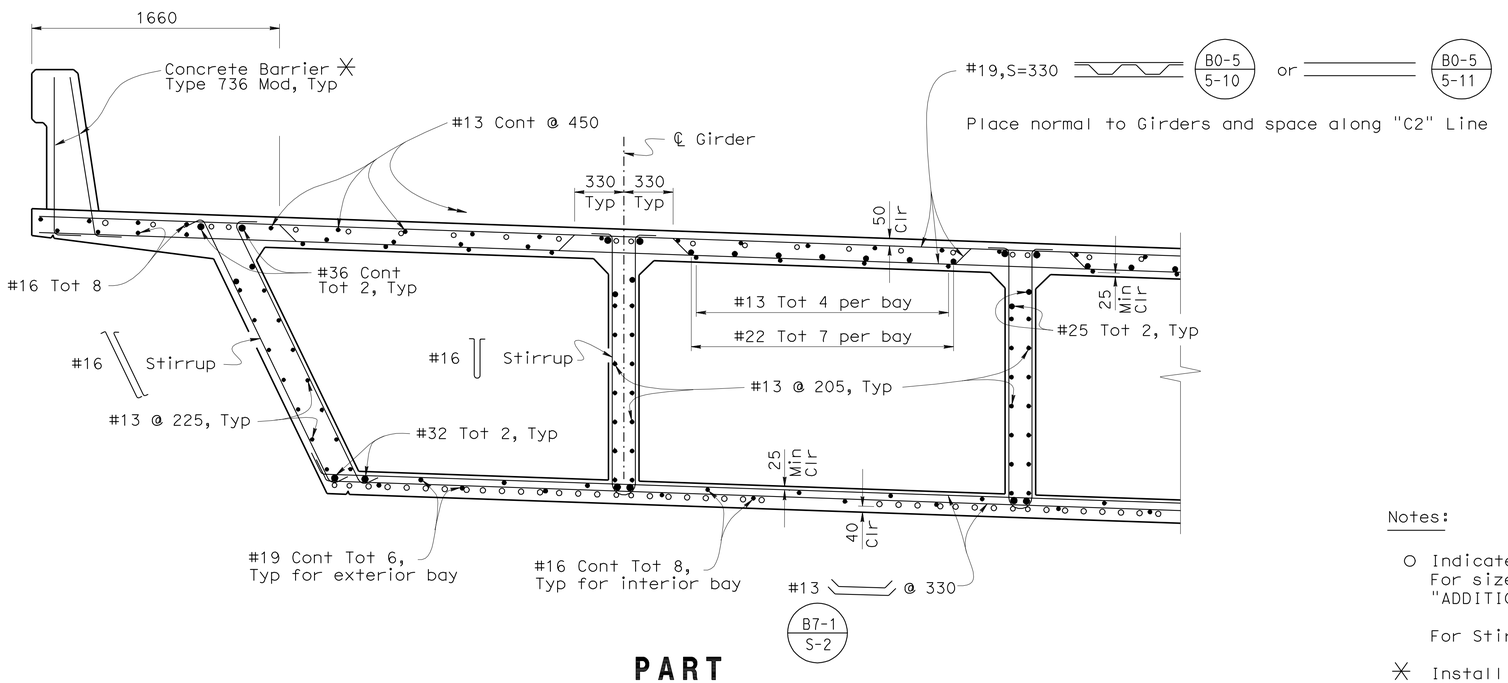

PART TYPICAL SECTION

1:20

Notes:

O Indicates additional Girder Reinforcement
For size and arrangement, see "ADDITIONAL GIRDER REINFORCEMENT DECK & SOFFIT" sheets

For Stirrup spacing, see "GIRDER LAYOUT" sheet

✳ Install utility conduits as req'd, (not shown) for size and other data, see "ROAD PLANS"

Caltrans Metric

	BY	CHECKED
DESIGN	Bill Kemp	D. Menzmer
DETAILS	Pauline Tong	D. Menzmer
QUANTITIES	M. Okimura	D. Menzmer

STATE OF CALIFORNIA
DEPARTMENT OF TRANSPORTATION

DIVISION OF ENGINEERING SERVICES
STRUCTURE DESIGN
DESIGN BRANCH 11

BRIDGE NO. 53-3019K
KILOMETER POST 3.88 (2.42)

CARMENITA ROAD NB OFF-RAMP
TYPICAL SECTION

ALL DIMENSIONS ARE IN MILLIMETERS UNLESS OTHERWISE SHOWN

ORIGINAL SCALE IN MILLIMETERS FOR REDUCED PLANS 0 10 20 30 40 50 60 70 80 90 100

CU 07225
EA 2159C1

DISREGARD PRINTS BEARING EARLIER REVISION DATES

REVISION DATES: 7-1-08 8-1-08 1-22-09 6-11-09 7-14-09 12-31-09 01-04-10

SHEET 17 OF 28

FILE => 53-3019k-k-typ.dgn

STRUCTURES DESIGN DETAIL SHEET (METRIC) (REV.03-17-04)

USERNAME => ttrene DATE PLOTTED => 22-JUN-2010 TIME PLOTTED => 15:38

DIST	COUNTY	ROUTE	KILOMETER POST TOTAL PROJECT	SHEET No	TOTAL SHEETS
07	LA	5	2.9/4.9	1027	1082

Daniel L. Texler 01-26-10
REGISTERED CIVIL ENGINEER DATE

6-21-10
PLANS APPROVAL DATE

REGISTERED PROFESSIONAL ENGINEER Daniel L Texler No. 49792 Exp. 9-30-10 CIVIL STATE OF CALIFORNIA

The State of California or its officers or agents shall not be responsible for the accuracy or completeness of electronic copies of this plan sheet.

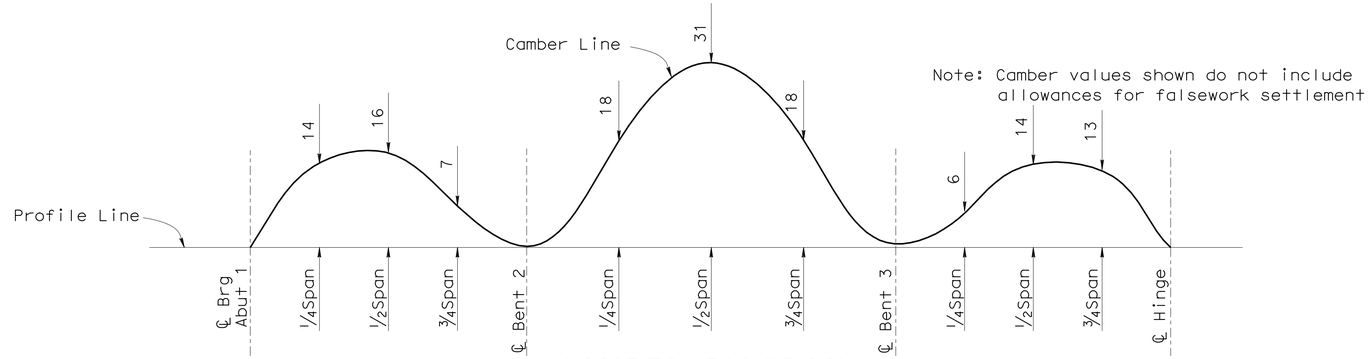

Note: Camber values shown do not include allowances for falsework settlement

CAMBER DIAGRAM

No Scale

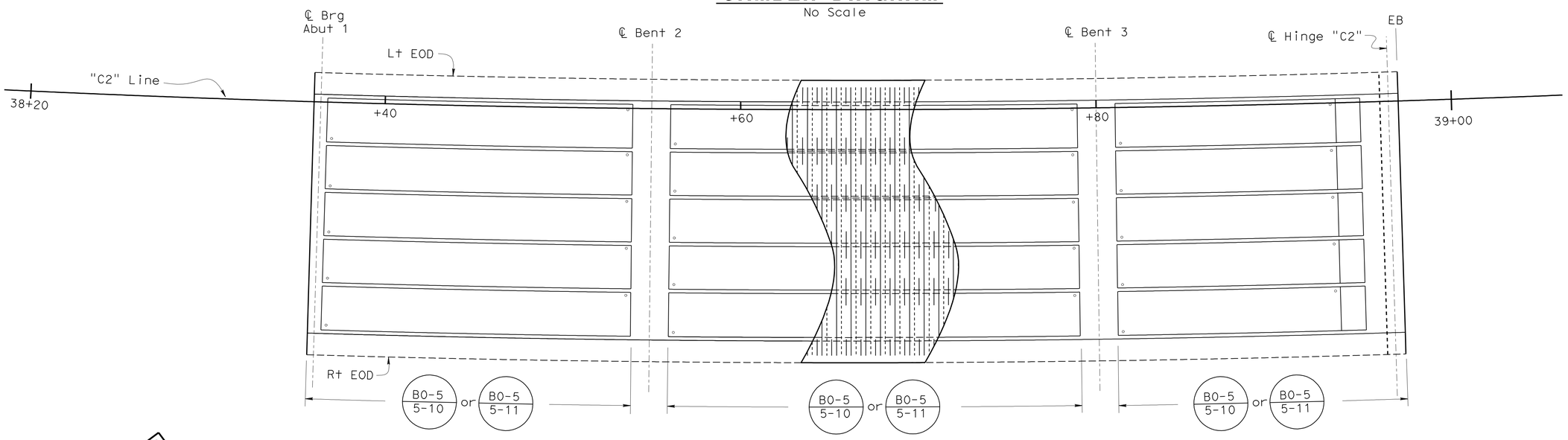

GIRDER LAYOUT

1:125

B7-1 / V-1 B7-1 / S-3

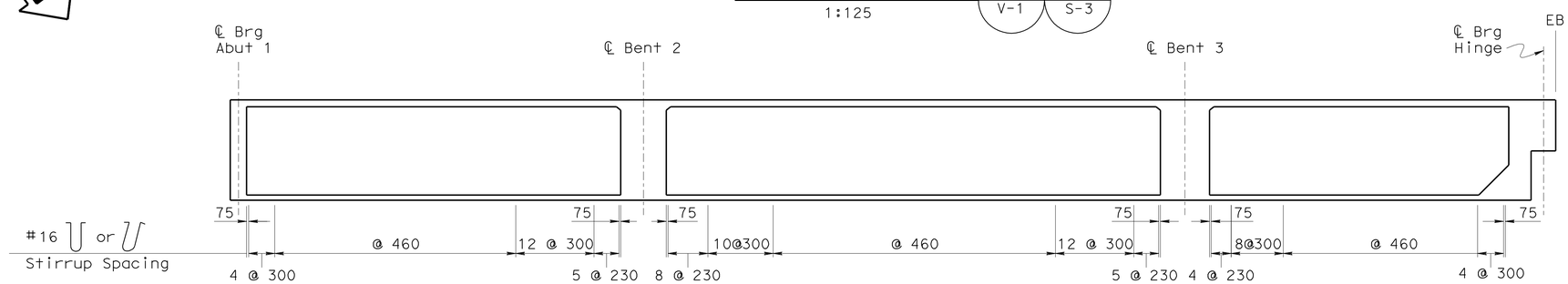

LONGITUDINAL SECTION

Horiz 1:125
Vert 1:50

Caltrans Metric

	BY	CHECKED
DESIGN	Bill Kemp	D. Menzmer
DETAILS	L. Goldthwait	D. Menzmer
QUANTITIES	M. Okimura	D. Menzmer

STATE OF CALIFORNIA
DEPARTMENT OF TRANSPORTATION

DIVISION OF ENGINEERING SERVICES
STRUCTURE DESIGN
DESIGN BRANCH 11

BRIDGE NO. 53-3019K
KILOMETER POST 3.88

CARMENITA ROAD NB OFF-RAMP
GIRDER LAYOUT

ALL DIMENSIONS ARE IN MILLIMETERS UNLESS OTHERWISE SHOWN

ORIGINAL SCALE IN MILLIMETERS FOR REDUCED PLANS 0 10 20 30 40 50 60 70 80 90 100

CU 07225
EA 2159C1

DISREGARD PRINTS BEARING EARLIER REVISION DATES

REVISION DATES: 4-24-08 6-26-08 7-17-08 8-1-08 8-7-08 1-16-09 1-22-09 6-11-09 6-16-09

SHEET 18 OF 28

FILE => 53-3019k-m-girlyt.dgn

STRUCTURES DESIGN DETAIL SHEET (METRIC) (REV.03-17-04)

USERNAME => trrene DATE PLOTTED => 22-JUN-2010 TIME PLOTTED => 15:38

DIST	COUNTY	ROUTE	KILOMETER POST TOTAL PROJECT	SHEET No	TOTAL SHEETS
07	LA	5	2.9/4.9	1028	1082

Daniel L. Texler 01-26-10
REGISTERED CIVIL ENGINEER DATE

6-21-10
PLANS APPROVAL DATE

REGISTERED PROFESSIONAL ENGINEER
Daniel L. Texler
No. 49792
Exp. 9-30-10
CIVIL
STATE OF CALIFORNIA

The State of California or its officers or agents shall not be responsible for the accuracy or completeness of electronic copies of this plan sheet.

NOTES:

1. Bent 3 is mirror image of Bent 2
2. All bars are #32 unless otherwise noted
3. All reinforcement shown is in addition to reinforcement shown on "TYPICAL SECTION" sheet
4. Only service splices allowed on continuous additional girder reinforcement
5. No splices allowed on non-continuous additional girder reinforcement

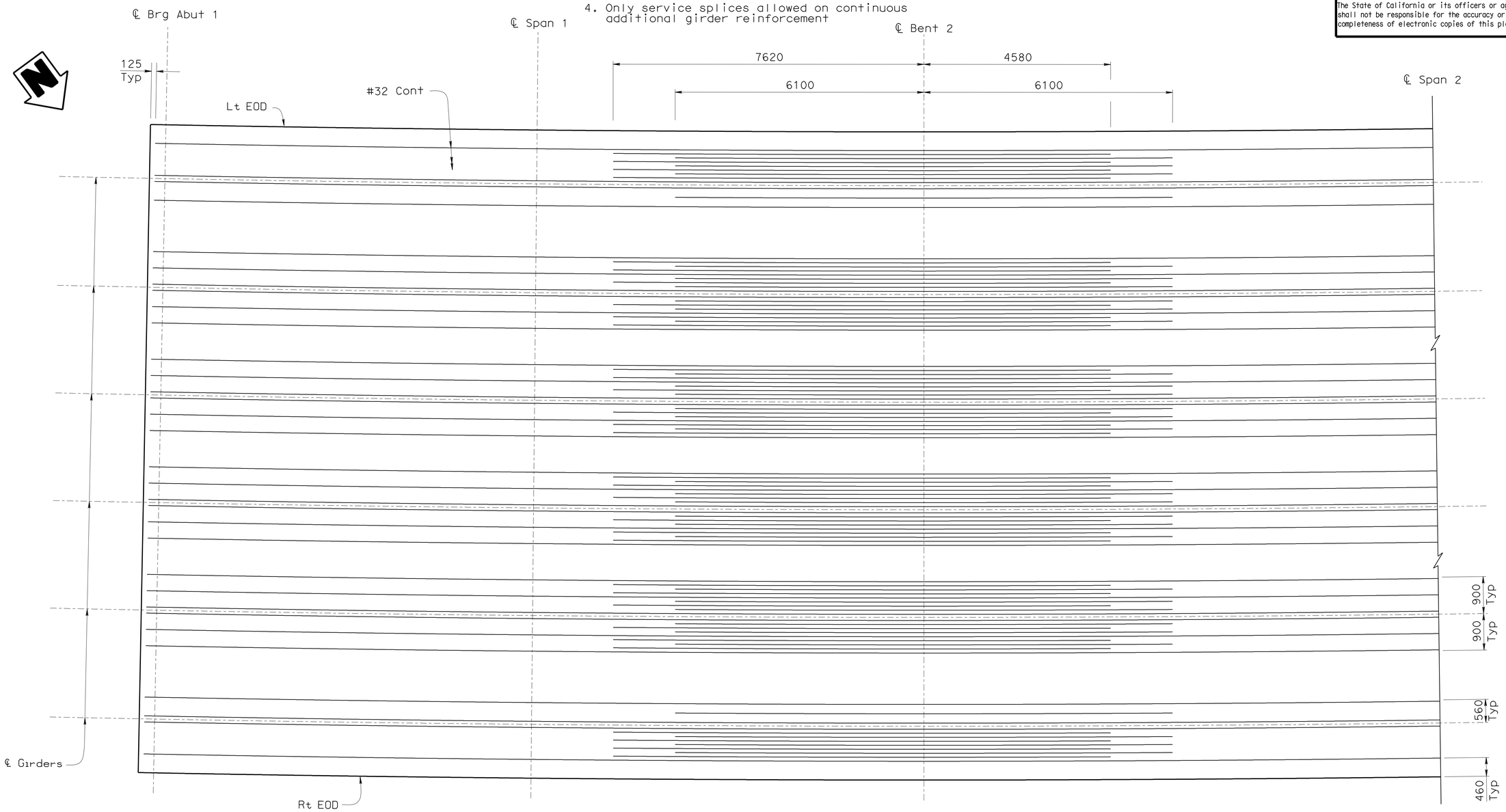

ADDITIONAL GIRDER REINFORCEMENT - DECK

1:50

Caltrans Metric

ALL DIMENSIONS ARE IN MILLIMETERS UNLESS OTHERWISE SHOWN

ORIGINAL SCALE IN MILLIMETERS FOR REDUCED PLANS 0 10 20 30 40 50 60 70 80 90 100

	BY	CHECKED
DESIGN	Bill Kemp	D. Menzmer
DETAILS	L. Goldthwait	D. Menzmer
QUANTITIES	M. Okimura	D. Menzmer

STATE OF CALIFORNIA
DEPARTMENT OF TRANSPORTATION

DIVISION OF ENGINEERING SERVICES
STRUCTURE DESIGN
DESIGN BRANCH 11

CU 07225
EA 2159C1

BRIDGE NO. 53-3019K
KILOMETER POST 3.88

CARMENITA ROAD NB OFF-RAMP

ADDITIONAL GIRDER REINFORCEMENT NO. 1

DISREGARD PRINTS BEARING EARLIER REVISION DATES

REVISION DATES: 7-01-08 7-01-08 8-4-08 11-18-08 1-22-09

SHEET 19 OF 28

FILE => 53-3019k-m-girrf01.dgn

STRUCTURES DESIGN DETAIL SHEET (METRIC) (REV.03-17-04)

USERNAME => trmartok DATE PLOTTED => 22-JUN-2010 TIME PLOTTED => 15:54

DIST	COUNTY	ROUTE	KILOMETER POST TOTAL PROJECT	SHEET No	TOTAL SHEETS
07	LA	5	2.9/4.9	1029	1082

Daniel L. Texler 01-26-10
REGISTERED CIVIL ENGINEER DATE

6-21-10
PLANS APPROVAL DATE

REGISTERED PROFESSIONAL ENGINEER
Daniel L. Texler
No. 49792
Exp. 9-30-10
CIVIL
STATE OF CALIFORNIA

The State of California or its officers or agents shall not be responsible for the accuracy or completeness of electronic copies of this plan sheet.

NOTES:

1. Bent 3 is mirror image of Bent 2
2. All bars are #32 unless otherwise noted
3. All reinforcement shown is in addition to reinforcement shown on "TYPICAL SECTION" sheet
4. Only service splices allowed on continuous additional girder reinforcement
5. No splices allowed on non-continuous additional girder reinforcement

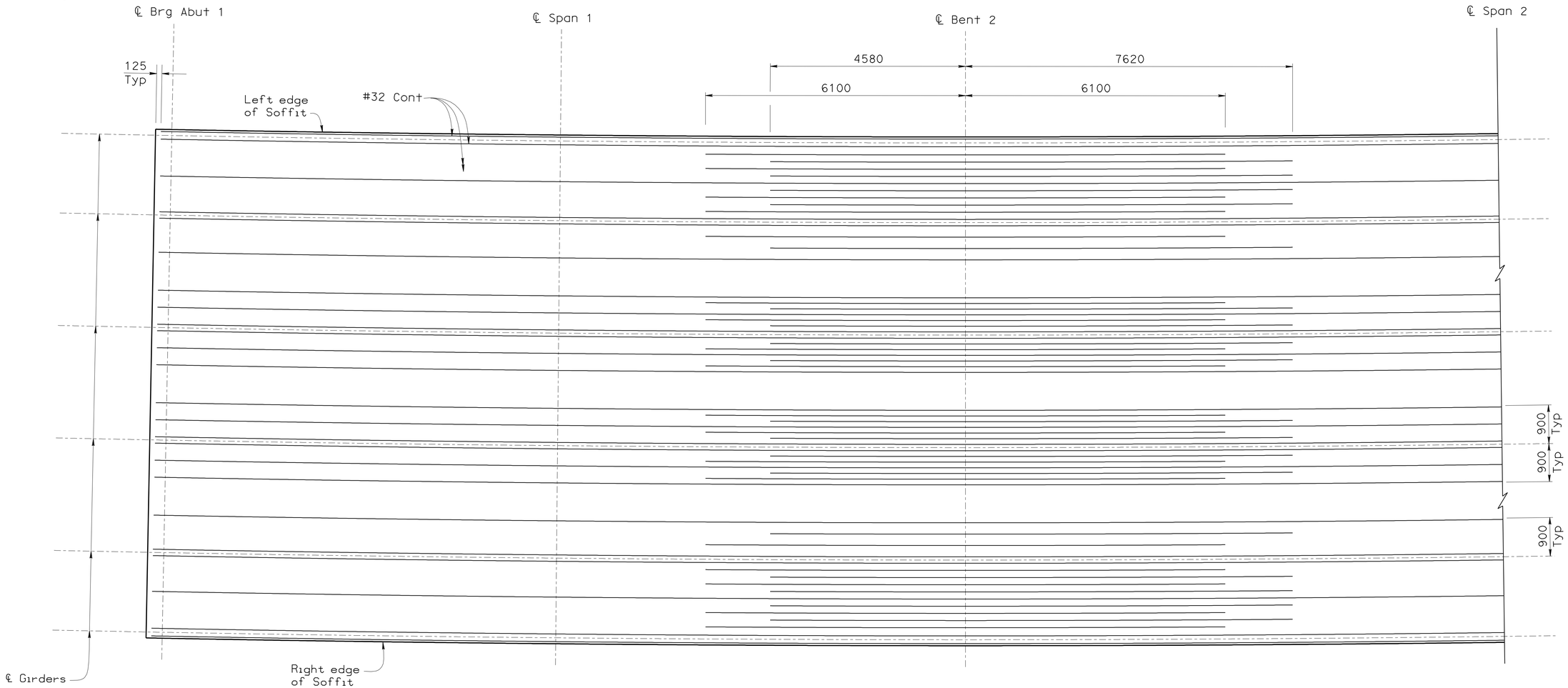

ADDITIONAL GIRDER REINFORCEMENT - SOFFIT

1:50

Caltrans Metric

	BY	CHECKED
DESIGN	Bill Kemp	D. Menzmer
DETAILS	Pauline Tong	D. Menzmer
QUANTITIES	M. Okimura	D. Menzmer

STATE OF CALIFORNIA
DEPARTMENT OF TRANSPORTATION

DIVISION OF ENGINEERING SERVICES
STRUCTURE DESIGN
DESIGN BRANCH 11

BRIDGE NO. 53-3019K
KILOMETER POST 3.88

CARMENITA ROAD NB OFF-RAMP
ADDITIONAL GIRDER REINFORCEMENT NO. 2

ALL DIMENSIONS ARE IN MILLIMETERS UNLESS OTHERWISE SHOWN

ORIGINAL SCALE IN MILLIMETERS FOR REDUCED PLANS 0 10 20 30 40 50 60 70 80 90 100

CU 07225
EA 2159C1

DISREGARD PRINTS BEARING EARLIER REVISION DATES

REVISION DATES: 7-01-08 7-07-08 8-4-08 11-18-08 1-22-09

SHEET 20 OF 28

FILE => 53-3019k-m-girrf02.dgn

STRUCTURES DESIGN DETAIL SHEET (METRIC) (REV.03-17-04)

USERNAME => ttmorlok DATE PLOTTED => 22-JUN-2010 TIME PLOTTED => 15:54

DIST	COUNTY	ROUTE	KILOMETER POST TOTAL PROJECT	SHEET No	TOTAL SHEETS
07	LA	5	2.9/4.9	1030	1082

Daniel L. Texler 01-26-10
REGISTERED CIVIL ENGINEER DATE

6-21-10
PLANS APPROVAL DATE

REGISTERED PROFESSIONAL ENGINEER Daniel L. Texler No. 49792 Exp. 9-30-10 CIVIL STATE OF CALIFORNIA

The State of California or its officers or agents shall not be responsible for the accuracy or completeness of electronic copies of this plan sheet.

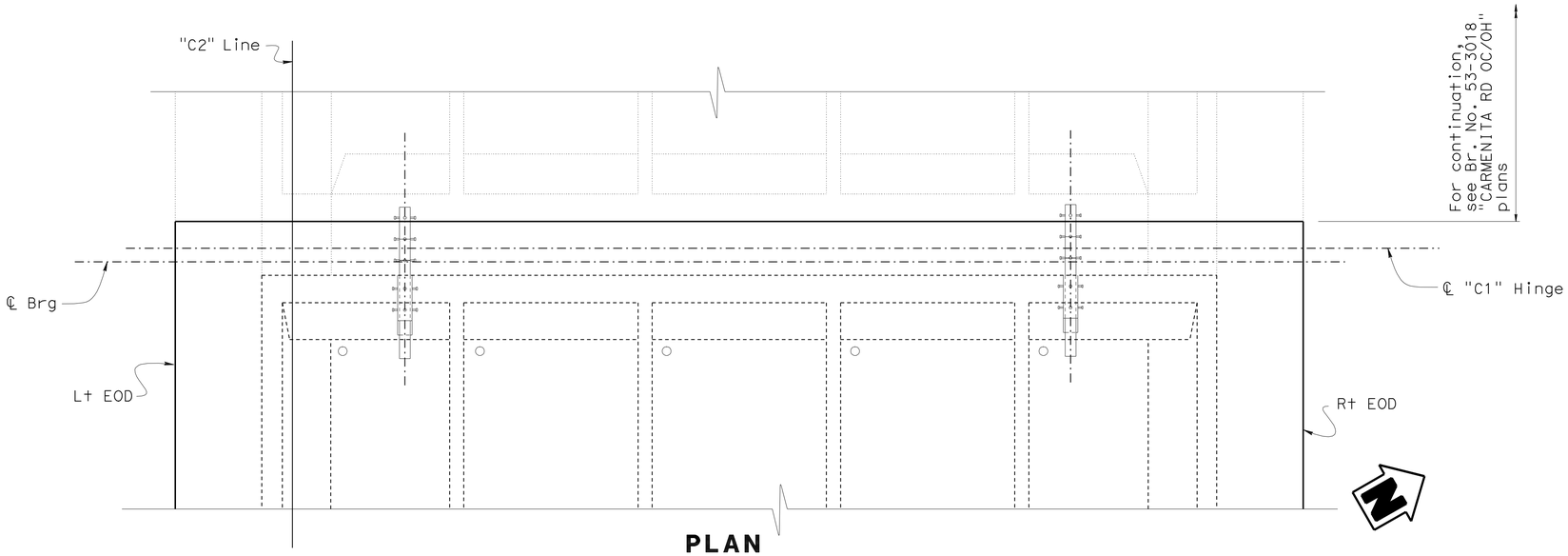

PLAN
1:40

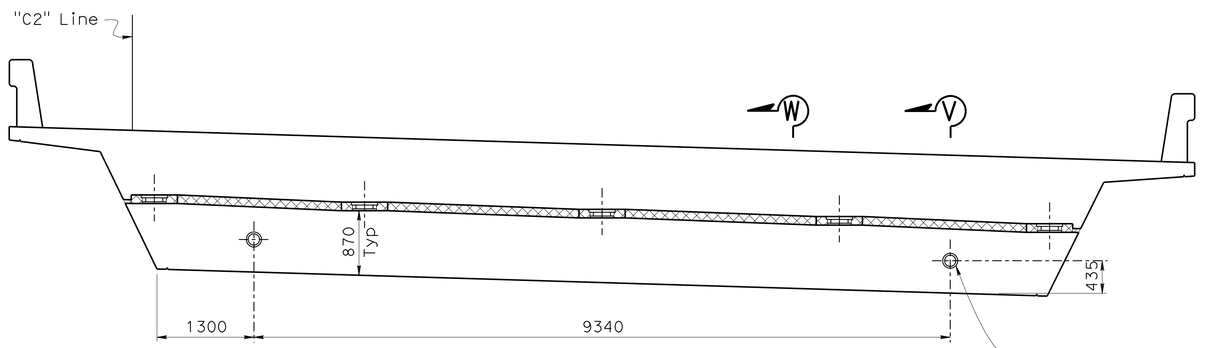

ELEVATION
1:40

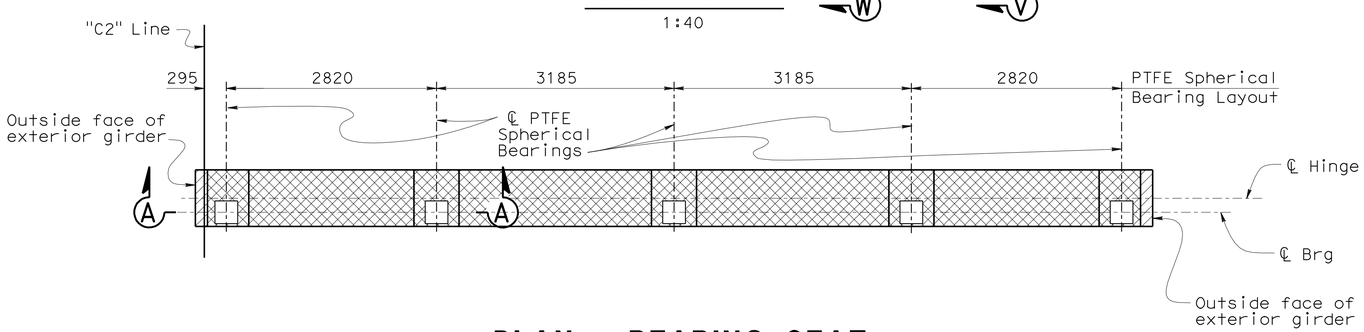

PLAN - BEARING SEAT
1:40

NOTES:

1. See Standard Plans B0-13 / 13-1 & B0-13 / 13-2
2. For 'Section V-V', see "HINGE DETAILS NO. 3" sheet.
3. For 'Section W-W', see "HINGE DETAILS NO. 2" sheet.
4. Expanded polystyrene to be removed 300 from visible surface.
5. For bearing pad details, see "PTFE/SPHERICAL EXPANSION BEARING DETAILS NO. 1" sheet

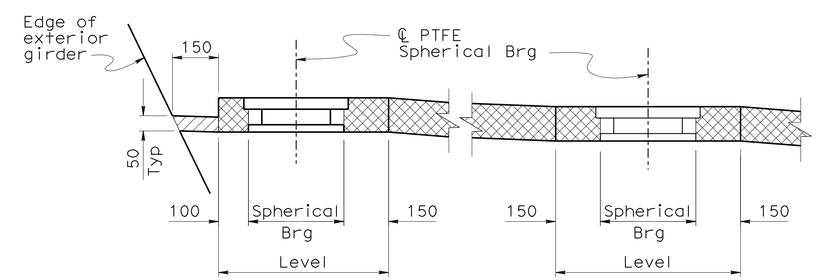

SECTION A-A
1:10

LEGEND:

Indicates 50 mm thick expanded polystyrene

Indicates expanded polystyrene, same thickness as bearing

	BY	CHECKED
DESIGN	Bill Kemp	D. Menzmer
DETAILS	Pauline Tong	D. Menzmer
QUANTITIES	M. Okimura	D. Menzmer

STATE OF CALIFORNIA
DEPARTMENT OF TRANSPORTATION

DIVISION OF ENGINEERING SERVICES
STRUCTURE DESIGN
DESIGN BRANCH 11

BRIDGE NO. 53-3019K
KILOMETER POST 3.88

CARMENITA ROAD NB OFF-RAMP
HINGE DETAILS NO. 1

ALL DIMENSIONS ARE IN MILLIMETERS UNLESS OTHERWISE SHOWN

ORIGINAL SCALE IN MILLIMETERS FOR REDUCED PLANS 0 10 20 30 40 50 60 70 80 90 100

CU 07225
EA 2159C1

DISREGARD PRINTS BEARING EARLIER REVISION DATES

REVISION DATES: 7-19-08 1-22-09 6-18-09

SHEET 21 OF 28

FILE => 53-3019k-n-hngdet01.dgn

STRUCTURES DESIGN DETAIL SHEET (METRIC) (REV.03-17-04)

USERNAME => trmorlok DATE PLOTTED => 22-JUN-2010 TIME PLOTTED => 16:54

DIST	COUNTY	ROUTE	KILOMETER POST TOTAL PROJECT	SHEET No	TOTAL SHEETS
07	LA	5	2.9/4.9	1031	1082

Daniel L. Texler 01-26-10
REGISTERED CIVIL ENGINEER DATE

6-21-10
PLANS APPROVAL DATE

REGISTERED PROFESSIONAL ENGINEER Daniel L. Texler No. 49792 Exp. 9-30-10 CIVIL STATE OF CALIFORNIA

The State of California or its officers or agents shall not be responsible for the accuracy or completeness of electronic copies of this plan sheet.

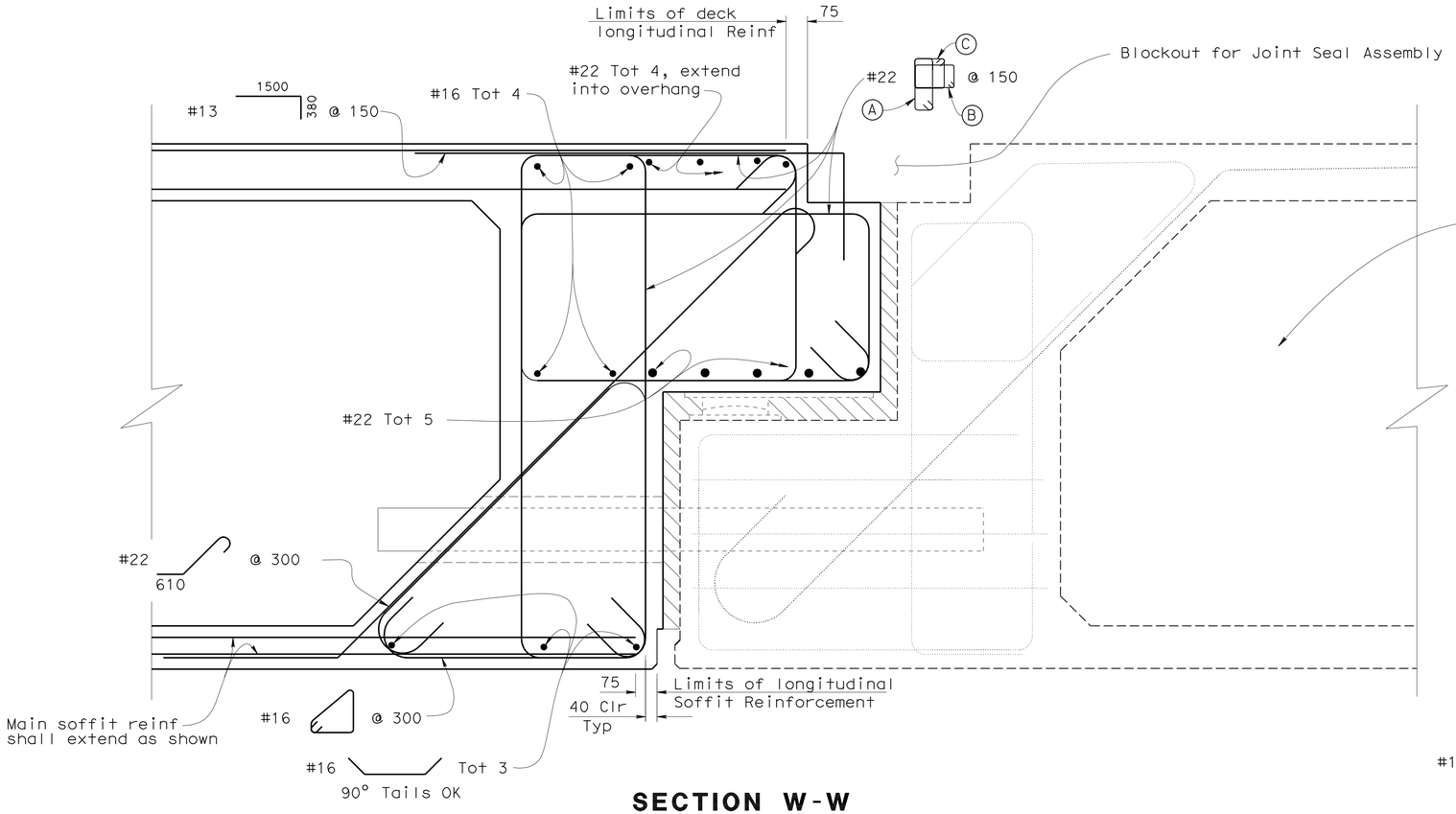

SECTION W-W

1:10

NOTES:

1. For location of 'Section W-W' and NPS6 double extra strong pipe layout, see "HINGE DETAILS NO. 1" sheet.
2. Hinge Seat shown for information only. For details, see Bridge No. 53-3018 "CARMENITA ROAD OC/OH" plans.

Denotes Expanded Polystyrene

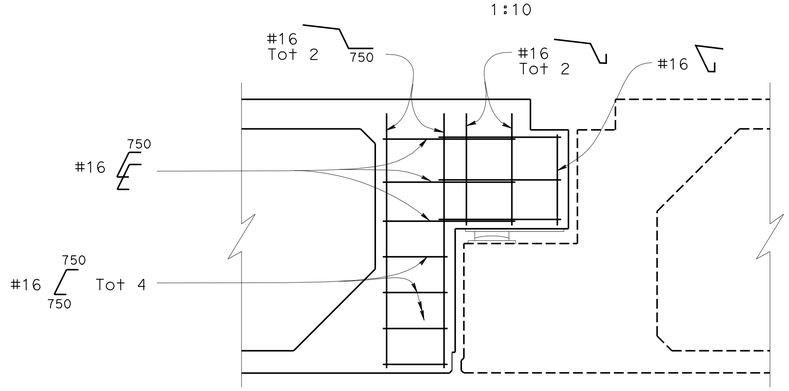

HINGE SIDE REINFORCEMENT

1:20

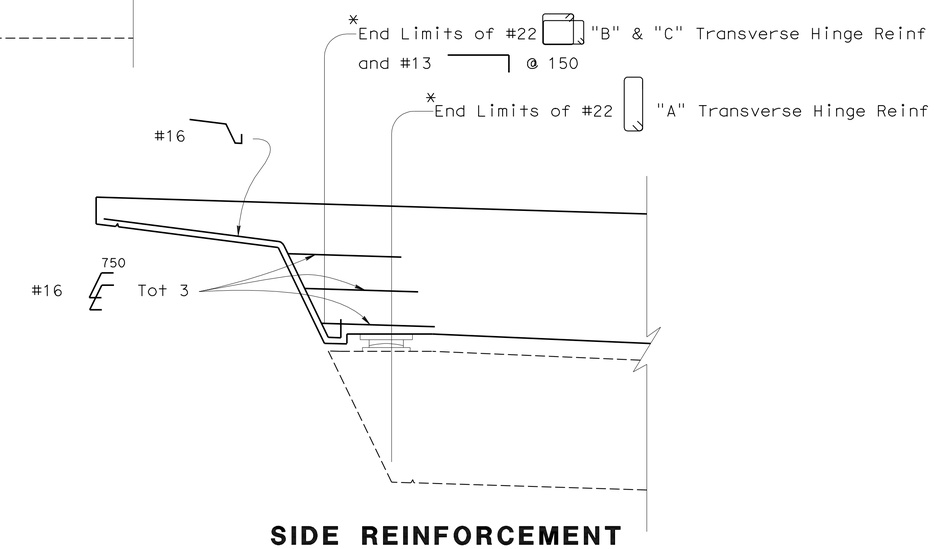

SIDE REINFORCEMENT

1:20

* See Section W-W for location of #22 Transverse Hinge Reinf and #13 @ 150

Adjust spacing to accomodate pipe shear keys in girder reinf

Caltrans Metric	DESIGN	BY Bill Kemp	CHECKED D. Menzmer	STATE OF CALIFORNIA DEPARTMENT OF TRANSPORTATION	DIVISION OF ENGINEERING SERVICES STRUCTURE DESIGN DESIGN BRANCH 11
	DETAILS	BY Pauline Tong	CHECKED D. Menzmer		
	QUANTITIES	BY M. Okimura	CHECKED D. Menzmer		

BRIDGE NO. 53-3019K
KILOMETER POST 3.88

CARMENITA ROAD NB OFF-RAMP
HINGE DETAILS NO. 2

ALL DIMENSIONS ARE IN MILLIMETERS UNLESS OTHERWISE SHOWN

ORIGINAL SCALE IN MILLIMETERS FOR REDUCED PLANS 0 10 20 30 40 50 60 70 80 90 100

CU 07225
EA 2159C1

DISREGARD PRINTS BEARING EARLIER REVISION DATES

REVISION DATES: 7-21-08 12-31-08 1-22-09 1-26-09 2-06-09 6-18-09

SHEET 22 OF 28

FILE => 53-3019k-n-hngdet02.dgn

STRUCTURES DESIGN DETAIL SHEET (METRIC) (REV.03-17-04)

USERNAME => trmarlok DATE PLOTTED => 22-JUN-2010 TIME PLOTTED => 15:54

DIST	COUNTY	ROUTE	KILOMETER POST TOTAL PROJECT	SHEET No	TOTAL SHEETS
07	LA	5	2.9/4.9	1032	1082

Daniel L. Texler 01-26-10
REGISTERED CIVIL ENGINEER DATE

6-21-10
PLANS APPROVAL DATE

REGISTERED PROFESSIONAL ENGINEER Daniel L. Texler No. 49792 Exp. 9-30-10 CIVIL STATE OF CALIFORNIA

The State of California or its officers or agents shall not be responsible for the accuracy or completeness of electronic copies of this plan sheet.

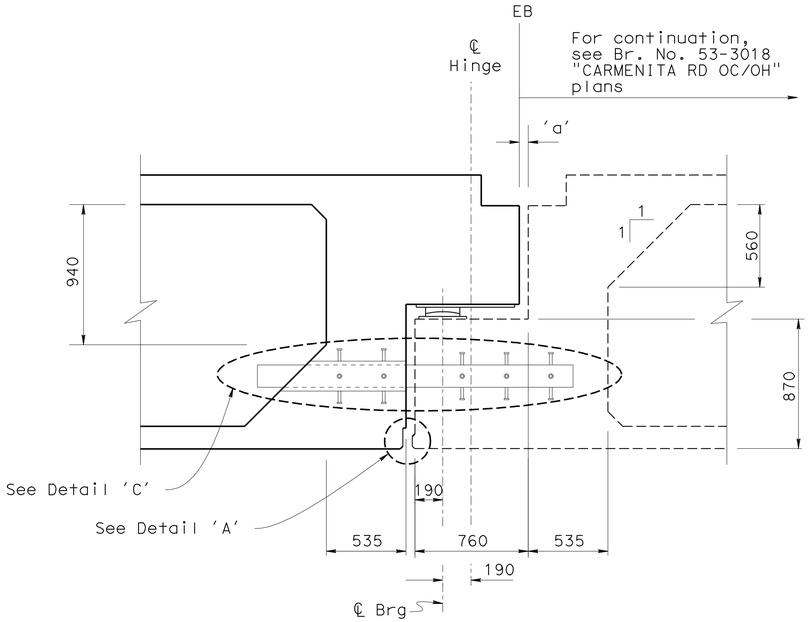

SECTION V-V
1:20

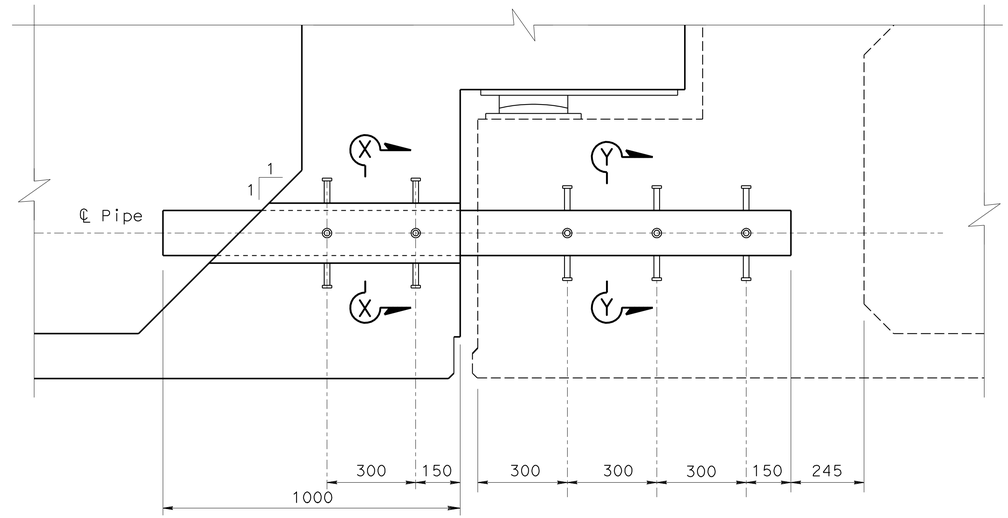

DETAIL 'C'
1:10

NOTES:

1. For location of 'Section V-V' and NPS6 double extra strong pipe layout, see "HINGE DETAILS NO. 1" sheet

2. Details for Br. No. 53-3018 shown for information only.

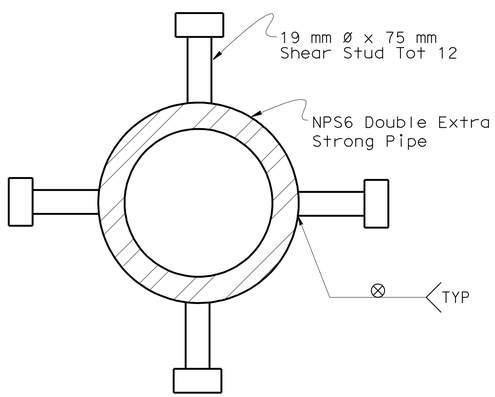

SECTION Y-Y
1:2.5

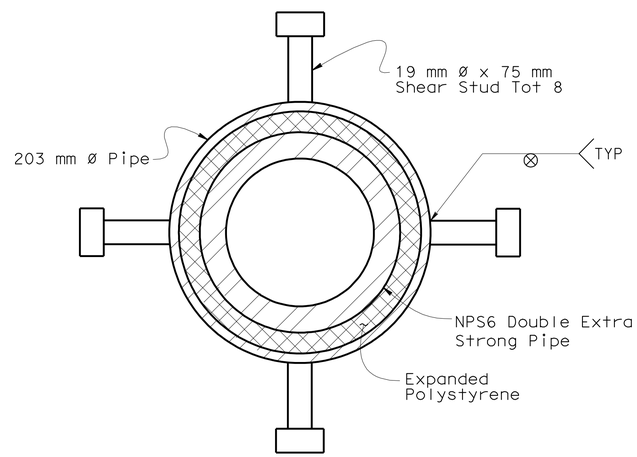

SECTION X-X
1:2.5

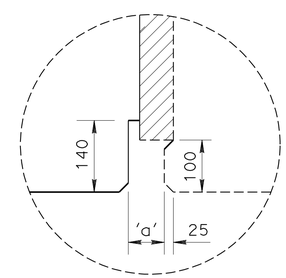

DETAIL A
No Scale

DESIGN	BY Bill Kemp	CHECKED D. Menzmer	
DETAILS	BY Pauline Tong	CHECKED D. Menzmer	
QUANTITIES	BY M. Okimura	CHECKED D. Menzmer	

STATE OF CALIFORNIA
DEPARTMENT OF TRANSPORTATION

DIVISION OF ENGINEERING SERVICES
STRUCTURE DESIGN
DESIGN BRANCH 11

BRIDGE NO. 53-3019K
KILOMETER POST 3.88

CARMENITA ROAD NB OFF-RAMP
HINGE DETAILS NO. 3

ALL DIMENSIONS ARE IN MILLIMETERS UNLESS OTHERWISE SHOWN

ORIGINAL SCALE IN MILLIMETERS FOR REDUCED PLANS 0 10 20 30 40 50 60 70 80 90 100

CU 07225
EA 2159C1

DISREGARD PRINTS BEARING EARLIER REVISION DATES

REVISION DATES: 7-21-08 12-31-08 6-11-09 6-18-09

SHEET 23 OF 28

FILE => 53-3019k-n-hngdet03.dgn

STRUCTURES DESIGN DETAIL SHEET (METRIC) (REV.03-17-04)

USERNAME => trmartok DATE PLOTTED => 22-JUN-2010 TIME PLOTTED => 15:54

DIST.	COUNTY	ROUTE	KILOMETER POST TOTAL PROJECT	SHEET NO.	TOTAL SHEETS
07	LA	5	2.9/4.9	1033	1082

Caltrans Metric

Daniel L. Texler 01-26-10
REGISTERED ENGINEER - CIVIL

6-21-10
PLANS APPROVAL DATE

REGISTERED PROFESSIONAL ENGINEER Daniel L. Texler No. 49792 Exp. 9-30-10 CIVIL STATE OF CALIFORNIA

The State of California or its officers or agents shall not be responsible for the accuracy or completeness of electronic copies of this plan sheet.

EXPANSION BEARING TABLE

LOCATION	MAXIMUM VERTICAL LOAD (kN)	MINIMUM DEAD LOAD (kN)	DESIGN ROTATION (Radians)	CONCAVE PLATE						CONVEX PLATE		MASONRY PLATE			SOLE PLATE			ASSEMBLY HEIGHT
				WIDTH / LENGTH	FLAT PTFE AREA (m^2)	DIAMETER	SPHERICAL RADIUS	MINIMUM THICKNESS	MAXIMUM THICKNESS	DIAMETER	MAXIMUM THICKNESS	WIDTH	LENGTH	THICKNESS	WIDTH	LENGTH	THICKNESS	
				L_{cp}	A_{PTFE}	D_m	R_{act}	T_{min}	T_{max}	C_m	H_{act}	W_{mp}	L_{mp}	T_{mp}	W_{sp}	L_{sp}	T_{sp}	A_h
"C2" Hinge	545	305	0.0349	210	0.0235	180	387	19	35	205	35	255	255	25	305	610	38.1	115

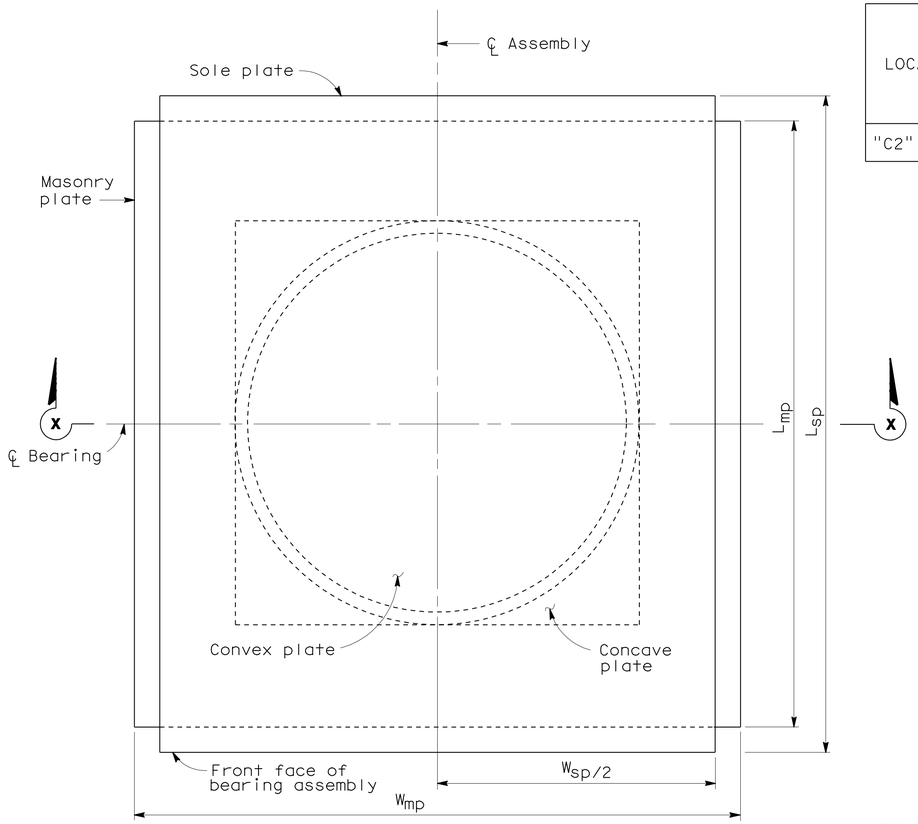

PLAN

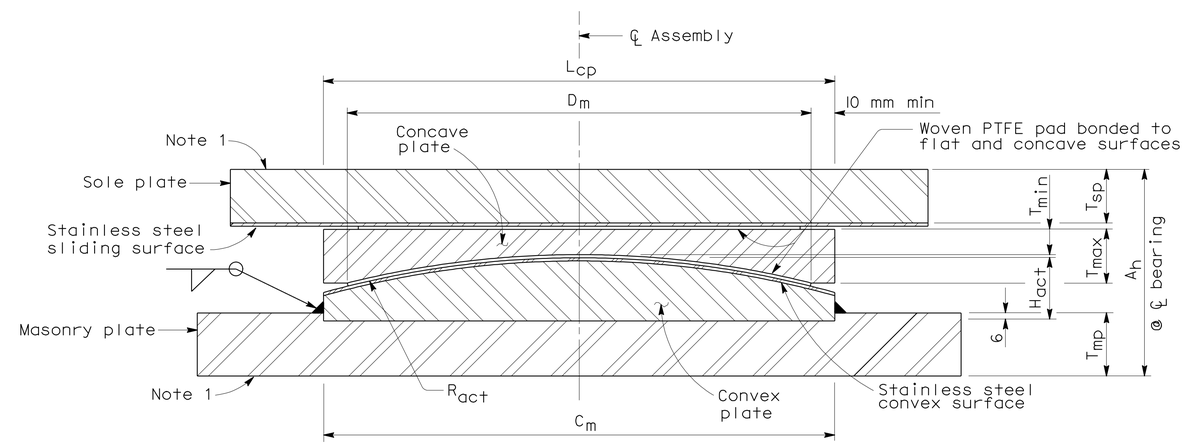

SECTION X-X

NOTES:

1. For anchorage details, see "PTFE/SPHERICAL EXPANSION BEARING DETAILS NO.2" sheet
2. All units in millimeters unless otherwise noted.
3. All dimensions shown are steel only unless otherwise noted.
4. H_{act} includes stainless steel.
5. A_h includes PTFE, substratum and stainless steel, (Varies).
6. R_{act} is to sliding surface.

NO SCALE

ALL DIMENSIONS ARE IN MILLIMETERS UNLESS OTHERWISE SHOWN

STANDARD DRAWING				
RELEASE DATE 4/9/97	DESIGN BY ROBERTO LACALLE	CHECKED ROD SIMMONS	RELEASED BY	
	DETAILS BY R. YEE	CHECKED ROD SIMMONS		
FILE NO. xs9-010	SUBMITTED BY ROBERTO LACALLE	DRAWING DATE 11/93	OFFICE CHIEF	

1 Note 1 Amended
2 Title Amended

STATE OF CALIFORNIA
DEPARTMENT OF TRANSPORTATION

DIVISION OF ENGINEERING SERVICES

BRIDGE NO. 53-3019K
KILOMETER POST 3.88

CARMENITA ROAD NB OFF-RAMP 2

PTFE/SPHERICAL EXPANSION BEARING DETAILS NO.1

DS OSD 2147A (METRIC) (REV. 2/25/97)

ORIGINAL SCALE IN MILLIMETERS FOR REDUCED PLANS 0 10 20 30 40 50 60 70 80 90 100

CU 07225
EA 2159C1

DISREGARD PRINTS BEARING EARLIER REVISION DATES → 7-22-08 1-22-09 7-6-09

REVISION DATES (PRELIMINARY STAGE ONLY)

SHEET 24 OF 28

USERNAME => trmariak

53-3019k-q-ptfe01.

DATE PLOTTED => 22-JUN-2010 TIME PLOTTED => 15:55

DIST	COUNTY	ROUTE	KILOMETER POST TOTAL PROJECT	SHEET No	TOTAL SHEETS
07	LA	5	2.9/4.9	1034	1082

Daniel L. Texler 01-26-10
REGISTERED CIVIL ENGINEER

6-21-10
PLANS APPROVAL DATE

REGISTERED PROFESSIONAL ENGINEER
Daniel L. Texler
No. 49792
Exp. 9-30-10
CIVIL
STATE OF CALIFORNIA

The State of California or its officers or agents shall not be responsible for the accuracy or completeness of electronic copies of this plan sheet.

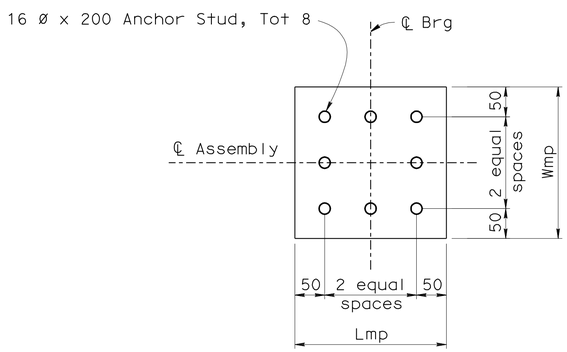

PLAN-MASONRY PLATE AT HINGE

1:5

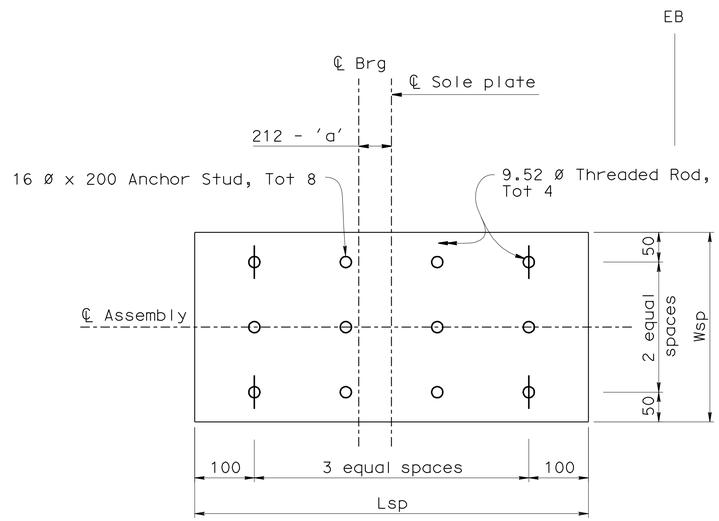

PLAN-SOLE PLATE AT HINGE

1:5

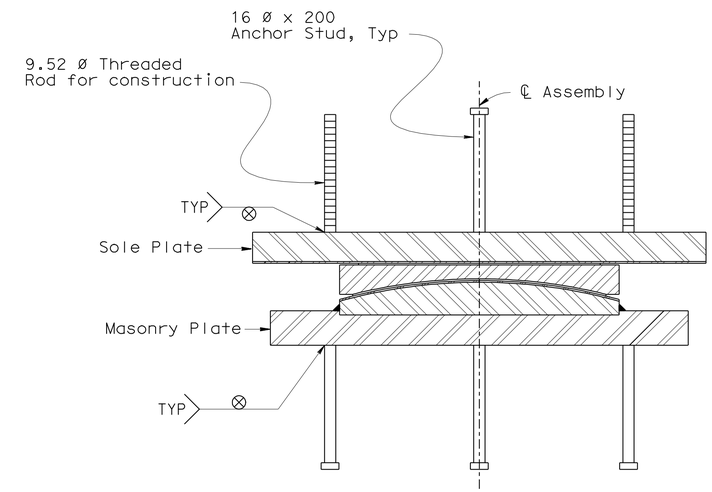

ANCHORAGE DETAIL

NO SCALE

NOTE:

For dimension 'a', see "JOINT SEAL ASSEMBLY (MAXIMUM MOVEMENT RATING = 100 mm)" sheet

Caltrans Metric

ALL DIMENSIONS ARE IN MILLIMETERS UNLESS OTHERWISE SHOWN

ORIGINAL SCALE IN MILLIMETERS FOR REDUCED PLANS 0 10 20 30 40 50 60 70 80 90 100

	BY	CHECKED
DESIGN	Phu Nguyen	D. Menzmer
DETAILS	Pauline Tong	D. Menzmer
QUANTITIES	M. Okimura	D. Menzmer

STATE OF CALIFORNIA
DEPARTMENT OF TRANSPORTATION

DIVISION OF ENGINEERING SERVICES
STRUCTURE DESIGN
DESIGN BRANCH 11

CU 07225
EA 2159C1

BRIDGE NO. 53-3019K
KILOMETER POST 3.88

CARMENITA ROAD NB OFF-RAMP
PTFE/SPHERICAL EXPANSION BEARING DETAILS NO. 2

DISREGARD PRINTS BEARING EARLIER REVISION DATES

REVISION DATES (PRELIMINARY STAGE ONLY): ~~3-4-08~~ ~~7-12-08~~ ~~7-24-08~~ ~~1-22-09~~ 6-11-09

SHEET 25 OF 28

FILE => 53-3019k-q-ptfe02.dgn

USERNAME => ttmorlok DATE PLOTTED => 22-JUN-2010 TIME PLOTTED => 15:59

DIST.	COUNTY	ROUTE	KILOMETER POST TOTAL PROJECT	SHEET NO.	TOTAL SHEETS
07	LA	5	2.9/4.9	1035	1082

Caltrans Metric

Daniel L. Texler 01-26-10
REGISTERED ENGINEER - CIVIL

6-21-10
PLANS APPROVAL DATE

REGISTERED PROFESSIONAL ENGINEER Daniel L. Texler No. 49792 Exp. 9-30-10 CIVIL STATE OF CALIFORNIA

The State of California or its officers or agents shall not be responsible for the accuracy or completeness of electronic copies of this plan sheet.

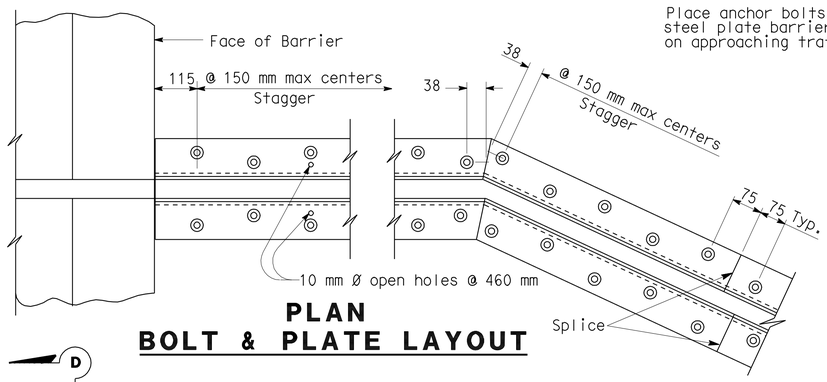

PLAN
BOLT & PLATE LAYOUT

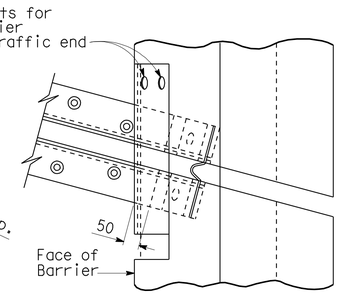

SKEW ≤ 20°

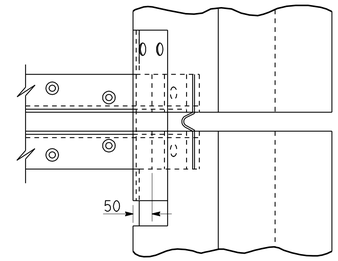

SKEW > 20°

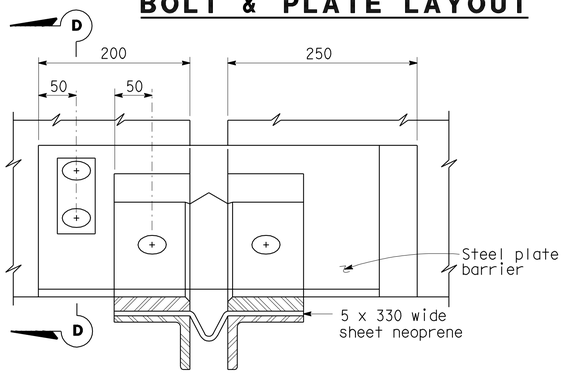

VIEW B-B

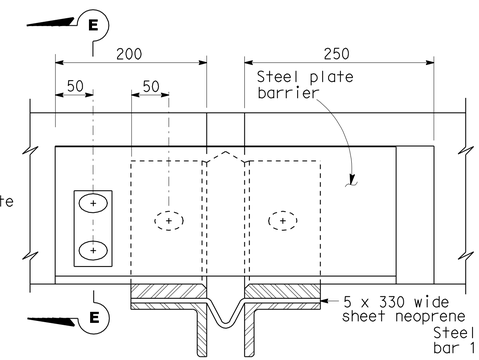

VIEW C-C

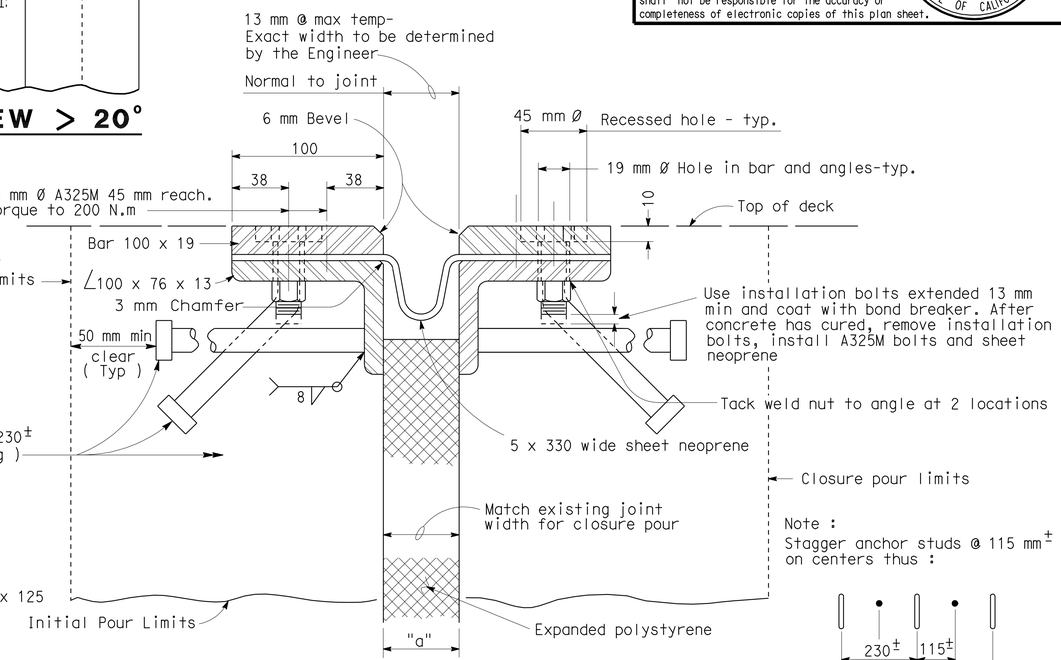

SECTION A-A

Note :
Stagger anchor studs @ 115 mm± on centers thus :

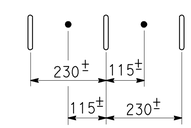

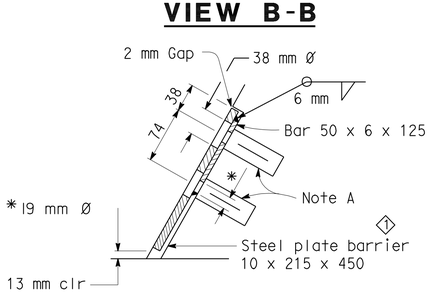

SECTION D-D

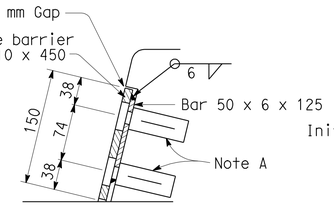

SECTION E-E

Joint Information			"a" Dimensions		
Location	Movement Rating (MR)	Skew	Winter	Spring & Fall	Summer
Hinge	60	0	60	40	30

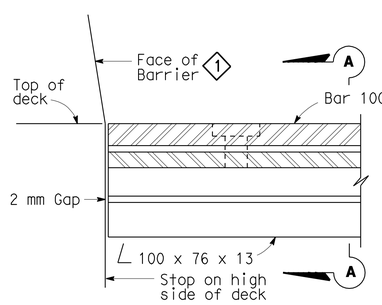

HIGH SIDE BARRIER DETAIL

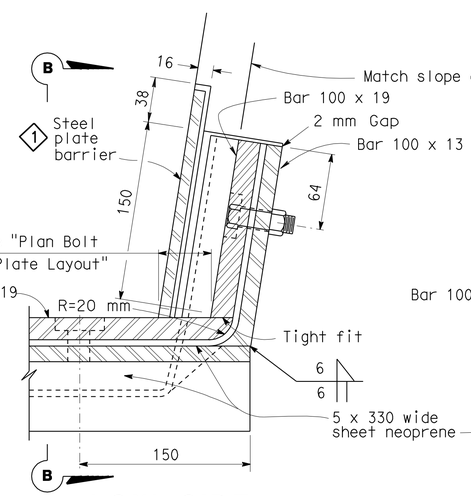

LOW SIDE BARRIER DETAIL
(See Note B)

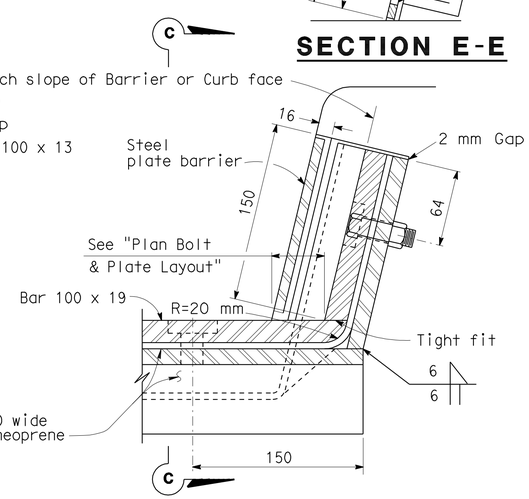

SIDEWALK DETAIL
(See Note B)

NOTES:

Full penetration butt welds may be substituted for fillet welds on all anchor studs.

Alternate types of anchor studs may be permitted subject to the approval by the Engineer.

Joint seal assembly to be used in conjunction with closure pour. (See other sheets for limits). Closure pour shall not be placed until final deck surface is within the tolerance specified.

Use joint at crown of roadway, at any change in transverse slope in deck and at changes in horizontal direction. Place other joints at or near lanes. All metal parts to be painted or galvanized after fabrication.

Sheet neoprene shall be fabricated in one continuous piece or joints shall be vulcanized. Neoprene shall be fabricated to bend around corners. 25 mm holes in neoprene sheets shall be drilled or punched so that the neoprene is not distorted at the time of installation.

NOTE A

Insert assembly or expansion anchorage for 16 x 45 A325M bolt.

NOTE B

Use the Sidewalk Detail at all sidewalk joints. Use the Barrier Detail at both sides if the roadway is crowned or if the difference in elevation between the ends of the seal is 150 mm or less.

ALL DIMENSIONS ARE IN MILLIMETERS UNLESS OTHERWISE SHOWN

NO SCALE

STANDARD DRAWING

RELEASE DATE	4/1/97	DESIGN	BY H. HERR	CHECKED R. LACALLE	RELEASED BY
FILE NO.	xs8-010	DETAILS	BY R. YEE	CHECKED R. LACALLE	
		SUBMITTED	BY C.W. PURKISS	DRAWING DATE 9/93	OFFICE CHIEF

1 Modify Face of Barrier

STATE OF CALIFORNIA
DEPARTMENT OF TRANSPORTATION

DIVISION OF ENGINEERING SERVICES

BRIDGE NO. 53-3019K
KILOMETER POST 3.88

CARMENITA ROAD NB OFF-RAMP
JOINT SEAL ASSEMBLY (MAXIMUM MOVEMENT RATING = 100 mm)

DS OSD 2147A (METRIC) (REV. 2/25/97)

ORIGINAL SCALE IN MILLIMETERS FOR REDUCED PLANS 0 10 20 30 40 50 60 70 80 90 100

CU 07225
EA 2159C1

DISREGARD PRINTS BEARING EARLIER REVISION DATES

REVISION DATES (PRELIMINARY STAGE ONLY) 3-4-08 1-22-09

SHEET 26 OF 28

USERNAME => trrichf

53-3019k-r-jtslas

DATE PLOTTED => 22-JUN-2010 TIME PLOTTED => 17:25

DIST.	COUNTY	ROUTE	KILOMETER POST TOTAL PROJECT	SHEET NO.	TOTAL SHEETS
07	LA	5	2.9/4.9	1036	1082

Caltrans Metric

Daniel L. Texler 01-26-10
REGISTERED ENGINEER - CIVIL

6-21-10
PLANS APPROVAL DATE

REGISTERED PROFESSIONAL ENGINEER Daniel L. Texler No. 49792 Exp. 9-30-10 CIVIL STATE OF CALIFORNIA

The State of California or its officers or agents shall not be responsible for the accuracy or completeness of electronic copies of this plan sheet.

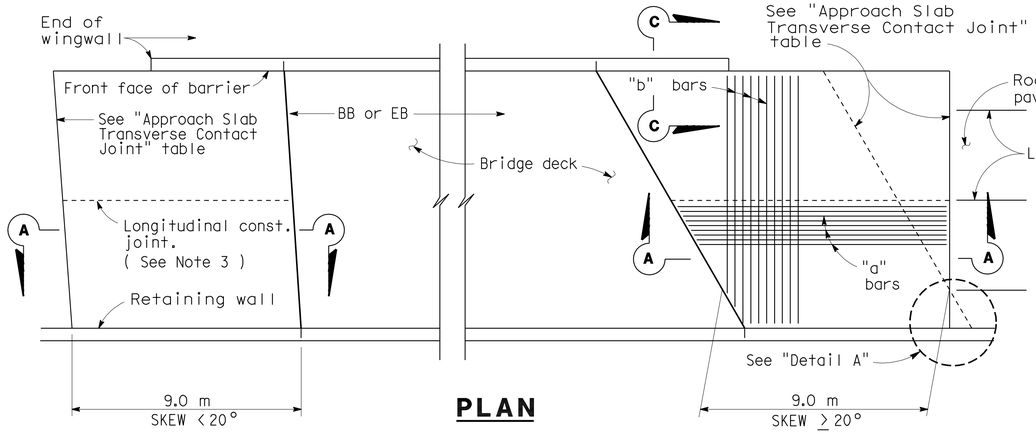

PLAN

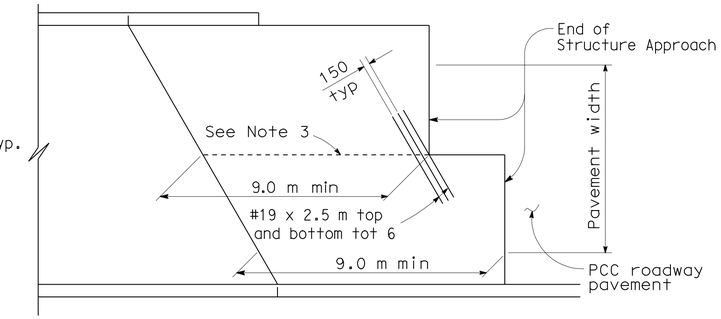

STRUCTURE APPROACH - END STAGGER DETAIL

APPROACH SLAB TRANSVERSE CONTACT JOINT		
APPROACH SKEW	WITH AC ROADWAY PAVEMENT	WITH PCC ROADWAY PAVEMENT
< 20°	Parallel to face of paving notch	Parallel to face of paving notch
20°- 45°	Parallel to face of P N use (Detail A)	Stagger lines 7.2 m to 10.8 m apart.
> 45°	Parallel to face of P N use (Detail A)	Stagger at each lane line.

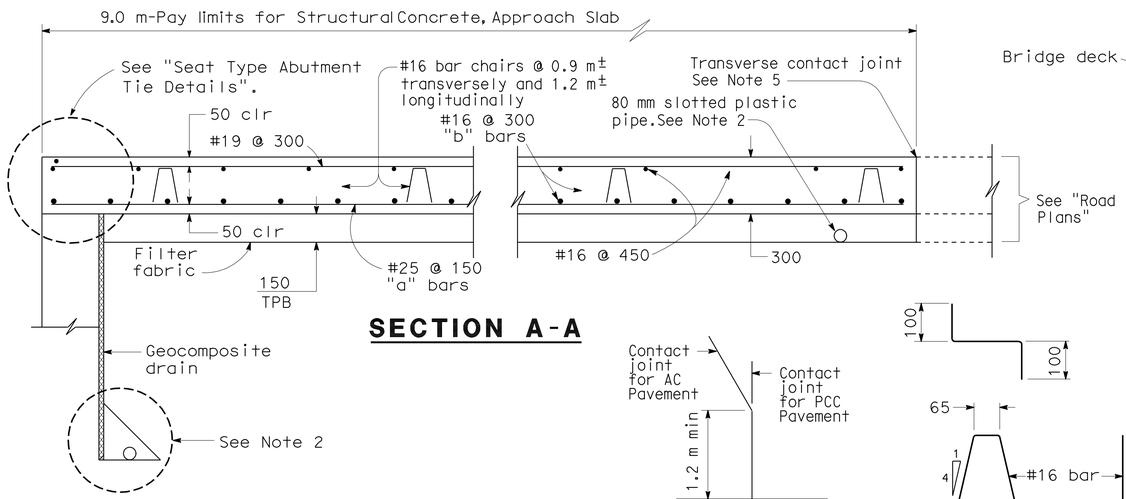

SECTION A-A

DETAIL A

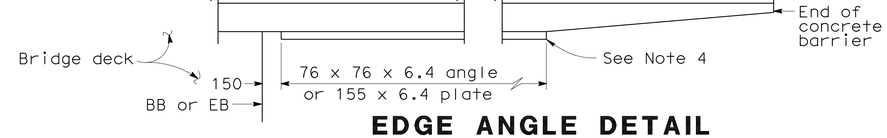

EDGE ANGLE DETAIL

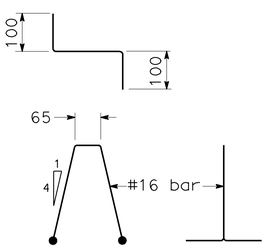

BAR CHAIR DETAIL

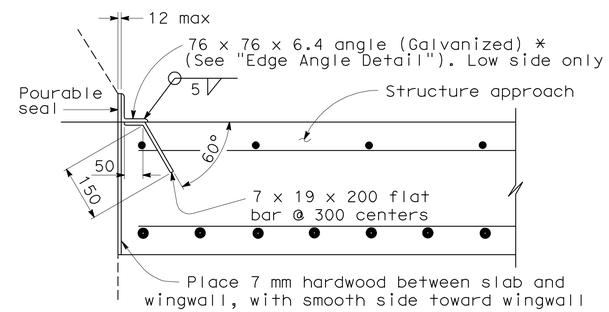

*(TO BE USED WITH TYPE 25 OR TYPE 27 CONCRETE BARRIER)

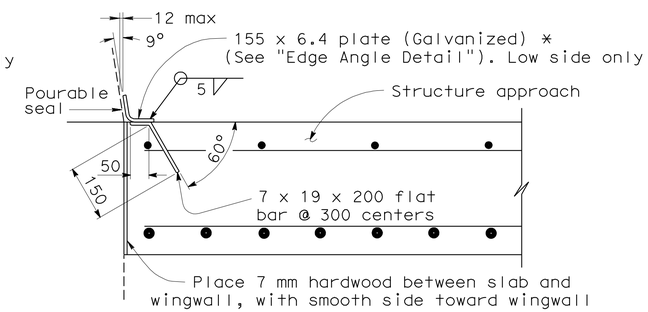

*(TO BE USED WITH TYPE 732 OR TYPE 736 CONCRETE BARRIER)

DETAIL B

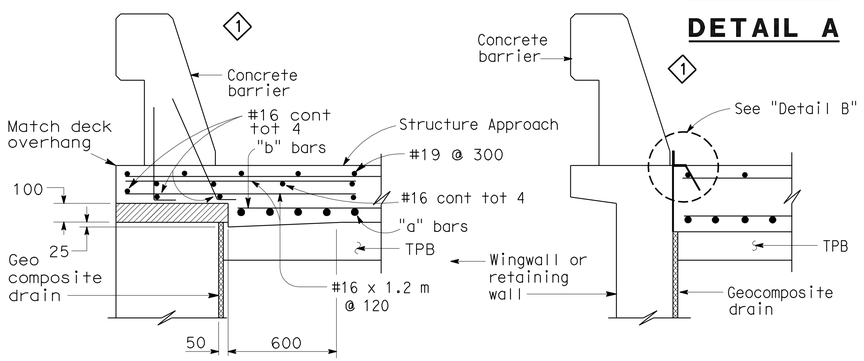

1 TYPE E-1

TYPE E-2

SECTION C-C

(Type E-1 to be used,unless otherwise shown on plans)

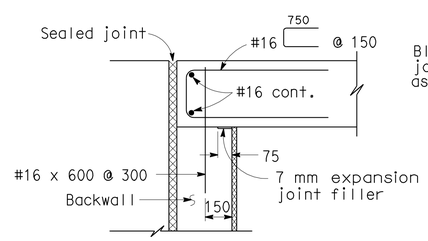

MR ≤ 50 mm

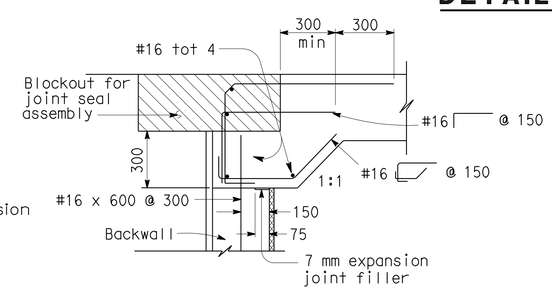

MR > 50 mm

SEAT TYPE ABUTMENT TIE DETAILS (SEE NOTE 1)

NOTES:

1. For details not shown,see Structure Plans. For MR ≤ 50 mm,adjust bar reinforcement to clear a sawcut for sealed joint,when required.
2. For drainage details,see "Structure Approach Drainage Details" sheet.
3. Longitudinal construction joints,when permitted by the Engineer, shall be located on lane lines.
4. End angle or plate at beginning of barrier transition, end of wingwall or end of structure approach as applicable.
5. For transverse contact joint with new PCC paving, refer to Standard Plan P10.
6. At the contractor's option, approach slab transverse reinforcement may be placed parallel to paving notch. Spacing of transverse reinforcement is measured along ℄ roadway.

Remove all polystyrene.

SPECIAL DETAILS
NO SCALE
ALL DIMENSIONS ARE IN MILLIMETERS UNLESS OTHERWISE SHOWN

STANDARD DRAWING				
RELEASE DATE 3/14/05	DESIGN	BY M. TRAFFALIS	CHECKED E. THORKILDSEN	RELEASED BY
FILE NO. xs3-120	DETAILS	BY R. YEE	CHECKED E. THORKILDSEN	OFFICE CHIEF
	SUBMITTED	BY M. HA	DRAWING DATE 4/98	

1 Revised Detail

STATE OF CALIFORNIA
DEPARTMENT OF TRANSPORTATION

DIVISION OF ENGINEERING SERVICES

CU 07225
EA 2159C1

BRIDGE NO. 53-3019K
KILOMETER POST 3.88

CARMENITA ROAD NB OFF-RAMP
STRUCTURE APPROACH TYPE N(9S)

DS OSD 2147A (METRIC) (REV. 2/25/97)

ORIGINAL SCALE IN MILLIMETERS FOR REDUCED PLANS 0 10 20 30 40 50 60 70 80 90 100

DISREGARD PRINTS BEARING EARLIER REVISION DATES 11-17-06 7-21-08

REVISION DATES (PRELIMINARY STAGE ONLY)

SHEET 27 OF 28

USERNAME => trrichf

53-3019k-s-sa.dgn

DATE PLOTTED => 22-JUN-2010 TIME PLOTTED => 17:25

DIST.	COUNTY	ROUTE	KILOMETER POST TOTAL PROJECT	SHEET NO.	TOTAL SHEETS
07	LA	5	2.9/4.9	1037	1082

Caltrans Metric

Daniel L. Texler 01-26-10
REGISTERED ENGINEER - CIVIL

6-21-10
PLANS APPROVAL DATE

REGISTERED PROFESSIONAL ENGINEER Daniel L. Texler No. 49792 Exp. 9-30-10 CIVIL STATE OF CALIFORNIA

The State of California or its officers or agents shall not be responsible for the accuracy or completeness of electronic copies of this plan sheet.

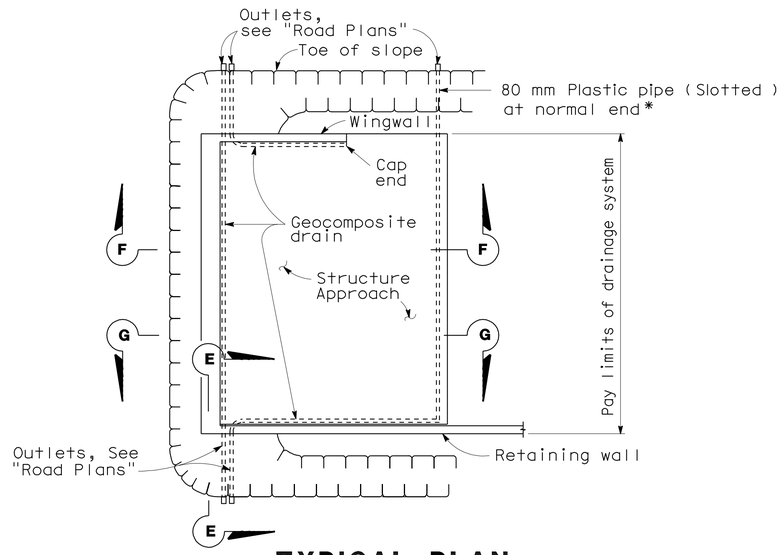

TYPICAL PLAN

*For pipe layout at staggered end, See "Detail B".

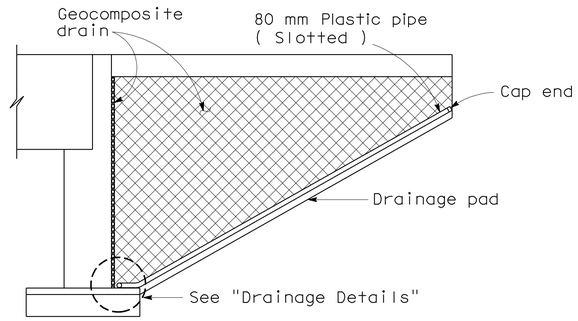

CANTILEVER WINGWALL
SECTION F-F

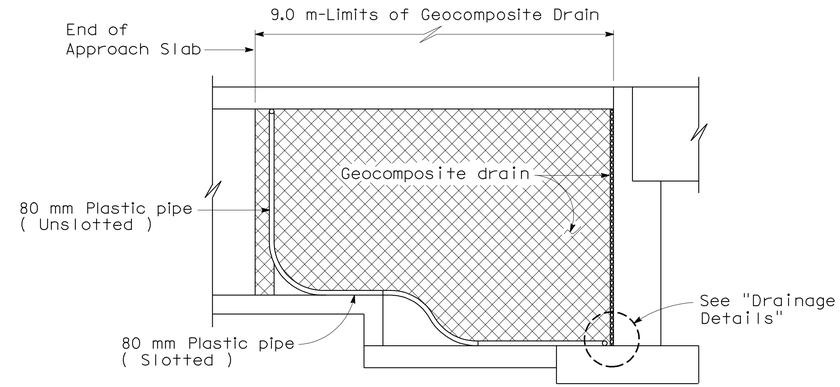

RETAINING WALL WINGWALL
SECTION G-G

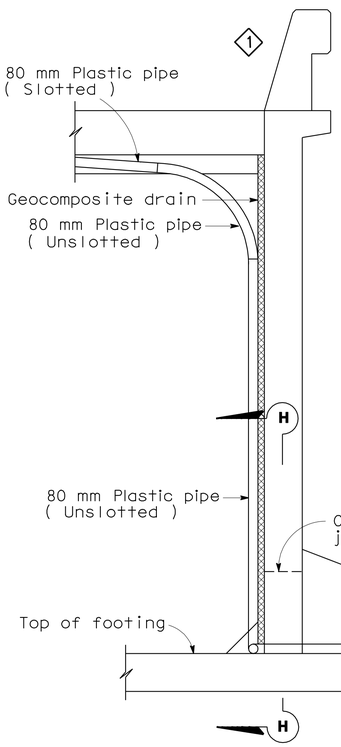

SECTION E-E

NOTE: Bends and junctions in 80 mm plastic pipe are 750 mm radius Min.

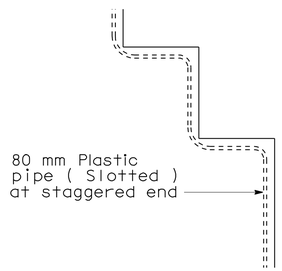

DETAIL B

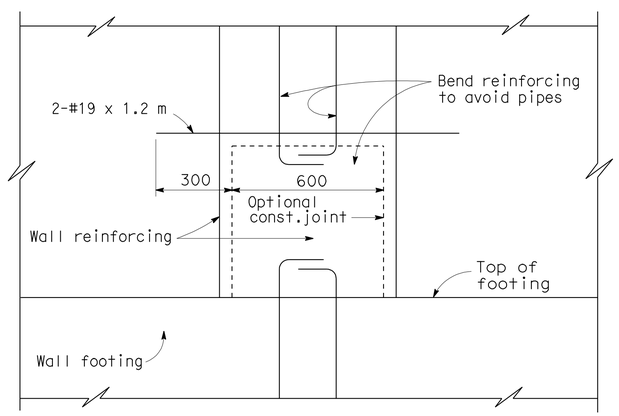

SECTION H-H

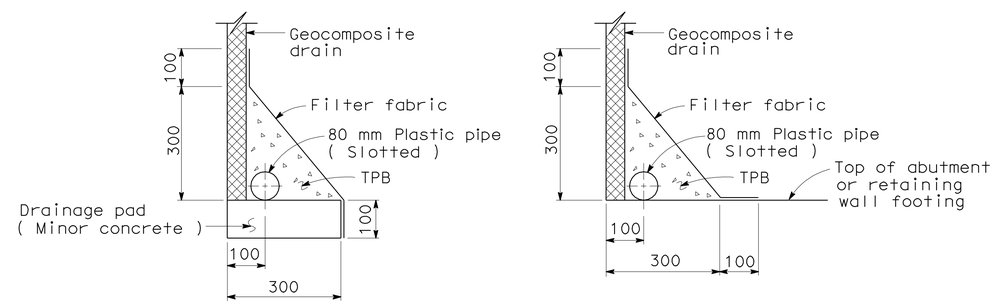

WITHOUT FOOTING **WITH FOOTING**

DRAINAGE DETAILS

NO SCALE

ALL DIMENSIONS ARE IN MILLIMETERS UNLESS OTHERWISE SHOWN

STANDARD DRAWING				
RELEASE DATE 4/23/98	DESIGN BY M. TRAFFALIS	CHECKED E. THORKILDSEN	RELEASED BY	
FILE NO. xs3-110	DETAILS BY R. YEE	CHECKED E. THORKILDSEN	OFFICE CHIEF	
	SUBMITTED BY M. HA	DRAWING DATE 4/98		

DS OSD 2147A (METRIC) (REV. 2/25/97)

1 Modify Face of Barrier

STATE OF CALIFORNIA DEPARTMENT OF TRANSPORTATION

DIVISION OF ENGINEERING SERVICES

CU 07225
EA 2159C1

BRIDGE NO. 53-3019K
KILOMETER POST 3.88

CARMENITA ROAD NB OFF-RAMP
STRUCTURE APPROACH DRAINAGE DETAILS

ORIGINAL SCALE IN MILLIMETERS FOR REDUCED PLANS 0 10 20 30 40 50 60 70 80 90 100

DISREGARD PRINTS BEARING EARLIER REVISION DATES

REVISION DATES (PRELIMINARY STAGE ONLY) 11-17-06 7-22-08 6-11-09

SHEET 28 OF 28

USERNAME => trrichf

53-3019k-s-saad.dg

DATE PLOTTED => 22-JUN-2010 TIME PLOTTED => 17:26

DIST	COUNTY	ROUTE	KILOMETER POST TOTAL PROJECT	SHEET No	TOTAL SHEETS
07	LA	5	2.9/4.9	1038	1082

Daniel L. Texler 1-26-10
REGISTERED CIVIL ENGINEER DATE

6-21-10
PLANS APPROVAL DATE

REGISTERED PROFESSIONAL ENGINEER Daniel L. Texler No. 49792 Exp. 9-30-10 CIVIL STATE OF CALIFORNIA

The State of California or its officers or agents shall not be responsible for the accuracy or completeness of electronic copies of this plan sheet.

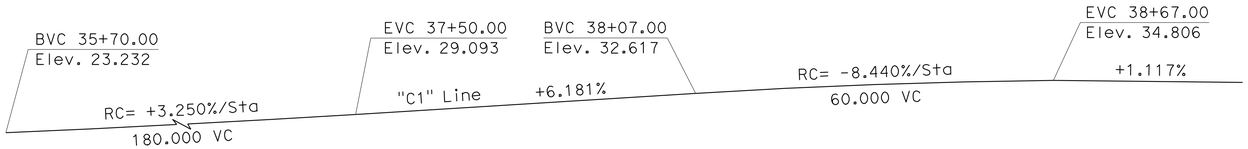

PROFILE GRADE
No Scale

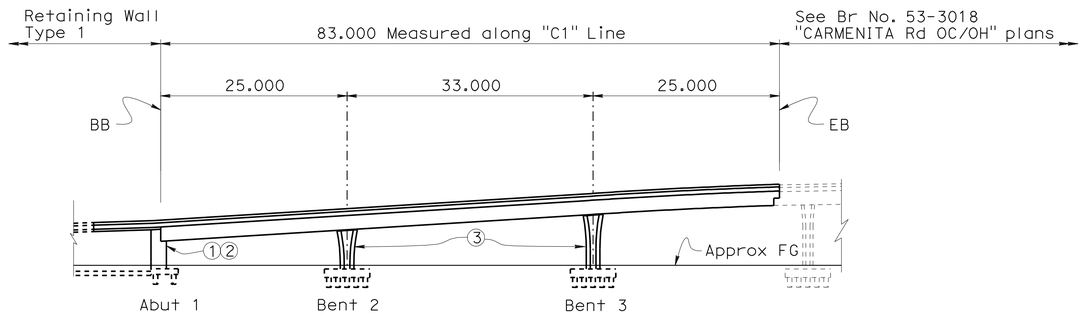

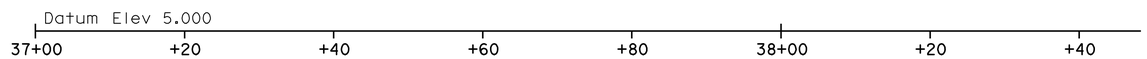

ELEVATION
1:400

NOTES:

① Paint 'BRIDGE No. 53-3019S'
② Paint 'CARMENITA Rd SB ON-RAMP'
③ Paint 'C1 BENT No.__'
④ Structure Approach Type N(9S)
⑤ Conc Barrier Type 736 Mod, install utility conduits as req'd, (not shown) for size and other data, See "ROAD PLANS"

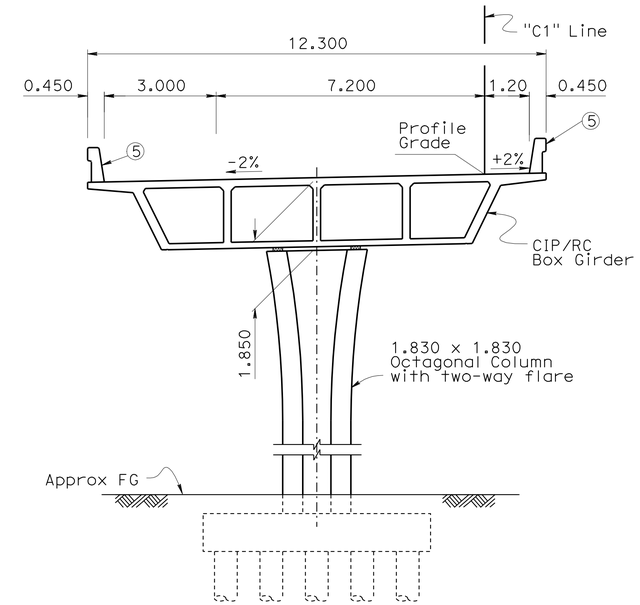

TYPICAL SECTION
1:80

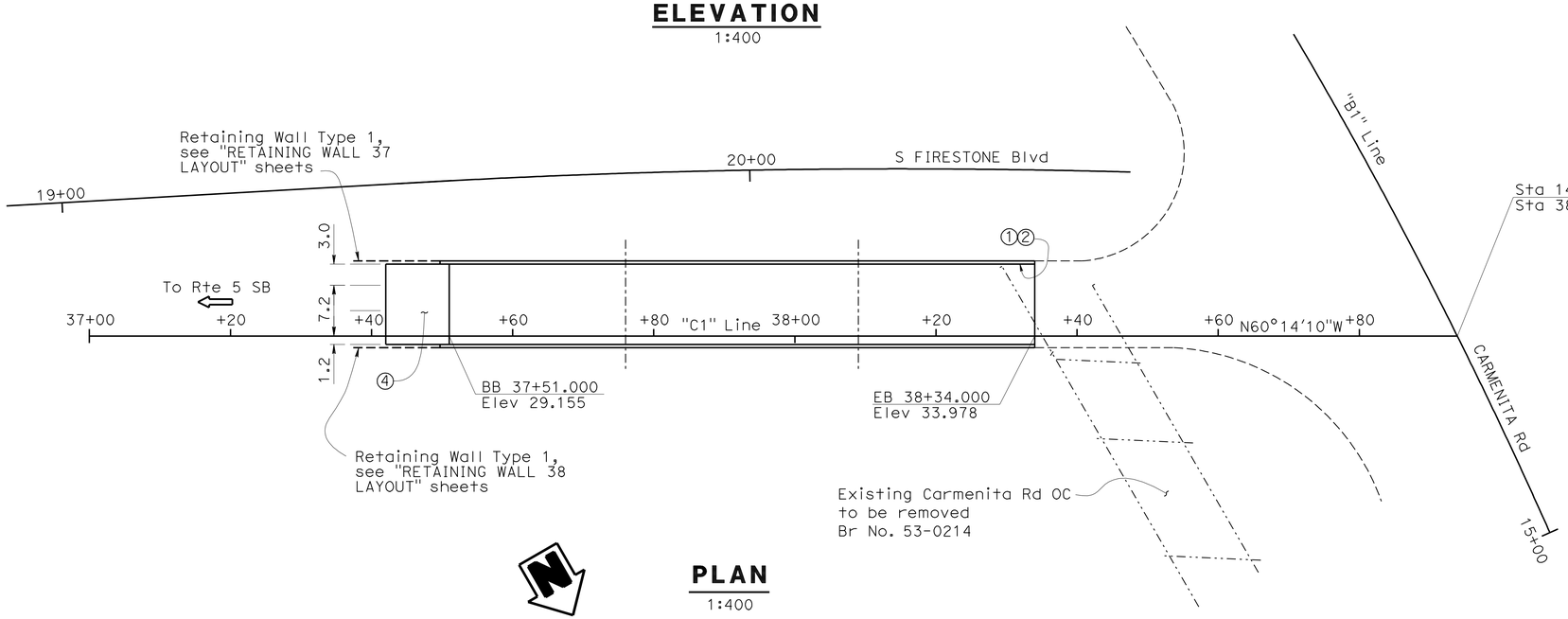

PLAN
1:400

FOR LIMITS OF STRUCTURE EXCAVATION (CONTAMINATED), SEE "ROAD PLANS".

QUANTITIES:

STRUCTURE EXCAVATION (BRIDGE)	448	m3
STRUCTURE EXCAVATION (CONTAMINATED)	38	m3
STRUCTURE EXCAVATION (RETAINING WALL)	752	m3
STRUCTURE BACKFILL (BRIDGE)	205	m3
STRUCTURE BACKFILL (RETAINING WALL)	524	m3
FURNISH STEEL PIPE PILING (610 MM)	980	m
DRIVE STEEL PIPE PILE (610 MM)	50	EA
FURNISH PILING (CLASS 400) (ALTERNATIVE V)	1120	m
DRIVE PILE (CLASS 400) (ALTERNATIVE V)	77	EA
760 mm PILE CASING	980	m
STRUCTURAL CONCRETE, BRIDGE FOOTING	158	m3
STRUCTURAL CONCRETE, BRIDGE	664	m3
STRUCTURAL CONCRETE, RETAINING WALL	239	m3
STRUCTURAL CONCRETE, APPROACH SLAB (TYPE N)	33	m3
ARCHITECTURAL TREATMENT	259	m2
PTFE SPHERICAL BEARING	5	EA
JOINT SEAL (MR 25 MM)	13	m
JOINT SEAL ASSEMBLY (MR 60 MM)	12	m
BAR REINFORCING STEEL (BRIDGE)	120 813	kg
BAR REINFORCING STEEL (RETAINING WALL)	17 420	kg
HEADED BAR REINFORCEMENT	248	EA
MISCELLANEOUS METAL (BRIDGE)	415	kg
CONCRETE BARRIER (TYPE 736 MODIFIED)	166	m
CONCRETE BARRIER (TYPE 736A MODIFIED)	116	m

Caltrans Metric

DESIGN ENGINEER

	BY	CHECKED
DESIGN	Bill Kemp	D. Menzmer
DETAILS	Pauline Tong	D. Menzmer
QUANTITIES	M. Okimura	D. Menzmer

LOAD FACTOR DESIGN — LIVE LOADING: HS20-44 AND ALTERNATIVE AND PERMIT DESIGN LOAD

	BY	CHECKED
LAYOUT	Bill Kemp	Doug Menzmer
SPECIFICATIONS	M. Pan	PLANS AND SPECS COMPARED

STATE OF CALIFORNIA
DEPARTMENT OF TRANSPORTATION

DIVISION OF ENGINEERING SERVICES
STRUCTURE DESIGN
DESIGN BRANCH 11

BRIDGE NO. 53-3019S
KILOMETER POST 3.88

CARMENITA ROAD SB ON-RAMP
GENERAL PLAN

ALL DIMENSIONS ARE IN METERS UNLESS OTHERWISE SHOWN

ORIGINAL SCALE IN MILLIMETERS FOR REDUCED PLANS 0 10 20 30 40 50 60 70 80 90 100

CU 07225
EA 2159C1

DISREGARD PRINTS BEARING EARLIER REVISION DATES

REVISION DATES: 11-05-07 | 3-24-08 | 7-08-08 | 8-29-08 | 01-02-09 | 7-14-09 | 12-28-09 | 1-3-10 | 1-11-10

SHEET 1 OF 26

FILE => 53-3019s-a-gp.dgn

STRUCTURES DESIGN GENERAL PLAN SHEET (METRIC) (REV.03-17-04)

USERNAME => ttrstpk DATE PLOTTED => 15-FEB-2011 TIME PLOTTED => 11:03

DIST	COUNTY	ROUTE	KILOMETER POST TOTAL PROJECT	SHEET No	TOTAL SHEETS
07	LA	5	2.9/4.9	1039	1082

Daniel L. Texler 1-26-10
REGISTERED CIVIL ENGINEER DATE

6-21-10
PLANS APPROVAL DATE

REGISTERED PROFESSIONAL ENGINEER
Daniel L. Texler
No. 49792
Exp. 9-30-10
CIVIL
STATE OF CALIFORNIA

The State of California or its officers or agents shall not be responsible for the accuracy or completeness of electronic copies of this plan sheet.

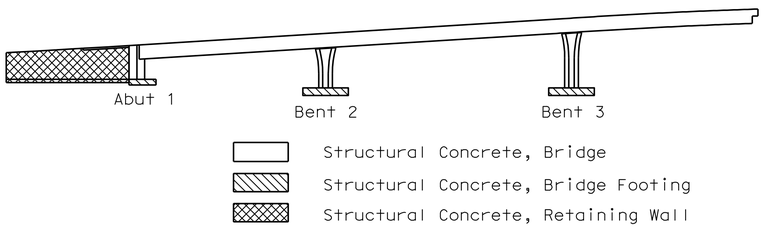

CONCRETE STRENGTH AND TYPE LIMITS

No Scale

GENERAL NOTES
LOAD FACTOR DESIGN

DESIGN: CALTRANS BRIDGE DESIGN SPECIFICATIONS
LFD Version April 2000 (1996 AASHTO with Interims and Revision by Caltrans)

SEISMIC DESIGN: CALTRANS SEISMIC DESIGN CRITERIA (SDC) Version 1.4, June 2006

DEAD LOAD: Includes 1675 Pa for Future Wearing Surface

LIVE LOADING: HS20-44 and Alternative and Permit Design Load

SEISMIC LOADING: Site Specific ARS Curve as shown

REINFORCED CONCRETE: f_y = 414 MPa
f'_c = 25 MPa
n = 8

Transverse Deck Slabs (Working Stress Design):
f_s = 140 MPa
f_c = 8 MPa
n = 10

STRUCTURAL STEEL: Steel Pipe Piles
ASTM-A252 M, Grade 3
f_y = 310 MPa
f_u = 455 MPa

STRUCTURAL STEEL: Steel Pipe: Shear Keys
ASTM-A53/A53M, Grade B
f_y = 240 MPa
f_u = 415 MPa

RAILING LOAD: 240 kN Traffic Collision Load (LFD) applied laterally at the top of barrier and distributed over a longitudinal distance of 3.008 meters.

INDEX TO PLANS

SHEET NO.	TITLE
1	GENERAL PLAN
2	INDEX TO PLANS
3	DECK CONTOURS
4	FOUNDATION PLAN NO. 1
5	FOUNDATION PLAN NO. 2
6	PILE DATA
7	PILE DETAILS
8	ABUTMENT LAYOUT
9	ABUTMENT DETAILS
10	RETAINING WALL 37 LAYOUT NO. 1
11	RETAINING WALL 37 LAYOUT NO. 2
12	RETAINING WALL 38 LAYOUT
13	BENT DETAILS NO. 1
14	BENT DETAILS NO. 2
15	BENT FOOTING DETAILS
16	TYPICAL SECTION
17	GIRDER LAYOUT
18	ADDITIONAL GIRDER REINFORMENT
19	HINGE DETAILS NO. 1
20	HINGE DETAILS NO. 2
21	HINGE DETAILS NO. 3
22	PTFE/SPHERICAL EXPANSION BEARINGS DETAIL NO. 1
23	PTFE/SPHERICAL EXPANSION BEARINGS DETAIL NO. 2
24	JOINT SEAL ASSEMBLY (MAXIMUM MOVEMENT RATING = 100 mm)
25	STRUCTURE APPROACH TYPE N(9S)
26	STRUCTURE APPROACH DRAINAGE DETAILS

STANDARD PLANS DATED JULY 2004

A10A	ACRONYMS AND ABBREVIATIONS (A-L)
A10B	ACRONYMS AND ABBREVIATIONS (M-Z)
A10C	SYMBOLS (SHEET 1 OF 2)
A10D	SYMBOLS (SHEET 2 OF 2)
A62C	LIMITS OF PAYMENT FOR EXCAVATION AND BACKFILL - BRIDGE
B0-1	BRIDGE DETAILS
B0-3	BRIDGE DETAILS
B0-5	BRIDGE DETAILS
B0-13	BRIDGE DETAILS
B2-5	PILE DETAILS CLASS 400 AND CLASS 625 ALTERNATIVE "V"
RSP B6-21	JOINT SEALS (MAXIMUM MOVEMENT RATING = 50 mm)
B7-1	BOX GIRDER DETAILS
B11-56	CONCRETE BARRIER TYPE 736

STANDARD PLAN SHEET NO.
DETAIL NO.

Caltrans Metric

	BY	CHECKED
DESIGN	Bill Kemp	D. Menzmer
DETAILS	Pauline Tong	D. Menzmer
QUANTITIES	M. Okimura	D. Menzmer

STATE OF CALIFORNIA
DEPARTMENT OF TRANSPORTATION

DIVISION OF ENGINEERING SERVICES
STRUCTURE DESIGN
DESIGN BRANCH 11

BRIDGE NO. 53-3019S
KILOMETER POST 3.88

CARMENITA ROAD SB ON-RAMP
INDEX TO PLANS

ALL DIMENSIONS ARE IN MILLIMETERS UNLESS OTHERWISE SHOWN

ORIGINAL SCALE IN MILLIMETERS FOR REDUCED PLANS 0 10 20 30 40 50 60 70 80 90 100

CU 07225
EA 2159C1

DISREGARD PRINTS BEARING EARLIER REVISION DATES

REVISION DATES: 11-06-07 5-18-09 6-03-09 6/18/09 6-30-09 12/16/09 12-28-09 01-08-09 01-15-09

SHEET 2 OF 26

FILE => 53-3019s-b-itp.dgn

STRUCTURES DESIGN DETAIL SHEET (METRIC) (REV.03-17-04)

USERNAME => trrright DATE PLOTTED => 22-JUN-2010 TIME PLOTTED => 17:26

DIST	COUNTY	ROUTE	KILOMETER POST TOTAL PROJECT	SHEET No	TOTAL SHEETS
07	LA	5	2.9/4.9	1040	1082

Daniel L. Texler 1-26-10
REGISTERED CIVIL ENGINEER DATE

6-21-10
PLANS APPROVAL DATE

REGISTERED PROFESSIONAL ENGINEER
Daniel L. Texler
No. 49792
Exp. 9-30-10
CIVIL
STATE OF CALIFORNIA

The State of California or its officers or agents shall not be responsible for the accuracy or completeness of electronic copies of this plan sheet.

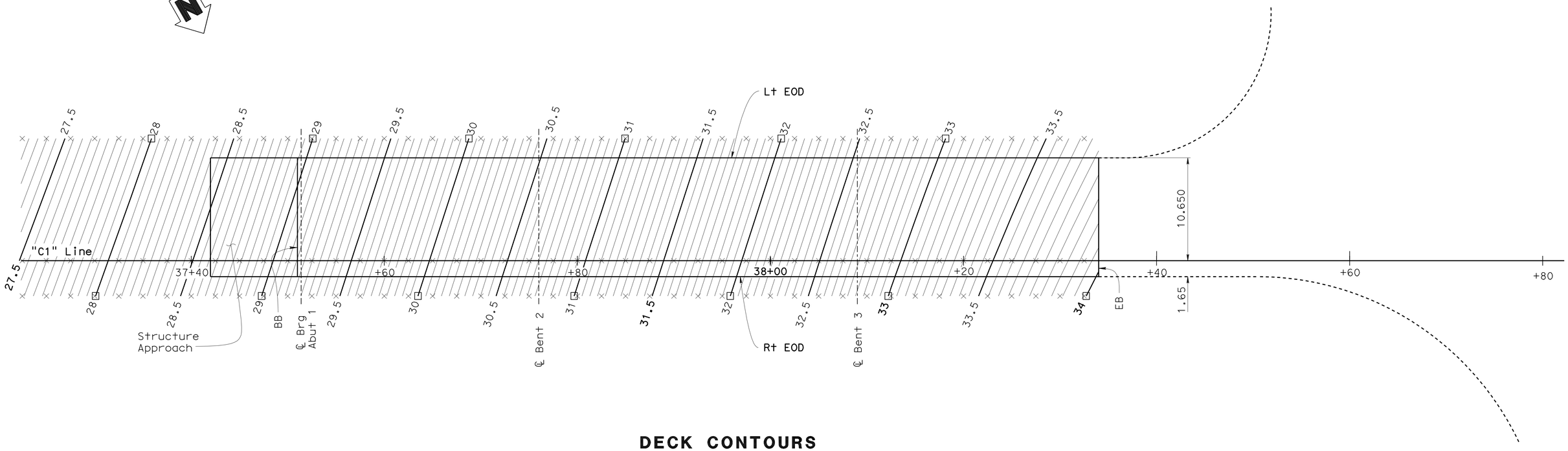

DECK CONTOURS

1:200

Notes:

1. Contour interval = 0.05
2. Contours do not include camber
3. X Indicates 2.5 intervals along station Line
4. □ Indicates even meter contours
5. Contours shall conform to deck transition, see CARMENITA ROAD OC/OH, BR NO. 53-3018 plans

Caltrans Metric

	BY	CHECKED
DESIGN	Bill Kemp	D. Menzmer
DETAILS	Pauline Tong	D. Menzmer
QUANTITIES	M. Okimura	D. Menzmer

STATE OF CALIFORNIA
DEPARTMENT OF TRANSPORTATION

DIVISION OF ENGINEERING SERVICES
STRUCTURE DESIGN
DESIGN BRANCH 11

BRIDGE NO. 53-3019S
KILOMETER POST 3.88

CARMENITA ROAD SB ON-RAMP
DECK CONTOURS

ALL DIMENSIONS ARE IN METERS UNLESS OTHERWISE SHOWN

ORIGINAL SCALE IN MILLIMETERS FOR REDUCED PLANS 0 10 20 30 40 50 60 70 80 90 100

CU 07225
EA 2159C1

DISREGARD PRINTS BEARING EARLIER REVISION DATES 11-06-07 3-24-08 7-7-08 01-05-09

REVISION DATES

SHEET 3 OF 26

FILE => 53-3019s-d-dekcon.dgn

STRUCTURES DESIGN DETAIL SHEET (METRIC) (REV.03-17-04)

USERNAME => trrichf DATE PLOTTED => 22-JUN-2010 TIME PLOTTED => 17:26

DIST	COUNTY	ROUTE	KILOMETER POST TOTAL PROJECT	SHEET No	TOTAL SHEETS
07	LA	5	2.9/4.9	1041	1082

Caltrans Metric

Daniel L. Texler 1-26-10
REGISTERED CIVIL ENGINEER DATE

6-21-10
PLANS APPROVAL DATE

REGISTERED PROFESSIONAL ENGINEER Daniel L. Texler No. 49792 Exp. 9-30-10 CIVIL STATE OF CALIFORNIA

The State of California or its officers or agents shall not be responsible for the accuracy or completeness of electronic copies of this plan sheet.

CURVE DATA				
No.	R	Δ	T	L
1	1200.000	18°03'52"	12.413	24.822
2	6000.000	04°28'35"	190.754	378.342

(AA) Sta. 13+95.898 "B2" LINE
Sta. 19+74.113 S FIRESTONE LOL

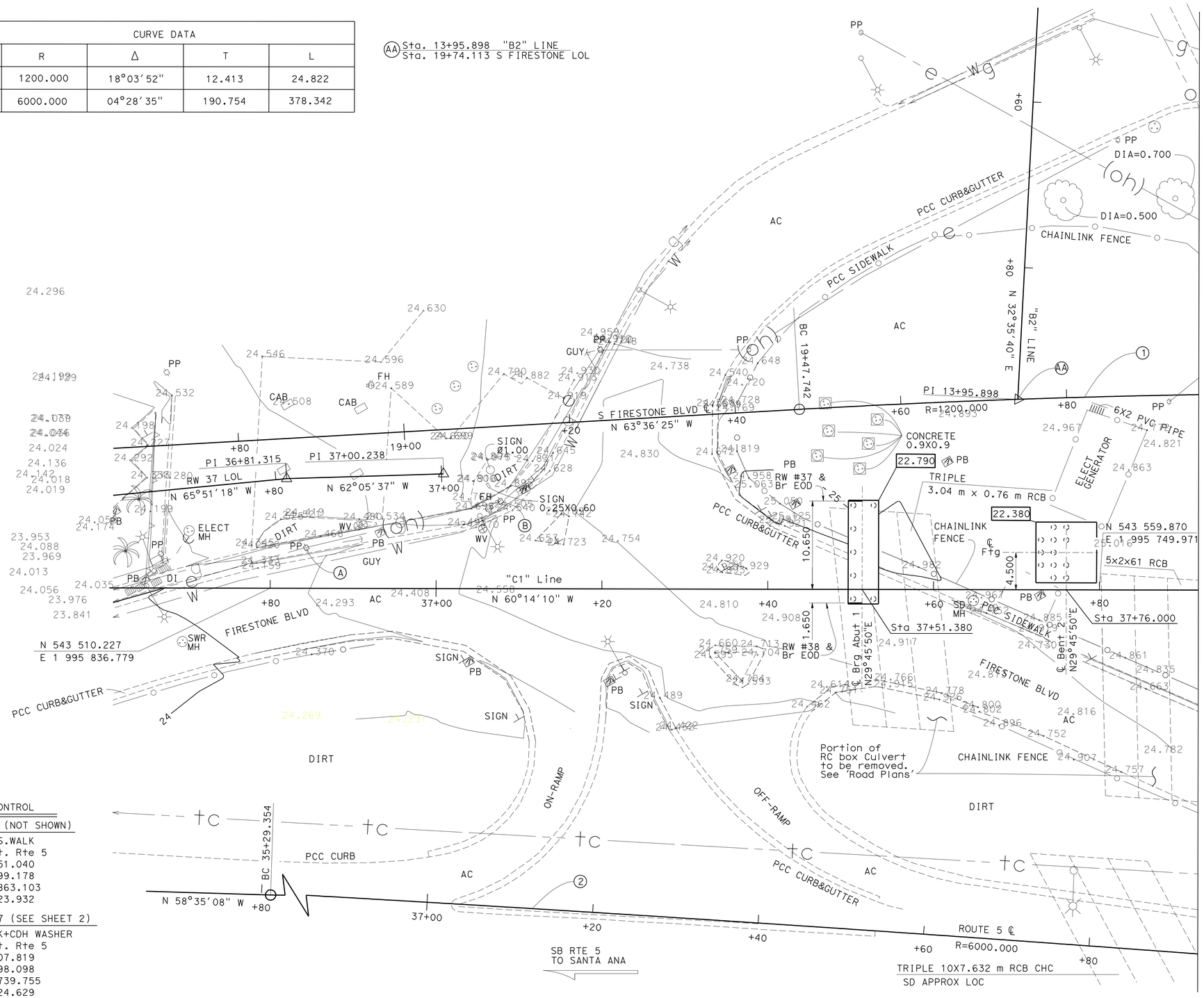

(A) PP ELEV. 24.450
WIRE ELEV. ± 33.59

(B) PP ELEV. 24.681
WIRE ELEV. ± 32.91

SURVEY CONTROL

SUHV 600 (NOT SHOWN)
Fnd PK/S.WALK
31.801 Lt. Rte 5
Sta. 36+51.040
N 543 499.178
E 1 995 863.103
Elev. = 23.932

SUHV 1477 (SEE SHEET 2)
Fnd SSPK+CDH WASHER
16.911 Lt. Rte 5
Sta. 38+07.819
N 543 598.098
E 1 995 739.755
Elev. = 24.629

NOTES:

UNDERGROUND UTILITIES AS SHOWN ARE APPROXIMATE

XXXX - Indicates Bottom of Footing Elevation

- Denotes piles (not all piles shown)

ALL DIMENSIONS ARE IN METERS UNLESS OTHERWISE SHOWN

PRELIMINARY INVESTIGATION SECTION

SCALE	VERT. DATUM NAVD 88	PHOTOGRAMMETRY AS OF:		
1:250	HORZ. DATUM NAD 83	SURVEYED	BY T. PHUNG 10/06	DRAFTED BY M. SADAGHIANI 11/06
ALIGNMENT TIES DIST. TRAV. SHEETS		FIELD CHECKED	BY L. MNABO 10/06	CHECKED BY L. MANABO 11/06

	BY	CHECKED
DESIGN	Bill Kemp	D. Menzmer
DETAILS	Pauline Tong	D. Menzmer
QUANTITIES	M. Okimura	D. Menzmer

STATE OF CALIFORNIA
DEPARTMENT OF TRANSPORTATION

DIVISION OF STRUCTURES
STRUCTURE DESIGN 11

BRIDGE NO. 53-3019S
KILOMETER POST 3.88

CARMENITA ROAD SB ON-RAMP
FOUNDATION PLAN NO. 1

STRUCTURES FOUNDATION PLAN SHEET (METRIC) (REV.12-1-01)

ORIGINAL SCALE IN MILLIMETERS FOR REDUCED PLANS 0 10 20 30 40 50 60 70 80 90 100

CU 07225
EA 2159C1

DISREGARD PRINTS BEARING EARLIER REVISION DATES

REVISION DATES (PRELIMINARY STAGE ONLY) 11-30-06 11-07-07 12-14-07 1-15-08 3-15-08 7-1-08 12-29-08 6-02-09

SHEET 4 OF 26

FILE => 53-3019s-e-fp01.dgn

USERNAME => trrlcnf DATE PLOTTED => 22-JUN-2010 TIME PLOTTED => 17:26

CURVE DATA				
No.	R	Δ	T	L
1	1200.000	18°03′52"	190.754	378.342
2	6000.000	04°28′35"	234.498	468.758
3	700.000	20°00′21"	123.465	244.416

(BB) Sta. 14+43.824 PROP CARMENITA RD LOL
Sta. 20+86.209 S FIRESTONE LOL

(CC) Sta. 14+68.485 PROP CARMENITA RD LOL
Sta. 38+93.573 SB ON-RAMP LOL

(DD) Sta. 14+72.503 PROP CARMENITA RD LOL
Sta. 38+90.360 SB OFF-RAMP LOL

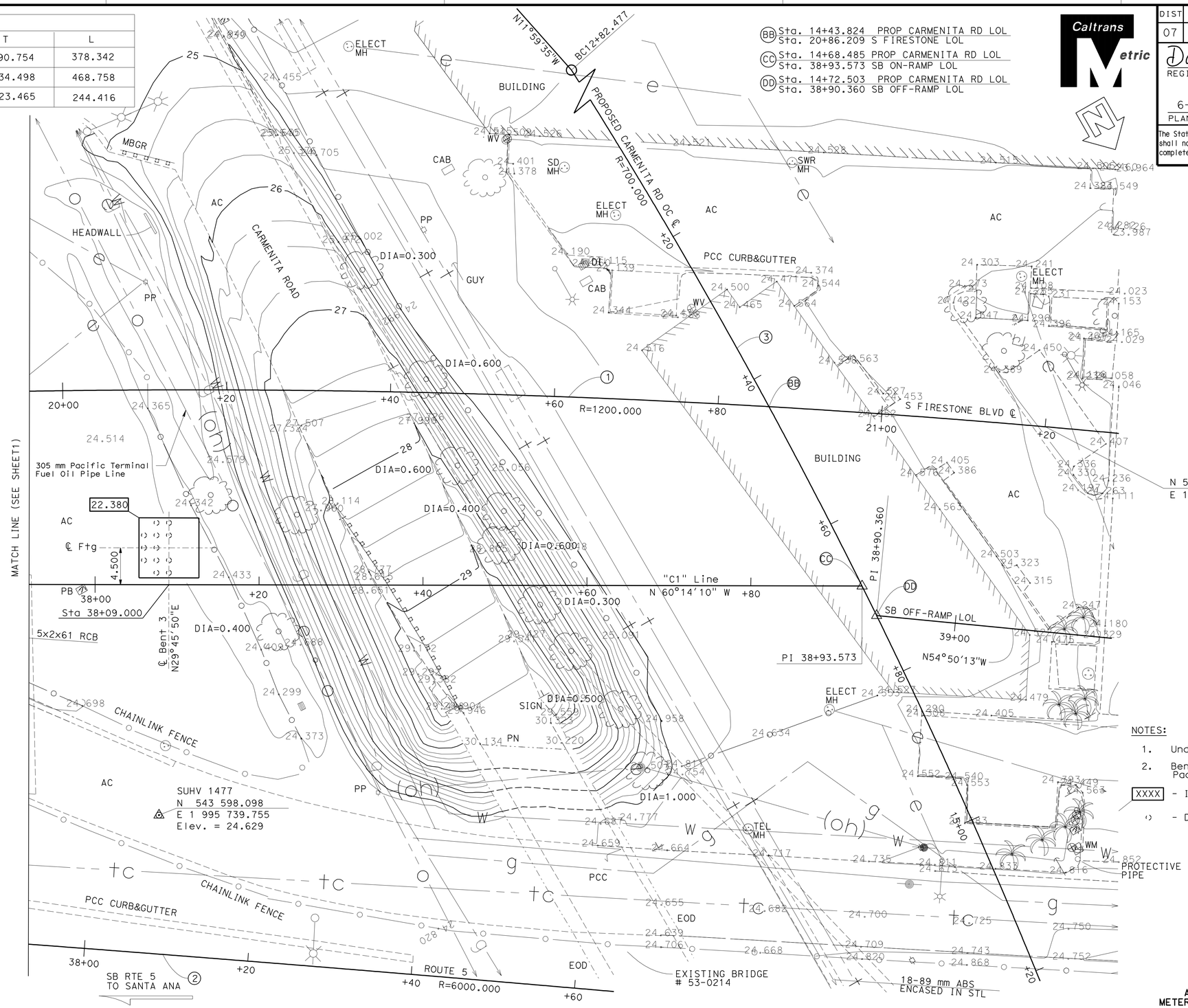

NOTES:

1. Underground utilities as shown are approximate
2. Bent 3 Footing to be oriented parallel to the Pacific Terminal Fuel Oil Pipe Line

XXXX - Indicates Bottom of Footing Elevation

( ) - Denotes piles (not all piles shown)

SURVEY CONTROL

SEE SHEET (1)

ALL DIMENSIONS ARE IN METERS UNLESS OTHERWISE SHOWN

DIST	COUNTY	ROUTE	KILOMETER POST TOTAL PROJECT	SHEET No	TOTAL SHEETS
07	LA	5	2.9/4.9	1042	1082

Daniel L. Texler 1-26-10
REGISTERED CIVIL ENGINEER DATE

6-21-10
PLANS APPROVAL DATE

REGISTERED PROFESSIONAL ENGINEER Daniel L. Texler No. 49792 Exp. 9-30-10 CIVIL STATE OF CALIFORNIA

The State of California or its officers or agents shall not be responsible for the accuracy or completeness of electronic copies of this plan sheet.

Caltrans Metric

PRELIMINARY INVESTIGATION SECTION							
SCALE 1:250	VERT. DATUM NAVD 88	PHOTOGRAMMETRY AS OF:					
	HORZ. DATUM NAD 83	SURVEYED	BY T. PHUNG 10/06	DRAFTED	BY M. SADAGHIANI 11/06		
ALIGNMENT TIES DOST TRSV SHEETS		FIELD CHECKED	BY L. MANABO 10/06	CHECKED	BY L. MANABO 11/06		

	BY	CHECKED
DESIGN	Bill Kemp	D. Menzmer
DETAILS	Pauline Tong	D. Menzmer
QUANTITIES	M. Okimura	D. Menzmer

STATE OF CALIFORNIA
DEPARTMENT OF TRANSPORTATION

DIVISION OF STRUCTURES
STRUCTURE DESIGN 11

BRIDGE NO. 53-3019S
KILOMETER POST 3.88

CARMENITA ROAD SB ON-RAMP
FOUNDATION PLAN NO. 2

STRUCTURES FOUNDATION PLAN SHEET (METRIC) (REV.12-1-01)

ORIGINAL SCALE IN MILLIMETERS FOR REDUCED PLANS 0 10 20 30 40 50 60 70 80 90 100

CU 07225
EA 2159C1

DISREGARD PRINTS BEARING EARLIER REVISION DATES

REVISION DATES (PRELIMINARY STAGE ONLY): 11-30-06 11-07-07 12-14-07 1-15-08 3-25-08 7-1-08 8-5-08 12-29-08

SHEET 5 OF 26

FILE => 53-3019s-e-fp02.dgn

USERNAME => trrlcnf DATE PLOTTED => 22-JUN-2010 TIME PLOTTED => 17:27

DIST	COUNTY	ROUTE	KILOMETER POST TOTAL PROJECT	SHEET No	TOTAL SHEETS
07	LA	5	2.9/4.9	1043	1082

Daniel L. Texler 1-26-10
REGISTERED CIVIL ENGINEER DATE

6-21-10
PLANS APPROVAL DATE

REGISTERED PROFESSIONAL ENGINEER
Daniel L. Texler
No. 49792
Exp. 9-30-10
CIVIL
STATE OF CALIFORNIA

The State of California or its officers or agents shall not be responsible for the accuracy or completeness of electronic copies of this plan sheet.

PILE DATA TABLE

Location	Pile Type	Design Loading (kN)	Nominal Resistance (kN)		Cut-off Elevation (m)	Design Tip Elevation (m) see Note 3			Specified Tip Elev (m)	Nominal Driving Resistance (kH) see Note 2
			Compression	Tension		Compression	Tension	Lateral		
Abut 1	610x12.7 Open Ended Pipe Pile	725	N/A	N/A	22.915	3.0	N/A	7.0	3.0	3400
Bent 2	610x12.7 Open Ended Pipe Pile	N/A	1400	600	22.505	3.0	6.5	7.0	3.0	3350
Bent 3	610x12.7 Open Ended Pipe Pile	N/A	1400	600	22.505	3.0	6.5	7.0	3.0	3350

DESIGN TIP ELEVATION ADJUSTMENT TABLE

Pile Casing Tip Elevation (expressed as a depth below existing ground in meters)	14.6	16.0	17.5	19.0	20.5	22.0	23.5	25.0	26.5
DTE Adjustment (m)									
Nominal Resistance less than 1450 kN or Design Loading less than 725 kN	0.0	-1.0	-2.3	-3.7	-5.0	-6.1	-6.9	-7.6	-8.4
Nominal Resistance greater than 1450 kN or Design Loading greater than 725 kN	0.0	-1.5	-3.0	-4.6	-6.1	-6.9	-7.6	-8.4	-9.1

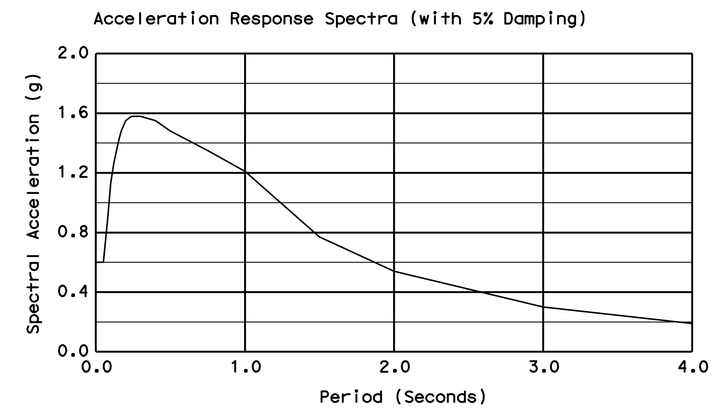

SITE SPECIFIC ARS CURVE

NOTES:

1. For Typical Pipe Pile Installation Procedure, see "PILE DETAILS" sheet
2. "Nominal Driving Resistance" shall only be applicable to piles installed without a Temp Steel Casing
3. Where pile installations require a Pile Casing and the Tip Elevation of the steel casing will be more than 14.6 meters below the exist ground surface, the "Specified Tip Elevation" value shown in the Pile Data Table shall be modified by adding to it the appropriate "DTE Adjustment" value from the Design Tip Elevation Adjustment Table

Caltrans Metric

ALL DIMENSIONS ARE IN MILLIMETERS UNLESS OTHERWISE SHOWN

ORIGINAL SCALE IN MILLIMETERS FOR REDUCED PLANS 0 10 20 30 40 50 60 70 80 90 100

	BY	CHECKED
DESIGN	D. Texler	D. Menzmer
DETAILS	T. Bittermann	D. Menzmer
QUANTITIES	M. Okimura	D. Menzmer

STATE OF CALIFORNIA
DEPARTMENT OF TRANSPORTATION

DIVISION OF ENGINEERING SERVICES
STRUCTURE DESIGN
DESIGN BRANCH 11

CU 07225
EA 2159C1

BRIDGE NO. 53-3019S
KILOMETER POST 3.88

CARMENITA ROAD SB ON-RAMP
PILE DATA

DISREGARD PRINTS BEARING EARLIER REVISION DATES → 12-31-09

REVISION DATES

SHEET 6 OF 26

FILE => 53-3019s-fa-piledata.dgn

STRUCTURES DESIGN DETAIL SHEET (METRIC) (REV.03-17-04)

USERNAME => ttrright DATE PLOTTED => 22-JUN-2010 TIME PLOTTED => 17:27

DIST	COUNTY	ROUTE	KILOMETER POST TOTAL PROJECT	SHEET No	TOTAL SHEETS
07	LA	5	2.9/4.9	1044	1082

Daniel L. Texler 5/24/10
REGISTERED CIVIL ENGINEER DATE

6-21-10
PLANS APPROVAL DATE

REGISTERED PROFESSIONAL ENGINEER
Daniel L. Texler
No. 49792
Exp. 9-30-10
CIVIL
STATE OF CALIFORNIA

The State of California or its officers or agents shall not be responsible for the accuracy or completeness of electronic copies of this plan sheet.

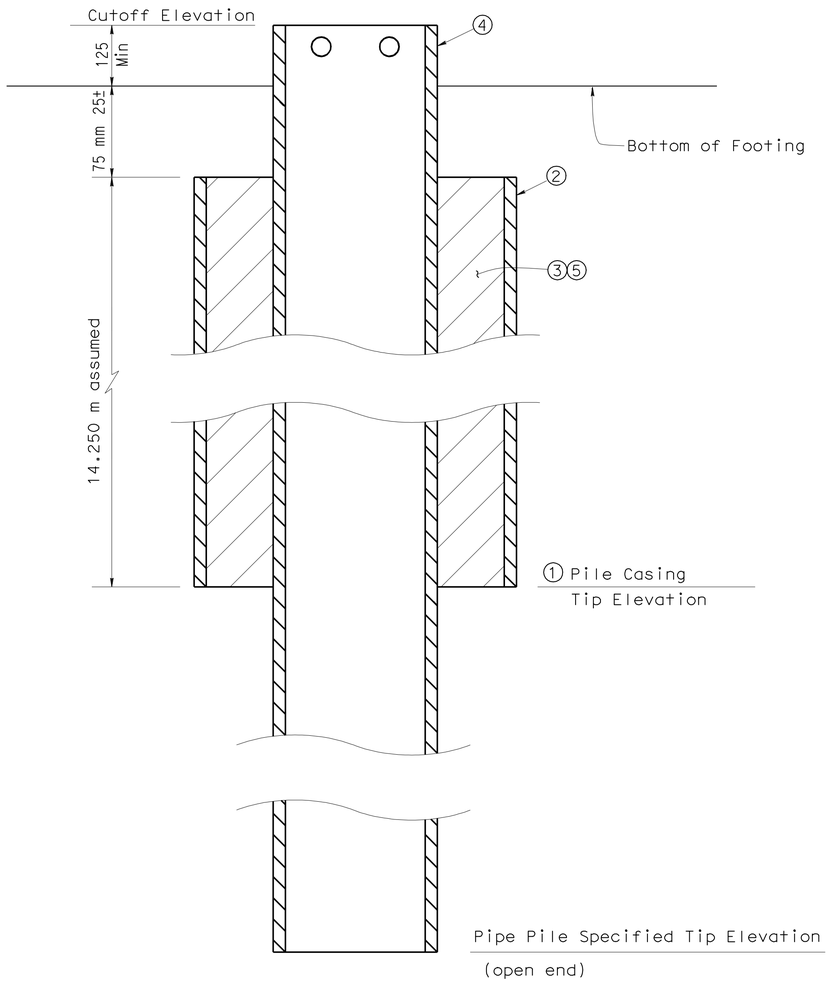

TYPICAL PIPE PILE INSTALLATION

INSTALLATION NOTES:

① Determine required Pile Casing Tip Elevation

② Install Pile Casing, 760 mm ø

③ Remove soil and debris from interior space of Pile Casing

④ Drive 610 mm ø Pipe Pile

⑤ Fill space between Pipe Pile & Pile Casing with grout

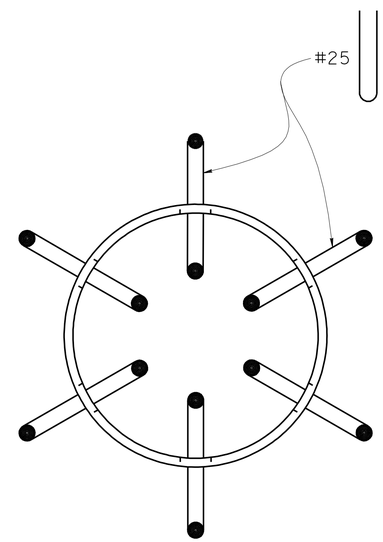

PLAN

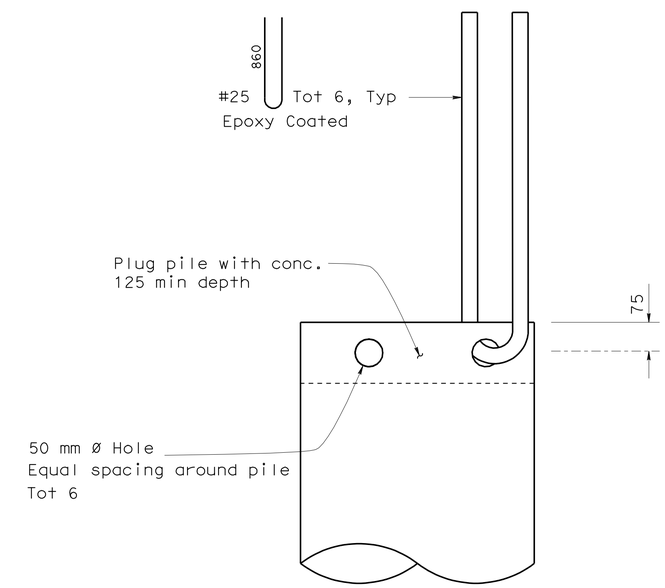

ELEVATION

TYPICAL PIPE PILE ANCHOR

NO SCALE

Caltrans Metric

ALL DIMENSIONS ARE IN MILLIMETERS UNLESS OTHERWISE SHOWN

ORIGINAL SCALE IN MILLIMETERS FOR REDUCED PLANS 0 10 20 30 40 50 60 70 80 90 100

	BY	CHECKED
DESIGN	D. Texler	D. Menzmer
DETAILS	T. Bittermann	D. Menzmer
QUANTITIES	M. Okimura	D. Menzmer

STATE OF CALIFORNIA
DEPARTMENT OF TRANSPORTATION

DIVISION OF ENGINEERING SERVICES
STRUCTURE DESIGN
DESIGN BRANCH 11

CU 07225
EA 2159C1

BRIDGE NO. 53-3019S
KILOMETER POST 3.88

CARMENITA ROAD SB ON-RAMP
PILE DETAILS

DISREGARD PRINTS BEARING EARLIER REVISION DATES

REVISION DATES: ~~12-31-09~~ ~~5-06-10~~ 5/18/10

SHEET 7 OF 26

FILE => 53-3019s-fb-piledet.dgn

STRUCTURES DESIGN DETAIL SHEET (METRIC) (REV.03-17-04)

USERNAME => ttrrichf DATE PLOTTED => 22-JUN-2010 TIME PLOTTED => 17:27

DIST	COUNTY	ROUTE	KILOMETER POST TOTAL PROJECT	SHEET No	TOTAL SHEETS
07	LA	5	2.9/4.9	1045	1082

Daniel L. Texler 5/24/10
REGISTERED CIVIL ENGINEER DATE

6-21-10
PLANS APPROVAL DATE

REGISTERED PROFESSIONAL ENGINEER Daniel L. Texler No. 49792 Exp. 9-30-10 CIVIL STATE OF CALIFORNIA

The State of California or its officers or agents shall not be responsible for the accuracy or completeness of electronic copies of this plan sheet.

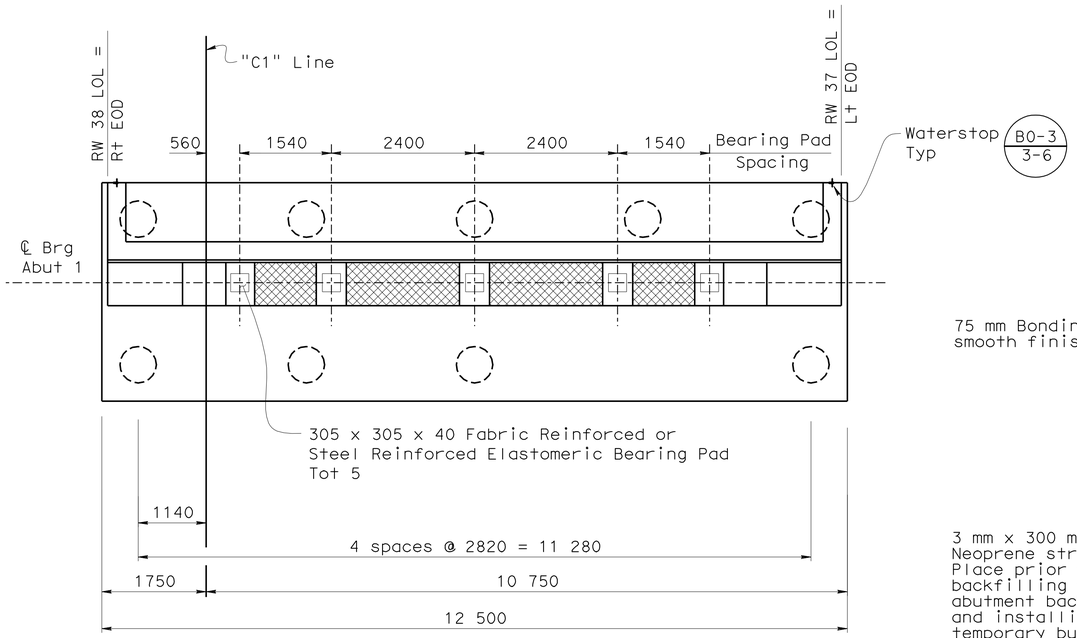

PLAN
1:50

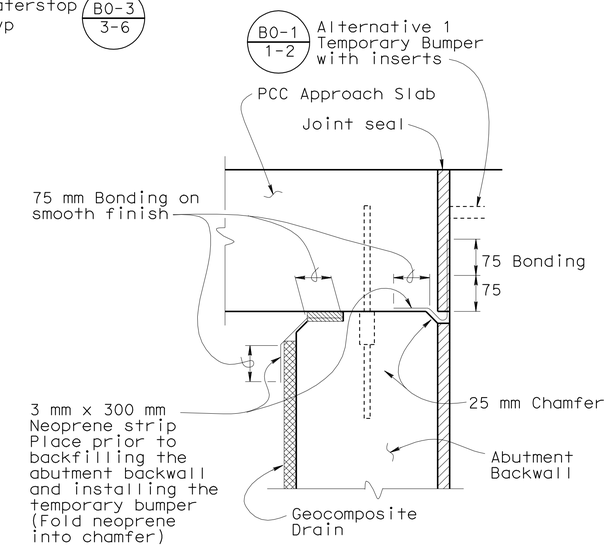

JOINT PROTECTION DETAIL
No Scale

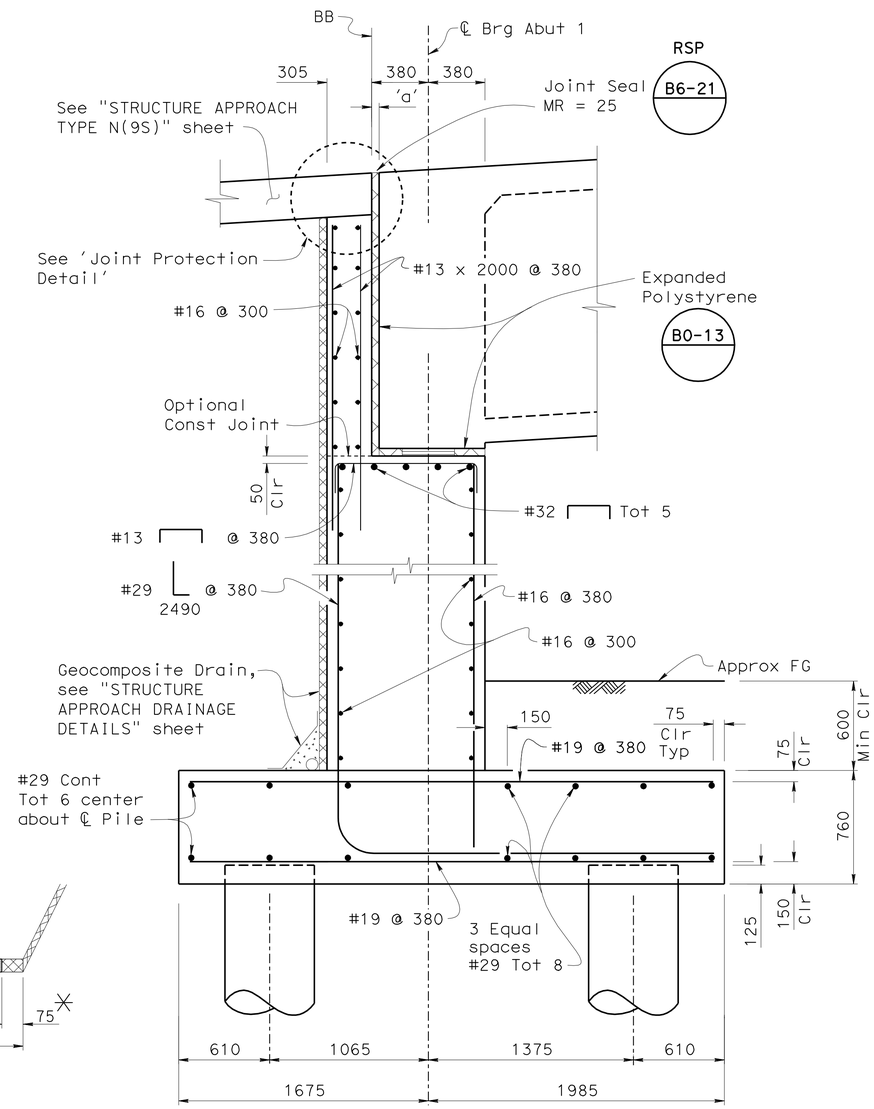

SECTION A-A
1:20

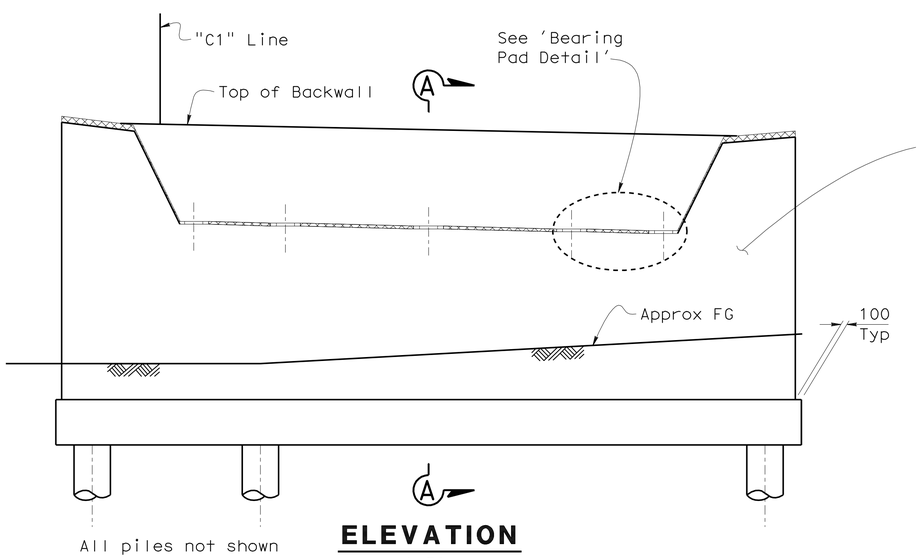

ELEVATION
1:50

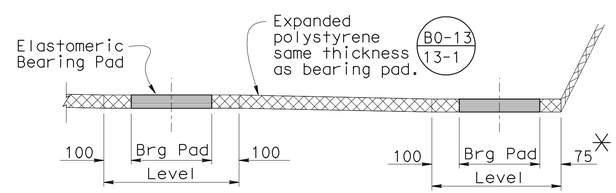

BEARING PAD DETAIL
No Scale

✳ Exterior Bearing Pad only

Caltrans Metric

	BY	CHECKED
DESIGN	Bill Kemp	D. Menzmer
DETAILS	Pauline Tong	D. Menzmer
QUANTITIES	M. Okimura	D. Menzmer

STATE OF CALIFORNIA
DEPARTMENT OF TRANSPORTATION

DIVISION OF ENGINEERING SERVICES
STRUCTURE DESIGN
DESIGN BRANCH 11

BRIDGE NO. 53-3019S
KILOMETER POST 3.88

CARMENITA ROAD SB ON-RAMP
ABUTMENT LAYOUT

ALL DIMENSIONS ARE IN MILLIMETERS UNLESS OTHERWISE SHOWN

ORIGINAL SCALE IN MILLIMETERS FOR REDUCED PLANS 0 10 20 30 40 50 60 70 80 90 100

CU 07225
EA 2159C1

DISREGARD PRINTS BEARING EARLIER REVISION DATES

REVISION DATES: 11-08-07 12-18-07 1-15-08 3-25-08 4/15/08 7-8-08 8-5-08 12-24-08 1-02-09

SHEET 8 OF 26

FILE => 53-3019s-fe-abtlyt.dgn

STRUCTURES DESIGN DETAIL SHEET (METRIC) (REV.03-17-04)

USERNAME => trrichf DATE PLOTTED => 22-JUN-2010 TIME PLOTTED => 17:27

DIST	COUNTY	ROUTE	KILOMETER POST TOTAL PROJECT	SHEET No	TOTAL SHEETS
07	LA	5	2.9/4.9	1046	1082

Daniel L. Texler 1-26-10
REGISTERED CIVIL ENGINEER DATE

6-21-10
PLANS APPROVAL DATE

REGISTERED PROFESSIONAL ENGINEER Daniel L. Texler No. 49792 Exp. 9-30-10 CIVIL STATE OF CALIFORNIA

The State of California or its officers or agents shall not be responsible for the accuracy or completeness of electronic copies of this plan sheet.

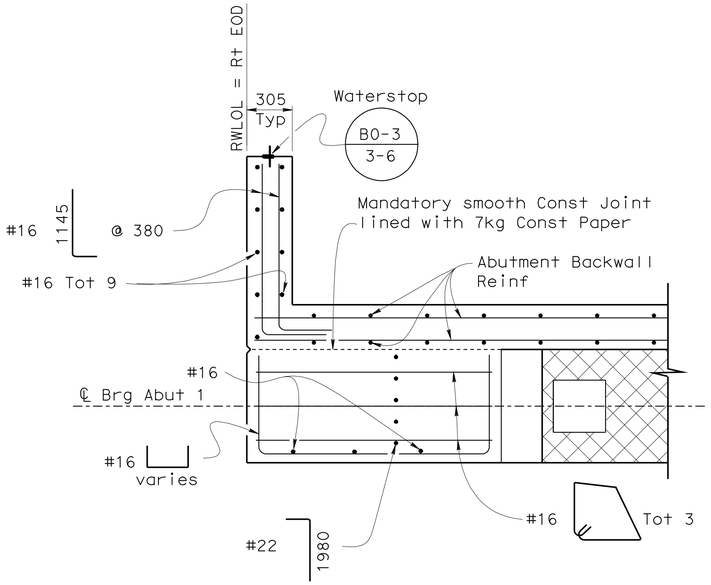

SECTION D-D

1:20

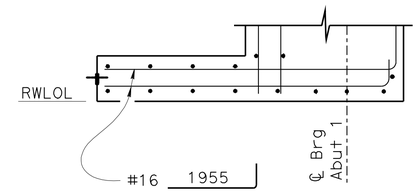

SECTION E-E

1:20

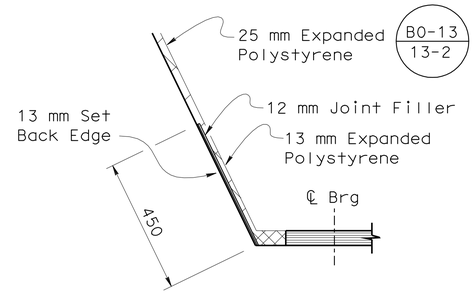

DETAIL C

No Scale

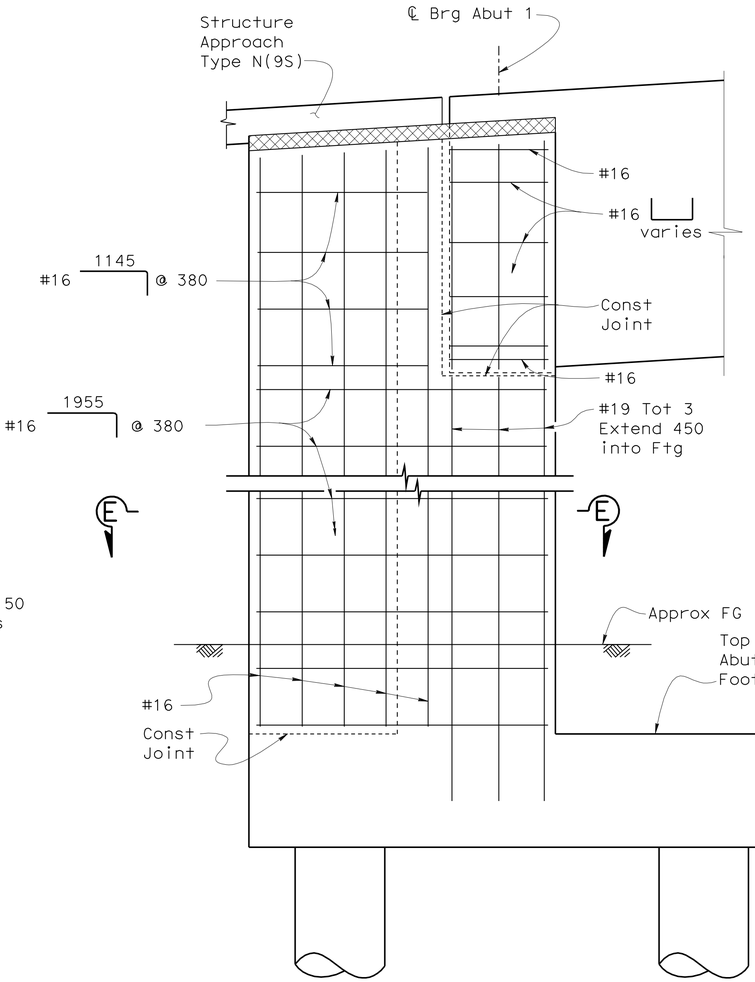

STUBWALL ELEVATION

1:20

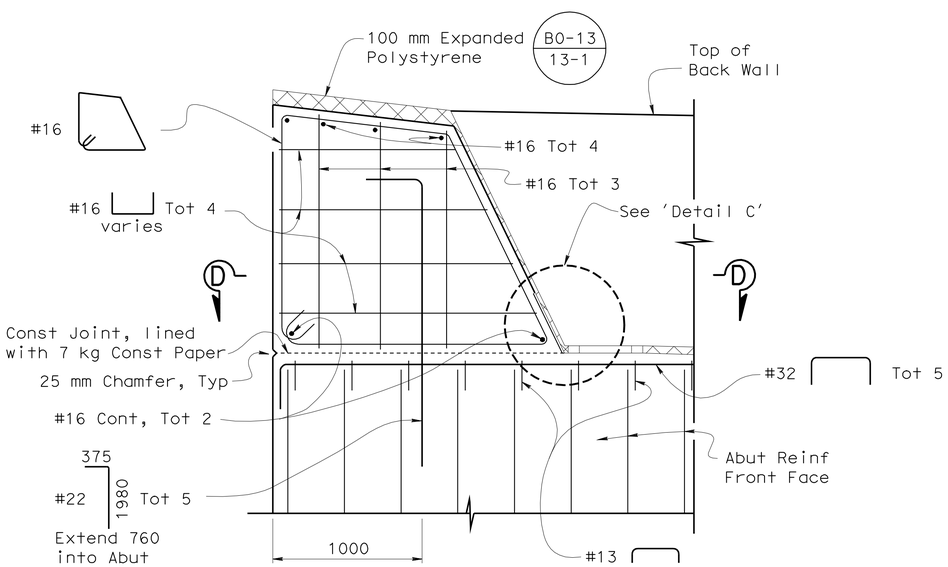

ABUTMENT SHEAR KEY DETAIL

1:20

Right shear key shown,
Left shear key similar

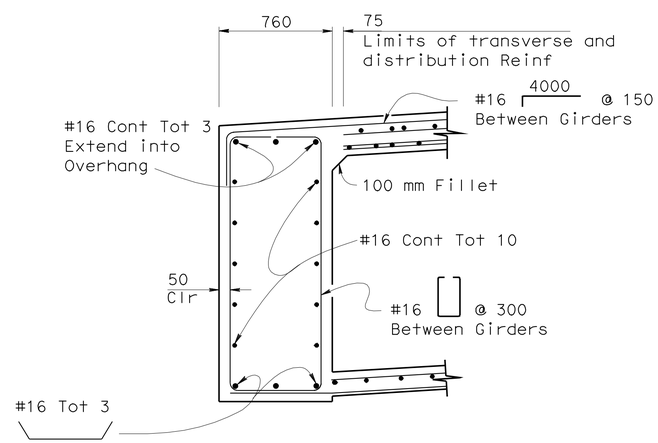

END DIAPHRAGM DETAIL

1:20

DESIGN	BY Bill Kemp	CHECKED D. Menzmer	
DETAILS	BY Pauline Tong/LG	CHECKED D. Menzmer	
QUANTITIES	BY M. Okimura	CHECKED D. Menzmer	

STATE OF CALIFORNIA
DEPARTMENT OF TRANSPORTATION

DIVISION OF ENGINEERING SERVICES
STRUCTURE DESIGN
DESIGN BRANCH 11

BRIDGE NO. 53-3019S
KILOMETER POST 3.88

CARMENITA ROAD SB ON-RAMP
ABUTMENT DETAILS

ALL DIMENSIONS ARE IN MILLIMETERS UNLESS OTHERWISE SHOWN

ORIGINAL SCALE IN MILLIMETERS FOR REDUCED PLANS 0 10 20 30 40 50 60 70 80 90 100

CU 07225
EA 2159C1

DISREGARD PRINTS BEARING EARLIER REVISION DATES

REVISION DATES: 12-8-06 | 01-05-09 | 1-15-08 | 2-12-08 | 3-12-08 | 3-28-08 | 4/17/08 | 7-18-08 | 8-21-08

SHEET 9 OF 26

FILE => 53-3019s-ff-abtdet.dgn

STRUCTURES DESIGN DETAIL SHEET (METRIC) (REV.03-17-04)

USERNAME => trrichf DATE PLOTTED => 22-JUN-2010 TIME PLOTTED => 17:27

DIST	COUNTY	ROUTE	KILOMETER POST TOTAL PROJECT	SHEET No	TOTAL SHEETS
07	LA	5	2.9/4.9	1047	1082

Daniel L. Texler 5/24/10
REGISTERED CIVIL ENGINEER DATE

6-21-10
PLANS APPROVAL DATE

REGISTERED PROFESSIONAL ENGINEER Daniel L. Texler No. 49792 Exp. 9-30-10 CIVIL STATE OF CALIFORNIA

The State of California or its officers or agents shall not be responsible for the accuracy or completeness of electronic copies of this plan sheet.

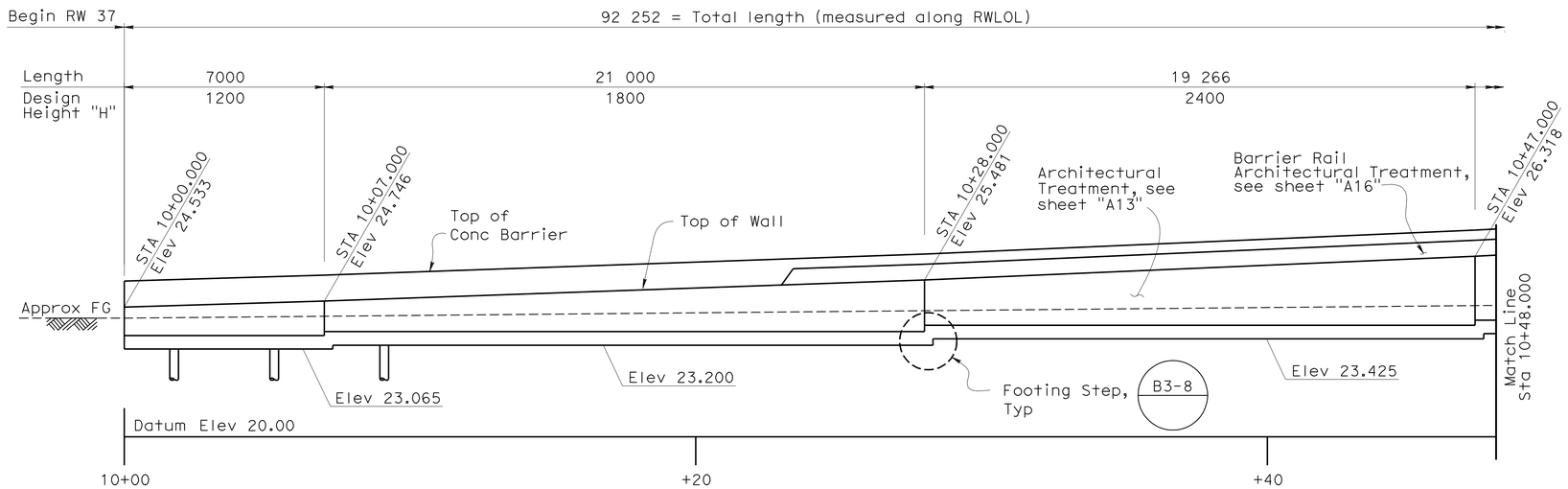

Note: All Piles not shown

MIRROR DEVELOPED ELEVATION

1:100

B0-3 3-2 | B0-3 3-3 | B0-3 3-4

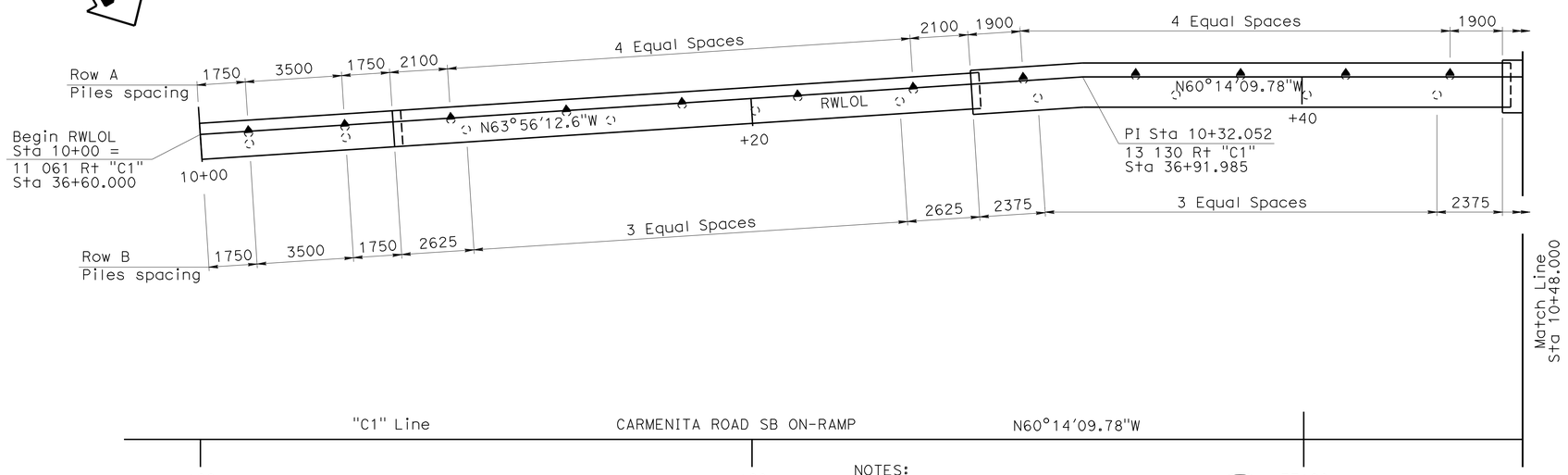

PLAN

1:100

B2-5

LEGEND:

- Indicates Vertical Piles
- Indicates Battered 1:3 Piles

NOTES:

Piles are Class 400, Alternative "V" closed-end with 60° conical tip

Pile Tip shall be 14.0 m below bottom of wall footings

Pile spacing measured along RWLOL

Stations and Elevations are in meters

Install utility conduits as req'd, (not shown) for size and other data, see "ROAD PLANS"

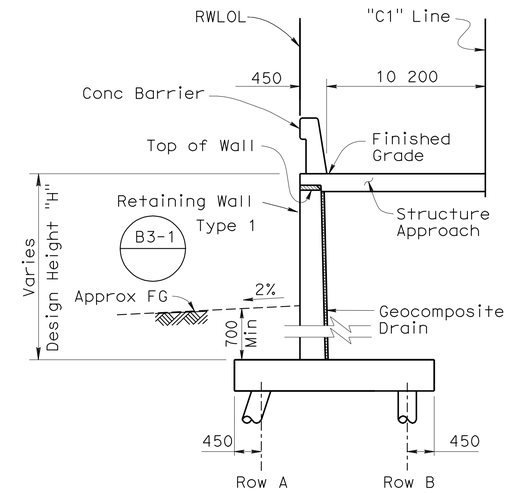

SECTION AT APPROACH SLAB

1:50

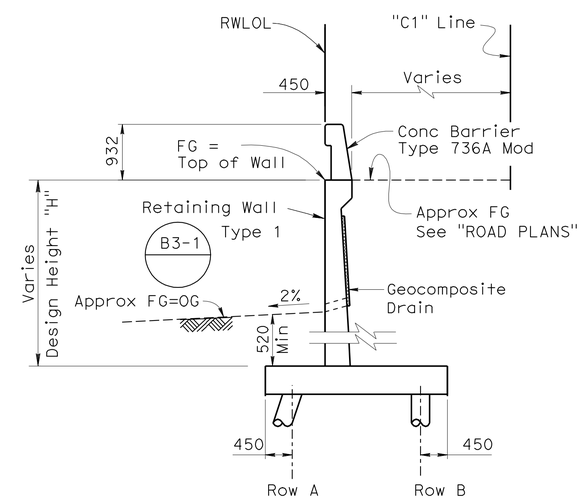

TYPICAL SECTION

1:50

Caltrans Metric

	BY	CHECKED
DESIGN	Bill Kemp	D. Menzmer
DETAILS	Pauline Tong	D. Menzmer
QUANTITIES	M. Okimura	D. Menzmer

STATE OF CALIFORNIA
DEPARTMENT OF TRANSPORTATION

DIVISION OF ENGINEERING SERVICES
STRUCTURE DESIGN
DESIGN BRANCH 11

CU 07225
EA 2159C1

BRIDGE NO. 53-3019S
KILOMETER POST 3.88

CARMENITA ROAD SB ON-RAMP
RETAINING WALL 37 LAYOUT NO. 1

ALL DIMENSIONS ARE IN MILLIMETERS UNLESS OTHERWISE SHOWN

ORIGINAL SCALE IN MILLIMETERS FOR REDUCED PLANS 0 10 20 30 40 50 60 70 80 90 100

DISREGARD PRINTS BEARING EARLIER REVISION DATES

REVISION DATES: ~~10-28-08~~ ~~1-2-10~~ ~~5-6-10~~ 5/18/10 ~~6/3/09~~ ~~7/1/09~~ ~~7-14-09~~ ~~8/6/09~~ ~~12/28/09~~

SHEET 10 OF 26

FILE => 53-3019s-fg-rw37lyt01.dgn

STRUCTURES DESIGN DETAIL SHEET (METRIC) (REV.03-17-04)

USERNAME => trrright DATE PLOTTED => 22-JUN-2010 TIME PLOTTED => 17:28

DIST	COUNTY	ROUTE	KILOMETER POST TOTAL PROJECT	SHEET No	TOTAL SHEETS
07	LA	5	2.9/4.9	1048	1082

Daniel L. Texler 5/24/10
REGISTERED CIVIL ENGINEER DATE

6-21-10
PLANS APPROVAL DATE

REGISTERED PROFESSIONAL ENGINEER Daniel L. Texler No. 49792 Exp. 9-30-10 CIVIL STATE OF CALIFORNIA

The State of California or its officers or agents shall not be responsible for the accuracy or completeness of electronic copies of this plan sheet.

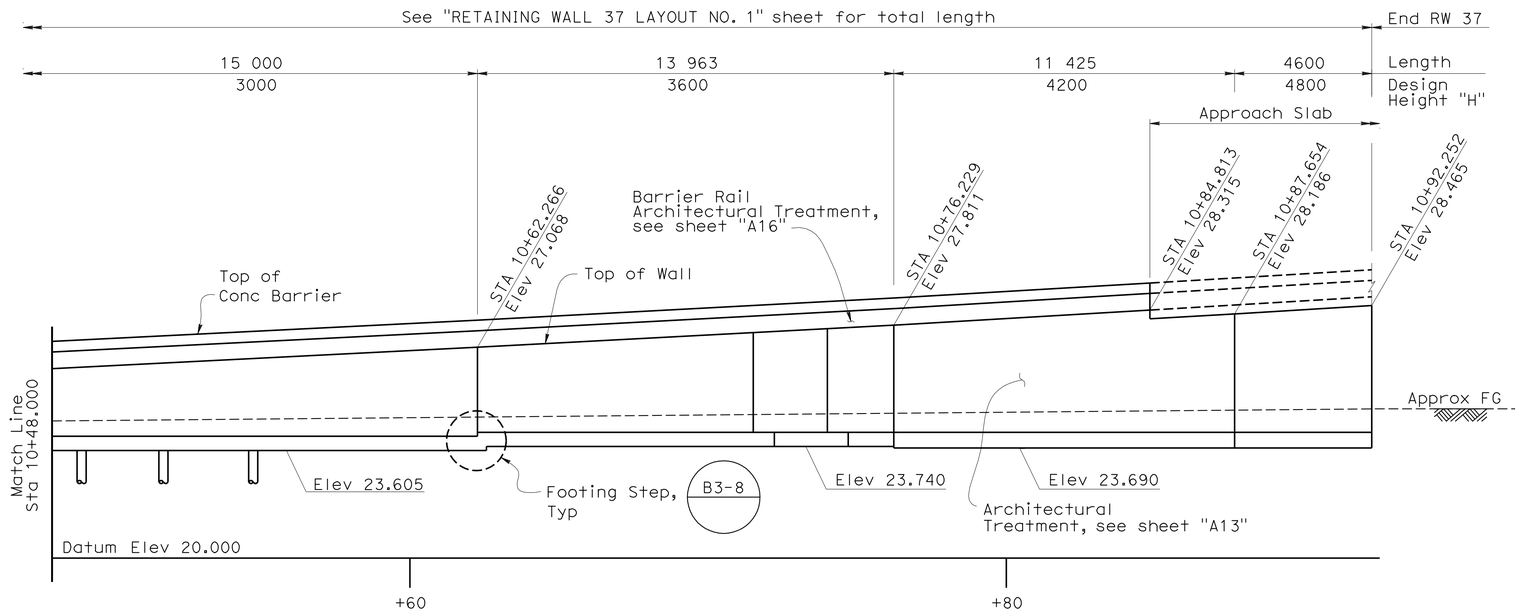

Note: All Piles not shown

MIRROR DEVELOPED ELEVATION

1:100

B0-3 3-2 | B0-3 3-3 | B0-3 3-4

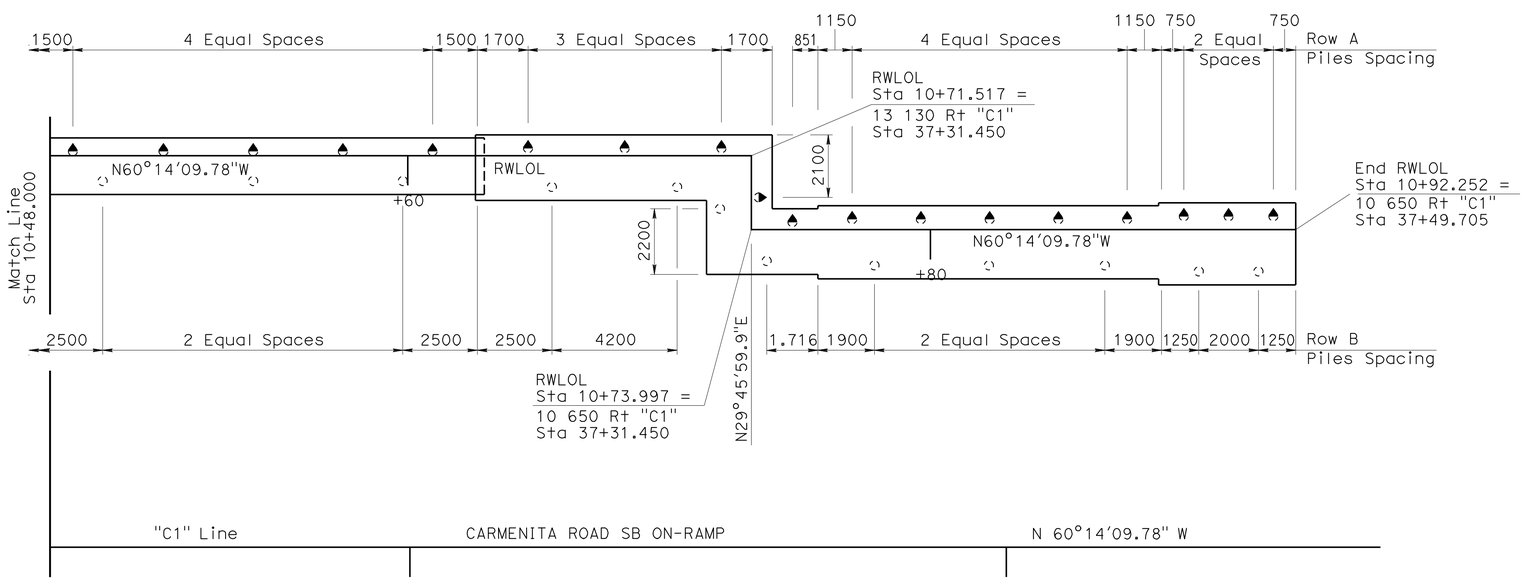

PLAN

1:100

LEGEND:

- ○ Indicates Vertical Piles
- ● Indicates Battered 1:3 Piles

NOTES:

Piles are Class 400, Alternative "V" closed-end with 60° conical tip (B2-5)

Pile Tip shall be 14.0 m below bottom of wall footings

Pile spacing measured along RWLOL

Stations and Elevations are in meters

Install utility conduits as req'd, (not shown) for size and other data, see "ROAD PLANS"

Caltrans Metric

	BY	CHECKED
DESIGN	Bill Kemp	D. Menzmer
DETAILS	Pauline Tong	D. Menzmer
QUANTITIES	M. Okimura	D. Menzmer

STATE OF CALIFORNIA DEPARTMENT OF TRANSPORTATION

DIVISION OF ENGINEERING SERVICES STRUCTURE DESIGN
DESIGN BRANCH 11

BRIDGE NO. 53-3019S
KILOMETER POST 3.88

CARMENITA ROAD SB ON-RAMP
RETAINING WALL 37 LAYOUT NO. 2

ALL DIMENSIONS ARE IN MILLIMETERS UNLESS OTHERWISE SHOWN

ORIGINAL SCALE IN MILLIMETERS FOR REDUCED PLANS 0 10 20 30 40 50 60 70 80 90 100

CU 07225
EA 2159C1

DISREGARD PRINTS BEARING EARLIER REVISION DATES

REVISION DATES: 10-28-08 11-28-08 11-28-08 5/12/09 5/20/09 7/09/09 1/21/10 5-6-10

SHEET 11 OF 26

FILE => 53-3019s-fg-rw37lyt02.dgn

STRUCTURES DESIGN DETAIL SHEET (METRIC) (REV.03-17-04)

USERNAME => trrright DATE PLOTTED => 22-JUN-2010 TIME PLOTTED => 17:28

DIST	COUNTY	ROUTE	KILOMETER POST TOTAL PROJECT	SHEET No	TOTAL SHEETS
07	LA	5	2.9/4.9	1049	1082

Daniel L. Texler 1-26-10
REGISTERED CIVIL ENGINEER DATE

6-21-10
PLANS APPROVAL DATE

REGISTERED PROFESSIONAL ENGINEER Daniel L Texler No. 49792 Exp. 9-30-10 CIVIL STATE OF CALIFORNIA

The State of California or its officers or agents shall not be responsible for the accuracy or completeness of electronic copies of this plan sheet.

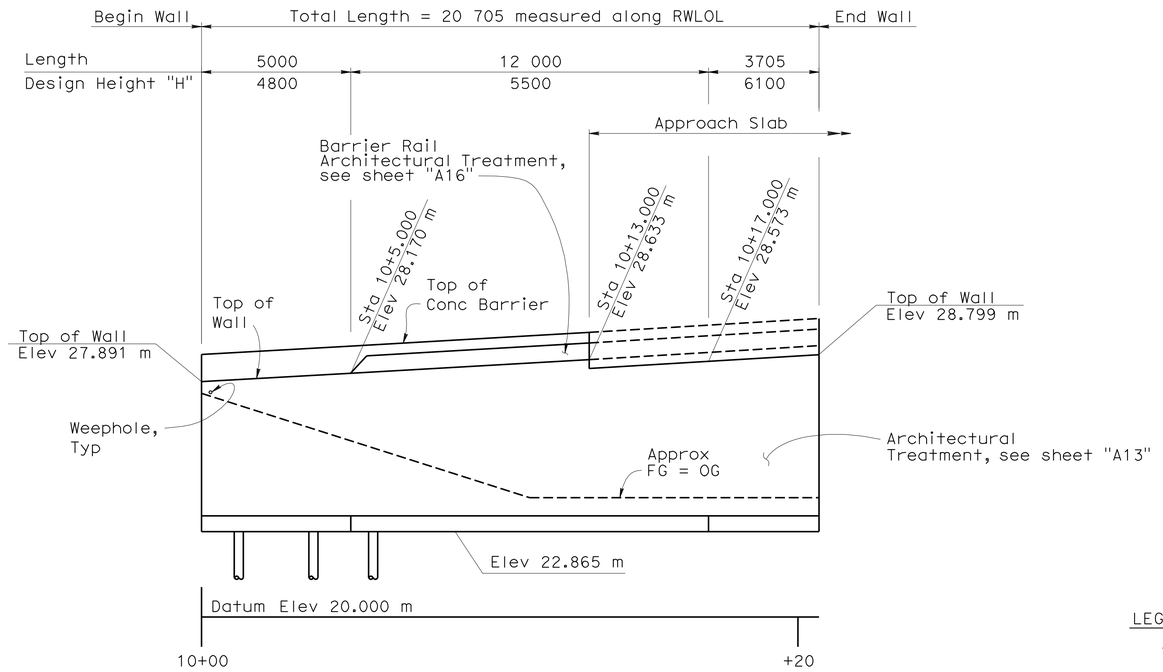

Note: All Piles not shown

ELEVATION

1:100

B0-3 / 3-2 | B0-3 / 3-3 | B0-3 / 3-4

LEGEND:

- Indicates Vertical Piles
- Indicates Battered 1:3 Piles

NOTES:

Piles are Class 400, Alternative "V" closed-end with 60° conical tip (B2-5)

Pile Tip shall be 14.0 m below bottom of wall footings

Pile spacing measured along RWLOL

Install utility conduits as req'd, (not shown) for size and other data, see "ROAD PLANS"

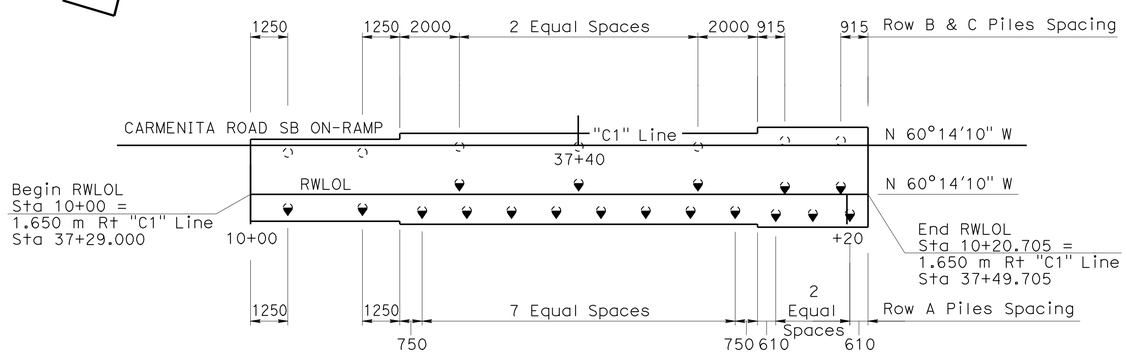

PLAN

1:100

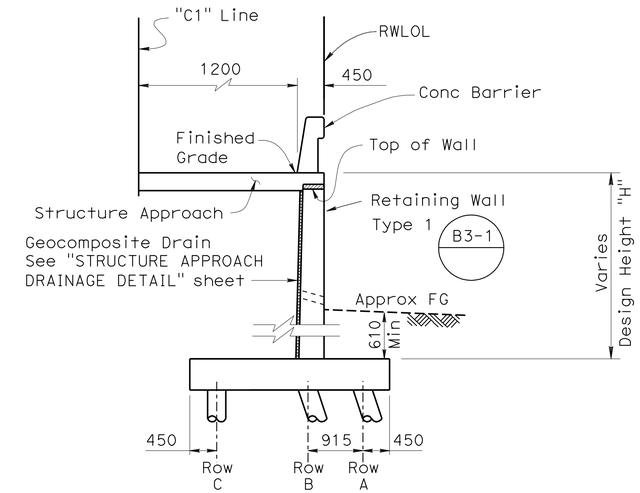

SECTION AT APPROACH SLAB

1:50

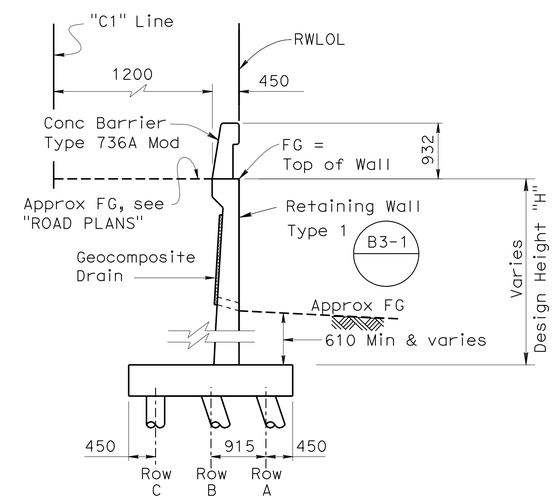

TYPICAL SECTION

1:50

DESIGN	BY Bill Kemp	CHECKED D. Menzmer	
DETAILS	BY Pauline Tong	CHECKED D. Menzmer	
QUANTITIES	BY M. Okimura	CHECKED D. Menzmer	

STATE OF CALIFORNIA DEPARTMENT OF TRANSPORTATION

DIVISION OF ENGINEERING SERVICES STRUCTURE DESIGN DESIGN BRANCH 11

BRIDGE NO. 53-3019S
KILOMETER POST 3.88

CARMENITA ROAD SB ON-RAMP
RETAINING WALL 38 LAYOUT

ALL DIMENSIONS ARE IN MILLIMETERS UNLESS OTHERWISE SHOWN

ORIGINAL SCALE IN MILLIMETERS FOR REDUCED PLANS 0 10 20 30 40 50 60 70 80 90 100

CU 07225
EA 2159C1

DISREGARD PRINTS BEARING EARLIER REVISION DATES

REVISION DATES: 9-30-08 12/28/09 1/1/10 5/12/09 5/20/09 6/5/09 7/1/09 7-14-09 8/6/09

SHEET 12 OF 26

FILE => 53-3019s-fh-rw38lyt.dgn

STRUCTURES DESIGN DETAIL SHEET (METRIC) (REV.03-17-04)

USERNAME => trrlcnf DATE PLOTTED => 22-JUN-2010 TIME PLOTTED => 17:28

DIST	COUNTY	ROUTE	KILOMETER POST TOTAL PROJECT	SHEET No	TOTAL SHEETS
07	LA	5	2.9/4.9	1050	1082

Daniel L. Texler 1-26-10
REGISTERED CIVIL ENGINEER DATE

6-21-10
PLANS APPROVAL DATE

REGISTERED PROFESSIONAL ENGINEER Daniel L. Texler No. 49792 Exp. 9-30-10 CIVIL STATE OF CALIFORNIA

The State of California or its officers or agents shall not be responsible for the accuracy or completeness of electronic copies of this plan sheet.

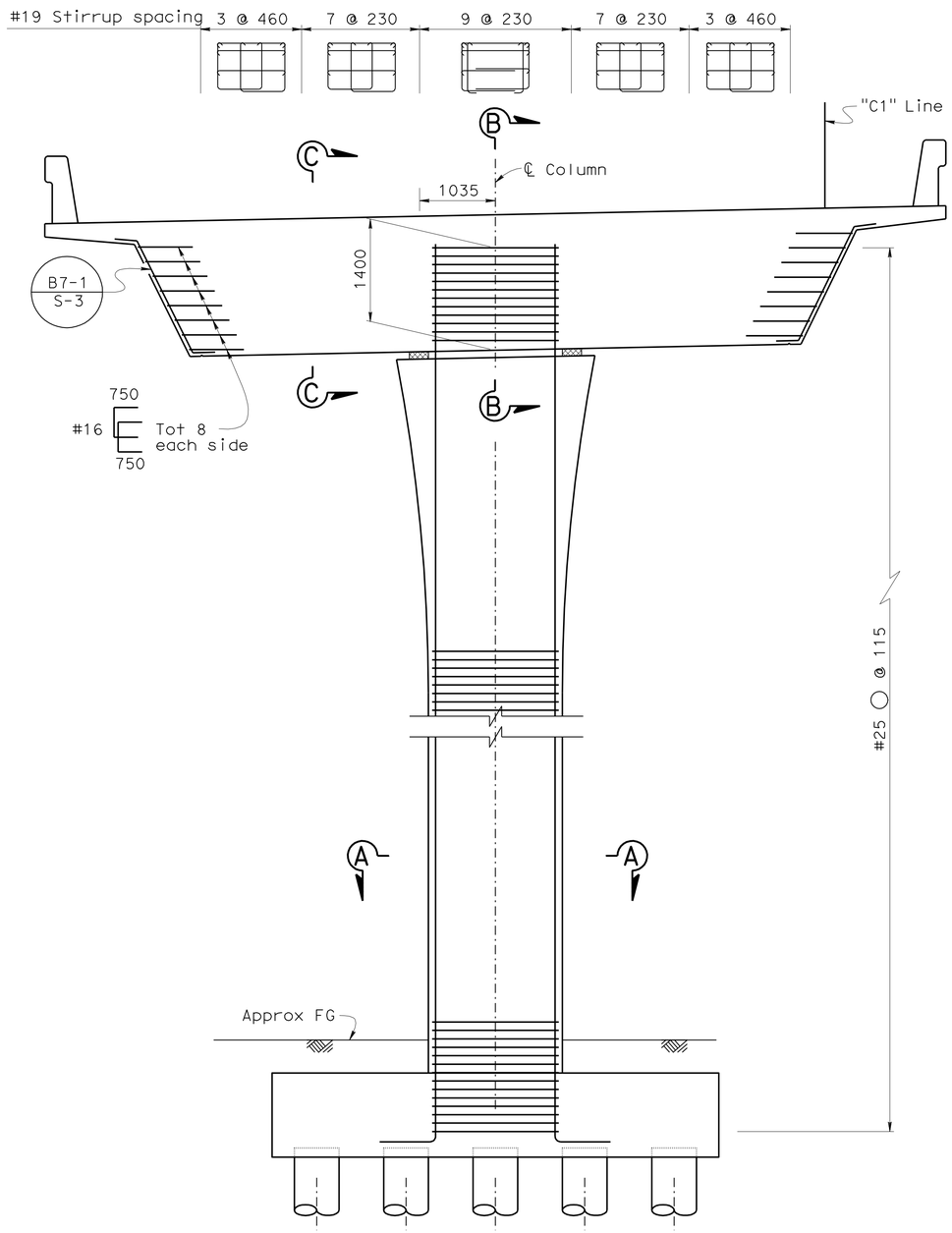

ELEVATION
1:40

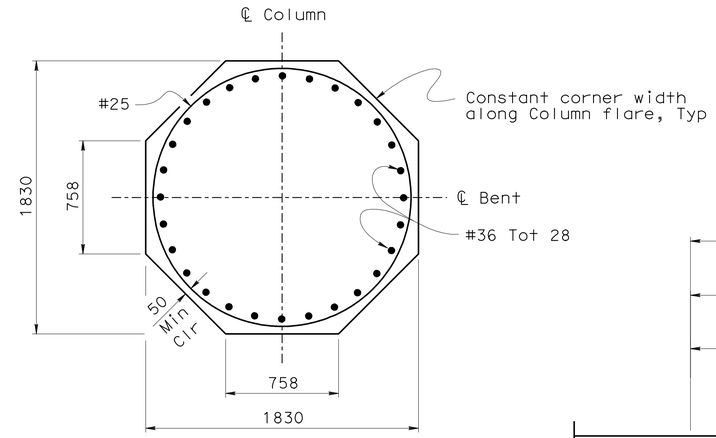

SECTION A-A
1:20

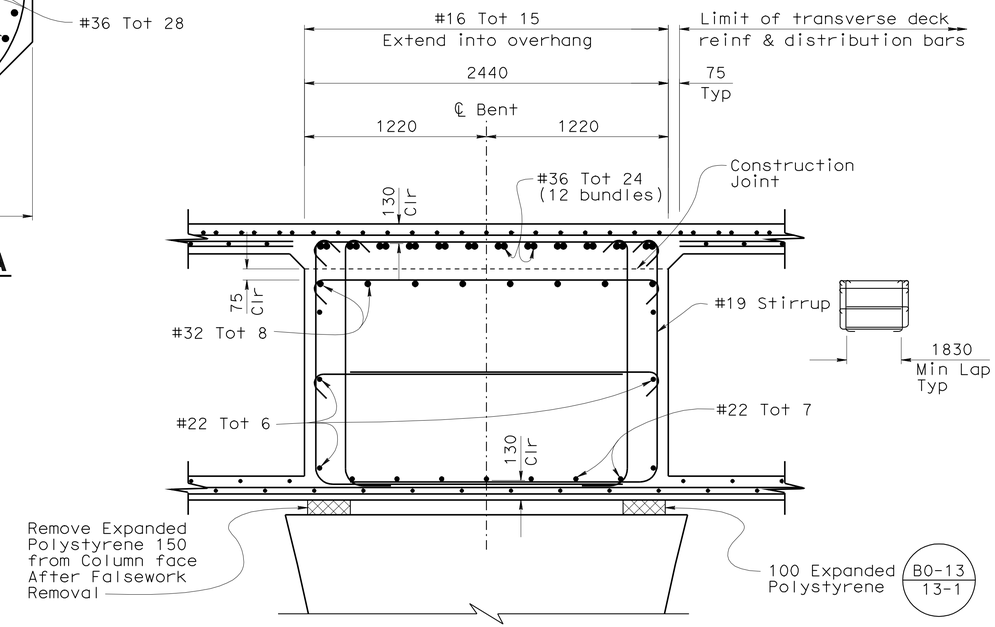

SECTION B-B
1:20

NOTES:

1. All Hoops are ultimate butt splice continuous
2. No splices allowed in main column reinforcement
3. For 'Column Geometrics', see "COLUMN FLARE DETAILS" sheet
4. Bent cap Bottom reinforcement in conflict with main column reinforcement may be adjusted horizontally as directed by the Engineer

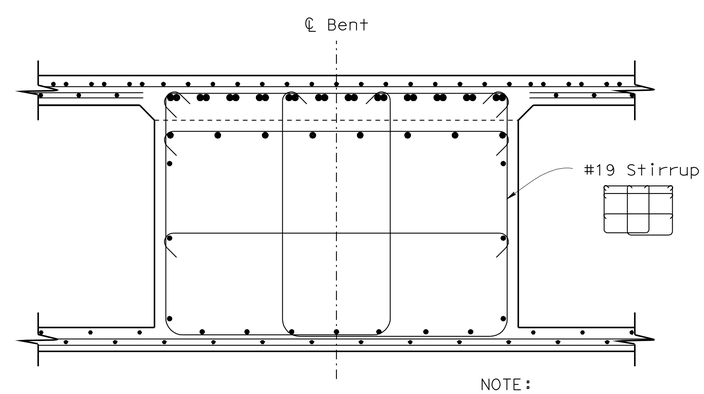

SECTION C-C
1:20

NOTE:
Reinforcement similar to 'Section B-B' except as shown

Caltrans Metric

DESIGN	BY Bill Kemp	CHECKED D. Menzmer
DETAILS	BY Pauline Tong	CHECKED D. Menzmer
QUANTITIES	BY M. Okimura	CHECKED D. Menzmer

STATE OF CALIFORNIA
DEPARTMENT OF TRANSPORTATION

DIVISION OF ENGINEERING SERVICES
STRUCTURE DESIGN
DESIGN BRANCH 11

BRIDGE NO. 53-3019S
KILOMETER POST 3.88

CARMENITA ROAD SB ON-RAMP
BENT DETAILS NO. 1

ALL DIMENSIONS ARE IN MILLIMETERS UNLESS OTHERWISE SHOWN

ORIGINAL SCALE IN MILLIMETERS FOR REDUCED PLANS 0 10 20 30 40 50 60 70 80 90 100

CU 07225
EA 2159C1

DISREGARD PRINTS BEARING EARLIER REVISION DATES

REVISION DATES: 12-14-07 12-17-07 1-18-08 3-26-08 12-30-08

SHEET 13 OF 26

FILE => 53-3019s-h-bntdet01.dgn

STRUCTURES DESIGN DETAIL SHEET (METRIC) (REV.03-17-04)

USERNAME => trright DATE PLOTTED => 22-JUN-2010 TIME PLOTTED => 17:28

DIST	COUNTY	ROUTE	KILOMETER POST TOTAL PROJECT	SHEET No	TOTAL SHEETS
07	LA	5	2.9/4.9	1051	1082

Daniel L. Texler 1-26-10
REGISTERED CIVIL ENGINEER DATE

6-21-10
PLANS APPROVAL DATE

REGISTERED PROFESSIONAL ENGINEER Daniel L. Texler No. 49792 Exp. 9-30-10 CIVIL STATE OF CALIFORNIA

The State of California or its officers or agents shall not be responsible for the accuracy or completeness of electronic copies of this plan sheet.

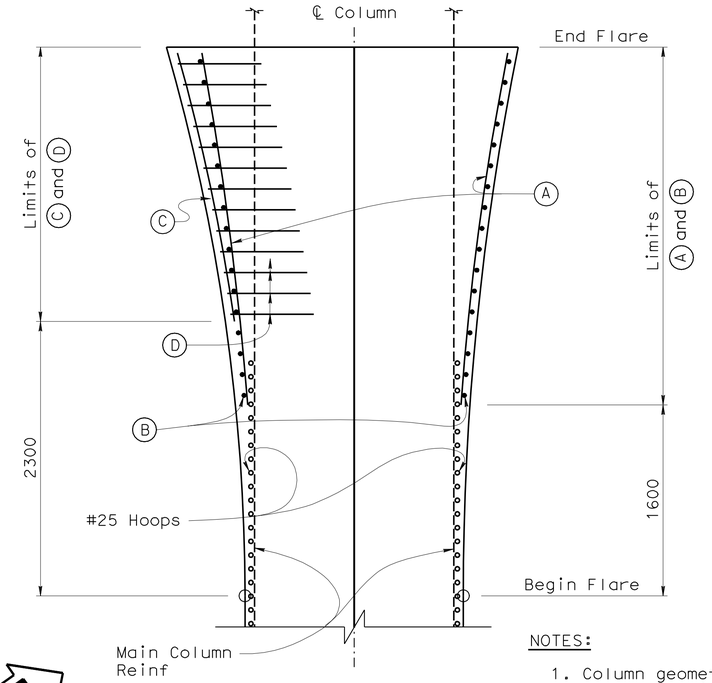

SECTION R-R
1:25

NOTES:

1. Column geometry and reinforcement are symmetric about ℄ Column & ℄ Bent

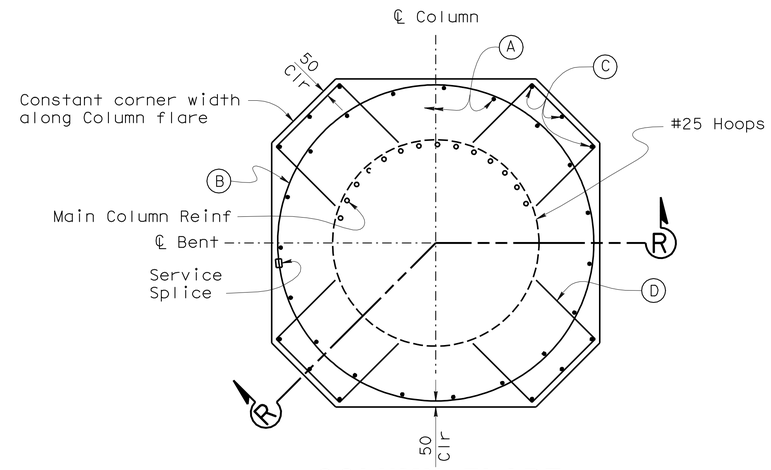

COLUMN FLARE REINFORCEMENT
1:25

LEGEND:

(A) = #19 / Tot 19

(B) = #25 Hoops @ 175, stagger splices

(C) = #19 / Tot 12

(D) = #19 700 × 700 @ 175

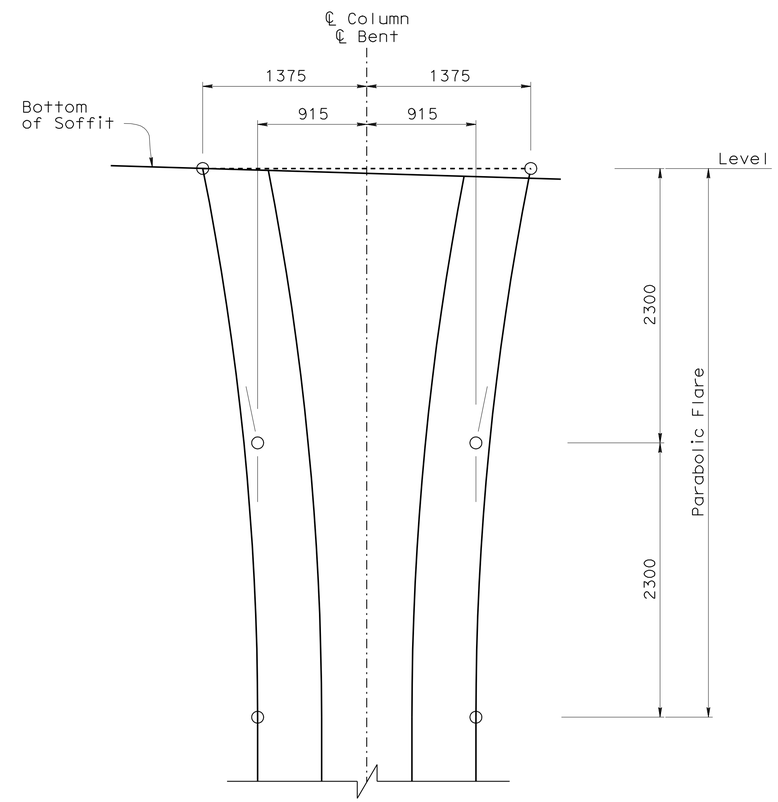

COLUMN GEOMETRY
1:25

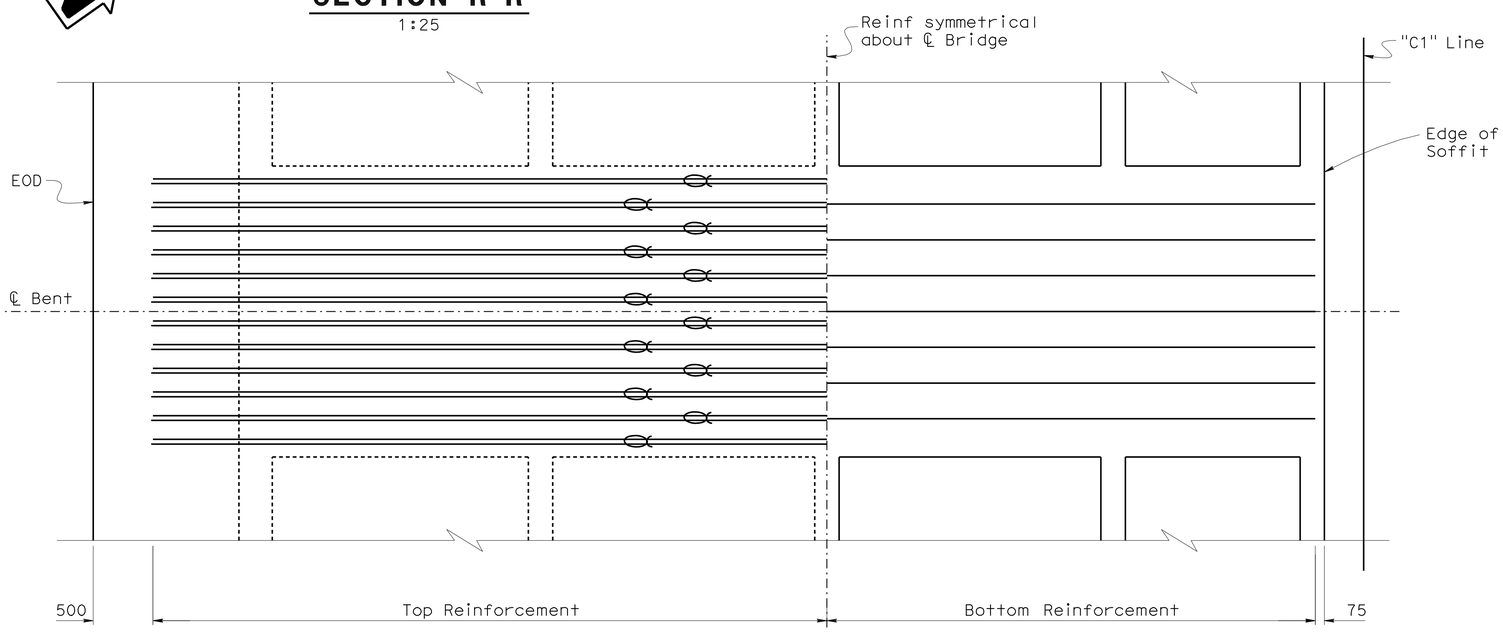

PLAN
1:25

Indicates Bundled Bars

DESIGN	BY Bill Kemp	CHECKED D. Menzmer	
DETAILS	BY Pauline Tong	CHECKED D. Menzmer	
QUANTITIES	BY M. Okimura	CHECKED D. Menzmer	

STATE OF CALIFORNIA
DEPARTMENT OF TRANSPORTATION

DIVISION OF ENGINEERING SERVICES
STRUCTURE DESIGN
DESIGN BRANCH 11

BRIDGE NO. 53-3019S
KILOMETER POST 3.88

CARMENITA ROAD SB ON-RAMP
BENT DETAILS NO. 2

ALL DIMENSIONS ARE IN MILLIMETERS UNLESS OTHERWISE SHOWN

ORIGINAL SCALE IN MILLIMETERS FOR REDUCED PLANS 0 10 20 30 40 50 60 70 80 90 100

CU 07225
EA 2159C1

DISREGARD PRINTS BEARING EARLIER REVISION DATES

REVISION DATES: 12-18-07 1-18-08 1-9-08 12-30-08 12-28-09

SHEET 14 OF 26

FILE => 53-3019s-h-bntdet02.dgn

STRUCTURES DESIGN DETAIL SHEET (METRIC) (REV.03-17-04)

USERNAME => trrichf DATE PLOTTED => 22-JUN-2010 TIME PLOTTED => 17:28

DIST	COUNTY	ROUTE	KILOMETER POST TOTAL PROJECT	SHEET No	TOTAL SHEETS
07	LA	5	2.9/4.9	1052	1082

Daniel L. Texler 1-26-10
REGISTERED CIVIL ENGINEER DATE

6-21-10
PLANS APPROVAL DATE

REGISTERED PROFESSIONAL ENGINEER
Daniel L. Texler
No. 49792
Exp. 9-30-10
CIVIL
STATE OF CALIFORNIA

The State of California or its officers or agents shall not be responsible for the accuracy or completeness of electronic copies of this plan sheet.

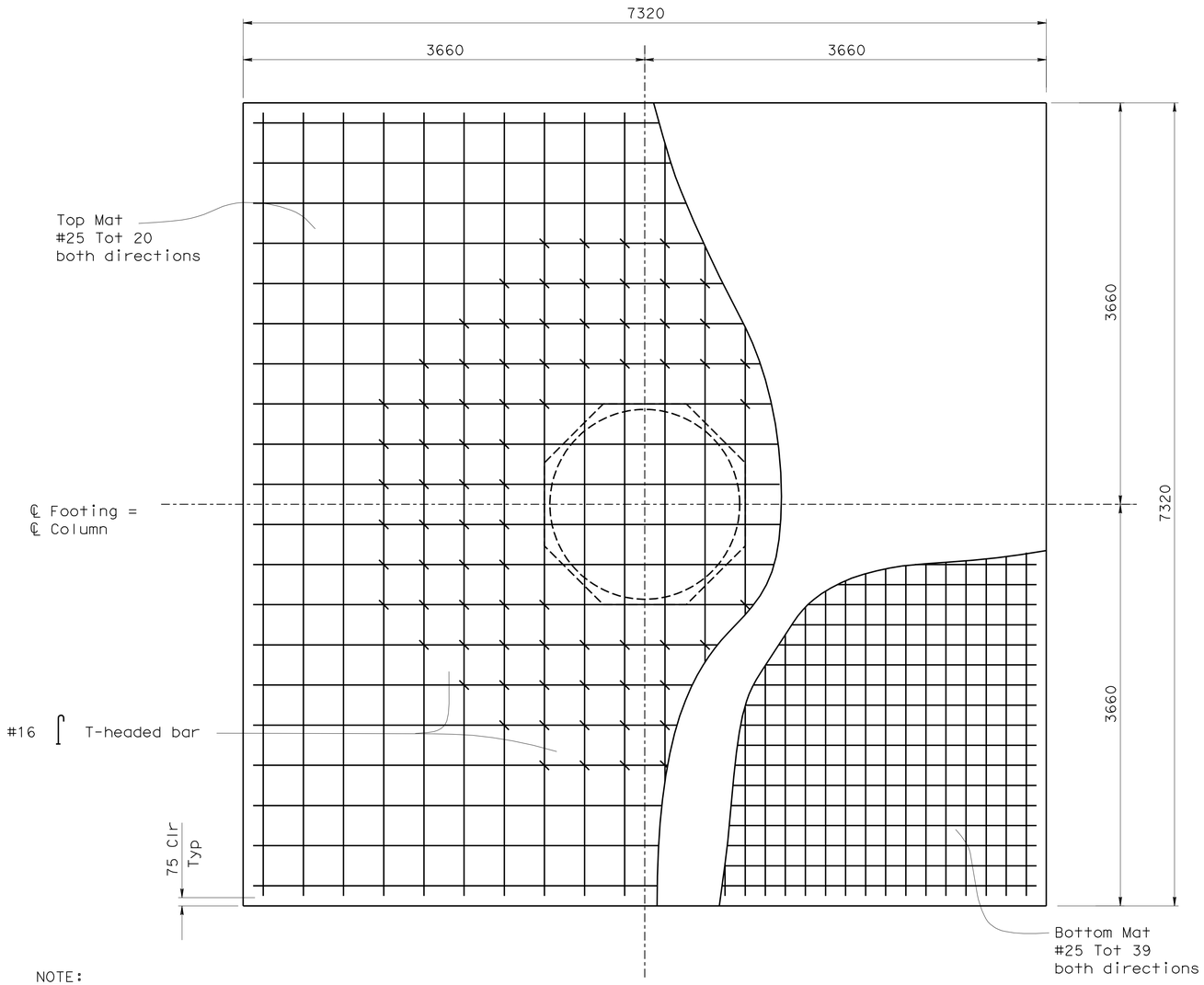

NOTE:

Details are symmetrical about ℄ Bent and ℄ Footing

TYPICAL FOOTING PLAN

1:25

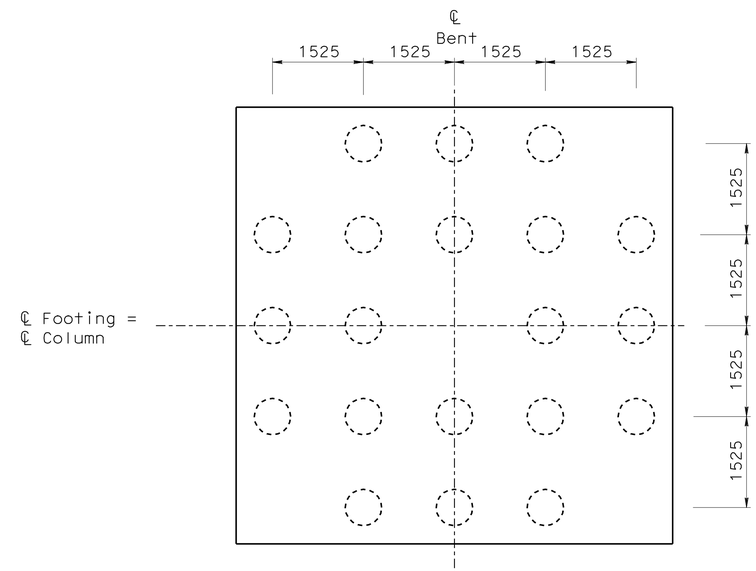

PILE LAYOUT

1:50

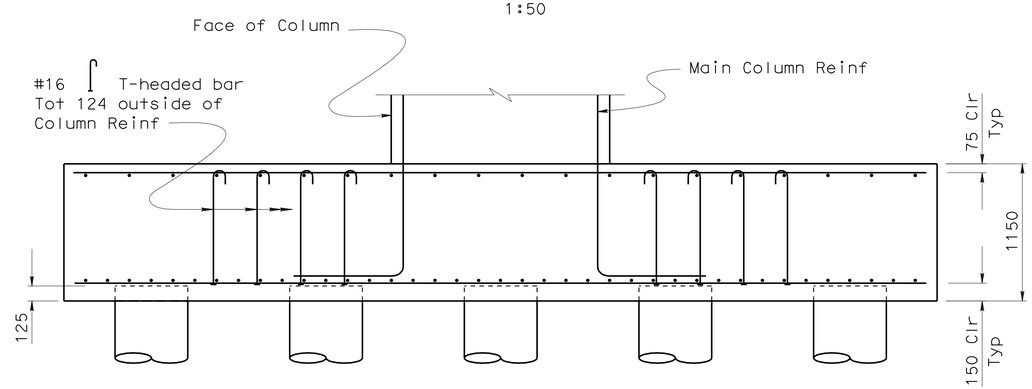

NOTE:

Place hooks at intersections of top and bottom mat bars

FOOTING SECTION

1:25

DESIGN	BY Bill Kemp	CHECKED D. Menzmer	
DETAILS	BY Pauline Tong	CHECKED D. Menzmer	
QUANTITIES	BY M. Okimura	CHECKED D. Menzmer	

STATE OF CALIFORNIA
DEPARTMENT OF TRANSPORTATION

DIVISION OF ENGINEERING SERVICES
STRUCTURE DESIGN
DESIGN BRANCH 11

BRIDGE NO. 53-3019S
KILOMETER POST 3.88

CARMENITA ROAD SB ON-RAMP
BENT FOOTING DETAILS

Caltrans Metric

ALL DIMENSIONS ARE IN MILLIMETERS UNLESS OTHERWISE SHOWN

ORIGINAL SCALE IN MILLIMETERS FOR REDUCED PLANS 0 10 20 30 40 50 60 70 80 90 100

CU 07225
EA 2159C1

DISREGARD PRINTS BEARING EARLIER REVISION DATES

REVISION DATES: 12-14-07, 1-16-08, 3-28-08, 7-9-08, 12-30-08, 6-02-09, 12-28-09

SHEET 15 OF 26

FILE => 53-3019s-h-bntftg.dgn

STRUCTURES DESIGN DETAIL SHEET (METRIC) (REV.03-17-04)

USERNAME => trmarlok DATE PLOTTED => 22-JUN-2010 TIME PLOTTED => 16:23

DIST	COUNTY	ROUTE	KILOMETER POST TOTAL PROJECT	SHEET No	TOTAL SHEETS
07	LA	5	2.9/4.9	1053	1082

Daniel L. Texler 1-26-10
REGISTERED CIVIL ENGINEER DATE

6-21-10
PLANS APPROVAL DATE

REGISTERED PROFESSIONAL ENGINEER Daniel L. Texler No. 49792 Exp. 9-30-10 CIVIL STATE OF CALIFORNIA

The State of California or its officers or agents shall not be responsible for the accuracy or completeness of electronic copies of this plan sheet.

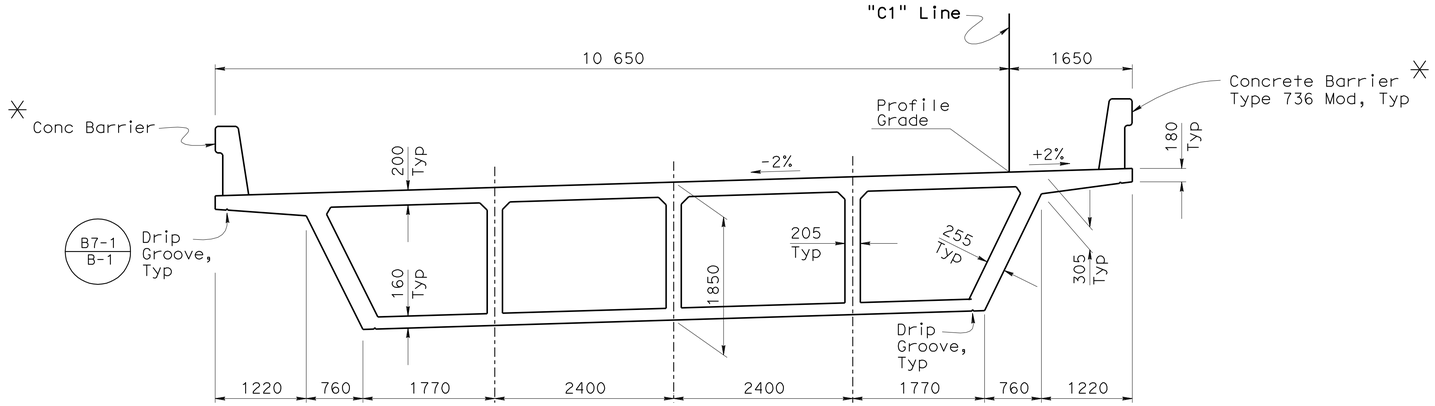

TYPICAL SECTION

1:40

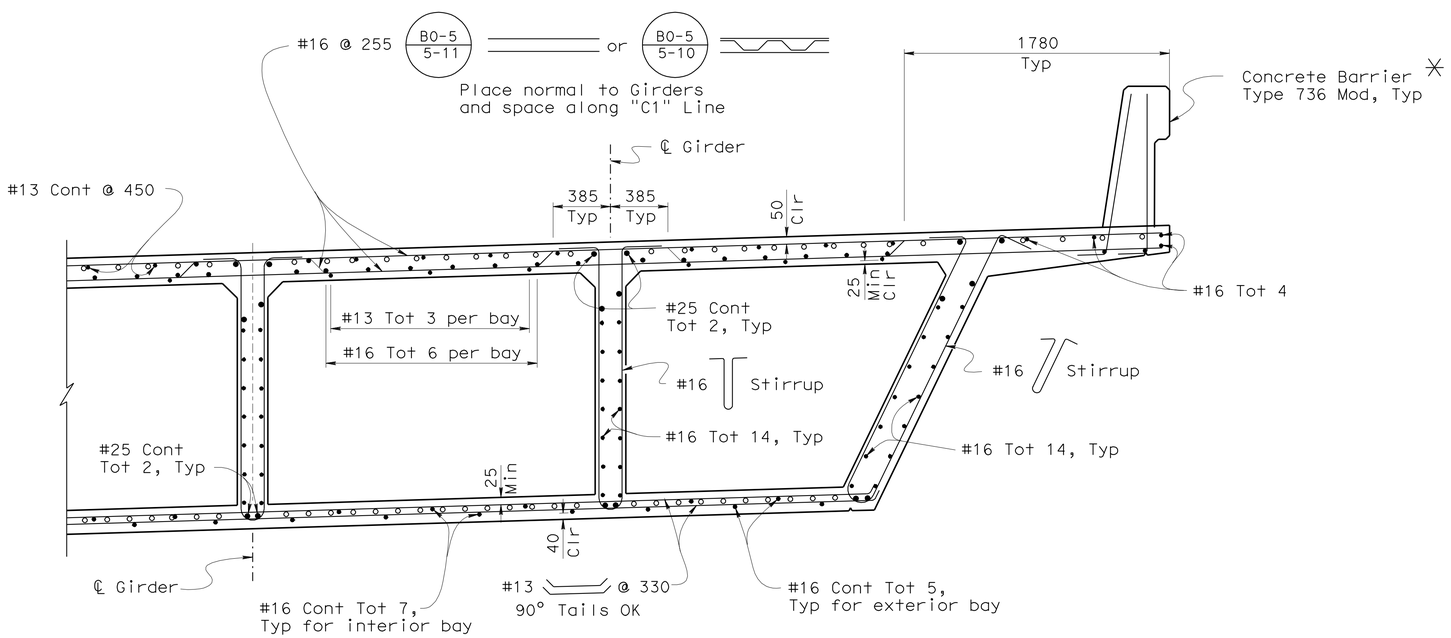

PART TYPICAL SECTION

B0-5 B7-1 B11-56

1:20

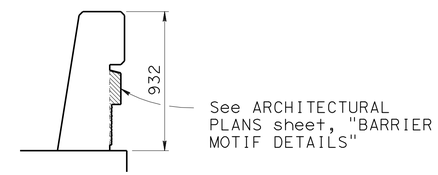

CONCRETE BARRIER ✳ TYPE 736 MOD & TYPE 736A MOD

1:20

For Reinforcement & other details not shown, see B11-56

NOTES:

o Indicates additional girder reinforcement. See "ADDITIONAL GIRDER REINFORCEMENT" she

For stirrup spacing, see "GIRDER LAYOUT" sheets

✳ Install utility conduits as req'd, (not shown) for size and other data, see "ROAD PLANS"

Caltrans Metric

	BY	CHECKED
DESIGN	Bill Kemp	D. Menzmer
DETAILS	Pauline Tong	D. Menzmer
QUANTITIES	M. Okimura	D. Menzmer

STATE OF CALIFORNIA DEPARTMENT OF TRANSPORTATION

DIVISION OF ENGINEERING SERVICES STRUCTURE DESIGN DESIGN BRANCH 11

BRIDGE NO. 53-3019S
KILOMETER POST 3.88

CARMENITA ROAD SB ON-RAMP
TYPICAL SECTION

ALL DIMENSIONS ARE IN MILLIMETERS UNLESS OTHERWISE SHOWN

ORIGINAL SCALE IN MILLIMETERS FOR REDUCED PLANS 0 10 20 30 40 50 60 70 80 90 100

CU 07225
EA 2159C1

DISREGARD PRINTS BEARING EARLIER REVISION DATES

REVISION DATES: 12-11-07 3-13-08 3-28-08 7-11-08 8-6-08 12-30-08 7-14-09 12-28-09 01-04-10

SHEET 16 OF 26

FILE => 53-3019s-k-typ.dgn

STRUCTURES DESIGN DETAIL SHEET (METRIC) (REV.03-17-04)

USERNAME => trmorlok DATE PLOTTED => 22-JUN-2010 TIME PLOTTED => 16:23

DIST	COUNTY	ROUTE	KILOMETER POST TOTAL PROJECT	SHEET No	TOTAL SHEETS
07	LA	5	2.9/4.9	1054	1082

Daniel L. Texler 1-26-10
REGISTERED CIVIL ENGINEER DATE

6-21-10
PLANS APPROVAL DATE

REGISTERED PROFESSIONAL ENGINEER Daniel L. Texler No. 49792 Exp. 9-30-10 CIVIL STATE OF CALIFORNIA

The State of California or its officers or agents shall not be responsible for the accuracy or completeness of electronic copies of this plan sheet.

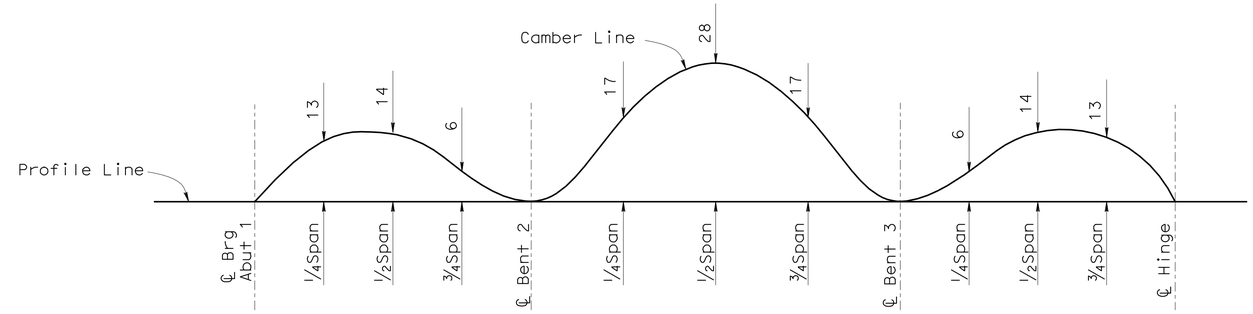

CAMBER DIAGRAM

No Scale

Note: Camber values shown do not include allowances for falsework settlement

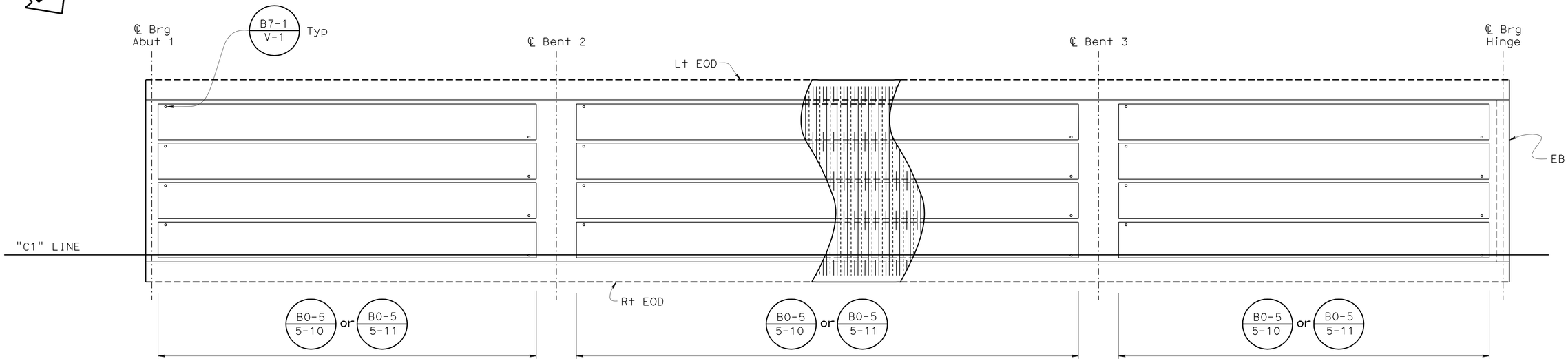

PLAN

1:125

B7-1 / V-1 B7-1 / S-3

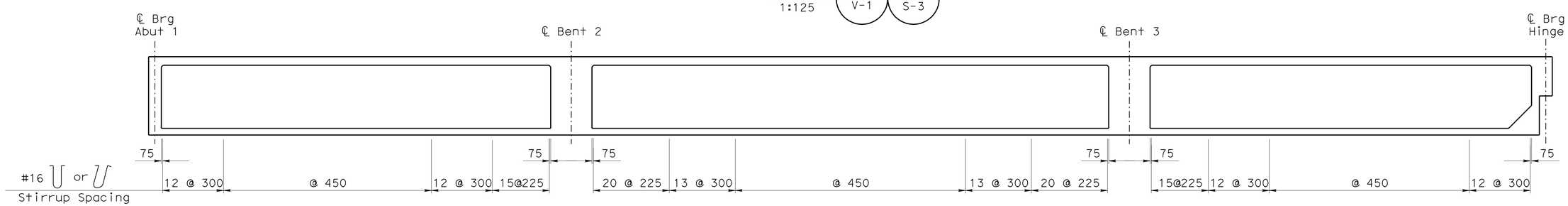

LONGITUDINAL SECTION

1:125 Horiz.
1:50 Vert.

Caltrans Metric

ALL DIMENSIONS ARE IN MILLIMETERS UNLESS OTHERWISE SHOWN

ORIGINAL SCALE IN MILLIMETERS FOR REDUCED PLANS 0 10 20 30 40 50 60 70 80 90 100

	BY	CHECKED
DESIGN	Bill Kemp	D. Menzmer
DETAILS	Pauline Tong	D. Menzmer
QUANTITIES	M. Okimura	D. Menzmer

STATE OF CALIFORNIA
DEPARTMENT OF TRANSPORTATION

DIVISION OF ENGINEERING SERVICES
STRUCTURE DESIGN
DESIGN BRANCH 11

CU 07225
EA 2159C1

BRIDGE NO. 53-3019S
KILOMETER POST 3.88

CARMENITA ROAD SB ON-RAMP
GIRDER LAYOUT

DISREGARD PRINTS BEARING EARLIER REVISION DATES

REVISION DATES: 12-15-07 1-14-08 3-28-08 7-11-08 8-5-08 8-21-08 12-30-08

SHEET 17 OF 26

FILE => 53-3019s-m-girlyt.dgn

STRUCTURES DESIGN DETAIL SHEET (METRIC) (REV.03-17-04)

USERNAME => trmorlok DATE PLOTTED => 22-JUN-2010 TIME PLOTTED => 16:24

DIST	COUNTY	ROUTE	KILOMETER POST TOTAL PROJECT	SHEET No	TOTAL SHEETS
07	LA	5	2.9/4.9	1055	1082

Daniel L. Texler 1-26-10
REGISTERED CIVIL ENGINEER DATE

6-21-10
PLANS APPROVAL DATE

REGISTERED PROFESSIONAL ENGINEER
Daniel L. Texler
No. 49792
Exp. 9-30-10
CIVIL
STATE OF CALIFORNIA

The State of California or its officers or agents shall not be responsible for the accuracy or completeness of electronic copies of this plan sheet.

NOTES:

1. Deck & soffit reinforcement shown shall be placed symmetrical about centerline of bridge
2. All reinforcement shown are #32 unless otherwise noted
3. All reinforcement shown is in addition to reinforcement shown on "TYPICAL SECTION" sheet
5. Only service splices allowed on continuous additional girder reinforcement
6. No splices allowed on non-continuous additional girder reinforcement

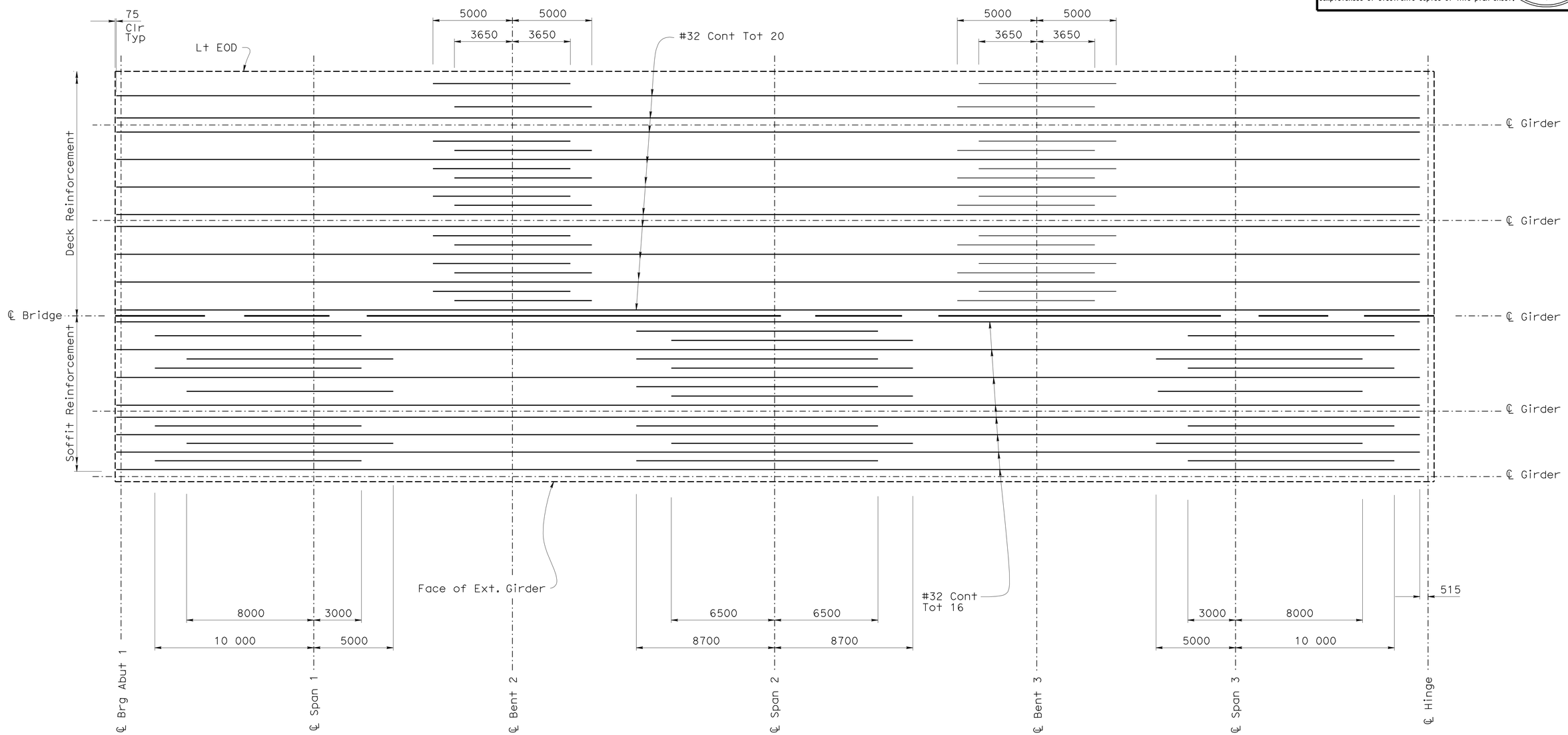

PLAN
No Scale

DESIGN	BY Bill Kemp	CHECKED D. Menzmer	
DETAILS	BY Pauline Tong	CHECKED D. Menzmer	
QUANTITIES	BY M. Okimura	CHECKED D. Menzmer	

STATE OF CALIFORNIA
DEPARTMENT OF TRANSPORTATION

DIVISION OF ENGINEERING SERVICES
STRUCTURE DESIGN
DESIGN BRANCH 11

BRIDGE NO. 53-3019S
KILOMETER POST 3.88

CARMENITA ROAD SB ON-RAMP
ADDITIONAL GIRDER REINFORCEMENT

Caltrans Metric

ALL DIMENSIONS ARE IN MILLIMETERS UNLESS OTHERWISE SHOWN

ORIGINAL SCALE IN MILLIMETERS FOR REDUCED PLANS 0 10 20 30 40 50 60 70 80 90 100

CU 07225
EA 2159C1

DISREGARD PRINTS BEARING EARLIER REVISION DATES

REVISION DATES: 12-18-07, 3-28-08, 7-14-08, 12-30-08, 6-10-09

SHEET 18 OF 26

FILE => 53-3019s-m-girrf.dgn

STRUCTURES DESIGN DETAIL SHEET (METRIC) (REV.03-17-04)

USERNAME => trmartok DATE PLOTTED => 22-JUN-2010 TIME PLOTTED => 16:24

DIST	COUNTY	ROUTE	KILOMETER POST TOTAL PROJECT	SHEET No	TOTAL SHEETS
07	LA	5	2.9/4.9	1056	1082

Daniel L. Texler 1-26-10
REGISTERED CIVIL ENGINEER DATE

6-21-10
PLANS APPROVAL DATE

REGISTERED PROFESSIONAL ENGINEER
Daniel L. Texler
No. 49792
Exp. 9-30-10
CIVIL
STATE OF CALIFORNIA

The State of California or its officers or agents shall not be responsible for the accuracy or completeness of electronic copies of this plan sheet.

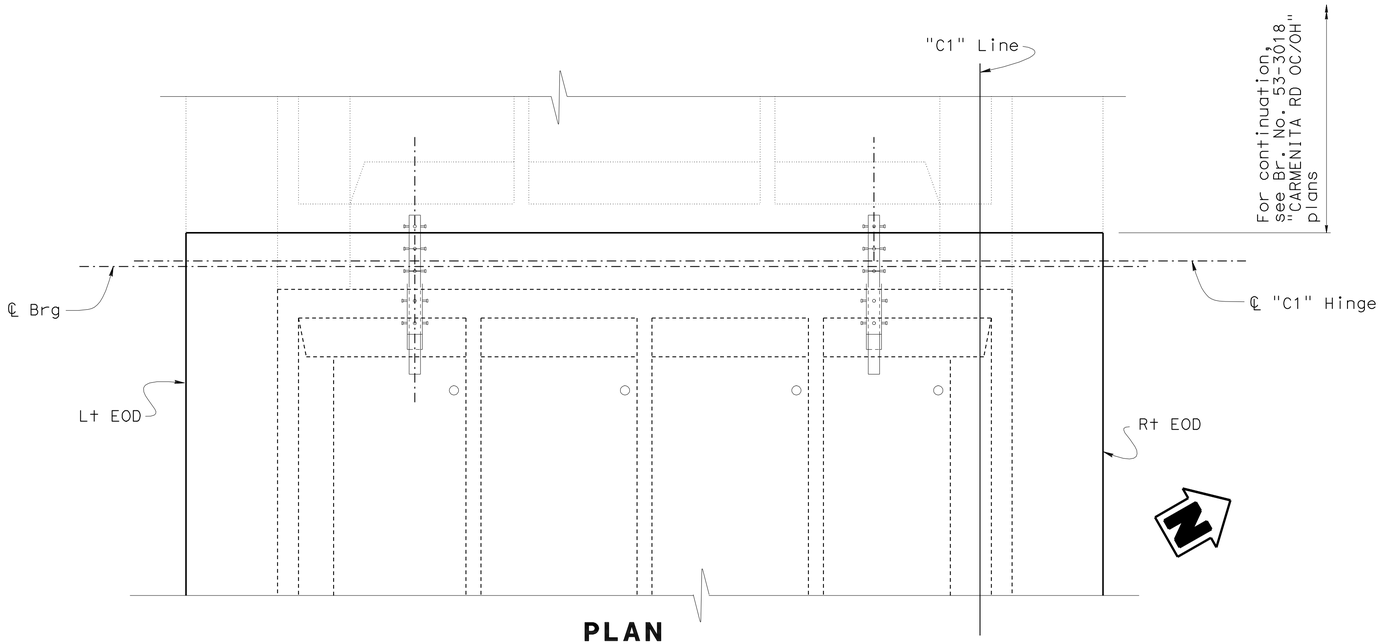

PLAN
1:40

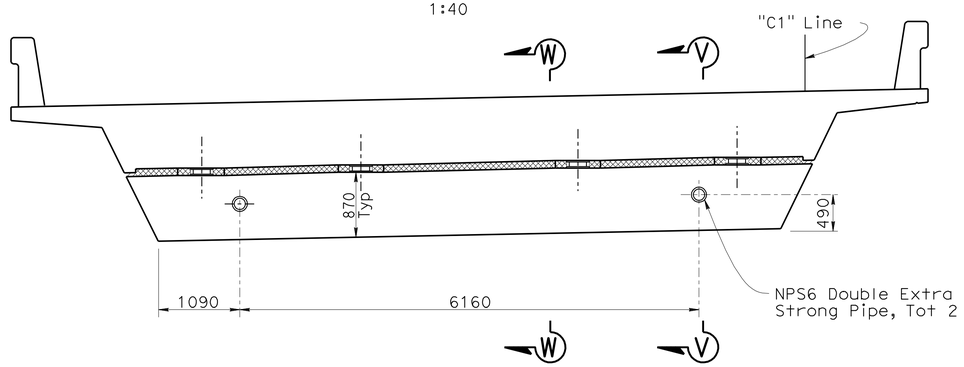

ELEVATION
1:40

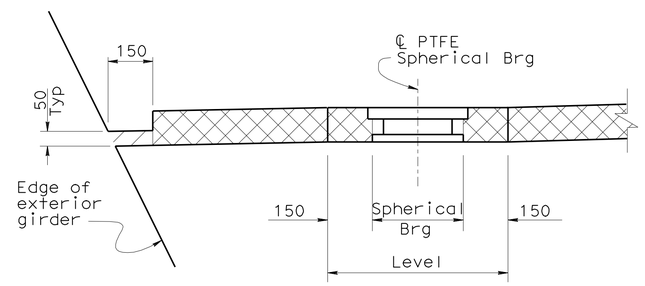

SECTION A-A
1:10

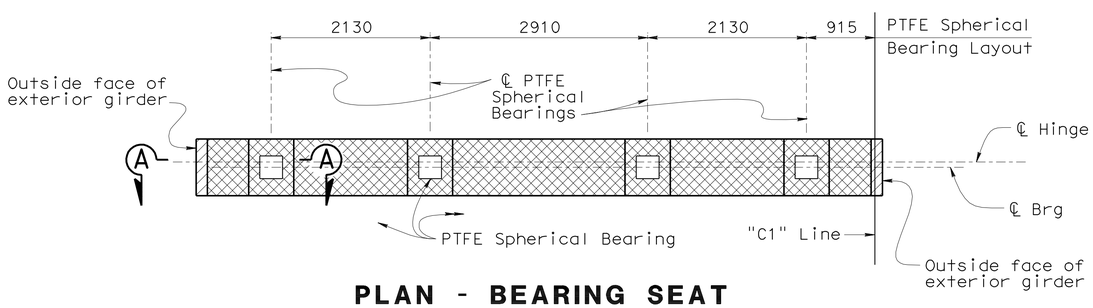

PLAN - BEARING SEAT
1:40

NOTES:

1. See Standard Plans B0-13 / 13-1 & B0-13 / 13-2
2. For 'Section V-V', see "HINGE DETAILS NO. 3" sheet.
3. For 'Section W-W', see "HINGE DETAILS NO. 2" sheet.
4. Expanded polystyrene to be removed 300 from visible surface.
5. For bearing pad details, see "PTFE/SPHERICAL EXPANSION BEARING DETAILS NO. 1" sheet

LEGEND:

Indicates 50 mm thick expanded polystyrene

Indicates expanded polystyrene, same thickness as bearing

Caltrans Metric

	BY	CHECKED
DESIGN	Bill Kemp	D. Menzmer
DETAILS	L. Goldthwait	D. Menzmer
QUANTITIES	M. Okimura	D. Menzmer

STATE OF CALIFORNIA
DEPARTMENT OF TRANSPORTATION

DIVISION OF ENGINEERING SERVICES
STRUCTURE DESIGN
DESIGN BRANCH 11

BRIDGE NO. 53-3019S
KILOMETER POST 3.88

CARMENITA ROAD SB ON-RAMP
HINGE DETAILS NO. 1

ALL DIMENSIONS ARE IN MILLIMETERS UNLESS OTHERWISE SHOWN

ORIGINAL SCALE IN MILLIMETERS FOR REDUCED PLANS 0 10 20 30 40 50 60 70 80 90 100

CU 07225
EA 2159C1

DISREGARD PRINTS BEARING EARLIER REVISION DATES

REVISION DATES: 3-5-07 | 8-8-08 | 12-30-08 | 6-18-09 | 10-01-07 | 3-13-08 | 3-26-08 | 6-26-08 | 7-11-08

SHEET 19 OF 26

FILE => 53-3019s-n-hngdet01.dgn

STRUCTURES DESIGN DETAIL SHEET (METRIC) (REV.03-17-04)

USERNAME => trmartok DATE PLOTTED => 22-JUN-2010 TIME PLOTTED => 16:24

DIST	COUNTY	ROUTE	KILOMETER POST TOTAL PROJECT	SHEET No	TOTAL SHEETS
07	LA	5	2.9/4.9	1057	1082

Daniel L. Texler 1-26-10
REGISTERED CIVIL ENGINEER DATE

6-21-10
PLANS APPROVAL DATE

REGISTERED PROFESSIONAL ENGINEER Daniel L. Texler No. 49792 Exp. 9-30-10 CIVIL STATE OF CALIFORNIA

The State of California or its officers or agents shall not be responsible for the accuracy or completeness of electronic copies of this plan sheet.

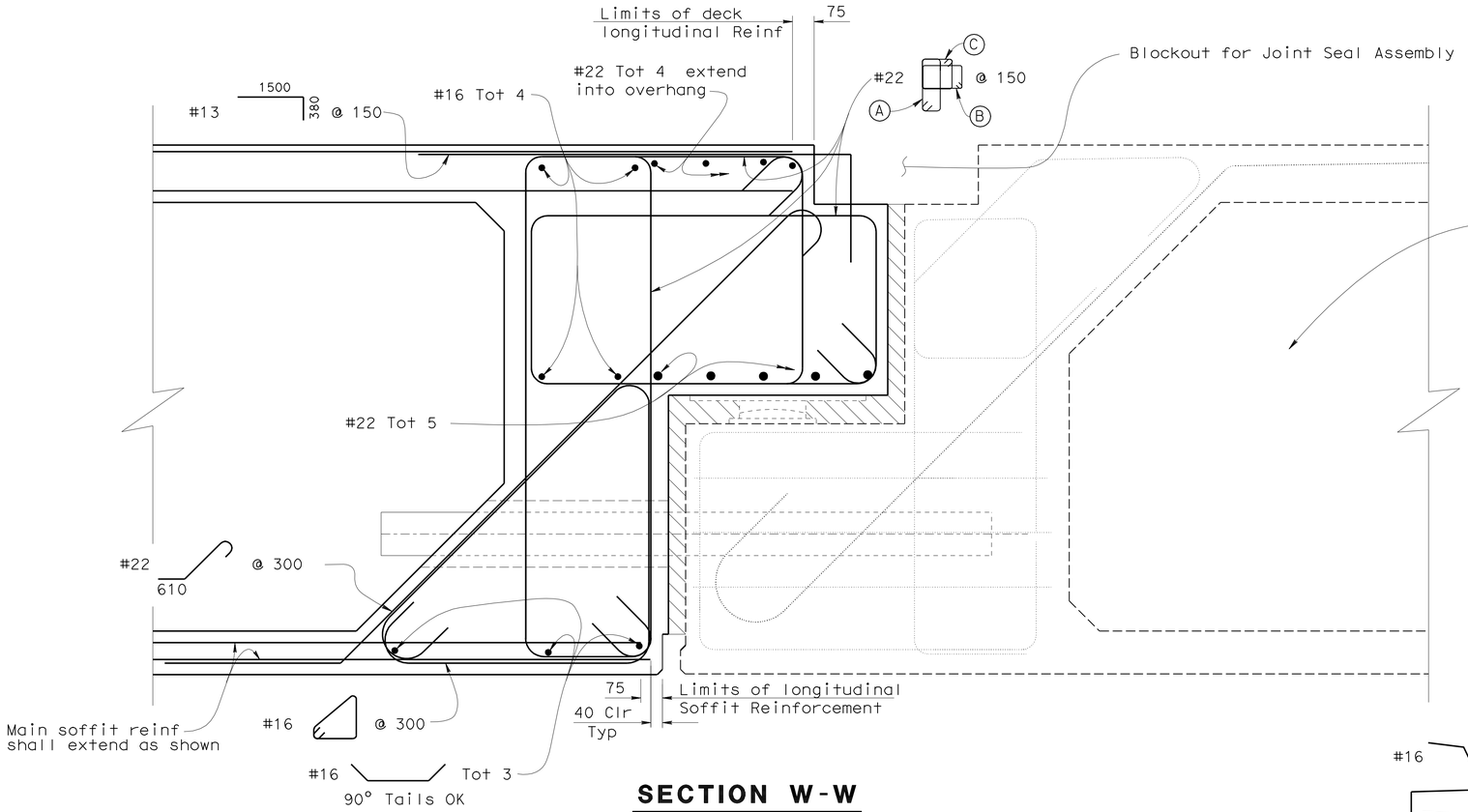

SECTION W-W

1:10

For Lower Hinge Reinforcement & Layout see "Br 53-3018" Plans

NOTES:

1. For location of 'Section W-W' and NPS6 double extra strong pipe layout, see "HINGE DETAILS NO. 1" sheet.
2. Hinge Seat shown for information only. For details, see Bridge No. 53-3018 "CARMENITA ROAD OC/OH" plans.

Denotes Expanded Polystyrene

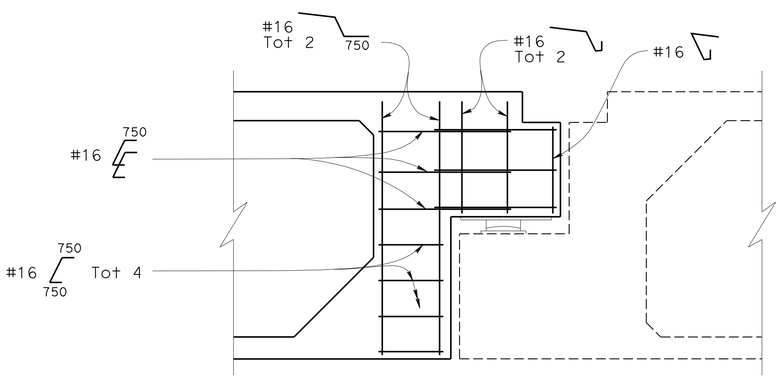

HINGE SIDE REINFORCEMENT

1:20

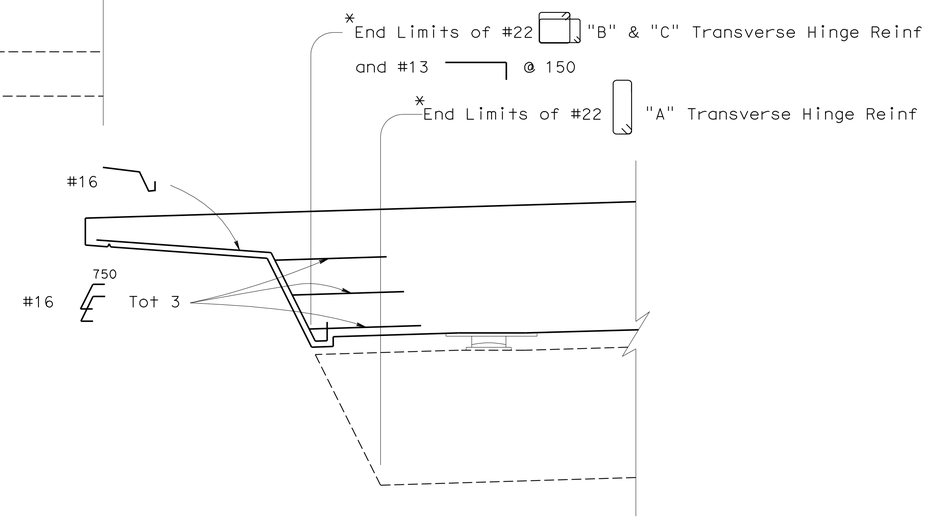

SIDE REINFORCEMENT

1:20

* See Section W-W for location of #22 Transverse Hinge Reinf and #13 @ 150

Adjust spacing to accomodate pipe shear keys and girder reinforcement

DESIGN	BY Bill Kemp	CHECKED D. Menzmer	
DETAILS	BY L. Goldthwait	CHECKED D. Menzmer	
QUANTITIES	BY M. Okimura	CHECKED D. Menzmer	

STATE OF CALIFORNIA
DEPARTMENT OF TRANSPORTATION

DIVISION OF ENGINEERING SERVICES
STRUCTURE DESIGN
DESIGN BRANCH 11

BRIDGE NO. 53-3019S
KILOMETER POST 3.88

CARMENITA ROAD SB ON-RAMP
HINGE DETAILS NO. 2

ALL DIMENSIONS ARE IN MILLIMETERS UNLESS OTHERWISE SHOWN

ORIGINAL SCALE IN MILLIMETERS FOR REDUCED PLANS 0 10 20 30 40 50 60 70 80 90 100

CU 07225
EA 2159C1

DISREGARD PRINTS BEARING EARLIER REVISION DATES

REVISION DATES: 04-23-08 4-28-08 4-30-08 5-1-08 7-12-08 01-02-09 1-22-09 6-18-09

SHEET 20 OF 26

FILE => 53-3019s-n-hngdet02.dgn

STRUCTURES DESIGN DETAIL SHEET (METRIC) (REV.03-17-04)

USERNAME => ttmorlok DATE PLOTTED => 22-JUN-2010 TIME PLOTTED => 16:24

DIST	COUNTY	ROUTE	KILOMETER POST TOTAL PROJECT	SHEET No	TOTAL SHEETS
07	LA	5	2.9/4.9	1058	1082

Daniel L. Texler 1-26-10
REGISTERED CIVIL ENGINEER DATE

6-21-10
PLANS APPROVAL DATE

REGISTERED PROFESSIONAL ENGINEER Daniel L. Texler No. 49792 Exp. 9-30-10 CIVIL STATE OF CALIFORNIA

The State of California or its officers or agents shall not be responsible for the accuracy or completeness of electronic copies of this plan sheet.

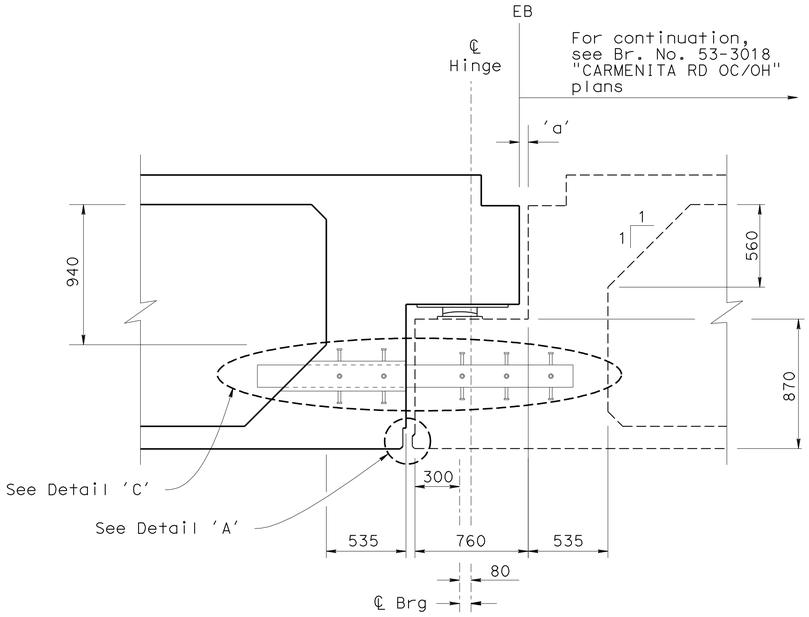

SECTION V-V
1:20

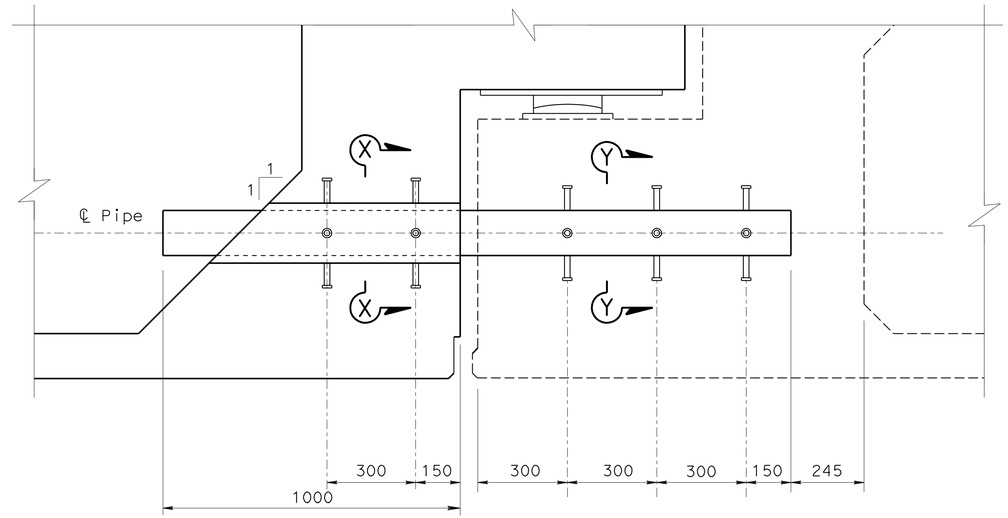

DETAIL 'C'
1:10

NOTES:

1. For location of 'Section V-V' and NPS6 double extra strong pipe layout, see "HINGE DETAILS NO. 1" sheet
2. Details for Br. No. 53-3018 shown for information only.

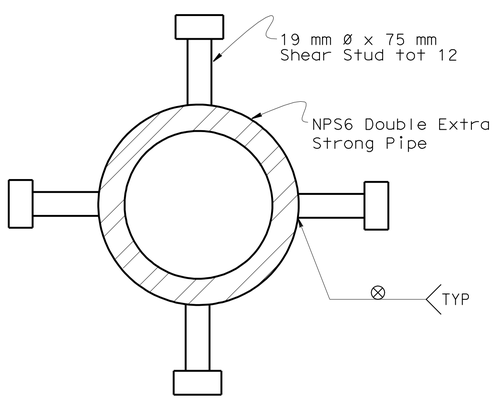

SECTION Y-Y
1:2.5

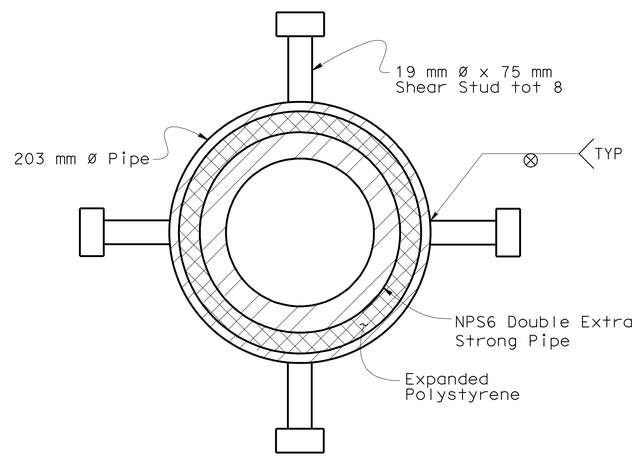

SECTION X-X
1:2.5

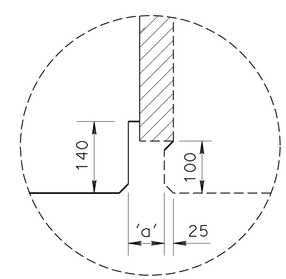

DETAIL A
No Scale

	BY	CHECKED
DESIGN	Bill Kemp	D. Menzmer
DETAILS	D. Elliott	D. Menzmer
QUANTITIES	M. Okimura	D. Menzmer

STATE OF CALIFORNIA
DEPARTMENT OF TRANSPORTATION

DIVISION OF ENGINEERING SERVICES
STRUCTURE DESIGN
DESIGN BRANCH 11

BRIDGE NO. 53-3019S
KILOMETER POST 3.88

CARMENITA ROAD SB ON-RAMP
HINGE DETAILS NO. 3

ALL DIMENSIONS ARE IN MILLIMETERS UNLESS OTHERWISE SHOWN

ORIGINAL SCALE IN MILLIMETERS FOR REDUCED PLANS 0 10 20 30 40 50 60 70 80 90 100

CU 07225
EA 2159C1

DISREGARD PRINTS BEARING EARLIER REVISION DATES

REVISION DATES: 3-5-07 6-11-09 6-18-09 03-19-07 10-11-07 3-05-08 5-05-08 7-15-08 01-12-09

SHEET 21 OF 26

FILE => 53-3019s-n-hngdet03.dgn

STRUCTURES DESIGN DETAIL SHEET (METRIC) (REV.03-17-04)

USERNAME => trmartok DATE PLOTTED => 22-JUN-2010 TIME PLOTTED => 16:24

DIST.	COUNTY	ROUTE	KILOMETER POST TOTAL PROJECT	SHEET NO.	TOTAL SHEETS
07	LA	5	2.9/4.9	1059	1082

Caltrans Metric

Daniel L. Texler 1-26-10
REGISTERED ENGINEER - CIVIL

6-21-10
PLANS APPROVAL DATE

REGISTERED PROFESSIONAL ENGINEER Daniel L. Texler No. 49792 Exp. 9-30-10 CIVIL STATE OF CALIFORNIA

The State of California or its officers or agents shall not be responsible for the accuracy or completeness of electronic copies of this plan sheet.

EXPANSION BEARING TABLE

LOCATION	MAXIMUM VERTICAL LOAD (kN)	MINIMUM DEAD LOAD (kN)	DESIGN ROTATION (Radians)	CONCAVE PLATE						CONVEX PLATE		MASONRY PLATE			SOLE PLATE			ASSEMBLY HEIGHT
				WIDTH / LENGTH	FLAT PTFE AREA (m^2)	DIAMETER	SPHERICAL RADIUS	MINIMUM THICKNESS	MAXIMUM THICKNESS	DIAMETER	MAXIMUM THICKNESS	WIDTH	LENGTH	THICKNESS	WIDTH	LENGTH	THICKNESS	
				L_{cp}	A_{PTFE}	D_m	R_{act}	T_{min}	T_{max}	C_m	H_{act}	W_{mp}	L_{mp}	T_{mp}	W_{sp}	L_{sp}	T_{sp}	A_h
"C1" Hinge	685	400	0.0349	220	0.03275	190	413	19	38	220	35	305	305	25	330	610	38	118

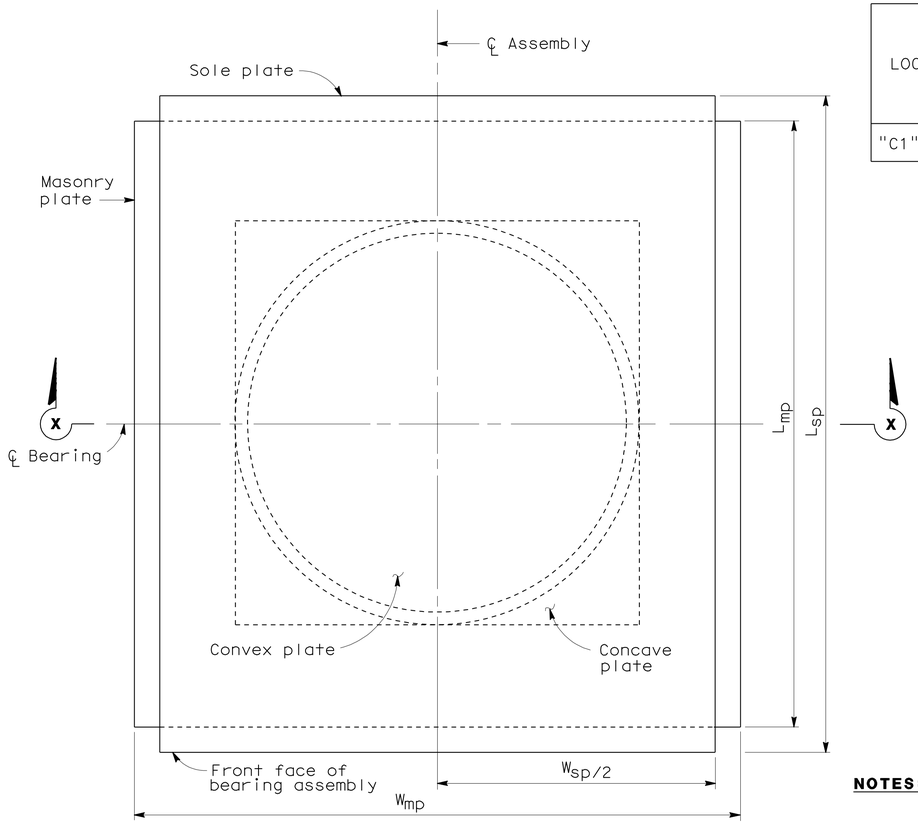

PLAN

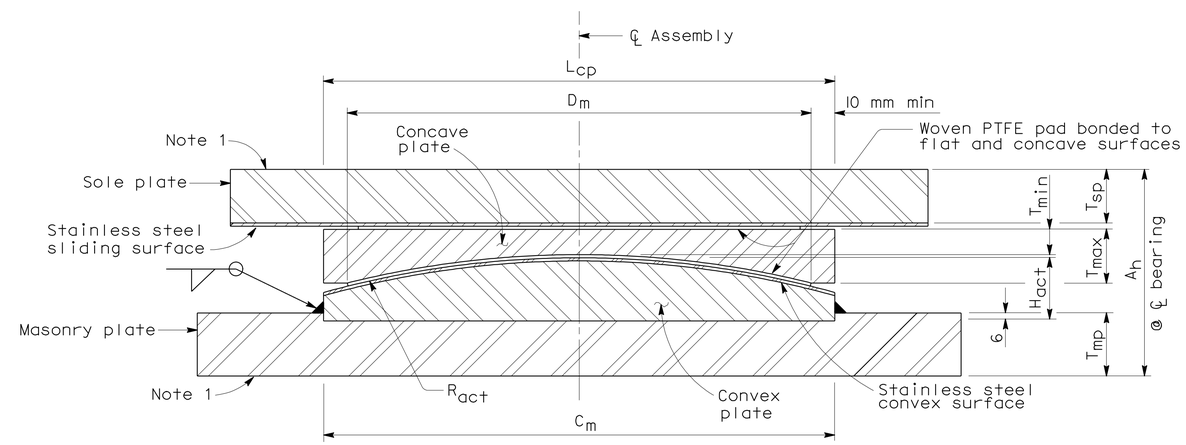

SECTION X-X

NOTES:

1. For anchorage details, see "PTFE/SPHERICAL EXPANSION BEARING DETAILS NO. 2" sheet
2. All units in millimeters unless otherwise noted.
3. All dimensions shown are steel only unless otherwise noted.
4. H_{act} includes stainless steel.
5. A_h includes PTFE, substratum and stainless steel, (Varies).
6. R_{act} is to sliding surface.

NO SCALE

ALL DIMENSIONS ARE IN MILLIMETERS UNLESS OTHERWISE SHOWN

STANDARD DRAWING				
RELEASE DATE 4/9/97	DESIGN BY ROBERTO LACALLE	CHECKED ROD SIMMONS	RELEASED BY	
	DETAILS BY R. YEE	CHECKED ROD SIMMONS		
FILE NO. xs9-010	SUBMITTED BY ROBERTO LACALLE	DRAWING DATE 11/93	OFFICE CHIEF	

1 Note 1 Amended
2 Title Amended

STATE OF CALIFORNIA
DEPARTMENT OF TRANSPORTATION

DIVISION OF ENGINEERING SERVICES

CU 07225
EA 2159C1

BRIDGE NO. 53-3019S
KILOMETER POST 3.88

CARMENITA ROAD SB ON-RAMP 2

PTFE/SPHERICAL EXPANSION BEARINGS DETAIL NO. 1

DS OSD 2147A (METRIC) (REV. 2/25/97)

ORIGINAL SCALE IN MILLIMETERS FOR REDUCED PLANS 0 10 20 30 40 50 60 70 80 90 100

DISREGARD PRINTS BEARING EARLIER REVISION DATES → 3-4-08 6-25-08 1-02-09

REVISION DATES (PRELIMINARY STAGE ONLY)

SHEET 22 OF 26

USERNAME => trmariak

53-3019s-p-ptfe01.

DATE PLOTTED => 22-JUN-2010 TIME PLOTTED => 16:24

DIST	COUNTY	ROUTE	KILOMETER POST TOTAL PROJECT	SHEET No	TOTAL SHEETS
07	LA	5	2.9/4.9	1060	1082

Daniel L. Texler 1-26-10
REGISTERED CIVIL ENGINEER

6-21-10
PLANS APPROVAL DATE

REGISTERED PROFESSIONAL ENGINEER
Daniel L. Texler
No. 49792
Exp. 9-30-10
CIVIL
STATE OF CALIFORNIA

The State of California or its officers or agents shall not be responsible for the accuracy or completeness of electronic copies of this plan sheet.

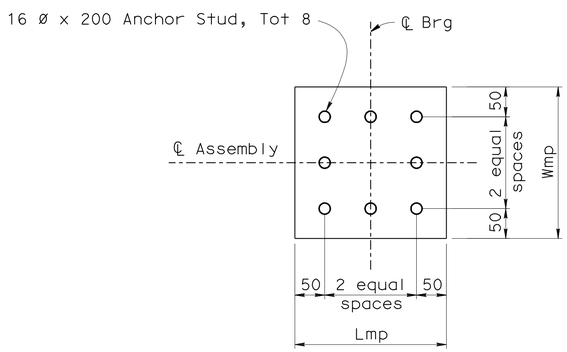

PLAN-MASONRY PLATE AT HINGE

1:5

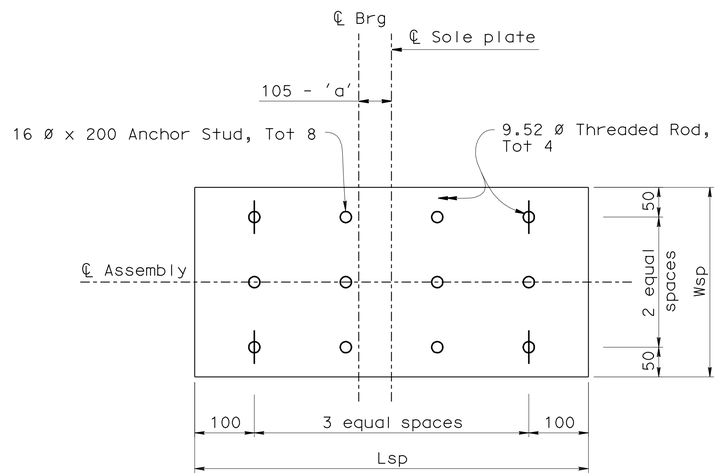

PLAN-SOLE PLATE AT HINGE

1:5

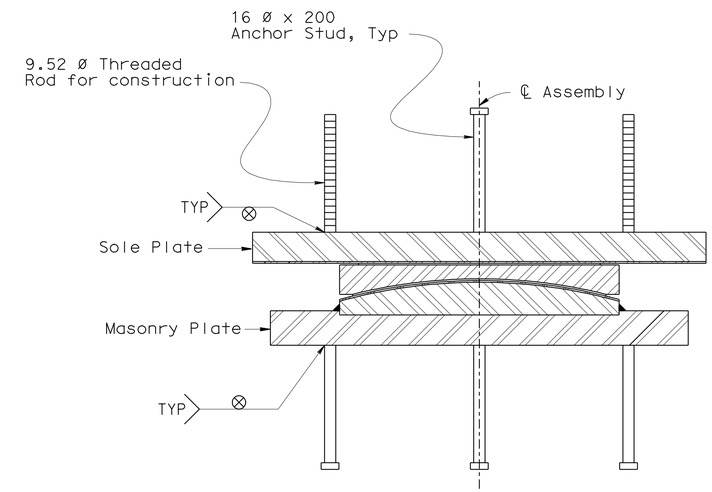

ANCHORAGE DETAIL

NO SCALE

NOTE:

For dimension 'a', see "JOINT SEAL ASSEMBLY (MAXIMUM MOVEMENT RATING = 100 mm)" sheet

DESIGN	BY Phu Nguyen	CHECKED D. Menzmer
DETAILS	BY Pauline Tong	CHECKED D. Menzmer
QUANTITIES	BY M. Okimura	CHECKED D. Menzmer

STATE OF CALIFORNIA
DEPARTMENT OF TRANSPORTATION

DIVISION OF ENGINEERING SERVICES
STRUCTURE DESIGN
DESIGN BRANCH 11

BRIDGE NO. 53-3019S
KILOMETER POST 3.88

CARMENITA ROAD SB ON-RAMP
PTFE/SPHERICAL EXPANSION BEARINGS DETAIL NO. 2

Caltrans Metric

ALL DIMENSIONS ARE IN MILLIMETERS UNLESS OTHERWISE SHOWN

ORIGINAL SCALE IN MILLIMETERS FOR REDUCED PLANS 0 10 20 30 40 50 60 70 80 90 100

CU 07225
EA 2159C1

DISREGARD PRINTS BEARING EARLIER REVISION DATES

REVISION DATES (PRELIMINARY STAGE ONLY): ~~3-4-08~~ ~~7-12-09~~ ~~1-04-09~~ 6-11-09

SHEET 23 OF 26

FILE => 53-3019s-p-ptfe02.dgn

USERNAME => ttmorlok DATE PLOTTED => 22-JUN-2010 TIME PLOTTED => 16:25

DIST.	COUNTY	ROUTE	KILOMETER POST TOTAL PROJECT	SHEET NO.	TOTAL SHEETS
07	LA	5	2.9/4.9	1061	1082

Caltrans Metric

Daniel L. Texler 1-26-10
REGISTERED ENGINEER - CIVIL

6-21-10
PLANS APPROVAL DATE

REGISTERED PROFESSIONAL ENGINEER Daniel L. Texler No. 49792 Exp. 9-30-10 CIVIL STATE OF CALIFORNIA

The State of California or its officers or agents shall not be responsible for the accuracy or completeness of electronic copies of this plan sheet.

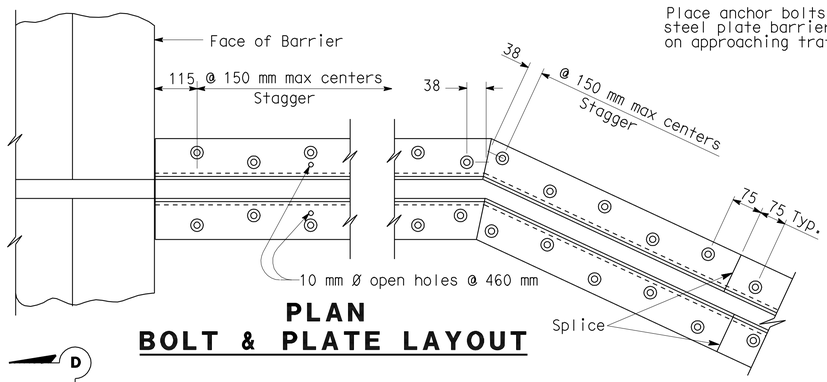

PLAN
BOLT & PLATE LAYOUT

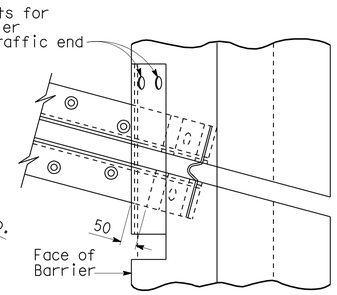

SKEW ≤ 20°

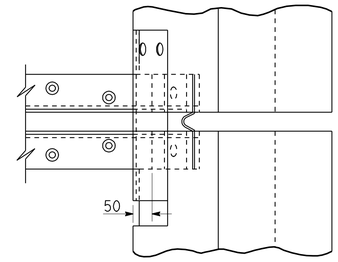

SKEW > 20°

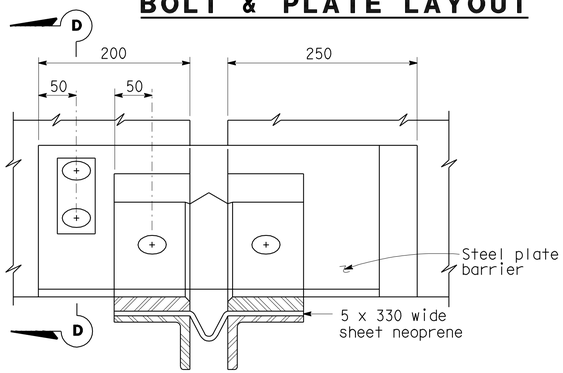

VIEW B-B

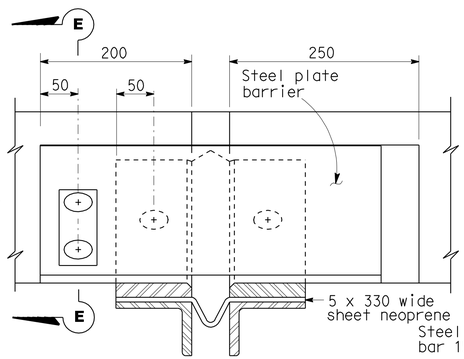

VIEW C-C

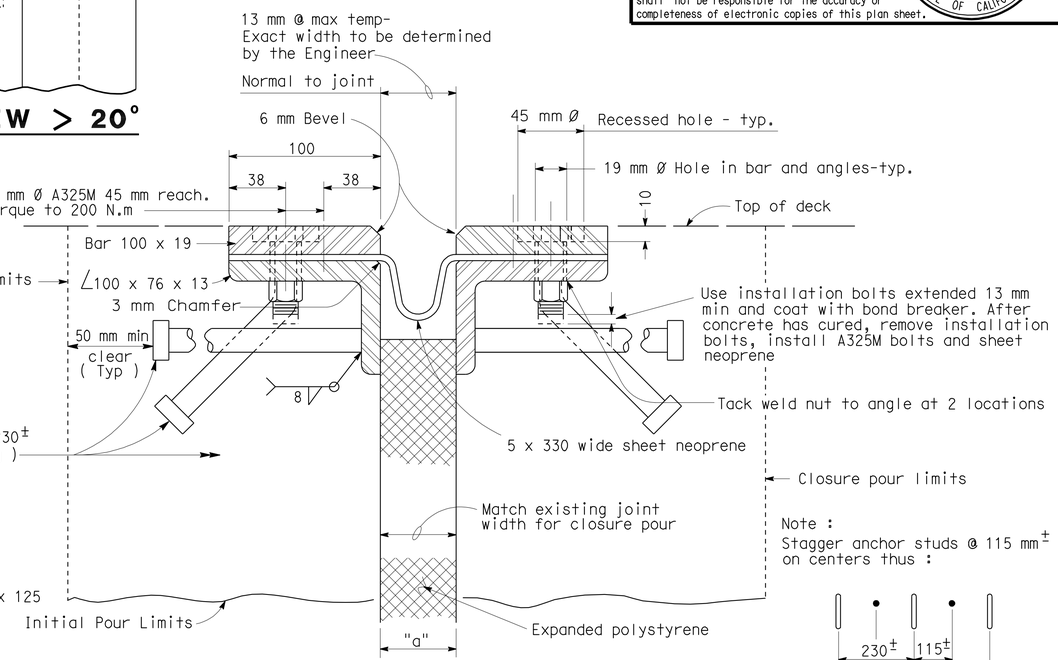

SECTION A-A

Note :
Stagger anchor studs @ 115 mm± on centers thus :

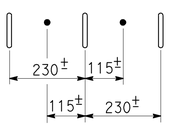

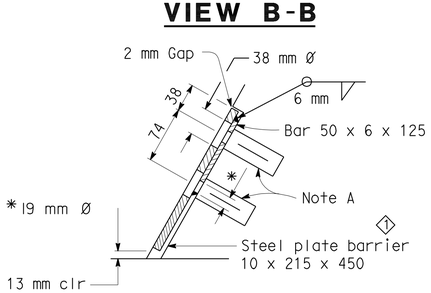

SECTION D-D

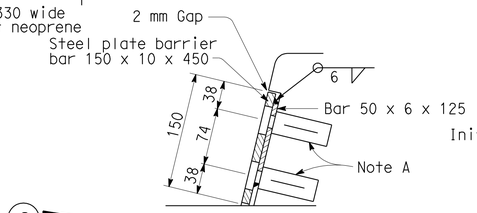

SECTION E-E

Joint Information			"a" Dimensions		
Location	Movement Rating (MR)	Skew	Winter	Spring & Fall	Summer
Hinge	60	0	60	40	30

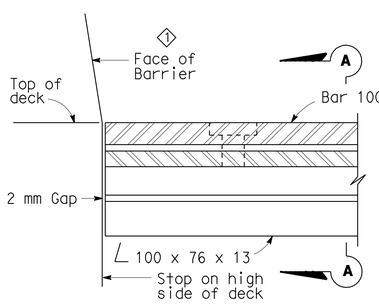

HIGH SIDE BARRIER DETAIL

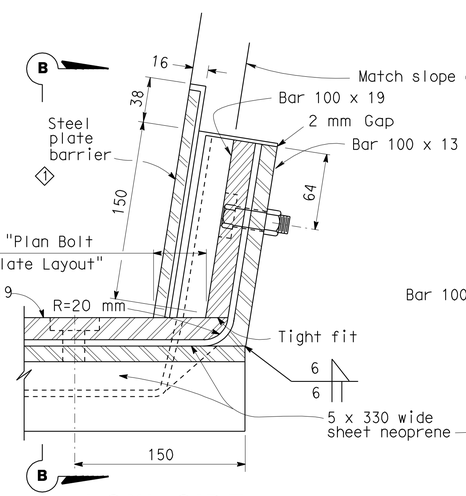

LOW SIDE BARRIER DETAIL
(See Note B)

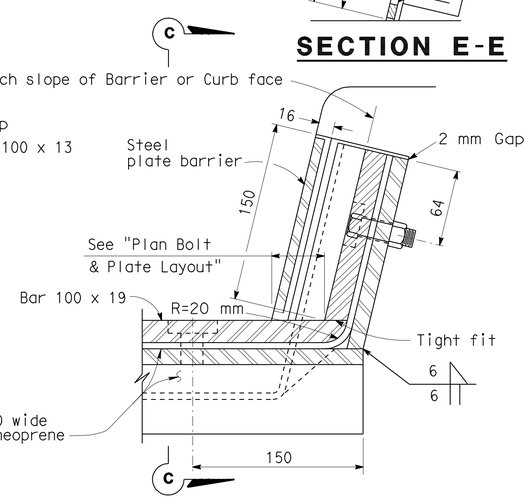

SIDEWALK DETAIL
(See Note B)

NOTES:

Full penetration butt welds may be substituted for fillet welds on all anchor studs.

Alternate types of anchor studs may be permitted subject to the approval by the Engineer.

Joint seal assembly to be used in conjunction with closure pour. (See other sheets for limits). Closure pour shall not be placed until final deck surface is within the tolerance specified.

Use joint at crown of roadway, at any change in transverse slope in deck and at changes in horizontal direction. Place other joints at or near lanes. All metal parts to be painted or galvanized after fabrication.

Sheet neoprene shall be fabricated in one continuous piece or joints shall be vulcanized. Neoprene shall be fabricated to bend around corners. 25 mm holes in neoprene sheets shall be drilled or punched so that the neoprene is not distorted at the time of installation.

NOTE A

Insert assembly or expansion anchorage for 16 x 45 A325M bolt.

NOTE B

Use the Sidewalk Detail at all sidewalk joints. Use the Barrier Detail at both sides if the roadway is crowned or if the difference in elevation between the ends of the seal is 150 mm or less.

ALL DIMENSIONS ARE IN MILLIMETERS UNLESS OTHERWISE SHOWN

NO SCALE

STANDARD DRAWING

RELEASE DATE	4/1/97	DESIGN	BY H. HERR	CHECKED R. LACALLE	RELEASED BY
FILE NO.	xs8-010	DETAILS	BY R. YEE	CHECKED R. LACALLE	
		SUBMITTED	BY C.W. PURKISS	DRAWING DATE 9/93	OFFICE CHIEF

1 Modify Face of Barrier

STATE OF CALIFORNIA
DEPARTMENT OF TRANSPORTATION

DIVISION OF ENGINEERING SERVICES

BRIDGE NO. 53-3019S
KILOMETER POST 3.88

CARMENITA ROAD SB ON-RAMP
JOINT SEAL ASSEMBLY (MAXIMUM MOVEMENT RATING = 100 mm)

DS OSD 2147A (METRIC) (REV. 2/25/97)

ORIGINAL SCALE IN MILLIMETERS FOR REDUCED PLANS 0 10 20 30 40 50 60 70 80 90 100

CU 07225
EA 2159C1

DISREGARD PRINTS BEARING EARLIER REVISION DATES

REVISION DATES (PRELIMINARY STAGE ONLY) 3-4-08 1-05-09

SHEET 24 OF 26

USERNAME => trmariak

53-3019s-q-jtseal.

DATE PLOTTED => 22-JUN-2010 TIME PLOTTED => 16:25

DIST.	COUNTY	ROUTE	KILOMETER POST TOTAL PROJECT	SHEET NO.	TOTAL SHEETS
07	LA	5	2.9/4.9	1062	1082

Caltrans Metric

Daniel L. Texler 1-26-10
REGISTERED ENGINEER - CIVIL

6-21-10
PLANS APPROVAL DATE

The State of California or its officers or agents shall not be responsible for the accuracy or completeness of electronic copies of this plan sheet.

REGISTERED PROFESSIONAL ENGINEER Daniel L. Texler No. 49792 Exp. 9-30-10 CIVIL STATE OF CALIFORNIA

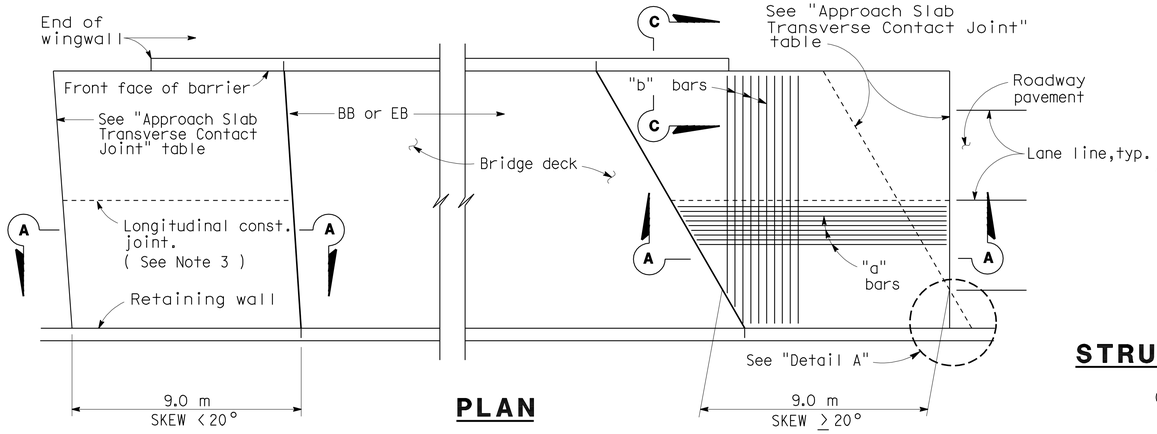

PLAN

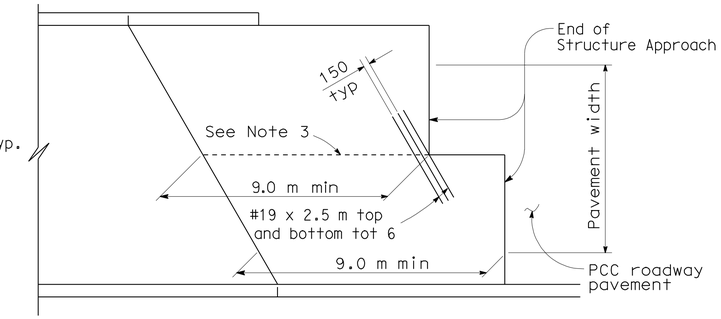

STRUCTURE APPROACH - END STAGGER DETAIL

APPROACH SLAB TRANSVERSE CONTACT JOINT		
APPROACH SKEW	WITH AC ROADWAY PAVEMENT	WITH PCC ROADWAY PAVEMENT
< 20°	Parallel to face of paving notch	Parallel to face of paving notch
20°- 45°	Parallel to face of P N use (Detail A)	Stagger lines 7.2 m to 10.8 m apart.
> 45°	Parallel to face of P N use (Detail A)	Stagger at each lane line.

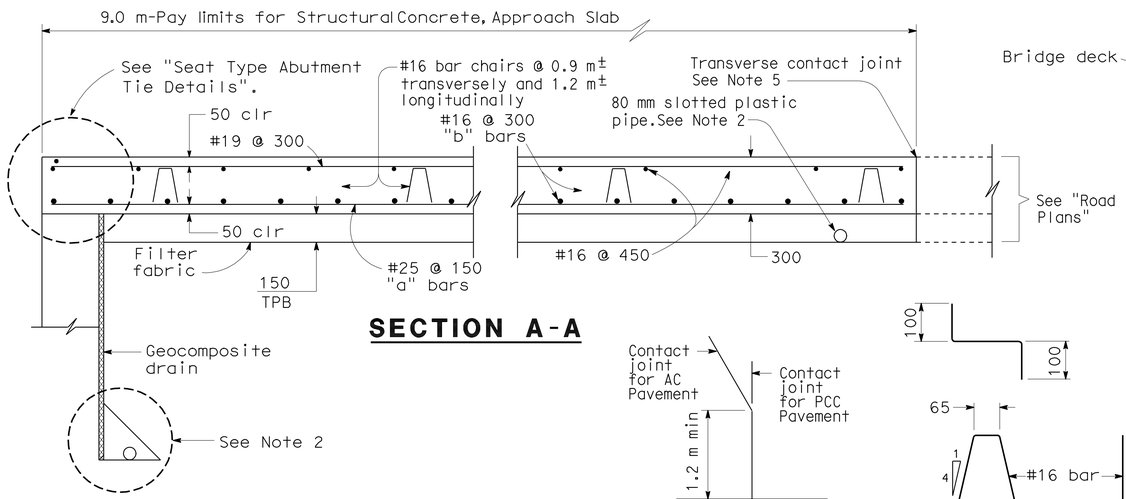

SECTION A-A

DETAIL A

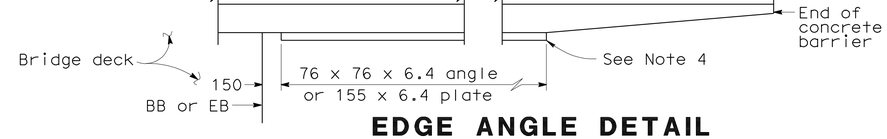

EDGE ANGLE DETAIL

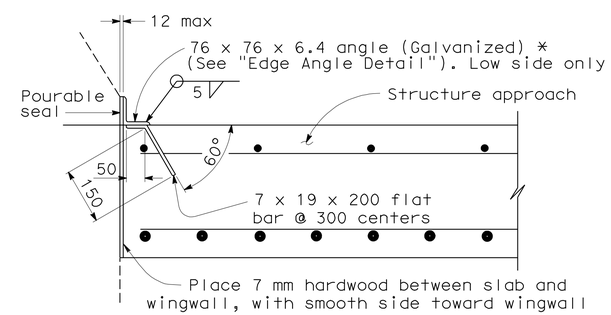

*(TO BE USED WITH TYPE 25 OR TYPE 27 CONCRETE BARRIER)

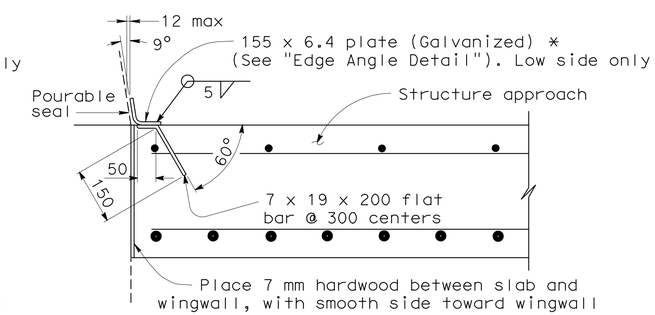

*(TO BE USED WITH TYPE 732 OR TYPE 736 CONCRETE BARRIER)

DETAIL B

BAR CHAIR DETAIL

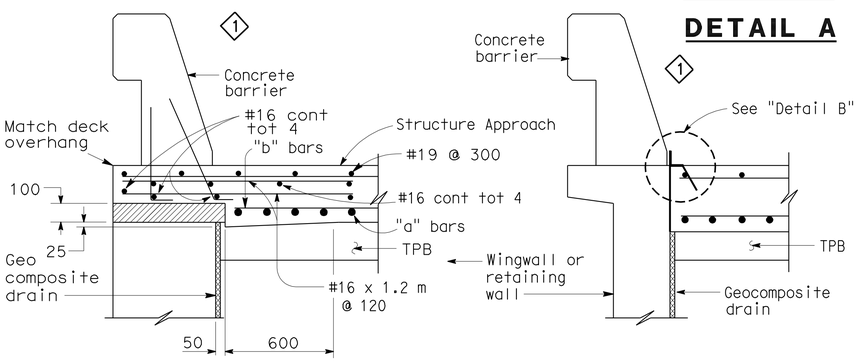

1 TYPE E-1

TYPE E-2

SECTION C-C

(Type E-1 to be used,unless otherwise shown on plans)

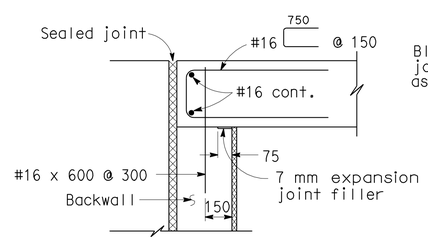

MR ≤ 50 mm

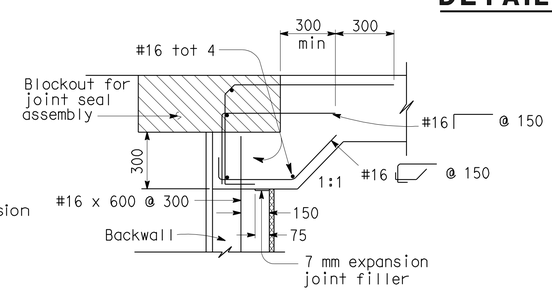

MR > 50 mm

SEAT TYPE ABUTMENT TIE DETAILS (SEE NOTE 1)

NOTES:

1. For details not shown,see Structure Plans. For MR ≤ 50 mm,adjust bar reinforcement to clear a sawcut for sealed joint,when required.
2. For drainage details,see "Structure Approach Drainage Details" sheet.
3. Longitudinal construction joints,when permitted by the Engineer, shall be located on lane lines.
4. End angle or plate at beginning of barrier transition, end of wingwall or end of structure approach as applicable.
5. For transverse contact joint with new PCC paving, refer to Standard Plan P10.
6. At the contractor's option, approach slab transverse reinforcement may be placed parallel to paving notch. Spacing of transverse reinforcement is measured along ℄ roadway.

Remove all polystyrene.

SPECIAL DETAILS
NO SCALE
ALL DIMENSIONS ARE IN MILLIMETERS UNLESS OTHERWISE SHOWN

STANDARD DRAWING				
RELEASE DATE 3/14/05	DESIGN	BY M. TRAFFALIS	CHECKED E. THORKILDSEN	RELEASED BY
FILE NO. xs3-120	DETAILS	BY R. YEE	CHECKED E. THORKILDSEN	
	SUBMITTED	BY M. HA	DRAWING DATE 4/98	OFFICE CHIEF

1 Revised Detail

STATE OF CALIFORNIA
DEPARTMENT OF TRANSPORTATION

DIVISION OF ENGINEERING SERVICES

CU 07225
EA 2159C1

BRIDGE NO. 53-3019S
KILOMETER POST 3.88

CARMENITA ROAD SB ON-RAMP
STRUCTURE APPROACH TYPE N(9S)

DS OSD 2147A (METRIC) (REV. 2/25/97)

ORIGINAL SCALE IN MILLIMETERS FOR REDUCED PLANS 0 10 20 30 40 50 60 70 80 90 100

DISREGARD PRINTS BEARING EARLIER REVISION DATES

REVISION DATES (PRELIMINARY STAGE ONLY) 11-17-06 11-21-06 11-02-09

SHEET 25 OF 26

USERNAME => trrichf

DATE PLOTTED => 22-JUN-2010 TIME PLOTTED => 16:47

53-3019s-s-san9s.d

DIST.	COUNTY	ROUTE	KILOMETER POST TOTAL PROJECT	SHEET NO.	TOTAL SHEETS
07	LA	5	2.9/4.9	1063	1082

Caltrans Metric

Daniel L. Texler 1-26-10
REGISTERED ENGINEER - CIVIL

6-21-10
PLANS APPROVAL DATE

REGISTERED PROFESSIONAL ENGINEER Daniel L. Texler No. 49792 Exp. 9-30-10 CIVIL STATE OF CALIFORNIA

The State of California or its officers or agents shall not be responsible for the accuracy or completeness of electronic copies of this plan sheet.

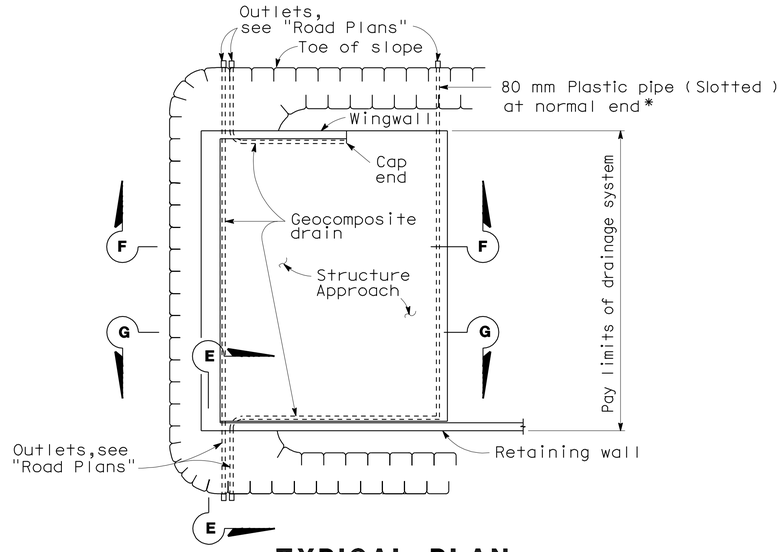

TYPICAL PLAN

*For pipe layout at staggered end, see "Detail B".

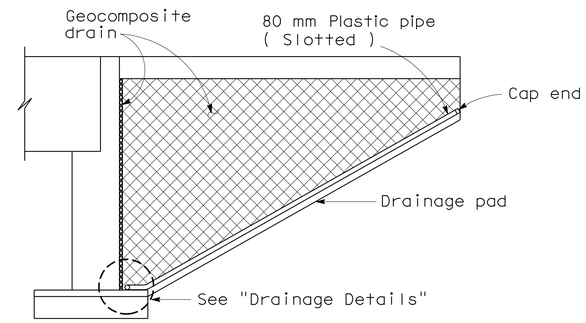

CANTILEVER WINGWALL SECTION F-F

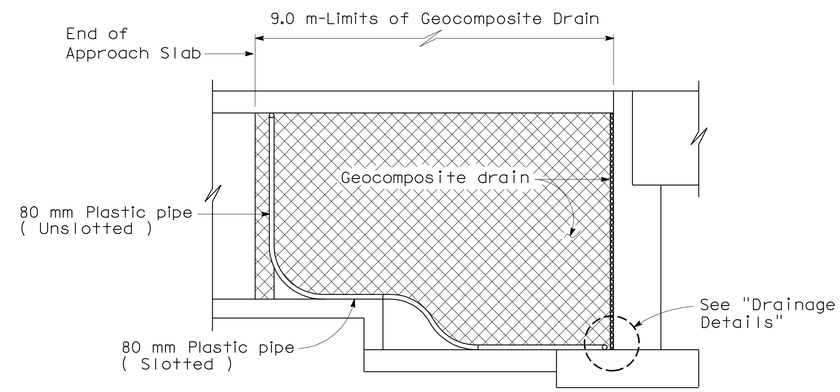

RETAINING WALL WINGWALL SECTION G-G

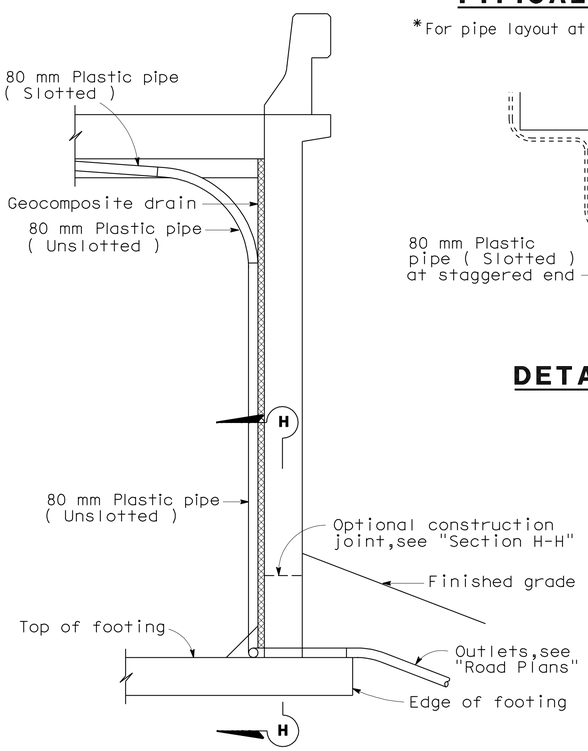

SECTION E-E

NOTE: Bends and junctions in 80 mm plastic pipe are 750 mm radius min.

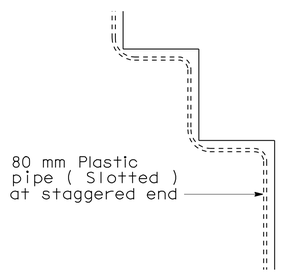

DETAIL B

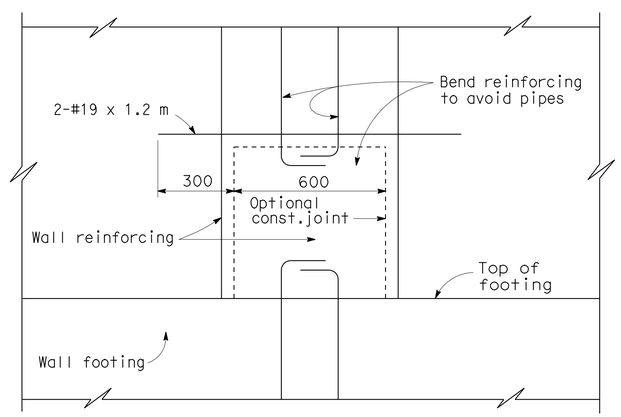

SECTION H-H

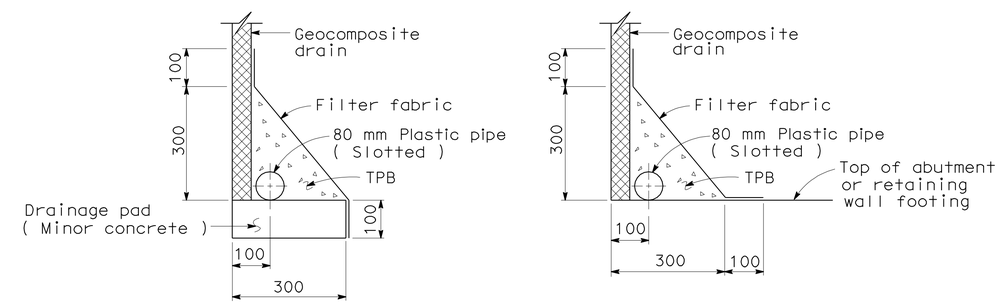

WITHOUT FOOTING

WITH FOOTING

DRAINAGE DETAILS

NO SCALE

ALL DIMENSIONS ARE IN MILLIMETERS UNLESS OTHERWISE SHOWN

STANDARD DRAWING					
RELEASE DATE 4/23/98	DESIGN	BY M. TRAFFALIS	CHECKED E. THORKILDSEN	RELEASED BY	
FILE NO. xs3-110	DETAILS	BY R. YEE	CHECKED E. THORKILDSEN	OFFICE CHIEF	
	SUBMITTED	BY M. HA	DRAWING DATE 4/98		

DS OSD 2147A (METRIC) (REV. 2/25/97)

STATE OF CALIFORNIA DEPARTMENT OF TRANSPORTATION

DIVISION OF ENGINEERING SERVICES

CU 07225
EA 2159C1

BRIDGE NO. 53-3019S
KILOMETER POST 3.88

CARMENITA ROAD SB ON-RAMP
STRUCTURE APPROACH DRAINAGE DETAILS

ORIGINAL SCALE IN MILLIMETERS FOR REDUCED PLANS 0 10 20 30 40 50 60 70 80 90 100

DISREGARD PRINTS BEARING EARLIER REVISION DATES

REVISION DATES (PRELIMINARY STAGE ONLY) 11-17-06 7-22-08 1-06-09

SHEET 26 OF 26

USERNAME => trrichf

53-3019s-ss-sadd.d

DATE PLOTTED => 22-JUN-2010 TIME PLOTTED => 16:47

DIST	COUNTY	ROUTE	KILOMETER POST TOTAL PROJECT	SHEET No	TOTAL SHEETS
07	LA	5	2.9/4.9	1064	1082

Daniel L. Texler 5/24/10
REGISTERED CIVIL ENGINEER DATE

6-21-10
PLANS APPROVAL DATE

REGISTERED PROFESSIONAL ENGINEER Daniel L. Texler No. 49792 Exp. 9-30-10 CIVIL STATE OF CALIFORNIA

The State of California or its officers or agents shall not be responsible for the accuracy or completeness of electronic copies of this plan sheet.

STANDARD PLANS DATED JULY 2004

A10A	ACRONYMS AND ABBREVIATIONS (A-L)
A10B	ACRONYMS AND ABBREVIATIONS (M-Z)
A62B	LIMITS OF PAYMENT FOR EXCAVATION AND BACKFILL- BRIDGE SURCHARGE AND WALL
B0-3	BRIDGE DETAILS
B2-5	PILE DETAILS CLASS 400 AND CLASS 625 ALTERNATIVE "V"
B3-1	RETAINING WALL TYPE 1
B3-7	RETAINING WALL TYPE 5
B3-8	RETAINING WALL DETAILS NO. 1
B11-47	CABLE RAILING
B11-51	TUBULAR HAND RAILING
B11-57	CONCRETE BARRIER TYPE 742A Mod
S49	OVERHEAD SIGNS - LIGHTWEIGHT FOUNDATION DETAILS

Standard Plan Sheet No.

Detail No.

INDEX TO PLANS

Sheet No.	Title
1	GENERAL PLAN
2	STRUCTURE PLAN NO. 1
3	STRUCTURE PLAN NO. 2
4	TYPICAL SECTION
5	RETAINING WALL DETAILS
6	SIGN 8A PEDESTAL DETAILS

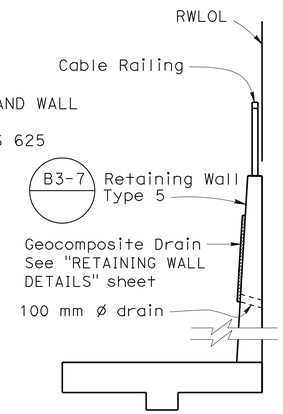

(Sta 9+97.607 to Sta 10+17.765)

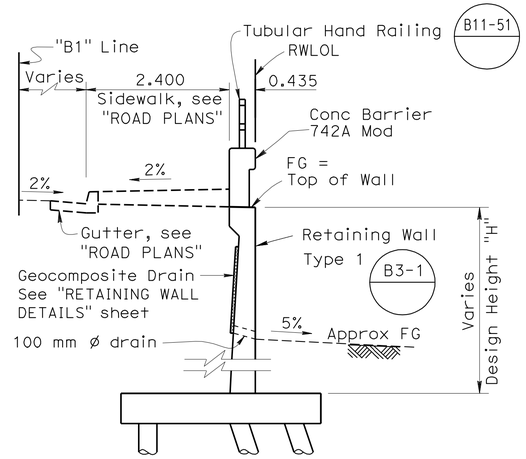

(Sta 10+17.765 to Sta 11+10.278)

TYPICAL SECTION

No Scale

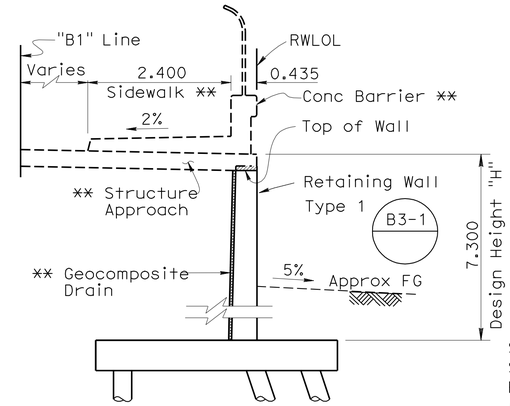

(Sta 11+10.278 to Sta 11+17.222)
** See Bridge No. 53-3018 plans

TYPICAL SECTION AT APPROACH SLAB

No Scale

NOTE: Install utility conduits as req'd, (not shown) for size and other data, see "ROAD PLANS"

QUANTITIES

STRUCTURE EXCAVATION (RETAINING WALL)	928	m^3
STRUCTURE BACKFILL (RETAINING WALL)	1277	m^3
FURNISH PILING (CLASS 400) (ALTERNATIVE V)	1581	m
DRIVE PILE (CLASS 400) (ALTERNATIVE V)	108	EA
STRUCTURAL CONCRETE, RETAINING WALL	387	m^3
ARCHITECTURAL TREATMENT	488	m^2
BAR REINFORCING STEEL (RETAINING WALL)	33 253	kg
TUBULAR HAND RAILING	93	m
CABLE RAILING	22	m
CONCRETE BARRIER (TYPE 742A MOD)	93	m

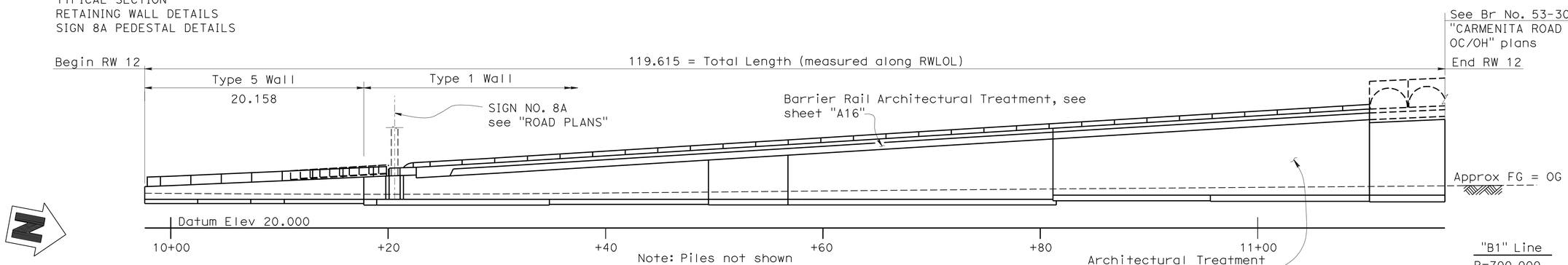

"B1" Line
R=700.000
Δ=20°0'20.6"
T=123.465
L=244.416

DEVELOPED ELEVATION

1:200

"B1" Line
R=333.000
Δ=11°44'01"
T=34.217
L=68.195

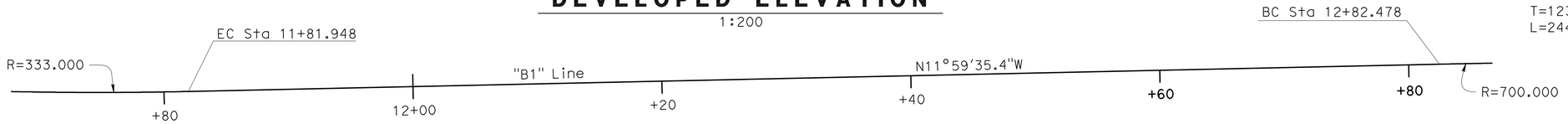

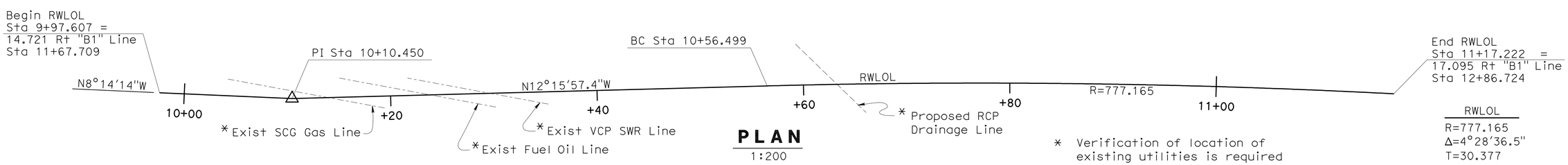

PLAN

1:200

* Verification of location of existing utilities is required

RWLOL
R=777.165
Δ=4°28'36.5"
T=30.377
L=60.724

NOTE: For limits of structure excavation (contaminated), see "Road Plans."

DESIGN	BY Junxia Wu/D.Texler	CHECKED M. Okimura	LOAD FACTOR DESIGN	LIVE LOADING: HS20-44 AND ALTERNATIVE AND PERMIT DESIGN LOAD	
DETAILS	BY Pauline Tong	CHECKED M. Okimura	LAYOUT	BY J. Wu	CHECKED M. Okimura
QUANTITIES	BY U. Inyang	CHECKED P. Nguyen	SPECIFICATIONS	BY M. Pan	PLANS AND SPECS COMPARED

DESIGN ENGINEER

Caltrans Metric

ALL DIMENSIONS ARE IN METERS UNLESS OTHERWISE SHOWN

ORIGINAL SCALE IN MILLIMETERS FOR REDUCED PLANS 0 10 20 30 40 50 60 70 80 90 100

STATE OF CALIFORNIA DEPARTMENT OF TRANSPORTATION

DIVISION OF ENGINEERING SERVICES STRUCTURE DESIGN

DESIGN BRANCH 11

CU 07225
EA 2159C

BRIDGE NO. RW12
KILOMETER POST 3.88

RETAINING WALL 12

GENERAL PLAN

DISREGARD PRINTS BEARING EARLIER REVISION DATES

REVISION DATES: 1-5-09 12-28-09 1-14-10 1-27-10 1-31-10 5-17-10 5-28-09 7-02-09 12-07-09

SHEET 1 OF 6

FILE => 53-rw12-a-gp.dgn

STRUCTURES DESIGN GENERAL PLAN SHEET (METRIC) (REV.03-17-04)

USERNAME => trrichf DATE PLOTTED => 22-JUN-2010 TIME PLOTTED => 17:09

DIST	COUNTY	ROUTE	KILOMETER POST TOTAL PROJECT	SHEET No	TOTAL SHEETS
07	LA	5	2.9/4.9	1065	1082

Daniel L. Texler 5/24/10
REGISTERED CIVIL ENGINEER DATE

6-21-10
PLANS APPROVAL DATE

REGISTERED PROFESSIONAL ENGINEER Daniel L. Texler No. 49792 Exp. 9-30-10 CIVIL STATE OF CALIFORNIA

The State of California or its officers or agents shall not be responsible for the accuracy or completeness of electronic copies of this plan sheet.

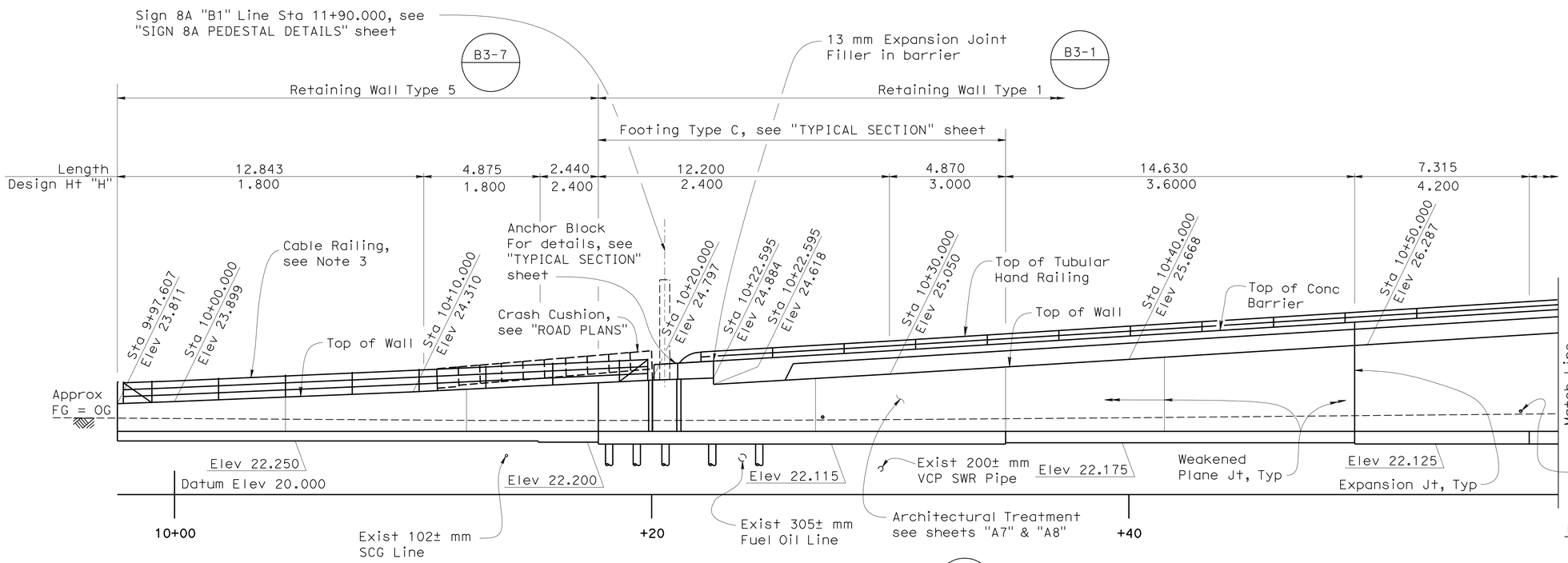

DEVELOPED ELEVATION
1:100

B0-3

Note: All piles not shown

LEGEND:

Indicates Vertical Piles

Indicates Battered 1:3 Piles

B2-5

NOTES:

1. Piles are Class 400, Alternative "V" closed-end with 60° conical tip
2. Pile Tip shall be 14.0 m below bottom of wall footings
3. Cable Railing from RWLOL Sta 9+98.000 to RWLOL Sta 10+19.940

B11-47

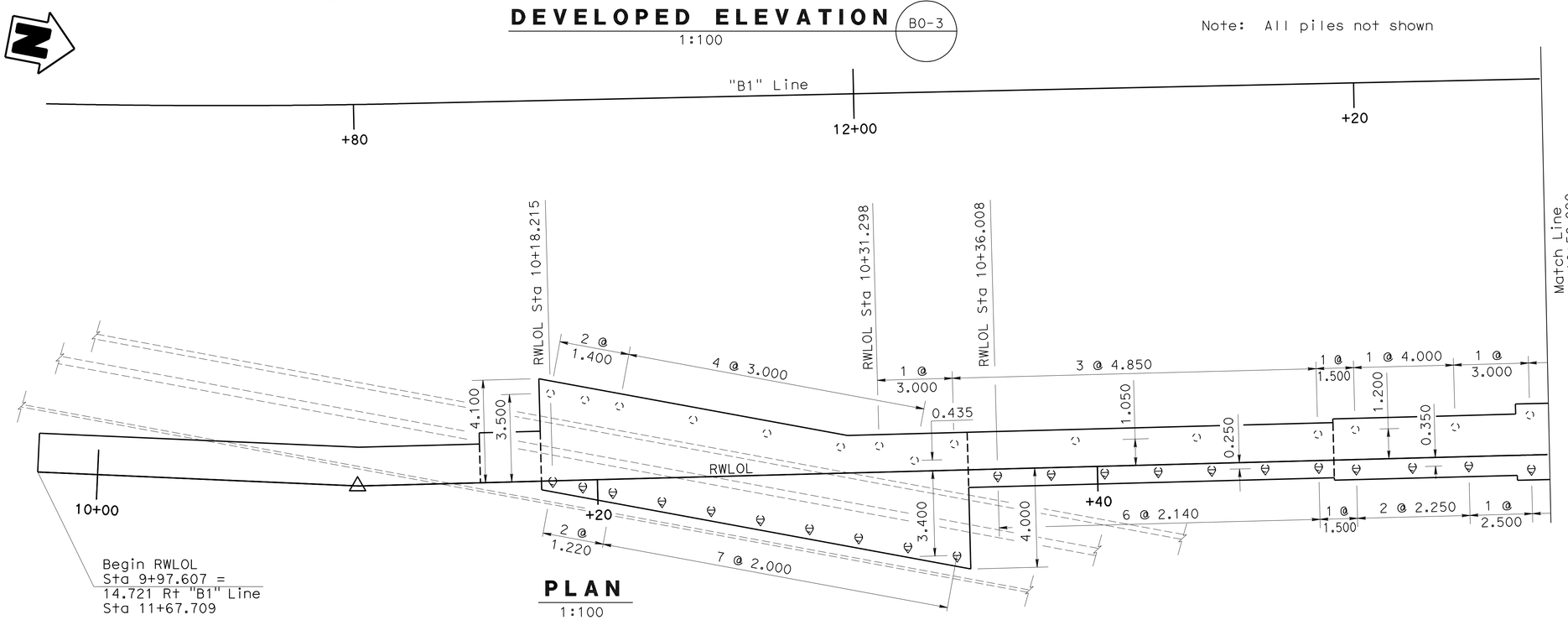

PLAN
1:100

DESIGN	BY Junxia Wu/D.Texler	CHECKED M. Okimura	
DETAILS	BY Pauline Tong	CHECKED M. Okimura	
QUANTITIES	BY U. Inyang	CHECKED P. Nguyen	

STATE OF CALIFORNIA
DEPARTMENT OF TRANSPORTATION

DIVISION OF ENGINEERING SERVICES
STRUCTURE DESIGN
DESIGN BRANCH 11

BRIDGE NO. RW12
KILOMETER POST 3.88

RETAINING WALL 12
STRUCTURE PLAN NO. 1

ALL DIMENSIONS ARE IN METERS UNLESS OTHERWISE SHOWN

ORIGINAL SCALE IN MILLIMETERS FOR REDUCED PLANS 0 10 20 30 40 50 60 70 80 90 100

CU 07225
EA 2159C1

DISREGARD PRINTS BEARING EARLIER REVISION DATES

REVISION DATES: ~~10-8-08~~ ~~01-08-10~~ ~~1-21-10~~ 5-20-10 ~~5-28-09~~ ~~5-27-09~~ ~~6-30-09~~ ~~7-08-09~~ ~~12-07-09~~ ~~12-28-09~~

SHEET 2 OF 6

FILE => 53-rw12-c-sp01.dgn

STRUCTURES DESIGN DETAIL SHEET (METRIC) (REV.03-17-04)

USERNAME => trrlchf DATE PLOTTED => 22-JUN-2010 TIME PLOTTED => 16:48

DIST	COUNTY	ROUTE	KILOMETER POST TOTAL PROJECT	SHEET No	TOTAL SHEETS
07	LA	5	2.9/4.9	1066	1082

Daniel L. Texler 5/24/10
REGISTERED CIVIL ENGINEER DATE

6-21-10
PLANS APPROVAL DATE

REGISTERED PROFESSIONAL ENGINEER Daniel L. Texler No. 49792 Exp. 9-30-10 CIVIL STATE OF CALIFORNIA

The State of California or its officers or agents shall not be responsible for the accuracy or completeness of electronic copies of this plan sheet.

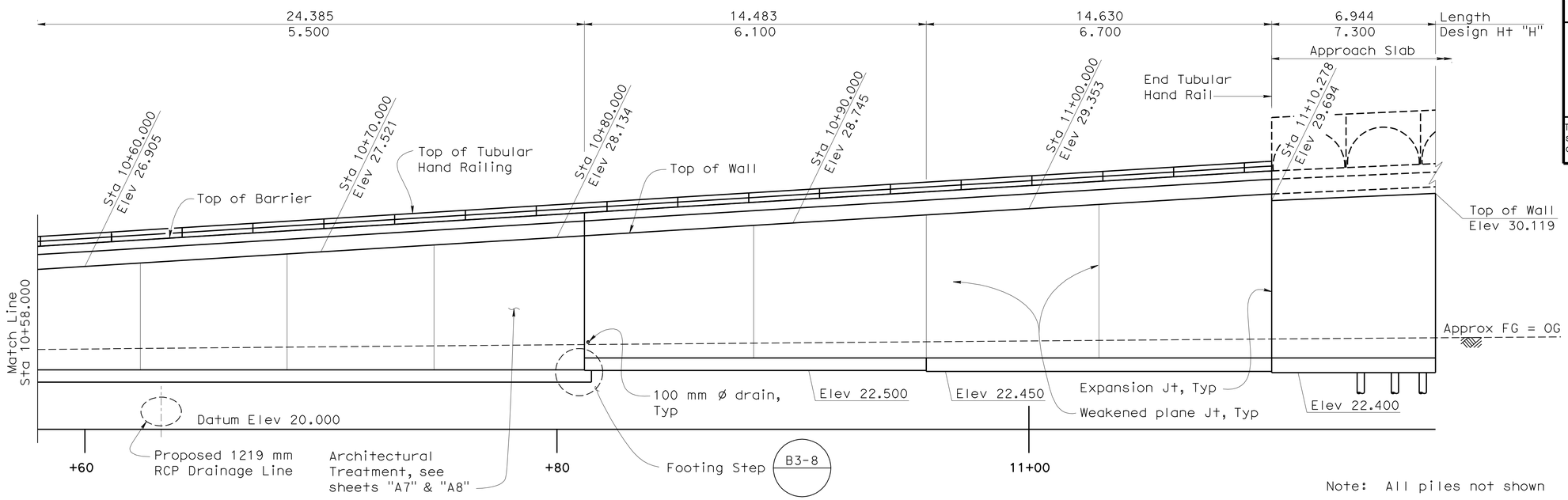

Note: All piles not shown

DEVELOPED ELEVATION

1:100

B0-3 B3-8

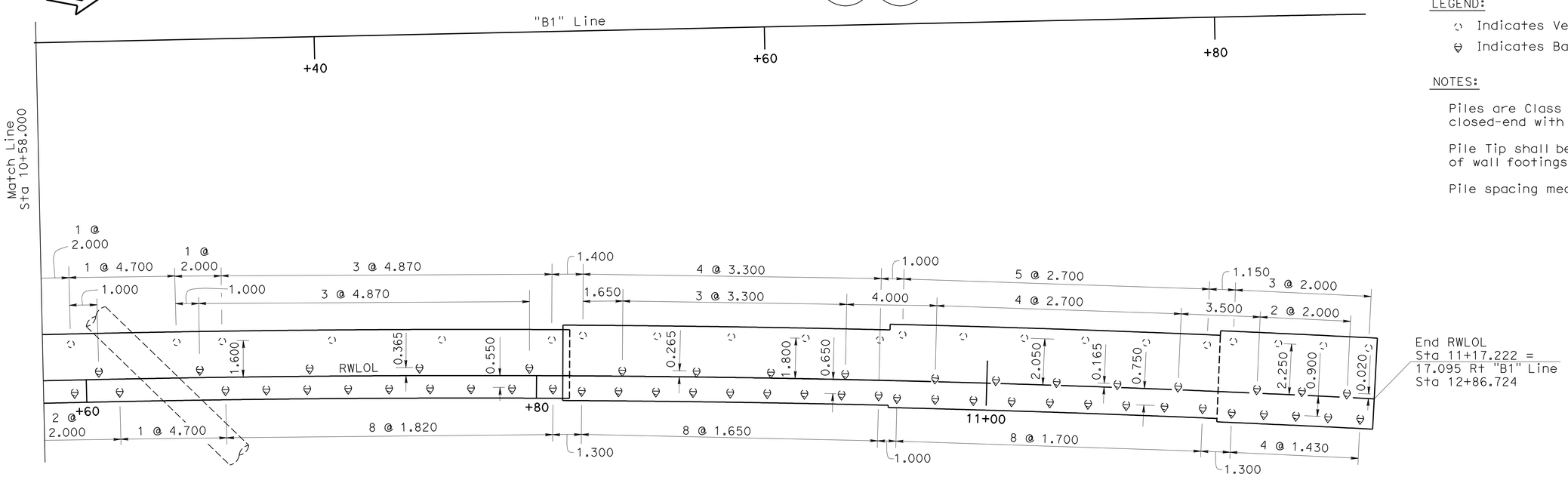

LEGEND:

Indicates Vertical Piles

Indicates Battered 1:3 Piles

NOTES:

Piles are Class 400, Alternative "V" closed-end with 60° conical tip (B2-5)

Pile Tip shall be 14.0 m below bottom of wall footings

Pile spacing measured along RWLOL

PLAN

1:100

DESIGN	BY Junxia Wu/D.Texler	CHECKED M. Okimura
DETAILS	BY Pauline Tong	CHECKED M. Okimura
QUANTITIES	BY U. Inyang	CHECKED P. Nguyen

STATE OF CALIFORNIA
DEPARTMENT OF TRANSPORTATION

DIVISION OF ENGINEERING SERVICES
STRUCTURE DESIGN
DESIGN BRANCH 11

BRIDGE NO. RW12
KILOMETER POST 3.88

RETAINING WALL 12
STRUCTURE PLAN NO. 2

ALL DIMENSIONS ARE IN METERS UNLESS OTHERWISE SHOWN

ORIGINAL SCALE IN MILLIMETERS FOR REDUCED PLANS 0 10 20 30 40 50 60 70 80 90 100

CU 07225
EA 2159C1

DISREGARD PRINTS BEARING EARLIER REVISION DATES

REVISION DATES: 10-8-08 1-23-09 3-18-09 4-22-09 5-8-09 5-21-09 6-30-09 7-30-09 1-3-10 5-17-10

SHEET 3 OF 6

FILE => 53-rw12-c-sp02.dgn

STRUCTURES DESIGN DETAIL SHEET (METRIC) (REV.03-17-04)

USERNAME => trrichf DATE PLOTTED => 22-JUN-2010 TIME PLOTTED => 16:48

DIST	COUNTY	ROUTE	KILOMETER POST TOTAL PROJECT	SHEET No	TOTAL SHEETS
07	LA	5	2.9/4.9	1067	1082

Daniel L. Texler 5/24/10
REGISTERED CIVIL ENGINEER DATE

6-21-10
PLANS APPROVAL DATE

REGISTERED PROFESSIONAL ENGINEER Daniel L. Texler No. 49792 Exp. 9-30-10 CIVIL STATE OF CALIFORNIA

The State of California or its officers or agents shall not be responsible for the accuracy or completeness of electronic copies of this plan sheet.

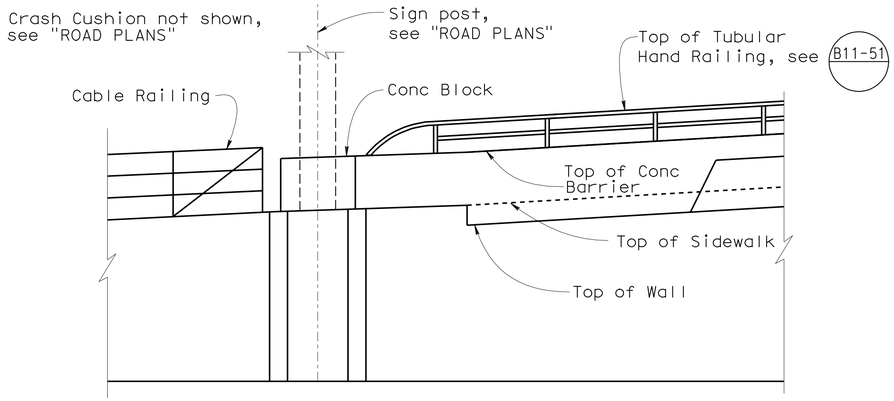

ELEVATION

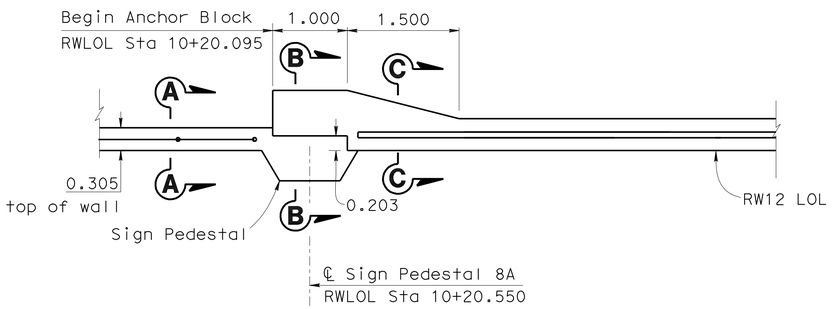

PLAN

ANCHOR BLOCK DETAILS

No Scale

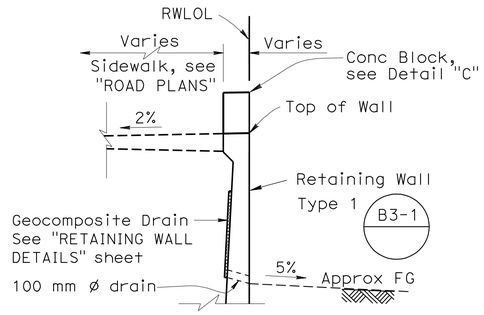

SECTION C-C

No Scale

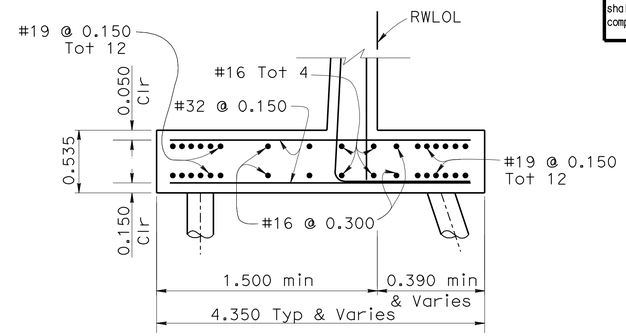

FOOTING TYPE C

No Scale

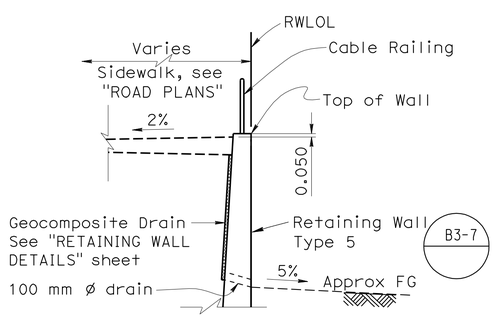

Note: Crash cushion not shown

SECTION A-A

No Scale

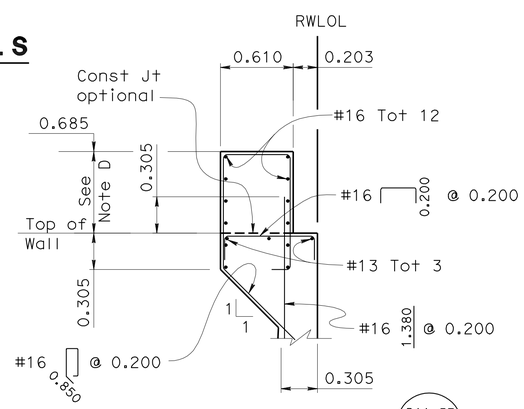

Notes: 1. For details not shown and note "D", see B11-57
2. For crash cushion and connection details see "ROAD PLANS"

DETAIL B

No Scale

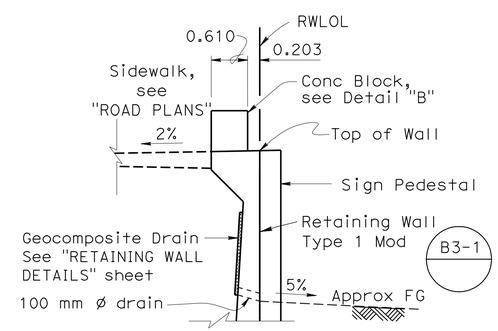

SECTION B-B

No Scale

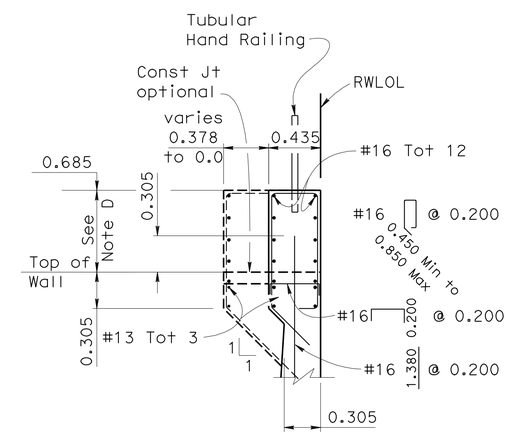

DETAIL C

No Scale

Note: For details not shown and note "D", see B11-57

DESIGN	BY Junxia Wu	CHECKED M. Okimura	
DETAILS	BY Pauline Tong	CHECKED M. Okimura	
QUANTITIES	BY U. Inyang	CHECKED P. Nguyen	

STATE OF CALIFORNIA DEPARTMENT OF TRANSPORTATION

DIVISION OF ENGINEERING SERVICES STRUCTURE DESIGN
DESIGN BRANCH 11

BRIDGE NO. RW12
KILOMETER POST 3.88

RETAINING WALL 12
TYPICAL SECTION

Caltrans Metric

ALL DIMENSIONS ARE IN METERS UNLESS OTHERWISE SHOWN

ORIGINAL SCALE IN MILLIMETERS FOR REDUCED PLANS 0 10 20 30 40 50 60 70 80 90 100

CU 07225
EA 2159C

DISREGARD PRINTS BEARING EARLIER REVISION DATES

REVISION DATES: 1-14-09 12-28-09 1-4-10 1-13-10 5-20-10 5-21-09 5-27-09 5-27-09 7-06-09 12-06-09

SHEET 4 OF 6

FILE => 53-rw12-d-typ.dgn

STRUCTURES DESIGN DETAIL SHEET (METRIC) (REV.03-17-04)

USERNAME => troland DATE PLOTTED => 22-JUN-2010 TIME PLOTTED => 16:56

DIST	COUNTY	ROUTE	KILOMETER POST TOTAL PROJECT	SHEET No	TOTAL SHEETS
07	LA	5	2.9/4.9	1068	1082

Daniel L. Texler 5/24/10
REGISTERED CIVIL ENGINEER DATE

6-21-10
PLANS APPROVAL DATE

REGISTERED PROFESSIONAL ENGINEER Daniel L.Texler No. 49792 Exp. 9-30-10 CIVIL STATE OF CALIFORNIA

The State of California or its officers or agents shall not be responsible for the accuracy or completeness of electronic copies of this plan sheet.

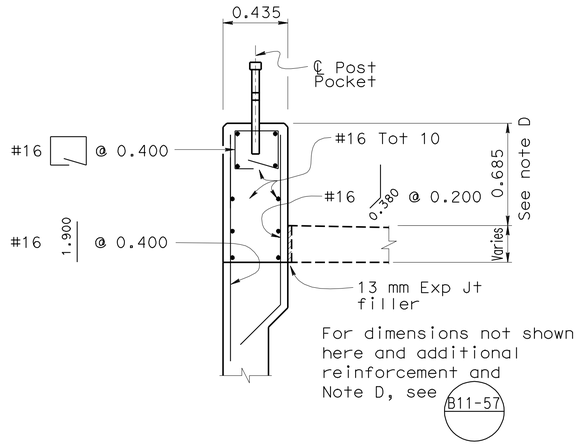

BARRIER TYPE 742A (MOD)

1:20

RWLOL Sta 10+22.595 to RWLOL Sta 10+26.551±

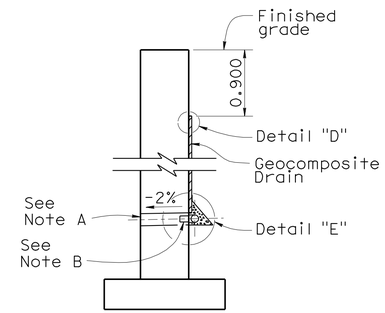

WALL SECTION

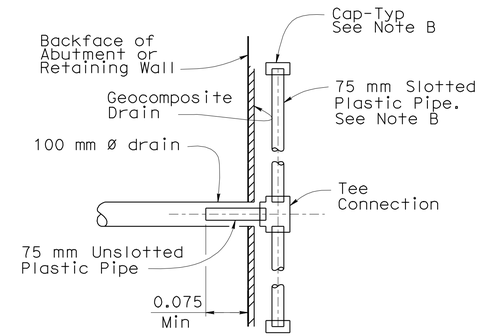

SECTION K-K

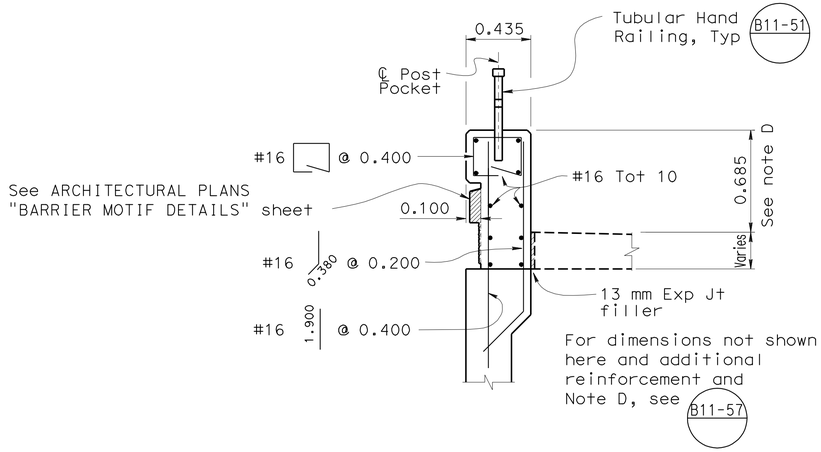

BARRIER TYPE 742A (MOD)

1:20

RWLOL Sta 10+26.551± to RWLOL Sta 11+10.278

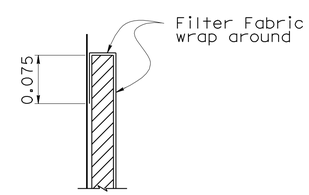

DETAIL "D"

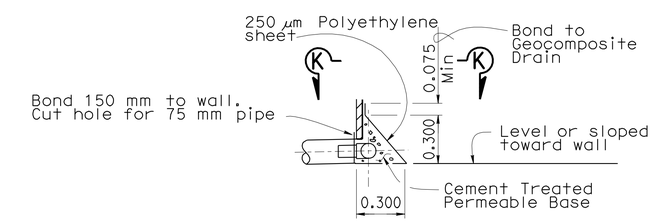

DETAIL "E"

WEEP HOLE AND GEOCOMPOSITE DRAIN

NO SCALE

Notes:

A. 100 mm ø drains at intermediate sag points and at 7.600 m center to center (2.750 m c-c for Type 3 and 2.800 m c-c for Type 4 retaining walls). For walls adjacent to sidewalks or curbs, provide 100 mm ø cast iron or asbestos cement pipe under the sidewalk to discharge through curb face. Exposed wall drains shall be located 75 mm ± above finished grade.

B. Geocomposite drain, cement treated permeable base, and 75 mm ø slotted plastic pipe continuous behind retaining wall or abutment. Cap ends of pipe. Provide "Tee" connection at each 100 mm ø drain.

C. Connect the low end of plastic pipe to the main outlet pipe as applicable.

Caltrans Metric

	BY	CHECKED
DESIGN	Junxia Wu	M. Okimura
DETAILS	Pauline Tong	M. Okimura
QUANTITIES	U. Inyang	P. Nguyen

STATE OF CALIFORNIA
DEPARTMENT OF TRANSPORTATION

DIVISION OF ENGINEERING SERVICES
STRUCTURE DESIGN
DESIGN BRANCH 11

BRIDGE NO. RW12
KILOMETER POST 3.88

RETAINING WALL 12
RETAINING WALL DETAILS

ALL DIMENSIONS ARE IN METERS UNLESS OTHERWISE SHOWN

ORIGINAL SCALE IN MILLIMETERS FOR REDUCED PLANS 0 10 20 30 40 50 60 70 80 90 100

CU 07225
EA 2159C

DISREGARD PRINTS BEARING EARLIER REVISION DATES

REVISION DATES: 2-18-09 3-17-09 4-24-09 5-14-09 5-21-09 8-3-09 12-28-09 01-08-10 01-22-10 5-20-10

SHEET 5 OF 6

FILE => 53-rw12-e-rwdet.dgn

STRUCTURES DESIGN DETAIL SHEET (METRIC) (REV.03-17-04)

USERNAME => trolandt DATE PLOTTED => 22-JUN-2010 TIME PLOTTED => 16:56

DIST	COUNTY	ROUTE	KILOMETER POST TOTAL PROJECT	SHEET No	TOTAL SHEETS
07	LA	5	2.9/4.9	1069	1082

Daniel L. Texler 5/24/10
REGISTERED CIVIL ENGINEER DATE

6-21-10
PLANS APPROVAL DATE

REGISTERED PROFESSIONAL ENGINEER Daniel L.Texler No. 49792 Exp. 9-30-10 CIVIL STATE OF CALIFORNIA

The State of California or its officers or agents shall not be responsible for the accuracy or completeness of electronic copies of this plan sheet.

NOTES:

1. Reinforcing shall be centered from sign axis.
2. For location of sign, see "ROAD PLANS".
3. Reinforcing shown is in addition to 2004 Retaining Wall Standard Plans unless otherwise indicated.
4. For Post Type 14 NPS base plate anchors and gusset plate details, see Revised Standard Plan S48.
5. Vertical reinforcement on pedestal can be adjusted to clear retaining wall reinforcement.
6. All vertical pedestal rebars to be bent 90° at the bottom and radiate out from the center.
7. 25 mm chamfer at all corners.

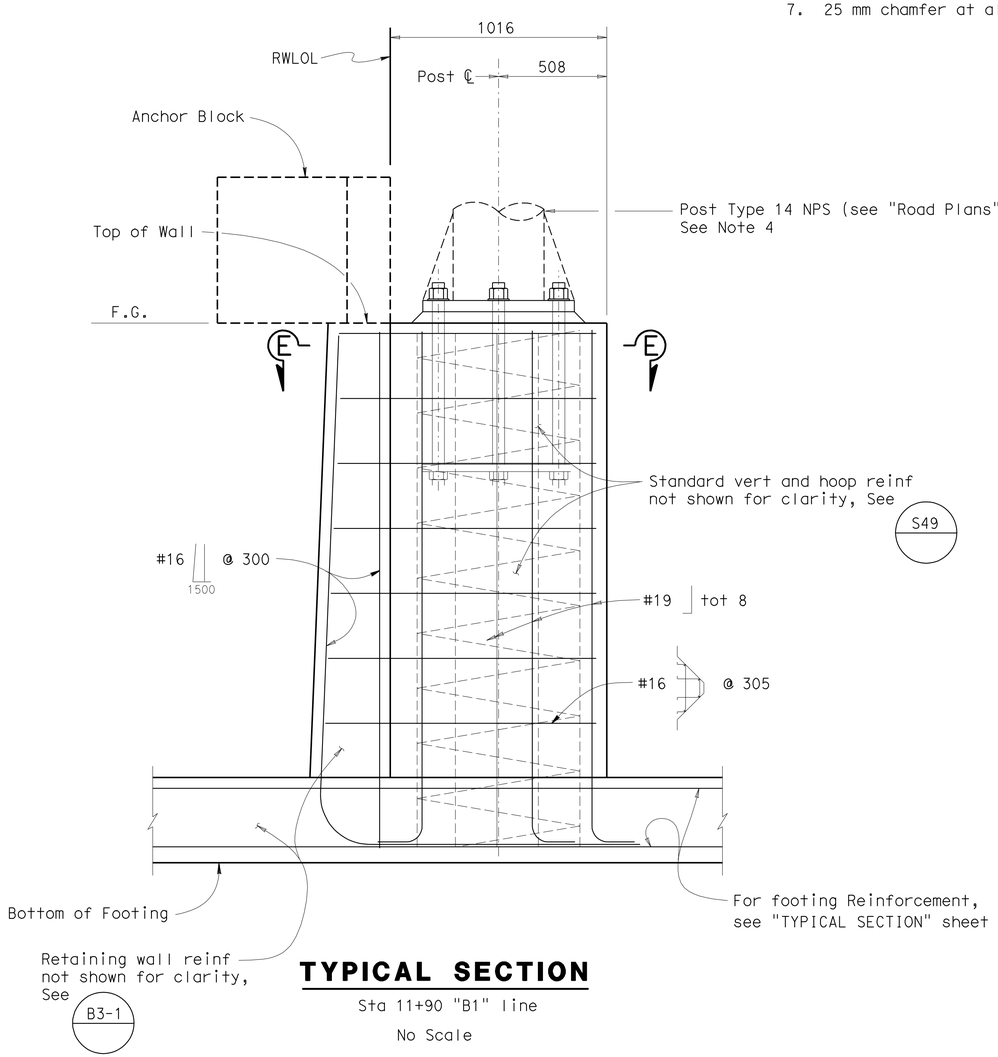

TYPICAL SECTION

Sta 11+90 "B1" line

No Scale

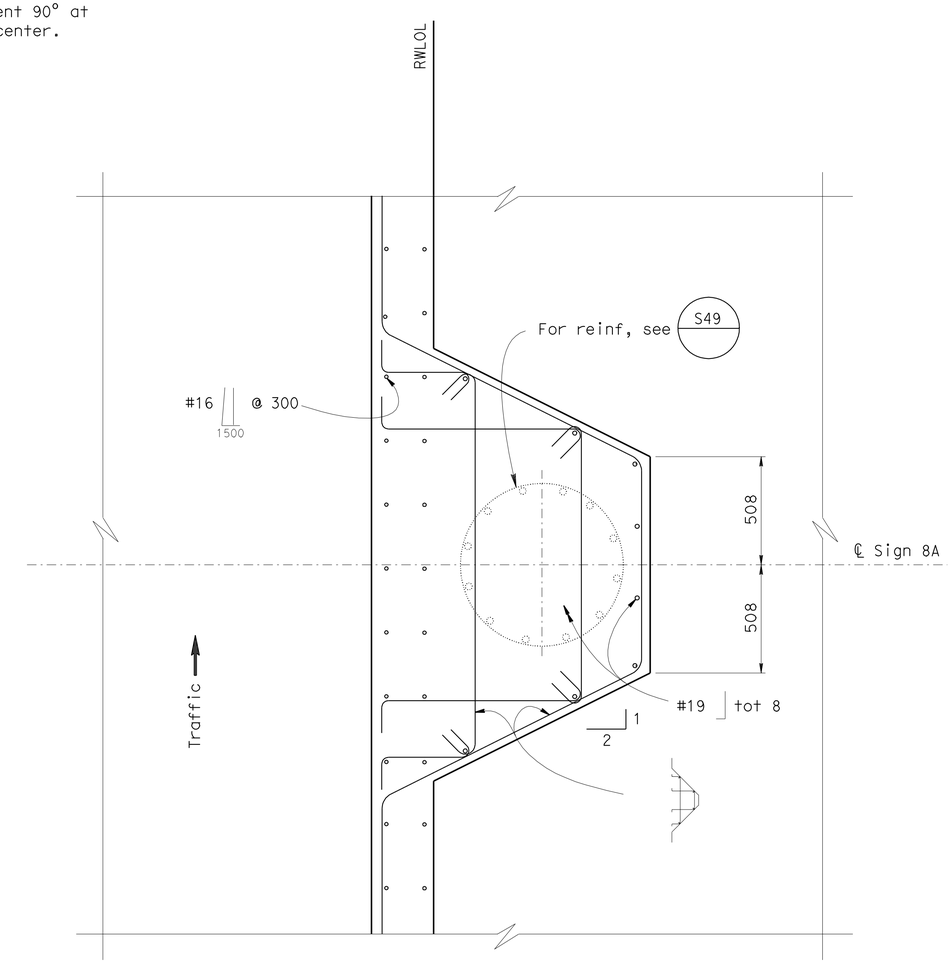

SECTION E-E

Retaining wall reinforcement not shown.

No Scale

DESIGN	BY Junxia Wu	CHECKED M. Okimura	STATE OF CALIFORNIA DEPARTMENT OF TRANSPORTATION	DIVISION OF ENGINEERING SERVICES STRUCTURE DESIGN DESIGN BRANCH 11	BRIDGE NO. RW12
DETAILS	BY Pauline Tong	CHECKED M. Okimura			KILOMETER POST 3.88
QUANTITIES	BY U. Inyang	CHECKED P. Nguyen			

RETAINING WALL 12
SIGN 8A PEDESTAL DETAILS

ALL DIMENSIONS ARE IN MILLIMETERS UNLESS OTHERWISE SHOWN

ORIGINAL SCALE IN MILLIMETERS FOR REDUCED PLANS 0 10 20 30 40 50 60 70 80 90 100

CU 07225
EA 2159C1

DISREGARD PRINTS BEARING EARLIER REVISION DATES

REVISION DATES: 12-07-09 12-30-09 1-7-10

SHEET 6 OF 6

FILE => 53-rw12-f-sgnpeddet.dgn

STRUCTURES DESIGN DETAIL SHEET (METRIC) (REV.03-17-04)

USERNAME => troland DATE PLOTTED => 22-JUN-2010 TIME PLOTTED => 16:57

DIST	COUNTY	ROUTE	KILOMETER POST TOTAL PROJECT	SHEET No	TOTAL SHEETS
07	LA	5	2.9/4.9	1070	1082

Daniel L. Texler 01-26-10
REGISTERED CIVIL ENGINEER DATE

6-21-10
PLANS APPROVAL DATE

REGISTERED PROFESSIONAL ENGINEER Daniel L. Texler No. 49792 Exp. 9-30-10 CIVIL STATE OF CALIFORNIA

The State of California or its officers or agents shall not be responsible for the accuracy or completeness of electronic copies of this plan sheet.

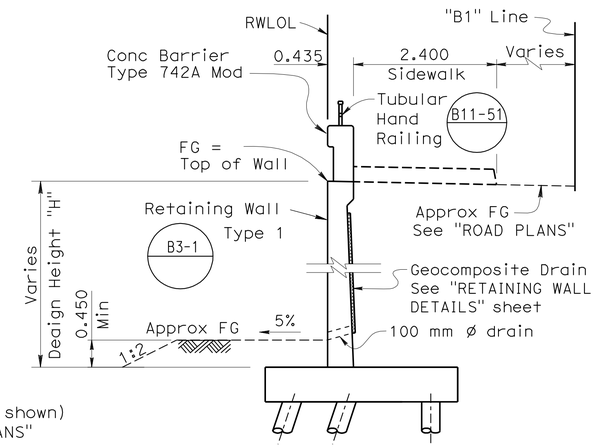

TYPICAL SECTION

1:50

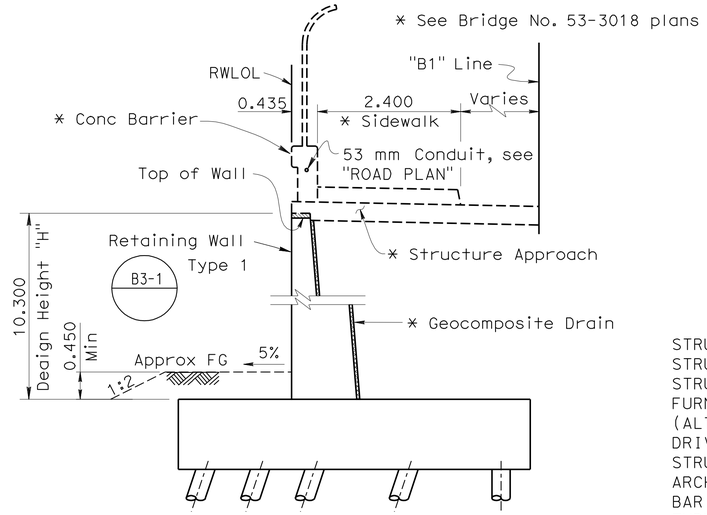

TYPICAL SECTION AT APPROACH SLAB

1:50

NOTE: Install utility conduits as req'd, (not shown) for size and other data, see "ROAD PLANS"

QUANTITIES

STRUCTURE EXCAVATION (CONTAMINATED)	156	m3
STRUCTURE EXCAVATION (RETAINING WALL)	3815	m3
STRUCTURE BACKFILL (RETAINING WALL)	2001	m3
FURNISH PILING (CLASS 400) (ALTERNATIVE V)	3188	m
DRIVE PILE (CLASS 400) (ALTERNATIVE V)	217	EA
STRUCTURAL CONCRETE, RETAINING WALL	731	m3
ARCHITECTURAL TREATMENT	678	m2
BAR REINFORCING STEEL (RETAINING WALL)	71 917	kg
TUBULAR HAND RAILING	122	m
CONCRETE BARRIER (TYPE 742A MOD)	122	m

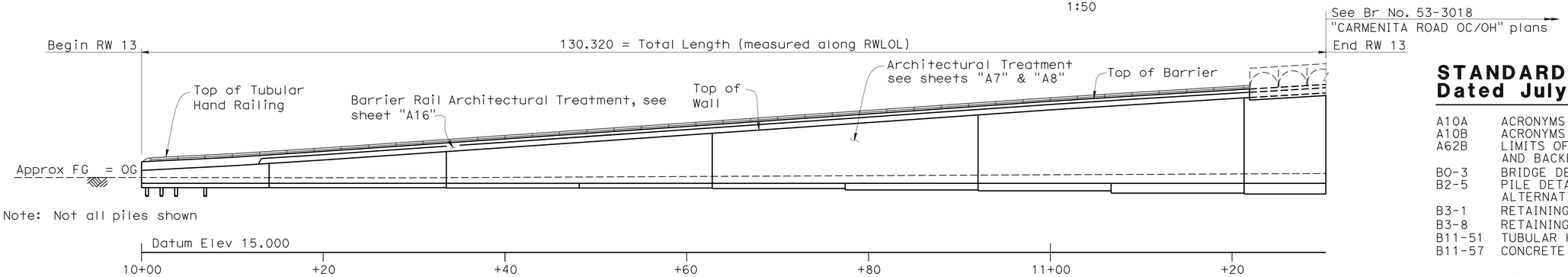

MIRRORED ELEVATION

1:250

STANDARD PLANS Dated July 2004

A10A	ACRONYMS AND ABBREVIATIONS (A-L)
A10B	ACRONYMS AND ABBREVIATIONS (M-Z)
A62B	LIMITS OF PAYMENT FOR EXCAVATION AND BACKFILL- BRIDGE SURCHARGE AND WALL
B0-3	BRIDGE DETAILS
B2-5	PILE DETAILS CLASS 400 AND CLASS 625 ALTERNATIVE "V"
B3-1	RETAINING WALL TYPE 1
B3-8	RETAINING WALL DETAILS NO. 1
B11-51	TUBULAR HAND RAILING
B11-57	CONCRETE BARRIER TYPE 742

Standard Plan Sheet No.

Detail No.

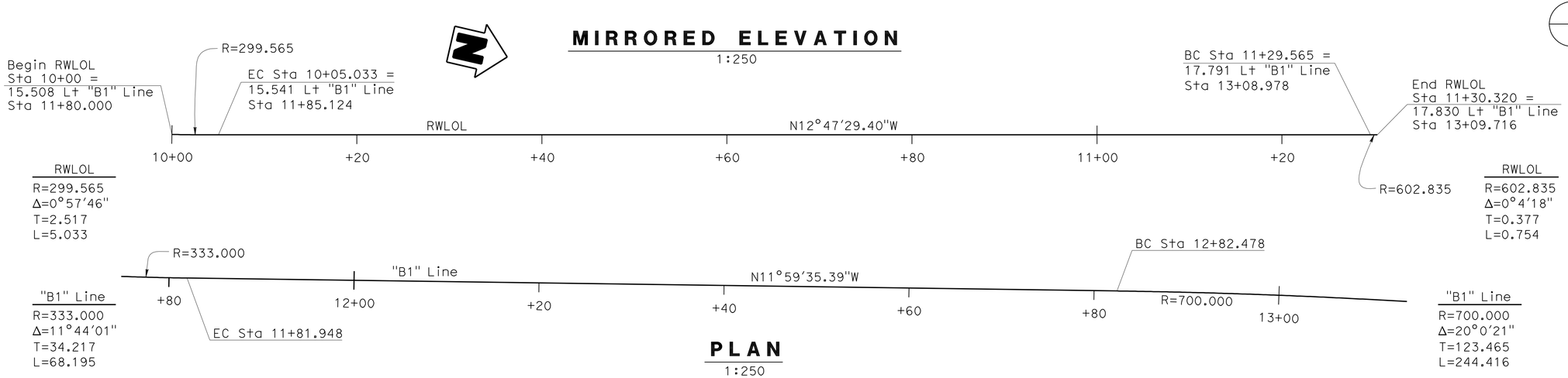

PLAN

1:250

INDEX TO PLANS

Sheet No.	Title
1	GENERAL PLAN
2	STRUCTURE PLAN NO. 1
3	STRUCTURE PLAN NO. 2
4	RETAINING WALL DETAILS

Caltrans Metric

DESIGN ENGINEER	DESIGN	BY Haitao Liu	CHECKED D. Menzmer	LOAD FACTOR DESIGN	LIVE LOADING: HS20-44 AND ALTERNATIVE AND PERMIT DESIGN LOAD
	DETAILS	BY Pauline Tong	CHECKED D. Menzmer	LAYOUT	BY Haitao Liu / CHECKED U. Inyang
	QUANTITIES	BY D. Tavatli	CHECKED K. Doll	SPECIFICATIONS	BY M. Pan / PLANS AND SPECS COMPARED

ALL DIMENSIONS ARE IN METERS UNLESS OTHERWISE SHOWN

ORIGINAL SCALE IN MILLIMETERS FOR REDUCED PLANS 0 10 20 30 40 50 60 70 80 90 100

STATE OF CALIFORNIA DEPARTMENT OF TRANSPORTATION

DIVISION OF ENGINEERING SERVICES STRUCTURE DESIGN DESIGN BRANCH 11

CU 07225
EA 2159C1

BRIDGE NO. RW13
KILOMETER POST 3.88

RETAINING WALL 13
GENERAL PLAN

DISREGARD PRINTS BEARING EARLIER REVISION DATES

REVISION DATES: 12-2-08 1/11/10 4-01-09 5-4-09 5-28-09 6-30-09 7-02-09 12-28-09 1-7-10

SHEET 1 OF 4

FILE => 53-rw13-a-gp.dgn

STRUCTURES DESIGN GENERAL PLAN SHEET (METRIC) (REV.03-17-04)

USERNAME => trolandt DATE PLOTTED => 22-JUN-2010 TIME PLOTTED => 16:57

DIST	COUNTY	ROUTE	KILOMETER POST TOTAL PROJECT	SHEET No	TOTAL SHEETS
07	LA	5	2.9/4.9	1071	1082

Daniel L. Texler 01-26-10
REGISTERED CIVIL ENGINEER DATE

6-21-10
PLANS APPROVAL DATE

REGISTERED PROFESSIONAL ENGINEER Daniel L Texler No. 49792 Exp. 9-30-08 CIVIL STATE OF CALIFORNIA

The State of California or its officers or agents shall not be responsible for the accuracy or completeness of electronic copies of this plan sheet.

LEGEND:

Indicates Vertical Piles

Indicates Battered 1:3 Piles

NOTES:

Piles are Class 400, Alternative "V" closed-end with 60° conical tip

Pile Tip shall be 14.0 m below bottom of wall footings

Pile spacing measured along RWLOL

B2-5

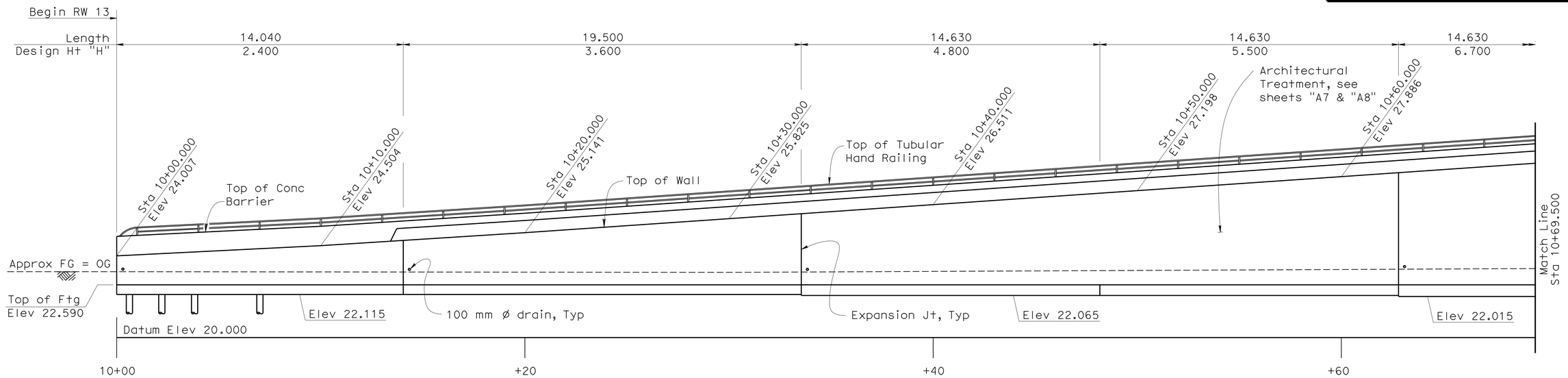

Note: Not all piles shown

MIRRORED ELEVATION

1:100

B0-3

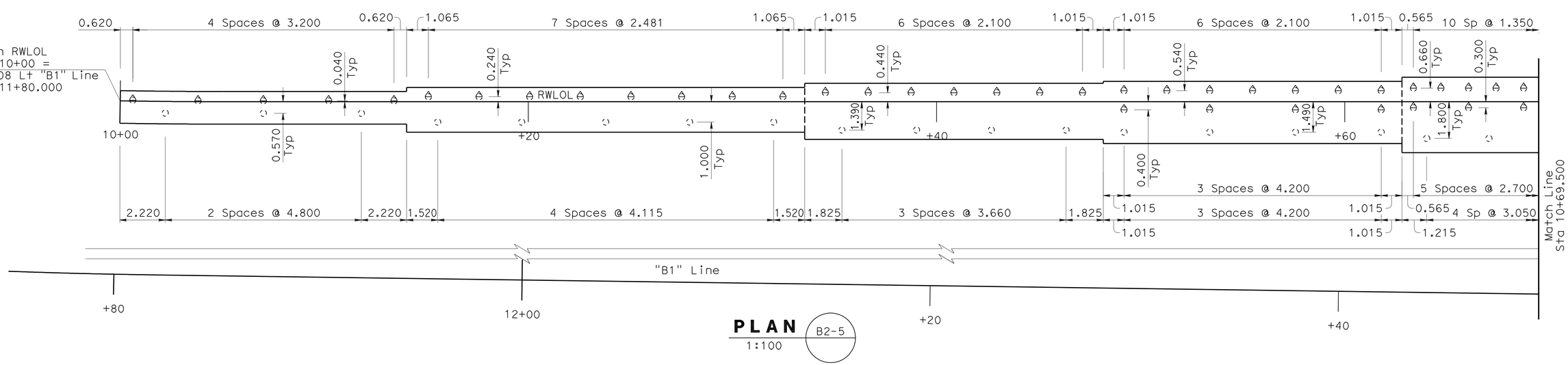

PLAN

1:100

B2-5

DESIGN	BY Haitao Liu	CHECKED D. Menzmer	
DETAILS	BY Pauline Tong	CHECKED D. Menzmer	
QUANTITIES	BY D. Tavatli	CHECKED K. Doll	

STATE OF CALIFORNIA
DEPARTMENT OF TRANSPORTATION

DIVISION OF ENGINEERING SERVICES
STRUCTURE DESIGN
DESIGN BRANCH 11

BRIDGE NO. RW13
KILOMETER POST 3.88

RETAINING WALL 13
STRUCTURE PLAN NO. 1

ALL DIMENSIONS ARE IN METERS UNLESS OTHERWISE SHOWN

ORIGINAL SCALE IN MILLIMETERS FOR REDUCED PLANS 0 10 20 30 40 50 60 70 80 90 100

CU 07225
EA 2159C1

DISREGARD PRINTS BEARING EARLIER REVISION DATES

REVISION DATES: 10-8-08 2-3-09 3-4-09 4-1-09 5-4-09 5-28-09 7-02-09 12-28-09 1-7-10

SHEET 2 OF 4

FILE => 53-rw13-c-sp01.dgn

STRUCTURES DESIGN DETAIL SHEET (METRIC) (REV.03-17-04)

USERNAME => ttrolandt DATE PLOTTED => 22-JUN-2010 TIME PLOTTED => 16:57

DIST	COUNTY	ROUTE	KILOMETER POST TOTAL PROJECT	SHEET No	TOTAL SHEETS
07	LA	5	2.9/4.9	1072	1082

Daniel L. Texler 01-26-10
REGISTERED CIVIL ENGINEER DATE

6-21-10
PLANS APPROVAL DATE

REGISTERED PROFESSIONAL ENGINEER Daniel L Texler No. 49792 Exp. 9-30-08 CIVIL STATE OF CALIFORNIA

The State of California or its officers or agents shall not be responsible for the accuracy or completeness of electronic copies of this plan sheet.

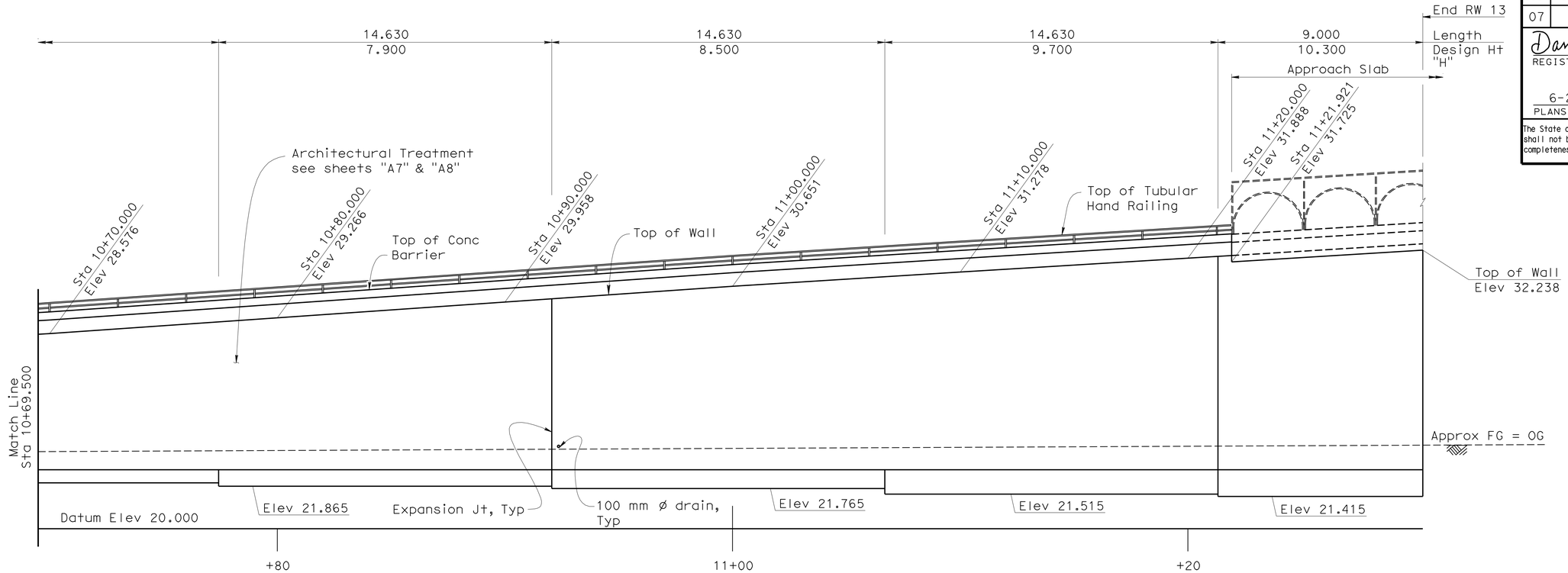

Note: Not all piles shown

MIRRORED ELEVATION (B0-3)
1:100

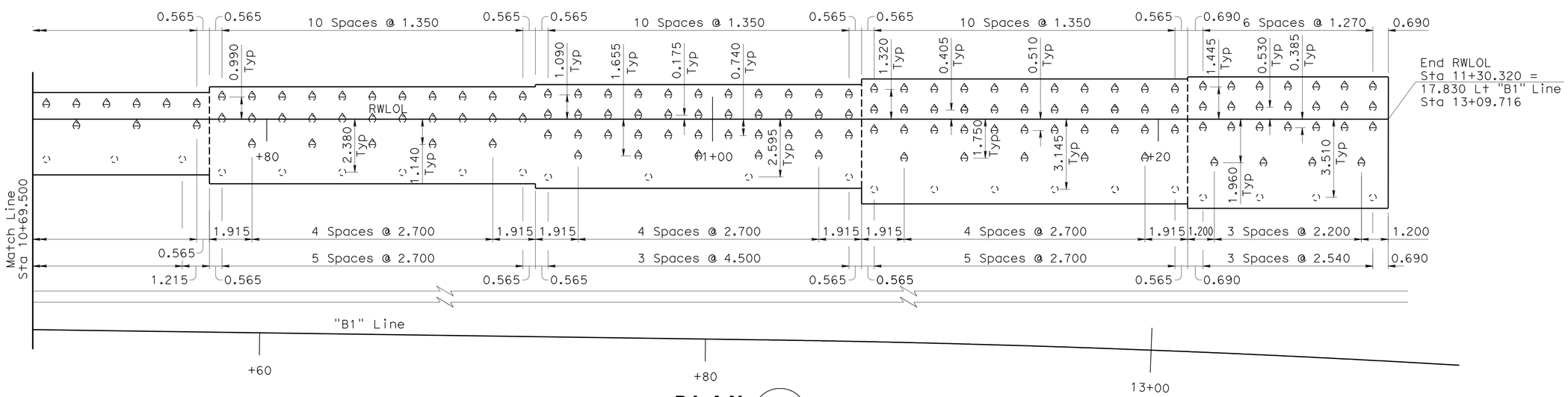

PLAN (B2-5)
1:100

DESIGN	BY Haitao Liu	CHECKED D. Menzmer
DETAILS	BY Pauline Tong	CHECKED D. Menzmer
QUANTITIES	BY D. Tavatli	CHECKED K. Doll

STATE OF CALIFORNIA
DEPARTMENT OF TRANSPORTATION

DIVISION OF ENGINEERING SERVICES
STRUCTURE DESIGN
DESIGN BRANCH 11

BRIDGE NO. RW13
KILOMETER POST 3.88

RETAINING WALL 13
STRUCTURE PLAN NO. 2

ALL DIMENSIONS ARE IN METERS UNLESS OTHERWISE SHOWN

ORIGINAL SCALE IN MILLIMETERS FOR REDUCED PLANS 0 10 20 30 40 50 60 70 80 90 100

CU 07225
EA 2159C1

DISREGARD PRINTS BEARING EARLIER REVISION DATES

REVISION DATES: 12-4-08 12-12-08 2-3-09 3-4-09 5-4-09 5-28-09 6-30-09 7-02-09 1-7-10

SHEET 3 OF 4

FILE => 53-rw13-c-sp02.dgn

STRUCTURES DESIGN DETAIL SHEET (METRIC) (REV.03-17-04)

USERNAME => trrright DATE PLOTTED => 22-JUN-2010 TIME PLOTTED => 17:09

DIST	COUNTY	ROUTE	KILOMETER POST TOTAL PROJECT	SHEET No	TOTAL SHEETS
07	LA	5	2.9/4.9	1073	1082

Daniel L. Texler 5/24/10
REGISTERED CIVIL ENGINEER DATE

6-21-10
PLANS APPROVAL DATE

REGISTERED PROFESSIONAL ENGINEER Daniel L.Texler No. 49792 Exp. 9-30-10 CIVIL STATE OF CALIFORNIA

The State of California or its officers or agents shall not be responsible for the accuracy or completeness of electronic copies of this plan sheet.

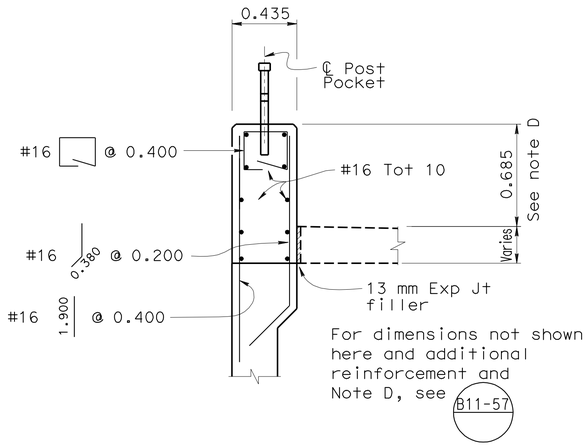

BARRIER TYPE 742A (MOD)

1:20

RWLOL Sta 10+00.000 to RWLOL Sta 10+13.716

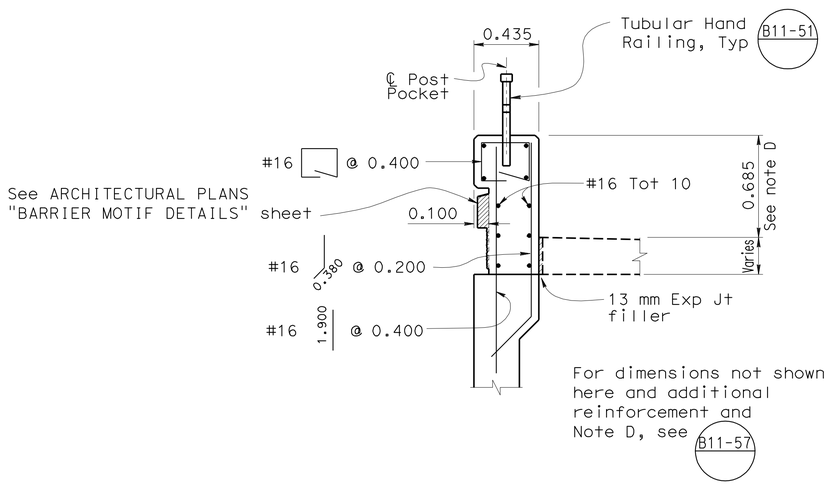

BARRIER TYPE 742A (MOD)

1:20

RWLOL Sta 10+13.716 to RWLOL Sta 11+21.921

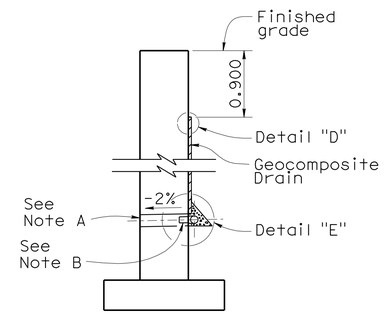

WALL SECTION

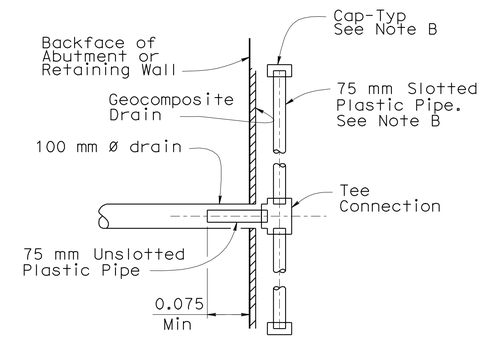

SECTION K-K

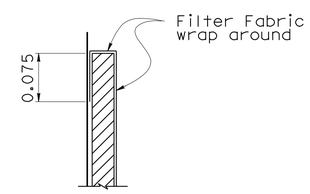

DETAIL "D"

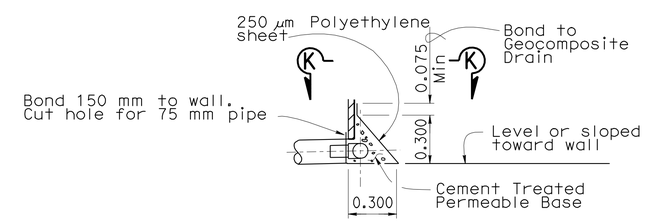

DETAIL "E"

WEEP HOLE AND GEOCOMPOSITE DRAIN

NO SCALE

Notes:

A. 100 mm ø drains at intermediate sag points and at 7.600 m center to center (2.750 m c-c for Type 3 and 2.800 m c-c for Type 4 retaining walls). For walls adjacent to sidewalks or curbs, provide 100 mm ø cast iron or asbestos cement pipe under the sidewalk to discharge through curb face. Exposed wall drains shall be located 75 mm ± above finished grade.

B. Geocomposite drain, cement treated permeable base, and 75 mm ø slotted plastic pipe continuous behind retaining wall or abutment. Cap ends of pipe. Provide "Tee" connection at each 100 mm ø drain.

C. Connect the low end of plastic pipe to the main outlet pipe as applicable.

Caltrans Metric

	BY	CHECKED
DESIGN	Haitao Liu	D. Menzmer
DETAILS	Pauline Tong	D. Menzmer
QUANTITIES	D. Tavatli	K. Doll

STATE OF CALIFORNIA DEPARTMENT OF TRANSPORTATION

DIVISION OF ENGINEERING SERVICES STRUCTURE DESIGN DESIGN BRANCH 11

BRIDGE NO. RW13
KILOMETER POST 3.88

RETAINING WALL 13
RETAINING WALL DETAILS

ALL DIMENSIONS ARE IN METERS UNLESS OTHERWISE SHOWN

ORIGINAL SCALE IN MILLIMETERS FOR REDUCED PLANS 0 10 20 30 40 50 60 70 80 90 100

CU 07225
EA 2159C1

DISREGARD PRINTS BEARING EARLIER REVISION DATES

REVISION DATES: 2-3-09 3-4-09 5-1-09 5-28-09 8-3-09 12-29-09 01/08/10 01/07/10

SHEET 4 OF 4

FILE => 53-rw13-d-rwdet.dgn

STRUCTURES DESIGN DETAIL SHEET (METRIC) (REV.03-17-04)

USERNAME => trrright DATE PLOTTED => 22-JUN-2010 TIME PLOTTED => 17:09

DIST	COUNTY	ROUTE	KILOMETER POST TOTAL PROJECT	SHEET No	TOTAL SHEETS
07	LA	5	2.9/4.9	1074	1082

Daniel L. Texler 01-26-10
REGISTERED CIVIL ENGINEER DATE

6-21-10
PLANS APPROVAL DATE

REGISTERED PROFESSIONAL ENGINEER Daniel L. Texler No. 49792 Exp. 9-30-10 CIVIL STATE OF CALIFORNIA

The State of California or its officers or agents shall not be responsible for the accuracy or completeness of electronic copies of this plan sheet.

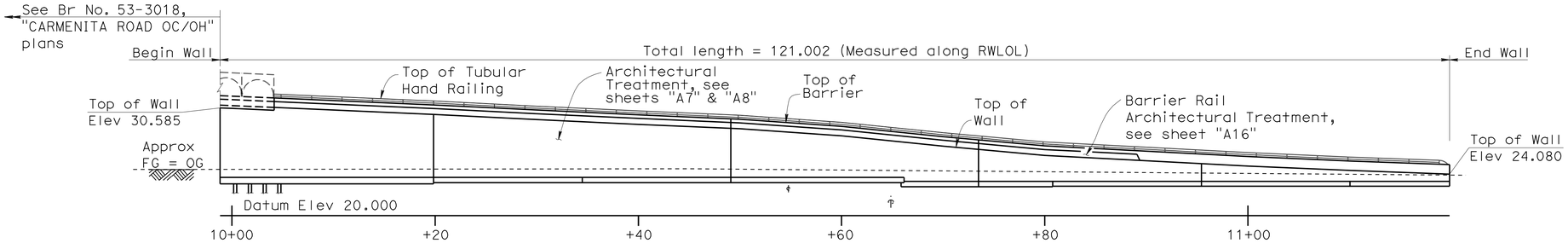

Note: Not all piles shown

DEVELOPED ELEVATION

1:250

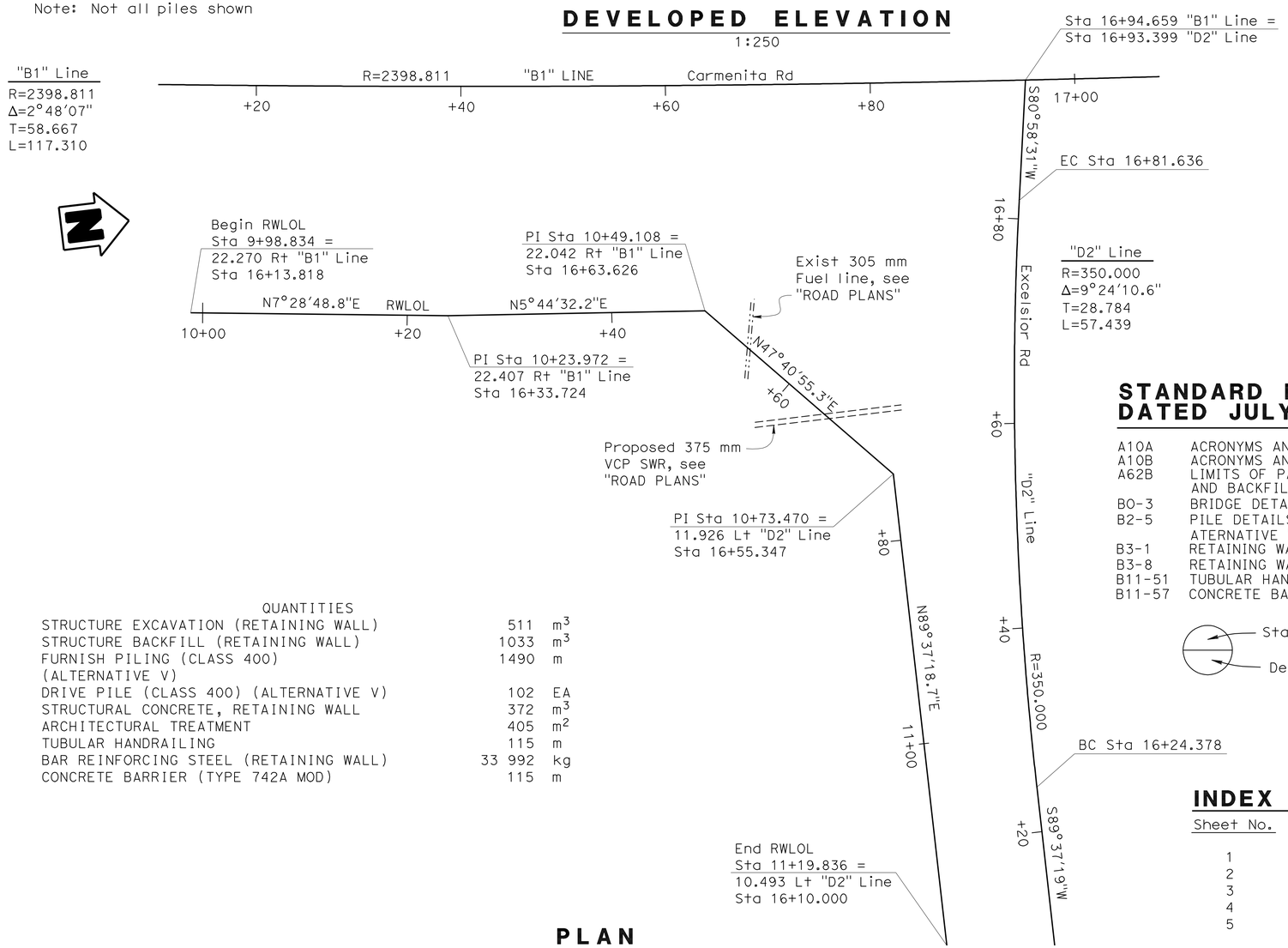

PLAN

1:250

NOTE: For limits of structure excavation (contaminated), see "Road Plans."

QUANTITIES

STRUCTURE EXCAVATION (RETAINING WALL)	511	m^3
STRUCTURE BACKFILL (RETAINING WALL)	1033	m^3
FURNISH PILING (CLASS 400) (ALTERNATIVE V)	1490	m
DRIVE PILE (CLASS 400) (ALTERNATIVE V)	102	EA
STRUCTURAL CONCRETE, RETAINING WALL	372	m^3
ARCHITECTURAL TREATMENT	405	m^2
TUBULAR HANDRAILING	115	m
BAR REINFORCING STEEL (RETAINING WALL)	33 992	kg
CONCRETE BARRIER (TYPE 742A MOD)	115	m

STANDARD PLANS DATED JULY 2004

A10A	ACRONYMS AND ABBREVIATIONS (A-L)
A10B	ACRONYMS AND ABBREVIATIONS (M-Z)
A62B	LIMITS OF PAYMENT FOR EXCAVATION AND BACKFILL- BRIDGE SURCHARGE AND WALL
BO-3	BRIDGE DETAILS
B2-5	PILE DETAILS CLASS 400 AND CLASS 625 ATERNATIVE "V"
B3-1	RETAINING WALL TYPE 1
B3-8	RETAINING WALL DETAILS NO. 1
B11-51	TUBULAR HAND RAILING
B11-57	CONCRETE BARRIER TYPE 742

Standard Plan Sheet No.

Detail No.

INDEX TO PLANS

Sheet No.	Title
1	GENERAL PLAN
2	STRUCTURE PLAN NO. 1
3	STRUCTURE PLAN NO. 2
4	STRUCTURE PLAN NO. 3
5	RETAINING WALL DETAILS

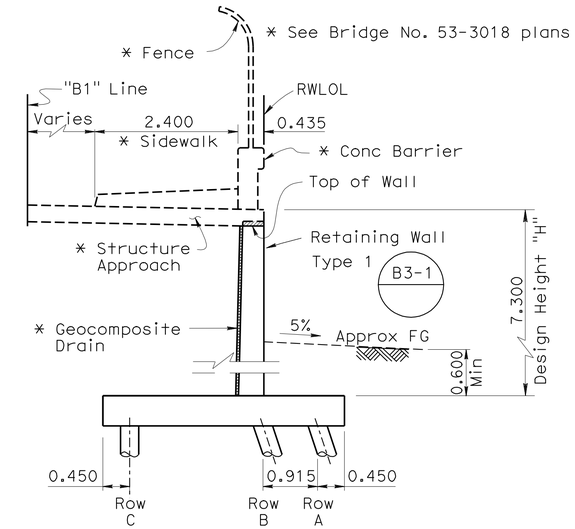

TYPICAL SECTION AT APPROACH SLAB

1:50

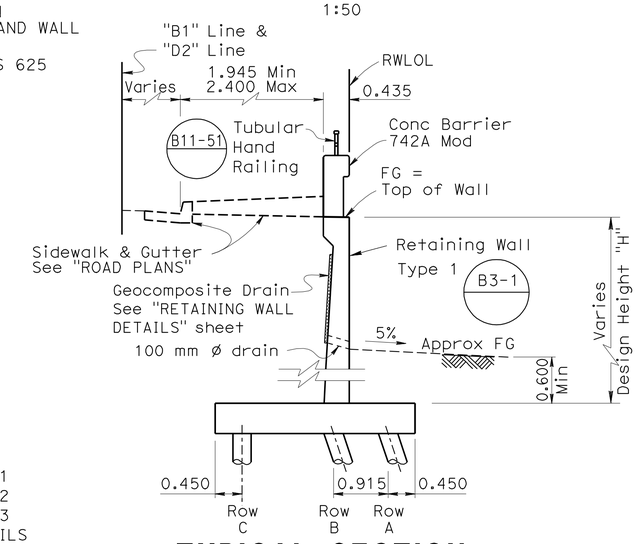

TYPICAL SECTION

1:50

Caltrans Metric	DESIGN ENGINEER	DESIGN	BY Junxia Wu	CHECKED D. Menzmer	LOAD FACTOR DESIGN	LIVE LOADING: HS20-44 AND ALTERNATIVE AND PERMIT DESIGN LOAD	
		DETAILS	BY Pauline Tong	CHECKED D. Menzmer	LAYOUT	BY Junxia Wu	CHECKED U. Inyang
		QUANTITIES	BY D. Tavatli	CHECKED K. Doll	SPECIFICATIONS	BY M. Pan	PLANS AND SPECS COMPARED

STATE OF CALIFORNIA DEPARTMENT OF TRANSPORTATION

DIVISION OF ENGINEERING SERVICES STRUCTURE DESIGN DESIGN BRANCH 11

BRIDGE NO. RW16 KILOMETER POST 3.88

RETAINING WALL 16
GENERAL PLAN

ALL DIMENSIONS ARE IN METERS UNLESS OTHERWISE SHOWN

ORIGINAL SCALE IN MILLIMETERS FOR REDUCED PLANS 0 10 20 30 40 50 60 70 80 90 100

CU 07225
EA 2159C1

DISREGARD PRINTS BEARING EARLIER REVISION DATES

REVISION DATES: 10-18-08 7-22-08 8-3-09 12-29-09 1-7-10 4-8-09 5-5-09 5-29-09 6-30-08

SHEET 1 OF 5

FILE => 53-rw16-a-gp.dgn

STRUCTURES DESIGN GENERAL PLAN SHEET (METRIC) (REV.03-17-04)

USERNAME => ttrstrk DATE PLOTTED => 15-FEB-2011 TIME PLOTTED => 11:03

DIST	COUNTY	ROUTE	KILOMETER POST TOTAL PROJECT	SHEET No	TOTAL SHEETS
07	LA	5	2.9/4.9	1075	1082

Daniel L. Texler 01-26-10
REGISTERED CIVIL ENGINEER DATE

6-21-10
PLANS APPROVAL DATE

REGISTERED PROFESSIONAL ENGINEER Daniel L. Texler No. 49792 Exp. 9-30-10 CIVIL STATE OF CALIFORNIA

The State of California or its officers or agents shall not be responsible for the accuracy or completeness of electronic copies of this plan sheet.

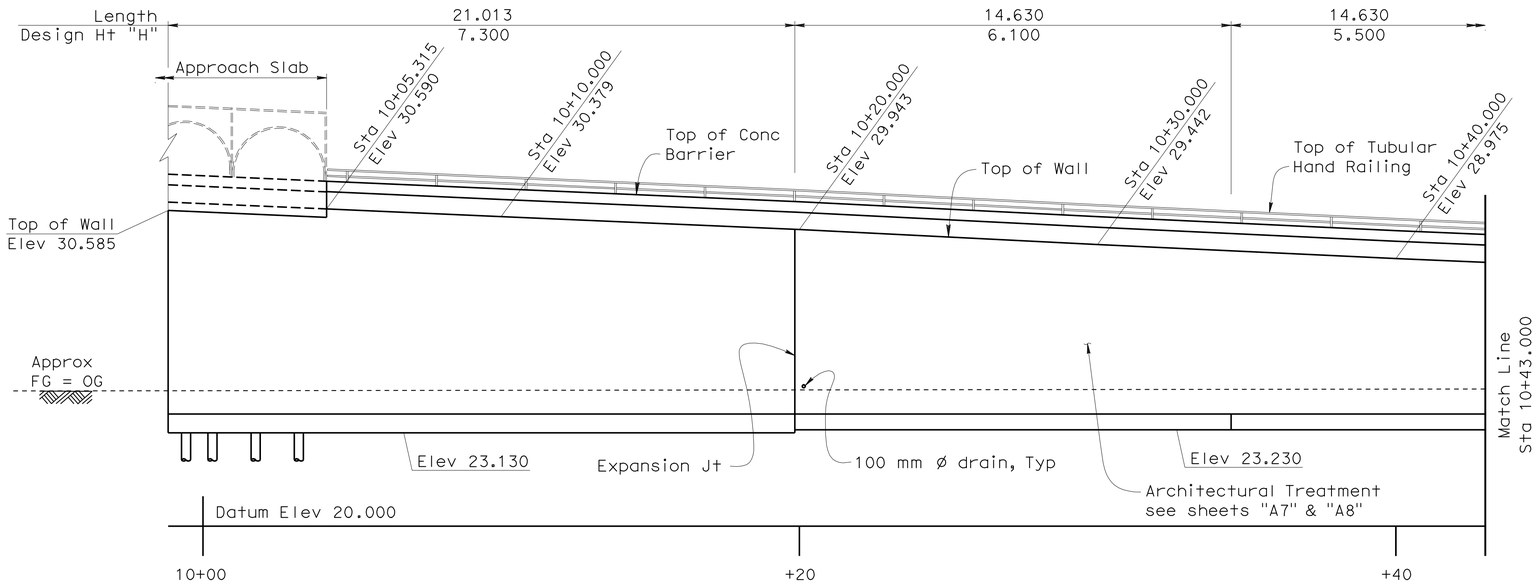

Note: Not all piles shown

DEVELOPED ELEVATION (B0-3)
1:100

LEGEND:

Indicates Vertical Piles

Indicates Battered 1:3 Piles

NOTES:

Piles are Class 400, Alternative "V" closed-end with 60° conical tip (B2-5)

Pile Tip shall be 14.0 m below bottom of wall footings

Pile spacing measured along RWLOL

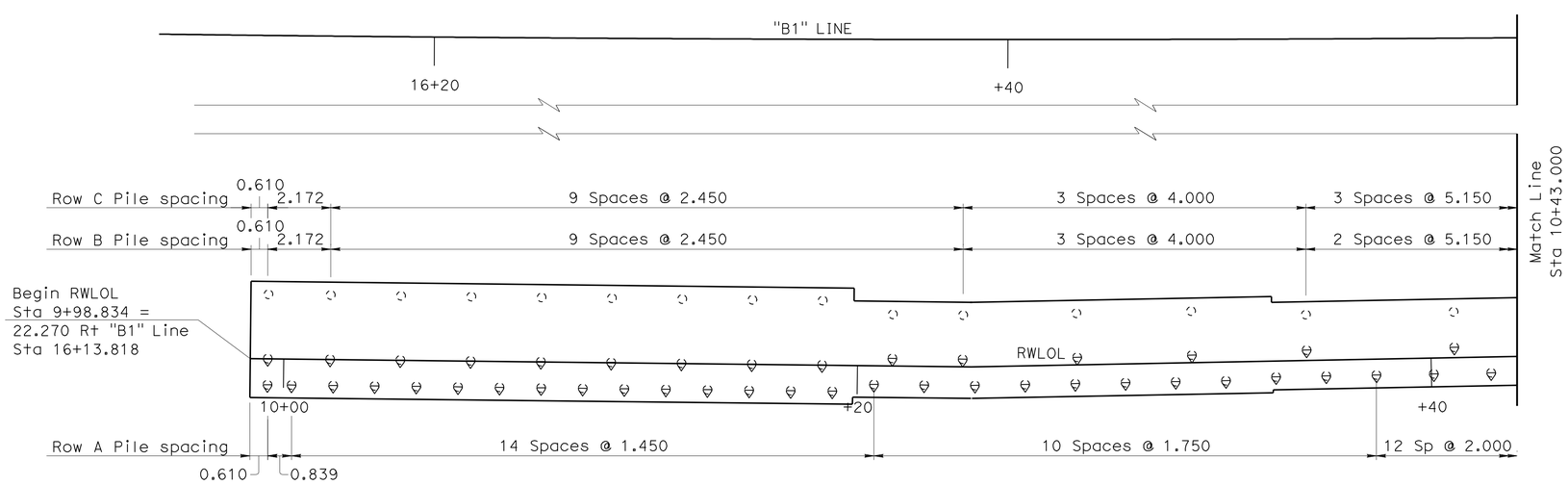

PLAN (B2-5)
1:100

DESIGN	BY Junxia Wu	CHECKED D. Menzmer	
DETAILS	BY Pauline Tong	CHECKED D. Menzmer	
QUANTITIES	BY D. Tavatli	CHECKED K. Doll	

STATE OF CALIFORNIA DEPARTMENT OF TRANSPORTATION

DIVISION OF ENGINEERING SERVICES STRUCTURE DESIGN DESIGN BRANCH 11

BRIDGE NO. RW16
KILOMETER POST 3.88

RETAINING WALL 16
STRUCTURE PLAN NO. 1

Caltrans Metric

ALL DIMENSIONS ARE IN METERS UNLESS OTHERWISE SHOWN

ORIGINAL SCALE IN MILLIMETERS FOR REDUCED PLANS 0 10 20 30 40 50 60 70 80 90 100

CU 07225
EA 2159C1

DISREGARD PRINTS BEARING EARLIER REVISION DATES

REVISION DATES: 12-29-08 1-16-09 3-11-09 5-5-09 5-29-09 6-30-09 7-02-09 1-7-10

SHEET 2 OF 5

FILE => 53-rw16-c-sp01.dgn

STRUCTURES DESIGN DETAIL SHEET (METRIC) (REV.03-17-04)

USERNAME => trrichf DATE PLOTTED => 22-JUN-2010 TIME PLOTTED => 17:09

DIST	COUNTY	ROUTE	KILOMETER POST TOTAL PROJECT	SHEET No	TOTAL SHEETS
07	LA	5	2.9/4.9	1076	1082

Daniel L. Texler 01-26-10
REGISTERED CIVIL ENGINEER DATE

6-21-10
PLANS APPROVAL DATE

REGISTERED PROFESSIONAL ENGINEER Daniel L. Texler No. 49792 Exp. 9-30-10 CIVIL STATE OF CALIFORNIA

The State of California or its officers or agents shall not be responsible for the accuracy or completeness of electronic copies of this plan sheet.

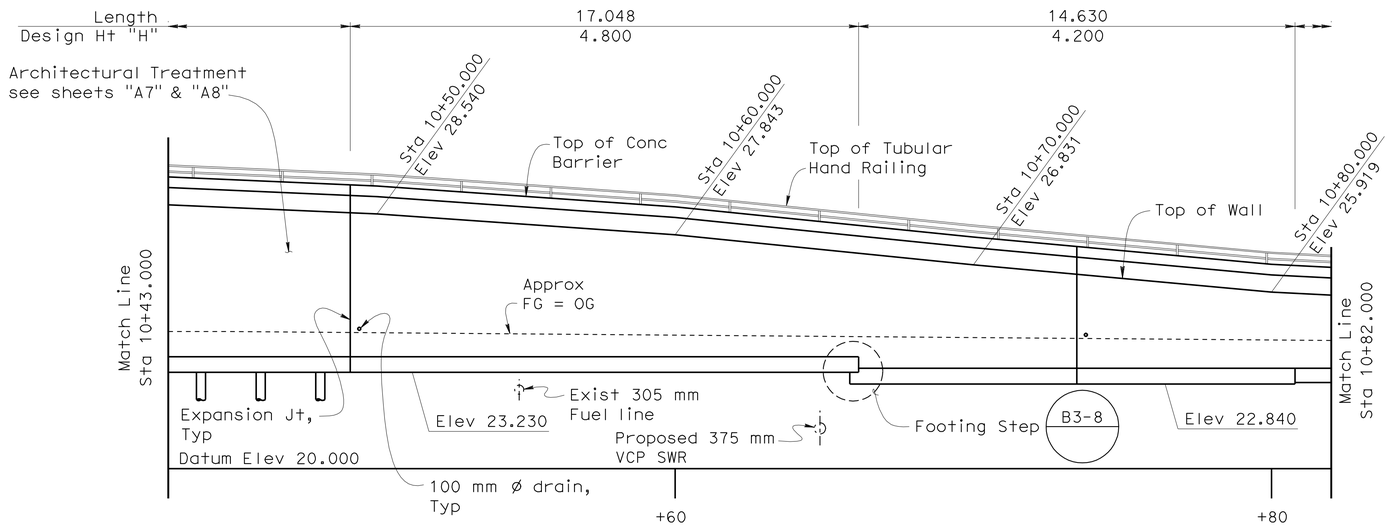

Note: Not all piles shown

DEVELOPED ELEVATION (B0-3)
1:100

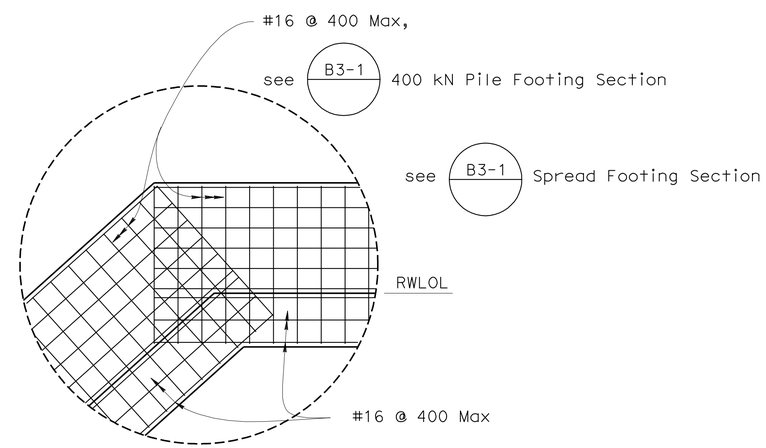

1. Reinforcement shown is in addition to that shown in (B3-1)
2. "Detail A" is shown for Sta 10+49.108. Detail at Sta 10+73.470 is similar

DETAIL A
1:50

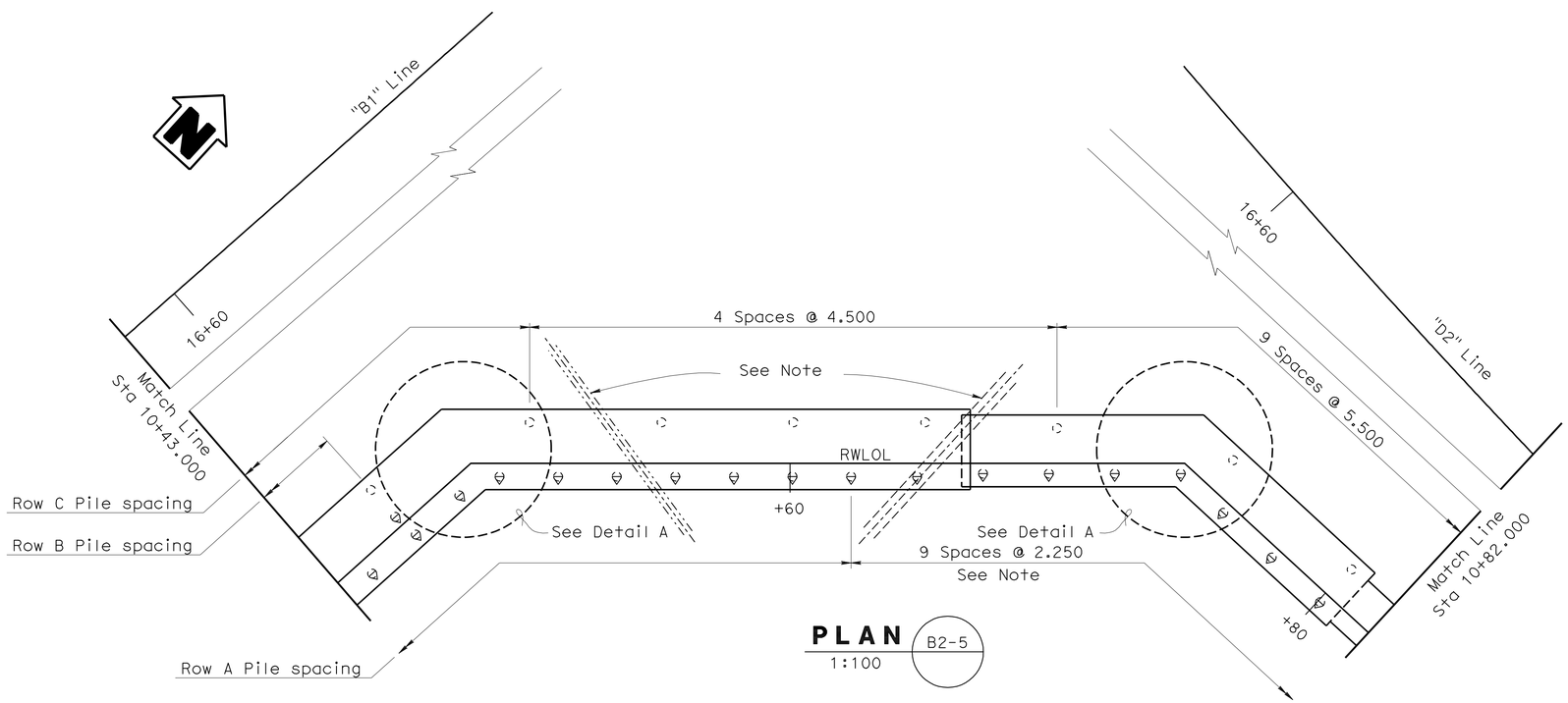

PLAN (B2-5)
1:100

NOTE:

Locate utility lines and adjust pile locations as directed by the Engineer

DESIGN	BY Junxia Wu	CHECKED D. Menzmer	
DETAILS	BY Pauline Tong	CHECKED D. Menzmer	
QUANTITIES	BY D. Tavatli	CHECKED K. Doll	

STATE OF CALIFORNIA
DEPARTMENT OF TRANSPORTATION

DIVISION OF ENGINEERING SERVICES
STRUCTURE DESIGN
DESIGN BRANCH 11

BRIDGE NO. RW16
KILOMETER POST 3.88

RETAINING WALL 16
STRUCTURE PLAN NO. 2

ALL DIMENSIONS ARE IN METERS UNLESS OTHERWISE SHOWN

ORIGINAL SCALE IN MILLIMETERS FOR REDUCED PLANS 0 10 20 30 40 50 60 70 80 90 100

CU 07225
EA 2159C1

DISREGARD PRINTS BEARING EARLIER REVISION DATES

REVISION DATES: 12-28-08 1-30-09 4-9-09 5-5-09 5-29-09 6-30-09 7-02-09 01-06-10 01-07-10

SHEET 3 OF 5

FILE => 53-rw16-c-sp02.dgn

STRUCTURES DESIGN DETAIL SHEET (METRIC) (REV.03-17-04)

USERNAME => trright DATE PLOTTED => 22-JUN-2010 TIME PLOTTED => 17:09

DIST	COUNTY	ROUTE	KILOMETER POST TOTAL PROJECT	SHEET No	TOTAL SHEETS
07	LA	5	2.9/4.9	1077	1082

Daniel L. Texler 01-26-10
REGISTERED CIVIL ENGINEER DATE

6-21-10
PLANS APPROVAL DATE

REGISTERED PROFESSIONAL ENGINEER
Daniel L. Texler
No. 49792
Exp. 9-30-10
CIVIL
STATE OF CALIFORNIA

The State of California or its officers or agents shall not be responsible for the accuracy or completeness of electronic copies of this plan sheet.

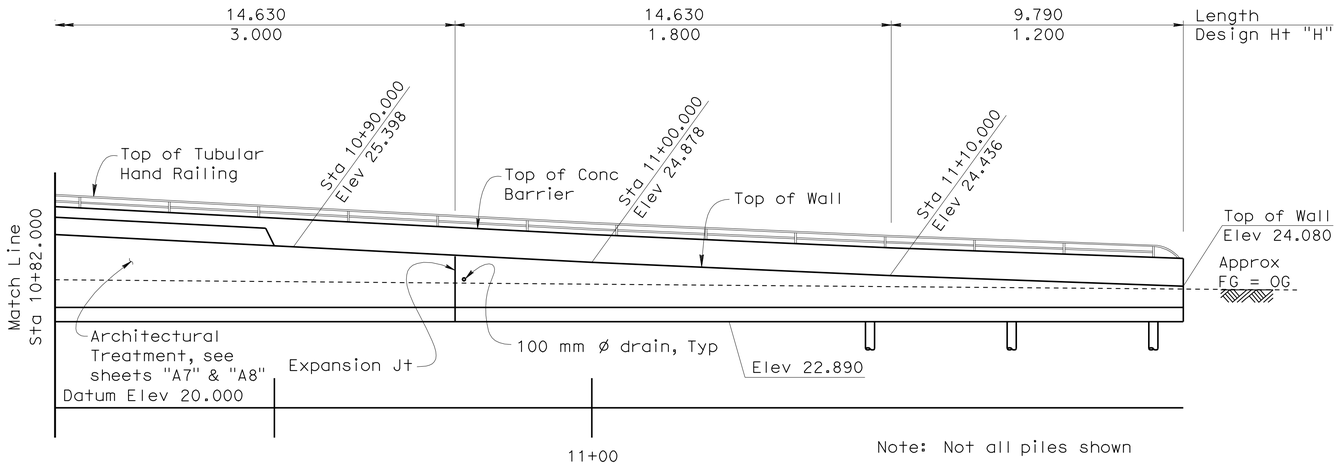

DEVELOPED ELEVATION
1:100
B0-3

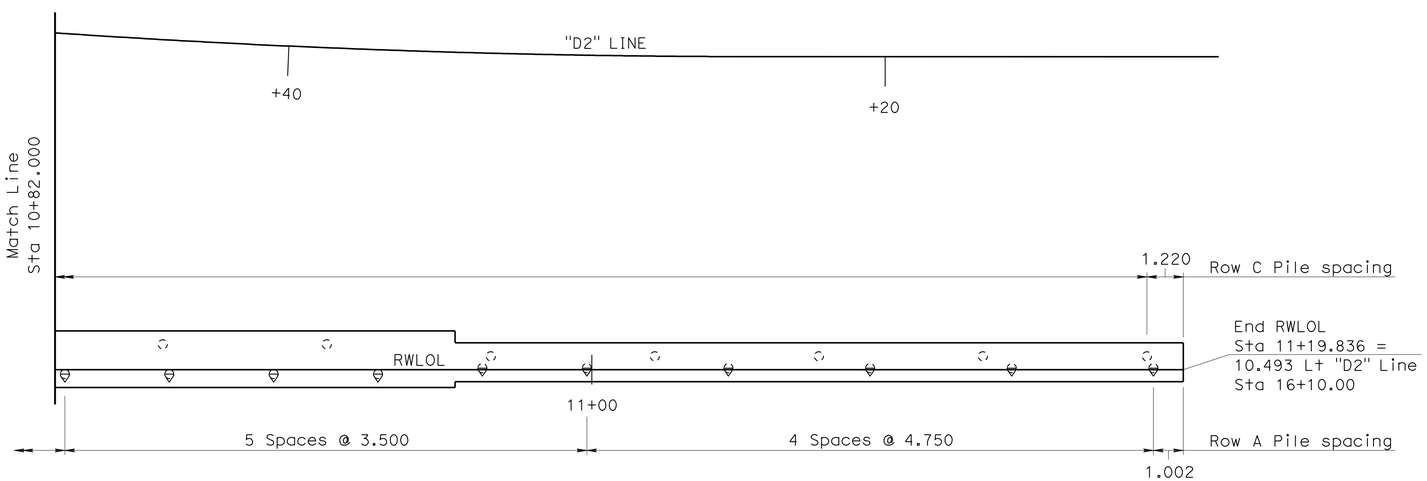

PLAN
1:100
B2-5

DESIGN	BY Junxia Wu	CHECKED D. Menzmer
DETAILS	BY Pauline Tong	CHECKED D. Menzmer
QUANTITIES	BY D. Tavatli	CHECKED K. Doll

STATE OF CALIFORNIA
DEPARTMENT OF TRANSPORTATION

DIVISION OF ENGINEERING SERVICES
STRUCTURE DESIGN
DESIGN BRANCH 11

BRIDGE NO. RW16
KILOMETER POST 3.88

RETAINING WALL 16
STRUCTURE PLAN NO. 3

ALL DIMENSIONS ARE IN METERS UNLESS OTHERWISE SHOWN

ORIGINAL SCALE IN MILLIMETERS FOR REDUCED PLANS 0 10 20 30 40 50 60 70 80 90 100

CU 07225
EA 2159C1

DISREGARD PRINTS BEARING EARLIER REVISION DATES

REVISION DATES: 12-28-08 1-3-09 5-5-09 5-29-09 6-30-09 7-02-09 12-28-09 1-7-10

SHEET 4 OF 5

FILE => 53-rw16-c-sp03.dgn

STRUCTURES DESIGN DETAIL SHEET (METRIC) (REV.03-17-04)

USERNAME => trrichf DATE PLOTTED => 22-JUN-2010 TIME PLOTTED => 17:10

DIST	COUNTY	ROUTE	KILOMETER POST TOTAL PROJECT	SHEET No	TOTAL SHEETS
07	LA	5	2.9/4.9	1078	1082

Daniel L. Texler 5/24/10
REGISTERED CIVIL ENGINEER DATE

6-21-10
PLANS APPROVAL DATE

REGISTERED PROFESSIONAL ENGINEER Daniel L.Texler No. 49792 Exp. 9-30-10 CIVIL STATE OF CALIFORNIA

The State of California or its officers or agents shall not be responsible for the accuracy or completeness of electronic copies of this plan sheet.

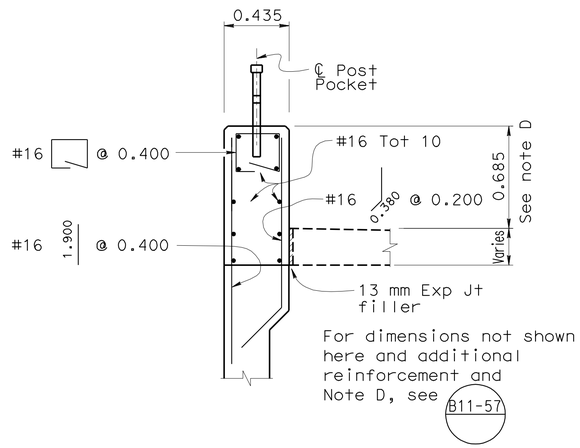

BARRIER TYPE 742A (MOD)

1:20

RWLOL Sta 10+89.356± to RWLOL Sta 11+19.836

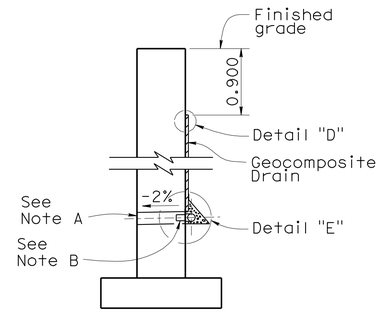

WALL SECTION

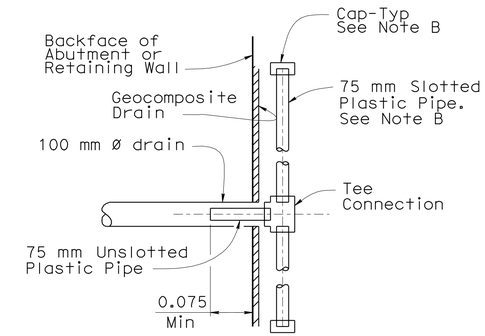

SECTION K-K

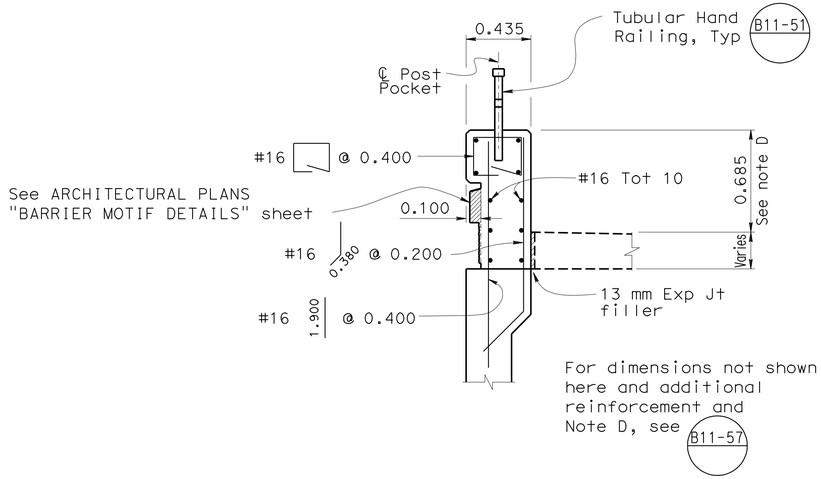

BARRIER TYPE 742A (MOD)

1:20

RWLOL Sta 10+05.315 to RWLOL Sta 10+89.356±

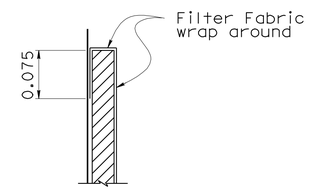

DETAIL "D"

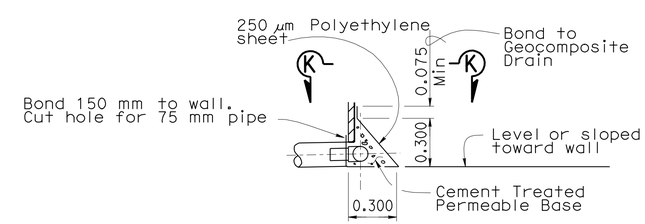

DETAIL "E"

WEEP HOLE AND GEOCOMPOSITE DRAIN

NO SCALE

Notes:

A. 100 mm ø drains at intermediate sag points and at 7.600 m center to center (2.750 m c-c for Type 3 and 2.800 m c-c for Type 4 retaining walls). For walls adjacent to sidewalks or curbs, provide 100 mm ø cast iron or asbestos cement pipe under the sidewalk to discharge through curb face. Exposed wall drains shall be located 75 mm ± above finished grade.

B. Geocomposite drain, cement treated permeable base, and 75 mm ø slotted plastic pipe continuous behind retaining wall or abutment. Cap ends of pipe. Provide "Tee" connection at each 100 mm ø drain.

C. Connect the low end of plastic pipe to the main outlet pipe as applicable.

Caltrans Metric

	BY	CHECKED
DESIGN	Junxia Wu	D. Menzmer
DETAILS	Pauline Tong	D. Menzmer
QUANTITIES	D. Tavatli	K. Doll

STATE OF CALIFORNIA
DEPARTMENT OF TRANSPORTATION

DIVISION OF ENGINEERING SERVICES
STRUCTURE DESIGN
DESIGN BRANCH 11

BRIDGE NO. RW16
KILOMETER POST 3.88

RETAINING WALL 16
RETAINING WALL DETAILS

ALL DIMENSIONS ARE IN METERS UNLESS OTHERWISE SHOWN

ORIGINAL SCALE IN MILLIMETERS FOR REDUCED PLANS 0 10 20 30 40 50 60 70 80 90 100

CU 07225
EA 2159C1

DISREGARD PRINTS BEARING EARLIER REVISION DATES

REVISION DATES: 2-1-09 3-5-09 5-6-09 5-29-09 8-31-09 12-28-09 01-05-10 01-07-10

SHEET 5 OF 5

FILE => 53-rw16-d-rwdet.dgn

STRUCTURES DESIGN DETAIL SHEET (METRIC) (REV.03-17-04)

USERNAME => trrichf DATE PLOTTED => 22-JUN-2010 TIME PLOTTED => 17:10

DIST	COUNTY	ROUTE	KILOMETER POST TOTAL PROJECT	SHEET No	TOTAL SHEETS
07	LA	5	2.9/4.9	1079	1082

Daniel L. Texler 5/24/10
REGISTERED CIVIL ENGINEER DATE

6-21-10
PLANS APPROVAL DATE

REGISTERED PROFESSIONAL ENGINEER Daniel L. Texler No. 49792 Exp. 9-30-10 CIVIL STATE OF CALIFORNIA

The State of California or its officers or agents shall not be responsible for the accuracy or completeness of electronic copies of this plan sheet.

QUANTITIES

STRUCTURE EXCAVATION (CONTAMINATED)	122	m3
STRUCTURE EXCAVATION (RETAINING WALL)	461	m3
STRUCTURE BACKFILL (RETAINING WALL)	1126	m3
FURNISH PILING (CLASS 400) (ALTERNATIVE V)	1650	m
DRIVE PILE (CLASS 400) (ALTERNATIVE V)	113	EA
STRUCTURAL CONCRETE, RETAINING WALL	409	m3
ARCHITECTURAL TREATMENT	426	m2
BAR REINFORCING STEEL (RETAINING WALL)	35 492	kg
TUBULAR HANDRAILING	131	m
CONCRETE BARRIER (TYPE 742A MOD)	131	m

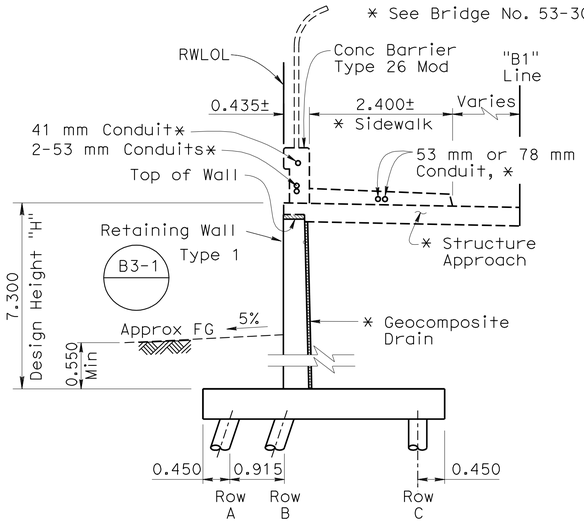

SECTION AT APPROACH SLAB

1:50

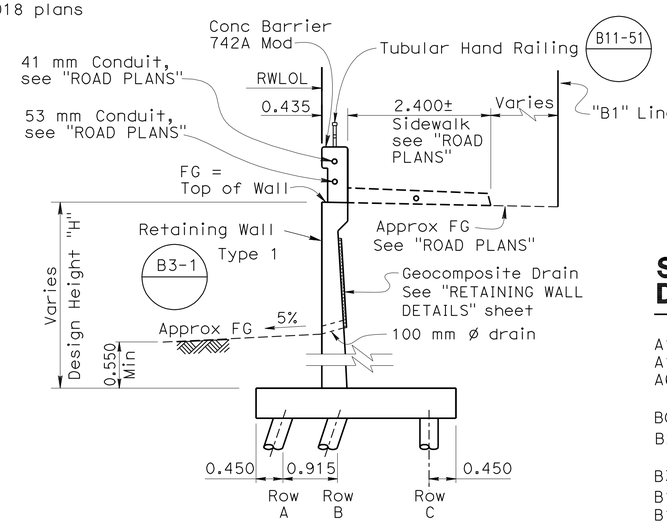

TYPICAL SECTION

1:50

STANDARD PLANS DATED JULY 2004

A10A	ACRONYMS AND ABBREVIATIONS (A-L)
A10B	ACRONYMS AND ABBREVIATIONS (M-Z)
A62B	LIMITS OF PAYMENT FOR EXCAVATION AND BACKFILL- BRIDGE SURCHARGE AND WALL
B0-3	BRIDGE DETAILS
B2-5	PILE DETAILS CLASS 400 AND CLASS 625 ALTERNATIVE "V"
B3-8	RETAINING WALL DETAILS NO. 1
B11-51	TUBULAR HAND RAILING
B11-54	CONCRETE BARRIER TYPE 26
B11-57	CONCRETE BARRIER TYPE 742

Standard Plan Sheet No.
Detail No.

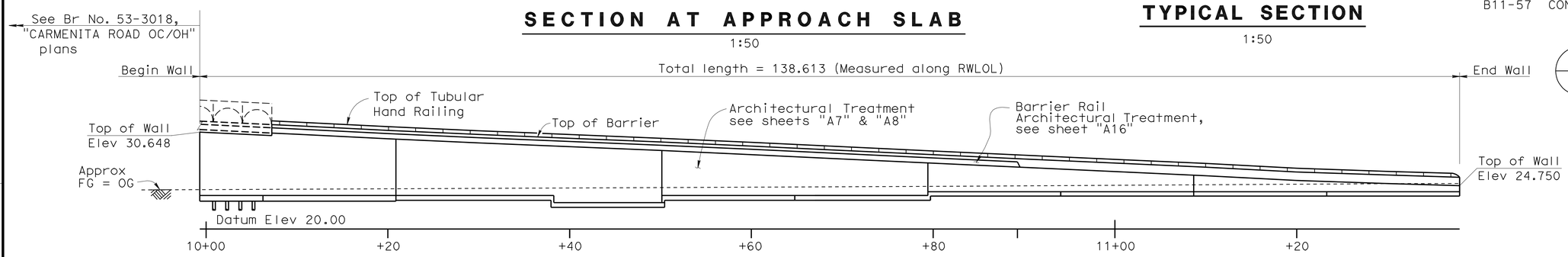

Note: Not all piles shown

MIRRORED ELEVATION

1:250

INDEX TO PLANS

Sheet No.	Title
1	GENERAL PLAN
2	STRUCTURE PLAN NO. 1
3	STRUCTURE PLAN NO. 2
4	RETAINING WALL DETAILS

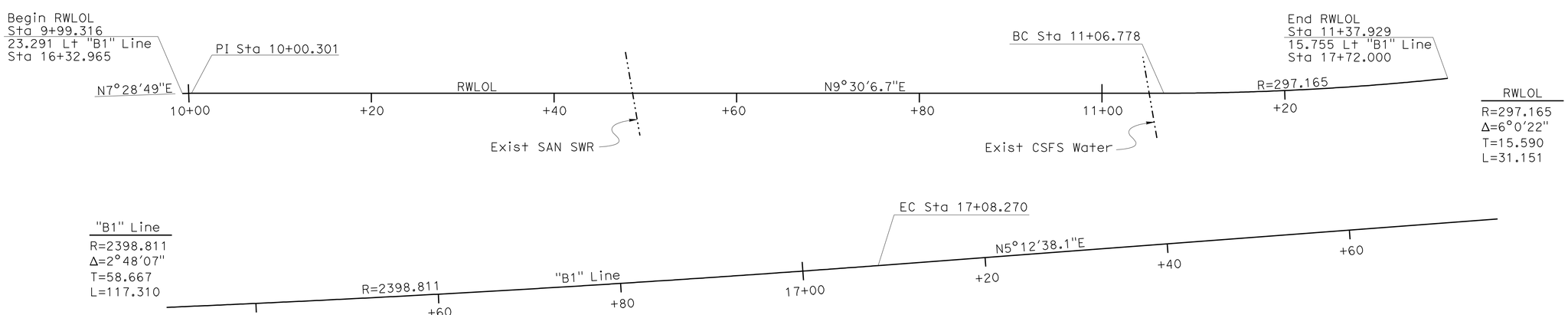

RWLOL
R=297.165
Δ=6°0'22"
T=15.590
L=31.151

PLAN

1:250

NOTE: For limits of structure excavation (contaminated), see "Road Plans."

Caltrans Metric

DESIGN ENGINEER

	BY	CHECKED
DESIGN	Junxia Wu	D. Menzmer
DETAILS	Pauline Tong	D. Menzmer
QUANTITIES	D. Tavatli	K. Doll

LOAD FACTOR DESIGN	LIVE LOADING: HS20-44 AND ALTERNATIVE AND PERMIT DESIGN LOAD		
LAYOUT	BY Junxia Wu	CHECKED U. Inyang	
SPECIFICATIONS	BY M. Pan	PLANS AND SPECS COMPARED	

STATE OF CALIFORNIA
DEPARTMENT OF TRANSPORTATION

DIVISION OF ENGINEERING SERVICES
STRUCTURE DESIGN
DESIGN BRANCH 11

BRIDGE NO. RW17
KILOMETER POST 3.88

RETAINING WALL 17
GENERAL PLAN

ALL DIMENSIONS ARE IN METERS UNLESS OTHERWISE SHOWN

ORIGINAL SCALE IN MILLIMETERS FOR REDUCED PLANS 0 10 20 30 40 50 60 70 80 90 100

CU 07225
EA 2159C1

DISREGARD PRINTS BEARING EARLIER REVISION DATES

REVISION DATES: 12-8-08 1/12/10 2-10-09 5-1-09 5-29-09 6-30-09 7-02-09 12-30-09 1-7-10

SHEET 1 OF 4

FILE => 53-rw17-a-gp.dgn

STRUCTURES DESIGN GENERAL PLAN SHEET (METRIC) (REV.03-17-04)

USERNAME => trmikest DATE PLOTTED => 24-JUN-2010 TIME PLOTTED => 13:52

DIST	COUNTY	ROUTE	KILOMETER POST TOTAL PROJECT	SHEET No	TOTAL SHEETS
07	LA	5	2.9/4.9	1080	1082

Daniel L. Texler 01-26-10
REGISTERED CIVIL ENGINEER DATE

6-21-10
PLANS APPROVAL DATE

REGISTERED PROFESSIONAL ENGINEER Daniel L Texler No. 49792 Exp. 9-30-08 CIVIL STATE OF CALIFORNIA

The State of California or its officers or agents shall not be responsible for the accuracy or completeness of electronic copies of this plan sheet.

LEGEND:

Indicates Vertical Piles

Indicates Battered 1:3 Piles

NOTES:

Piles are Class 400, Alternative "V" closed-end with 60° conical tip (B2-5)

Pile Tip shall be 14.0 m below bottom of wall footings

Pile spacing measured along RWLOL

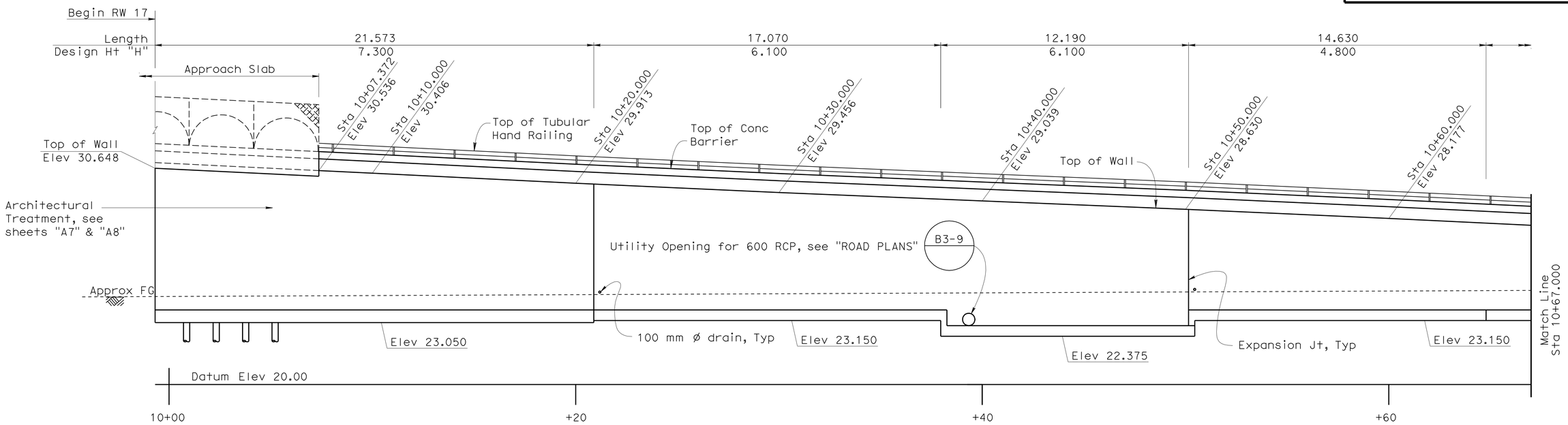

Note: Not all piles shown

MIRRORED ELEVATION (B0-3)
1:100

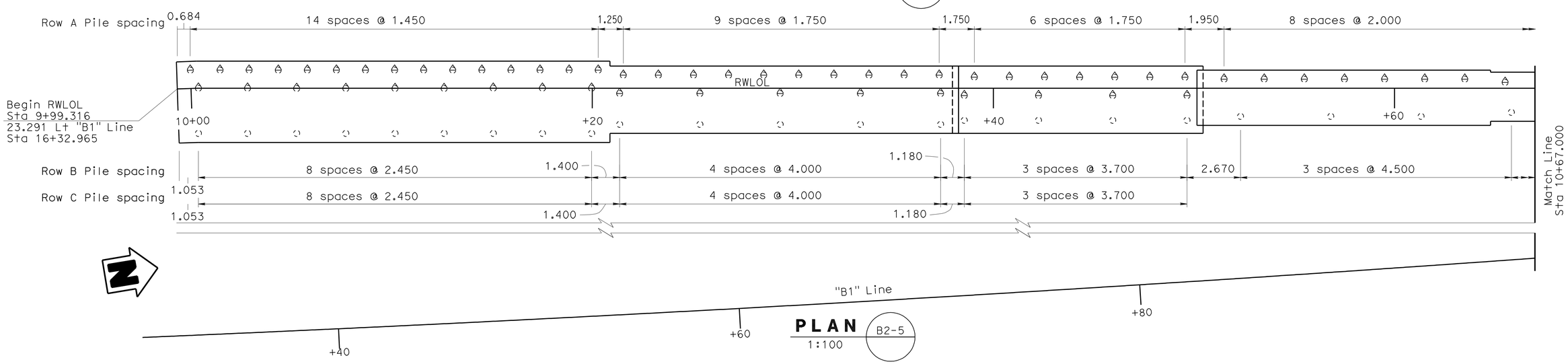

PLAN (B2-5)
1:100

DESIGN	BY Haitao Liu	CHECKED D. Menzmer	
DETAILS	BY Pauline Tong	CHECKED D. Menzmer	
QUANTITIES	BY D. Tavatli	CHECKED K. Doll	

STATE OF CALIFORNIA
DEPARTMENT OF TRANSPORTATION

DIVISION OF ENGINEERING SERVICES
STRUCTURE DESIGN
DESIGN BRANCH 11

BRIDGE NO. RW17
KILOMETER POST 3.88

RETAINING WALL 17
STRUCTURE PLAN NO. 1

ALL DIMENSIONS ARE IN METERS UNLESS OTHERWISE SHOWN

ORIGINAL SCALE IN MILLIMETERS FOR REDUCED PLANS 0 10 20 30 40 50 60 70 80 90 100

CU 07225
EA 2159C1

DISREGARD PRINTS BEARING EARLIER REVISION DATES

REVISION DATES: 10-8-08 12-15-08 12-17-08 5-4-09 5-28-09 7-02-09 12-30-09 1-7-10

SHEET 2 OF 4

FILE => 53-rw17-b-sp01.dgn

STRUCTURES DESIGN DETAIL SHEET (METRIC) (REV.03-17-04)

USERNAME => trrichf DATE PLOTTED => 22-JUN-2010 TIME PLOTTED => 17:10

DIST	COUNTY	ROUTE	KILOMETER POST TOTAL PROJECT	SHEET No	TOTAL SHEETS
07	LA	5	2.9/4.9	1081	1082

Daniel L. Texler 01-26-10
REGISTERED CIVIL ENGINEER DATE

6-21-10
PLANS APPROVAL DATE

REGISTERED PROFESSIONAL ENGINEER
Daniel L Texler
No. 49792
Exp. 9-30-08
CIVIL
STATE OF CALIFORNIA

The State of California or its officers or agents shall not be responsible for the accuracy or completeness of electronic copies of this plan sheet.

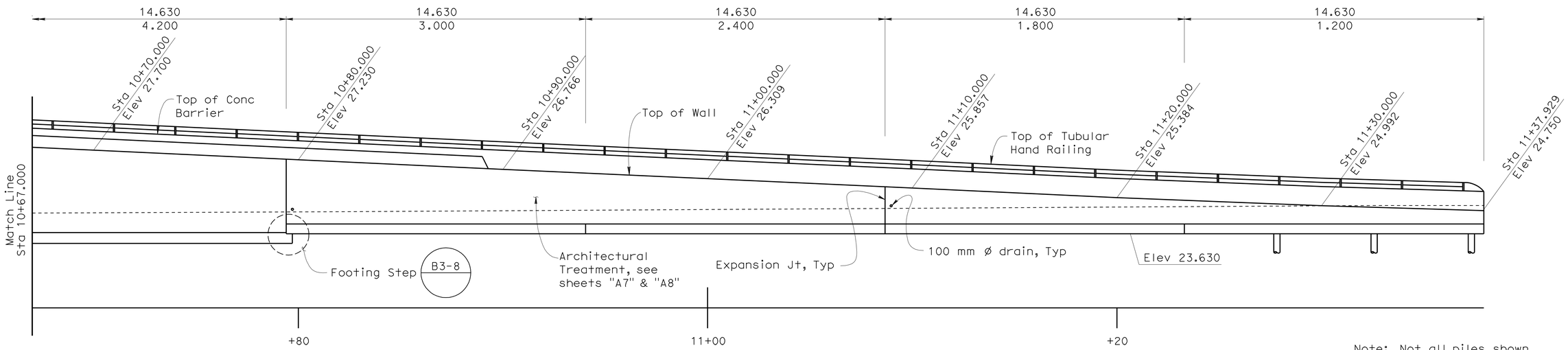

Note: Not all piles shown

MIRRORED ELEVATION B0-3
1:100

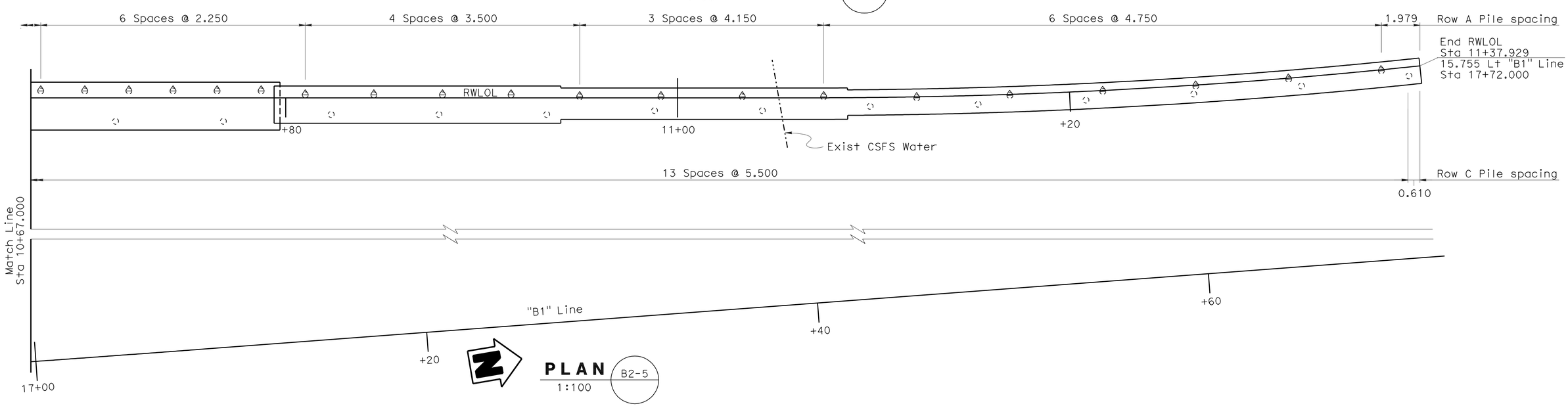

PLAN B2-5
1:100

DESIGN	BY Haitao Liu	CHECKED D. Menzmer	
DETAILS	BY Pauline Tong	CHECKED D. Menzmer	
QUANTITIES	BY D. Tavatli	CHECKED K. Doll	

STATE OF CALIFORNIA
DEPARTMENT OF TRANSPORTATION

DIVISION OF ENGINEERING SERVICES
STRUCTURE DESIGN
DESIGN BRANCH 11

BRIDGE NO. RW17
KILOMETER POST 3.88

RETAINING WALL 17
STRUCTURE PLAN NO. 2

ALL DIMENSIONS ARE IN METERS UNLESS OTHERWISE SHOWN

ORIGINAL SCALE IN MILLIMETERS FOR REDUCED PLANS 0 10 20 30 40 50 60 70 80 90 100

CU 07225
EA 2159C1

DISREGARD PRINTS BEARING EARLIER REVISION DATES

REVISION DATES: 10-8-08, 12-15-08, 5-4-09, 5-29-09, 6-30-09, 7-02-09, 12-30-09, 1-7-10

SHEET 3 OF 4

FILE => 53-rw17-b-sp02.dgn

STRUCTURES DESIGN DETAIL SHEET (METRIC) (REV.03-17-04)

USERNAME => trright DATE PLOTTED => 22-JUN-2010 TIME PLOTTED => 17:10

DIST	COUNTY	ROUTE	KILOMETER POST TOTAL PROJECT	SHEET No	TOTAL SHEETS
07	LA	5	2.9/4.9	1082	1082

Daniel L. Texler 5/24/10
REGISTERED CIVIL ENGINEER DATE

6-21-10
PLANS APPROVAL DATE

REGISTERED PROFESSIONAL ENGINEER Daniel L.Texler No. 49792 Exp. 9-30-10 CIVIL STATE OF CALIFORNIA

The State of California or its officers or agents shall not be responsible for the accuracy or completeness of electronic copies of this plan sheet.

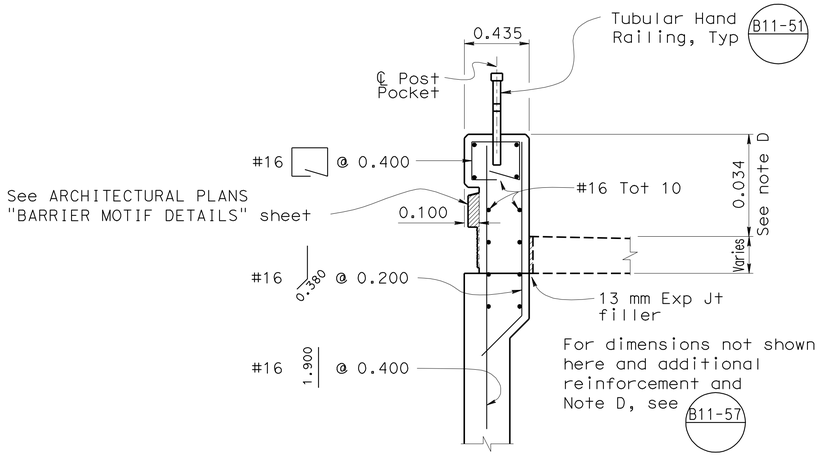

RWLOL Sta 10+07.372 to RWLOL Sta 10+89.277±

BARRIER TYPE 742A (MOD)

1:20

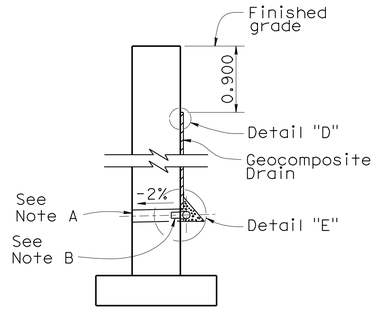

WALL SECTION

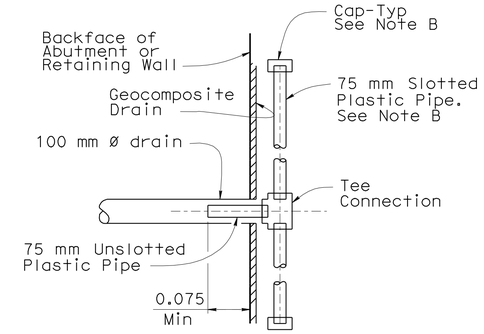

SECTION K-K

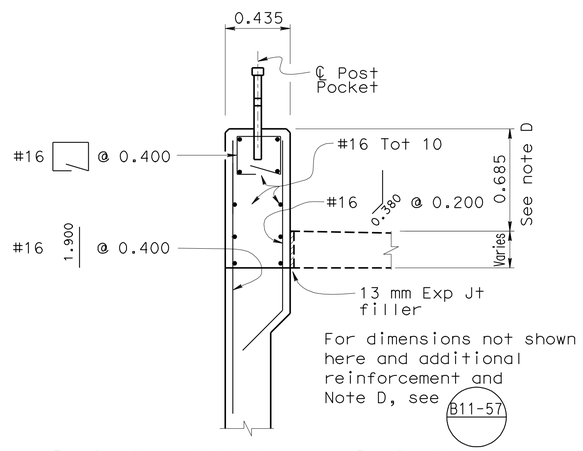

RWLOL Sta 10+89.277± to RWLOL Sta 11+37.929

BARRIER TYPE 742A (MOD)

1:20

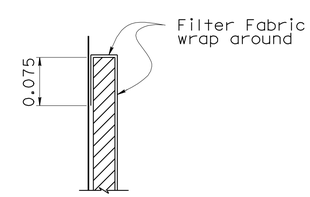

DETAIL "D"

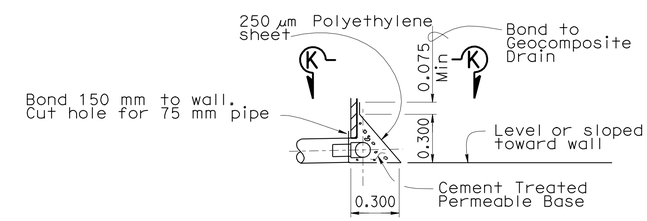

DETAIL "E"

WEEP HOLE AND GEOCOMPOSITE DRAIN

NO SCALE

Notes:

A. 100 mm Ø drains at intermediate sag points and at 7.600 m center to center (2.750 m c-c for Type 3 and 2.800 m c-c for Type 4 retaining walls). For walls adjacent to sidewalks or curbs, provide 100 mm Ø cast iron or asbestos cement pipe under the sidewalk to discharge through curb face. Exposed wall drains shall be located 75 mm ± above finished grade.

B. Geocomposite drain, cement treated permeable base, and 75 mm Ø slotted plastic pipe continuous behind retaining wall or abutment. Cap ends of pipe. Provide "Tee" connection at each 100 mm Ø drain.

C. Connect the low end of plastic pipe to the main outlet pipe as applicable.

Caltrans Metric

	BY	CHECKED
DESIGN	Junxia Wu	D. Menzmer
DETAILS	Pauline Tong	D. Menzmer
QUANTITIES	D. Tavatli	K. Doll

STATE OF CALIFORNIA DEPARTMENT OF TRANSPORTATION

DIVISION OF ENGINEERING SERVICES STRUCTURE DESIGN
DESIGN BRANCH 11

BRIDGE NO. RW17
KILOMETER POST 3.88

RETAINING WALL 17
RETAINING WALL DETAILS

ALL DIMENSIONS ARE IN METERS UNLESS OTHERWISE SHOWN

ORIGINAL SCALE IN MILLIMETERS FOR REDUCED PLANS 0 10 20 30 40 50 60 70 80 90 100

CU 07225
EA 2159C1

DISREGARD PRINTS BEARING EARLIER REVISION DATES

REVISION DATES: 2-10-09 | 5-1-09 | 6-1-09 | 6/8/09 | 6/22/09 | 8/3/09 | 12/30/09 | 01/05/10 | 1-7-10

SHEET 4 OF 4

FILE => 53-rw17-c-rwdet.dgn

STRUCTURES DESIGN DETAIL SHEET (METRIC) (REV.03-17-04)

USERNAME => trrichf DATE PLOTTED => 22-JUN-2010 TIME PLOTTED => 17:11