Dist	COUNTY	ROUTE	KILOMETER POST TOTAL PROJECT	SHEET No.	TOTAL SHEETS
07	LA	5	2.9/4.9	701	1082

REGISTERED ELECTRICAL ENGINEER 12/23/09

PLANS APPROVAL DATE 6-21-10

REGISTERED PROFESSIONAL ENGINEER CECILIO BURCIAGA No. E015302 Exp. 3-31-11 ELECT STATE OF CALIFORNIA

THE STATE OF CALIFORNIA OR ITS OFFICERS OR AGENTS SHALL NOT BE RESPONSIBLE FOR THE ACCURACY OR COMPLETENESS OF ELECTRONIC COPIES OF THIS PLAN SHEET.

Caltrans Metric

POLE AND EQUIPMENT SCHEDULE

STANDARD No.	Type	SMA	LMA	VEH SIG MTG Mast Arm	VEH SIG MTG Pole	PED SIGNAL MTG	PPB Ø	PPB ARROW	HPS LUMINAIRE	IISNS	VIDEO DETECTION SYSTEM
A	61A-5-161 **	18.2	4.6	2-MAS	SV-1-T SV-2-TA	-	-	-	310 W	← I-5 SOUTH	INSTALL ***
B	24A-3-161 **	10.7	4.6	1-MAS	SV-1-T	SP-1-T	2	→	310 W	Carmenita Rd	INSTALL ***
C	15TS *	-	4.6	-	SV-1-T	-	2	-	310 W	-	-
D	1-A *	-	-	-	TV-2-T	SP-1-T	-	←	-	-	-
E	61A-5-161 **	18.2	4.6	2-MAS	SV-1-T SV-1-T	SP-1-T	-	-	310 W	I-5 SOUTH →	INSTALL ***
F	15TS *	-		-	SV-1-T	-	6	→		-	-
G	15TS *	-	4.6	-	SV-1-T	-	6	←	310 W	-	-
H	1-A *	-	-	-	TV-1-T	SP-1-T	-	-	-	-	-

*** FOR VIVDS INSTALLATION DETAIL SEE SHEET SES-1
** INSTALL ON CONCRETE BARRIER, SEE STRUCTURE SHEET SD-69 FOR FOUNDATION DETAILS
* INSTALL ON CONCRETE BARRIER

GENERAL NOTE: (THIS SHEET)

ALL INDUCTIVE LOOP DETECTORS SHALL BE PRE-FORMED.

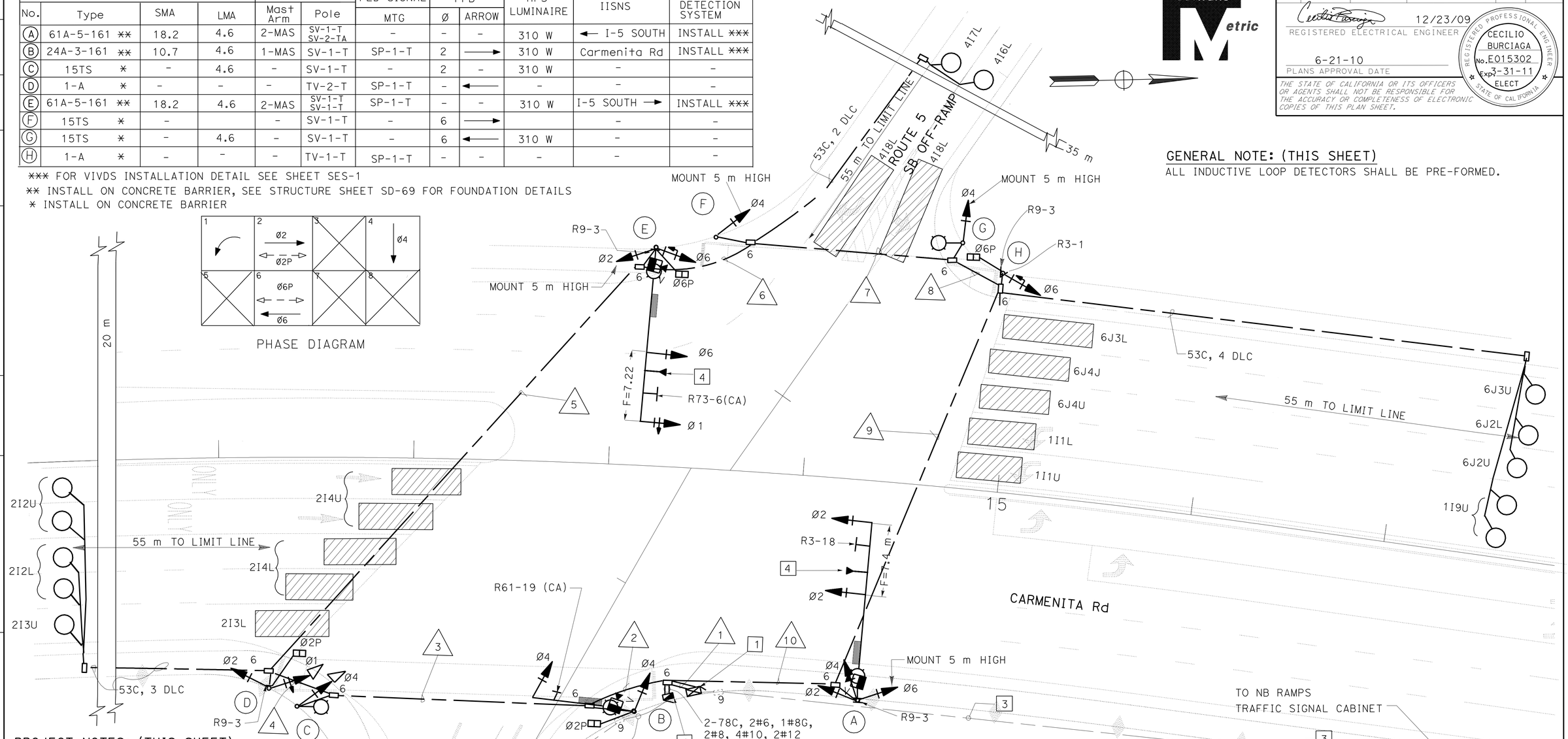

PROJECT NOTES: (THIS SHEET)

1. INSTALL STATE-FURNISHED MODEL 2070 CONTROLLER UNIT WITH MODEL 2070 6B MODEM WITH TYPE 332 CABINET. INSTALL BATTERY BACKUP SYSTEM BATTERIES AND CABINET. BATTERY BACKUP SYSTEM COMPONENTS ARE STATE-FURNISHED. INSTALL VIDEO DETECTION CONTROLLER AND EQUIPMENT IN CABINET.
2. 120/240 V UNMETERED TYPE III-BF SERVICE EQUIPMENT ENCLOSURE WITH:

   100 A, 240 V, 2P, CB - MAIN
   50 A, 120 V, 1P, CB - SIGNAL
   30 A, 120 V, 1P, CB - LIGHTING
   20 A, 120 V, 1P, CB - IISNS

   CTID No. 07-53-005-003.901 ADDRESS: 15121 ½ CARMENITA Rd
3. 53C, 6 PR#19 SIC (FOR REFERENCE ONLY, SEE SHEET E-44 FOR INSTALLATION DETAILS).
4. INSTALL STATE-FURNISHED EMERGENCY VEHICLE DETECTOR UNIT.

FOR LEGEND AND ABBREVIATIONS SEE SHEET E-1
THIS PLAN IS ACCURATE FOR ELECTRICAL WORK ONLY.

CONDUIT AND CONDUCTOR SCHEDULE

AWG OR CABLE	CIRCUIT	CONDUIT RUN NUMBER AND SIZE 1	2	3	4	5	6	7	8	9	10
28CSC	C1	1	1	1	1	1	1	1	1	1	1
	C2	1	1	1	1	1	1	1	1	1	1
#10	IISNS		2	2	2	2					2
#8	LUMINAIRE		2	2	2	2			2	2	2
#6	SERVICE	2									
#8	EGC	1	1	1	1	1	1	1	1	1	1
DLC	Ø1 DETECTORS	1								1	1
	Ø2 DETECTORS	3	3	3	3						
	Ø4 DETECTORS	2						2	2	2	2
	Ø6 DETECTORS	3								3	3
	TOTAL DLC	9	3	3	3			2	2	5	6
EVD		2	1	1	1	1					1
VIDEO DETECTOR CABLE		3	2	1	1	1					1
CONDUIT SIZE		2-78	78	78	78	78	78	78	78	78	78

ALL DIMENSIONS ARE IN METERS UNLESS OTHERWISE SHOWN

SIGNAL AND LIGHTING (LOCATION 4)

SCALE 1:200

E-38

LAST REVISION 06-02-10 | DATE PLOTTED => 22-JUN-2010 | TIME PLOTTED => 17:27

STATE OF CALIFORNIA - DEPARTMENT OF TRANSPORTATION
Caltrans
TRAFFIC DESIGN

FUNCTIONAL SUPERVISOR: YI TSAU
CALCULATED-DESIGNED BY: LUKE SUN
CHECKED BY: CECILIO BURCIAGA
REVISED BY | DATE REVISED

Dist	COUNTY	ROUTE	KILOMETER POST TOTAL PROJECT	SHEET No.	TOTAL SHEETS
07	LA	5	2.9/4.9	702	1082

REGISTERED ELECTRICAL ENGINEER 12/23/09

PLANS APPROVAL DATE 6-21-10

REGISTERED PROFESSIONAL ENGINEER CECILIO BURCIAGA No. E015302 Exp. 3-31-11 ELECT STATE OF CALIFORNIA

THE STATE OF CALIFORNIA OR ITS OFFICERS OR AGENTS SHALL NOT BE RESPONSIBLE FOR THE ACCURACY OR COMPLETENESS OF ELECTRONIC COPIES OF THIS PLAN SHEET.

Caltrans Metric

NOTE:

FOR COMPLETE RIGHT OF WAY AND ACCURATE ACCESS DATA, SEE RIGHT OF WAY RECORD MAPS AT DISTRICT OFFICE.

PROJECT NOTES: (THIS SHEET)

1. INSTALL STATE-FURNISHED MODEL 2070 CONTROLLER UNIT WITH 2070 6B MODEM, MODEL 170E CONTROLLER UNIT WITH INTERNAL MODEL 496 MODEM WITH TYPE 332 CABINET. INSTALL CTNET SIGNAL INTERCONNECT EQUIPMENT AND CTNET FIXED WIRELESS COMMUNICATIONS EQUIPMENT ASSEMBLY IN CABINET. (FOR INSTALLATION OF TRAFFIC SIGNAL INTERCONNECT AND WIRELESS DATA SERVICE EQUIPMENT DETAILS SEE E-62) INSTALL BATTERY BACKUP SYSTEM BATTERIES AND CABINET. BATTERY BACKUP SYSTEM COMPONENTS ARE STATE-FURNISHED. INSTALL VIDEO DETECTION CONTROLLER AND EQUIPMENT IN CABINET.
2. 120/240 V UNMETERED TYPE III-BF SERVICE EQUIPMENT ENCLOSURE WITH:

100 A, 240 V, 2P, CB - MAIN
50 A, 120 V, 1P, CB - SIGNAL
30 A, 120 V, 1P, CB - LIGHTING
20 A, 120 V, 1P, CB - IISNS

CTID No. 07-53-005-003.911 ADDRESS: 15111½ CARMENITA Rd

3. 53C, 6PR#19 SIC (FOR REFERENCE ONLY, SEE SHEET E-44 FOR INSTALLATION DETAILS).
4. INSTALL STATE-FURNISHED EMERGENCY VEHICLE DETECTOR UNIT.

GENERAL NOTE: (THIS SHEET)

ALL INDUCTIVE LOOP DETECTORS SHALL BE PRE-FORMED.

POLE AND EQUIPMENT SCHEDULE

STANDARD				VEH SIG MTG		PED SIGNAL	PPB		HPS LUMINAIRE	IISNS	VIDEO DETECTION SYSTEM
No.	Type	SMA	LMA	Mast Arm	Pole	MTG	Ø	ARROW			
(I)	61A-5-161 **	19.8	4.6	2-MAS	SV-1-T	SP-1-T	2	→	310 W	-	INSTALL ***
(J)	15TS *	-	4.6	-	SV-1-T	-	-	-	310 W	-	-
(K)	15TS *	-	4.6	-	SV-1-T	-	-	-	310 W	-	-
(L)	1-A *	-	-	-	SV-1-T	SP-1-T	2	←	-	-	-
(M)	29A-5-161 **	16.8	4.6	2-MAS	SV-1-T SV-2-TA	-	-	-	310 W	I-5 NORTH →	INSTALL ***
(N)	1-A *	-	-	-	TV-1-T	SP-1-T	6	→	-	-	-
(O)	29A-5-161 **	15.2	4.6	1-MAS	SV-1-T	-	-	-	310 W	Carmenita Rd	INSTALL ***
(P)	1-A *	-	-	-	TV-2-T	SP-1-T	6	←	-	-	-

*** FOR VIVDS INSTALLATION DETAIL SEE SHEET SES-1
** INSTALL ON CONCRETE BARRIER, SEE STRUCTURE SHEET SD-69 FOR FOUNDATION DETAILS
* INSTALL ON CONCRETE BARRIER

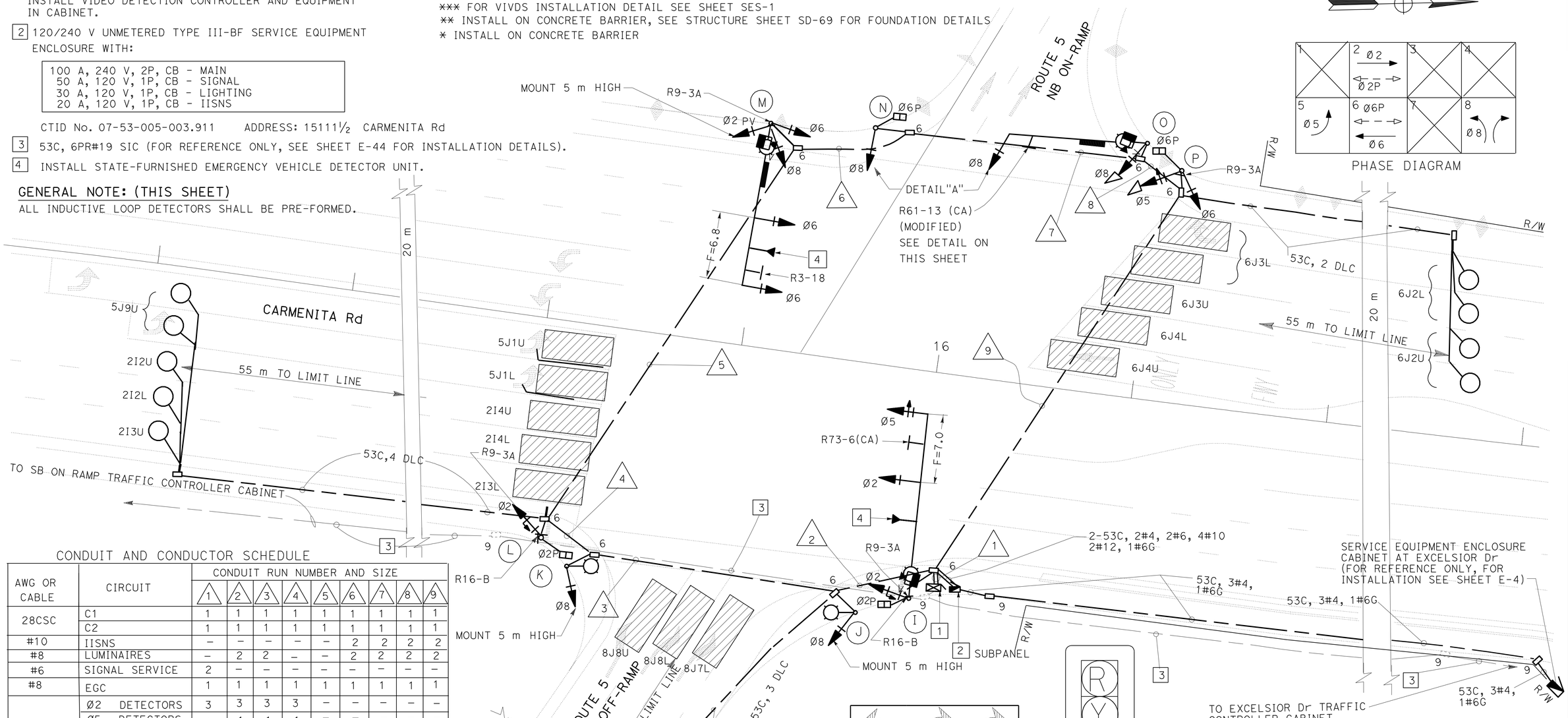

CONDUIT AND CONDUCTOR SCHEDULE

AWG OR CABLE	CIRCUIT	CONDUIT RUN NUMBER AND SIZE								
		1	2	3	4	5	6	7	8	9
28CSC	C1	1	1	1	1	1	1	1	1	1
	C2	1	1	1	1	1	1	1	1	1
#10	IISNS	–	–	–	–	–	2	2	2	2
#8	LUMINAIRES	–	2	2	–	–	2	2	2	2
#6	SIGNAL SERVICE	2	–	–	–	–	–	–	–	–
#8	EGC	1	1	1	1	1	1	1	1	1
DLC	Ø2 DETECTORS	3	3	3	3	–	–	–	–	–
	Ø5 DETECTORS	1	1	1	1	–	–	–	–	–
	Ø6 DETECTORS	2	–	–	–	–	–	–	–	2
	Ø8 DETECTORS	3	3	–	–	–	–	–	–	–
	TOTAL	9	7	4	4	–	–	–	–	2
EVD		2	–	–	–	–	1	1	1	1
VIDEO DETECTOR CABLE		3	–	–	–	–	1	1	2	2
CONDUIT SIZE		2-78	78	78	78	78	78	78	78	78

ALL DIMENSIONS ARE IN METERS UNLESS OTHERWISE SHOWN

SIGNAL AND LIGHTING (LOCATION 5)

SCALE 1:200

E-39

FOR LEGEND AND ABBREVIATIONS SEE SHEET E-1
THIS PLAN IS ACCURATE FOR ELECTRICAL WORK ONLY.

STATE OF CALIFORNIA - DEPARTMENT OF TRANSPORTATION
Caltrans TRAFFIC DESIGN
FUNCTIONAL SUPERVISOR YI TSAU
CALCULATED-DESIGNED BY LUKE SUN
CHECKED BY CECILIO BURCIAGA
REVISED BY DATE REVISED

LAST REVISION 06-02-10 DATE PLOTTED => 22-JUN-2010 TIME PLOTTED => 17:53

Dist	COUNTY	ROUTE	KILOMETER POST TOTAL PROJECT	SHEET No.	TOTAL SHEETS
07	LA	5	2.9/4.9	703	1082

REGISTERED ELECTRICAL ENGINEER 12/23/09

PLANS APPROVAL DATE 6-21-10

REGISTERED PROFESSIONAL ENGINEER CECILIO BURCIAGA No. E015302 Exp. 3-31-11 ELECT STATE OF CALIFORNIA

THE STATE OF CALIFORNIA OR ITS OFFICERS OR AGENTS SHALL NOT BE RESPONSIBLE FOR THE ACCURACY OR COMPLETENESS OF ELECTRONIC COPIES OF THIS PLAN SHEET.

Caltrans Metric

NOTE:

FOR COMPLETE RIGHT OF WAY AND ACCURATE ACCESS DATA, SEE RIGHT OF WAY RECORD MAPS AT DISTRICT OFFICE.

POLE AND EQUIPMENT SCHEDULE

No.	STANDARD Type	SMA	LMA	VEH SIG MTG Mast Arm	Pole	PED SIGNAL MTG	PPB Ø	ARROW	HPS LUMINAIRE	IISNS	VIVDS ***
A	29A-5-161	16.8	4.6	2-MAS	SV-1-T	SP-2-T	8	←	400 W	EXCELSIOR Dr →	INSTALL
B	1-A	-	-	-	TV-1-T	-	2	←	-	-	-
C	PPB POST	-	-	-	-	-	2	→	-	-	-
D	15TS	-	4.6	-	SV-2-TA	SP-1-T	-	-	400 W	-	-
E	61A-5-161	19.8	4.6	3-MAS	SV-2-TA	-	-	-	400 W	← EXCELSIOR Dr	INSTALL
F	19A-3-161	9.1	4.6	MAS	SV-3-TA	SP-1-T	8	→	400 W	CARMENITA Rd	INSTALL

*** FOR VIVDS INSTALLATION DETAIL SEE SHEET SES-1

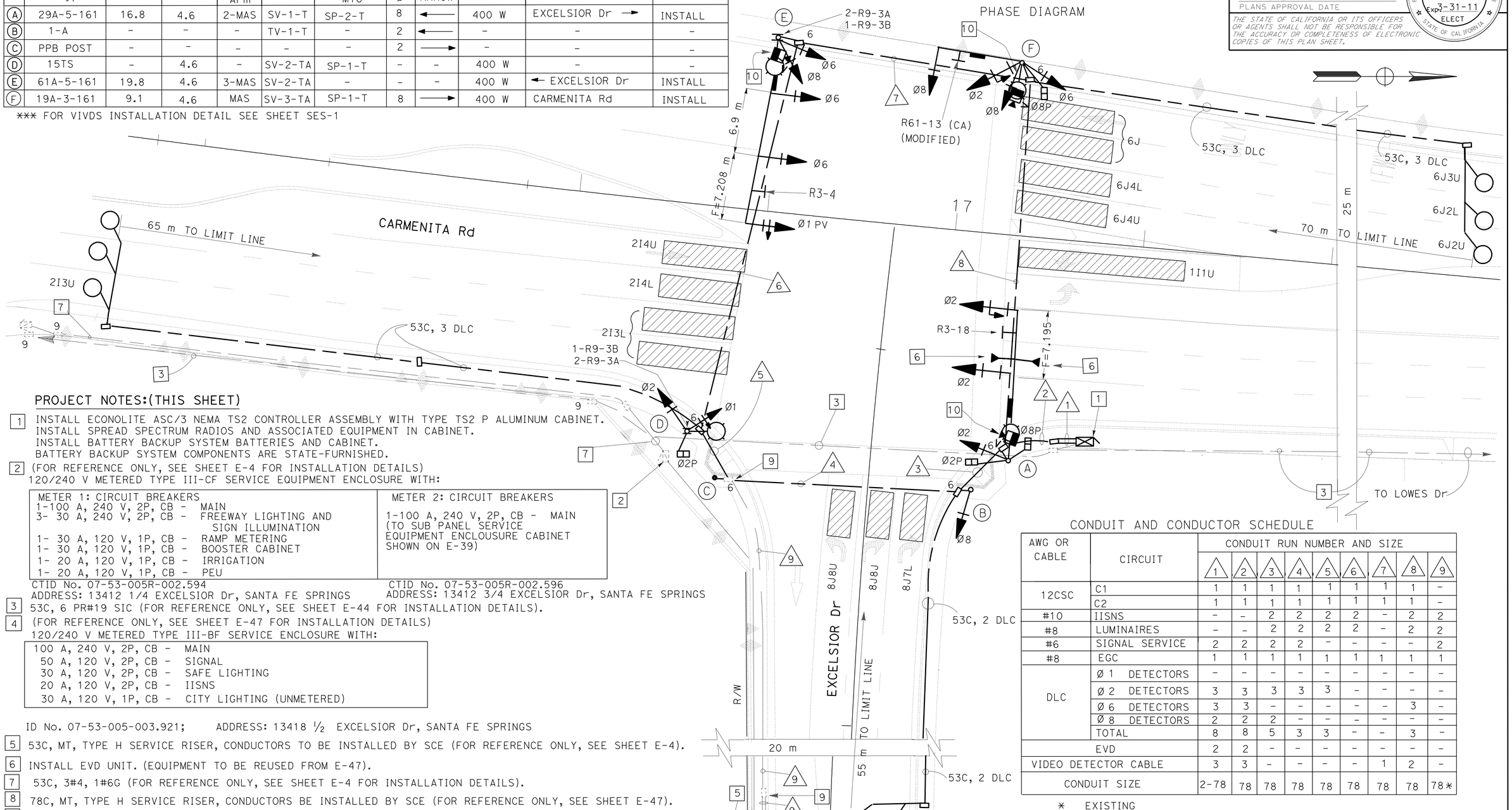

PROJECT NOTES:(THIS SHEET)

1 INSTALL ECONOLITE ASC/3 NEMA TS2 CONTROLLER ASSEMBLY WITH TYPE TS2 P ALUMINUM CABINET.
INSTALL SPREAD SPECTRUM RADIOS AND ASSOCIATED EQUIPMENT IN CABINET.
INSTALL BATTERY BACKUP SYSTEM BATTERIES AND CABINET.
BATTERY BACKUP SYSTEM COMPONENTS ARE STATE-FURNISHED.

2 (FOR REFERENCE ONLY, SEE SHEET E-4 FOR INSTALLATION DETAILS)
120/240 V METERED TYPE III-CF SERVICE EQUIPMENT ENCLOSURE WITH:

METER 1: CIRCUIT BREAKERS	METER 2: CIRCUIT BREAKERS
1-100 A, 240 V, 2P, CB - MAIN 3- 30 A, 240 V, 2P, CB - FREEWAY LIGHTING AND SIGN ILLUMINATION 1- 30 A, 120 V, 1P, CB - RAMP METERING 1- 30 A, 120 V, 1P, CB - BOOSTER CABINET 1- 20 A, 120 V, 1P, CB - IRRIGATION 1- 20 A, 120 V, 1P, CB - PEU	1-100 A, 240 V, 2P, CB - MAIN (TO SUB PANEL SERVICE EQUIPMENT ENCLOUSURE CABINET SHOWN ON E-39)
CTID No. 07-53-005R-002.594 ADDRESS: 13412 1/4 EXCELSIOR Dr, SANTA FE SPRINGS	CTID No. 07-53-005R-002.596 ADDRESS: 13412 3/4 EXCELSIOR Dr, SANTA FE SPRINGS

3 53C, 6 PR#19 SIC (FOR REFERENCE ONLY, SEE SHEET E-44 FOR INSTALLATION DETAILS).

4 (FOR REFERENCE ONLY, SEE SHEET E-47 FOR INSTALLATION DETAILS)
120/240 V METERED TYPE III-BF SERVICE ENCLOSURE WITH:

100 A, 240 V, 2P, CB -	MAIN
50 A, 120 V, 2P, CB -	SIGNAL
30 A, 120 V, 2P, CB -	SAFE LIGHTING
20 A, 120 V, 2P, CB -	IISNS
30 A, 120 V, 1P, CB -	CITY LIGHTING (UNMETERED)

ID No. 07-53-005-003.921; ADDRESS: 13418 ½ EXCELSIOR Dr, SANTA FE SPRINGS

5 53C, MT, TYPE H SERVICE RISER, CONDUCTORS TO BE INSTALLED BY SCE (FOR REFERENCE ONLY, SEE SHEET E-4).

6 INSTALL EVD UNIT. (EQUIPMENT TO BE REUSED FROM E-47).

7 53C, 3#4, 1#6G (FOR REFERENCE ONLY, SEE SHEET E-4 FOR INSTALLATION DETAILS).

8 78C, MT, TYPE H SERVICE RISER, CONDUCTORS BE INSTALLED BY SCE (FOR REFERENCE ONLY, SEE SHEET E-47).

9 PULL BOX (FOR REFERENCE ONLY, SEE SHEET E-47 FOR INSTALLATION DETAILS).

10 REUSE VIVDS CAMERA FROM STAGE 2 PHASE 2.

GENERAL NOTES: (FOR SHEET E-40 TO E-50)

1. PULL BOX SHALL BE CONFORMED WITH THE DETAIL SHOWN ON SHEET E-61.
2. THIS PERMANENT TRAFFIC SIGNAL SYSTEM SHALL BE INSTALLED AND FUNCTIONING BEFORE START OF STAGE 3 PHASE 3.

CONDUIT AND CONDUCTOR SCHEDULE

AWG OR CABLE	CIRCUIT	CONDUIT RUN NUMBER AND SIZE 1	2	3	4	5	6	7	8	9
12CSC	C1	1	1	1	1	1	1	1	1	-
	C2	1	1	1	1	1	1	1	1	-
#10	IISNS	-	-	2	2	2	2	-	2	2
#8	LUMINAIRES	-	-	2	2	2	2	-	2	2
#6	SIGNAL SERVICE	2	2	2	2	-	-	-	-	2
#8	EGC	1	1	1	1	1	1	1	1	1
DLC	Ø 1 DETECTORS	-	-	-	-	-	-	-	-	-
	Ø 2 DETECTORS	3	3	3	3	3	-	-	-	-
	Ø 6 DETECTORS	3	3	-	-	-	-	-	3	-
	Ø 8 DETECTORS	2	2	2	-	-	-	-	-	-
	TOTAL	8	8	5	3	3	-	-	3	-
EVD		2	2	-	-	-	-	-	-	-
VIDEO DETECTOR CABLE		3	3	-	-	-	-	1	2	-
CONDUIT SIZE		2-78	78	78	78	78	78	78	78	78*

* EXISTING

ALL DIMENSIONS ARE IN METERS UNLESS OTHERWISE SHOWN

SIGNAL AND LIGHTING (CITY STREET LOCATION 6)

SCALE 1:200

E-40

FOR LEGEND AND ABBREVIATIONS SEE SHEET E-1
THIS PLAN IS ACCURATE FOR ELECTRICAL WORK ONLY.

STATE OF CALIFORNIA - DEPARTMENT OF TRANSPORTATION
Caltrans
TRAFFIC DESIGN
FUNCTIONAL SUPERVISOR YI TSAU
CALCULATED-DESIGNED BY LUKE SUN
CHECKED BY CECILIO BURCIAGA
REVISED BY DATE REVISED

LAST REVISION 06-02-10 DATE PLOTTED => 22-JUN-2010 TIME PLOTTED => 17:15

Dist	COUNTY	ROUTE	KILOMETER POST TOTAL PROJECT	SHEET No.	TOTAL SHEETS
07	LA	5	2.9/4.9	704	1082

REGISTERED ELECTRICAL ENGINEER 12/23/09

6-21-10
PLANS APPROVAL DATE

REGISTERED PROFESSIONAL ENGINEER CECILIO BURCIAGA No. E015302 Exp. 3-31-11 ELECT STATE OF CALIFORNIA

THE STATE OF CALIFORNIA OR ITS OFFICERS OR AGENTS SHALL NOT BE RESPONSIBLE FOR THE ACCURACY OR COMPLETENESS OF ELECTRONIC COPIES OF THIS PLAN SHEET.

Caltrans Metric

NOTE:

FOR COMPLETE RIGHT OF WAY AND ACCURATE ACCESS DATA, SEE RIGHT OF WAY RECORD MAPS AT DISTRICT OFFICE.

EXISTING POLE AND EQUIPMENT SCHEDULE

STANDARD				veh sig mtg		ped SIGNAL	ppb		hps LUMINAIRE	iisns
No.	Type	sma	lma	Mast Arm	Pole	mtg	Ø	ARROW		
A	29A-5-161	16.8	4.6	2-mas	SV-2-TA	SP-2-T	2/8	↗ ↖	400 W	⇦ Lowes Dr
B	19A-4-161	7.6	4.6	1-mas	SV-3-TA	SP-1-T	2	←	400 W	Carmenita Rd
C	29A-5-161	15.2	4.6	2-mas	SV-1-T	SP-1-T	6	→	400 W	Lowes Dr ⇨
D	1-A	-	-	-	TV-1-T	-	-	-	-	-
E	17-3-161	6.1	4.6	1-mas	SV-1-T	SP-1-T	6	←	400 W	Carmenita Rd
F	1-A	-	-	-	TV-2-T	SP-1-T	8	→	-	-

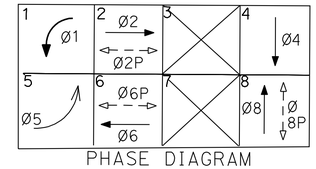

PHASE DIAGRAM

EXISTING CONDUIT AND CONDUCTOR SCHEDULE

AWG OR CABLE	CIRCUIT	CONDUIT RUN NUMBER AND SIZE 1	2	3	4	5	6	7	8	9	10
12CSC	C1	1	1	1	1	1	1	1	1	1	–
	C2	1	1	1	1	1	1	1	1	1	
VIVDS CABLE		4	4	2	2	1	–	–	1	1	–
#10	IISNS	–	2	2	2	2	–	–	2	2	2
#8	LUMINAIRES	–	2	2	2	2	–	–	2	2	2
#6	SERVICE	2	–	–	–	–	–	–	–	–	2
#14	EGC	4	4	2	2	2	–	–	2	2	–
#8	EDV	1	1	1	1	1	–	1	1	1	1
DLC	Ø1 DETECTOR	–	–	–	–	–	–	–	–	–	–
	Ø2 DETECTOR	3 (N)	3 (N)	3 (N)	3 (N)	–	–	–	–	–	–
	Ø4 DETECTOR	–	–	–	–	–	–	–	–	–	–
	Ø5 DETECTOR	–	–	–	–	–	–	–	–	–	–
	Ø6 DETECTOR	3 (N)	3 (N)	–	–	–	–	–	–	3 (N)	–
	Ø8 DETECTOR	–	–	–	–	–	–	–	–	–	–
	TOTAL DLC	6	6	3	3	-	–	–	–	3	–
CONDUIT SIZE		2-78	78	78	78	78	78	78	78	78	2-78

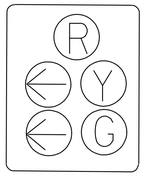

DETAIL "A"

DETAIL "B"

PROJECT NOTES: (THIS SHEET)

1. INSTALL ECONOLITE ASC/3 NEMA TS2 CONTROLLER ASSEMBLY WITH TYPE TS2 P ALUMINUM CABINET. (FOR REFERENCE ONLY, SEE SHEET E-50 FOR INSTALLATION)
   INSTALL SPREAD SPECTRUM RADIO SYSTEM AND ASSOCIATED EQUIPMENT IN CABINET.
2. EXISTING EMERGENCY VEHICLE DETECTOR UNIT. (FOR REFERENCE ONLY, SEE SHEET E-50 FOR INSTALLATION).
3. 120/240V UNMETERED TYPE III-BF SERVICE ENCLOSURE WITH: (FOR REFERENCE ONLY, SEE SHEET E-50 FOR INSTALLATION)
   - 100 A, 240 V, 2P, CB - MAIN
   - 50 A, 120 V, 1P, CB - SIGNAL
   - 30 A, 120 V, 1P, CB - SAFETY LIGHTING
   - 20 A, 120 V, 1P, CB - IISNS

   ID No. 07-53-005-002.663 ADDRESS: 14880 ½ CARMENITA Rd, NORWALK
4. 53C, 6 PR#19 SIC (FOR REFERENCE ONLY, SEE SHEET E-44 FOR INSTALLATION).

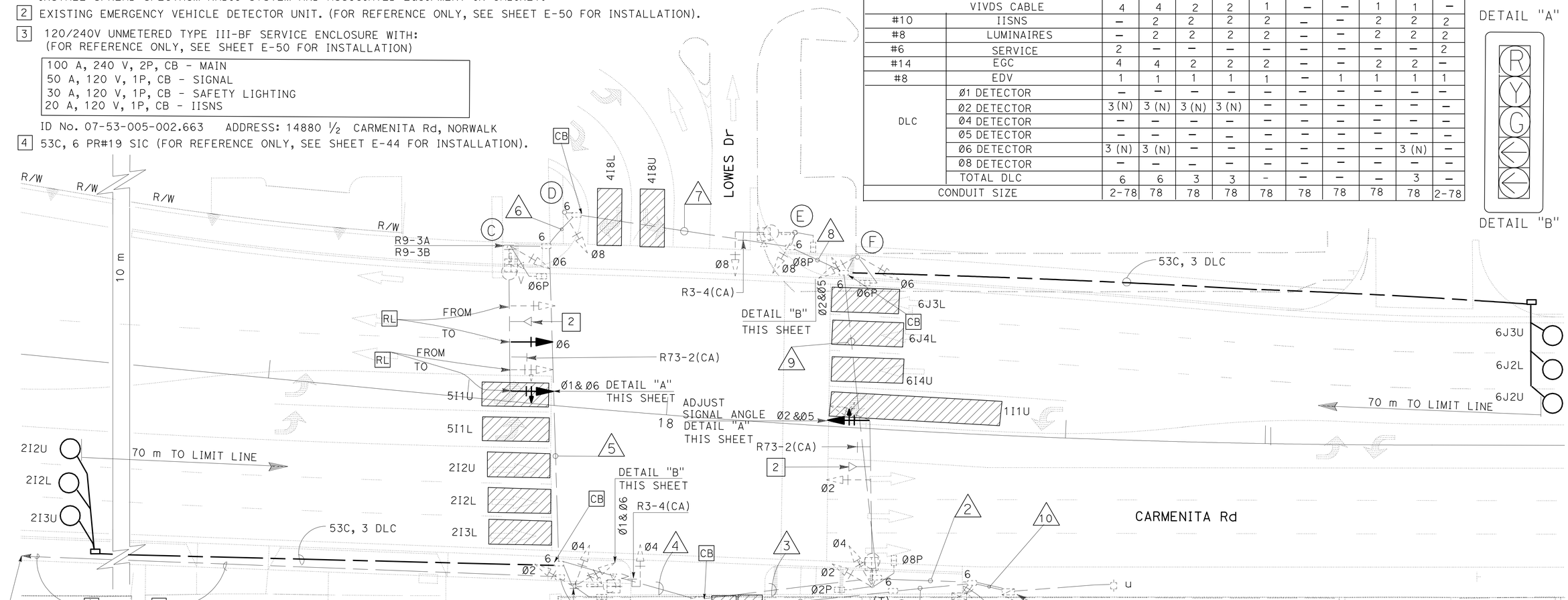

GENERAL NOTE: (THIS SHEET)

THIS PERMANENT TRAFFIC SIGNAL SYSTEM SHALL BE INSTALLED AND FUNCTIONING BEFORE START OF STAGE 3 PHASE 3.

FOR LEGEND AND ABBREVIATIONS SEE SHEET E-1
THIS PLAN IS ACCURATE FOR ELECTRICAL WORK ONLY.

ALL DIMENSIONS ARE IN METERS UNLESS OTHERWISE SHOWN

SIGNAL AND LIGHTING (CITY STREET LOCATION 7)

SCALE 1:200

E-41

STATE OF CALIFORNIA - DEPARTMENT OF TRANSPORTATION
Caltrans TRAFFIC DESIGN
FUNCTIONAL SUPERVISOR YI TSAU
CALCULATED-DESIGNED BY LUKE SUN
CHECKED BY CECILIO BURCIAGA
REVISED BY DATE REVISED

LAST REVISION 06-02-10 DATE PLOTTED => 22-JUN-2010 TIME PLOTTED => 17:15

Dist	COUNTY	ROUTE	KILOMETER POST TOTAL PROJECT	SHEET No.	TOTAL SHEETS
07	LA	5	2.9/4.9	705	1082

REGISTERED ELECTRICAL ENGINEER 12/23/09

PLANS APPROVAL DATE 6-21-10

REGISTERED PROFESSIONAL ENGINEER CECILIO BURCIAGA No. E015302 Exp. 3-31-11 ELECT STATE OF CALIFORNIA

THE STATE OF CALIFORNIA OR ITS OFFICERS OR AGENTS SHALL NOT BE RESPONSIBLE FOR THE ACCURACY OR COMPLETENESS OF ELECTRONIC COPIES OF THIS PLAN SHEET.

Caltrans Metric

NOTE:

FOR COMPLETE RIGHT OF WAY AND ACCURATE ACCESS DATA, SEE RIGHT OF WAY RECORD MAPS AT DISTRICT OFFICE.

POLE AND EQUIPMENT SCHEDULE

STANDARD				VEH SIG MTG		PED SIGNAL	PPB		HPS LUMINAIRE	IISNS	VIDEO DETECTION SYSTEM
No.	TYPE	SMA	LMA	MAST ARM	POLE	MTG	Ø	ARROW			
A	29A-5-161	15.2	4.6	2-MAS	SV-1-T	SP-1-T			310 W	Cornet Ave	INSTALL **
B	1-A				TV-2-T		6	→			
C	19A-4-161	7.6	4.6	1-MAS	SV-1-T	SP-1-T	6	←	310 W	Alondra Blvd	INSTALL **
D	15TS		4.6		SV-2-TA	SP-1-T	8	→	310 W		
E	29A-5-161	15.2	4.6	2-MAS	SV-1-T	SP-1-T	8	←	310 W	Manning Way	INSTALL **
F	1-A				TV-2-T	SP-1-T	2	→			
G	19A-4-161	7.6	4.6	1-MAS	SV-1-T		2	←	310 W	Alondra Blvd	INSTALL **
H	1-A				TV-2-T	SP-1-T					

** FOR VIVDS INSTALLATION DETAIL SEE SHEET SES-1.

PROPOSED PHASE DIAGRAM

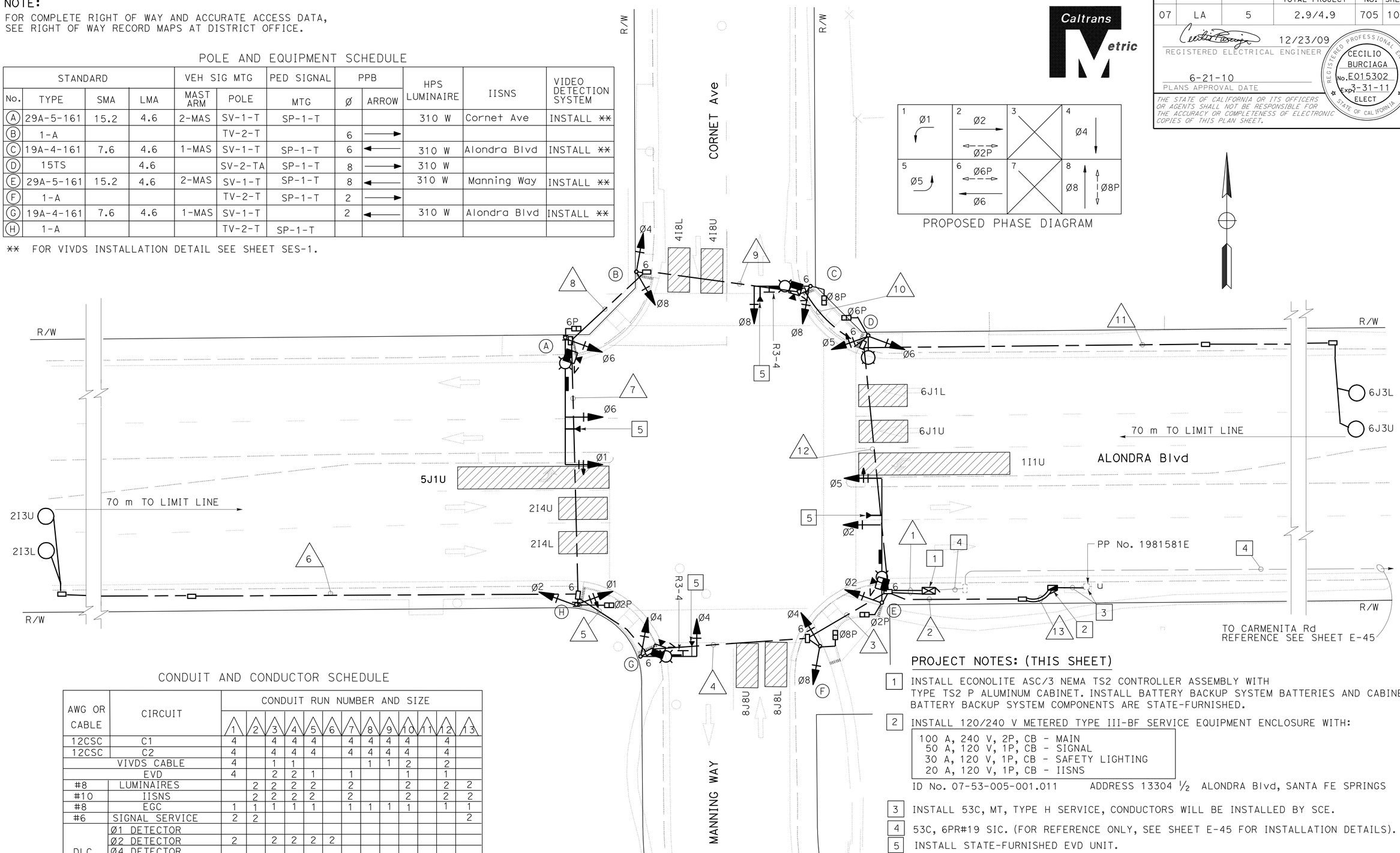

CONDUIT AND CONDUCTOR SCHEDULE

AWG OR CABLE	CIRCUIT	CONDUIT RUN NUMBER AND SIZE												
		1	2	3	4	5	6	7	8	9	10	11	12	13
12CSC	C1	4		4	4	4		4	4	4	4		4	
12CSC	C2	4		4	4	4		4	4	4	4		4	
VIVDS CABLE		4		1	1				1	1	2		2	
EVD		4		2	2	1		1			1		1	
#8	LUMINAIRES		2	2	2	2		2			2		2	2
#10	IISNS		2	2	2	2		2			2		2	2
#8	EGC	1	1	1	1	1		1	1	1	1		1	1
#6	SIGNAL SERVICE	2	2											2
DLC	Ø1 DETECTOR													
	Ø2 DETECTOR	2		2	2	2	2							
	Ø4 DETECTOR													
	Ø5 DETECTOR													
	Ø6 DETECTOR	2										2	2	
	Ø8 DETECTOR													
CONDUIT SIZE		2-78	78	78	78	78	53	78	78	78	78	53	78	2-78

PROJECT NOTES: (THIS SHEET)

1. INSTALL ECONOLITE ASC/3 NEMA TS2 CONTROLLER ASSEMBLY WITH TYPE TS2 P ALUMINUM CABINET. INSTALL BATTERY BACKUP SYSTEM BATTERIES AND CABINET. BATTERY BACKUP SYSTEM COMPONENTS ARE STATE-FURNISHED.
2. INSTALL 120/240 V METERED TYPE III-BF SERVICE EQUIPMENT ENCLOSURE WITH:
   - 100 A, 240 V, 2P, CB - MAIN
   - 50 A, 120 V, 1P, CB - SIGNAL
   - 30 A, 120 V, 1P, CB - SAFETY LIGHTING
   - 20 A, 120 V, 1P, CB - IISNS

   ID No. 07-53-005-001.011 ADDRESS 13304 ½ ALONDRA Blvd, SANTA FE SPRINGS
3. INSTALL 53C, MT, TYPE H SERVICE, CONDUCTORS WILL BE INSTALLED BY SCE.
4. 53C, 6PR#19 SIC. (FOR REFERENCE ONLY, SEE SHEET E-45 FOR INSTALLATION DETAILS).
5. INSTALL STATE-FURNISHED EVD UNIT.

ALL DIMENSIONS ARE IN METERS UNLESS OTHERWISE SHOWN

FOR LEGEND AND ABBREVIATIONS SEE SHEET E-1
THIS PLAN IS ACCURATE FOR ELECTRICAL WORK ONLY.

SIGNAL AND LIGHTING (CITY STREET LOCATION 1)

SCALE 1:200

E-42

LAST REVISION DATE PLOTTED => 22-JUN-2010 TIME PLOTTED => 17:15 06-02-10

REVISED BY | DATE REVISED

LUKE SUN | CECILIO BURCIAGA

CALCULATED-DESIGNED BY | CHECKED BY

FUNCTIONAL SUPERVISOR YI TSAU

STATE OF CALIFORNIA - DEPARTMENT OF TRANSPORTATION

Caltrans TRAFFIC DESIGN

Dist	COUNTY	ROUTE	KILOMETER POST TOTAL PROJECT	SHEET No.	TOTAL SHEETS
07	LA	5	2.9/4.9	706	1082

12/23/09
REGISTERED ELECTRICAL ENGINEER

6-21-10
PLANS APPROVAL DATE

REGISTERED PROFESSIONAL ENGINEER CECILIO BURCIAGA No. E015302 Exp. 3-31-11 ELECT STATE OF CALIFORNIA

THE STATE OF CALIFORNIA OR ITS OFFICERS OR AGENTS SHALL NOT BE RESPONSIBLE FOR THE ACCURACY OR COMPLETENESS OF ELECTRONIC COPIES OF THIS PLAN SHEET.

Caltrans Metric

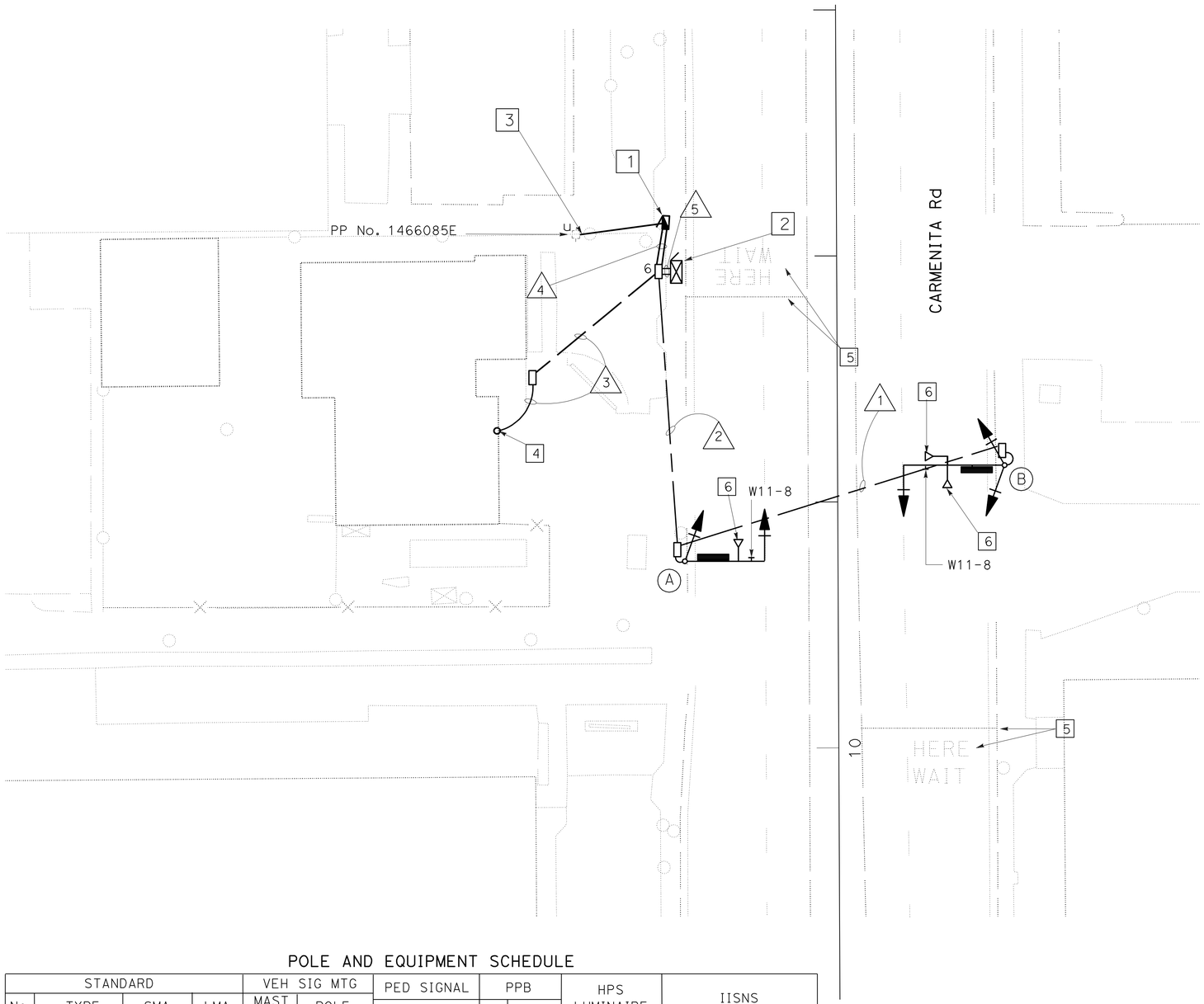

PROJECT NOTES: (THIS SHEET)

1. FOR REFERENCE ONLY, SEE SHEET E-22 FOR SERVICE EQUIPMENT ENCLOSURE.
2. ECONOLITE ASC/3 NEMA TS2 CONTROLLER ASSEMBLY WITH TYPE TS2 P ALUMINUM CABINET.
3. FOR REFERENCE ONLY, SEE SHEET E-22 FOR INSTALLATION DETAILS 78C, MT, TYPE H SERVICE. CABLES WILL BE INSTALLED BY SCE.
4. INSTALL TYPE C PUSH BUTTON INSIDE FIRE STATION. (CONTACT BATTALION CHIEF AT (562) 944-9713 FOR LOCATION AND SCHEDULING OF WORK).
5. PAVEMENT DELINEATION FOR REFERENCE ONLY.
6. INSTALL STATE-FURNISHED EVD UNIT.

POLE AND EQUIPMENT SCHEDULE

STANDARD				VEH SIG MTG		PED SIGNAL	PPB		HPS LUMINAIRE	IISNS
No.	TYPE	SMA	LMA	MAST ARM	POLE	MTG	Ø	ARROW		
Ⓐ	18-4-161	7.6	-	MAS	SV-1-T	-	-	-	-	FIRE STATION
Ⓑ	18-4-161	7.6	-	MAS	SV-2-TA	-	-	-	-	FIRE STATION

CONDUIT AND CONDUCTOR SCHEDULE

AWG OR CABLE	CIRCUIT	CONDUIT RUN NUMBER AND SIZE				
		1	2	3	4	5
12CSC	C1 CABLE	1	1			1
#6	SERVICE				2	2
FIRE STATION CABLE (3CSC)				1		1
EVD		1	2			2
#8	EGC	1	1	1	1	1
CONDUIT SIZE		78	78	27	2-78	2-78

FOR LEGEND AND ABBREVIATIONS SEE SHEET E-1
THIS PLAN IS ACCURATE FOR ELECTRICAL WORK ONLY.

ALL DIMENSIONS ARE IN METERS UNLESS OTHERWISE SHOWN

SIGNAL AND LIGHTING (CITY STREET LOCATION 2)

SCALE 1:200

E-43

STATE OF CALIFORNIA - DEPARTMENT OF TRANSPORTATION
Caltrans
TRAFFIC DESIGN

FUNCTIONAL SUPERVISOR: YI TSAU
CALCULATED-DESIGNED BY: LUKE SUN
CHECKED BY: CECILIO BURCIAGA
REVISED BY
DATE REVISED

LAST REVISION 06-02-10 | DATE PLOTTED => 22-JUN-2010 | TIME PLOTTED => 17:15

Dist	COUNTY	ROUTE	KILOMETER POST TOTAL PROJECT	SHEET No.	TOTAL SHEETS
07	LA	5	2.9/4.9	707	1082

12/23/09
REGISTERED ELECTRICAL ENGINEER

6-21-10
PLANS APPROVAL DATE

REGISTERED PROFESSIONAL ENGINEER
CECILIO BURCIAGA
No. E015302
Exp. 3-31-11
ELECT
STATE OF CALIFORNIA

THE STATE OF CALIFORNIA OR ITS OFFICERS OR AGENTS SHALL NOT BE RESPONSIBLE FOR THE ACCURACY OR COMPLETENESS OF ELECTRONIC COPIES OF THIS PLAN SHEET.

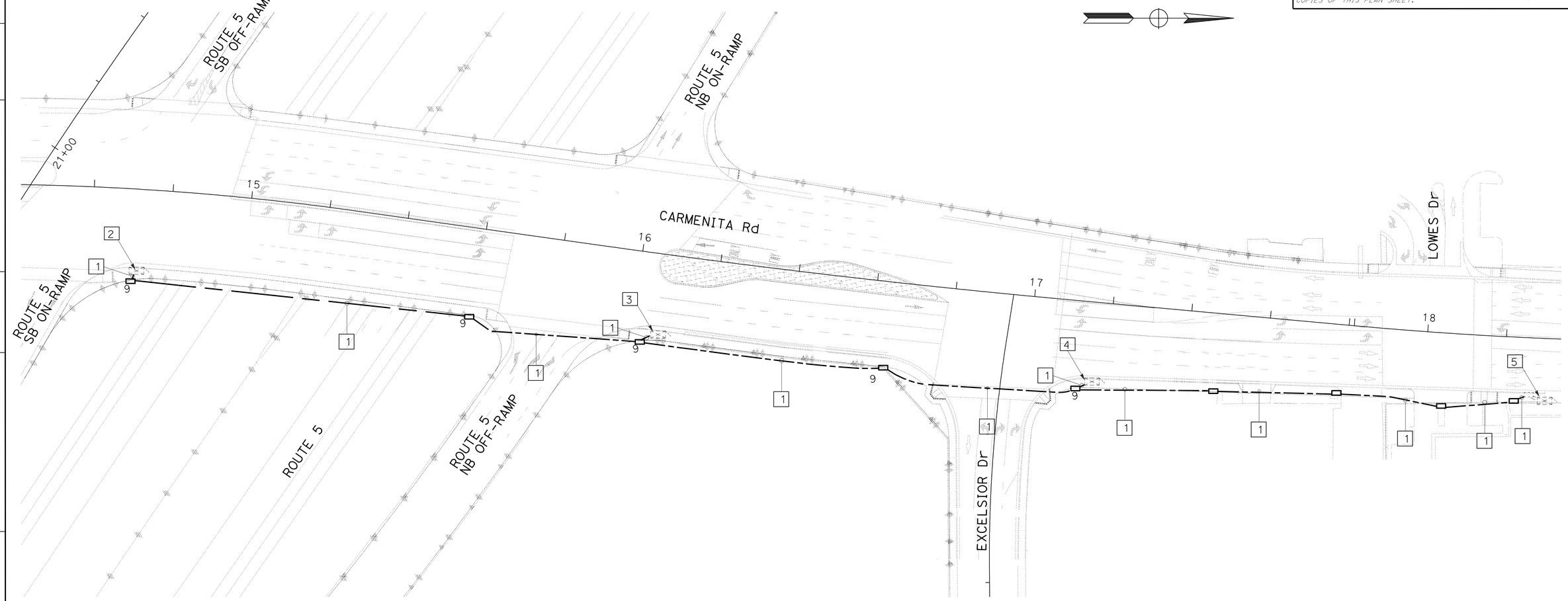

PROJECT NOTES: (THIS SHEET)

1. 53C, 6PR#19 SIC.
2. STATE-FURNISHED MODEL 2070 CONTROLLER UNIT WITH MODEL 332 CABINET. (FOR REFERENCE ONLY, SEE SHEET E-38 FOR INSTALLATION DETAILS).
3. STATE-FURNISHED MODEL 2070 CONTROLLER UNIT WITH MODEL 332 CABINET. (REFERENCE ONLY, SEE SHEET E-39 FOR INSTALLATION DETAILS).
4. ECONOLITE ASC/3 NEMA TS2 CONTROLLER ASSEMBLY WITH TYPE TS2 P ALUMINUM CABINET. (FOR REFERENCE ONLY, SEE SHEET E-40 FOR INSTALLATION DETAILS).
5. ECONOLITE ASC/3 NEMA TS2 CONTROLLER ASSEMBLY WITH TYPE TS2 P ALUMINUM CABINET. (FOR REFERENCE ONLY, SEE SHEET E-41 FOR INSTALLATION DETAILS).

ALL DIMENSIONS ARE IN METERS UNLESS OTHERWISE SHOWN

INTERCONNECTION CONDUIT AND CONDUCTOR

SCALE 1:500

THIS PLAN IS ACCURATE FOR ELECTRICAL WORK ONLY.

E-44

REVISED BY | DATE REVISED
LUKE SUN | CECILIO BURCIAGA
CALCULATED-DESIGNED BY | CHECKED BY
FUNCTIONAL SUPERVISOR: YI TSAU

STATE OF CALIFORNIA - DEPARTMENT OF TRANSPORTATION
Caltrans
TRAFFIC DESIGN

LAST REVISION 06-02-10 | DATE PLOTTED => 22-JUN-2010 | TIME PLOTTED => 17:15

Dist	COUNTY	ROUTE	KILOMETER POST TOTAL PROJECT	SHEET No.	TOTAL SHEETS
07	LA	5	2.9/4.9	708	1082

12/23/09
REGISTERED ELECTRICAL ENGINEER

6-21-10
PLANS APPROVAL DATE

REGISTERED PROFESSIONAL ENGINEER
CECILIO BURCIAGA
No. E015302
Exp. 3-31-11
ELECT
STATE OF CALIFORNIA

THE STATE OF CALIFORNIA OR ITS OFFICERS OR AGENTS SHALL NOT BE RESPONSIBLE FOR THE ACCURACY OR COMPLETENESS OF ELECTRONIC COPIES OF THIS PLAN SHEET.

Caltrans Metric

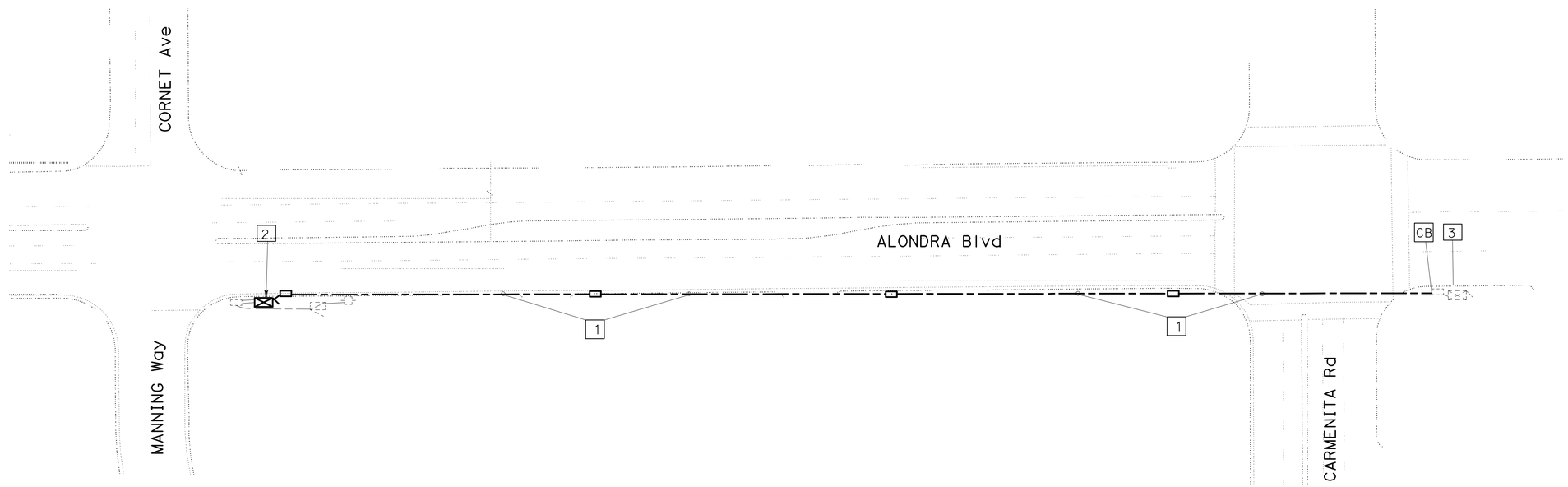

PROJECT NOTES: (THIS SHEET)

1. 53C, 6PR#19 SIC.
2. ECONOLITE ASC/3 NEMA TS2 CONTROLLER ASSEMBLY WITH TYPE TS2 P ALUMINUM CABINET. (FOR REFERENCE ONLY, SEE SHEET E-42 FOR INSTALLATION DETAILS).
3. EXISTING ECONOLITE ASC/3 NEMA TS2 CONTROLLER ASSEMBLY WITH TYPE TS2 P ALUMINUM CABINET.

ALL DIMENSIONS ARE IN METERS UNLESS OTHERWISE SHOWN

INTERCONNECTION CONDUIT AND CONDUCTOR

SCALE 1:500

THIS PLAN IS ACCURATE FOR ELECTRICAL WORK ONLY.

E-45

REVISED BY	
DATE REVISED	
LUKE SUN	
CECILIO BURCIAGA	
CALCULATED-DESIGNED BY	
CHECKED BY	
FUNCTIONAL SUPERVISOR	
YI TSAU	

STATE OF CALIFORNIA - DEPARTMENT OF TRANSPORTATION
Caltrans
TRAFFIC DESIGN

LAST REVISION 06-02-10 | DATE PLOTTED => 22-JUN-2010 | TIME PLOTTED => 17:15

Dist	COUNTY	ROUTE	KILOMETER POST TOTAL PROJECT	SHEET No.	TOTAL SHEETS
07	LA	5	2.9/4.9	709	1082

12/23/09
REGISTERED ELECTRICAL ENGINEER

6-21-10
PLANS APPROVAL DATE

REGISTERED PROFESSIONAL ENGINEER CECILIO BURCIAGA No. E015302 Exp. 3-31-11 ELECT STATE OF CALIFORNIA

THE STATE OF CALIFORNIA OR ITS OFFICERS OR AGENTS SHALL NOT BE RESPONSIBLE FOR THE ACCURACY OR COMPLETENESS OF ELECTRONIC COPIES OF THIS PLAN SHEET.

Caltrans Metric

EXISTING POLE AND EQUIPMENT SCHEDULE

No.	STANDARD Type	STANDARD SMA	STANDARD LMA	VEH SIG MTG Mast Arm	VEH SIG MTG Pole	PED SIGNAL MTG	PPB Ø	PPB ARROW	LUMINAIRE	IISNS	VIVDS ***
A	19-2-129	6.1	3.7	1-MAS	SV-2-TA				400 W		
B	1-A				SV-1-T						
C	1-A (N)				SV-1-T						
D	15TS (N)		3.7		SV-1-T				400 W		INSTALL
E	29A-5-161(N)	15.2	3.7	2-MAS	SV-1-T	SP-1-T	2	←	400 W	CARMENITA Rd	INSTALL
F	29A-5-161(N)	15.2	3.7	2-MAS	SV-1-T		2	→	400 W	FIRESTONE Blvd (R)	INSTALL
G	1-A				SV-1-T						
H	1-A (N)				SV-1-T						
I	1-A (N)				SV-1-T						

(R) - RELOCATE
*** FOR VIVDS INSTALLATION DETAIL SEE SHEET E-57.

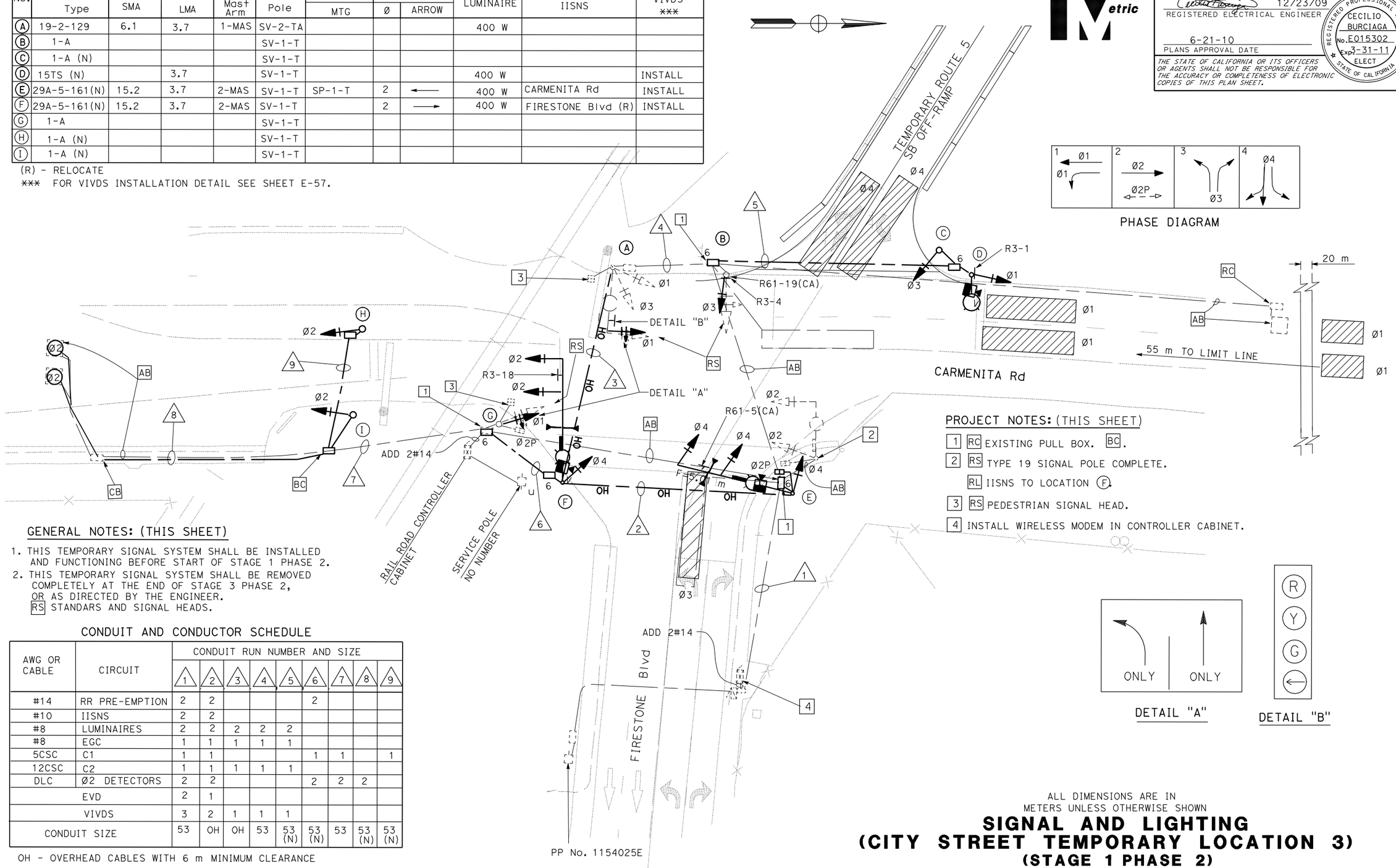

GENERAL NOTES: (THIS SHEET)

1. THIS TEMPORARY SIGNAL SYSTEM SHALL BE INSTALLED AND FUNCTIONING BEFORE START OF STAGE 1 PHASE 2.
2. THIS TEMPORARY SIGNAL SYSTEM SHALL BE REMOVED COMPLETELY AT THE END OF STAGE 3 PHASE 2, OR AS DIRECTED BY THE ENGINEER.

RS STANDARS AND SIGNAL HEADS.

PROJECT NOTES: (THIS SHEET)

1 RC EXISTING PULL BOX. BC.
2 RS TYPE 19 SIGNAL POLE COMPLETE.
RL IISNS TO LOCATION F.
3 RS PEDESTRIAN SIGNAL HEAD.
4 INSTALL WIRELESS MODEM IN CONTROLLER CABINET.

CONDUIT AND CONDUCTOR SCHEDULE

AWG OR CABLE	CIRCUIT	CONDUIT RUN NUMBER AND SIZE 1	2	3	4	5	6	7	8	9
#14	RR PRE-EMPTION	2	2				2			
#10	IISNS	2	2							
#8	LUMINAIRES	2	2	2	2	2				
#8	EGC	1	1	1	1	1				
5CSC	C1	1	1				1	1		1
12CSC	C2	1	1	1	1	1				
DLC	Ø2 DETECTORS	2	2				2	2	2	
	EVD	2	1							
	VIVDS	3	2	1	1	1				
CONDUIT SIZE		53	OH	OH	53	53 (N)	53 (N)	53	53 (N)	53 (N)

OH - OVERHEAD CABLES WITH 6 m MINIMUM CLEARANCE

PP No. 1154025E

FOR LEGEND AND ABBREVIATIONS SEE SHEET E-1
THIS PLAN IS ACCURATE FOR ELECTRICAL WORK ONLY.

ALL DIMENSIONS ARE IN METERS UNLESS OTHERWISE SHOWN

SIGNAL AND LIGHTING (CITY STREET TEMPORARY LOCATION 3)
(STAGE 1 PHASE 2)

SCALE 1:200

E-46

REVISED BY	DATE REVISED

LUKE SUN — CECILIO BURCIAGA
CALCULATED-DESIGNED BY — CHECKED BY
FUNCTIONAL SUPERVISOR — YI TSAU

STATE OF CALIFORNIA - DEPARTMENT OF TRANSPORTATION
Caltrans TRAFFIC DESIGN

LAST REVISION 06-02-10 | DATE PLOTTED => 15-DEC-2010 | TIME PLOTTED => 13:01

Dist	COUNTY	ROUTE	KILOMETER POST TOTAL PROJECT	SHEET No.	TOTAL SHEETS
07	LA	5	2.9/4.9	710	1082

REGISTERED ELECTRICAL ENGINEER 12/23/09

PLANS APPROVAL DATE 6-21-10

REGISTERED PROFESSIONAL ENGINEER CECILIO BURCIAGA No. E015302 Exp. 3-31-11 ELECT STATE OF CALIFORNIA

THE STATE OF CALIFORNIA OR ITS OFFICERS OR AGENTS SHALL NOT BE RESPONSIBLE FOR THE ACCURACY OR COMPLETENESS OF ELECTRONIC COPIES OF THIS PLAN SHEET.

Caltrans Metric

PROJECT NOTES: (THIS SHEET)

1. RL SIGNAL POLE AND EQUIPMENT.
2. RL ECONOLITE ASC/3 NEMA TS2 CONTROLLER ASSEMBLY WITH STATE TYPE P CABINET, INSTALL GPS SYSTEM.
3. INSTALL STATE-FURNISHED EMERGENCY VEHICLE DETECTOR UNIT.
4. INSTALL 120/240 V METERED TYPE III-BF SERVICE EQUIPMENT ENCLOSURE WITH:

100 A, 240 V, 2P, CB -	MAIN	
50 A, 120 V, 2P, CB -	SIGNAL	
30 A, 120 V, 2P, CB -	SAFE LIGHTING	
20 A, 120 V, 2P, CB -	IISNS	
30 A, 120 V, 1P, CB -	CITY LIGHTING (UNMETERED)	

ID No. 07-53-005-003.921;
ADDRESS: 13418 1/2 EXCELSIOR Dr, SANTA FE SPRINGS

5. RC EXIST PULL BOX, BC #6 PULL BOX.
6. OVERHEAD 2#8, 1 VIVDS CABLE, 12CSC, 5CSC FOR Ø1. AND 1 EVD CABLE WITH 6 m MINIMUM CLEARANCE.
7. OVERHEAD 2#8, 2 VIVDS CABLE, 12CSC, 5CSC FOR Ø1. AND 1 EVD CABLE WITH 6 m MINIMUM CLEARANCE.
8. RS SIGNAL POLE AND EQUIPMENT.

GENERAL NOTES: (THIS SHEET)

1. THIS TEMPORARY SIGNAL SYSTEM SHALL BE INSTALLED AND FUNCTIONING BEFORE START OF STAGE 2 PHASE 2.
2. RC OVERHEAD CONDUCTORS, CONTROLLER CABINET AND TEMPORARY SIGNAL POLES, AFTER FINAL SIGNAL SYSTEM IS INSTALLED, OR AS DIRECTED BY THE ENGINEER.

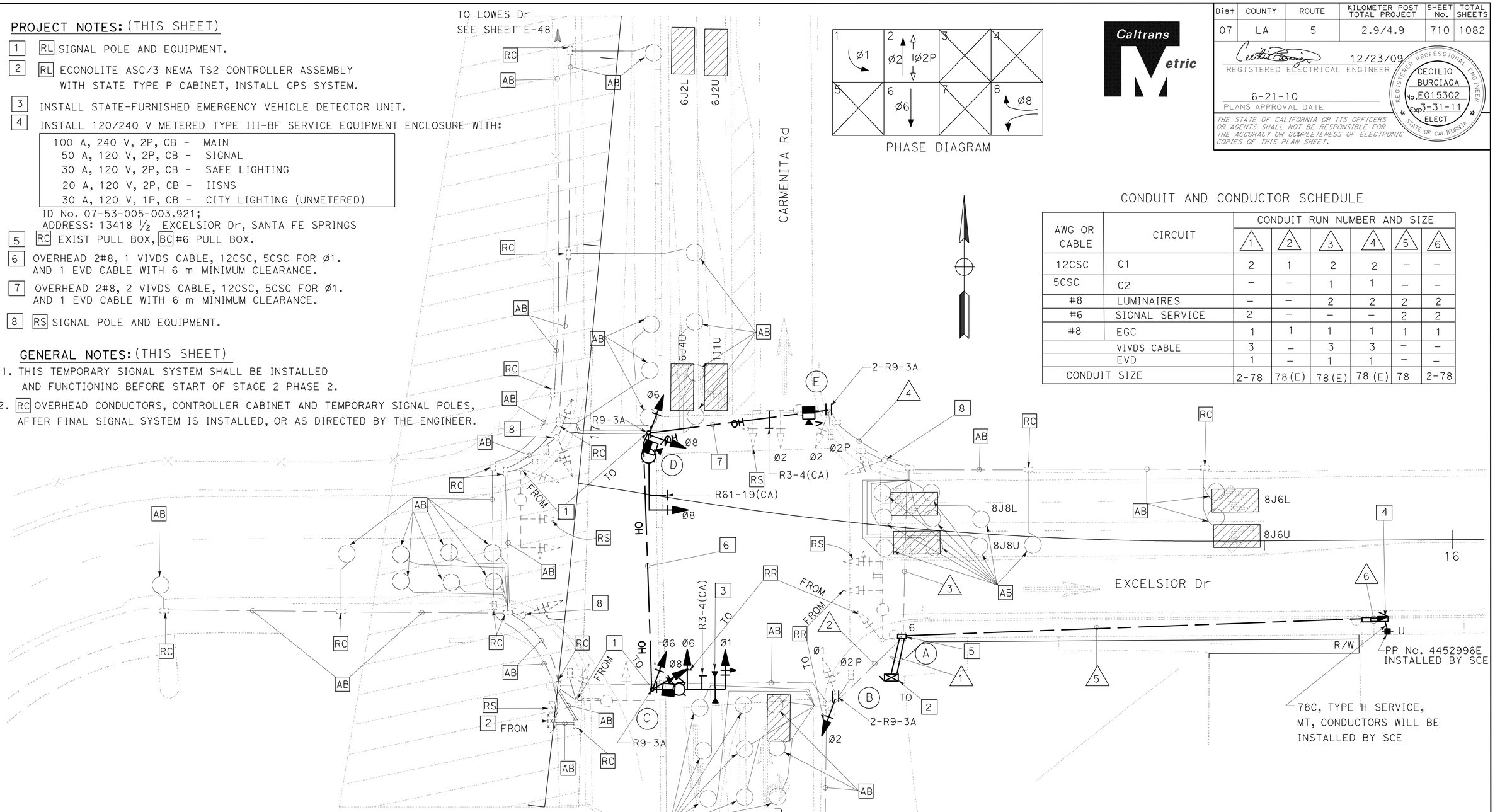

CONDUIT AND CONDUCTOR SCHEDULE

AWG OR CABLE	CIRCUIT	CONDUIT RUN NUMBER AND SIZE					
		1	2	3	4	5	6
12CSC	C1	2	1	2	2	–	–
5CSC	C2	–	–	1	1	–	–
#8	LUMINAIRES	–	–	2	2	2	2
#6	SIGNAL SERVICE	2	–	–	–	2	2
#8	EGC	1	1	1	1	1	1
VIVDS CABLE		3	–	3	3	–	–
EVD		1	–	1	1	–	–
CONDUIT SIZE		2-78	78(E)	78(E)	78(E)	78	2-78

POLE AND EQUIPMENT SCHEDULE

No.	STANDARD			VEH SIG MTG		PED SIGNAL	PPB		HPS LUMINAIRE	VIVDS ***
	Type	SMA	LMA	Mast Arm	Pole	MTG	Ø	ARROW		
A	19-4-112(E)	-	3.7	-	-	-	2	←	400 W	-
B	1-A (E)	-	-	-	TV-2-T(N)	SP-1-T(E)	-	-	-	-
C	26-4-112(R)	12.1	3.7	2-MAS(R)	SV-2-TA(R)	-	-	-	400 W	INSTALL (N)
D	19-4-112(R)	7.6	3.7	1-MAS(R)	SV-2-TA(R)	-	-	-	400 W	INSTALL (N)
E	26-4-112(E)	12.1	3.7	2-MAS(E)	SV-1-T(E)	SP-1-T(E)	2	→	400 W	INSTALL (N)

(R) RELOCATE
*** FOR VIVDS INSTALLATION DETAIL SEE SHEET SES-1

FOR LEGEND AND ABBREVIATIONS SEE SHEET E-1
THIS PLAN IS ACCURATE FOR ELECTRICAL WORK ONLY.

ALL DIMENSIONS ARE IN METERS UNLESS OTHERWISE SHOWN

SIGNAL AND LIGHTING (CITY STREET TEMPORARY LOCATION 6)

(STAGE 2 PHASE 2)

SCALE 1:200

E-47

STATE OF CALIFORNIA - DEPARTMENT OF TRANSPORTATION
Caltrans TRAFFIC DESIGN
FUNCTIONAL SUPERVISOR YI TSAU
CALCULATED-DESIGNED BY LUKE SUN
CHECKED BY CECILIO BURCIAGA
REVISED BY DATE REVISED

LAST REVISION 06-02-10 DATE PLOTTED => 22-JUN-2010 TIME PLOTTED => 17:16

Dist	COUNTY	ROUTE	KILOMETER POST TOTAL PROJECT	SHEET No.	TOTAL SHEETS
07	LA	5	2.9/4.9	711	1082

REGISTERED ELECTRICAL ENGINEER 12/23/09

6-21-10
PLANS APPROVAL DATE

REGISTERED PROFESSIONAL ENGINEER CECILIO BURCIAGA No. E015302 Exp. 3-31-11 ELECT STATE OF CALIFORNIA

THE STATE OF CALIFORNIA OR ITS OFFICERS OR AGENTS SHALL NOT BE RESPONSIBLE FOR THE ACCURACY OR COMPLETENESS OF ELECTRONIC COPIES OF THIS PLAN SHEET.

Caltrans Metric

PROJECT NOTES: (THIS SHEET)

1. RS SIGNAL POLE, RR SIGNAL EQUIPMENT.
2. EXISTING ECONOLITE ASC/3 NEMA TS2 CONTROLLER ASSEMBLY WITH TYPE TS2 P ALUMINUM CABINET. INSTALL CTNET SIGNAL INTERCONNECT EQUIPMENT AND CTNET FIXED WIRELESS COMMUNICATIONS EQUIPMENT ASSEMBLY IN CABINET. (FOR INSTALLATION OF TRAFFIC SIGNAL INTERCONNECT AND WIRELESS DATA SERVICE EQUIPMENT DETAILS SEE E-62)
3. INSTALL 29A-5-161 FOUNDATION FOR FUTURE USE.
4. INSTALL 19A-4-161 FOUNDATION FOR FUTURE USE.
5. INSTALL SIGN R3-4(CA).
6. INSTALL STANDARD TYPE 1-A FOUNDATION FOR FUTURE USE.
7. INSTALL 78C, MT.
8. INSTALL STATE-FURNISHED EMERGENCY VEHICLE DETECTOR UNIT.
9. METERED TYPE III-BF SERVICE EQUIPMENT ENCLOSURE WITH:

100 A, 240 V, 2P, CB - MAIN
50 A, 120 V, 1P, CB - SIGNAL
30 A, 120 V, 1P, CB - SAFETY LIGHTING
20 A, 120 V, 1P, CB - IISNS

ID No. 07-53-005-002.663
ADDRESS: 14880 1/2 CARMENITA Rd, NORWALK

EXISTING POLE AND EQUIPMENT SCHEDULE

	STANDARD			VEH SIG MTG		PED SIGNAL	PPB		HPS LUMINAIRE	IISNS	VIVDS
No.	TYPE	SMA	LMA	MAST ARM	POLE	MTG	Ø	ARROW			***
A	24-4-112	9.1	4.6	1-MAS 1-MAT	SV-2-TA	SVP-1-T	2	←	400 W	⇦ LOWES Dr	INSTALL (N)
B	18-4-112	6.1	-	1-MAS	SV-3-TA	-	2	→	-		INSTALL (N)
C	19A-3-161 (*)	4.6	4.6	1-MAS(R) 1-MAT(R)	SV-2-TA(R)	-	-	-	400 W(R)		INSTALL (N)
D	17-3-161 (N)	6.1	4.6	1-MAT(N)	SV-1-T (N)	-	-	-	400 W(N)	CARMENITA Rd (N)	INSTALL (N)
E	1-A (*)				TV-2-T (R)						

(*) NEW POLE FOR TEMPORARY SIGNAL, INSTALLED ON PLATE WITH BLOCKS. SEE DETAIL ON E-55, E-56.
(R) REUSE
*** FOR VIVDS INSTALLATION DETAIL SEE SHEET SES-1

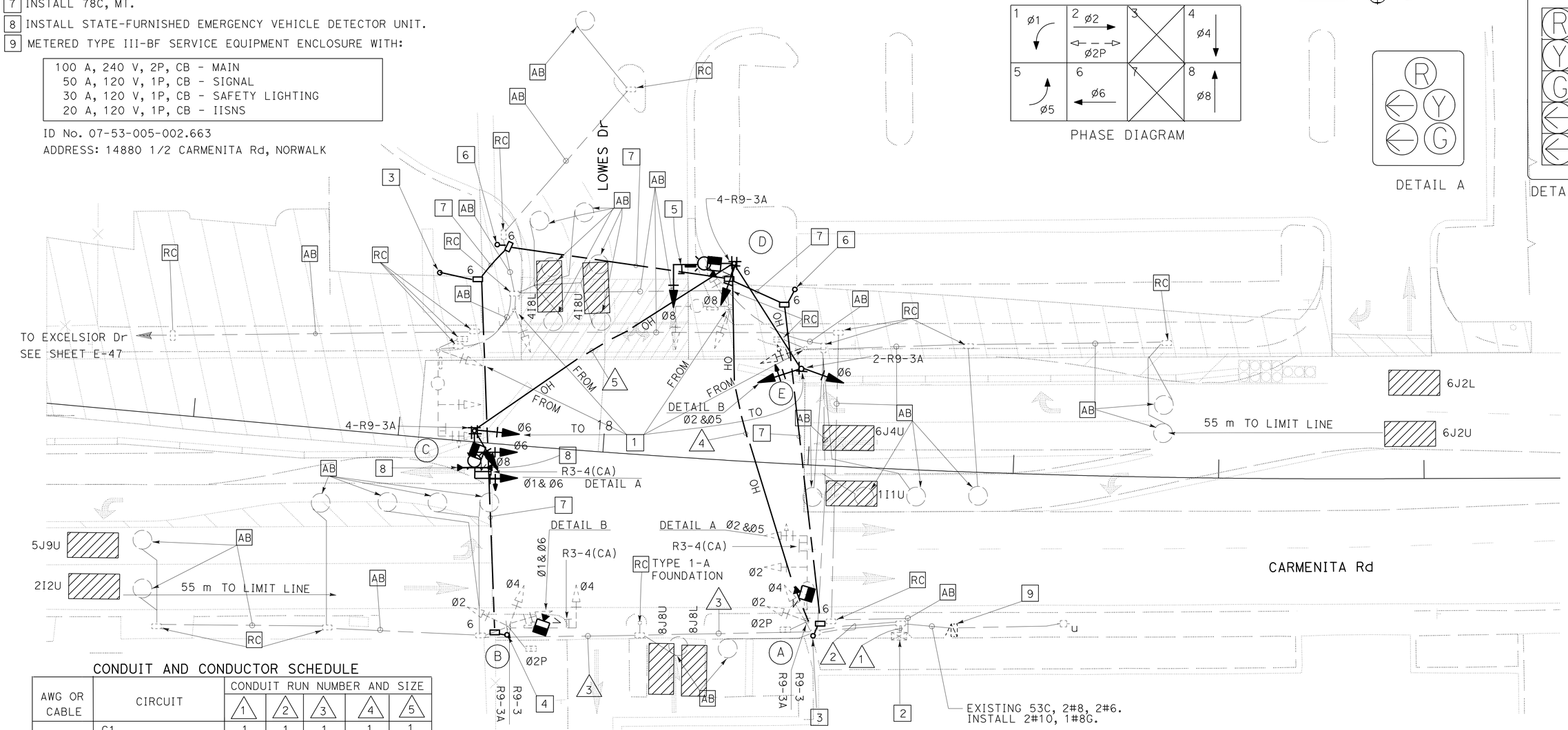

PHASE DIAGRAM

DETAIL A

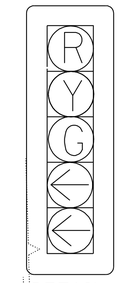

DETAIL B

CONDUIT AND CONDUCTOR SCHEDULE

AWG OR CABLE	CIRCUIT	CONDUIT RUN NUMBER AND SIZE 1	2	3	4	5
12CSC	C1	1	1	1	1	1
	C2	1	1	1	1	1
#10	IISNS	–	2	2	2	2
#8	LUMINAIRES	–	2	–	2	2
#6	SIGNAL SERVICE	2	–	–	–	–
	VIVDS CABLE	4	4	1	2	1
	EVD	1	1	–	1	1
CONDUIT SIZE		2-78	78	78	OH	OH

OH - OVERHEAD CABLE WITH 6 m MINIMUM CLEARANCE

GENERAL NOTES: (THIS SHEET)

1. THIS TEMPORARY SIGNAL SYSTEM SHALL BE INSTALLED AND FUNCTIONING BEFORE START OF STAGE 2 PHASE 2.
2. RC OVERHEAD CONDUCTORS AND TEMPORARY SIGNAL POLES AFTER STAGE 3 PHASE 1 TEMPORARY SIGNAL SYSTEM IS INSTALLED, OR AS DIRECTED BY THE ENGINEER.
3. TEMPORY TRAFFIC SIGNALS ON CONCRETE BLOCKS/BASES WITHIN THE PUBLIC RIGHT-OF-WAY SHALL PROVIDE MINIMUM 1.22 m CLEARANCE PER AMERICANS WITH DISABILITIES ACT REQUIREMENTS.

THIS PLAN IS ACCURATE FOR ELECTRICAL WORK ONLY.

ALL DIMENSIONS ARE IN METERS UNLESS OTHERWISE SHOWN

SIGNAL AND LIGHTING (CITY STREET TEMPORARY LOCATION 7)

(STAGE 2 PHASE 2)

SCALE 1:200

E-48

REVISED BY | DATE REVISED
LUKE SUN
CALCULATED-DESIGNED BY | CHECKED BY
CECILIO BURCIAGA
FUNCTIONAL SUPERVISOR
YI TSAU

STATE OF CALIFORNIA - DEPARTMENT OF TRANSPORTATION
Caltrans TRAFFIC DESIGN

LAST REVISION 06-02-10 | DATE PLOTTED => 22-JUN-2010 | TIME PLOTTED => 15:15

Dist	COUNTY	ROUTE	KILOMETER POST TOTAL PROJECT	SHEET No.	TOTAL SHEETS
07	LA	5	2.9/4.9	712	1082

REGISTERED ELECTRICAL ENGINEER 12/23/09

6-21-10
PLANS APPROVAL DATE

REGISTERED PROFESSIONAL ENGINEER C. BURCIAGA No. E015302 Exp. 3/31/11 ELEC STATE OF CALIFORNIA

THE STATE OF CALIFORNIA OR ITS OFFICERS OR AGENTS SHALL NOT BE RESPONSIBLE FOR THE ACCURACY OR COMPLETENESS OF ELECTRONIC COPIES OF THIS PLAN SHEET.

Caltrans Metric

PROJECT NOTES: (THIS SHEET)

1. INSTALL ECONOLITE ASC/3 NEMA TS2 CONTROLLER ASSEMBLY WITH TYPE TS2 P ALUMINUM CABINET.
2. INSTALL 53C, MT, TYPE H SERVICE. CONDUCTORS WILL BE INSTALLED BY SCE.
3. INSTALL 120/240 V TYPE III-BF METERED SERVICE EQUIPMENT ENCLOSURE WITH:

   100 A, 240 V, 2P, CB - MAIN
   50 A, 120 V, 1P, CB - SIGNAL
   30 A, 120 V, 1P, CB - SAFETY LIGHTING
   20 A, 120 V, 1P, CB - IISNS

   ID No. 07-53-005R-002.343
   ADDRESS: 14700 1/2 CARMENITA Rd
4. INSTALL STATE-FURNISHED EMERGENCY VEHICLE DETECTOR UNIT.

POLE AND EQUIPMENT SCHEDULE

STANDARD				VEH SIG MTG		PED SIGNAL	PPB		HPS LUMINAIRE	IISNS	VIVDS
No.	Type	SMA	LMA	Mast Arm	Pole	MTG	Ø	ARROW			***
A	29A-5-161	16.8	4.6	2-MAS	SV-2-TA	-	-	-	400 W	PUMICE St	INSTALL
B	15TS	-	4.6	-	SV-3-TA	-	-	-	400 W		INSTALL
C	29A-5-161	16.8	4.6	2-MAS	SV-2-TA	-	-	-	400 W	PUMICE St	INSTALL
D	19A-3-161	7.6	4.6	1-MAT	SV-3-TA	-	-	-	400 W	CARMENITA Rd	INSTALL

*** FOR VIVDS INSTALLATION DETAIL SEE SHEET SES-1

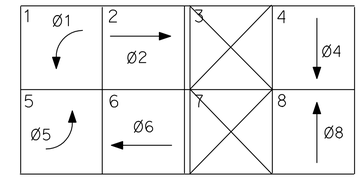

PHASE DIAGRAM

GENERAL NOTES: (THIS SHEET)

1. THIS TEMPORARY SIGNAL SYSTEM SHALL BE INSTALLED AND FUNCTIONING BEFORE START OF STAGE 2 PHASE 2.
2. RC OVERHEAD CONDUCTORS, CONTROLLER CABINET, AND TEMPORARY SIGNAL POLES AFTER STAGE 3 PHASE 3, OR AS DIRECTED BY THE ENGINEER.

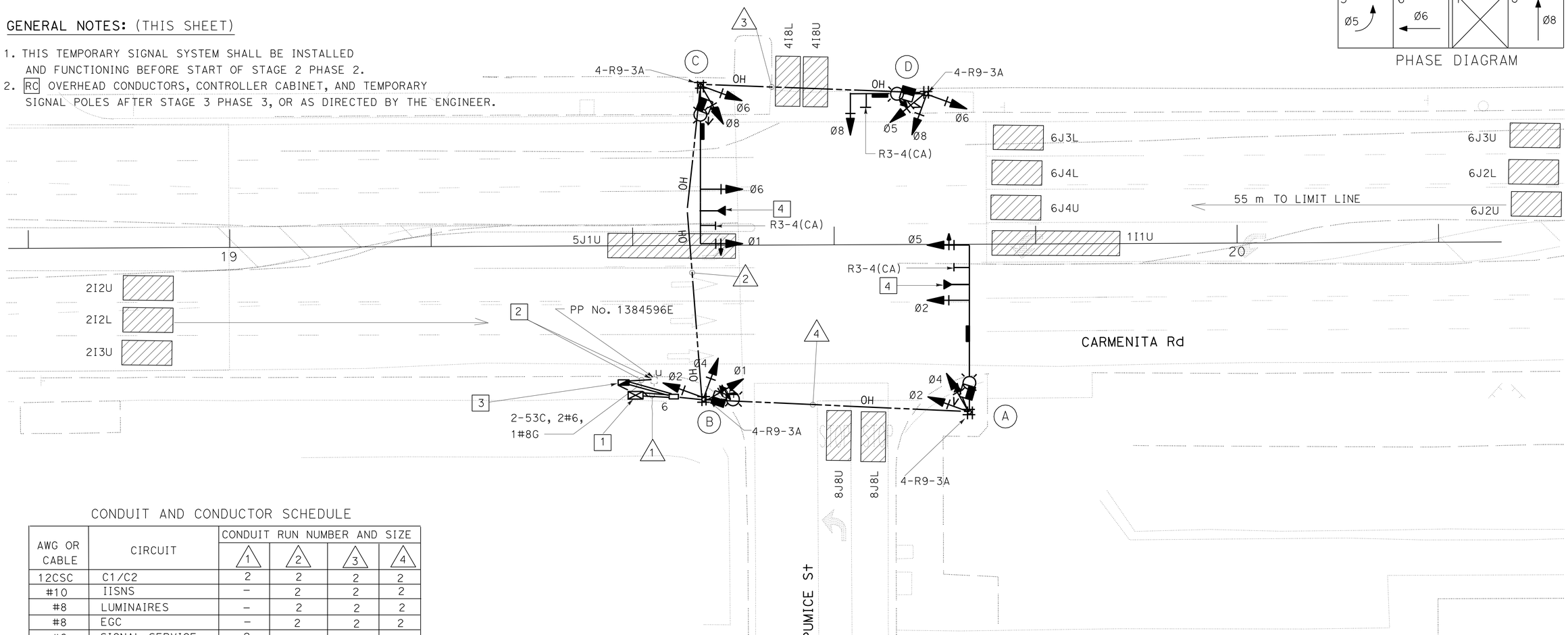

CONDUIT AND CONDUCTOR SCHEDULE

AWG OR CABLE	CIRCUIT	CONDUIT RUN NUMBER AND SIZE			
		1	2	3	4
12CSC	C1/C2	2	2	2	2
#10	IISNS	–	2	2	2
#8	LUMINAIRES	–	2	2	2
#8	EGC	–	2	2	2
#6	SIGNAL SERVICE	2	–	–	–
VIVDS CABLE		4	2	1	1
EVD		2	1	1	1
CONDUIT SIZE		2-78	OH	OH	OH

OH - OVERHEAD CABLES WITH 6 m MINIMUM CLEARANCE.

ALL DIMENSIONS ARE IN METERS UNLESS OTHERWISE SHOWN

SIGNAL AND LIGHTING (CITY STREET TEMPORARY LOCATION 8) (STAGE 2 PHASE 2)

SCALE 1:200

FOR LEGEND AND ABBREVIATIONS SEE SHEET E-1
THIS PLAN IS ACCURATE FOR ELECTRICAL WORK ONLY.

E-49

STATE OF CALIFORNIA - DEPARTMENT OF TRANSPORTATION
Caltrans TRAFFIC DESIGN
FUNCTIONAL SUPERVISOR YI TSAU
CALCULATED-DESIGNED BY CECILIO BURCIAGA
CHECKED BY LUKE SUN
REVISED BY DATE REVISED

LAST REVISION 06-02-10 DATE PLOTTED => 22-JUN-2010 TIME PLOTTED => 15:15

Dist	COUNTY	ROUTE	KILOMETER POST TOTAL PROJECT	SHEET No.	TOTAL SHEETS
07	LA	5	2.9/4.9	713	1082

REGISTERED ELECTRICAL ENGINEER 12/23/09

6-21-10
PLANS APPROVAL DATE

REGISTERED PROFESSIONAL ENGINEER CECILIO BURCIAGA No. E015302 Exp. 3-31-11 ELECT STATE OF CALIFORNIA

THE STATE OF CALIFORNIA OR ITS OFFICERS OR AGENTS SHALL NOT BE RESPONSIBLE FOR THE ACCURACY OR COMPLETENESS OF ELECTRONIC COPIES OF THIS PLAN SHEET.

Caltrans Metric

PROJECT NOTES: (THIS SHEET)

1. RS SIGNAL POLE AND EQUIPMENT.
2. RS EXISTING CONTROLLER CABINET ASSEMBLY. INSTALL ECONOLITE ASC/3 NEMA TS2 CONTROLLER ASSEMBLY WITH TYPE TS2 P ALUMINUM CABINET AT SAME LOCATION. INSTALL BATTERY BACKUP SYSTEM BATTERIES AND CABINET. BATTERY BACKUP SYSTEM COMPONENTS ARE STATE-FURNISHED.
3. RS EXISTING 120/240 V TYPE III-BF SERVICE EQUIPMENT ENCLOSURE. INSTALL 120/240 V METERED TYPE III-BF SERVICE EQUIPMENT ENCLOSURE WITH:
   - 100 A, 240 V, 2P, CB - MAIN
   - 50 A, 120 V, 1P, CB - SIGNAL
   - 30 A, 120 V, 1P, CB - SAFETY LIGHTING
   - 20 A, 120 V, 1P, CB - IISNS

ID No. 07-53-005-002.663 ADDRESS: 14880 1/2 CARMENITA Rd, NORWALK

4. USE BRACKET SYSTEM FOR TEMPORARY SIGNAL MAST ARM MOUNTING. NO HOLE SHALL BE DRILLED ON MAST ARM. (FOR INSTALLATION DETAILS, SEE SHEET E-57).
5. RL EMERGENCY VEHICLE DETECTOR UNIT FROM SIGNAL POLE (C) (SEE SHEET E-48).
6. RL CAMERA FROM TEMPORARY SIGNAL POLE (A) (SEE SHEET E-48).
7. RL CAMERA FROM TEMPORARY SIGNAL POLE (B) (SEE SHEET E-48).
8. RL CAMERA FROM TEMPORARY SIGNAL POLE (C) (SEE SHEET E-48).

CONDUIT AND CONDUCTOR SCHEDULE

AWG OR CABLE	CIRCUIT	CONDUIT RUN NUMBER AND SIZE 1	2	3	4	5	6	7	8	9
12CSC	C1	1	1	1	1	–	1	1	1	–
	C2	1	1	1	1	–	1	1	1	–
VIVDS CABLE		4	4	2	1	–	–	1	1	–
#10	IISNS	–	2	2	2	–	–	2	2	2
#8	LUMINAIRE	–	2	2	2	–	–	2	2	2
#6	SERVICE	2	–	–	–	–	–	–	–	2
#8	EGC	1	1	1	1	1	1	1	1	1
EVD		2	2	1	1	–	–	–	–	–
CONDUIT SIZE		2-78	78	78	78(*)	78(*)	78(*)	78(*)	78(*)	2-78

(*) EXISTING CONDUIT INSTALLED ON STAGE 2 PHASE 2, FOR REFERENCE SEE SHEET E-48

POLE AND EQUIPMENT SCHEDULE

STANDARD No.	Type	SMA	LMA	VEH SIG MTG Mast Arm	Pole	PED SIGNAL MTG	PPB Ø	PPB ARROW	HPS LUMINAIRE	IISNS	VIDEO DETECTION SYSTEM
(F)	29A-5-161(*)	16.8	4.6	2-MAS	SV-2-TA	SP-2-T	2 / 8	→ / ←	400 W	⇦ Lowes Dr	INSTALL ***
(G)	19A-4-161(*)	7.6	4.6	1-MAS	SV-3-TA	SP-1-T	2	←	400 W	Carmenita Rd	INSTALL ***
(I)	29A-5-161(*)	15.2	4.6	2-MAS	SV-1-T	SP-1-T	6	→	400 W	Lowes Dr ⇨	INSTALL ***
(J)	1-A (*)	-	-	-	TV-1-T	-	-	-	-	-	-
(K)	17-3-161(E)	6.1	4.6	1-MAS(E)	SV-1-T(E)	SP-1-T	6	←	400 W(E)	Carmenita Rd(E)	(E)
(L)	1-A (*)	-	-	-	TV-2-T	SP-1-T	8	→	-	-	-
(M)	1-A (*)	-	-	-	TV-1-T	-	-	-	-	-	-

(*) INSTALL SIGNAL POLE ON EXISTING FOUNDATION (FOUNDATION INSTALLED ON TEMPORARY STAGE 2 PHASE 2. REFERENCE SEE SHEET E-48)

*** FOR VIVDS INSTALLATION DETAIL SEE SHEET SES-1

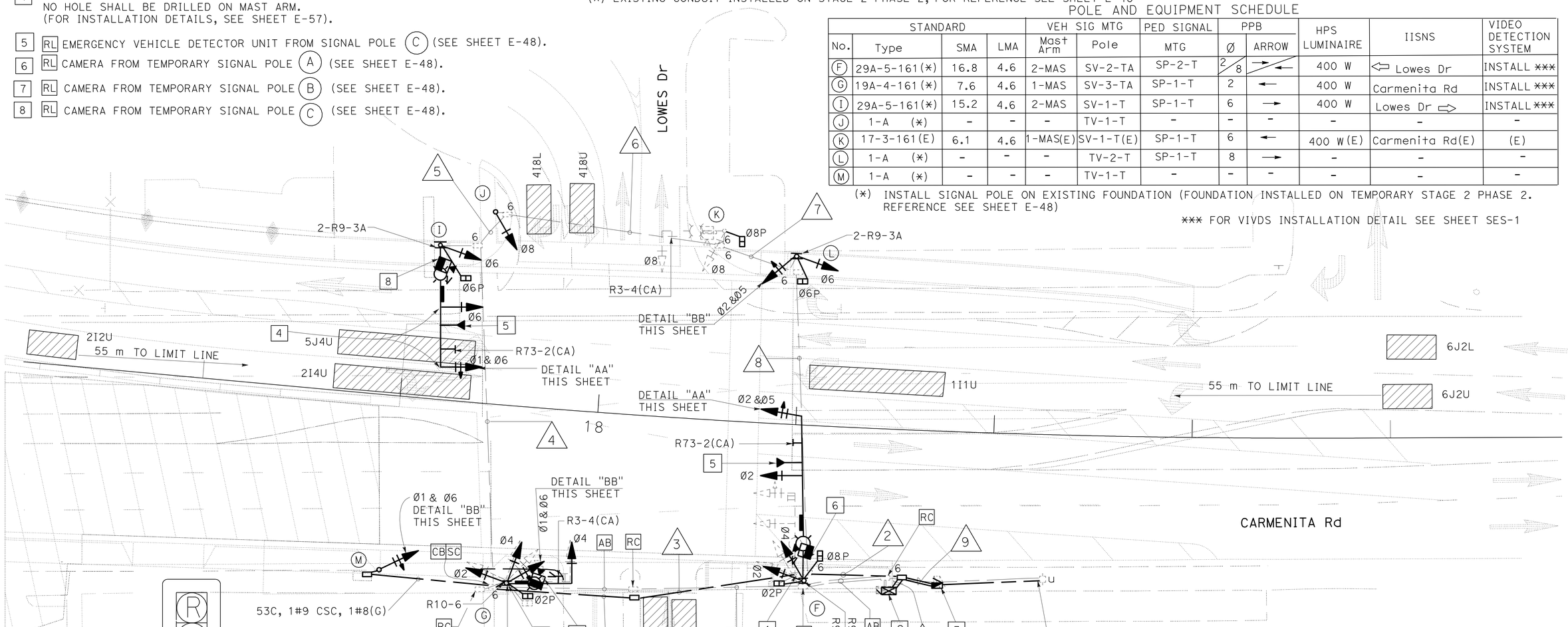

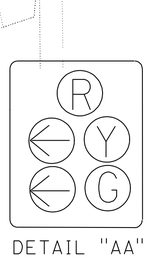

DETAIL "AA"

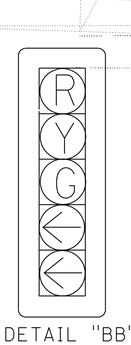

DETAIL "BB"

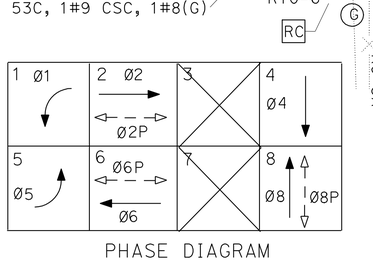

PHASE DIAGRAM

GENERAL NOTE: (THIS SHEET)

1. THIS TEMPORARY SIGNAL SYSTEM MUST BE INSTALLED AND FUNCTIONING BEFORE START OF STAGE 3 PHASE 1.

FOR LEGEND AND ABBREVIATIONS SEE SHEET E-1
THIS PLAN IS ACCURATE FOR ELECTRICAL WORK ONLY.

ALL DIMENSIONS ARE IN METERS UNLESS OTHERWISE SHOWN

SIGNAL AND LIGHTING (CITY STREET TEMPORARY LOCATION 7) (STAGE 3 PHASE 1)

SCALE 1:200

E-50

STATE OF CALIFORNIA - DEPARTMENT OF TRANSPORTATION
Caltrans
TRAFFIC DESIGN

FUNCTIONAL SUPERVISOR: YI TSAU
CALCULATED-DESIGNED BY: LUKE SUN
CHECKED BY: CECILIO BURCIAGA
REVISED BY / DATE REVISED

LAST REVISION 06-02-10 | DATE PLOTTED => 10-FEB-2011 | TIME PLOTTED => 13:41

Dist	COUNTY	ROUTE	KILOMETER POST TOTAL PROJECT	SHEET No.	TOTAL SHEETS
07	LA	5	2.9/4.9	714	1082

12/23/09
REGISTERED ELECTRICAL ENGINEER

6-21-10
PLANS APPROVAL DATE

REGISTERED PROFESSIONAL ENGINEER CECILIO BURCIAGA No. E015302 Exp. 3-31-11 ELECT STATE OF CALIFORNIA

THE STATE OF CALIFORNIA OR ITS OFFICERS OR AGENTS SHALL NOT BE RESPONSIBLE FOR THE ACCURACY OR COMPLETENESS OF ELECTRONIC COPIES OF THIS PLAN SHEET.

Caltrans Metric

NOTE:
FOR COMPLETE RIGHT OF WAY AND ACCURATE ACCESS DATA, SEE RIGHT OF WAY RECORD MAPS AT DISTRICT OFFICE.

PROJECT NOTES: (THIS SHEET)

1. INSTALL 53C, 2#10, 1#8G.
2. FOR REFERENCE ONLY. (SEE SHEET E-3 FOR INSTALLATION DETAILS)
3. INSTALL 2#10. (SEE SHEET E-3 FOR CONDUIT INSTALLATION DETAILS)
4. IRRIGATION CONTROLLER CABINET FOR REFERENCE ONLY. SEE IRRIGATION PLAN SHEET IP-2 FOR DETAILS.
5. FOR REFERENCE ONLY. (SEE SHEET E-3 FOR INSTALLATION DETAILS) 120/240 V METERED TYPE III-CF SERVICE EQUIPMENT ENCLOSURE WITH:

METER 1: CIRCUIT BREAKERS	METER 2: CIRCUIT BREAKERS
1-100 A, 240 V, 2P, CB - MAIN 2- 30 A, 240 V, 2P, CB - FREEWAY LIGHTING AND SIGN ILLUMINATION 1- 30 A, 120 V, 1P, CB - RAMP METERING 1- 30 A, 120 V, 1P, CB - BOOSTER CABINET 1- 20 A, 120,V, 1P, CB - IRRIGATION 1- 20 A, 120 V, 1P, CB - PEU	1-100 A, 240 V, 2P, CB - MAIN (TO SUB PANEL SERVICE EQUIPMENT ENCLOUSURE SHOWN ON E-39)
CTID No. 07-53-005R-002.331 ADDRESS: 13530 1/4 FIRESTONE Blvd	CTID No. 07-53-005R-002.333 ADDRESS: 13530 3/4 FIRESTONE Blvd

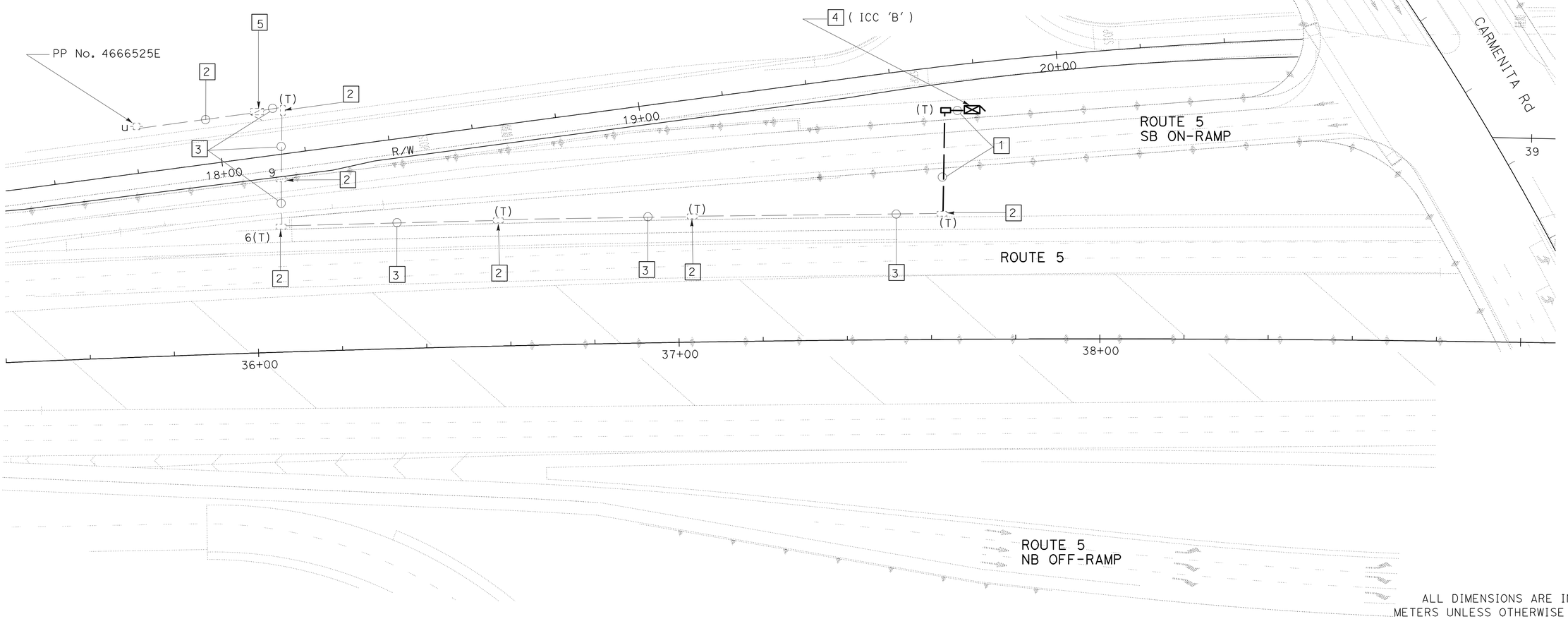

ALL DIMENSIONS ARE IN METERS UNLESS OTHERWISE SHOWN

THIS PLAN IS ACCURATE FOR ELECTRICAL WORK ONLY.

ELECTRIC SERVICE (IRRIGATION)

SCALE 1:500

E-51

STATE OF CALIFORNIA - DEPARTMENT OF TRANSPORTATION
Caltrans
TRAFFIC DESIGN

FUNCTIONAL SUPERVISOR: YI TSAU
CALCULATED-DESIGNED BY: LUKE SUN
CHECKED BY: CECILIO BURCIAGA
REVISED BY
DATE REVISED

LAST REVISION 06-02-10
DATE PLOTTED => 22-JUN-2010
TIME PLOTTED => 15:15

Dist	COUNTY	ROUTE	KILOMETER POST TOTAL PROJECT	SHEET No.	TOTAL SHEETS
07	LA	5	2.9/4.9	715	1082

12/23/09
REGISTERED ELECTRICAL ENGINEER

6-21-10
PLANS APPROVAL DATE

REGISTERED PROFESSIONAL ENGINEER CECILIO BURCIAGA No. E015302 Exp. 3-31-11 ELECT STATE OF CALIFORNIA

THE STATE OF CALIFORNIA OR ITS OFFICERS OR AGENTS SHALL NOT BE RESPONSIBLE FOR THE ACCURACY OR COMPLETENESS OF ELECTRONIC COPIES OF THIS PLAN SHEET.

Caltrans Metric

NOTE:
FOR COMPLETE RIGHT OF WAY AND ACCURATE ACCESS DATA, SEE RIGHT OF WAY RECORD MAPS AT DISTRICT OFFICE.

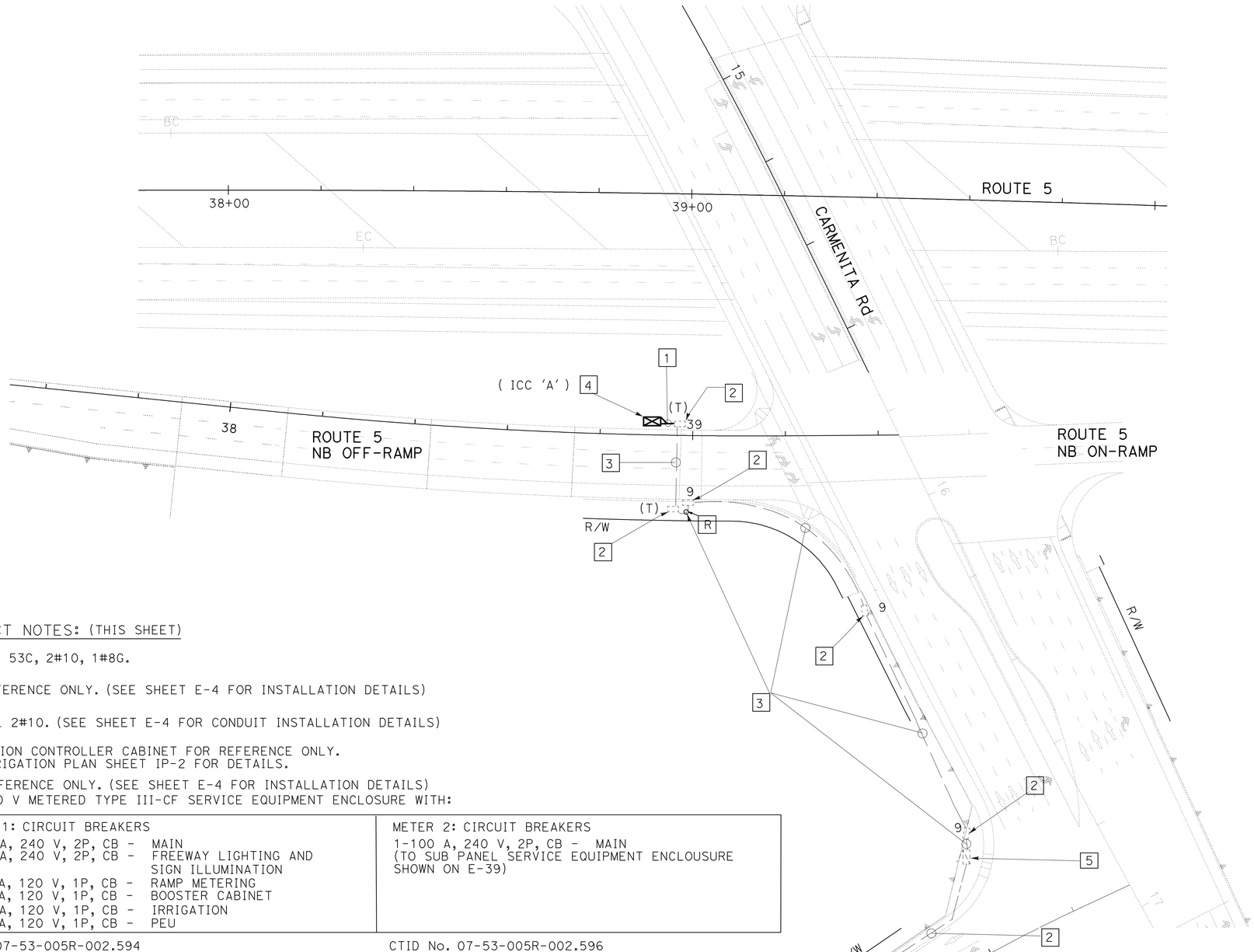

PROJECT NOTES: (THIS SHEET)

1. INSTALL 53C, 2#10, 1#8G.
2. FOR REFERENCE ONLY. (SEE SHEET E-4 FOR INSTALLATION DETAILS)
3. INSTALL 2#10. (SEE SHEET E-4 FOR CONDUIT INSTALLATION DETAILS)
4. IRRIGATION CONTROLLER CABINET FOR REFERENCE ONLY. SEE IRRIGATION PLAN SHEET IP-2 FOR DETAILS.
5. FOR REFERENCE ONLY. (SEE SHEET E-4 FOR INSTALLATION DETAILS) 120/240 V METERED TYPE III-CF SERVICE EQUIPMENT ENCLOSURE WITH:

METER 1: CIRCUIT BREAKERS	METER 2: CIRCUIT BREAKERS
1-100 A, 240 V, 2P, CB - MAIN 4- 30 A, 240 V, 2P, CB - FREEWAY LIGHTING AND SIGN ILLUMINATION 1- 30 A, 120 V, 1P, CB - RAMP METERING 1- 30 A, 120 V, 1P, CB - BOOSTER CABINET 1- 20 A, 120 V, 1P, CB - IRRIGATION 1- 20 A, 120 V, 1P, CB - PEU	1-100 A, 240 V, 2P, CB - MAIN (TO SUB PANEL SERVICE EQUIPMENT ENCLOUSURE SHOWN ON E-39)
CTID No. 07-53-005R-002.594 ADDRESS: 13412 1/4 EXCELSIOR Dr, SANTA FE SPRINGS	CTID No. 07-53-005R-002.596 ADDRESS: 13412 3/4 EXCELSIOR Dr, SANTA FE SPRINGS

ALL DIMENSIONS ARE IN METERS UNLESS OTHERWISE SHOWN

ELECTRIC SERVICE (IRRIGATION)

SCALE 1:500

E-52

THIS PLAN IS ACCURATE FOR ELECTRICAL WORK ONLY.

STATE OF CALIFORNIA - DEPARTMENT OF TRANSPORTATION
Caltrans
TRAFFIC DESIGN

FUNCTIONAL SUPERVISOR: YI TSAU
CALCULATED-DESIGNED BY: LUKE SUN
CHECKED BY: CECILIO BURCIAGA
REVISED BY / DATE REVISED

LAST REVISION 06-02-10 | DATE PLOTTED => 22-JUN-2010 | TIME PLOTTED => 15:15

Dist	COUNTY	ROUTE	KILOMETER POST TOTAL PROJECT	SHEET No.	TOTAL SHEETS
07	LA	5	2.9/4.9	716	1082

12/23/09
REGISTERED ELECTRICAL ENGINEER

6-21-10
PLANS APPROVAL DATE

REGISTERED PROFESSIONAL ENGINEER CECILIO BURCIAGA No. E015302 Exp. 3-31-11 ELECT STATE OF CALIFORNIA

THE STATE OF CALIFORNIA OR ITS OFFICERS OR AGENTS SHALL NOT BE RESPONSIBLE FOR THE ACCURACY OR COMPLETENESS OF ELECTRONIC COPIES OF THIS PLAN SHEET.

Caltrans Metric

NOTES: (THIS SHEET)

1. TEMPORARY POLES SHALL BE USED FOR EITHER OVERHEAD CONDUCTORS OR LUMINAIRES WITH MAST ARMS.
2. ALL OVERHEAD CABLE SHALL BE SLACK SPANNED WITH 6.1 m MINIMUM OVERHEAD CLEARANCE.
3. NO SPARE CONDUCTORS REQUIRED EXCEPT AS NOTED.
4. MULTI-CONDUCTOR OR SINGLE CONDUCTOR CABLE MAY BE USED.
5. POLES SHALL BE BREAST BLOCKED, GUYED OR RAKED WHERE NECESSARY.
6. COLOR CODING ON MULTI-CONDUCTOR CABLE NEED NOT CONFORM TO THE STANDARD SPECIFICATIONS REQUIREMENT.
7. CABLE SHALL BE SUSPENDED FROM SPAN WIRE AS FOLLOWS,

   MAIN RUN - 10 mm SPAN WIRE.
   TIE RODS SHALL BE 19 mm STANDARD PIPE WITH 16 mm Ø 127 mm THREADED RODS WELDED TO EACH END.
8. LUMINAIRE SHALL HAVE INTEGRAL BALLAST.

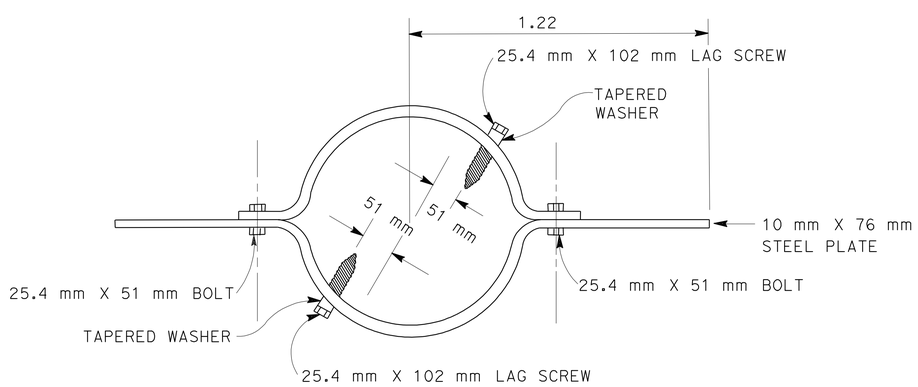

WIND ANCHOR

TO BE INSTALLED PERPENDICULAR TO MAST ARMS AND 0.61 m Min BELOW GRADE

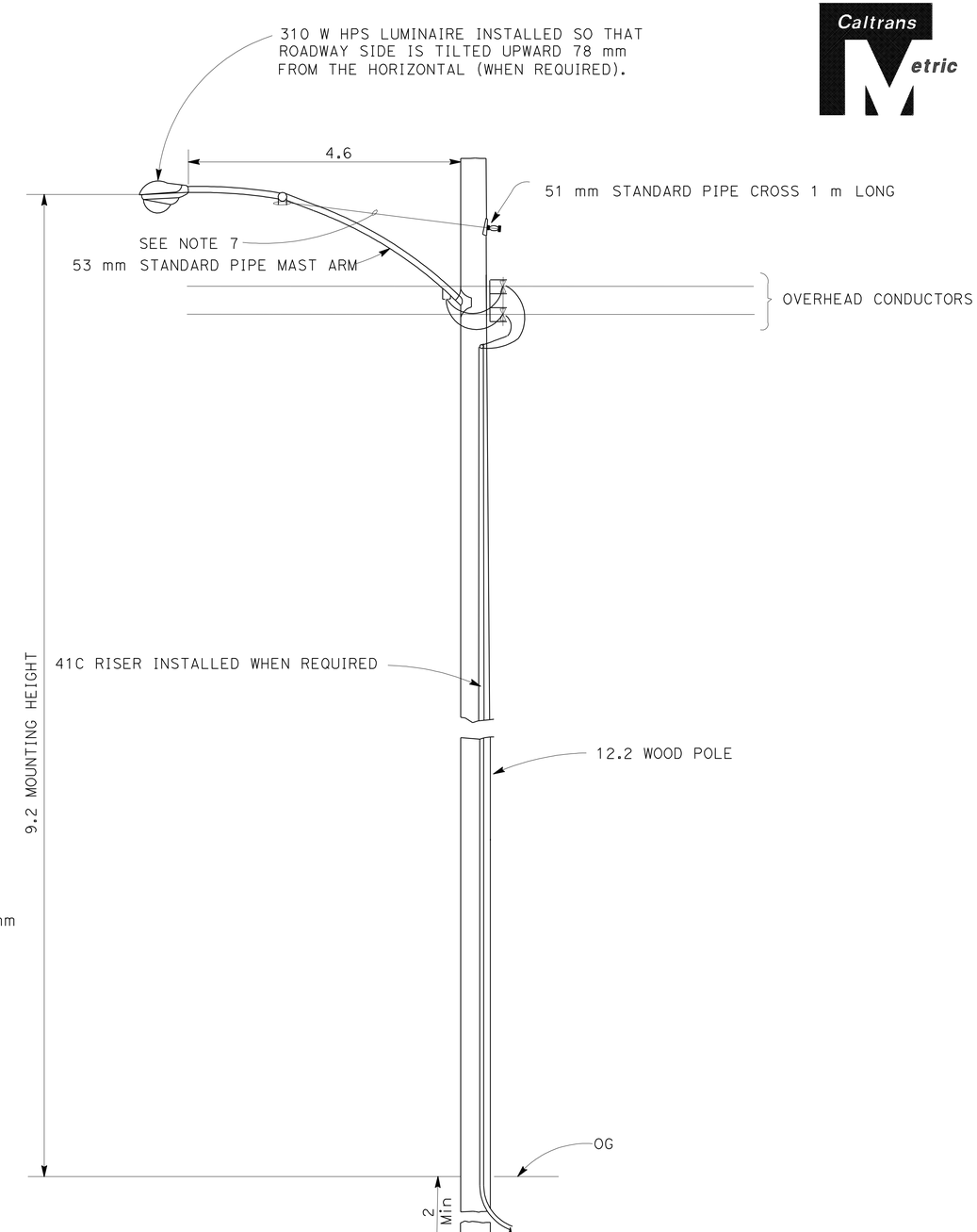

TYPICAL MOUNTING DETAILS

ALL DIMENSIONS ARE IN METERS UNLESS OTHERWISE SHOWN

LIGHTING (TEMPORARY)

NO SCALE

E-53

THIS PLAN IS ACCURATE FOR ELECTRICAL WORK ONLY.

STATE OF CALIFORNIA - DEPARTMENT OF TRANSPORTATION
Caltrans
TRAFFIC DESIGN

FUNCTIONAL SUPERVISOR: YI TSAU
CALCULATED-DESIGNED BY: LUKE SUN
CHECKED BY: CECILIO BURCIAGA
REVISED BY
DATE REVISED

LAST REVISION 06-02-10
DATE PLOTTED => 22-JUN-2010
TIME PLOTTED => 15:15

Dist	COUNTY	ROUTE	KILOMETER POST TOTAL PROJECT	SHEET No.	TOTAL SHEETS
07	LA	5	2.9/4.9	717	1082

12/23/09
REGISTERED ELECTRICAL ENGINEER

6-21-10
PLANS APPROVAL DATE

REGISTERED PROFESSIONAL ENGINEER CECILIO BURCIAGA No. E015302 Exp. 3-31-11 ELECT STATE OF CALIFORNIA

THE STATE OF CALIFORNIA OR ITS OFFICERS OR AGENTS SHALL NOT BE RESPONSIBLE FOR THE ACCURACY OR COMPLETENESS OF ELECTRONIC COPIES OF THIS PLAN SHEET.

Caltrans Metric

NOTES:

1. THE 15TS STANDARD SHALL CONFORM TO STANDARD PLANS RSP ES-7A (FOUNDATION EXCLUDED).

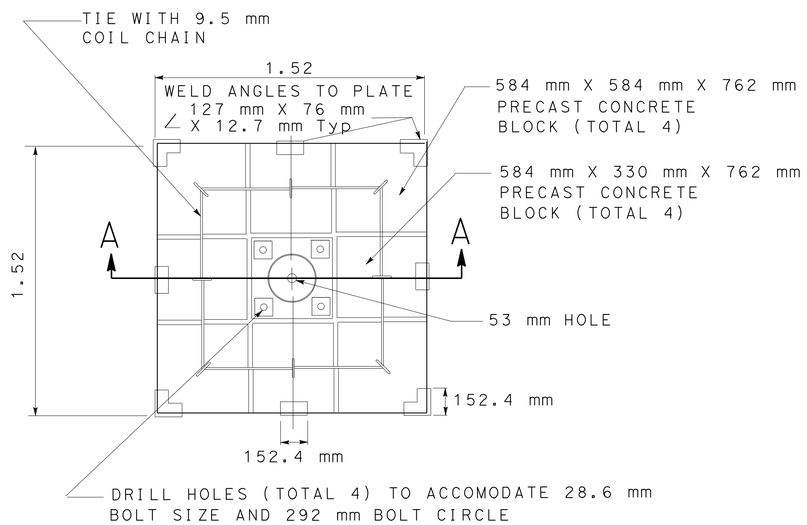

PLAN

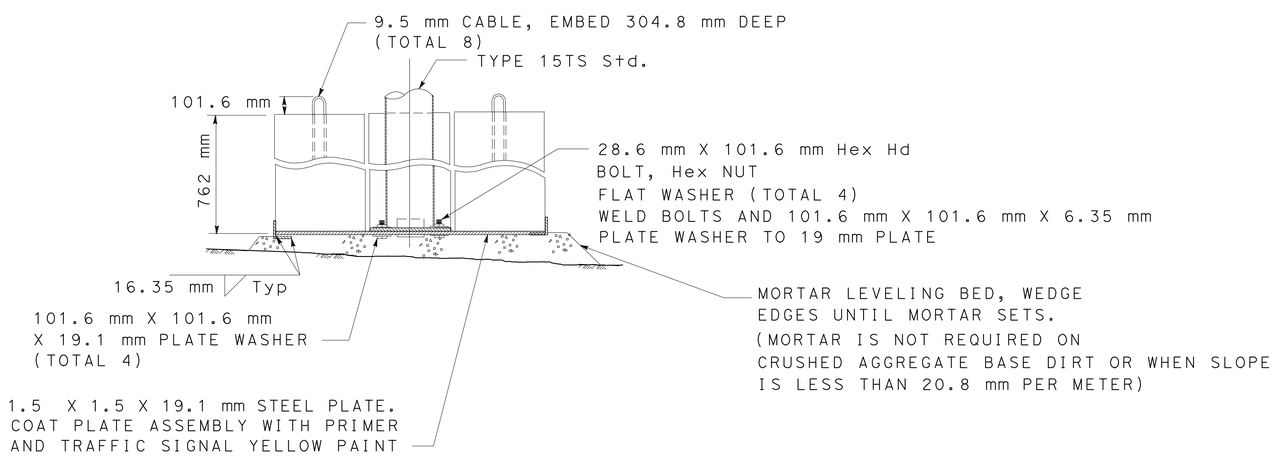

SECTION A-A

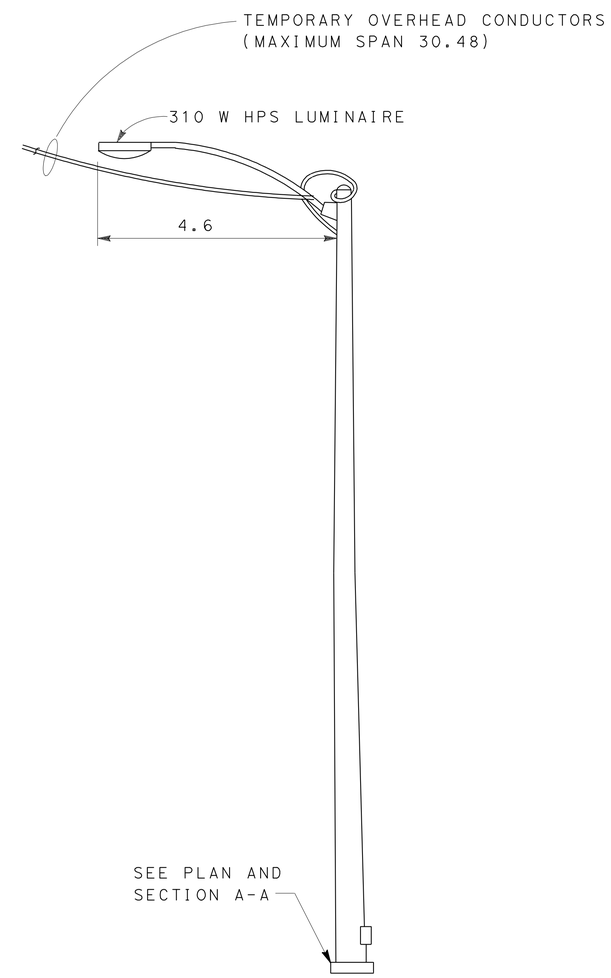

TYPE 15TS Std

ALL DIMENSIONS ARE IN METERS UNLESS OTHERWISE SHOWN

LIGHTING (TEMPORARY)

NO SCALE

THIS PLAN ACCURATE FOR ELECTRICAL WORK ONLY.

E-54

STATE OF CALIFORNIA - DEPARTMENT OF TRANSPORTATION
Caltrans
TRAFFIC DESIGN

FUNCTIONAL SUPERVISOR: YI TSAU
CALCULATED-DESIGNED BY: LUKE SUN
CHECKED BY: CECILIO BURCIAGA
REVISED BY
DATE REVISED

LAST REVISION 06-02-10
DATE PLOTTED => 22-JUN-2010
TIME PLOTTED => 15:15

Dist	COUNTY	ROUTE	KILOMETER POST TOTAL PROJECT	SHEET No.	TOTAL SHEETS
07	LA	5	2.9/4.9	718	1082

12/23/09
REGISTERED ELECTRICAL ENGINEER

6-21-10
PLANS APPROVAL DATE

REGISTERED PROFESSIONAL ENGINEER
CECILIO BURCIAGA
No. E015302
Exp. 3-31-11
ELECT
STATE OF CALIFORNIA

THE STATE OF CALIFORNIA OR ITS OFFICERS OR AGENTS SHALL NOT BE RESPONSIBLE FOR THE ACCURACY OR COMPLETENESS OF ELECTRONIC COPIES OF THIS PLAN SHEET.

Caltrans Metric

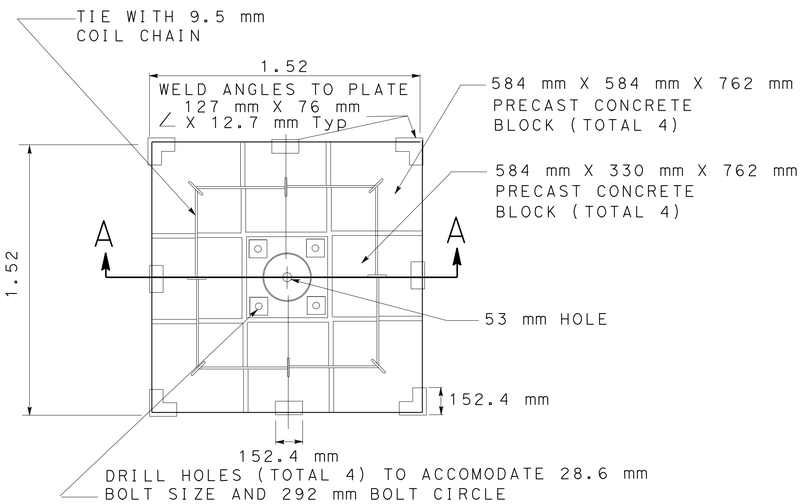

PLAN

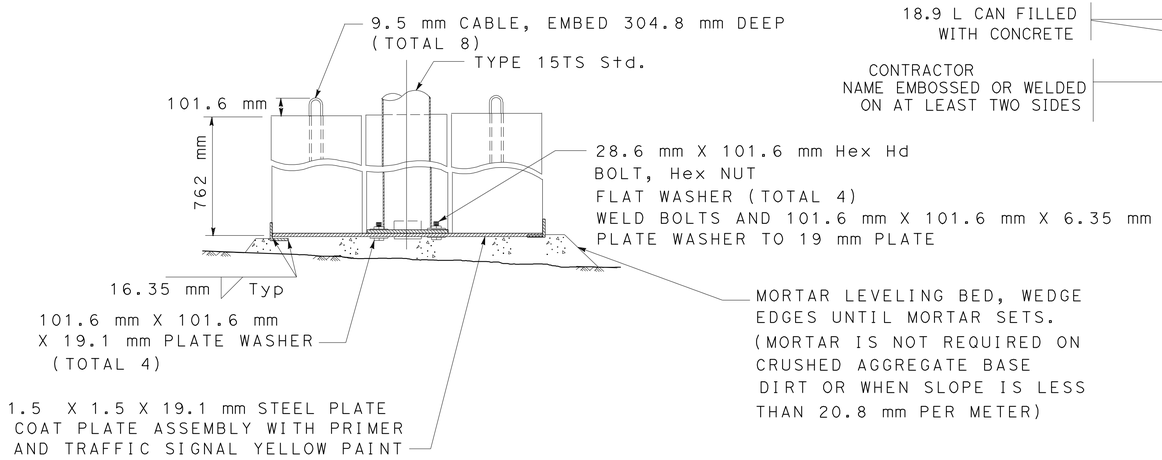

SECTION A-A

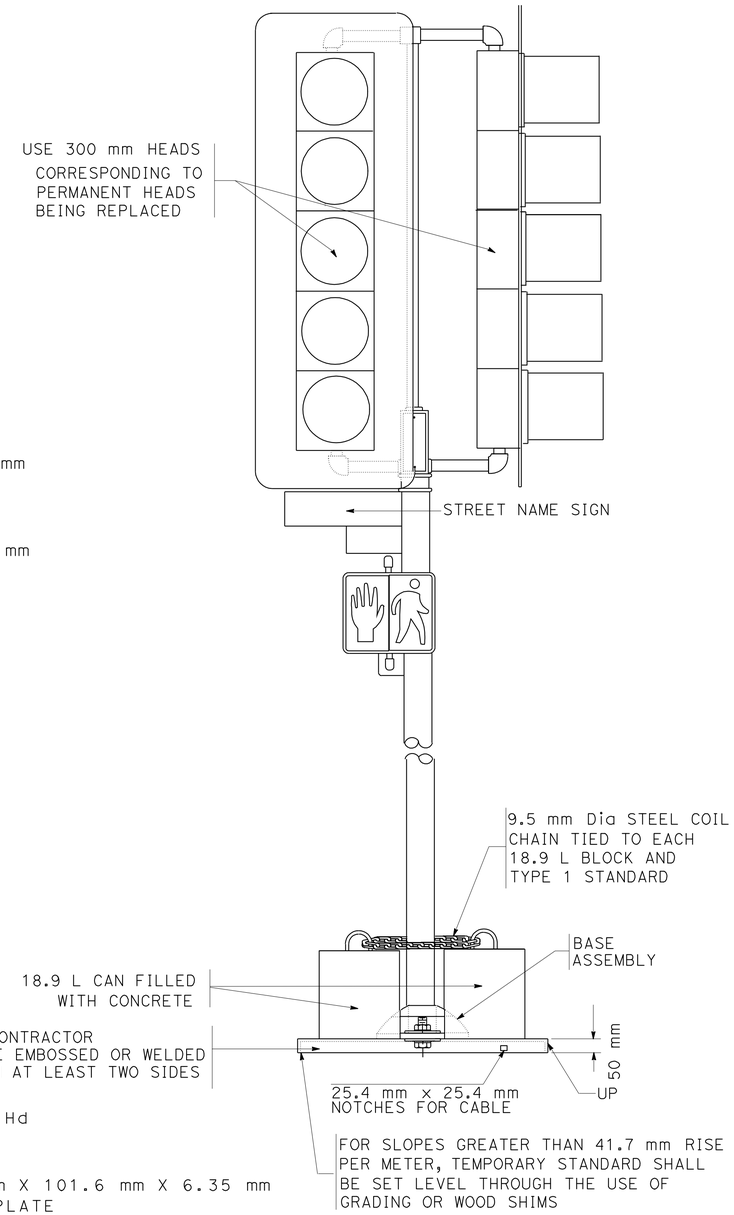

TEMPORARY SIGNAL
FOR TYPE 1-A STANDARD

ALL DIMENSIONS ARE IN
METERS UNLESS OTHERWISE SHOWN

THIS PLAN IS ACCURATE FOR ELECTRICAL WORK ONLY

SIGNAL AND LIGHTING (CITY STREET TEMPORARY LOCATION 7)

NO SCALE

E-55

STATE OF CALIFORNIA - DEPARTMENT OF TRANSPORTATION
Caltrans
TRAFFIC DESIGN

FUNCTIONAL SUPERVISOR: YI TSAU
CALCULATED-DESIGNED BY: CECILIO BURCIAGA
CHECKED BY: LUKE SUN
REVISED BY
DATE REVISED

LAST REVISION 06-02-10
DATE PLOTTED => 22-JUN-2010
TIME PLOTTED => 15:15

Dist	COUNTY	ROUTE	KILOMETER POST TOTAL PROJECT	SHEET No.	TOTAL SHEETS
07	LA	5	2.9/4.9	719	1082

12/23/09
REGISTERED ELECTRICAL ENGINEER

6-21-10
PLANS APPROVAL DATE

REGISTERED PROFESSIONAL ENGINEER
CECILIO BURCIAGA
No. E015302
Exp. 3-31-11
ELECT
STATE OF CALIFORNIA

THE STATE OF CALIFORNIA OR ITS OFFICERS OR AGENTS SHALL NOT BE RESPONSIBLE FOR THE ACCURACY OR COMPLETENESS OF ELECTRONIC COPIES OF THIS PLAN SHEET.

Caltrans Metric

NOTES: (THIS SHEET)

1. THE 19A-3-161 STANDARD SHALL CONFORM TO STANDARD PLANS RSP ES-7E (FOUNDATION EXCLUDED).
2. THERE SHALL BE A MAXIMUM OF 2-5 SECTION HEADS AND 2-PED HEADS MOUNTED TO THE SHAFT AND ONE 5-SECTION SIGNAL HEAD MOUNTED AT THE END OF MAST ARM.

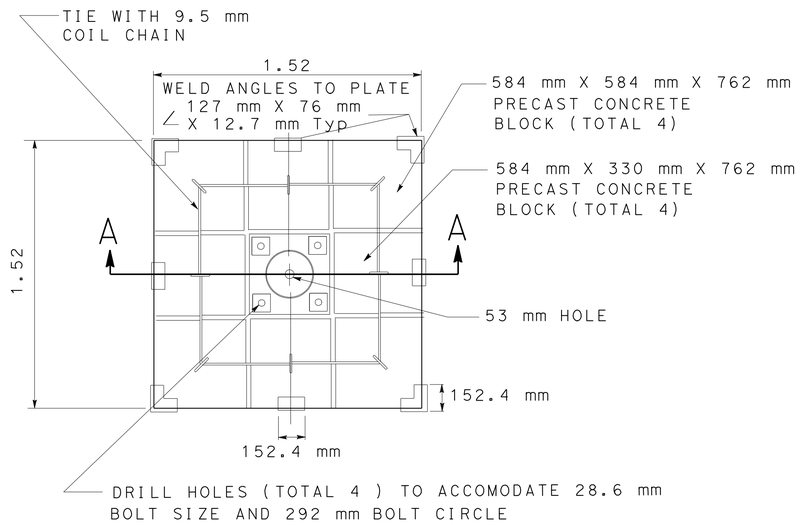

PLAN

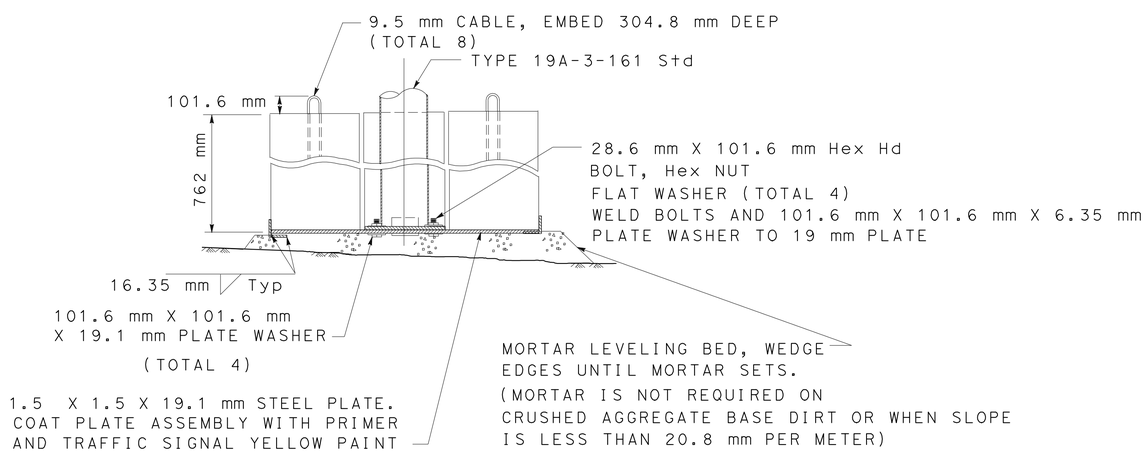

SECTION A-A

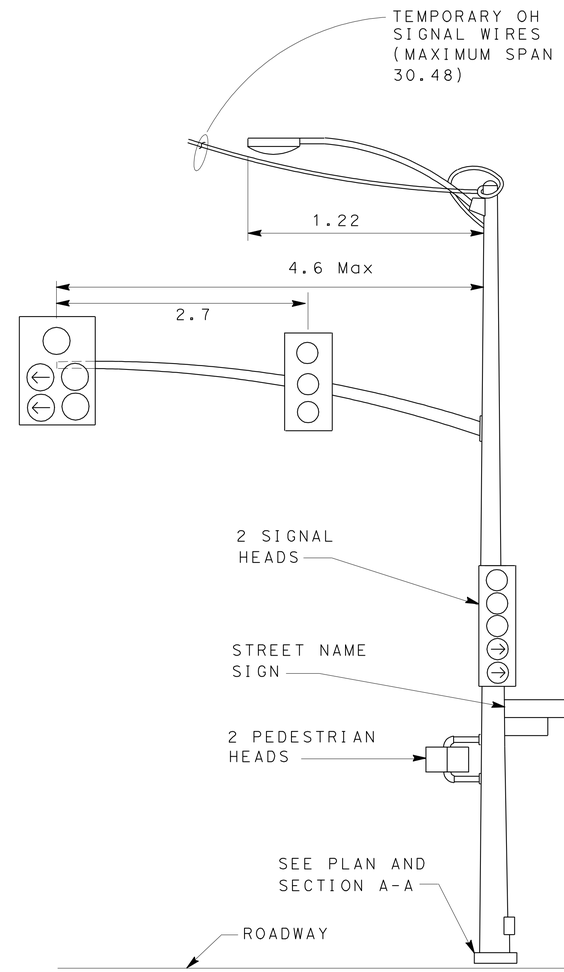

TYPE 19A-3-161 Std

ALL DIMENSIONS ARE IN METERS UNLESS OTHERWISE SHOWN

SIGNAL AND LIGHTING (TEMPORARY)

NO SCALE

THIS PLAN IS ACCURATE FOR ELECTRICAL WORK ONLY.

E-56

STATE OF CALIFORNIA - DEPARTMENT OF TRANSPORTATION
Caltrans
TRAFFIC DESIGN

FUNCTIONAL SUPERVISOR: YI TSAU
CALCULATED-DESIGNED BY: LUKE SUN
CHECKED BY: CECILIO BURCIAGA
REVISED BY
DATE REVISED

LAST REVISION 06-02-10
DATE PLOTTED => 22-JUN-2010
TIME PLOTTED => 15:16

Dist	COUNTY	ROUTE	KILOMETER POST TOTAL PROJECT	SHEET No.	TOTAL SHEETS
07	LA	5	2.9/4.9	720	1082

12/23/09
REGISTERED ELECTRICAL ENGINEER

6-21-10
PLANS APPROVAL DATE

REGISTERED PROFESSIONAL ENGINEER
CECILIO BURCIAGA
No. E015302
Exp. 3-31-11
ELECT
STATE OF CALIFORNIA

THE STATE OF CALIFORNIA OR ITS OFFICERS OR AGENTS SHALL NOT BE RESPONSIBLE FOR THE ACCURACY OR COMPLETENESS OF ELECTRONIC COPIES OF THIS PLAN SHEET.

ABBREVIATION: (THIS SHEET)

CTC	CENTER TO CENTER
TOE	THREADED ONE END

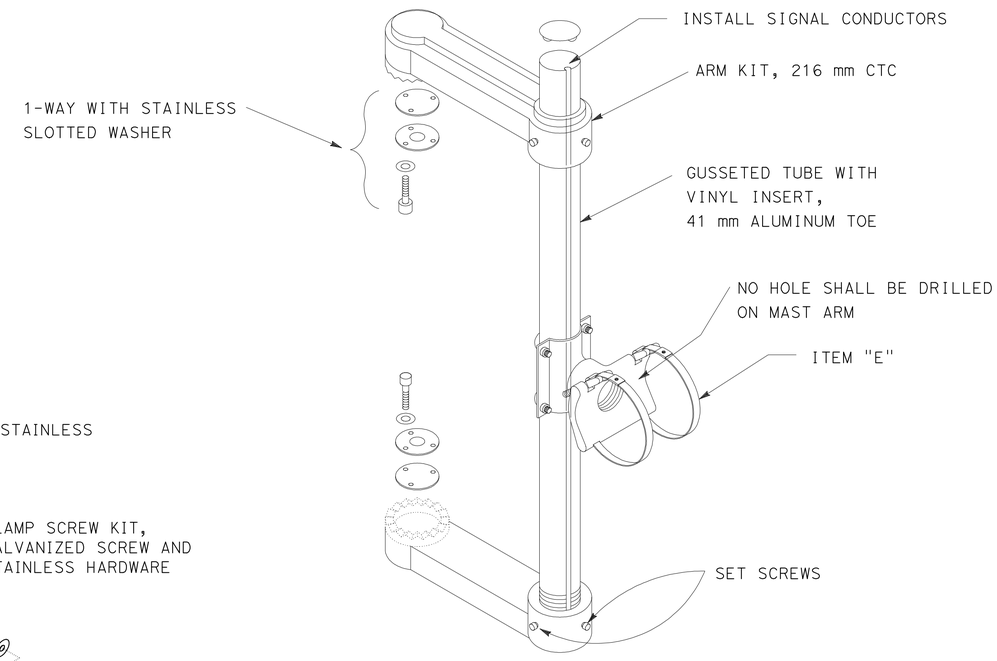

TEMPORARY MAST ARM MOUNTING

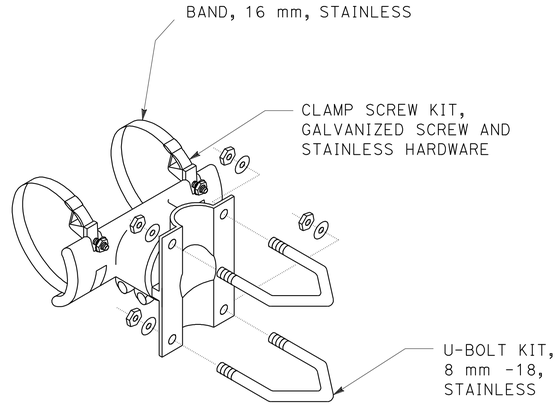

ITEM "E"

ALL DIMENSIONS ARE IN METERS UNLESS OTHERWISE SHOWN

RAMP METERING SYSTEM SIGNAL AND LIGHTING (DETAILS)

NO SCALE

THIS PLAN IS ACCURATE FOR ELECTRICAL WORK ONLY.

E-57

REVISED BY	
DATE REVISED	
LUKE SUN	
CECILIO BURCIAGA	
CALCULATED-DESIGNED BY	
CHECKED BY	
FUNCTIONAL SUPERVISOR	
YI TSAU	

STATE OF CALIFORNIA - DEPARTMENT OF TRANSPORTATION
Caltrans
TRAFFIC DESIGN

LAST REVISION 06-02-10
DATE PLOTTED => 22-JUN-2010
TIME PLOTTED => 15:16

Dist	COUNTY	ROUTE	KILOMETER POST TOTAL PROJECT	SHEET No.	TOTAL SHEETS
07	LA	5	2.9/4.9	721	1082

12/23/09
REGISTERED ELECTRICAL ENGINEER

6-21-10
PLANS APPROVAL DATE

REGISTERED PROFESSIONAL ENGINEER CECILIO BURCIAGA No. E015302 Exp. 3-31-11 ELECT STATE OF CALIFORNIA

THE STATE OF CALIFORNIA OR ITS OFFICERS OR AGENTS SHALL NOT BE RESPONSIBLE FOR THE ACCURACY OR COMPLETENESS OF ELECTRONIC COPIES OF THIS PLAN SHEET.

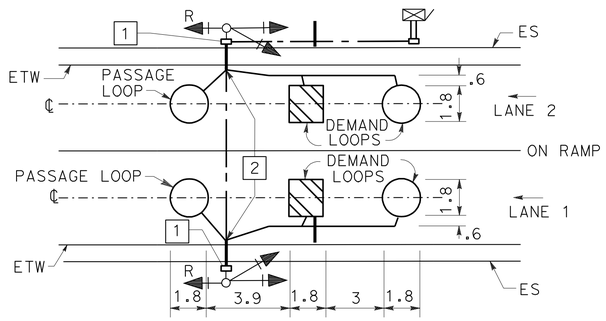

TYPICAL 2-LANE RAMP
METERING SYSTEM INSTALLATION

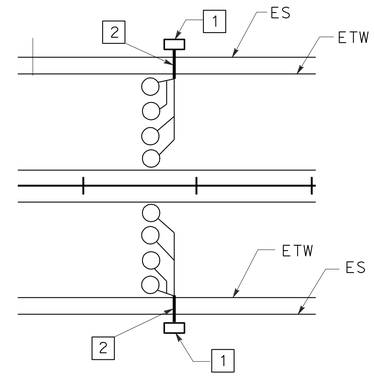

TYPICAL TRAFFIC
MONITORING LOOP CONFIGURATION

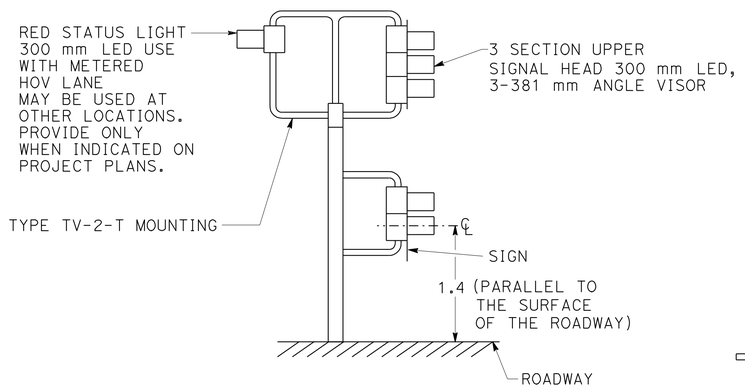

RAMP METER SIGNAL

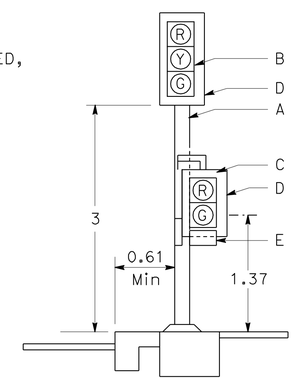

A. TYPE 1-A SIGNAL STANDARD.

B. 3-SECTION 300 mm LED SIGNAL HEAD (RED, YELLOW, GREEN).
457 mm x 200 mm ANGLED VISORS ARE REQUIRED WHERE SHOWN ON PLANS.

C. 2-SECTION 300 mm LED SIGNAL HEAD (RED, GREEN).
300 mm FULL CIRCLE VISORS
TYPE SV-1-T BRACKET MOUNTING ON SIDE OF STANDARD, AWAY FROM TRAFFIC.

D. BACKPLATE.

E. R89(CA)
MOUNT ON BACK PLATE AND CENTER BETWEEN GREEN SECTION AND BOTTOM OF BACK PLATES AND SIDES. ATTACH WITH 7 mm x 19 mm BOLTS, HEX NUTS, PLAIN AND LOCK WASHERS.

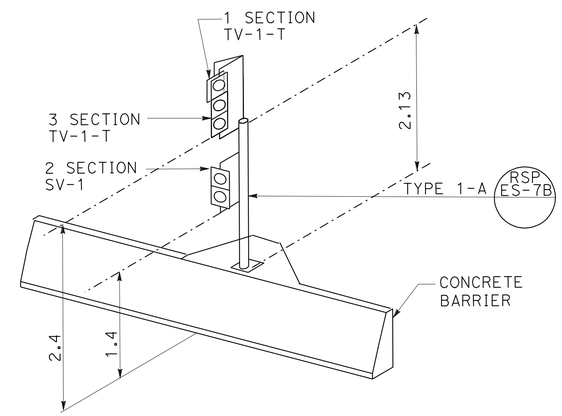

TYPICAL DETAIL FOR RAMP METER SIGNAL ON CONCRETE BARRIER

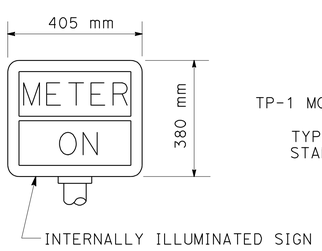

DETAIL D
METER-ON SIGN

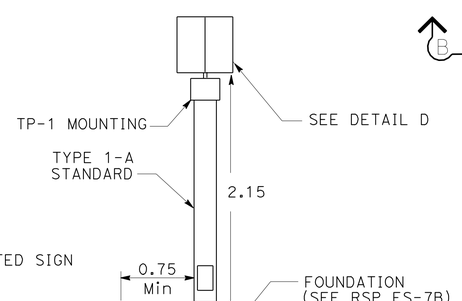

METER-ON SIGNAL

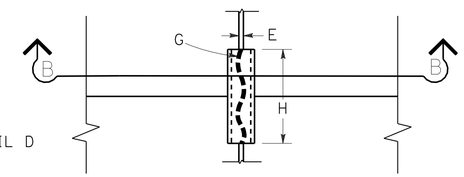

PLAN VIEW

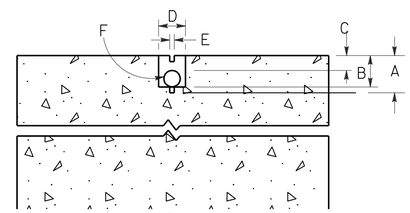

SECTION B-B

A. SAW-CUT DEPTH TO ACCOMMODATE SPECIFIED NUMBER OF CONDUCTORS WITH A MINIMUM OF 13 mm FROM TOP OF WIRE TO PAVEMENT SURFACE (83 mm Max).

B. SLOT SAW-CUT DEPTH TO ACCOMMODATE 27C TYPE 3 CONDUIT WITH 13 mm MINIMUM FROM TOP OF CONDUIT TO PAVEMENT SURFACE.

C. 13 mm MINIMUM BETWEEN TOP OF CONDUIT AND PAVEMENT SURFACE.

D. SAW-CUT WIDTH TO ACCOMMODATE 27C TYPE 3 CONDUIT WITH 3 mm CLEARANCE.

E. SAW-CUT 10 mm WIDE (Max).

F. 27C TYPE 3 CONDUIT, 152 mm LONG, PLUG BOTH ENDS WITH CAULKING COMPOUND TO KEEP OUT EPOXY.

G. CONDUCTORS WITH 13 mm MINIMUM SLACK INSIDE CONDUIT.

H. SAW-CUT LENGTH OF SLOT 3 mm LONGER THAN CONDUIT.

TYPICAL LOOP LEAD-IN
DETAIL AT PAVEMENT JOINT

NOTES: (THIS SHEET ONLY)

1. SEE PLANS FOR CONDUIT SIZES & TYPES OF PULL BOXES. SEE TYPICAL LOOP LEAD-IN DETAIL AT PAVEMENT JOINT ON THIS SHEET.

2. SEE RSP ES-5D.

3. THE CONTRACTOR SHALL VERIFY ALL CONTROLLER FIELD DIMENSIONS BEFORE ORDERING OR FABRICATING MATERIAL.

THIS PLAN IS ACCURATE FOR ELECTRICAL WORK ONLY.

ALL DIMENSIONS ARE IN METERS UNLESS OTHERWISE SHOWN

RAMP METERING SYSTEM
(DETAILS)

NO SCALE

E-58

STATE OF CALIFORNIA - DEPARTMENT OF TRANSPORTATION
Caltrans
TRAFFIC DESIGN

FUNCTIONAL SUPERVISOR: YI TSAU
CALCULATED-DESIGNED BY: LUKE SUN
CHECKED BY: CECILIO BURCIAGA
REVISED BY / DATE REVISED

LAST REVISION 06-02-10 | DATE PLOTTED => 22-JUN-2010 | TIME PLOTTED => 15:16

Dist	COUNTY	ROUTE	KILOMETER POST TOTAL PROJECT	SHEET No.	TOTAL SHEETS
07	LA	5	2.9/4.9	722	1082

12/23/09
REGISTERED ELECTRICAL ENGINEER

6-21-10
PLANS APPROVAL DATE

REGISTERED PROFESSIONAL ENGINEER
CECILIO BURCIAGA
No. E015302
Exp. 3-31-11
ELECT
STATE OF CALIFORNIA

THE STATE OF CALIFORNIA OR ITS OFFICERS OR AGENTS SHALL NOT BE RESPONSIBLE FOR THE ACCURACY OR COMPLETENESS OF ELECTRONIC COPIES OF THIS PLAN SHEET.

Caltrans Metric

THIS SHEET INTENTIONALLY LEFT BLANK

RAMP METERING SYSTEM

E-59

REVISED BY	DATE REVISED

LUKE SUN
CECILIO BURCIAGA

CALCULATED-DESIGNED BY
CHECKED BY

FUNCTIONAL SUPERVISOR
YI TSAU

STATE OF CALIFORNIA - DEPARTMENT OF TRANSPORTATION
Caltrans
TRAFFIC DESIGN

LAST REVISION 06-02-10
DATE PLOTTED => 09-FEB-2011
TIME PLOTTED => 08:30

DIST	COUNTY	ROUTE	KILOMETER POST TOTAL PROJECT	SHEET No	TOTAL SHEETS
07	LA	5	2.9/4.9	723	1082

REGISTERED CIVIL ENGINEER 7/22/10 DATE

6-21-10
PLANS APPROVAL DATE

REGISTERED PROFESSIONAL ENGINEER ANDREW BUI No. C63560 Exp. 9/30/10 CIVIL STATE OF CALIFORNIA

The State of California or its officers or agents shall not be responsible for the accuracy or completeness of electronic copies of this plan sheet.

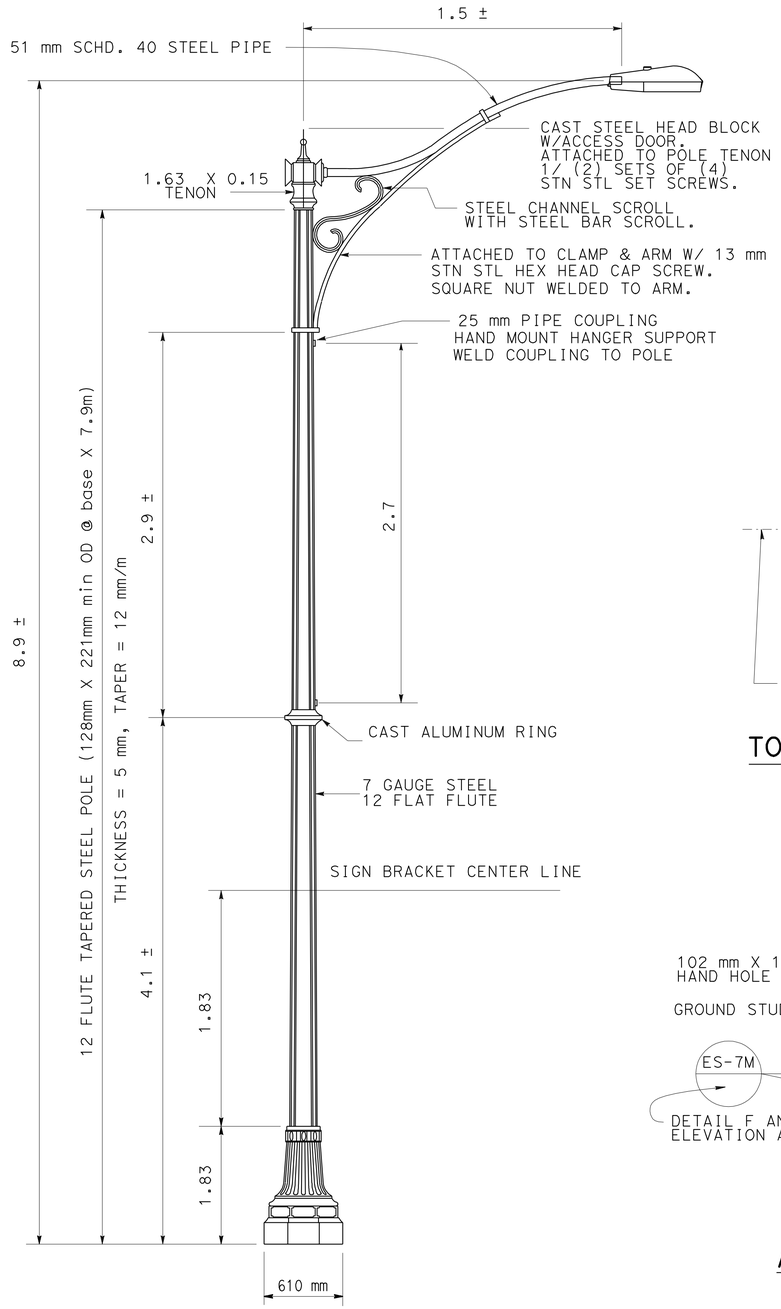

ELEVATION
DECORATIVE CITY LIGHTING STANDARD

NO SCALE

NOTE:
THE CONTRACTOR SHALL VERIFY ALL CONTROLLING FIELD DIMENSIONS BEFORE ORDERING OR FABRICATING ANY MATERIAL.

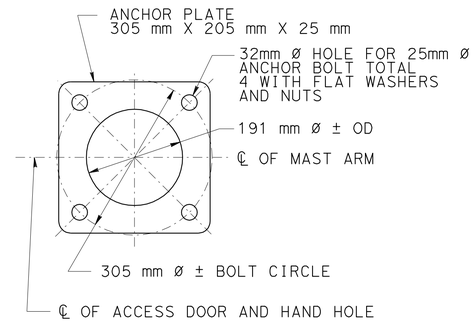

TOP VIEW OF BASE PLATE

STREET MOUNT (TYPE 3)

NO SCALE

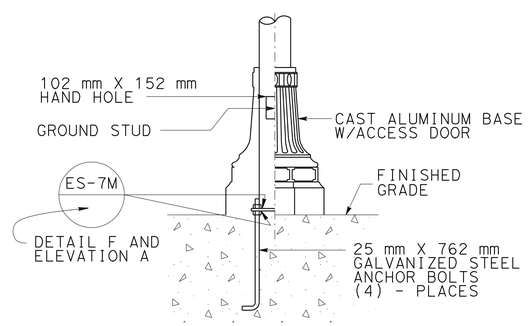

ANCHORAGE DETAIL

NO SCALE

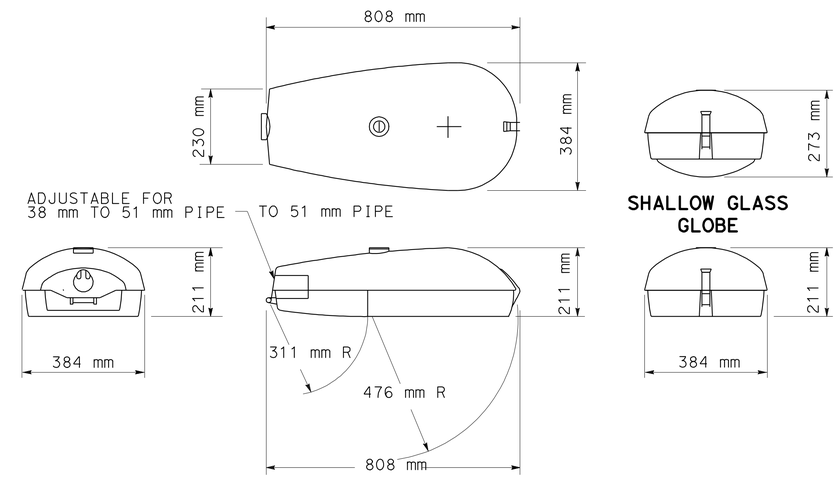

LUMINAIRE WITH CUTOFF OPTICS & 4 BOLT SLIPFITTER

NO SCALE

NOTES:

1. All fasteners to be stainless steel unless otherwise otherwise specified.
2. All cast aluminum to be S19 alloy unless otherwise specified.
3. All steel to be high tensile strength reference all details see structure sheet SD-66, luminaire corbel details No. 3.

BRANCH CHIEF	DESIGN	BY J DATILES	CHECKED A BUI
	DETAILS	BY A R DUDSAK	CHECKED J DATILES
	QUANTITIES	BY J DATILES	CHECKED A BUI

STATE OF CALIFORNIA
DEPARTMENT OF TRANSPORTATION

DIVISION OF ENGINEERING SERVICES
DESIGN AND TECHNICAL SERVICES
SPECIAL DESIGNS BRANCH
A

BRIDGE NO. X
POST MILE X

DECORATIVE CITY LIGHTING STANDARD
DECORATIVE POLE DETAILS 1

E-60

(ENGLISH) SPECIAL DESIGNS BRANCH BORDER SHEET (REV. 7-1-09)

ORIGINAL SCALE IN MILLIMETERS FOR REDUCED PLANS 0 10 20 30 40 50 60 70 80 90 100

CU X
EA X

DISREGARD PRINTS BEARING EARLIER REVISION DATES 7/18/10 7/21/10 7/22/10

REVISION DATES

SHEET 1 OF 1

FILE => spec_des_br_prj/2010sd/07-2159C1/07-2159c1_ses-1.dgn

USERNAME => ttmirkes1 DATE PLOTTED => 22-JUL-2010 TIME PLOTTED => 13:00

Dist	COUNTY	ROUTE	KILOMETER POST TOTAL PROJECT	SHEET No.	TOTAL SHEETS
07	LA	5	2.9/4.9	724	1082

Caltrans Metric

12/23/09
REGISTERED ELECTRICAL ENGINEER

6-21-10
PLANS APPROVAL DATE

REGISTERED PROFESSIONAL ENGINEER
CECILIO BURCIAGA
No. E015302
Exp. 3-31-11
ELECT
STATE OF CALIFORNIA

THE STATE OF CALIFORNIA OR ITS OFFICERS OR AGENTS SHALL NOT BE RESPONSIBLE FOR THE ACCURACY OR COMPLETENESS OF ELECTRONIC COPIES OF THIS PLAN SHEET.

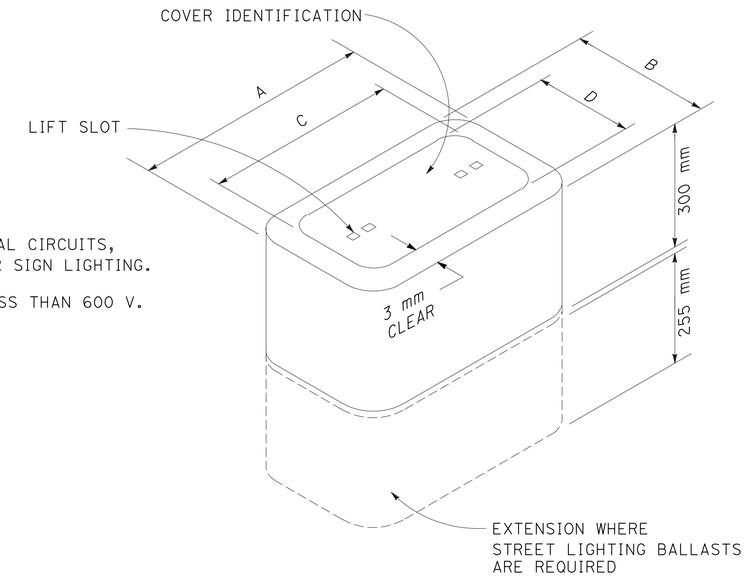

COVER IDENTIFICATION:

"TRAFFIC SIGNAL" - TRAFFIC SIGNAL CIRCUITS, INCLUDING THOSE WITH STREET OR SIGN LIGHTING.

"STREET LIGHTING" - CIRCUITS LESS THAN 600 V.

NOTE: (THIS SHEET)

BOXES SHALL BE PCC AND COVERS SHALL BE NON-BOLTDOWN TYPE UNLESS OTHERWISE NOTED.

PULL BOX No.	TYPE	DIMENSIONS (mm)			
		OUTSIDE		COVER	
		A	B	C	D
5	PLASTIC	610	375	584	350
6	PLASTIC	800	475	775	450

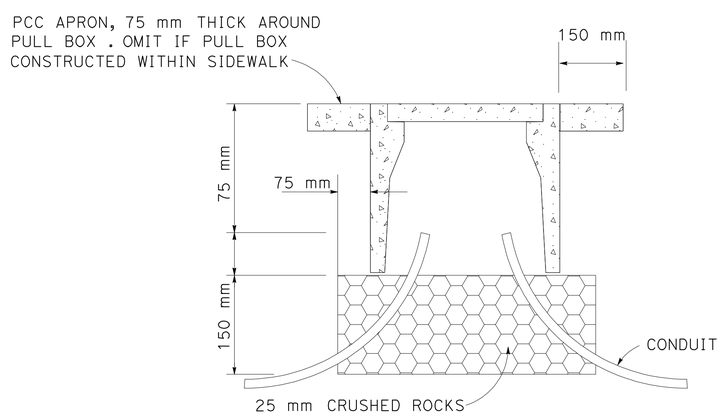

CITY OF SANTA FE SPRINGS
PULL BOX
DETAIL

ALL DIMENSIONS ARE IN METERS UNLESS OTHERWISE SHOWN

LIGHTING (CITY STREET) (PULL BOX DETAILS)

NO SCALE

E-61

THIS PLAN ACCURATE FOR ELECTRICAL WORK ONLY.

STATE OF CALIFORNIA - DEPARTMENT OF TRANSPORTATION
Caltrans
TRAFFIC DESIGN

FUNCTIONAL SUPERVISOR: YI TSAU
CALCULATED-DESIGNED BY: LUKE SUN
CHECKED BY: CECILIO BURCIAGA
REVISED BY
DATE REVISED

LAST REVISION 06-02-10 | DATE PLOTTED => 22-JUN-2010 | TIME PLOTTED => 15:16

Dist	COUNTY	ROUTE	KILOMETER POST TOTAL PROJECT	SHEET No.	TOTAL SHEETS
07	LA	5	2.9/4.9	725	1082

12/23/09
REGISTERED ELECTRICAL ENGINEER

6-21-10
PLANS APPROVAL DATE

REGISTERED PROFESSIONAL ENGINEER CECILIO BURCIAGA No. E015302 Exp. 3-31-11 ELECT STATE OF CALIFORNIA

THE STATE OF CALIFORNIA OR ITS OFFICERS OR AGENTS SHALL NOT BE RESPONSIBLE FOR THE ACCURACY OR COMPLETENESS OF ELECTRONIC COPIES OF THIS PLAN SHEET.

Caltrans Metric

ABBREVIATIONS (THIS SHEET)

PDA	POWER DISTRIBUTION ASSEMBLY
CTNET	CALTRANS TRAFFIC SIGNAL NETWORK.
LARTMC	LOS ANGELES REGIONAL TMC
VPN	VIRTUAL PRIVATE NETWORK
GRPS	GENERAL PACKET RADIO SERVICE
IP	INTERNET PROTOCOL
GPS	GLOBAL POSITIONING SYSTEM

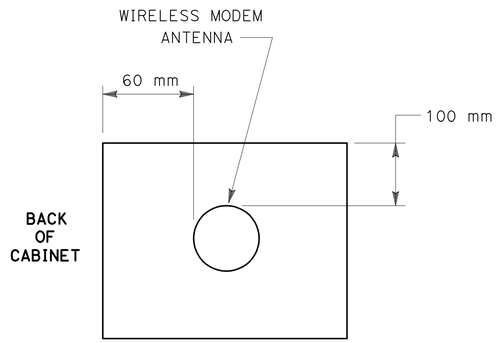

Top View
MODEL 332/334 CABINET

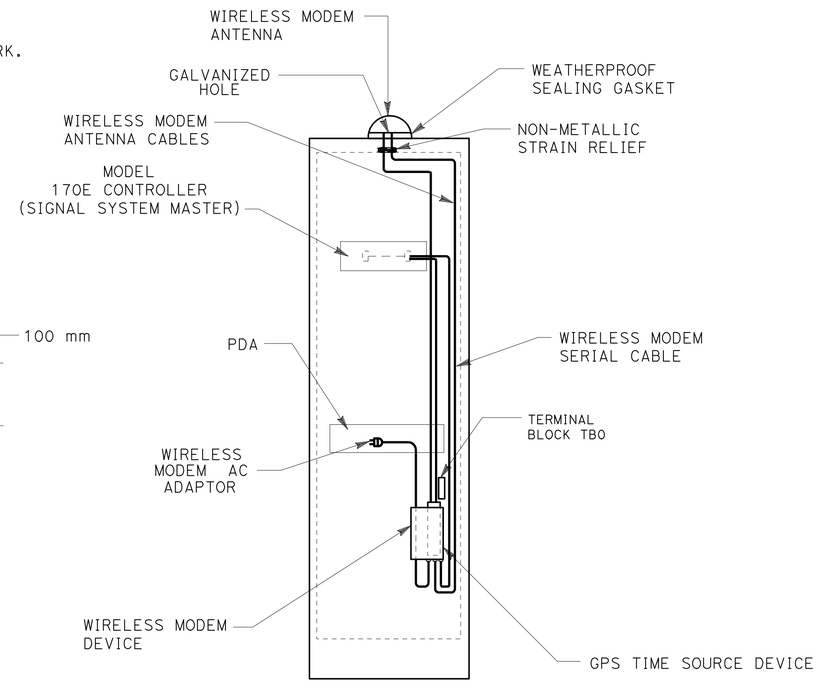

Back View

TRAFFIC SIGNAL INTERCONNECT AND WIRELESS DATA SERVICE EQUIPMENT INSTALLATION DETAILS

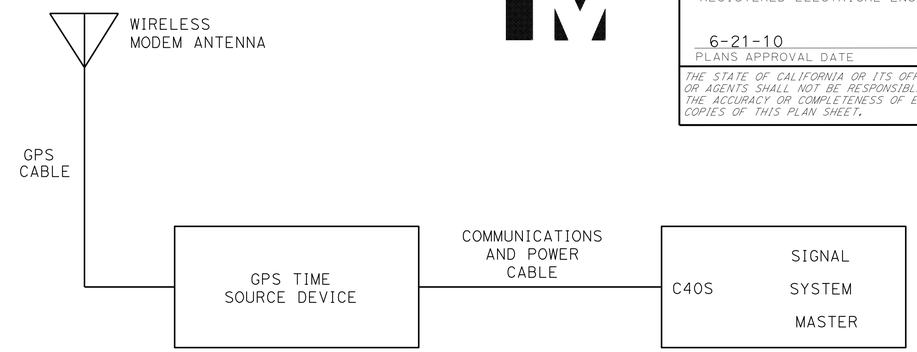

GPS TIME SOURCE DEVICE CONNECTIVITY DETAIL

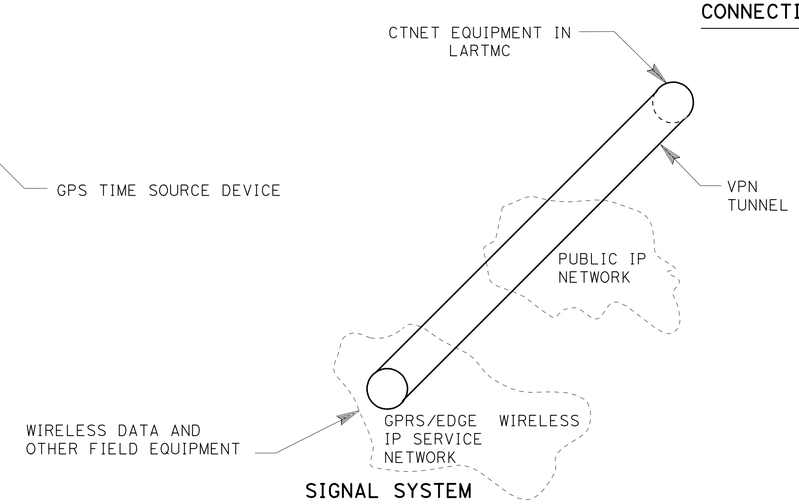

SIGNAL SYSTEM WIRELESS CONNECTIVITY DETAIL

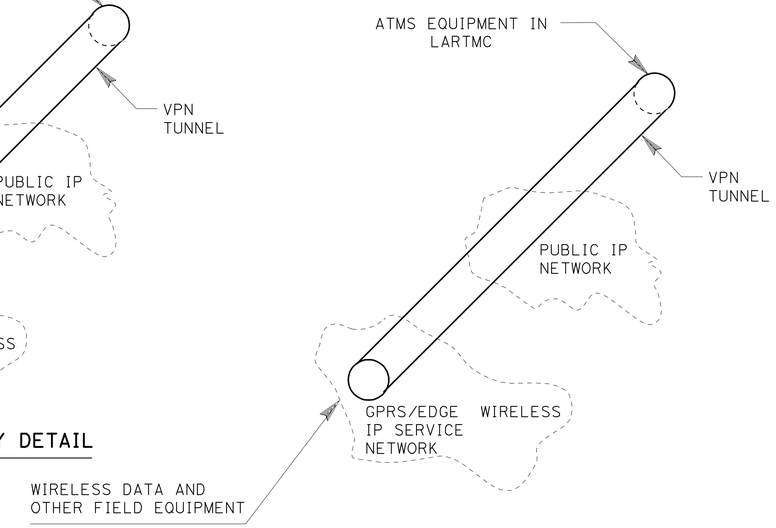

RAMP METERING SYSTEM WIRELESS CONNECTIVITY DETAIL

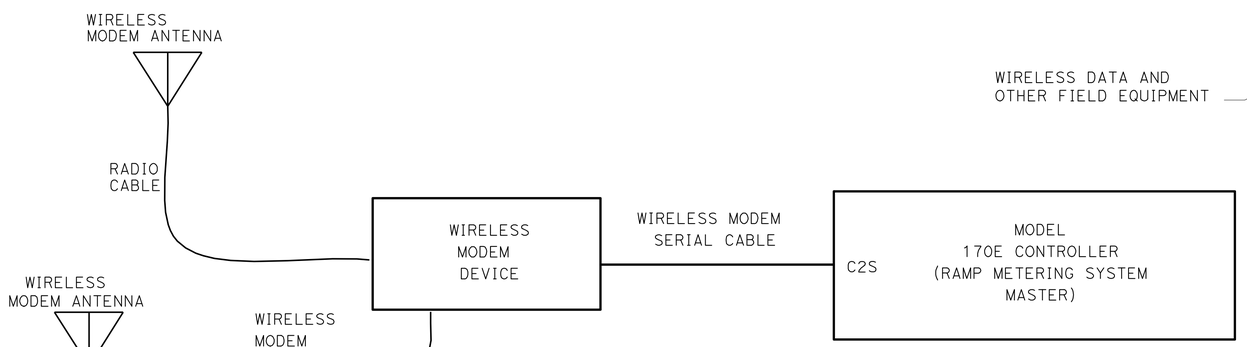

RAMP METERING WIRELESS MODEM CONNECTION DETAIL

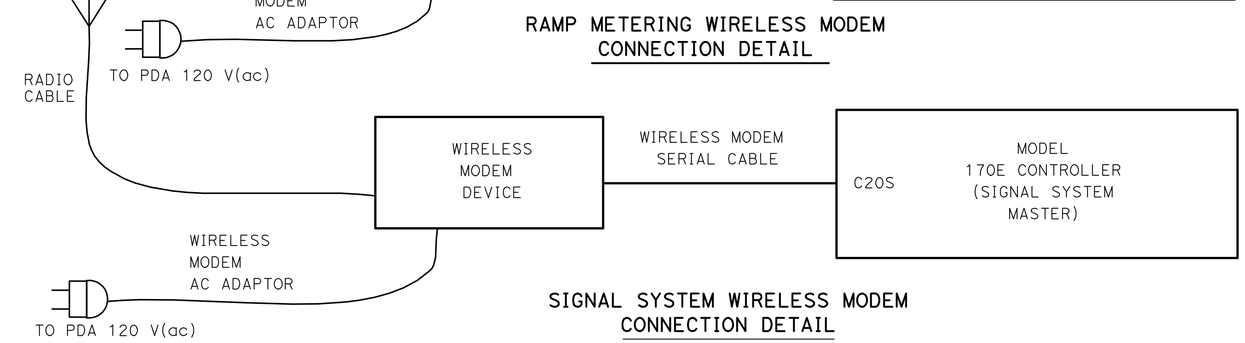

SIGNAL SYSTEM WIRELESS MODEM CONNECTION DETAIL

ALL DIMENSIONS ARE IN METERS UNLESS OTHERWISE SHOWN

WIRELESS COMMUNICATION EQUIPMENT (DETAILS)

NO SCALE

THIS PLAN IS ACCURATE FOR ELECTRICAL WORK ONLY.

E-62

REVISED BY | DATE REVISED
LUKE SUN | CECILIO BURCIAGA
CALCULATED-DESIGNED BY | CHECKED BY
FUNCTIONAL SUPERVISOR: YI TSAU

STATE OF CALIFORNIA - DEPARTMENT OF TRANSPORTATION
Caltrans TRAFFIC DESIGN

LAST REVISION 06-02-10 | DATE PLOTTED => 22-JUN-2010 | TIME PLOTTED => 15:16

Dist	COUNTY	ROUTE	KILOMETER POST TOTAL PROJECT	SHEET No.	TOTAL SHEETS
07	LA	5	2.9/4.9	726	1082

12/23/09
REGISTERED ELECTRICAL ENGINEER

6-21-10
PLANS APPROVAL DATE

REGISTERED PROFESSIONAL ENGINEER C. BURCIAGA No. E015302 Exp. 3-31-11 ELECT STATE OF CALIFORNIA

THE STATE OF CALIFORNIA OR ITS OFFICERS OR AGENTS SHALL NOT BE RESPONSIBLE FOR THE ACCURACY OR COMPLETENESS OF ELECTRONIC COPIES OF THIS PLAN SHEET.

Caltrans Metric

ABBREVIATIONS:

MTA	MVDS TERMINATION ASSEMBLY
VAC	VOLTS ALTERNATING CURRENT
VDC	VOLTS DIRECT CURRENT
DC	DIRECT CURRENT
TB	TERMINAL BLOCK
RX	RECEIVE
TX	TRANSMIT
COAX	COAXIAL
J-BOX	JUNCTION BOX

MVDS TERMINATION ASSEMBLY PANEL

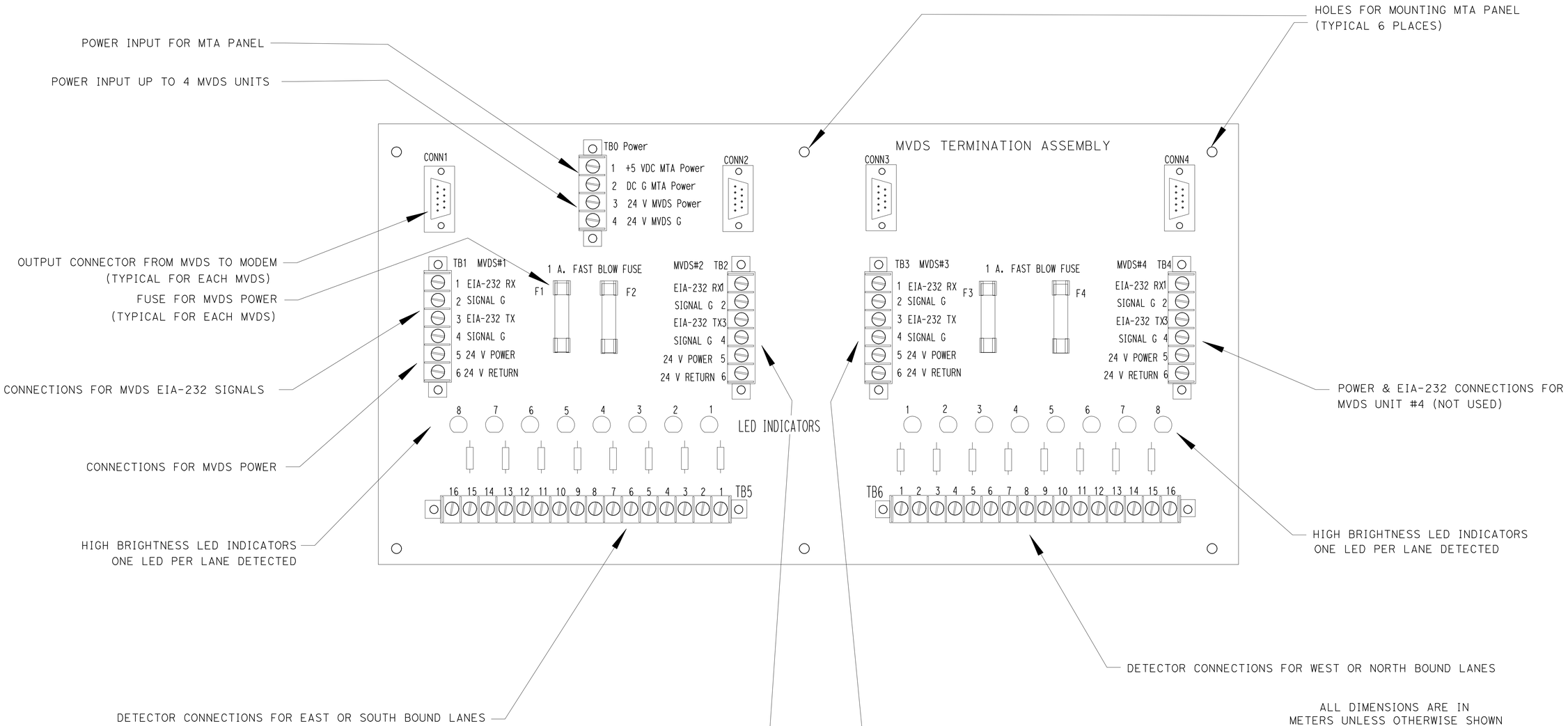

ALL DIMENSIONS ARE IN METERS UNLESS OTHERWISE SHOWN

MICROWAVE VEHICLE DETECTION SYSTEM (DETAILS)

NO SCALE

THIS PLAN IS ACCURATE FOR ELECTRICAL WORK ONLY.

E-63

REVISED BY	LIEN VO
DATE REVISED	01/08
CALCULATED-DESIGNED BY	LUKE SUN
CHECKED BY	CECILIO BURCIAGA
FUNCTIONAL SUPERVISOR	YI TSAU

STATE OF CALIFORNIA - DEPARTMENT OF TRANSPORTATION
Caltrans TRAFFIC DESIGN

LAST REVISION 06-02-10 | DATE PLOTTED => 22-JUN-2010 | TIME PLOTTED => 15:16

Dist	COUNTY	ROUTE	KILOMETER POST TOTAL PROJECT	SHEET No.	TOTAL SHEETS
07	LA	5	2.9/4.9	727	1082

Caltrans Metric

12/23/09
REGISTERED ELECTRICAL ENGINEER

6-21-10
PLANS APPROVAL DATE

REGISTERED PROFESSIONAL ENGINEER CECILIO BURCIAGA No. E015302 Exp. 3-31-11 ELECTRICAL STATE OF CALIFORNIA

THE STATE OF CALIFORNIA OR ITS OFFICERS OR AGENTS SHALL NOT BE RESPONSIBLE FOR THE ACCURACY OR COMPLETENESS OF ELECTRONIC COPIES OF THIS PLAN SHEET.

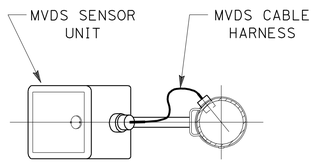

TOP VIEW

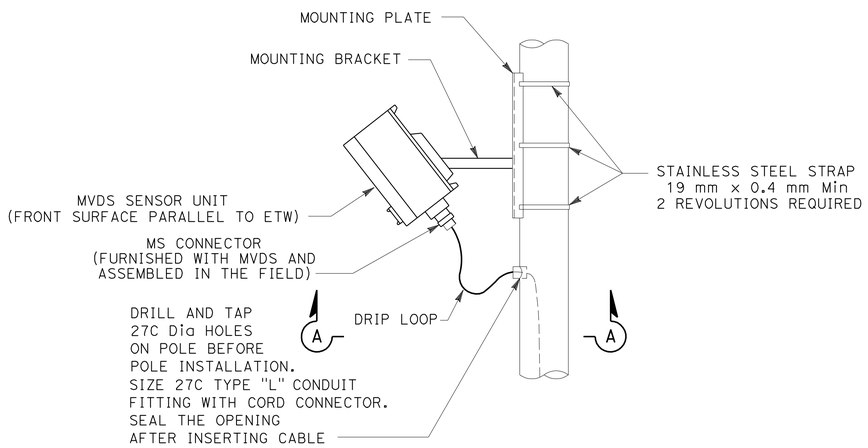

MVDS MOUNTING DETAIL

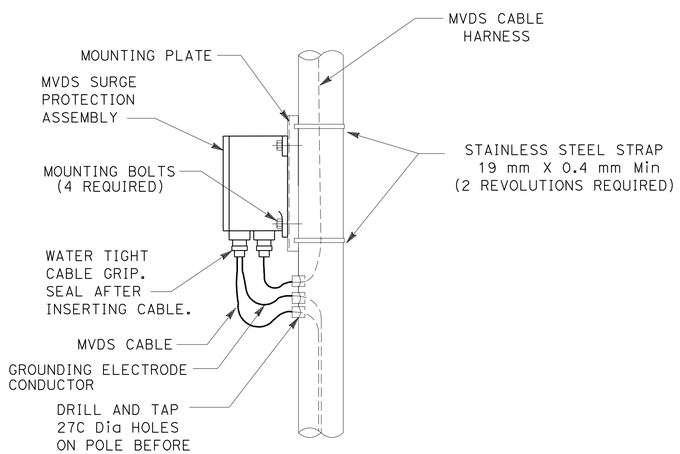

MVDS SURGE PROTECTION ASSEMBLY MOUNTING DETAIL

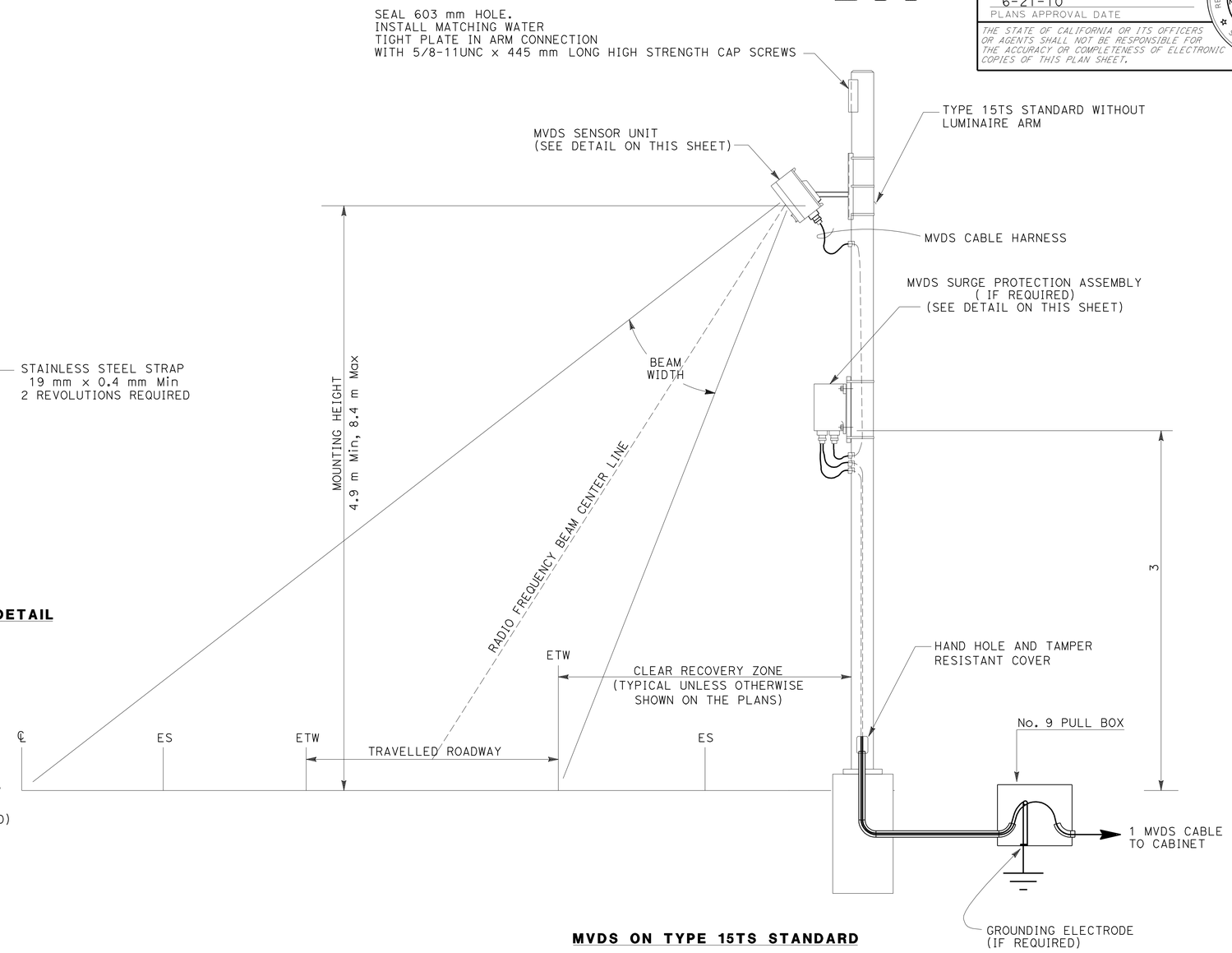

MVDS ON TYPE 15TS STANDARD

ALL DIMENSIONS ARE IN
METERS UNLESS OTHERWISE SHOWN

MICROWAVE VEHICLE DETECTION SYSTEM
(DETAILS)

NO SCALE

E-64

THIS PLAN IS ACCURATE FOR ELECTRICAL WORK ONLY.

REVISED BY	LIEN VO
DATE REVISED	01/08
CALCULATED-DESIGNED BY	LUKE SUN
CHECKED BY	CECILIO BURCIAGA
FUNCTIONAL SUPERVISOR	YI TSAU

STATE OF CALIFORNIA - DEPARTMENT OF TRANSPORTATION
Caltrans
TRAFFIC DESIGN

LAST REVISION 06-02-10 | DATE PLOTTED => 22-JUN-2010 | TIME PLOTTED => 15:16

Dist	COUNTY	ROUTE	KILOMETER POST TOTAL PROJECT	SHEET No.	TOTAL SHEETS
07	LA	5	2.9/4.9	728	1082

12/23/09
REGISTERED ELECTRICAL ENGINEER

6-21-10
PLANS APPROVAL DATE

REGISTERED PROFESSIONAL ENGINEER CECILIO BURCIAGA No. E015302 Exp. 3-31-11 ELECTRICAL STATE OF CALIFORNIA

THE STATE OF CALIFORNIA OR ITS OFFICERS OR AGENTS SHALL NOT BE RESPONSIBLE FOR THE ACCURACY OR COMPLETENESS OF ELECTRONIC COPIES OF THIS PLAN SHEET.

Caltrans Metric

WIRE USAGE IN MVDS CABLE

MS CONNECTOR PIN ID	WIRE NUMBER	PAIR NUMBER	FUNCTION	CONNECTS TO MTA PANEL	CONNECTS TO POSITION	SAMPLE LANE ASSIGNMENT
A	1	1	DETECTOR #1	TB 5	1	LANE#1 WB or NB
B	2	1	DETECTOR #1 RETURN	TB 5	2	
C	3	2	DETECTOR #2	TB 5	3	LANE#2 WB or NB
D	4	2	DETECTOR #2 RETURN	TB 5	4	
E	5	3	DETECTOR #3	TB 5	5	LANE#3 WB or NB
F	6	3	DETECTOR #3 RETURN	TB 5	6	
G	7	4	DETECTOR #4	TB 5	7	LANE#4 WB or NB
H	8	4	DETECTOR #4 RETURN	TB 5	8	
J	9	5	DETECTOR #5	TB 6	1	LANE#1 EB or SB
K	10	5	DETECTOR #5 RETURN	TB 6	2	
L	11	6	DETECTOR #6	TB 6	3	LANE#2 EB or SB
M	12	6	DETECTOR #6 RETURN	TB 6	4	
N	13	7	DETECTOR #7	TB 6	5	LANE#3 EB or SB
P	14	7	DETECTOR #7 RETURN	TB 6	6	
R	15	8	DETECTOR #8	TB 6	7	LANE#4 EB or SB
S	16	8	DETECTOR #8 RETURN	TB 6	8	
T	17	9	RS232 RX (RECEIVE)	TB 1	1	
U	18	9	RS232 G (RECEIVE GROUND)	TB 1	2	
V	19	10	RS232 TX (TRANSMIT)	TB 1	3	
W	20	10	RS232 G (TRANSMIT GROUND)	TB 1	4	
f	21	11	12-24 VOLTS AC/DC POWER	TB 1	5	
g	22	11	12-24 VOLTS AC/DC POWER	TB 1	6	

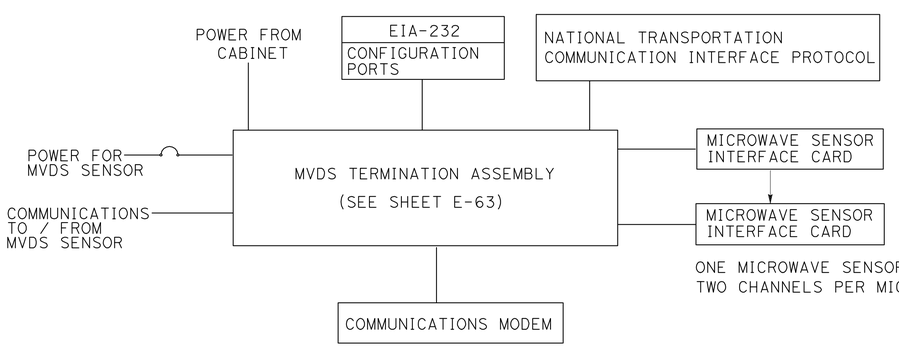

ONE MICROWAVE SENSOR INTERFACE CARD PER INPUT FILE SLOT, TWO CHANNELS PER MICROWAVE SENSOR INTERFACE CARD.

MVDS TERMINATION ASSEMBLY DETAIL

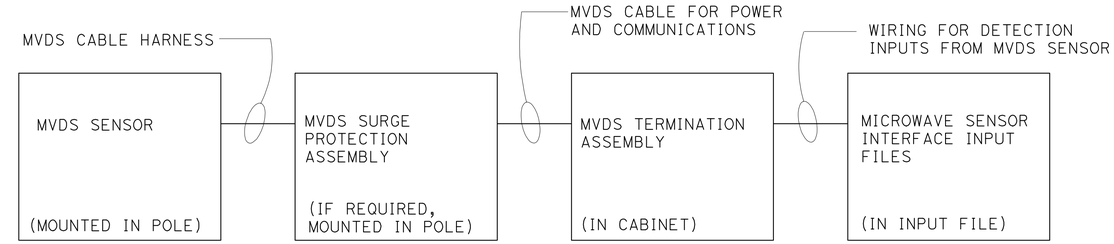

MVDS UNIT CONNECTIONS DETAIL

ALL DIMENSIONS ARE IN METERS UNLESS OTHERWISE SHOWN

MICROWAVE VEHICLE DETECTION SYSTEM (DETAILS)

NO SCALE

E-65

THIS PLAN ACCURATE FOR ELECTRICAL WORK ONLY.

STATE OF CALIFORNIA - DEPARTMENT OF TRANSPORTATION
Caltrans
TRAFFIC DESIGN

FUNCTIONAL SUPERVISOR: YI TSAU
CALCULATED-DESIGNED BY: LUKE SUN
CHECKED BY: CECILIO BURCIAGA
REVISED BY: LIEN VO
DATE REVISED: 01/08

LAST REVISION: 06-02-10
DATE PLOTTED => 22-JUN-2010
TIME PLOTTED => 15:17

Dist	COUNTY	ROUTE	KILOMETER POST TOTAL PROJECT	SHEET No.	TOTAL SHEETS
07	LA	5	2.9/4.9	729	1082

Caltrans Metric

Leesunghwan 12/23/09
REGISTERED ELECTRICAL ENGINEER

6-21-10
PLANS APPROVAL DATE

REGISTERED PROFESSIONAL ENGINEER SUNG LEE No. E16249 Exp. 12/31/10 ELECTRICAL STATE OF CALIFORNIA

THE STATE OF CALIFORNIA OR ITS OFFICERS OR AGENTS SHALL NOT BE RESPONSIBLE FOR THE ACCURACY OR COMPLETENESS OF ELECTRONIC COPIES OF THIS PLAN SHEET.

GENERAL NOTES: (E-66 THROUGH E-91)

1. UNLESS OTHERWISE NOTED, ALL COMMUNICATION CONDUIT BENDS SHALL BE 1.3 m RADIUS FACTORY BENDS.
2. COMMUNICATION CONDUIT SHALL BE CENTERED IN THE PAVED SHOULDER OR AS SHOWN ON THESE PLANS OR AS DIRECTED BY THE ENGINEER.
3. TRENCHING IN PAVEMENT ALLOWED ONLY WHERE SHOWN ON PLANS.
4. ALL PULL BOXES AND SPLICE VAULTS SHALL BE INSTALLED IN UNPAVED AREA UNLESS NOTED OTHERWISE.
5. ANY PULL BOX INSTALLED IN THE SHOULDER SHALL BE TRAFFIC RATED.
6. ALL COMMUNICATION CONDUITS SHALL HAVE TRACER WIRE.

LEGEND: (E-66 THROUGH E-91)

- [V] EXISTING SPLICE VAULT
- CN EXISTING CABLE NODE
- DN EXISTING DATA NODE
- VN EXISTING VIDEO NODE
- CCTV EXISTING CCTV CABINET
- VN NEW VIDEO NODE
- DN NEW DATA NODE
- CCTV RELOCATED CCTV CABINET
- [V]S NEW SPLICE VAULT WITH SPLICE CLOSURE
- [V] NEW SPLICE VAULT
- NEW TEMPORARY NODE

ABBREVIATIONS: (E-66 THROUGH E-91)

4WTO	-	FOUR WIRE TRANSMIT ONLY
AWG	-	AMERICAN WIRE GAUGE
CCM	-	CAMERA CONTROL MODEM
CCR	-	CAMERA CONTROL RECEIVER
CIA	-	CONTROLLER INTERFACE ASSEMBLY
CHAN	-	CHANNEL
CTX	-	CLEAR TO SEND
COAX	-	COAXIAL CABLE
D4	-	4TH GENERATION CHANNEL BANK
DN	-	DATA NODE
DS-1	-	OPTICAL MODEM
DEC	-	DECODER
FDU	-	FIBER DISTRIBUTION UNIT
FOTM	-	FIBER OPTIC TRAFFIC MODEM
FOCM	-	FIBER OPTIC CONTROL MODEM
FOSC	-	FIBER OPTIC SPLICE CLOSURE
FXS	-	FOREIGN EXCHANGE SUBSCRIBER
INTRFCE	-	INTERFACE
LED	-	LIGHT EMITTING DIODE
LCU	-	LOCAL CONTROL UNIT
MMFO	-	MULTIMODE FIBER OPTIC CABLE
MUX	-	MULTIPLEX
NWK	-	NORWALK HUB
TDM	-	TIME DIVISION MULTIPLEXER
PBX	-	PRIVATE BRANCH EXCHANGE
P19	-	PAIR 19 AMERICAN WIRE GAUGE
P22	-	PAIR 22 AMERICAN WIRE GAUGE
PDA	-	POWER DISTRIBUTION ASSEMBLY
PR	-	PAIR
RF	-	RADIO FREQUENCY
RMS	-	RAMP METERING SYSTEM
RTS	-	REQUEST TO SEND
RX	-	RECEIVE
SONET	-	SYNCHRONOUS OPTICAL NETWORKING
SMFO	-	SINGLEMODE FIBER OPTIC CABLE
TMC	-	TRAFFIC MANAGEMENT CENTER
TPC	-	TWISTED PAIR CABLE
TX	-	TRANSMIT
VN	-	VIDEO NODE
VMX	-	VIDEO MULTIPLEXER
VTD	-	VIDEO TRANSMITTER/DATA TRANSCEIVER
VRD	-	VIDEO RECEIVER/DATA TRANSCEIVER

MODIFY COMMUNICATION SYSTEM

THIS PLAN IS ACCURATE FOR ELECTRICAL WORK ONLY.

E-66

REVISED BY | DATE REVISED
SUNG LEE | DAVID PADILLA
CALCULATED-DESIGNED BY | CHECKED BY
FUNCTIONAL SUPERVISOR: JACQUELINE C. TAN
STATE OF CALIFORNIA - DEPARTMENT OF TRANSPORTATION
Caltrans OFFICE OF ITS

LAST REVISION 06-02-10 | DATE PLOTTED => 22-JUN-2010 | TIME PLOTTED => 15:17

Dist	COUNTY	ROUTE	KILOMETER POST TOTAL PROJECT	SHEET No.	TOTAL SHEETS
07	LA	5	2.9/4.9	730	1082

Leesunghwan 12/23/09
REGISTERED ELECTRICAL ENGINEER DATE

6-21-10
PLANS APPROVAL DATE

REGISTERED PROFESSIONAL ENGINEER SUNG LEE No. E16249 Exp. 12/31/10 ELECTRICAL STATE OF CALIFORNIA

THE STATE OF CALIFORNIA OR ITS OFFICERS OR AGENTS SHALL NOT BE RESPONSIBLE FOR THE ACCURACY OR COMPLETENESS OF ELECTRONIC COPIES OF THIS PLAN SHEET.

Caltrans Metric

NOTE:
FOR COMPLETE RIGHT OF WAY AND ACCURATE ACCESS DATA, SEE RIGHT OF WAY RECORD MAPS AT DISTRICT OFFICE.

CONDUIT AND CONDUCTOR SCHEDULE

CONDUIT/ CONDUCTOR	FUNCTION	RUN			
		3	9		
50P22 CABLE	DATA DISTRIBUTION	1(E)	1(E)		
24SMFO CABLE	VIDEO DISTRIBUTION	1(E)		1(E)	
12MMFO CABLE	VIDEO DISTRIBUTION	1(E)			1(E)
INNERDUCT (SIZE 25)		2(E)		1	1
CONDUIT SIZE		103(E)	103		

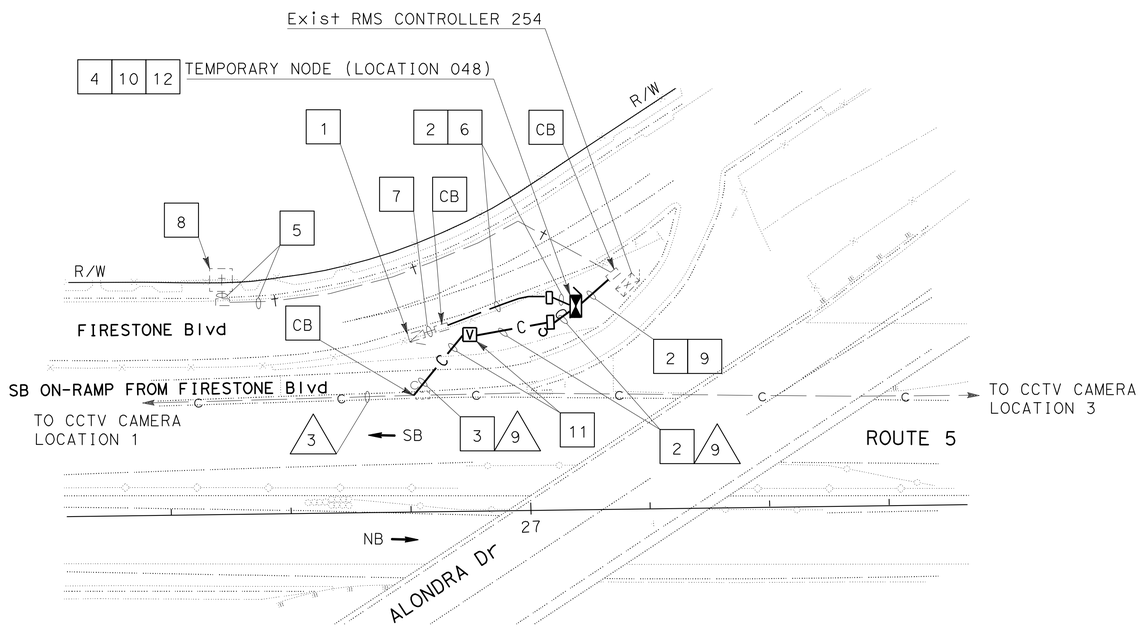

PROJECT NOTES: (THIS SHEET ONLY)

1. Exist 120/240 V, SERVICE EQUIPMENT ENCLOSURE: ADD 1-30 A, 120 V, 1P CIRCUIT BREAKER FOR TEMPORARY NODE.
2. TRENCH AND INSTALL CONDUIT IN PAVED AREA.
3. JACK TYPE 1 CONDUIT, SEE SHEET E-80 FOR DETAILS.
4. DISCONNECT AND PULL 50P22, 12MMFO AND 24SMFO FROM Exist CCTV CAMERA (LOCATION 3) AT Sta 31+00. COIL 40 m OF 24SMFO CABLE AND TERMINATE 50P22 AND 12MMFO CABLES AT THE CABINET.
5. ADD 2 CAT-5E.
6. INSTALL 53C, 2#4, 1#8G.
7. ADD 2#4, 1#8G.
8. TERMINATE 2 CAT-5E.
9. INSTALL 78C, 2 CAT-5E.
10. INSTALL D4 CHANNEL BANK, T-1 ROUTER, H.264 ENCODERS, VIDEO MUX, VIDEO RECEIVR, AND DS-1 MODEM IN MODEL 334-TV CABINET . SEE SHEETS E-68 TO E-70 FOR DETAILS.
11. LEAVE IN-PLACE AFTER THE COMPLETION OF CONSTRUCTION.
12. FOR FOUNDATION DETAILS, SEE SHEET E-85.

ALL DIMENSIONS ARE IN METER UNLESS OTHERWISE SHOWN

TEMPORARY COMMUNICATION SYSTEM

SCALE 1:500

FOR LEGEND, ABBREVIATIONS, AND GENERAL NOTES SEE SHEET E-66.
THIS PLAN IS ACCURATE FOR ELECTRICAL WORK ONLY.

E-67

REVISED BY | DATE REVISED
SUNG LEE | DAVID PADILLA
CALCULATED-DESIGNED BY | CHECKED BY
FUNCTIONAL SUPERVISOR | JACQUELINE C. TAN
STATE OF CALIFORNIA - DEPARTMENT OF TRANSPORTATION
Caltrans ITS DEVELOPMENT

LAST REVISION 06-02-10 | DATE PLOTTED => 22-JUN-2010 | TIME PLOTTED => 15:17

Dist	COUNTY	ROUTE	KILOMETER POST TOTAL PROJECT	SHEET No.	TOTAL SHEETS
07	LA	5	2.9/4.9	731	1082

Caltrans Metric

Leesunghwan 12/23/09
REGISTERED ELECTRICAL ENGINEER DATE

6-21-10
PLANS APPROVAL DATE

REGISTERED PROFESSIONAL ENGINEER SUNG LEE No. E16249 Exp. 12/31/10 ELECTRICAL STATE OF CALIFORNIA

THE STATE OF CALIFORNIA OR ITS OFFICERS OR AGENTS SHALL NOT BE RESPONSIBLE FOR THE ACCURACY OR COMPLETENESS OF ELECTRONIC COPIES OF THIS PLAN SHEET.

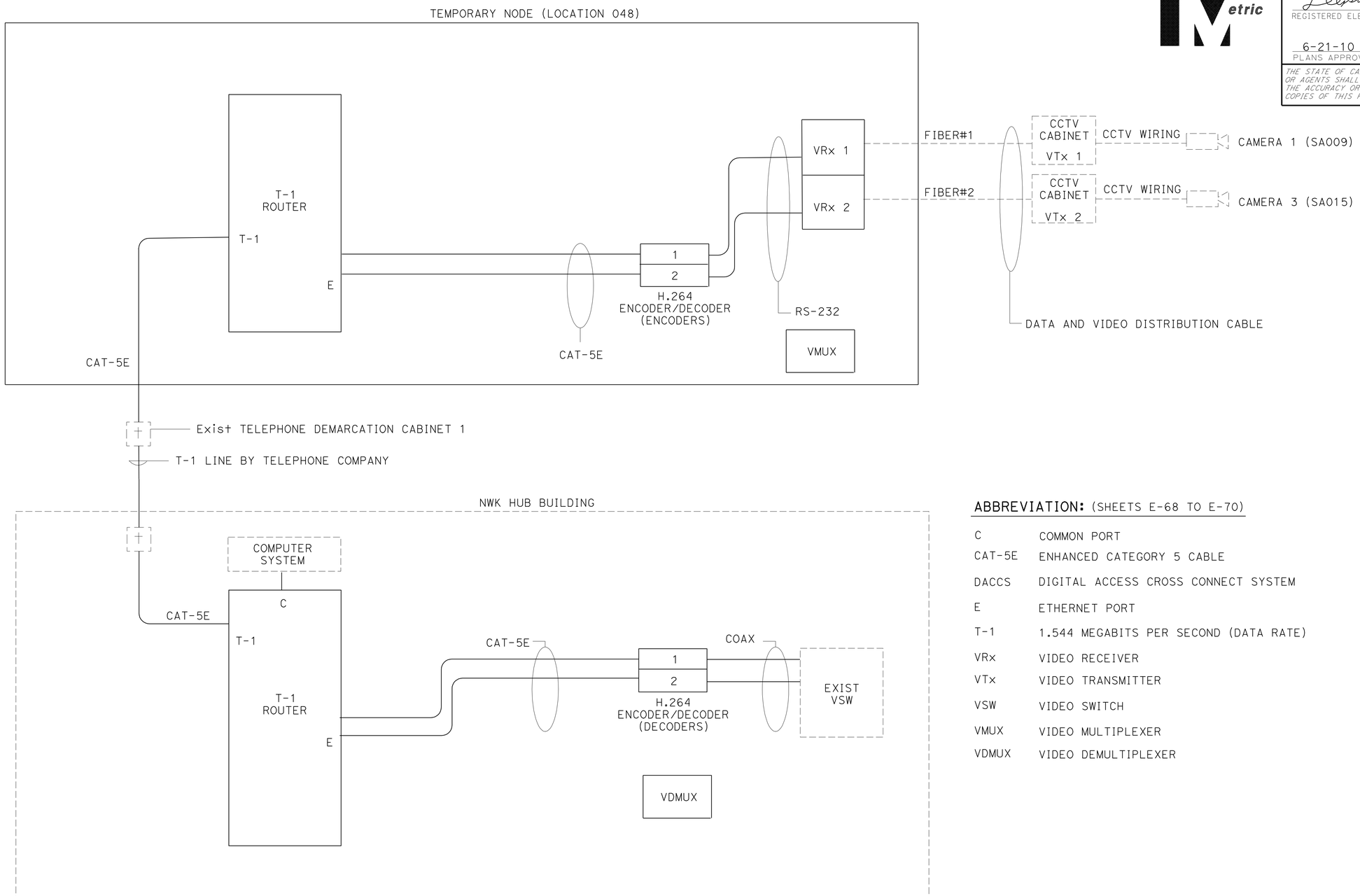

ABBREVIATION: (SHEETS E-68 TO E-70)

C	COMMON PORT
CAT-5E	ENHANCED CATEGORY 5 CABLE
DACCS	DIGITAL ACCESS CROSS CONNECT SYSTEM
E	ETHERNET PORT
T-1	1.544 MEGABITS PER SECOND (DATA RATE)
VRx	VIDEO RECEIVER
VTx	VIDEO TRANSMITTER
VSW	VIDEO SWITCH
VMUX	VIDEO MULTIPLEXER
VDMUX	VIDEO DEMULTIPLEXER

ALL DIMENSIONS ARE IN METER UNLESS OTHERWISE SHOWN

TEMPORARY COMMUNICATION SYSTEM

NO SCALE

(VIDEO PATH FROM CCTV CAMERAS TO NORWALK HUB BUILDING)

FOR LEGEND, ABBREVIATIONS, AND GENERAL NOTES SEE SHEET E-66.
THIS PLAN IS ACCURATE FOR ELECTRICAL WORK ONLY.

E-68

REVISED BY	DATE REVISED
SUNG LEE	DAVID PADILLA
CALCULATED-DESIGNED BY	CHECKED BY
FUNCTIONAL SUPERVISOR	JACQUELINE C. TAN

STATE OF CALIFORNIA - DEPARTMENT OF TRANSPORTATION
Caltrans ITS DEVELOPMENT

LAST REVISION 06-02-10 DATE PLOTTED => 22-JUN-2010 TIME PLOTTED => 15:17

Dist	COUNTY	ROUTE	KILOMETER POST TOTAL PROJECT	SHEET No.	TOTAL SHEETS
07	LA	5	2.9/4.9	732	1082

Leesunghwan 12/23/09
REGISTERED ELECTRICAL ENGINEER DATE

6-21-10
PLANS APPROVAL DATE

REGISTERED PROFESSIONAL ENGINEER SUNG LEE No. E16249 Exp. 12/31/10 ELECTRICAL STATE OF CALIFORNIA

THE STATE OF CALIFORNIA OR ITS OFFICERS OR AGENTS SHALL NOT BE RESPONSIBLE FOR THE ACCURACY OR COMPLETENESS OF ELECTRONIC COPIES OF THIS PLAN SHEET.

Caltrans Metric

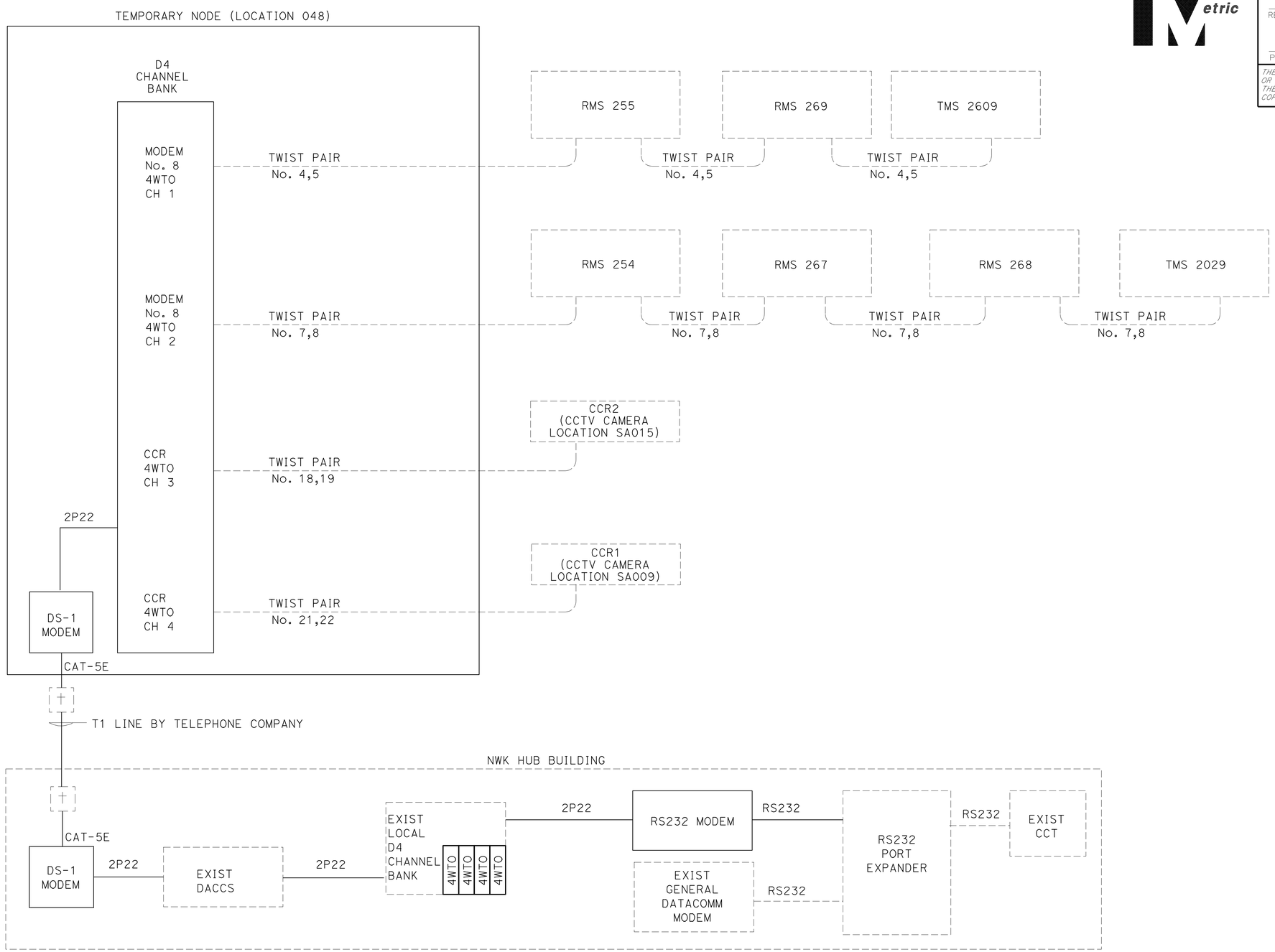

ALL DIMENSIONS ARE IN METER UNLESS OTHERWISE SHOWN

(DATA PATH FROM TRAFFIC ELEMENTS TO NORWALK HUB BUILDING)

TEMPORARY COMMUNICATION SYSTEM

NO SCALE

FOR LEGEND, ABBREVIATIONS, AND GENERAL NOTES, SEE SHEET E-66.
THIS PLAN IS ACCURATE FOR ELECTRICAL WORK ONLY.

E-69

REVISED BY	DATE REVISED

CALCULATED-DESIGNED BY: SUNG LEE
CHECKED BY: DAVID PADILLA
FUNCTIONAL SUPERVISOR: JACQUELINE C. TAN

STATE OF CALIFORNIA - DEPARTMENT OF TRANSPORTATION
Caltrans ITS DEVELOPMENT

LAST REVISION 06-02-10
DATE PLOTTED => 22-JUN-2010
TIME PLOTTED => 15:17

Dist	COUNTY	ROUTE	KILOMETER POST TOTAL PROJECT	SHEET No.	TOTAL SHEETS
07	LA	5	2.9/4.9	733	1082

Leesunghwan 12/23/09
REGISTERED ELECTRICAL ENGINEER DATE

6-21-10
PLANS APPROVAL DATE

REGISTERED PROFESSIONAL ENGINEER SUNG LEE No. E16249 Exp. 12/31/10 ELECTRICAL STATE OF CALIFORNIA

THE STATE OF CALIFORNIA OR ITS OFFICERS OR AGENTS SHALL NOT BE RESPONSIBLE FOR THE ACCURACY OR COMPLETENESS OF ELECTRONIC COPIES OF THIS PLAN SHEET.

Caltrans Metric

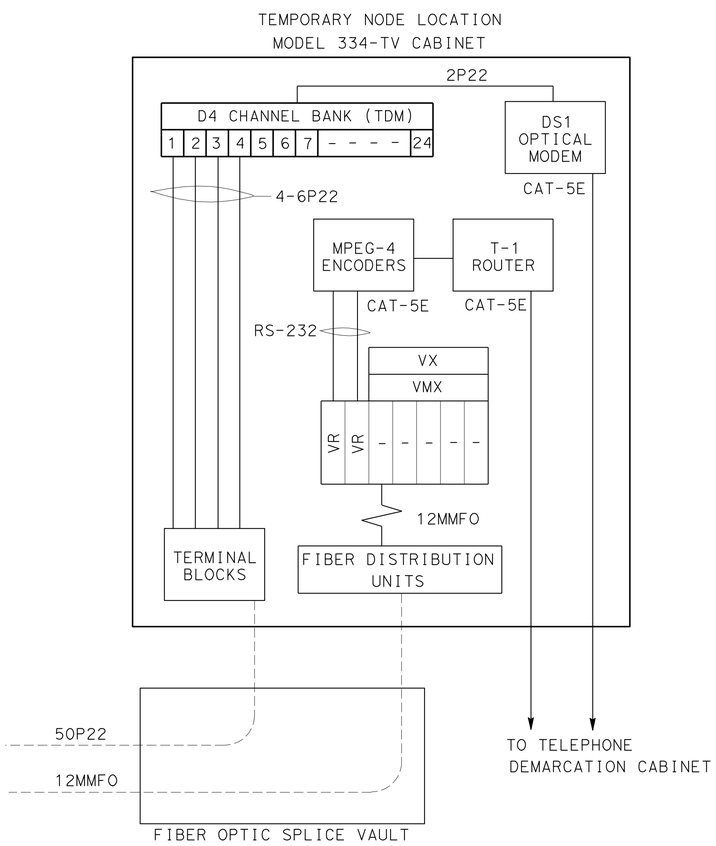

TEMPORARY NODE WIRING DIAGRAM

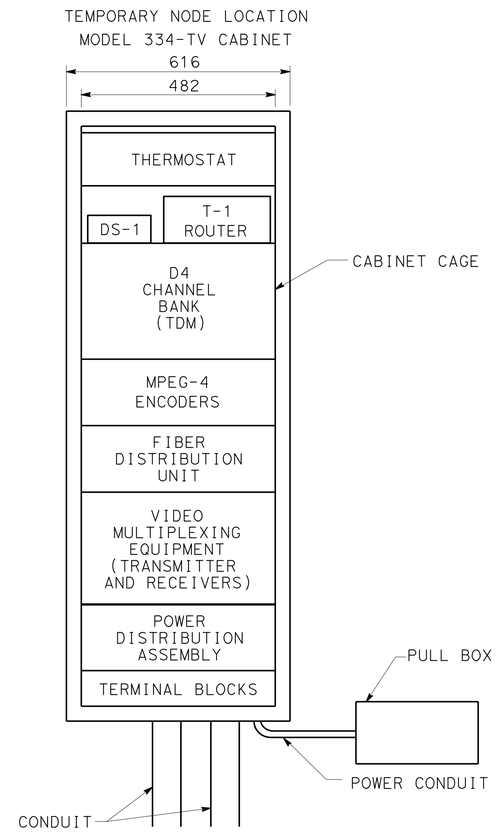

TEMPORARY NODE CABINET

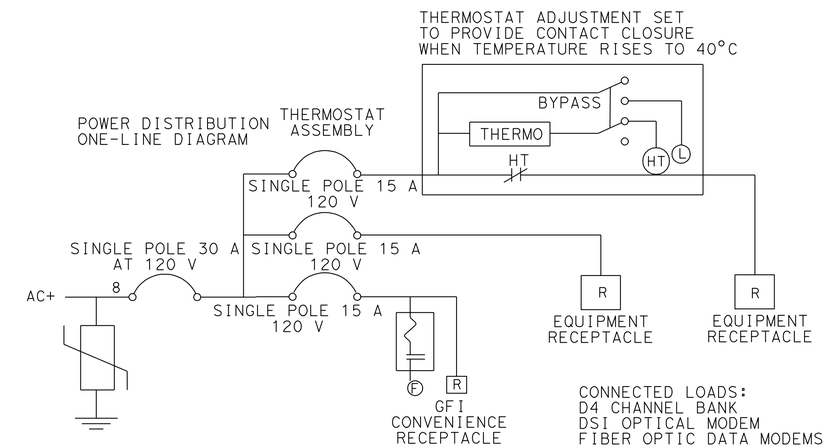

POWER DISTRIBUTION ASSEMBLY FOR TEMPORARY NODE

ALL DIMENSIONS ARE IN METER UNLESS OTHERWISE SHOWN

TEMPORARY COMMUNICATION SYSTEM

NO SCALE

(MODEL 334 CABINET AND WIRING DETAILS)

FOR LEGEND, ABBREVIATIONS, AND GENERAL NOTES, SEE SHEET E-66.
THIS PLAN IS ACCURATE FOR ELECTRICAL WORK ONLY.

E-70

STATE OF CALIFORNIA - DEPARTMENT OF TRANSPORTATION
Caltrans ITS DEVELOPMENT

FUNCTIONAL SUPERVISOR: JACQUELINE C. TAN
CALCULATED-DESIGNED BY: SUNG LEE
CHECKED BY: DAVID PADILLA
REVISED BY
DATE REVISED

LAST REVISION DATE PLOTTED => 22-JUN-2010
06-02-10 TIME PLOTTED => 15:17

Dist	COUNTY	ROUTE	TOTAL PROJECT	SHEET No.	TOTAL SHEETS
07	LA	5	2.9/4.9	734	1082

Leesunghwan 12/23/09
REGISTERED ELECTRICAL ENGINEER

6-21-10
PLANS APPROVAL DATE

REGISTERED PROFESSIONAL ENGINEER SUNG LEE No. E16249 Exp. 12/31/10 ELECTRICAL STATE OF CALIFORNIA

THE STATE OF CALIFORNIA OR ITS OFFICERS OR AGENTS SHALL NOT BE RESPONSIBLE FOR THE ACCURACY OR COMPLETENESS OF ELECTRONIC COPIES OF THIS PLAN SHEET.

Caltrans Metric

NOTE:

FOR COMPLETE RIGHT OF WAY AND ACCURATE ACCESS DATA, SEE RIGHT OF WAY RECORD MAPS AT DISTRICT OFFICE.

CONDUIT AND CONDUCTOR SCHEDULE

CONDUIT/ CONDUCTOR	FUNCTION	RUN 1	RUN 2				RUN 3	RUN 6		
48SMFO CABLE	TRUNK CABLE		1							
36SMFO CABLE	VIDEO DISTRIBUTION			1						
48SMFO CABLE	DATA DISTRIBUTION				1					
50P22 CABLE	DATA DISTRIBUTION						1(E)	1(E)		
24SMFO CABLE	VIDEO DISTRIBUTION						1(E)		1(E)	
12MMFO CABLE	VIDEO DISTRIBUTION						1(E)			1(E)
INNERDUCT (SIZE 25)			1	1	1	1	2(E)		1(E)	1(E)
CONDUIT SIZE		103	103				103(E)	103(E)		

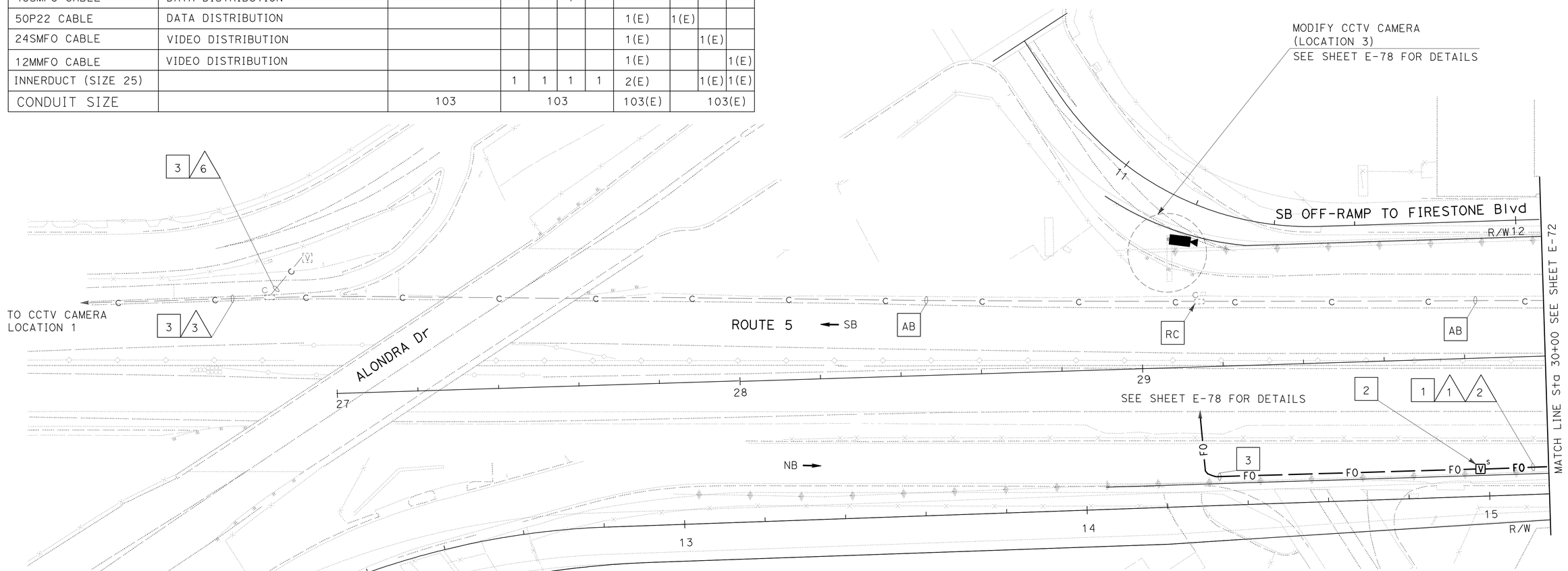

PROJECT NOTES: (THIS SHEET ONLY)

1. TRENCH AND INSTALL CONDUIT IN PAVED AREA. SEE SHEET E-81 FOR DETAILS.
2. COIL 40 m OF 36SMFO AND 2-48SMFO INSIDE OF SPLICE VAULT FOR FUTURE USE.
3. SHOWN FOR REFERENCE ONLY.

ALL DIMENSIONS ARE IN METER UNLESS OTHERWISE SHOWN

MODIFY COMMUNICATION SYSTEM

SCALE 1:500

FOR LEGEND, ABBREVIATIONS, AND GENERAL NOTES SEE SHEET E-66.
THIS PLAN IS ACCURATE FOR ELECTRICAL WORK ONLY.

E-71

STATE OF CALIFORNIA - DEPARTMENT OF TRANSPORTATION
Caltrans OFFICE OF ITS

FUNCTIONAL SUPERVISOR: JACQUELINE C. TAN
CALCULATED-DESIGNED BY: SUNG LEE
CHECKED BY: DAVID PADILLA
REVISED BY / DATE REVISED

LAST REVISION 06-02-10
DATE PLOTTED => 22-JUN-2010
TIME PLOTTED => 15:17

Dist	COUNTY	ROUTE	KILOMETER POST TOTAL PROJECT	SHEET No.	TOTAL SHEETS
07	LA	5	2.9/4.9	735	1082

Leesunghwan 12/23/09
REGISTERED ELECTRICAL ENGINEER

6-21-10
PLANS APPROVAL DATE

REGISTERED PROFESSIONAL ENGINEER SUNG LEE No. E16249 Exp. 12/31/10 ELECTRICAL STATE OF CALIFORNIA

THE STATE OF CALIFORNIA OR ITS OFFICERS OR AGENTS SHALL NOT BE RESPONSIBLE FOR THE ACCURACY OR COMPLETENESS OF ELECTRONIC COPIES OF THIS PLAN SHEET.

Caltrans Metric

NOTE:

FOR COMPLETE RIGHT OF WAY AND ACCURATE ACCESS DATA, SEE RIGHT OF WAY RECORD MAPS AT DISTRICT OFFICE.

CONDUIT AND CONDUCTOR SCHEDULE

CONDUIT/ CONDUCTOR	FUNCTION	RUN 1	RUN 2			
48SMFO CABLE	TRUNK CABLE		1			
36SMFO CABLE	VIDEO DISTRIBUTION			1		
48SMFO CABLE	DATA DISTRIBUTION				1	
INNERDUCT (SIZE 25)			1	1	1	1
CONDUIT SIZE		103	103			

PROJECT NOTES: (THIS SHEET ONLY)

1. TRENCH AND INSTALL CONDUIT IN PAVED AREA. SEE SHEET E-81 FOR DETAILS.
2. RL EXISTING CONTROLLER CABINET TO NEW LOCATION AT STA 29+20, RS CCTV CAMERA, SEE SHEET E-78 FOR DETAILS.
3. INSTALL 78C, 12SMFO.
4. INSTALL 12-FIBER FDU, FOTM AND 12SMFO. TERMINATE 12SMFO CABLE IN Exist CONTROLLER CABINET. SEE SHEET E-87 FOR DETAILS.
5. ADD 12SMFO CABLE.
6. SPLICE 12SMFO WITH 48SMFO.

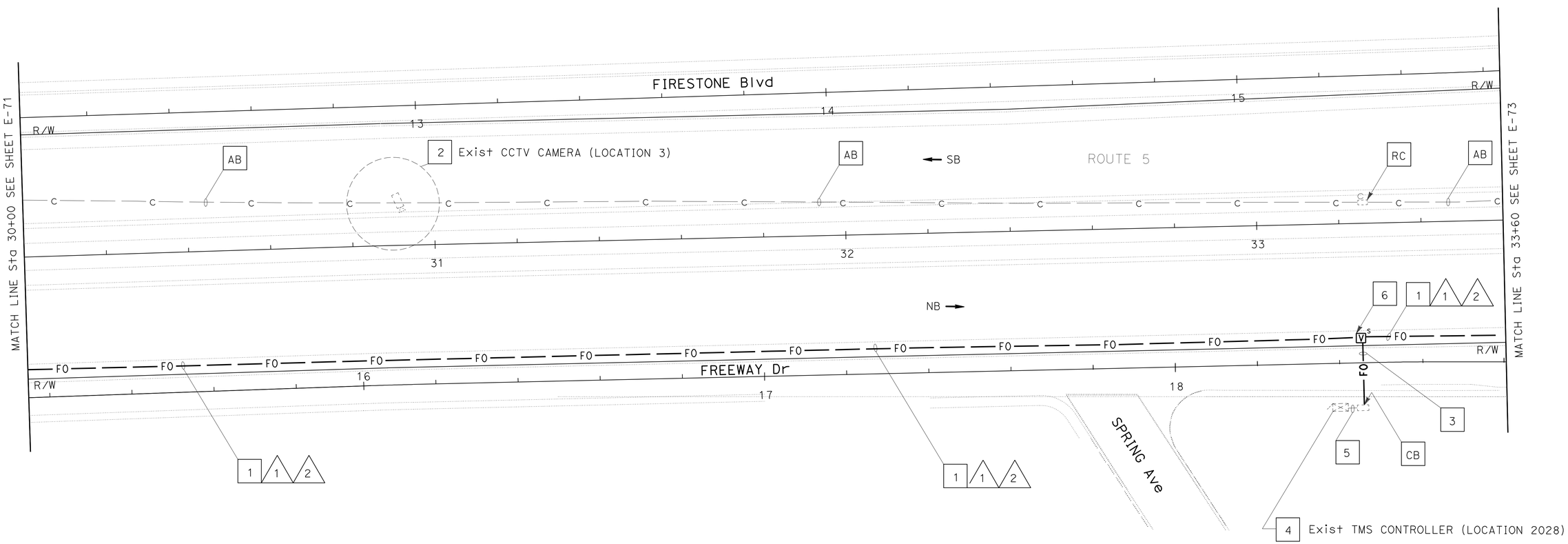

ALL DIMENSIONS ARE IN METER UNLESS OTHERWISE SHOWN

MODIFY COMMUNICATION SYSTEM

SCALE 1:500

E-72

FOR LEGEND, ABBREVIATIONS, AND GENERAL NOTES SEE SHEET E-66.
THIS PLAN IS ACCURATE FOR ELECTRICAL WORK ONLY.

STATE OF CALIFORNIA - DEPARTMENT OF TRANSPORTATION
Caltrans OFFICE OF ITS

FUNCTIONAL SUPERVISOR: JACQUELINE C. TAN
CALCULATED-DESIGNED BY: SUNG LEE
CHECKED BY: DAVID PADILLA
REVISED BY / DATE REVISED

LAST REVISION 06-02-10 | DATE PLOTTED => 22-JUN-2010 | TIME PLOTTED => 15:17

Dist	COUNTY	ROUTE	KILOMETER POST TOTAL PROJECT	SHEET No.	TOTAL SHEETS
07	LA	5	2.9/4.9	736	1082

Leesungkwan 12/23/09
REGISTERED ELECTRICAL ENGINEER

6-21-10
PLANS APPROVAL DATE

REGISTERED PROFESSIONAL ENGINEER SUNG LEE No. E16249 Exp. 12/31/10 ELECTRICAL STATE OF CALIFORNIA

THE STATE OF CALIFORNIA OR ITS OFFICERS OR AGENTS SHALL NOT BE RESPONSIBLE FOR THE ACCURACY OR COMPLETENESS OF ELECTRONIC COPIES OF THIS PLAN SHEET.

Caltrans Metric

NOTE:

FOR COMPLETE RIGHT OF WAY AND ACCURATE ACCESS DATA, SEE RIGHT OF WAY RECORD MAPS AT DISTRICT OFFICE.

CONDUIT AND CONDUCTOR SCHEDULE

CONDUIT/ CONDUCTOR	FUNCTION	RUN 1	RUN 2				RUN 4
48SMFO CABLE	TRUNK CABLE		1				
36SMFO CABLE	VIDEO DISTRIBUTION			1			
48SMFO CABLE	DATA DISTRIBUTION				1		
12SMFO CABLE	DATA DISTRIBUTION						1
INNERDUCT (SIZE 25)			1	1	1	1	
CONDUIT SIZE		103	103				78

PROJECT NOTES: (THIS SHEET ONLY)

1. TRENCH AND INSTALL CONDUIT IN PAVED AREA. SEE SHEET E-81 FOR DETAILS.
2. JACK TYPE 1 CONDUIT. SEE SHEET E-80 FOR DETAILS.
3. INSTALL 12-FIBER FDU, FOTM AND 12SMFO. TERMINATE 12SMFO CABLE IN Exist CONTROLLER CABINET. SEE SHEET E-87 FOR DETAILS.
4. ADD 12SMFO.
5. SPLICE 12SMFO WITH 48SMFO.

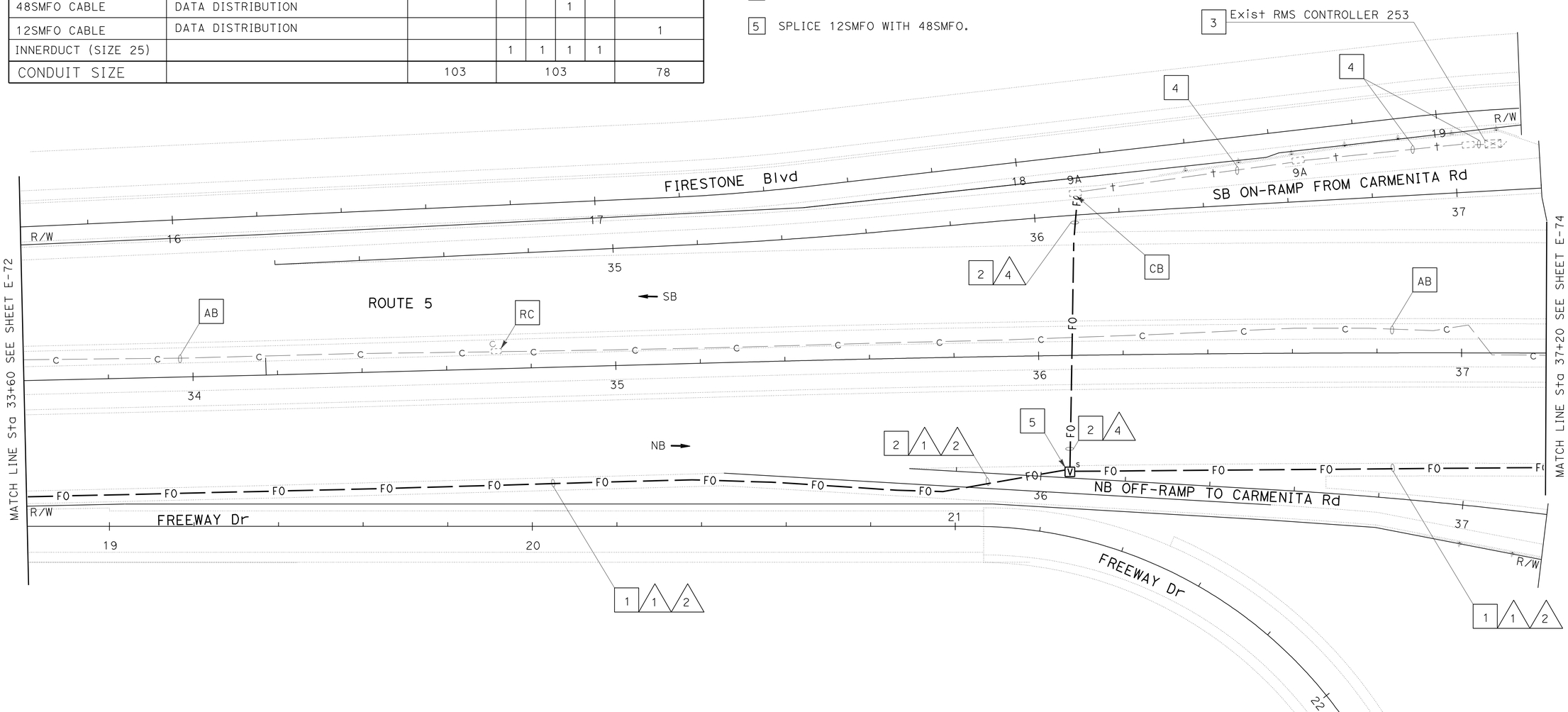

ALL DIMENSIONS ARE IN METER UNLESS OTHERWISE SHOWN

MODIFY COMMUNICATION SYSTEM

SCALE 1:500

FOR LEGEND, ABBREVIATIONS AND GENERAL NOTES SEE SHEET E-66.
THIS PLAN IS ACCURATE FOR ELECTRICAL WORK ONLY.

E-73

STATE OF CALIFORNIA - DEPARTMENT OF TRANSPORTATION
Caltrans OFFICE OF ITS

FUNCTIONAL SUPERVISOR: JACQUELINE C. TAN
CALCULATED-DESIGNED BY: SUNG LEE
CHECKED BY: DAVID PADILLA
REVISED BY / DATE REVISED

LAST REVISION 06-02-10 | DATE PLOTTED => 22-JUN-2010 | TIME PLOTTED => 15:36

Dist	COUNTY	ROUTE	KILOMETER POST TOTAL PROJECT	SHEET No.	TOTAL SHEETS
07	LA	5	2.9/4.9	737	1082

Leesungkwan 12/23/09
REGISTERED ELECTRICAL ENGINEER

6-21-10
PLANS APPROVAL DATE

REGISTERED PROFESSIONAL ENGINEER SUNG LEE No. E16249 Exp. 12/31/10 ELECTRICAL STATE OF CALIFORNIA

THE STATE OF CALIFORNIA OR ITS OFFICERS OR AGENTS SHALL NOT BE RESPONSIBLE FOR THE ACCURACY OR COMPLETENESS OF ELECTRONIC COPIES OF THIS PLAN SHEET.

Caltrans Metric

NOTE:

FOR COMPLETE RIGHT OF WAY AND ACCURATE ACCESS DATA, SEE RIGHT OF WAY RECORD MAPS AT DISTRICT OFFICE.

PROJECT NOTES: (THIS SHEET ONLY)

1 TRENCH AND INSTALL CONDUIT IN PAVED AREA. SEE SHEET E-81 FOR DETAILS.

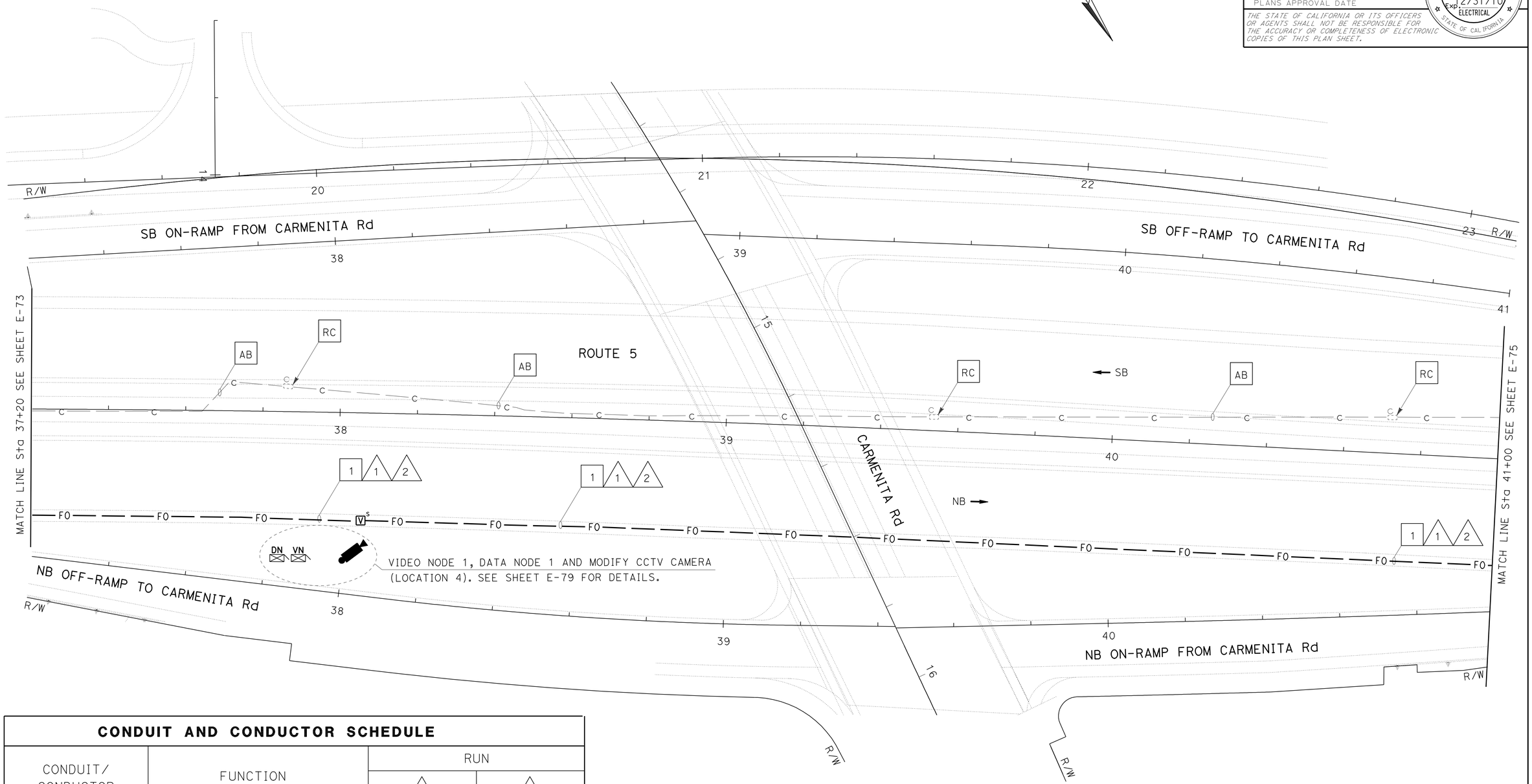

CONDUIT AND CONDUCTOR SCHEDULE

CONDUIT/ CONDUCTOR	FUNCTION	RUN				
		1	2			
48SMFO CABLE	TRUNK CABLE		1			
36SMFO CABLE	VIDEO DISTRIBUTION			1		
48SMFO CABLE	DATA DISTRIBUTION				1	
INNERDUCT (SIZE 25)			1	1	1	1
CONDUIT SIZE		103	103			

FOR LEGEND, ABBREVIATIONS AND GENERAL NOTES SEE SHEET E-66.
THIS PLAN IS ACCURATE FOR ELECTRICAL WORK ONLY.

ALL DIMENSIONS ARE IN METER UNLESS OTHERWISE SHOWN

MODIFY COMMUNICATION SYSTEM

SCALE 1:500

E-74

STATE OF CALIFORNIA - DEPARTMENT OF TRANSPORTATION
Caltrans **OFFICE OF ITS**

FUNCTIONAL SUPERVISOR: JACQUELINE C. TAN
CALCULATED-DESIGNED BY: SUNG LEE
CHECKED BY: DAVID PADILLA
REVISED BY / DATE REVISED

LAST REVISION 06-02-10 | DATE PLOTTED => 22-JUN-2010 | TIME PLOTTED => 15:36

Dist	COUNTY	ROUTE	KILOMETER POST TOTAL PROJECT	SHEET No.	TOTAL SHEETS
07	LA	5	2.9/4.9	738	1082

Leesunghwan 12/23/09
REGISTERED ELECTRICAL ENGINEER

6-21-10
PLANS APPROVAL DATE

REGISTERED PROFESSIONAL ENGINEER SUNG LEE No. E16249 Exp. 12/31/10 ELECTRICAL STATE OF CALIFORNIA

THE STATE OF CALIFORNIA OR ITS OFFICERS OR AGENTS SHALL NOT BE RESPONSIBLE FOR THE ACCURACY OR COMPLETENESS OF ELECTRONIC COPIES OF THIS PLAN SHEET.

Caltrans Metric

NOTE:

FOR COMPLETE RIGHT OF WAY AND ACCURATE ACCESS DATA, SEE RIGHT OF WAY RECORD MAPS AT DISTRICT OFFICE.

PROJECT NOTES: (THIS SHEET ONLY)

1. TRENCH AND INSTALL CONDUIT IN PAVED AREA. SEE SHEET E-81 FOR DETAILS.
2. JACK TYPE 1 CONDUIT BENEATH ROADWAY. SEE SHEET E-80 FOR DETAILS.
3. RL Exist CONTROLLER CABINET TO NEW LOCATION AT Sta 38+00. SEE SHEET E-79 FOR DETAILS.
4. INSTALL 12-FIBER FDU, FOTM, 12SMFO. TERMINATE 12SMFO CABLE IN Exist CONTROLLER CABINET. SEE SHEET E-87 FOR DETAILS.
5. ADD 12SMFO
6. SPLICE 12SMFO WITH 48SMFO.

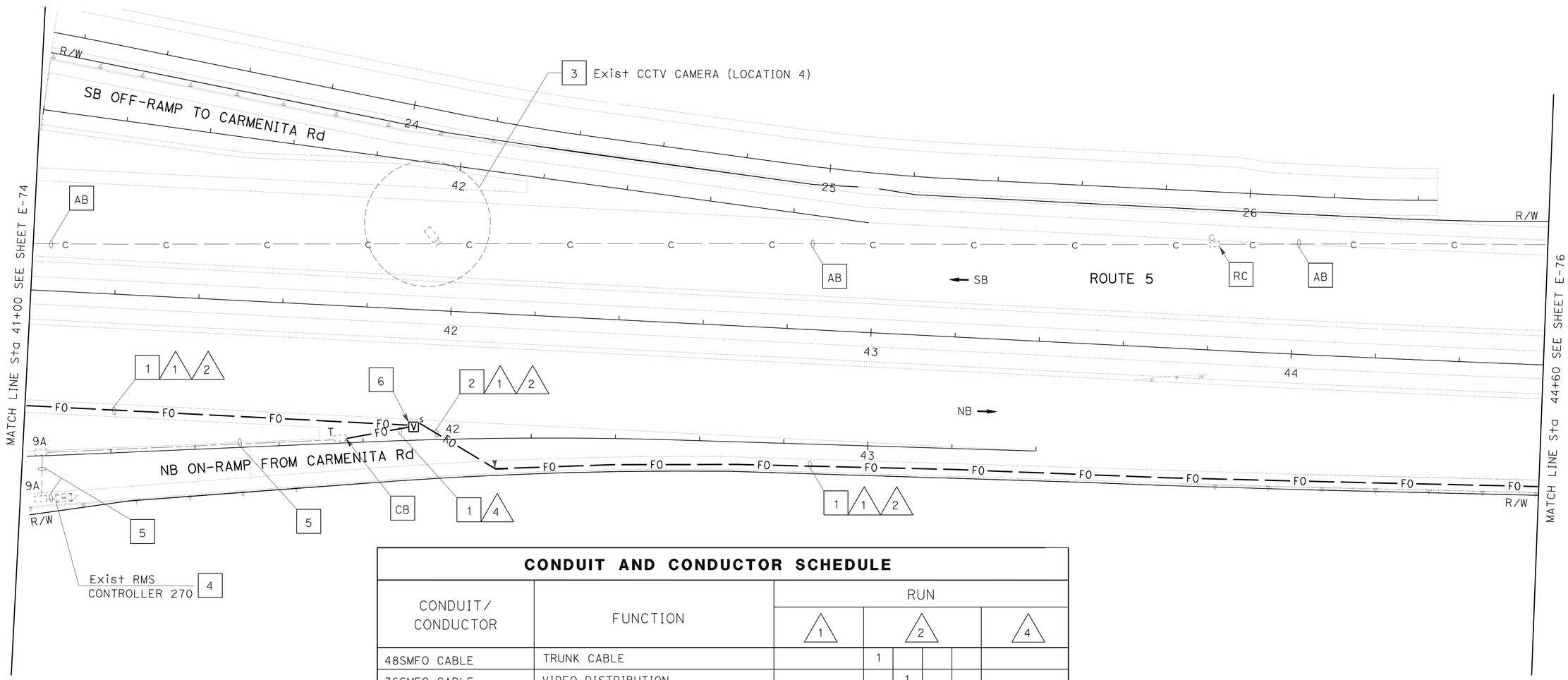

CONDUIT AND CONDUCTOR SCHEDULE

CONDUIT/ CONDUCTOR	FUNCTION	RUN 1	RUN 2				RUN 4
48SMFO CABLE	TRUNK CABLE		1				
36SMFO CABLE	VIDEO DISTRIBUTION			1			
48SMFO CABLE	DATA DISTRIBUTION				1		
12SMFO CABLE	DATA DISTRIBUTION						1
INNERDUCT (SIZE 25)			1	1	1	1	
CONDUIT SIZE		103	103				78

FOR LEGEND, ABBREVIATIONS AND GENERAL NOTES SEE SHEET E-66.
THIS PLAN IS ACCURATE FOR ELECTRICAL WORK ONLY.

ALL DIMENSIONS ARE IN METER UNLESS OTHERWISE SHOWN

MODIFY COMMUNICATION SYSTEM

SCALE 1:500

E-75

STATE OF CALIFORNIA - DEPARTMENT OF TRANSPORTATION
Caltrans **OFFICE OF ITS**

FUNCTIONAL SUPERVISOR: JACQUELINE C. TAN
CALCULATED-DESIGNED BY: SUNG LEE
CHECKED BY: DAVID PADILLA
REVISED BY / DATE REVISED

LAST REVISION 06-02-10
DATE PLOTTED => 22-JUN-2010
TIME PLOTTED => 15:36

Dist	COUNTY	ROUTE	KILOMETER POST TOTAL PROJECT	SHEET No.	TOTAL SHEETS
07	LA	5	2.9/4.9	739	1082

REGISTERED ELECTRICAL ENGINEER 12/23/09

6-21-10
PLANS APPROVAL DATE

REGISTERED PROFESSIONAL ENGINEER SUNG LEE No. E16249 Exp. 12/31/10 ELECTRICAL STATE OF CALIFORNIA

THE STATE OF CALIFORNIA OR ITS OFFICERS OR AGENTS SHALL NOT BE RESPONSIBLE FOR THE ACCURACY OR COMPLETENESS OF ELECTRONIC COPIES OF THIS PLAN SHEET.

Caltrans Metric

NOTE:

FOR COMPLETE RIGHT OF WAY AND ACCURATE ACCESS DATA, SEE RIGHT OF WAY RECORD MAPS AT DISTRICT OFFICE.

CONDUIT AND CONDUCTOR SCHEDULE

CONDUIT/ CONDUCTOR	FUNCTION	RUN 1	RUN 2			
48SMFO CABLE	TRUNK CABLE		1			
36SMFO CABLE	VIDEO DISTRIBUTION			1		
48SMFO CABLE	DATA DISTRIBUTION				1	
INNERDUCT (SIZE 25)			1	1	1	1
CONDUIT SIZE		103	103			

PROJECT NOTES: (THIS SHEET ONLY)

1. TRENCH AND INSTALL CONDUIT IN PAVED AREA. SEE SHEET E-81 FOR DETAILS.
2. JACK TYPE 1 CONDUIT, SEE SHEET E-80 FOR DETAILS.
3. INSTALL 78C, 12SMFO.
4. INSTALL 12-FIBER FDU, FOTM, 12SMFO. TERMINATE 12SMFO CABLE IN Exist CONTROLLER CABINET. SEE SHEET E-87 FOR DETAILS.
5. ADD 12SMFO CABLE.
6. SPLICE 12SMFO WITH 48SMFO.

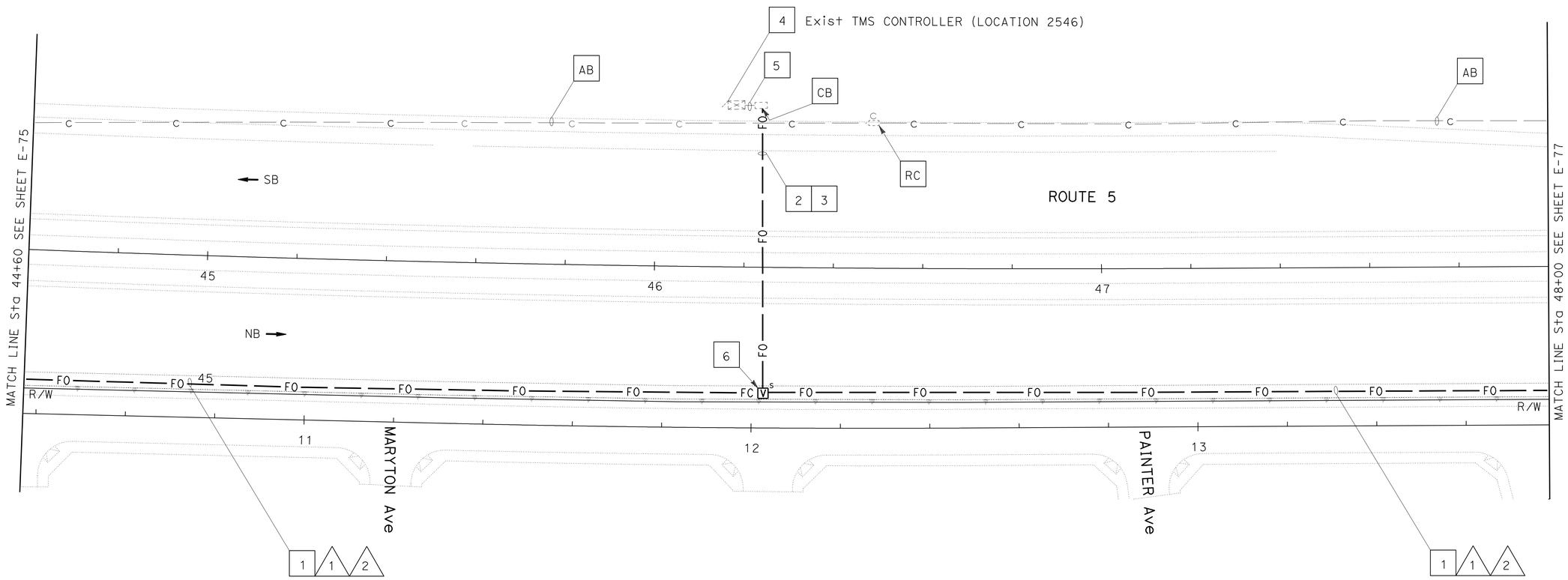

ALL DIMENSIONS ARE IN METER UNLESS OTHERWISE SHOWN

MODIFY COMMUNICATION SYSTEM

SCALE 1:500

FOR LEGEND, ABBREVIATIONS AND GENERAL NOTES SEE SHEET E-66.
THIS PLAN IS ACCURATE FOR ELECTRICAL WORK ONLY.

E-76

STATE OF CALIFORNIA - DEPARTMENT OF TRANSPORTATION
Caltrans **OFFICE OF ITS**

FUNCTIONAL SUPERVISOR: JACQUELINE C. TAN
CALCULATED-DESIGNED BY: SUNG LEE
CHECKED BY: DAVID PADILLA
REVISED BY / DATE REVISED

LAST REVISION 06-02-10 | DATE PLOTTED => 22-JUN-2010 | TIME PLOTTED => 15:36

Dist	COUNTY	ROUTE	KILOMETER POST TOTAL PROJECT	SHEET No.	TOTAL SHEETS
07	LA	5	2.9/4.9	740	1082

Leesunghwan 12/23/09
REGISTERED ELECTRICAL ENGINEER

6-21-10
PLANS APPROVAL DATE

REGISTERED PROFESSIONAL ENGINEER SUNG LEE No. E16249 Exp. 12/31/10 ELECTRICAL STATE OF CALIFORNIA

THE STATE OF CALIFORNIA OR ITS OFFICERS OR AGENTS SHALL NOT BE RESPONSIBLE FOR THE ACCURACY OR COMPLETENESS OF ELECTRONIC COPIES OF THIS PLAN SHEET.

Caltrans Metric

NOTE:

FOR COMPLETE RIGHT OF WAY AND ACCURATE ACCESS DATA, SEE RIGHT OF WAY RECORD MAPS AT DISTRICT OFFICE.

CONDUIT AND CONDUCTOR SCHEDULE

CONDUIT/ CONDUCTOR	FUNCTION	RUN 1	RUN 2				RUN 3
48SMFO CABLE	TRUNK CABLE		1				
36SMFO CABLE	VIDEO DISTRIBUTION			1			
48SMFO CABLE	DATA DISTRIBUTION				1		
50P22 CABLE	DATA DISTRIBUTION						1(E)
24SMFO CABLE	TRUNK CABLE						1(E)
12MMFO CABLE	VIDEO DISTRIBUTION						1(E)
INNERDUCT (SIZE 25)			1	1	1	1	2(E)
CONDUIT SIZE		103	103				103(E)

PROJECT NOTES: (THIS SHEET ONLY)

1. TRENCH AND INSTALL CONDUIT IN PAVED AREA. SEE SHEET E-81 FOR DETAILS.
2. JACK TYPE 1 CONDUIT, SEE SHEET E-80 FOR DETAILS.
3. COIL 40 m OF 36SMFO AND 48SMFO INSIDE OF SPLICE VAULT FOR FUTURE USE.
4. SPLICE 48SMFO WITH EXISTING 24SMFO CABLES IN THE SAME CONFIGURATION.

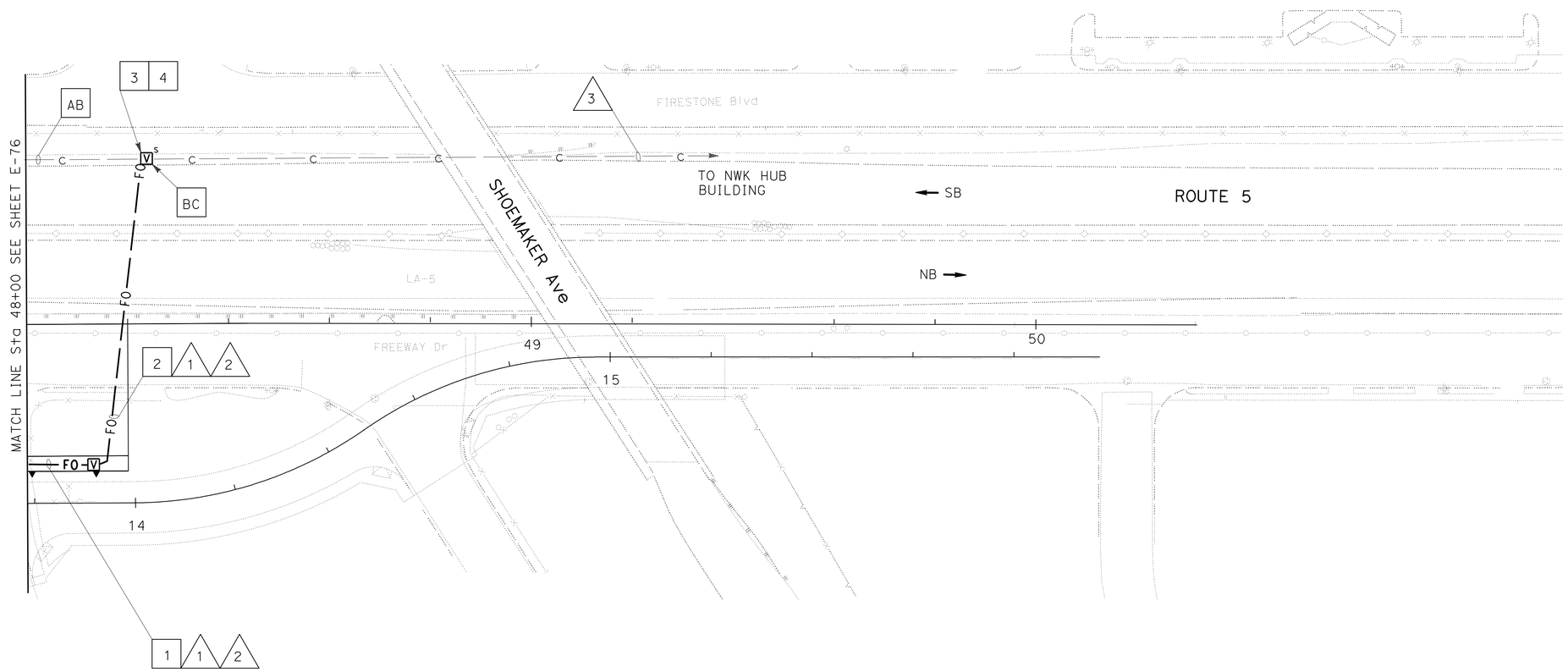

ALL DIMENSIONS ARE IN METER UNLESS OTHERWISE SHOWN

MODIFY COMMUNICATION SYSTEM

SCALE 1:500

FOR LEGEND, ABBREVIATIONS AND GENERAL NOTES SEE SHEET E-66.
THIS PLAN IS ACCURATE FOR ELECTRICAL WORK ONLY.

E-77

STATE OF CALIFORNIA - DEPARTMENT OF TRANSPORTATION
Caltrans OFFICE OF ITS

FUNCTIONAL SUPERVISOR: JACQUELINE C. TAN
CALCULATED-DESIGNED BY: SUNG LEE
CHECKED BY: DAVID PADILLA
REVISED BY / DATE REVISED

LAST REVISION 06-02-10
DATE PLOTTED => 22-JUN-2010
TIME PLOTTED => 15:36

Dist	COUNTY	ROUTE	KILOMETER POST TOTAL PROJECT	SHEET No.	TOTAL SHEETS
07	LA	5	2.9/4.9	741	1082

Leesunghwan 12/23/09
REGISTERED ELECTRICAL ENGINEER

6-21-10
PLANS APPROVAL DATE

REGISTERED PROFESSIONAL ENGINEER SUNG LEE No. E16249 Exp. 12/31/10 ELECTRICAL STATE OF CALIFORNIA

THE STATE OF CALIFORNIA OR ITS OFFICERS OR AGENTS SHALL NOT BE RESPONSIBLE FOR THE ACCURACY OR COMPLETENESS OF ELECTRONIC COPIES OF THIS PLAN SHEET.

Caltrans Metric

NOTE:

FOR COMPLETE RIGHT OF WAY AND ACCURATE ACCESS DATA, SEE RIGHT OF WAY RECORD MAPS AT DISTRICT OFFICE.

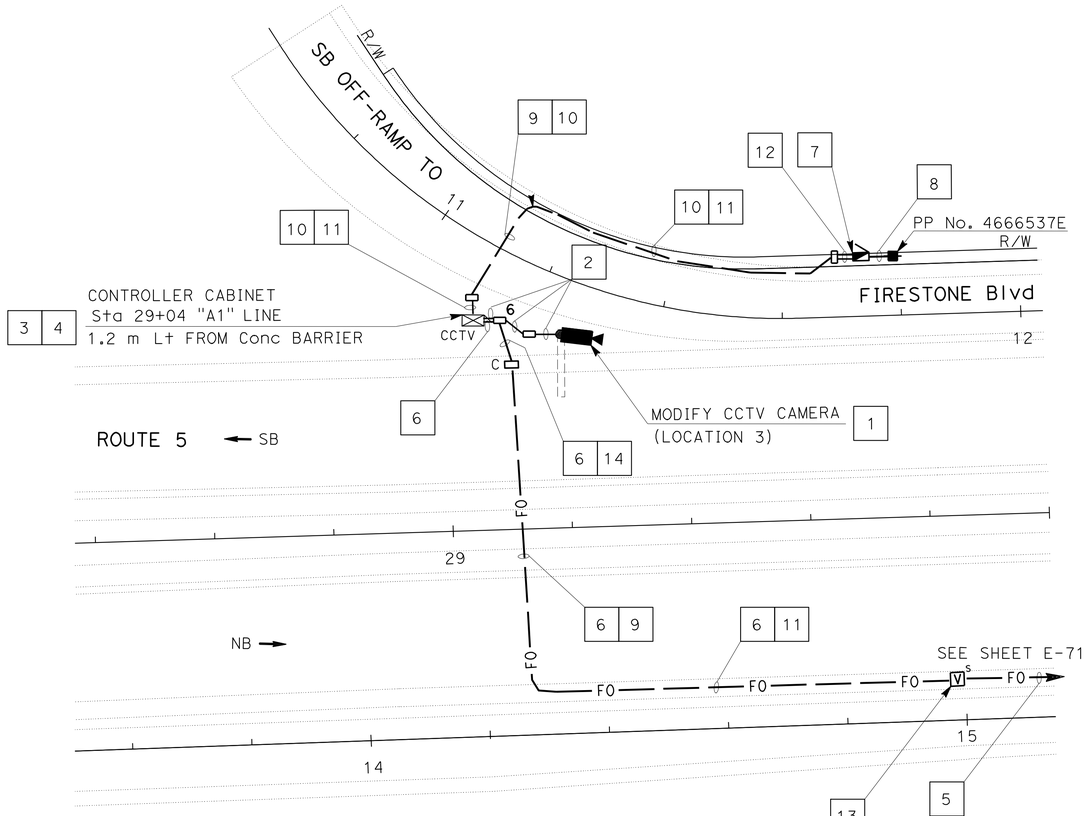

PROJECT NOTES: (THIS SHEET ONLY)

1. INSTALL CCTV CAMERA ASSEMBLY/SUPPORT AND PAN/TILT UNIT ON POLE EXTENSION TYPE CCTV 5 ON Exist OVERHEAD SIGN. SEE REVISED STANDARD PLANS ES-16B FOR DETAILS.

2. INSTALL CCTV WIRING, SEE SHEET E-86 FOR DETAILS.

3. INSTALL RELOCATED MODEL 334-TV CONTROLLER CABINET ASSEMBLY. SEE SHEET E-85 FOR DETAILS.

4. INSTALL LCU, FDU, FOCM, VIDEO TRANSCEIVER. SEE SHEET E-88 FOR DETAILS.
   RC EXISTING MODEM, MULTIMODE TRANSMITTER AND CCR.

5. SHOWN FOR REFERENCE ONLY.

6. INSTALL 2-12SMFO.

7. INSTALL 120/240 V, 3-WIRE, 1P, 100 A, METERED TYPE III-BF SERVICE EQUIPMENT ENCLOSURE WITH:
   1-100 A, 240 V, 2P, CB - MAIN
   1-30 A, 120 V, 1P, CB - CCTV
   ADDRESS: 13770 ½ FIRESTONE Blvd
   ID No. 07-53-005-R-001.895

8. INSTALL 78C, MT IN PAVED AREA.
   UTILITY COMPANY WILL INSTALL CONDUCTORS.

9. JACK 78C TYPE 1, SEE SHEET E-80 FOR DETAILS.

10. INSTALL 53C, 2#4, 1#8G.

11. TRENCH AND INSTALL CONDUIT IN PAVED AREA. SEE SHEET E-81 FOR DETAILS.

12. INSTALL 2-53C, 2#4, 1#8G.

13. SPLICE 12SMFO WITH 48SMFO AND 12SMFO WITH 36SMFO.

14. INSTALL 78C IN PAVED AREA. SEE SHEET E-81 FOR DETAILS.

ALL DIMENSIONS ARE IN METER UNLESS OTHERWISE SHOWN

MODIFY COMMUNICATION SYSTEM

SCALE 1:500

(MODIFY CLOSED CIRCUIT TELEVISION CAMERA, LOCATION 3)

FOR LEGEND, ABBREVIATIONS, AND GENERAL NOTES SEE SHEET E-66.
THIS PLAN IS ACCURATE FOR ELECTRICAL WORK ONLY.

E-78

STATE OF CALIFORNIA - DEPARTMENT OF TRANSPORTATION
Caltrans OFFICE OF ITS

FUNCTIONAL SUPERVISOR: JACQUELINE C. TAN
CALCULATED-DESIGNED BY: SUNG LEE
CHECKED BY: DAVID PADILLA
REVISED BY
DATE REVISED

LAST REVISION 06-02-10
DATE PLOTTED => 22-JUN-2010
TIME PLOTTED => 15:37

Dist	COUNTY	ROUTE	KILOMETER POST TOTAL PROJECT	SHEET No.	TOTAL SHEETS
07	LA	5	2.9/4.9	742	1082

REGISTERED ELECTRICAL ENGINEER 12/23/09

6-21-10
PLANS APPROVAL DATE

REGISTERED PROFESSIONAL ENGINEER SUNG LEE No. E16249 Exp. 12/31/10 ELECTRICAL STATE OF CALIFORNIA

THE STATE OF CALIFORNIA OR ITS OFFICERS OR AGENTS SHALL NOT BE RESPONSIBLE FOR THE ACCURACY OR COMPLETENESS OF ELECTRONIC COPIES OF THIS PLAN SHEET.

Caltrans Metric

NOTE:

FOR COMPLETE RIGHT OF WAY AND ACCURATE ACCESS DATA, SEE RIGHT OF WAY RECORD MAPS AT DISTRICT OFFICE.

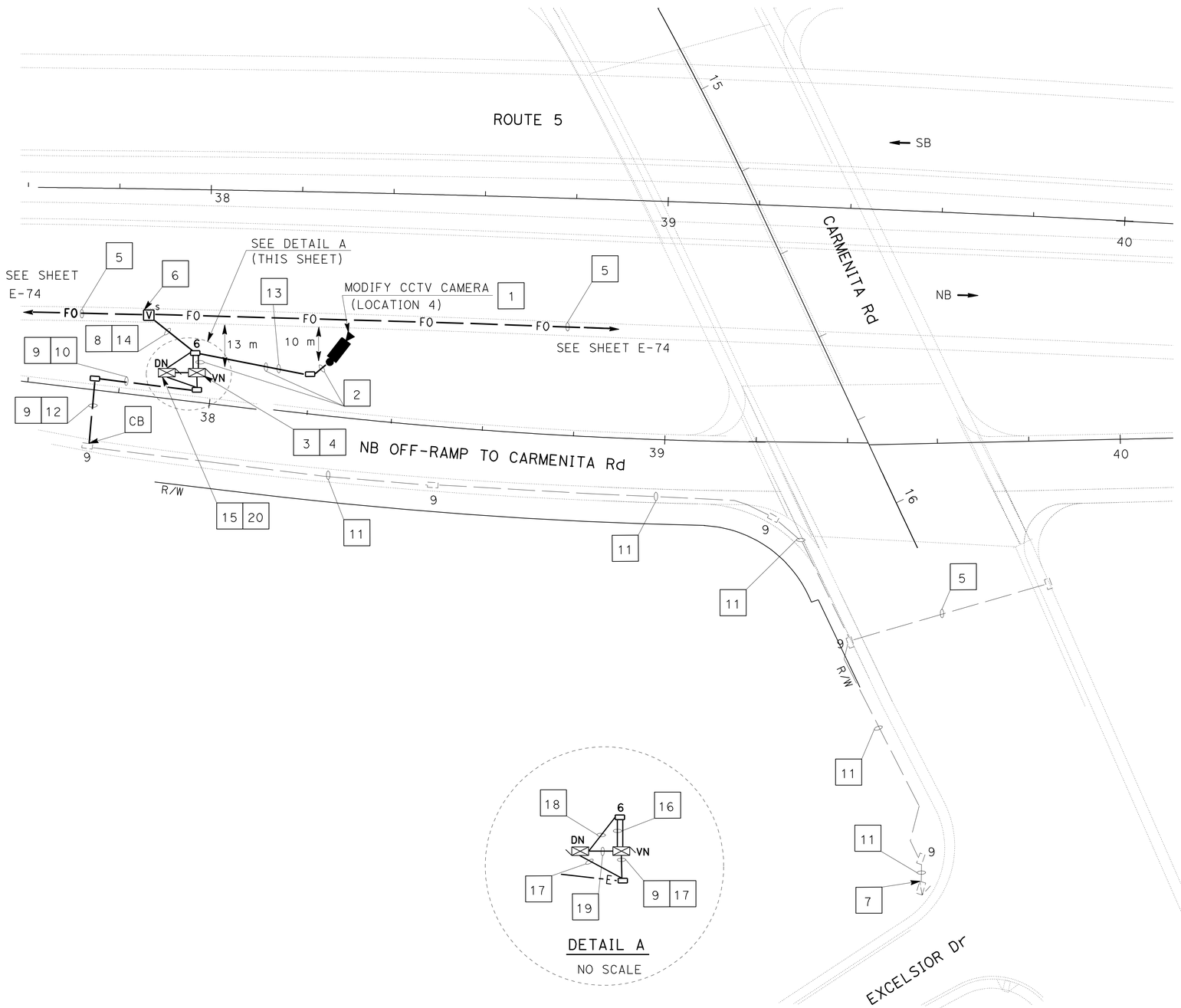

PROJECT NOTES: (THIS SHEET ONLY)

1. INSTALL CCTV CAMERA ASSEMBLY/SUPPORT AND PAN/TILT UNIT ON POLE TYPE CCTV 60. SEE REVISED STANDARD PLANS ES-16C FOR DETAILS.
2. INSTALL CCTV WIRING. SEE SHEET E-86 AND E-89 FOR DETAILS.
3. INSTALL RELOCATED MODEL 334-TV CONTROLLER CABINET. SEE SHEET E-85 FOR DETAILS. INSTALL LCU, VMUX, VRD, FDU, CCM. SEE SHEET E-89 FOR DETAILS.
4. TERMINATE 2-36SMFO AND 12SMFO.
5. SHOWN FOR REFERENCE ONLY.
6. SPLICE 2-12SMFO WITH 48SMFO.
7. Exist 120/240 V, TYPE III-CF SERVICE EQUIPMENT ENCLOSURE: ADD 1-30 A, 120 V, 1P CIRCUIT BREAKER FOR CCTV AT METER 2.
8. INSTALL 2-12SMFO, 2-48SMFO, 2-36SMFO.
9. INSTALL 53C, 2#4, 1#6G.
10. TRENCH AND INSTALL 53C IN PAVED AREA. SEE SHEET E-81 FOR DETAILS.
11. INSTALL 2#4, 1#6G.
12. JACK TYPE 1 CONDUIT, SEE SHEET E-80 FOR DETAILS.
13. TRENCH AND INSTALL CONDUIT IN SOIL. SEE SHEET E-81 FOR DETAILS.
14. TRENCH AND INSTALL 103C IN SOIL. SEE SHEET E-81 FOR DETAILS.
15. TERMINATE 2-48SMFO, 12SMFO.
16. INSTALL 12SMF, 2-36SMFO.
17. INSTALL 2#4, 1#8G.
18. INSTALL 12SMFO, 2-48SMFO
19. INSTALL 6P19.
20. INSTALL NEW MODEL 334-TV CONTROLLER CABINET, SEE SHEET E-85 FOR DETAILS.

ALL DIMENSIONS ARE IN METER UNLESS OTHERWISE SHOWN

(VIDEO NODE, LOCATION 1)
(DATA NODE, LOCATION 1)
(MODIFY CLOSED CIRCUIT TELEVISION CAMERA , LOCATION 4)

FOR LEGEND, ABBREVIATIONS AND GENERAL NOTES SEE SHEET E-66.
THIS PLAN IS ACCURATE FOR ELECTRICAL WORK ONLY.

MODIFY COMMUNICATION SYSTEM

SCALE 1:500

E-79

STATE OF CALIFORNIA - DEPARTMENT OF TRANSPORTATION
Caltrans **OFFICE OF ITS**

FUNCTIONAL SUPERVISOR: JACQUELINE C. TAN
CALCULATED-DESIGNED BY: DAVID PADILLA
CHECKED BY: SUNG LEE
REVISED BY / DATE REVISED

LAST REVISION 06-02-10
DATE PLOTTED => 22-JUN-2010
TIME PLOTTED => 15:37

Dist	COUNTY	ROUTE	KILOMETER POST TOTAL PROJECT	SHEET No.	TOTAL SHEETS
07	LA	5	2.9/4.9	743	1082

Leesunghwan 12/23/09
REGISTERED ELECTRICAL ENGINEER

6-21-10
PLANS APPROVAL DATE

REGISTERED PROFESSIONAL ENGINEER SUNG LEE No. E16249 Exp. 12/31/10 ELECTRICAL STATE OF CALIFORNIA

THE STATE OF CALIFORNIA OR ITS OFFICERS OR AGENTS SHALL NOT BE RESPONSIBLE FOR THE ACCURACY OR COMPLETENESS OF ELECTRONIC COPIES OF THIS PLAN SHEET.

Caltrans Metric

NOTES: (THIS SHEET ONLY)

1. ALL JACKED CONDUITS SHALL BE 760 mm MINIMUM BELOW FINISHED GRADE.
2. PLACE PULL BOXES OR SPLICE VAULTS AS SHOWN PER PLANS.
3. BEND ANGLES AND CONDUIT DIRECTION VARY AS SHOWN PER PLANS.

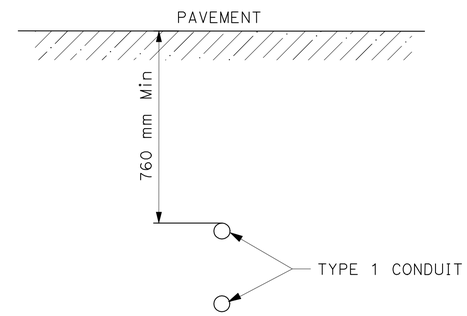

SECTION A-A

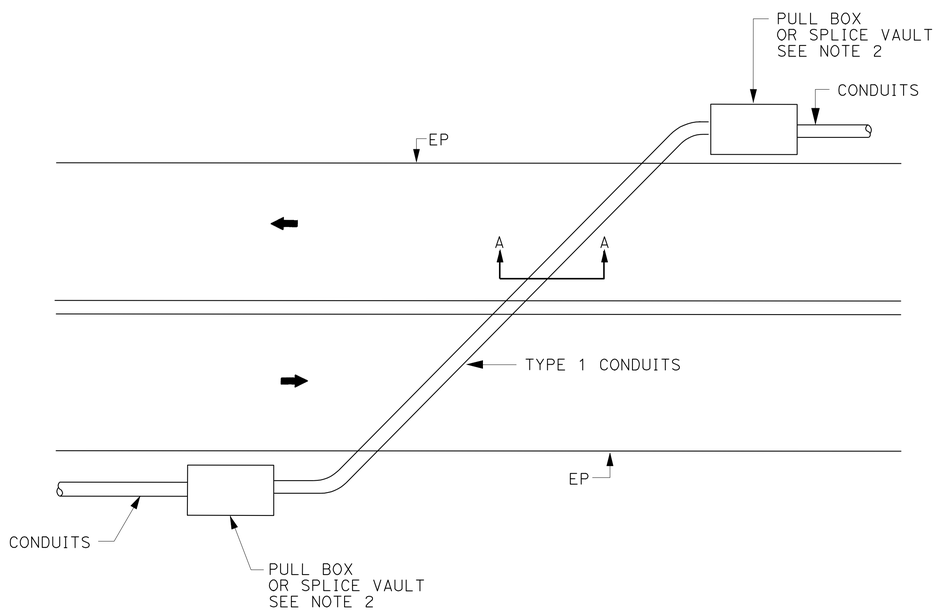

TYPICAL MAINLINE CROSSING (4 OR MORE LANES)

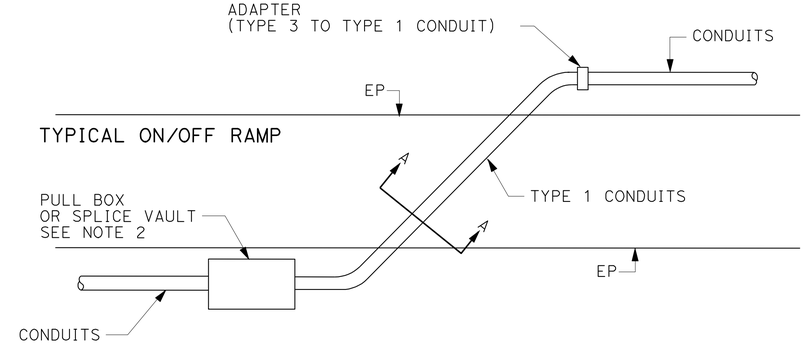

TYPICAL ON/OFF-RAMP CROSSING

ALL DIMENSIONS ARE IN METERS UNLESS OTHERWISE SHOWN

MODIFY COMMUNICATION SYSTEM

NO SCALE

(JACKING DETAILS)

THIS PLAN IS ACCURATE FOR ELECTRICAL WORK ONLY.

E-80

STATE OF CALIFORNIA - DEPARTMENT OF TRANSPORTATION
Caltrans **OFFICE OF ITS**

FUNCTIONAL SUPERVISOR: JACQUELINE C. TAN
CALCULATED-DESIGNED BY: SUNG LEE
CHECKED BY: DAVID PADILLA
REVISED BY
DATE REVISED

LAST REVISION 06-02-10 | DATE PLOTTED => 22-JUN-2010 | TIME PLOTTED => 15:37

Dist	COUNTY	ROUTE	KILOMETER POST TOTAL PROJECT	SHEET No.	TOTAL SHEETS
07	LA	5	2.9/4.9	744	1082

Leesunghwan 12/23/09
REGISTERED ELECTRICAL ENGINEER

6-21-10
PLANS APPROVAL DATE

REGISTERED PROFESSIONAL ENGINEER SUNG LEE No. E16249 Exp. 12/31/10 ELECTRICAL STATE OF CALIFORNIA

THE STATE OF CALIFORNIA OR ITS OFFICERS OR AGENTS SHALL NOT BE RESPONSIBLE FOR THE ACCURACY OR COMPLETENESS OF ELECTRONIC COPIES OF THIS PLAN SHEET.

Caltrans Metric

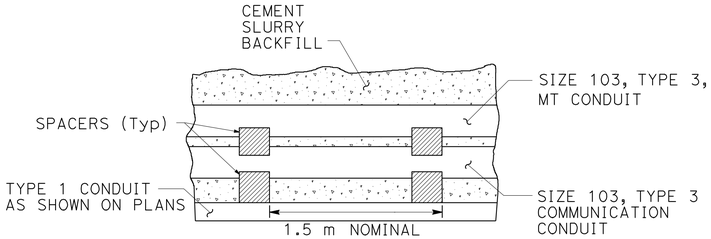

CONDUIT SPACER PLACEMENT (SIDE VIEW)

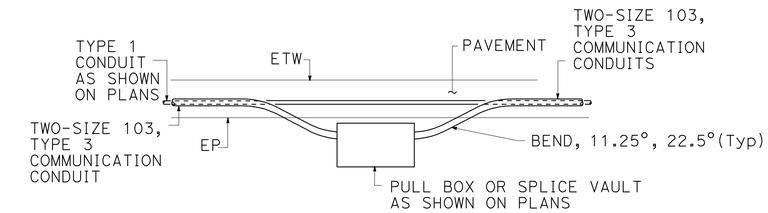

OUTSIDE SHOULDER PULL BOX INSTALLATION (TOP VIEW)

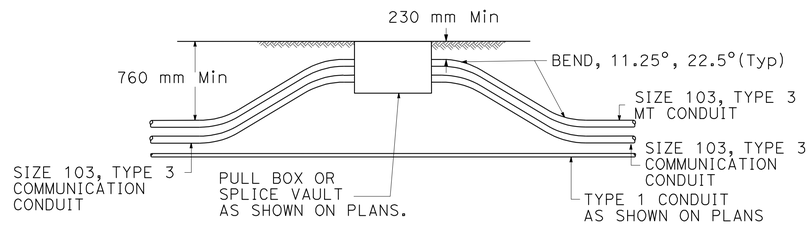

PULL BOX FOR SOIL AREA TRENCHING (ELEVATION)

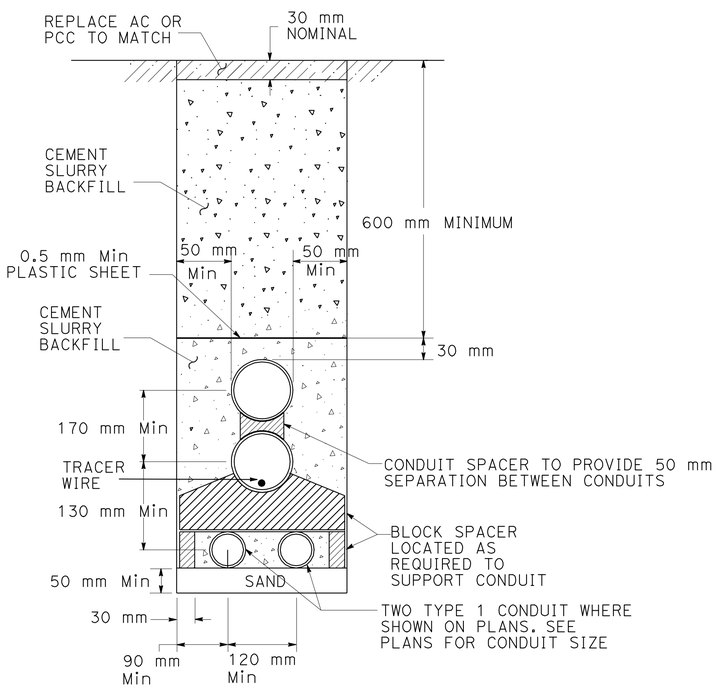

TRENCH IN CONCRETE OR ASPHALT WITH TWO 103C TYPE 3 AND TWO TYPE 1 CONDUITS

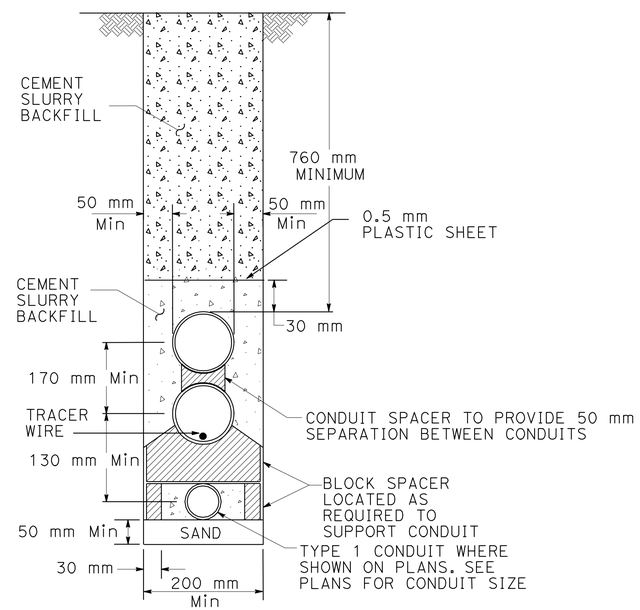

TRENCH IN SOIL WITH TWO 103C TYPE 3 AND ONE TYPE 1 CONDUIT

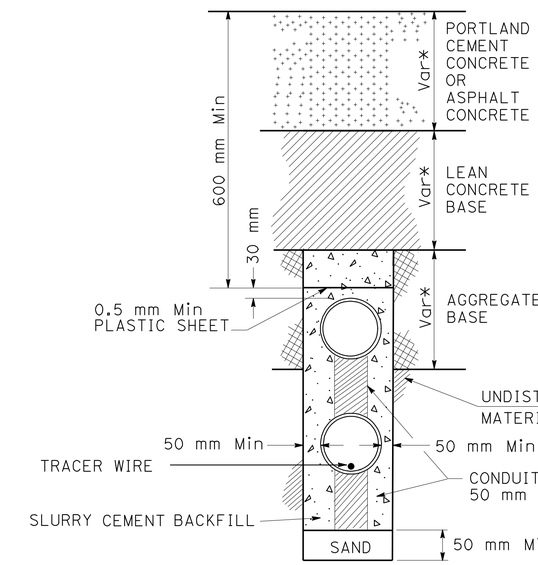

TRENCH IN NEW PAVEMENT (PCC or ASPHALT) WITH TWO 103C TYPE 3

(* PAVEMENT THICKNESS, SEE TYPICAL CROSS SECTION PLANS)

ALL DIMENSIONS ARE IN METERS UNLESS OTHERWISE SHOWN

MODIFY COMMUNICATION SYSTEM

NO SCALE

(TRENCH DETAILS)

THIS PLAN IS ACCURATE FOR ELECTRICAL WORK ONLY.

E-81

STATE OF CALIFORNIA - DEPARTMENT OF TRANSPORTATION
Caltrans
OFFICE OF ITS

FUNCTIONAL SUPERVISOR: JACQUELINE C. TAN
CALCULATED-DESIGNED BY: SUNG LEE
CHECKED BY: DAVID PADILLA
REVISED BY
DATE REVISED

LAST REVISION 06-02-10 | DATE PLOTTED => 22-JUN-2010 | TIME PLOTTED => 15:37

Dist	COUNTY	ROUTE	KILOMETER POST TOTAL PROJECT	SHEET No.	TOTAL SHEETS
07	LA	5	2.9/4.9	745	1082

Leesunghwan 12/23/09
REGISTERED ELECTRICAL ENGINEER

6-21-10
PLANS APPROVAL DATE

REGISTERED PROFESSIONAL ENGINEER SUNG LEE No. E16249 EXP. 12/31/10 ELECTRICAL STATE OF CALIFORNIA

THE STATE OF CALIFORNIA OR ITS OFFICERS OR AGENTS SHALL NOT BE RESPONSIBLE FOR THE ACCURACY OR COMPLETENESS OF ELECTRONIC COPIES OF THIS PLAN SHEET.

Caltrans Metric

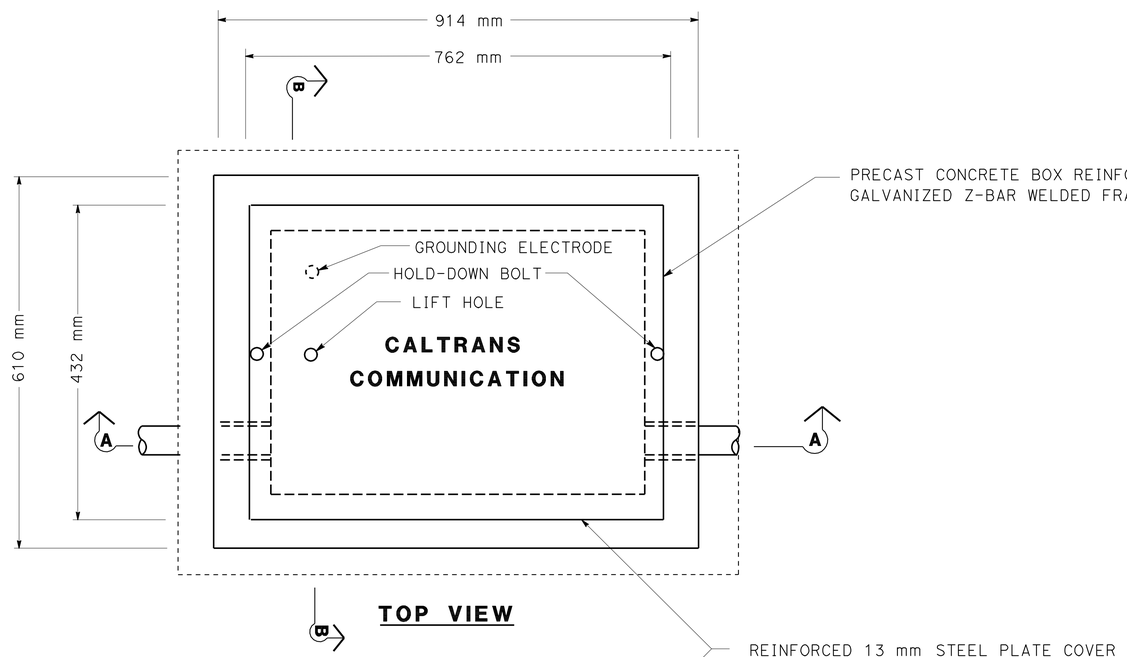

PRECAST CONCRETE BOX REINFORCED WITH GALVANIZED Z-BAR WELDED FRAME

TOP VIEW

REINFORCED 13 mm STEEL PLATE COVER

TOP FLUSH WITH SURROUNDING GRADE

NOTES: (THIS SHEET ONLY)

1. FOR DETAILS NOT SHOWN SEE STANDARD PLAN RSP ES-8.
2. CONDUITS SHOWN ARE FOR EXAMPLE ONLY. ADDITIONAL CONDUITS MAY BE REQUIRED AS SHOWN ON THE PLAN SHEETS.
3. CONDUITS SHALL EXTEND INTO THE PULL BOX A NOMINAL 50 mm FROM THE INSIDE WALL.

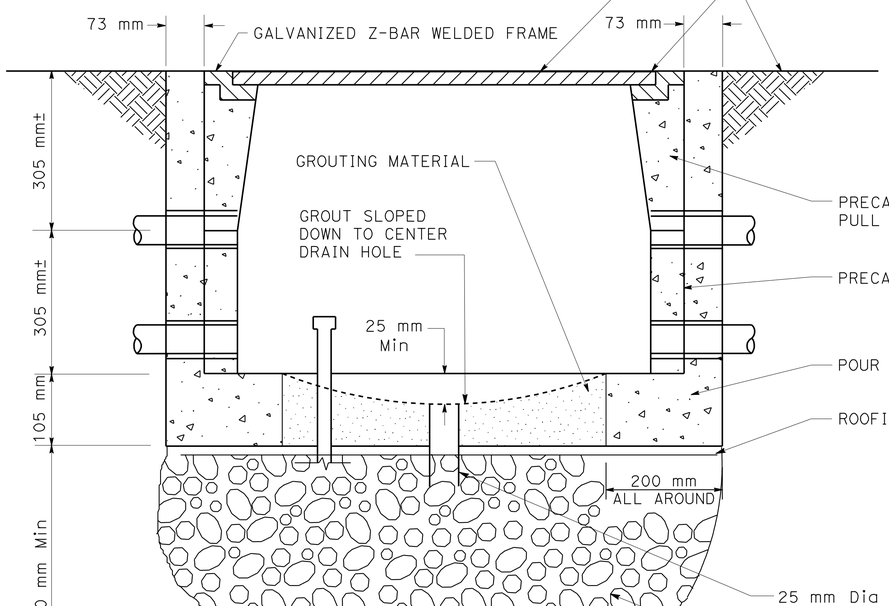

PRECAST CONCRETE PULL BOX

PRECAST EXTENSION BOX

POUR CONCRETE AROUND PULL BOX

ROOFING PAPER

25 mm Dia AND 100 mm LONG PVC NIPPLE

CLEAN CRUSHED ROCK SUMP

SECTION A-A

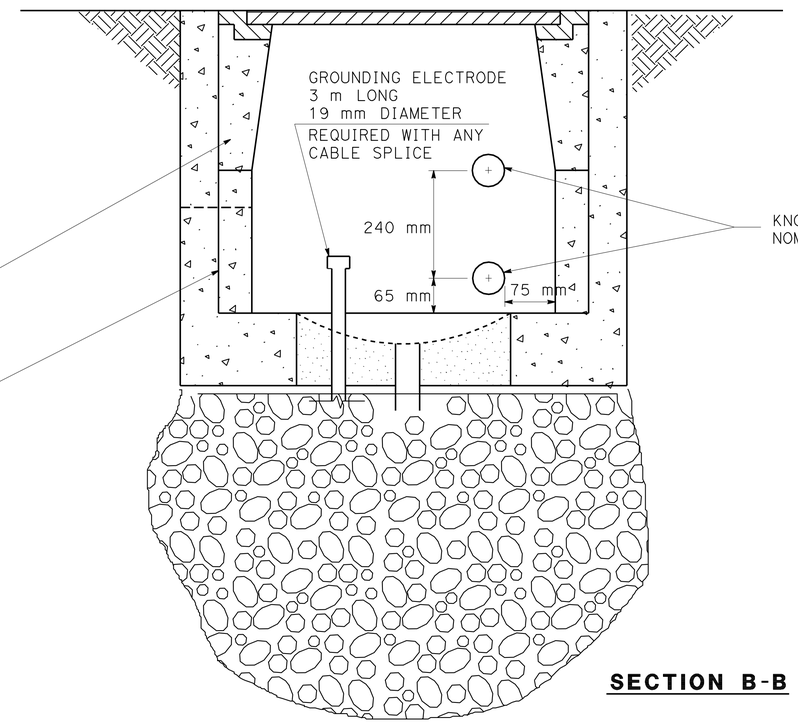

KNOCKOUT HOLE(S)
NOMINAL 115 mm DIAMETER

SECTION B-B

ALL DIMENSIONS ARE IN METERS UNLESS OTHERWISE SHOWN

MODIFY COMMUNICATION SYSTEM

NO SCALE

(COMMUNICATION PULL BOX)

THIS PLAN IS ACCURATE FOR ELECTRICAL WORK ONLY.

E-82

STATE OF CALIFORNIA - DEPARTMENT OF TRANSPORTATION
Caltrans
OFFICE OF ITS

FUNCTIONAL SUPERVISOR: JACQUELINE C. TAN
CALCULATED-DESIGNED BY: SUNG LEE
CHECKED BY: DAVID PADILLA
REVISED BY
DATE REVISED

LAST REVISION 06-02-10 | DATE PLOTTED => 22-JUN-2010 | TIME PLOTTED => 15:37

Dist	COUNTY	ROUTE	KILOMETER POST TOTAL PROJECT	SHEET No.	TOTAL SHEETS
07	LA	5	2.9/4.9	746	1082

Caltrans Metric

Leesunghwan 12/23/09
REGISTERED ELECTRICAL ENGINEER

6-21-10
PLANS APPROVAL DATE

REGISTERED PROFESSIONAL ENGINEER SUNG LEE No. E16249 Exp. 12/31/10 ELECTRICAL STATE OF CALIFORNIA

THE STATE OF CALIFORNIA OR ITS OFFICERS OR AGENTS SHALL NOT BE RESPONSIBLE FOR THE ACCURACY OR COMPLETENESS OF ELECTRONIC COPIES OF THIS PLAN SHEET.

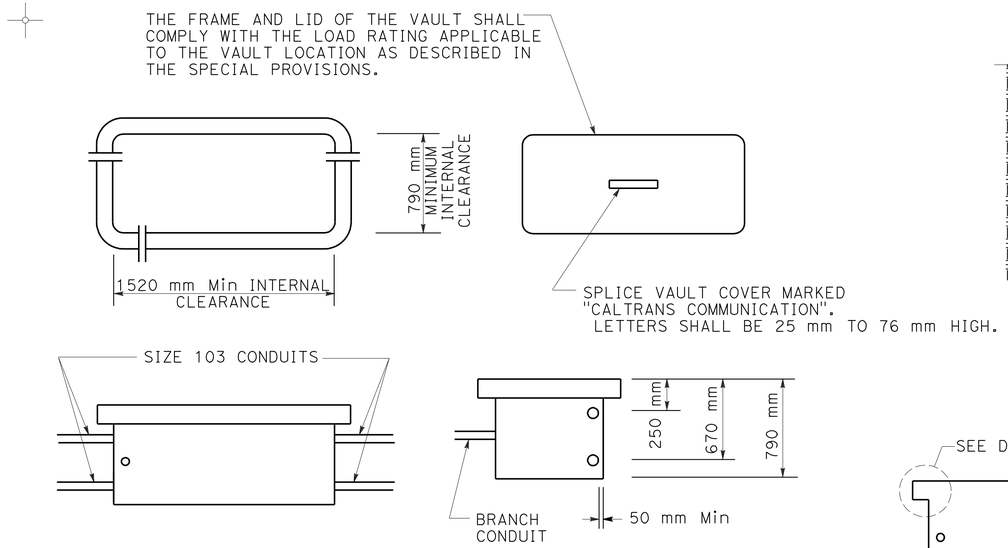

SPLICE VAULT DIMENSIONS

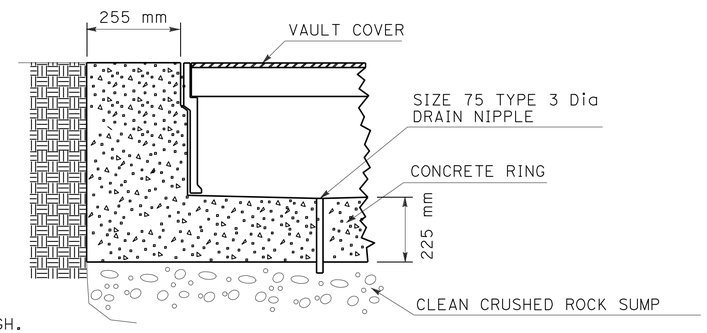

DETAIL A

INSTALLATION IN ASPHALT PAVEMENT

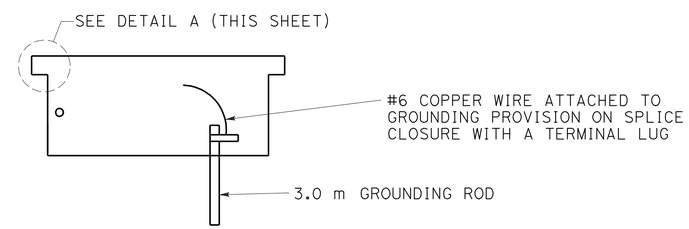

SPLICE VAULT INSTALLATION

INSTALLATION NOTES:

1. CONCRETE ENCASEMENT AROUND SPLICE VAULT SHALL BE MINOR CONCRETE.
2. PAVEMENT AND SUBGRADE TO BE AS DIRECTED BY THE ENGINEER.

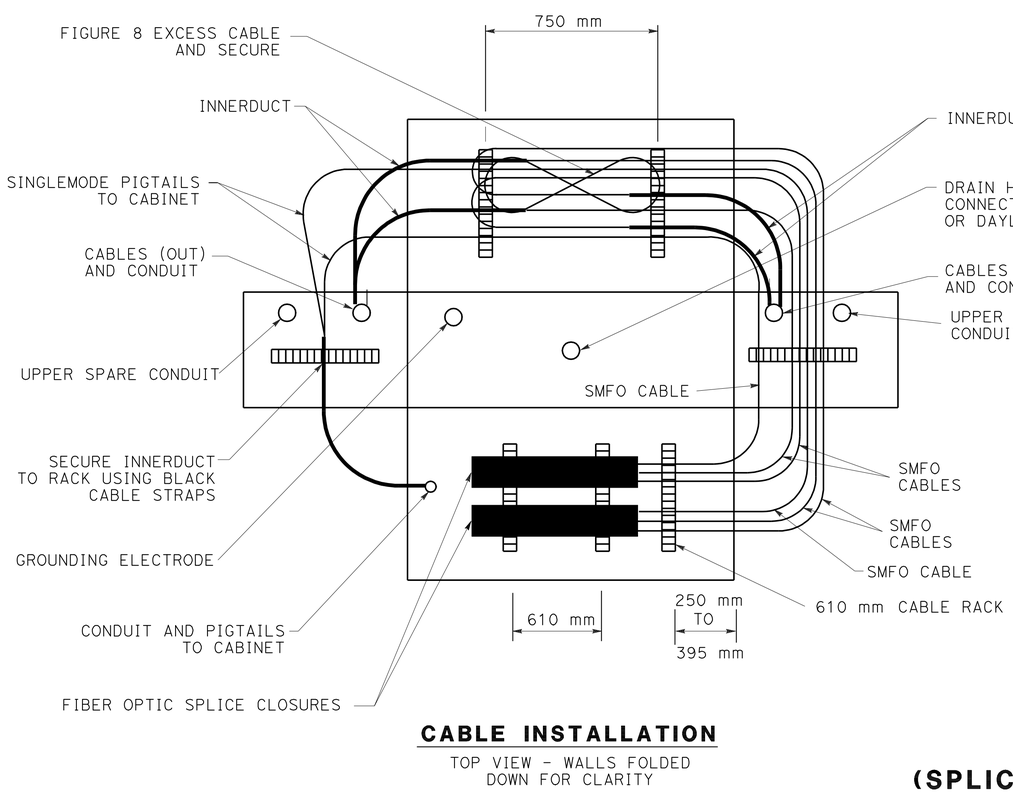

CABLE INSTALLATION

TOP VIEW - WALLS FOLDED DOWN FOR CLARITY

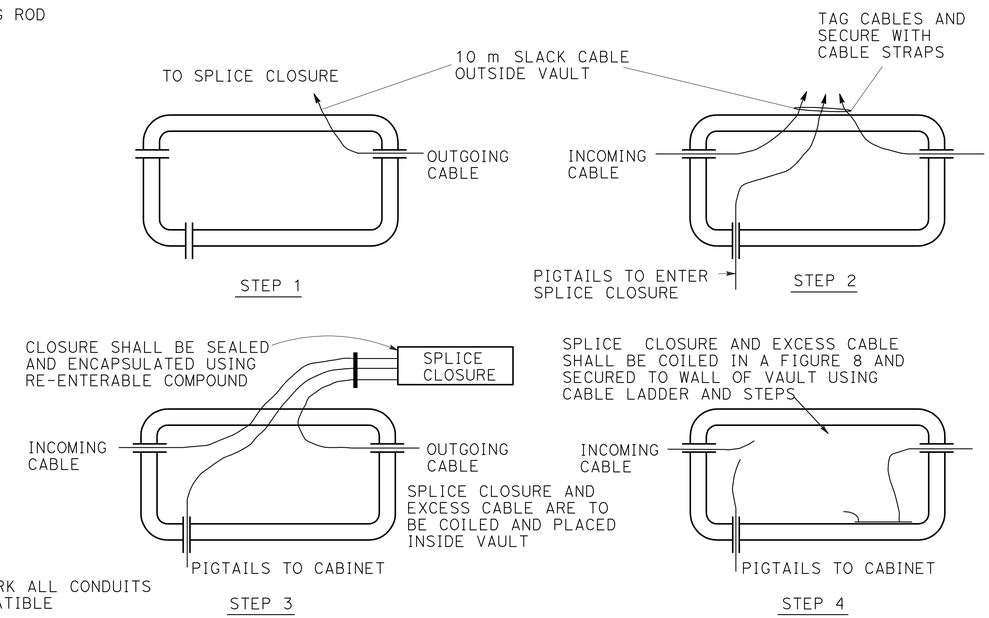

SPLICE PROCEDURE

NOTES: (THIS SHEET ONLY)

1. UPON ACCEPTANCE OF THE WORK ALL CONDUITS SHALL BE SEALED WITH COMPATIBLE SEALANT MATERIAL.
2. ALL GROUND CONNECTIONS SHALL BE COATED WITH OXIDATION PROHIBITING COMPOUND.
3. ALL CABLE STRAPS SHALL BE DESIGNED TO WITHSTAND ULTRA-VIOLET EXPOSURE.
4. THE VAULT SHALL BE CAULKED AFTER ALL KNOWN ENTRANCES HAVE BEEN MADE.
5. INSTALL ALL CABLES IN LOWER SIZE 103 CONDUIT.
6. UPPER SIZE 103 CONDUIT IS SPARE ONLY.
7. VAULT SHALL HAVE INTEGRAL BASE OR SHALL BE GROUTED PER STANDARD SPECIFICATION OF PULL BOXES.
8. NUMBER OF SPLICE CLOSURES MAY VARY.

ALL DIMENSIONS ARE IN METERS UNLESS OTHERWISE SHOWN

MODIFY COMMUNICATION SYSTEM

NO SCALE

(SPLICE VAULT DETAILS)

THIS PLAN IS ACCURATE FOR ELECTRICAL WORK ONLY.

E-83

STATE OF CALIFORNIA - DEPARTMENT OF TRANSPORTATION
Caltrans OFFICE OF ITS

FUNCTIONAL SUPERVISOR: JACQUELINE C. TAN
CALCULATED-DESIGNED BY: SUNG LEE
CHECKED BY: DAVID PADILLA
REVISED BY / DATE REVISED

LAST REVISION 06-02-10
DATE PLOTTED => 22-JUN-2010
TIME PLOTTED => 16:10

Dist	COUNTY	ROUTE	KILOMETER POST TOTAL PROJECT	SHEET No.	TOTAL SHEETS
07	LA	5	2.9/4.9	747	1082

Caltrans Metric

Leesunghwan 12/23/09
REGISTERED ELECTRICAL ENGINEER

6-21-10
PLANS APPROVAL DATE

REGISTERED PROFESSIONAL ENGINEER SUNG LEE No. E16249 Exp. 12/31/10 ELECTRICAL STATE OF CALIFORNIA

THE STATE OF CALIFORNIA OR ITS OFFICERS OR AGENTS SHALL NOT BE RESPONSIBLE FOR THE ACCURACY OR COMPLETENESS OF ELECTRONIC COPIES OF THIS PLAN SHEET.

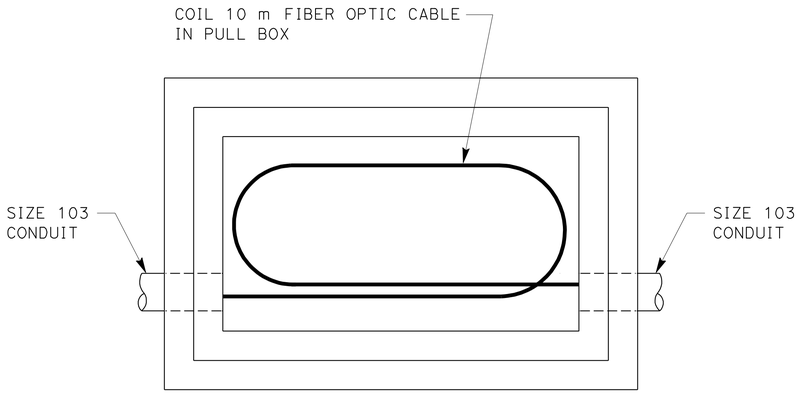

DETAIL A
COMMUNICATIONS PULL BOX NO SPLICE

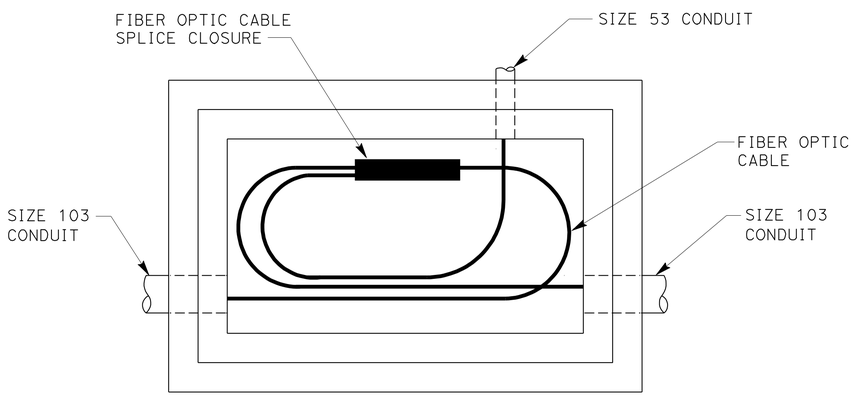

COMMUNICATIONS PULL BOX WITH
FIBER OPTIC CABLE - WITH SPLICE

DETAIL B
COMMUNICATIONS PULL BOX WITH SPLICE

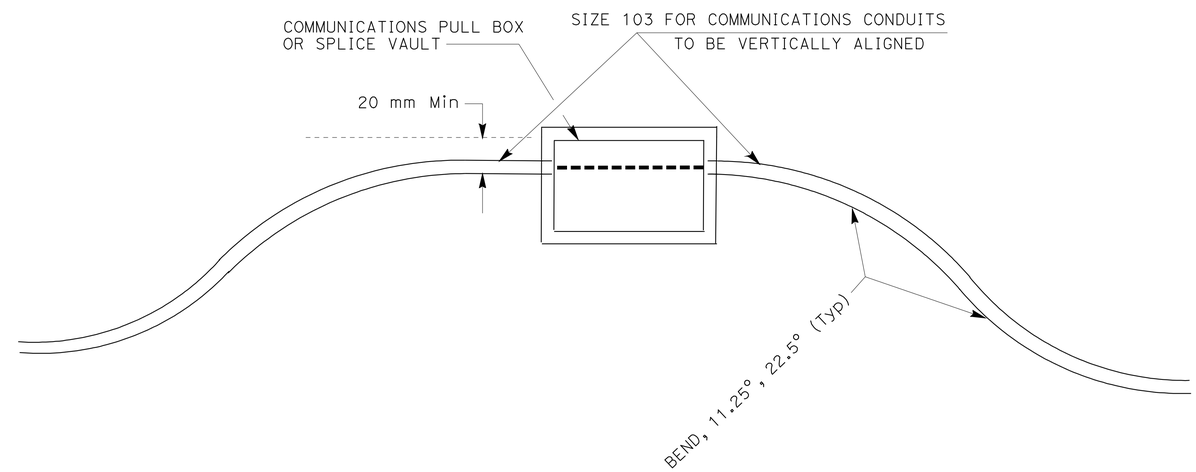

DETAIL C (TOP VIEW)

NOTES: (THIS SHEET ONLY)

1. CONTRACTOR SHALL ADAPT CONDUIT STUBOUTS FOR SPECIFIC PROJECT REQUIREMENTS.
2. ADDITIONAL CONDUIT ENTRANCES AS REQUIRED.
3. CONDUITS SHALL EXTEND INTO THE PULL BOX A NOMINAL 50 mm FROM THE INSIDE WALL.

ALL DIMENSIONS ARE IN
METERS UNLESS OTHERWISE SHOWN

MODIFY COMMUNICATION SYSTEM

NO SCALE

(DETAILS FOR NO. 6 AND COMMUNICATION PULL BOX)

THIS PLAN IS ACCURATE FOR ELECTRICAL WORK ONLY.

E-84

STATE OF CALIFORNIA - DEPARTMENT OF TRANSPORTATION
Caltrans **OFFICE OF ITS**

FUNCTIONAL SUPERVISOR: JACQUELINE C. TAN
CALCULATED-DESIGNED BY: SUNG LEE
CHECKED BY: DAVID PADILLA
REVISED BY
DATE REVISED

LAST REVISION 06-02-10
DATE PLOTTED => 22-JUN-2010
TIME PLOTTED => 16:10

Dist	COUNTY	ROUTE	KILOMETER POST TOTAL PROJECT	SHEET No.	TOTAL SHEETS
07	LA	5	2.9/4.9	748	1082

Leesunghwan 12/23/09
REGISTERED ELECTRICAL ENGINEER

6-21-10
PLANS APPROVAL DATE

REGISTERED PROFESSIONAL ENGINEER SUNG LEE No. E16249 Exp. 12/31/10 ELECTRICAL STATE OF CALIFORNIA

THE STATE OF CALIFORNIA OR ITS OFFICERS OR AGENTS SHALL NOT BE RESPONSIBLE FOR THE ACCURACY OR COMPLETENESS OF ELECTRONIC COPIES OF THIS PLAN SHEET.

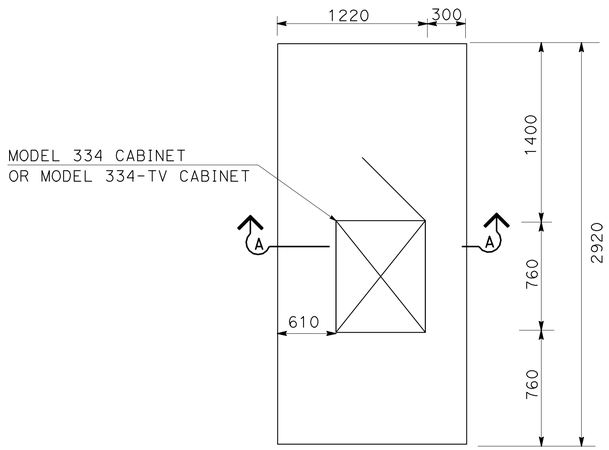

DETAIL A
PLAN VIEW

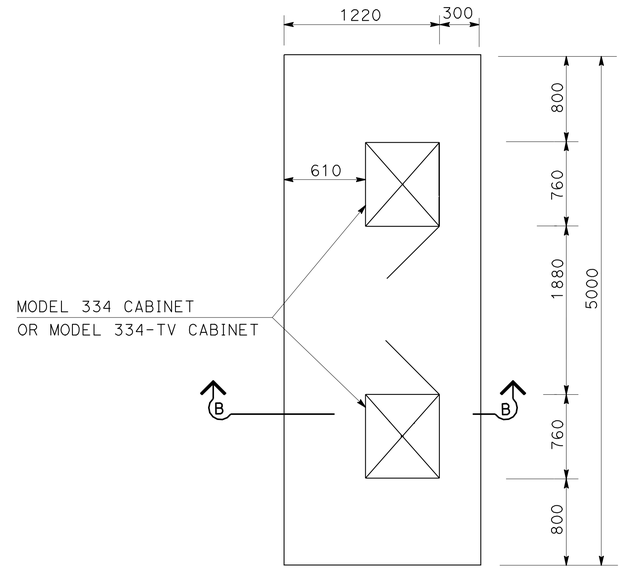

DETAIL B
PLAN VIEW

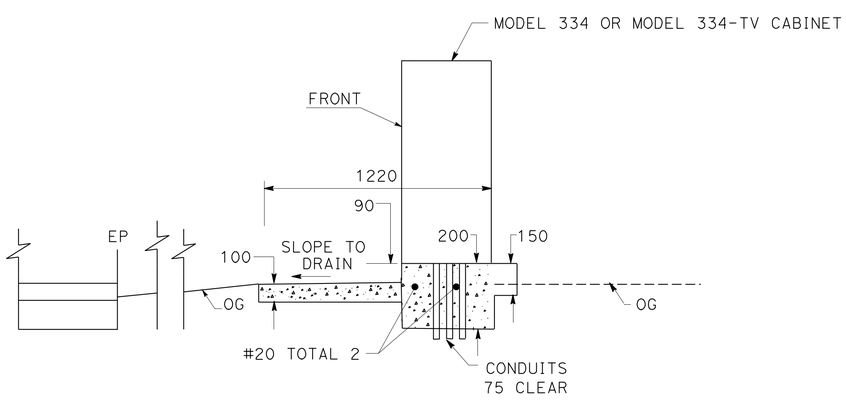

SECTION A-A
ELEVATION VIEW FOR DETAIL A

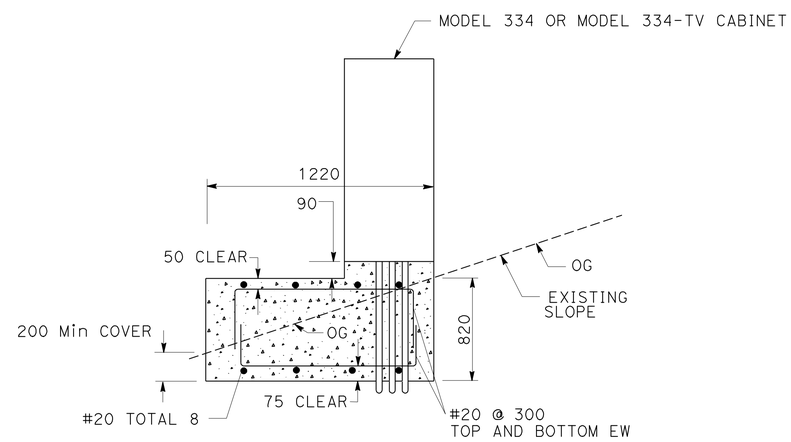

SECTION B-B
ELEVATION VIEW FOR DETAIL B

ALL DIMENSIONS ARE IN
MILLIMETERS UNLESS OTHERWISE SHOWN

MODIFY COMMUNICATION SYSTEM

NO SCALE

E-85

(CABINET FOUNDATION DETAILS)

THIS PLAN IS ACCURATE FOR ELECTRICAL WORK ONLY.

STATE OF CALIFORNIA - DEPARTMENT OF TRANSPORTATION
Caltrans
OFFICE OF ITS

FUNCTIONAL SUPERVISOR: JACQUELINE C. TAN
CALCULATED-DESIGNED BY: SUNG LEE
CHECKED BY: DAVID PADILLA
REVISED BY
DATE REVISED

LAST REVISION 06-02-10 | DATE PLOTTED => 22-JUN-2010 | TIME PLOTTED => 16:10

Dist	COUNTY	ROUTE	KILOMETER POST TOTAL PROJECT	SHEET No.	TOTAL SHEETS
07	LA	5	2.9/4.9	749	1082

Caltrans Metric

Leesunghwan 12/23/09
REGISTERED ELECTRICAL ENGINEER

6-21-10
PLANS APPROVAL DATE

REGISTERED PROFESSIONAL ENGINEER SUNG LEE No. E16249 Exp. 12/31/10 ELECTRICAL STATE OF CALIFORNIA

THE STATE OF CALIFORNIA OR ITS OFFICERS OR AGENTS SHALL NOT BE RESPONSIBLE FOR THE ACCURACY OR COMPLETENESS OF ELECTRONIC COPIES OF THIS PLAN SHEET.

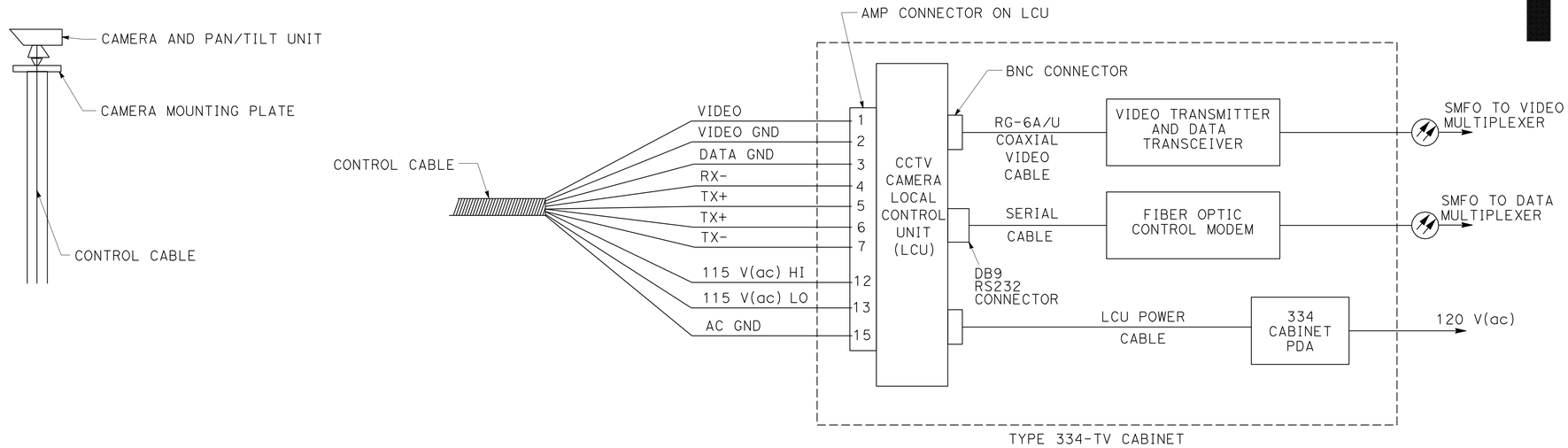

WIRING DIAGRAM

VIDEO BLANKING PRIVACY ZONES TO EXCLUDE NON-TRAFFIC FEATURES WHICH ARE NOT TO BE VIEWED (EG, RESIDENTIAL HOUSING). THE PRIVACY ZONES SHALL BE ADJUSTED AS DIRECTED BY THE RESIDENT ENGINEER.

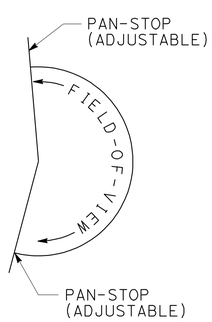

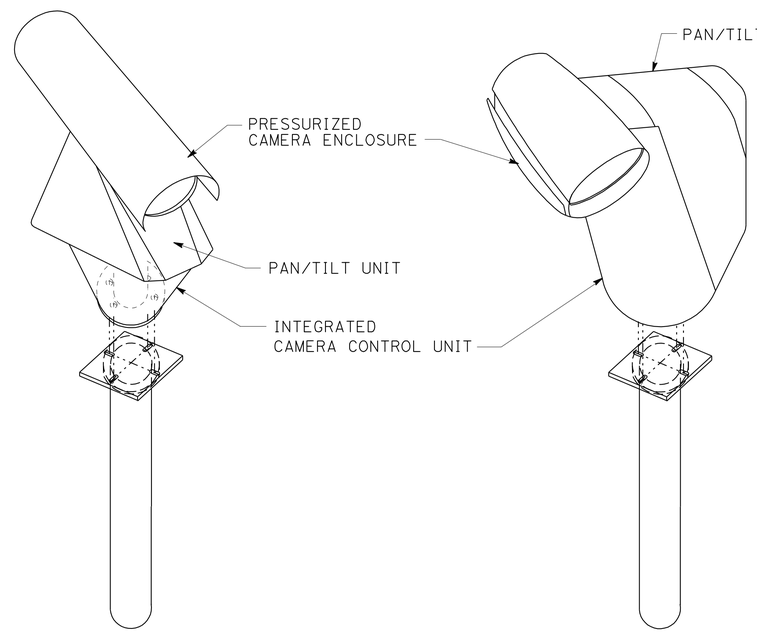

TYPICAL CAMERA WITH PAN/TILT UNIT (TYPE 1)

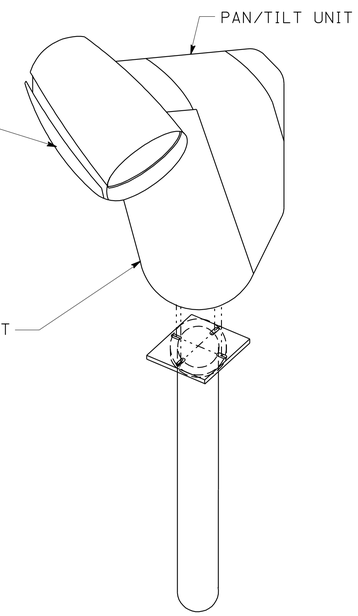

TYPICAL CAMERA WITH PAN/TILT UNIT (TYPE 2)

NOTES:

1. PROVIDE CABLE LENGTH FROM THE CAMERA ASSEMBLY TO THE LCU INCLUDING CONNECTORS.
2. PROVIDE ALL CABLES FROM THE LCU TO THE FIBER OPTIC VIDEO TRANSMITTER, FIBER OPTIC DATA TRANSCEIVER AND PDA.
3. IN THE CCTV CAMERA CABINET, THE NUMBER IDENTIFIES THE SPECIFIC CONDUCTOR TO BE USED FOR THE INDICATED FUNCTION.
4. CONNECT DRAIN WIRES OF SHIELDED-CONDUCTORS TO CABINET GROUND AT THE LCU.
5. INSTALL CONNECTORS IN ACCORDANCE WITH THE MANUFACTURER'S INSTRUCTIONS.
6. WATERPROOF ALL CONNECTORS AND CABLES USING WATER-TIGHT GROMMETS, SEALING COMPOUNDS, AND TAPE.
7. AS REQUIRED, INSTALL ADAPTER MOUNTING PLATES TO MOUNT CCTV CAMERA.

(WIRING DIAGRAM FOR CLOSED CIRCUIT TELEVISION CAMERA ASSEMBLY WITH PAN/TILT UNIT)

FOR LEGEND, ABBREVIATIONS, AND GENERAL NOTES SEE SHEET E-66.
THIS PLAN IS ACCURATE FOR ELECTRICAL WORK ONLY.

ALL DIMENSIONS ARE IN METERS UNLESS OTHERWISE SHOWN

MODIFY COMMUNICATION SYSTEM

NO SCALE

E-86

STATE OF CALIFORNIA - DEPARTMENT OF TRANSPORTATION
Caltrans
OFFICE OF ITS

FUNCTIONAL SUPERVISOR: JACQUELINE C. TAN
CALCULATED-DESIGNED BY: SUNG LEE
CHECKED BY: DAVID PADILLA
REVISED BY / DATE REVISED

LAST REVISION 06-02-10 | DATE PLOTTED => 22-JUN-2010 | TIME PLOTTED => 16:10

Dist	COUNTY	ROUTE	KILOMETER POST TOTAL PROJECT	SHEET No.	TOTAL SHEETS
07	LA	5	2.9/4.9	750	1082

Leesunghwan 12/23/09
REGISTERED ELECTRICAL ENGINEER

6-21-10
PLANS APPROVAL DATE

REGISTERED PROFESSIONAL ENGINEER SUNG LEE No. E16249 Exp. 12/31/10 ELECTRICAL STATE OF CALIFORNIA

THE STATE OF CALIFORNIA OR ITS OFFICERS OR AGENTS SHALL NOT BE RESPONSIBLE FOR THE ACCURACY OR COMPLETENESS OF ELECTRONIC COPIES OF THIS PLAN SHEET.

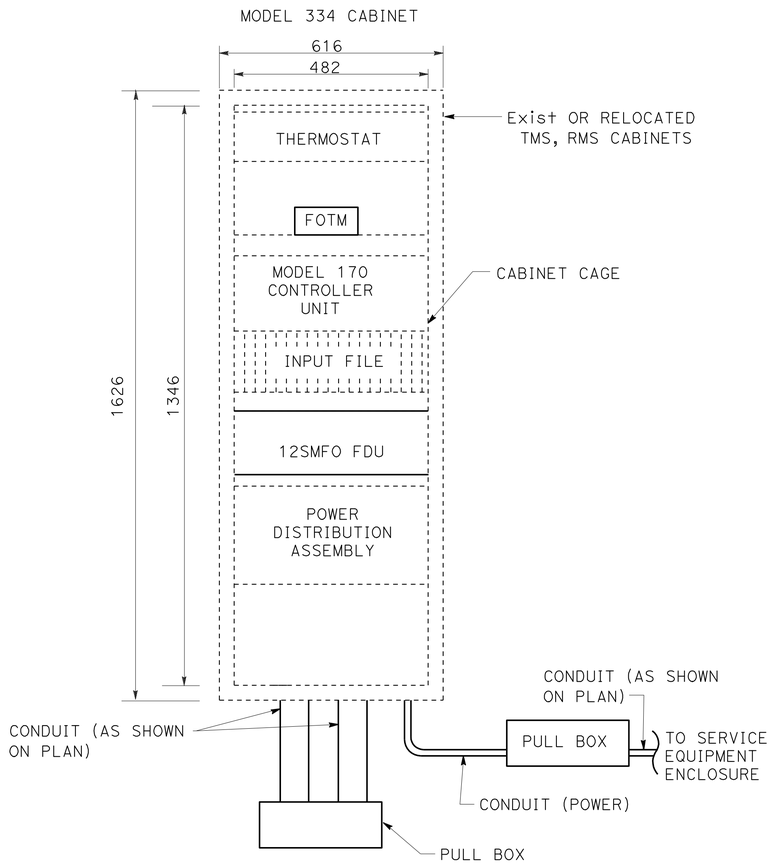

Exist OR RELOCATED MODEL 334 CONTROLLER CABINET EQUIPMENT LAYOUT FOR RMS,TMS

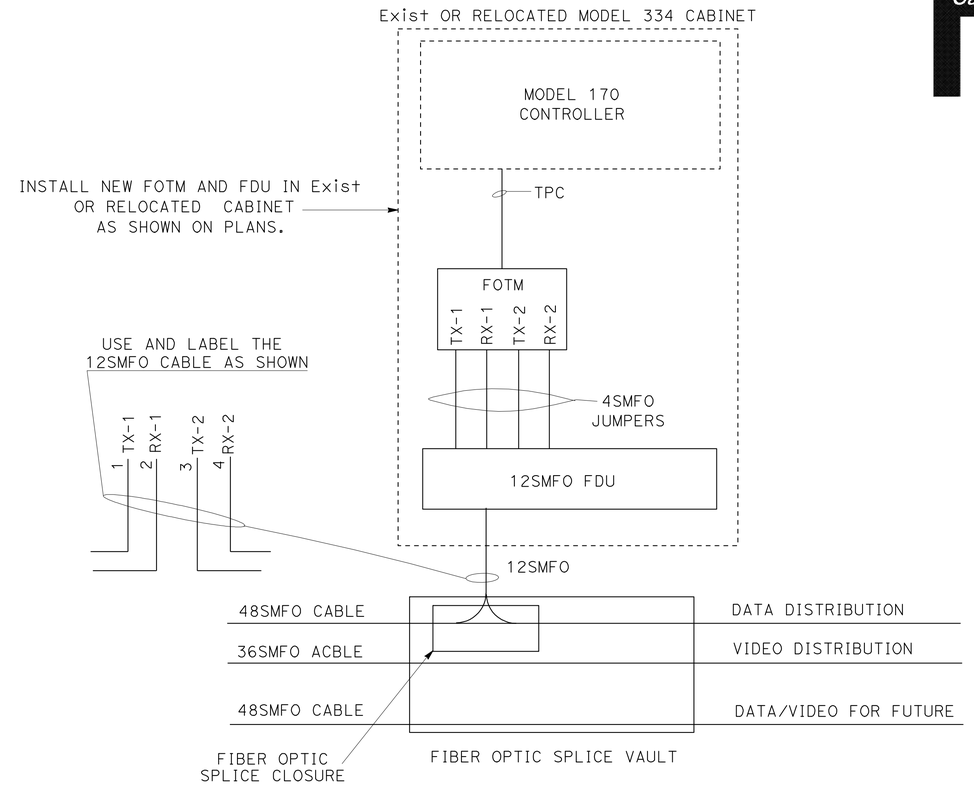

Exist OR RELOCATED MODEL 334 CONTROLLER CABINET WIRING DETAIL FOR RMS,TMS

LEGEND: (SHEETS E-87 THROUGH E-88)

- SURGE PROTECTOR
- CIRCUIT BREAKER
- (HT) HIGH TEMPERATURE RELAY COIL
- HT RELAY CONTACT NORMALLY CLOSED
- 8 WIRE SIZE, IF NOT INDICATED SHALL BE #12 AWG
- (F) FAN
- (L) INDICATOR LAMP
- THERMOSTATIC CONTROL
- THERMO ADJUSTABLE CALIBRATED THERMOSTAT
- R DUPLEX RECEPTACLE
- EQUIPMENT GROUND

ABBREVIATIONS: (SHEETS E-87 THROUGH E-88)

CAB	CABINET
EG	EQUIPMENT GROUND
HT	HIGH TEMPERATURE
W/GFI	WITH GROUND FAULT INTERRUPTOR

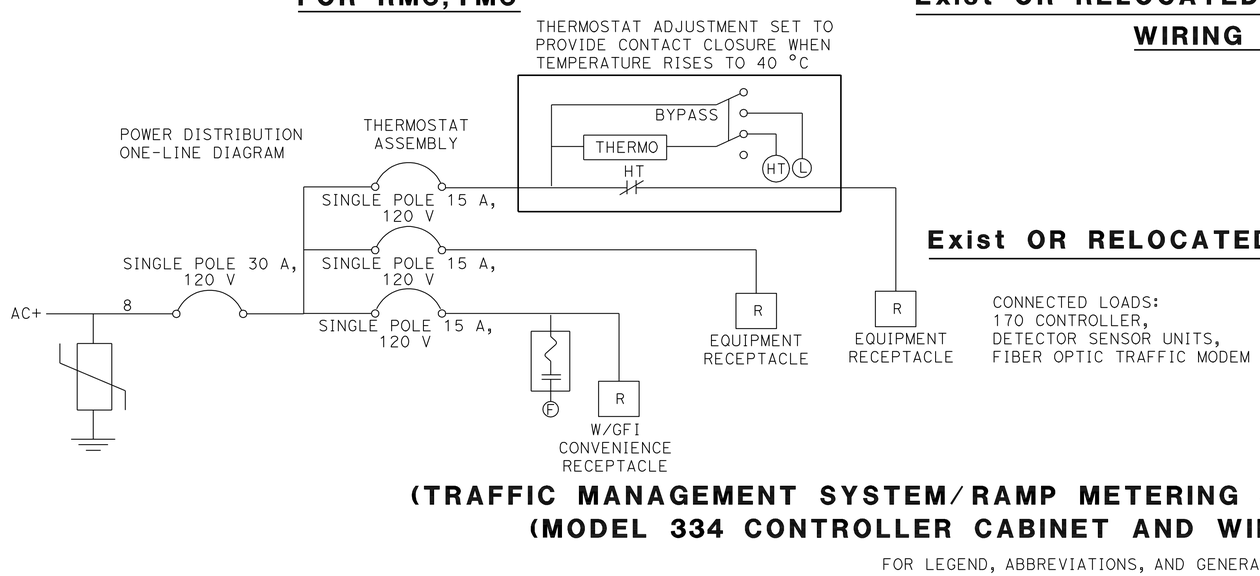

Exist OR RELOCATED POWER DISTRIBUTION ASSEMBLY

CONNECTED LOADS:
170 CONTROLLER,
DETECTOR SENSOR UNITS,
FIBER OPTIC TRAFFIC MODEM

ALL DIMENSIONS ARE IN METERS UNLESS OTHERWISE SHOWN

(TRAFFIC MANAGEMENT SYSTEM/RAMP METERING SYSTEM LOCATIONS) (MODEL 334 CONTROLLER CABINET AND WIRING DETAILS)

FOR LEGEND, ABBREVIATIONS, AND GENERAL NOTES SEE SHEET E-66.
THIS PLAN IS ACCURATE FOR ELECTRICAL WORK ONLY.

MODIFY COMMUNICATION SYSTEM

NO SCALE

E-87

STATE OF CALIFORNIA - DEPARTMENT OF TRANSPORTATION
Caltrans OFFICE OF ITS

FUNCTIONAL SUPERVISOR: JACQUELINE C. TAN
CALCULATED-DESIGNED BY: SUNG LEE
CHECKED BY: DAVID PADILLA
REVISED BY
DATE REVISED

LAST REVISION 06-02-10
DATE PLOTTED => 22-JUN-2010
TIME PLOTTED => 16:10

Dist	COUNTY	ROUTE	KILOMETER POST TOTAL PROJECT	SHEET No.	TOTAL SHEETS
07	LA	5	2.9/4.9	751	1082

Leesungkwan 12/23/09
REGISTERED ELECTRICAL ENGINEER

6-21-10
PLANS APPROVAL DATE

REGISTERED PROFESSIONAL ENGINEER SUNG LEE No. E16249 Exp. 12/31/10 ELECTRICAL STATE OF CALIFORNIA

THE STATE OF CALIFORNIA OR ITS OFFICERS OR AGENTS SHALL NOT BE RESPONSIBLE FOR THE ACCURACY OR COMPLETENESS OF ELECTRONIC COPIES OF THIS PLAN SHEET.

Caltrans Metric

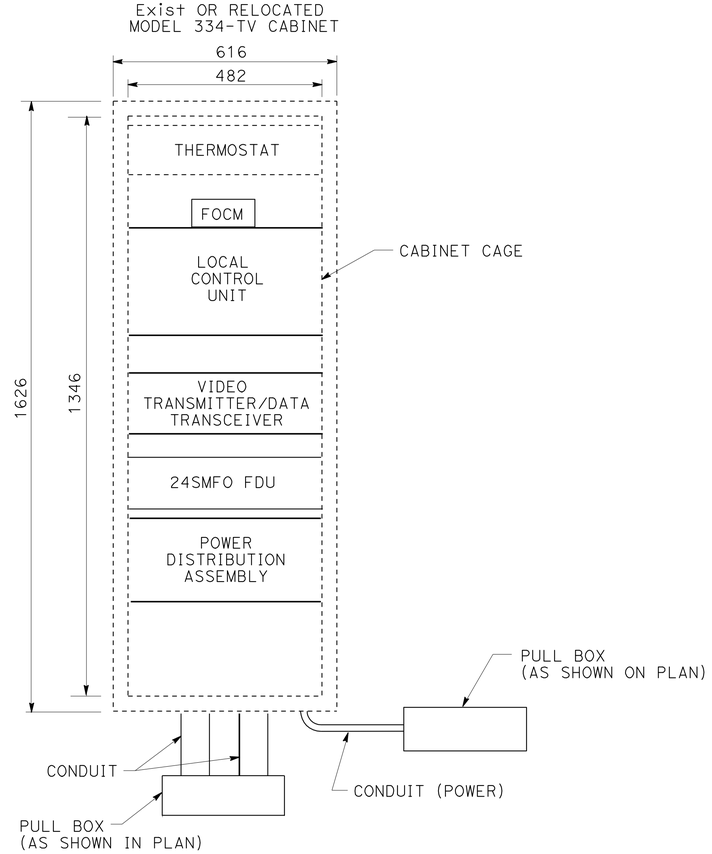

Exist OR RELOCATED CCTV CAMERA MODEL 334-TV CABINET EQUIPMENT LAYOUT

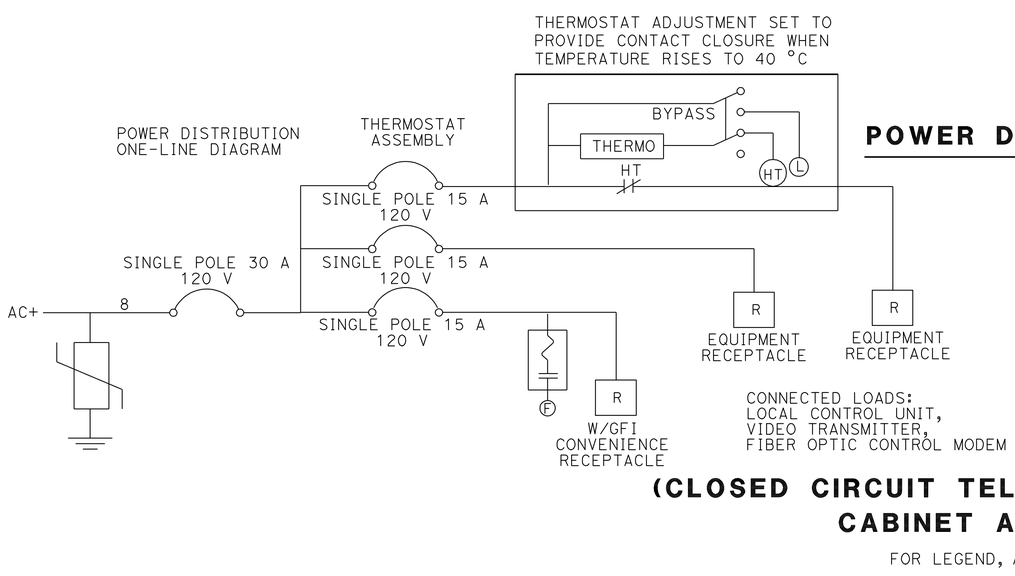

POWER DISTRIBUTION ASSEMBLY

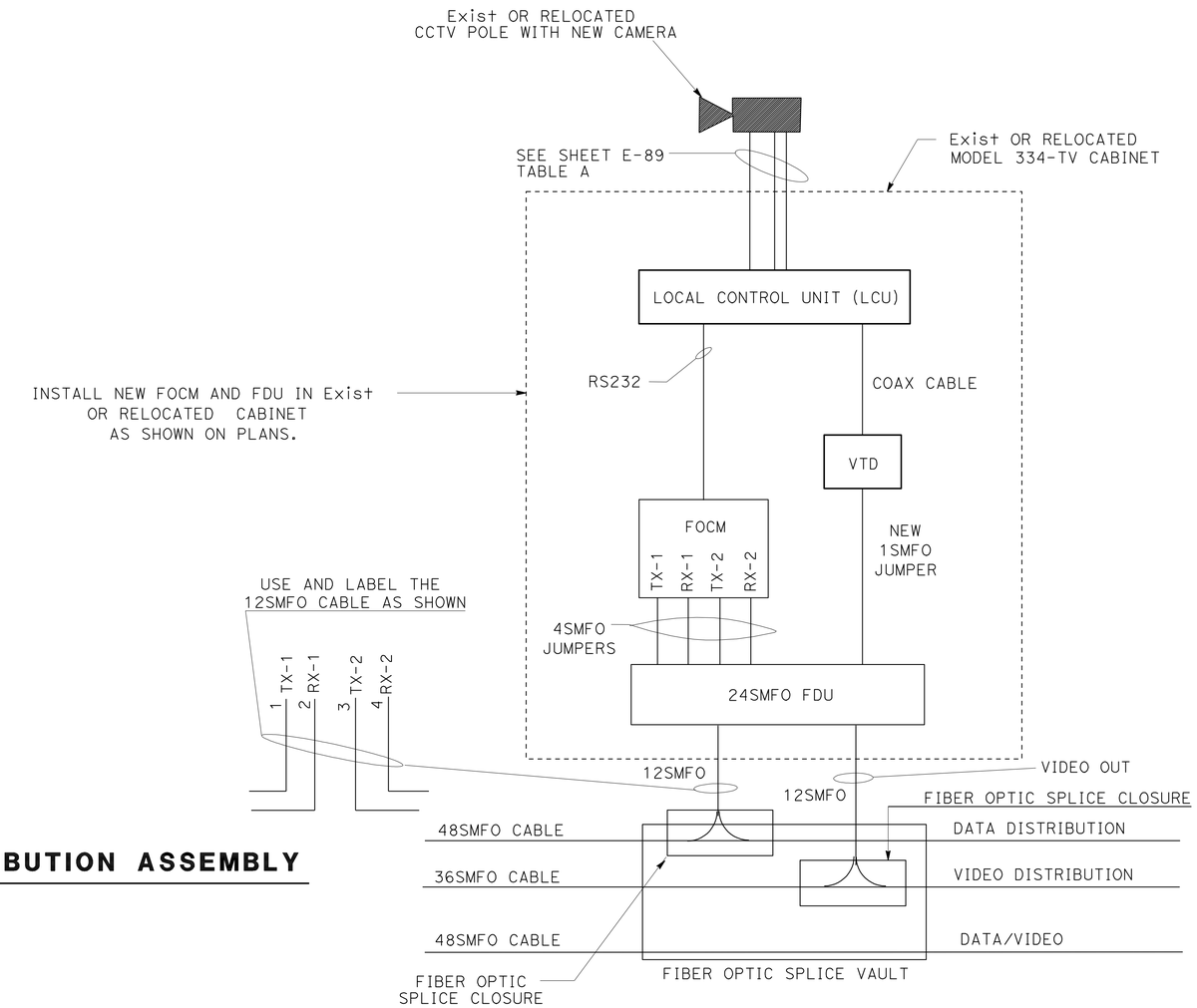

Exist OR RELOCATED CCTV CAMERA MODEL 334-TV CABINET WIRING DETAIL

(CLOSED CIRCUIT TELEVISION CAMERA CONTROLLER CABINET AND WIRING DETAILS)

FOR LEGEND, ABBREVIATIONS, AND GENERAL NOTES SEE SHEET E-66.
THIS PLAN IS ACCURATE FOR ELECTRICAL WORK ONLY.

ALL DIMENSIONS ARE IN METERS UNLESS OTHERWISE SHOWN

MODIFY COMMUNICATION SYSTEM

NO SCALE

E-88

REVISED BY	DATE REVISED

CALCULATED-DESIGNED BY: SUNG LEE
CHECKED BY: DAVID PADILLA
FUNCTIONAL SUPERVISOR: JACQUELINE C. TAN

STATE OF CALIFORNIA - DEPARTMENT OF TRANSPORTATION
Caltrans OFFICE OF ITS

LAST REVISION 06-02-10
DATE PLOTTED => 22-JUN-2010
TIME PLOTTED => 16:10

Dist	COUNTY	ROUTE	KILOMETER POST TOTAL PROJECT	SHEET No.	TOTAL SHEETS
07	LA	5	2.9/4.9	752	1082

Caltrans Metric

Leesunghwan 12/23/09
REGISTERED ELECTRICAL ENGINEER

6-21-10
PLANS APPROVAL DATE

REGISTERED PROFESSIONAL ENGINEER SUNG LEE No. E16249 Exp. 12/31/10 ELECTRICAL STATE OF CALIFORNIA

THE STATE OF CALIFORNIA OR ITS OFFICERS OR AGENTS SHALL NOT BE RESPONSIBLE FOR THE ACCURACY OR COMPLETENESS OF ELECTRONIC COPIES OF THIS PLAN SHEET.

PAN/TILT CONTROL 8PR19
CAMERA CONTROL 5#26
ETHERNET CABLE
VIDEO COAXIAL

TABLE A

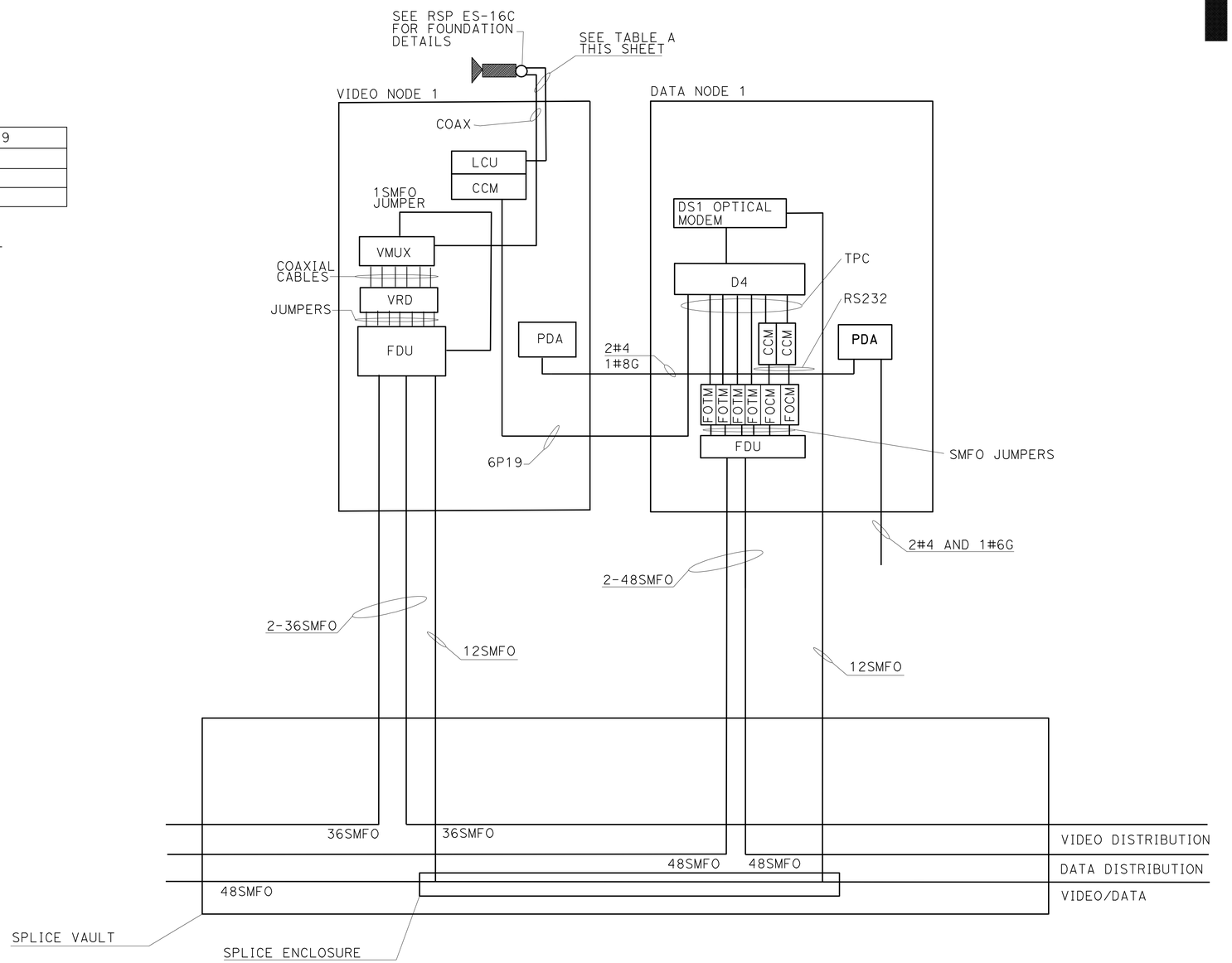

DETAIL B

(DATA NODE AND VIDEO NODE DETAILS)

FOR LEGEND, ABBREVIATIONS, AND GENERAL NOTES SEE SHEET E-66.
THIS PLAN IS ACCURATE FOR ELECTRICAL WORK ONLY.

ALL DIMENSIONS ARE IN METERS UNLESS OTHERWISE SHOWN

MODIFY COMMUNICATION SYSTEM

NO SCALE

E-89

STATE OF CALIFORNIA - DEPARTMENT OF TRANSPORTATION
Caltrans **OFFICE OF ITS**

FUNCTIONAL SUPERVISOR: JACQUELINE C. TAN
CALCULATED-DESIGNED BY: SUNG LEE
CHECKED BY: DAVID PADILLA
REVISED BY / DATE REVISED

LAST REVISION 06-02-10
DATE PLOTTED => 22-JUN-2010
TIME PLOTTED => 16:11

Dist	COUNTY	ROUTE	KILOMETER POST TOTAL PROJECT	SHEET No.	TOTAL SHEETS
07	LA	5	2.9/4.9	753	1082

Leesunghwan 12/23/09
REGISTERED ELECTRICAL ENGINEER

6-21-10
PLANS APPROVAL DATE

REGISTERED PROFESSIONAL ENGINEER SUNG LEE No. E16249 Exp. 12/31/10 ELECTRICAL STATE OF CALIFORNIA

THE STATE OF CALIFORNIA OR ITS OFFICERS OR AGENTS SHALL NOT BE RESPONSIBLE FOR THE ACCURACY OR COMPLETENESS OF ELECTRONIC COPIES OF THIS PLAN SHEET.

FIBER	USE	KP 3.1 CLOSED CIRCUIT TELEVISION LOCATION 3	KP 3.4 TRAFFIC MONITORING STATION 2028	KP 3.7 RAMP METERING STATION 253	KP 4.0 RAMP METERING STATION 270	KP 4.2 CLOSED CIRCUIT TELEVISION LOCATION 4	KP 4.2 DATA NODE (LOCATION 1)	KP 4.2 VIDEO NODE (LOCATION 1)	KP 4.5 TRAFFIC MONITORING STATION 2546	FIBER
1	MODEM 8 TX						X			1
2	MODEM 8 RX						X			2
3	MODEM 8 TX		X		X		X			3
4	MODEM 8 RX		X		X		X			4
5	MODEM 8 TX			X			X		X	5
6	MODEM 8 RX			X			X		X	6
7	MODEM 72 TX						X			7
8	MODEM 72 RX						X			8
9	MODEM 72 TX						X			9
10	MODEM 72 RX						X			10
11	MODEM 72 TX						X			11
12	MODEM 72 RX						X			12
13	CCR1 TX					X	X			13
14	CCR1 RX					X	X			14
15	CCR2 TX	X					X			15
16	CCR2 RX	X					X			16
17	CMS25 TX						X			17
18	CMS25 RX						X			18
19							X			19
20							X			20
21							X			21
22							X			22
23							X			23
24							X			24
25-48							X			25-72

(FIBER ASSIGNMENT TABLE)
(DATA DISTRIBUTION)

FOR LEGEND, ABBREVIATIONS, AND GENERAL NOTES SEE SHEET E-66.
THIS PLAN IS ACCURATE FOR ELECTRICAL WORK ONLY.

MODIFY COMMUNICATION SYSTEM

NO SCALE

E-90

STATE OF CALIFORNIA - DEPARTMENT OF TRANSPORTATION
Caltrans OFFICE OF ITS

FUNCTIONAL SUPERVISOR: JACQUELINE C. TAN
CALCULATED-DESIGNED BY: SUNG LEE
CHECKED BY: DAVID PADILLA
REVISED BY
DATE REVISED

LAST REVISION 06-02-10 | DATE PLOTTED => 22-JUN-2010 | TIME PLOTTED => 16:11

Dist	COUNTY	ROUTE	KILOMETER POST TOTAL PROJECT	SHEET No.	TOTAL SHEETS
07	LA	5	2.9/4.9	754	1082

Leesunghwan 12/23/09
REGISTERED ELECTRICAL ENGINEER

6-21-10
PLANS APPROVAL DATE

REGISTERED PROFESSIONAL ENGINEER SUNG LEE No. E16249 Exp. 12/31/10 ELECTRICAL STATE OF CALIFORNIA

THE STATE OF CALIFORNIA OR ITS OFFICERS OR AGENTS SHALL NOT BE RESPONSIBLE FOR THE ACCURACY OR COMPLETENESS OF ELECTRONIC COPIES OF THIS PLAN SHEET.

NOTE: (THIS SHEET ONLY)

1. FIBER NUMBERS MAY BE RE-ASSIGNED BY THE ENGINEER DURING CONSTRUCTION.

FIBER	USE	CLOSED CIRCUIT TELEVISION LOCATION 3	CLOSED CIRCUIT TELEVISION LOCATION 4	VIDEO NODE (LOCATION 1)	FIBER
	KP	3.1	4.2	4.2	
1	CCTV 1	X		X	1
2				X	2
3				X	3
4				X	4
5				X	5
6				X	6
7				X	7
8				X	8
9				X	9
10				X	10
11				X	11
12				X	12
13				X	13
14				X	14
15				X	15
16				X	16
17				X	17
18				X	18
19				X	19
20				X	20
21				X	21
22				X	22
23				X	23
24				X	24
25-36				X	25-36

VIDEO (36SMFO) ASSIGNMENT TABLE

FIBER	USE	SPLICE VAULT KP 2.7	DATA NODE 1 KP 4.2	VIDEO NODE 1 KP 4.2	SPLICE VAULT KP 4.9
1	OM-TX (1)	SP	OM-RX		SP
2	OM-RX (1)	SP	OM-TX		SP
3	VDMUX(1)	SP		VMUX	SP
4	SPARE	SP			SP
5	SPARE	SP			SP
6	SPARE	SP			SP
7	SPARE	SP			SP
8	SPARE	SP			SP
9	SPARE	SP			SP
10	SPARE	SP			SP
11	SPARE	SP			SP
12	SPARE	SP			SP
13	SPARE	SP			SP
14	SPARE	SP			SP
15	SPARE	SP			SP
16	SPARE	SP			SP
17	SPARE	SP			SP
18	SPARE	SP			SP
19	SPARE	SP			SP
20	SPARE	SP			SP
21	SPARE	SP			SP
22	SPARE	SP			SP
23	SPARE	SP			SP
24	SPARE	SP			SP
25-48	SPARE	SP			SP

TRUNK CABLE (48SMFO) ASSIGNMENT TABLE

LEGEND: (THIS SHEET ONLY)

OM-RX	CONNECT FIBER(S) TO "RECEIVE" PORT OF DS-1 OPTICAL MODEM
OM-TX	CONNECT FIBER(S) TO "TRANSMIT" PORT OF DS-1 OPTICAL MODEM
VMUX	CONNECT FIBERS TO THE VIDEO MULTIPLEXER
VDMUX	CONNECT FIBERS TO THE VIDEO DEMULTIPLEXER
SP	SPLICE WITH EXISTING FIBER OPTIC CABLE

(FIBER ASSIGNMENT TABLE)
(VIDEO AND TRUNK DISTRIBUTION)

FOR LEGEND, ABBREVIATIONS, AND GENERAL NOTES SEE SHEET E-66.
THIS PLAN IS ACCURATE FOR ELECTRICAL WORK ONLY.

MODIFY COMMUNICATION SYSTEM

NO SCALE

E-91

STATE OF CALIFORNIA - DEPARTMENT OF TRANSPORTATION
Caltrans OFFICE OF ITS

FUNCTIONAL SUPERVISOR: JACQUELINE C. TAN
CALCULATED-DESIGNED BY: SUNG LEE
CHECKED BY: DAVID PADILLA
REVISED BY
DATE REVISED

LAST REVISION 06-02-10 DATE PLOTTED => 22-JUN-2010 TIME PLOTTED => 16:11

DIST	COUNTY	ROUTE	KILOMETER POST TOTAL PROJECT	SHEET No	TOTAL SHEETS
07	LA	5	2.9/4.9	755	1082

REGISTERED CIVIL ENGINEER DATE

6-21-10
PLANS APPROVAL DATE

REGISTERED PROFESSIONAL ENGINEER JEFFREY B. WOODY No. C41260 Exp. 3/31/11 CIVIL STATE OF CALIFORNIA

The State of California or its officers or agents shall not be responsible for the accuracy or completeness of electronic copies of this plan sheet.

NOTES:

1. ALL METALLIC CONDUITS, BOLTS STRAPS AND Misc HARDWARE SHALL BE GALVANIZED.
2. BACKPLATES ARE REQUIRED ON ALL SIGNAL FACES.
3. ELEMENTS (TOTAL VIVDS ASSEMBLY) SHALL HAVE A MAXIMUM WEIGHT OF 4.5 kg AND A MAXIMUM EFFECTIVE PRESSURE AREA OF 0.09 METER SQUARE.
4. MAXIMUM OF 2 VIVDS ELEMENTS ADDED PER TRAFFIC SIGNAL STRUCTURE. MAXIMUM OF 1 ELEMENT PER ARM (LIGHTING ARM OR TRAFFIC SIGNAL ARM).

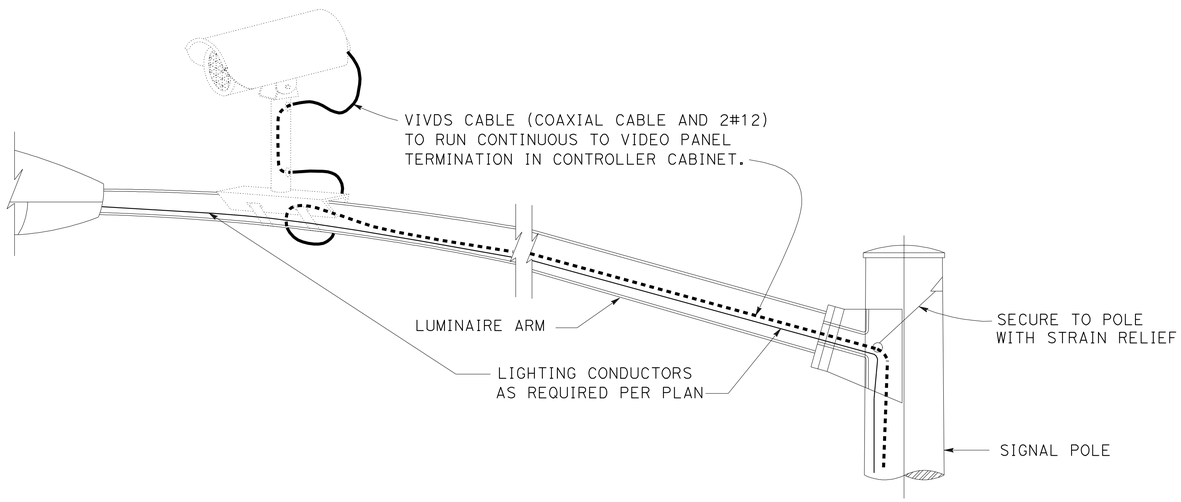

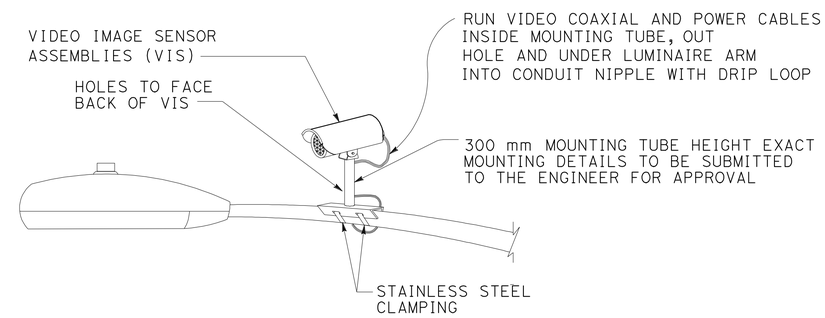

CAMERA MOUNTING DETAILS

NO SCALE

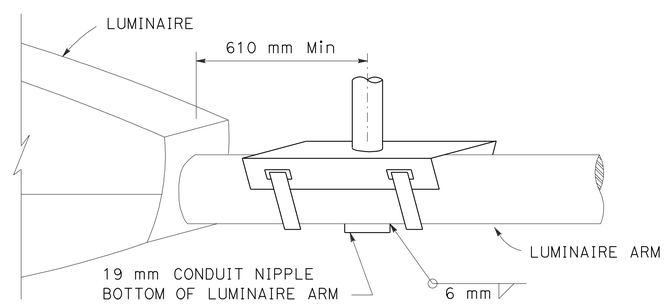

VIVDS INSTALLATION ON LUMINAIRE MAST ARM

NO SCALE

NOTE:
THE CONTRACTOR SHALL VERIFY ALL CONTROLLING FIELD DIMENSIONS BEFORE ORDERING OR FABRICATING ANY MATERIAL.

Caltrans Metric

DESIGN ENGINEER

	BY	CHECKED
DESIGN	J WOODY	J GILLIAM
DETAILS	MIKE SLAYTON	J WOODY
QUANTITIES	J WOODY	J GILLIAM

STATE OF CALIFORNIA
DEPARTMENT OF TRANSPORTATION

DIVISION OF ENGINEERING SERVICES
DESIGN AND TECHNICAL SERVICES
SPECIAL DESIGNS BRANCH
A

BRIDGE NO. N/A
KILOMETER POST

CAMERA MOUNTING DETAILS
SIGNAL AND LIGHTING, RAMP METERING SYSTEM

SES-1

ALL DIMENSIONS ARE IN METERS UNLESS OTHERWISE SHOWN

ORIGINAL SCALE IN MILLIMETERS FOR REDUCED PLANS 0 10 20 30 40 50 60 70 80 90 100

CU 07
EA 2159C1

DISREGARD PRINTS BEARING EARLIER REVISION DATES

REVISION DATES: 5-28-10 6-1-10 6-16-10

SHEET 1 OF 1

07-2159c1_ses1.dgn

Dist	COUNTY	ROUTE	KILOMETER POST TOTAL PROJECT	SHEET No.	TOTAL SHEETS
07	LA	5	2.9/4.9	756	1082

REGISTERED CIVIL ENGINEER DATE 12-23-09

6-21-10
PLANS APPROVAL DATE

REGISTERED PROFESSIONAL ENGINEER NGIM NANCY PE No. 58161 Exp. 6-30-10 CIVIL STATE OF CALIFORNIA

THE STATE OF CALIFORNIA OR ITS OFFICERS OR AGENTS SHALL NOT BE RESPONSIBLE FOR THE ACCURACY OR COMPLETENESS OF ELECTRONIC COPIES OF THIS PLAN SHEET.

Caltrans Metric

HORIZONTAL AND VERTICAL CONTROL

△ GPS 0890 - FD 2½" CADT DISK STAMPED "LA 5 1.8 1995" IN CATCH BASIN, FLUSH, THE MARK IS LOCATED @ N'LY RETURN OF MARQUARDT AVENUE & FREEWAY DRIVE PER SR 95-004.

GPS 0891 - FD 2" I.P. IN CONCRETE WITH 2½" CADT DISK, DOWN 0.2', STAMPED " LA 5 2.5 1995" THE MARK IS LOCATED IN THE DIRT GORE OF NB 5 (SANTA ANA) FWY OFF RAMP TO CARMENITA ROAD PER SR 95-004.

GPS 0892 - FD 2½" CADT DISK IN GUTTER, FLUSH, STAMPED " LA 5 3.2 1995 ", THE MARK IS LOCATED AT OPPOSITE STREET ADDRESS 12857 FIRESTONE Blvd, SANTA FE SPRINGS, ON SW'LY SIDE OF THE STREET PER SR 95-004.

● BM-DY 9274 - FD STANDARD 3½" NATIONAL GEODETIC SURVEY BENCHMARK DISK SET VERTICALLY IN CONC. COLUMN, STAMPED " L 1453 1989 ", THE MARK IS LOCATED IN MOST SE'LY OF COLUMNS IN ALONDRA Blvd UNDERCROSSING OF THE 5 (SANTA ANA) FWY PER SR 95-004.

BM-DY 9276 - FD STANDARD 3½" NATIONAL GEODETIC SURVEY BENCHMARK DISK SET VERTICALLY IN CONC. COLUMN, STAMPED " J 1453 1989 ", THE MARK IS LOCATED IN MOST W'LY OF COLUMNS OF ROSECRANS AVE UNDERCROSSING OF THE 5 (SANTA ANA) FWY PER SR 95-004.

NOTE:

FOR COMPLETE PROJECT CONTROL AND MONUMENTATION DATA, SEE THE SURVEY RECORDS ON FILE IN THE SURVEYS DEPARTMENT AT THE DISTRICT OFFICE.

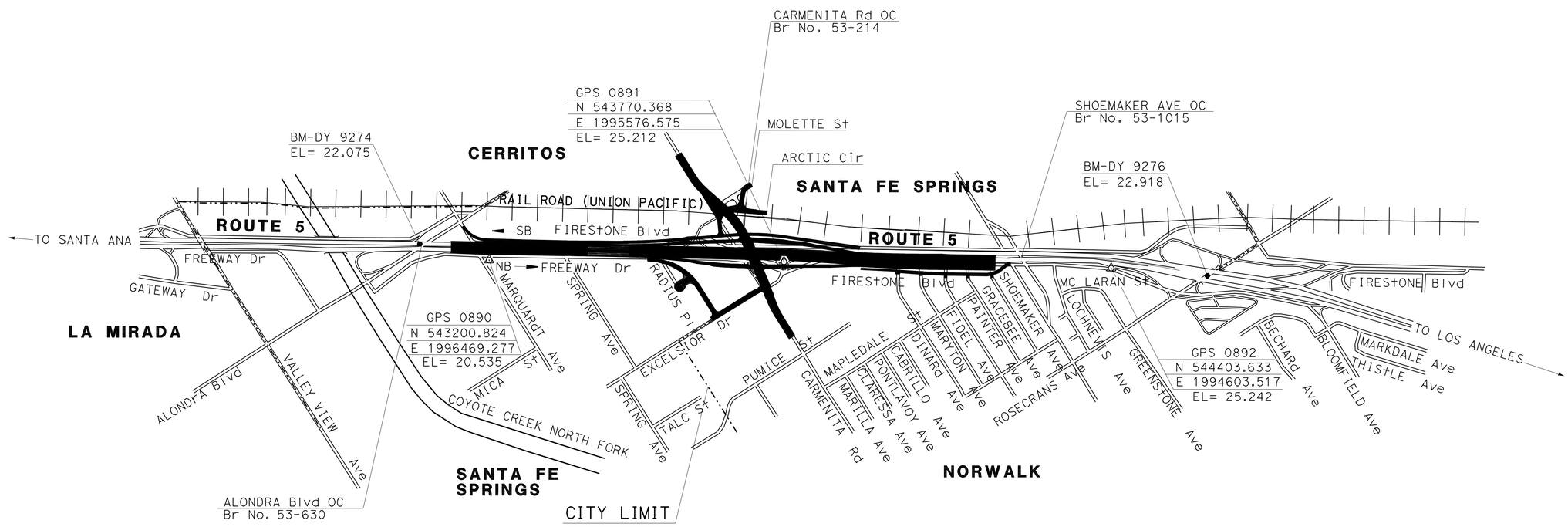

PROJECT CONTROL

NO SCALE

PC-1

REVISED BY	DATE REVISED

HAN NG — NGIM NANCY PE

CALCULATED-DESIGNED BY — CHECKED BY

FUNCTIONAL SUPERVISOR — NGIM NANCY PE

STATE OF CALIFORNIA - DEPARTMENT OF TRANSPORTATION
Caltrans OFFICE OF DESIGN A

LAST REVISION 00-00-00 | DATE PLOTTED => 22-JUN-2010 | TIME PLOTTED => 16:11

Dist	COUNTY	ROUTE	KILOMETER POST TOTAL PROJECT	SHEET No.	TOTAL SHEETS
07	LA	5	2.9/4.9	757	1082

Duke M Huynh 12-23-09
REGISTERED CIVIL ENGINEER DATE

6-21-10
PLANS APPROVAL DATE

REGISTERED PROFESSIONAL ENGINEER DUKE HUYNH No. C65591 Exp. 9-30-11 CIVIL STATE OF CALIFORNIA

THE STATE OF CALIFORNIA OR ITS OFFICERS OR AGENTS SHALL NOT BE RESPONSIBLE FOR THE ACCURACY OR COMPLETENESS OF ELECTRONIC COPIES OF THIS PLAN SHEET.

Caltrans Metric

LEGEND:

- TWO POST SIGN
- ONE POST SIGN
- PORTABLE CHANGEABLE MESSAGE SIGN (PCMS)
- DIRECTION OF DETOUR TRAFFIC
- ROAD CLOSED

NOTES:

1. SIGN AND PCMS LOCATIONS ARE APPROXIMATE. EXACT LOCATIONS WILL BE DETERMINED BY THE ENGINEER.
2. SEE CONSTRUCTION AREA SIGNS, STAGE CONSTRUCTION, AND TRAFFIC HANDLING PLANS FOR ADDITIONAL CONSTRUCTION AREA SIGNS.
3. CONFLICTING SIGNS SHALL BE REMOVED OR COVERED DURING CONSTRUCTION AS DIRECTED BY THE ENGINEER.
4. IN LIEU OF WOOD POSTS, SIGNS MAY BE ATTACHED TO EXISTING UTILITY POSTS BY STRAP AND SADDLE METHOD UPON APPROVAL OF LOCAL AGENCIES.
5. SIGNS SHALL BE MOUNTED WITH BOTTOM OF SIGNS A MINIMUM OF 2.1 METERS ABOVE GROUND.
6. FOR ADDITIONAL SIGN DETAILS, SEE SHEET MIQ-1.

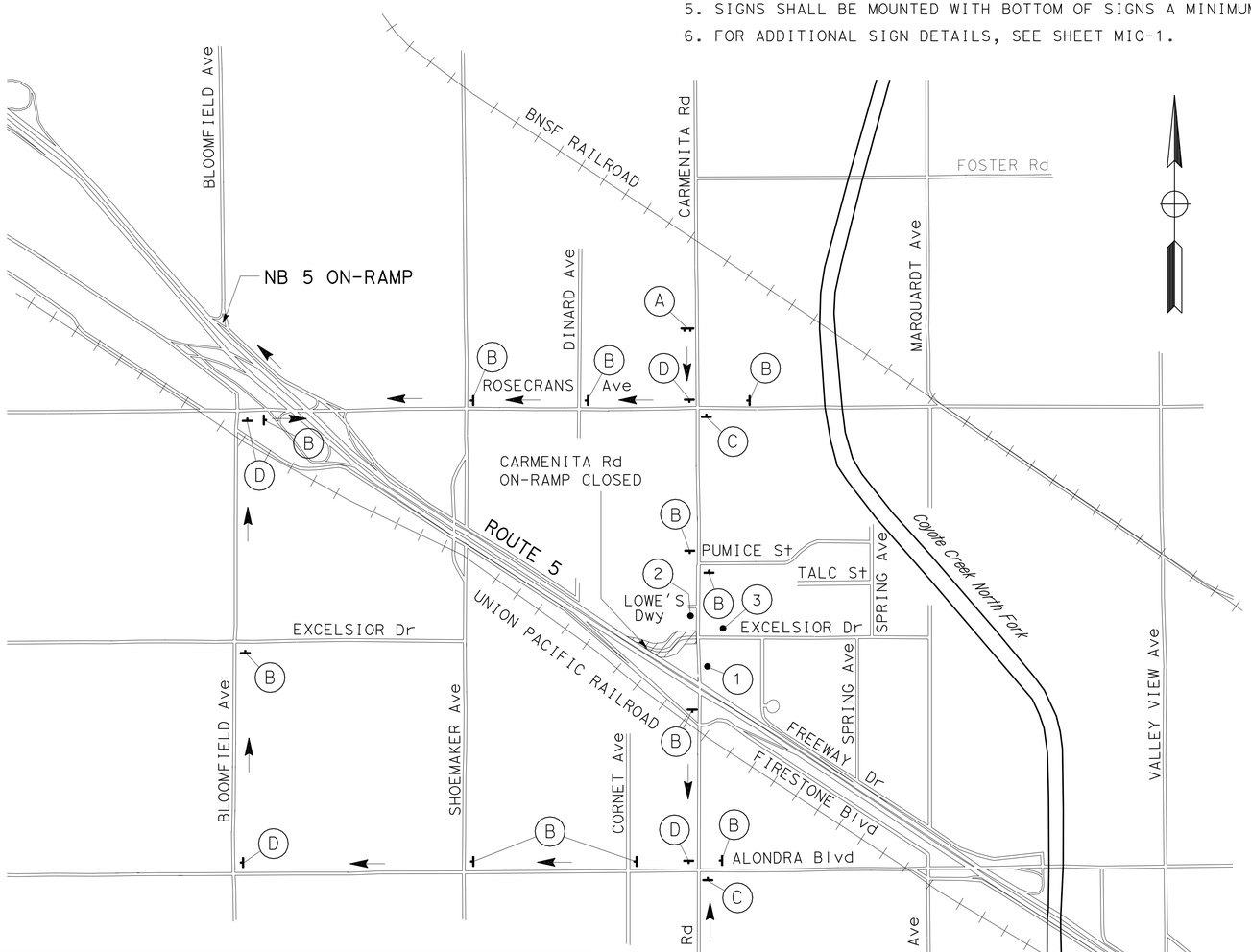

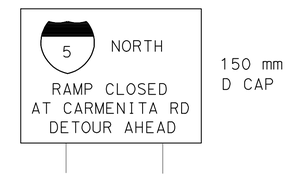

150 mm
D CAP

SIGN (A)

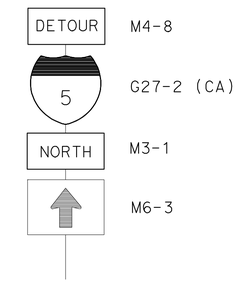

SIGN (B)

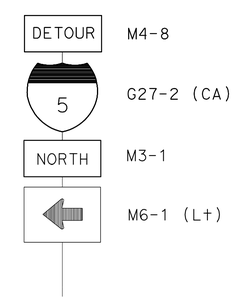

SIGN (C)

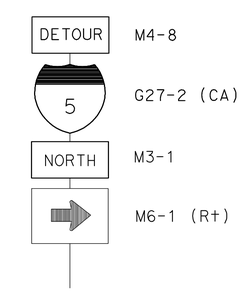

SIGN (D)

PCMS No.	LOCATION	MESSAGE		DURATION
		FIRST FLASH	SECOND FLASH	
1	NB CARMENITA Rd IN ADVANCE OF EXCELSIOR Dr	N 5 RAMP CLOSED	STARTING MM-DD-YY	TWO WEEKS PRIOR TO CLOSURE
2	SB CARMENITA Rd JUST SOUTH OF LOWE'S Dwy	N 5 RAMP CLOSED	STARTING MM-DD-YY	
3	WB EXCELSIOR Dr 80 METERS EAST OF CARMENITA Rd	N 5 RAMP CLOSED	STARTING MM-DD-YY	

THIS PLAN ACCURATE FOR MOTORIST INFORMATION WORK ONLY.

STAGE 2-PHASE 2
MOTORIST INFORMATION PLAN (SIGNING AND PCMS LOCATIONS)
NB ROUTE 5 CARMENITA ROAD ON-RAMP CLOSURE

NO SCALE

MI-1

REVISED BY	DATE REVISED

CALCULATED-DESIGNED BY: JULIO C VALDEZ
CHECKED BY: DUKE M HUYNH
FUNCTIONAL SUPERVISOR: DENIS S KATAYAMA

STATE OF CALIFORNIA - DEPARTMENT OF TRANSPORTATION
Caltrans DTM

LAST REVISION 11-24-09 | DATE PLOTTED => 22-JUN-2010 | TIME PLOTTED => 16:11

Dist	COUNTY	ROUTE	KILOMETER POST TOTAL PROJECT	SHEET No.	TOTAL SHEETS
07	LA	5	2.9/4.9	758	1082

Duke M Huynh 12-23-09
REGISTERED CIVIL ENGINEER DATE

6-21-10
PLANS APPROVAL DATE

REGISTERED PROFESSIONAL ENGINEER DUKE HUYNH No. C65591 Exp. 9-30-11 CIVIL STATE OF CALIFORNIA

THE STATE OF CALIFORNIA OR ITS OFFICERS OR AGENTS SHALL NOT BE RESPONSIBLE FOR THE ACCURACY OR COMPLETENESS OF ELECTRONIC COPIES OF THIS PLAN SHEET.

Caltrans Metric

LEGEND:

- ONE POST SIGN
- PORTABLE CHANGEABLE MESSAGE SIGN (PCMS)
- DIRECTION OF DETOUR TRAFFIC
- ROAD CLOSURE

NOTES:

1. SIGN AND PCMS LOCATIONS ARE APPROXIMATE. EXACT LOCATIONS WILL BE DETERMINED BY THE ENGINEER.
2. SEE CONSTRUCTION AREA SIGNS, STAGE CONSTRUCTION, AND TRAFFIC HANDLING PLANS FOR ADDITIONAL CONSTRUCTION AREA SIGNS.
3. CONFLICTING SIGNS SHALL BE REMOVED OR COVERED DURING CONSTRUCTION AS DIRECTED BY THE ENGINEER.
4. SEE SHEET MI-3 FOR ADDITIONAL SIGNING.
5. IN LIEU OF WOOD POSTS, SIGNS MAY BE ATTACHED TO EXISTING UTILITY POSTS BY STRAP AND SADDLE METHOD UPON APPROVAL OF LOCAL AGENCIES.
6. SIGNS SHALL BE MOUNTED WITH BOTTOM OF SIGNS A MINIMUM OF 2.1 METERS ABOVE GROUND.
7. FOR ADDITIONAL SIGN DETAILS, SEE SHEET MIQ-1.

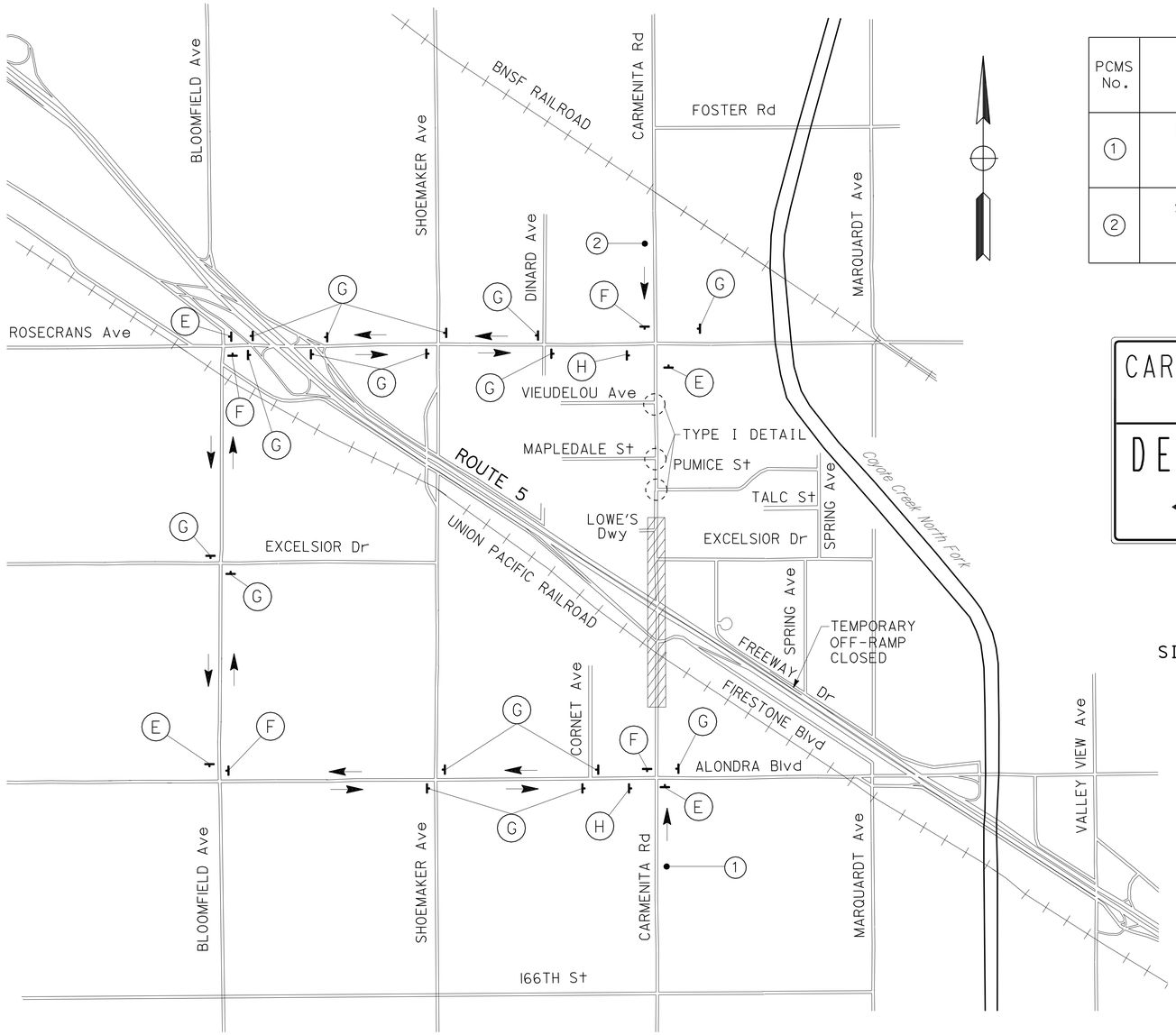

PCMS No.	LOCATION	PRIMARY MESSAGE		SECONDARY MESSAGE		DURATION
		FIRST FLASH	SECOND FLASH	FIRST FLASH	SECOND FLASH	
1	NB CARMENITA Rd JUST SOUTH OF FIRESTONE Blvd	CARMNITA CLOSED AT RTE 5	ON MM-DD-YY XPM-XAM	ROAD CLOSED AT RTE 5	DETOUR ALONDRA BLVD	7 DAYS PRIOR TO CLOSURE, USE PRIMARY MESSAGE AND PLACE PCMS AS DESCRIBED ON THIS TABLE. DURING CLOSURE, USE SECONDARY MESSAGE AND PLACE PCMS AS SHOWN ON PLAN.
2	SB CARMENITA Rd JUST NORTH OF ROUTE 5	CARMNITA CLOSED AT RTE 5	ON MM-DD-YY XPM-XAM	ROAD CLOSED AT RTE 5	DETOUR ROSECRNS AVE	

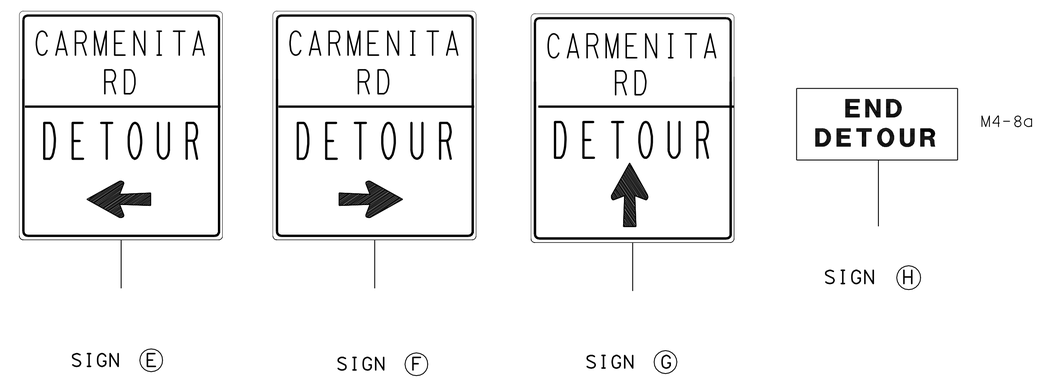

SIGN	SIZE	BORDER WIDTH	MARGIN WIDTH	LETTER SIZE		CORNER RADIUS
				LINE 1 & 2	LINE 3	
E, F, AND G	1220 X 1375	35	20	150C	200D	75
SIGNS ARE M4-9 (MOD): ARROW 150 CAP-1L-324						

ALL DIMENSIONS ARE IN MILLIMETERS UNLESS OTHERWISE SHOWN.

THIS PLAN ACCURATE FOR MOTORIST INFORMATION WORK ONLY.

STAGE 2-PHASE 2
MOTORIST INFORMATION PLAN (SIGNING AND PCMS LOCATIONS)
CARMENITA ROAD CLOSURE

NO SCALE

MI-2

STATE OF CALIFORNIA - DEPARTMENT OF TRANSPORTATION
Caltrans DTM

FUNCTIONAL SUPERVISOR: DENIS S KATAYAMA
CALCULATED-DESIGNED BY: JULIO C VALDEZ
CHECKED BY: DUKE M HUYNH
REVISED BY / DATE REVISED

LAST REVISION 11-24-09 | DATE PLOTTED => 22-JUN-2010 | TIME PLOTTED => 16:11

Dist	COUNTY	ROUTE	KILOMETER POST TOTAL PROJECT	SHEET No.	TOTAL SHEETS
07	LA	5	2.9/4.9	759	1082

Caltrans Metric

Duke M Huynh 12-23-09
REGISTERED CIVIL ENGINEER DATE

6-21-10
PLANS APPROVAL DATE

REGISTERED PROFESSIONAL ENGINEER DUKE HUYNH No. C65591 Exp. 9-30-11 CIVIL STATE OF CALIFORNIA

THE STATE OF CALIFORNIA OR ITS OFFICERS OR AGENTS SHALL NOT BE RESPONSIBLE FOR THE ACCURACY OR COMPLETENESS OF ELECTRONIC COPIES OF THIS PLAN SHEET.

LEGEND

- ONE POST SIGN
- TYPE III BARRICADE
- ROAD CLOSURE

NOTES:
1. FOR TYPE I DETAIL LOCATIONS, SEE SHEET MI-2.
2. SIGNS SHALL BE MOUNTED WITH BOTTOM OF SIGNS A MINIMUM OF 2.1 METERS ABOVE GROUND.
3. EXCELSIOR Dr DETOUR:
   NB CARMENITA RD TRAFFIC SHALL BE DETOURED AS SHOWN ON DETAIL "A".
   SB CARMENITA RD TRAFFIC SHALL BE DETOURED AS SHOWN ON SHEET MI-4.
4. FOR SIGN (K), (L), AND (M), SEE SHEET MI-4.

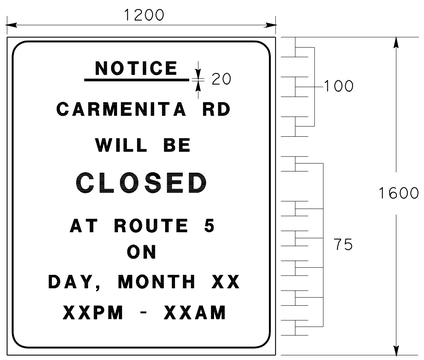

SPECIAL (I)

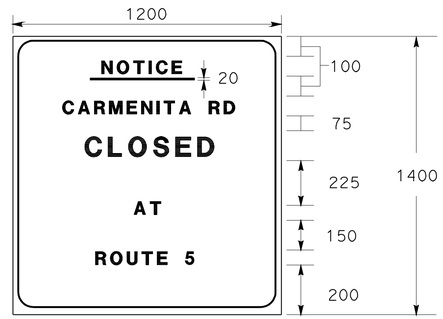

SPECIAL (J)

R11-2

W20-2

R11-4

W20-3

M4-10 (Lt or Rt)

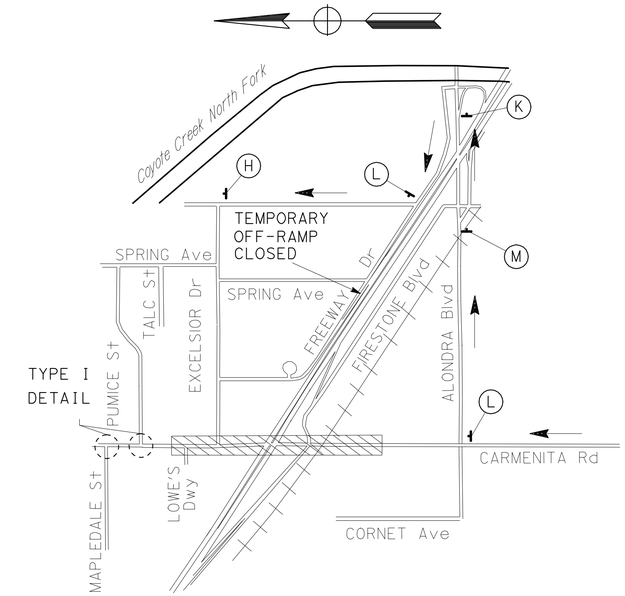

DETAIL "A"

SIGN	SIZE	BORDER WIDTH	MARGIN WIDTH	LETTER SIZE						CORNER RADIUS
				LINE 1	LINE 2	LINE 3	LINE 4	LINE 5	LINE 6,7, & 8	
SPECIAL "I"	1200 X 1600	30	20	100E	100D*	100D	150E	100D*	75D	75
SPECIAL "J"	1200 X 1400	30	20	100E	100D*	150E	100E	100D*		75
* CONDENSED SPACING IF NECESSARY										

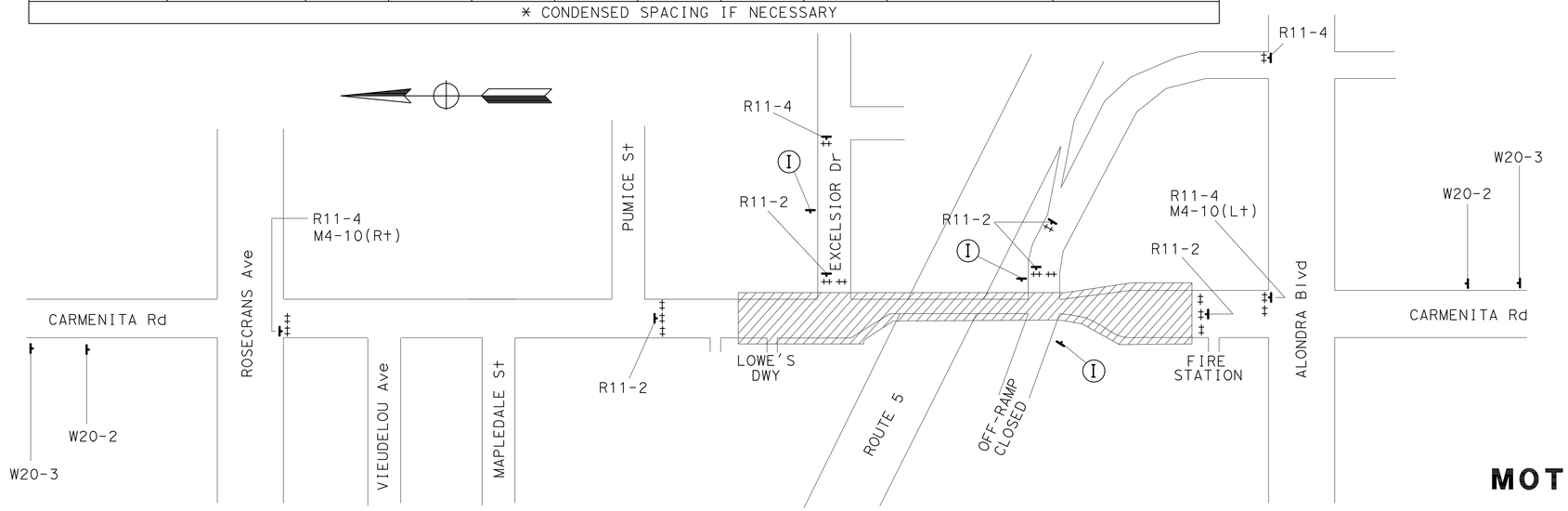

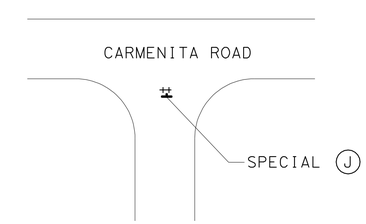

TYPE I DETAIL

ALL DIMENSIONS ARE IN MILLIMETERS UNLESS OTHERWISE SHOWN.

THIS PLAN ACCURATE FOR MOTORIST INFORMATION WORK ONLY.

STAGE 2-PHASE 2
MOTORIST INFORMATION PLAN (SIGNING)
CARMENITA ROAD CLOSURE

NO SCALE

MI-3

STATE OF CALIFORNIA - DEPARTMENT OF TRANSPORTATION
Caltrans DTM

FUNCTIONAL SUPERVISOR: DENIS S KATAYAMA
CALCULATED-DESIGNED BY: JULIO C VALDEZ
CHECKED BY: DUKE M HUYNH
REVISED BY / DATE REVISED

LAST REVISION DATE PLOTTED => 22-JUN-2010
TIME PLOTTED => 16:11
11-24-09

Dist	COUNTY	ROUTE	KILOMETER POST TOTAL PROJECT	SHEET No.	TOTAL SHEETS
07	LA	5	2.9/4.9	760	1082

Duke M Huynh 12-23-09
REGISTERED CIVIL ENGINEER DATE

6-21-10
PLANS APPROVAL DATE

REGISTERED PROFESSIONAL ENGINEER DUKE HUYNH No. C65591 Exp. 9-30-11 CIVIL STATE OF CALIFORNIA

THE STATE OF CALIFORNIA OR ITS OFFICERS OR AGENTS SHALL NOT BE RESPONSIBLE FOR THE ACCURACY OR COMPLETENESS OF ELECTRONIC COPIES OF THIS PLAN SHEET.

Caltrans Metric

LEGEND

- PORTABLE CHANGEABLE MESSAGE SIGN (PCMS)
- ONE POST SIGN
- TWO POST SIGN
- DIRECTION OF DETOUR TRAFFIC
- ROAD CLOSURE

NOTES:
1. SIGN AND PCMS LOCATIONS ARE APPROXIMATE. EXACT LOCATIONS WILL BE DETERMINED BY THE ENGINEER.
2. SEE CONSTRUCTION AREA SIGNS, STAGE CONSTRUCTION, AND TRAFFIC HANDLING PLANS FOR ADDITIONAL CONSTRUCTION AREA SIGNS.
3. CONFLICTING SIGNS SHALL BE REMOVED OR COVERED DURING CONSTRUCTION AS DIRECTED BY THE ENGINEER.
4. IN LIEU OF WOOD POSTS, SIGNS MAY BE ATTACHED TO EXISTING UTILITY POSTS BY STRAP AND SADDLE METHOD UPON APPROVAL OF LOCAL AGENCIES.
5. SIGNS SHALL BE MOUNTED WITH BOTTOM OF SIGNS A MINIMUM OF 2.1 METERS ABOUVE GROUND.
6. FOR SIGN (E), (F), (G), AND (H), SEE SHEET MI-2.
7. FOR ADDITIONAL SIGN DETAILS, SEE SHEET MIQ-1.

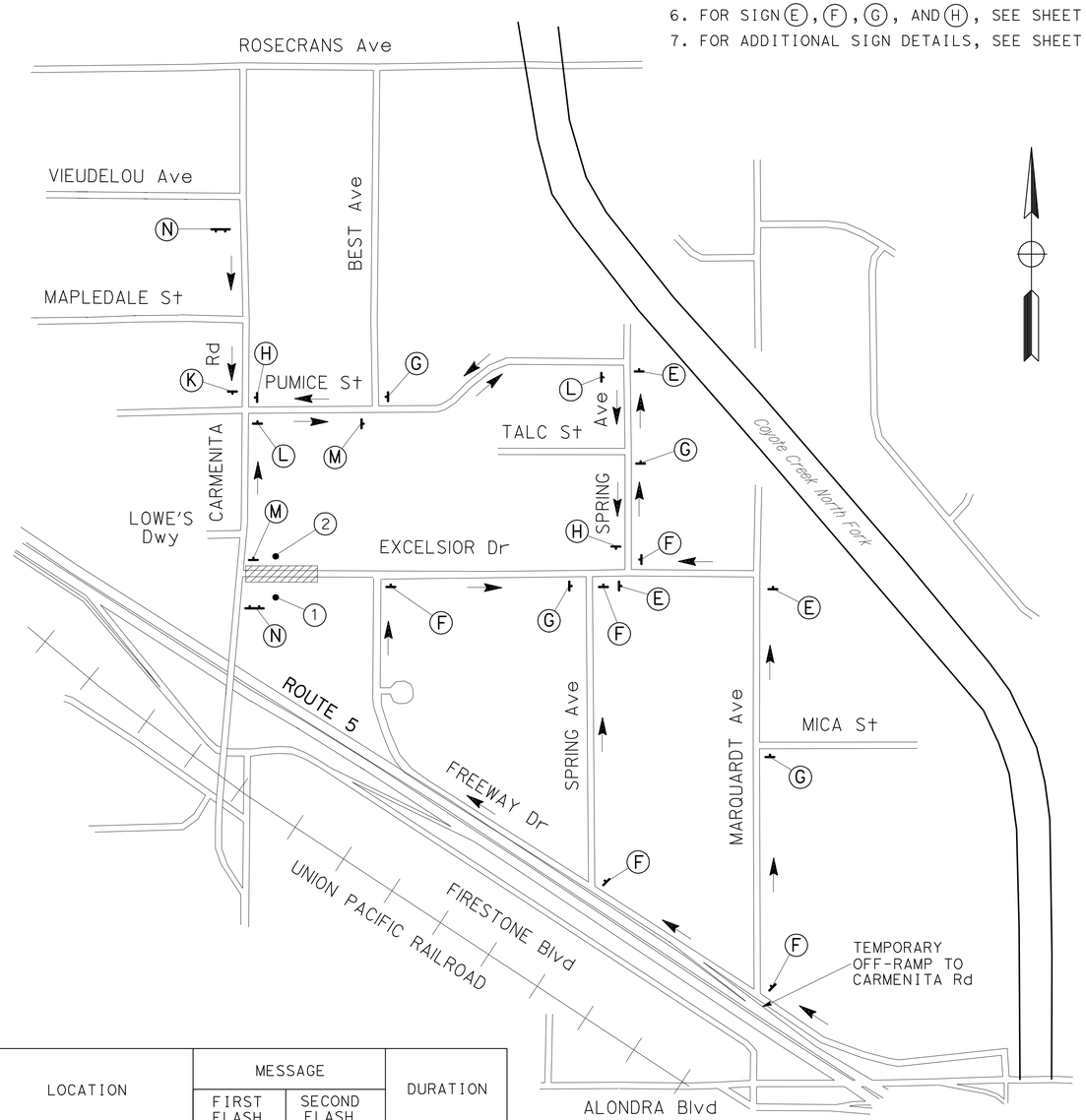

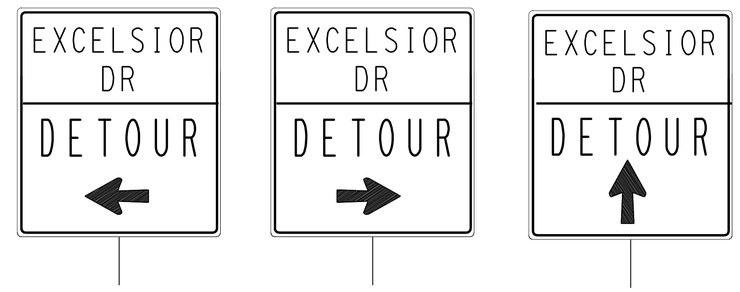

SIGN (K) SIGN (L) SIGN (M)

SIGN	SIZE	BORDER WIDTH	MARGIN WIDTH	LETTER SIZE		CORNER RADIUS
				LINE 1 & 2	LINE 3	
(K), (L), AND (M)	1220 X 1375	35	20	150C	200D	75
SIGNS ARE M4-9 (MOD): ARROW 150 CAP-1L-324						

EXCELSIOR DR
CLOSED
USE PUMICE ST

150 mm
D CAP

SIGN (N)

PCMS No.	LOCATION	MESSAGE		DURATION
		FIRST FLASH	SECOND FLASH	
1	EB EXCELSIOR Dr 80 METERS EAST OF CARMENITA Rd	RD CLOSD TO THRU TRAFFIC	STARTING MM-DD-YY	TWO WEEKS PRIOR TO CLOSURE
2	WB EXCELSIOR Dr 80 METERS EAST OF CARMENITA Rd	RD CLOSD TO THRU TRAFFIC	STARTING MM-DD-YY	

THIS PLAN ACCURATE FOR MOTORIST INFORMATION WORK ONLY.

STAGE 3-PHASE 1
MOTORIST INFORMATION PLAN (SIGNING AND PCMS LOCATIONS)
EXCELSIOR DRIVE CLOSURE

NO SCALE

MI-4

STATE OF CALIFORNIA - DEPARTMENT OF TRANSPORTATION
Caltrans DTM

FUNCTIONAL SUPERVISOR: DENIS S KATAYAMA
CALCULATED-DESIGNED BY: JULIO C VALDEZ
CHECKED BY: DUKE M HUYNH
REVISED BY / DATE REVISED

LAST REVISION 11-25-09
DATE PLOTTED => 22-JUN-2010
TIME PLOTTED => 17:43

Dist	COUNTY	ROUTE	KILOMETER POST TOTAL PROJECT	SHEET No.	TOTAL SHEETS
07	LA	5	2.9/4.9	761	1082

Duke M Huynh 12-23-09
REGISTERED CIVIL ENGINEER DATE

6-21-10
PLANS APPROVAL DATE

REGISTERED PROFESSIONAL ENGINEER DUKE HUYNH No. C65591 Exp. 9-30-11 CIVIL STATE OF CALIFORNIA

THE STATE OF CALIFORNIA OR ITS OFFICERS OR AGENTS SHALL NOT BE RESPONSIBLE FOR THE ACCURACY OR COMPLETENESS OF ELECTRONIC COPIES OF THIS PLAN SHEET.

Caltrans Metric

LEGEND

- TWO POST SIGN
- ONE POST SIGN
- DIRECTION OF DETOUR TRAFFIC
- ROAD CLOSURE

NOTES:

1. SIGN LOCATIONS ARE APPROXIMATE. EXACT LOCATIONS WILL BE DETERMINED BY THE ENGINEER.
2. SEE CONSTRUCTION AREA SIGNS, STAGE CONSTRUCTION, AND TRAFFIC HANDLING PLANS FOR ADDITIONAL CONSTRUCTION AREA SIGNS.
3. CONFLICTING SIGNS SHALL BE REMOVED OR COVERED DURING CONSTRUCTION AS DIRECTED BY THE ENGINEER.
4. IN LIEU OF WOOD POSTS, SIGNS MAY BE ATTACHED TO EXISTING UTILITY POSTS BY STRAP AND SADDLE METHOD UPON APPROVAL OF LOCAL AGENCIES.
5. SIGNS SHALL BE MOUNTED WITH BOTTOM OF SIGNS A MINIMUM OF 2.1 METERS ABOVE GROUND.
6. SEE TRAFFIC HANDLING PLANS FOR SB ROUTE 5 OFF-RAMP TO CARMENITA Rd DETOUR SIGNS.
7. FOR ADDITIONAL SIGN DETAILS, SEE SHEET MIQ-1.

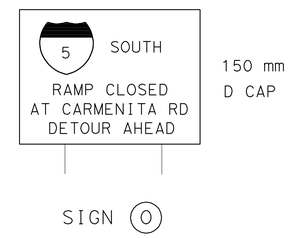

SIGN O

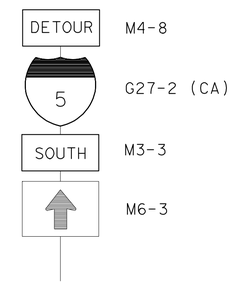

SIGN P

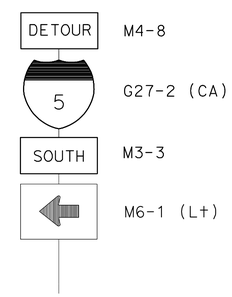

SIGN Q

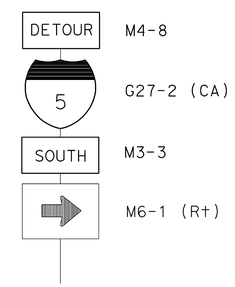

SIGN R

THIS PLAN ACCURATE FOR MOTORIST INFORMATION WORK ONLY.

STAGE 3-PHASE 1
MOTORIST INFORMATION PLAN (SIGNING)
SB CARMENITA ROAD TO SB ROUTE 5 ON-RAMP CLOSURE

NO SCALE

MI-5

REVISED BY	DATE REVISED

CALCULATED-DESIGNED BY: JULIO C VALDEZ
CHECKED BY: DUKE M HUYNH
FUNCTIONAL SUPERVISOR: DENIS S KATAYAMA

STATE OF CALIFORNIA - DEPARTMENT OF TRANSPORTATION
Caltrans DTM

LAST REVISION 11-24-09 | DATE PLOTTED => 22-JUN-2010 | TIME PLOTTED => 17:43

Dist	COUNTY	ROUTE	KILOMETER POST TOTAL PROJECT	SHEET No.	TOTAL SHEETS
07	LA	5	2.9/4.9	762	1082

Duke M Huynh 12-23-09
REGISTERED CIVIL ENGINEER DATE

6-21-10
PLANS APPROVAL DATE

REGISTERED PROFESSIONAL ENGINEER DUKE HUYNH No. C65591 Exp. 9-30-11 CIVIL STATE OF CALIFORNIA

THE STATE OF CALIFORNIA OR ITS OFFICERS OR AGENTS SHALL NOT BE RESPONSIBLE FOR THE ACCURACY OR COMPLETENESS OF ELECTRONIC COPIES OF THIS PLAN SHEET.

Caltrans Metric

LEGEND

- TWO POST SIGN
- ONE POST SIGN
- PORTABLE CHANGEABLE MESSAGE SIGN (PCMS)
- DIRECTION OF DETOUR TRAFFIC
- ROAD CLOSURE

NOTES:

1. SIGN AND PCMS LOCATIONS ARE APPROXIMATE. EXACT LOCATIONS WILL BE DETERMINED BY THE ENGINEER.
2. SEE CONSTRUCTION AREA SIGNS, STAGE CONSTRUCTION, AND TRAFFIC HANDLING PLANS FOR ADDITIONAL CONSTRUCTION AREA SIGNS.
3. CONFLICTING SIGNS SHALL BE REMOVED OR COVERED DURING CONSTRUCTION AS DIRECTED BY THE ENGINEER.
4. IN LIEU OF WOOD POSTS, SIGNS MAY BE ATTACHED TO EXISTING UTILITY POSTS BY STRAP AND SADDLE METHOD UPON APPROVAL OF LOCAL AGENCIES.
5. SIGNS SHALL BE MOUNTED WITH BOTTOM OF SIGNS A MINIMUM OF 2.1 METERS ABOVE GROUND.
6. FOR ADDITIONAL DETOUR SIGNS AND SIGN (O), (P), AND (R) DETAILS ALONG ALONDRA Blvd, BLOOMFIELD Ave, AND ROSECRANS Ave, SEE SHEET MI-5.
7. FOR ADDITIONAL SIGN DETAILS, SEE SHEET MIQ-1.

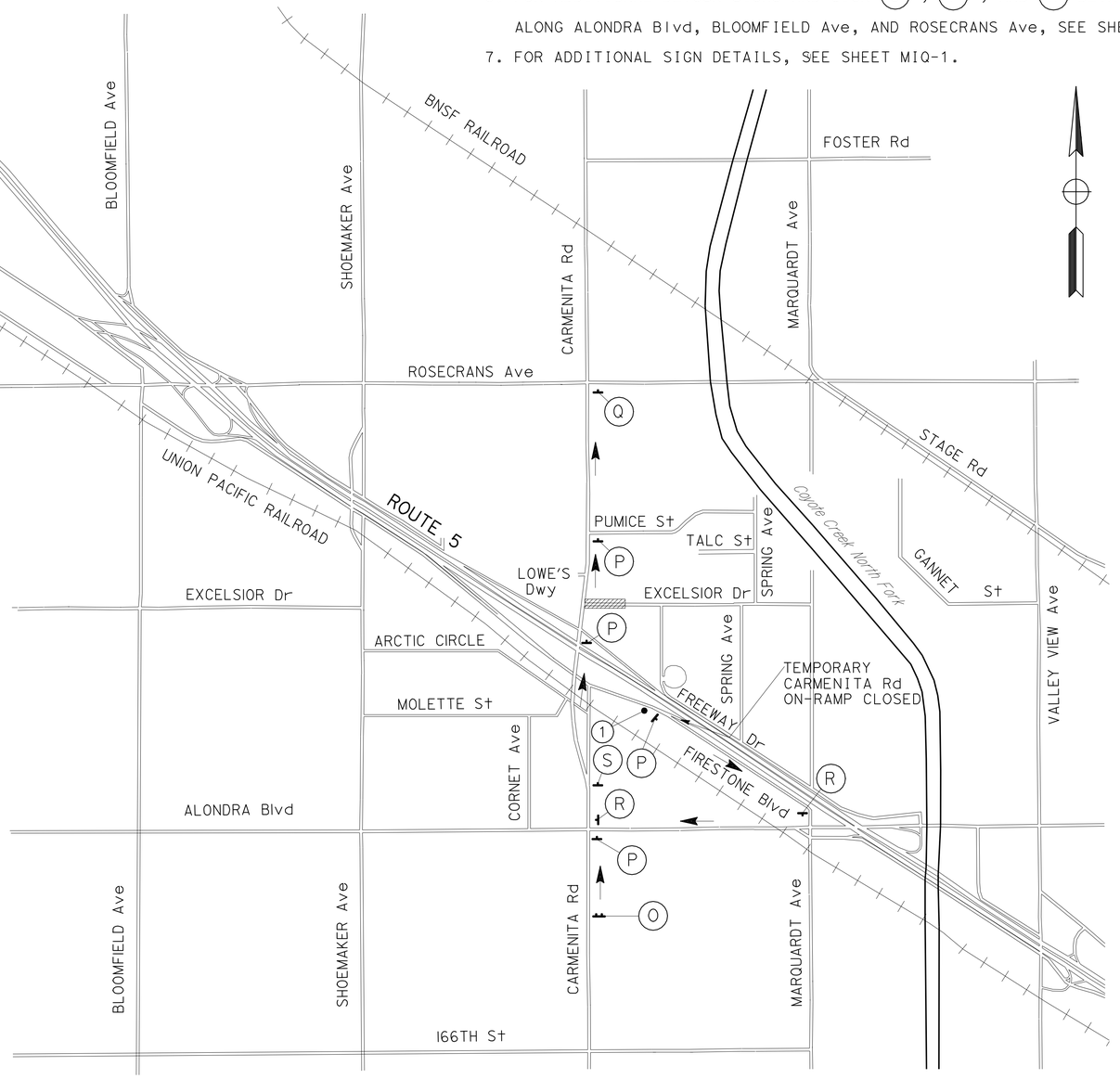

PCMS No.	LOCATION	MESSAGE		DURATION
		FIRST FLASH	SECOND FLASH	
1	SB FIRESTONE BLVD IN ADVANCE OF SB ROUTE 5 ON-RAMP	S 5 RAMP CLOSED	STARTING MM-DD-YY	TWO WEEKS PRIOR TO CLOSURE

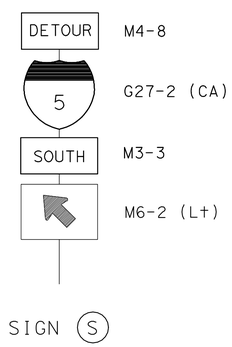

STAGE 3-PHASE 2
MOTORIST INFORMATION PLAN
(SIGNING AND PCMS LOCATION)
SB ROUTE 5 CARMENITA ROAD ON-RAMP CLOSURE

NO SCALE

THIS PLAN ACCURATE FOR MOTORIST INFORMATION WORK ONLY.

MI-6

STATE OF CALIFORNIA - DEPARTMENT OF TRANSPORTATION
Caltrans DTM

FUNCTIONAL SUPERVISOR: DENIS S KATAYAMA
CALCULATED-DESIGNED BY: JULIO C VALDEZ
CHECKED BY: DUKE M HUYNH
REVISED BY / DATE REVISED

LAST REVISION 12-03-09
DATE PLOTTED => 22-JUN-2010
TIME PLOTTED => 17:43

Dist	COUNTY	ROUTE	KILOMETER POST TOTAL PROJECT	SHEET No.	TOTAL SHEETS
07	LA	5	2.9/4.9	763	1082

Duke M Huynh 12-23-09
REGISTERED CIVIL ENGINEER DATE

6-21-10
PLANS APPROVAL DATE

REGISTERED PROFESSIONAL ENGINEER DUKE HUYNH No. C65591 Exp. 9-30-11 CIVIL STATE OF CALIFORNIA

THE STATE OF CALIFORNIA OR ITS OFFICERS OR AGENTS SHALL NOT BE RESPONSIBLE FOR THE ACCURACY OR COMPLETENESS OF ELECTRONIC COPIES OF THIS PLAN SHEET.

Caltrans Metric

LEGEND

- PORTABLE CHANGEABLE MESSAGE SIGN (PCMS)
- TWO POST SIGN
- ONE POST SIGN
- DIRECTION OF DETOUR TRAFFIC
- ROAD CLOSURE (STAGE 3 - PHASE 2A)
- ROAD CLOSURE (STAGE 3 - PHASE 2B)

NOTES:
1. SIGN AND PCMS LOCATIONS ARE APPROXIMATE. EXACT LOCATIONS WILL BE DETERMINED BY THE ENGINEER.
2. SEE CONSTRUCTION AREA SIGNS, STAGE CONSTRUCTION, AND TRAFFIC HANDLING PLANS FOR ADDITIONAL CONSTRUCTION AREA SIGNS.
3. CONFLICTING SIGNS SHALL BE REMOVED OR COVERED DURING CONSTRUCTION AS DIRECTED BY THE ENGINEER.
4. IN LIEU OF WOOD POSTS, SIGNS MAY BE ATTACHED TO EXISTING UTILITY POSTS BY STRAP AND SADDLE METHOD UPON APPROVAL OF LOCAL AGENCIES.
5. SIGNS SHALL BE MOUNTED WITH BOTTOM OF SIGNS A MINIMUM OF 2.1 METERS ABOVE GROUND.
6. FOR SIGN (F), (G), AND (H), SEE SHEET MI-2.
7. FOR ADDITIONAL SIGN DETAILS, SEE SHEET MIQ-1.

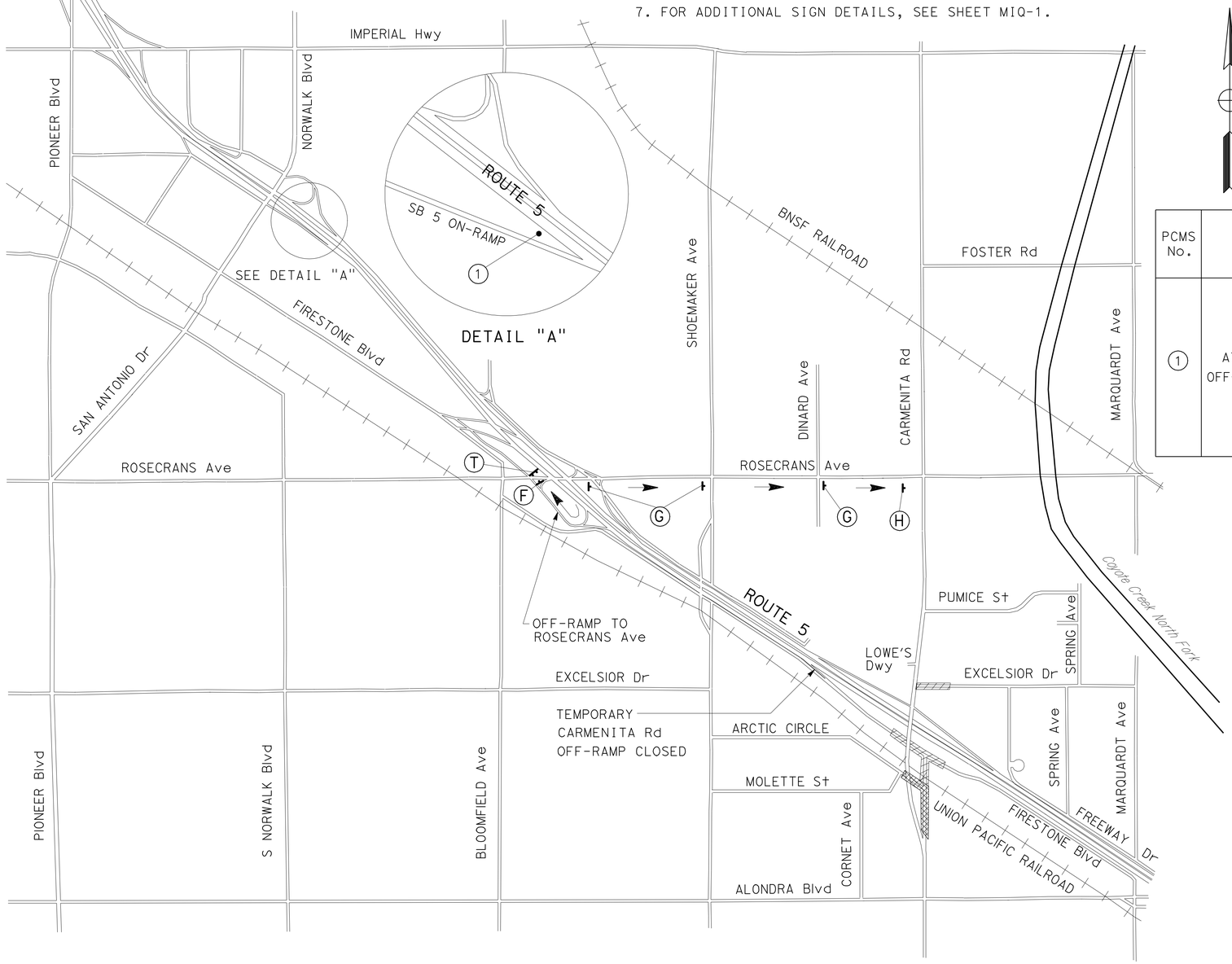

PCMS No.	LOCATION	PRIMARY MESSAGE		SECONDARY MESSAGE		DURATION
		FIRST FLASH	SECOND FLASH	FIRST FLASH	SECOND FLASH	
1	SB ROUTE 5 AT CARMENITA Rd OFF-RAMP (STA. 23+20)	RAMP WILL BE CLOSED	STARTING MM-DD-YY	CARMNITA RAMP CLOSED	DETOUR ROSECRNS	TWO WEEKS PRIOR TO CLOSURE, USE PRIMARY MESSAGE AND PLACE PCMS AS SHOWN ON THIS TABLE. DURING CLOSURE, USE SECONDARY MESSAGE AND PLACE PCMS AS SHOWN ON PLAN.

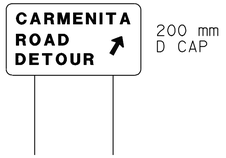

SIGN (T)

STAGE 3-PHASE 2A AND 2B
MOTORIST INFORMATION PLAN
(SIGNING AND PCMS LOCATION)
SB ROUTE 5 CARMENITA ROAD OFF-RAMP CLOSURE

NO SCALE

THIS PLAN ACCURATE FOR MOTORIST INFORMATION WORK ONLY.

MI-7

STATE OF CALIFORNIA - DEPARTMENT OF TRANSPORTATION
Caltrans DTM

FUNCTIONAL SUPERVISOR: DENIS S KATAYAMA
CALCULATED-DESIGNED BY: JULIO C VALDEZ
CHECKED BY: DUKE M HUYNH
REVISED BY / DATE REVISED

LAST REVISION 11-24-09 | DATE PLOTTED => 22-JUN-2010 | TIME PLOTTED => 17:43

Dist	COUNTY	ROUTE	KILOMETER POST TOTAL PROJECT	SHEET No.	TOTAL SHEETS
07	LA	5	2.9/4.9	764	1082

Duke M Huynh 12-23-09
REGISTERED CIVIL ENGINEER DATE

6-21-10
PLANS APPROVAL DATE

REGISTERED PROFESSIONAL ENGINEER
DUKE HUYNH
No. C65591
Exp. 9-30-11
CIVIL
STATE OF CALIFORNIA

THE STATE OF CALIFORNIA OR ITS OFFICERS OR AGENTS SHALL NOT BE RESPONSIBLE FOR THE ACCURACY OR COMPLETENESS OF ELECTRONIC COPIES OF THIS PLAN SHEET.

Caltrans Metric

MOTORIST INFORMATION SIGN QUANTITIES

SIGN No.	PANEL SIZE (mm x mm)	POST SIZE (mm x mm)	No. OF POST (EA)	"E" DIMENSION (m)	SIGN QUANTITY (EA)	REMARKS
SIGN (A)	2430 X 1670	140 X 190	2	1.8	2	BLACK ON ORANGE
SIGN (B)		89 X 140	1	1.4	11	
M4-8	530 X 230					BLACK ON ORANGE
G27-2 (CA)	610 X 610					
M3-1	530 X 230					WHITE ON BLUE
M6-3	530 X 380					WHITE ON BLUE
SIGN (C)		89 X 140	1	1.4	2	
M4-8	530 X 230					BLACK ON ORANGE
G27-2 (CA)	610 X 610					
M3-1	530 X 230					WHITE ON BLUE
M6-1 (L†)	530 X 380					WHITE ON BLUE
SIGN (D)		89 X 140	1	1.4	4	
M4-8	530 X 230					BLACK ON ORANGE
G27-2 (CA)	610 X 610					
M3-1	530 X 230					WHITE ON BLUE
M6-1 (R†)	530 X 380					WHITE ON BLUE
SIGN (E)		140 X 140	1	1.5	7	
M4-9 (MOD) L	1220 X 1375					BLACK ON ORANGE
SIGN (F)		140 X 140	1	1.5	10	
M4-9 (MOD) R	1220 X 1375					BLACK ON ORANGE
SIGN (G)		140 X 140	1	1.5	23	
M4-9 (MOD)	1220 X 1375					BLACK ON ORANGE
SIGN (H)	600 X 450	89 X 89	1	1.0	6	BLACK ON ORANGE
SIGN (I)	1200 X 1600	89 X 140	2	1.4	3	BLACK ON ORANGE
SIGN (J)	1200 X 1400	89 X 140	2	1.4	3	BLACK ON ORANGE
SIGN (K)		140 X 140	1	1.5	2	
M4-9 (MOD) L	1220 X 1375					BLACK ON ORANGE
SIGN (L)		140 X 140	1	1.5	4	
M4-9 (MOD) R	1220 X 1375					BLACK ON ORANGE
SIGN (M)		140 X 140	1	1.5	3	
M4-9 (MOD)	1220 X 1375					BLACK ON ORANGE

MOTORIST INFORMATION SIGN QUANTITIES

SIGN No.	PANEL SIZE (mm x mm)	POST SIZE (mm x mm)	No. OF POST (EA)	"E" DIMENSION (m)	SIGN QUANTITY (EA)	REMARKS
SIGN (N)	2130 X 1070	89 X 140	2	1.4	2	BLACK ON ORANGE
SIGN (O)	2430 X 1670	140 X 190	2	1.8	2	BLACK ON ORANGE
SIGN (P)		89 X 140	1	1.4	12	
M4-8	530 X 230					BLACK ON ORANGE
G27-2 (CA)	610 X 610					
M3-3	530 X 230					WHITE ON BLUE
M6-3	530 X 380					WHITE ON BLUE
SIGN (Q)		89 X 140	1	1.4	2	
M4-8	530 X 230					BLACK ON ORANGE
G27-2 (CA)	610 X 610					
M3-3	530 X 230					WHITE ON BLUE
M6-1 (L†)	530 X 380					WHITE ON BLUE
SIGN (R)		89 X 140	1	1.4	8	
M4-8	530 X 230					BLACK ON ORANGE
G27-2 (CA)	610 X 610					
M3-3	530 X 230					WHITE ON BLUE
M6-1 (R†)	530 X 380					WHITE ON BLUE
SIGN (S)		89 X 140	1	1.4	1	
M4-8	530 X 230					BLACK ON ORANGE
G27-2 (CA)	610 X 610					
M3-3	530 X 230					WHITE ON BLUE
M6-1 (L†)	530 X 380					WHITE ON BLUE
SIGN (T)	2130 X 1520	140 X 140	2	1.5	1	BLACK ON ORANGE
				TOTAL	108	

MOTORIST INFORMATION QUANTITIES (SIGNING)

MIQ-1

REVISED BY | DATE REVISED
JULIO C VALDEZ | DUKE M HUYNH
CALCULATED-DESIGNED BY | CHECKED BY
FUNCTIONAL SUPERVISOR
DENIS S KATAYAMA

STATE OF CALIFORNIA - DEPARTMENT OF TRANSPORTATION
Caltrans
DTM

LAST REVISION 11-23-09 | DATE PLOTTED => 22-JUN-2010 | TIME PLOTTED => 17:43

Dist	COUNTY	ROUTE	KILOMETER POST TOTAL PROJECT	SHEET No.	TOTAL SHEETS
07	LA	5	2.9/4.9	765	1082

REGISTERED CIVIL ENGINEER 12-23-09 DATE

6-21-10
PLANS APPROVAL DATE

REGISTERED PROFESSIONAL ENGINEER NGIM NANCY PE No. 58161 Exp. 6-30-10 CIVIL STATE OF CALIFORNIA

THE STATE OF CALIFORNIA OR ITS OFFICERS OR AGENTS SHALL NOT BE RESPONSIBLE FOR THE ACCURACY OR COMPLETENESS OF ELECTRONIC COPIES OF THIS PLAN SHEET.

Caltrans Metric

NOTES:

FOR ACCURATE RIGHT OF WAY AND ACCESS DATA, CONTACT RIGHT OF WAY ENGINEERING AT THE DISTRICT OFFICE.

LEGEND:

(No.) PARCEL NUMBER

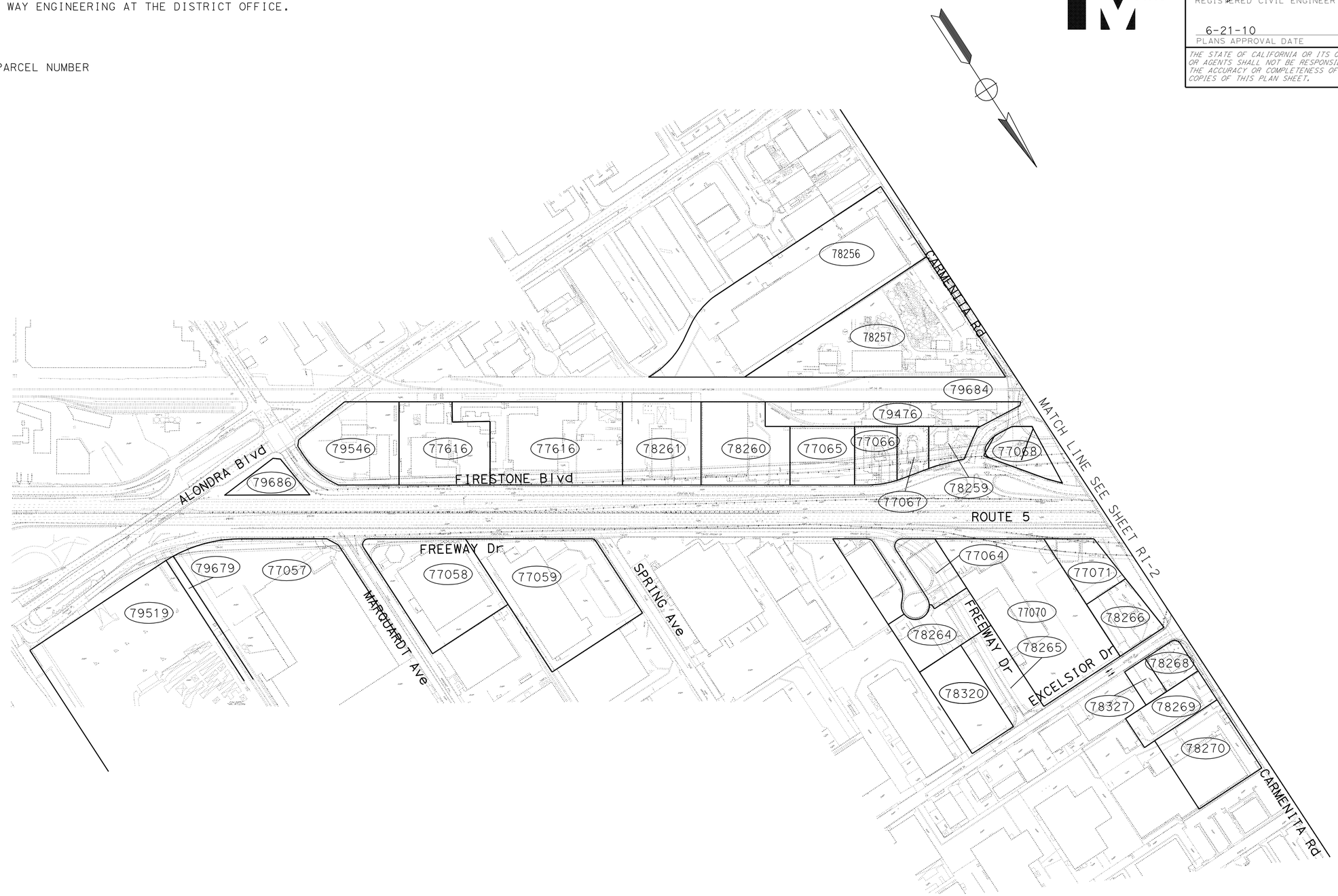

RIGHT-OF-WAY INFORMATION

NO SCALE

RI-1

THIS PLAN ACCURATE FOR RIGHT-OF-WAY INFORMATION ONLY.

STATE OF CALIFORNIA - DEPARTMENT OF TRANSPORTATION
Caltrans OFFICE OF DESIGN A

FUNCTIONAL SUPERVISOR: NANCY PE
CALCULATED-DESIGNED BY: WILL CARPIO
CHECKED BY: NANCY PE
REVISED BY / DATE REVISED

S:\projects\2159c1\resubmit3\72159c1g001.dgn

LAST REVISION 00-00-00
DATE PLOTTED => 14-FEB-2011
TIME PLOTTED => 09:18

Dist	COUNTY	ROUTE	KILOMETER POST TOTAL PROJECT	SHEET No.	TOTAL SHEETS
07	LA	5	2.9/4.9	766	1082

REGISTERED CIVIL ENGINEER 12-23-09 DATE

6-21-10
PLANS APPROVAL DATE

REGISTERED PROFESSIONAL ENGINEER NGIM NANCY PE No. 58161 Exp 6-30-10 CIVIL STATE OF CALIFORNIA

THE STATE OF CALIFORNIA OR ITS OFFICERS OR AGENTS SHALL NOT BE RESPONSIBLE FOR THE ACCURACY OR COMPLETENESS OF ELECTRONIC COPIES OF THIS PLAN SHEET.

Caltrans Metric

NOTES:

FOR ACCURATE RIGHT OF WAY AND ACCESS DATA, CONTACT RIGHT OF WAY ENGINEERING AT THE DISTRICT OFFICE.

LEGEND:

(No.) PARCEL NUMBER

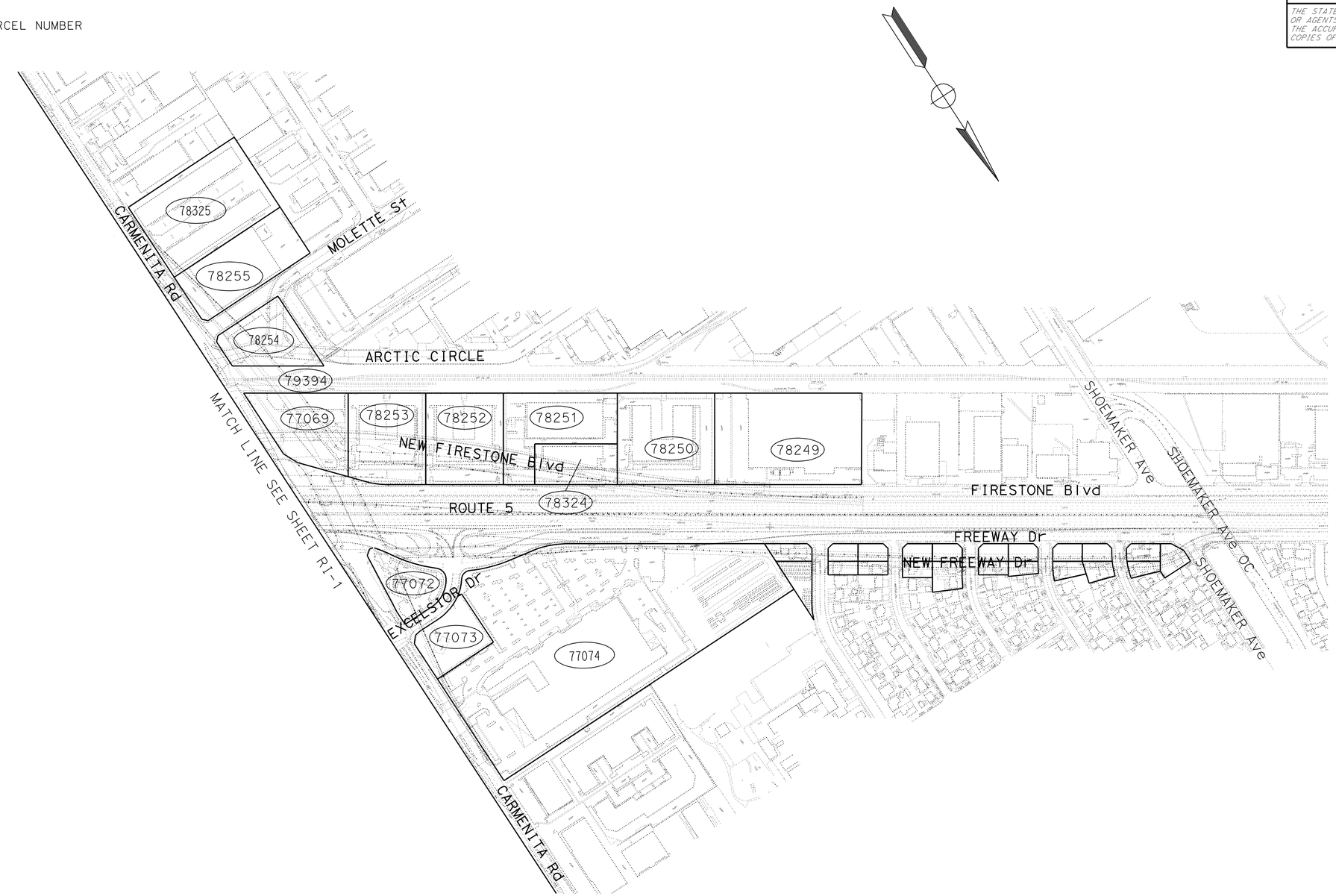

THIS PLAN ACCURATE FOR RIGHT-OF-WAY INFORMATION ONLY.

RIGHT-OF-WAY INFORMATION

NO SCALE

RI-2

REVISED BY	DATE REVISED

CALCULATED-DESIGNED BY: WILL CARPIO
CHECKED BY: NANCY PE
FUNCTIONAL SUPERVISOR: NANCY PE

STATE OF CALIFORNIA - DEPARTMENT OF TRANSPORTATION
Caltrans OFFICE OF DESIGN A

S:\projects\2159c1\resubmit3\72159c1g002.dgn

LAST REVISION 00-00-00 | DATE PLOTTED => 22-JUN-2010 | TIME PLOTTED => 17:44

DIST	COUNTY	ROUTE	KILOMETER POST TOTAL PROJECT	SHEET NO.	TOTAL SHEETS
07	LA	5	2.9/4.9	767	1082

Caltrans Metric

Donald E Howe
REGISTERED CIVIL ENGINEER

June 6, 2008
PLANS APPROVAL DATE

REGISTERED PROFESSIONAL ENGINEER Donald E. Howe No. C46402 Exp. 3-31-09 CIVIL STATE OF CALIFORNIA

The State of California or its officers or agents shall not be responsible for the accuracy or completeness of electronic copies of this plan sheet.

To get to the Caltrans web site, go to: http://www.dot.ca.gov

To accompany plans dated 6-21-10

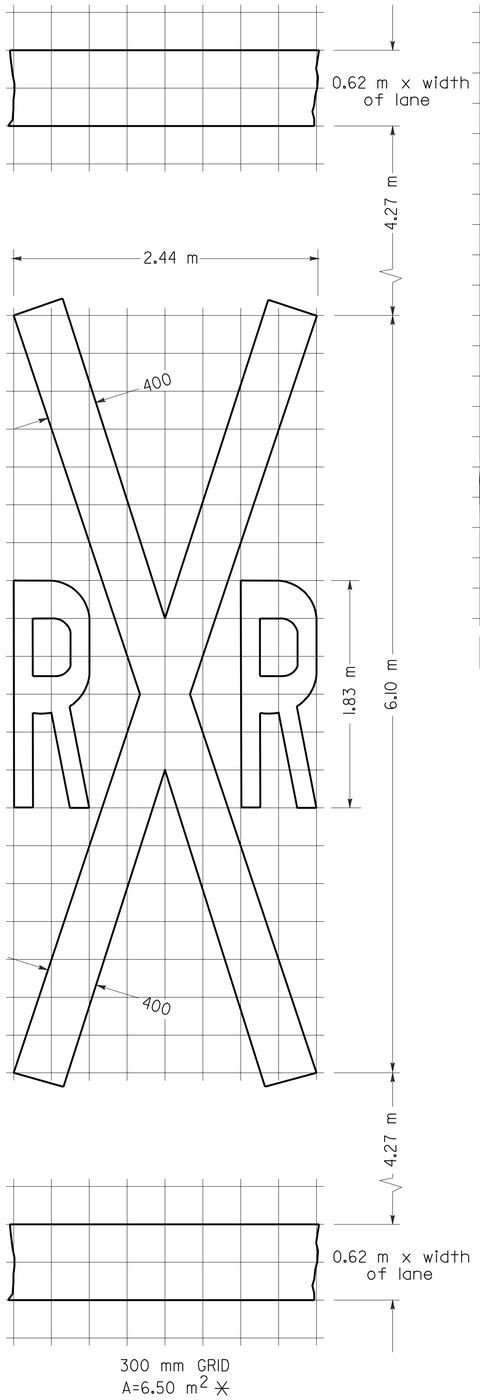

RAILROAD CROSSING SYMBOL

✳6.5 m^2 DOES NOT INCLUDE THE 0.6 m x VARIABLE WIDTH TRANSVERSE LINES.

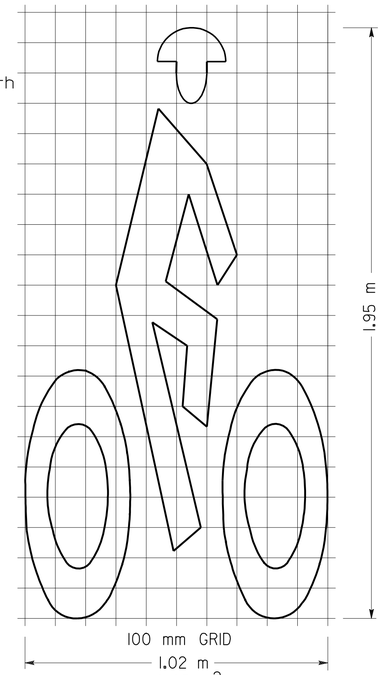

BIKE LANE SYMBOL

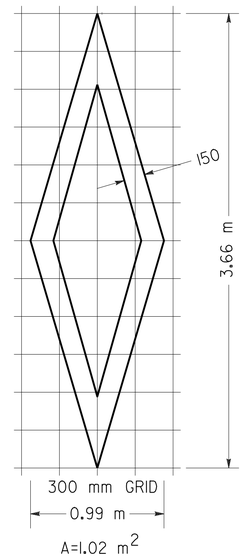

DIAMOND SYMBOL

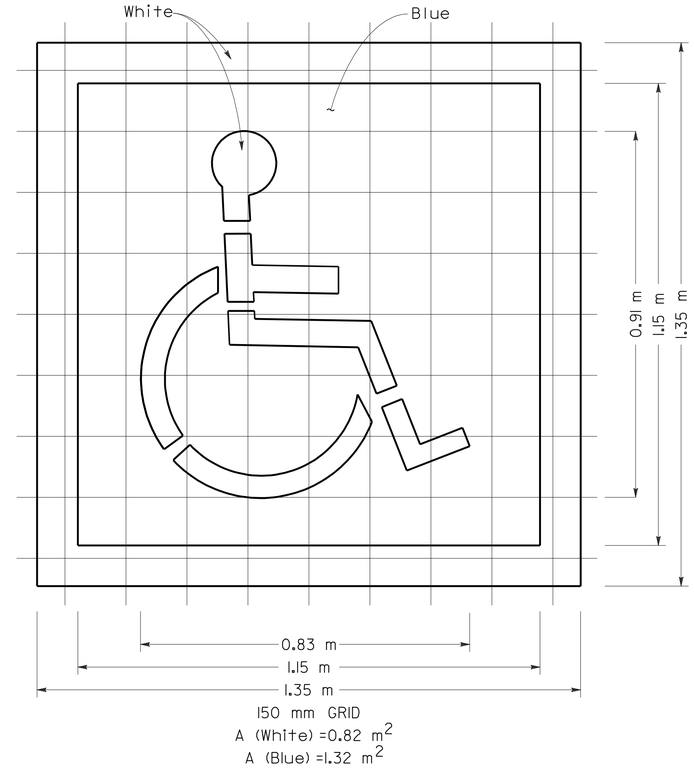

INTERNATIONAL SYMBOL OF ACCESSIBILITY MARKING

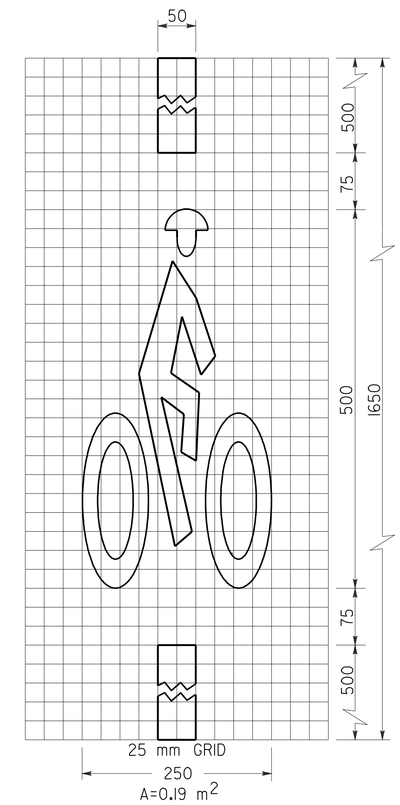

BICYCLE LOOP DETECTOR SYMBOL

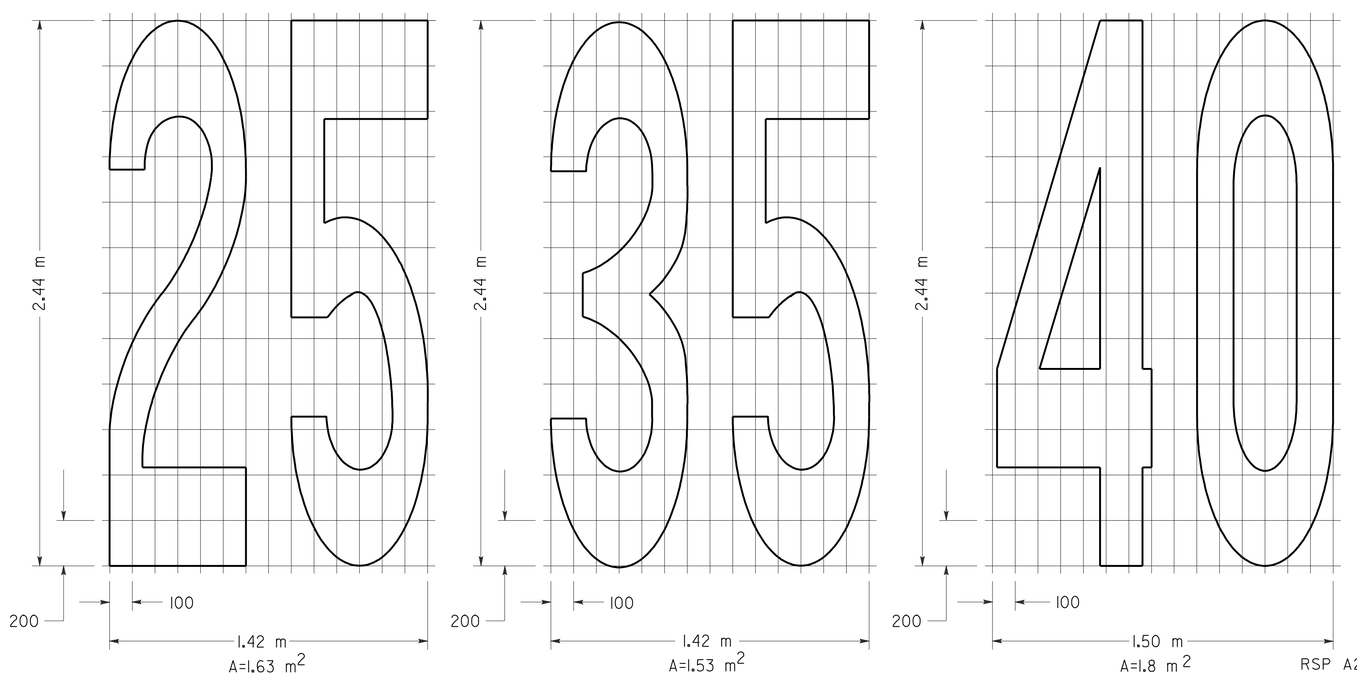

NUMERALS

NOTE:

1. Minor variations in dimensions may be accepted by the Engineer.

STATE OF CALIFORNIA
DEPARTMENT OF TRANSPORTATION

PAVEMENT MARKINGS SYMBOLS AND NUMERALS

NO SCALE

ALL DIMENSIONS ARE IN MILLIMETERS UNLESS OTHERWISE SHOWN

RSP A24C DATED JUNE 6, 2008 SUPERSEDES STANDARD PLAN A24C DATED July 1, 2004 - PAGE 11 OF THE STANDARD PLANS BOOK DATED July 2004.

REVISED STANDARD PLAN RSP A24C

2004 REVISED Std PLAN RSP A24C

5-27-08

DIST	COUNTY	ROUTE	KILOMETER POST TOTAL PROJECT	SHEET NO.	TOTAL SHEETS
07	LA	5	2.9/4.9	768	1082

Caltrans Metric

REGISTERED CIVIL ENGINEER

November 17, 2006
PLANS APPROVAL DATE

REGISTERED PROFESSIONAL ENGINEER Michael Janzen No. 44788 Exp. 03-31-08 CIVIL STATE OF CALIFORNIA

The State of California or its officers or agents shall not be responsible for the accuracy or completeness of electronic copies of this plan sheet.

To get to the Caltrans web site, go to: http://www.dot.ca.gov

To accompany plans dated 6-21-10

2004 REVISED Std PLAN RSP A87A

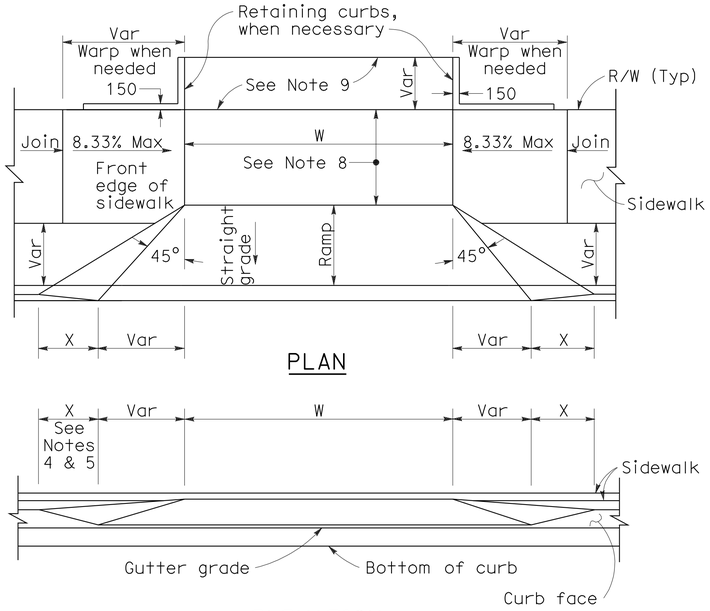

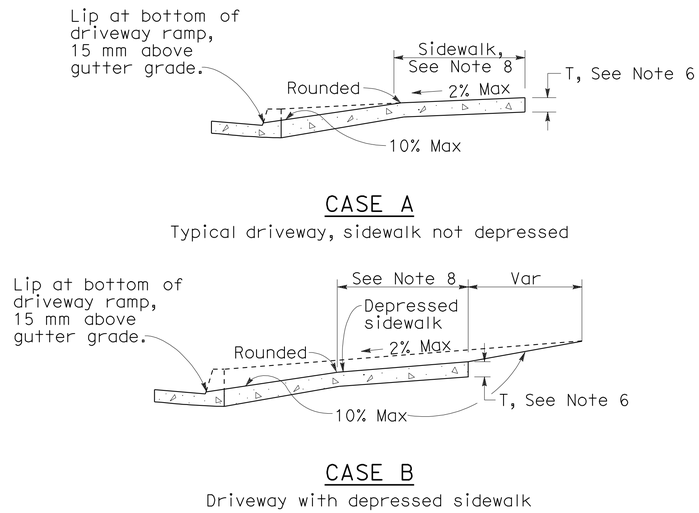

CURB QUANTITIES

TYPE	CUBIC METERS PER METER
A1-150	0.064
A1-200	0.075
A2-150	0.144
A2-200	0.155
A3-150	0.025
A3-200	0.035
B1-100	0.056
B1-150	0.073
B2-100	0.137
B2-150	0.152
B3-100	0.017
B3-150	0.027
B4	0.142
D-100	0.100
D-150	0.162
E	0.161

TABLE A

CURB TYPE	DIMENSIONS "H1"	"H2"	"W1"	"W2"
A1-150	350	150	190	40
A1-200	400	200	200	50
A2-150	300	150	790	40
A2-200	350	200	800	50
A3-150	150	130	185	35
A3-200	200	180	198	48
B1-100	300	100	200	70
B1-150	350	150	230	100
B2-100	250	100	800	70
B2-150	300	150	830	100
B3-100	100	80	185	55
B3-150	150	130	217	87
D-100	250	100	452	322
D-150	300	150	652	522

DRIVEWAYS

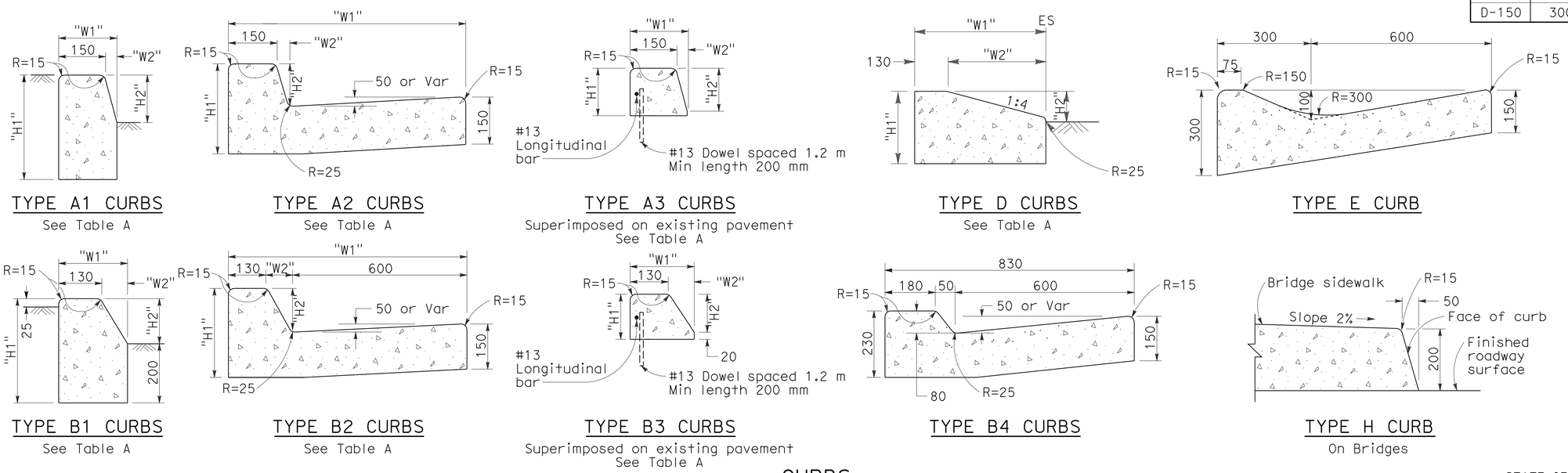

CURBS

NOTES

1. Case A driveway section typically applies.
2. Use Case B driveway section when ramp slopes would exceed 10% in Case A.
3. Use Case B driveway section when sidewalk cross slope would exceed 2% in Case A.
4. X=900 mm except for curb heights over 250 mm where 1:4 slopes shall be used on curb slope.
5. X is a variable when sidewalk is located where wheelchairs may traverse the surface. Slopes shall not exceed 8.33%.
6. Sidewalk and ramp thickness ``T'' at driveway shall be 100 mm for residental and 150 mm for commercial.
7. Difference in slope of the driveway ramp and the slope of a line between the gutter and a point on the roadway 1.5 meters from gutter line shall not exceed 15%. Reduce driveway ramp slope, not gutter slope, where required.
8. Minimum width of clear passageway for sidewalk shall be 1.22 meters.
9. Retaining curbs and acquisition of construction easement may be necessary for narrow sidewalks or curb heights in excess of 150 mm.
10. Across the pedestrian route at curb ramp locations, the gutter pan slope shall not exceed 25 mm of depth for each 600 mm of width.

STATE OF CALIFORNIA
DEPARTMENT OF TRANSPORTATION

CURBS AND DRIVEWAYS

NO SCALE

ALL DIMENSIONS ARE IN MILLIMETERS UNLESS OTHERWISE SHOWN

RSP A87A DATED NOVEMBER 17, 2006 SUPERSEDES STANDARD PLAN A87A DATED JULY 1, 2004-PAGE 115 OF THE STANDARD PLANS BOOK DATED JULY 2004.

REVISED STANDARD PLAN RSP A87A

10-25-06

DIST	COUNTY	ROUTE	KILOMETER POST TOTAL PROJECT	SHEET NO.	TOTAL SHEETS
07	LA	5	2.9/4.9	769	1082

REGISTERED CIVIL ENGINEER

December 16, 2005
PLANS APPROVAL DATE

Hector David Cordova No. C41957 Exp. 3-31-06 CIVIL — REGISTERED PROFESSIONAL ENGINEER — STATE OF CALIFORNIA

The State of California or its officers or agents shall not be responsible for the accuracy or completeness of electronic copies of this plan sheet.

To get to the Caltrans web site, go to: http://www.dot.ca.gov

To accompany plans dated 6-21-10

Caltrans Metric

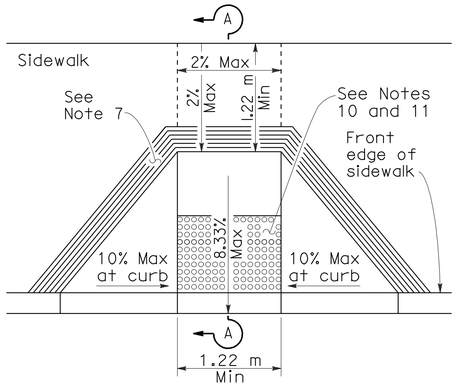

CASE A

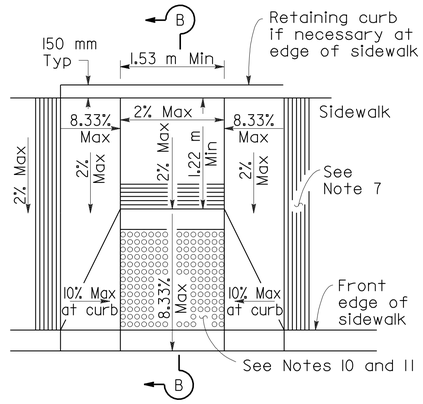

CASE B

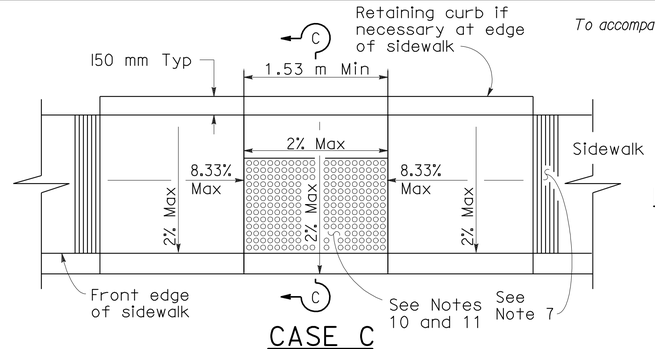

CASE C

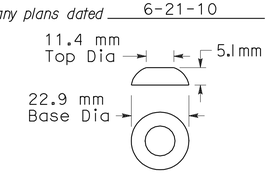

RAISED TRUNCATED DOME

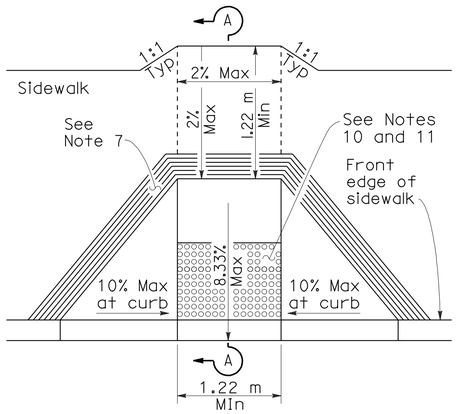

CASE D

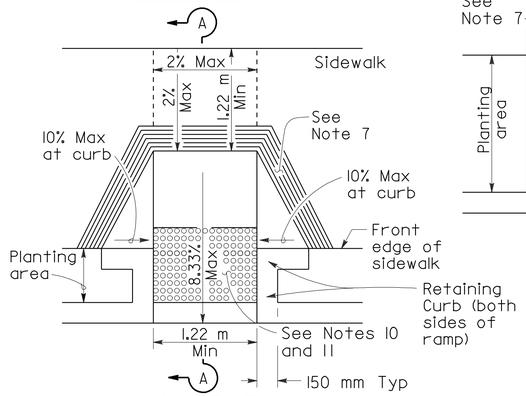

CASE E

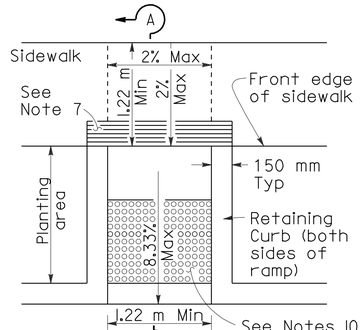

CASE F

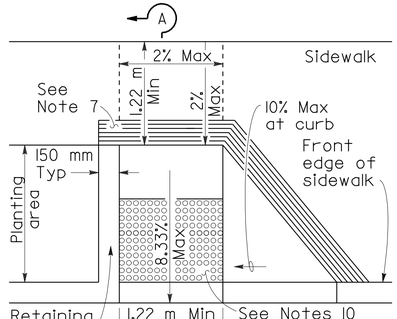

CASE G

See Note 4

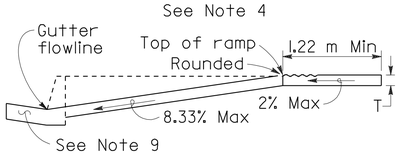

SECTION A-A

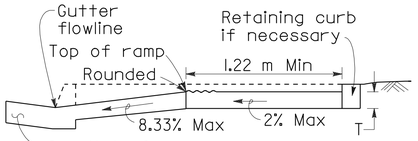

SECTION B-B

Depress entire sidewalk as required

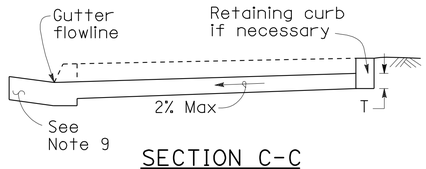

SECTION C-C

NOTES

1. As site conditions dictate, Case A through Case G curb ramps may be used for corner installations similar to those shown in Detail A and Detail B. The case of curb ramps used in Detail A do not have to be the same. Case A through Case G curb ramps also may be used at mid block locations, as site conditions dictate. For Cases B and C, the side of the curb ramp should always be perpendicular to curb face.
2. If distance from curb to back of sidewalk is too short to accommodate ramp and 1.22 m platform (landing) as shown in Case A, the sidewalk may be depressed longitudinally as in Case B, or C or may be widened as in Case D.
3. When ramp is located in center of curb return, crosswalk configuration must be similar to that shown for Detail B.
4. As site conditions dictate, the retaining curb side and the flared side of the Case G ramp shall be constructed in reversed position.
5. If located on a curve, the sides of the ramp need not be parallel, but the minimum width of the ramp shall be 1.22 m.
6. Side slope of ramp flares vary uniformly from a maximum of 10% at curb to conform with longitudinal sidewalk slope adjacent to top of the ramp, except in Case C and Case F.
7. The curb ramp shall be outlined, as shown, with a 305 mm wide border with 6 mm grooves approximately 19 mm on center. See grooving detail.
8. Transitions from ramps and landings to walks, gutters or streets shall be flush and free of abrupt changes.
9. Maximum slopes of adjoining gutters, the road surface immediately adjacent to the curb ramp, or accessible route shall not exceed 5 percent within 1.22 m of the top and bottom of the curb ramp.
10. Curb ramps shall have a detectable warning surface that extends the full width and 914 mm depth of the ramp. Detectable Warning Surfaces shall conform to the details on this plan and the requirements in the Special Provisions.
11. The edge of the detectable warning surface nearest the street shall be between 150 mm and 205 mm from the gutter flowline.
12. Sidewalk and ramp thickness, "T", shall be 90 mm minimum.
13. Utility pull boxes, manholes, vaults and all other utility facilities within the boundaries of the curb ramp will be relocated or adjusted to grade by the owner prior to, or in conjunction with, curb ramp construction.
14. For retrofit conditions, removal and replacement of curb apron will be at the Contractor's option, unless otherwise shown on project plans.

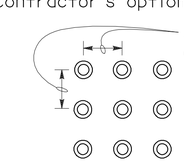

RAISED TRUNCATED DOME PATTERN (IN-LINE)

DETECTABLE WARNING SURFACE

See Note 10

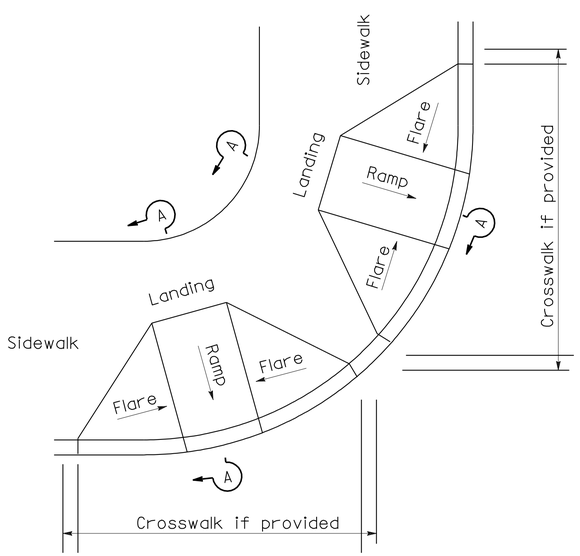

DETAIL A

TYPICAL TWO-RAMP CORNER INSTALLATION

See Note 1

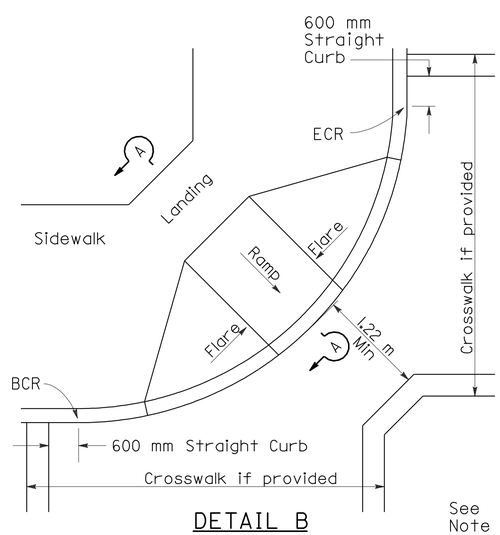

DETAIL B

TYPICAL ONE-RAMP CORNER INSTALLATION

See Notes 1 and 3

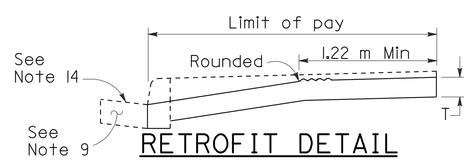

RETROFIT DETAIL

Existing curb and sidewalk

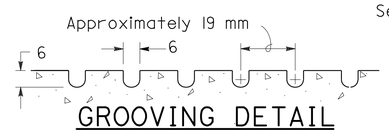

GROOVING DETAIL

STATE OF CALIFORNIA
DEPARTMENT OF TRANSPORTATION

CURB RAMP DETAILS

NO SCALE

ALL DIMENSIONS ARE IN MILLIMETERS UNLESS OTHERWISE SHOWN

RSP A88A DATED DECEMBER 16, 2005 SUPERSEDES STANDARD PLAN A88A DATED JULY 1, 2004-PAGE 117 OF THE STANDARD PLANS BOOK DATED JULY 2004.

REVISED STANDARD PLAN RSP A88A

2004 REVISED Std PLAN RSP A88A

12-16-05

DIST	COUNTY	ROUTE	KILOMETER POST TOTAL PROJECT	SHEET NO.	TOTAL SHEETS
07	LA	5	2.9/4.9	770	1082

REGISTERED CIVIL ENGINEER

November 17, 2006
PLANS APPROVAL DATE

REGISTERED PROFESSIONAL ENGINEER — William K. Farnbach — No. 49042 — Exp. 09-30-08 — CIVIL — STATE OF CALIFORNIA

The State of California or its officers or agents shall not be responsible for the accuracy or completeness of electronic copies of this plan sheet.

To get to the Caltrans web site, go to: http://www.dot.ca.gov

To accompany plans dated 6-21-10

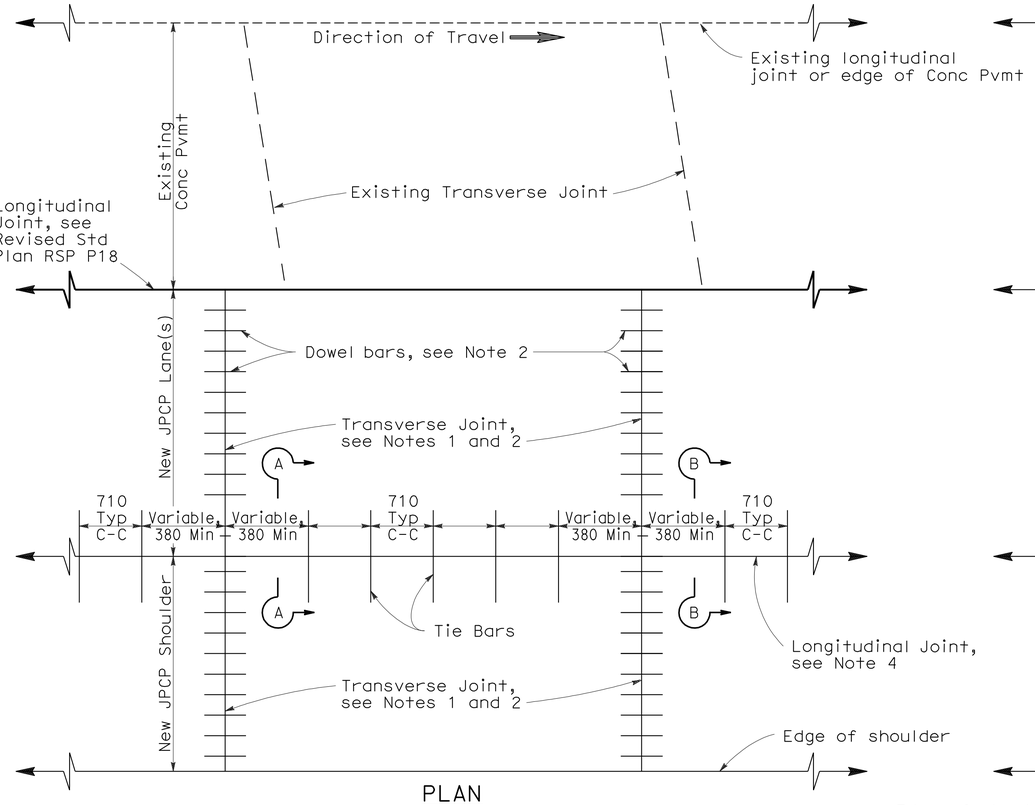

PLAN

LANE/SHOULDER ADDITION OR RECONSTRUCTION

See Notes 6 and 7

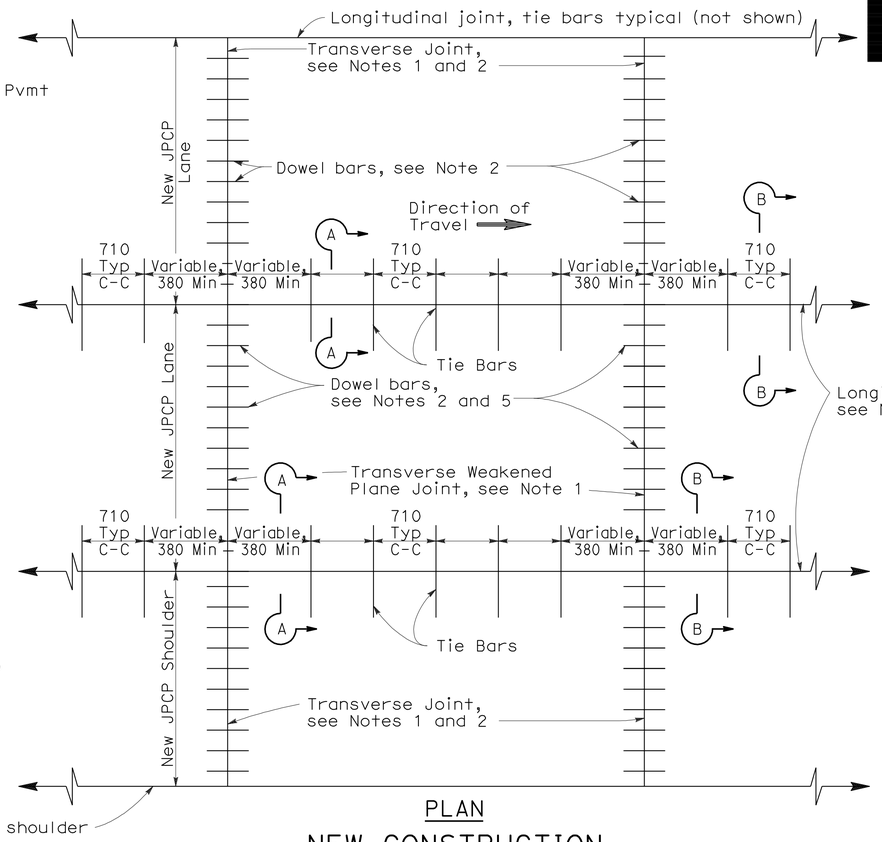

PLAN

NEW CONSTRUCTION

See Notes 6 and 7

NOTES

1. Transverse joints shall be constructed at right angles to the longitudinal pavement joints in new portland cement concrete pavement and spaced at successive repeated intervals of 3.66 m, 4.57 m, 3.96 m and 4.27 m.
2. For transverse joint and dowel bar details not shown, see Revised Standard Plan RSP P10.
3. Construct longitudinal weakened plane joints as shown in Section A-A when more than one lane or shoulder widths are placed at one time. If constructing one lane at a time, use longitudinal contact joint, as shown in Section B-B.
4. For additional longitudinal joint details, see Revised Standard Plan RSP P18.
5. If fresh concrete is placed adjacent to existing concrete, the top corner of the new hardened concrete does not need to be rounded to the 6 mm radius, as shown.
6. Joint spacing patterns do not apply to intersections.
7. Details can also apply to inside widening.

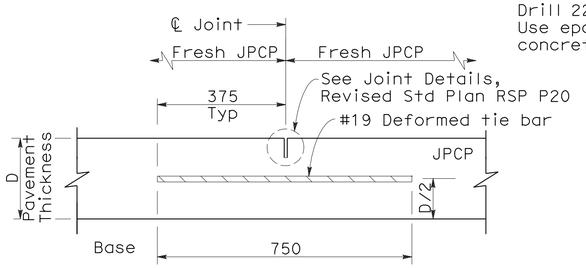

SECTION A-A

LONGITUDINAL WEAKENED PLANE JOINT

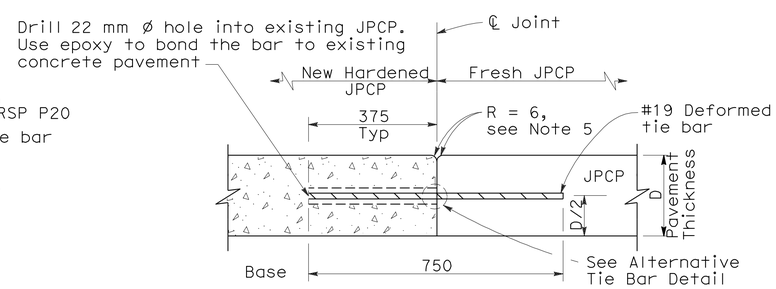

SECTION B-B

LONGITUDINAL CONTACT JOINT

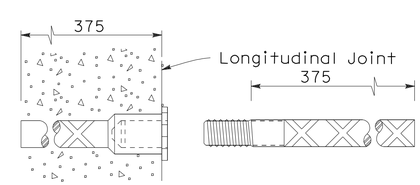

ALTERNATIVE TIE BAR DETAIL

(Dowel Splice Coupler)

TIE BAR DETAILS

STATE OF CALIFORNIA
DEPARTMENT OF TRANSPORTATION

JOINTED PLAIN CONCRETE PAVEMENT

NO SCALE

ALL DIMENSIONS ARE IN MILLIMETERS UNLESS OTHERWISE SHOWN

RSP P1 DATED NOVEMBER 17, 2006 SUPERSEDES STANDARD PLAN P1 DATED JULY 1, 2004-PAGE 121 OF THE STANDARD PLANS BOOK DATED JULY 2004.

REVISED STANDARD PLAN RSP P1

2004 REVISED Std PLAN RSP P1

10-24-06

DIST	COUNTY	ROUTE	KILOMETER POST TOTAL PROJECT	SHEET NO.	TOTAL SHEETS
07	LA	5	2.9/4.9	771	1082

Caltrans Metric

REGISTERED CIVIL ENGINEER

November 17, 2006
PLANS APPROVAL DATE

REGISTERED PROFESSIONAL ENGINEER — William K. Farnbach — No. 49042 — Exp. 09-30-08 — CIVIL — STATE OF CALIFORNIA

The State of California or its officers or agents shall not be responsible for the accuracy or completeness of electronic copies of this plan sheet.

To get to the Caltrans web site, go to: http://www.dot.ca.gov

To accompany plans dated 6-21-10

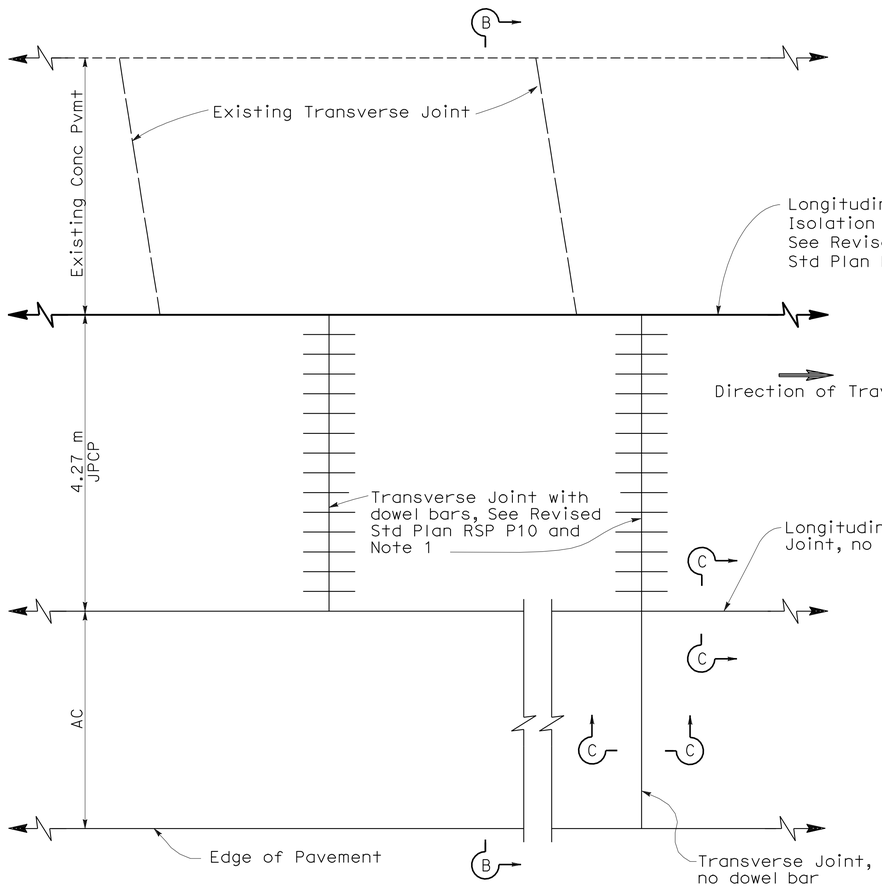

PLAN

LANE/SHOULDER ADDITION OR RECONSTRUCTION

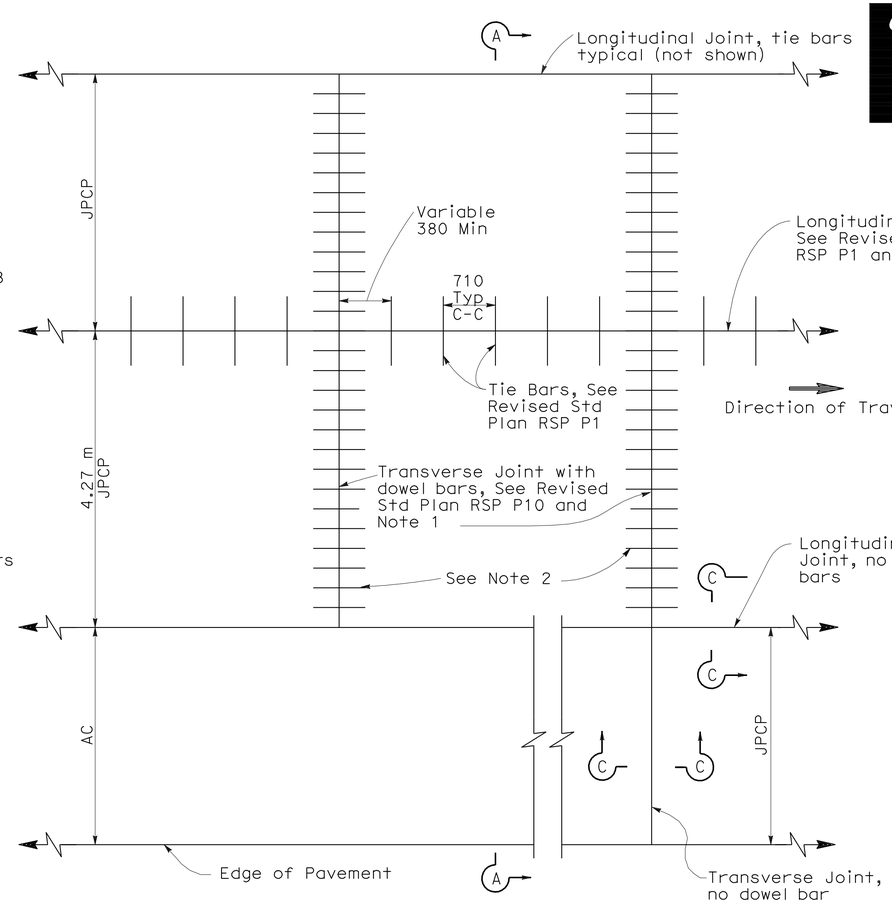

PLAN

NEW CONSTRUCTION

NOTES

1. Transverse joints shall be constructed at right angles to the longitudinal pavement joints in new JPCP pavement and spaced at successive repeated intervals of 3.66 m, 4.57 m, 3.96 m and 4.27 m.
2. For locations of rumble strips, see project plans. For details not shown, see Standard Plans A40A and A40B.
3. Joint spacing patterns do not apply to intersections.

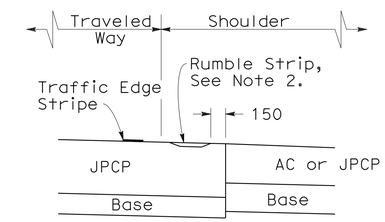

DETAIL "A"

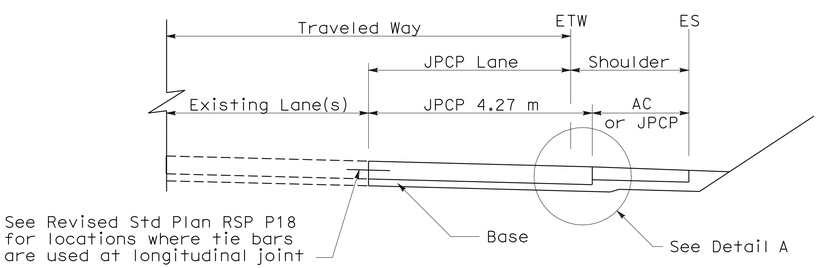

SECTION B-B

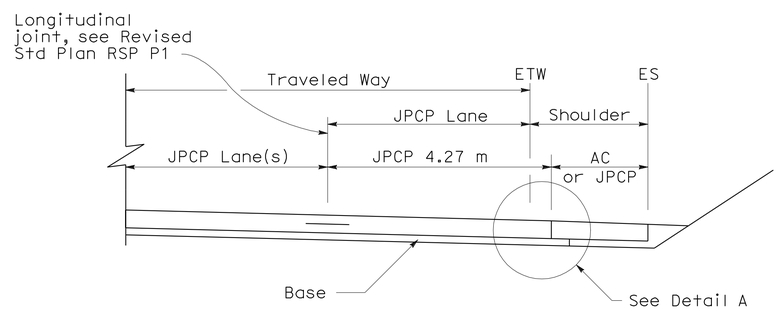

SECTION A-A

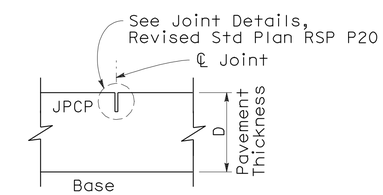

SECTION C-C

TRANSVERSE/LONGITUDINAL JOINT

(no dowel bars/tie bars)

STATE OF CALIFORNIA
DEPARTMENT OF TRANSPORTATION

JOINTED PLAIN CONCRETE PAVEMENT-WIDEN SLAB DETAILS

NO SCALE

ALL DIMENSIONS ARE IN MILLIMETERS UNLESS OTHERWISE SHOWN

RSP P2 DATED NOVEMBER 17, 2006 SUPERSEDES STANDARD PLAN P2 DATED JULY 1, 2004-PAGE 122 OF THE STANDARD PLANS BOOK DATED JULY 2004.

REVISED STANDARD PLAN RSP P2

2004 REVISED Std PLAN RSP P2

10-25-06

DIST	COUNTY	ROUTE	KILOMETER POST TOTAL PROJECT	SHEET NO.	TOTAL SHEETS
07	LA	5	2.9/4.9	772	1082

REGISTERED CIVIL ENGINEER

November 17, 2006
PLANS APPROVAL DATE

REGISTERED PROFESSIONAL ENGINEER William K. Farnbach No. 49042 Exp. 09-30-08 CIVIL STATE OF CALIFORNIA

The State of California or its officers or agents shall not be responsible for the accuracy or completeness of electronic copies of this plan sheet.

To get to the Caltrans web site, go to: http://www.dot.ca.gov

To accompany plans dated 6-21-10

Caltrans Metric

PLAN

HORIZONTAL OFFSET TOLERANCE

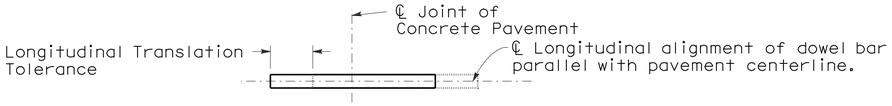

PLAN

LONGITUDINAL TRANSLATION TOLERANCE

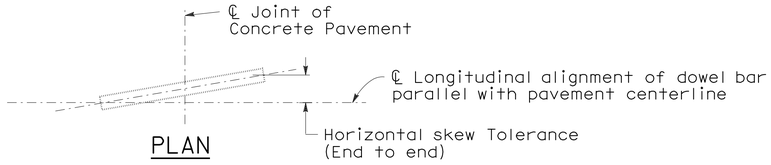

PLAN

HORIZONTAL SKEW TOLERANCE

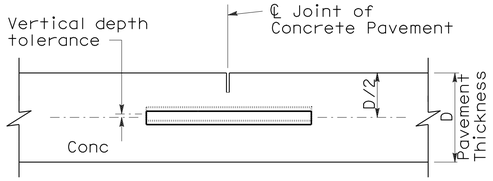

ELEVATION

VERTICAL DEPTH TOLERANCE

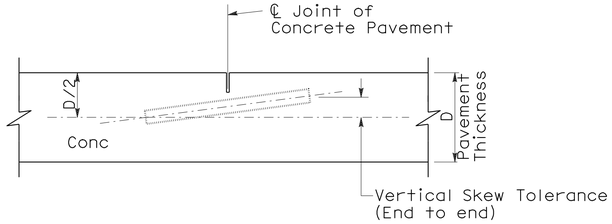

ELEVATION

VERTICAL SKEW TOLERANCE

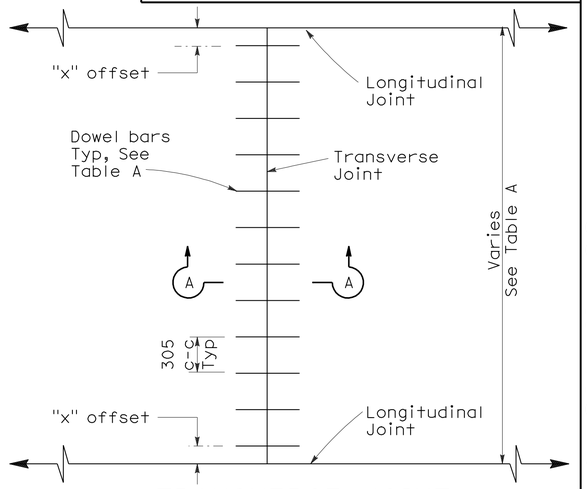

TRANSVERSE JOINT DOWEL BAR LAYOUT

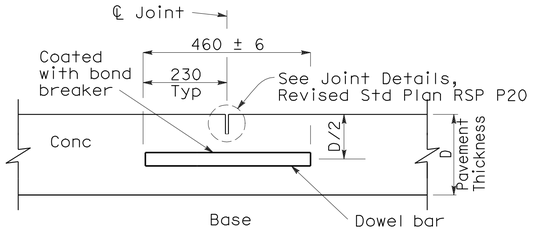

TRANSVERSE WEAKENED PLANE JOINT

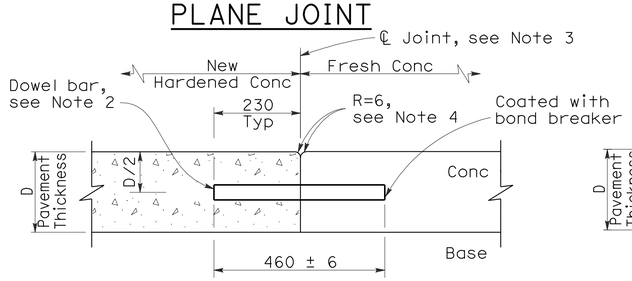

TRANSVERSE CONTACT JOINT DETAIL

SECTION A-A

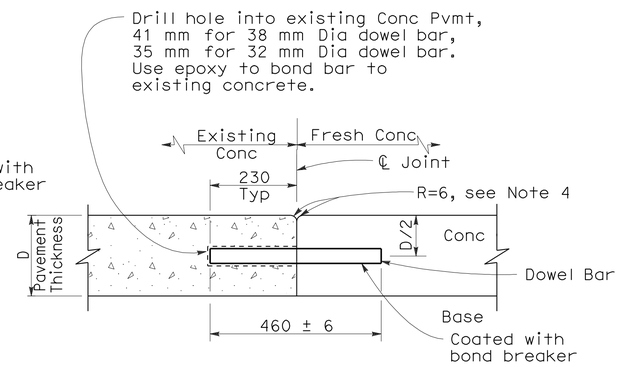

TRANSVERSE CONTACT JOINT FOR EXISTING CONCRETE PAVEMENT

(Drill and bond locations)

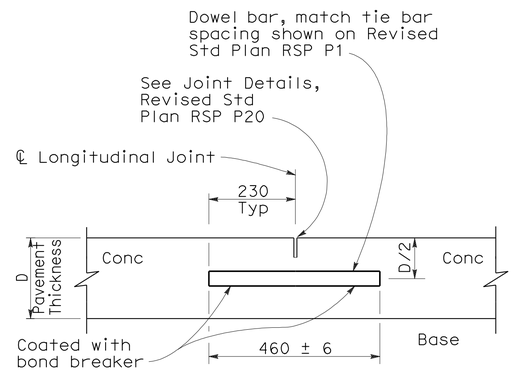

LONGITUDINAL WEAKENED PLANE JOINT WITH DOWEL BARS

(See Revised Std Plan RSP P18)

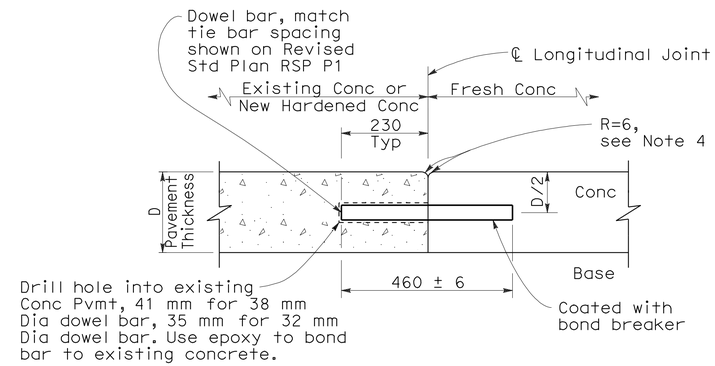

LONGITUDINAL CONTACT JOINT WITH DOWEL BARS

(See Revised Std Plan RSP P18)

TABLE A

Dowel Bar Transverse Spacing Table		
Width between Longitudinal Joints (m)	Offset Dimension "X" (mm)	Number of Dowels between Longitudinal Joints
4.27	152	14
3.66	152	12
3.60	125	12
3.05	152	10
3.00	125	10
2.44	152	8
2.4	130	8
1.52	150	5
1.50	140	5

See Note 3

NOTES

1. See Revised Standard Plan RSP P1 for typical dowel placement and locations.
2. 38 mm Dia smooth dowels are to be used with a pavement thickness, D, equal to or greater than 215 mm. For pavement thickness, D, less than 215 mm, use 32 mm Dia smooth dowels.
3. For widths not shown, see Project Plans.
4. If fresh concrete pavement is placed adjacent to existing concrete pavement, the top corner of the existing concrete pavement does not need to be rounded to the 6 mm radius, as shown.

STATE OF CALIFORNIA
DEPARTMENT OF TRANSPORTATION

CONCRETE PAVEMENT-DOWEL BAR DETAILS

NO SCALE

ALL DIMENSIONS ARE IN MILLIMETERS UNLESS OTHERWISE SHOWN

RSP P10 DATED NOVEMBER 17, 2006 SUPERSEDES STANDARD PLAN P10 DATED JULY 1, 2004-PAGE 125 OF THE STANDARD PLANS BOOK DATED JULY 2004.

REVISED STANDARD PLAN RSP P10

2004 REVISED Std PLAN RSP P10

10-25-06

DIST	COUNTY	ROUTE	KILOMETER POST TOTAL PROJECT	SHEET NO.	TOTAL SHEETS
07	LA	5	2.9/4.9	773	1082

Caltrans Metric

REGISTERED CIVIL ENGINEER

November 17, 2006
PLANS APPROVAL DATE

REGISTERED PROFESSIONAL ENGINEER William K. Farnbach No. 49042 Exp. 09-30-08 CIVIL STATE OF CALIFORNIA

The State of California or its officers or agents shall not be responsible for the accuracy or completeness of electronic copies of this plan sheet.

To get to the Caltrans web site, go to: http://www.dot.ca.gov

To accompany plans dated 6-21-10

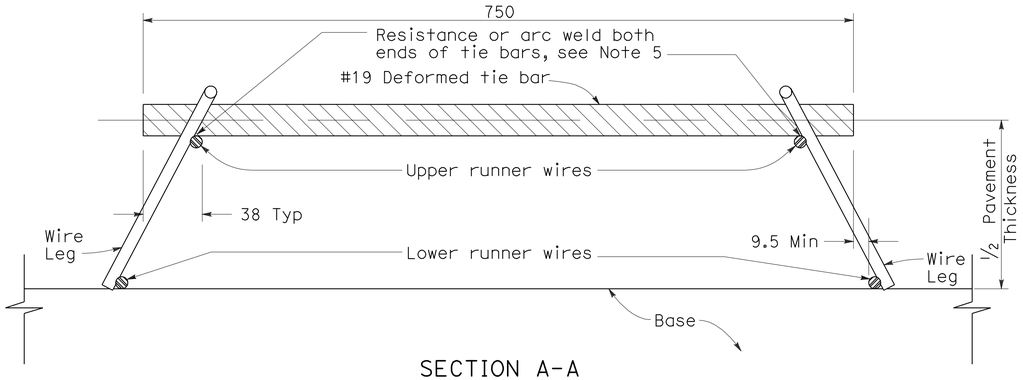

SECTION A-A

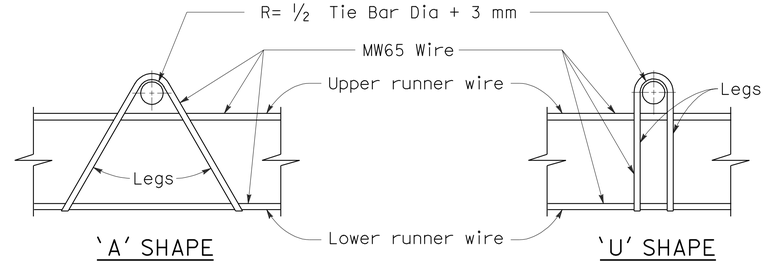

ASSEMBLY FRAME DETAILS

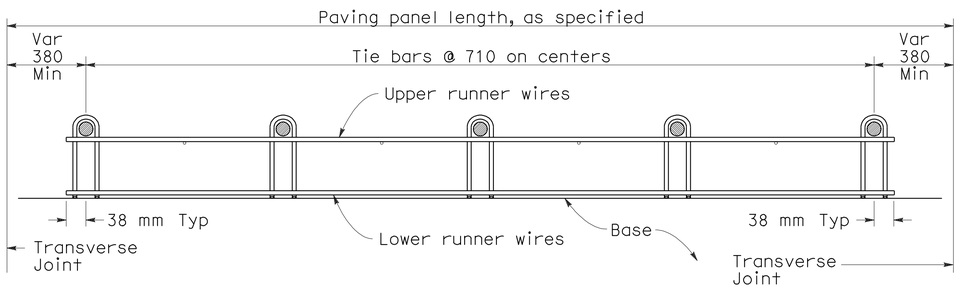

SECTION B-B

See Note 1

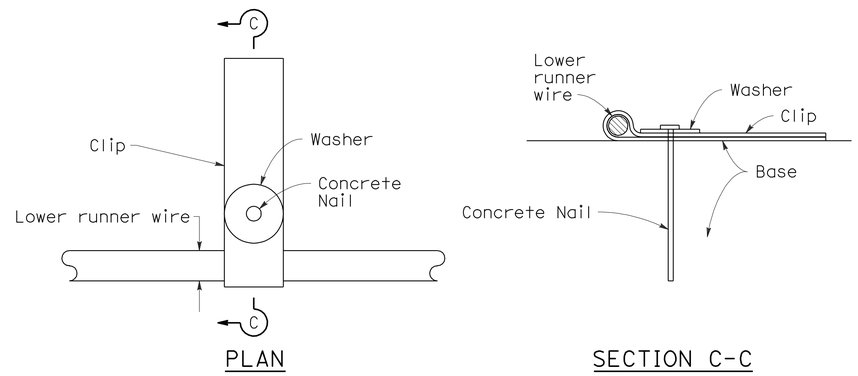

PLAN

SECTION C-C

FASTENER DETAIL

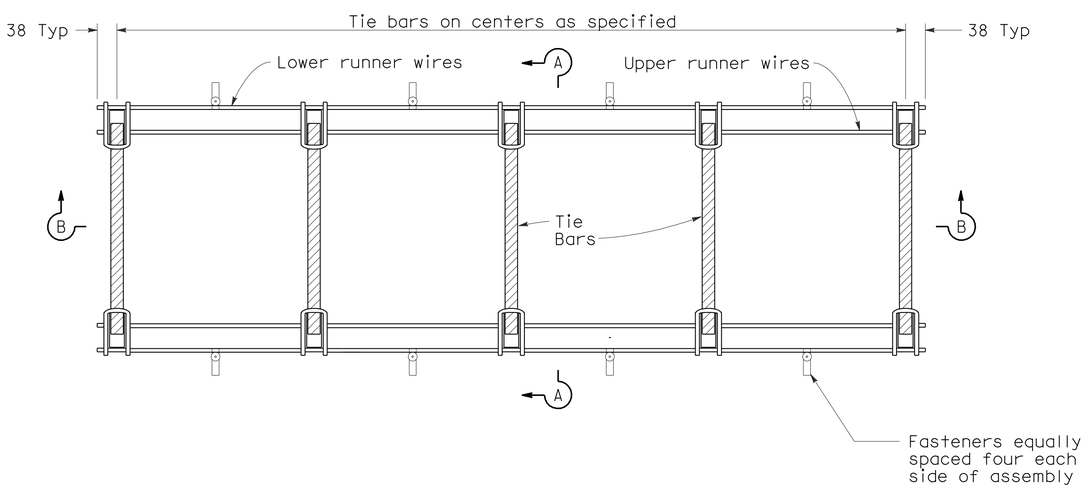

PLAN

TIE BAR BASKET

(TIE BARS AT LONGITUDINAL JOINT)
See Note 1

NOTES

1. 'U' frame shape assembly shown. 'U' frame shape or 'A' frame shape are acceptable.
2. Wire sizes shown are minimum required.
3. All wire intersections are to be resistance welded.
4. Not for use on undoweled skewed concrete pavement.
5. Weld may be at top or bottom of tie bar.

STATE OF CALIFORNIA
DEPARTMENT OF TRANSPORTATION

CONCRETE PAVEMENT-TIE BAR BASKET DETAILS

NO SCALE

ALL DIMENSIONS ARE IN MILLIMETERS UNLESS OTHERWISE SHOWN

RSP P17 DATED NOVEMBER 17, 2006 SUPERSEDES STANDARD PLAN P17 DATED JULY 1, 2004-PAGE 127 OF THE STANDARD PLANS BOOK DATED JULY 2004.

REVISED STANDARD PLAN RSP P17

2004 REVISED Std PLAN RSP P17

8-1-06

DIST	COUNTY	ROUTE	KILOMETER POST TOTAL PROJECT	SHEET NO.	TOTAL SHEETS
07	LA	5	2.9/4.9	774	1082

Caltrans Metric

Raymond Don Tsztoo
REGISTERED CIVIL ENGINEER

June 6, 2008
PLANS APPROVAL DATE

REGISTERED PROFESSIONAL ENGINEER Raymond Don Tsztoo No. C37332 Exp. 6-30-08 CIVIL STATE OF CALIFORNIA

The State of California or its officers or agents shall not be responsible for the accuracy or completeness of electronic copies of this plan sheet.

To get to the Caltrans web site, go to: http://www.dot.ca.gov

To accompany plans dated 6-21-10

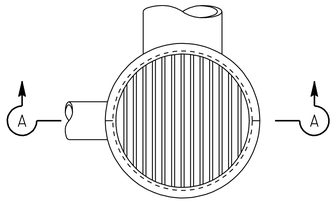

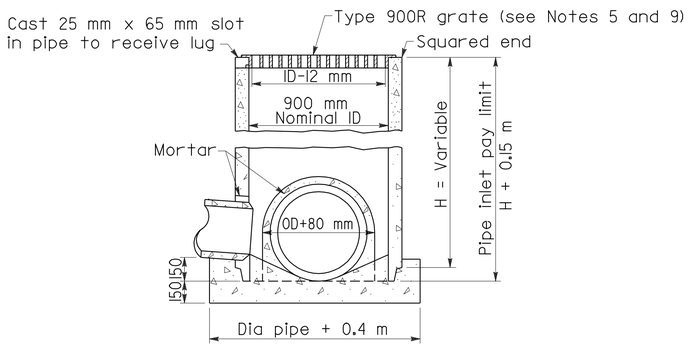

SECTION A-A

TYPE GCP

CONCRETE PIPE INLET WITH GRATE

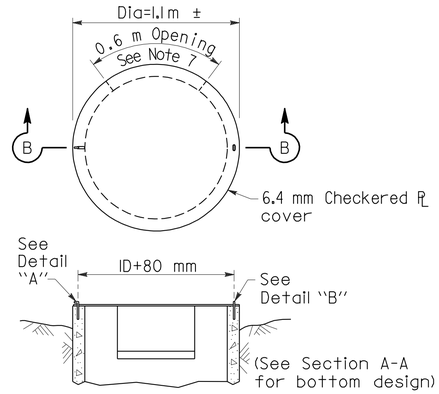

SECTION B-B

TYPE OCP or OCPI

CONCRETE PIPE INLET WITH STEEL COVER
(See Note 6)

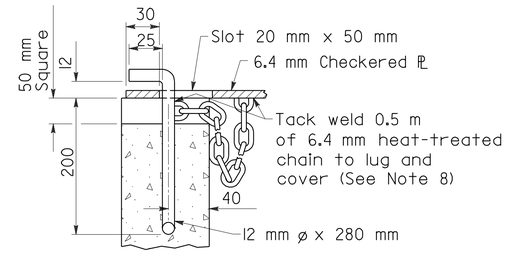

DETAIL "A"

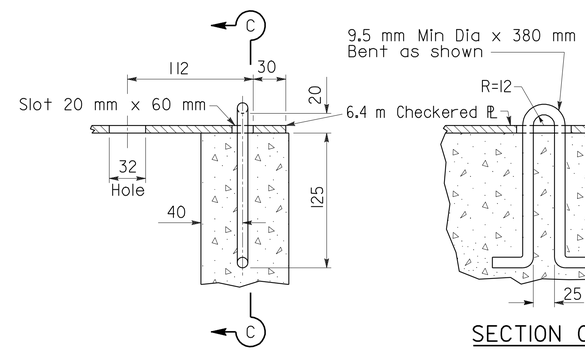

DETAIL "B"

SECTION C-C

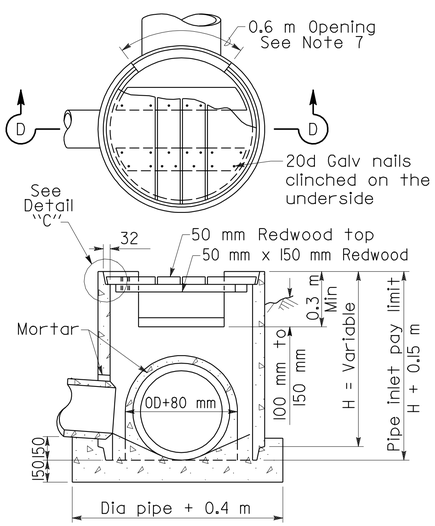

SECTION D-D

TYPE OCP or OCPI

CONCRETE PIPE INLET WITH REDWOOD COVER
(See Notes 6 and 10)

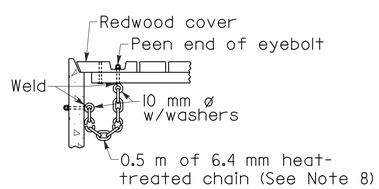

DETAIL "C"

NOTES

1. For details of steel pipe inlets, see Standard Plan D75A.
2. For details of ladder and steps and when ladder or steps are required, see Standard Plan D75C.
3. Inlet pipes shall not protrude into basin.
4. Except for inlets used for junction boxes, basin floors shall have minimum slope of 1:4 from all directions toward outlet pipe, and a wood trowel finish.
5. See Revised Standard Plan RSP D77A and Standard Plan D77B for Grate and Frame Details and Weights of Miscellaneous Iron and Steel.
6. Designation of Type OCPI pipe inlets on plans indicates trash racks are to be furnished and installed on all side openings. See Standard Plan D75C for Trash Rack details.
7. More than one side opening may be required. Location and number as ordered by the Engineer. Opening may be cast in pipe.
8. Chain to be provided when specified.
9. Place pipe so bars of grate will be parallel with main surface flow.
10. Redwood covers shall only be placed at locations designated on the plans.

STATE OF CALIFORNIA
DEPARTMENT OF TRANSPORTATION

PIPE INLETS

NO SCALE

ALL DIMENSIONS ARE IN MILLIMETERS UNLESS OTHERWISE SHOWN

RSP D75B DATED JUNE 6, 2008 SUPERSEDES STANDARD PLAN D75B
DATED July 1, 2004 - PAGE 153 OF THE STANDARD PLANS BOOK DATED July 2004.

REVISED STANDARD PLAN RSP D75B

2004 REVISED Std PLAN RSP D75B

05-20-08

DIST	COUNTY	ROUTE	KILOMETER POST TOTAL PROJECT	SHEET NO.	TOTAL SHEETS
07	LA	5	2.9/4.9	775	1082

Caltrans Metric

Raymond Don Tsztoo
REGISTERED CIVIL ENGINEER

January 18, 2008
PLANS APPROVAL DATE

REGISTERED PROFESSIONAL ENGINEER Raymond Don Tsztoo No. C37332 Exp. 6-30-08 CIVIL STATE OF CALIFORNIA

The State of California or its officers or agents shall not be responsible for the accuracy or completeness of electronic copies of this plan sheet.

To get to the Caltrans web site, go to: http://www.dot.ca.gov

To accompany plans dated 6-21-10

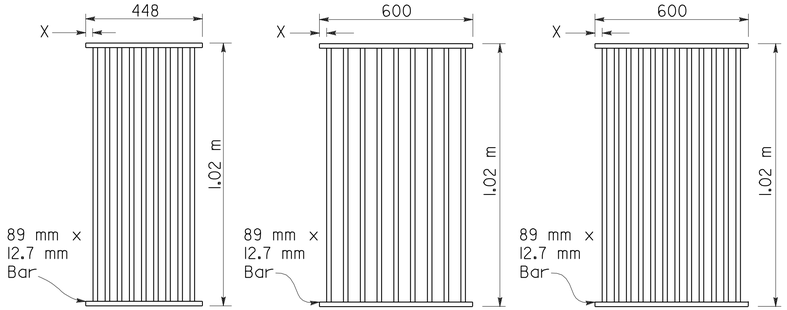

TYPE 450-9

35 mm Clear spacing. Use within the roadbed on highways where bicycles and pedestrians are excluded.

TYPE 600-9

51 mm Clear spacing. Use in locations off the roadbed on all types of highways.

TYPE 600-12

35 mm Clear spacing. Use within the roadbed on highways where bicycles and pedestrians are excluded.

RECTANGULAR GRATE DETAILS

(See table below)

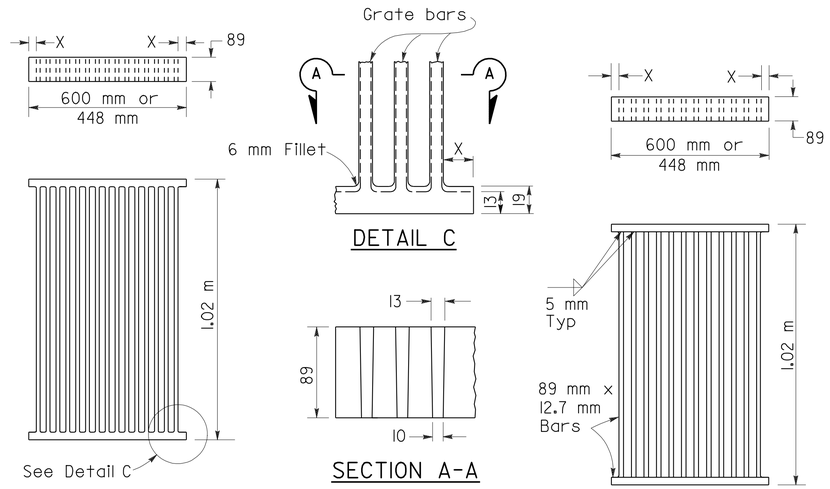

ALTERNATIVE CAST NODULAR IRON GRATE OR CAST STEEL GRATE

ALTERNATIVE WELDED GRATE

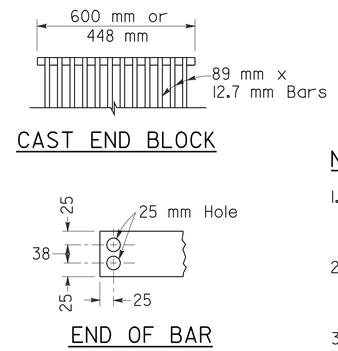

CAST END BLOCK

END OF BAR

ALTERNATIVE CAST NODULAR IRON OR CAST STEEL END BLOCK GRATE

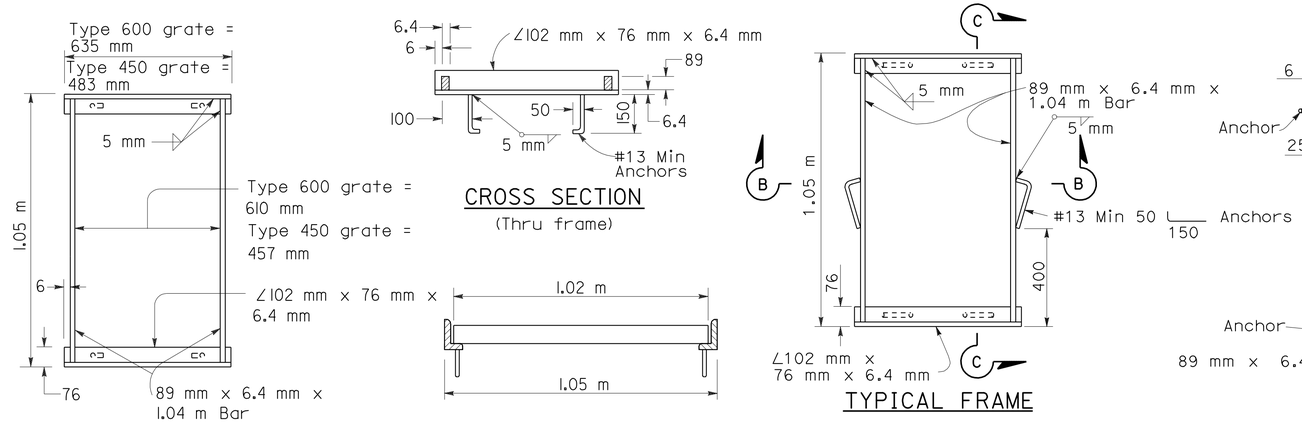

RECTANGULAR FRAME DETAILS

(For all rectangular grates)

ALTERNATIVE ANCHOR FOR RECTANGULAR FRAME

(For details not shown, See Rectangular Frame Details)

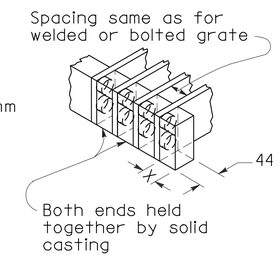

NOTES

1. Grate type numbers refer to approximate width of grate in millimeters and number of bars, respectively.
2. Contractor has the option of using cast nodular iron, cast steel, welded, bolted, or cast end block grate.
3. See Special Provisions for requirements pertaining to galvanizing or asphalt dipping of grates and frames.
4. Rounded top of bars optional on all grates.
5. Pipe inlets with a grate shall be placed so that bars parallel direction of principle surface flow.
6. Full penetration butt welds may be substituted for the fillet welds on all anchors.
7. Standard square, hexagon, round or equivalent headed anchors may be substituted for the right angle hooks on the anchors shown on this plan.
8. Grate and frame weights are based on welded grates (weights of face angles, steps, protection bars, etc. are not included).

GRATE BAR SPACING TABLE

TYPE	No. OF BARS	CLEAR BAR SPACING (mm)	X (mm)
450-9	9	35	27
600-9	9	51	40
600-12	12	35	32

INLET TYPE	COVER TYPE	MASS (kg)
OS	PLATE	79
OL-2.1	PLATE	77
OL-3.0	PLATE	77
OL-4.3	PLATE	77
OL-6.4	PLATE	77
OCP	PLATE	51
OCPI	PLATE	51
OCPI	REDWOOD	19
OMP	PLATE	80
OMPI	PLATE	80

INLET TYPE	GRATE TYPE	No. OF GRATES	MASS (kg)
GDO	600-12	2	288
GOL-2.1	600-12	1	148
GOL-3.0	600-12	1	148
GO,G1,G2,G3,G4(TYPE 600)	600-9	1	119
	600-12	1	148
G4(TYPE 450),G5,G6	450-9	1	113
GT-1	450-9	2	226
GT-2	450-9	2	226
GT-3	600-12	2	296
GT-4	600-12	2	296
TRASH RACK			10

BASIS FOR MISC IRON & STEEL FINAL PAY MASSES FOR DRAINAGE INLETS

(See General Notes, No. 8)

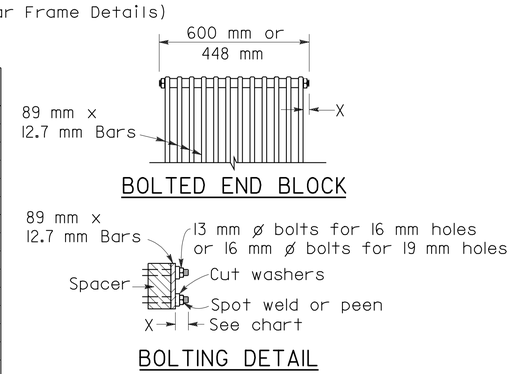

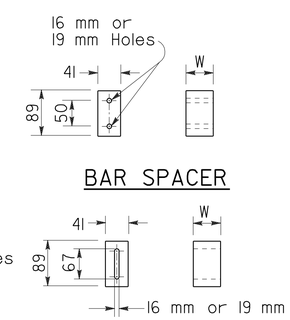

ALTERNATIVE BOLTED GRATE

STATE OF CALIFORNIA
DEPARTMENT OF TRANSPORTATION

GRATE DETAILS

NO SCALE

ALL DIMENSIONS ARE IN MILLIMETERS UNLESS OTHERWISE SHOWN

RSP D77A DATED JANUARY 18, 2008 SUPERSEDES STANDARD PLAN D77A DATED JULY 1, 2004 - PAGE 155 OF THE STANDARD PLANS BOOK DATED JULY 2004.

REVISED STANDARD PLAN RSP D77A

2004 REVISED Std PLAN RSP D77A

To accompany plans dated 6-21-10

Caltrans Metric

DIST	COUNTY	ROUTE	KILOMETER POST TOTAL PROJECT	SHEET NO.	TOTAL SHEETS
07	LA	5	2.9/4.9	776	1082

Raymond Don Tsztoo
REGISTERED CIVIL ENGINEER

June 6, 2008
PLANS APPROVAL DATE

REGISTERED PROFESSIONAL ENGINEER Raymond Don Tsztoo No. C37332 Exp. 6-30-08 STATE OF CALIFORNIA

The State of California or its officers or agents shall not be responsible for the accuracy or completeness of electronic copies of this plan sheet.

To get to the Caltrans web site, go to: http://www.dot.ca.gov

ANNULAR AND HELICAL PROFILE

COUPLING TYPE	PIPE CORRUGATION (mm)	PIPE SIZE (mm)	W OR A (mm)	PIPE WALL THICKNESS CSP (mm)	PIPE WALL THICKNESS CAP (mm)	BAND THICKNESS CSP (mm)	BAND THICKNESS CAP (mm)	BAR AND STRAP (CSP ONLY) STRAP THICKNESS (mm)	BOLTS (mm ø)	BAR Dia (mm)	BAR YIELD STRENGTH (MPa)	ANGLE DIMENSIONS CSP (mm)	ANGLE DIMENSIONS CAP (mm)	BOLTS (No.-mm ø) CSP	BOLTS (No.-mm ø) CAP	RIVETS ANGLE TO BAND CSP	RIVETS ANGLE TO BAND CAP	SPOT WELDS ANGLE TO BAND CSP
TWO PIECE INTEGRAL FLANGE	38 x 6.5	150 - 250	178	1.32 - 2.01	1.22 - 1.52	1.32	1.52							2-10	2-10			
		300 - 450	178	1.32 - 2.01		1.63								2-13				
	68 x 13	300 - 600	178	1.32 - 2.01	1.52 - 2.67	1.63	1.52							2-13	2-13			
UNIVERSAL	68 x 13	THROUGH 900	305	1.32 - 3.51	1.52 - 3.43	1.32	1.52					51 x 51 x 4.8	51 x 51 x 4.8	3-13	3-13	3-9.5 mm	3-9.5 mm	3-15 mm
		1050 - 1500	305	1.32 - 4.27	1.91 - 4.17	1.32	1.52					51 x 51 x 4.8	51 x 51 x 4.8	3-13	3-13	3-9.5 mm	3-9.5 mm	5-15 mm
		THROUGH 1800	305	1.32 - 4.27	4.17	1.32	2.67	2.01	13	22	220	51 x 51 x 4.8	51 x 51 x 4.8	3-13	3-13	3-9.5 mm	3-9.5 mm	5-15 mm
		1950 - 2100	413	4.27		2.01		DOUBLE 2.01	13	22	220							
ANNULAR	68 x 13	THROUGH 900	178	1.63 - 3.51	1.52 - 3.43	1.32	1.52	2.01	13	22	220	51 x 51 x 4.8	51 x 51 x 4.8	2-13	2-13	3-9.5 mm	3-9.5 mm	3-15 mm
		1050 - 1800	305	1.63 - 4.27	1.91 - 4.17	1.32	2.67	2.01	13	22	220	51 x 51 x 4.8	51 x 51 x 4.8	3-13	3-13	3-9.5 mm	3-9.5 mm	5-15 mm
		1950 - 2100	305	4.27		2.01		2.77	13	22	310	51 x 51 x 4.8		3-13		3-9.5 mm		5-15 mm
	75 x 25	1200 - 2250	355	1.63 - 2.77		1.32		2.01	13	22	220	51 x 51 x 4.8		3-13		3-9.5 mm		5-15 mm
		2400 - 3000	355	2.01 - 2.77		1.32		2.77	13	22	310	51 x 51 x 4.8		3-13		4-9.5 mm		
		1050 - 2700	355		1.52 - 3.43		1.52						51 x 51 x 4.8		3-13		3-9.5 mm	
HELICAL	68 x 13	THROUGH 900	305	1.32 - 3.51	1.52 - 3.43	1.32	1.52	2.01	13	22	220	51 x 51 x 4.8	51 x 51 x 4.8	3-13	3-13	3-9.5 mm	3-9.5 mm	3-15 mm
		1050 - 1800	305	1.32 - 4.27	1.91 - 4.17	1.32	1.52	2.01	13	22	220	51 x 51 x 4.8	51 x 51 x 4.8	3-13	3-13	3-9.5 mm	3-9.5 mm	5-15 mm
		1950 - 2100	305	4.27		2.01		2.77	13	22	310	51 x 51 x 4.8		3-13		3-9.5 mm		5-15 mm
	75 x 25	1200 - 2250	355	1.63 - 2.77		1.32		2.01	13	22	220	51 x 51 x 4.8		3-13		3-9.5 mm		5-15 mm
		2400 - 3000	355	2.01 - 2.77		1.32		2.77	13	22	310	51 x 51 x 4.8		3-13		4-9.5 mm		
		1050 - 2700	355		1.52 - 3.43		1.52						51 x 51 x 4.8		3-13		3-9.5 mm	
HUGGER	68 x 13 REROLLED END	300 - 1350	100	1.32 - 2.77		1.32						64 x 38 x 4.8	64 x 38 x 4.8	1-13				3-15 mm
		1500 - 1650	100	2.77		1.63						64 x 38 x 4.8	64 x 38 x 4.8	1-13				3-15 mm
		900 - 1200	100	3.51		1.63						64 x 38 x 4.8	64 x 38 x 4.8	1-13				3-15 mm
		THROUGH 1800	267	1.32 - 4.27		1.32		2.01	13	22	220							
		1950 - 2100	267	4.27		2.01		2.77	13	22	310							
	75 x 25 REROLLED END	1200 - 2250	267	1.63 - 2.77		1.32		2.01	13	22	220							
		2400 - 3000	267	2.01 - 2.77		1.32		2.77	13	22	310							
	125 x 25 REROLLED END	1200 - 1650	190	1.63 - 2.77		1.63		2.01	13	22	220	64 x 38 x 4.8	64 x 38 x 4.8	1-13				3-15 mm
		1800 - 2250	190	1.63 - 2.01		1.63		2.01	13	22	220	64 x 38 x 4.8	64 x 38 x 4.8	1-13				3-15 mm
		1200 - 2250	190	1.63 - 3.51		1.63		2.01	13	22	220							
		1200 - 3000	305 SEE	1.63 - 2.77		1.63		2.01	13	22	220							
		1200 - 2100	305 NOTE	3.51		1.63		2.01	13	22	220							
		2250 - 3000	305 11	3.51		1.63		DOUBLE 2.01	13	22	220							

SPIRAL RIB PROFILE

COUPLING TYPE	PIPE CORRUGATION (mm)	PIPE SIZE (mm)	W (mm)	PIPE WALL THICKNESS SSRP (mm)	PIPE WALL THICKNESS ASRP (mm)	BAND THICKNESS SSRP (mm)	BAND THICKNESS ASRP (mm)	BAR AND STRAP (SSRP ONLY) STRAP THICKNESS (mm)	BOLTS (mm ø)	BAR Dia (mm)	BAR YIELD STRENGTH (MPa)	ANGLE DIMENSIONS SSRP (mm)	ANGLE DIMENSIONS ASRP (mm)	BOLTS (No.- mm ø) SSRP	BOLTS (No.- mm ø) ASRP	RIVETS ANGLE TO BAND SSRP	RIVETS ANGLE TO BAND ASRP	SPOT WELDS ANGLE TO BAND SSRP
ANNULAR	68 x 13 * REROLLED END	600 - 900	305	1.63 - 2.77	1.52 - 2.67	1.32	1.52	2.01	13	22	220	51 x 51 x 4.8	51 x 51 x 4.8	3-13	3-13	3-9.5 mm	3-9.5 mm	5-15 mm
		1050 - 1500	305	1.63 - 2.77	1.91 - 2.67	1.32	2.67	2.01	13	22	220	51 x 51 x 4.8	51 x 51 x 4.8	3-13	3-13	3-9.5 mm	3-9.5 mm	5-15 mm
		1650 - 1800	305	1.63 - 2.77		1.32		2.01	13	22	220	51 x 51 x 4.8	51 x 51 x 4.8	3-13	3-13	3-9.5 mm	3-9.5 mm	5-15 mm
		1950 - 2900	305	2.01 - 2.77		2.01		2.77	13	22	310	51 x 51 x 4.8	51 x 51 x 4.8	3-13	3-13	3-9.5 mm	3-9.5 mm	5-15 mm
HUGGER	68 x 13 * REROLLED END	600 - 1800	267	1.63 - 2.77		1.32		2.01	13	22	220							
		1950 - 2100	267	2.77		2.01		2.77	13	22	310							

* See Note 14.

14. All profiles of Spiral Rib Pipe (19 mm x 19 mm ribs at 191 mm pitch and 19 mm x 25 mm ribs at 292 mm pitch in both steel and aluminum and 19 mm x 25 mm ribs at 216 mm pitch in steel only) shall be manufactured with rerolled ends. Corrugation profile of the rerolled ends shall be 68 mm x 13 mm annual corrugations with a minimum of two full corrugations at each end.

ALL DIMENSIONS ARE IN MILLIMETERS UNLESS OTHERWISE SHOWN

NOTES

1. All ferrous metal coupling band connection hardware shall be galvanized or electro-plated in accordance with the Standard Specifications.
2. For helically corrugated coupling bands, the connection angles may be oriented parallel to the pipe axis, provided connecting holes are slotted lengthwise sufficiently to allow adjustment for the helix angle.
3. Tension strap may be connected to band with either spot welds or fillet welds that develop minimum required strength of strap.
4. Use 32 mm gage line dimension on attached angle leg for rivets and spot welds.
5. Band thickness shall not be less than:
   a. 3 standard thicknesses lighter than the thickness of the pipe for Corrugated Steel Pipe.
   b. 2 standard thicknesses lighter than the thickness of the pipe and in no case lighter than 1.5 mm for Corrugated Aluminum Pipe.
6. Dimensions, thicknesses and strengths shown are minimum.
7. For pipe arches use same width band as for round pipe of equal periphery.
8. Fillet welds of equivalent strenght may be substituted for spot welds or rivets.
9. Spot welds shall develop minimum required strength of strap.
10. Pipe with rerolled ends having at least two 68 mm x 13 mm annular corrugations at each end with or without an upturned flange may be connected with any of the annular coupling bands shown for pipe of the same diameter and wall thickness and having 68 mm x 13 mm corrugations.
11. In the case of H-305 huggerbands, two piece bands are required for diameters through 2400 mm and three piece bands are required for diameters 2550 mm through 3000 mm.
12. Two piece bands are required for pipes greater than 1050 mm diameter.
13. The 57 mm x 51 mm x 2.8 mm thick galvanized die-formed angle connector may be used in lieu of the 51 mm x 51 mm 4.8 mm angle connector for standard joints only on pipes through 1800 mm diameter.

STATE OF CALIFORNIA
DEPARTMENT OF TRANSPORTATION

CORRUGATED METAL PIPE COUPLING DETAILS No. 5 STANDARD JOINT

NO SCALE

RSP D97E DATED JUNE 6, 2008 SUPERSEDES STANDARD PLAN D97E DATED July 1, 2004 - PAGE 187 OF THE STANDARD PLANS BOOK DATED July 2004.

REVISED STANDARD PLAN RSP D97E

2004 REVISED Std PLAN RSP D97E

05-19-08

To accompany plans dated 6-21-10

Caltrans Metric

DIST	COUNTY	ROUTE	KILOMETER POST TOTAL PROJECT	SHEET NO.	TOTAL SHEETS
07	LA	5	2.9/4.9	777	1082

Raymond Don Tsztoo
REGISTERED CIVIL ENGINEER

June 6, 2008
PLANS APPROVAL DATE

REGISTERED PROFESSIONAL ENGINEER Raymond Don Tsztoo No. C37332 Exp. 6-30-08 STATE OF CALIFORNIA

The State of California or its officers or agents shall not be responsible for the accuracy or completeness of electronic copies of this plan sheet.

To get to the Caltrans web site, go to: http://www.dot.ca.gov

ANNULAR AND HELICAL PROFILE

COUPLING TYPE	PIPE CORRUGATION (mm)	PIPE SIZE (mm)	W OR A (mm)	PIPE WALL THICKNESS CSP (mm)	PIPE WALL THICKNESS CAP (mm)	BAND THICKNESS CSP (mm)	BAND THICKNESS CAP (mm)	BAR AND STRAP (CSP ONLY) STRAP THICKNESS (mm)	BAR AND STRAP (CSP ONLY) BOLTS (mm ø)	BAR AND STRAP (CSP ONLY) BAR Dia (mm)	BAR AND STRAP (CSP ONLY) BAR YIELD STRENGTH (MPa)	ANGLE DIMENSIONS CSP (mm)	ANGLE DIMENSIONS CAP (mm)	ANGLE BOLTS (No. - mm ø) CSP	ANGLE BOLTS (No. - mm ø) CAP	ANGLE RIVETS ANGLE TO BAND CSP	ANGLE RIVETS ANGLE TO BAND CAP	ANGLE SPOT WELDS ANGLE TO BAND CSP
TWO PIECE INTEGRAL FLANGE	38 x 6.5	150-250	178	1.63-2.01	1.52	1.63	1.52							2-10	2-10			
	68 x 13	300-600	305		1.52-2.67		1.52								3-13			
UNIVERSAL	68 x 13	THROUGH 900	305	1.63-3.51	1.52-3.43	1.63	1.52	2.01	13	22	220	51 x 51 x 4.8	51 x 51 x 4.8	3-13	3-13	3-9.5 mm	3-9.5 mm	5-15 mm
		1050-1500	413	1.63-4.27	1.52-4.17	1.63	1.52	DOUBLE 2.01	13	22	220	51 x 51 x 6.4	51 x 51 x 6.4	4-13	4-13	5-9.5 mm	5-9.5 mm	
ANNULAR	68 x 13	THROUGH 900	305	1.63-3.51	1.52-3.43	1.63	1.52					51 x 51 x 4.8	51 x 51 x 4.8	3-13	3-13	3-9.5 mm	3-9.5 mm	5-15 mm
		1050-1500	305	1.63-2.01		1.63						51 x 51 x 4.8		3-13		3-9.5 mm		5-15 mm
		1050-1500	305	2.77-4.27	3.43-4.17	1.63	1.91					51 x 51 x 6.4	51 x 51 x 6.4	3-13	3-13	5-9.5 mm	5-9.5 mm	
		1650-1800	610		4.17		2.67						51 x 51 x 6.4		5-13		5-13 mm	
		1650-2100	610	2.77-4.27		1.63						51 x 51 x 6.4		5-13		7-9.5 mm		
		1050-1350	305		1.52-2.67		1.52						51 x 51 x 4.8		3-13		3-9.5 mm	
	75 x 25	1200-1500	355	1.63-2.01		1.63						51 x 51 x 4.8		3-13		3-9.5 mm		5-15 mm
		1200-1500	355	2.77		1.63						51 x 51 x 4.8		3-13		5-9.5 mm		
		1650-3000	635	1.63-2.77		1.63						51 x 51 x 4.8		5-13		9-9.5 mm		
		1050-1500	355		1.52-2.67		1.52						51 x 51 x 4.8		3-13		5-9.5 mm	
		1050-1500	355		3.43		1.91						51 x 51 x 6.4		3-13		5-9.5 mm	
		1650-2400	635		1.52-3.43		1.52						51 x 51 x 6.4		5-13		7-9.5 mm	
		2400-2700	635		3.43		1.91						51 x 51 x 6.4		5-13		7-9.5 mm	
HELICAL	68 x 13	THROUGH 900	305	1.63-3.51	1.52-3.43	1.63	1.52					51 x 51 x 4.8	51 x 51 x 4.8	3-13	3-13	3-9.5 mm	3-9.5 mm	5-15 mm
		1050-1350	305		1.52-2.67		1.52						51 x 51 x 4.8		3-13		3-9.5 mm	
		1050-1500	305	1.63-2.01		1.63						51 x 51 x 4.8		3-13		3-9.5 mm		5-15 mm
		1050-1500	305	2.77-4.27	3.43-4.17	1.63	1.91					51 x 51 x 6.4	51 x 51 x 6.4	3-13	3-13	5-9.5 mm	5-9.5 mm	
		1650-2100	610	2.77-4.27		1.63						51 x 51 x 6.4		5-13		7-9.5 mm		
		1650-1800	610		4.17		2.67						51 x 51 x 6.4		5-13		5-9.5 mm	
	75 x 25	1200-1500	355	1.63-2.01		1.63						51 x 51 x 4.8		3-13		3-9.5 mm		5-15 mm
		1200-1500	355	2.77		1.63						51 x 51 x 4.8		3-13		5-9.5 mm		
		1650-3000	635	1.63-2.77		1.63						51 x 51 x 4.8		5-13		9-9.5 mm		
		1050-1500	355		1.52-2.67		1.52						51 x 51 x 4.8		3-13		5-9.5 mm	
		1050-1500	355		3.43		1.91						51 x 51 x 6.4		3-13		5-9.5 mm	
		1650-2400	635		1.52-3.43		1.52						51 x 51 x 6.4		5-13		7-9.5 mm	
		2400-2700	635		3.43		1.91						51 x 51 x 6.4		5-13		7-9.5 mm	
HUGGER	68 x 13 REROLLED END	THROUGH 1200	267	2.77		1.63		2.01	13	22	220							
		1350 - 1650	267	2.77		1.63		DOUBLE 2.01	13	22	220							
		THROUGH 1350	267	1.63 - 2.01		1.63		2.01	13	22	220							
		THROUGH 1500	267	3.51		2.01		DOUBLE 2.01	13	22	220							
		1650 - 1800	267	3.51		2.77		DOUBLE 2.01	13	22	220							
		THROUGH 1800	267	4.27		2.77		DOUBLE 2.77	13	22	310							
	75 x 25 REROLLED END	1200 - 2100	267	2.77		2.01		DOUBLE 2.01	13	22	220							
		1200 - 2250	267	1.63 - 2.01		1.63		DOUBLE 2.01	13	22	220							
		2400 - 2550	267	2.01		2.01		DOUBLE 2.01	13	22	220							
		2250 - 3000	267	2.77		2.77		DOUBLE 2.77	13	22	310							

SPIRAL RIB PROFILE

COUPLING TYPE	PIPE CORRUGATION (mm)	PIPE SIZE (mm)	W (mm)	PIPE WALL THICKNESS SSRP (mm)	PIPE WALL THICKNESS ASRP (mm)	BAND THICKNESS SSRP (mm)	BAND THICKNESS ASRP (mm)	BAR AND STRAP (SSRP ONLY) STRAP THICKNESS (mm)	BAR AND STRAP (SSRP ONLY) BOLTS (mm ø)	BAR AND STRAP (SSRP ONLY) BAR Dia (mm)	BAR AND STRAP (SSRP ONLY) BAR YIELD STRENGTH (MPa)	ANGLE DIMENSIONS SSRP (mm)	ANGLE DIMENSIONS ASRP (mm)	ANGLE BOLTS (No.- mm ø) SSRP	ANGLE BOLTS (No.- mm ø) ASRP	ANGLE RIVETS ANGLE TO BAND SSRP	ANGLE RIVETS ANGLE TO BAND ASRP	ANGLE SPOT WELDS ANGLE TO BAND SSRP
ANNULAR	68 x 13 ✳ REROLLED END	600 - 900	305	1.63 - 2.77	1.52 - 2.67	1.63	1.52	2.01	13	22	220	51 x 51 x 4.8	51 x 51 x 4.8	3-13	3-13	3-9.5 mm	3-9.5 mm	5-15 mm
		1050 - 1500	305	1.63 - 2.01	1.90 - 2.67	1.63	1.90	2.01	13	22	220	51 x 51 x 4.8	51 x 51 x 4.8	3-13	3-13	3-9.5 mm	3-9.5 mm	5-15 mm
		1050 - 1500	305	2.77		1.63		2.01	13	22	220	51 x 51 x 6.4		3-13		5-9.5 mm		
		1650 - 2100	610	2.77		1.63		2.01	13	22	220	51 x 51 x 6.4		5-13		7-9.5 mm		
HUGGER	68 x 13 ✳ REROLLED END	600 - 1350	267	1.63 - 2.01		1.63		2.01	13	22	220							
		600 - 1200	267	2.77		1.63		2.01	13	22	220							
		1350 - 1650	267	2.77		1.63		Double 2.01	13	22	220							

✳ See Note 13.

13. All profiles of Spiral Rib Pipe (19 mm x 19 mm ribs at 191 mm pitch and 19 mm x 25 mm ribs at 292 mm pitch in both steel and aluminum and 19 mm x 25 mm ribs at 216 mm pitch in steel only) shall be manufactured with rerolled ends. Corrugation profile of the rerolled ends shall be 68 mm x 13 mm annual corrugations with a minimum of two full corrugations at each end.

ALL DIMENSIONS ARE IN MILLIMETERS UNLESS OTHERWISE SHOWN

NOTES

1. All ferrous metal coupling band connection hardware shall be galvanized or electro-plated in accordance with the Standard Specifications.
2. For helically corrugated coupling bands, the connection angles may be oriented parallel to the pipe axis, provided connecting holes are slotted lengthwise sufficiently to allow adjustment for the helix angle.
3. Tension strap may be connected to band with either spot welds or fillet welds that develop minimum required strength of strap.
4. Use 32 mm gage line dimension on attached angle leg for rivets and spot welds.
5. Band thickness shall not be less than:
   a. 3 standard thicknesses lighter than the thickness of the pipe for corrugated steel pipe.
   b. 2 standard thicknesses lighter than the thickness of the pipe and in no case lighter than 1.5 mm for corrugated aluminum pipe.
6. Dimensions, thicknesses and strengths shown are minimum.
7. For pipe arches use same width band as for round pipe of equal periphery.
8. Fillet welds of equivalent strength may be substituted for spot welds or rivets.
9. Spot welds shall develop minimum required strength of strap.
10. Pipe with rerolled ends having at least two 68 mm x 13 mm annular corrugations at each end with or without an upturned flange may be connected with any of the annular coupling bands shown for pipe of the same diameter and wall thickness and having 68 mm x 13 mm corrugations.
11. In the case of H-305 huggerbands, two piece bands are required for diameters through 2400 mm and three piece bands are required for diameters 2550 mm through 3000 mm.
12. Two piece bands are required for pipes greater than 1050 mm diameter.

STATE OF CALIFORNIA
DEPARTMENT OF TRANSPORTATION

CORRUGATED METAL PIPE COUPLING DETAILS No. 6 POSITIVE JOINT

NO SCALE

RSP D97F DATED JUNE 6, 2008 SUPERSEDES STANDARD PLAN D97F
DATED July 1, 2004 - PAGE 188 OF THE STANDARD PLANS BOOK DATED July 2004.

REVISED STANDARD PLAN RSP D97F

2004 REVISED Std PLAN RSP D97F

05-19-08

DIST	COUNTY	ROUTE	KILOMETER POST TOTAL PROJECT	SHEET NO.	TOTAL SHEETS
07	LA	5	2.9/4.9	778	1082

Caltrans Metric

LICENSED LANDSCAPE ARCHITECT

March 7, 2008
PLANS APPROVAL DATE

LICENSED LANDSCAPE ARCHITECT Gregory A. Balzer 2576 Signature 02-28-2009 Renewal Date 02-21-08 Date STATE OF CALIFORNIA

The State of California or its officers or agents shall not be responsible for the accuracy or completeness of electronic copies of this plan sheet.

To get to the Caltrans web site, go to: http://www.dot.ca.gov

To accompany plans dated 6-21-10

2004 REVISED Std PLAN RSP H2

EXISTING	PROPOSED	ITEM DESCRIPTION
		WATER METER (WM)
		BACKFLOW PREVENTER ASSEMBLY (BPA)
		BACKFLOW PREVENTER ASSEMBLY IN ENCLOSURE (BPAE)
		BACKFLOW PREVENTER ENCLOSURE (BPE)
		BOOSTER PUMP (BP)
		TRUCK LOADING STANDPIPE (TLS)
fs	FS	FLOW SENSOR (FS)
		MASTER IRRIGATION CONTROLLER (MIC)
		AUXILIARY IRRIGATION CONTROLLER (AIC)
		IRRIGATION CONTROLLER (IC)/ IRRIGATION CONTROLLER (IC) (BATTERY)
		IRRIGATION CONTROLLER(S) IN CONTROLLER ENCLOSURE CABINET (ICC)
		CONTROL AND NEUTRAL CONDUCTORS (CNC)
scc	SCC	SPRINKLER CONTROL CONDUIT (SCC)
		CONDUIT (COND)
		IRRIGATION SLEEVE
dip	DIP	DUCTILE IRON PIPE (SUPPLY LINE) (MAIN) (DIP)
		GALVANIZED STEEL PIPE (SUPPLY LINE) (MAIN) (GSP)
		GALVANIZED STEEL PIPE (SUPPLY LINE) (LATERAL) (GSP)
		PLASTIC PIPE (PR 200) (SUPPLY LINE) (MAIN)
		PLASTIC PIPE (PR 200) (SUPPLY LINE) (LATERAL)
		PLASTIC PIPE (IRRIGATION LINE)
		REMOTE CONTROL VALVE (RCV) REMOTE CONTROL VALVE (MASTER) (RCVM)
		MANUAL CONTROL VALVE (MCV)
		VALVE ASSEMBLY UNIT (VAU)
		WYE STRAINER (WS)
		FILTER ASSEMBLY UNIT (FAU)
		GATE VALVE (GV)
		BALL VALVE (BV)

EXISTING	PROPOSED	ITEM DESCRIPTION
		QUICK COUPLING VALVE (QCV)
		CAM COUPLING ASSEMBLY (CCA)
		PRESSURE REDUCING VALVE (PRV)
		PRESSURE RELIEF VALVE (PRLV)
		FLOW CONTROL VALVE (FCV)
		COMBINATION AIR RELEASE VALVE (CARV)
		CHECK VALVE (CV)
		FLUSH VALVE (FV)
		NOZZLE LINE W/TURNING UNION
		IRRIGATION SYSTEM
		IRRIGATION SYSTEM TO BE REMOVED
		CHAIN LINK GATE
		QUICK COUPLING VALVE W/SPRINKLER PROTECTOR
3	3	SPRINKLER W/SPRINKLER PROTECTOR
		CONNECT TO EXISTING SYSTEM
		CAP
		CAP EXISTING

VALVE CODE

- RCV SIZE (mm)
- IRRIGATION CONTROLLER
- CONTROLLER STATION
- VALVE IN PARALLEL (IF APPLICABLE)
- L/min
- QUANTITY OF SPRINKLERS (WHEN SHOWN)

* 63.5-A-2b-151.4-60

- MCV SIZE (mm)
- VALVE NUMBER
- L/min
- QUANTITY OF TYPE SPRINKLERS (WHEN SHOWN)

* 50.8-3-113.5-50

* VALVE CODES FOR EXISTING VALVES ARE SHOWN IN A DASHED ENCLOSURE.

STATE OF CALIFORNIA
DEPARTMENT OF TRANSPORTATION

PLANTING AND IRRIGATION SYMBOLS

NO SCALE

ALL DIMENSIONS ARE IN MILLIMETERS UNLESS OTHERWISE SHOWN

RSP H2 DATED MARCH 7, 2008 SUPERSEDES STANDARD PLAN H2 DATED JULY 1, 2004 - PAGE 202 OF THE STANDARD PLANS BOOK DATED JULY 2004.

REVISED STANDARD PLAN RSP H2

DIST	COUNTY	ROUTE	KILOMETER POST TOTAL PROJECT	SHEET NO.	TOTAL SHEETS
07	LA	5	2.9/4.9	779	1082

Caltrans Metric

Randell D. Hiatt
REGISTERED CIVIL ENGINEER

June 6, 2008
PLANS APPROVAL DATE

REGISTERED PROFESSIONAL ENGINEER
Randell D. Hiatt
No. C50200
Exp. 6-30-09
CIVIL
STATE OF CALIFORNIA

The State of California or its officers or agents shall not be responsible for the accuracy or completeness of electronic copies of this plan sheet.

To get to the Caltrans web site, go to: http://www.dot.ca.gov

To accompany plans dated 6-21-10

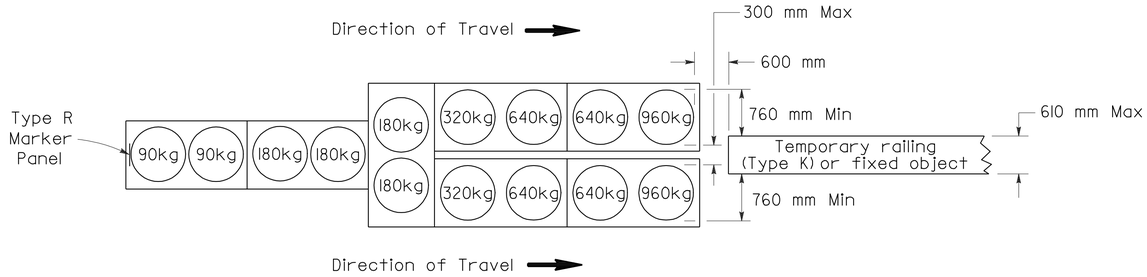

ARRAY 'TU14'

Approach speed 70 km/h or more

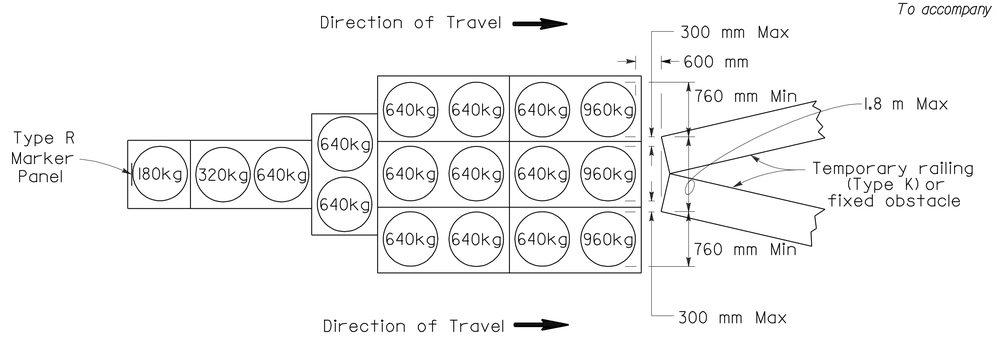

ARRAY 'TU17'

Approach speed less than 70 km/h

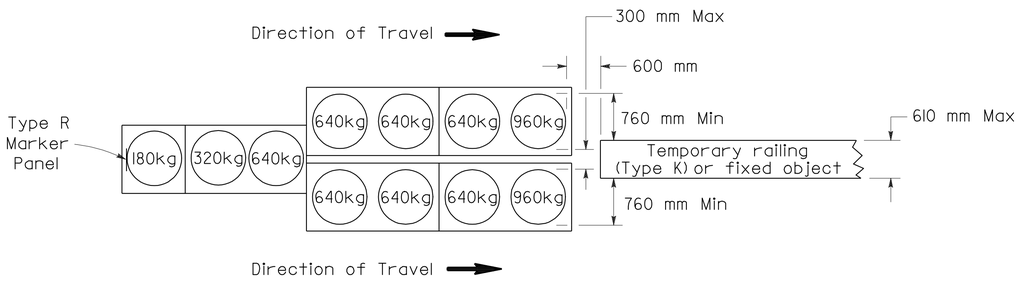

ARRAY 'TU11'

Approach speed less than 70 km/h

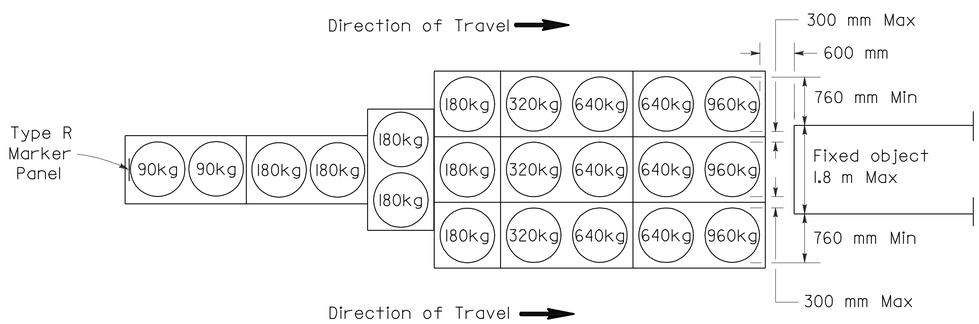

ARRAY 'TU21'

Approach speed 70 km/h or more

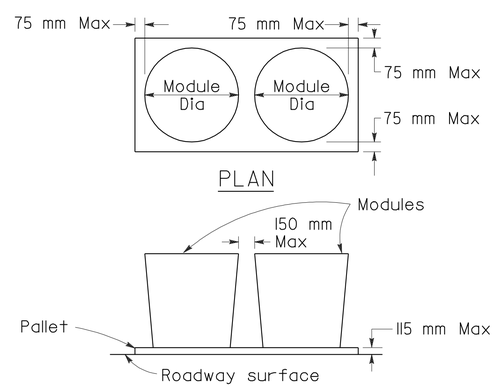

CRASH CUSHION PALLET DETAIL

See Note 7

NOTES

1. (XXX) Indicates sand filled module location and mass of sand in kilograms for each module. Module spacing is based on the greater diameter of the module.
2. All sand masses are nominal.
3. Temporary crash cushion arrays shall not encroach on the traveled way.
4. Place the top of Type R marker panel 25 mm below the module lid.
5. Refer to Standard Plan A73B for marker details.
6. Approach speeds indicated conform to NCHRP 350 Report criteria.
7. Use of Pallets is optional.

STATE OF CALIFORNIA
DEPARTMENT OF TRANSPORTATION

TEMPORARY CRASH CUSHION, SAND FILLED (UNIDIRECTIONAL)

NO SCALE

ALL DIMENSIONS ARE IN MILLIMETERS UNLESS OTHERWISE SHOWN

RSP T1A DATED JUNE 6, 2008 SUPERSEDES STANDARD PLAN T1A
DATED July 1, 2004 - PAGE 211 OF THE STANDARD PLANS BOOK DATED July 2004.

REVISED STANDARD PLAN RSP T1A

2004 REVISED Std PLAN RSP T1A

5-16-08

DIST	COUNTY	ROUTE	KILOMETER POST TOTAL PROJECT	SHEET NO.	TOTAL SHEETS
07	LA	5	2.9/4.9	780	1082

Caltrans Metric

Randell D. Hiatt
REGISTERED CIVIL ENGINEER

June 6, 2008
PLANS APPROVAL DATE

REGISTERED PROFESSIONAL ENGINEER
Randell D. Hiatt
No. C50200
Exp. 6-30-09
CIVIL
STATE OF CALIFORNIA

The State of California or its officers or agents shall not be responsible for the accuracy or completeness of electronic copies of this plan sheet.

To get to the Caltrans web site, go to: http://www.dot.ca.gov

To accompany plans dated 6-21-10

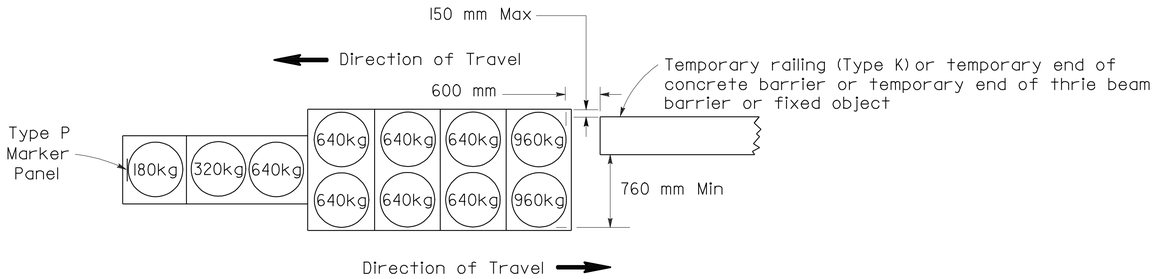

ARRAY 'TBI1'

Approach speed less than 70 km/h

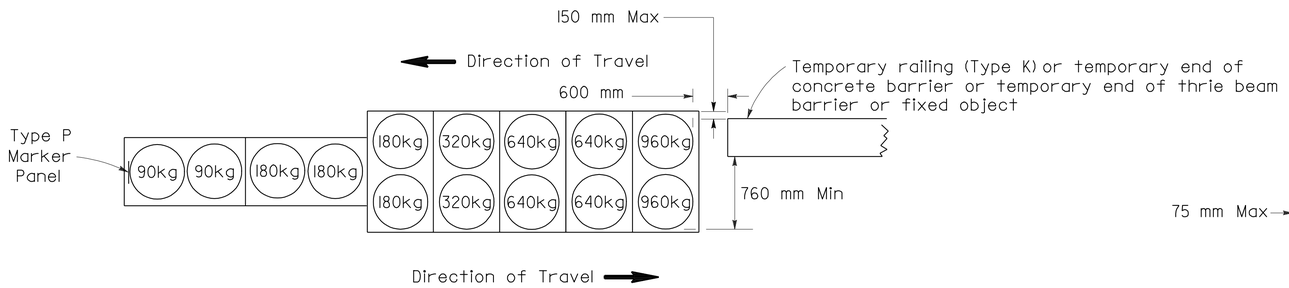

ARRAY 'TBI4'

Approach speed 70 km/h or more

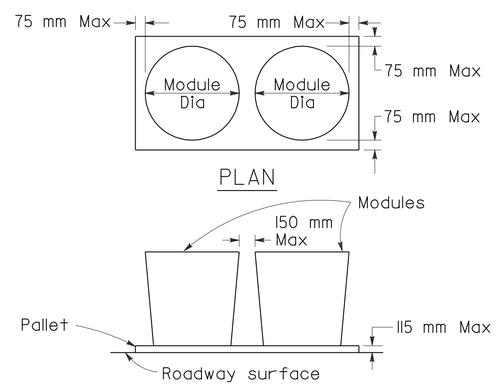

CRASH CUSHION PALLET DETAIL

See Note 7

NOTES

1. (XXX) Indicates sand filled module location and mass of sand in kilograms for each module. Module spacing is based on the greater diameter of the module.
2. All sand masses are nominal.
3. Temporary crash cushion arrays shall not encroach on the traveled way.
4. Place the Type P marker panel so that the bottom of the panel rests upon the pallet.
5. Refer to Standard Plan A73B for marker details.
6. Approach speeds indicated conform to NCHRP 350 Report criteria.
7. Use of Pallets is optional.

STATE OF CALIFORNIA
DEPARTMENT OF TRANSPORTATION

TEMPORARY CRASH CUSHION, SAND FILLED (BIDIRECTIONAL)

NO SCALE

ALL DIMENSIONS ARE IN MILLIMETERS UNLESS OTHERWISE SHOWN

RSP T1B DATED JUNE 6, 2008 SUPERSEDES STANDARD PLAN T1B DATED July 1, 2004 - PAGE 212 OF THE STANDARD PLANS BOOK DATED July 2004.

REVISED STANDARD PLAN RSP T1B

2004 REVISED Std PLAN RSP T1B

5-16-08

DIST	COUNTY	ROUTE	KILOMETER POST TOTAL PROJECT	SHEET NO.	TOTAL SHEETS
07	LA	5	2.9/4.9	781	1082

Caltrans Metric

Randell D. Hiatt
REGISTERED CIVIL ENGINEER

June 6, 2008
PLANS APPROVAL DATE

REGISTERED PROFESSIONAL ENGINEER
Randell D. Hiatt
No. C50200
Exp. 6-30-09
CIVIL
STATE OF CALIFORNIA

The State of California or its officers or agents shall not be responsible for the accuracy or completeness of electronic copies of this plan sheet.

To get to the Caltrans web site, go to: http://www.dot.ca.gov

To accompany plans dated 6-21-10

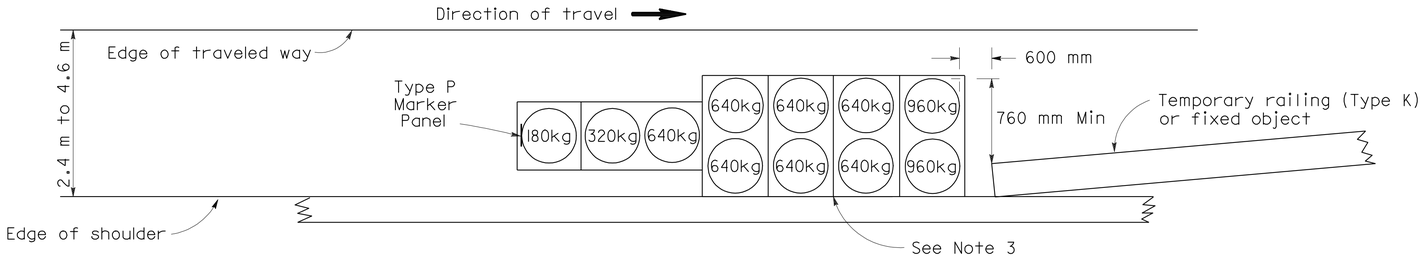

ARRAY 'TSI1'

Approach speed less than 70 km/h
See Note 9

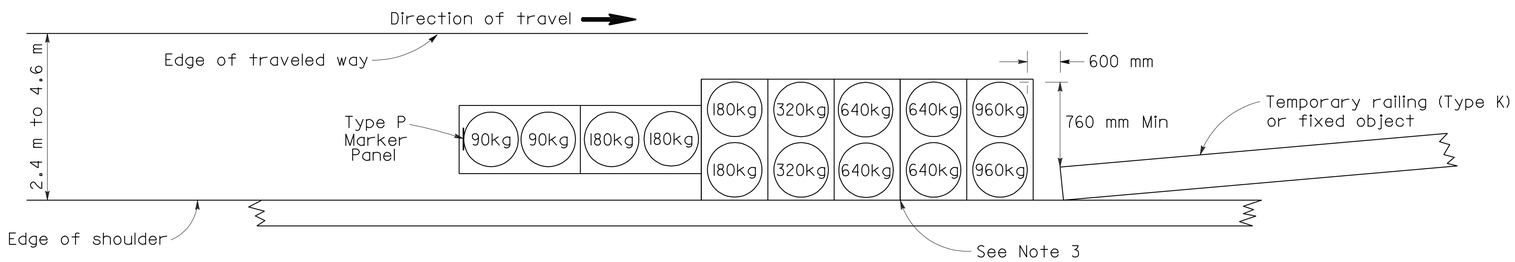

ARRAY 'TSI4'

Approach speed 70 km/h or more
See Note 9

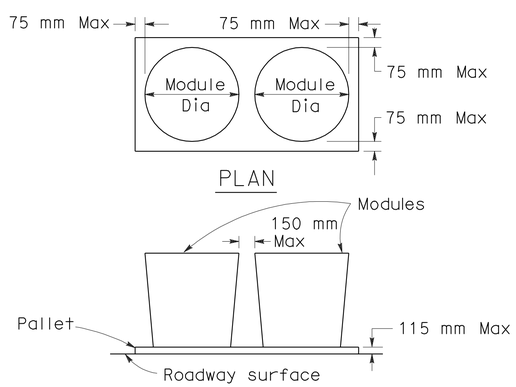

CRASH CUSHION PALLET DETAIL

See Note 11

NOTES

1. (XXX) Indicates sand filled module location and mass of sand in kilograms for each module. Module spacing is based on the greater diameter of the module.
2. All sand masses are nominal.
3. The temporary crash cushion arrays shown on this plan shall be used only in locations where there will be traffic on one side of the temporary crash cushion array.
4. If the fixed object or approach end of the temporary railing is less than 4.60 meters from the edge of traveled way, a temporary crash cushion is required.
5. Temporary crash cushion arrays shall not encroach on the traveled way.
6. Arrays for median shoulders shall conform to details shown on this plan for outside shoulders.
7. Place the Type P marker panel so that the bottom of the panel rest upon the pallet and faces traffic.
8. Refer to Standard Plan A73B for marker details.
9. For shoulder widths less than 2.4 m, appropriate approved crash cushion protection, other than sand filled modules, shall be provided at fixed objects and at approach ends of temporary railing. The specific type of crash cushion shall be as shown on the project plans or as specified in the Special Provisions, or if not shown on the project plans or specified in the Special Provisions, shall be as approved by the Engineer.
10. Approach speeds indicated conform to NCHRP 350 Report criteria.
11. Use of Pallets is optional.

STATE OF CALIFORNIA
DEPARTMENT OF TRANSPORTATION

TEMPORARY CRASH CUSHION, SAND FILLED (SHOULDER INSTALLATIONS)

NO SCALE

ALL DIMENSIONS ARE IN MILLIMETERS UNLESS OTHERWISE SHOWN

RSP T2 DATED JUNE 6, 2008 SUPERSEDES STANDARD PLAN T2
DATED July 1, 2004 - PAGE 213 OF THE STANDARD PLANS BOOK DATED July 2004.

REVISED STANDARD PLAN RSP T2

2004 REVISED Std PLAN RSP T2

5-16-08

DIST	COUNTY	ROUTE	KILOMETER POST TOTAL PROJECT	SHEET NO.	TOTAL SHEETS
07	LA	5	2.9/4.9	782	1082

Greg W. Edwards
REGISTERED CIVIL ENGINEER

April 28, 2005
PLANS APPROVAL DATE

REGISTERED PROFESSIONAL ENGINEER Greg W. Edwards No. C36386 Exp. 6-30-06 CIVIL STATE OF CALIFORNIA

The State of California or its officers or agents shall not be responsible for the accuracy or completeness of electronic copies of this plan sheet.

To get to the Caltrans web site, go to: http://www.dot.ca.gov

To accompany plans dated 6-21-10

Caltrans Metric

NOTES

Unless otherwise specified in the special provisions, all temporary warning signs shall have black legend on orange background.

California code are designated by (CA). Otherwise, Federal codes are shown.

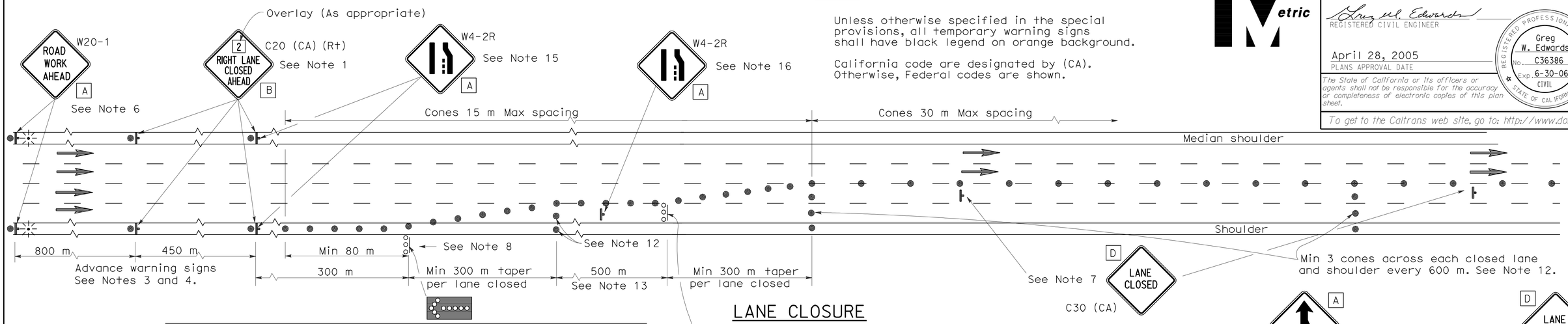

LANE CLOSURE

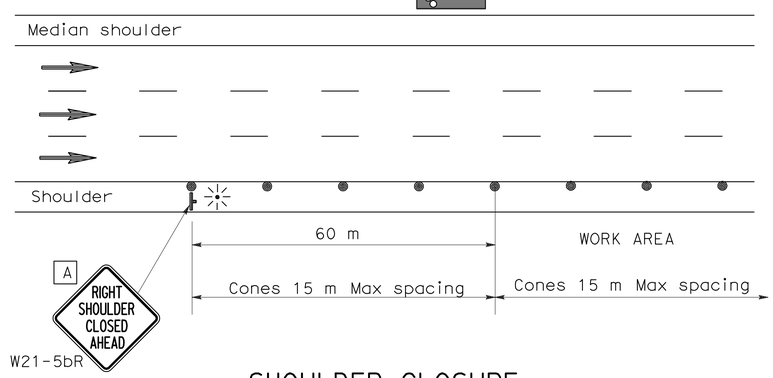

SHOULDER CLOSURE

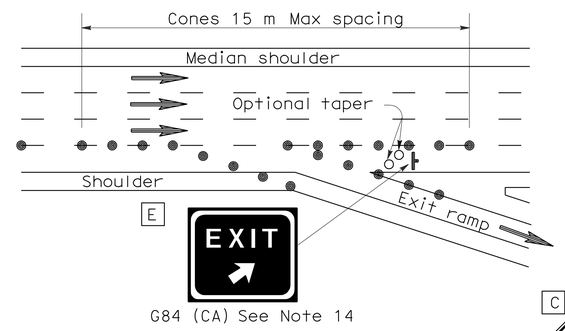

LANE CLOSURE AT EXIT RAMP

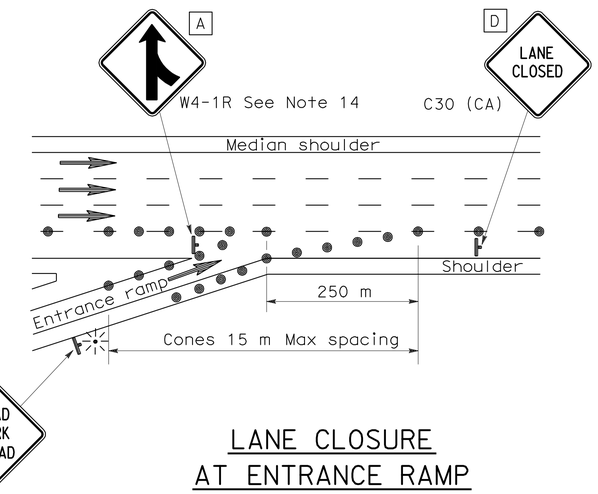

LANE CLOSURE AT ENTRANCE RAMP

NOTES

1. Median lane closures shall conform to the details for outside lane closures except that C20 (CA) (Lt) signs shall be used.
2. At least one person shall be assigned to provide full time maintenance of traffic control devices for lane closures.
3. Duplicate sign installations are not required:
   a) On opposite shoulder if at least one-half of the available lanes remain open to traffic.
   b) In the median if the width of the median shoulder is less than 2.4 m and the outside lanes are to be closed.
4. Each advance warning sign on each side of the roadway shall be equipped with at least two flags for daytime closure. Each flag shall be at least 400 mm x 400 mm in size and shall be orange or fluorescent red-orange in color. Flashing beacons shall be placed at the locations indicated for lane closure during hours of darkness.
5. A C14 (CA) "END ROAD WORK" sign, as appropriate, shall be placed at the end of the lane closure unless the end of work area is obvious or ends within a larger project's limits.
6. If the W20-1 sign would follow within 600 m of a stationary W20-1 or C11 (CA) "ROAD WORK NEXT _____ MILES", use a C20 (CA) sign for the first advance warning sign.
7. Place a C30 (CA) sign every 600 m throughout length of lane closure.
8. One flashing arrow sign for each lane closed. The first flashing arrow sign shall be Type I. All others may be either Type I or Type II.
9. A minimum 450 m of sight distance shall be provided where possible for vehicles approaching the first flashing arrow sign. Lane closures shall not begin at top of crest vertical curve or on a horizontal curve.
10. All cones used for lane closures during the hours of darkness shall be fitted with retroreflective bands (or sleeves) as specified in the specifications.
11. Portable delineators, placed at one-half the spacing indicated for traffic cones may be used instead of cones for daytime closures only.
12. Unless otherwise specified in the special provisions, a minimum of 3 cones shall be placed transversely across each closed lane and shoulder at each location where a taper across a traffic lane ends and every 600 m as shown on the "Lane Closure" detail. Two Type II barricades may be used instead of the 3 cones. The transverse alignment of the cones or barricades on the closed shoulder may be shifted from the transverse alignment to provide access to the work.
13. Unless otherwise specified in the special provisions, the 500 m tangent shown along lane lines shall be used between the 300 m tapers required for each closed traffic lane.
14. Unless otherwise specified in the special provisions, the G84 (CA) and W4-1 signs shall be used as shown.
15. When specified in the special provisions, a W4-2 "LANE ENDS" symbol sign is to be used in place of the C20 (CA) "RIGHT LANE CLOSED AHEAD" sign.
16. The W4-2 "LANE ENDS" symbol sign shown at this location is to be used where the W4-2 sign is used as advance warning as described in Note 15.

SIGN PANEL SIZE (Min)

A	1200 mm x 1200 mm
B	1219 mm x 1219 mm
C	750 mm x 750 mm
D	762 mm x 762 mm
E	1372 mm x 1219 mm

LEGEND

- Traffic Cone
- Traffic Cone (optional taper)
- Temporary Sign
- Flashing Arrow Sign (FAS)
- FAS Support or Trailer
- Direction of Travel
- Portable Flashing Beacon

STATE OF CALIFORNIA
DEPARTMENT OF TRANSPORTATION

TRAFFIC CONTROL SYSTEM FOR LANE CLOSURE ON FREEWAYS AND EXPRESSWAYS

NO SCALE

ALL DIMENSIONS ARE IN MILLIMETERS UNLESS OTHERWISE SHOWN

RSP T10 DATED APRIL 28, 2005 SUPERSEDES STANDARD PLAN T10 DATED JULY 1, 2004-PAGE 218 OF THE STANDARD PLANS BOOK DATED JULY 2004.

REVISED STANDARD PLAN RSP T10

2004 REVISED Std PLAN RSP T10

DIST	COUNTY	ROUTE	KILOMETER POST TOTAL PROJECT	SHEET NO.	TOTAL SHEETS
07	LA	5	2.9/4.9	783	1082

REGISTERED CIVIL ENGINEER

April 28, 2005
PLANS APPROVAL DATE

REGISTERED PROFESSIONAL ENGINEER G.W. Edwards No. C36386 Exp. 6-30-06 CIVIL STATE OF CALIFORNIA

The State of California or its officers or agents shall not be responsible for the accuracy or completeness of electronic copies of this plan sheet.

To get to the Caltrans web site, go to: http://www.dot.ca.gov

Caltrans Metric

To accompany plans dated 6-21-10

NOTES

Unless otherwise specified in the special provisions, all temporary warning signs shall have black legend on orange background.

California code are designated by (CA). Otherwise, Federal codes are shown.

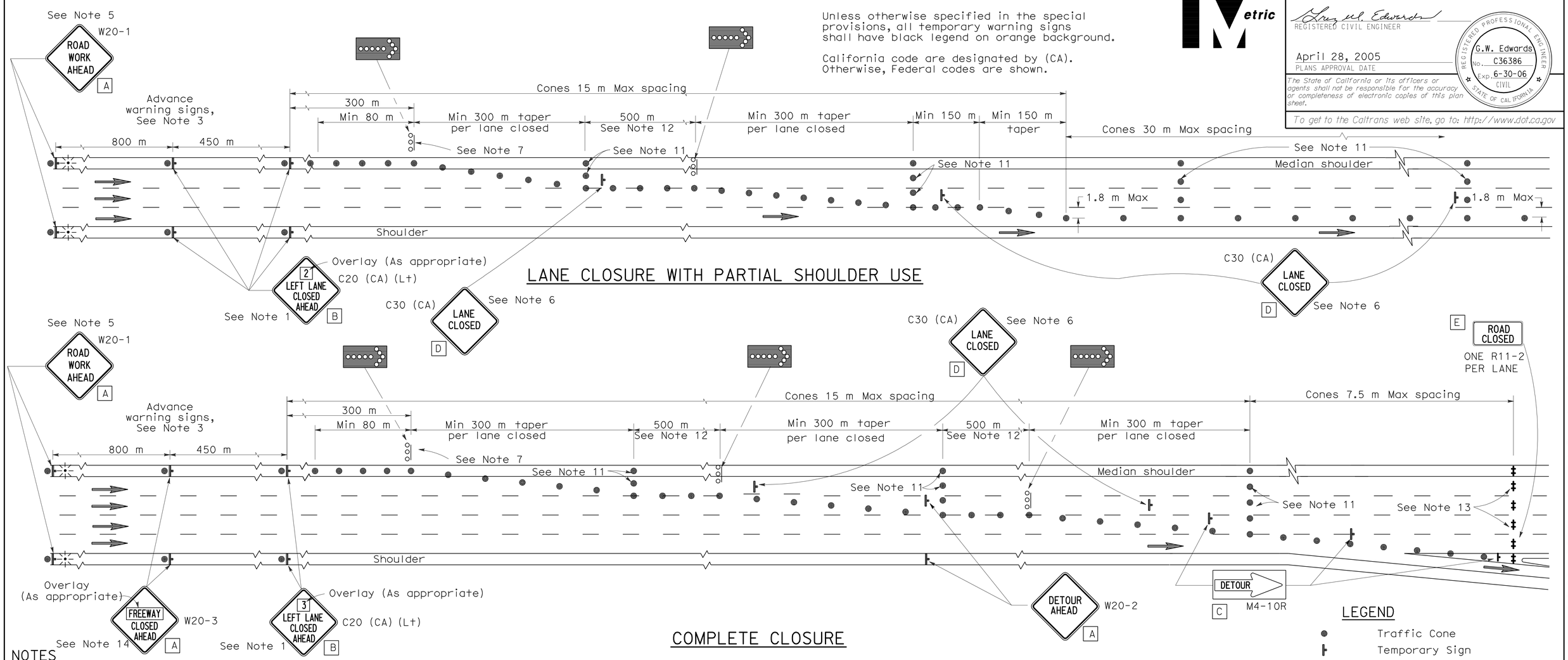

LANE CLOSURE WITH PARTIAL SHOULDER USE

COMPLETE CLOSURE

NOTES

1. Lane closures on the right side using partial median shoulder as a traffic lane shall conform to the details for inside lane closure except that C20 (CA) (Rt) signs shall be used.
2. At least one person shall be assigned to provide full time maintenance of traffic control devices for lane closures.
3. Each advance warning sign on each side of the roadway shall be equipped with at least two flags for daytime closure. Each flag shall be at least 400 mm x 400 mm in size and shall be orange or fluorescent red-orange in color. Flashing beacons shall be placed at the locations indicated for lane closure during hours of darkness.
4. A C14 (CA) "END ROAD WORK" sign, as appropriate, shall be placed at the end of the lane closure unless the end of work area is obvious or ends within a larger project's limits.
5. If the W20-1 sign would follow within 600 m of a stationary W20-1 or C11 (CA) "ROAD WORK NEXT ___ MILES", use a C20 (CA) sign for the first advance warning sign.
6. Place a C30 (CA) sign every 600 m throughout length of lane closure.
7. One flashing arrow sign for each lane closed. The first flashing arrow sign shall be Type I. All others may be either Type I or Type II.
8. A minimum 450 m of sight distance shall be provided where possible for vehicles approaching the first flashing arrow sign. Lane closures shall not begin at the top of crest vertical curve or on a horizontal curve.
9. All cones used for lane closures during the hours of darkness shall be fitted with retroreflective bands (or sleeves) as specified in the specifications.
10. Portable delineators, placed at one-half the spacing indicated for traffic cones, may be used instead of cones for daytime closures only.
11. Unless otherwise specified in the special provisions, a minimum of 3 cones shall be placed transversely across each closed lane and shoulder at each location where a taper across a traffic lane ends and every 600 m as shown on the "Lane Closure With Partial Shoulder Use" detail. Two Type II barricades may be used instead of the 3 cones. The transverse alignment of the cones or barricades on the closed shoulder may be shifted from the transverse alignment to provide access to the work.
12. Unless otherwise specified in the special provisions, the 500 m tangent shown along lane lines shall be used between the 300 m tapers required for each closed traffic lane.
13. A minimum of Two Type II barricades shall be placed across each closed lane and shoulder at the location shown and every 600 m within the complete closure area. Within the complete closure area, the transverse alignment of the barricades on the closed shoulder may be shifted from the transverse alignment to provide access to the work.
14. When specified in the special provisions, a W20-2 "DETOUR AHEAD" sign is to be used in place of the W20-3 "FREEWAY CLOSED AHEAD" sign.

SIGN PANEL SIZE (Min)

A	1200 mm x 1200 mm
B	1219 mm x 1219 mm
C	1200 mm x 450 mm
D	762 mm x 762 mm
E	1200 mm x 750 mm

LEGEND

- Traffic Cone
- Temporary Sign
- Barricade
- Flashing Arrow Sign (FAS)
- FAS Support or Trailer
- Direction of Travel
- Portable Flashing Beacon

STATE OF CALIFORNIA
DEPARTMENT OF TRANSPORTATION

TRAFFIC CONTROL SYSTEM FOR LANE AND COMPLETE CLOSURES ON FREEWAYS AND EXPRESSWAYS

NO SCALE

ALL DIMENSIONS ARE IN MILLIMETERS UNLESS OTHERWISE SHOWN

RSP T10A DATED APRIL 28, 2005 SUPERSEDES STANDARD PLAN T10A DATED JULY 1, 2004-PAGE 219 OF THE STANDARD PLANS BOOK DATED JULY 2004.

REVISED STANDARD PLAN RSP T10A

2004 REVISED Std PLAN RSP T10A

TYPICAL RAMP CLOSURES

LEGEND

- Traffic Cone
- Temporary Sign
- Barricades
- Direction of Travel
- Turn Arrow

SIGN PANEL SIZE (Min)

A	1200 mm x 1200 mm
B	1200 mm x 750 mm
C	750 mm x 750 mm
D	762 mm x 762 mm
E	900 mm x 900 mm
F	1219 mm x 914 mm

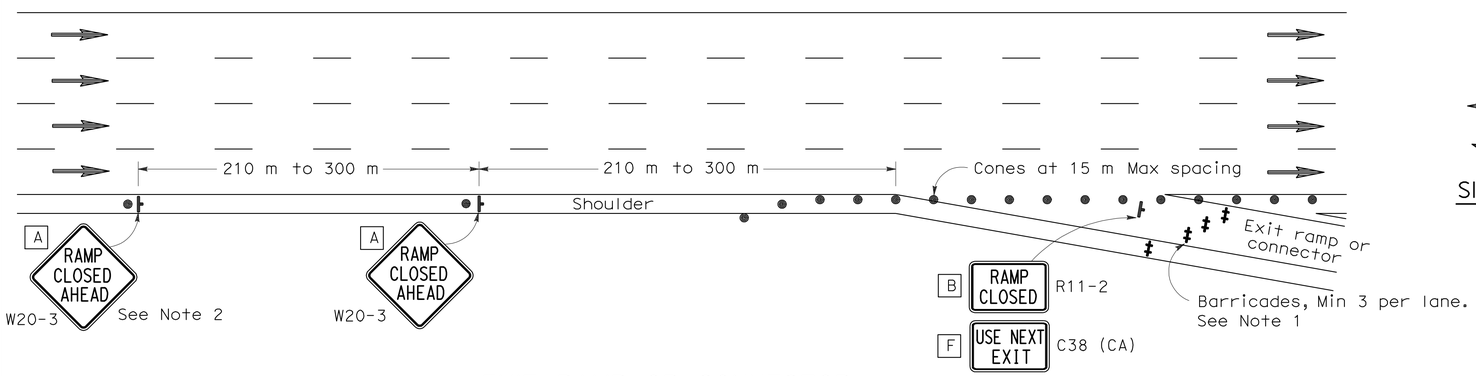

EXIT RAMP OR CONNECTOR

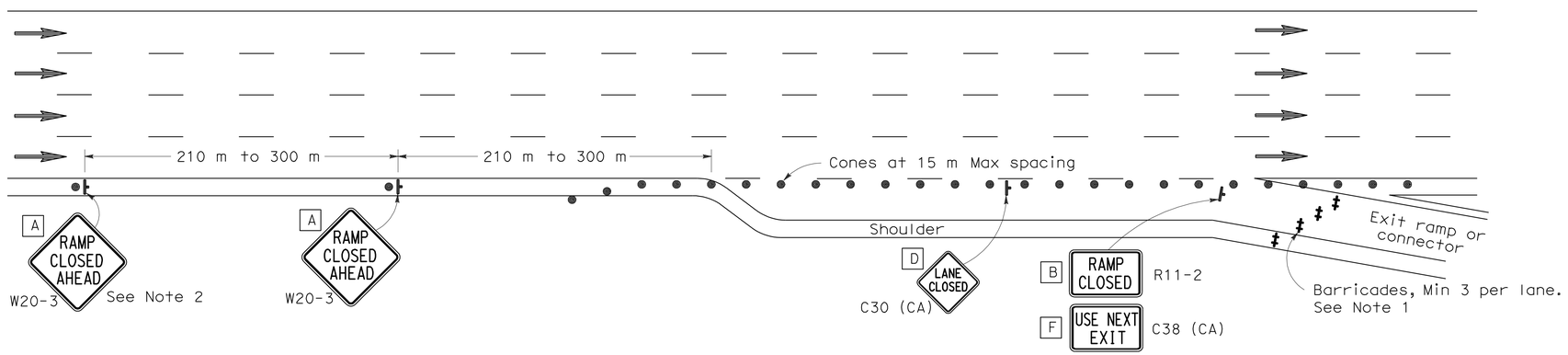

EXIT RAMP OR CONNECTOR WITH ADDITIONAL LANE

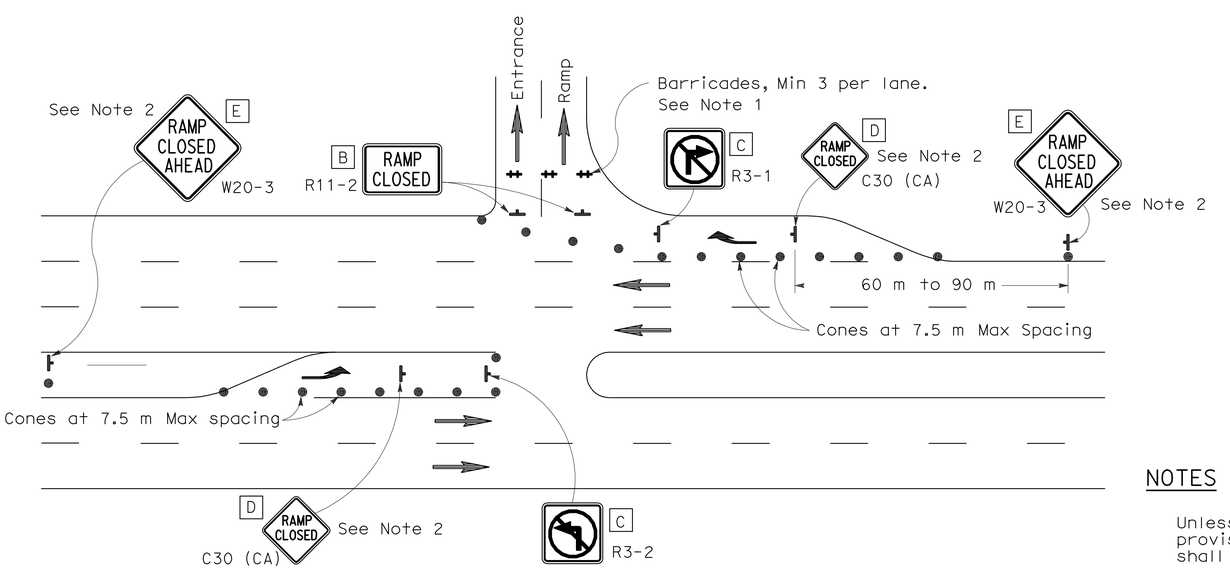

ENTRANCE RAMP WITH TURNING POCKETS

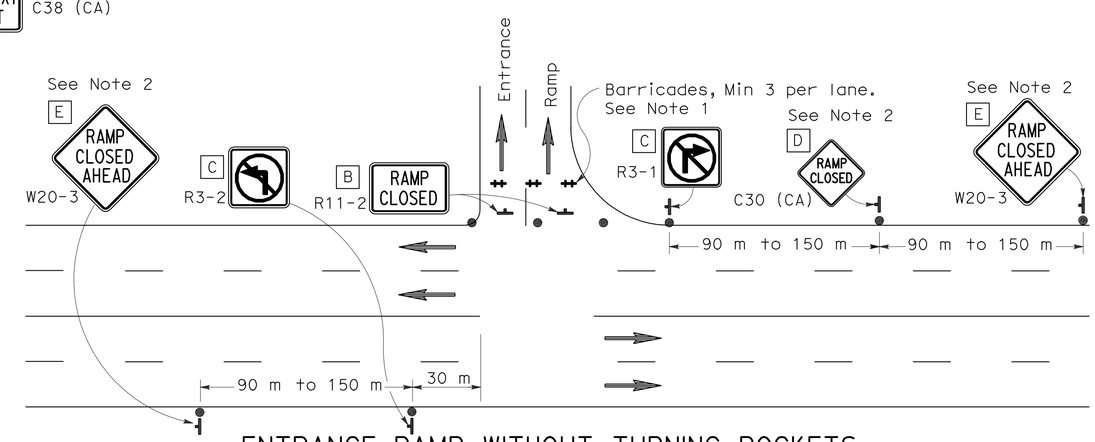

ENTRANCE RAMP WITHOUT TURNING POCKETS

NOTES

1. Barricades shall be Type I, II, or III for closures lasting one week or less and Type III for closures lasting longer than one week.
2. Instead of placing the W20-3 "RAMP CLOSED AHEAD" and C30 (CA) "RAMP CLOSED" signs, black on orange overlay plates with the word "CLOSED" may be mounted, as directed by the Engineer, on all guide signs that refer to the closed ramp. The letter size on the overlay shall be the same as the guide sign.
3. Each advance W20-3 "RAMP CLOSED AHEAD" sign shall be equipped with at least two flags for daytime closure. Each flag shall be at least 400 mm x 400 mm in size and shall be orange or fluorescent red-orange in color.
4. All cones used for ramp closures during the hours of darkness shall be fitted with retroreflective bands (or sleeves) as specified in the specifications.
5. Portable delineators, placed at one-half the spacing indicated for traffic cones, may be used instead of cones for daytime ramp closures only.
6. At least one person shall be assigned to provide full time maintenance of traffic control devices, unless otherwise directed by the Engineer.
7. The existing "EXIT" sign in the gore area shall be covered during ramp closures.

NOTES

Unless otherwise specified in the special provisions, all temporary warning signs shall have black legend on orange background.

California code are designated by (CA). Otherwise, Federal codes are shown.

DIST	COUNTY	ROUTE	KILOMETER POST TOTAL PROJECT	SHEET NO.	TOTAL SHEETS
07	LA	5	2.9/4.9	784	1082

Caltrans Metric

REGISTERED CIVIL ENGINEER

April 28, 2005
PLANS APPROVAL DATE

REGISTERED PROFESSIONAL ENGINEER
Greg W. Edwards
No. C36386
Exp. 6-30-06
CIVIL
STATE OF CALIFORNIA

The State of California or its officers or agents shall not be responsible for the accuracy or completeness of electronic copies of this plan sheet.

To get to the Caltrans web site, go to: http://www.dot.ca.gov

To accompany plans dated 6-21-10

STATE OF CALIFORNIA
DEPARTMENT OF TRANSPORTATION

TRAFFIC CONTROL SYSTEM FOR RAMP CLOSURE

NO SCALE

ALL DIMENSIONS ARE IN MILLIMETERS UNLESS OTHERWISE SHOWN

RSP T14 DATED APRIL 28, 2005 SUPERSEDES STANDARD PLAN T14 DATED JULY 1, 2004-PAGE 223 OF THE STANDARD PLANS BOOK DATED JULY 2004.

REVISED STANDARD PLAN RSP T14

2004 REVISED Std PLAN RSP T14

DIST	COUNTY	ROUTE	KILOMETER POST TOTAL PROJECT	SHEET NO.	TOTAL SHEETS
07	LA	5	2.9/4.9	785	1082

REGISTERED CIVIL ENGINEER

October 5, 2007
PLANS APPROVAL DATE

REGISTERED PROFESSIONAL ENGINEER Efthymios Delis No. C51434 Exp. 6-30-08 CIVIL STATE OF CALIFORNIA

The State of California or its officers or agents shall not be responsible for the accuracy or completeness of electronic copies of this plan sheet.

To get to the Caltrans web site, go to: http://www.dot.ca.gov

Caltrans Metric

To accompany plans dated 6-21-10

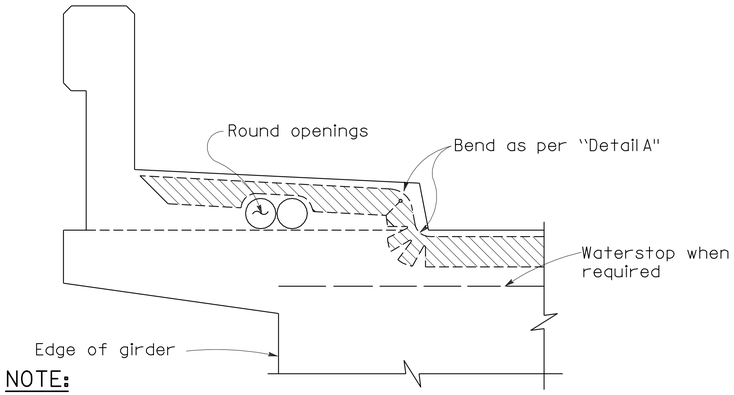

NOTE:

Type "B" seal shown. Type "A" seals to comform to the general path of seal shown, cuts for bending not required. Bend Type "A" seals 75 mm up into curb or barrier rail on only the low end of the seal.

CONCRETE BARRIER AND SIDEWALK

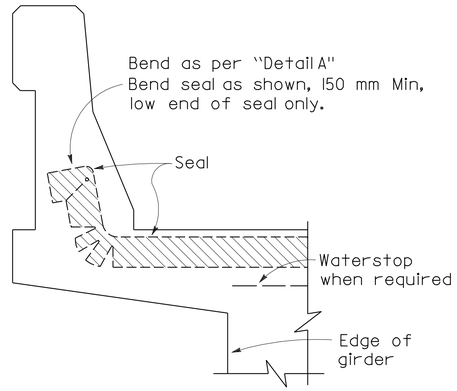

CONCRETE BARRIER

JOINT SEALS DETAILS

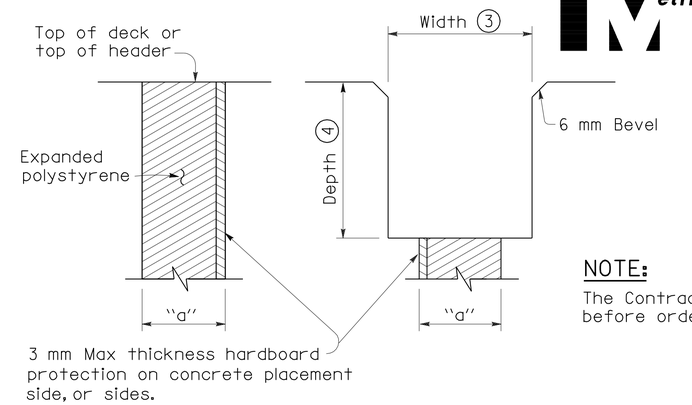

FORMING DETAIL SAWCUT DETAIL

NOTE:

The Contractor shall verify all controlling field dimensions before ordering or fabricating any material.

NOTES:

① Make smooth cuts from the bottom of seal to 40 mm clear of top leaving at least one complete cell between the top of the cut and top of the seal. When necessary cut back of seal to clear conduit and round openings.

② Opening in barrier to match width of sawn deck joint.

③ Sawcut groove widths shall be as ordered by the Engineer.

④ Depth of sawcut: Type A - Depth to be 50 mm minimum.
Type B - Depth to be equal to or greater than the depth of seal measured along the contact surface, when compressed to minimum width position (W_2) plus dimensions shown above.

⑤ MR (movement rating) as shown on other plan sheets.

⑥ Other depths must be approved by the Engineer.

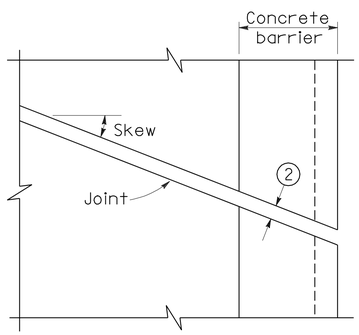

PLAN OF JOINT (SKEW ≤ 20°)

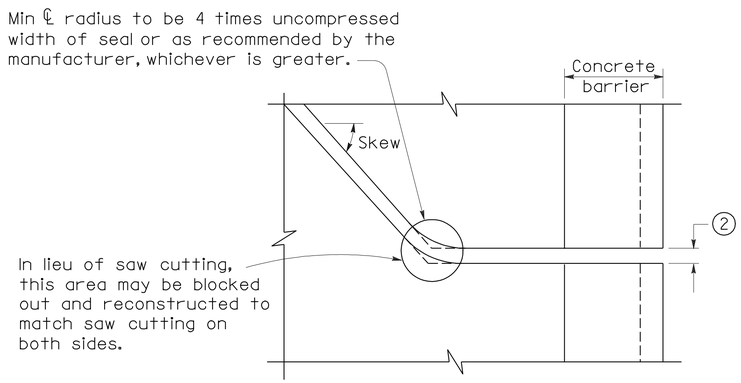

PLAN OF JOINT (SKEW > 20°)

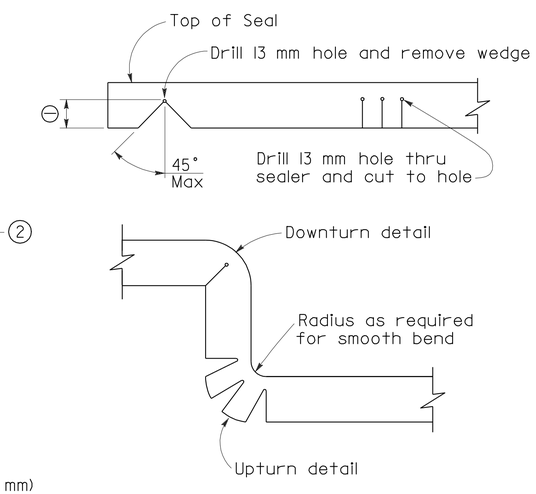

DETAIL A

DIMENSIONS "a" OF JOINT REQUIRED

Movement Rating (MR) ⑤	Bridge Type	"a" Dimension Deck Concrete Placed		
		Winter	Fall-Spring	Summer
50 mm	All except CIP/PS	40 mm	30 mm	20 mm
	CIP/PS	30 mm	25 mm	13 mm
40 mm	All except CIP/PS	30 mm	25 mm	13 mm
	CIP/PS	25 mm	20 mm	13 mm
25 mm	All except CIP/PS	25 mm	20 mm	13 mm
	CIP/PS	20 mm	13 mm	13 mm
13 mm	All except CIP/PS	20 mm	20 mm	13 mm
	CIP/PS	13 mm	13 mm	13 mm

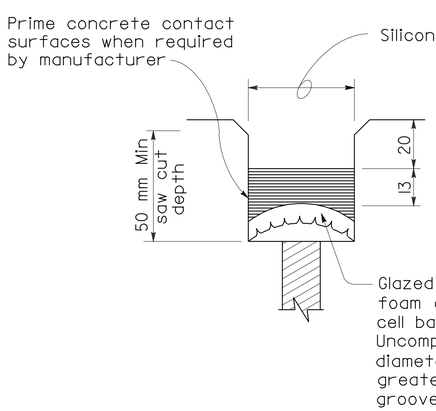

TYPE A SEAL

Movement rating : Silicone = 25 mm Max

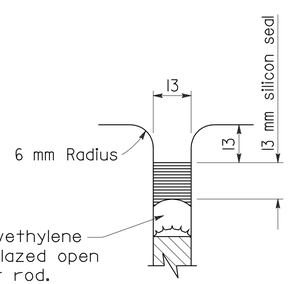

TYPE AL SEAL

Longitudinal joints only

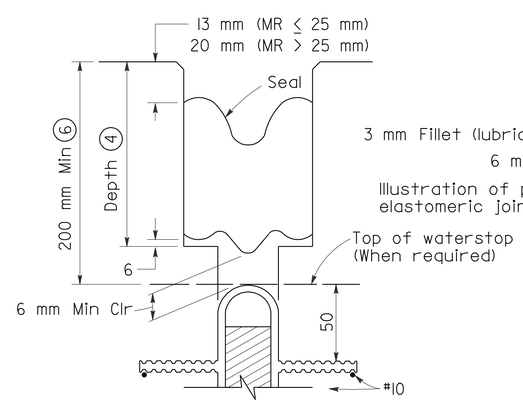

TYPE B JOINT SEAL IN MINIMUM WIDTH POSITION (W_2)

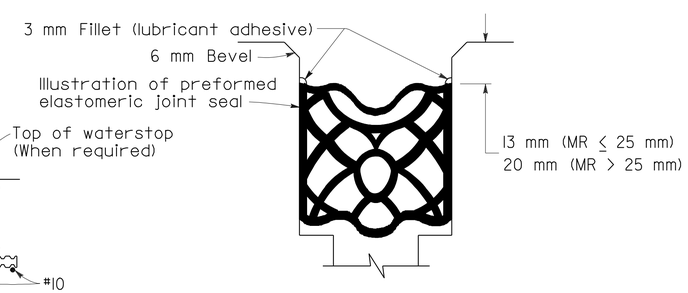

TYPE B SEAL

Movement Rating ≤ 50 mm

STATE OF CALIFORNIA
DEPARTMENT OF TRANSPORTATION

JOINT SEALS (MAXIMUM MOVEMENT RATING = 50 mm)

NO SCALE

ALL DIMENSIONS ARE IN MILLIMETERS UNLESS OTHERWISE SHOWN

RSP B6-21 DATED OCTOBER 5, 2007 SUPERSEDES RSP B6-21 DATED JANUARY 26, 2005 AND STANDARD PLAN B6-21 DATED JULY 1, 2004-PAGE 258 OF THE STANDARD PLANS BOOK DATED JULY 2004.

REVISED STANDARD PLAN RSP B6-21

2004 REVISED Std PLAN RSP B6-21

5-17-07

To accompany plans dated 6-21-10

Caltrans Metric

DIST	COUNTY	ROUTE	KILOMETER POST TOTAL PROJECT	SHEET NO.	TOTAL SHEETS
07	LA	5	2.9/4.9	786	1082

REGISTERED CIVIL ENGINEER

April 28, 2005
PLANS APPROVAL DATE

REGISTERED PROFESSIONAL ENGINEER Michael Pope No. C54503 Exp. 12-31-05 CIVIL STATE OF CALIFORNIA

The State of California or its officers or agents shall not be responsible for the accuracy or completeness of electronic copies of this plan sheet.

To get to the Caltrans web site, go to: http://www.dot.ca.gov

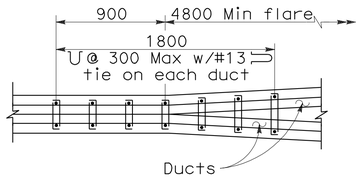

PLAN

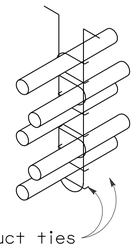

NOTE

Place closed end of duct ties in direction of flare.

STIRRUP REINFORCEMENT AT FLARE OF GIRDER STEM

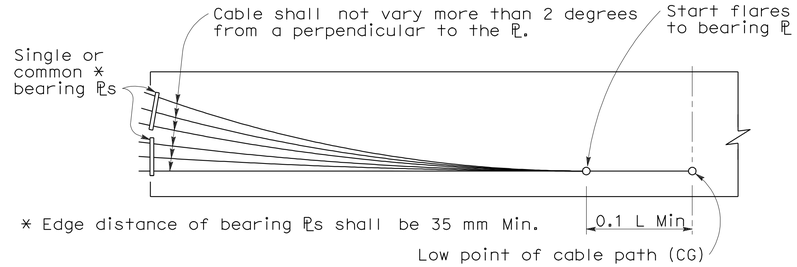

BEARING PLATE PRESTRESSING PATH

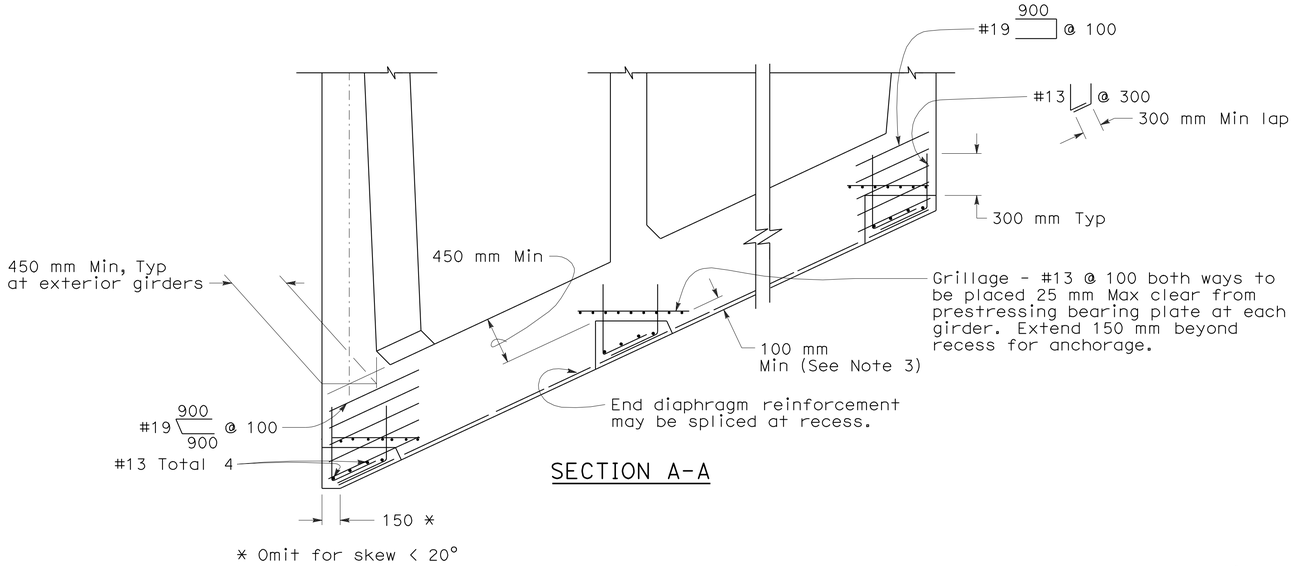

SECTION A-A

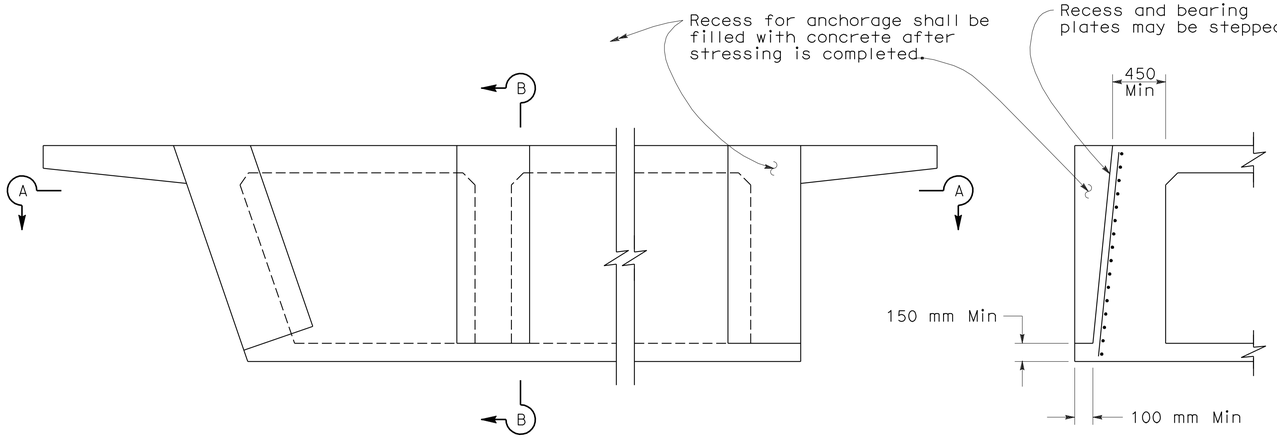

PRESTRESS ANCHORAGE DETAILS AT SEAT TYPE ABUTMENTS

SECTION B-B

NOTES

Distribution of prestressing force:

Unless otherwise noted, the prestressing force shall be distributed with an approximately equal amount in each girder and shall be placed symmetrically about the center line of the structure. In slabs, the prestressing force shall be uniformly distributed across the slab.

Stressing sequence:

No more than ½ of the prestressing force in any girder may be applied before an equal force is applied in the adjacent girders. The maximum force variation between girders shall also not exceed the prestressing force of the largest tendon used in all girders. At no time during stressing operations will more than 1/6 of total prestressing force be applied eccentrically about the centerline of the structure.

Girder stem may be flared near anchorage to provide clearances for the particular anchorage system.

Place duct ties, as shown for flare girder stem, at each location where ducts change horizontal direction.

Bar reinforcement interfering with the prestressing tendon alignment shall be adjusted, as approved by the Engineer.

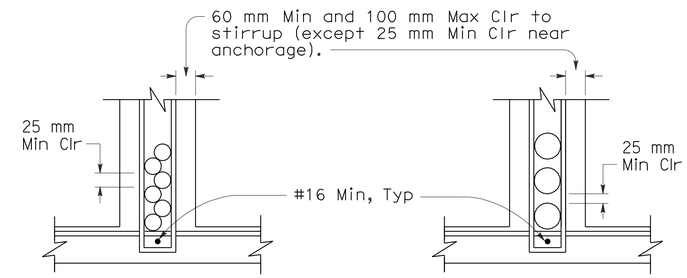

DUCTS 114 mm OD AND LESS

DUCTS OVER 114 mm OD

CLEARANCE REQUIREMENTS FOR DUCTS

NOTES

1. Duct patterns shown are for a 300 mm wide girder stem. For other widths the minimum clearances must be maintained.
2. ⊔ Stirrups may also be used. For continuous stirrups in girder stems greater than 400 mm wide (ie: at flares) use 2-#16 minimum ⊔ or ⊔.
3. 100 mm minimum is not required if this detail is used at hinge location.
4. For additional details, see Standard Plan B7-1.
5. Approval of the Engineer is required for deviations.

STATE OF CALIFORNIA
DEPARTMENT OF TRANSPORTATION

CAST-IN-PLACE PRESTRESSED GIRDER DETAILS

NO SCALE

ALL DIMENSIONS ARE IN MILLIMETERS UNLESS OTHERWISE SHOWN

RSP B8-5 DATED APRIL 28, 2005 SUPERSEDES STANDARD PLAN B8-5 DATED JULY 1, 2004-PAGE 266 OF THE STANDARD PLANS BOOK DATED JULY 2004.

REVISED STANDARD PLAN RSP B8-5

2004 REVISED Std PLAN RSP B8-5

DIST	COUNTY	ROUTE	KILOMETER POST TOTAL PROJECT	SHEET NO.	TOTAL SHEETS
07	LA	5	2.9/4.9	787	1082

REGISTERED CIVIL ENGINEER

January 18, 2008
PLANS APPROVAL DATE

REGISTERED PROFESSIONAL ENGINEER Douglas J. Dunrud No. C47240 Exp. 12-31-09 CIVIL STATE OF CALIFORNIA

The State of California or its officers or agents shall not be responsible for the accuracy or completeness of electronic copies of this plan sheet.

To get to the Caltrans web site, go to: http://www.dot.ca.gov

Caltrans Metric

To accompany plans dated 6-21-10

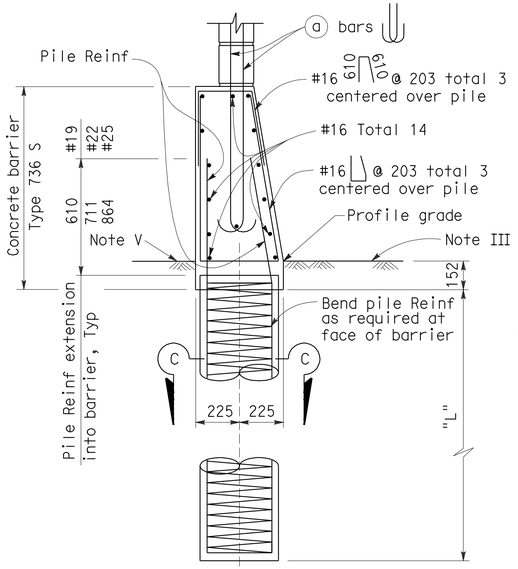

CASE 1
For details not shown, See Case 2.
Level ground ±10% on both sides of barrier.

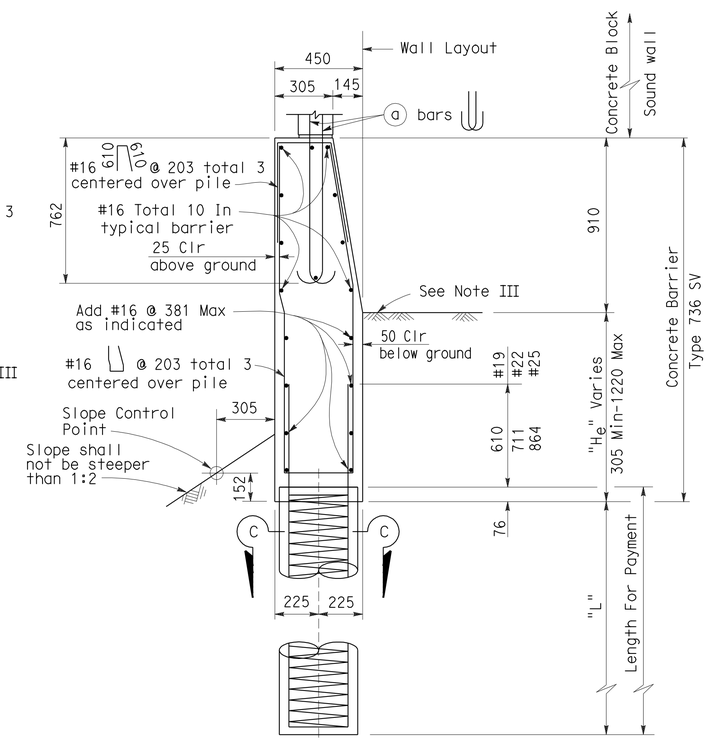

CASE 2
For details not shown, See Case 1.
Level ground ±10% at the traffic side of barrier and sloping ground on the opposite side.

BARRIER SECTIONS

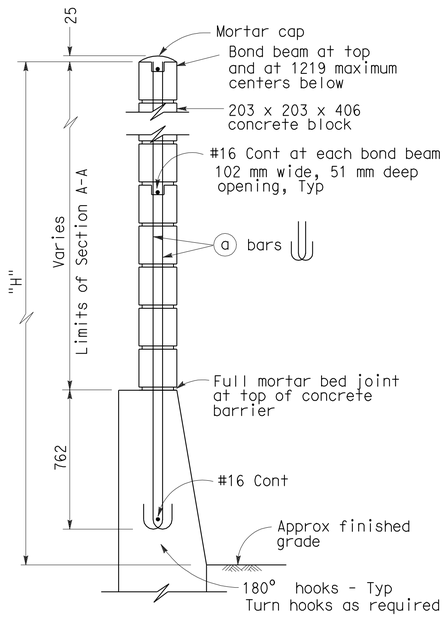

H=1930 THRU H=3150

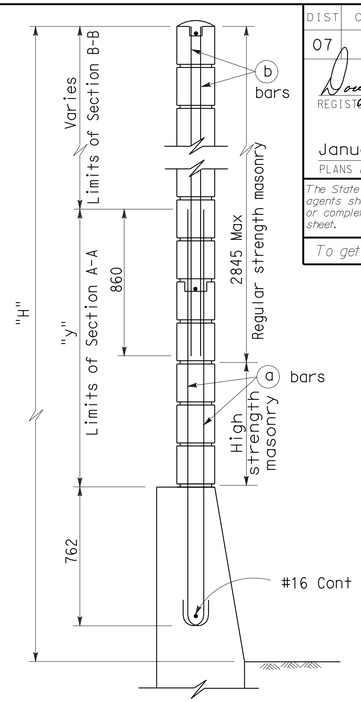

H=3759 THRU H=4978

For details not shown, see H=1930 thru H=3150.

TYPICAL SECTIONS

See Standard Plan B15-8 for pile details.

SOUND WALL REINFORCEMENT TABLE

Maximum H	ⓐ bars @ 406 Max	ⓑ bars @ 406 Max	"y"	f'm (MPa)	Compressive Strength of CMU (MPa)	Maximum H
1930	#13	---	---	10.34	13.1	1930
2540	#13	---	---	10.34	13.1	2540
3150	#13	---	---	10.34	13.1	3150
3759	#16	#13	1524	10.34	13.1	3759
4369	#19	#13	2134	10.34	13.1	4369
4978	#19	#13	2743	17.24	25.6	4978

NOTES A THROUGH G

A. For type of block, type of block bond, and joint finish, see other sheets.

B. When blocks are laid in stacked bond, ladder type, galvanized joint reinforcement shall be provided. A minimum of 2 - 3.76 mm wires continuous at 1219 mm maximum to be used. Locate reinforcement in joints that are at the approximate midpoint between bond beams.

C. Horizontal joints shall be tooled concave or may be weathered. Vertical joints shall be tooled concave or may be raked.

D. For intermediate wall heights (H), or barrier depths (He), that are between the values given, use the tabular information for the next higher (H) or (He).

E. Class 2 concrete to be used for the barrier.

F. Masonry strengths are listed in the "SOUND WALL REINFORCEMENT TABLE".

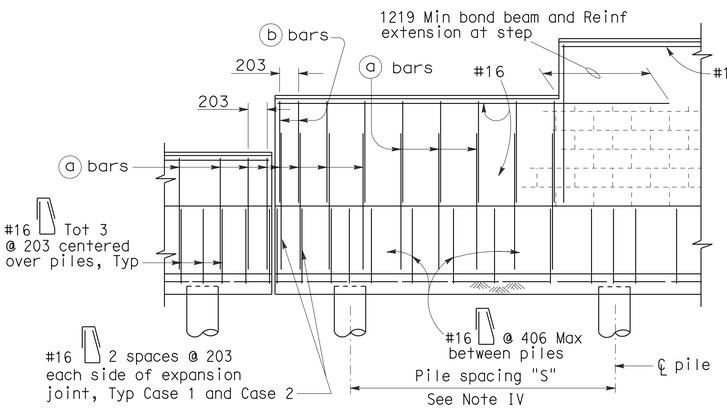

CASE 1
For details not shown, See Case 2.

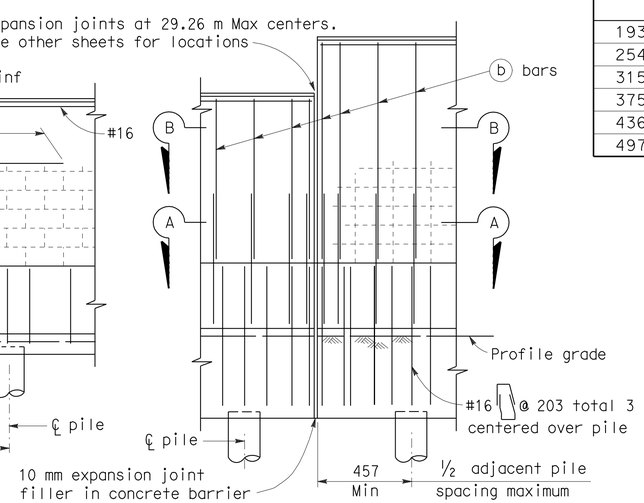

CASE 2
For details not shown, See Case 1.

PARTIAL ELEVATIONS

NOTES I THROUGH VI

I. Details shown are primarily to conform design of sound walls to Type 736S and Type 736 SV Concrete Barriers. For sound wall details conforming with barriers see Standard Plans B15-7 and B15-8.

II. For details and sections not shown, see Standard Plans B15-7 and B15-8.

III. Slope ground at traffic side of barrier to drain. Maximum slope ±10%. See Standard Plan B11-56, Note D.

IV. Pile spacing may be varied, but shall not exceed the tabular values. See Standard Plan B15-8.

V. For Case 1 - ground line to be at the same elevation on both sides of the barrier. Barrier shall not be used to retain earth.

VI. See Standard Plan B15-9 for other details.

STATE OF CALIFORNIA
DEPARTMENT OF TRANSPORTATION

SOUND WALL MASONRY BLOCK ON TYPE 736S/SV BARRIER DETAILS (1)

NO SCALE

ALL DIMENSIONS ARE IN MILLIMETERS UNLESS OTHERWISE SHOWN

RSP B15-6 DATED JANUARY 18, 2008 SUPERSEDES RSP B15-6 DATE APRIL 28, 2005 AND STANDARD PLAN B15-6 DATED JULY 1, 2004-PAGE 296 OF THE STANDARD PLANS BOOK DATED JULY 2004.

REVISED STANDARD PLAN RSP B15-6

2004 REVISED Std PLAN RSP B15-6

11-19-07

DIST	COUNTY	ROUTE	KILOMETER POST TOTAL PROJECT	SHEET NO.	TOTAL SHEETS
07	LA	5	2.9/4.9	788	1082

REGISTERED CIVIL ENGINEER

June 6, 2008
PLANS APPROVAL DATE

REGISTERED PROFESSIONAL ENGINEER — Tillat Satter — No. C42892 — Exp. 03-31-10 — CIVIL — STATE OF CALIFORNIA

The State of California or its officers or agents shall not be responsible for the accuracy or completeness of electronic copies of this plan sheet.

To get to the Caltrans web site, go to: http://www.dot.ca.gov

Caltrans Metric

To accompany plans dated 6-21-10

2004 REVISED Std PLAN RSP B15-7

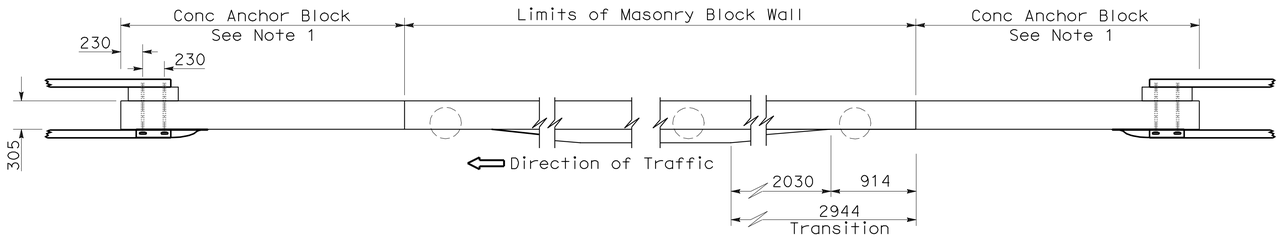

PLAN

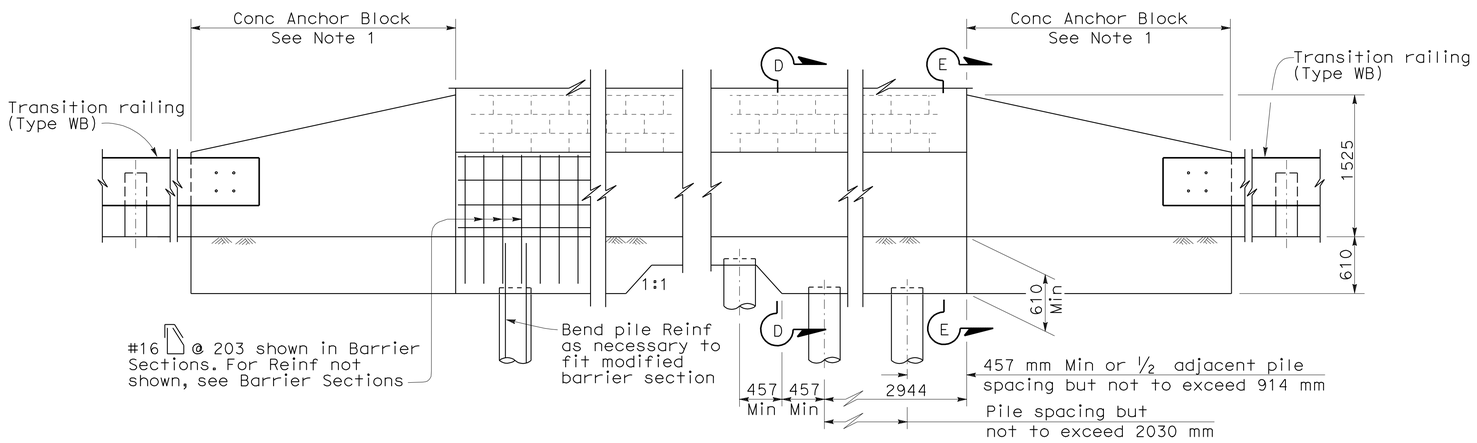

ELEVATION

METAL BEAM GUARDRAIL ANCHORAGE

For details not shown, see Standard Plan B11-56.

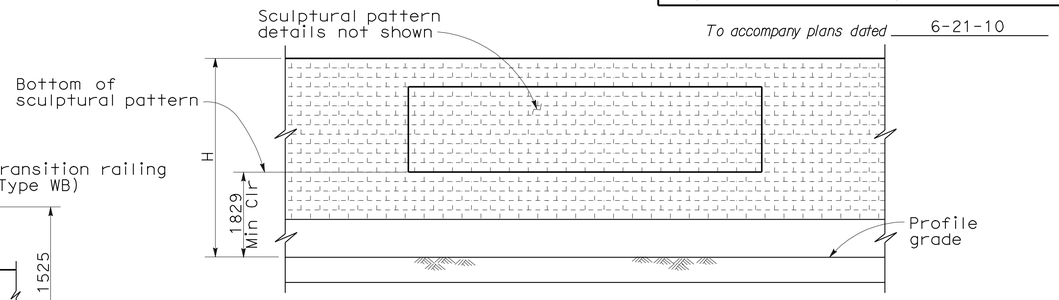

CLEARANCE DETAIL

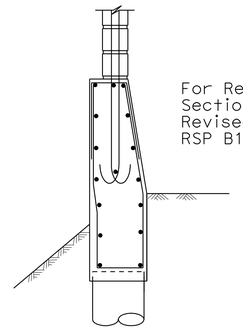

SECTION D-D

For Reinf, see "Barrier Sections Case 2" on Revised Standard Plan RSP B15-6

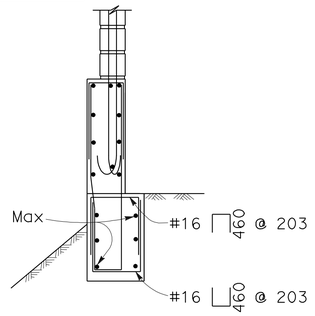

SECTION E-E

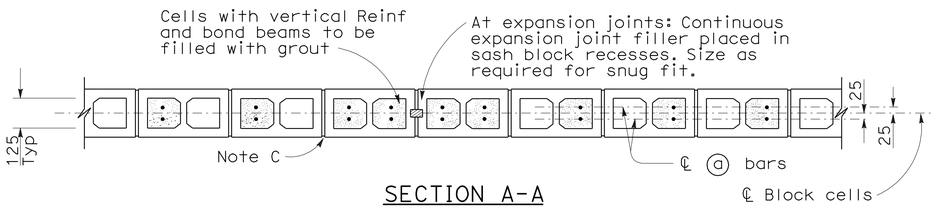

SECTION A-A

For details not shown, see other details.

H=1930 THRU H=3150

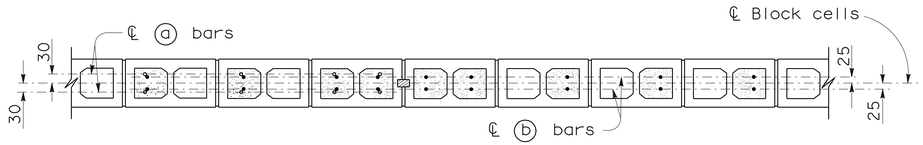

SECTION A-A SECTION B-B

For details not shown, see other details.

H=3759 THRU H=4978

DESIGN NOTES:

DESIGN

Uniform Building Code, 1997 Edition
and the Bridge Design Specifications.

DESIGN WIND LOAD

1293 Pa

DESIGN SEISMIC LOAD

0.57 Dead load

REINFORCED CONCRETE

f'c = 22.408 MPa
fy = 413.688 MPa

CONCRETE MASONRY

REGULAR STRENGTH	HIGH STRENGTH	
f'm = 10.34 MPa	f'm = 13.79 MPa	f'm = 17.24 MPa
fb = 3.41 MPa	fb = 4.55 MPa	fb = 5.72 MPa
fs = 165.5 MPa	fs = 165.5 MPa	fs = 165.5 MPa
n = 25.8	n = 19.3	n = 15.5

NOTE:

1. For Concrete Anchor Block and connection details, see "Connection Detail DD" on Standard Plan A77J3.

STATE OF CALIFORNIA
DEPARTMENT OF TRANSPORTATION

SOUND WALL MASONRY BLOCK ON TYPE 736S/SV BARRIER DETAILS (2)

NO SCALE

ALL DIMENSIONS ARE IN
MILLIMETERS UNLESS OTHERWISE SHOWN

RSP B15-7 DATED JUNE 6, 2008 SUPERSEDES STANDARD PLAN B15-7
DATED July 1, 2004 - PAGE 297 OF THE STANDARD PLANS BOOK DATED July 2004.

REVISED STANDARD PLAN RSP B15-7

5-15-08

DIST	COUNTY	ROUTE	KILOMETER POST TOTAL PROJECT	SHEET NO.	TOTAL SHEETS
07	LA	5	2.9/4.9	789	1082

REGISTERED CIVIL ENGINEER

April 28, 2005
PLANS APPROVAL DATE

REGISTERED PROFESSIONAL ENGINEER Tillat Sattar No. C42892 Exp. 03-31-2006 CIVIL STATE OF CALIFORNIA

The State of California or its officers or agents shall not be responsible for the accuracy or completeness of electronic copies of this plan sheet.

To get to the Caltrans web site, go to: http://www.dot.ca.gov

To accompany plans dated 6-21-10

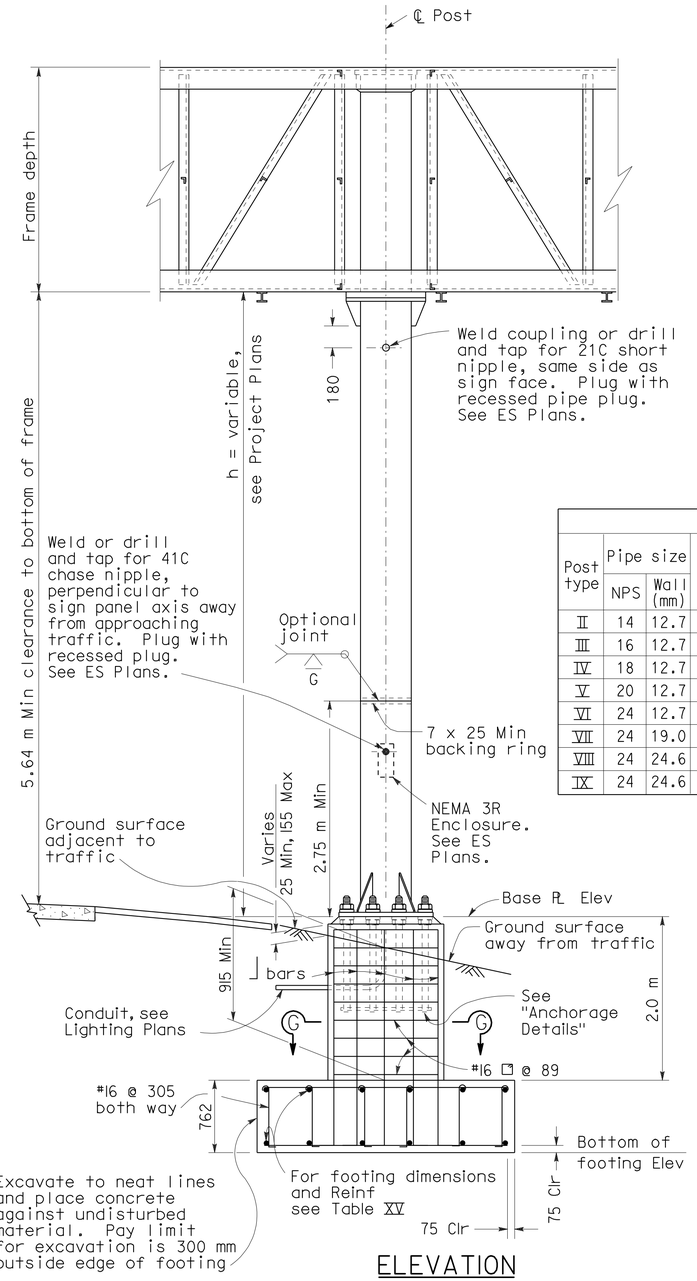

ELEVATION

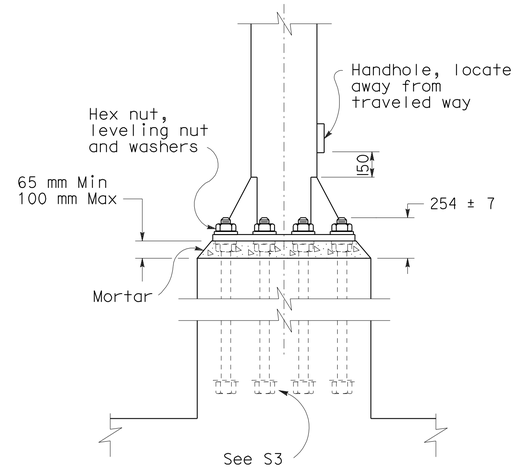

ANCHORAGE DETAILS

TABLE XV

Post type	Pipe size NPS	Pipe size Wall (mm)	Cap Plate for L 127x127 (mm)	Cap Plate for L 152x152 (mm)	Round Pedestal: Pedestal Size Dia (mm)	Round Pedestal: Vertical ⌋-Bars Equally spaced total	Round Pedestal: Vertical ⌋-Bars Bar Size	Round Pedestal: Vertical ⌋-Bars Bar B.C. (mm)	Round Pedestal: Spiral Bar Size	Round Pedestal: Spiral Pitch (mm)	Square Pedestal: Pedestal Size Square (mm)	Square Pedestal: Vertical ⌋-Bars Equally spaced total	Square Pedestal: Vertical ⌋-Bars Bar Size	Square Pedestal: Vertical ⌋-Bars Spacing ea face (mm)	Square Pedestal: Hoop Bar Size	Square Pedestal: Hoop Spacing (mm)	Pile footing Dia (mm)	Pile footing Depth (m)	Alternate: Spread Footing See note 2 (mm)	Alternate: Spread Footing Reinforcement: Width Top	Alternate: Spread Footing Reinforcement: Width Bottom	Alternate: Spread Footing Reinforcement: Longitudinal Top	Alternate: Spread Footing Reinforcement: Longitudinal Bottom	Alternate: Spread Footing Reinforcement: Footing Stirrups
II	14	12.7	610 x 610 x 25	660 x 660 x 25	1600	16	32	1372	16	89	1600	16	32	346	16	89	1372	4.5	3658 x 4267 x 762	14-#19	14-#22	13-#29	13-#29	#16 @ 305
III	16	12.7	660 x 660 x 25	711 x 711 x 25	1600	16	32	1372	16	89	1600	16	32	346	16	89	1372	4.9	3658 x 4267 x 762	15-#19	15-#22	13-#29	13-#29	#16 @ 305
IV	18	12.7	711 x 711 x 25	762 x 762 x 25	1600	16	32	1372	16	89	1600	16	32	346	16	89	1372	5.5	3658 x 4267 x 762	15-#19	15-#22	13-#29	13-#29	#16 @ 305
V	20	12.7	762 x 762 x 25	813 x 813 x 25	1600	16	32	1372	16	89	1600	16	32	346	16	89	1372	5.8	3962 x 4267 x 762	15-#19	15-#22	14-#29	14-#29	#16 @ 305
VI	24	12.7	864 x 864 x 25	914 x 914 x 25	1753	16	36	1534	16	89	1753	16	36	381	16	89	1524	6.7	3962 x 4877 x 762	17-#22	17-#22	14-#29	14-#36	#16 @ 305
VII	24	19.0	864 x 864 x 25	914 x 914 x 25	1753	16	36	1534	16	89	1753	16	36	381	16	89	1524	7.0	3962 x 5182 x 762	18-#22	18-#22	14-#29	14-#36	#16 @ 305
VIII	24	24.6	864 x 864 x 25	914 x 914 x 25	1753	16	36	1534	16	89	1753	16	36	381	16	89	1524	7.6	3962 x 5486 x 762	19-#22	19-#22	14-#29	14-#36	#16 @ 305
IX	24	24.6	864 x 864 x 25	914 x 914 x 25	1753	16	36	1534	16	89	1753	16	36	381	16	89	1524	7.6	3962 x 5486 x 762	19-#22	19-#22	14-#29	14-#36	#16 @ 305

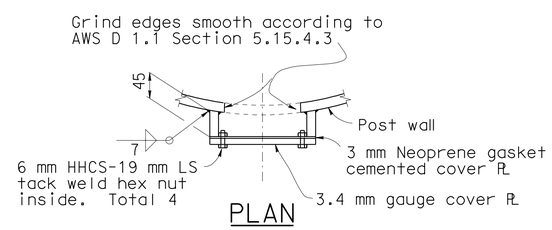

PLAN

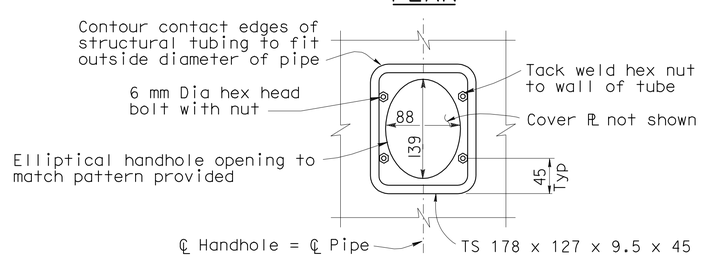

ELEVATION

TYPICAL DETAILS OF HANDHOLE AND COVER

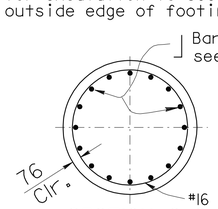

SECTION G-G
ROUND PEDESTAL

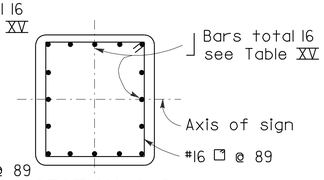

SECTION G-G
RECTANGLE PEDESTAL

Notes:

1. For "General Notes" see Revised Standard Plan RSP S1.
2. Longer side of footing shall be normal to axis of sign.
3. Backfill shall be in place prior to erection of post.
4. Thread upper 254 mm of anchor bolts and galvanize upper 305 mm.
5. Spread footing shown, use Pile Foundation when shown on the Project Plans.
6. Anchor plates may be retained with hexagon nut or formed head as alternatives to details shown.
7. On single post sign structures, the post shall be raked out of plumb, with the use of the leveling nuts to make the bottom of the sign frame level.
8. At final position of post all top and bottom nuts shall be tightened against base plate.
9. When foundation is located on a steep slope with exposed face of concrete adjacent to traffic, see "Detail C" on Revised Standard Plan RSP S7 or RSP S8, as applicable.
10. Slope protection required when indicated on the Project Plans.

STATE OF CALIFORNIA
DEPARTMENT OF TRANSPORTATION

OVERHEAD SIGNS-TRUSS SINGLE POST TYPE POST TYPES II THROUGH IX

NO SCALE

ALL DIMENSIONS ARE IN MILLIMETERS UNLESS OTHERWISE SHOWN

RSP S2 DATED APRIL 28, 2005 SUPERSEDES RSP S2 DATED JANUARY 24,2005 AND STANDARD PLAN S2 DATED JULY 1, 2004-PAGE 311 OF THE STANDARD PLANS BOOK DATED JULY 2004.

REVISED STANDARD PLAN RSP S2

2004 REVISED Std PLAN RSP S2

DIST	COUNTY	ROUTE	KILOMETER POST TOTAL PROJECT	SHEET NO.	TOTAL SHEETS
07	LA	5	2.9/4.9	790	1082

To accompany plans dated 6-21-10

Caltrans Metric

REGISTERED CIVIL ENGINEER

January 24, 2005
PLANS APPROVAL DATE

REGISTERED PROFESSIONAL ENGINEER — Tillat Sattar — No. C42892 — Exp. 03-31-2006 — CIVIL — STATE OF CALIFORNIA

The State of California or its officers or agents shall not be responsible for the accuracy or completeness of electronic copies of this plan sheet.

To get to the Caltrans web site, go to: http://www.dot.ca.gov

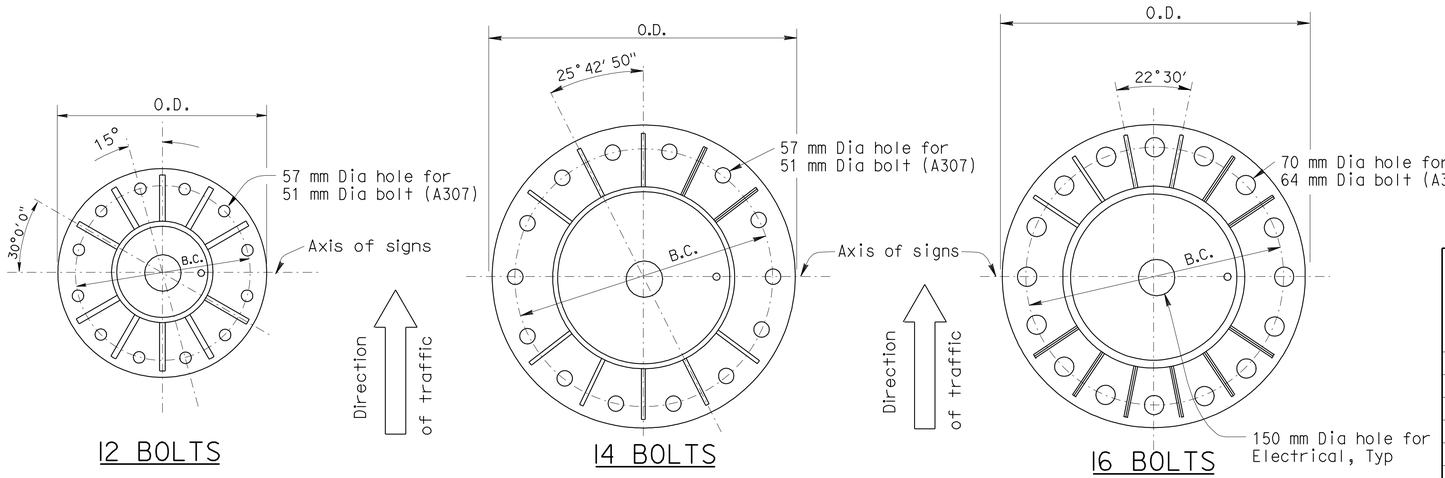

SINGLE POST TYPE BASE PLATE DETAILS

Post Type No.	Nominal Pipe Size (NPS)	Pipe Thickness (mm)	Base ℙ OD & Thickness (mm)	Anchor: Bolt Circle (mm)	Anchor: Bolts Total & Dia (mm)	CIDH: Pile Dia (mm)	CIDH: Pile Depth (m)	CIDH: Vertical Reinforcing: Total	CIDH: Vertical Reinforcing: Bar Size	CIDH: Vertical Reinforcing: Bar Circle (mm)	CIDH: Spiral: Bar Size	CIDH: Spiral: Pitch (mm)
II	14	12.7	864 x 51	610	12-51	1372	4.5	26	32	1143	16	89
III	16	12.7	864 x 51	610	12-51	1372	4.9	26	32	1143	16	89
IV	18	12.7	864 x 51	610	12-51	1372	5.5	26	32	1143	16	89
V	20	12.7	1016 x 64	864	14-51	1372	5.8	26	32	1143	16	89
VI	24	12.7	1016 x 64	864	16-64	1524	6.7	28	36	1295	16	89
VII	24	19.0	1016 x 64	864	16-64	1524	7.0	28	36	1295	16	89
VIII	24	24.6	1016 x 89	864	16-64	1524	7.6	28	36	1295	16	89
IX	24	24.6	1016 x 89	864	16-64	1524	7.6	28	36	1295	16	89

SINGLE POST TABLE

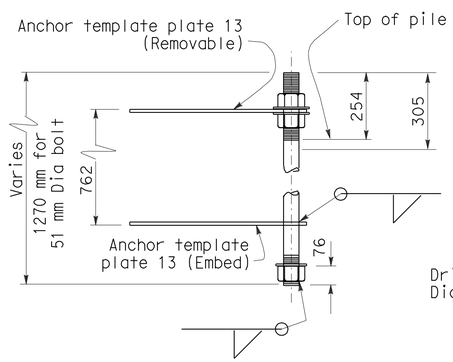

FOR POST II THRU IV
12 BOLTS PATTERN

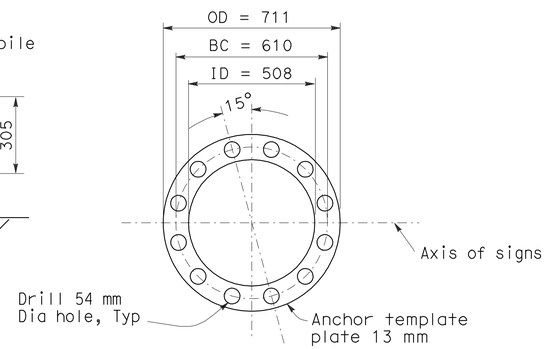

12 BOLTS

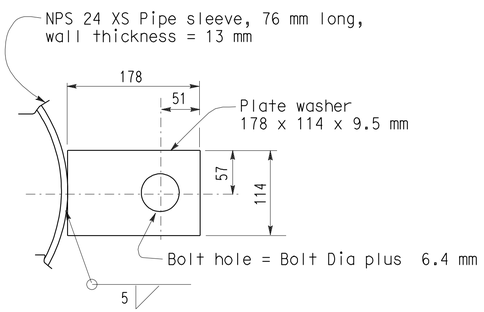

PLATE WASHER FOR
14 &16 BOLT PATTERN

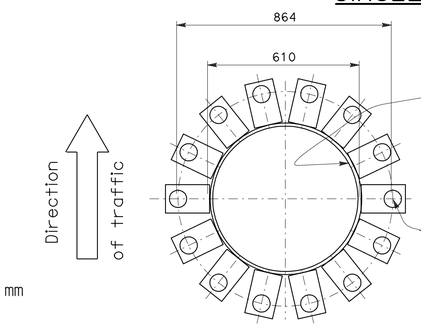

14 BOLTS
ANCHOR BOLT TEMPLATE

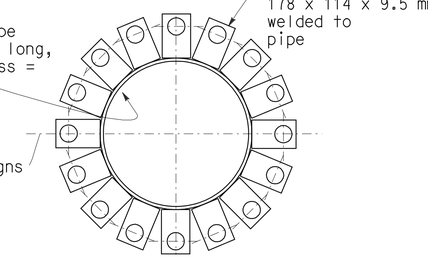

16 BOLTS

(Option: Permanent template similar to ring plate type can be used in lieu of plate washer type).

Template to match base plate anchor bolt layouts

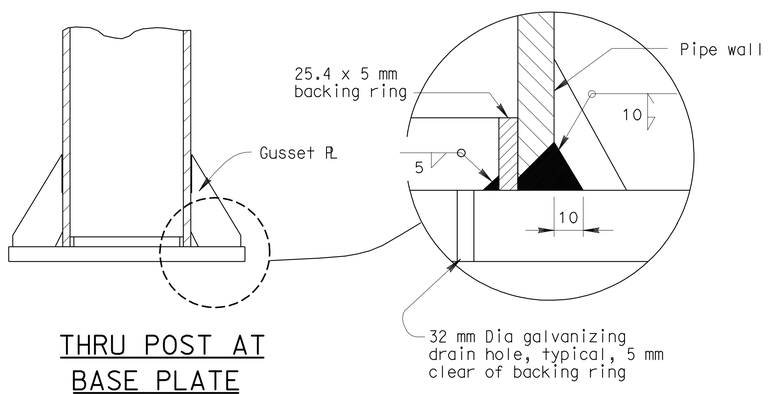

THRU POST AT
BASE PLATE

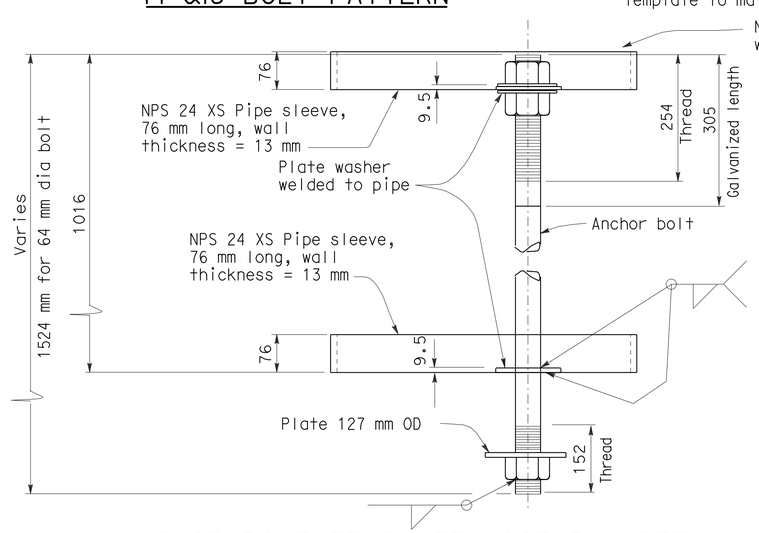

ANCHOR BOLT TEMPLATE ASSEMBLY DETAIL

Note: One bolt shown only. Other bolts not shown.

STATE OF CALIFORNIA
DEPARTMENT OF TRANSPORTATION

OVERHEAD SIGNS-TRUSS SINGLE POST TYPE BASE PLATE AND ANCHORAGE DETAILS

NO SCALE

ALL DIMENSIONS ARE IN
MILLIMETERS UNLESS OTHERWISE SHOWN

RSP S3 DATED JANUARY 24, 2005 SUPERSEDES STANDARD PLAN S3
DATED JULY 1, 2004-PAGE 312 OF THE STANDARD PLANS BOOK DATED JULY 2004.

REVISED STANDARD PLAN RSP S3

2004 REVISED Std PLAN RSP S3

To accompany plans dated 6-21-10

Caltrans Metric

DIST	COUNTY	ROUTE	KILOMETER POST TOTAL PROJECT	SHEET NO.	TOTAL SHEETS
07	LA	5	2.9/4.9	791	1082

REGISTERED CIVIL ENGINEER

April 28, 2005
PLANS APPROVAL DATE

REGISTERED PROFESSIONAL ENGINEER Tillat Sattar No. C42892 Exp. 03-31-2006 CIVIL STATE OF CALIFORNIA

The State of California or its officers or agents shall not be responsible for the accuracy or completeness of electronic copies of this plan sheet.

To get to the Caltrans web site, go to: http://www.dot.ca.gov

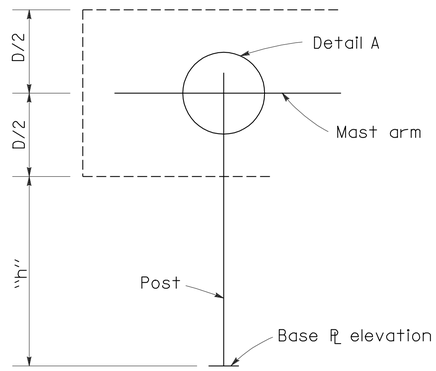

SINGLE ARM SERIES
TYPE B-1

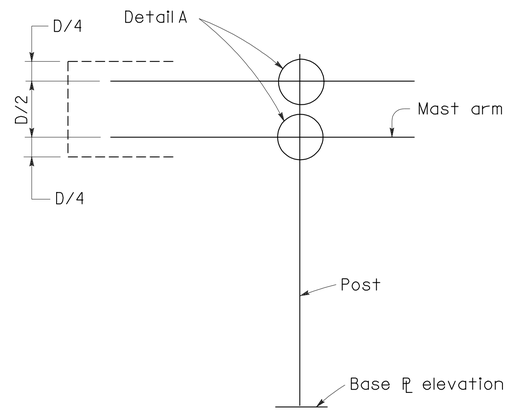

DOUBLE ARM SERIES
TYPE B-2

POST ANGLES			
POST SIZE	ANGLE	X (mm)	WELD (mm)
6	L102 x 76 x12.7	45	7
8	L127 x 76 x12.7	45	7
10	L152 x 102 x15.9	64	7
12	L178 x 102 x15.9	64	8
14	L203 x 102 x19.0	64	8

POST TO ARM FRAMING DATA

MAST ARM ANGLES				
ARM SIZE	ANGLE (mm)	HS BOLT	Y (mm)	WELD (mm)
TS 76 x 76 x 6.4	L64 x 64 x 9.5	M16	35	7
TS 102 x 102 x 6.4	L64 x 64 x 9.5	M16	35	7
TS 127 x 127 x 6.4	L76 x 64 x 9.5	M16	35	7
TS 152 x 152 x 6.4	L89 x 64 x 9.5	M16	35	7
TS 178 x 178 x 6.4	L102 x 76 x 12.7	M20	45	8
TS 203 x 203 x 6.4	L127 x 76 x 12.7	M22	45	8
TS 254 x 254 x 6.4	L152 x 102 x 15.9	M22	64	8

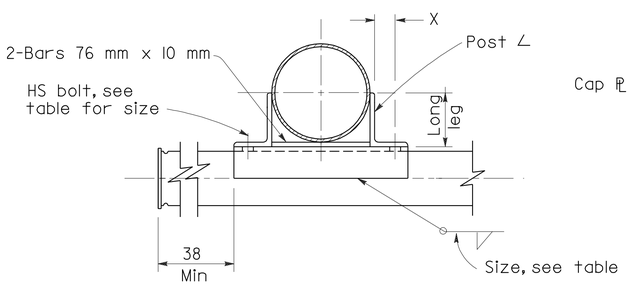

SECTION D-D

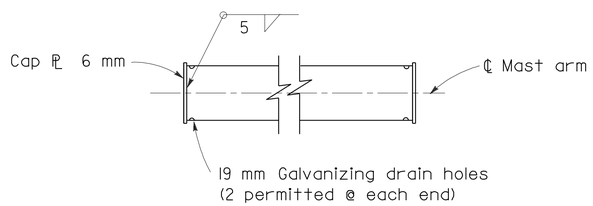

MAST ARM

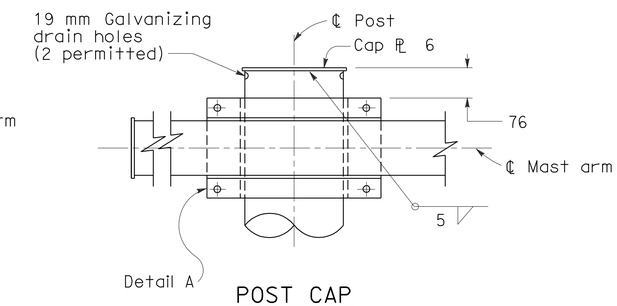

POST CAP

END DETAIL

SEE OTHER PLAN SHEETS FOR

1. Sign type and location
2. Panel type and location on structure
3. Post size and dimension "h".
4. Mast arm size.
5. Foundation type.
6. Illumination if required.

NOTES

For post connection to base plate see RSP S48

For mast arm length and mast arm-to-sign panel connections see S46

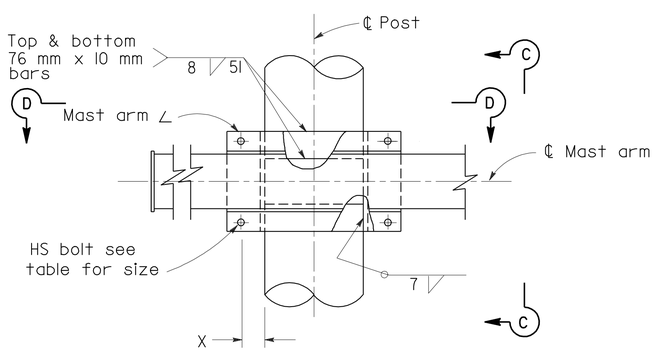

DETAIL A

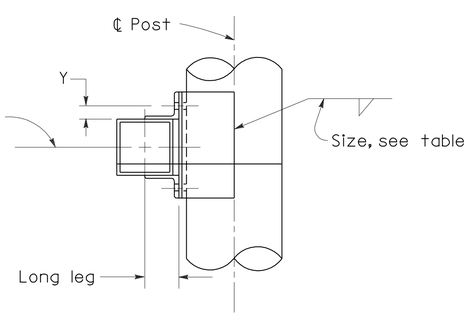

SECTION C-C

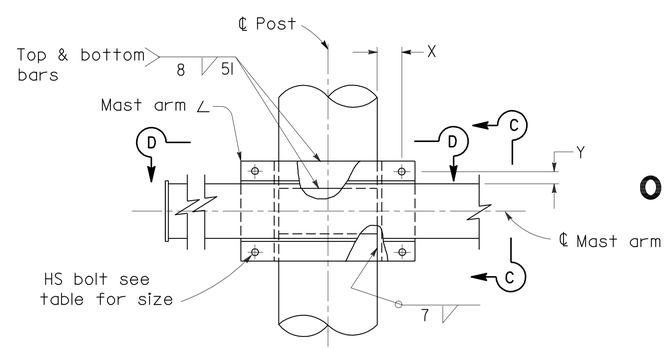

DETAIL B

STATE OF CALIFORNIA
DEPARTMENT OF TRANSPORTATION

OVERHEAD SIGNS-LIGHTWEIGHT TYPE B CONNECTION DETAILS

NO SCALE

ALL DIMENSIONS ARE IN MILLIMETERS UNLESS OTHERWISE SHOWN

RSP S44 DATED APRIL 28, 2005 SUPERSEDES RSP S44 DATED JANUARY 24, 2005 AND STANDARD PLAN S44 DATED JULY 1, 2004-PAGE 343 OF THE STANDARD PLANS BOOK DATED JULY 2004.

REVISED STANDARD PLAN RSP S44

2004 REVISED Std PLAN RSP S44

To accompany plans dated 6-21-10

Caltrans Metric

DIST	COUNTY	ROUTE	KILOMETER POST TOTAL PROJECT	SHEET NO.	TOTAL SHEETS
07	LA	5	2.9/4.9	792	1082

REGISTERED CIVIL ENGINEER

January 24, 2005
PLANS APPROVAL DATE

REGISTERED PROFESSIONAL ENGINEER Tillat Sattar No. C42892 Exp. 03-31-2006 CIVIL STATE OF CALIFORNIA

The State of California or its officers or agents shall not be responsible for the accuracy or completeness of electronic copies of this plan sheet.

To get to the Caltrans web site, go to: http://www.dot.ca.gov

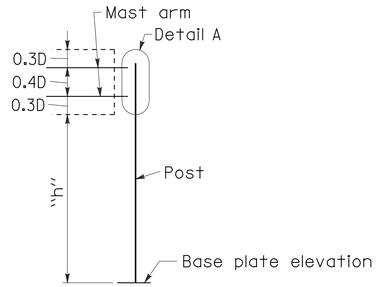

DOUBLE MAST ARM SERIES
TYPE C-1

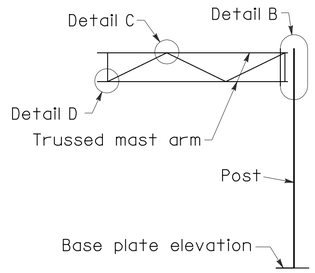

TRUSSED MAST ARM SERIES
TYPE C-2

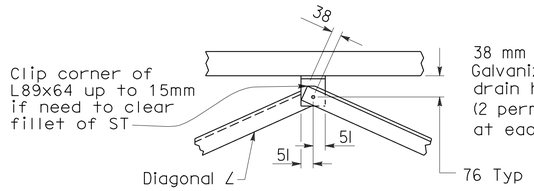

DETAIL C

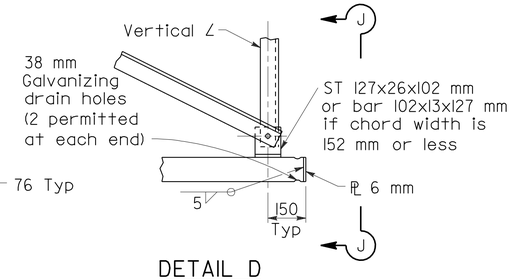

DETAIL D

POST ANGLES			
POST SIZE	ANGLE (mm)	X (mm)	WELD (mm)
6	∠127x76x12.7	44	7
8	∠152x102x15.9	57	7
10	∠178x102x15.9	57	7
12	∠203x102x19.0	57	8
14	∠203x102x19.0	57	8

POST TO ARM FRAMING DATA

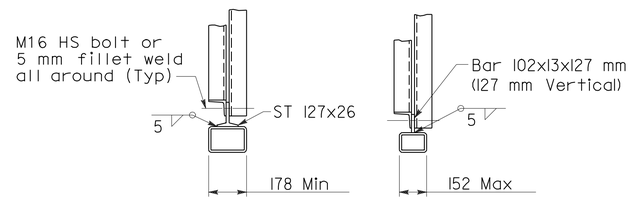

SECTION J-J

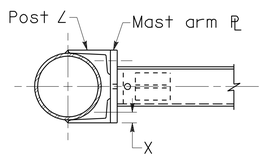

SECTION G-G

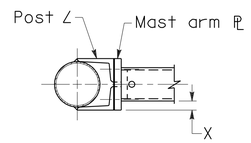

SECTION F-F

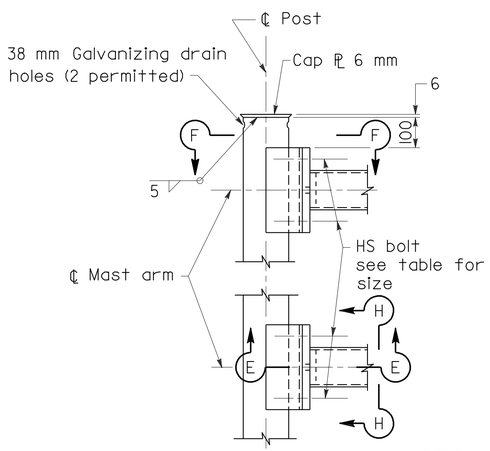

DETAIL A

NOTE

"T" equals vertical dimension of mast arm.

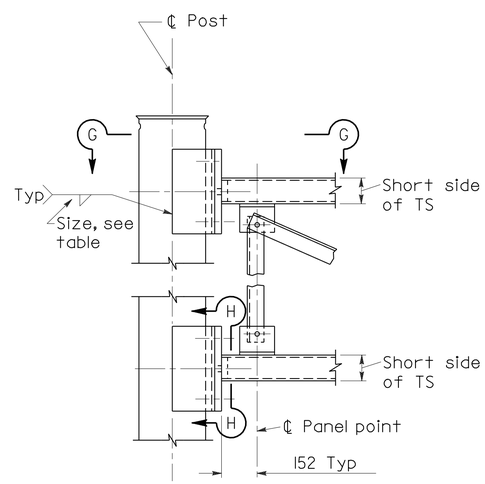

DETAIL B

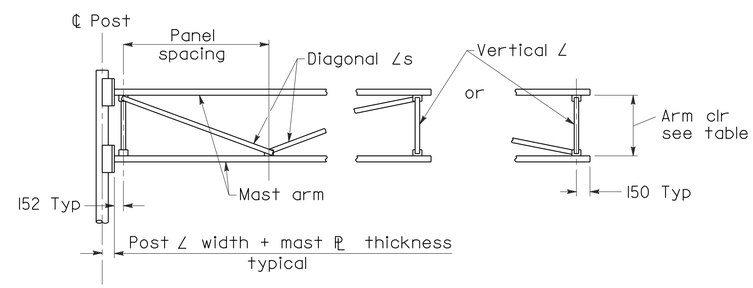

TRUSS FRAMING DATA

SIGN DEPTH (mm)	ARM CLEARANCE (mm)	MAX PANEL SPACING (mm)	VERTICAL ANGLE (mm)	DIAGONAL ANGLE (mm)
D=1016-1778	610	1321	51x51x6.4	51x51x6.4
D=2032-2540	914	1981	89x64x6.4*	89x64x6.4*

*Short leg outstanding

MAST ARM PLATE			
TWO ARMS	TRUSSED ARMS	PLATE (mm)	HS BOLT
TS 76x76x6.4		19	M16
TS 102x102x6.4		25.4	M16
TS 127x127x6.4		25.4	M20
TS 152x152x6.4		25.4	M20
TS 178x178x6.4	TS 127x76x9.5	32	M20
	TS 152x102x9.5	32	M22
	TS 178x127x9.5	32	M22
	TS 203x152x9.5	32	M22
	TS 254x152x9.5	32	M24

NOTES

For post connection to base PL see RSP S48

For mast arm length and mast-arm-to sign panel connections see S46

See other plan sheets for:

1. Sign type and location.
2. Panel type and location on structure.
3. Post size and dimension "h".
4. Mast arm size.
5. Foundation type.
6. Illumination if required.

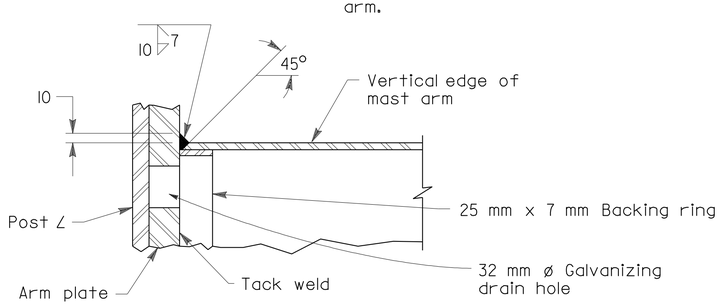

SECTION E-E

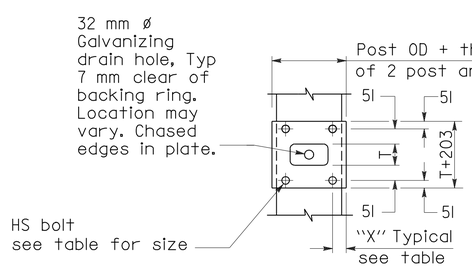

SECTION H-H

NOTE

"T" equals vertical dimension of mast arm.

Bottom connection shown. Top similar.

For General Notes see RSP S48

STATE OF CALIFORNIA
DEPARTMENT OF TRANSPORTATION

OVERHEAD SIGNS-LIGHTWEIGHT TYPE C CONNECTIONS DETAILS

NO SCALE

ALL DIMENSIONS ARE IN MILLIMETERS UNLESS OTHERWISE SHOWN

RSP S45 DATED JANUARY 24, 2005 SUPERSEDES STANDARD PLAN S45
DATED JULY 1, 2004-PAGE 344 OF THE STANDARD PLANS BOOK DATED JULY 2004.

REVISED STANDARD PLAN RSP S45

2004 REVISED Std PLAN RSP S45

DIST	COUNTY	ROUTE	KILOMETER POST TOTAL PROJECT	SHEET NO.	TOTAL SHEETS
07	LA	5	2.9/4.9	793	1082

REGISTERED CIVIL ENGINEER

January 24, 2005
PLANS APPROVAL DATE

REGISTERED PROFESSIONAL ENGINEER Tillat Sattar No. C42892 Exp. 03-31-2006 CIVIL STATE OF CALIFORNIA

The State of California or its officers or agents shall not be responsible for the accuracy or completeness of electronic copies of this plan sheet.

To get to the Caltrans web site, go to: http://www.dot.ca.gov

To accompany plans dated 6-21-10

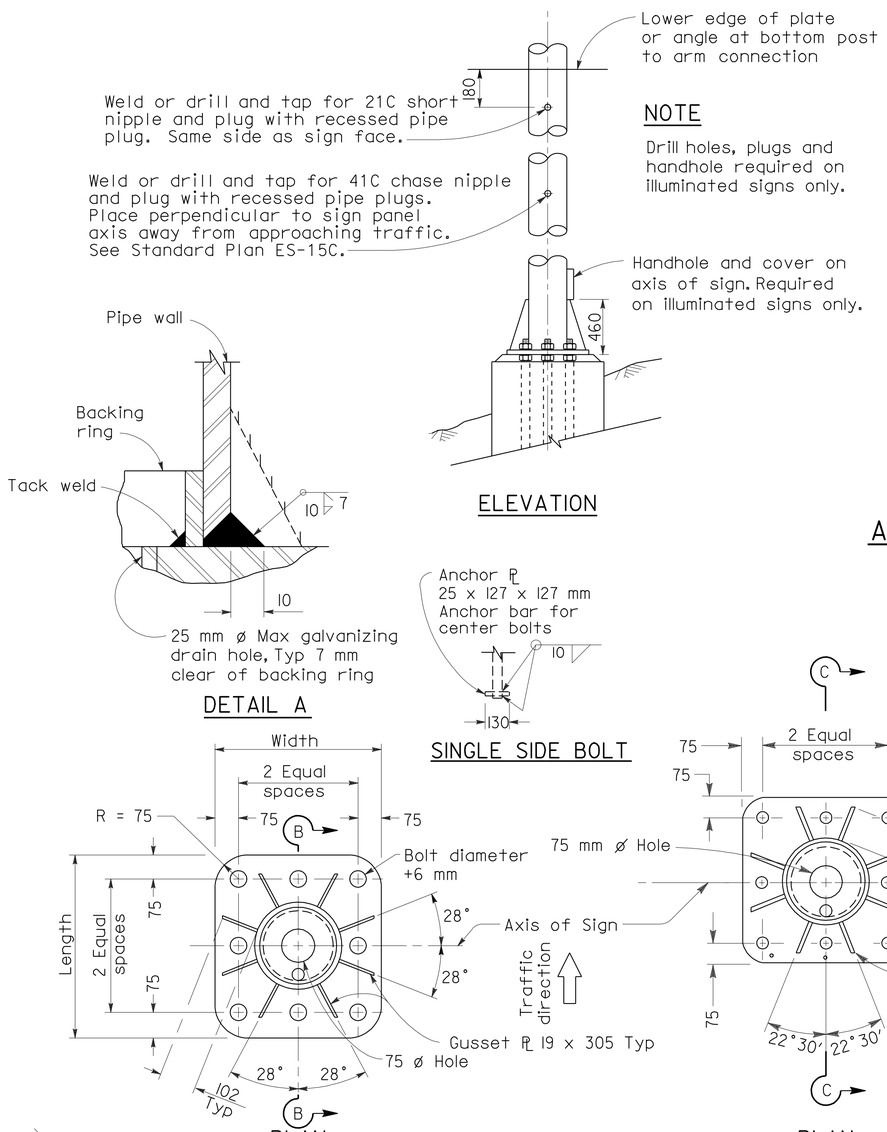

BASE PLATE DETAILS

NOTE

Drill holes, plugs and handhole required on illuminated signs only.

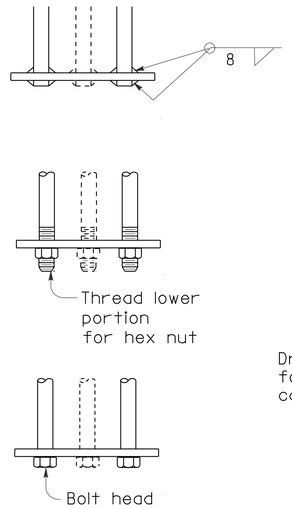

ALTERNATIVE BAR CONNECTIONS

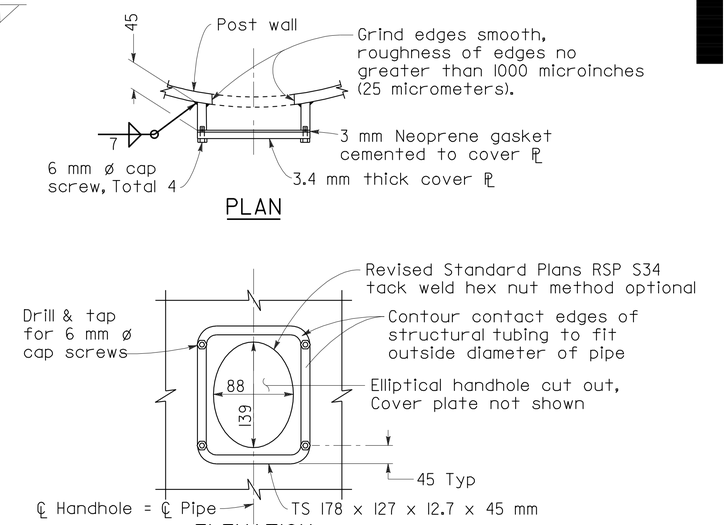

TYPICAL DETAILS OF HANDHOLE AND COVER

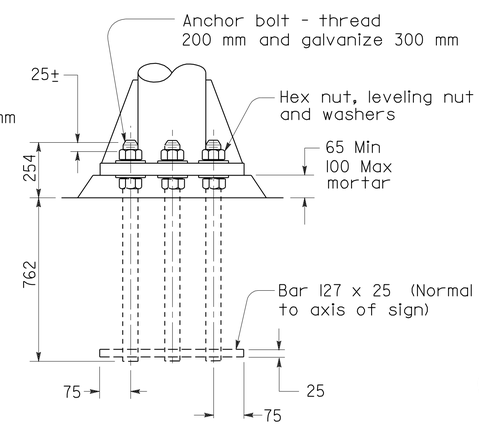

ANCHORAGE BOLT

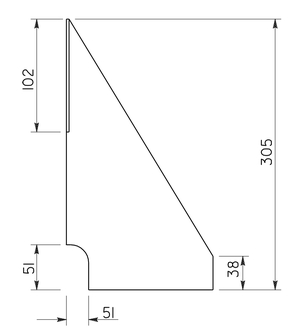

GUSSET DETAIL

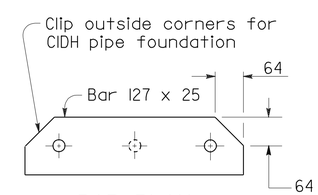

BAR PLAN

ANCHORAGE DETAILS

GENERAL NOTES

DESIGN: AASHTO Standard Specifications for Structural Supports for Highway Signs, Luminaires and Traffic Signals, dated 1994.

CONSTRUCTION: Standard Specifications and the Special Provision.

WELDING: All welding continuous unless otherwise noted on the plans. All welding to be done in accordance with the Standard Specifications.

NOTES

1. Footing shall be placed with long dimensions normal to axis of sign.
2. On single post signs the post shall be raked out of plumb with the use of leveling nuts to make the bottom of the sign panel level.
3. 51mm ø anchor bolts may be substituted for 45 mm ø bolts. 64 mm ø anchor bolts may be substituted for 57 mm ø bolts.

Post Size		Base Plate (mm)	Anchor Bolts	
NPS	"t" (mm)		#	Bolt ø
6	7.11	51 x 534 x 534	8	51 mm
6	10.97	51 x 534 x 534	8	51 mm
8	8.18	51 x 534 x 534	8	51 mm
8	12.7	51 x 534 x 534	8	51 mm
10	12.7	51 x 715 x 715	8	57 mm
12	12.7	51 x 715 x 715	8	57 mm
14	12.7	51 x 715 x 715	8	57 mm
14	19.0	51 x 715 x 715	8	57 mm

"t" = Wall Thickness

STATE OF CALIFORNIA
DEPARTMENT OF TRANSPORTATION

OVERHEAD SIGNS-LIGHTWEIGHT POST DETAILS

NO SCALE

ALL DIMENSIONS ARE IN MILLIMETERS UNLESS OTHERWISE SHOWN

RSP S48 DATED JANUARY 24, 2005 SUPERSEDES STANDARD PLAN S48 DATED JULY 1, 2004-PAGE 347 OF THE STANDARD PLANS BOOK DATED JULY 2004.

REVISED STANDARD PLAN RSP S48

2004 REVISED Std PLAN RSP S48

DIST	COUNTY	ROUTE	KILOMETER POST TOTAL PROJECT	SHEET NO.	TOTAL SHEETS
07	LA	5	2.9/4.9	794	1082

Caltrans Metric

Jeffery G. McRae
REGISTERED ELECTRICAL ENGINEER

October 5, 2007
PLANS APPROVAL DATE

REGISTERED PROFESSIONAL ENGINEER
Jeffery G. McRae
No. E14512
Exp. 6-30-08
ELECTRICAL
STATE OF CALIFORNIA

The State of California or its officers or agents shall not be responsible for the accuracy or completeness of electronic copies of this plan sheet.

To get to the Caltrans web site, go to: http://www.dot.ca.gov

To accompany plans dated 6-21-10

ELECTROLIERS

STANDARD TYPES
15, 15D
15 STRUCTURE
21, 21D STRUCTURE
30
31
32
35
36-20A

High mast lighting standard

Double arm lighting standard

Existing electrolier

Electrolier foundation (Future installation)

NOTES

1. Luminaires shall be 310 W HPS when installed on Type 21, 21D, 30, 31, 32, 35 and 36-20A Standards, unless otherwise specified. Luminaires shall be 200 W HPS when installed on other type standards or poles, unless otherwise specified.
2. Luminaires shall be the cutoff type, ANSI Type III medium cutoff lighting distribution, unless otherwise specified.
3. Variations noted adjacent to symbol on project plans.

Electrolier (see project notes or project plans)

Luminaire on wood pole

STANDARD NOTES

- AB — Abandon. If applied to conduit, remove conductors.
- BC — Install pull box in existing conduit run.
- BP — Pedestrian barricade, type as indicated on plan.
- CB — Install conduit into existing pull box.
- CC — Connect new and existing conduit. Remove existing conductors and install conductors as indicated.
- CF — Conduit to remain for future use. Remove conductors. Install pull wire or rope.
- DH — Detector handhole.
- FA — Foundation to be abandoned.
- IS — Install sign on signal mast arm.
- NS — No slip base on standard.
- PEC — Photoelectric control.
- PEU — Photoelectric unit.
- RC — Equipment or material to be removed and become the property of the Contractor.
- RE — Remove electrolier, fuses and ballast. Tape ends of conductors.
- RL — Relocate equipment.
- RR — Remove and reuse equipment.
- RS — Remove and salvage equipment.
- SC — Splice new to existing conductors.
- SD — Service disconnect.
- SF — Standard to remain for future use. Remove luminaire, pole conductors, fuses and ballast. Tape disconnects.
- TSP — Telephone service point.

ABBREVIATIONS AND EQUIPMENT DESIGNATIONS

PROPOSED	EXISTING	
BBS	bbs	Battery backup system
BC	bc	Bolt circle
C	C	Conduit
CCTV	cctv	Closed circuit television
CKT	ckt	Circuit
CMS	cms	Changeable message sign
DLC	dlc	Loop detector lead-in cable
EMS	ems	Extinguishable message sign
EVC	evc	Emergency vehicle cable
EVD	evd	Emergency vehicle detector
FB	fb	Flashing beacon
FBCA	fbca	Flashing beacon control assembly
FBS	fbs	Flashing beacon with slip base
FO	fo	Fiber optic
G	G	Ground (Equipment Grounding Conductor)
GFCI	GFCI	Ground fault circuit interrupt
HAR	har	Highway advisory radio
HEX	hex	Hexagonal
HPS	hps	High pressure sodium
IISNS	iisns	Internally illuminated street name sign
ISL	isl	Induction sign lighting
LED	led	Light emitting diode
LMA	lma	Luminaire mast arm
LPS	lps	Low pressure sodium
LTG	ltg	Lighting
LUM	lum	Luminaire
MAT	mat	Mast arm mounted vehicle signal faces, top attachment
MAS	mas	Mast arm mounted vehicle signal faces, side attachment
MAS-4A	mas-4A	Mast arm mounted vehicle signal faces, side attachment - 4 signal section
MAS-4B	mas-4B	
MAS-4C	mas-4C	
MAS-5A	mas-5A	Mast arm mounted vehicle signal faces, side attachment - 5 signal section
MAS-5B	mas-5B	
MC	mc	Mercury contactor
M/M	m/m	Multiple to multiple transformer
MT	mt	Conduit with pull wire or rope only
MTG	mtg	Mounting
	mv	Mercury vapor lighting fixture
N	N	Neutral (Grounded Conductor)
NC	NC	Normally closed
NO	NO	Normally open
PB	pb	Pull box
PEC	pec	Photoelectric control (Type I, II, III, IV or V as shown)
PED	ped	Pedestrian
PEU	peu	Photoelectric unit
PPB	ppb	Pedestrian push button
RL	RL	Relocated equipment
RM	rm	Ramp metering
SB	sb	Slip base
SIC	sic	Signal interconnect cable
SIG	sig	Signal
SMA	sma	Signal mast arm
SNS	sns	Street name sign
SP	sp	Service point
TDC	tdc	Telephone demarcation cabinet
TMS	tms	Traffic monitoring station
TOS	tos	Traffic Operations System
VEH	veh	Vehicle
XFMR	xfmr	Transformer
COMM	comm	Communication
RWIS	rwis	Roadway weather information system

SOFFIT AND WALL MOUNTED LUMINAIRES

Pendant, 70 W HPS unless otherwise specified.

Flush, 70 W HPS unless otherwise specified.

Wall surface, 70 W HPS unless otherwise specified.

Existing soffit or wall luminaire to remain unmodified.

Existing soffit or wall luminaire to be modified as specified.

NOTE

Arrow indicates "street side" of luminaire.

STATE OF CALIFORNIA
DEPARTMENT OF TRANSPORTATION

ELECTRICAL SYSTEMS (SYMBOLS AND ABBREVIATIONS)

NO SCALE

ALL DIMENSIONS ARE IN MILLIMETERS UNLESS OTHERWISE SHOWN

RSP ES-1A DATED OCTOBER 5, 2007 SUPERSEDES STANDARD PLAN ES-1A DATED JULY 1, 2004-PAGE 413 OF THE STANDARD PLANS BOOK DATED JULY 2004.

REVISED STANDARD PLAN RSP ES-1A

2004 REVISED Std PLAN RSP ES-1A

DIST	COUNTY	ROUTE	KILOMETER POST TOTAL PROJECT	SHEET NO.	TOTAL SHEETS
07	LA	5	2.9/4.9	795	1082

Caltrans Metric

REGISTERED ELECTRICAL ENGINEER

October 5, 2007
PLANS APPROVAL DATE

REGISTERED PROFESSIONAL ENGINEER Jeffery G. McRae No. E14512 Exp. 6-30-08 ELECTRICAL STATE OF CALIFORNIA

The State of California or its officers or agents shall not be responsible for the accuracy or completeness of electronic copies of this plan sheet.

To get to the Caltrans web site, go to: http://www.dot.ca.gov

To accompany plans dated 6-21-10

CONDUIT

PROPOSED	EXISTING	
		Lighting conduit, unless otherwise indicated or noted
		Traffic signal conduit
C	c	Communication conduit
T	t	Telephone conduit
F	f	Fire alarm conduit
FO	fo	Fiber optic conduit
		Conduit termination (RSP ES-9A C)
R	r	Conduit riser in/on structure or Service pole

SERVICE EQUIPMENT

PROPOSED	EXISTING	
OH	oh	Overhead lines
U	u	Wood pole "U" indicates utility owned
		Pole guy-with anchor
		Utility transformer-ground mounted
III		Service equipment enclosure type
		Service equipment enclosure door indicates front of enclosure
T	t	Telephone demarcation cabinet

POLE-MOUNTED SERVICE DESIGNATION

TYPE H SERVICE - 8.8 m

Type of installation

Pole height above grade

ILLUMINATED OVERHEAD SIGN

PROPOSED	EXISTING	
		Overhead sign - Single post
		Overhead sign - Two post
		Overhead sign - Mounted on structure
		Overhead sign with electrolier

SIGNAL EQUIPMENT

PROPOSED	EXISTING	
		Pedestrian signal face
		Pedestrian push button post
		Pedestrian barricade
		Vehicle signal face (with backplate, 3-Section: red, yellow and green)
		Vehicle signal face with angle visors
PV	PV	Modifications of basic symbols: "L" Indicates all non-arrow sections louvered "LG" Indicates louvered green section only "PV" indicates 300 mm programmed visibility sections "200" indicates all 200 mm sections (only when specified)
		Type 15TS and Vehicle signal face
		Vehicle signal face with red, yellow and green left arrow sections
		Vehicle signal face with red and yellow sections and up green arrow
		Vehicle signal face (5 Section) with red, yellow and green sections and yellow and green right arrows
		Type 1 Standard and attached vehicle signal faces
		Standard with signal mast arm only and attached vehicle signal faces and internally illuminated street name sign
		Type 33 Standard, Left-turn vehicle signal face and sign
		Standard with luminaire and signal mast arms and attached vehicle signal faces
		Cantilever flashing beacon Type 9 Frame, with a sign unless otherwise specified or indicated
Y Y	Y Y	Type 15-FBS Standard with two vehicle signal face sections with lens, backplate and visor with a sign
R	Y	Flashing beacon. One vehicle signal face section with lens, backplate and visor. "R" indicates red indication, "Y" indicates yellow indication
		Controller assembly. Door indicates front of cabinet
		Guard post
		Type 1 Standard with "Meter On" sign
		Emergency vehicle detector

NOTES

1. All signal sections shall be 300 mm unless shown otherwise.
2. Signal heads shall be provided with backplates unless shown otherwise.
3. Signal indication shall be LED.

STATE OF CALIFORNIA
DEPARTMENT OF TRANSPORTATION

ELECTRICAL SYSTEMS (SYMBOLS AND ABBREVIATIONS)

NO SCALE

ALL DIMENSIONS ARE IN MILLIMETERS UNLESS OTHERWISE SHOWN

RSP ES-1B DATED OCTOBER 5, 2007 SUPERSEDES STANDARD PLAN ES-1B DATED JULY 1, 2004-PAGE 414 OF THE STANDARD PLANS BOOK DATED JULY 2004.

REVISED STANDARD PLAN RSP ES-1B

2004 REVISED Std PLAN RSP ES-1B

8-9-07

DIST	COUNTY	ROUTE	KILOMETER POST TOTAL PROJECT	SHEET NO.	TOTAL SHEETS
07	LA	5	2.9/4.9	796	1082

Caltrans Metric

REGISTERED ELECTRICAL ENGINEER

October 5, 2007
PLANS APPROVAL DATE

REGISTERED PROFESSIONAL ENGINEER Jeffery G. McRae No. E14512 Exp. 6-30-08 ELECTRICAL STATE OF CALIFORNIA

The State of California or its officers or agents shall not be responsible for the accuracy or completeness of electronic copies of this plan sheet.

To get to the Caltrans web site, go to: http://www.dot.ca.gov

To accompany plans dated 6-21-10

EQUIPMENT IDENTIFICATION

ILLUMINATED SIGN IDENTIFICATION NUMBER:

Sign No. 12345 — Sign number - Place on post or structure

10 ISL SCI 1.0

- 1.0 — Transformer rating (kVA)
- SCI — Lighting control type
- ISL — Number and type of fixtures

Do NOT place on standard or structure

ELECTROLIER OR EQUIPMENT IDENTIFICATION NUMBER:

12345 - 4.6

- 4.6 — Mast arm length in meters, if shown. Do not place on standard or structure.
- 12345 — Equipment number - Place on standard or structure. Existing equipment numbers are shown in parenthesis

CONDUIT AND CONDUCTOR IDENTIFICATION:

41C, 2#10, 15#14, 2 DLC

- 2#10, 15#14, 2 DLC — Number and size of conductors and cables
- 41C — Size of conduit in millimeters

Ø1, Ø2, Ø2P, etc.	Traffic phase identification for signal faces, detectors and phase diagrams
1 2 3	Project note numbers
A B C	Equipment description, installation or item numbers
1 2 3	Conduit run numbers

SIGNAL AND LIGHTING STANDARD (TYPICAL DESIGNATION):

19A - 3 - 161

- 161 — Wind velocity=161 km/h
- 3 — Case 3 arm loading
- 19A — Standard type
- Standard Plan sheet number
- Detail number or letter

WIRING DIAGRAM LEGEND

P	Pole
CB	Circuit breaker
A	Ampere
V	Volt
M	Metered
UM	Unmetered
NB	Neutral bus
GB	Ground bus
G	Equipment grounding conductor
N	Grounded conductor (Neutral)

- External conductor
- Conductor or bus
- Tie point
- Contactor coil
- Contactor, Contact NO
- Terminal blocks
- Contactor, Contact NC
- Enclosure bond
- Grounding electrode
- Circuit breaker
- Receptacle

PULL BOXES

PROPOSED EXISTING

Pull box-No. 5 unless otherwise indicated or noted.

3 9A(21)

Pull box-Additional designations or descriptions

3 = No. 3½ pull box
5 = No. 5 pull box
6 = No. 6 pull box
7 = No. 7 (Ceiling pull box)
8 = No. 8 (Pendant soffit pull box)
9 = No. 9 pull box
9A = No. 9A pull box

(C) = Communications pull box
(E) = Pull box with extension
(S) = Sprinkler control pull box
(21) = Anchor bolts and conduit for future installation of Type 21 Standard
(T) = Traffic pull box

MISCELLANEOUS EQUIPMENT

PROPOSED	EXISTING	
CMS	cms	Changeable message sign
		Closed circuit television camera
		Highway advisory radio pole and antenna
EMS	ems	Extinguishable message sign
		Detection device
M V	m v	M = Microwave sensor V = Video image sensor

VEHICLE DETECTORS

5 J 9 U

- Vehicle detector designation
- U = Upper, L = Lower
- Slot number in input file
- Input file (I or J)
- Phase

PROPOSED	EXISTING	
		Type A detector loop. Outline of sawcut shown.
		Type B detector loop. Outline of sawcut shown.
		Type C detector loop. Outline of sawcut shown.
		Type D detector loop. Outline of sawcut shown.
		Type E detector loop. Outline of sawcut shown.
		Type Q detector loop. Outline of sawcut shown.
		Magnetic detector
DH	dh	Detector handhole
		Microwave or video detection zone

STATE OF CALIFORNIA
DEPARTMENT OF TRANSPORTATION

ELECTRICAL SYSTEMS (SYMBOLS AND ABBREVIATIONS)

NO SCALE

ALL DIMENSIONS ARE IN MILLIMETERS UNLESS OTHERWISE SHOWN

RSP ES-1C DATED OCTOBER 5, 2007 SUPERSEDES STANDARD PLAN ES-1C DATED JULY 1, 2004-PAGE 415 OF THE STANDARD PLANS BOOK DATED JULY 2004.

REVISED STANDARD PLAN RSP ES-1C

2004 REVISED Std PLAN RSP ES-1C

10-1-07

DIST	COUNTY	ROUTE	KILOMETER POST TOTAL PROJECT	SHEET NO.	TOTAL SHEETS
07	LA	5	2.9/4.9	797	1082

Caltrans Metric

REGISTERED ELECTRICAL ENGINEER

October 5, 2007
PLANS APPROVAL DATE

REGISTERED PROFESSIONAL ENGINEER Jeffery G. McRae No. E14512 Exp. 6-30-08 ELECTRICAL STATE OF CALIFORNIA

The State of California or its officers or agents shall not be responsible for the accuracy or completeness of electronic copies of this plan sheet.

To get to the Caltrans web site, go to: http://www.dot.ca.gov

To accompany plans dated 6-21-10

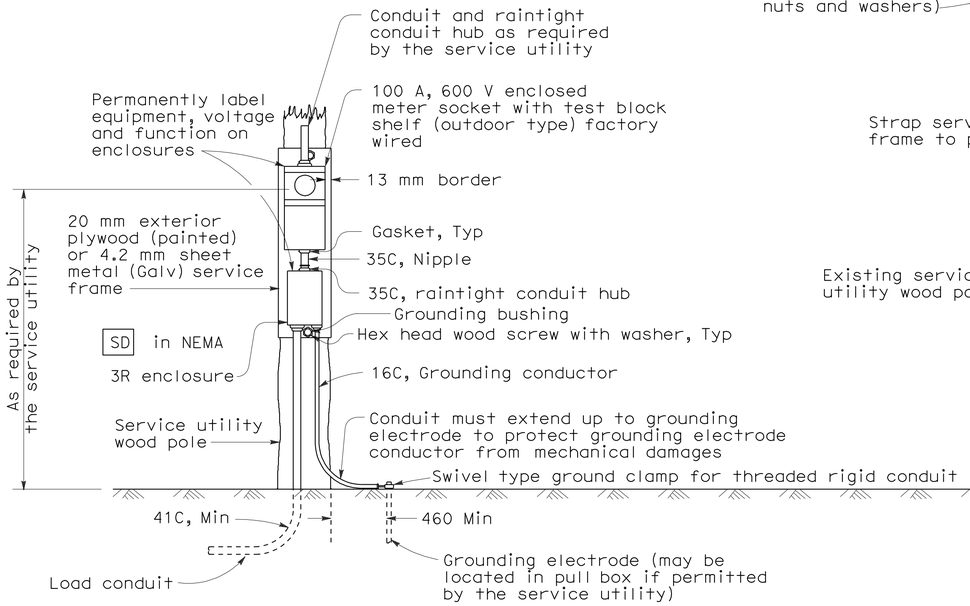

TYPE SCE-1 SERVICE

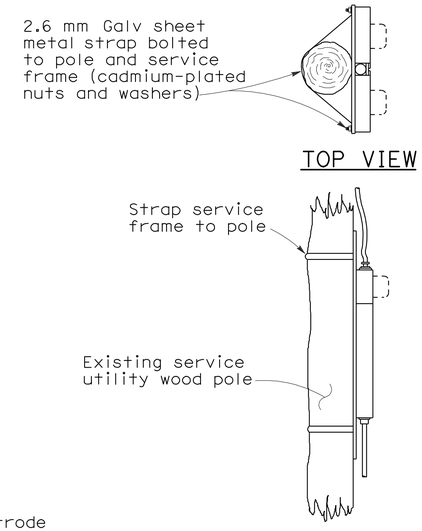

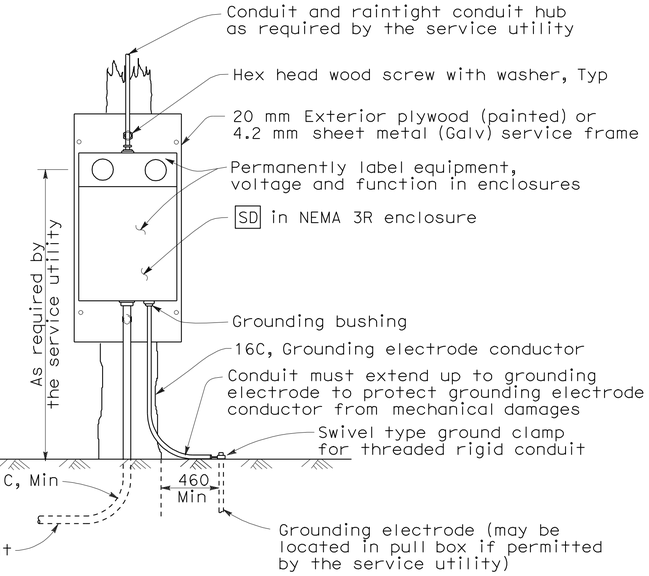

TYPE SCE-2 SERVICE

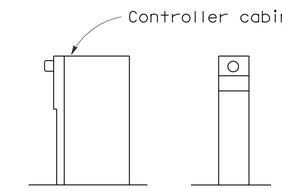

TYPE OF SERVICE (TYPICAL)

Type II service equipment enclosure mounted on a side of a controller cabinet.
Type III complete free-standing service equipment enclosure.

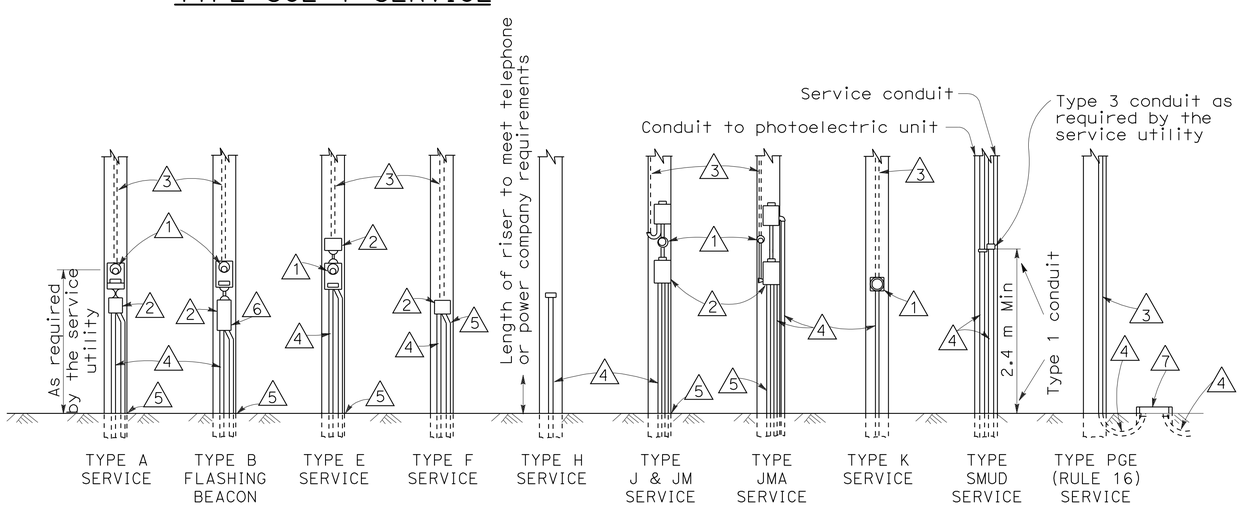

NOTES

1. Meter socket.
2. Service enclosure with a minimum 60 A rated main circuit breaker, unless otherwise shown.
3. (a) Utility owned pole. The service utility will furnish and install required service riser, PEU with conductors and other equipment as needed.
   (b) State owned pole. The Contractor shall furnish and install required service riser and equipment.
4. Conduit, length and size as required.
5. 16C, 1#6. See "Service Grounding" detail.
6. Flashing beacon control assembly.
7. Service pull box, No. 5 unless otherwise noted, furnished and installed by the Contractor. Service utility shall determine the exact location.

POLE MOUNTED SERVICE INSTALLATIONS

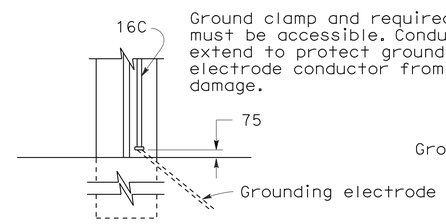

TYPE A

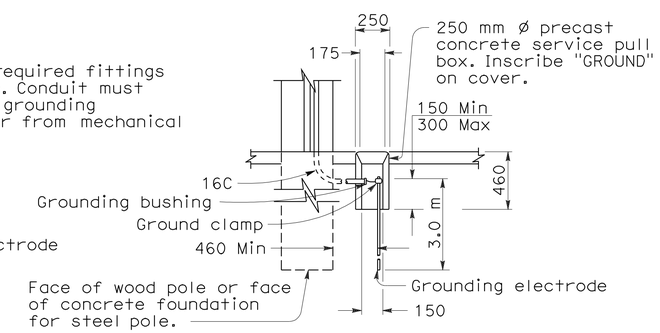

TYPE B

Use where service utility requires 460 mm clearance between grounding electrode and the pole or service equipment enclosure. Installation shown is for sidewalk or paved areas. In unpaved areas, omit special service pull box and locate ground clamp above ground or locate ground clamp in nearest pull box.

SERVICE GROUNDING

STATE OF CALIFORNIA
DEPARTMENT OF TRANSPORTATION

ELECTRICAL SYSTEMS (SERVICE EQUIPMENT)

NO SCALE

ALL DIMENSIONS ARE IN MILLIMETERS UNLESS OTHERWISE SHOWN

RSP ES-2A DATED OCTOBER 5, 2007 SUPERSEDES STANDARD PLAN ES-2A DATED JULY 1, 2004-PAGE 416 OF THE STANDARD PLANS BOOK DATED JULY 2004.

REVISED STANDARD PLAN RSP ES-2A

2004 REVISED Std PLAN RSP ES-2A

7-2-07

DIST	COUNTY	ROUTE	KILOMETER POST TOTAL PROJECT	SHEET NO.	TOTAL SHEETS
07	LA	5	2.9/4.9	798	1082

Caltrans Metric

REGISTERED ELECTRICAL ENGINEER

October 5, 2007
PLANS APPROVAL DATE

REGISTERED PROFESSIONAL ENGINEER
Jeffery G. McRae
No. E14512
Exp. 6-30-08
ELECTRICAL
STATE OF CALIFORNIA

The State of California or its officers or agents shall not be responsible for the accuracy or completeness of electronic copies of this plan sheet.

To get to the Caltrans web site, go to: http://www.dot.ca.gov

To accompany plans dated 6-21-10

2004 REVISED Std PLAN RSP ES-2C

NOTES-TYPE III SERVICE EQUIPMENT ENCLOSURES:

1. Service equipment enclosure and metering equipment shall meet the requirements of the service utility. The meter area shall have a sealable, lockable, weathertight cover that can be removed without the use of tools.

2. Service equipment enclosures shall be factory wired and conform to NEMA standards.

3. Dimensions of service equipment enclosures shall meet the requirements of the service utility.

4. The dead front panels on Type III-A service equipment enclosures shall have a continuous stainless steel or aluminum piano hinge. The panel in front of the breakers shall be secured with a latch or captive screws. No live parts shall be mounted on the dead front panel.

5. The exterior door shall have provisions for padlocking. The padlock hole shall be a minimum diameter of 11 mm.

6. Enclosures housing transformers of more than one kVA shall have effective screened ventilation louvers of not less than 32 000 mm^2. Screen shall be stainless steel No. 304, with a No. 10 size mesh. Framed screen shall be secured with at least four bolts.

7. Fasteners on the exterior of the enclosure shall be vandal-resistant and shall not be removable from the exterior. Screws, nuts, bolts and washers shall be stainless steel.

8. Landing lugs for incoming service conductors shall be compatible with either copper or aluminum conductors sized to suit the conductors shown on the plan. Landing lugs shall be copper or tin-plated aluminum. Neutral bus shall be rated for 125 A and be suitable for copper or aluminum conductors unless otherwise specified. The terminal shall include but not be limited to:

   a) Incoming terminals (landing lugs)
   b) Neutral lugs
   c) Solid neutral terminal strip

9. At least 6 standard single pole circuit breaker spaces, 20 mm nominal, shall be provided for branch circuits. Circuit breaker interiors shall be copper. Interiors of enclosure shall accept plug-in or cable-in/cable-out circuit breakers.

10. Control wiring shall be 600 V, 14 stranded machine tool wire. Where subject to flexing, 19 strand wire shall be used.

11. Main bus shall be rated for 125 A and shall be tin-plated copper.

12. A plastic laminated wiring diagram shall be provided with brass mounting eyelets and attached to the inside of the enclosure and the wiring diagram shall affixed to the interior with a UL or ETL approved method.

13. An engraved phenolic nameplate on the dead front panel indicating the function of each circuit or device shall be installed with stainless steel rivets or stainless steel screws:

    a) Adjacent to the breaker or device with character size a minimum of 3 mm.

    b) At the top of the exterior door panel indicating system number, voltage level and number of phases with character size a minimum of 5 mm.

14. The plan shows the approximate location of devices within the enclosure. Components may be rearranged, however, the "working" clearances within the service equipment enclosure shall be maintained.

15. In unpaved areas a raised portland cement concrete pad 600 mm x 100 mm x width of foundation shall be constructed in front of new service equipment enclosure installation. Pad shall be set to elevation of foundation.

16. Foundation shall extend 50 mm minimum beyond edge of service equipment enclosure.

17. Internal bus, where shown, is typical only. Alternative design of proposed service equipment enclosure shall be submitted to the Engineer for approval.

18. Plug-in circuit breakers may be mounted in the vertical or horizontal position. Cable-in/cable-out circuit breakers shall be mounted in the vertical position.

19. Type III-AF and Type III-BF service equipment enclosures shall have the meter viewing windows located on the front side of the service equipment enclosures.

20. Type III-AR and Type III-BR service equipment enclosures shall be similarly constructed as Type III-AF and Type III-BF respectively, except the meter viewing windows shall be located on the back side of the service equipment enclosures.

21. Minimum clearance shall be required for front and back of service equipment enclosure per National Electrical Code, Article 110.26, "Spaces About Electric Equipment (600 Volts, Nominal, or Less)".

STATE OF CALIFORNIA
DEPARTMENT OF TRANSPORTATION

ELECTRICAL SYSTEMS (SERVICE EQUIPMENT NOTES TYPE III SERIES)

NO SCALE

ALL DIMENSIONS ARE IN MILLIMETERS UNLESS OTHERWISE SHOWN

RSP ES-2C DATED OCTOBER 5, 2007 SUPERSEDES STANDARD PLAN ES-2C DATED JULY 1, 2004-PAGE 418 OF THE STANDARD PLANS BOOK DATED JULY 2004.

REVISED STANDARD PLAN RSP ES-2C

DIST	COUNTY	ROUTE	KILOMETER POST TOTAL PROJECT	SHEET NO.	TOTAL SHEETS
07	LA	5	2.9/4.9	799	1082

Caltrans Metric

REGISTERED ELECTRICAL ENGINEER

October 5, 2007
PLANS APPROVAL DATE

REGISTERED PROFESSIONAL ENGINEER Jeffery G. McRae No. E14512 Exp. 6-30-08 ELECTRICAL STATE OF CALIFORNIA

The State of California or its officers or agents shall not be responsible for the accuracy or completeness of electronic copies of this plan sheet.

To get to the Caltrans web site, go to: http://www.dot.ca.gov

To accompany plans dated 6-21-10

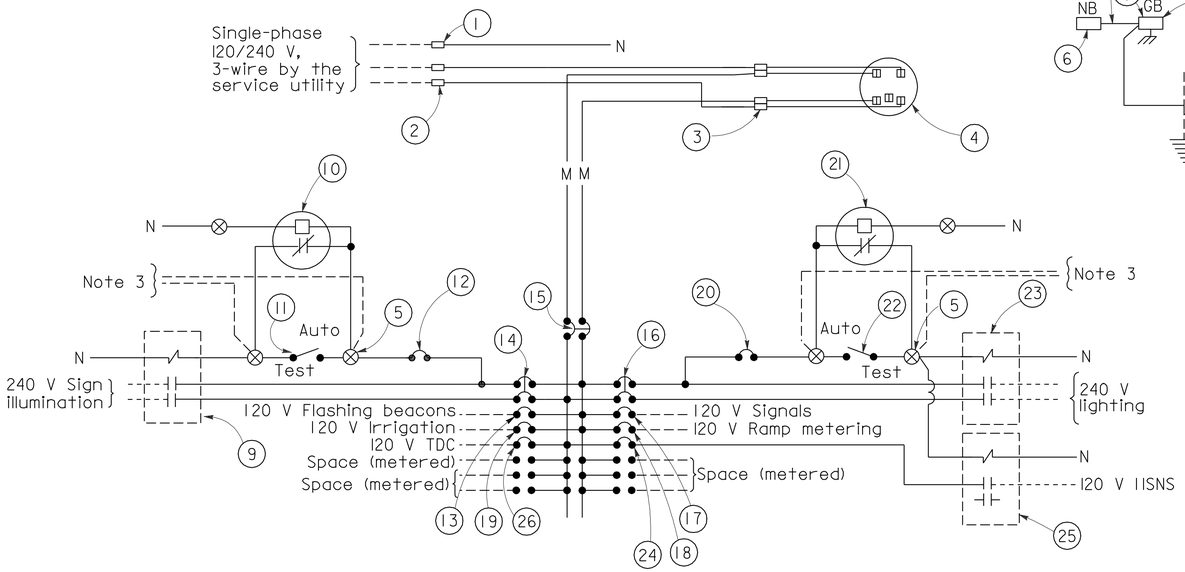

120/240 V SERVICE WIRING DIAGRAM (TYPICAL)

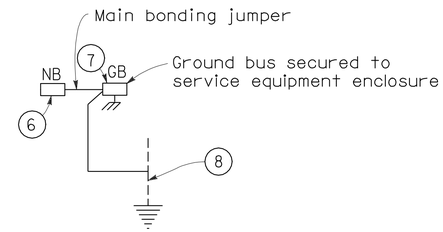

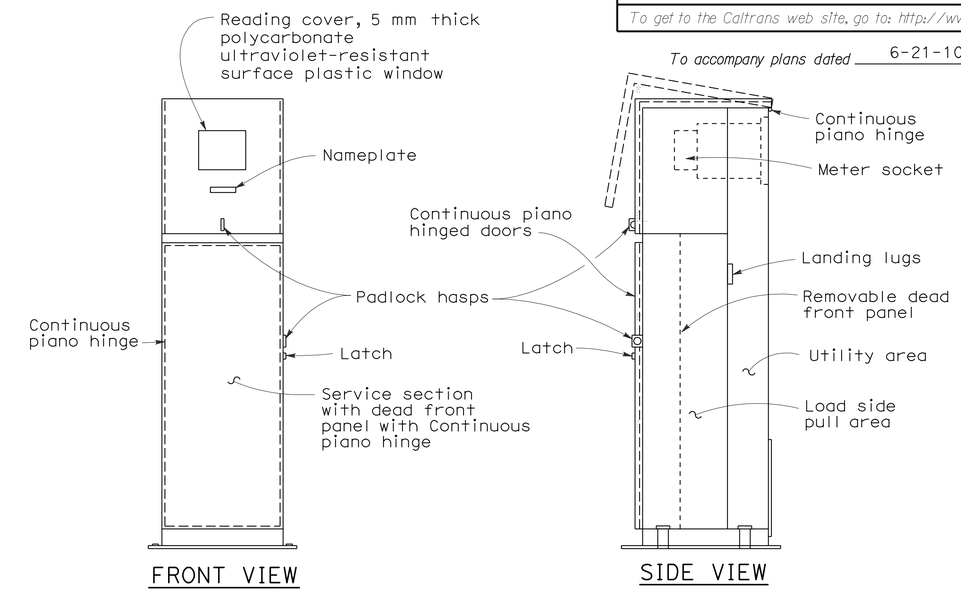

FRONT VIEW

SIDE VIEW

TYPE III-BF SERVICE EQUIPMENT ENCLOSURE WITH PROVISIONS FOR ONE 100 A METER (TYPICAL)

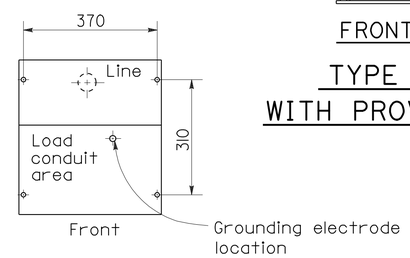

BASE FOR TYPE III-B SERVICE EQUIPMENT ENCLOSURE

TYPE III-B SERVICE (120/240 V) EQUIPMENT LEGEND		
ITEM No.	COMPONENT	NAME PLATE DESCRIPTION
1	Neutral lug	
2	Landing lug (Note 6)	
3	Test bypass facility	
4	Meter socket and support	
5	Terminal blocks	
6	Neutral bus	
7	Ground bus	
8	Grounding electrode	
9	30 A, 2PNO Contactor	Sign Illumination
10	Photoelectric unit (Note 7)	
11	15 A, IP, Test switch	Sign Illumination Test Switch
12	15 A, 120 V, IP, CB	Sign Illumination Control
13	15 A, 120 V, IP, CB	Flashing Beacon
14	30 A, 240 V, 2P, CB	Sign Illumination
15	100 A, 240 V, 2P, CB	Main Breaker
16	30 A, 240 V, 2P, CB	Lighting
17	50 A, 120 V, IP, CB	Signals
18	30 A, 120 V, IP, CB	Ramp Metering
19	20 A, 120 V, IP, CB	Irrigation
20	15 A, 120 V, IP, CB	Lighting Control
21	Photoelectric unit (Note 7)	
22	15 A, IP, Test switch	Lighting Test Switch
23	60 A, 2PNO Contactor	Lighting
24	15 A, 120 V, IP, CB	IISNS
25	30 A, 2PNO Contactor	IISNS
26	20 A, 120 V, IP, CB	Telephone Demarcation Cabinet

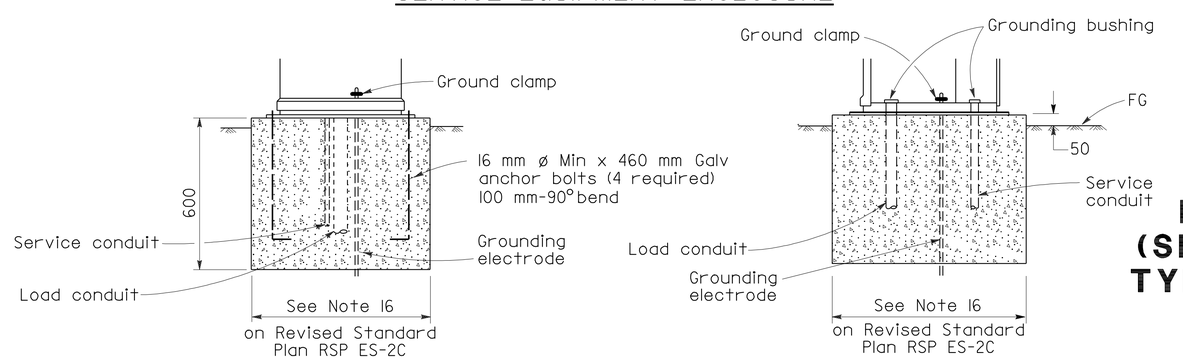

FRONT VIEW

SIDE VIEW

TYPE III-B SERVICE EQUIPMENT ENCLOSURE FOUNDATION DETAILS

NOTES (FOR SERVICE EQUIPMENT ENCLOSURE)

1. Voltage ratings of service equipment shall conform to the service voltages indicated on the plans.
2. Unless otherwise indicated on the plans, service equipment items shall be provided for each service equipment enclosure as shown.
3. Connect to remote test switch mounted on lighting standards, sign post or structure when required.
4. Items No. 1 and 6 shall be isolated from the service equipment enclosure.
5. Meter sockets shall be 5 clip type.
6. The landing lug shall be suitable for multiple conductors.
7. Type V photoelectric control shall be used unless otherwise indicated on the plans.

STATE OF CALIFORNIA
DEPARTMENT OF TRANSPORTATION

ELECTRICAL SYSTEMS (SERVICE EQUIPMENT AND TYPICAL WIRING DIAGRAM, TYPE III -B SERIES)

NO SCALE

ALL DIMENSIONS ARE IN MILLIMETERS UNLESS OTHERWISE SHOWN

RSP ES-2E DATED OCTOBER 5, 2007 SUPERSEDES STANDARD PLAN ES-2E DATED JULY 1, 2004-PAGE 420 OF THE STANDARD PLANS BOOK DATED JULY 2004.

REVISED STANDARD PLAN RSP ES-2E

2004 REVISED Std PLAN RSP ES-2E

8-9-07

DIST	COUNTY	ROUTE	KILOMETER POST TOTAL PROJECT	SHEET NO.	TOTAL SHEETS
07	LA	5	2.9/4.9	800	1082

Jeffery G. McRae
REGISTERED ELECTRICAL ENGINEER

October 5, 2007
PLANS APPROVAL DATE

REGISTERED PROFESSIONAL ENGINEER Jeffery G. McRae No. E14512 Exp. 6-30-08 ELECTRICAL STATE OF CALIFORNIA

The State of California or its officers or agents shall not be responsible for the accuracy or completeness of electronic copies of this plan sheet.

To get to the Caltrans web site, go to: http://www.dot.ca.gov

Caltrans Metric

To accompany plans dated 6-21-10

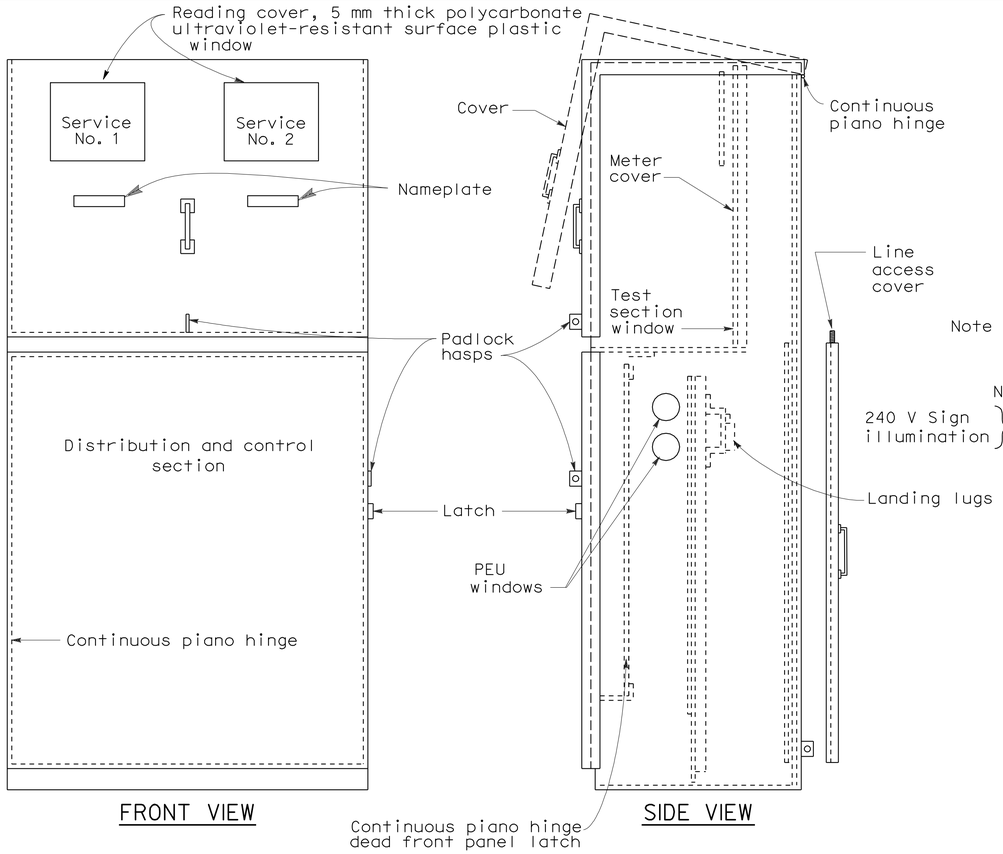

TYPE III-CF SERVICE EQUIPMENT ENCLOSURE WITH PROVISIONS FOR TWO 100 A METERS (TYPICAL)

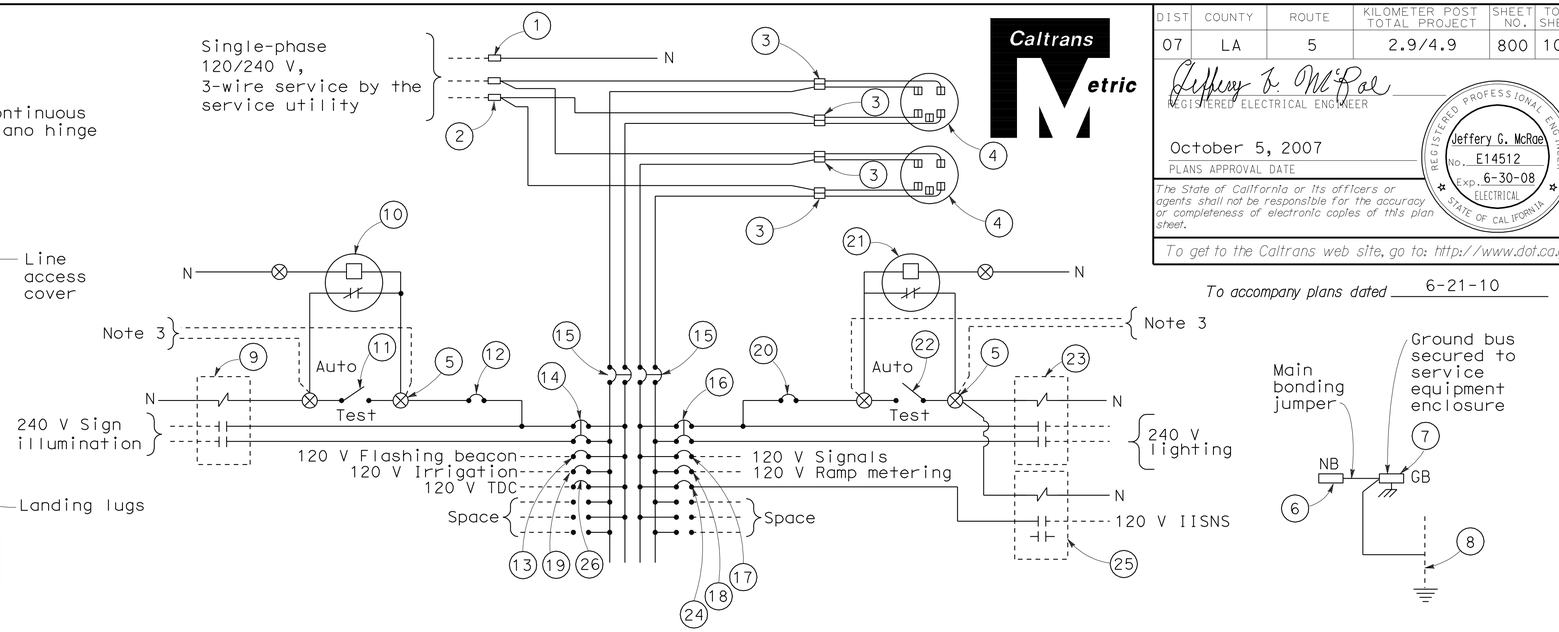

120/240 V SERVICE WIRING DIAGRAM (TYPICAL)

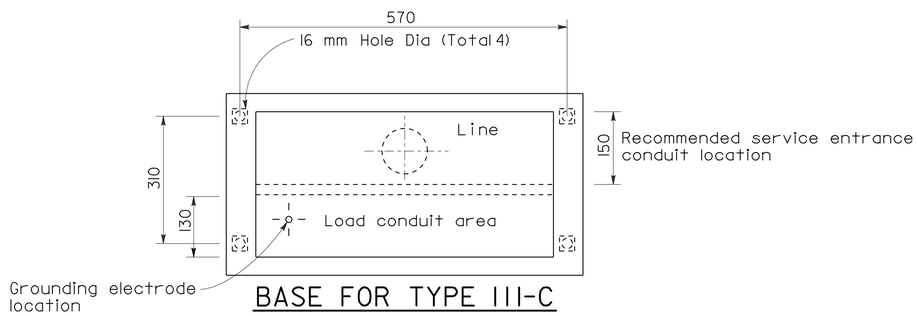

BASE FOR TYPE III-C SERVICE EQUIPMENT ENCLOSURE

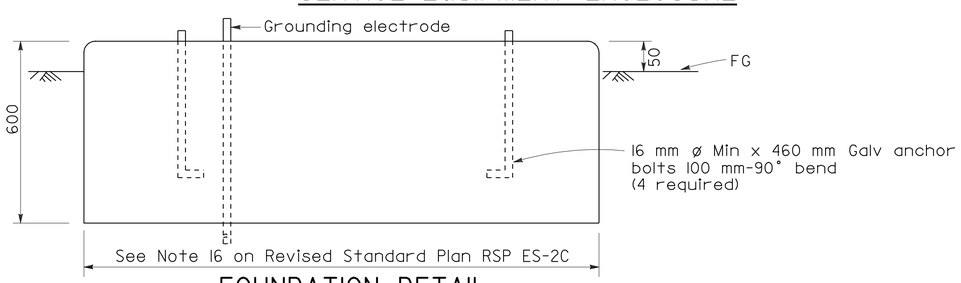

FOUNDATION DETAIL

TYPE III-C SERVICE (120/240 V) EQUIPMENT LEGEND

ITEM No.	COMPONENT	NAME PLATE DESCRIPTION	ITEM No.	COMPONENT	NAME PLATE DESCRIPTION
1	Neutral lug		14	30 A,240 V,2P,CB	Sign Illumination
2	Landing lug (Note 6)		15	100 A,240 V,2P,CB	Main Breaker
3	Test bypass facility		16	30 A,240 V,2P,CB	Lighting
4	Meter socket and support		17	50 A,120 V,1P,CB	Signals
5	Terminal blocks		18	30 A,120 V,1P,CB	Ramp Metering
6	Neutral bus		19	20 A,120 V,1P,CB	Irrigation
7	Ground bus		20	15 A,120 V,1P,CB	Lighting Control
8	Grounding electrode		21	Photoelectric unit(Note 7)	
9	30 A,2PNO, Contactor	Sign Illumination	22	15 A,1P,Test switch	Lighting Control
10	Photoelectric unit (Note 7)		23	60 A,2PNO Contactor	Lighting
11	15 A,1P, Test switch	Sign Illumination Test Switch	24	15 A,120 V,1P,CB	IISNS
12	15 A,120 V,1P,CB	Sign Illumination Control	25	30 A,2PNO Contactor	IISNS
13	15 A,120 V,1P,CB	Flashing Beacon	26	20 A,120 V,1P,CB	Telephone Demarcation Cabinet

NOTES (FOR SERVICE EQUIPMENT ENCLOSURE)

1. Voltage ratings of service equipment shall conform to the service voltages indicated on the plans.
2. Unless otherwise indicated on the plans, service equipment items shall be provided for each service equipment enclosure as shown.
3. Connect to remote test switch mounted on lighting standards, sign post or structure when required.
4. Items No. 1 and 6 shall be isolated from the service equipment enclosure.
5. Meter sockets shall be 5 clip type.
6. The landing lug shall be suitable for multiple conductors.
7. Type V photoelectric control shall be used unless otherwise indicated on the plans.

STATE OF CALIFORNIA
DEPARTMENT OF TRANSPORTATION

ELECTRICAL SYSTEMS (SERVICE EQUIPMENT AND TYPICAL WIRING DIAGRAM TYPE III -C SERIES)

NO SCALE

ALL DIMENSIONS ARE IN MILLIMETERS UNLESS OTHERWISE SHOWN

RSP ES-2F DATED OCTOBER 5, 2007 SUPERSEDES STANDARD PLAN ES-2F DATED JULY 1, 2004-PAGE 421 OF THE STANDARD PLANS BOOK DATED JULY 2004.

REVISED STANDARD PLAN RSP ES-2F

2004 REVISED Std PLAN RSP ES-2F

8-9-07