NOTES: PIPE JOINTS ARE STANDARD JOINTS.
(N) NOT A SEPARATE PAY ITEM, FOR INFORMATION ONLY.

Caltrans Metric

Dist	COUNTY	ROUTE	KILOMETER POST TOTAL PROJECT	SHEET No.	TOTAL SHEETS
07	LA	5	2.9/4.9	301	1082

REGISTERED CIVIL ENGINEER 12-23-09 DATE
6-21-10
PLANS APPROVAL DATE

REGISTERED PROFESSIONAL ENGINEER RALPH M. SASAKI No. 30849 Exp. 3/31/10 CIVIL STATE OF CALIFORNIA

THE STATE OF CALIFORNIA OR ITS OFFICERS OR AGENTS SHALL NOT BE RESPONSIBLE FOR THE ACCURACY OR COMPLETENESS OF ELECTRONIC COPIES OF THIS PLAN SHEET.

SUMMARY OF DRAINAGE QUANTITIES

DRAINAGE PLAN	DRAINAGE SYSTEM No. ⬡	DRAINAGE UNIT ◯	"H" OR "V" (N)	MINOR CONCRETE (MINOR STRUCTURE)	MISCELLANEOUS IRON AND STEEL	CLASS 1 CONCRETE (BOX CULVERT)	BAR REINFORCING STEEL (BOX CULVERT)	MINOR CONCRETE (BACKFILL)	MINOR CONCRETE (DITCH LINING)	MINOR CONCRETE (GUTTER LINING)	MINOR CONCRETE (GUTTER DEPRESSION)	450 mm RCP	525 mm RCP	600 mm RCP	750 mm RCP	900 mm RCP	1050 mm RCP	1200 mm RCP	1425 mm RCP	450 mm SCSP (2.01 mm THICK)	150 mm UNPERFORATED PP *	GRATED LINE DRAIN	900 mm PRECAST CONCRETE PIPE MANHOLE	PLACE HMA (MISC AREA) *	HOT MIX ASPHALT *	DITCH EXCAVATION	REMOVE CONCRETE	REMOVE PIPE	REMOVE INLET	REMOVE HEADWALL	REMOVE MANHOLE	ADJUST MANHOLE	CURB DRAIN	600 mm MH FRAME AND COVER (N)	610 mm MH FRAME AND COVER (N)	914 mm MH FRAME AND COVER (N)	CATCH BASIN MH FRAME AND COVER (N)	TYPE 600-12 FRAME AND GRATE (N)	TYPE 600-12X FRAME AND GRATE (N)	FRAME AND GRATING FOR CATCH BASINS (N)	MAXIMUM COVER (N)	DESCRIPTION	STATION
			m	m3	kg	m3	kg	m3	m3	m3	m3	m	m	m	m	m	m	m	m	m	m	m	m	m2	tonne	m3	m3	m	EA	EA	EA	EA	EA	EA	EA	EA	EA	EA	EA	EA	EA	m		
D-6	55	a																												1													REMOVE HEADWALL	1.65 m L+ 47+95.709 ℄ "A1"
D-7	56	a																										86.4															REMOVE 1219 mm RCP	
		b																													1												REMOVE MANHOLE No. 2	8.69 m R+ 12+23.799 ℄ "B1"
		c																											1														REMOVE COCB WITH GRATING	21.26 m L+ 12+98.789 ⅊ "B2"
		d																										4.2															REMOVE 457 mm RCP	
		e																									0.47																REMOVE JUNCTION STRUCTURE	21.26 m L+ 12+96.910 ⅊ "B2"
	57	a																									0.44																REMOVE CONCRETE GUTTER	
		b																									1.12																REMOVE PARKWAY DRAIN	12.96 m R+ 11+23.393 ℄ "B1"
	58	a																										12.0															REMOVE 4-102 mm CIP	
		b																									0.87																REMOVE CURB DRAIN	0.63 m R+ 12+11.361 ℄ "B1"
	59	a																										5.1															REMOVE 102 mm CIP	
		b																									0.92																REMOVE CURB DRAIN	47.32 m L+ 0+52.033 ⅊ "E2"
	60	a																										5.1															REMOVE 102 mm CIP	
		b																									0.92																REMOVE CURB DRAIN	30.01 m L+ 0+60.059 ⅊ "E2"
	61	a																										5.0															REMOVE 102 mm CIP	
		b																									0.90																REMOVE CURB DRAIN	13.40 m L+ 0+72.780 ⅊ "E2"
	62	a																										2.2															REMOVE 102 mm CIP	
D-7		b																									0.40																REMOVE CURB DRAIN	8.14 m L+ 0+86.873 ⅊ "E2"
SHEET TOTAL																											6.04	120.0	1	1	1												SHEET TOTAL	

* TO BE COMBINED WITH HIGHWAY QUANTITIES

DRAINAGE QUANTITIES
DQ-10

CALCULATED-DESIGNED BY S. M. TAN W. Y. LEE
CHECKED BY R. M. SASAKI
REVISED BY
DATE REVISED
FUNCTIONAL SUPERVISOR RALPH M. SASAKI

STATE OF CALIFORNIA - DEPARTMENT OF TRANSPORTATION
Caltrans
HYDRAULICS

LAST REVISION 00-00-00
DATE PLOTTED => 22-JUN-2010
TIME PLOTTED => 09:10

NOTES: PIPE JOINTS ARE STANDARD JOINTS.

(N) NOT A SEPARATE PAY ITEM, FOR INFORMATION ONLY.

Caltrans Metric

Dist	COUNTY	ROUTE	KILOMETER POST TOTAL PROJECT	SHEET No.	TOTAL SHEETS
07	LA	5	2.9/4.9	302	1082

REGISTERED CIVIL ENGINEER 12-23-09 DATE

6-21-10
PLANS APPROVAL DATE

REGISTERED PROFESSIONAL ENGINEER RALPH M. SASAKI No. 30849 Exp. 3/31/10 CIVIL STATE OF CALIFORNIA

THE STATE OF CALIFORNIA OR ITS OFFICERS OR AGENTS SHALL NOT BE RESPONSIBLE FOR THE ACCURACY OR COMPLETENESS OF ELECTRONIC COPIES OF THIS PLAN SHEET.

SUMMARY OF DRAINAGE QUANTITIES

DRAINAGE PLAN	DRAINAGE SYSTEM No. ⬡	DRAINAGE UNIT ○	"H" OR "V" (N)	MINOR CONCRETE (MINOR STRUCTURE)	MISCELLANEOUS IRON AND STEEL	CLASS 1 CONCRETE (BOX CULVERT)	BAR REINFORCING STEEL (BOX CULVERT)	MINOR CONCRETE (BACKFILL)	MINOR CONCRETE (DITCH LINING)	MINOR CONCRETE (GUTTER LINING)	MINOR CONCRETE (GUTTER DEPRESSION)	450 mm RCP	525 mm RCP	600 mm RCP	750 mm RCP	900 mm RCP	1050 mm RCP	1200 mm RCP	1425 mm RCP	450 mm SCSP (2.01 mm THICK)	150 mm UNPERFORATED PP *	GRATED LINE DRAIN	900 mm PRECAST CONCRETE PIPE MANHOLE	PLACE HMA (MISC AREA) *	HOT MIX ASPHALT *	DITCH EXCAVATION	REMOVE CONCRETE	REMOVE PIPE	REMOVE INLET	REMOVE HEADWALL	REMOVE MANHOLE	ADJUST MANHOLE	CURB DRAIN	600 mm MH FRAME AND COVER (N)	610 mm MH FRAME AND COVER (N)	914 mm MH FRAME AND COVER (N)	CATCH BASIN MH FRAME AND COVER (N)	TYPE 600-12 FRAME AND GRATE (N)	TYPE 600-12X FRAME AND GRATE (N)	FRAME AND GRATING FOR CATCH BASINS (N)	MAXIMUM COVER (N)	DESCRIPTION	STATION
			m	m3	kg	m3	kg	m3	m3	m3	m3	m	m	m	m	m	m	m	m	m	m	m	m	m2	tonne	m3	m3	m	EA	EA	EA	EA	EA	EA	EA	EA	EA	EA	EA	EA	m		
D-7	63	a																										9.8														REMOVE 102 mm CIP	
		b																									1.76															REMOVE CURB DRAIN	49.69 m Lt 0+31.067 ℄ "E2"
	64	a																										9.8														REMOVE 102 mm CIP	
		b																									1.76															REMOVE CURB DRAIN	22.77 m Lt 0+49.248 ℄ "E2"
	65	a																										19.4														REMOVE 2-102 mm CIP	
		b																									2.04															REMOVE CURB DRAIN	20.29 m Rt 0+38.460 ℄ "E2"
	66	a																										9.7														REMOVE 102 mm CIP	
		b																									1.75															REMOVE CURB DRAIN	35.40 m Rt 0+16.121 ℄ "E2"
D-7	137	a																									0.32															REMOVE CONCRETE GUTTER	
D-8	67	a																											1													REMOVE COCB	2.12 m Lt 17+04.593 ℄ "B1"
		b																										46.3														REMOVE 457 mm RCP	
	68	a																												1												REMOVE HEADWALL	62.68 m Lt 16+88.684 ℄ "B1"
		b																									7.60															REMOVE 2-1524 mm X 610 mm RCB	
		c																												1												REMOVE HEADWALL	57.46m Lt 16+86.794 ℄ "B1"
		d																									30.50															REMOVE 3-1524 mm X 610 mm RCB	
		e																												1												REMOVE HEADWALL	49.59 m Lt 16+74.780 ℄ "B1"
		f																									70.50															REMOVE 2-1524 mm X 610 mm RCB	
		g																												1												REMOVE HEADWALL	48.22 m Lt 16+27.364 ℄ "B1"
		h																									86.60															REMOVE 3-3050 mm X 762 mm RCB	
		i																												1												REMOVE HEADWALL	49.28 m Lt 16+10.226 ℄ "B1"
		j																											1													REMOVE COCB	42.61 m Lt 16+77.799 ℄ "B1"
D-8		k																										4.1														REMOVE 457 mm RCP	
SHEET TOTAL																											202.83	99.1	2	5												SHEET TOTAL	

* TO BE COMBINED WITH HIGHWAY QUANTITIES

DRAINAGE QUANTITIES
DQ-11

S. M. TAN
W. Y. LEE
CALCULATED-DESIGNED BY

R. M. SASAKI
CHECKED BY

REVISED BY
DATE REVISED

FUNCTIONAL SUPERVISOR
RALPH M. SASAKI

STATE OF CALIFORNIA - DEPARTMENT OF TRANSPORTATION
Caltrans
HYDRAULICS

LAST REVISION 00-00-00
DATE PLOTTED => 22-JUN-2010
TIME PLOTTED => 09:10

NOTES: PIPE JOINTS ARE STANDARD JOINTS.
(N) NOT A SEPARATE PAY ITEM, FOR INFORMATION ONLY.

Caltrans Metric

Dist	COUNTY	ROUTE	KILOMETER POST TOTAL PROJECT	SHEET No.	TOTAL SHEETS
07	LA	5	2.9/4.9	303	1082

12-23-09
REGISTERED CIVIL ENGINEER DATE

6-21-10
PLANS APPROVAL DATE

REGISTERED PROFESSIONAL ENGINEER RALPH M. SASAKI No. 30849 Exp. 3/31/10 CIVIL STATE OF CALIFORNIA

THE STATE OF CALIFORNIA OR ITS OFFICERS OR AGENTS SHALL NOT BE RESPONSIBLE FOR THE ACCURACY OR COMPLETENESS OF ELECTRONIC COPIES OF THIS PLAN SHEET.

SUMMARY OF DRAINAGE QUANTITIES

DRAINAGE PLAN	DRAINAGE SYSTEM No. ⬡	DRAINAGE UNIT ◯	"H" OR "V" (N)	MINOR CONCRETE (MINOR STRUCTURE)	MISCELLANEOUS IRON AND STEEL	CLASS 1 CONCRETE (BOX CULVERT)	BAR REINFORCING STEEL (BOX CULVERT)	MINOR CONCRETE (BACKFILL)	MINOR CONCRETE (DITCH LINING)	MINOR CONCRETE (GUTTER LINING)	MINOR CONCRETE (GUTTER DEPRESSION)	450 mm RCP	525 mm RCP	600 mm RCP	750 mm RCP	900 mm RCP	1050 mm RCP	1200 mm RCP	1425 mm RCP	450 mm SCSP (2.01 mm THICK)	150 mm UNPERFORATED PP *	GRATED LINE DRAIN	900 mm PRECAST CONCRETE PIPE MANHOLE	PLACE HMA (MISC AREA) *	HOT MIX ASPHALT *	DITCH EXCAVATION	REMOVE CONCRETE	REMOVE PIPE	REMOVE INLET	REMOVE HEADWALL	REMOVE MANHOLE	ADJUST MANHOLE	CURB DRAIN	600 mm MH FRAME AND COVER (N)	610 mm MH FRAME AND COVER (N)	914 mm MH FRAME AND COVER (N)	CATCH BASIN MH FRAME AND COVER (N)	TYPE 600-12 FRAME AND GRATE (N)	TYPE 600-12X FRAME AND GRATE (N)	FRAME AND GRATING FOR CATCH BASINS (N)	MAXIMUM COVER (N)	DESCRIPTION	STATION
			m	m3	kg	m3	kg	m3	m3	m3	m3	m	m	m	m	m	m	m	m	m	m	m	m	m2	tonne	m3	m3	m	EA	EA	EA	EA	m	EA	EA	EA	EA	EA	EA	EA	m		
D-8	69	a																										22.5													REMOVE 3-102 mm CIP	
		b																									1.80														REMOVE CURB DRAIN	7.99 m L† 16+22.540 ⅊ "D2"
	70	a																										6.3													REMOVE 3-102 mm CIP	
		b																									0.50														REMOVE CURB DRAIN	7.97 m L† 15+98.078 ⅊ "D2"
	71	a																										1.8													REMOVE 102 mm CIP	
		b																									0.32														REMOVE CURB DRAIN	6.99 m R† 16+41.414 ⅊ "D2"
	72	a																										2.4													REMOVE 102 mm CIP	
		b																									0.43														REMOVE CURB DRAIN	22.72 m R† 17+26.456 ℄ "B1"
	73	a																									0.66														REMOVE PARKWAY DRAIN	14.42 m R† 18+20.849 ℄ "B1"
	74	a																										3.2													REMOVE 102 mm CIP	
		b																									0.58														REMOVE CURB DRAIN	2.43 m L† 17+19.401 ℄ "B1"
	75	a																										2.9													REMOVE 102 mm CIP	
		b																									0.52														REMOVE CURB DRAIN	3.12 m L† 17+25.470 ℄ "B1"
	76	a																									1.77														REMOVE PARKWAY DRAIN	6.68 m L† 17+63.464 ℄ "B1"
	77	a																										2.9													REMOVE 102 mm CIP	
D-8		b																									0.52														REMOVE CURB DRAIN	25.59 m L† 16+91.437 ℄ "B1"
SHEET TOTAL																											7.10	42.0													SHEET TOTAL	

* TO BE COMBINED WITH HIGHWAY QUANTITIES

DRAINAGE QUANTITIES
DQ-12

CALCULATED-DESIGNED BY S. M. TAN W. Y. LEE
CHECKED BY R. M. SASAKI
REVISED BY
DATE REVISED
FUNCTIONAL SUPERVISOR RALPH M. SASAKI

STATE OF CALIFORNIA - DEPARTMENT OF TRANSPORTATION
Caltrans
HYDRAULICS

LAST REVISION 00-00-00
DATE PLOTTED => 22-JUN-2010
TIME PLOTTED => 09:10

NOTES: PIPE JOINTS ARE STANDARD JOINTS.
(N) NOT A SEPARATE PAY ITEM, FOR INFORMATION ONLY.

Dist	COUNTY	ROUTE	KILOMETER POST TOTAL PROJECT	SHEET No.	TOTAL SHEETS
07	LA	5	2.9/4.9	304	1082

REGISTERED CIVIL ENGINEER 12-23-09 DATE
6-21-10
PLANS APPROVAL DATE

REGISTERED PROFESSIONAL ENGINEER RALPH M. SASAKI No. 30849 Exp. 3/31/10 CIVIL STATE OF CALIFORNIA

THE STATE OF CALIFORNIA OR ITS OFFICERS OR AGENTS SHALL NOT BE RESPONSIBLE FOR THE ACCURACY OR COMPLETENESS OF ELECTRONIC COPIES OF THIS PLAN SHEET.

Caltrans Metric

SUMMARY OF DRAINAGE QUANTITIES

DRAINAGE PLAN	DRAINAGE SYSTEM No. ⬡	DRAINAGE UNIT ○	"H" OR "V" (N)	MINOR CONCRETE (MINOR STRUCTURE)	MISCELLANEOUS IRON AND STEEL	CLASS 1 CONCRETE (BOX CULVERT)	BAR REINFORCING STEEL (BOX CULVERT)	MINOR CONCRETE (BACKFILL)	MINOR CONCRETE (DITCH LINING)	MINOR CONCRETE (GUTTER LINING)	MINOR CONCRETE (GUTTER DEPRESSION)	450 mm RCP	525 mm RCP	600 mm RCP	750 mm RCP	900 mm RCP	1050 mm RCP	1200 mm RCP	1425 mm RCP	450 mm SCSP (2.01 mm THICK)	150 mm UNPERFORATED PP *	GRATED LINE DRAIN	900 mm PRECAST CONCRETE PIPE MANHOLE	PLACE HMA (MISC AREA) *	HOT MIX ASPHALT *	DITCH EXCAVATION	REMOVE CONCRETE	REMOVE PIPE	REMOVE INLET	REMOVE HEADWALL	REMOVE MANHOLE	ADJUST MANHOLE	CURB DRAIN	600 mm MH FRAME AND COVER (N)	610 mm MH FRAME AND COVER (N)	914 mm MH FRAME AND COVER (N)	CATCH BASIN MH FRAME AND COVER (N)	TYPE 600-12 FRAME AND GRATE (N)	TYPE 600-12X FRAME AND GRATE (N)	FRAME AND GRATING FOR CATCH BASINS (N)	MAXIMUM COVER (N)	DESCRIPTION	STATION
			m	m3	kg	m3	kg	m3	m3	m3	m3	m	m	m	m	m	m	m	m	m	m	m	m	m2	tonne	m3	m3	m	EA	EA	EA	EA	EA	EA	EA	EA	EA	EA	EA	EA	m		
D-8	78	a																										3.1														REMOVE 102 mm CIP	
		b																									0.56															REMOVE CURB DRAIN	31.45 m L+ 16+90.742 ℄ "B1"
	79	a																										3.7														REMOVE 102 mm CIP	
D-8		b																									0.67															REMOVE CURB DRAIN	42.28 m L+ 16+77.853 ℄ "B1"
D-9	80	a																											1													REMOVE DROP INLET	13.66 m L+ 14+46.501 ⅊ "D2"
		b																										16.0														REMOVE 2-102 mm CIP	
		c																									1.68															REMOVE CURB DRAIN	7.81 m L+ 14+40.190 ⅊ "D2"
D-9	81	a																									4.14															REMOVE PARKWAY DRAIN	33.06 m L+ 22+37.345 ⅊ "D1"
D-10	82	a	0.96	3.26	55						2.36																										1					COCB WITH LOCAL DEPRESSIONS AT CATCH BASINS CASE E	9.13 m L+ 11+17.704 ⅊ "E1"
		b						12.13				20.6																													0.4	450 mm RCP W/ 20.6 m Conc BACKFILL	
	83	a	1.92	1.75	55						0.48																										1					COCB WITH LOCAL DEPRESSIONS AT CATCH BASINS CASE E	9.62 m R+ 10+66.619 ⅊ "E1"
		b																														1										ADJUST MANHOLE	3.67 m L+ 10+63.886 ⅊ "E1"
	84	a	2.32	3.21	200																	0.3												1								MH No. 1	27.55 m R+ 28+90.633 ℄ "A1"
		b													65.0																										1.2	750 mm RCP	
		c	1.98	2.92	200																	0.3												1								MH No. 1	27.15 m R+ 29+57.046 ℄ "A1"
D-10		d													61.6																										1.0	750 mm RCP	
D-11		e	1.76	2.61	200																	0.3												1								MH No. 1	26.84 m R+ 30+20.000 ℄ "A1"
SHEET TOTAL				13.75	710			12.13			2.84	20.6			126.6							0.9					7.05	22.8	1			1		3			2					SHEET TOTAL	

* TO BE COMBINED WITH HIGHWAY QUANTITIES

DRAINAGE QUANTITIES
DQ-13

STATE OF CALIFORNIA - DEPARTMENT OF TRANSPORTATION
Caltrans
HYDRAULICS

FUNCTIONAL SUPERVISOR: RALPH M. SASAKI
CALCULATED-DESIGNED BY: S. M. TAN / W. Y. LEE
CHECKED BY: R. M. SASAKI
REVISED BY
DATE REVISED

LAST REVISION 00-00-00
DATE PLOTTED => 22-JUN-2010
TIME PLOTTED => 09:10

NOTES: PIPE JOINTS ARE STANDARD JOINTS.
(N) NOT A SEPARATE PAY ITEM, FOR INFORMATION ONLY.

Caltrans Metric

Dist	COUNTY	ROUTE	KILOMETER POST TOTAL PROJECT	SHEET No.	TOTAL SHEETS
07	LA	5	2.9/4.9	305	1082

12-23-09
REGISTERED CIVIL ENGINEER DATE

6-21-10
PLANS APPROVAL DATE

REGISTERED PROFESSIONAL ENGINEER RALPH M. SASAKI No. 30849 Exp. 3/31/10 CIVIL STATE OF CALIFORNIA

THE STATE OF CALIFORNIA OR ITS OFFICERS OR AGENTS SHALL NOT BE RESPONSIBLE FOR THE ACCURACY OR COMPLETENESS OF ELECTRONIC COPIES OF THIS PLAN SHEET.

SUMMARY OF DRAINAGE QUANTITIES

DRAINAGE PLAN	DRAINAGE SYSTEM No. ⬡	DRAINAGE UNIT ○	"H" OR "V" (N)	MINOR CONCRETE (MINOR STRUCTURE)	MISCELLANEOUS IRON AND STEEL	CLASS 1 CONCRETE (BOX CULVERT)	BAR REINFORCING STEEL (BOX CULVERT)	MINOR CONCRETE (BACKFILL)	MINOR CONCRETE (DITCH LINING)	MINOR CONCRETE (GUTTER LINING)	MINOR CONCRETE (GUTTER DEPRESSION)	450 mm RCP	525 mm RCP	600 mm RCP	750 mm RCP	900 mm RCP	1050 mm RCP	1200 mm RCP	1425 mm RCP	450 mm SCSP (2.01 mm THICK)	150 mm UNPERFORATED PP *	GRATED LINE DRAIN	900 mm PRECAST CONCRETE PIPE MANHOLE	PLACE HMA (MISC AREA) *	HOT MIX ASPHALT *	DITCH EXCAVATION	REMOVE CONCRETE	REMOVE PIPE	REMOVE INLET	REMOVE HEADWALL	REMOVE MANHOLE	ADJUST MANHOLE	CURB DRAIN	600 mm MH FRAME AND COVER (N)	610 mm MH FRAME AND COVER (N)	914 mm MH FRAME AND COVER (N)	CATCH BASIN MH FRAME AND COVER (N)	TYPE 600-12 FRAME AND GRATE (N)	TYPE 600-12X FRAME AND GRATE (N)	FRAME AND GRATING FOR CATCH BASINS (N)	MAXIMUM COVER (N)	DESCRIPTION	STATION
			m	m3	kg	m3	kg	m3	m3	m3	m3	m	m	m	m	m	m	m	m	m	m	m	m	m2	tonne	m3	m3	m	EA	EA	EA	EA	EA	EA	EA	EA	EA	EA	EA	EA	EA	m		
D-10	85	a		3.39	197																		3.8												1							MH PIPE TO PIPE MAIN LINE	13.57 m L+ 12+12.123 ℄ "D1"
		b																	61.6																						4.0	1425 mm RCP	
		c		3.39	197																		3.1												1							MH PIPE TO PIPE MAIN LINE	3.46 m R+ 12+70.622 ℄ "D1"
		d																	17.9																						3.3	1425 mm RCP	
		e		5.47	197																		2.8												1							MH PIPE TO PIPE	4.27 m R+ 12+90.513 ℄ "D1"
		f																	45.9																						3.1	1425 mm RCP	
		g		5.47	197																		2.9												1							MH PIPE TO PIPE	4.27 m R+ 13+42.482 ℄ "D1"
D-10		h																	108.8																						3.3	1425 mm RCP	
D-11		i		5.08	197																		3.3												1							MH PIPE TO PIPE	4.27 m R+ 14+54.059 ℄ "D1"
		j															72.2																								3.6	1050 mm RCP	
D-11		K		0.93																																						JUNCTION STRUCTURE PIPE TO PIPE	2.44 m R+ 15+12.974 ℄ "D1"
D-10	86	a										5.5																													3.5	450 mm RCP	
D-10		b	1.37	1.95	55						0.60																										1					COCB WITH LOCAL DEPRESSIONS AT CATCH BASINS CASE E	6.97 m R+ 12+74.000 ℄ "D1"
D-10	87	a														18.0																									3.5	900 mm RCP	
		b		2.41	197																		2.0												1							MH PIPE TO PIPE	6.09 m R+ 10+33.310 ℄ MARQUARDT Ave
		c														14.9																									2.1	900 mm RCP	
		d		1.49	197																		1.5												1							MH PIPE TO PIPE MAIN LINE	6.09 m R+ 10+50.257 ℄ MARQUARDT Ave
		e														1.2																									1.7	900 mm RCP	
		f											2.4																												2.0	525 mm RCP	
		g										16.8																													1.9	450 mm RCP	
		h	1.37	5.13	55						1.08																										1					COCB WITH LOCAL DEPRESSIONS AT CATCH BASINS CASE E	9.89 m L+ 10+55.766 ℄ MARQUARDT Ave
D-10	88	a		0.76											11.8																										1.8	750 mm RCP W/ 1.2 m PIPE ENCASEMENT	
		b	1.40	2.22	200																		1.1											1								MH No. 1	5.96 m R+ 14+04.825 ℄ "D1"
		c													60.2																										3.4	750 mm RCP	
		d	1.40	2.21	200																		3.0											1								MH No. 1	7.56 m R+ 13+43.465 ℄ "D1"
SHEET TOTAL				39.90	1889						1.68	22.3	2.4		72.0	34.1	72.2		234.2				23.5											2	7		2					SHEET TOTAL	

* TO BE COMBINED WITH HIGHWAY QUANTITIES

DRAINAGE QUANTITIES
DQ-14

STATE OF CALIFORNIA - DEPARTMENT OF TRANSPORTATION
Caltrans
HYDRAULICS

FUNCTIONAL SUPERVISOR: RALPH M. SASAKI
CALCULATED-DESIGNED BY: S. M. TAN / W. Y. LEE
CHECKED BY: R. M. SASAKI
REVISED BY
DATE REVISED

LAST REVISION 00-00-00
DATE PLOTTED => 22-JUN-2010
TIME PLOTTED => 09:10

NOTES: PIPE JOINTS ARE STANDARD JOINTS.
(N) NOT A SEPARATE PAY ITEM, FOR INFORMATION ONLY.

Caltrans Metric

Dist	COUNTY	ROUTE	KILOMETER POST TOTAL PROJECT	SHEET No.	TOTAL SHEETS
07	LA	5	2.9/4.9	306	1082

REGISTERED CIVIL ENGINEER 12-23-09 DATE
6-21-10
PLANS APPROVAL DATE

REGISTERED PROFESSIONAL ENGINEER RALPH M. SASAKI No. 30849 Exp. 3/31/10 CIVIL STATE OF CALIFORNIA

THE STATE OF CALIFORNIA OR ITS OFFICERS OR AGENTS SHALL NOT BE RESPONSIBLE FOR THE ACCURACY OR COMPLETENESS OF ELECTRONIC COPIES OF THIS PLAN SHEET.

SUMMARY OF DRAINAGE QUANTITIES

DRAINAGE PLAN	DRAINAGE SYSTEM No. ⬡	DRAINAGE UNIT ◯	"H" OR "V" (N)	MINOR CONCRETE (MINOR STRUCTURE)	MISCELLANEOUS IRON AND STEEL	CLASS 1 CONCRETE (BOX CULVERT)	BAR REINFORCING STEEL (BOX CULVERT)	MINOR CONCRETE (BACKFILL)	MINOR CONCRETE (DITCH LINING)	MINOR CONCRETE (GUTTER LINING)	MINOR CONCRETE (GUTTER DEPRESSION)	450 mm RCP	525 mm RCP	600 mm RCP	750 mm RCP	900 mm RCP	1050 mm RCP	1200 mm RCP	1425 mm RCP	450 mm SCSP (2.01 mm THICK)	150 mm UNPERFORATED PP *	GRATED LINE DRAIN	900 mm PRECAST CONCRETE PIPE MANHOLE	PLACE HMA (MISC AREA) *	HOT MIX ASPHALT *	DITCH EXCAVATION	REMOVE CONCRETE	REMOVE PIPE	REMOVE INLET	REMOVE HEADWALL	REMOVE MANHOLE	ADJUST MANHOLE	CURB DRAIN	600 mm MH FRAME AND COVER (N)	610 mm MH FRAME AND COVER (N)	914 mm MH FRAME AND COVER (N)	CATCH BASIN MH FRAME AND COVER (N)	TYPE 600-12 FRAME AND GRATE (N)	TYPE 600-12X FRAME AND GRATE (N)	FRAME AND GRATING FOR CATCH BASINS (N)	MAXIMUM COVER (N)	DESCRIPTION	STATION
			m	m3	kg	m3	kg	m3	m3	m3	m3	m	m	m	m	m	m	m	m	m	m	m	m	m2	tonne	m3	m3	m	EA	EA	EA	EA	EA	EA	EA	EA	EA	EA	EA	EA	EA	m		
D-10	88	e													1.1																										3.5	750 mm RCP	
D-10	89	a				17.00	1875	10.61																																		2-1520 mm X 915 mm X 10.3 m RCB	
		b	1.60			2.40	60	10.61																																		BOX CULVERT WINGWALL TYPE A	
		c	1.60			1.62	41																																			BOX CULVERT WINGWALL TYPE B	
		d		2.58																																						CONCRETE APRON	
		e		3.06																																						DBL PIPE CULVERT HEADWALL	11.53 m R+ 12+21.832 ℄ "D1"
		f														9.5																									0.2	900 mm RCP	
		g														9.5																									0.2	900 mm RCP	
		h		2.03																																						DBL PIPE CULVERT HEADWALL	11.51 m R+ 12+31.541 ℄ "D1"
		i		1.15																																						CONCRETE APRON	
D-10	90	a													10.5																										1.1	750 mm RCP	
		b	1.94	2.78	200																		0.3											1								MH No. 1	5.96 m R+ 13+38.682 ℄ "D1"
		c													46.0																										3.0	750 mm RCP	
		d	1.40	2.22	200																		2.7											1								MH No. 1	7.56 m R+ 12+91.494 ℄ "D1"
		e													1.1																										3.2	750 mm RCP	
D-10	91	a		0.79																																						PARKWAY DRAIN	6.68 m R+ 12+42.810 ℄ "D1"
D-11	92	a												1.2																											1.8	600 mm RCP	
		b	1.52	5.50	55						1.08																									1					COCB WITH LOCAL DEPRESSIONS CASE E	4.26 m R+ 15+15.542 ℄ "D1"
	93	a													54.0																										0.9	750 mm RCP	
		b	1.52	1.48	264																																2					GD-1 INLET	28.95 m L+ 30+20.000 ℄ "A1"
		c													19.1																										0.7	750 mm RCP	
		d	1.46	1.43	264																																2					GD-1 INLET	28.95 m L+ 30+40.000 ℄ "A1"
		e													99.4																										0.7	750 mm RCP	
		f	1.50	1.46	264																																2					GD-1 INLET	28.95 m L+ 31+40.000 ℄ "A1"
D-11		g													99.1																										0.8	750 mm RCP	
SHEET TOTAL			24.48	1247		21.02	1976	21.22			1.08			1.2	330.3	19.0							3.0										2		1	6					SHEET TOTAL	

* TO BE COMBINED WITH HIGHWAY QUANTITIES

DRAINAGE QUANTITIES
DQ-15

STATE OF CALIFORNIA - DEPARTMENT OF TRANSPORTATION
Caltrans
HYDRAULICS

FUNCTIONAL SUPERVISOR: RALPH M. SASAKI
CALCULATED-DESIGNED BY: S. M. TAN / W. Y. LEE
CHECKED BY: R. M. SASAKI
REVISED BY
DATE REVISED

LAST REVISION 00-00-00
DATE PLOTTED => 01-FEB-2011
TIME PLOTTED => 11:39

NOTES: PIPE JOINTS ARE STANDARD JOINTS.
(N) NOT A SEPARATE PAY ITEM, FOR INFORMATION ONLY.

Caltrans Metric

Dist	COUNTY	ROUTE	KILOMETER POST TOTAL PROJECT	SHEET No.	TOTAL SHEETS
07	LA	5	2.9/4.9	307	1082

REGISTERED CIVIL ENGINEER 12-23-09 DATE
6-21-10
PLANS APPROVAL DATE

REGISTERED PROFESSIONAL ENGINEER RALPH M. SASAKI No. 30849 Exp. 3/31/10 CIVIL STATE OF CALIFORNIA

THE STATE OF CALIFORNIA OR ITS OFFICERS OR AGENTS SHALL NOT BE RESPONSIBLE FOR THE ACCURACY OR COMPLETENESS OF ELECTRONIC COPIES OF THIS PLAN SHEET.

SUMMARY OF DRAINAGE QUANTITIES

DRAINAGE PLAN	DRAINAGE SYSTEM No. ⬡	DRAINAGE UNIT ○	"H" OR "V" (N)	MINOR CONCRETE (MINOR STRUCTURE)	MISCELLANEOUS IRON AND STEEL	CLASS 1 CONCRETE (BOX CULVERT)	BAR REINFORCING STEEL (BOX CULVERT)	MINOR CONCRETE (BACKFILL)	MINOR CONCRETE (DITCH LINING)	MINOR CONCRETE (GUTTER LINING)	MINOR CONCRETE (GUTTER DEPRESSION)	450 mm RCP	525 mm RCP	600 mm RCP	750 mm RCP	900 mm RCP	1050 mm RCP	1200 mm RCP	1425 mm RCP	450 mm SCSP (2.01 mm THICK)	150 mm UNPERFORATED PP *	GRATED LINE DRAIN	900 mm PRECAST CONCRETE PIPE MANHOLE	PLACE HMA (MISC AREA) *	HOT MIX ASPHALT *	DITCH EXCAVATION	REMOVE CONCRETE	REMOVE PIPE	REMOVE INLET	REMOVE HEADWALL	REMOVE MANHOLE	ADJUST MANHOLE	CURB DRAIN	600 mm MH FRAME AND COVER (N)	610 mm MH FRAME AND COVER (N)	914 mm MH FRAME AND COVER (N)	CATCH BASIN MH FRAME AND COVER (N)	TYPE 600-12 FRAME AND GRATE (N)	TYPE 600-12X FRAME AND GRATE (N)	FRAME AND GRATING FOR CATCH BASINS (N)	MAXIMUM COVER (N)	DESCRIPTION	STATION
			m	m3	kg	m3	kg	m3	m3	m3	m3	m	m	m	m	m	m	m	m	m	m	m	m	m2	tonne	m3	m3	m	EA	EA	EA	EA	EA	EA	EA	EA	EA	EA	EA	EA	EA	EA	m		
D-11	93	h	1.54	1.48	264																																	2				GD-1 INLET	28.95 m L+ 32+40.000 ℄ "A1"
		i												99.1																											0.9	600 mm RCP	
		j	1.52	1.48	264																																	2				GD-1 INLET	30.95 m L+ 33+40.000 ℄ "A1"
D-11		k												99.0																											0.9	600 mm RCP	
D-12		l	1.52	1.48	264																																	2				GD-1 INLET	32.95 m L+ 34+40.000 ℄ "A1"
		m												99.2																											0.9	600 mm RCP	
		n	1.52	1.48	264																																	2				GD-1 INLET	35.17 m L+ 35+40.000 ℄ "A1"
		o												68.8																											1.1	600 mm RCP	
		p	1.68	1.59	264																																	2				GD-1 INLET	7.97 m L+ 36+09.976 ⅊ "C1"
		q												122.2																											1.9	600 mm RCP	
		r	2.50	2.96	264																																	2				GD-1 INLET	10.00 m L+ 37+31.750 ⅊ "C1"
		s												11.0																											1.1	600 mm RCP	
		t	1.42	1.40	264																																	2				GD-1 INLET	28.95 m L+ 36+10.000 ℄ "A1"
		u												6.1																											0.8	600 mm RCP	
		v	1.40	1.38	264																																	2				GD-1 INLET	28.95 m L+ 36+17.000 ℄ "A1"
		w												12.3																											0.7	600 mm RCP	
		x	1.36	1.35	264																																	2				GD-1 INLET	28.95 m L+ 36+30.000 ℄ "A1"
D-12		y												101.3																											0.8	600 mm RCP	
D-13		z	1.46	1.43	264																																	2				GD-1 INLET	28.95 m L+ 37+31.800 ℄ "A1"
		a1												9.4																											1.4	600 mm RCP	
D-13	93	b1		3.49																																						TRANSITION STRUCTURE No. 4	34.30 m L+ 37+40.000 ℄ "A1"
SHEET TOTAL				19.52	2640									628.4																								20				SHEET TOTAL	

* TO BE COMBINED WITH HIGHWAY QUANTITIES

DRAINAGE QUANTITIES
DQ-16

REVISED BY | DATE REVISED
S. M. TAN / W. Y. LEE | R. M. SASAKI
CALCULATED-DESIGNED BY | CHECKED BY
FUNCTIONAL SUPERVISOR: RALPH M. SASAKI

STATE OF CALIFORNIA - DEPARTMENT OF TRANSPORTATION
Caltrans
HYDRAULICS

LAST REVISION 00-00-00 | DATE PLOTTED => 22-JUN-2010 | TIME PLOTTED => 09:10

NOTES: PIPE JOINTS ARE STANDARD JOINTS.
(N) NOT A SEPARATE PAY ITEM, FOR INFORMATION ONLY.

Caltrans Metric

Dist	COUNTY	ROUTE	KILOMETER POST TOTAL PROJECT	SHEET No.	TOTAL SHEETS
07	LA	5	2.9/4.9	308	1082

REGISTERED CIVIL ENGINEER 12-23-09 DATE
6-21-10
PLANS APPROVAL DATE

REGISTERED PROFESSIONAL ENGINEER RALPH M. SASAKI No. 30849 Exp. 3/31/10 CIVIL STATE OF CALIFORNIA

THE STATE OF CALIFORNIA OR ITS OFFICERS OR AGENTS SHALL NOT BE RESPONSIBLE FOR THE ACCURACY OR COMPLETENESS OF ELECTRONIC COPIES OF THIS PLAN SHEET.

SUMMARY OF DRAINAGE QUANTITIES

DRAINAGE PLAN	DRAINAGE SYSTEM No. ⬡	DRAINAGE UNIT ○	"H" OR "V" (N)	MINOR CONCRETE (MINOR STRUCTURE)	MISCELLANEOUS IRON AND STEEL	CLASS 1 CONCRETE (BOX CULVERT)	BAR REINFORCING STEEL (BOX CULVERT)	MINOR CONCRETE (BACKFILL)	MINOR CONCRETE (DITCH LINING)	MINOR CONCRETE (GUTTER LINING)	MINOR CONCRETE (GUTTER DEPRESSION)	450 mm RCP	525 mm RCP	600 mm RCP	750 mm RCP	900 mm RCP	1050 mm RCP	1200 mm RCP	1425 mm RCP	450 mm SCSP (2.01 mm THICK)	150 mm UNPERFORATED PP *	GRATED LINE DRAIN	900 mm PRECAST CONCRETE PIPE MANHOLE	PLACE HMA (MISC AREA) *	HOT MIX ASPHALT *	DITCH EXCAVATION	REMOVE CONCRETE	REMOVE PIPE	REMOVE INLET	REMOVE HEADWALL	REMOVE MANHOLE	ADJUST MANHOLE	CURB DRAIN	600 mm MH FRAME AND COVER (N)	610 mm MH FRAME AND COVER (N)	914 mm MH FRAME AND COVER (N)	CATCH BASIN MH FRAME AND COVER (N)	TYPE 600-12 FRAME AND GRATE (N)	TYPE 600-12X FRAME AND GRATE (N)	FRAME AND GRATING FOR CATCH BASINS (N)	MAXIMUM COVER (N)	DESCRIPTION	STATION
			m	m3	kg	m3	kg	m3	m3	m3	m3	m	m	m	m	m	m	m	m	m	m	m	m	m2	tonne	m3	m3	m	EA	EA	EA	EA	EA	EA	EA	EA	EA	EA	EA	EA	EA	EA	m		
D-11	94	a	1.84	1.70	264																																		2				GD-1 INLET	29.62 m R+ 28+24.500 ℄ "A1"
		b													34.6																											0.8	750 mm RCP	
		c	1.54	1.48	264																																		2				GD-1 INLET	29.41 m R+ 28+60.000 ℄ "A1"
		d													79.1																											0.9	750 mm RCP	
		e	1.64	1.56	264																																		2				GD-1 INLET	29.41 m R+ 29+40.000 ℄ "A1"
		f													89.1																											1.1	750 mm RCP	
		g	1.78	1.66	264																																		2				GD-1 INLET	28.95 m R+ 30+30.000 ℄ "A1"
D-11		h													98.9																											1.0	750 mm RCP	
D-12		i	1.64	1.56	264																																		2				GD-1 INLET	28.95 m R+ 31+30.000 ℄ "A1"
		j													99.1																											0.8	750 mm RCP	
		k	1.62	1.54	264																																		2				GD-1 INLET	28.95 m R+ 32+30.000 ℄ "A1"
		l												99.1																												0.8	600 mm RCP	
		m	1.46	1.43	264																																		2				GD-1 INLET	28.95 m R+ 33+30.000 ℄ "A1"
		n												99.1																												0.9	600 mm RCP	
		o	1.50	1.46	264																																		2				GD-1 INLET	28.95 m R+ 34+30.000 ℄ "A1"
		p												94.5																												0.9	600 mm RCP	
		q	1.54	1.48	264																																		2				GD-1 INLET	28.97 m R+ 35+25.000 ℄ "A1"
		r												53.2																												0.9	600 mm RCP	
D-12		s	1.44	1.41	264																																		2				GD-1 INLET	33.43 m R+ 35+80.000 ℄ "A1"
D-13		t												86.6																												0.9	600 mm RCP	
D-12		u	1.50	1.46	264																																		2				GD-1 INLET	6.45 m R+ 36+68.036 ₿ "C2"
		v												11.7																												0.9	600 mm RCP	
		w	1.34	1.35	264																																		2				GD-1 INLET	6.52 m R+ 36+80.619 ₿ "C2"
D-12	94	x												96.5																												1.5	600 mm RCP	
SHEET TOTAL				18.09	3168									540.7	400.8																								24				SHEET TOTAL	

* TO BE COMBINED WITH HIGHWAY QUANTITIES

DRAINAGE QUANTITIES
DQ-17

STATE OF CALIFORNIA - DEPARTMENT OF TRANSPORTATION
Caltrans
HYDRAULICS

CALCULATED-DESIGNED BY S. M. TAN W. Y. LEE
CHECKED BY R. M. SASAKI
FUNCTIONAL SUPERVISOR RALPH M. SASAKI
REVISED BY
DATE REVISED

LAST REVISION 00-00-00
DATE PLOTTED => 22-JUN-2010
TIME PLOTTED => 09:10

NOTES: PIPE JOINTS ARE STANDARD JOINTS.
(N) NOT A SEPARATE PAY ITEM, FOR INFORMATION ONLY.

Caltrans Metric

Dist	COUNTY	ROUTE	KILOMETER POST TOTAL PROJECT	SHEET No.	TOTAL SHEETS
07	LA	5	2.9/4.9	309	1082

REGISTERED CIVIL ENGINEER 12-23-09 DATE
6-21-10
PLANS APPROVAL DATE

REGISTERED PROFESSIONAL ENGINEER RALPH M. SASAKI No. 30849 Exp. 3/31/10 CIVIL STATE OF CALIFORNIA

THE STATE OF CALIFORNIA OR ITS OFFICERS OR AGENTS SHALL NOT BE RESPONSIBLE FOR THE ACCURACY OR COMPLETENESS OF ELECTRONIC COPIES OF THIS PLAN SHEET.

SUMMARY OF DRAINAGE QUANTITIES

DRAINAGE PLAN	DRAINAGE SYSTEM No. ⬡	DRAINAGE UNIT ◯	"H" OR "V" (N)	MINOR CONCRETE (MINOR STRUCTURE)	MISCELLANEOUS IRON AND STEEL	CLASS 1 CONCRETE (BOX CULVERT)	BAR REINFORCING STEEL (BOX CULVERT)	MINOR CONCRETE (BACKFILL)	MINOR CONCRETE (DITCH LINING)	MINOR CONCRETE (GUTTER LINING)	MINOR CONCRETE (GUTTER DEPRESSION)	450 mm RCP	525 mm RCP	600 mm RCP	750 mm RCP	900 mm RCP	1050 mm RCP	1200 mm RCP	1425 mm RCP	450 mm SCSP (2.01 mm THICK)	150 mm UNPERFORATED PP *	GRATED LINE DRAIN	900 mm PRECAST CONCRETE PIPE MANHOLE	PLACE HMA (MISC AREA) *	HOT MIX ASPHALT *	DITCH EXCAVATION	REMOVE CONCRETE	REMOVE PIPE	REMOVE INLET	REMOVE HEADWALL	REMOVE MANHOLE	ADJUST MANHOLE	CURB DRAIN	600 mm MH FRAME AND COVER (N)	610 mm MH FRAME AND COVER (N)	914 mm MH FRAME AND COVER (N)	CATCH BASIN MH FRAME AND COVER (N)	TYPE 600-12 FRAME AND GRATE (N)	TYPE 600-12X FRAME AND GRATE (N)	FRAME AND GRATING FOR CATCH BASINS (N)	MAXIMUM COVER (N)	DESCRIPTION	STATION
			m	m3	kg	m3	kg	m3	m3	m3	m3	m	m	m	m	m	m	m	m	m	m	m	m	m2	tonne	m3	m3	m	EA	EA	EA	EA	EA	EA	EA	EA	EA	EA	EA	EA	EA	EA	m		
D-13	94	y	2.06	1.87	264																																	2				GD-1 INLET	13.65 m R+ 37+78.000 ℄ "C2"
D-12		z												9.5																											0.9	600 mm RCP	
		a1	1.24	1.69	296																																	2				GD-3 INLET	29.10 m R+ 36+63.000 ℄ "A1"
		b1												5.2																											0.7	600 mm RCP	
		c1	1.34	1.35	264																																	2				GD-1 INLET	28.95 m R+ 36+69.000 ℄ "A1"
		d1												5.1																											0.7	600 mm RCP	
		e1	1.32	1.33	264																																	2				GD-1 INLET	28.95 m R+ 36+75.000 ℄ "A1"
		f1												104.6																											0.7	600 mm RCP	
D-12		g1	1.36	1.35	264																																	2				GD-1 INLET	29.47 m R+ 37+81.000 ℄ "A1"
D-13		h1												15.6																											0.7	600 mm RCP	
D-13	94	i1	1.06	1.76	296																																	2				GD-3 INLET	37.11 m R+ 37+95.250 ℄ "A1"
D-11	95	a		0.63																																						PARKWAY DRAIN	6.10 m L+ 13+07.983 ⅊ "E1"
	96	a		0.71																																						PARKWAY DRAIN	6.10 m L+ 13+45.986 ⅊ "E1"
	97	a		1.12																																						PARKWAY DRAIN	6.10 m L+ 14+16.063 ⅊ "E1"
	137	a		0.92																																						PARKWAY DRAIN	6.10 m L+ 14+61.066 ⅊ "E1"
	98	a		0.97																																						PARKWAY DRAIN	6.10 m L+ 15+01.040 ⅊ "E1"
	99	a		0.97																																						PARKWAY DRAIN	6.10 m L+ 15+63.041 ⅊ "E1"
	100	a																															1									CURB DRAIN	4.26 m R+ 16+13.897 ⅊ "D1"
	101	a																															1									CURB DRAIN	4.26 m R+ 16+49.625 ⅊ "D1"
D-11	102	a		0.79																																						PARKWAY DRAIN	5.71 m R+ 17+23.378 ⅊ "D1"
SHEET TOTAL				15.46	1648									140.0																			2					12				SHEET TOTAL	

* TO BE COMBINED WITH HIGHWAY QUANTITIES

DRAINAGE QUANTITIES
DQ-18

STATE OF CALIFORNIA - DEPARTMENT OF TRANSPORTATION
Caltrans
HYDRAULICS

FUNCTIONAL SUPERVISOR: RALPH M. SASAKI
CALCULATED-DESIGNED BY: S. M. TAN, W. Y. LEE
CHECKED BY: R. M. SASAKI
REVISED BY
DATE REVISED

LAST REVISION 00-00-00
DATE PLOTTED => 01-FEB-2011
TIME PLOTTED => 11:39

NOTES: PIPE JOINTS ARE STANDARD JOINTS.
(N) NOT A SEPARATE PAY ITEM, FOR INFORMATION ONLY.

Caltrans Metric

Dist	COUNTY	ROUTE	KILOMETER POST TOTAL PROJECT	SHEET No.	TOTAL SHEETS
07	LA	5	2.9/4.9	310	1082

REGISTERED CIVIL ENGINEER 12-23-09 DATE
6-21-10
PLANS APPROVAL DATE

REGISTERED PROFESSIONAL ENGINEER RALPH M. SASAKI No. 30849 Exp. 3/31/10 CIVIL STATE OF CALIFORNIA

THE STATE OF CALIFORNIA OR ITS OFFICERS OR AGENTS SHALL NOT BE RESPONSIBLE FOR THE ACCURACY OR COMPLETENESS OF ELECTRONIC COPIES OF THIS PLAN SHEET.

SUMMARY OF DRAINAGE QUANTITIES

DRAINAGE PLAN	DRAINAGE SYSTEM No. ⬡	DRAINAGE UNIT ○	"H" OR "V" (N)	MINOR CONCRETE (MINOR STRUCTURE)	MISCELLANEOUS IRON AND STEEL	CLASS 1 CONCRETE (BOX CULVERT)	BAR REINFORCING STEEL (BOX CULVERT)	MINOR CONCRETE (BACKFILL)	MINOR CONCRETE (DITCH LINING)	MINOR CONCRETE (GUTTER LINING)	MINOR CONCRETE (GUTTER DEPRESSION)	450 mm RCP	525 mm RCP	600 mm RCP	750 mm RCP	900 mm RCP	1050 mm RCP	1200 mm RCP	1425 mm RCP	450 mm SCSP (2.01 mm THICK)	150 mm UNPERFORATED PP *	GRATED LINE DRAIN	900 mm PRECAST CONCRETE PIPE MANHOLE	PLACE HMA (MISC AREA) *	HOT MIX ASPHALT *	DITCH EXCAVATION	REMOVE CONCRETE	REMOVE PIPE	REMOVE INLET	REMOVE HEADWALL	REMOVE MANHOLE	ADJUST MANHOLE	CURB DRAIN	600 mm MH FRAME AND COVER (N)	610 mm MH FRAME AND COVER (N)	914 mm MH FRAME AND COVER (N)	CATCH BASIN MH FRAME AND COVER (N)	TYPE 600-12 FRAME AND GRATE (N)	TYPE 600-12X FRAME AND GRATE (N)	FRAME AND GRATING FOR CATCH BASINS (N)	MAXIMUM COVER (N)	DESCRIPTION	STATION
			m	m3	kg	m3	kg	m3	m3	m3	m3	m	m	m	m	m	m	m	m	m	m	m	m	m2	tonne	m3	m3	m	EA	EA	EA	EA	EA	EA	EA	EA	EA	EA	EA	EA	EA	m		
D-12	103	a							35.46																	357.9																TYPE B DRAIN L = 264.6 m	
	104	a		1.06																																						PARKWAY DRAIN	6.10 m L+ 15+91.060 ℄ "E1"
	105	a		0.97																																						PARKWAY DRAIN	6.10 m L+ 16+74.984 ℄ "E1"
D-12	106	a		1.15																																						PARKWAY DRAIN	6.56 m R+ 21+08.267 ℄ "D1"
D-13	107	a	1.64	2.22	55						0.60																										1					COCB WITH LOCAL DEPRESSIONS AT CATCH BASINS CASE E	6.10 m L+ 21+99.005 ℄ "E1"
		b												88.6																										1.2	600 mm RCP	
		c		0.89																																					JUNCTION STRUCTURE-PIPE TO RCB	3.22 m L+ 21+12.352 ℄ "E1"
	108	a	1.34	0.93	148																																	1				TYPE G1 INLET	1.05 m R+ 40+66.600 ℄ "C4"
D-13		b										42.5																												1.3	450 mm RCP	
D-14		c	1.52	0.92	148																																	1				TYPE G1 INLET	1.05 m R+ 41+10.000 ℄ "C4"
		d																		19.1																						450 mm SCSP (2.01 mm THICK)	
		e										19.1																												1.3	450 mm RCP	
		f	1.70	1.13	148																																	1				TYPE G1 INLET	1.05 m R+ 41+30.000 ℄ "C4"
		g										12.2																												1.0	450 mm RCP	
		h	4.02	5.04	148																																	1				TYPE G2 INLET	8.29 m L+ 41+30.000 ℄ "C4"
D-14		i										14.0																												1.0	450 mm RCP	
SHEET TOTAL				14.31	647				35.46		0.60	87.8		88.6						19.1						357.9											1	4				SHEET TOTAL	

* TO BE COMBINED WITH HIGHWAY QUANTITIES

DRAINAGE QUANTITIES
DQ-19

STATE OF CALIFORNIA - DEPARTMENT OF TRANSPORTATION
Caltrans
HYDRAULICS

CALCULATED-DESIGNED BY S. M. TAN W. Y. LEE
CHECKED BY R. M. SASAKI
FUNCTIONAL SUPERVISOR RALPH M. SASAKI
REVISED BY
DATE REVISED

LAST REVISION 00-00-00
DATE PLOTTED => 22-JUN-2010
TIME PLOTTED => 09:10

NOTES: PIPE JOINTS ARE STANDARD JOINTS.
(N) NOT A SEPARATE PAY ITEM, FOR INFORMATION ONLY.

Caltrans Metric

Dist	COUNTY	ROUTE	KILOMETER POST TOTAL PROJECT	SHEET No.	TOTAL SHEETS
07	LA	5	2.9/4.9	311	1082

REGISTERED CIVIL ENGINEER 12-23-09 DATE
6-21-10
PLANS APPROVAL DATE

REGISTERED PROFESSIONAL ENGINEER RALPH M. SASAKI No. 30849 Exp. 3/31/10 CIVIL STATE OF CALIFORNIA

THE STATE OF CALIFORNIA OR ITS OFFICERS OR AGENTS SHALL NOT BE RESPONSIBLE FOR THE ACCURACY OR COMPLETENESS OF ELECTRONIC COPIES OF THIS PLAN SHEET.

SUMMARY OF DRAINAGE QUANTITIES

DRAINAGE PLAN	DRAINAGE SYSTEM No. ⬡	DRAINAGE UNIT ◯	"H" OR "V" (N)	MINOR CONCRETE (MINOR STRUCTURE)	MISCELLANEOUS IRON AND STEEL	CLASS 1 CONCRETE (BOX CULVERT)	BAR REINFORCING STEEL (BOX CULVERT)	MINOR CONCRETE (BACKFILL)	MINOR CONCRETE (DITCH LINING)	MINOR CONCRETE (GUTTER LINING)	MINOR CONCRETE (GUTTER DEPRESSION)	450 mm RCP	525 mm RCP	600 mm RCP	750 mm RCP	900 mm RCP	1050 mm RCP	1200 mm RCP	1425 mm RCP	450 mm SCSP (2.01 mm THICK)	150 mm UNPERFORATED PP *	GRATED LINE DRAIN	900 mm PRECAST CONCRETE PIPE MANHOLE	PLACE HMA (MISC AREA) *	HOT MIX ASPHALT *	DITCH EXCAVATION	REMOVE CONCRETE	REMOVE PIPE	REMOVE INLET	REMOVE HEADWALL	REMOVE MANHOLE	ADJUST MANHOLE	CURB DRAIN	600 mm MH FRAME AND COVER (N)	610 mm MH FRAME AND COVER (N)	914 mm MH FRAME AND COVER (N)	CATCH BASIN MH FRAME AND COVER (N)	TYPE 600-12 FRAME AND GRATE (N)	TYPE 600-12X FRAME AND GRATE (N)	FRAME AND GRATING FOR CATCH BASINS (N)	MAXIMUM COVER (N)	DESCRIPTION	STATION
			m	m3	kg	m3	kg	m3	m3	m3	m3	m	m	m	m	m	m	m	m	m	m	m	m	m2	tonne	m3	m3	m	EA	EA	EA	EA	m	EA	EA	EA	EA	EA	EA	EA	m		
D-14	109	a	1.08	1.07	55						0.48																										1					COCB WITH LOCAL DEPRESSIONS AT CATCH BASINS CASE E	6.10 m L+ 25+98.346 ℄ "E1"
		b						0.59				1.2																													0.4	450 mm RCP W/ 1.0 m Conc BACKFILL	
		c		0.22																																						JUNCTION STRUCTURE-PIPE TO PIPE	4.27 m L+ 25+97.459 ℄ "E1"
		d						67.62						132.8																											1.0	600 mm RCP W/ 89.1 m Conc BACKFILL	
		e		2.39	197																		0.2												1							MANHOLE-PIPE TO PIPE	4.49 m L+ 23+65.195 ℄ "E1"
		f												117.3																											0.9	600 mm RCP	
		g		2.36	197																		0.3												1							MANHOLE-PIPE TO PIPE	4.82 m L+ 23+46.464 ℄ "E1"
		h												14.2																											1.0	600 mm RCP	
	110	a	1.16	0.83	148																																	1				TYPE G1 INLET	35.98 m R+ 42+26.000 ℄ "A1"
		b										5.1																													0.7	450 mm RCP	
		c	1.16	1.21	264																																	2				GD-1 INLET	36.49 m R+ 42+20.000 ℄ "A1"
		d										9.2																													0.7	450 mm RCP	
		e	1.20	0.86	148																																	1				TYPE G1 INLET	37.43 m R+ 42+10.000 ℄ "A1"
		f										17.8																													0.8	450 mm RCP	
		g	1.28	0.90	148																																	1				TYPE G1 INLET	39.45 m R+ 41+91.402 ℄ "A1"
		h										24.9																													0.9	450 mm RCP	
		i	1.50	1.46	264																																	2				GD-1 INLET	28.95 m R+ 41+68.000 ℄ "A1"
		j												67.1																											0.9	600 mm RCP	
D-13		k	1.52	1.48	264																																	2				GD-1 INLET	28.95 m R+ 41+00.000 ℄ "A1"
		l												14.1																											0.9	600 mm RCP	
		m	1.58	1.52	264																																	2				GD-1 INLET	28.95 m R+ 40+85.000 ℄ "A1"
		n												20.6																											0.9	600 mm RCP	
D-13		o		4.49																																						TRANSITION STRUCTURE No. 4	37.45 m R+ 40+60.851 ℄ "A1"
SHEET TOTAL				18.79	1949			68.21			0.48	58.2		366.1									0.5												2		1	11				SHEET TOTAL	

* TO BE COMBINED WITH HIGHWAY QUANTITIES

DRAINAGE QUANTITIES
DQ-20

STATE OF CALIFORNIA - DEPARTMENT OF TRANSPORTATION
Caltrans
HYDRAULICS

FUNCTIONAL SUPERVISOR: RALPH M. SASAKI
CALCULATED-DESIGNED BY: S. M. TAN, W. Y. LEE
CHECKED BY: R. M. SASAKI
REVISED BY
DATE REVISED

LAST REVISION 00-00-00
DATE PLOTTED => 22-JUN-2010
TIME PLOTTED => 09:11

NOTES: PIPE JOINTS ARE STANDARD JOINTS.
(N) NOT A SEPARATE PAY ITEM, FOR INFORMATION ONLY.

Caltrans Metric

Dist	COUNTY	ROUTE	KILOMETER POST TOTAL PROJECT	SHEET No.	TOTAL SHEETS
07	LA	5	2.9/4.9	312	1082

REGISTERED CIVIL ENGINEER 12-23-09 DATE
6-21-10
PLANS APPROVAL DATE

REGISTERED PROFESSIONAL ENGINEER RALPH M. SASAKI No. 30849 Exp. 3/31/10 CIVIL STATE OF CALIFORNIA

THE STATE OF CALIFORNIA OR ITS OFFICERS OR AGENTS SHALL NOT BE RESPONSIBLE FOR THE ACCURACY OR COMPLETENESS OF ELECTRONIC COPIES OF THIS PLAN SHEET.

SUMMARY OF DRAINAGE QUANTITIES

DRAINAGE PLAN	DRAINAGE SYSTEM No. ⬡	DRAINAGE UNIT ◯	"H" OR "V" (N)	MINOR CONCRETE (MINOR STRUCTURE)	MISCELLANEOUS IRON AND STEEL	CLASS 1 CONCRETE (BOX CULVERT)	BAR REINFORCING STEEL (BOX CULVERT)	MINOR CONCRETE (BACKFILL)	MINOR CONCRETE (DITCH LINING)	MINOR CONCRETE (GUTTER LINING)	MINOR CONCRETE (GUTTER DEPRESSION)	450 mm RCP	525 mm RCP	600 mm RCP	750 mm RCP	900 mm RCP	1050 mm RCP	1200 mm RCP	1425 mm RCP	450 mm SCSP (2.01 mm THICK)	150 mm UNPERFORATED PP *	GRATED LINE DRAIN	900 mm PRECAST CONCRETE PIPE MANHOLE	PLACE HMA (MISC AREA) *	HOT MIX ASPHALT *	DITCH EXCAVATION	REMOVE CONCRETE	REMOVE PIPE	REMOVE INLET	REMOVE HEADWALL	REMOVE MANHOLE	ADJUST MANHOLE	CURB DRAIN	600 mm MH FRAME AND COVER (N)	610 mm MH FRAME AND COVER (N)	914 mm MH FRAME AND COVER (N)	CATCH BASIN MH FRAME AND COVER (N)	TYPE 600-12 FRAME AND GRATE (N)	TYPE 600-12X FRAME AND GRATE (N)	FRAME AND GRATING FOR CATCH BASINS (N)	MAXIMUM COVER (N)	DESCRIPTION	STATION
			m	m3	kg	m3	kg	m3	m3	m3	m3	m	m	m	m	m	m	m	m	m	m	m	m	m2	tonne	m3	m3	m	EA	EA	EA	EA	EA	EA	EA	EA	EA	EA	EA	EA	EA	m		
D-13	110	p		4.65																																						TRANSITION STRUCTURE No. 4	42.98 m R+ 39+90.159 ℄ "A1"
		q												2.4																											0.6	600 mm RCP	
D-13		r		0.36																																						JUNCTION STRUCTURE-PIPE TO RCB	43.50 m R+ 39+83.276 ℄ "A1"
D-14	111	a	1.40	1.39	264																																	2				GD-1 INLET	37.20 m L+ 42+44.000 ℄ "A1"
		b										5.1																													1.1	450 mm RCP	
		c	1.70	1.61	264																																	2				GD-1 INLET	36.68 m L+ 42+50.000 ℄ "A1"
		d										5.1																													1.1	450 mm RCP	
		e	1.40	0.97	148																																	1				TYPE G1 INLET	36.17 m L+ 42+56.000 ℄ "A1"
		f										8.7																													1.0	450 mm RCP	
	112	a	1.08	1.14	110																													1								JC 3	12.98 m R+ 42+92.223 ⅊ "C3"
		b						15.13				25.7																													0.6	450 mm RCP W/ 25.7 m CONC BACKFILL	
		c	1.12	1.17	110																													1								JC 3	12.98 m R+ 42+65.326 ⅊ "C3"
		d						14.13				105.2																													0.7	450 mm RCP W/ 24.0 m CONC BACKFILL	
		e	1.34	1.37	490																																			1		GRATING CATCH BASIN - ALLEY	16.18 m R+ 41+57.591 ⅊ "C3"
		f										22.8																													1.0	450 mm RCP	
		g	1.42	1.42	490																																			1		GRATING CATCH BASIN - ALLEY	16.95 m R+ 41+33.872 ⅊ "C3"
D-14		h										35.7																													1.3	450 mm RCP	
D-13		i	1.68	1.70	490																																			1		GRATING CATCH BASIN - ALLEY	19.77 m R+ 40+97.513 ⅊ "C3"
		j												57.8																											1.6	600 mm RCP	
		k		2.37	197																		0.6												1							MH PIPE TO PIPE	24.96 m R+ 40+39.812 ⅊ "C3"
		l												40.1																											1.9	600 mm RCP	
D-13		m		0.34																																						JUNCTION STRUCTURE-PIPE TO RCB	36.68 m R+ 16+34.656 ⅊ "B1"
SHEET TOTAL				18.49	2563			29.26				208.3		100.3									0.6											2	1		5		3		SHEET TOTAL	

* TO BE COMBINED WITH HIGHWAY QUANTITIES

DRAINAGE QUANTITIES
DQ-21

STATE OF CALIFORNIA - DEPARTMENT OF TRANSPORTATION
Caltrans
HYDRAULICS

FUNCTIONAL SUPERVISOR: RALPH M. SASAKI
CALCULATED-DESIGNED BY: S. M. TAN / W. Y. LEE
CHECKED BY: R. M. SASAKI
REVISED BY
DATE REVISED

LAST REVISION 00-00-00
DATE PLOTTED => 22-JUN-2010
TIME PLOTTED => 09:11

NOTES: PIPE JOINTS ARE STANDARD JOINTS.
(N) NOT A SEPARATE PAY ITEM, FOR INFORMATION ONLY.

Caltrans Metric

Dist	COUNTY	ROUTE	KILOMETER POST TOTAL PROJECT	SHEET No.	TOTAL SHEETS
07	LA	5	2.9/4.9	313	1082

REGISTERED CIVIL ENGINEER 12-23-09 DATE
6-21-10
PLANS APPROVAL DATE

REGISTERED PROFESSIONAL ENGINEER RALPH M. SASAKI No. 30849 Exp. 3/31/10 CIVIL STATE OF CALIFORNIA

THE STATE OF CALIFORNIA OR ITS OFFICERS OR AGENTS SHALL NOT BE RESPONSIBLE FOR THE ACCURACY OR COMPLETENESS OF ELECTRONIC COPIES OF THIS PLAN SHEET.

SUMMARY OF DRAINAGE QUANTITIES

DRAINAGE PLAN	DRAINAGE SYSTEM No. ⬡	DRAINAGE UNIT ◯	"H" OR "V" (N)	MINOR CONCRETE (MINOR STRUCTURE)	MISCELLANEOUS IRON AND STEEL	CLASS 1 CONCRETE (BOX CULVERT)	BAR REINFORCING STEEL (BOX CULVERT)	MINOR CONCRETE (BACKFILL)	MINOR CONCRETE (DITCH LINING)	MINOR CONCRETE (GUTTER LINING)	MINOR CONCRETE (GUTTER DEPRESSION)	450 mm RCP	525 mm RCP	600 mm RCP	750 mm RCP	900 mm RCP	1050 mm RCP	1200 mm RCP	1425 mm RCP	450 mm SCSP (2.01 mm THICK)	150 mm UNPERFORATED PP *	GRATED LINE DRAIN	900 mm PRECAST CONCRETE PIPE MANHOLE	PLACE HMA (MISC AREA) *	HOT MIX ASPHALT *	DITCH EXCAVATION	REMOVE CONCRETE	REMOVE PIPE	REMOVE INLET	REMOVE HEADWALL	REMOVE MANHOLE	ADJUST MANHOLE	CURB DRAIN	600 mm MH FRAME AND COVER (N)	610 mm MH FRAME AND COVER (N)	914 mm MH FRAME AND COVER (N)	CATCH BASIN MH FRAME AND COVER (N)	TYPE 600-12 FRAME AND GRATE (N)	TYPE 600-12X FRAME AND GRATE (N)	FRAME AND GRATING FOR CATCH BASINS (N)	MAXIMUM COVER (N)	DESCRIPTION	STATION
			m	m3	kg	m3	kg	m3	m3	m3	m3	m	m	m	m	m	m	m	m	m	m	m	m	m2	tonne	m3	m3	m	EA	EA	EA	EA	EA	EA	EA	EA	EA	EA	EA	EA	EA	EA	m		
D-14	113	a	1.16	1.21	264																																	2				GD-1 INLET	29.10 m Lt 41+30.000 ℄ "A1"
D-14		b												69.1																											0.5	600 mm RCP	
D-13		c	1.08	1.15	264																																	2				GD-1 INLET	29.20 m Lt 40+60.000 ℄ "A1"
		d												19.1																											1.0	600 mm RCP	
		e	1.06	1.14	264																																	2				GD-1 INLET	29.33 m Lt 40+40.000 ℄ "A1"
		f						38.40						50.6																											0.4	600 mm RCP W/ 50.6 m Conc BACKFILL	
		g								3.22																																CONCRETE GUTTER	
		h																			2.8																					1.4	150 mm UNPERFORATED PP	
		i										0.6																													0.2	450 mm RCP	
		j							0.38																	0.9																TYPE B DRAIN, L=2.8 m	
		k	1.56	1.47	110																												1									JUNCTION CHAMBER No. 3-C	43.33 m Lt 39+72.364 ℄ "A1"
		l												32.5																											1.0	600 mm RCP	
		m							4.13																	9.6																TYPE B DRAIN, L=30.8 m	
		n	1.62	1.51	110																												1									JUNCTION CHAMBER No. 3-C	43.78 m Lt 39+39.351 ℄ "A1"
		o												2.4																											1.0	600 mm RCP	
D-13		p		0.67																																						JUNCTION STRUCTURE- PIPE TO RCB	43.85 m Lt 39+34.963 ℄ "A1"
D-14	114	a		1.15																																						PARKWAY DRAIN	5.48 m Rt 0+39.338 ℄ DINARD AVE
D-15	115	a							0.20																	0.5																TYPE B DRAIN	
		b	1.24	1.26	110																												1									JUNCTION CHAMBER No. 3-C	0.53 m Rt 47+88.764 ℄ "A1"
		c												1.5																											0.6	600 mm RCP	
D-15		d		0.39																																						JUNCTION STRUCTURE No. 3	0.53 m Rt 47+92.572 ℄ "A1"
SHEET TOTAL				9.95	1122			38.40	4.71	3.22		0.6		175.2							2.8					11.0								3				6				SHEET TOTAL	

* TO BE COMBINED WITH HIGHWAY QUANTITIES

DRAINAGE QUANTITIES
DQ-22

STATE OF CALIFORNIA - DEPARTMENT OF TRANSPORTATION
Caltrans
HYDRAULICS

FUNCTIONAL SUPERVISOR: RALPH M. SASAKI
CALCULATED-DESIGNED BY: S. M. TAN / W. Y. LEE
CHECKED BY: R. M. SASAKI
REVISED BY
DATE REVISED

LAST REVISION 00-00-00
DATE PLOTTED => 22-JUN-2010
TIME PLOTTED => 09:11

NOTES: PIPE JOINTS ARE STANDARD JOINTS.
(N) NOT A SEPARATE PAY ITEM, FOR INFORMATION ONLY.

Caltrans Metric

Dist	COUNTY	ROUTE	KILOMETER POST TOTAL PROJECT	SHEET No.	TOTAL SHEETS
07	LA	5	2.9/4.9	314	1082

REGISTERED CIVIL ENGINEER 12-23-09 DATE
6-21-10
PLANS APPROVAL DATE

REGISTERED PROFESSIONAL ENGINEER RALPH M. SASAKI No. 30849 Exp. 3/31/10 CIVIL STATE OF CALIFORNIA

THE STATE OF CALIFORNIA OR ITS OFFICERS OR AGENTS SHALL NOT BE RESPONSIBLE FOR THE ACCURACY OR COMPLETENESS OF ELECTRONIC COPIES OF THIS PLAN SHEET.

SUMMARY OF DRAINAGE QUANTITIES

DRAINAGE PLAN	DRAINAGE SYSTEM No. ⬡	DRAINAGE UNIT ◯	"H" OR "V" (N)	MINOR CONCRETE (MINOR STRUCTURE)	MISCELLANEOUS IRON AND STEEL	CLASS 1 CONCRETE (BOX CULVERT)	BAR REINFORCING STEEL (BOX CULVERT)	MINOR CONCRETE (BACKFILL)	MINOR CONCRETE (DITCH LINING)	MINOR CONCRETE (GUTTER LINING)	MINOR CONCRETE (GUTTER DEPRESSION)	450 mm RCP	525 mm RCP	600 mm RCP	750 mm RCP	900 mm RCP	1050 mm RCP	1200 mm RCP	1425 mm RCP	450 mm SCSP (2.01 mm THICK)	150 mm UNPERFORATED PP *	GRATED LINE DRAIN	900 mm PRECAST CONCRETE PIPE MANHOLE	PLACE HMA (MISC AREA) *	HOT MIX ASPHALT *	DITCH EXCAVATION	REMOVE CONCRETE	REMOVE PIPE	REMOVE INLET	REMOVE HEADWALL	REMOVE MANHOLE	ADJUST MANHOLE	CURB DRAIN	600 mm MH FRAME AND COVER (N)	610 mm MH FRAME AND COVER (N)	914 mm MH FRAME AND COVER (N)	CATCH BASIN MH FRAME AND COVER (N)	TYPE 600-12 FRAME AND GRATE (N)	TYPE 600-12X FRAME AND GRATE (N)	FRAME AND GRATING FOR CATCH BASINS (N)	MAXIMUM COVER (N)	DESCRIPTION	STATION
			m	m3	kg	m3	kg	m3	m3	m3	m3	m	m	m	m	m	m	m	m	m	m	m	m	m2	tonne	m3	m3	m	EA	EA	EA	EA	EA	EA	EA	EA	EA	EA	EA	EA	EA	m		
D-15	116	a	0.84	0.98	264																																	2				GD-1 INLET	29.67 m R+ 45+20.000 ℄ "A1"
		b						105.56						139.1																											0.2	600 mm RCP WITH CONCRETE BACKFILL	
		c	0.86	0.99	264																																	2				GD-1 INLET	29.21 m R+ 46+60.000 ℄ "A1"
		d						44.85						59.1																											0.3	600 mm RCP WITH CONCRETE BACKFILL	
		e	0.88	1.01	264																																	2				GD-1 INLET	28.97 m R+ 47+20.000 ℄ "A1"
		f						18.29						24.1																											0.3	600 mm RCP WITH CONCRETE BACKFILL	
		g	0.92	1.04	264																																	2				GD-1 INLET	28.97 m R+ 47+45.000 ℄ "A1"
		h						4.63						6.1																											0.3	600 mm RCP WITH CONCRETE BACKFILL	
		i	0.96	1.06	264																																	2				GD-1 INLET	28.97 m R+ 47+52.000 ℄ "A1"
		j						3.87						5.1																											0.3	600 mm RCP WITH CONCRETE BACKFILL	
		k	0.98	1.08	264																																	2				GD-1 INLET	28.97 m R+ 47+58.000 ℄ "A1"
		l						6.75						33.4																											0.4	600 mm RCP WITH CONCRETE BACKFILL	
		m		0.38																																						JUNCTION STRUCTURE No. 3	28.56 m R+ 47+92.420 ℄ "A1"
	117	a		5.76																																						SIDEWALK CULVERT	
		b				124.15	7225																																			5-1520 mm X 760 mm RCB	
D-15		c		0.32																																						WALL PLUG	
D-16	118	a																						20.0	3.61																	PLACE HMA MSC	
D-17	119	a	1.56	2.14	55						0.60																									1					COCB WITH LOCAL DEPRESSIONS CASE E	3.91 m R+ 11+93.930 ℄ "B2"
		b										2.7																													1.2	450 mm RCP	
		c		2.21	197																		0.7											1								MANHOLE PIPE TO PIPE	0.92 m R+ 11+92.042 ℄ "B2"
D-17		d												83.5																											2.1	600 mm RCP	
		e	1.80	1.56	55						0.48																									1					COCB WITH LOCAL DEPRESSIONS CASE E	13.27 m R+ 11+10.491 ℄ "B1"
SHEET TOTAL			18.53	1891	124.15	7225	183.95			1.08	2.7		350.4									0.7	20.0	3.61									1		2	12					SHEET TOTAL	

* TO BE COMBINED WITH HIGHWAY QUANTITIES

CALCULATED-DESIGNED BY S. M. TAN W. Y. LEE
CHECKED BY R. M. SASAKI
FUNCTIONAL SUPERVISOR RALPH M. SASAKI
REVISED BY
DATE REVISED

STATE OF CALIFORNIA - DEPARTMENT OF TRANSPORTATION
Caltrans HYDRAULICS

DRAINAGE QUANTITIES
DQ-23

LAST REVISION 00-00-00
DATE PLOTTED => 22-JUN-2010
TIME PLOTTED => 09:11

NOTES: PIPE JOINTS ARE STANDARD JOINTS.
(N) NOT A SEPARATE PAY ITEM, FOR INFORMATION ONLY.

Caltrans Metric

Dist	COUNTY	ROUTE	KILOMETER POST TOTAL PROJECT	SHEET No.	TOTAL SHEETS
07	LA	5	2.9/4.9	315	1082

REGISTERED CIVIL ENGINEER 12-23-09 DATE
6-21-10
PLANS APPROVAL DATE

REGISTERED PROFESSIONAL ENGINEER RALPH M. SASAKI No. 30849 Exp. 3/31/10 CIVIL STATE OF CALIFORNIA

THE STATE OF CALIFORNIA OR ITS OFFICERS OR AGENTS SHALL NOT BE RESPONSIBLE FOR THE ACCURACY OR COMPLETENESS OF ELECTRONIC COPIES OF THIS PLAN SHEET.

SUMMARY OF DRAINAGE QUANTITIES

DRAINAGE PLAN	DRAINAGE SYSTEM No. ⬡	DRAINAGE UNIT ◯	"H" OR "V" (N)	MINOR CONCRETE (MINOR STRUCTURE)	MISCELLANEOUS IRON AND STEEL	CLASS 1 CONCRETE (BOX CULVERT)	BAR REINFORCING STEEL (BOX CULVERT)	MINOR CONCRETE (BACKFILL)	MINOR CONCRETE (DITCH LINING)	MINOR CONCRETE (GUTTER LINING)	MINOR CONCRETE (GUTTER DEPRESSION)	450 mm RCP	525 mm RCP	600 mm RCP	750 mm RCP	900 mm RCP	1050 mm RCP	1200 mm RCP	1425 mm RCP	450 mm SCSP (2.01 mm THICK)	150 mm UNPERFORATED PP *	GRATED LINE DRAIN	900 mm PRECAST CONCRETE PIPE MANHOLE	PLACE HMA (MISC AREA) *	HOT MIX ASPHALT *	DITCH EXCAVATION	REMOVE CONCRETE	REMOVE PIPE	REMOVE INLET	REMOVE HEADWALL	REMOVE MANHOLE	ADJUST MANHOLE	CURB DRAIN	600 mm MH FRAME AND COVER (N)	610 mm MH FRAME AND COVER (N)	914 mm MH FRAME AND COVER (N)	CATCH BASIN MH FRAME AND COVER (N)	TYPE 600-12 FRAME AND GRATE (N)	TYPE 600-12X FRAME AND GRATE (N)	FRAME AND GRATING FOR CATCH BASINS (N)	MAXIMUM COVER (N)	DESCRIPTION	STATION
			m	m3	kg	m3	kg	m3	m3	m3	m3	m	m	m	m	m	m	m	m	m	m	m	m	m2	tonne	m3	m3	m	EA	EA	EA	EA	EA	EA	EA	EA	EA	EA	EA	EA	EA	m		
D-17	119	f												3.6																											1.9	600 mm RCP	
		g		2.19	197																		1.6												1							MANHOLE PIPE TO PIPE	9.94 m R+ 11+08.602 ℄ "B1"
		h												20.3																											2.6	600 mm RCP	
		i		0.44																																						JUNCTION STRUCTURE - PIPE TO PIPE	7.07 m L+ 11+02.587 ℄ "B1"
	120	a	2.24	1.86	55						0.48																									1					COCB WITH LOCAL DEPRESSIONS CASE E	12.70 m L+ 11+24.000 ℄ "B1"
		b												5.1																											2.9	600 mm RCP	
		c		0.60																																						JUNCTION STRUCTURE - PIPE TO PIPE	7.06 m L+ 11+16.369 ℄ "B1"
	121	a																														1										ADJUST MANHOLE TO GRADE	7.12 m L+ 11+13.135 ℄ "B1"
	122	a	1.86	1.57	490																																			1		CURBSIDE GRATING CATCH BASIN	13.68 m R+ 12+78.091 ℄ "B1"
		b										40.0																													1.2	450 mm RCP	
		c	2.00	1.68	490																																			1		CURBSIDE GRATING CATCH BASIN	12.22 m R+ 12+37.552 ℄ "B1"
		d										67.6																													1.3	450 mm RCP	
		e	1.54	1.32	490																																			1		CURBSIDE GRATING CATCH BASIN	12.58 m R+ 11+72.544 ℄ "B1"
		f												14.1																											3.3	600 mm RCP	
		g		2.53	197																		2.9												1							MANHOLE PIPE TO PIPE MAIN LINE	2.03 m L+ 11+72.567 ℄ "B1"
		h										17.9																													3.3	450 mm RCP	
		i	1.40	1.35	110																													1								JC 3	20.04 m L+ 11+78.120 ℄ "B1"
		j								0.16																																CONCRETE GUTTER	
D-17		k	0.90	0.69	148																																		1			TYPE G1 INLET	24.39 m L+ 11+64.481 ℄ "B1"
		l										12.5																													0.7	450 mm RCP	
		m										30.5																													0.8	450 mm RCP	
		n	1.04	1.77	148																																		1			TYPE G1 INLET	17.60 m L+ 12+08.674 ℄ "B1"
		o								0.24																																CONCRETE GUTTER	
SHEET TOTAL				16.00	2325					0.40	0.48	168.5		43.1									4.5									1		1	2		1		2	3		SHEET TOTAL	

* TO BE COMBINED WITH HIGHWAY QUANTITIES

DRAINAGE QUANTITIES
DQ-24

STATE OF CALIFORNIA - DEPARTMENT OF TRANSPORTATION
Caltrans HYDRAULICS

FUNCTIONAL SUPERVISOR: RALPH M. SASAKI
CALCULATED-DESIGNED BY: S. M. TAN, W. Y. LEE
CHECKED BY: R. M. SASAKI
REVISED BY
DATE REVISED

LAST REVISION 00-00-00
DATE PLOTTED => 22-JUN-2010
TIME PLOTTED => 09:11

NOTES: PIPE JOINTS ARE STANDARD JOINTS.
(N) NOT A SEPARATE PAY ITEM, FOR INFORMATION ONLY.

Caltrans Metric

Dist	COUNTY	ROUTE	KILOMETER POST TOTAL PROJECT	SHEET No.	TOTAL SHEETS
07	LA	5	2.9/4.9	316	1082

REGISTERED CIVIL ENGINEER 12-23-09 DATE
6-21-10
PLANS APPROVAL DATE

REGISTERED PROFESSIONAL ENGINEER RALPH M. SASAKI No. 30849 Exp. 3/31/10 CIVIL STATE OF CALIFORNIA

THE STATE OF CALIFORNIA OR ITS OFFICERS OR AGENTS SHALL NOT BE RESPONSIBLE FOR THE ACCURACY OR COMPLETENESS OF ELECTRONIC COPIES OF THIS PLAN SHEET.

SUMMARY OF DRAINAGE QUANTITIES

DRAINAGE PLAN	DRAINAGE SYSTEM No. ⬡	DRAINAGE UNIT ◯	"H" OR "V" (N)	MINOR CONCRETE (MINOR STRUCTURE)	MISCELLANEOUS IRON AND STEEL	CLASS 1 CONCRETE (BOX CULVERT)	BAR REINFORCING STEEL (BOX CULVERT)	MINOR CONCRETE (BACKFILL)	MINOR CONCRETE (DITCH LINING)	MINOR CONCRETE (GUTTER LINING)	MINOR CONCRETE (GUTTER DEPRESSION)	450 mm RCP	525 mm RCP	600 mm RCP	750 mm RCP	900 mm RCP	1050 mm RCP	1200 mm RCP	1425 mm RCP	450 mm SCSP (2.01 mm THICK)	150 mm UNPERFORATED PP *	GRATED LINE DRAIN	900 mm PRECAST CONCRETE PIPE MANHOLE	PLACE HMA (MISC AREA) *	HOT MIX ASPHALT *	DITCH EXCAVATION	REMOVE CONCRETE	REMOVE PIPE	REMOVE INLET	REMOVE HEADWALL	REMOVE MANHOLE	ADJUST MANHOLE	CURB DRAIN	600 mm MH FRAME AND COVER (N)	610 mm MH FRAME AND COVER (N)	914 mm MH FRAME AND COVER (N)	CATCH BASIN MH FRAME AND COVER (N)	TYPE 600-12 FRAME AND GRATE (N)	TYPE 600-12X FRAME AND GRATE (N)	FRAME AND GRATING FOR CATCH BASINS (N)	MAXIMUM COVER (N)	DESCRIPTION	STATION
			m	m3	kg	m3	kg	m3	m3	m3	m3	m	m	m	m	m	m	m	m	m	m	m	m	m2	tonne	m3	m3	m	EA	EA	EA	EA	m	EA	EA	EA	EA	EA	EA	EA	m		
D-17	123	a		0.79																																					PARKWAY DRAIN	2.40 m R+ 11+25.810 ℄ "B2"
	124	a																				52.0																			GRATED LINE DRAIN	
		b	1.40	1.21	490																																		1		CURBSIDE GRATING CATCH BASIN	0.55 m L+ 12+38.450 ℄ "B1"
D-17		c										14.0																												1.3	450 mm RCP	
D-18	125	a	1.00	1.02	55						0.48																									1					COCB WITH LOCAL DEPRESSIONS CASE E	5.20 m R+ 13+46.500 ℄ "B2"
		b						7.48				12.7																												0.6	450 mm RCP W/ 12.7 m Conc BACKFILL	
		c	1.30	1.22	55						0.48																									1					COCB WITH LOCAL DEPRESSIONS CASE E	7.20 m L+ 13+46.500 ℄ "B2"
		d											21.7																											1.0	525 mm RCP	
	126	a	1.10	1.08	55						0.48																									1					COCB WITH LOCAL DEPRESSIONS CASE E	6.00 m R+ 0+59.565 ℄ "E3"
		b						4.24				7.5																												0.6	450 mm RCP W/ 7.2 m Conc BACKFILL	
		c		2.65	197																		0.2											1							MANHOLE PIPE TO PIPE	0.83 m L+ 0+55.292 ℄ "E3"
		d						4.59				8.0																												0.7	450 mm RCP W/ 7.8 m Conc BACKFILL	
		e	1.10	1.08	55																															1					COCB	8.28 m L+ 0+59.400 ℄ "E3"
		f						1.41				2.4																												0.7	450 mm RCP W/ 2.4 m Conc BACKFILL	
		g										36.5																												1.5	450 mm RCP	
	127	a																													1											ADJUST MANHOLE TO GRADE	2.44 m L+ 13+16.472 ℄ "B2"
		b		2.48	197																		0.2											1							MANHOLE PIPE TO PIPE MAIN LINE	17.04 m L+ 13+07.322 ℄ "B2"
		c																88.8																						5.9	1200 mm RCP	
D-18		d		2.48	197																		5.3											1							MANHOLE PIPE TO PIPE MAIN LINE	8.37 m R+ 12+22.307 ℄ "B1"
SHEET TOTAL				14.01	1301			17.72			1.44	81.1	21.7					88.8				52.0	5.7								1			3		4			1		SHEET TOTAL	

* TO BE COMBINED WITH HIGHWAY QUANTITIES

DRAINAGE QUANTITIES
DQ-25

STATE OF CALIFORNIA - DEPARTMENT OF TRANSPORTATION
Caltrans
HYDRAULICS

FUNCTIONAL SUPERVISOR: RALPH M. SASAKI
CALCULATED-DESIGNED BY: S. M. TAN / W. Y. LEE
CHECKED BY: R. M. SASAKI
REVISED BY
DATE REVISED

LAST REVISION 00-00-00
DATE PLOTTED => 22-JUN-2010
TIME PLOTTED => 09:11

NOTES: PIPE JOINTS ARE STANDARD JOINTS.
(N) NOT A SEPARATE PAY ITEM, FOR INFORMATION ONLY.

Caltrans Metric

Dist	COUNTY	ROUTE	KILOMETER POST TOTAL PROJECT	SHEET No.	TOTAL SHEETS
07	LA	5	2.9/4.9	317	1082

REGISTERED CIVIL ENGINEER 12-23-09 DATE
6-21-10
PLANS APPROVAL DATE

REGISTERED PROFESSIONAL ENGINEER RALPH M. SASAKI No. 30849 Exp. 3/31/10 CIVIL STATE OF CALIFORNIA

THE STATE OF CALIFORNIA OR ITS OFFICERS OR AGENTS SHALL NOT BE RESPONSIBLE FOR THE ACCURACY OR COMPLETENESS OF ELECTRONIC COPIES OF THIS PLAN SHEET.

SUMMARY OF DRAINAGE QUANTITIES

DRAINAGE PLAN	DRAINAGE SYSTEM No. ⬡	DRAINAGE UNIT ○	"H" OR "V" (N)	MINOR CONCRETE (MINOR STRUCTURE)	MISCELLANEOUS IRON AND STEEL	CLASS 1 CONCRETE (BOX CULVERT)	BAR REINFORCING STEEL (BOX CULVERT)	MINOR CONCRETE (BACKFILL)	MINOR CONCRETE (DITCH LINING)	MINOR CONCRETE (GUTTER LINING)	MINOR CONCRETE (GUTTER DEPRESSION)	450 mm RCP	525 mm RCP	600 mm RCP	750 mm RCP	900 mm RCP	1050 mm RCP	1200 mm RCP	1425 mm RCP	450 mm SCSP (2.01 mm THICK)	150 mm UNPERFORATED PP *	GRATED LINE DRAIN	900 mm PRECAST CONCRETE PIPE MANHOLE	PLACE HMA (MISC AREA) *	HOT MIX ASPHALT *	DITCH EXCAVATION	REMOVE CONCRETE	REMOVE PIPE	REMOVE INLET	REMOVE HEADWALL	REMOVE MANHOLE	ADJUST MANHOLE	CURB DRAIN	600 mm MH FRAME AND COVER (N)	610 mm MH FRAME AND COVER (N)	914 mm MH FRAME AND COVER (N)	CATCH BASIN MH FRAME AND COVER (N)	TYPE 600-12 FRAME AND GRATE (N)	TYPE 600-12X FRAME AND GRATE (N)	FRAME AND GRATING FOR CATCH BASINS (N)	MAXIMUM COVER (N)	DESCRIPTION	STATION
			m	m3	kg	m3	kg	m3	m3	m3	m3	m	m	m	m	m	m	m	m	m	m	m	m	m2	tonne	m3	m3	m	EA	EA	EA	EA	EA	EA	EA	EA	EA	EA	EA	EA	EA	m		
D-18	128	a		0.90																																						PIPE HEADWALL	9.43 m R+ 13+75.411 ℄ "B1"
		b												15.9																											0.4	600 mm RCP	
		c	1.10	1.21	110																													1								JUNCTION CHAMBER No. 3	20.93 m R+ 13+63.773 ℄ "B1"
		d																												1												REMOVE HEADWALL	21.63 m R+ 13+63.048 ℄ "B1"
		e																										0.8														REMOVE 457 mm RCP	
D-18		f										0.8																													0.4	450 mm RCP	
D-19	129	a	1.82	1.53	490																																		1			CURBSIDE GRATING CATCH BASIN	19.23 m R+ 16+62.430 ℄ "B1"
		b												19.4																											1.3	600 mm RCP	
		c	3.04	5.32	197																													1								COCB W/ MANHOLE IN STREET	1.32 m R+ 16+72.842 ℄ "B1"
		d												24.0																											5.3	600 mm RCP	
		e		0.15																																						JUNCTION STRUCTURE-PIPE TO RCB	23.54 m L+ 16+74.079 ℄ "B1"
		f																				41.0																				GRATED LINE DRAIN	
	130	a	1.26	2.02	55						0.60																									1					COCB WITH LOCAL DEPRESSIONS CASE E	13.92 m R+ 18+25.425 ℄ "B1"
		b												29.1																											1.0	600 mm RCP	
		c	1.04	3.10	217																																	2			TYPE GOL INLET (MOD)	14.82 m L+ 18+24.098 ℄ "B1"
		d				33.28	3449																																		1520 mm X 610 mm RCB	
		e	0.66	0.82	108																																	1			TYPE G4 INLET (MOD)	13.45 m L+ 17+82.000 ℄ "B1"
		f				103.58	10733																																			1520 mm X 610 mm RCB	
		g			197																		1.0											1								MANHOLE-Conc BOX STORM DRAIN	24.62 m L+ 16+74.140 ℄ "B1"
D-19		h		2.40																																						JUNCTION STRUCTURE-RCB TO RCB	32.61 m L+ 16+59.261 ℄ "B1"
SHEET TOTAL				17.45	1374	136.86	14182				0.60	0.8		88.4								41.0	1.0					0.8		1				1	2		1		3	1		SHEET TOTAL	

* TO BE COMBINED WITH HIGHWAY QUANTITIES

DRAINAGE QUANTITIES
DQ-26

STATE OF CALIFORNIA - DEPARTMENT OF TRANSPORTATION
Caltrans
HYDRAULICS

FUNCTIONAL SUPERVISOR: RALPH M. SASAKI
CALCULATED-DESIGNED BY: S. M. TAN / W. Y. LEE
CHECKED BY: R. M. SASAKI
REVISED BY / DATE REVISED

LAST REVISION 00-00-00
DATE PLOTTED => 22-JUN-2010
TIME PLOTTED => 09:11

NOTES: PIPE JOINTS ARE STANDARD JOINTS.
(N) NOT A SEPARATE PAY ITEM, FOR INFORMATION ONLY.

Caltrans Metric

Dist	COUNTY	ROUTE	KILOMETER POST TOTAL PROJECT	SHEET No.	TOTAL SHEETS
07	LA	5	2.9/4.9	318	1082

REGISTERED CIVIL ENGINEER 12-23-09 DATE
6-21-10
PLANS APPROVAL DATE

REGISTERED PROFESSIONAL ENGINEER RALPH M. SASAKI No. 30849 Exp. 3/31/10 CIVIL STATE OF CALIFORNIA

THE STATE OF CALIFORNIA OR ITS OFFICERS OR AGENTS SHALL NOT BE RESPONSIBLE FOR THE ACCURACY OR COMPLETENESS OF ELECTRONIC COPIES OF THIS PLAN SHEET.

SUMMARY OF DRAINAGE QUANTITIES

DRAINAGE PLAN	DRAINAGE SYSTEM No. ⬡	DRAINAGE UNIT ◯	"H" OR "V" (N)	MINOR CONCRETE (MINOR STRUCTURE)	MISCELLANEOUS IRON AND STEEL	CLASS 1 CONCRETE (BOX CULVERT)	BAR REINFORCING STEEL (BOX CULVERT)	MINOR CONCRETE (BACKFILL)	MINOR CONCRETE (DITCH LINING)	MINOR CONCRETE (GUTTER LINING)	MINOR CONCRETE (GUTTER DEPRESSION)	450 mm RCP	525 mm RCP	600 mm RCP	750 mm RCP	900 mm RCP	1050 mm RCP	1200 mm RCP	1425 mm RCP	450 mm SCSP (2.01 mm THICK)	150 mm UNPERFORATED PP *	GRATED LINE DRAIN	900 mm PRECAST CONCRETE PIPE MANHOLE	PLACE HMA (MISC AREA) *	HOT MIX ASPHALT *	DITCH EXCAVATION	REMOVE CONCRETE	REMOVE PIPE	REMOVE INLET	REMOVE HEADWALL	REMOVE MANHOLE	ADJUST MANHOLE	CURB DRAIN	600 mm MH FRAME AND COVER (N)	610 mm MH FRAME AND COVER (N)	914 mm MH FRAME AND COVER (N)	CATCH BASIN MH FRAME AND COVER (N)	TYPE 600-12 FRAME AND GRATE (N)	TYPE 600-12X FRAME AND GRATE (N)	FRAME AND GRATING FOR CATCH BASINS (N)	MAXIMUM COVER (N)	DESCRIPTION	STATION
			m	m3	kg	m3	kg	m3	m3	m3	m3	m	m	m	m	m	m	m	m	m	m	m	m	m2	tonne	m3	m3	m	EA	EA	EA	EA	EA	EA	EA	EA	EA	EA	EA	EA	EA	m		
D-19	131	a				774.36	146555																																			4270 mm X 762 mm RCB	
		b		0.70	306																														1							MANHOLE-Conc BOX STORM DRAIN	30.06 m L+ 16+33.919 ℄ "B1"
		c		0.21	306																														1							MANHOLE-Conc BOX STORM DRAIN	44.50 m R+ 39+79.436 ℄ "A1"
		d		0.63	306																														1							MANHOLE-Conc BOX STORM DRAIN	43.11 m L+ 39+31.052 ℄ "A1"
		e		0.70	306																														1							MANHOLE-Conc BOX STORM DRAIN	0.59 m R+ 21+12.172 ⅊ "E1"
		f		33.64																																						TRANSITION STRUCTURE No. 1	12.35 m L+ 20+45.580 ⅊ "E1"
		g		0.69																																						WALL PLUG	34.76 m L+ 16+65.000 ℄ "B1"
	132	a	1.05	1.70	55																															1						COCB	50.58 m R+ 40+55.243 ⅊ "C3"
		b												29.6																											0.9	600 mm RCP	
	133	a		0.74																																						PARKWAY DRAIN	14.00 m R+ 18+20.906 ℄ "B1"
	134	a																															1									CURB DRAIN	8.11 m L+ 15+98.116 ⅊ "D2"
	135	a	0.90	0.69	148																																		1			TYPE G1 INLET	20.95 m R+ 17+75.000 ℄ "B1"
		b										3.4																													0.6	450 mm RCP	
		c	1.35	1.37	55						0.48																									1						COCB WITH LOCAL DEPRESSIONS CASE E	16.05 m R+ 17+75.220 ℄ "B1"
		d										30.0																													1.1	450 mm RCP	
		e								0.36																																CONCRETE GUTTER	
D-19	136	a		0.51																																						PARKWAY DRAIN	7.28 m R+ 16+02.300 ℄ "D2"
SHEET TOTAL				41.58	1482	774.36	146555			0.36	0.48	33.4		29.6																			1		4	2		1			SHEET TOTAL	
GRAND TOTAL				297.81	25956	1056.39	169938	370.89	40.17	3.98	10.76	684.3	24.1	2552.0	929.7	53.1	72.2	88.8	234.2	19.1	2.8	93.0	40.4	20.0	3.61	368.9	1110.24	1754.8	36	24	8	3	5	14	18	4	17	100	6	8		TOTAL	

* TO BE COMBINED WITH HIGHWAY QUANTITIES

DRAINAGE QUANTITIES
DQ-27

STATE OF CALIFORNIA - DEPARTMENT OF TRANSPORTATION
Caltrans HYDRAULICS

FUNCTIONAL SUPERVISOR: RALPH M. SASAKI
CALCULATED-DESIGNED BY: S. M. TAN, W. Y. LEE
CHECKED BY: R. M. SASAKI
REVISED BY / DATE REVISED

LAST REVISION 00-00-00 DATE PLOTTED => 01-FEB-2011 TIME PLOTTED => 11:39

Dist	COUNTY	ROUTE	KILOMETER POST TOTAL PROJECT	SHEET No.	TOTAL SHEETS
07	LA	5	2.9/4.9	319	1082

REGISTERED CIVIL ENGINEER 12-23-09 DATE

6-21-10
PLANS APPROVAL DATE

REGISTERED PROFESSIONAL ENGINEER NGIM NANCY PE No. 58161 Exp. 6-30-10 CIVIL STATE OF CALIFORNIA

THE STATE OF CALIFORNIA OR ITS OFFICERS OR AGENTS SHALL NOT BE RESPONSIBLE FOR THE ACCURACY OR COMPLETENESS OF ELECTRONIC COPIES OF THIS PLAN SHEET.

Caltrans Metric

SANITARY SEWER SYSTEM No. 1
PROFILE

SCALE Horiz 1:500
Vert 1:50

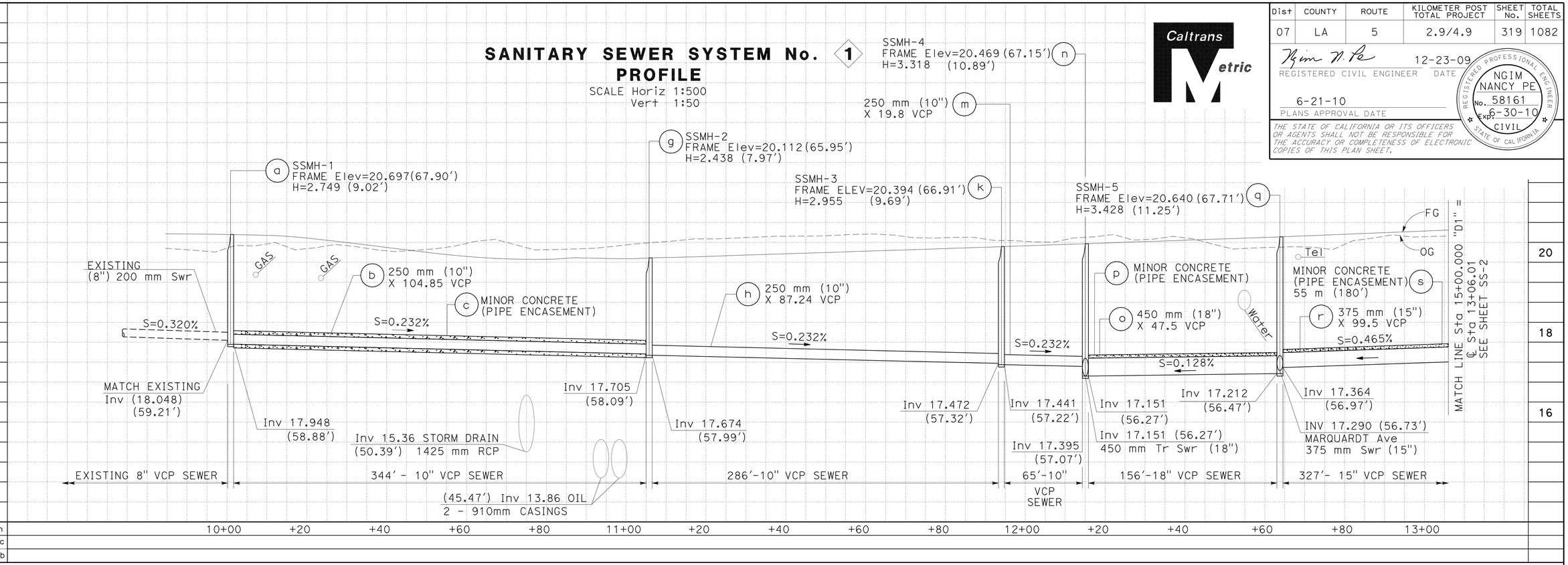

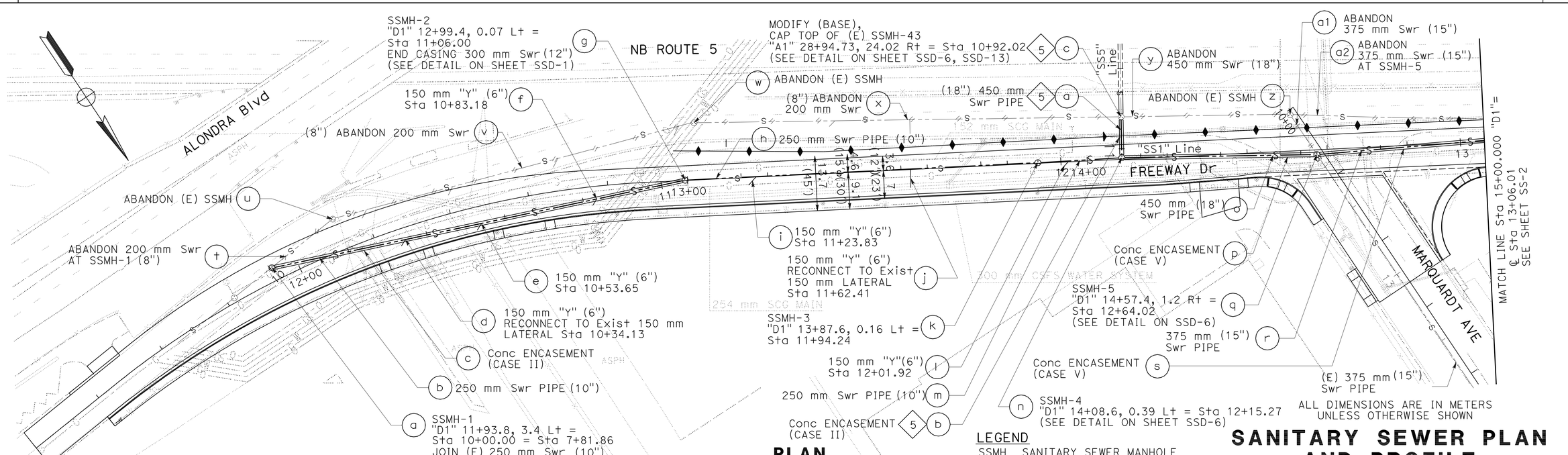

PLAN

SCALE Horiz 1:500
THIS PLAN ACCURATE FOR SEWER WORK ONLY

LEGEND

SSMH	SANITARY SEWER MANHOLE
------	EXISTING "Y" (WYE) CONNECTION
———	PROPOSED "Y" (WYE) CONNECTION
(E)	EXISTING "Y" (WYE) CONNECTION

ALL DIMENSIONS ARE IN METERS UNLESS OTHERWISE SHOWN

SANITARY SEWER PLAN AND PROFILE

SCALE AS SHOWN

SS-1

YIM T. TSE 10/09 YTT
NGIM NANCY PE 04/09 YTT
02/08 RK
REVISED BY DATE REVISED
CALCULATED-DESIGNED BY
CHECKED BY
FUNCTIONAL SUPERVISOR
NGIM NANCY PE

STATE OF CALIFORNIA - DEPARTMENT OF TRANSPORTATION
Caltrans OFFICE OF DESIGN A

S:\projects\2159c1\72159cja001.dgn

LAST REVISION 00-00-00 DATE PLOTTED => 22-JUN-2010 TIME PLOTTED => 0:36

Dist	COUNTY	ROUTE	KILOMETER POST TOTAL PROJECT	SHEET No.	TOTAL SHEETS
07	LA	5	2.9/4.9	320	1082

Ngim N. Pe 12-23-09
REGISTERED CIVIL ENGINEER DATE

6-21-10
PLANS APPROVAL DATE

REGISTERED PROFESSIONAL ENGINEER NGIM NANCY PE No. 58161 Exp. 6-30-10 CIVIL STATE OF CALIFORNIA

THE STATE OF CALIFORNIA OR ITS OFFICERS OR AGENTS SHALL NOT BE RESPONSIBLE FOR THE ACCURACY OR COMPLETENESS OF ELECTRONIC COPIES OF THIS PLAN SHEET.

Caltrans Metric

SANITARY SEWER SYSTEM No. 1
PROFILE

SCALE Horiz 1:500
Vert 1:50

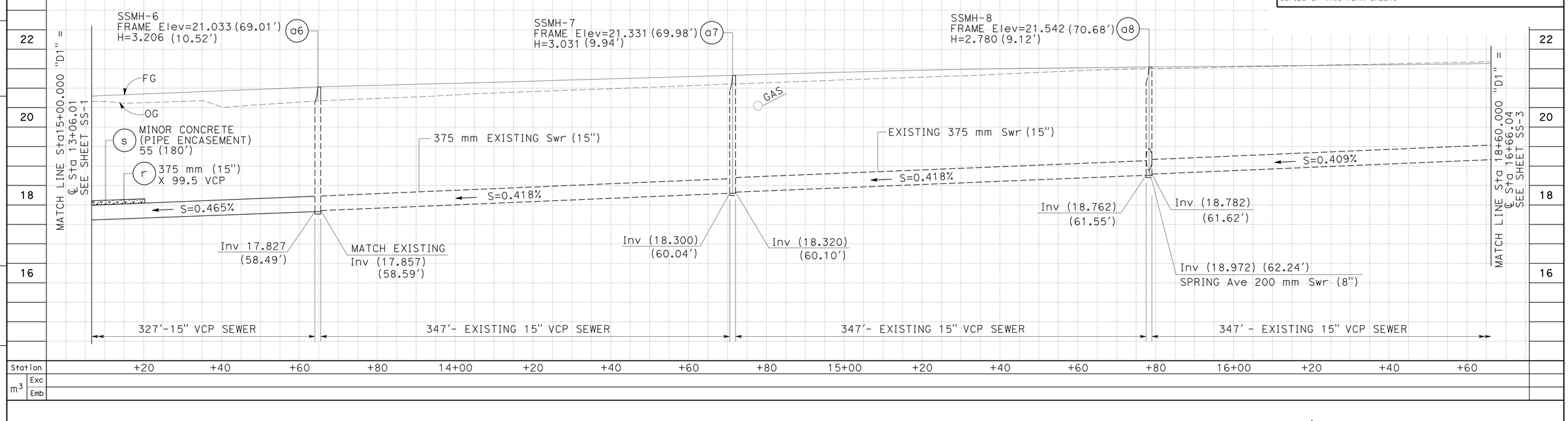

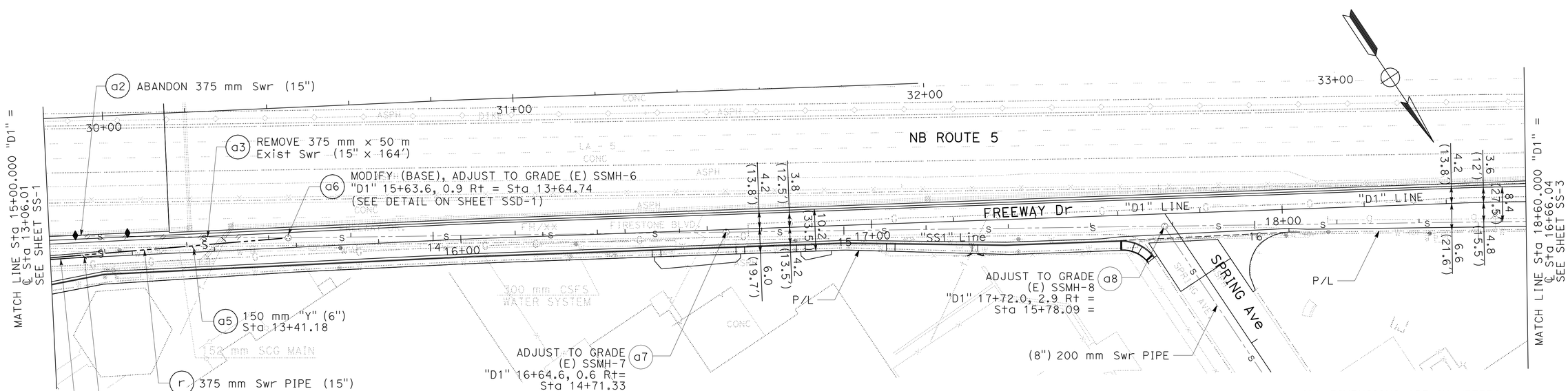

PLAN

SCALE Horiz 1:500
THIS PLAN ACCURATE FOR SEWER WORK ONLY

ALL DIMENSIONS ARE IN METERS UNLESS OTHERWISE SHOWN

SANITARY SEWER PLAN AND PROFILE

SCALE AS SHOWN **SS-2**

YTT	10/09	
YTT	04/09	
RK	02/08	
REVISED BY	DATE REVISED	
YIM T. TSE	NGIM NANCY PE	CALCULATED-DESIGNED BY
		CHECKED BY
	NGIM NANCY PE	FUNCTIONAL SUPERVISOR

STATE OF CALIFORNIA - DEPARTMENT OF TRANSPORTATION
Caltrans OFFICE OF DESIGN A

S:\projects\2159c1\72159cja002.dgn

LAST REVISION 00-00-00
DATE PLOTTED => 22-JUN-2010
TIME PLOTTED => 10:56

Dist	COUNTY	ROUTE	KILOMETER POST TOTAL PROJECT	SHEET No.	TOTAL SHEETS
07	LA	5	2.9/4.9	321	1082

REGISTERED CIVIL ENGINEER 12-23-09 DATE

6-21-10
PLANS APPROVAL DATE

REGISTERED PROFESSIONAL ENGINEER NGIM NANCY PE No. 58161 Exp. 6-30-10 CIVIL STATE OF CALIFORNIA

THE STATE OF CALIFORNIA OR ITS OFFICERS OR AGENTS SHALL NOT BE RESPONSIBLE FOR THE ACCURACY OR COMPLETENESS OF ELECTRONIC COPIES OF THIS PLAN SHEET.

Caltrans Metric

SANITARY SEWER SYSTEM No. 1
PROFILE

SCALE Horiz 1:500
Vert 1:50

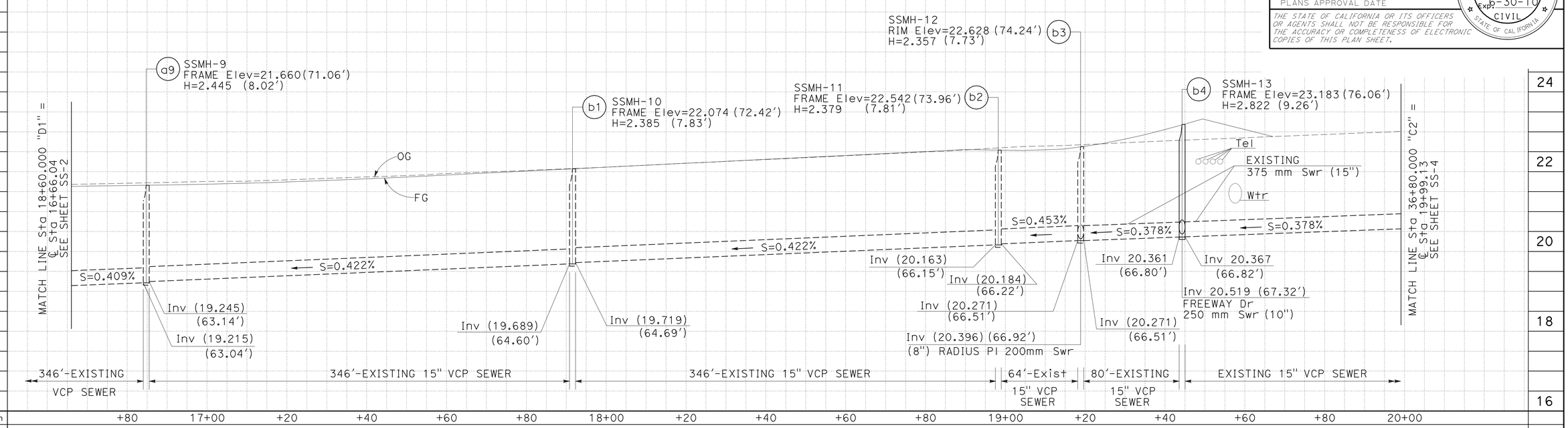

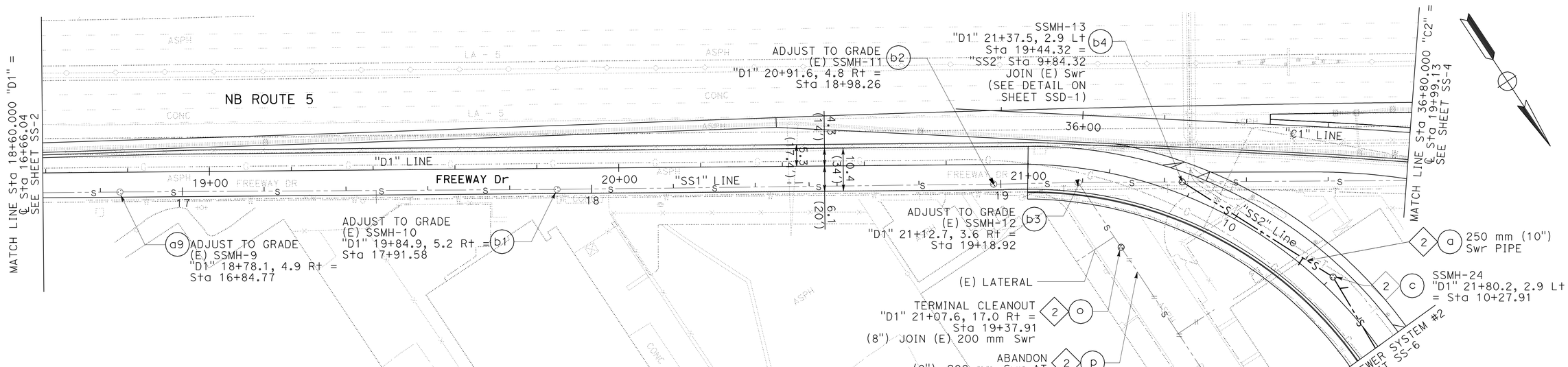

PLAN

SCALE Horiz 1:500
THIS PLAN ACCURATE FOR SEWER WORK ONLY

ALL DIMENSIONS ARE IN METERS UNLESS OTHERWISE SHOWN

SANITARY SEWER PLAN AND PROFILE

SCALE AS SHOWN

SS-3

YIM T. TSE — NGIM NANCY PE — CALCULATED-DESIGNED BY — CHECKED BY — FUNCTIONAL SUPERVISOR

REVISED BY	DATE REVISED
YTT	10/09
YTT	04/09
RK	02/08

STATE OF CALIFORNIA - DEPARTMENT OF TRANSPORTATION
Caltrans OFFICE OF DESIGN A

S:\projects\2159c1\72159cja003.dgn

LAST REVISION 00-00-00 | DATE PLOTTED => 23-JUN-2010 | TIME PLOTTED => 11:11

Dist	COUNTY	ROUTE	KILOMETER POST TOTAL PROJECT	SHEET No.	TOTAL SHEETS
07	LA	5	2.9/4.9	322	1082

REGISTERED CIVIL ENGINEER 12-23-09 DATE

6-21-10
PLANS APPROVAL DATE

REGISTERED PROFESSIONAL ENGINEER NGIM NANCY PE No. 58161 Exp. 6-30-10 CIVIL STATE OF CALIFORNIA

THE STATE OF CALIFORNIA OR ITS OFFICERS OR AGENTS SHALL NOT BE RESPONSIBLE FOR THE ACCURACY OR COMPLETENESS OF ELECTRONIC COPIES OF THIS PLAN SHEET.

Caltrans Metric

SANITARY SEWER SYSTEM No. 1
PROFILE

SCALE Horiz 1:500
Vert 1:50

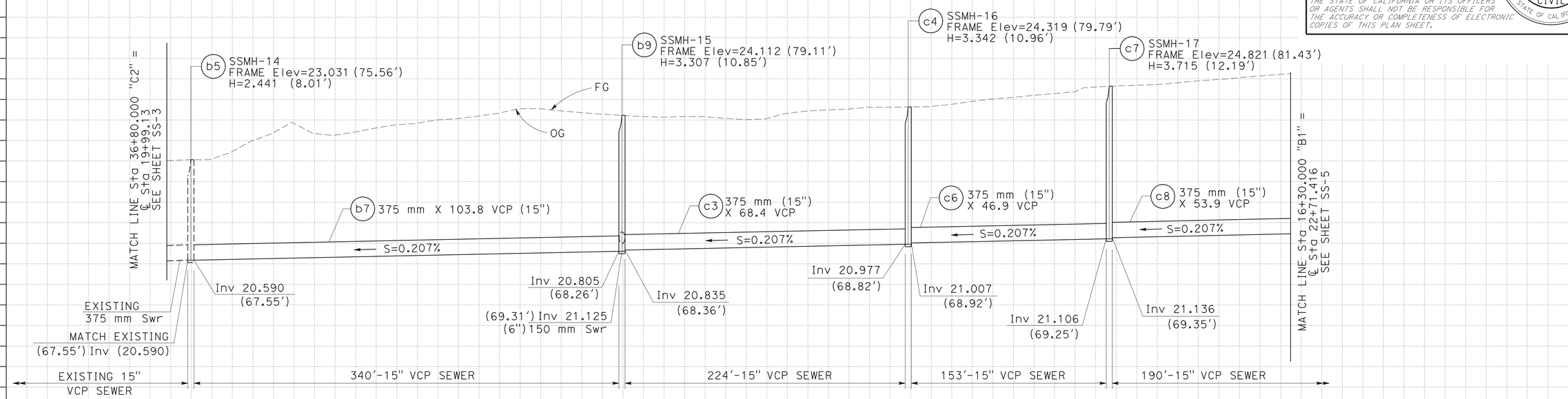

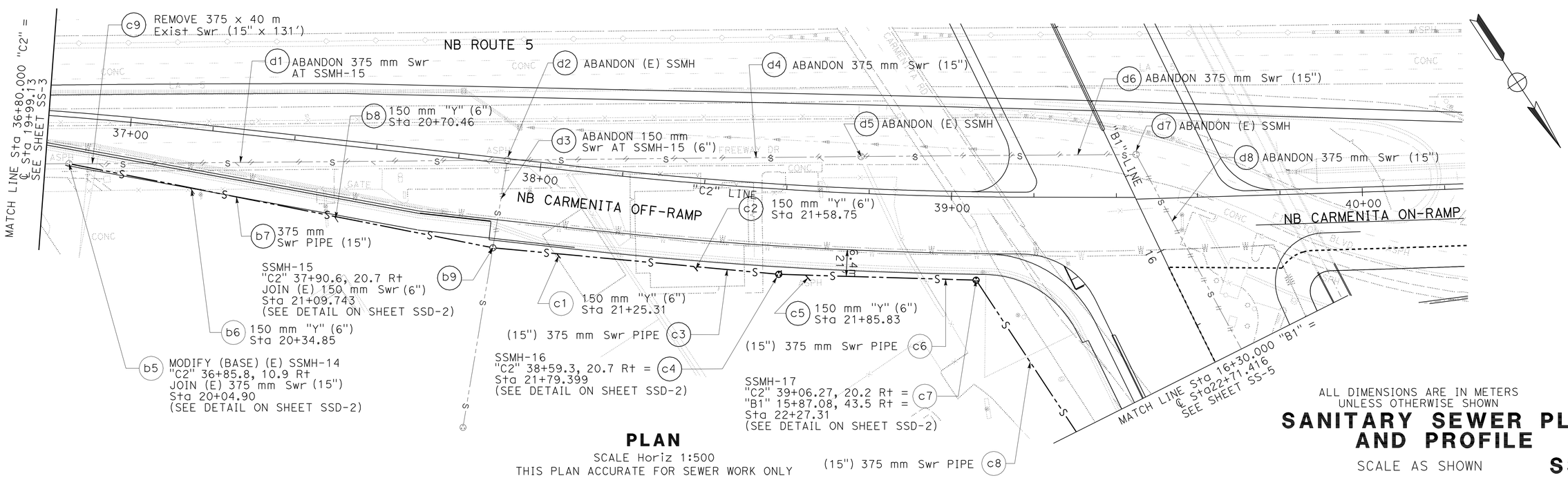

PLAN

SCALE Horiz 1:500
THIS PLAN ACCURATE FOR SEWER WORK ONLY

ALL DIMENSIONS ARE IN METERS UNLESS OTHERWISE SHOWN

SANITARY SEWER PLAN AND PROFILE

SCALE AS SHOWN

SS-4

YTT	10/09		
YTT	04/09	28	
RK	02/08	26	
REVISED BY	DATE REVISED	24	
YIM T. TSE	NGIM NANCY PE	22	
CALCULATED-DESIGNED BY	CHECKED BY	20	
FUNCTIONAL SUPERVISOR	NGIM NANCY PE	18	

STATE OF CALIFORNIA - DEPARTMENT OF TRANSPORTATION
Caltrans OFFICE OF DESIGN A

S:\projects\2159c1\72159cja004.dgn

LAST REVISION 00-00-00
DATE PLOTTED => 22-JUN-2010
TIME PLOTTED => 10:56

Dist	COUNTY	ROUTE	KILOMETER POST TOTAL PROJECT	SHEET No.	TOTAL SHEETS
07	LA	5	2.9/4.9	323	1082

Caltrans Metric

Nim N. Pe 12-23-09
REGISTERED CIVIL ENGINEER DATE

6-21-10
PLANS APPROVAL DATE

REGISTERED PROFESSIONAL ENGINEER NGIM NANCY PE No. 58161 Exp. 6-30-10 CIVIL STATE OF CALIFORNIA

THE STATE OF CALIFORNIA OR ITS OFFICERS OR AGENTS SHALL NOT BE RESPONSIBLE FOR THE ACCURACY OR COMPLETENESS OF ELECTRONIC COPIES OF THIS PLAN SHEET.

SANITARY SEWER SYSTEM No. 1
PROFILE

SCALE Horiz 1:500
Vert 1:50

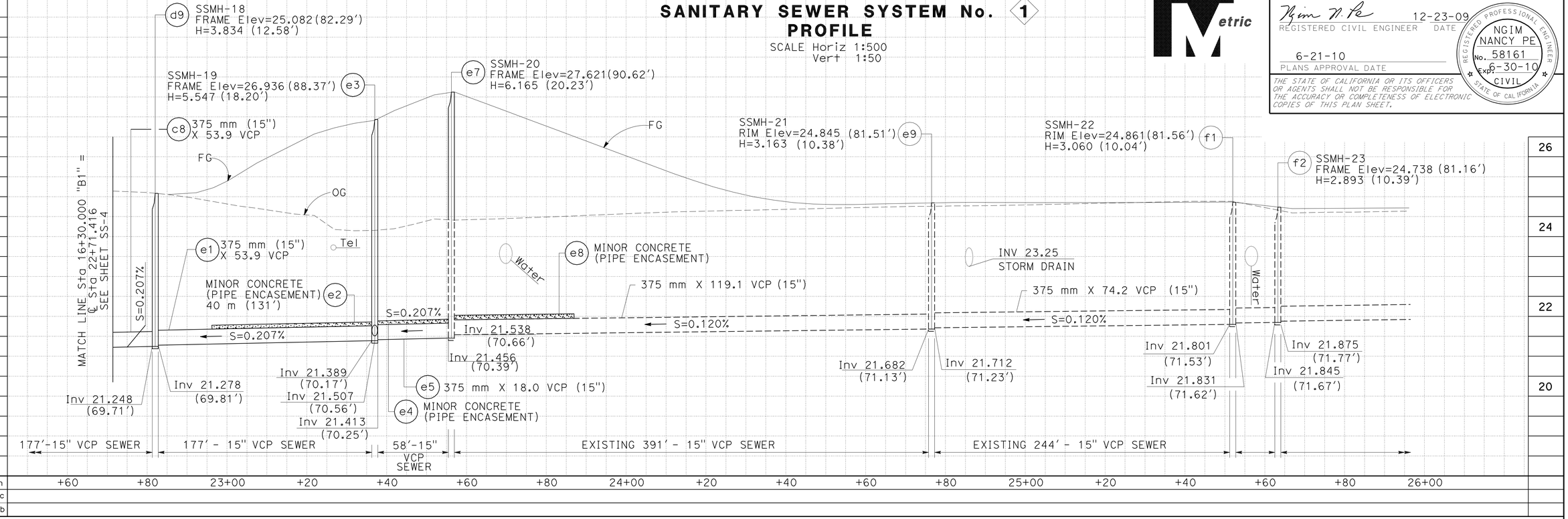

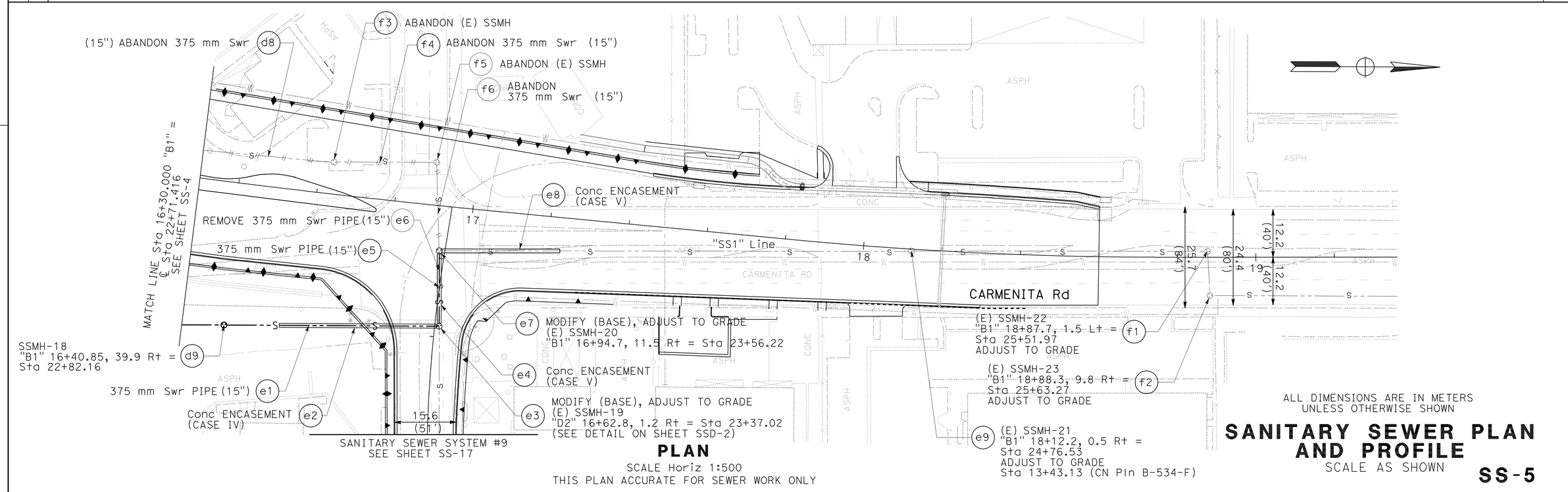

PLAN

SCALE Horiz 1:500
THIS PLAN ACCURATE FOR SEWER WORK ONLY

ALL DIMENSIONS ARE IN METERS
UNLESS OTHERWISE SHOWN

SANITARY SEWER PLAN AND PROFILE

SCALE AS SHOWN

SS-5

YTT	10/09		
YTT	04/09		
RK	02/08		
REVISED BY	DATE REVISED		
YIM T. TSE	NGIM NANCY PE		
CALCULATED-DESIGNED BY	CHECKED BY		
FUNCTIONAL SUPERVISOR	NGIM NANCY PE		

STATE OF CALIFORNIA - DEPARTMENT OF TRANSPORTATION
Caltrans OFFICE OF DESIGN A

S:\projects\2159c1\72159cja005.dgn

LAST REVISION 00-00-00 | DATE PLOTTED => 22-JUN-2010 | TIME PLOTTED => 10:36

Dist	COUNTY	ROUTE	KILOMETER POST TOTAL PROJECT	SHEET No.	TOTAL SHEETS
07	LA	5	2.9/4.9	324	1082

Caltrans Metric

Ngim N. Pe 12-23-09
REGISTERED CIVIL ENGINEER DATE

6-21-10
PLANS APPROVAL DATE

REGISTERED PROFESSIONAL ENGINEER NGIM NANCY PE No. 58161 Exp. 6-30-10 CIVIL STATE OF CALIFORNIA

THE STATE OF CALIFORNIA OR ITS OFFICERS OR AGENTS SHALL NOT BE RESPONSIBLE FOR THE ACCURACY OR COMPLETENESS OF ELECTRONIC COPIES OF THIS PLAN SHEET.

SANITARY SEWER SYSTEM No. 2
PROFILE

SCALE Horiz 1:500
Vert 1:50

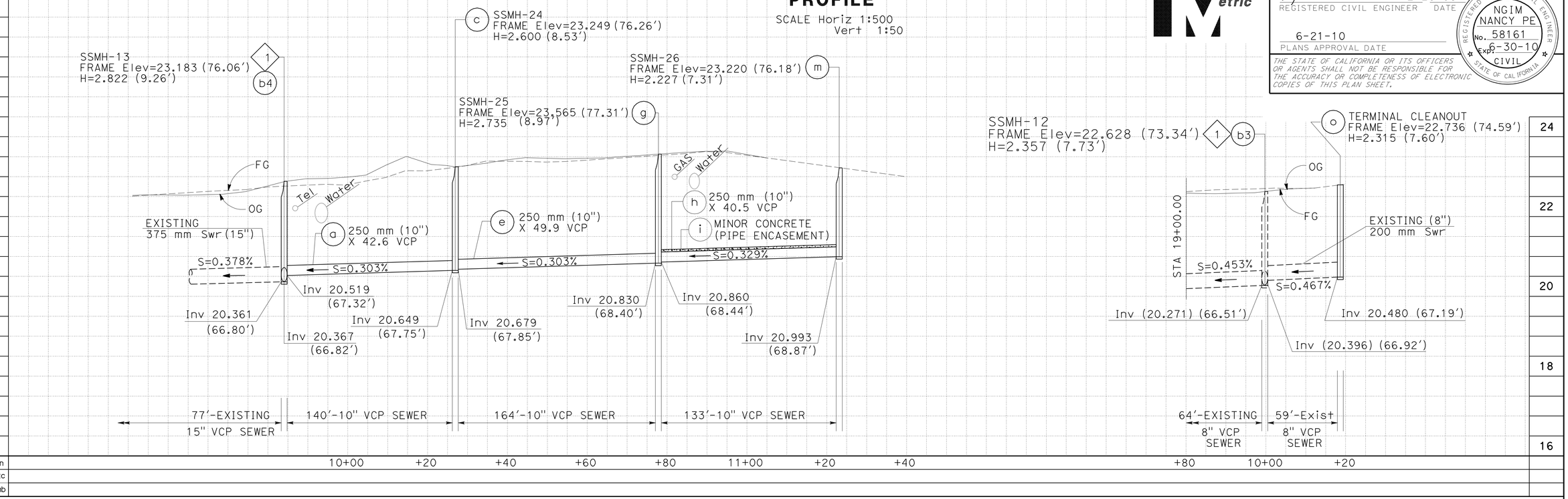

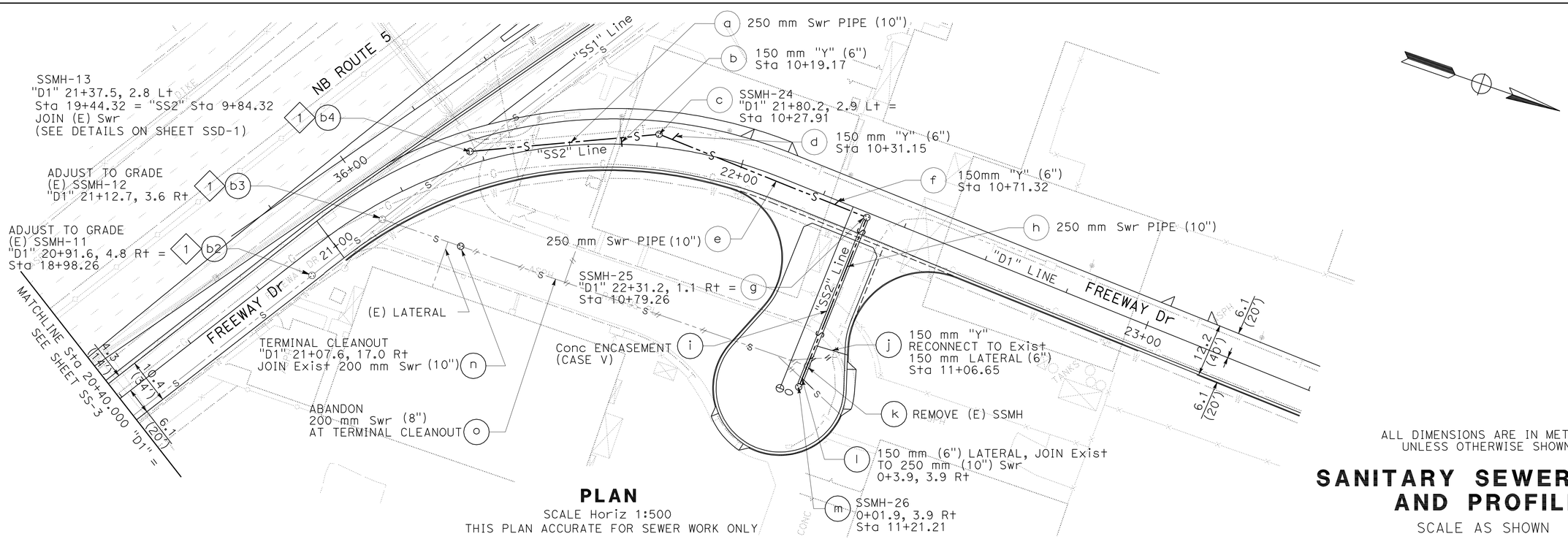

PLAN

SCALE Horiz 1:500
THIS PLAN ACCURATE FOR SEWER WORK ONLY

ALL DIMENSIONS ARE IN METERS
UNLESS OTHERWISE SHOWN

SANITARY SEWER PLAN AND PROFILE

SCALE AS SHOWN

SS-6

YTT	YTT	RK
10/09	04/09	02/08
DATE REVISED	DATE REVISED	DATE REVISED
YIM T. TSE	NGIM NANCY PE	
CALCULATED-DESIGNED BY	CHECKED BY	FUNCTIONAL SUPERVISOR
NGIM NANCY PE		

STATE OF CALIFORNIA - DEPARTMENT OF TRANSPORTATION
Caltrans OFFICE OF DESIGN A

S:\projects\2159c1\72159cja006.dgn

LAST REVISION 00-00-00 | DATE PLOTTED => 22-JUN-2010 | TIME PLOTTED => 10:36

Dist	COUNTY	ROUTE	KILOMETER POST TOTAL PROJECT	SHEET No.	TOTAL SHEETS
07	LA	5	2.9/4.9	325	1082

Ngim N. Pe 12-23-09
REGISTERED CIVIL ENGINEER DATE

6-21-10
PLANS APPROVAL DATE

REGISTERED PROFESSIONAL ENGINEER NGIM NANCY PE No. 58161 Exp. 6-30-10 CIVIL STATE OF CALIFORNIA

THE STATE OF CALIFORNIA OR ITS OFFICERS OR AGENTS SHALL NOT BE RESPONSIBLE FOR THE ACCURACY OR COMPLETENESS OF ELECTRONIC COPIES OF THIS PLAN SHEET.

Caltrans Metric

SANITARY SEWER SYSTEM No. 3
PROFILE

SCALE Horiz 1:500
Vert 1:50

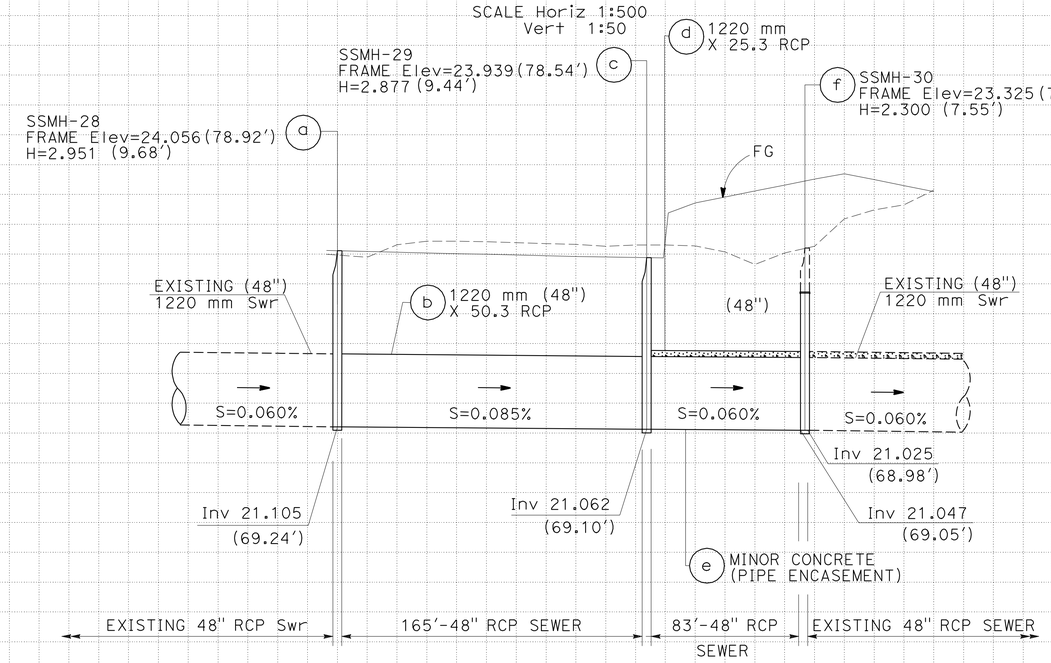

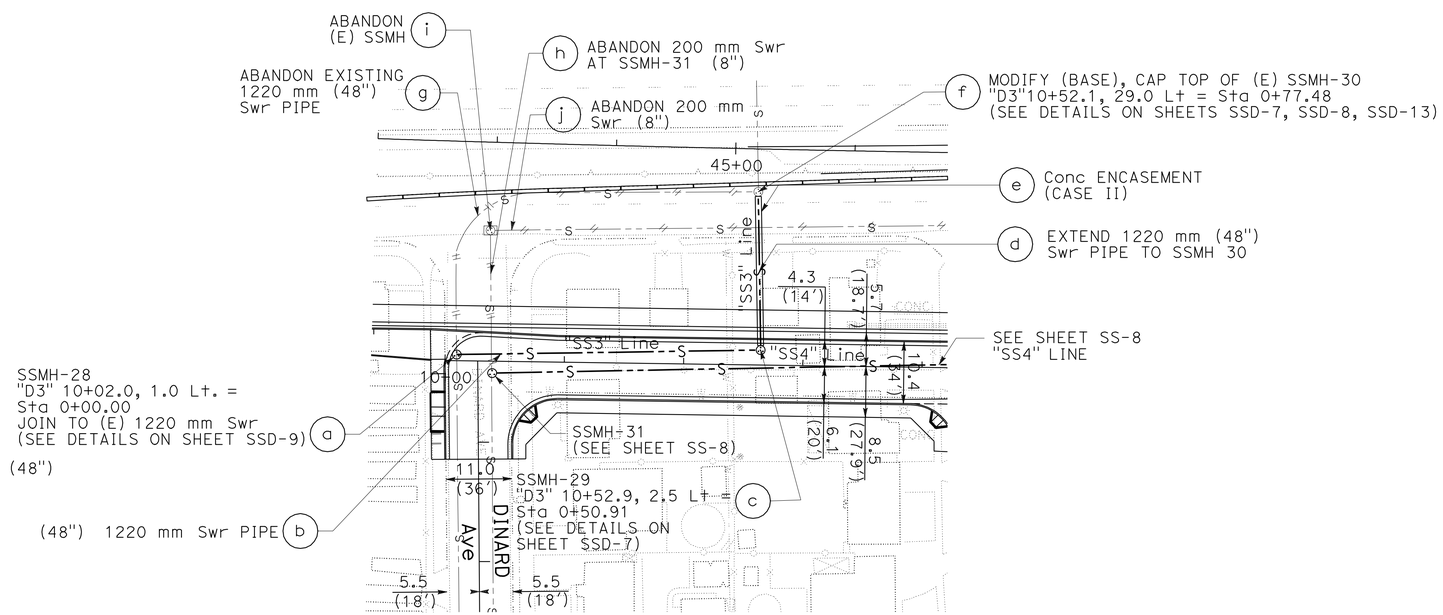

PLAN
SCALE Horiz 1:500
THIS PLAN ACCURATE FOR SEWER WORK ONLY

ALL DIMENSIONS ARE IN METERS
UNLESS OTHERWISE SHOWN

SANITARY SEWER PLAN AND PROFILE
SCALE AS SHOWN

SS-7

YTT	YTT	RK
10/09	04/09	02/08

REVISED BY — DATE REVISED

YIM T. TSE — NGIM NANCY PE

CALCULATED-DESIGNED BY — CHECKED BY

FUNCTIONAL SUPERVISOR — NGIM NANCY PE

STATE OF CALIFORNIA - DEPARTMENT OF TRANSPORTATION
Caltrans OFFICE OF DESIGN A

S:\projects\2159c1\72159cja007.dgn

LAST REVISION 00-00-00 — DATE PLOTTED => 22-JUN-2010 — TIME PLOTTED => 10:54

Dist	COUNTY	ROUTE	KILOMETER POST TOTAL PROJECT	SHEET No.	TOTAL SHEETS
07	LA	5	2.9/4.9	326	1082

REGISTERED CIVIL ENGINEER 12-23-09 DATE

6-21-10
PLANS APPROVAL DATE

REGISTERED PROFESSIONAL ENGINEER NGIM NANCY PE No. 58161 Exp. 6-30-10 CIVIL STATE OF CALIFORNIA

THE STATE OF CALIFORNIA OR ITS OFFICERS OR AGENTS SHALL NOT BE RESPONSIBLE FOR THE ACCURACY OR COMPLETENESS OF ELECTRONIC COPIES OF THIS PLAN SHEET.

Caltrans Metric

SANITARY SEWER SYSTEM No. 4
PROFILE

SCALE Horiz 1:500
Vert 1:50

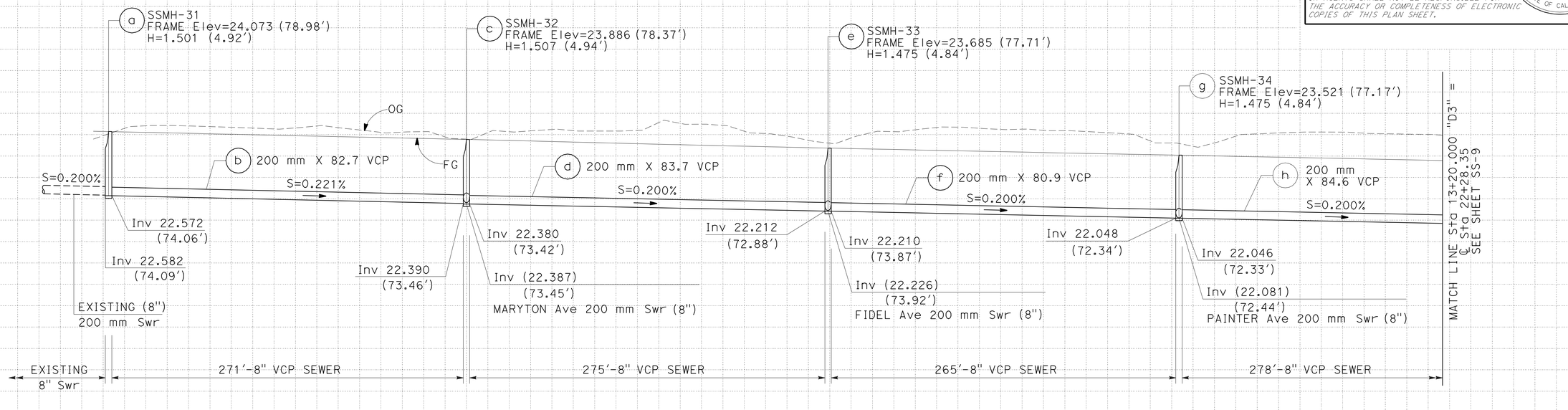

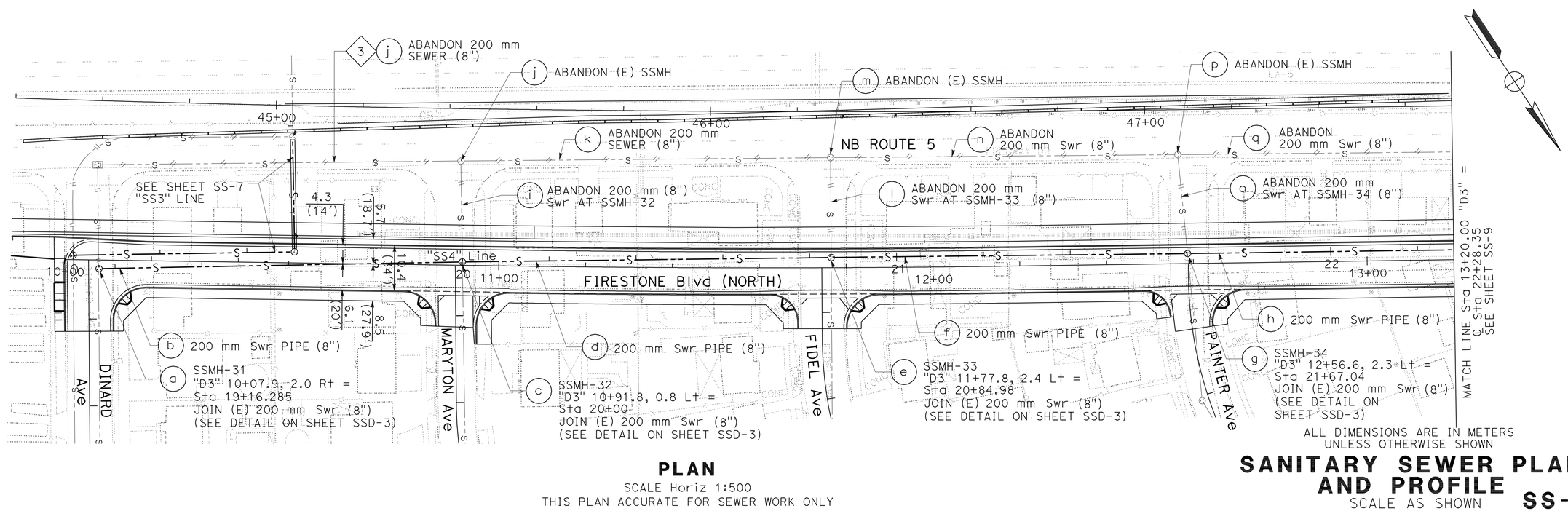

ALL DIMENSIONS ARE IN METERS UNLESS OTHERWISE SHOWN

PLAN
SCALE Horiz 1:500
THIS PLAN ACCURATE FOR SEWER WORK ONLY

SANITARY SEWER PLAN AND PROFILE
SCALE AS SHOWN

SS-8

REVISED BY	DATE REVISED
YTT	10/09
YTT	04/09
RK	02/08

CALCULATED-DESIGNED BY: YIM T. TSE
CHECKED BY: NGIM NANCY PE
FUNCTIONAL SUPERVISOR: NGIM NANCY PE

STATE OF CALIFORNIA - DEPARTMENT OF TRANSPORTATION
Caltrans OFFICE OF DESIGN A

S:\projects\2159c1\72159cja008.dgn

LAST REVISION 00-00-00
DATE PLOTTED => 22-JUN-2010
TIME PLOTTED => 10:37

Dist	COUNTY	ROUTE	KILOMETER POST TOTAL PROJECT	SHEET No.	TOTAL SHEETS
07	LA	5	2.9/4.9	327	1082

REGISTERED CIVIL ENGINEER 12-23-09 DATE

6-21-10
PLANS APPROVAL DATE

REGISTERED PROFESSIONAL ENGINEER NGIM NANCY PE No. 58161 Exp. 6-30-10 CIVIL STATE OF CALIFORNIA

THE STATE OF CALIFORNIA OR ITS OFFICERS OR AGENTS SHALL NOT BE RESPONSIBLE FOR THE ACCURACY OR COMPLETENESS OF ELECTRONIC COPIES OF THIS PLAN SHEET.

Caltrans Metric

SANITARY SEWER SYSTEM No. 4
PROFILE

SCALE Horiz 1:500
Vert 1:50

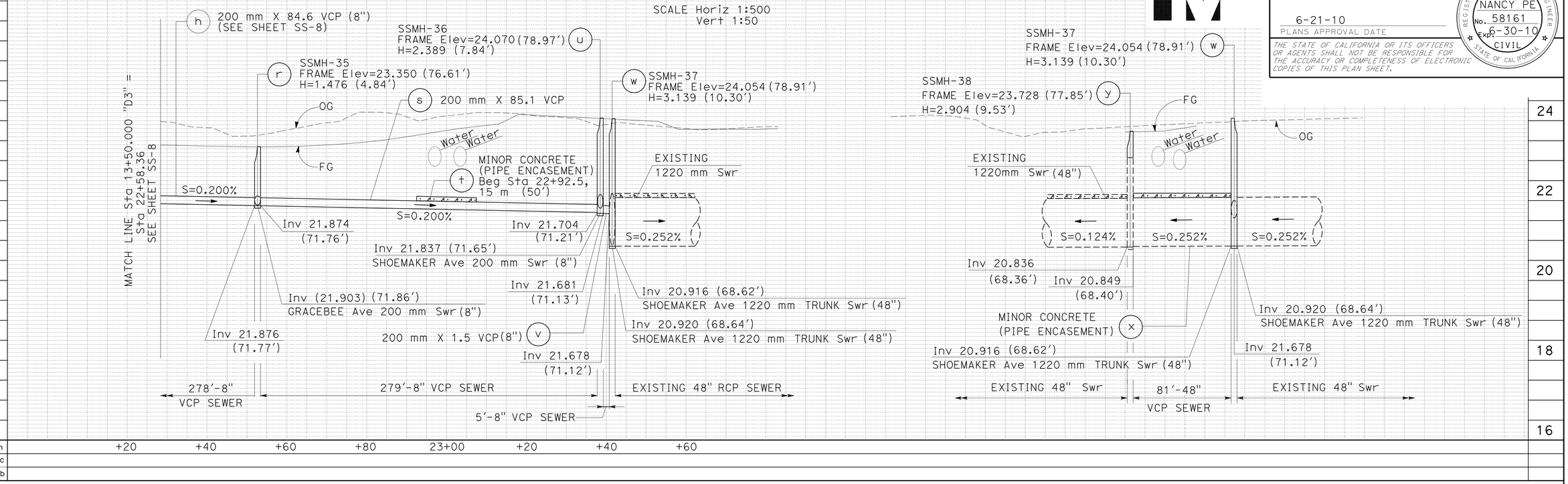

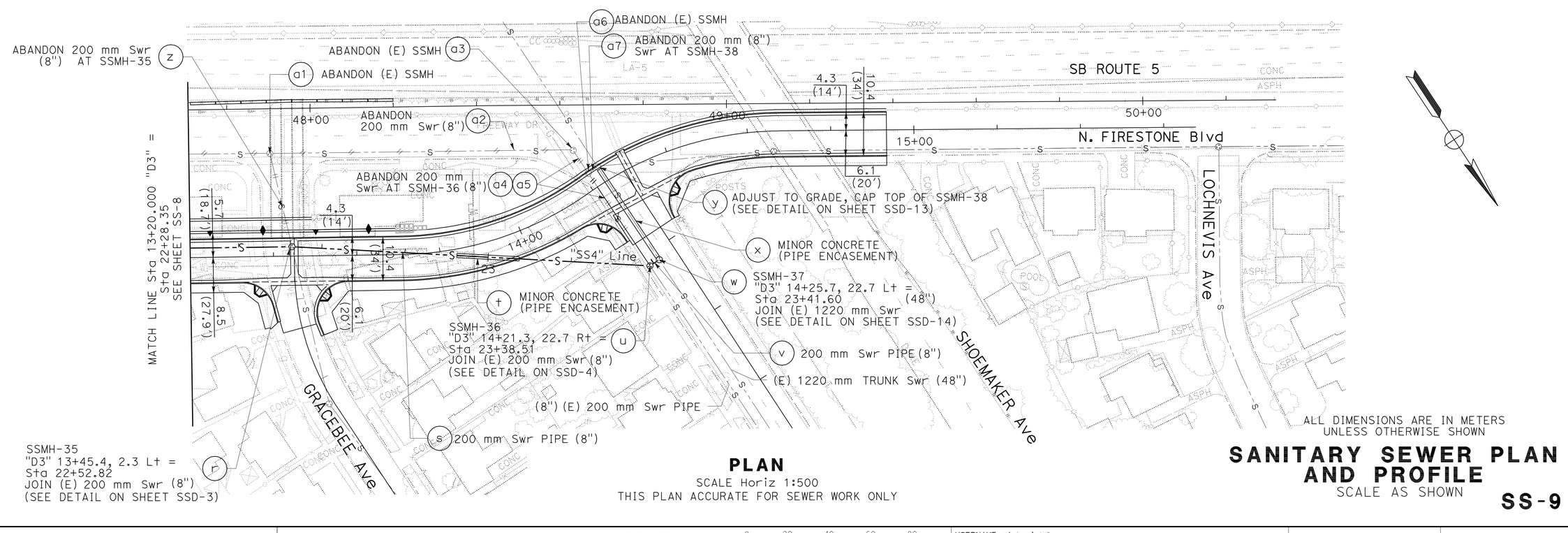

PLAN
SCALE Horiz 1:500
THIS PLAN ACCURATE FOR SEWER WORK ONLY

ALL DIMENSIONS ARE IN METERS UNLESS OTHERWISE SHOWN

SANITARY SEWER PLAN AND PROFILE
SCALE AS SHOWN

SS-9

YTT	YTT	RK
10/09	04/09	02/08

REVISED BY — DATE REVISED

YIM T. TSE — NGIM NANCY PE

CALCULATED-DESIGNED BY — CHECKED BY

FUNCTIONAL SUPERVISOR — NGIM NANCY PE

STATE OF CALIFORNIA - DEPARTMENT OF TRANSPORTATION
Caltrans OFFICE OF DESIGN A

S:\projects\2159c1\72159cja009.dgn

LAST REVISION 00-00-00 | DATE PLOTTED => 22-JUN-2010 | TIME PLOTTED => 10:37

Dist	COUNTY	ROUTE	KILOMETER POST TOTAL PROJECT	SHEET No.	TOTAL SHEETS
07	LA	5	2.9/4.9	328	1082

REGISTERED CIVIL ENGINEER — DATE 12-23-09

6-21-10
PLANS APPROVAL DATE

REGISTERED PROFESSIONAL ENGINEER NGIM NANCY PE No. 58161 Exp. 6-30-10 CIVIL STATE OF CALIFORNIA

THE STATE OF CALIFORNIA OR ITS OFFICERS OR AGENTS SHALL NOT BE RESPONSIBLE FOR THE ACCURACY OR COMPLETENESS OF ELECTRONIC COPIES OF THIS PLAN SHEET.

Caltrans Metric

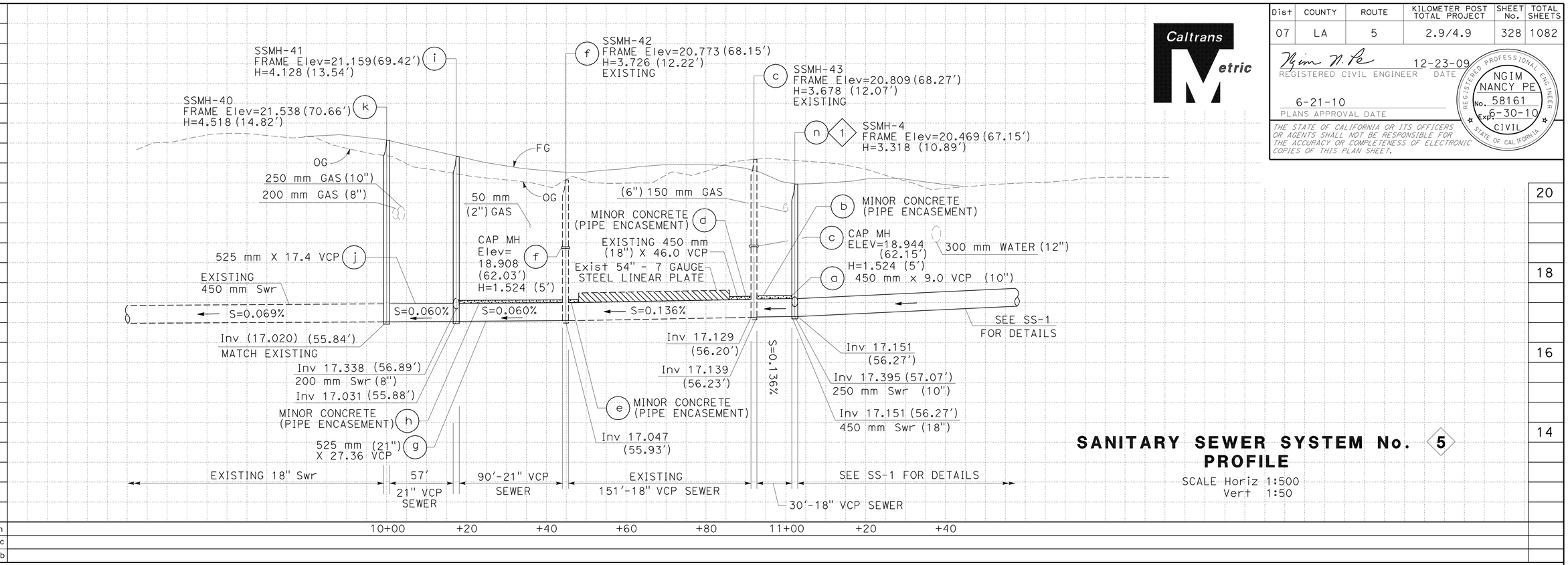

SANITARY SEWER SYSTEM No. 5
PROFILE

SCALE Horiz 1:500
Vert 1:50

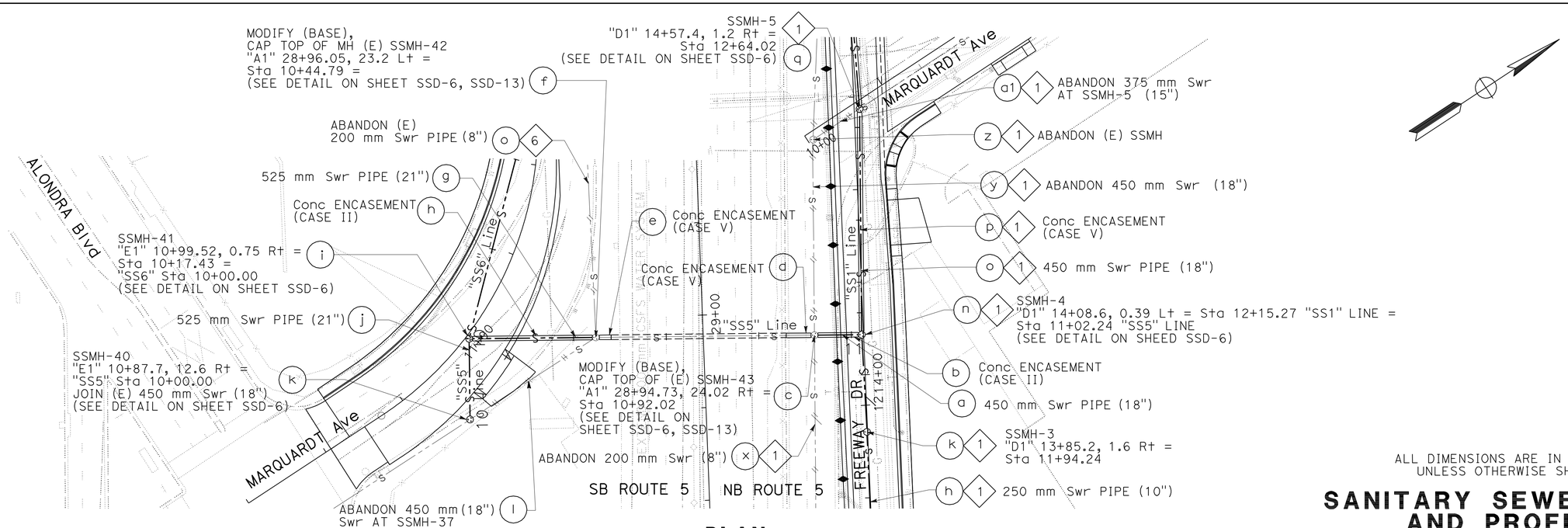

PLAN

SCALE Horiz 1:500
THIS PLAN ACCURATE FOR SEWER WORK ONLY

ALL DIMENSIONS ARE IN METERS
UNLESS OTHERWISE SHOWN

SANITARY SEWER PLAN AND PROFILE

SCALE AS SHOWN

SS-10

YTT	10/09		
YTT	04/09		
RK	02/08		
REVISED BY	DATE REVISED		
YIM T. TSE	NGIM NANCY PE		
CALCULATED-DESIGNED BY	CHECKED BY		
FUNCTIONAL SUPERVISOR	NGIM NANCY PE		

STATE OF CALIFORNIA - DEPARTMENT OF TRANSPORTATION
Caltrans OFFICE OF DESIGN A

S:\projects\2159c1\72159cja010.dgn

LAST REVISION 00-00-00 | DATE PLOTTED => 22-JUN-2010 | TIME PLOTTED => 10:37

BORDER LAST REVISED 3/1/2007 | RELATIVE BORDER SCALE IS IN MILLIMETERS 0 20 40 60 80 | USERNAME => trrichf | DGN FILE => 72159cja010.dgn | CU 07225 | EA 2159C1

Dist	COUNTY	ROUTE	KILOMETER POST TOTAL PROJECT	SHEET No.	TOTAL SHEETS
07	LA	5	2.9/4.9	329	1082

REGISTERED CIVIL ENGINEER 12-23-09 DATE

6-21-10
PLANS APPROVAL DATE

REGISTERED PROFESSIONAL ENGINEER NGIM NANCY PE No. 58161 Exp. 6-30-10 CIVIL STATE OF CALIFORNIA

THE STATE OF CALIFORNIA OR ITS OFFICERS OR AGENTS SHALL NOT BE RESPONSIBLE FOR THE ACCURACY OR COMPLETENESS OF ELECTRONIC COPIES OF THIS PLAN SHEET.

Caltrans Metric

SANITARY SEWER SYSTEM No. 6
PROFILE

SCALE Horiz 1:500
Vert 1:50

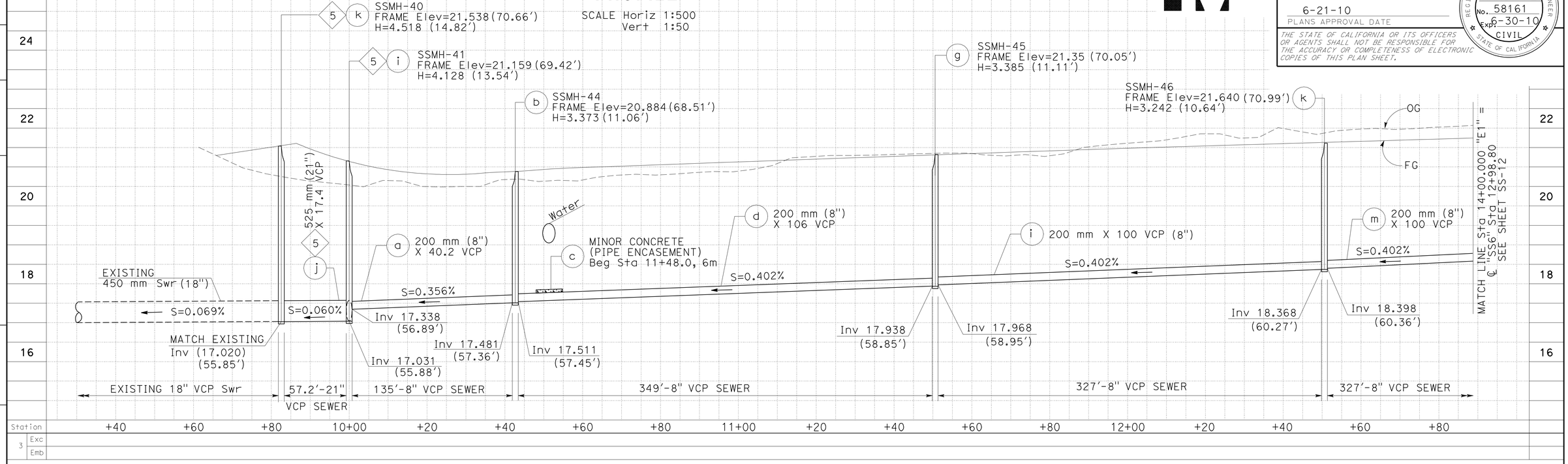

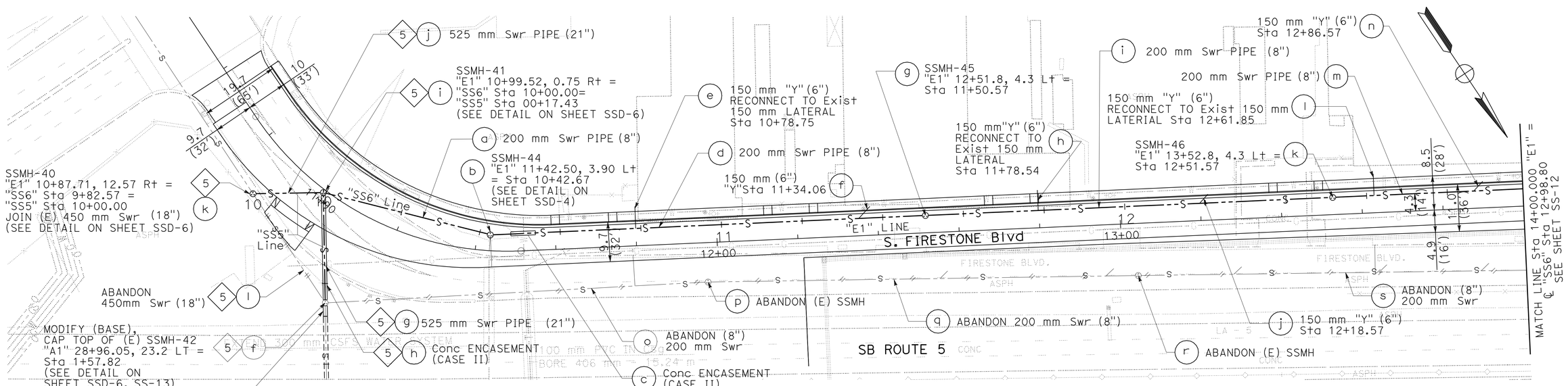

ALL DIMENSIONS ARE IN METERS UNLESS OTHERWISE SHOWN

PLAN
SCALE Horiz 1:500
THIS PLAN ACCURATE FOR SEWER WORK ONLY

SANITARY SEWER PLAN AND PROFILE
SCALE AS SHOWN

SS-11

REVISED BY	DATE REVISED
YTT	10/09
YTT	04/09
RK	02/08

YIM T. TSE — NGIM NANCY PE
CALCULATED-DESIGNED BY — CHECKED BY
FUNCTIONAL SUPERVISOR — NGIM NANCY PE

STATE OF CALIFORNIA - DEPARTMENT OF TRANSPORTATION
Caltrans OFFICE OF DESIGN A

S:\projects\2159c1\72159cja011.dgn

LAST REVISION 00-00-00 | DATE PLOTTED => 22-JUN-2010 | TIME PLOTTED => 10:37

Dist	COUNTY	ROUTE	KILOMETER POST TOTAL PROJECT	SHEET No.	TOTAL SHEETS
07	LA	5	2.9/4.9	330	1082

Ngim N. Pe 12-23-09
REGISTERED CIVIL ENGINEER DATE

6-21-10
PLANS APPROVAL DATE

REGISTERED PROFESSIONAL ENGINEER NGIM NANCY PE No. 58161 Exp. 6-30-10 CIVIL STATE OF CALIFORNIA

THE STATE OF CALIFORNIA OR ITS OFFICERS OR AGENTS SHALL NOT BE RESPONSIBLE FOR THE ACCURACY OR COMPLETENESS OF ELECTRONIC COPIES OF THIS PLAN SHEET.

Caltrans Metric

SANITARY SEWER SYSTEM No. 6
PROFILE

SCALE Horiz 1:500
Vert 1:50

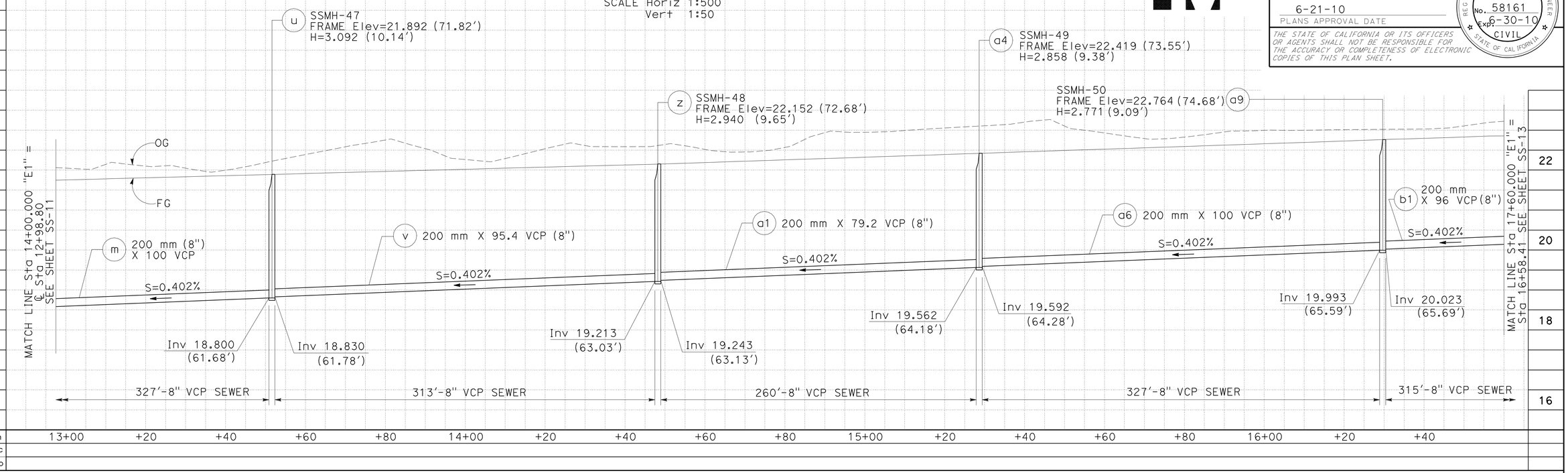

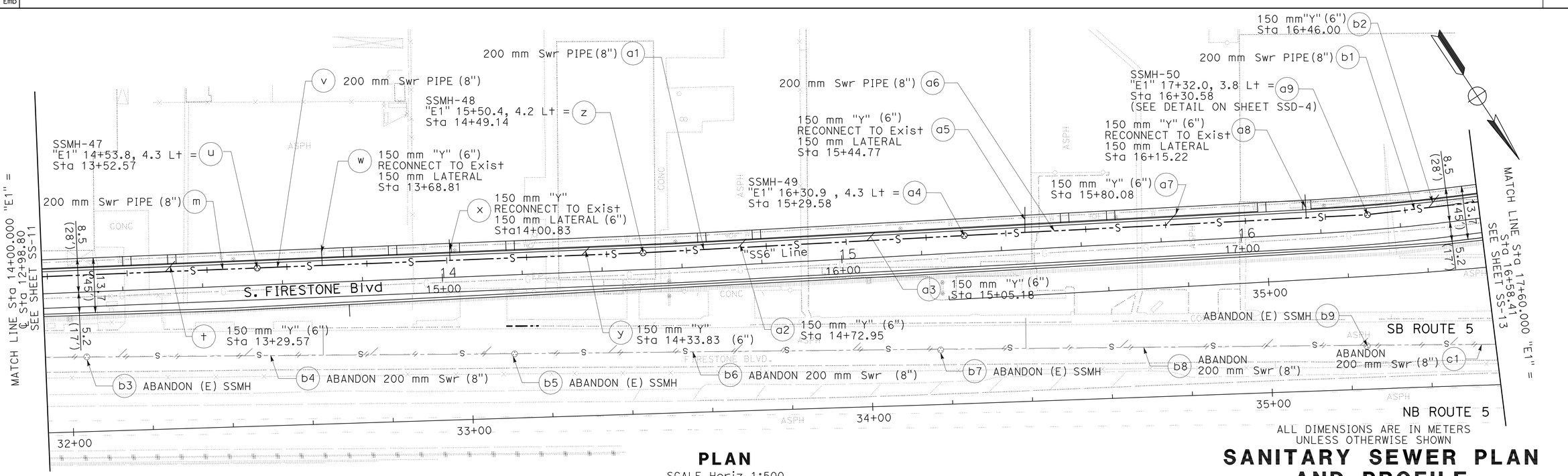

ALL DIMENSIONS ARE IN METERS UNLESS OTHERWISE SHOWN

PLAN
SCALE Horiz 1:500
THIS PLAN ACCURATE FOR SEWER WORK ONLY

SANITARY SEWER PLAN AND PROFILE
SCALE AS SHOWN

SS-12

REVISED BY	DATE REVISED
YTT	10/09
YTT	04/09
RK	02/08

YIM T. TSE — NGIM NANCY PE
CALCULATED-DESIGNED BY — CHECKED BY
FUNCTIONAL SUPERVISOR — NGIM NANCY PE

STATE OF CALIFORNIA - DEPARTMENT OF TRANSPORTATION
Caltrans OFFICE OF DESIGN A

S:\projects\2159c1\72159cja012.dgn

LAST REVISION 00-00-00 | DATE PLOTTED => 22-JUN-2010 | TIME PLOTTED => 10:37

BORDER LAST REVISED 3/1/2007 | RELATIVE BORDER SCALE IS IN MILLIMETERS 0 20 40 60 80 | USERNAME => trrichf | DGN FILE => 72159cja012.dgn | CU 07225 | EA 2159C1

Dist	COUNTY	ROUTE	KILOMETER POST TOTAL PROJECT	SHEET No.	TOTAL SHEETS
07	LA	5	2.9/4.9	331	1082

REGISTERED CIVIL ENGINEER 12-23-09 DATE

6-21-10
PLANS APPROVAL DATE

REGISTERED PROFESSIONAL ENGINEER NGIM NANCY PE No. 58161 Exp. 6-30-10 CIVIL STATE OF CALIFORNIA

THE STATE OF CALIFORNIA OR ITS OFFICERS OR AGENTS SHALL NOT BE RESPONSIBLE FOR THE ACCURACY OR COMPLETENESS OF ELECTRONIC COPIES OF THIS PLAN SHEET.

Caltrans Metric

SANITARY SEWER SYSTEM No. 6
PROFILE

SCALE Horiz 1:500
Vert 1:50

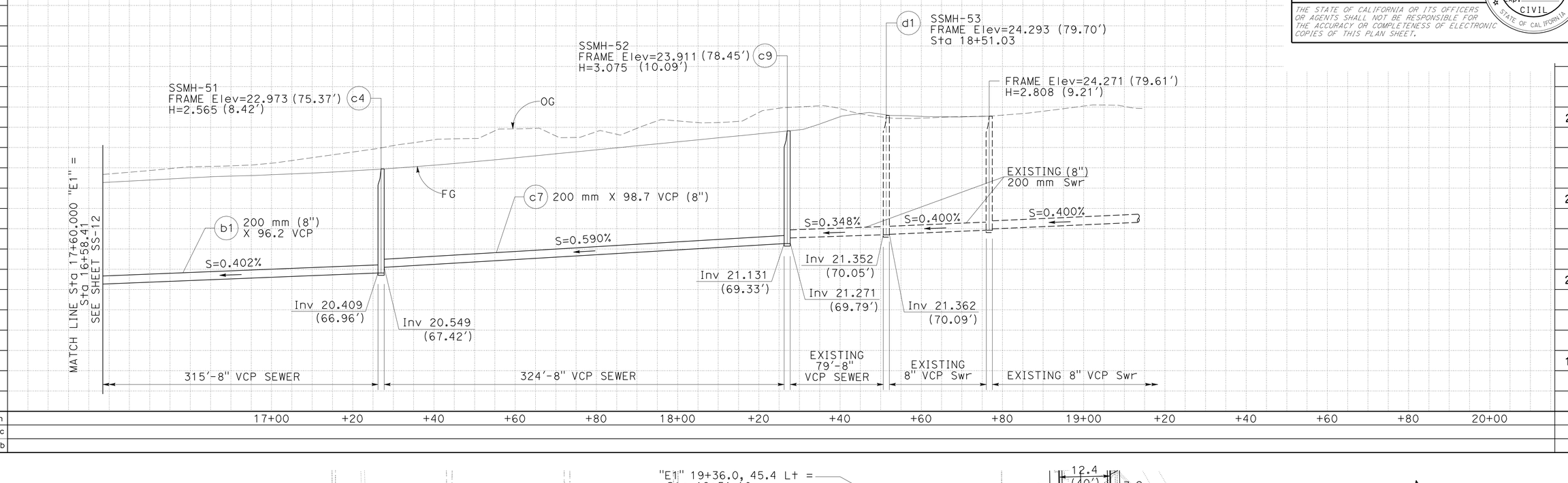

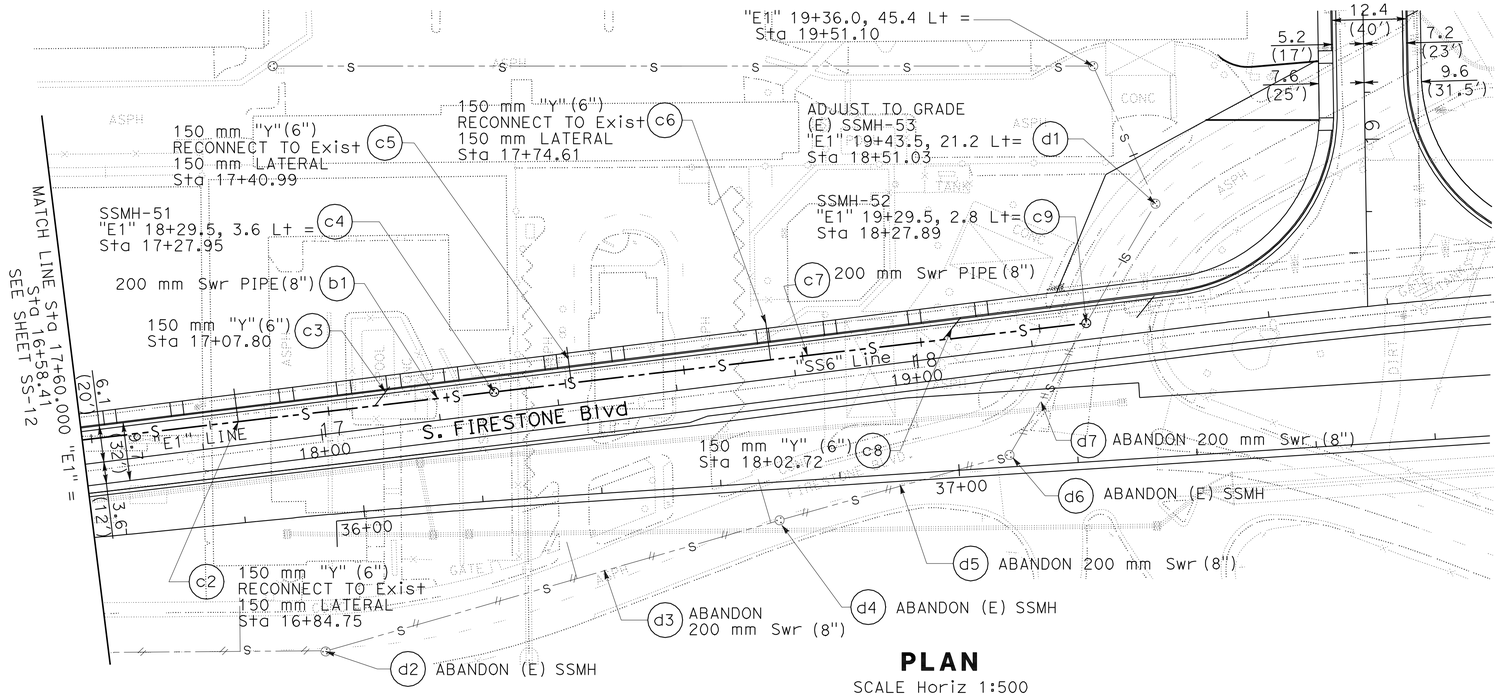

PLAN
SCALE Horiz 1:500
THIS PLAN ACCURATE FOR SEWER WORK ONLY

ALL DIMENSIONS ARE IN METERS
UNLESS OTHERWISE SHOWN

SANITARY SEWER PLAN AND PROFILE
SCALE AS SHOWN

SS-13

YTT	10/09	
YTT	04/09	
RK	02/08	26

REVISED BY — DATE REVISED

YIM T. TSE — NGIM NANCY PE

CALCULATED-DESIGNED BY — CHECKED BY

FUNCTIONAL SUPERVISOR — NGIM NANCY PE

STATE OF CALIFORNIA - DEPARTMENT OF TRANSPORTATION
Caltrans OFFICE OF DESIGN A

S:\projects\2159c1\resubmit7\72159cja013.dgn

LAST REVISION 00-00-00 — DATE PLOTTED => 22-JUN-2010 — TIME PLOTTED => 10:37

Dist	COUNTY	ROUTE	KILOMETER POST TOTAL PROJECT	SHEET No.	TOTAL SHEETS
07	LA	5	2.9/4.9	332	1082

REGISTERED CIVIL ENGINEER 12-23-09 DATE

6-21-10
PLANS APPROVAL DATE

REGISTERED PROFESSIONAL ENGINEER NGIM NANCY PE No. 58161 Exp. 6-30-10 CIVIL STATE OF CALIFORNIA

THE STATE OF CALIFORNIA OR ITS OFFICERS OR AGENTS SHALL NOT BE RESPONSIBLE FOR THE ACCURACY OR COMPLETENESS OF ELECTRONIC COPIES OF THIS PLAN SHEET.

Caltrans Metric

SANITARY SEWER SYSTEM No. 7
PROFILE

SCALE Horiz 1:500
Vert 1:50

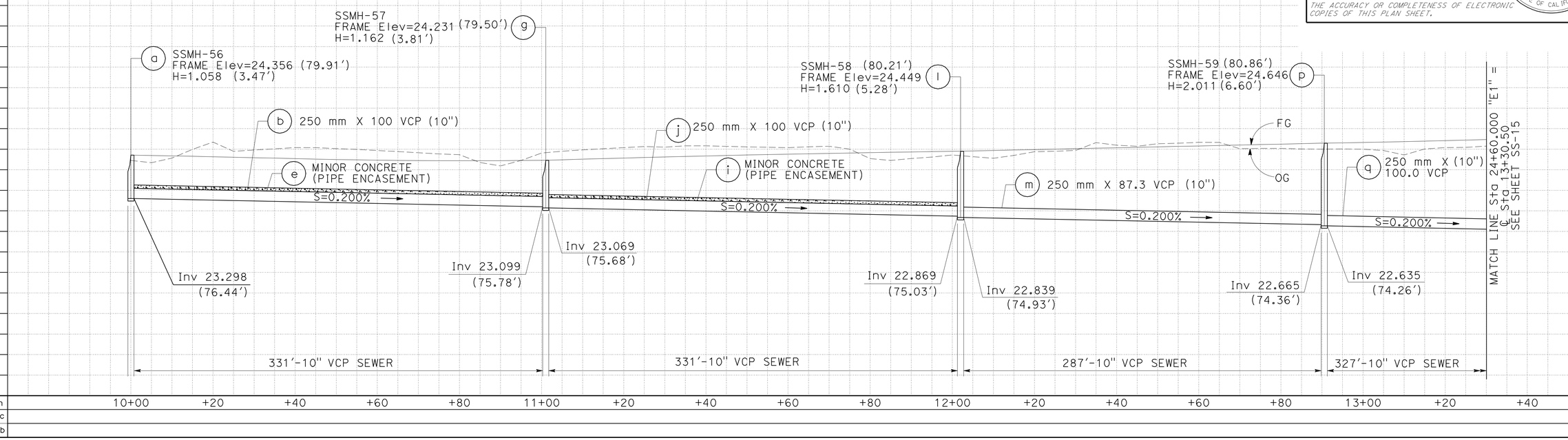

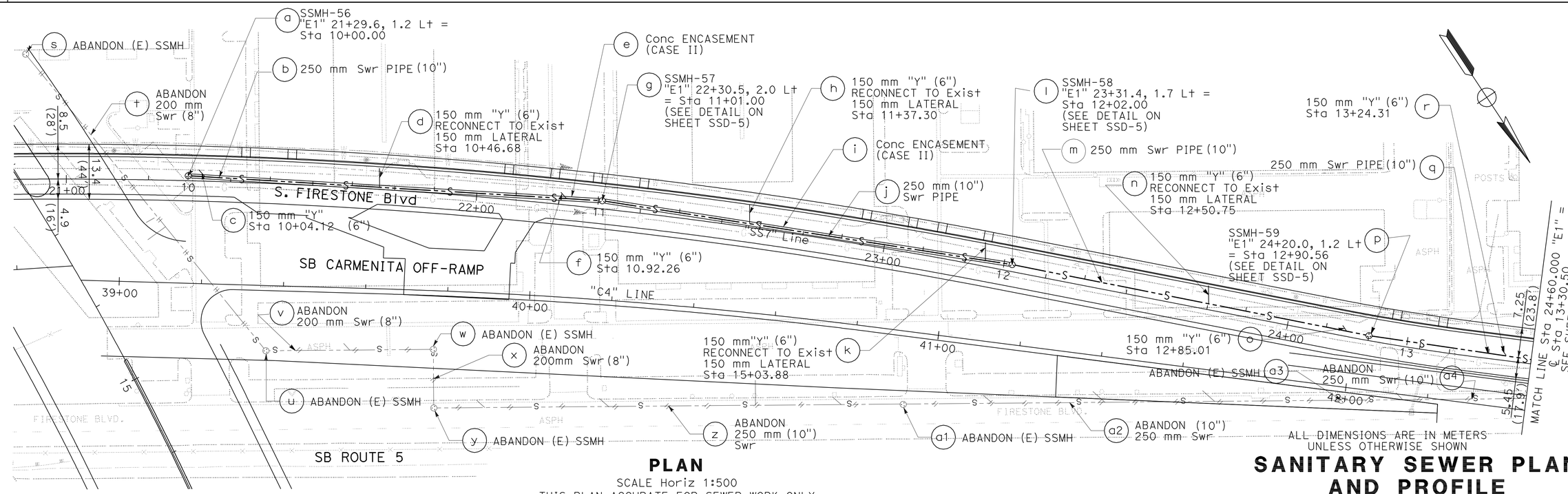

ALL DIMENSIONS ARE IN METERS UNLESS OTHERWISE SHOWN

PLAN
SCALE Horiz 1:500
THIS PLAN ACCURATE FOR SEWER WORK ONLY

SANITARY SEWER PLAN AND PROFILE
SCALE AS SHOWN

SS-14

YTT	YTT	RK
10/09	04/09	02/08

REVISED BY — DATE REVISED

YIM T. TSE — NGIM NANCY PE

CALCULATED-DESIGNED BY — CHECKED BY

FUNCTIONAL SUPERVISOR — NGIM NANCY PE

STATE OF CALIFORNIA - DEPARTMENT OF TRANSPORTATION
Caltrans OFFICE OF DESIGN A

S:\projects\2159c1\72159cja014.dgn

LAST REVISION 00-00-00 | DATE PLOTTED => 22-JUN-2010 | TIME PLOTTED => 10:38

Dist	COUNTY	ROUTE	KILOMETER POST TOTAL PROJECT	SHEET No.	TOTAL SHEETS
07	LA	5	2.9/4.9	333	1082

Caltrans Metric

Yim N. Ne 12-23-09
REGISTERED CIVIL ENGINEER DATE

6-21-10
PLANS APPROVAL DATE

REGISTERED PROFESSIONAL ENGINEER NGIM NANCY PE No. 58161 Exp. 6-30-10 CIVIL STATE OF CALIFORNIA

THE STATE OF CALIFORNIA OR ITS OFFICERS OR AGENTS SHALL NOT BE RESPONSIBLE FOR THE ACCURACY OR COMPLETENESS OF ELECTRONIC COPIES OF THIS PLAN SHEET.

SANITARY SEWER SYSTEM No. 7
PROFILE

SCALE Horiz 1:500
Vert 1:50

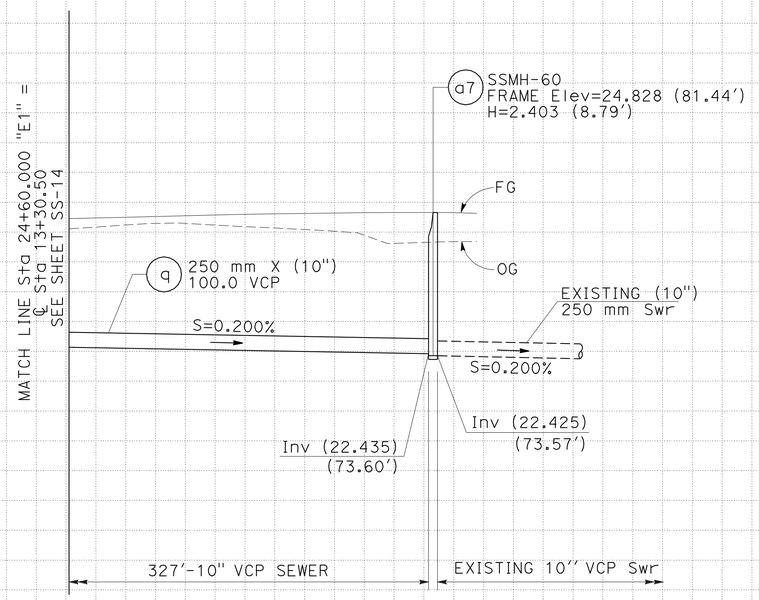

Station		+20	+40	+60	+80	14+00	+20
m^3	Exc						
	Emb						

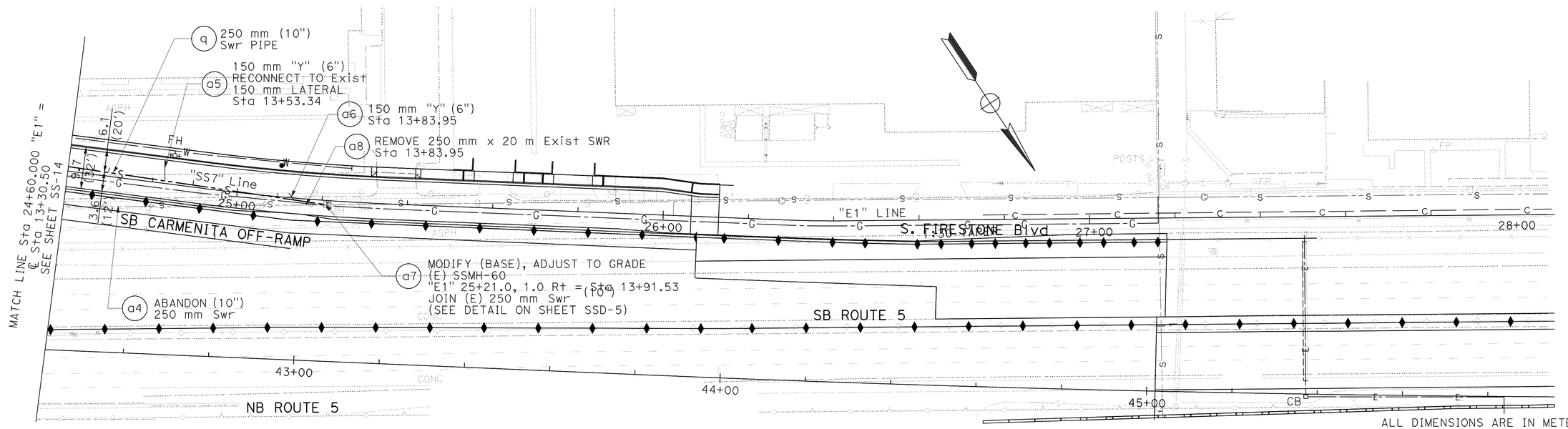

ALL DIMENSIONS ARE IN METERS
UNLESS OTHERWISE SHOWN

PLAN

SCALE Horiz 1:500
THIS PLAN ACCURATE FOR SEWER WORK ONLY

SANITARY SEWER PLAN AND PROFILE

SCALE AS SHOWN **SS-15**

YTT	10/09	
YTT	04/09	
RK	02/08	
REVISED BY	DATE REVISED	
YIM T. TSE	NGIM NANCY PE	
CALCULATED-DESIGNED BY	CHECKED BY	
FUNCTIONAL SUPERVISOR	NGIM NANCY PE	

STATE OF CALIFORNIA - DEPARTMENT OF TRANSPORTATION
Caltrans OFFICE OF DESIGN A

S:\projects\2159c1\72159cja015.dgn

LAST REVISION 00-00-00
DATE PLOTTED => 22-JUN-2010
TIME PLOTTED => 10:58

Dist	COUNTY	ROUTE	KILOMETER POST TOTAL PROJECT	SHEET No.	TOTAL SHEETS
07	LA	5	2.9/4.9	334	1082

Caltrans Metric

Ngim N. Pe 12-23-09
REGISTERED CIVIL ENGINEER DATE

6-21-10
PLANS APPROVAL DATE

REGISTERED PROFESSIONAL ENGINEER NGIM NANCY PE No. 58161 Exp. 6-30-10 CIVIL STATE OF CALIFORNIA

THE STATE OF CALIFORNIA OR ITS OFFICERS OR AGENTS SHALL NOT BE RESPONSIBLE FOR THE ACCURACY OR COMPLETENESS OF ELECTRONIC COPIES OF THIS PLAN SHEET.

SANITARY SEWER SYSTEM No. 8
PROFILE

SCALE Horiz 1:500
Vert 1:50

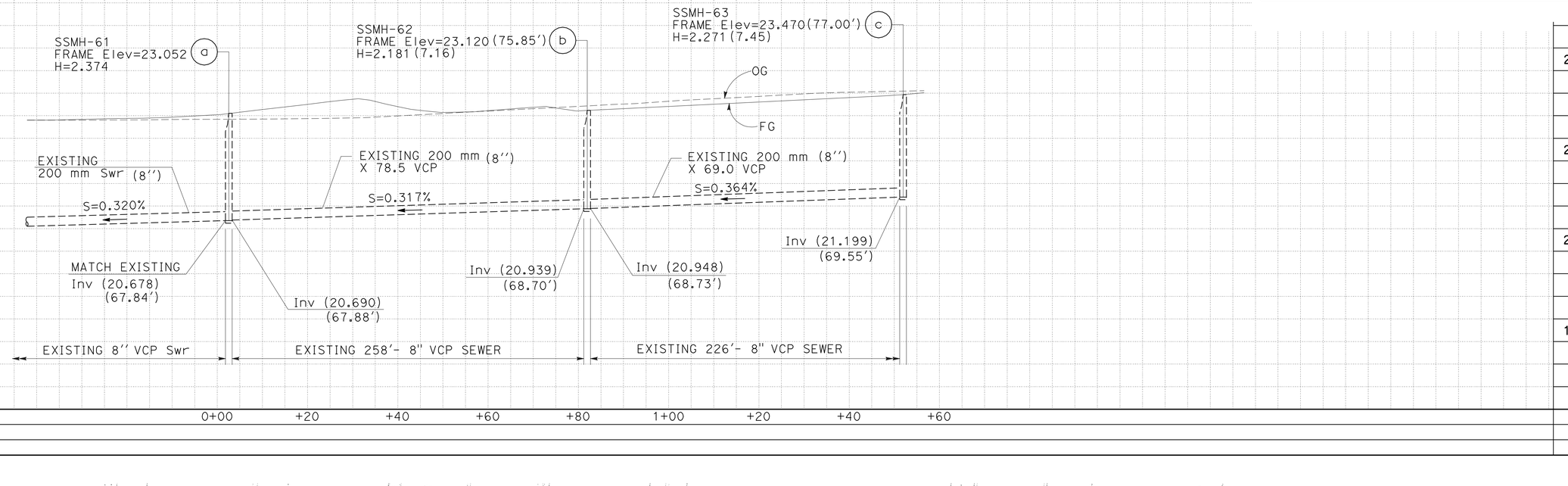

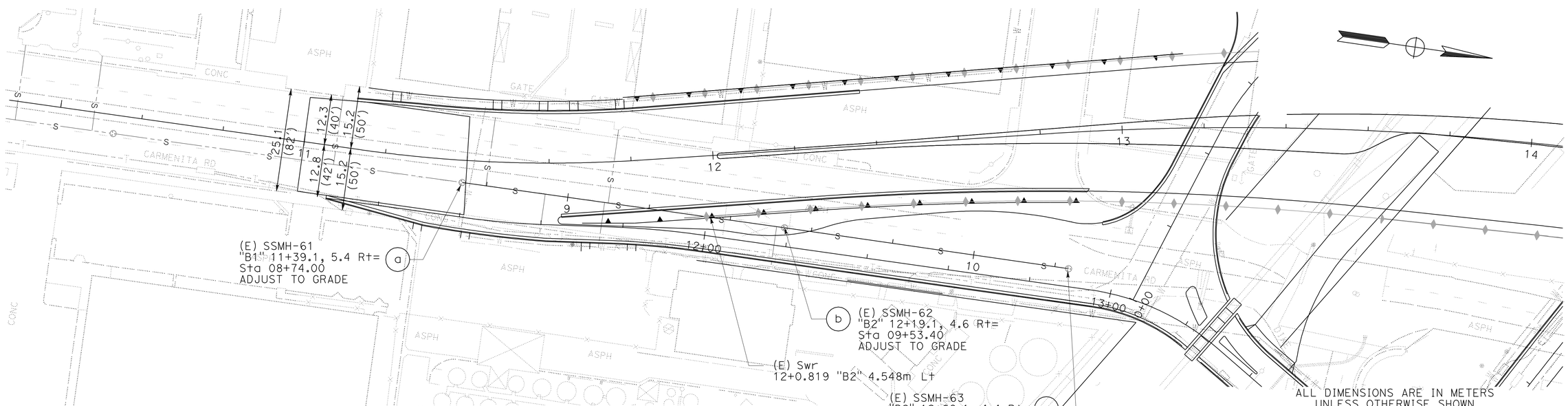

PLAN
SCALE Horiz 1:500
THIS PLAN ACCURATE FOR SEWER WORK ONLY

ALL DIMENSIONS ARE IN METERS
UNLESS OTHERWISE SHOWN

SANITARY SEWER PLAN AND PROFILE
SCALE AS SHOWN **SS-16**

YTT	YTT	RK
10/09	04/09	02/08

REVISED BY — DATE REVISED

YIM T. TSE — NGIM NANCY PE

CALCULATED-DESIGNED BY — CHECKED BY

FUNCTIONAL SUPERVISOR — NGIM NANCY PE

STATE OF CALIFORNIA - DEPARTMENT OF TRANSPORTATION
Caltrans OFFICE OF DESIGN A

S:\projects\2159c1\72159cja016.dgn

LAST REVISION 00-00-00 — DATE PLOTTED => 22-JUN-2010 — TIME PLOTTED => 11:01

Dist	COUNTY	ROUTE	KILOMETER POST TOTAL PROJECT	SHEET No.	TOTAL SHEETS
07	LA	5	2.9/4.9	335	1082

Caltrans Metric

REGISTERED CIVIL ENGINEER 12-23-09 DATE

6-21-10
PLANS APPROVAL DATE

REGISTERED PROFESSIONAL ENGINEER NGIM NANCY PE No. 58161 Exp. 6-30-10 CIVIL STATE OF CALIFORNIA

THE STATE OF CALIFORNIA OR ITS OFFICERS OR AGENTS SHALL NOT BE RESPONSIBLE FOR THE ACCURACY OR COMPLETENESS OF ELECTRONIC COPIES OF THIS PLAN SHEET.

SANITARY SEWER SYSTEM No. 9
PROFILE

SCALE Horiz 1:500
Vert 1:50

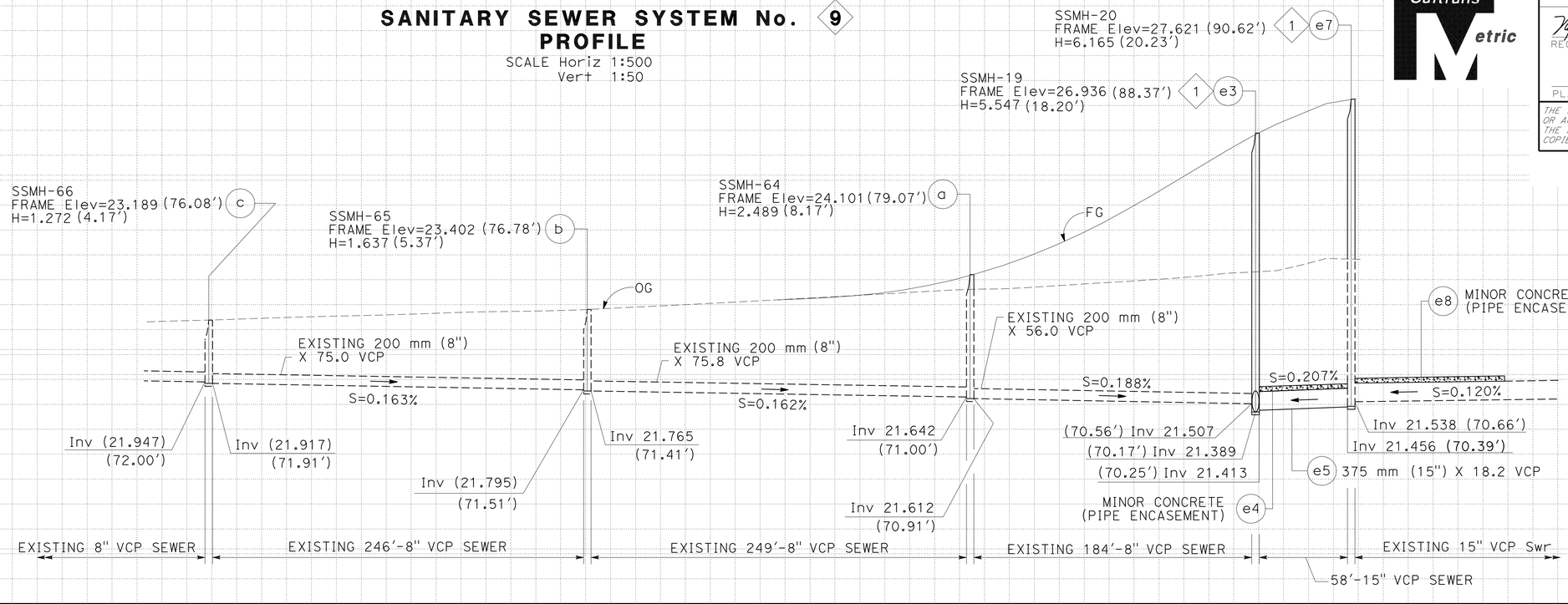

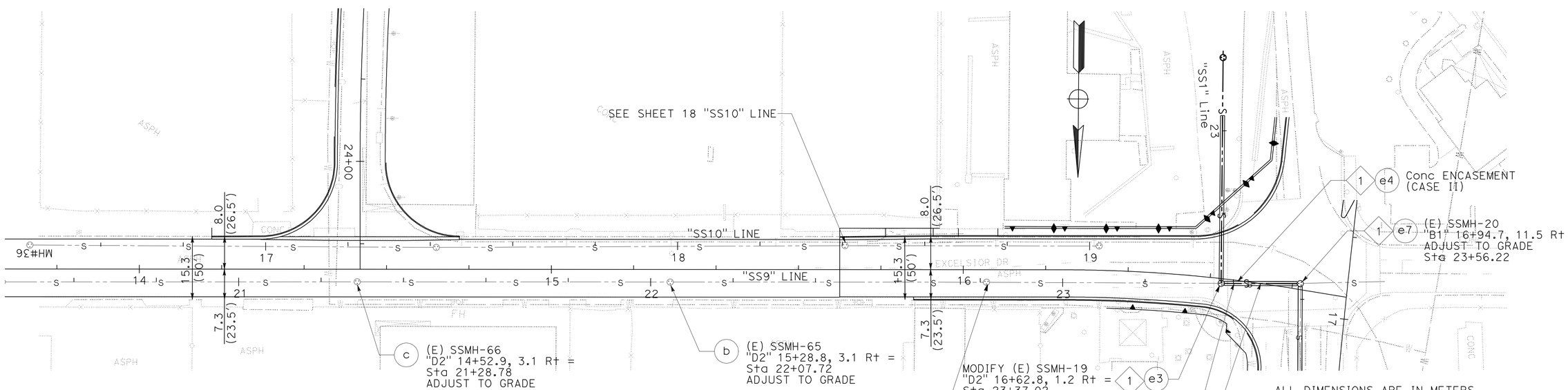

PLAN

SCALE Horiz 1:500
THIS PLAN ACCURATE FOR SEWER WORK ONLY

ALL DIMENSIONS ARE IN METERS UNLESS OTHERWISE SHOWN

SANITARY SEWER PLAN AND PROFILE

SCALE AS SHOWN

SS-17

REVISED BY	DATE REVISED
YTT	10/09
YTT	04/09
RK	02/08

YIM T. TSE — NGIM NANCY PE

CALCULATED-DESIGNED BY — CHECKED BY

FUNCTIONAL SUPERVISOR — NGIM NANCY PE

STATE OF CALIFORNIA - DEPARTMENT OF TRANSPORTATION
Caltrans OFFICE OF DESIGN A

S:\projects\2159c1\72159cja017.dgn

LAST REVISION 00-00-00 — DATE PLOTTED => 22-JUN-2010 — TIME PLOTTED => 10:38

Dist	COUNTY	ROUTE	KILOMETER POST TOTAL PROJECT	SHEET No.	TOTAL SHEETS
07	LA	5	2.9/4.9	336	1082

Ngim N. Pe 12-23-09
REGISTERED CIVIL ENGINEER DATE

6-21-10
PLANS APPROVAL DATE

REGISTERED PROFESSIONAL ENGINEER NGIM NANCY PE No. 58161 Exp. 6-30-10 CIVIL STATE OF CALIFORNIA

THE STATE OF CALIFORNIA OR ITS OFFICERS OR AGENTS SHALL NOT BE RESPONSIBLE FOR THE ACCURACY OR COMPLETENESS OF ELECTRONIC COPIES OF THIS PLAN SHEET.

Caltrans Metric

SANITARY SEWER SYSTEM No. 10
PROFILE

SCALE Horiz 1:500
Vert 1:50

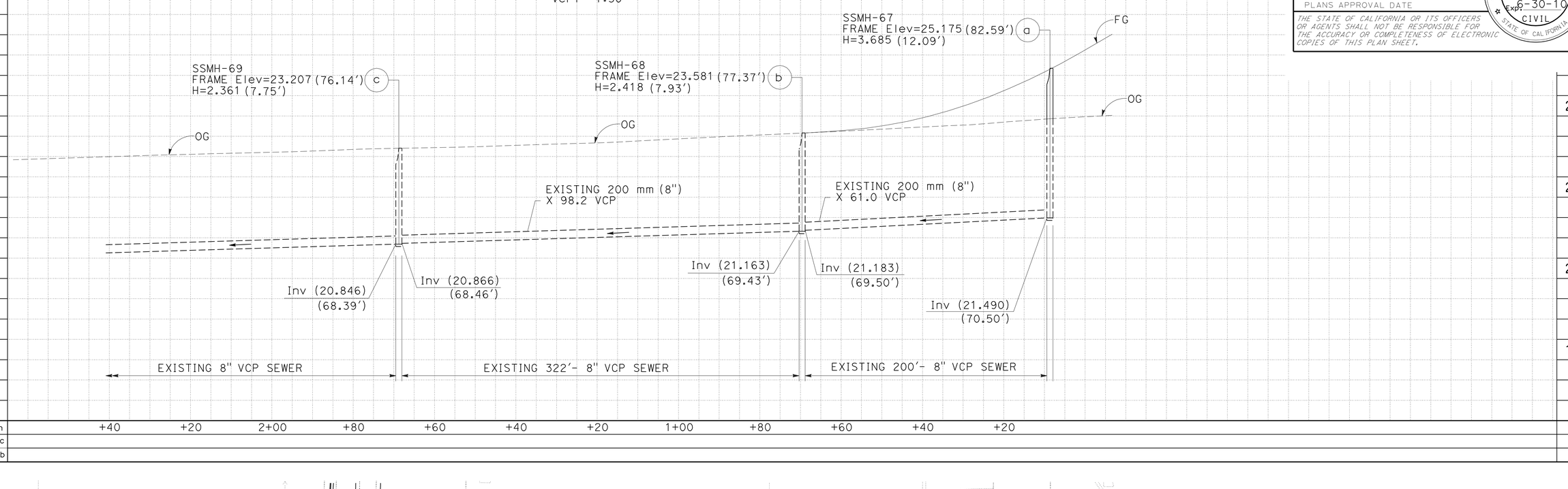

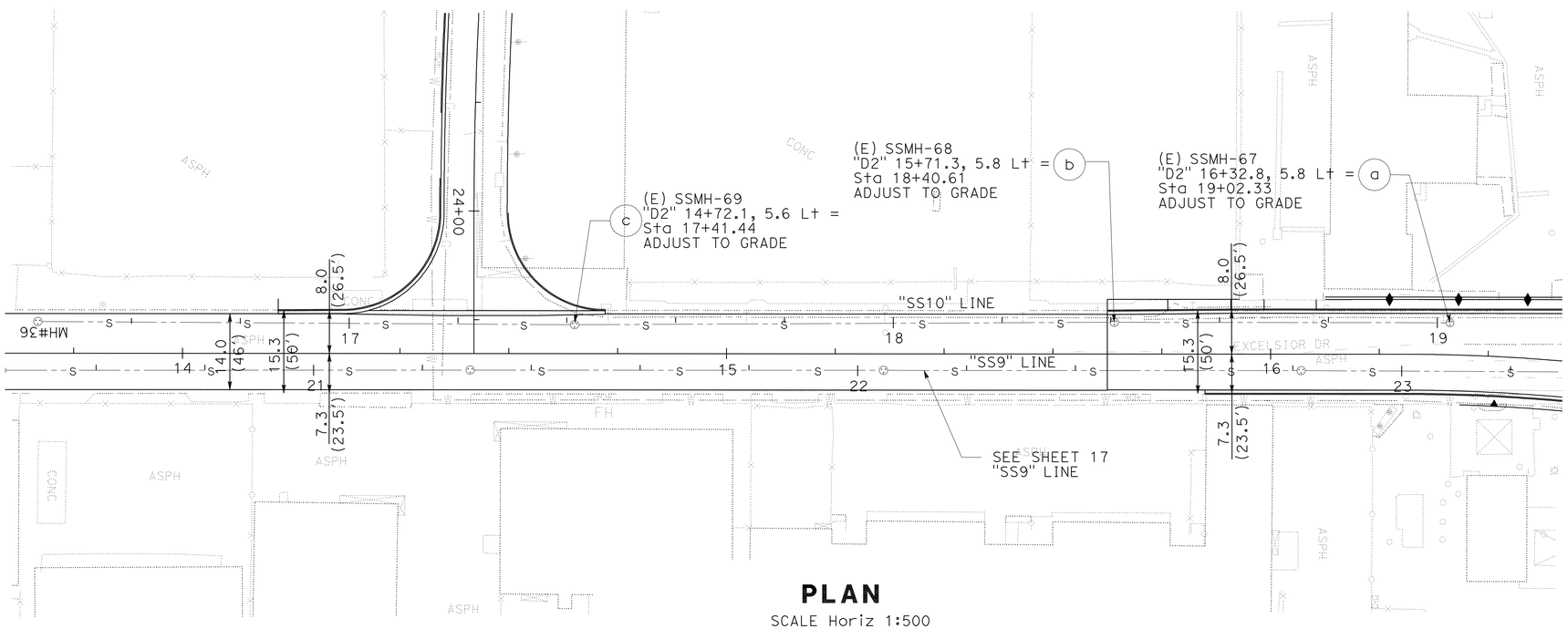

PLAN

SCALE Horiz 1:500
THIS PLAN ACCURATE FOR SEWER WORK ONLY

ALL DIMENSIONS ARE IN METERS
UNLESS OTHERWISE SHOWN

SANITARY SEWER PLAN AND PROFILE

SCALE AS SHOWN

SS-18

YTT	10/09	
YTT	04/09	
RK	02/08	
REVISED BY	DATE REVISED	
YIM T. TSE	NGIM NANCY PE	CALCULATED-DESIGNED BY
		CHECKED BY
FUNCTIONAL SUPERVISOR	NGIM NANCY PE	

STATE OF CALIFORNIA - DEPARTMENT OF TRANSPORTATION
Caltrans OFFICE OF DESIGN A

S:\projects\2159c1\72159cja018.dgn

LAST REVISION 00-00-00
DATE PLOTTED => 22-JUN-2010
TIME PLOTTED => 10:38

Dist	COUNTY	ROUTE	KILOMETER POST TOTAL PROJECT	SHEET No.	TOTAL SHEETS
07	LA	5	2.9/4.9	337	1082

Ngim N. Pe 12-23-09
REGISTERED CIVIL ENGINEER DATE

6-21-10
PLANS APPROVAL DATE

REGISTERED PROFESSIONAL ENGINEER NGIM NANCY PE No. 58161 Exp. 6-30-10 CIVIL STATE OF CALIFORNIA

THE STATE OF CALIFORNIA OR ITS OFFICERS OR AGENTS SHALL NOT BE RESPONSIBLE FOR THE ACCURACY OR COMPLETENESS OF ELECTRONIC COPIES OF THIS PLAN SHEET.

Caltrans Metric

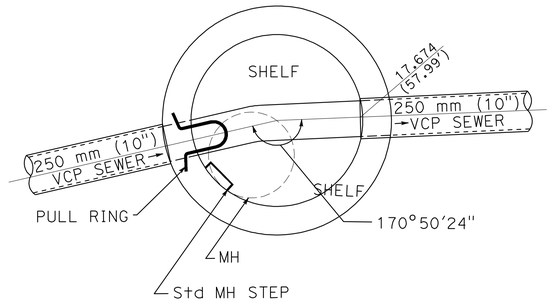

1220 mm (48") Dia MH SSMH-2
"D1" Sta 12+99.4, 0.07 Lt
Sta 11+06.00
(SHEET SS-1)

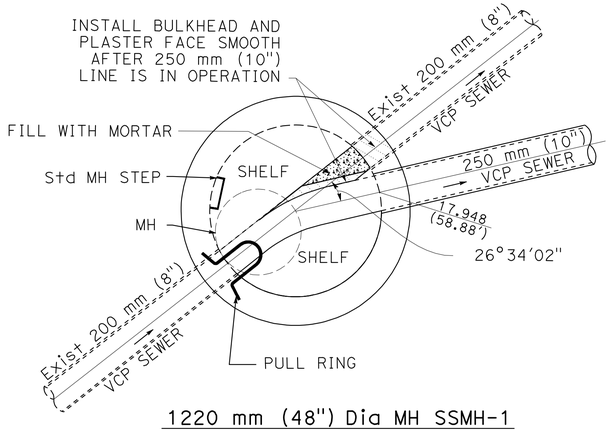

1220 mm (48") Dia MH SSMH-1
"D1" Sta 11+93.8, 3.4 Lt
Sta 10+00.00
(SHEET SS-1)

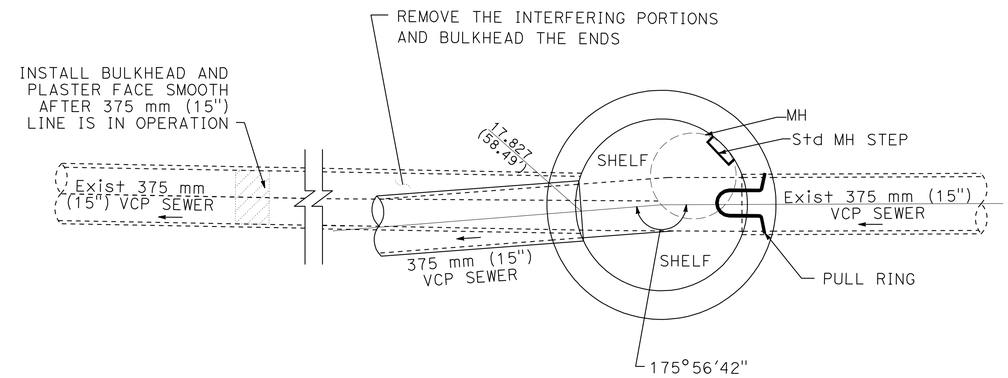

1220 mm (48") Dia MH "SSMH-6"
"D1" Sta 15+63.6, 0.9 Rt
Sta 13+64.74
(SHEET SS-2)

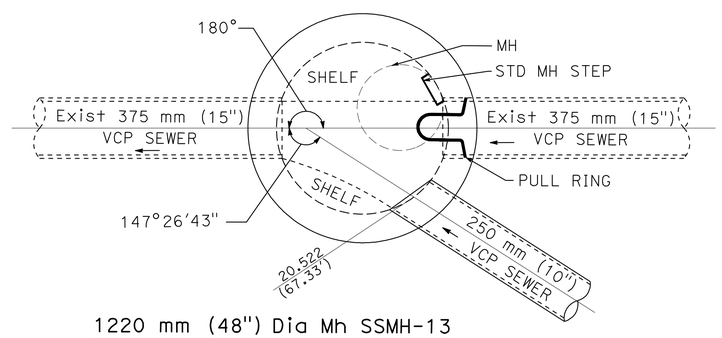

1220 mm (48") Dia Mh SSMH-13
"D1" Sta 21+12.7, 3.6 Lt
Sta 19+18.92
(SHEET SS-3)

ALL DIMENSIONS ARE IN METERS
UNLESS OTHERWISE SHOWN

SANITARY SEWER DETAILS
CITY OF SANTA FE SPRINGS
NO SCALE

SSD-1

YTT	10/09		
YTT	04/09		
RK	02/08		
REVISED BY	DATE REVISED		
YIM T. TSE			
NGIM NANCY PE			
CALCULATED-DESIGNED BY			
CHECKED BY			
FUNCTIONAL SUPERVISOR			
NGIM NANCY PE			

STATE OF CALIFORNIA - DEPARTMENT OF TRANSPORTATION
Caltrans OFFICE OF DESIGN A

S:\projects\2159c1\72159cjc001.dgn

LAST REVISION 00-00-00 | DATE PLOTTED => 22-JUN-2010 | TIME PLOTTED => 10:38

Dist	COUNTY	ROUTE	KILOMETER POST TOTAL PROJECT	SHEET No.	TOTAL SHEETS
07	LA	5	2.9/4.9	338	1082

REGISTERED CIVIL ENGINEER 12-23-09 DATE

6-21-10
PLANS APPROVAL DATE

REGISTERED PROFESSIONAL ENGINEER NGIM NANCY PE No. 58161 Exp. 6-30-10 CIVIL STATE OF CALIFORNIA

THE STATE OF CALIFORNIA OR ITS OFFICERS OR AGENTS SHALL NOT BE RESPONSIBLE FOR THE ACCURACY OR COMPLETENESS OF ELECTRONIC COPIES OF THIS PLAN SHEET.

Caltrans Metric

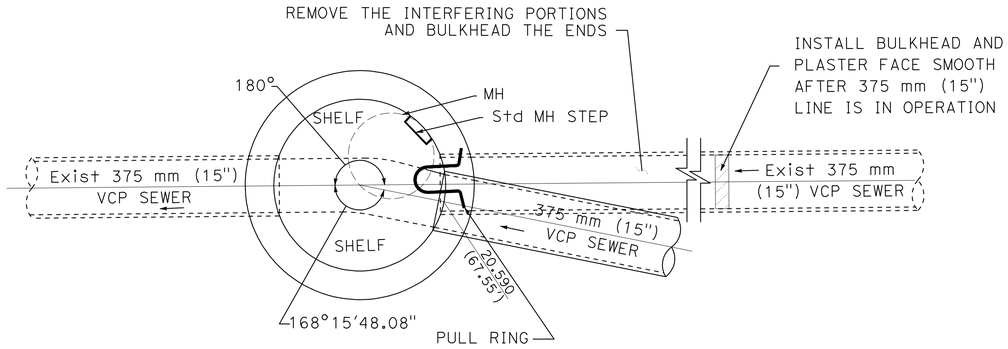

1220 mm (48") Dia MH SSMH-14
"C2" Sta 36+85.9, 10.9 Rt
Sta 20+04.90
(SHEET SS-4)

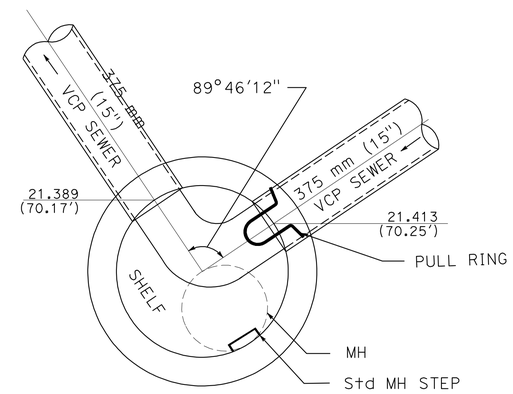

1220 mm (48") Dia MH SSMH-19
"D2" Sta 16+62.8, 1.2 Rt
Sta 23+37.02
(SHEET SS-5)

NOTES

1. THE CONTRACTOR SHALL NOT REMOVE THE UPSTREAM INTERFERING PORTION OF SEWER PIPES AT SSMH-14 UNTIL ALL REPLACEMENT UPSTREAM SYSTEMS ARE COMPLETED AND READY TO ACCEPT FLOW.

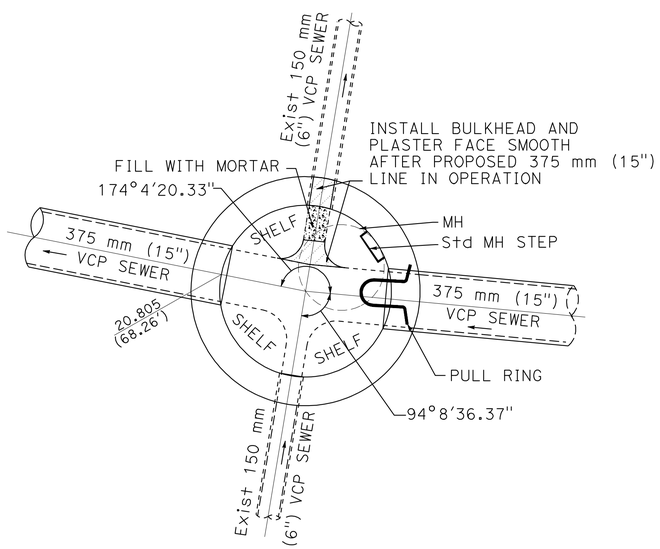

1220 mm (48") Dia MH SSMH-15
"C2" Sta 37+90.6, 20.7 Rt
Sta 21+09.743
(SHEET SS-4)

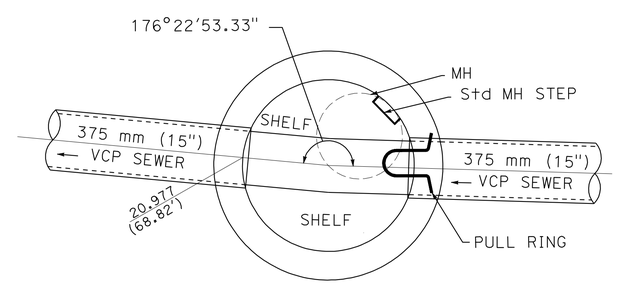

1220 mm (48") Dia MH SSMH-16
"C2" Sta 38+59.3, 20.7 Rt
Sta 21+79.399
(SHEET SS-4)

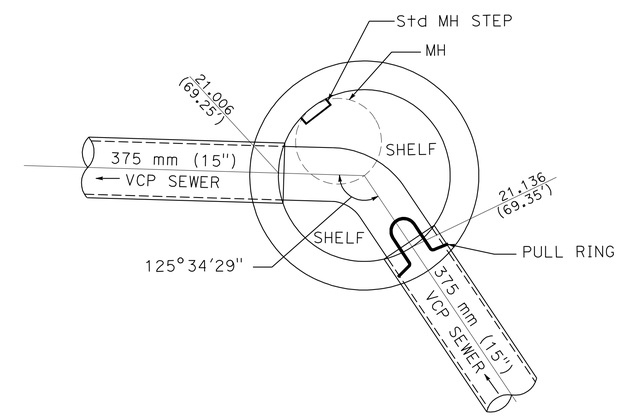

1220 mm (48") Dia MH SSMH-17
"C2" Sta 39+06.27, 20.2 Rt
Sta 22+27.31
(SHEET SS-4)

ALL DIMENSIONS ARE IN METERS UNLESS OTHERWISE SHOWN

SANITARY SEWER DETAILS
CITY OF SANTA FE SPRINGS
NO SCALE

SSD-2

YTT	YTT	RK	YIM T. TSE
10/09	04/09	02/08	NGIM NANCY PE
REVISED BY	DATE REVISED	CALCULATED-DESIGNED BY	FUNCTIONAL SUPERVISOR
CHECKED BY			

STATE OF CALIFORNIA - DEPARTMENT OF TRANSPORTATION
Caltrans OFFICE OF DESIGN A

S:\projects\2159c1\72159cjc002.dgn

LAST REVISION 00-00-00 | DATE PLOTTED => 22-JUN-2010 | TIME PLOTTED => 10:39

Dist	COUNTY	ROUTE	KILOMETER POST TOTAL PROJECT	SHEET No.	TOTAL SHEETS
07	LA	5	2.9/4.9	339	1082

REGISTERED CIVIL ENGINEER 12-23-09 DATE

6-21-10
PLANS APPROVAL DATE

REGISTERED PROFESSIONAL ENGINEER NGIM NANCY PE No. 58161 Exp. 6-30-10 CIVIL STATE OF CALIFORNIA

THE STATE OF CALIFORNIA OR ITS OFFICERS OR AGENTS SHALL NOT BE RESPONSIBLE FOR THE ACCURACY OR COMPLETENESS OF ELECTRONIC COPIES OF THIS PLAN SHEET.

Caltrans Metric

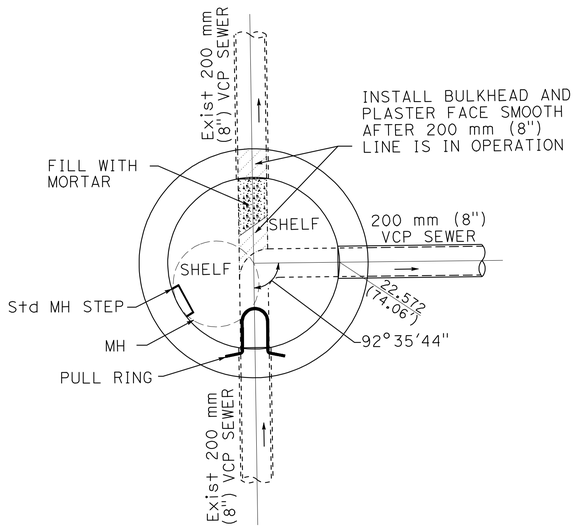

1220 mm (48") Dia MH SSMH-31
"D3" Sta 10+07.9, 2.0 Rt
Sta 19+16.29
(SHEET SS-8)

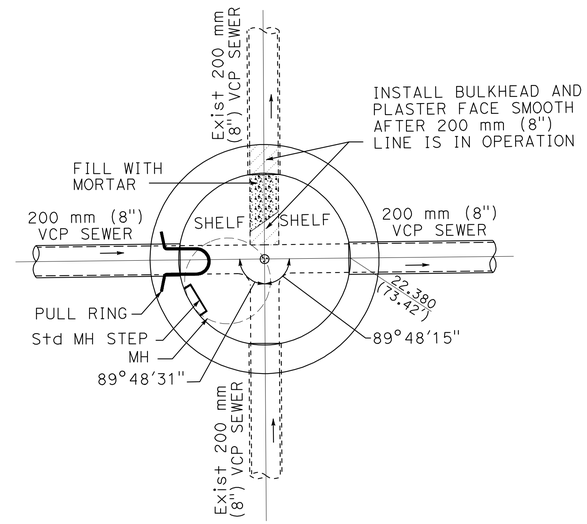

1220 mm (48") Dia MH SSMH-32
"D3" Sta 10+91.8, 0.8 Lt
Sta 20+00.00
(SHEET SS-8)

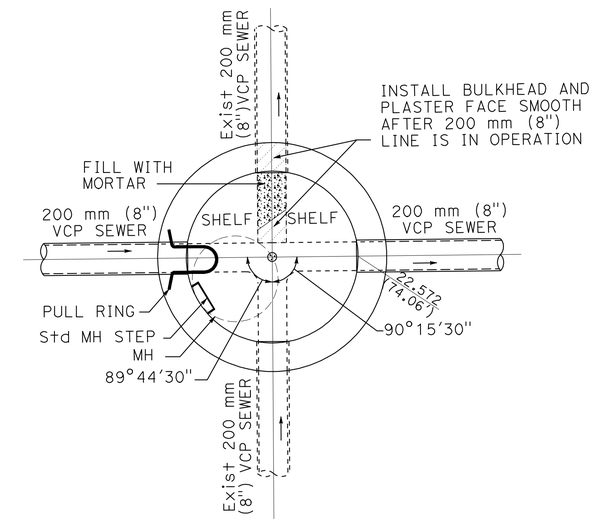

1220 mm (48") Dia MH SSMH-33
"D3" Sta 11+77.8, 2.4 Lt
Sta 20+84.98
(SHEET SS-8)

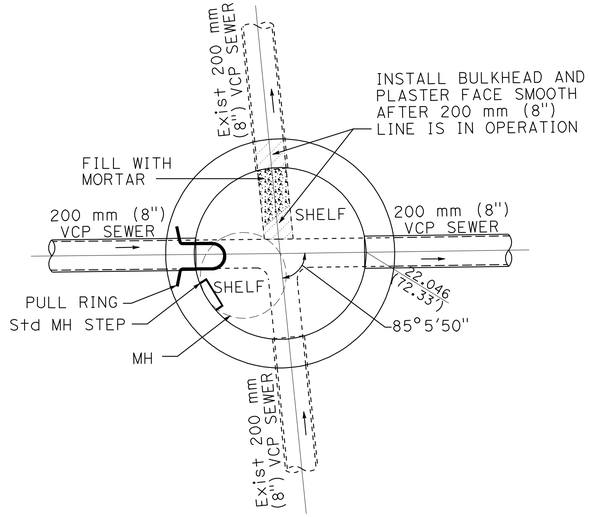

1220 mm (48")Dia MH SSMH-34
"D3" Sta 12+56.6, 2.3 Lt
Sta 21+67.04
(SHEET SS-8)

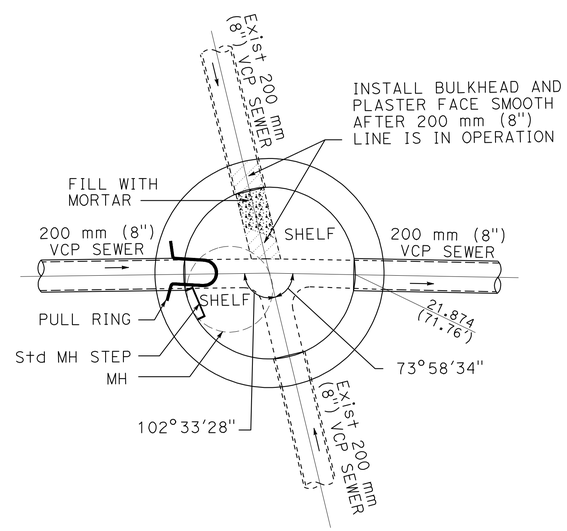

1220 mm (48") Dia MH SSMH-35
"D3" Sta 13+45.4, 2.3 Lt
Sta 22+52.82
(SHEET SS-9)

ALL DIMENSIONS ARE IN METERS
UNLESS OTHERWISE SHOWN

SANITARY SEWER DETAILS
CITY OF SANTA FE SPRINGS
NO SCALE

SSD-3

YTT	YTT	RK	YIM T. TSE
10/09	04/09	02/08	NGIM NANCY PE
REVISED BY			CALCULATED-DESIGNED BY
DATE REVISED			CHECKED BY

FUNCTIONAL SUPERVISOR: NGIM NANCY PE

STATE OF CALIFORNIA - DEPARTMENT OF TRANSPORTATION
Caltrans OFFICE OF DESIGN A

S:\projects\2159c1\72159cjc003.dgn

LAST REVISION 00-00-00 | DATE PLOTTED => 22-JUN-2010 | TIME PLOTTED => 10:39

Dist	COUNTY	ROUTE	KILOMETER POST TOTAL PROJECT	SHEET No.	TOTAL SHEETS
07	LA	5	2.9/4.9	340	1082

Ngim N. Pe 12-23-09
REGISTERED CIVIL ENGINEER DATE

6-21-10
PLANS APPROVAL DATE

REGISTERED PROFESSIONAL ENGINEER NGIM NANCY PE No. 58161 Exp. 6-30-10 CIVIL STATE OF CALIFORNIA

THE STATE OF CALIFORNIA OR ITS OFFICERS OR AGENTS SHALL NOT BE RESPONSIBLE FOR THE ACCURACY OR COMPLETENESS OF ELECTRONIC COPIES OF THIS PLAN SHEET.

Caltrans Metric

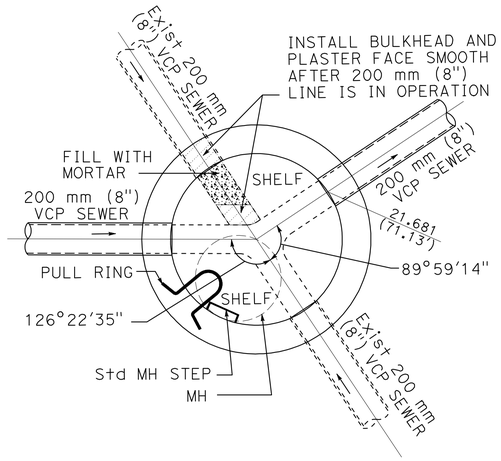

1220 mm (48") Dia MH SSMH-36
"D3" Sta 14+20.3, 20.1 Rt
Sta 23+38.51
(SHEET SS-9)

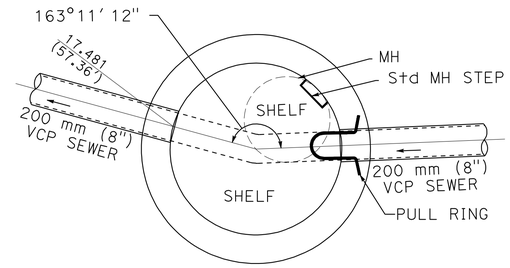

1220 mm (48") Dia MH SSMH-44
"E1" Sta 11+42.50, 3.9 Lt
Sta 10+42.67
(SHEET SS-11)

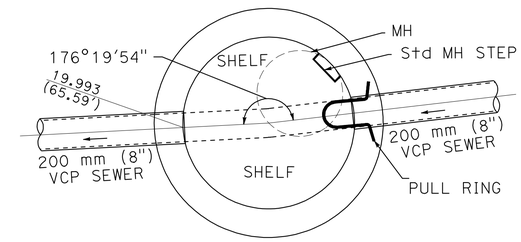

1220 mm (48") Dia MH SSMH-50
"E1" Sta 17+32.0, 3.8 Lt
Sta 16+30.58
(SHEET SS-12)

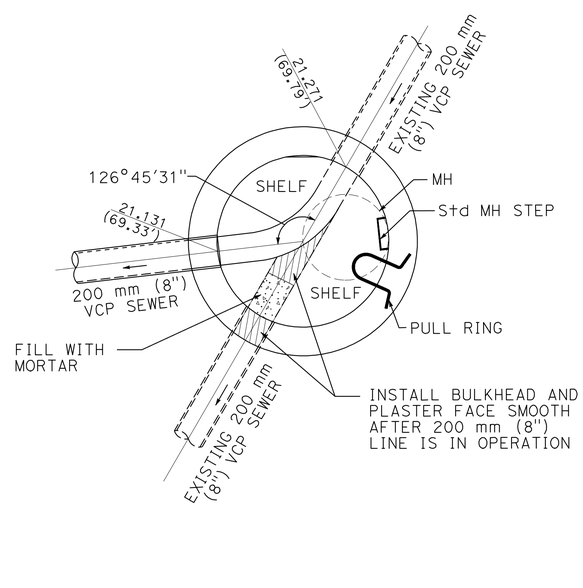

1220 mm (48") Dia MH SSMH-52
"E1" Sta 19+29.5, 2.8 Lt
Sta 18+27.89
(SHEET SS-13)

ALL DIMENSIONS ARE IN METERS
UNLESS OTHERWISE SHOWN

SANITARY SEWER DETAILS
CITY OF SANTA FE SPRINGS
NO SCALE

SSD-4

YTT	YTT	RK
10/09	04/09	02/08
REVISED BY	DATE REVISED	
YIM T. TSE	NGIM NANCY PE	
CALCULATED-DESIGNED BY	CHECKED BY	
FUNCTIONAL SUPERVISOR	NGIM NANCY PE	

STATE OF CALIFORNIA - DEPARTMENT OF TRANSPORTATION
Caltrans OFFICE OF DESIGN A

S:\projects\2159c1\resubmit7\72159cjc004.dgn

LAST REVISION 00-00-00 | DATE PLOTTED => 22-JUN-2010 | TIME PLOTTED => 10:39

Dist	COUNTY	ROUTE	KILOMETER POST TOTAL PROJECT	SHEET No.	TOTAL SHEETS
07	LA	5	2.9/4.9	341	1082

REGISTERED CIVIL ENGINEER 12-23-09 DATE

6-21-10
PLANS APPROVAL DATE

REGISTERED PROFESSIONAL ENGINEER NGIM NANCY PE No. 58161 Exp. 6-30-10 CIVIL STATE OF CALIFORNIA

THE STATE OF CALIFORNIA OR ITS OFFICERS OR AGENTS SHALL NOT BE RESPONSIBLE FOR THE ACCURACY OR COMPLETENESS OF ELECTRONIC COPIES OF THIS PLAN SHEET.

Caltrans Metric

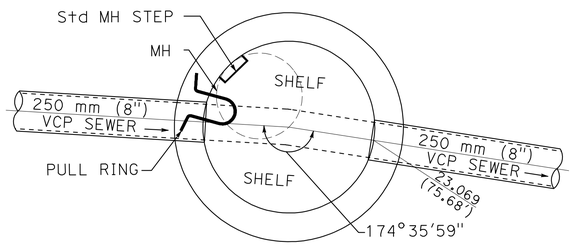

1220 mm (48") Dia MH SSMH-57
"E1" Sta 22+30.5 2.0 Lt
Sta 11+01.00
(SHEET SS-14)

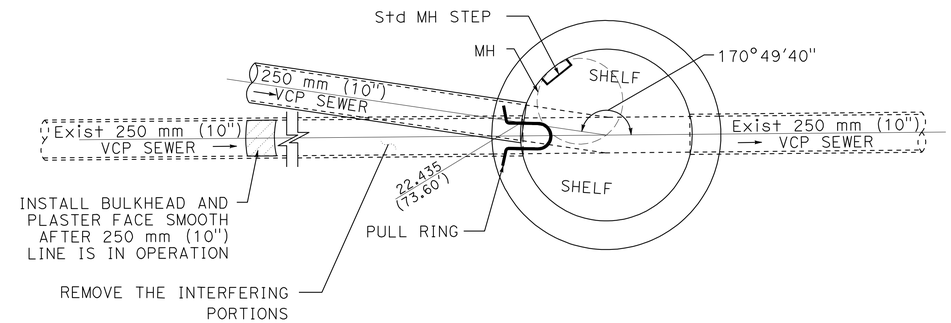

1220 mm (48") Dia MH SSMH-60
"E1" Sta 25+21.0, 1.0 Rt
Sta 13+91.53
(SHEET SS-15)

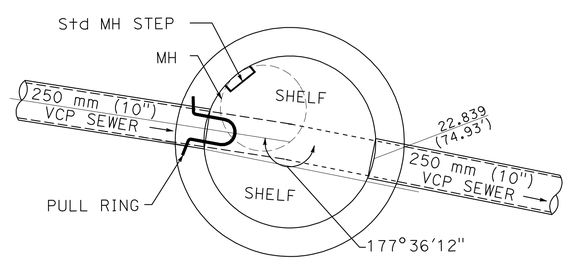

1220 mm (48") Dia MH SSMH-58
"E1" Sta 23+31.4 1.7 Lt
Sta 12+02.00
(SHEET SS-14)

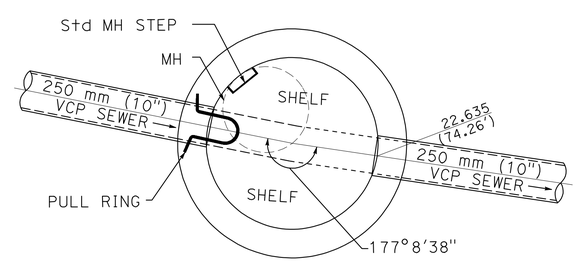

1220 mm (48") Dia MH SSMH-59
"E1" Sta 24+20.0, 1.2 Lt
Sta 12+90.56
(SHEET SS-14)

ALL DIMENSIONS ARE IN METERS
UNLESS OTHERWISE SHOWN

SANITARY SEWER DETAILS
CITY OF SANTA FE SPRINGS
NO SCALE

SSD-5

YTT	YTT	RK	YIM T. TSE
10/09	04/09	02/08	NGIM NANCY PE
		REVISED BY	CALCULATED-DESIGNED BY
		DATE REVISED	CHECKED BY

FUNCTIONAL SUPERVISOR
NGIM NANCY PE

STATE OF CALIFORNIA - DEPARTMENT OF TRANSPORTATION
Caltrans OFFICE OF DESIGN A

S:\projects\2159c1\resubmit7\72159cjc005.dgn

LAST REVISION 00-00-00 | DATE PLOTTED => 22-JUN-2010 | TIME PLOTTED => 10:39

Dist	COUNTY	ROUTE	KILOMETER POST TOTAL PROJECT	SHEET No.	TOTAL SHEETS
07	LA	5	2.9/4.9	342	1082

REGISTERED CIVIL ENGINEER 12-23-09 DATE

6-21-10
PLANS APPROVAL DATE

REGISTERED PROFESSIONAL ENGINEER NGIM NANCY PE No. 58161 Exp. 6-30-10 CIVIL STATE OF CALIFORNIA

THE STATE OF CALIFORNIA OR ITS OFFICERS OR AGENTS SHALL NOT BE RESPONSIBLE FOR THE ACCURACY OR COMPLETENESS OF ELECTRONIC COPIES OF THIS PLAN SHEET.

Caltrans Metric

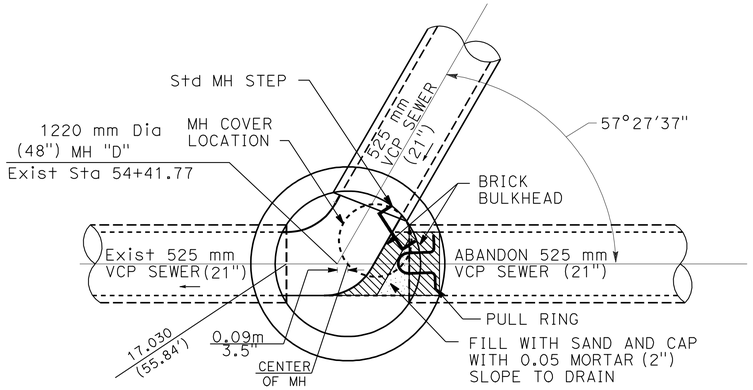

1220 mm (48") Dia MH SSMH-40
"E1" Sta 10+87.7, 12.6 Rt
Sta 10+00.00
(SHEET SS-10)

NOTE: THE CONTRACTOR SHALL PARTIALLY FORM THE BASE OF THE MANHOLE AROUND THE EXISTING VCP AND CONSTRUCT THE MANHOLE. WHEN THE PROPOSED SEWER IS COMPLETED, TESTED, CCTV INSPECTED, AND READY TO ACCEPT FLOWS, AND WHEN ALLOW BY THE ENGINEER, THE CONTRACTOR SHALL BREAK OUT THE EXISTING 525 mm (21") VCP DURING LOW FLOW, INSERT A FLEXIBLE SLEEVE TO CONTAIN THE FLOW, COMPLETE CHANNELIZATION OF THE BASE IN THE DRY AND INSTALL BRICK BULKHEAD. THE CONTRACTOR SHALL NOT BREAK OUT THE PIPE AND INSERT THE FLEXIBLE SLEEVE WITHOUT 5 DAYS OF CLEAR WEATHER FORECAST AND NOT LESS THAN 2 DAYS AFTER A RAIN EVENT. THE FLEXIBLE SLEEVE SHALL NOT BE LEFT IN PLACE UNATTENDED.

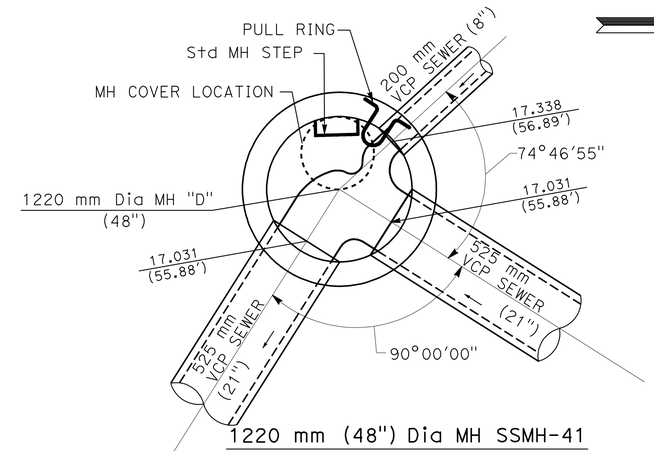

1220 mm (48") Dia MH SSMH-41
"E1" Sta 10+99.52, 0.75 Rt =
Sta 10+17.43 = SS6 LINE 10+00.00
(SHEET SS-10, SS-11)

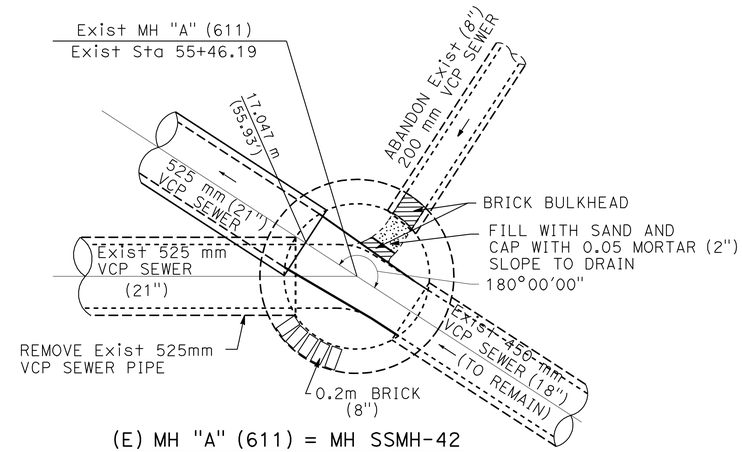

(E) MH "A" (611) = MH SSMH-42
"A1" Sta 28+96.05, 23.2 Rt = Sta 10+44.79
(SHEET SS-10)

NOTE: THE CONTRACTOR SHALL NOT START WORK ON THIS SYSTEM UNTIL WORK IS COMPLETED AT Sta 10+00, 10+17.43, 12+15.27, 12+64.02. CONTRACTOR SHALL BYPASS FLOW TO ANGLE POINT MH "D" AT STATION 0+00. ONCE BYPASS SYSTEM IS IN OPERATION, CONTRACTOR SHALL BREAK AND REMOVE EXISTING 525 mm (21") VCP THAT INTERFERE WITH PROPOSED 525 mm VCP OUTLET, CONNECT THE 525 mm (21") VCP, COMPLETE CHANNELIZATION OF EXISTING MANHOLE BASE IN DRY, AND CAP MANHOLE AS SHOWN ON DETAILS. THE MANHOLE SHALL THEN BE ABANDONED PER SSD-13.

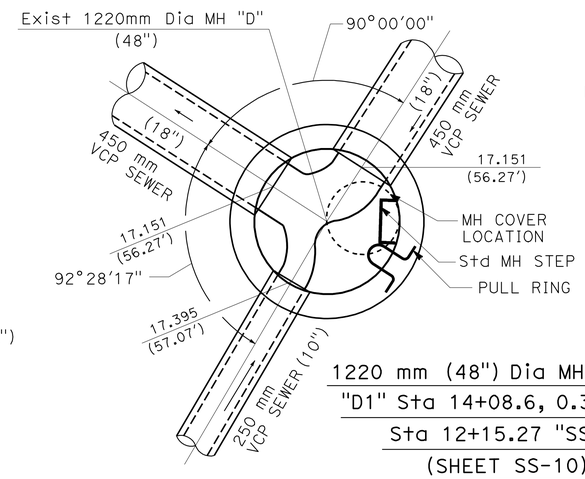

1220 mm (48") Dia MH SSMH-4
"D1" Sta 14+08.6, 0.39 Lt =
Sta 12+15.27 "SS1"
(SHEET SS-10)

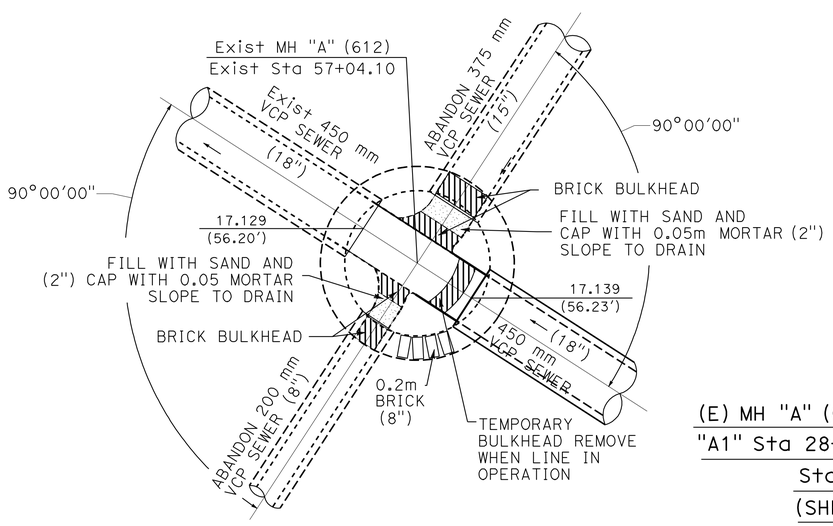

(E) MH "A" (612) = MH SSMH-43
"A1" Sta 28+94.73, 24.02 Rt =
Sta 10+92.02
(SHEET SS-10)

NOTE: THE CONTRACTOR SHALL CREATE OPENING IN EXISTING MANHOLE TO CONNECT PROPOSED 450 mm (18") VCP, PARTIALLY CHANNELIZE THE EXISTING MANHOLE, INSTALL TEMPORARY BULKHEAD AT THE INLET FROM NORTH AT THE MANHOLE TO PREVENT BACKFLOW INTO THE NEW SEWER. WHEN THE PROPOSED SEWER IS COMPLETED, TESTED, CCTV INSPECTED AND READY TO ACCEPT FLOWS, AND WHEN ALLOWED BY THE ENGINEER, THE CONTRACTOR SHALL INSERT A FLEXIBLE SLEEVE TO CONTAIN THE FLOW, COMPLETE CHANNELIZATION OF THE BASE IN DRY, REMOVE THE TEMPORARY BULKHEAD, AND INSTALL BULKHEAD AND PLASTER FACE SMOOTH AT THE 375 mm (15") AND 200 mm (8") INCOMING SEWERS. THE CONTRACTOR SHALL NOT BREAK OUT THE PIPES AND INSERT THE FLEXIBLE SLEEVE WITHOUT 5 DAYS OF CLEAR WEATHER FORECAST AND NOT LESS THAN 2 DAYS AFTER A RAIN EVENT. THE MANHOLE SHALL THEN BE ABANDONED PER SSD-13.

1220 mm (48") Dia MH SSMH-5
"D1" Sta 14+57.4, 1.2 Rt =
Sta 12+64.02 "SS1"
(SHEET SS-1, SS-10)

NOTE:
THE CONTRACTOR SHALL PARTIALLY FORM THE BASE OF THE MANHOLE AROUND THE EXISTING VCP, AND CONSTRUCT THE MANHOLE AND CONNECT THE PROPOSED 375 mm (15") OUTLET VCP TO THE MANHOLE. WHEN THE PROPOSED SEWER IS COMPLETE, TESTED, CCTV INSPECTED, AND READY TO ACCEPT FLOWS, ANDWHEN ALLOWED BY THE ENGINEER, THE CONTRACTOR SHALL BREAK OUT THE EXISTING 375 mm (15") VCP, INSERT A FLEXIBLE SLEEVE TO CONTAIN THE FLOW, COMPLETE CHANNELIZATION OF THE BASE IN DRY AND INSTALL BRICK BULKHEAD.

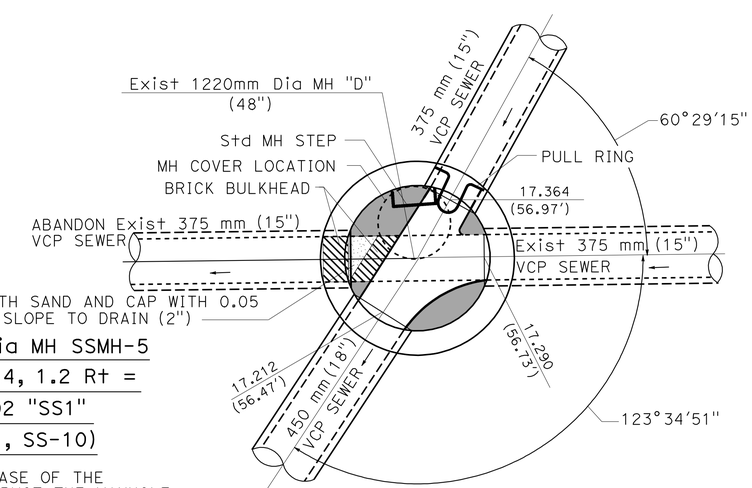

MARQUARDT AVENUE TRUNK SEWER

ALL DIMENSIONS ARE IN METERS UNLESS OTHERWISE SHOWN

MANHOLE DETAILS

SANITARY SEWER DETAILS

NO SCALE

SSD-6

YTT	YTT	RK	YIM T. TSE
10/09	04/09	02/08	NGIM NANCY PE
		REVISED BY	CALCULATED-DESIGNED BY
		DATE REVISED	CHECKED BY
FUNCTIONAL SUPERVISOR			
NGIM NANCY PE			

STATE OF CALIFORNIA - DEPARTMENT OF TRANSPORTATION
Caltrans OFFICE OF DESIGN A

S:\projects\2159c1\72159cjc006.dgn

LAST REVISION 00-00-00 | DATE PLOTTED => 22-JUN-2010 | TIME PLOTTED => 0:39

Dist	COUNTY	ROUTE	KILOMETER POST TOTAL PROJECT	SHEET No.	TOTAL SHEETS
07	LA	5	2.9/4.9	343	1082

Caltrans Metric

REGISTERED CIVIL ENGINEER 12-23-09 DATE

6-21-10
PLANS APPROVAL DATE

REGISTERED PROFESSIONAL ENGINEER NGIM NANCY PE No. 58161 Exp. 6-30-10 CIVIL STATE OF CALIFORNIA

THE STATE OF CALIFORNIA OR ITS OFFICERS OR AGENTS SHALL NOT BE RESPONSIBLE FOR THE ACCURACY OR COMPLETENESS OF ELECTRONIC COPIES OF THIS PLAN SHEET.

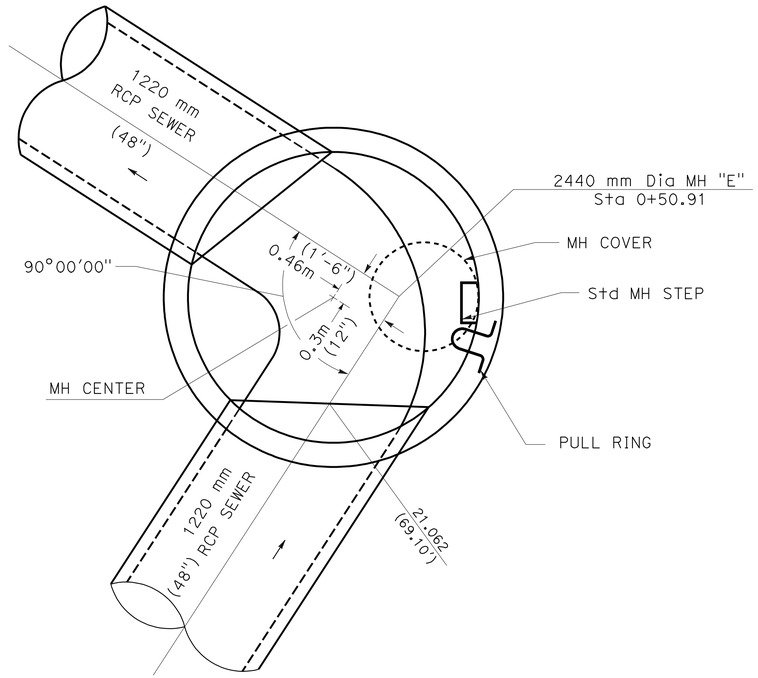

(96") 2440 mm Dia MH "SSMH-29"
"D3" Sta 10+52.9, 2.5 Lt
Sta 0+50.91
(SHEET SS-7)

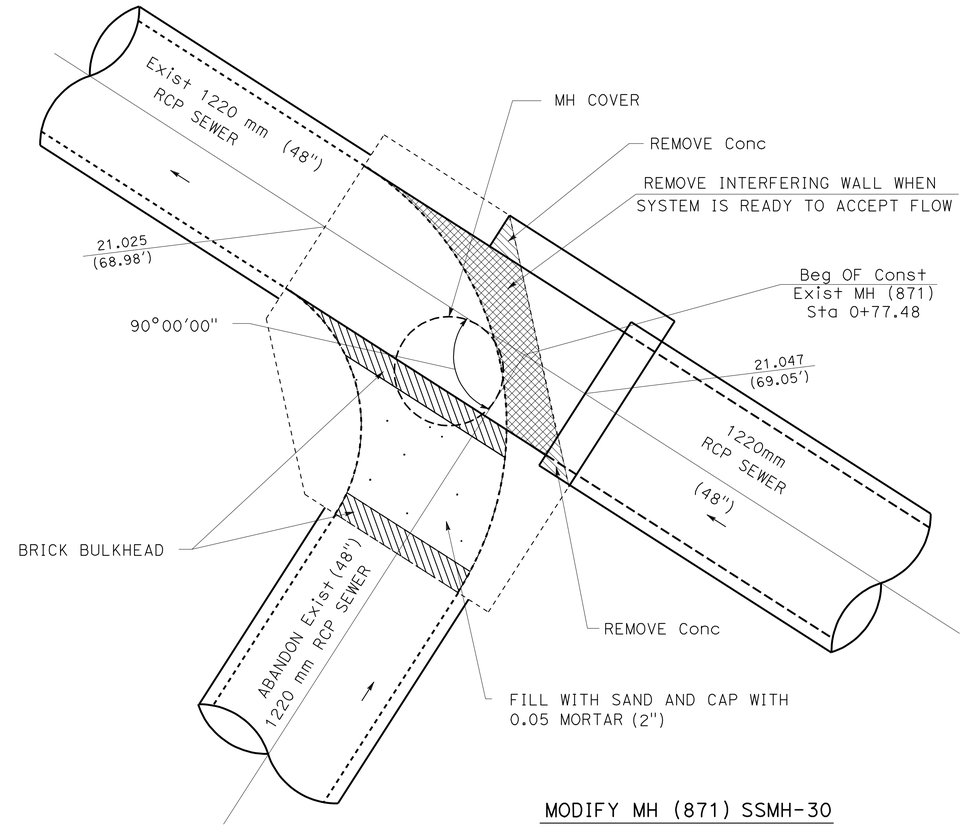

MODIFY MH (871) SSMH-30
Sta "D3" 10+52.1, 29.0 Lt = Sta 0+77.48
(SHEET SS-7)

NOTES:
1. MODIFY MH AS SHOWN ON SHEET SSD-8 WITHOUT BREAKING THROUGH EXISTING MH AND WALL, UNTIL SYSTEM IS READY TO ACCEPT FLOW.
2. ABANDON EXISTING MH AS SHOWN ON SHEET SSD-8 AFTER THE SEWER IS COMPLETED, TESTED, CCTV INSPECTED, AND READY TO ACCEPT FLOWS, AND AS DIRECTED BY THE ENGINEER

SOUTH WHITTIER OUTFALL RELIEF TRUNK SEWER
SECTION 2B
MANHOLE DETAILS

ALL DIMENSIONS ARE IN METERS
UNLESS OTHERWISE SHOWN
SANITARY SEWER DETAILS
NO SCALE
SSD-7

YTT	YTT	RK	YIM T. TSE
10/09	04/09	02/08	NGIM NANCY PE
		REVISED BY	CALCULATED-DESIGNED BY
		DATE REVISED	CHECKED BY

FUNCTIONAL SUPERVISOR
NGIM NANCY PE

STATE OF CALIFORNIA - DEPARTMENT OF TRANSPORTATION
Caltrans OFFICE OF DESIGN A

S:\projects\2159c1\72159cjc007.dgn

LAST REVISION 00-00-00 DATE PLOTTED => 22-JUN-2010 TIME PLOTTED => 10:39

Dist	COUNTY	ROUTE	KILOMETER POST TOTAL PROJECT	SHEET No.	TOTAL SHEETS
07	LA	5	2.9/4.9	344	1082

Caltrans Metric

REGISTERED CIVIL ENGINEER 12-23-09 DATE

6-21-10
PLANS APPROVAL DATE

REGISTERED PROFESSIONAL ENGINEER NGIM NANCY PE No. 58161 Exp. 6-30-10 CIVIL STATE OF CALIFORNIA

THE STATE OF CALIFORNIA OR ITS OFFICERS OR AGENTS SHALL NOT BE RESPONSIBLE FOR THE ACCURACY OR COMPLETENESS OF ELECTRONIC COPIES OF THIS PLAN SHEET.

NOTE: REFER TO LOS ANGELES COUNTY SANITATION DISTRICT'S AS-BUILT PLANS FOR EXISTING MH INFORMATION NOT SHOWN ON THIS PLAN.

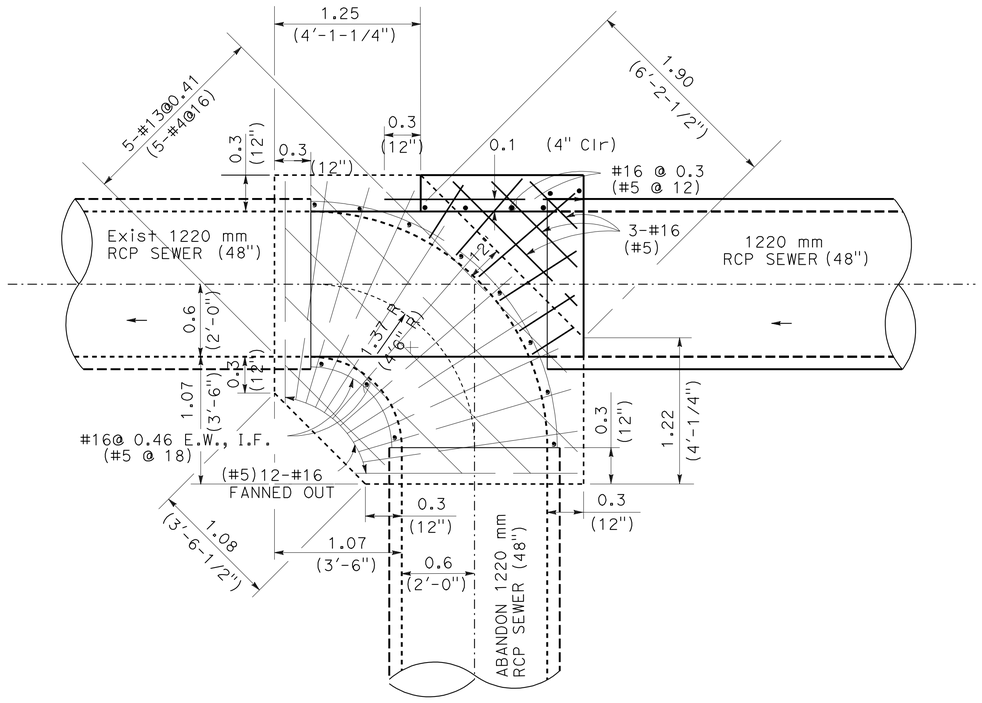

PLAN SECTION A-A

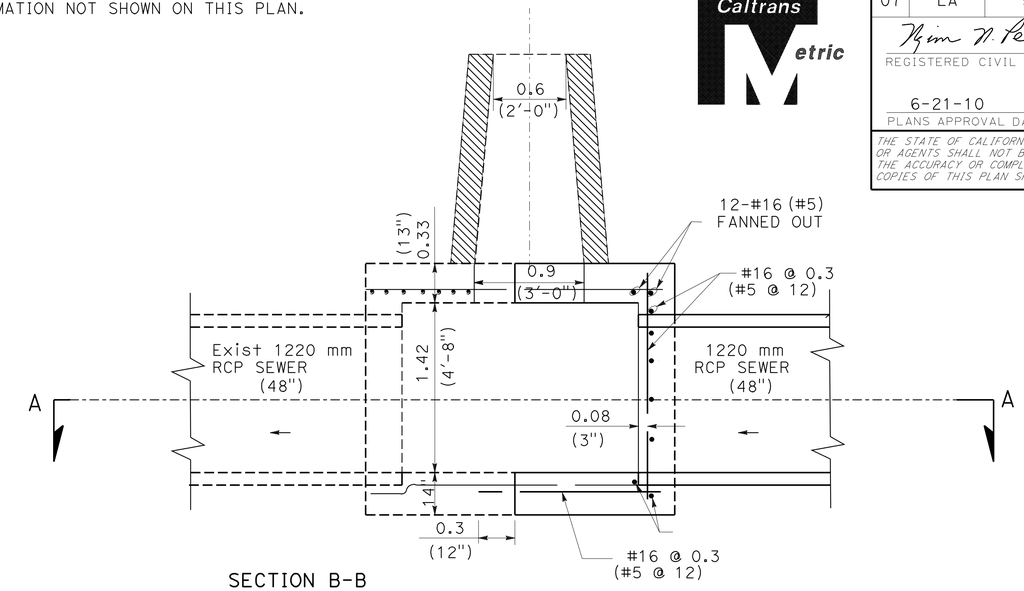

SECTION B-B

NOTE: 1. USE EPOXY ADHESIVE TO BOND REINFORCEMENT WITH Exist CONCRETE.

2. EPOXY ADHESIVE ITW RAMSET/RED HEAD EPCON SYSTEM CERAMIC 6 HILTI HIT RE500 ADHESIVE OR EQUAL ANCHORING SYSTEM SHALL BE USED.

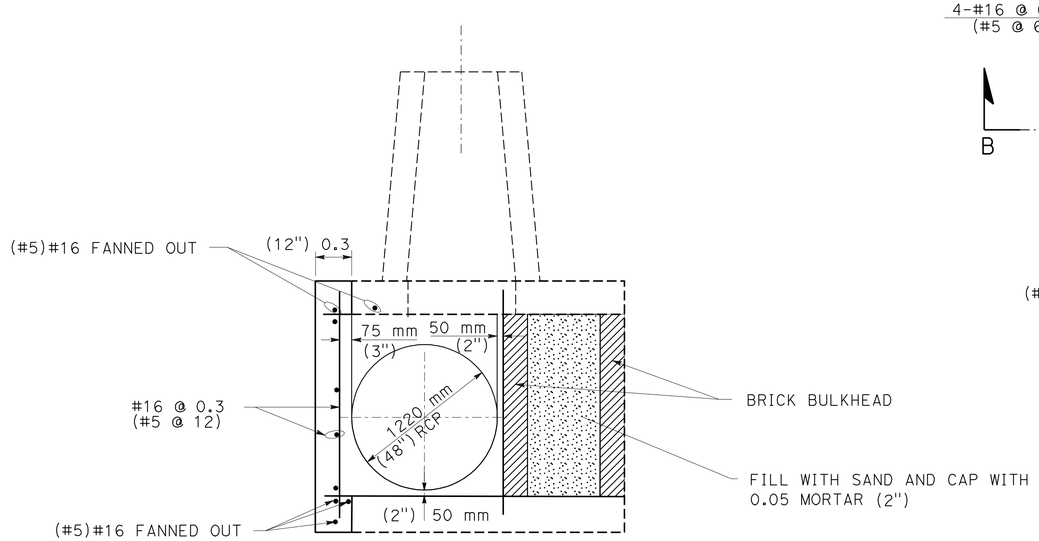

SECTION C-C

NOTE: CONCRETE SHALL BE 660-B-4000 AND SHALL OBTAIN A MINIMUM OF COMPRESSIVE STRENGTH OF 3 KSI (3000 PSI) PRIOR TO BACKFILLING.

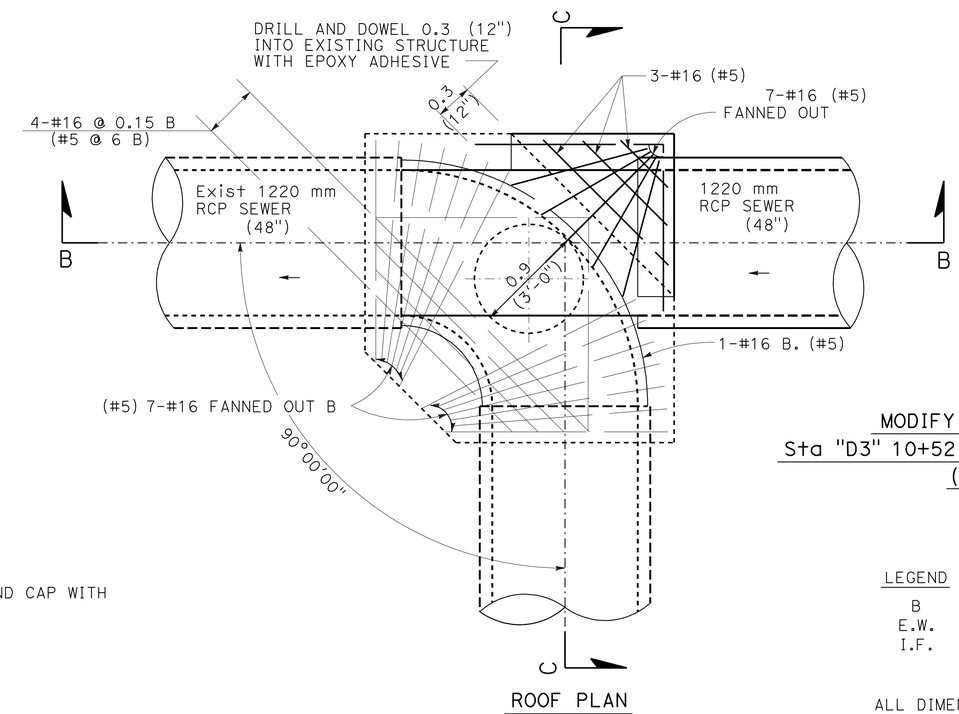

ROOF PLAN

MODIFY MH (871) SSMH-30
Sta "D3" 10+52.1, 29.0 Lt = Sta 0+77.48
(SHEET SS-7)

LEGEND

B	BOTTOM
E.W.	EACH WAY
I.F.	INSIDE FACE

ALL DIMENSIONS ARE IN METERS UNLESS OTHERWISE SHOWN

SOUTH WHITTIER OUTFALL RELIEF TRUNK SEWER
SECTION 2B

MANHOLE DETAILS

SANITARY SEWER DETAILS

NO SCALE

SSD-8

YTT	10/09		
YTT	04/09		
RK	02/08		
REVISED BY	DATE REVISED		
YIM T. TSE	NGIM NANCY PE		
CALCULATED-DESIGNED BY	CHECKED BY		
FUNCTIONAL SUPERVISOR	NGIM NANCY PE		

STATE OF CALIFORNIA - DEPARTMENT OF TRANSPORTATION
Caltrans OFFICE OF DESIGN A

S:\projects\2159c1\72159cjc008.dgn

LAST REVISION 00-00-00 | DATE PLOTTED => 22-JUN-2010 | TIME PLOTTED => 10:39

Dist	COUNTY	ROUTE	KILOMETER POST TOTAL PROJECT	SHEET No.	TOTAL SHEETS
07	LA	5	2.9/4.9	345	1082

REGISTERED CIVIL ENGINEER — DATE 12-23-09

6-21-10
PLANS APPROVAL DATE

REGISTERED PROFESSIONAL ENGINEER NGIM NANCY PE No. 58161 Exp. 6-30-10 CIVIL STATE OF CALIFORNIA

THE STATE OF CALIFORNIA OR ITS OFFICERS OR AGENTS SHALL NOT BE RESPONSIBLE FOR THE ACCURACY OR COMPLETENESS OF ELECTRONIC COPIES OF THIS PLAN SHEET.

NOTE: REFER TO STANDARD MH TYPE "E" DETAILS
SEE DETAIL SHEETS SSD-16 AND SSD-17

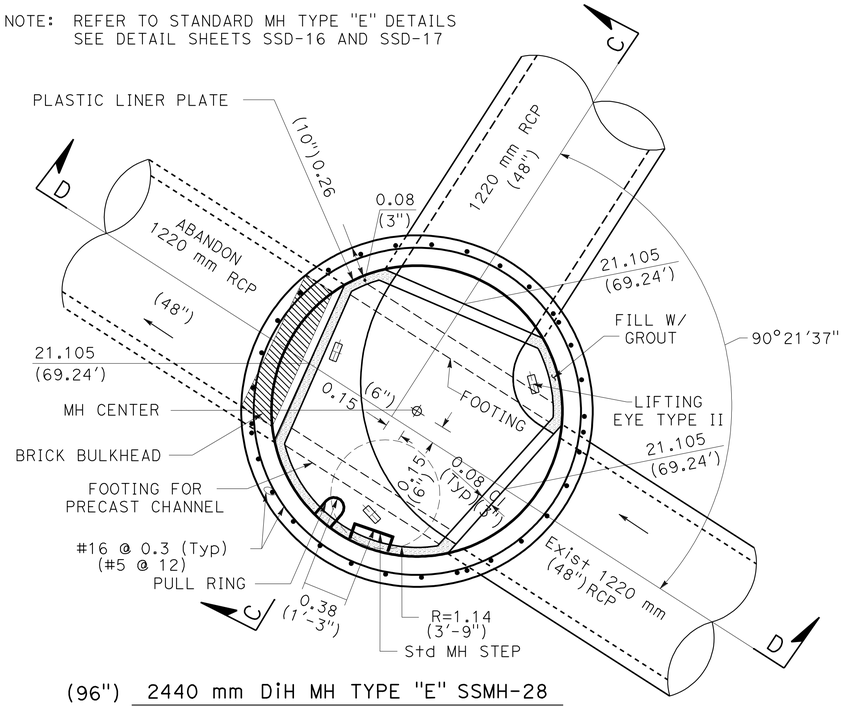

(96") 2440 mm DiH MH TYPE "E" SSMH-28
"D3" Sta 10+02.0, 1.0 Lt = Sta 0+00.00
(SHEET SS-7)

NOTE:

THE CONTRACTOR SHALL PARTIALLY FORM THE BASE OF THE MANHOLE AROUND THE EXISTING RCP, CONSTRUCT THE MANHOLE, AND CONNECT THE 1220 mm (48") RCP UP TO THE WALL OF THE MANHOLE. WHEN THE SEWER IS COMPLETED,TESTED, CCTV INSPECTED, AND READY TO ACCEPT FLOWS, AND WHEN ALLOWED BY THE ENGINEER, THE CONTRACTOR SHALL BREAK OUT THE EXISTING 1220 mm (48") RCP DURING LOW FLOW, INSTALL THE PRECAST CHANNEL AND INSTALL BULKHEAD AT 1220 mm (48") RCP TO BE ABANDONED. THE CONTRACTOR SHALL NOT BREAK OUT THE PIPE WITHOUT 5 DAYS OF CLEAR WEATHER FORECAST AND NOT LESS THAN 2 DAYS AFTER A RAIN EVENT.

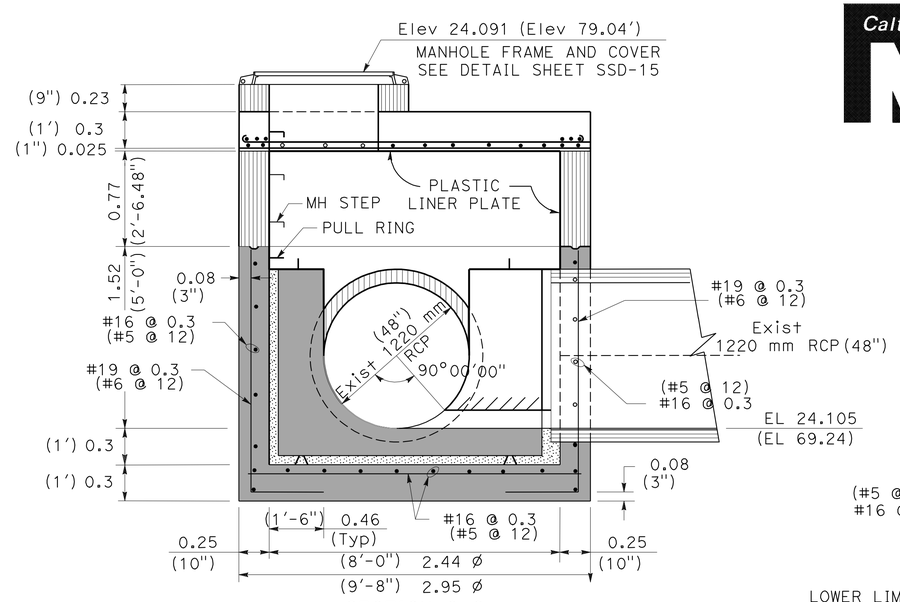

SECTION C-C

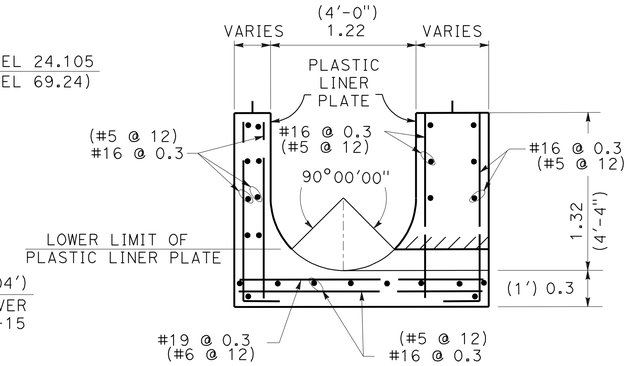

SECTION B-B

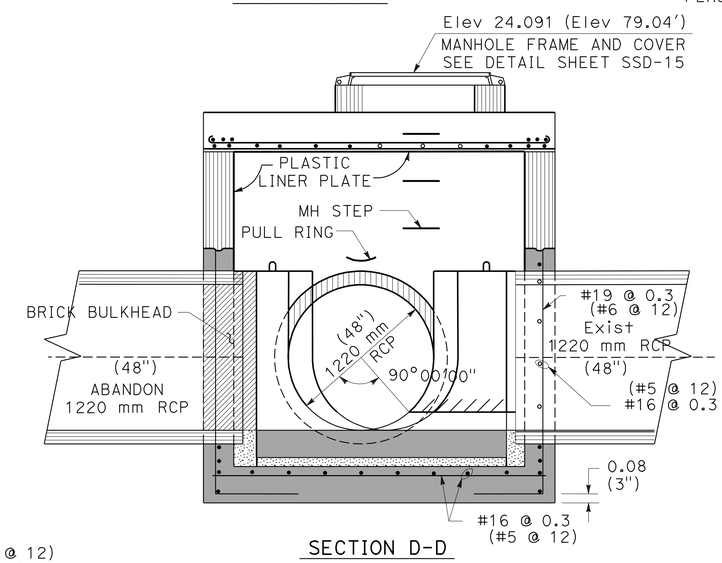

SECTION D-D

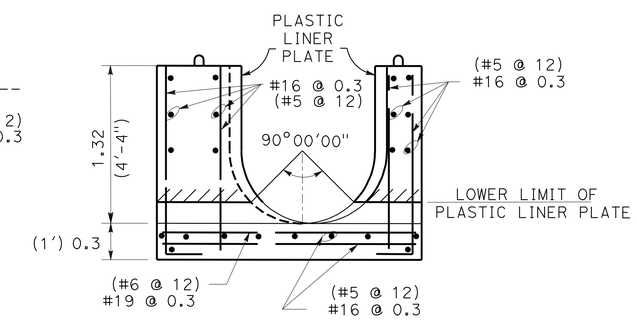

SECTION A-A

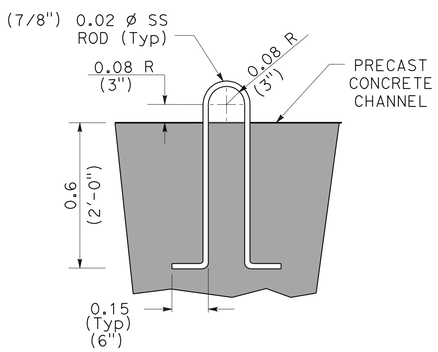

LIFTING EYE TYPE II

NOTE: LIFTING EYES ARE DESIGNED TO LIFT VERTICALLY. CONTRACTOR SHALL NOT EXERT HORIZONTAL FORCES DURING LIFTING.

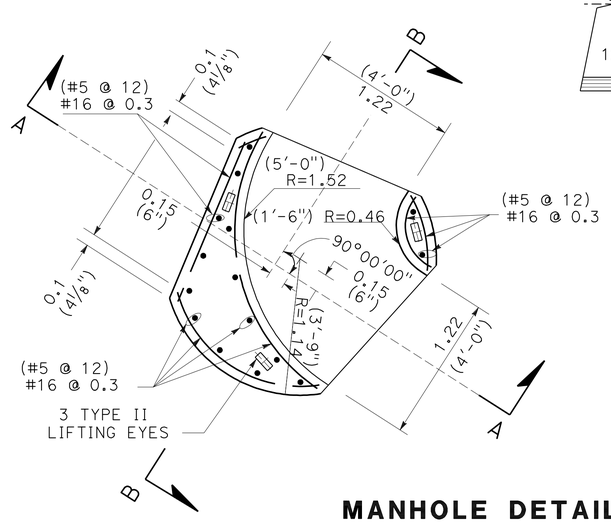

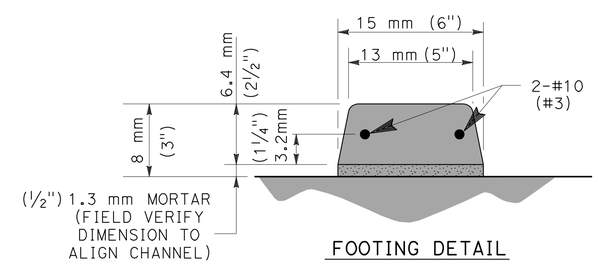

FOOTING DETAIL

MANHOLE DETAILS

SOUTH WHITTIER OUTFALL RELIEF TRUNK SEWER
SECTION 2B

ALL DIMENSIONS ARE IN METERS
UNLESS OTHERWISE SHOWN

SANITARY SEWER DETAILS

NO SCALE

SSD-9

YTT	10/09		
YTT	04/09		
RK	02/08	REVISED BY	DATE REVISED
YIM T. TSE	NGIM NANCY PE	CALCULATED-DESIGNED BY	CHECKED BY
FUNCTIONAL SUPERVISOR	NGIM NANCY PE		

STATE OF CALIFORNIA - DEPARTMENT OF TRANSPORTATION
Caltrans OFFICE OF DESIGN A

S:\projects\2159c1\72159cjc009.dgn

LAST REVISION 00-00-00 | DATE PLOTTED => 22-JUN-2010 | TIME PLOTTED => 10:40

Dist	COUNTY	ROUTE	KILOMETER POST TOTAL PROJECT	SHEET No.	TOTAL SHEETS
07	LA	5	2.9/4.9	346	1082

REGISTERED CIVIL ENGINEER 12-23-09 DATE

6-21-10
PLANS APPROVAL DATE

REGISTERED PROFESSIONAL ENGINEER NGIM NANCY PE No. 58161 Exp. 6-30-10 CIVIL STATE OF CALIFORNIA

THE STATE OF CALIFORNIA OR ITS OFFICERS OR AGENTS SHALL NOT BE RESPONSIBLE FOR THE ACCURACY OR COMPLETENESS OF ELECTRONIC COPIES OF THIS PLAN SHEET.

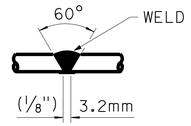

REBAR #22 (#7) OR SMALLER
(UNLESS OTHERWISE NOTED)

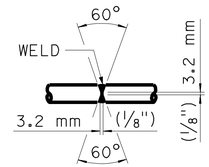

CHIP OR GRIND ROOT TO SOUND METAL BEFORE WELDING SECOND OR ROOT SIDE

REBAR #25 (#8) OR LARGER
(UNLESS OTHERWISE NOTED)

SPLICE WELDING OF REBARS

SECTION OR DETAIL DESIGNATION (LETTERS INDICATE SECTION & NUMBERS INDICATE DETAILS)

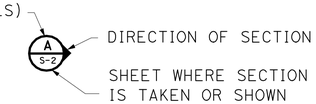

NOTE:
WHERE LETTERS ONLY ARE USED FOR A SECTION, THE SECTION IS TAKEN AND SHOWN ON THE SAME SHEET.

SECTION DESIGNATION

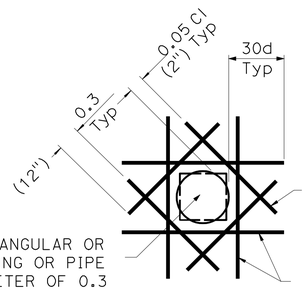

DIAGONAL BARS EQUAL IN SIZE TO PRINCIPAL REINFORCEMENT IN EACH LAYER.

SQUARE RECTANGULAR OR CIRCULAR OPENING OR PIPE WITH A DIAMETER OF 0.3 (12") OR MORE.

BARS EQUAL TO 1/2 THE TOTAL NUMBERS OF BARS INTERRUPTED. EACH SIDE OF OPENING.

TYPICAL REINFORCING AT CONCRETE OPENING
(UNLESS OTHERWISE NOTED.)

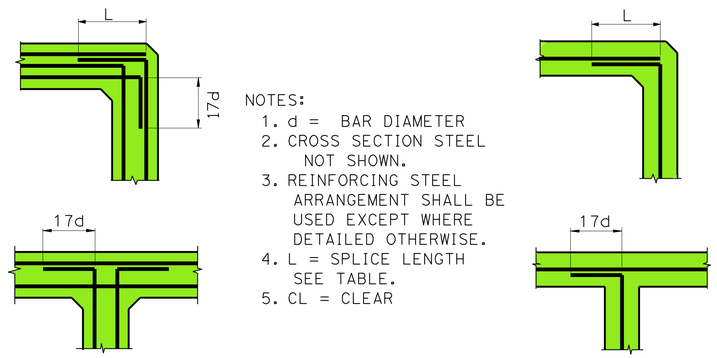

NOTES:
1. d = BAR DIAMETER
2. CROSS SECTION STEEL NOT SHOWN.
3. REINFORCING STEEL ARRANGEMENT SHALL BE USED EXCEPT WHERE DETAILED OTHERWISE.
4. L = SPLICE LENGTH SEE TABLE.
5. CL = CLEAR

TYPICAL REINFORCING STEEL AT WALL CORNERS AND INTERSECTIONS - CONCRETE

CONTINUE REINFORCEMENT THRU JOINT UNLESS SHOWN OTHERWISE

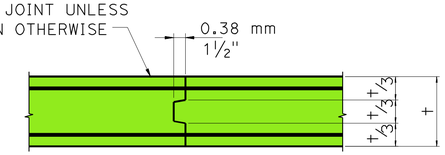

CONSTRUCTION JOINT DETAIL

CLASS "B" LAP SPLICES, METERS (INCHES)

BAR SIZES	fc'= 20.68 MPa (3,000 psi)				fc'= 27.58 MPa (4,000 psi)			
	fy= 275.8 MPa (40 ksi)		fy= 413.7 MPa (60 ksi)		fy= 275.8 MPa (40 ksi)		fy= 413.7 MPa (60 ksi)	
	TOP BAR	OTHER	TOP BAR	OTHER	TOP BAR	OTHER	TOP BAR	OTHER
#13 (#4)	0.635 (25)	0.483 (19)	0.991 (38)	0.737 (29)	0.559 (22)	0.431 (17)	0.838 (33)	0.635 (25)
#16 (#5)	0.787 (31)	0.610 (24)	1.194 (47)	0.914 (36)	0.686 (27)	0.533 (21)	1.041 (41)	0.787 (31)
#19 (#6)	0.965 (38)	0.737 (29)	1.422 (56)	1.092 (43)	0.838 (33)	0.635 (25)	1.245 (49)	0.940 (37)
#22 (#7)	1.371 (54)	1.067 (42)	2.057 (81)	1.600 (63)	1.194 (47)	0.914 (36)	1.803 (71)	1.372 (54)
#25 (#8)	1.575 (62)	1.219 (48)	2.362 (93)	1.829 (72)	1.372 (54)	1.067 (42)	2.057 (81)	1.574 (62)
#29 (#9)	1.778 (70)	1.372 (54)	2.667 (105)	2.057 (81)	1.549 (61)	1.194 (47)	2.311 (91)	1.778 (70)
#32 (#10)	2.007 (79)	1.549 (61)	2.997 (118)	2.311 (91)	1.727 (68)	1.346 (53)	2.591 (102)	2.007 (79)

NOTES:

1. LAP SPLICE LENGTHS SHOWN ABOVE ARE BASED ON SECTION 1912.2.2 OF THE COUNTY OF LOS ANGELES BUILDING CODE FOR UNCOATED BARS AND NORMAL WEIGHT CONC.
2. IF THERE ARE ANY DISCREPANCIES BETWEEN THIS TABLE AND THE 1999 COUNTY OF LOS ANGELES BUILDING CODE,THE 1999 COUNTY OF LOS ANGELES BUILDING CODE SHALL TAKE PRECEDENCE.
3. MINIMUM REINFORCING BAR SPACING SHALL BE 0.3m. (12 inches)
4. MINIMUM CLEAR COVER OVER THE REINFORCING BAR SHALL BE 0.05m. (2 inches)
5. CONFIGURATIONS NOT MEETING NOTE 2 OR 3 SHALL BE INVESTIGATED ON A CASE BY CASE BASIS.

LEGEND

PROPOSED CONCRETE SECTION

ALL DIMENSIONS ARE IN METERS UNLESS OTHERWISE SHOWN

GENERAL NOTES AND TYPICAL DETAILS

SOUTH WHITTIER OUTFALL RELIEF TRUNK SEWER
SECTION 2B

SANITARY SEWER DETAILS

NO SCALE

SSD-10

YTT	YTT	YTT
10/09	04/09	02/08
REVISED BY	RK	
DATE REVISED		
YIM T. TSE		
NGIM NANCY PE		
CALCULATED-DESIGNED BY		
CHECKED BY		
FUNCTIONAL SUPERVISOR		
NGIM NANCY PE		

STATE OF CALIFORNIA - DEPARTMENT OF TRANSPORTATION
Caltrans OFFICE OF DESIGN A

S:\projects\2159c1\72159cjc010.dgn

LAST REVISION 00-00-00 DATE PLOTTED => 22-JUN-2010 TIME PLOTTED => 10:40

Dist	COUNTY	ROUTE	KILOMETER POST TOTAL PROJECT	SHEET No.	TOTAL SHEETS
07	LA	5	2.9/4.9	347	1082

REGISTERED CIVIL ENGINEER 12-23-09 DATE

6-21-10
PLANS APPROVAL DATE

REGISTERED PROFESSIONAL ENGINEER NGIM NANCY PE No. 58161 Exp. 6-30-10 CIVIL STATE OF CALIFORNIA

THE STATE OF CALIFORNIA OR ITS OFFICERS OR AGENTS SHALL NOT BE RESPONSIBLE FOR THE ACCURACY OR COMPLETENESS OF ELECTRONIC COPIES OF THIS PLAN SHEET.

Caltrans Metric

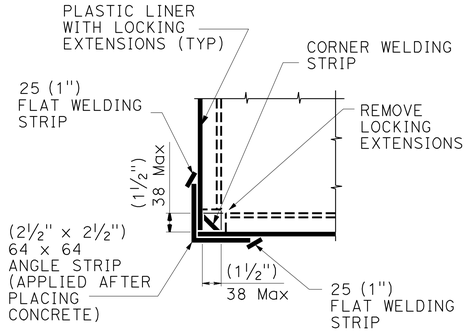

OUTSIDE CORNER A

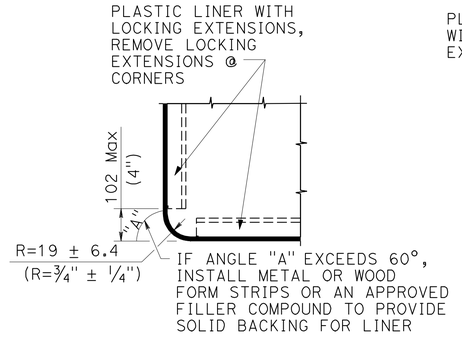

OUTSIDE CORNER B

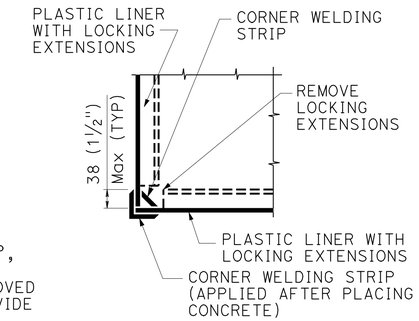

OUTSIDE CORNER C

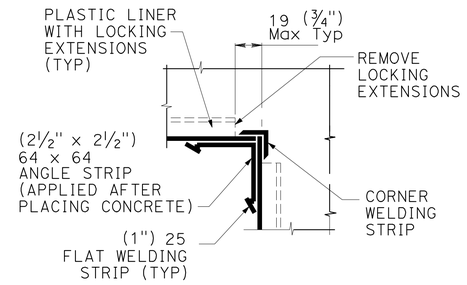

INSIDE CORNER D

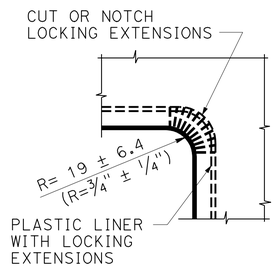

INSIDE CORNER E

TYPICAL CORNER DETAILS

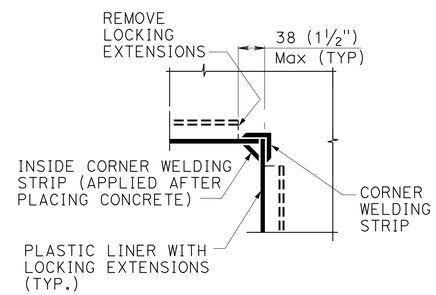

INSIDE CORNER F

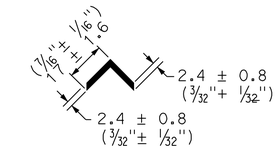

CORNER WELDING STRIP-OUTSIDE

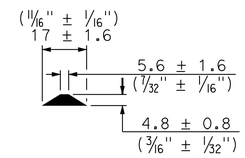

CORNER WELDING STRIP-INSIDE

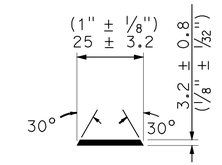

FLAT WELDING STRIP

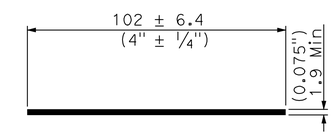

CONTRACTION JOINT STRIP

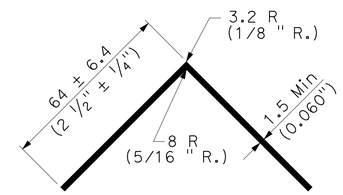

(2.5" x 2.5") 64mm x 64mm ANGLE STRIP

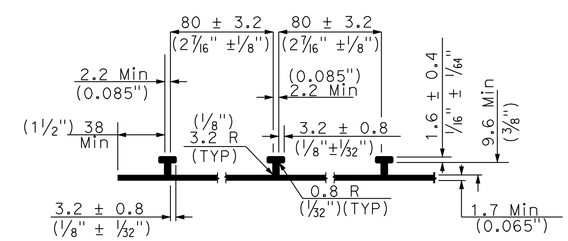

LOCKING EXTENSIONS DETAIL

STANDARD INSTALLATION ACCESSORY STRIPS

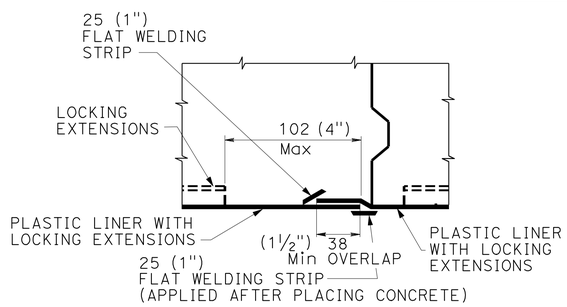

TYPE I

MAY BE USED AT TRANSVERSE LINER PLATE JOINTS. SHALL BE USED FOR LINER PLATE JOINTS AT CONSTRUCTION JOINTS IN CONCRETE.

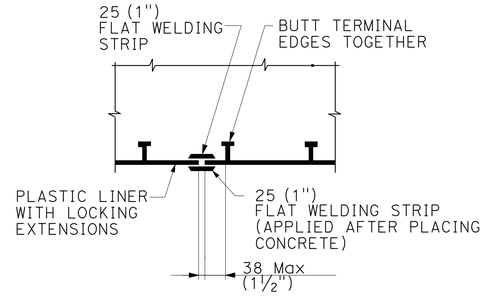

TYPE III

MAY BE USED AT LINER PLATE JOINTS WHERE TERMINAL EDGES ARE PARALLEL AND BUTTED TOGETHER.

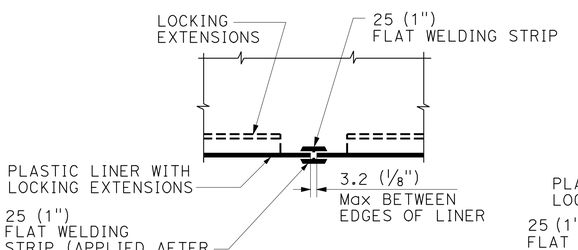

TYPE II

MAY BE USED AT ALL LINER JOINTS EXCEPT TRANSVERSE LINER JOINTS. WHICH EXTEND TO A LOWER TERMINAL EDGE OF LINER.

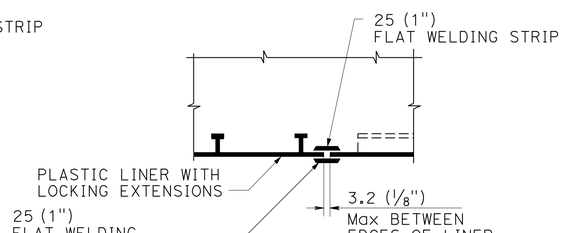

TYPE IV

MAY BE USED AT JOINTS WHERE LOCKING EXTENSIONS ARE PERPENDICULAR TO EACH OTHER.

TYPICAL FIELD JOINTS

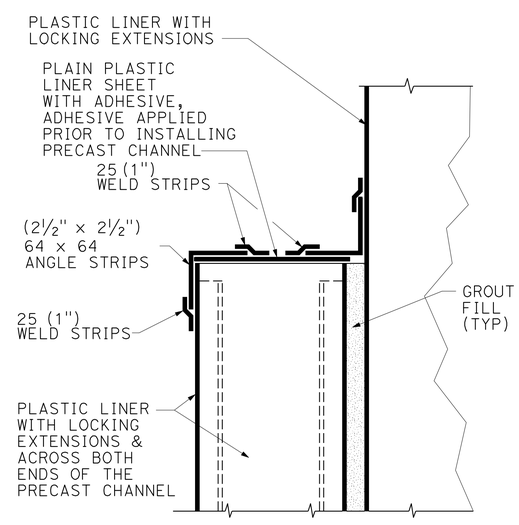

SECTION @ PRECAST CHANNEL @ WALL

PLASTIC LINER DETAIL

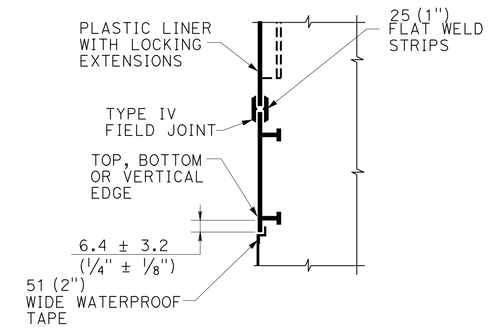

VERTICAL WALL TERMINATING EDGE DETAIL

SOUTH WHITTIER OUTFALL RELIEF TRUNK SEWER
SECTION 2B

ALL DIMENSIONS ARE IN MILLIMETERS UNLESS OTHERWISE SHOWN

SANITARY SEWER DETAILS

NO SCALE

SSD-11

YTT	10/09		
YTT	04/09		
RK	02/08		
REVISED BY	DATE REVISED		
YIM T. TSE	NGIM NANCY PE		
CALCULATED-DESIGNED BY	CHECKED BY		
FUNCTIONAL SUPERVISOR	NGIM NANCY PE		

STATE OF CALIFORNIA - DEPARTMENT OF TRANSPORTATION
Caltrans OFFICE OF DESIGN A

S:\projects\2159c1\72159cjc011.dgn

LAST REVISION 00-00-00 | DATE PLOTTED => 22-JUN-2010 | TIME PLOTTED => 10:40

Dist	COUNTY	ROUTE	KILOMETER POST TOTAL PROJECT	SHEET No.	TOTAL SHEETS
07	LA	5	2.9/4.9	348	1082

Caltrans Metric

REGISTERED CIVIL ENGINEER 12-23-09 DATE

6-21-10
PLANS APPROVAL DATE

REGISTERED PROFESSIONAL ENGINEER NGIM NANCY PE No. 58161 Exp. 6-30-10 CIVIL STATE OF CALIFORNIA

THE STATE OF CALIFORNIA OR ITS OFFICERS OR AGENTS SHALL NOT BE RESPONSIBLE FOR THE ACCURACY OR COMPLETENESS OF ELECTRONIC COPIES OF THIS PLAN SHEET.

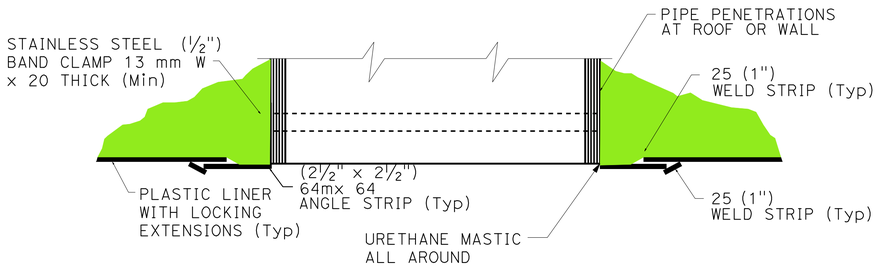

DETAIL AT PENETRATION THAT STOPS AT INSIDE SURFACE

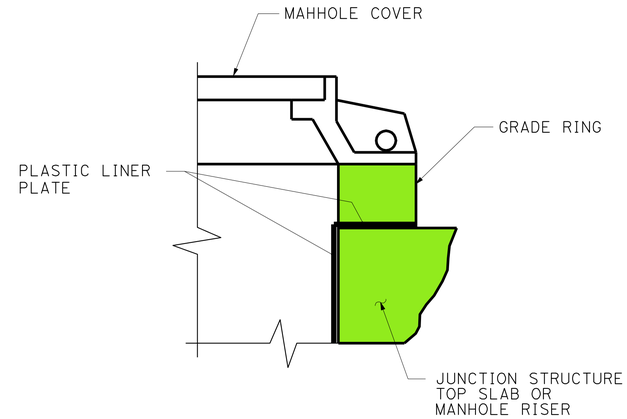

GRADE RING EDGE SEALING DETAIL

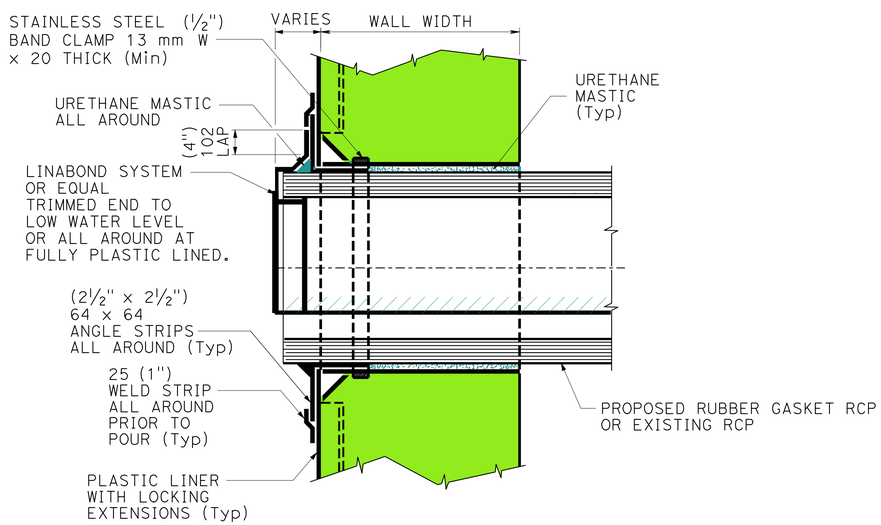

LINER DETAIL @ RC PIPE AND PROPOSED WALL

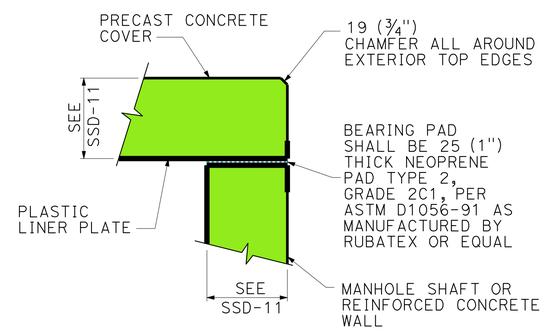

ROOF EDGE SEALING DETAIL

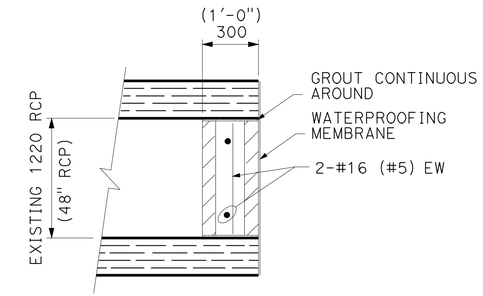

NOTES:

1. WATERPROOF COATING SHALL BE COAL TAR EPOXY RESIN. ACCEPTABLE PRODUCTS ARE KOPPER'S BITUMASTIC 300-M, OR EQUAL. (TOTAL DRY FILM THICKNESS SHALL BE 0.51 mm (20 MILS) MINIMUM)
2. BRICK SHALL BE GRADE TYPE SW 3 KSI (3000 PSI) WITH TYPE S GROUT.

BRICK BULKHEAD DETAIL

MISCELLANEOUS DETAILS

SOUTH WHITTIER OUTFALL RELIEF TRUNK SEWER
SECTION 2B

ALL DIMENSIONS ARE IN MILLIMETERS UNLESS OTHERWISE SHOWN

SANITARY SEWER DETAILS

NO SCALE

SSD-12

YIM T. TSE	YTT	10/09
NGIM NANCY PE	YTT	04/09
	RK	02/08
REVISED BY	DATE REVISED	
CALCULATED-DESIGNED BY		
CHECKED BY		
FUNCTIONAL SUPERVISOR		
NGIM NANCY PE		

STATE OF CALIFORNIA - DEPARTMENT OF TRANSPORTATION
Caltrans OFFICE OF DESIGN A

S:\projects\2159c1\72159cjc012.dgn

LAST REVISION 00-00-00 | DATE PLOTTED => 22-JUN-2010 | TIME PLOTTED => 10:40

Dist	COUNTY	ROUTE	KILOMETER POST TOTAL PROJECT	SHEET No.	TOTAL SHEETS
07	LA	5	2.9/4.9	349	1082

Caltrans Metric

REGISTERED CIVIL ENGINEER 12-23-09 DATE

6-21-10
PLANS APPROVAL DATE

REGISTERED PROFESSIONAL ENGINEER NGIM NANCY PE No. 58161 Exp. 6-30-10 CIVIL STATE OF CALIFORNIA

THE STATE OF CALIFORNIA OR ITS OFFICERS OR AGENTS SHALL NOT BE RESPONSIBLE FOR THE ACCURACY OR COMPLETENESS OF ELECTRONIC COPIES OF THIS PLAN SHEET.

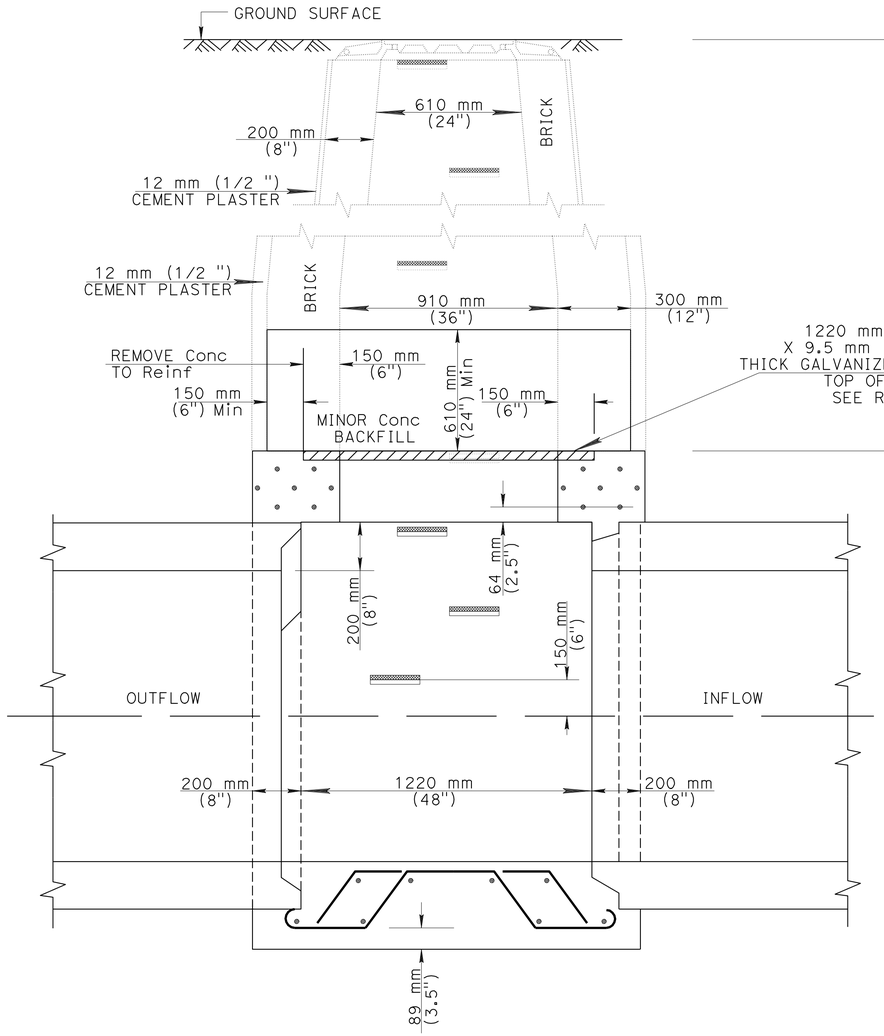

LONGITUDINAL SECTION

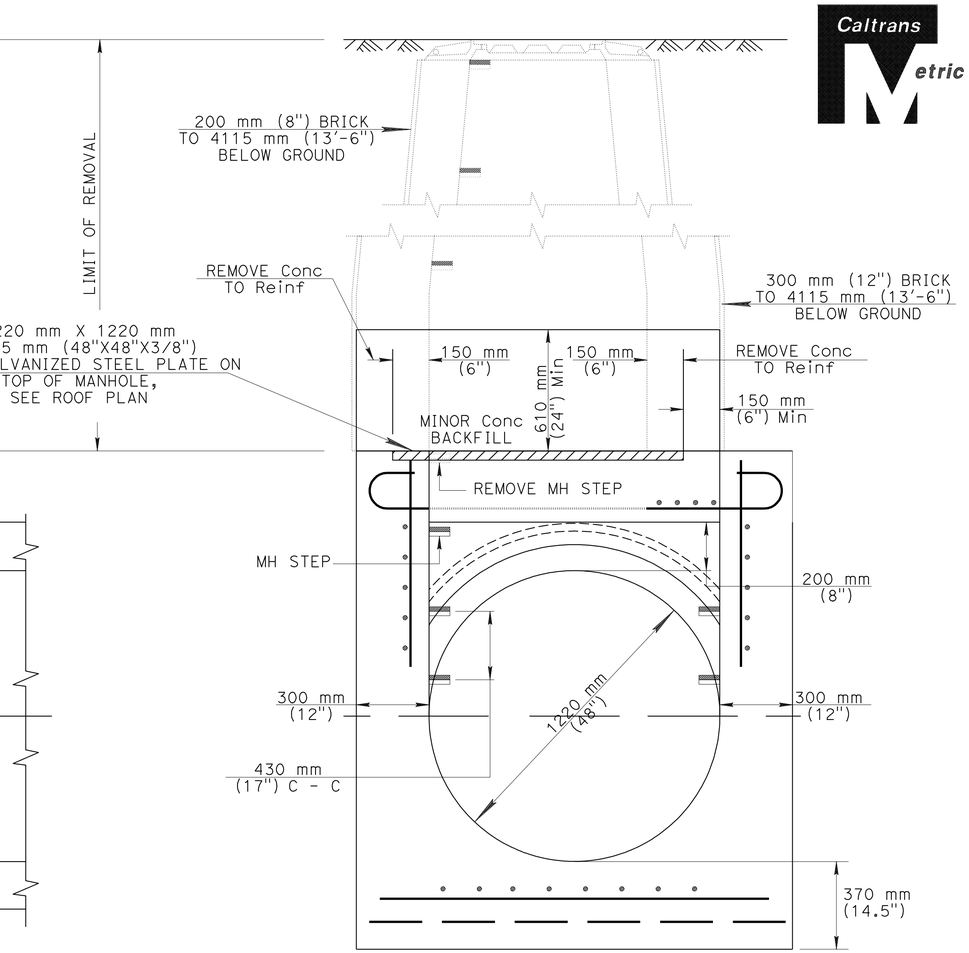

CROSS SECTION

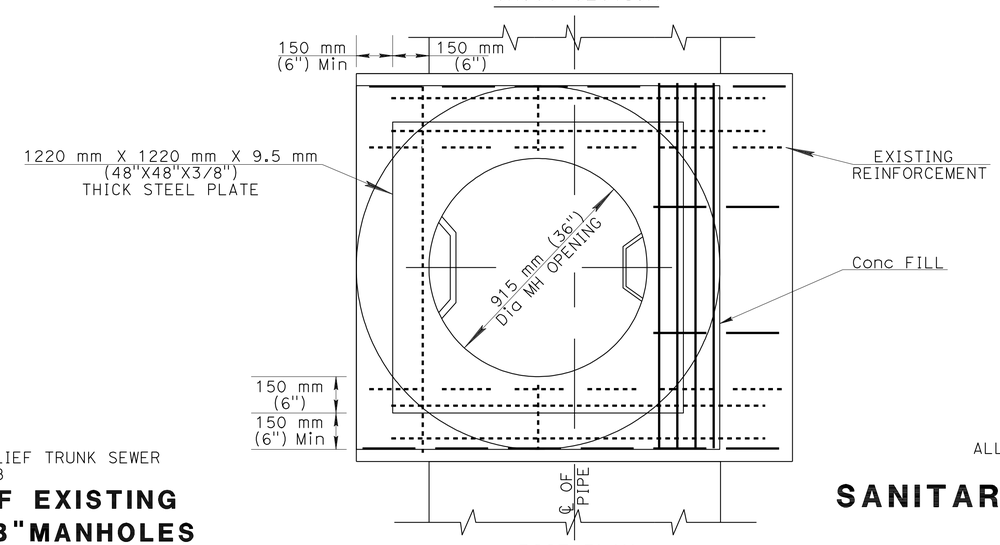

ROOF PLAN

NOTES:

1. THE CONTRACTOR SHALL REMOVE A MINIMUM OF 915 mm (3'-0") OF THE MANHOLE SHAFT BELOW STREET SUBGRADE.

SOUTH WHITTIER OUTFALL RELIEF TRUNK SEWER
SECTION 2B

ABANDONMENT OF EXISTING TYPE "A", and "B"MANHOLES

ALL DIMENSIONS ARE IN METERS UNLESS OTHERWISE SHOWN

SANITARY SEWER DETAILS

NO SCALE

SSD-13

YTT	10/09		
YTT	04/09		
RK	02/08		
REVISED BY	DATE REVISED		
YIM T. TSE	NGIM NANCY PE	CALCULATED-DESIGNED BY	FUNCTIONAL SUPERVISOR
		CHECKED BY	NGIM NANCY PE

STATE OF CALIFORNIA - DEPARTMENT OF TRANSPORTATION
Caltrans OFFICE OF DESIGN A

S:\projects\2159c1\72159cjc013.dgn

LAST REVISION 00-00-00 | DATE PLOTTED => 22-JUN-2010 | TIME PLOTTED => 10:40

Dist	COUNTY	ROUTE	KILOMETER POST TOTAL PROJECT	SHEET No.	TOTAL SHEETS
07	LA	5	2.9/4.9	350	1082

Caltrans Metric

REGISTERED CIVIL ENGINEER — DATE 12-23-09

6-21-10
PLANS APPROVAL DATE

REGISTERED PROFESSIONAL ENGINEER NGIM NANCY PE No. 58161 Exp. 6-30-10 CIVIL STATE OF CALIFORNIA

THE STATE OF CALIFORNIA OR ITS OFFICERS OR AGENTS SHALL NOT BE RESPONSIBLE FOR THE ACCURACY OR COMPLETENESS OF ELECTRONIC COPIES OF THIS PLAN SHEET.

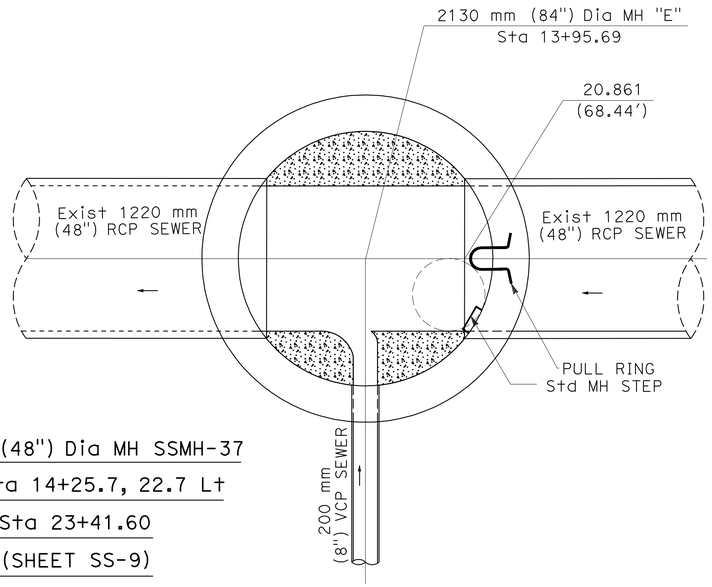

1220 mm (48") Dia MH SSMH-37
"D3" Sta 14+25.7, 22.7 Lt
Sta 23+41.60
(SHEET SS-9)

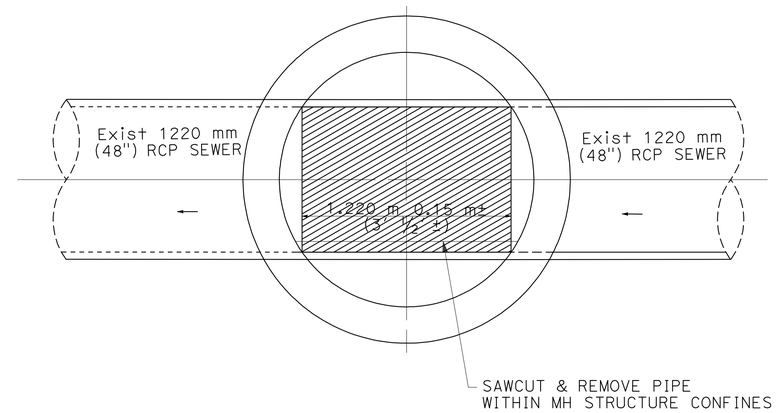

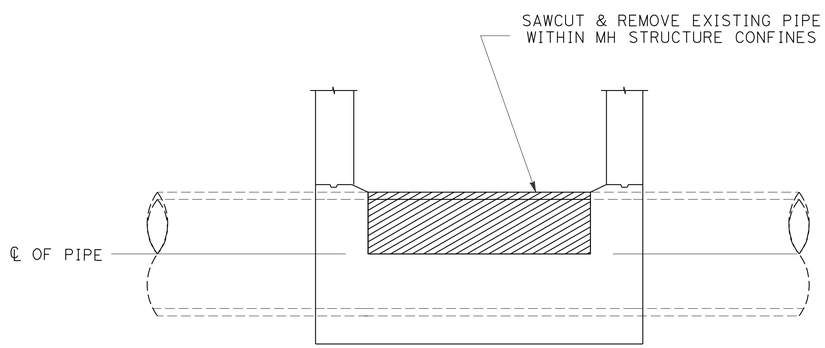

SECTION A-A

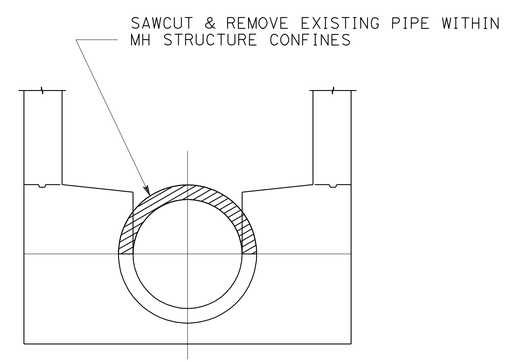

SECTION B-B

ALL DIMENSIONS ARE IN METERS
UNLESS OTHERWISE SHOWN

SOUTH WHITTIER OUTFALL TRUNK SEWER
SECTION 2

MANHOLE DETAILS

SANITARY SEWER DETAILS
NO SCALE

SSD-14

	REVISED BY	DATE REVISED
YTT	YTT	RK
10/09	04/09	02/08

CALCULATED-DESIGNED BY: YIM T. TSE
CHECKED BY: NGIM NANCY PE
FUNCTIONAL SUPERVISOR: NGIM NANCY PE

STATE OF CALIFORNIA - DEPARTMENT OF TRANSPORTATION
Caltrans OFFICE OF DESIGN A

S:\projects\2159c1\72159cjc014.dgn

LAST REVISION 00-00-00
DATE PLOTTED => 22-JUN-2010
TIME PLOTTED => 10:40

Dist	COUNTY	ROUTE	KILOMETER POST TOTAL PROJECT	SHEET No.	TOTAL SHEETS
07	LA	5	2.9/4.9	351	1082

REGISTERED CIVIL ENGINEER 12-23-09 DATE

6-21-10
PLANS APPROVAL DATE

REGISTERED PROFESSIONAL ENGINEER NGIM NANCY PE No. 58161 Exp. 6-30-10 CIVIL STATE OF CALIFORNIA

THE STATE OF CALIFORNIA OR ITS OFFICERS OR AGENTS SHALL NOT BE RESPONSIBLE FOR THE ACCURACY OR COMPLETENESS OF ELECTRONIC COPIES OF THIS PLAN SHEET.

Caltrans Metric

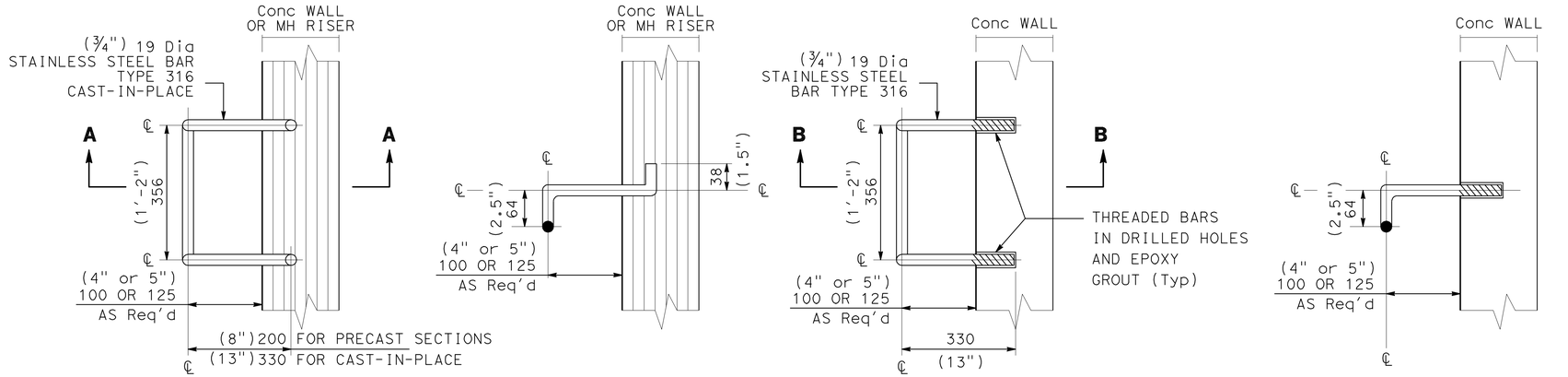

TYPE I MANHOLE STEP **TYPE II MANHOLE STEP**

STANDARD MANHOLE STEP

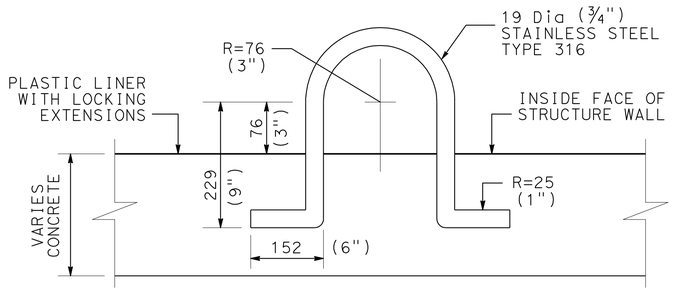

FOR CONCRETE STRUCTURE OR TYPE "A" MANHOLE WALL

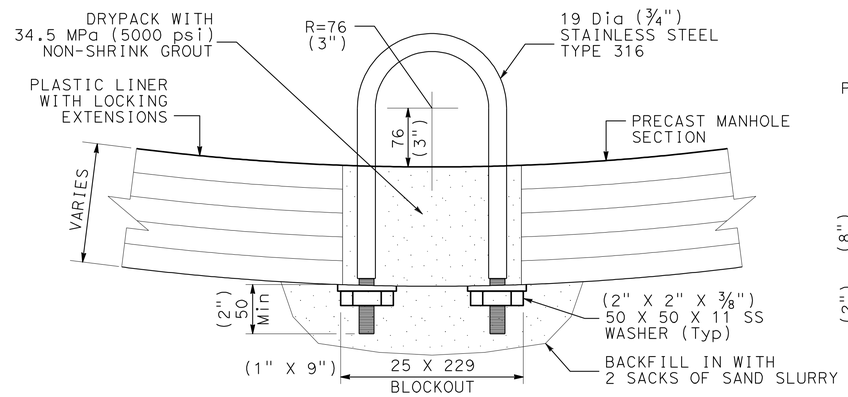

FOR PRECAST MANHOLE SECTION OR CONCRETE WALL LESS THAN 102

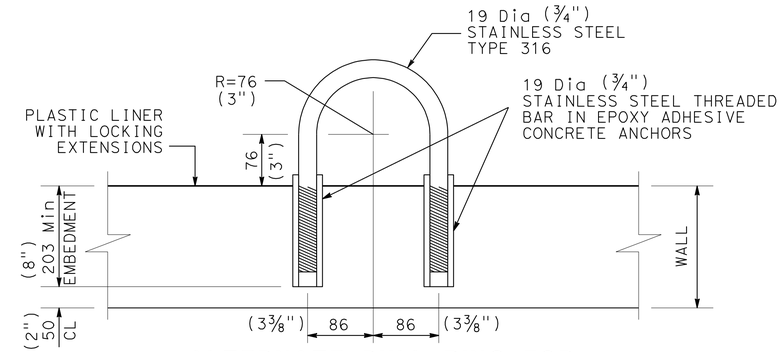

ALTERNATE PULL RING FOR CONCRETE STRUCTURE

STANDARD PULL RING

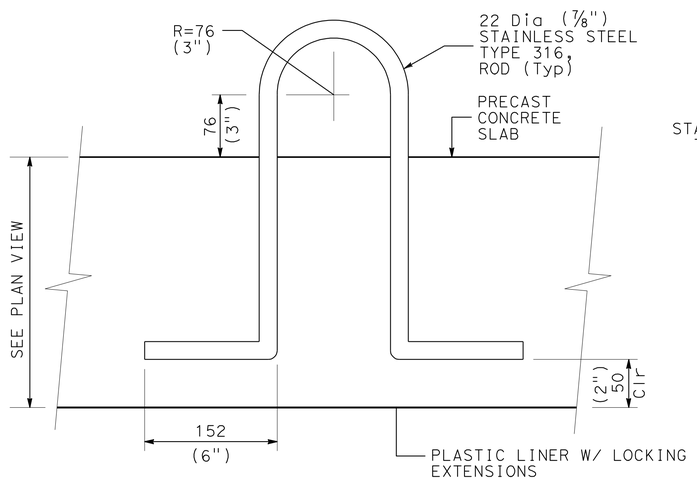

TYPE I LIFTING EYE DETAIL

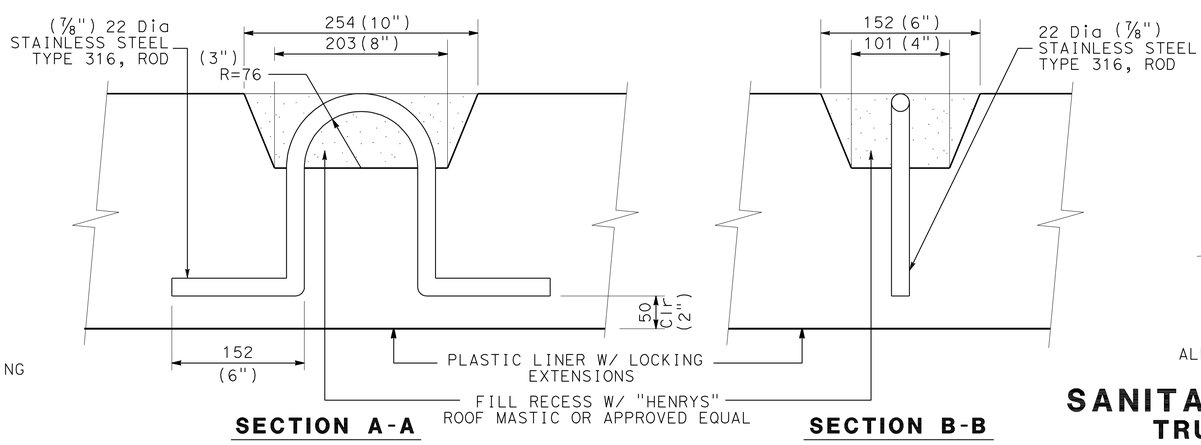

SECTION A-A **SECTION B-B**

STANDARD LIFTING EYE

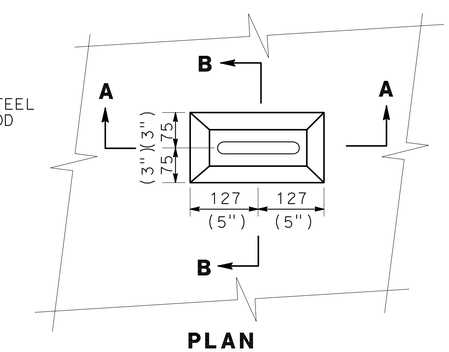

PLAN

ALL DIMENSIONS ARE IN MILLIMETERS UNLESS OTHERWISE SHOWN

SANITARY SEWER DETAILS
TRUNK SEWER SYSTEM

NO SCALE

SSD-15

YTT	10/09		
YTT	04/09		
RK	02/08		
REVISED BY	DATE REVISED		
YIM T. TSE	NGIM NANCY PE		
CALCULATED-DESIGNED BY	CHECKED BY		
FUNCTIONAL SUPERVISOR	NGIM NANCY PE		

STATE OF CALIFORNIA - DEPARTMENT OF TRANSPORTATION
Caltrans OFFICE OF DESIGN A

S:\projects\2159c1\72159cjc015.dgn

LAST REVISION 00-00-00 | DATE PLOTTED => 22-JUN-2010 | TIME PLOTTED => 10:41

Dist	COUNTY	ROUTE	KILOMETER POST TOTAL PROJECT	SHEET No.	TOTAL SHEETS
07	LA	5	2.9/4.9	352	1082

REGISTERED CIVIL ENGINEER 12-23-09 DATE

6-21-10
PLANS APPROVAL DATE

REGISTERED PROFESSIONAL ENGINEER NGIM NANCY PE No. 58161 Exp. 6-30-10 CIVIL STATE OF CALIFORNIA

THE STATE OF CALIFORNIA OR ITS OFFICERS OR AGENTS SHALL NOT BE RESPONSIBLE FOR THE ACCURACY OR COMPLETENESS OF ELECTRONIC COPIES OF THIS PLAN SHEET.

Caltrans Metric

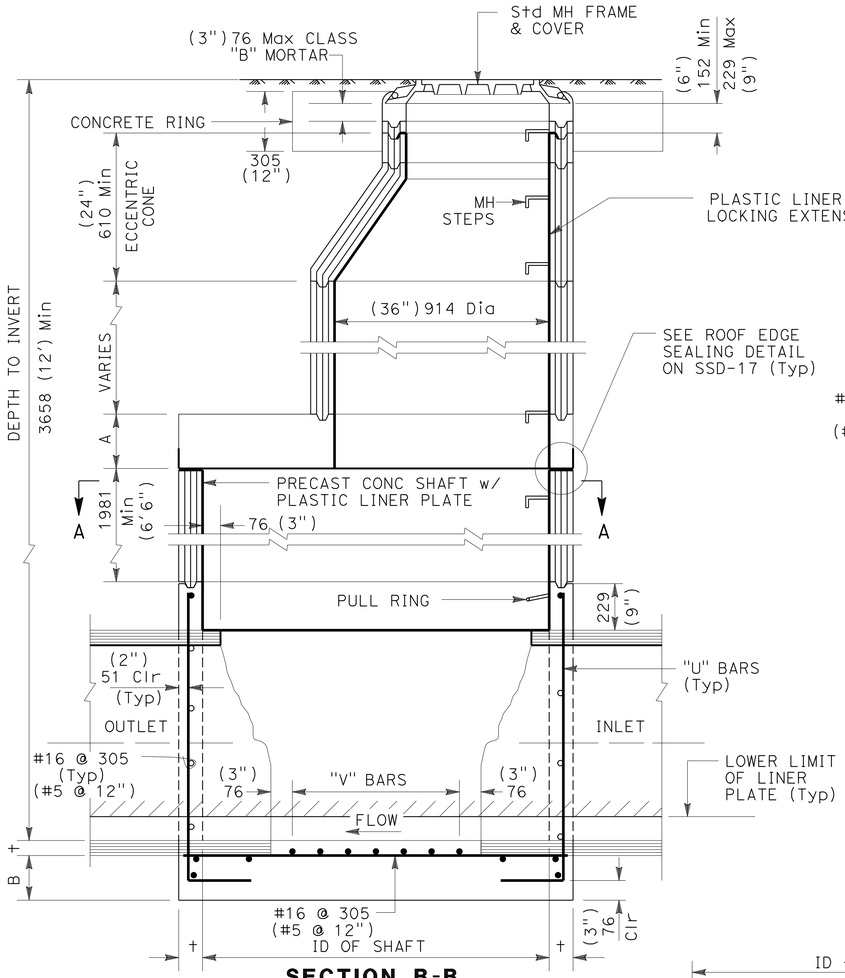

SECTION B-B

CASE I

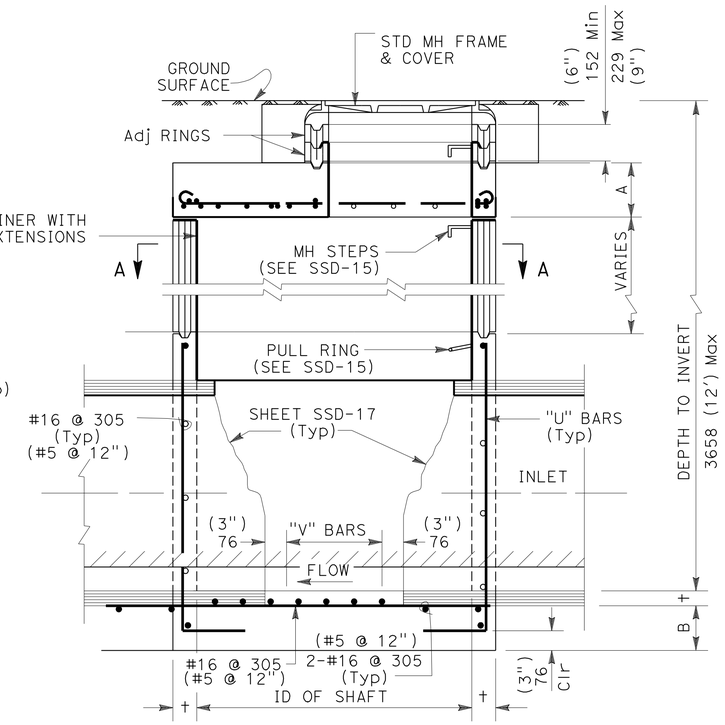

SECTION B-B

CASE II

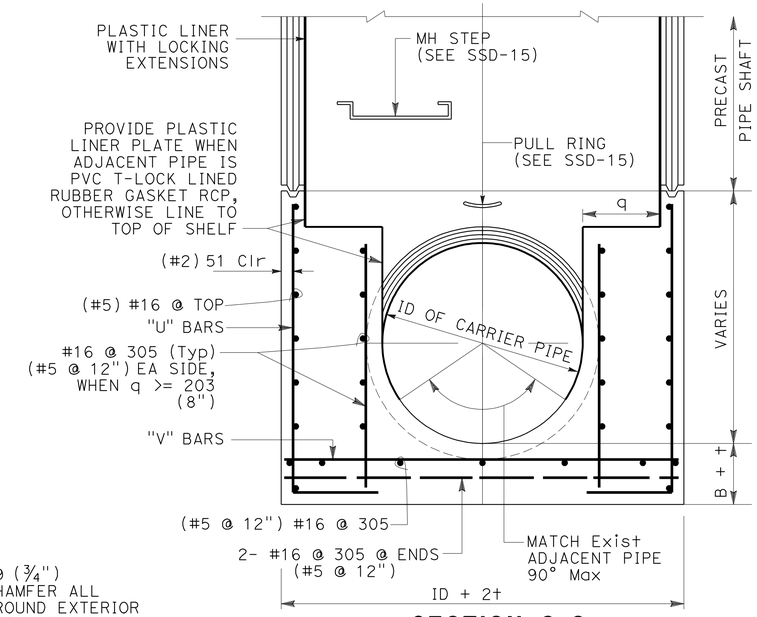

SECTION C-C

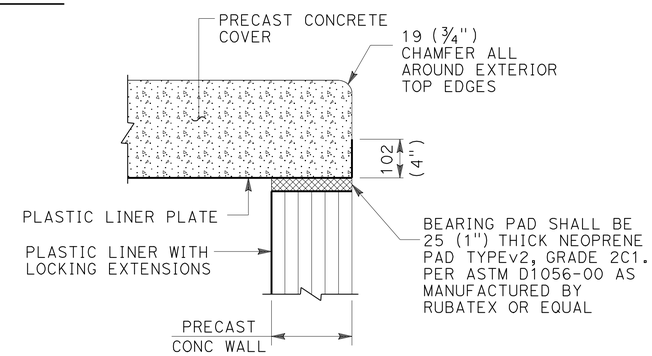

ROOF EDGE SEALING DETAIL

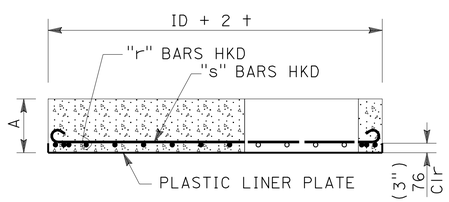

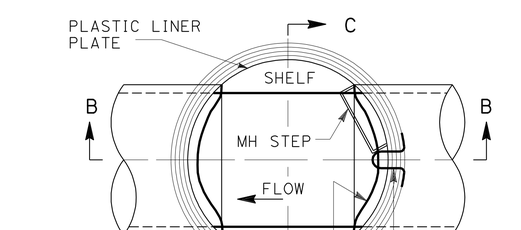

PLAN- SECTION A-A

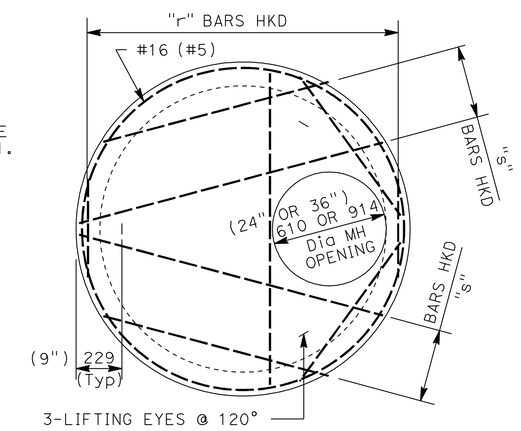

DETAIL OF FLAT SLAB TOP

610 OR 914 x 1524, 1829, 2134 OR 2438

(24" OR 36" x 60", 72", 84" OR 96")

TABLE OF REINFORCING BARS

SHAFT Dia	DEPTH TO Inv	DIMENSIONS A	DIMENSIONS B	REINFORCING BARS "r"	REINFORCING BARS "s"	REINFORCING BARS "u"	REINFORCING BARS "v"
1524 (60")	UP TO 4572 (15')	254 (10')	203 (8')	#19@152 (#6@6)	#19@152 (#6@6)	#16@305 (#5@12)	#16@305 (#5@12)
	UP TO 9144 (30')	305 (12')	254 (10')	#22@152 (#7@6)	#22@152 (#7@6)	#19@254 (#6@10)	#19@305 (#6@12)
1829 (72")	UP TO 4572 (15')	254 (10')	203 (8')	#19@152 (#6@6)	#19@152 (#6@6)	#16@305 (#5@12)	#16@305 (#5@12)
	UP TO 9144 (30')	305 (12')	254 (10')	#25@152 (#8@6)	#25@152 (#8@6)	#22@305 (#7@12)	#22@305 (#7@12)
2134 (84")	UP TO 4572 (15')	254 (10')	254 (10')	#22@152 (#7@6)	#22@152 (#7@6)	#16@305 (#5@12)	#16@305 (#5@12)
	UP TO 9144 (30')	356 (14')	254 (10')	#25@152 (#8@6)	#25@152 (#8@6)	#22@305 (#7@12)	#22@305 (#8@12)
2438 (96")	UP TO 4572 (15')	305 (12')	254 (10')	#22@152 (#7@6)	#22@152 (#7@6)	#19@305 (#6@12)	#19@305 (#6@12)
	UP TO 9144 (30')	381 (15')	305 (12')	#25@152 (#8@6)	#25@152 (#8@6)	#22@152 (#7@6)	#22@305 (#8@12)

ALL DIMENSIONS ARE IN MILLIMETERS UNLESS OTHERWISE SHOWN

STANDARD MANHOLE, TYPE "E"

SANITARY SEWER DETAILS
TRUNK SEWER SYSTEM
NO SCALE

SSD-16

YTT	10/09		
YTT	04/09		
RK	02/08		
REVISED BY	DATE REVISED		
YIM T. TSE	NGIM NANCY PE		
CALCULATED-DESIGNED BY	CHECKED BY		
FUNCTIONAL SUPERVISOR	NGIM NANCY PE		

STATE OF CALIFORNIA - DEPARTMENT OF TRANSPORTATION
Caltrans OFFICE OF DESIGN A

S:\projects\2159c1\72159cjc016.dgn

LAST REVISION 00-00-00 | DATE PLOTTED => 22-JUN-2010 | TIME PLOTTED => 10:41

Dist	COUNTY	ROUTE	KILOMETER POST TOTAL PROJECT	SHEET No.	TOTAL SHEETS
07	LA	5	2.9/4.9	353	1082

Caltrans Metric

REGISTERED CIVIL ENGINEER 12-23-09 DATE

6-21-10
PLANS APPROVAL DATE

REGISTERED PROFESSIONAL ENGINEER NGIM NANCY PE No. 58161 Exp. 6-30-10 CIVIL STATE OF CALIFORNIA

THE STATE OF CALIFORNIA OR ITS OFFICERS OR AGENTS SHALL NOT BE RESPONSIBLE FOR THE ACCURACY OR COMPLETENESS OF ELECTRONIC COPIES OF THIS PLAN SHEET.

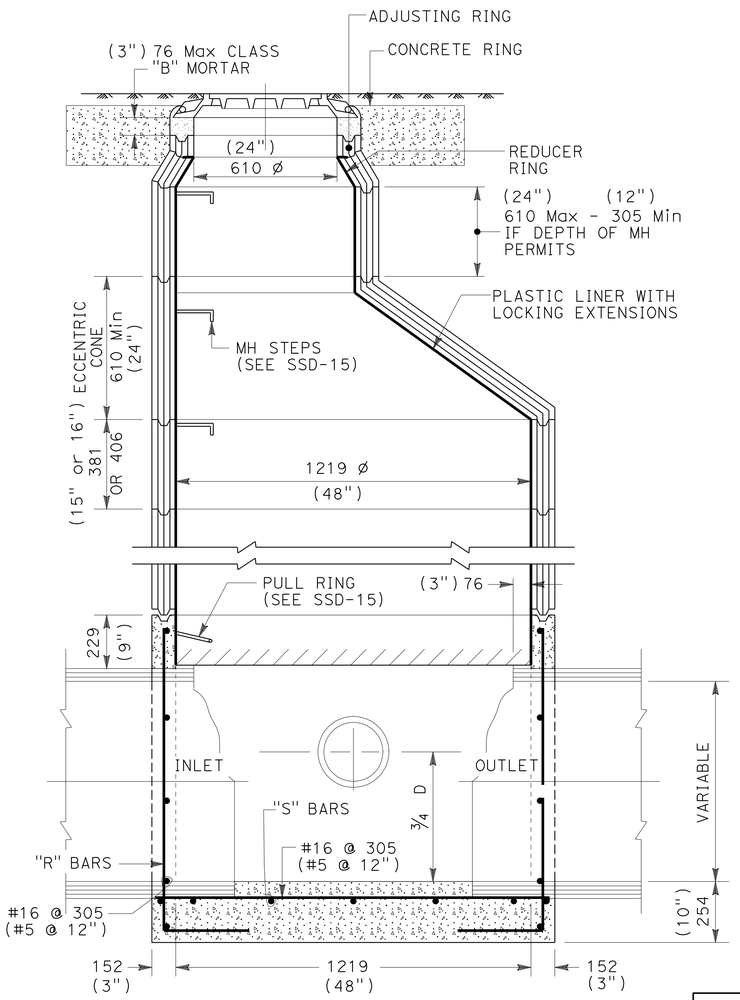

SECTION A-A

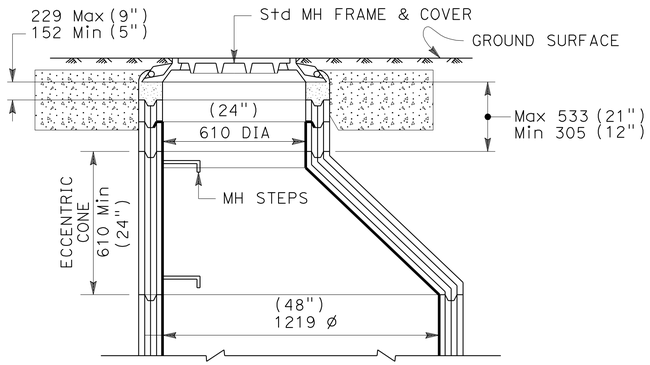

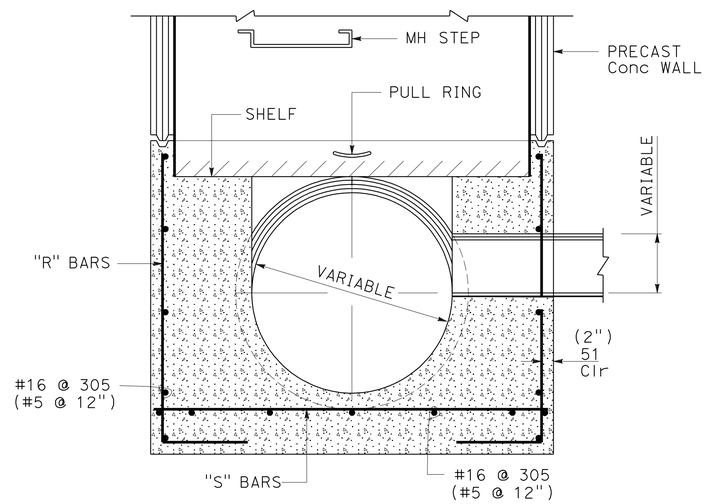

SECTION B-B

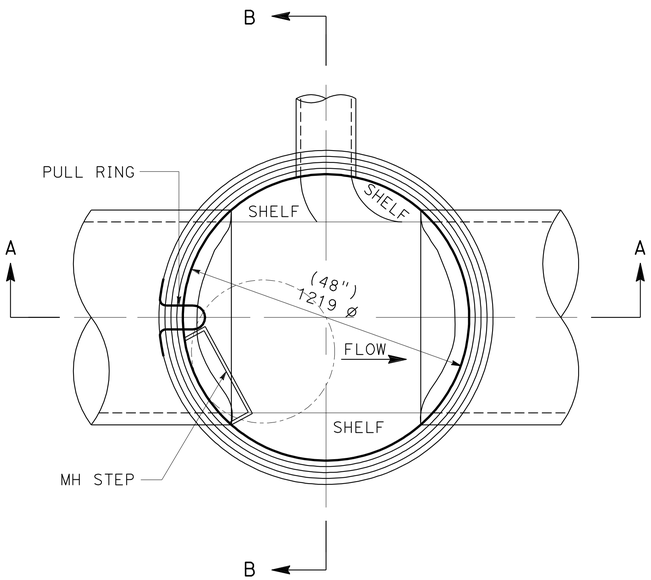

PLAN
FOR 203 TO 762 PIPE

TABLE OF REINFORCING BARS			
PIPE DIAMETER	DEPTH TO Inv	BARS "R"	BARS "S"
203 TO 533 (8" TO 21")	UP TO 4572 (15")	#16 @ 305 (#5 @ 12)	#16 @ 305 (#5 @ 12)
	UP TO 9144 (30")	#19 @ 305 (#6 @ 12)	#19 @ 305 (#6 @ 12)
610 TO 762 (24" TO 30")	UP TO 4572 (15")	#16 @ 305 (#5 @ 12)	#16 @ 305 (#5 @ 12)
	UP TO 9144 (30")	#22 @ 305 (#7 @ 12)	#19 @ 305 (#6 @ 12)

STANDARD MANHOLE, TYPE "D"

ALL DIMENSIONS ARE IN MILLIMETERS
UNLESS OTHERWISE SHOWN

SANITARY SEWER DETAILS
TRUNK SEWER SYSTEM

NO SCALE

SSD-17

REVISED BY	DATE REVISED
YTT	10/09
YTT	04/09
RK	02/08

YIM T. TSE — NGIM NANCY PE
CALCULATED-DESIGNED BY — CHECKED BY
FUNCTIONAL SUPERVISOR — NGIM NANCY PE

STATE OF CALIFORNIA - DEPARTMENT OF TRANSPORTATION
Caltrans OFFICE OF DESIGN A

S:\projects\2159c1\72159cjc017.dgn

LAST REVISION 00-00-00 | DATE PLOTTED => 22-JUN-2010 | TIME PLOTTED => 10:41

Dist	COUNTY	ROUTE	KILOMETER POST TOTAL PROJECT	SHEET No.	TOTAL SHEETS
07	LA	5	2.9/4.9	354	1082

REGISTERED CIVIL ENGINEER 12-23-09 DATE

6-21-10
PLANS APPROVAL DATE

REGISTERED PROFESSIONAL ENGINEER NGIM NANCY PE No. 58161 Exp. 6-30-10 CIVIL STATE OF CALIFORNIA

THE STATE OF CALIFORNIA OR ITS OFFICERS OR AGENTS SHALL NOT BE RESPONSIBLE FOR THE ACCURACY OR COMPLETENESS OF ELECTRONIC COPIES OF THIS PLAN SHEET.

Caltrans Metric

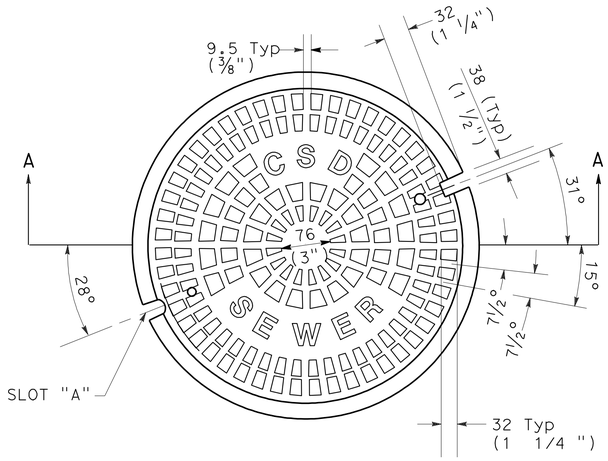

PLAN OF COVER
TOP VIEW

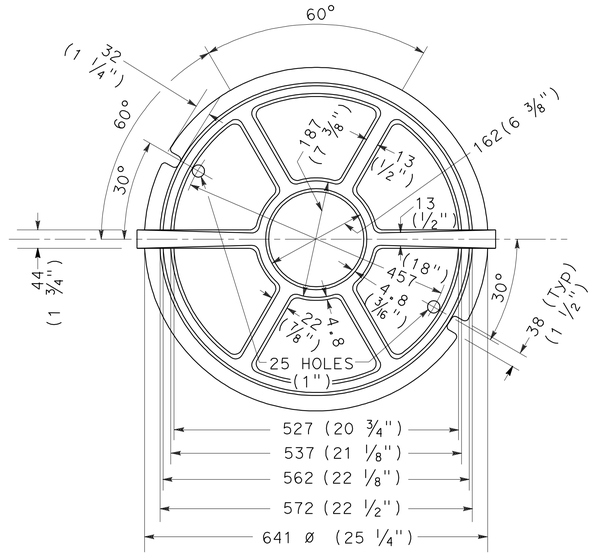

PLAN OF COVER

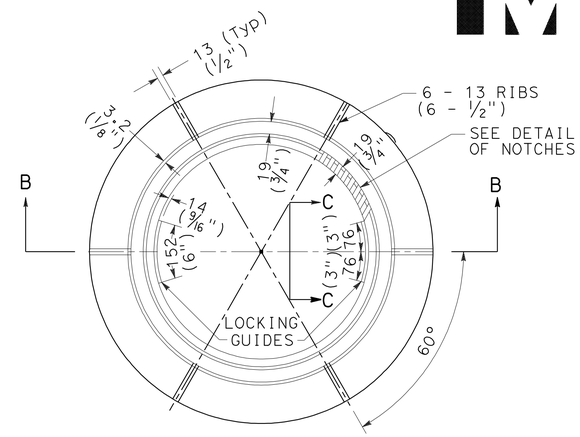

PLAN OF FRAME

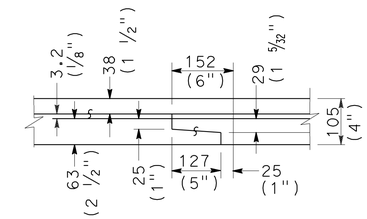

LOCKING GUIDE
SIDE VIEW C-C

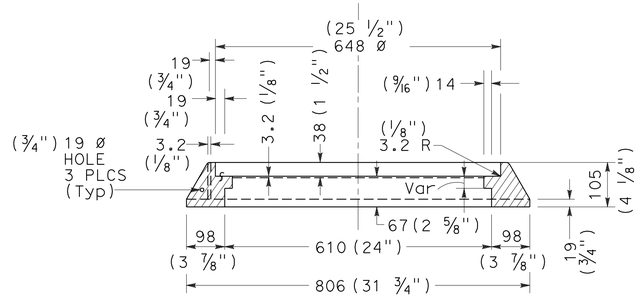

SECTION B-B

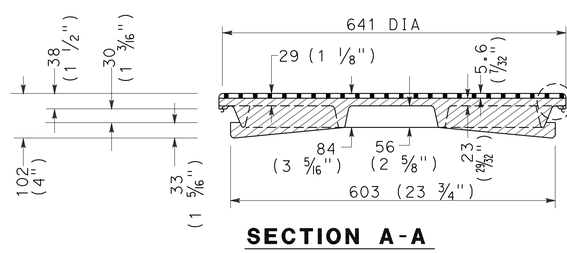

SECTION A-A

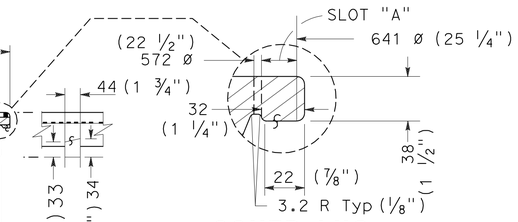

COVER LUG
END VIEW

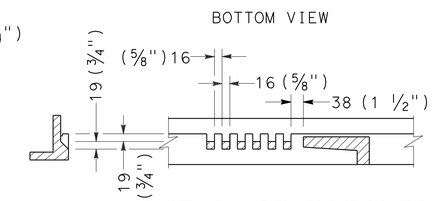

DETAIL OF NOTCHES

STANDARD 610mm (24") LOCKING MANHOLE FRAME AND COVER

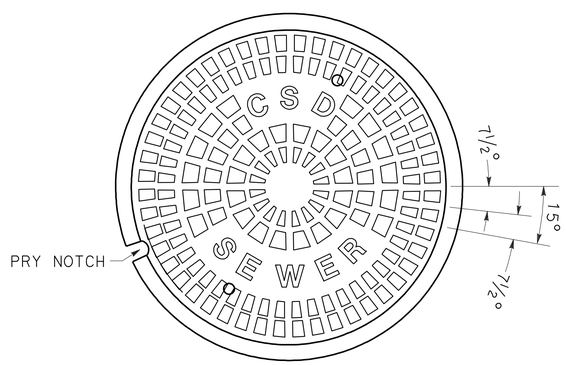

PLAN OF COVER
TOP VIEW

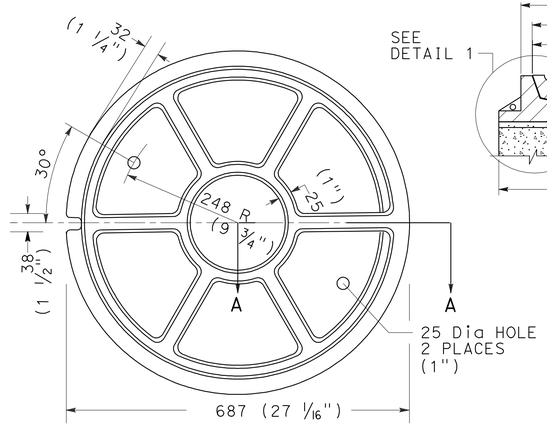

PLAN OF COVER
BOTTOM VIEW

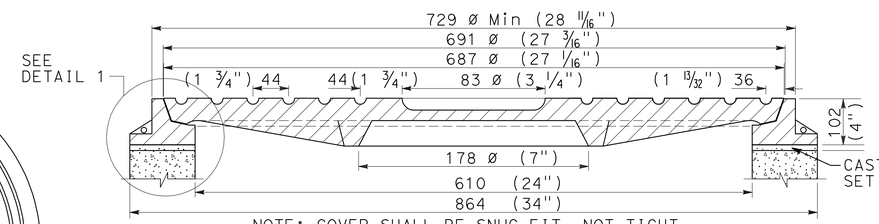

NOTE: COVER SHALL BE SNUG FIT, NOT TIGHT

MANHOLE FRAME AND COVER

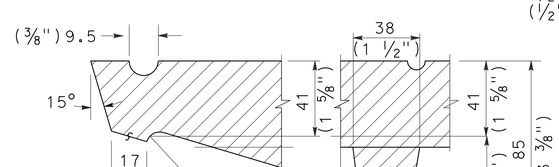

SECTION A-A

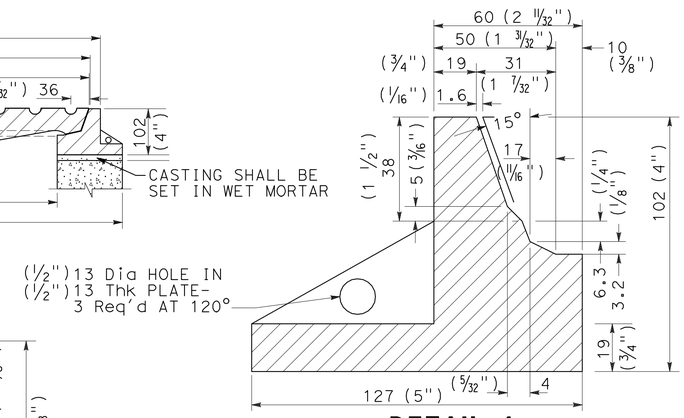

DETAIL 1

ALL DIMENSIONS ARE IN MILLIMETERS
UNLESS OTHERWISE SHOWN

STANDARD 610mm (24") TRAFFIC MANHOLE FRAME AND COVER

SANITARY SEWER DETAILS
TRUNK SEWER SYSTEM
NO SCALE

SSD-18

	YTT	YTT	RK	YIM T. TSE	CALCULATED-DESIGNED BY	FUNCTIONAL SUPERVISOR
REVISED BY	10/09	04/09	02/08	NGIM NANCY PE	CHECKED BY	NGIM NANCY PE
DATE REVISED						

STATE OF CALIFORNIA - DEPARTMENT OF TRANSPORTATION
Caltrans OFFICE OF DESIGN A

S:\projects\2159c1\72159cjc018.dgn

LAST REVISION 00-00-00 | DATE PLOTTED => 22-JUN-2010 | TIME PLOTTED => 10:41

Dist	COUNTY	ROUTE	KILOMETER POST TOTAL PROJECT	SHEET No.	TOTAL SHEETS
07	LA	5	2.9/4.9	355	1082

Caltrans Metric

REGISTERED CIVIL ENGINEER 12-23-09 DATE

6-21-10
PLANS APPROVAL DATE

REGISTERED PROFESSIONAL ENGINEER NGIM NANCY PE No. 58161 Exp. 6-30-10 CIVIL STATE OF CALIFORNIA

THE STATE OF CALIFORNIA OR ITS OFFICERS OR AGENTS SHALL NOT BE RESPONSIBLE FOR THE ACCURACY OR COMPLETENESS OF ELECTRONIC COPIES OF THIS PLAN SHEET.

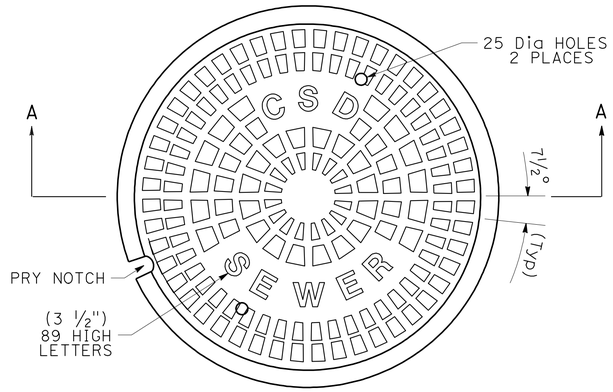

PLAN OF COVER
TOP VIEW

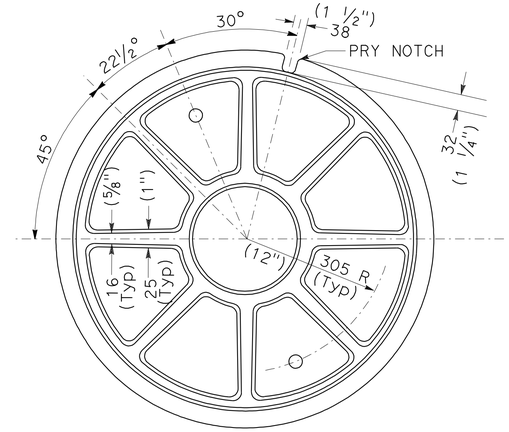

PLAN OF COVER
BOTTOM VIEW

STANDARD 762 MANHOLE COVER
(STANDARD 30" MANHOLE COVER)

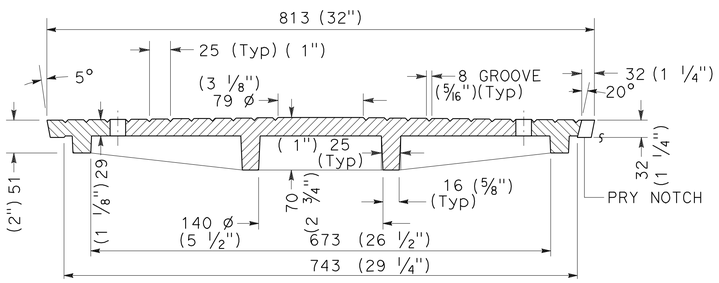

SECTION A-A
762 COVER FOR 762 MH FRAME
(30" COVER FOR 30" MH FRAME)

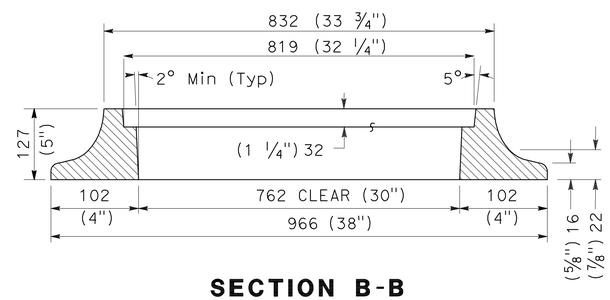

SECTION B-B

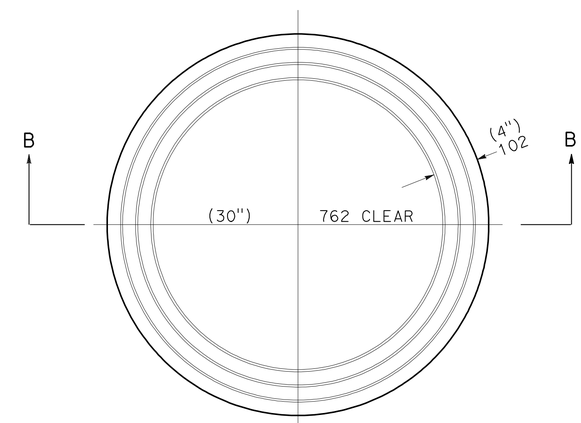

PLAN OF FRAME

STANDARD 762 MANHOLE FRAME
(STANDARD 30" MANHOLE FRAME)

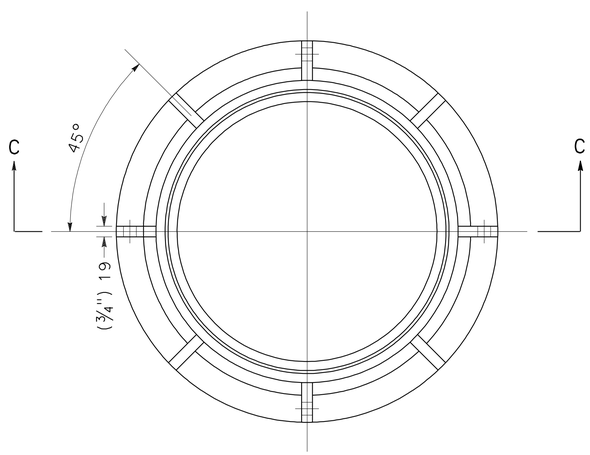

PLAN OF FRAME

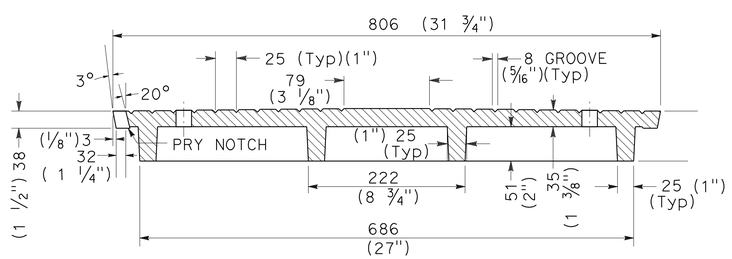

SECTION A-A
762 COVER FOR 914 MH FRAME
(30" COVER FOR 36" MH FRAME)

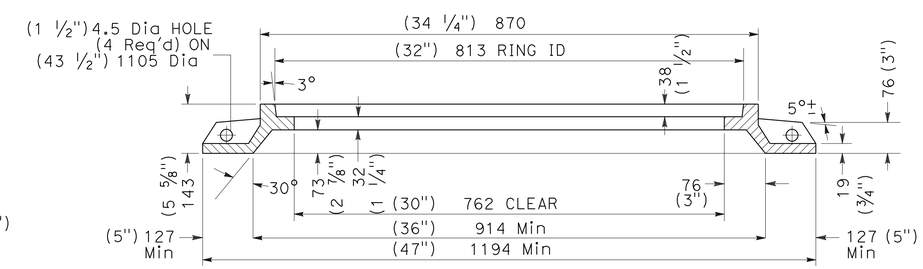

SECTION C-C

STANDARD 914 MANHOLE FRAME FOR 762 COVER
(STANDARD 36" MANHOLE FRAME FOR 30" COVER)

ALL DIMENSIONS ARE IN MILLIMETERS
UNLESS OTHERWISE SHOWN

SANITARY SEWER DETAILS
TRUNK SEWER SYSTEM

NO SCALE

SSD-19

YTT	YTT	YTT	
10/09	04/09	02/08	DATE REVISED
		RK	REVISED BY
YIM T. TSE			
NGIM NANCY PE			
CALCULATED-DESIGNED BY			
CHECKED BY			
FUNCTIONAL SUPERVISOR			
NGIM NANCY PE			

STATE OF CALIFORNIA - DEPARTMENT OF TRANSPORTATION
Caltrans OFFICE OF DESIGN A

S:\projects\2159c1\72159cjc019.dgn

LAST REVISION 00-00-00
DATE PLOTTED => 22-JUN-2010
TIME PLOTTED => 10:42

Dist	COUNTY	ROUTE	KILOMETER POST TOTAL PROJECT	SHEET No.	TOTAL SHEETS
07	LA	5	2.9/4.9	356	1082

REGISTERED CIVIL ENGINEER 12-23-09 DATE

6-21-10
PLANS APPROVAL DATE

REGISTERED PROFESSIONAL ENGINEER NGIM NANCY PE No. 58161 Exp. 6-30-10 CIVIL STATE OF CALIFORNIA

THE STATE OF CALIFORNIA OR ITS OFFICERS OR AGENTS SHALL NOT BE RESPONSIBLE FOR THE ACCURACY OR COMPLETENESS OF ELECTRONIC COPIES OF THIS PLAN SHEET.

Caltrans Metric

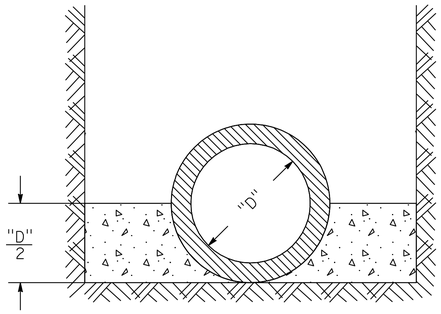

CASE I - CONCRETE CRADLE

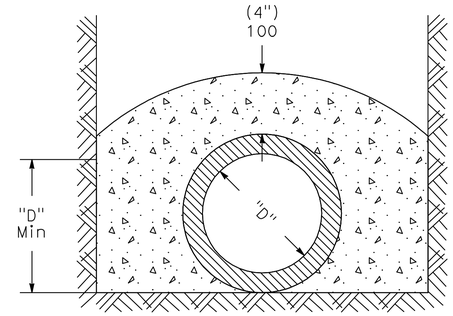

CASE II - CONCRETE ENCASEMENT

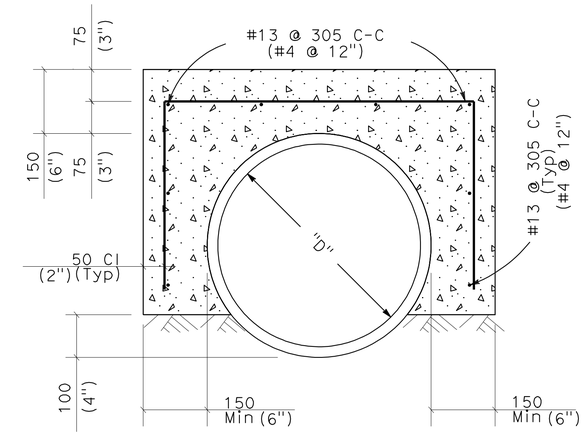

CASE V - CONCRETE ENCASEMENT

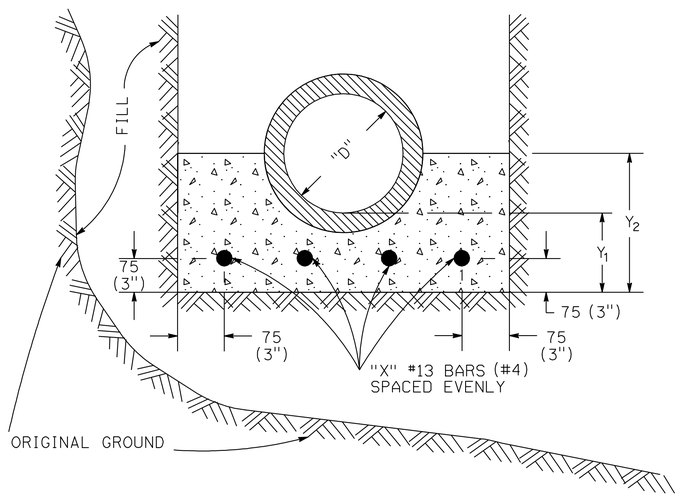

CASE III - SPECIAL CRADLE

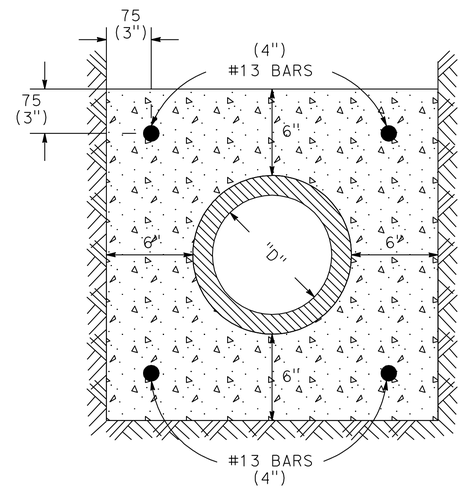

CASE IV - SPECIAL ENCASEMENT

GENERAL NOTES:

1. EXTEND BOTH ENDS OF CRADLE OR ENCASEMENT TO A POINT 25 (ONE INCH) SHORT OF FIRST PIPE JOINT BEYOND LOCATIONS SPECIFIED ON PLAN.

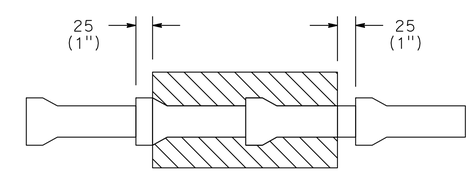

PLAN VIEW

2. APPLY FORM OIL, THIN PLASTIC SHEET, OR OTHER ACCEPTABLE MATERIAL TO PIPE, TO PREVENT BOND BETWEEN PIPE AND CONCRETE.
3. USE TYPE 2 CONCRETE.

SCHEDULE OF DIMENSIONS AND REINFORCING BARS
FOR SPECIAL CRADLE CASE III

"D" (DIAMETER)	"X" NUMBER OF #13 BARS (#4)	THICKNESS	
		Y_1	Y_2
150 = 0.15m = (6")	2	100 = 0.10m = (4")	200 = 0.20m = (8")
200 = 0.20m = (8")	4	125 = 0.13m = (5")	250 = 0.25m = (10")
250 = 0.25m = (10")	4	150 = 0.15m = (6")	300 = 0.30m = (12")
300 = 0.30m = (12")	4	175 = 0.18m = (7")	380 = 0.38m = (15")
380 = 0.38m = (15")	5	225 = 0.23m = (9")	480 = 0.48m = (19")
460 = 0.46m = (18")	5	250 = 0.25m = (10")	560 = 0.56m = (22")
530 = 0.53m = (21")	6	300 = 0.30m = (12")	660 = 0.66m = (26")
610 = 0.61m = (24")	6	325 = 0.33m = (13")	710 = 0.71m = (28")

CRADLING AND ENCASEMENT

ALL DIMENSIONS ARE IN MILLIMETERS
UNLESS OTHERWISE SHOWN

SANITARY SEWER DETAILS

NO SCALE

SSD-20

	REVISED BY	DATE REVISED
YTT	YTT	RK
10/09	04/09	02/08

CALCULATED-DESIGNED BY: YIM T. TSE
CHECKED BY: NGIM NANCY PE
FUNCTIONAL SUPERVISOR: NGIM NANCY PE

STATE OF CALIFORNIA - DEPARTMENT OF TRANSPORTATION
Caltrans OFFICE OF DESIGN A

S:\projects\2159c1\72159cjc020.dgn

LAST REVISION 00-00-00 | DATE PLOTTED => 22-JUN-2010 | TIME PLOTTED => 10:42

Dist	COUNTY	ROUTE	KILOMETER POST TOTAL PROJECT	SHEET No.	TOTAL SHEETS
07	LA	5	2.9/4.9	357	1082

Caltrans Metric

Ngim N. Pe 12-23-09
REGISTERED CIVIL ENGINEER DATE

6-21-10
PLANS APPROVAL DATE

REGISTERED PROFESSIONAL ENGINEER NGIM NANCY PE No. 58161 Exp. 6-30-10 CIVIL STATE OF CALIFORNIA

THE STATE OF CALIFORNIA OR ITS OFFICERS OR AGENTS SHALL NOT BE RESPONSIBLE FOR THE ACCURACY OR COMPLETENESS OF ELECTRONIC COPIES OF THIS PLAN SHEET.

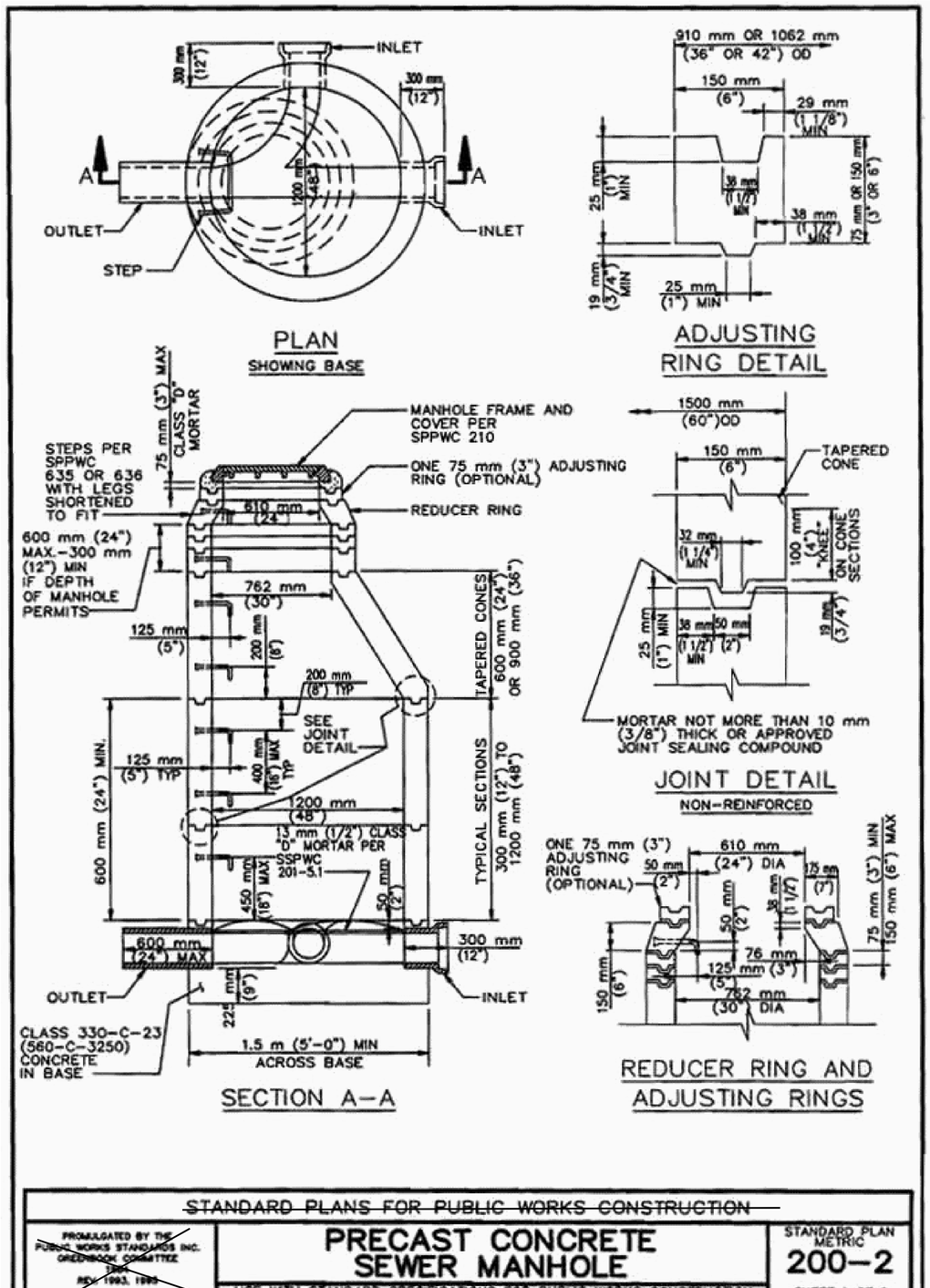

~~STANDARD PLANS FOR PUBLIC WORKS CONSTRUCTION~~

~~PROMULGATED BY THE PUBLIC WORKS STANDARDS INC. GREENBOOK COMMITTEE 1967 REV. 1993, 1995~~

PRECAST CONCRETE SEWER MANHOLE

~~USE WITH STANDARD SPECIFICATIONS FOR PUBLIC WORKS CONSTRUCTION~~

STANDARD PLAN METRIC **200–2** SHEET 1 OF 2

NOTES:

1. EXCEPT AS NOTED HEREON, THE PRECAST UNITS SHALL BE MANUFACTURED AND TESTED IN ACCORDANCE WITH ASTM C 478. AS AN ALTERNATE CURING METHOD, THE UNITS MAY BE CURED USING SATURATED STEAM FOR A MINIMUM OF 12 HOURS FOLLOWED BY 6 DAYS OF WATER CURING OR MEMBRANE CURING. IF THE UNITS ARE CURED BY THE ALTERNATE METHOD, THEY SHALL NOT BE SHIPPED PRIOR TO 8 DAYS AFTER CASTING NOR UNTIL THE CONCRETE HAS ATTAINED A STRENGTH OF 25 MPa (3500 PSI)
2. MANHOLE STEPS SHALL CONFORM TO SPPWC 635 TYPE 1 OR 3 OR SPPWC 636. THE MANHOLE STEPS SHALL BE UNIFORMLY SPACED AT A MAXIMUM OF 400 mm (16"). THE LOWEST STEP SHALL BE PLACED NOT LESS THAN 200 mm (8") NOR MORE THAN 450 mm (18") ABOVE THE SHELF. THE STEPS SHALL PROJECT 125 mm (5") INSIDE THE MANHOLE.
3. RISER SECTIONS MAY BE REINFORCED OR UNREINFORCED. REINFORCED SECTIONS SHALL BE REINFORCED IN ACCORDANCE WITH ASTM C 478 AND SHALL HAVE A MINIMUM WALL THICKNESS OF 125 mm (5"). UNREINFORCED RISER SECTIONS SHALL HAVE A MINIMUM WALL THICKNESS OF 150 mm (6").
4. THE 600 mm x 1200 mm (24"x48") ECCENTRIC CONES MAY BE REINFORCED OR UNREINFORCED. IF REINFORCED, THE WALL THICKNESS SHALL BE NOT LESS THAN 125 mm (5"). IF UNREINFORCED, THE WALL THICKNESS SHALL NOT BE LESS THAN 150 mm (6").
5. JOINTS SHALL BE TONGUE AND GROOVE. JOINTS FOR REINFORCED STRUCTURES SHALL CONFORM WITH ASTM C 478 SECTION 14.
6. PRECAST UNITS SHALL BE ASSEMBLED USING CLASS "B" MORTAR.
7. IF 762 mm (30") DIAMETER MANHOLE FRAME AND COVER IS REQUIRED, IT SHALL BE INSTALLED WHERE THE REDUCER RING IS SHOWN IN THE SECTION.
8. FOR REINFORCED PRECAST STRUCTURES, ALL REINFORCEMENT SHALL HAVE A MINIMUM OF 50 mm (2") OF COVER OVER THE STEEL ON THE INSIDE FACE.
9. THE TOP OPENING OF THE MANHOLE AND THE STEPS SHALL BE PLACED DIRECTLY OVER THE OUTLET OF THE STRUCTURE EXCEPT AS OTHERWISE NOTED ON PLANS.
10. CONCRETE BASE AND STUB WALLS SHALL BE POURED IN ONE OPERATION TO A POINT 50 mm (2") ABOVE THE INLET AND OUTLET PIPES. ALL PIPES SHALL BE RIGIDLY SUPPORTED BY TEMPORARY PIERS OR OTHER METHODS DURING THE OPERATION. CONCRETE SHALL SET FOR 24 HOURS BEFORE PLACING PRECAST UNITS.

~~STANDARD PLANS FOR PUBLIC WORKS CONSTRUCTION~~

PRECAST CONCRETE SEWER MANHOLE

STANDARD PLAN METRIC **200–2** SHEET 2 OF 2

ALL DIMENSIONS ARE IN METERS UNLESS OTHERWISE SHOWN

SANITARY SEWER DETAILS
NO SCALE
SSD-21

YTT	YTT	RK	YIM T. TSE
10/09	04/09	02/08	NGIM NANCY PE
DATE REVISED		REVISED BY	CALCULATED-DESIGNED BY
			CHECKED BY
			FUNCTIONAL SUPERVISOR
			NGIM NANCY PE

STATE OF CALIFORNIA - DEPARTMENT OF TRANSPORTATION
Caltrans OFFICE OF DESIGN A

S:\projects\2159c1\72159cjc021.dgn

LAST REVISION 00-00-00 DATE PLOTTED => 31-JAN-2011 TIME PLOTTED => 14:54

Dist	COUNTY	ROUTE	KILOMETER POST TOTAL PROJECT	SHEET No.	TOTAL SHEETS
07	LA	5	2.9/4.9	358	1082

Caltrans Metric

REGISTERED CIVIL ENGINEER 12-23-09 DATE

6-21-10
PLANS APPROVAL DATE

REGISTERED PROFESSIONAL ENGINEER NGIM NANCY PE No. 58161 Exp. 6-30-10 CIVIL STATE OF CALIFORNIA

THE STATE OF CALIFORNIA OR ITS OFFICERS OR AGENTS SHALL NOT BE RESPONSIBLE FOR THE ACCURACY OR COMPLETENESS OF ELECTRONIC COPIES OF THIS PLAN SHEET.

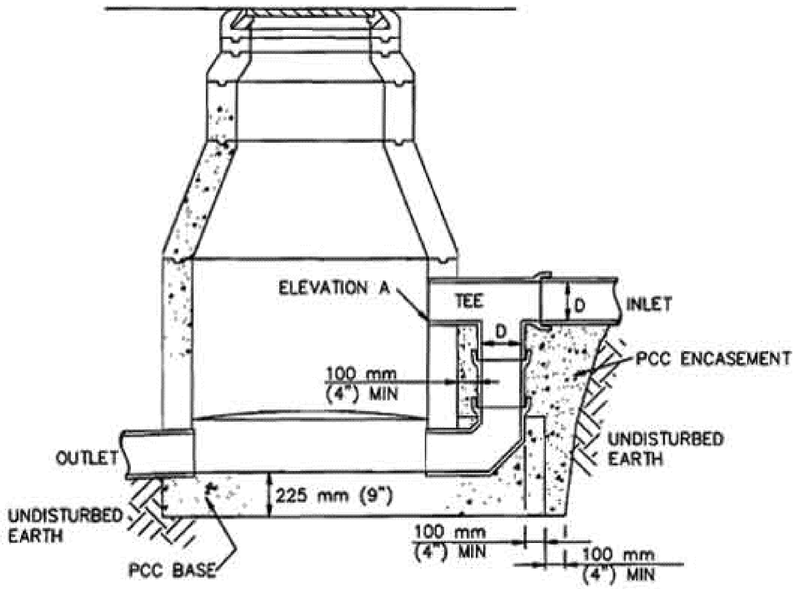

SECTION A–A

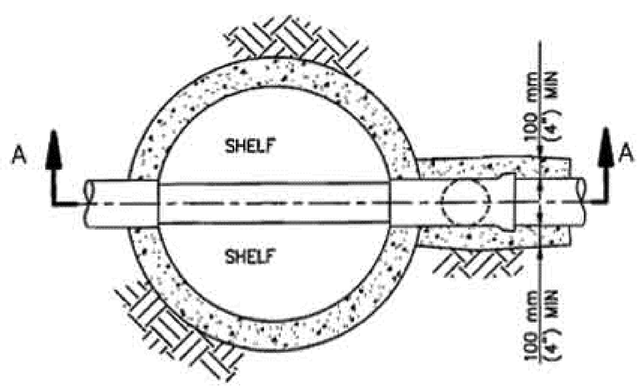

PLAN

~~STANDARD PLANS FOR PUBLIC WORKS CONSTRUCTION~~

~~PROMULGATED BY THE PUBLIC WORKS STANDARDS INC. GREENBOOK COMMITTEE 1994 REV. 2005~~

DROP SEWER MANHOLE

USE WITH STANDARD SPECIFICATIONS FOR PUBLIC WORKS CONSTRUCTION

STANDARD PLAN METRIC **202–1** SHEET 1 OF 2

NOTES:

1. EXCEPT AS SHOWN ON THIS PLAN, MANHOLES SHALL CONFORM TO SPPWC 200 OR 203.
2. PIPE FOR THE DROP INLET SHALL BE THE SAME MATERIAL AS THE SEWER UNLESS APPROVED ADAPTERS ARE USED. IF SO, THE PIPE MAY BE VCP, ABS SOLID WALL, ABS COMPOSITE, PVC PLASTIC, OR POLYETHELYNE.
3. FOR BRICK MANHOLES, A BRICK ARCH IS ALSO REQUIRED OVER THE UPPER INLET PIPE.
4. IF TWO OR MORE DROP INLETS ARE REQUIRED IN A SINGLE MANHOLE, EACH SHALL BE CONSTRUCTED SEPARATELY.

~~STANDARD PLANS FOR PUBLIC WORKS CONSTRUCTION~~

DROP SEWER MANHOLE

STANDARD PLAN METRIC **202–1** SHEET 2 OF 2

ALL DIMENSIONS ARE IN METERS
UNLESS OTHERWISE SHOWN

SANITARY SEWER DETAILS
NO SCALE
SSD-22

YTT	YTT	RK
10/09	04/09	02/08
REVISED BY	DATE REVISED	

YIM T. TSE — NGIM NANCY PE

CALCULATED-DESIGNED BY — CHECKED BY

FUNCTIONAL SUPERVISOR — NGIM NANCY PE

STATE OF CALIFORNIA - DEPARTMENT OF TRANSPORTATION
Caltrans OFFICE OF DESIGN A

S:\projects\2159c1\72159cjc022.dgn

LAST REVISION 00-00-00 | DATE PLOTTED => 31-JAN-2011 | TIME PLOTTED => 14:54

Dist	COUNTY	ROUTE	KILOMETER POST TOTAL PROJECT	SHEET No.	TOTAL SHEETS
07	LA	5	2.9/4.9	359	1082

Caltrans Metric

REGISTERED CIVIL ENGINEER 12-23-09 DATE

6-21-10
PLANS APPROVAL DATE

REGISTERED PROFESSIONAL ENGINEER NGIM NANCY PE No. 58161 Exp. 6-30-10 CIVIL STATE OF CALIFORNIA

THE STATE OF CALIFORNIA OR ITS OFFICERS OR AGENTS SHALL NOT BE RESPONSIBLE FOR THE ACCURACY OR COMPLETENESS OF ELECTRONIC COPIES OF THIS PLAN SHEET.

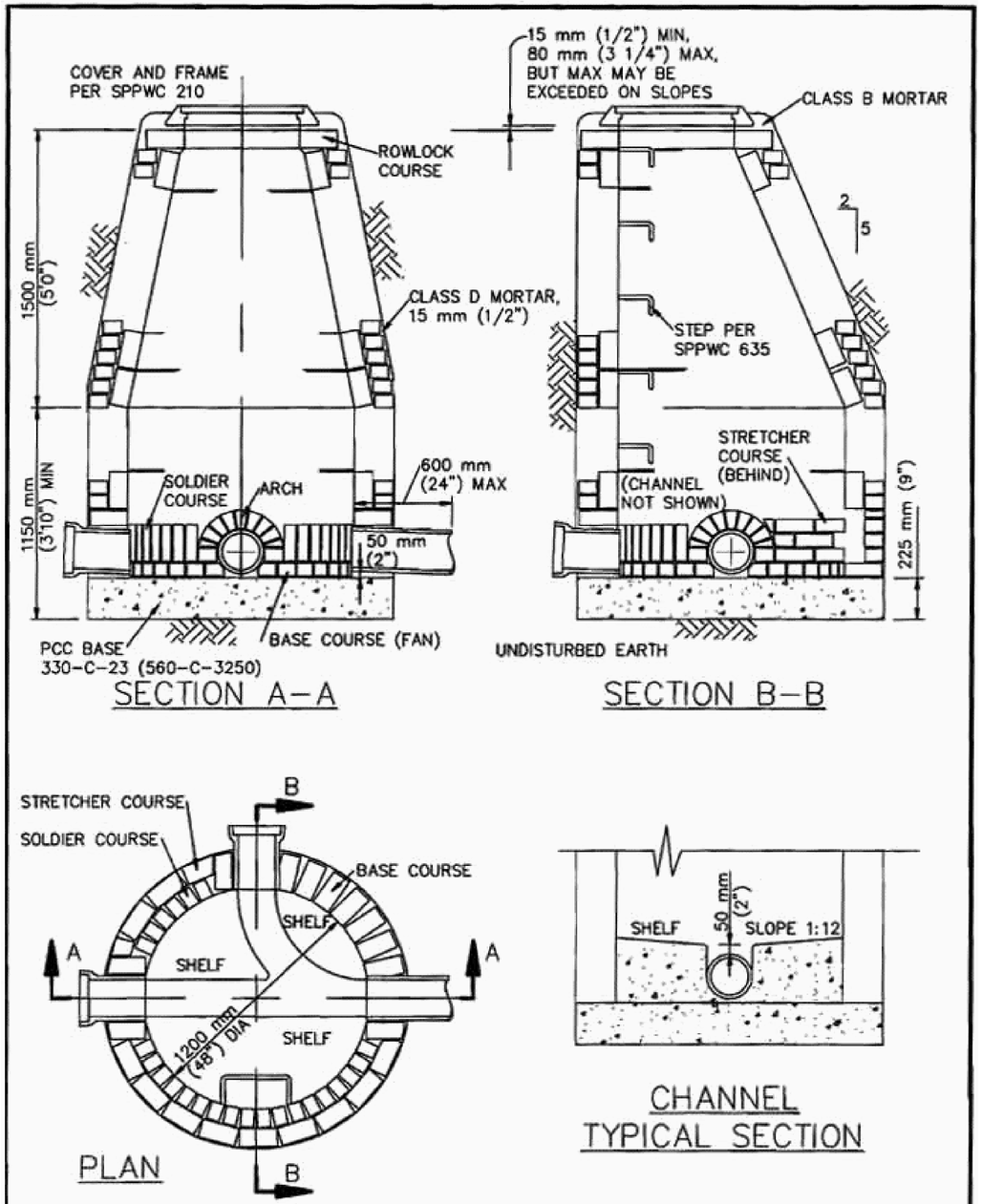

~~STANDARD PLANS FOR PUBLIC WORKS CONSTRUCTION~~

~~PROMULGATED BY THE PUBLIC WORKS STANDARDS INC. GREENBOOK COMMITTEE 1993 REV. 2005~~

BRICK SEWER MANHOLE

USE WITH STANDARD SPECIFICATIONS FOR PUBLIC WORKS CONSTRUCTION

STANDARD PLAN METRIC **203-1** SHEET 1 OF 2

NOTES:

1. CONCRETE BASE: DURING CONSTRUCTION, ALL PIPES SHALL BE RIGIDLY SUPPORTED BY BRICK PIERS 300 mm (12") DEEP, LOCATED JUST OUTSIDE THE STRUCTURE. CONSTRUCT TOP OF CONCRETE BASE 50 mm (2") BELOW INVERT OF LOWEST PIPE. FILL SPACE BENEATH PIPE WITH MORTAR AND SHOVE FROM BOTH SIDES WITH BASE COURSE BRICK TO FORM A WATER-TIGHT JOINT.
2. BASE OF FAN COURSE: LAY BRICK FLAT ON RADIAL LINES WITH TOPS TO SAME LEVEL.
3. ARCHES: LAY SPALLED BRICK ON EDGE TO FORM A TRUE RADIAL ARCH WITH FULL MORTAR JOINT AROUND ALL PIPE OPENINGS. TURN ARCH OF TWO SUCH COURSES OVER PIPES 375 mm (15") OR MORE IN DIAMETER.
4. SOLDIER COURSES: LAY INSIDE BRICK ON RADIAL LINES WITH FIRST FOUR COURSES VERTICAL. LAY SUCCEEDING COURSES WITH A UNIFORM BATTER TO OBTAIN AN INSIDE DIAMETER OF 600 mm (24") AT TOP OF LAST OR FRACTIONAL SOLDIER COURSE. USE SPLIT BRICK TO CLOSE SOLDIER COURSE.
5. STRETCHER COURSES: LAY OUTSIDE BRICK FLAT IN A DEEP BED OF MORTAR. SHOVE BRICK TOGETHER AGAINST ADJACENT SOLDIER COURSE.
6. ROWLOCK COURSE: LAY LAST COURSE OF BRICK ON EDGE ACROSS SOLDIER AND STRETCHER COURSES ON RADIAL LINES, WITH TOPS PARALLEL AND 120 mm (4 1/2") BELOW FINISHED GRADE.
7. JOINTS: INSIDE JOINTS SHALL BE NEATLY STRUCK AND SHALL NOT EXCEED 10 mm (3/8") IN THICKNESS.
8. STEPS: MANHOLE STEPS SHALL CONFORM WITH SPPWC 635 TYPE 3. THE TOP STEP SHALL BE PLACED JUST UNDER THE MANHOLE FRAME. THE LOWEST STEP SHALL BE PLACED BETWEEN 200 mm (8") AND 600 mm (24") ABOVE THE SHELF.
9. WALL THICKNESS: BRICKWORK SHALL BE 200 mm (8") THICK TO A DEPTH OF 6.5 m (22'). BRICKWORK BELOW 6.5 m (22') DEEP SHALL BE 300 mm (12") THICK.
10. A FLEXIBLE JOINT SHALL BE INSTALLED AT THE FIRST JOINT FROM MANHOLE FOR ALL CONNECTIONS EXCEPT THOSE WITH REINFORCED CONCRETE PIPE.

~~STANDARD PLANS FOR PUBLIC WORKS CONSTRUCTION~~

BRICK SEWER MANHOLE

STANDARD PLAN METRIC **203-1** SHEET 2 OF 2

ALL DIMENSIONS ARE IN METERS UNLESS OTHERWISE SHOWN

SANITARY SEWER DETAILS
NO SCALE
SSD-23

YTT	YTT	RK	YIM T. TSE
10/09	04/09	02/08	NGIM NANCY PE
YTT	YTT	RK	NGIM NANCY PE
10/09	04/09	02/08	NGIM NANCY PE

CALCULATED-DESIGNED BY / CHECKED BY / REVISED BY / DATE REVISED / FUNCTIONAL SUPERVISOR

STATE OF CALIFORNIA - DEPARTMENT OF TRANSPORTATION
Caltrans OFFICE OF DESIGN A

S:\projects\2159c1\72159cjc023.dgn

LAST REVISION 00-00-00 | DATE PLOTTED => 31-JAN-2011 | TIME PLOTTED => 14:54

BORDER LAST REVISED 3/1/2007 | RELATIVE BORDER SCALE IS IN MILLIMETERS 0 20 40 60 80 | USERNAME => trmnguye | DGN FILE => 72159cjc023.dgn | CU 07225 | EA 2159C1

Dist	COUNTY	ROUTE	KILOMETER POST TOTAL PROJECT	SHEET No.	TOTAL SHEETS
07	LA	5	2.9/4.9	360	1082

Caltrans Metric

REGISTERED CIVIL ENGINEER 12-23-09 DATE

6-21-10
PLANS APPROVAL DATE

REGISTERED PROFESSIONAL ENGINEER NGIM NANCY PE No. 58161 Exp. 6-30-10 CIVIL STATE OF CALIFORNIA

THE STATE OF CALIFORNIA OR ITS OFFICERS OR AGENTS SHALL NOT BE RESPONSIBLE FOR THE ACCURACY OR COMPLETENESS OF ELECTRONIC COPIES OF THIS PLAN SHEET.

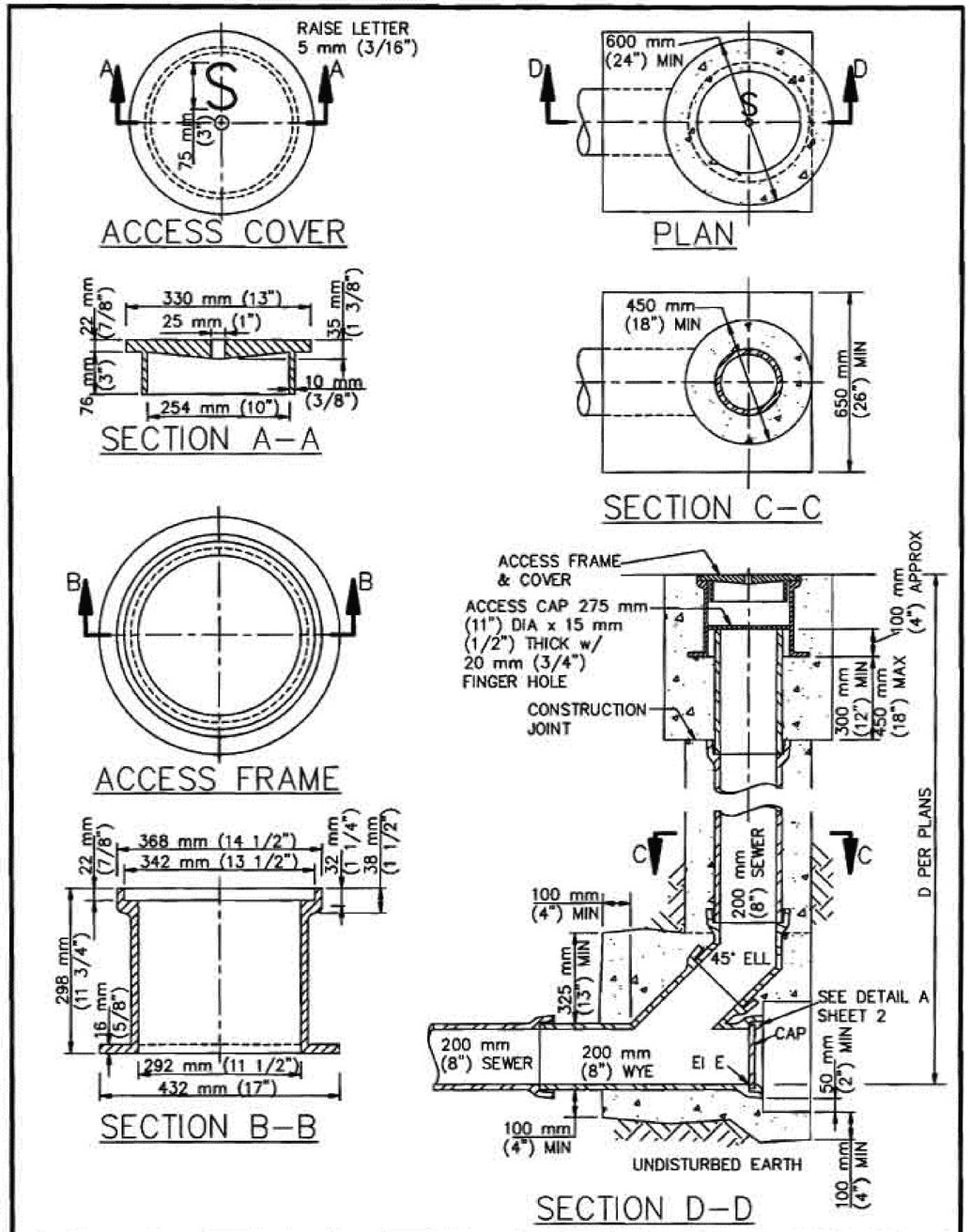

STANDARD PLANS FOR PUBLIC WORKS CONSTRUCTION

PROMULGATED BY THE PUBLIC WORKS STANDARDS INC. GREENBOOK COMMITTEE 1993 REV. 2005

TERMINAL CLEANOUT STRUCTURE

USE WITH STANDARD SPECIFICATIONS FOR PUBLIC WORKS CONSTRUCTION

STANDARD PLAN METRIC **204–1** SHEET 1 OF 2

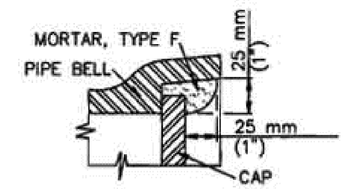

DETAIL A

NOTES:

1. SEE PLANS FOR VALUES OF DIMENSION D AND ELEVATION E.
2. PIPE AND FITTINGS, UNLESS OTHERWISE NOTED, SHALL BE OF THE SAME MATERIALS AS THE SEWER, UNLESS APPROVED ADAPTORS ARE USED, AND MAY BE ANY OF THE FOLLOWING:
   A. VC PIPE
   B. PE PIPE
   C. ABS SOLID WALL PIPE
   D. ABS COMPOSITE PIPE
   E. PVC PLASTIC PIPE
3. PIPE AND FITTINGS SHALL BE BEDDED AND ENCASED IN PCC AS SHOWN. PCC SHALL BE CLASS 265–C–14 (450–C–2000). JOIN AND ALIGN PIPE AND FITTINGS BEFORE PLACING CONCRETE. MAINTAIN ALIGNMENT WHILE PLACING AND ALLOWING PCC TO SET.
4. THE ACCESS FRAME, COVER AND CAP SHALL BE CAST IRON. THE FINGER HOLES MAY BE DRILLED OR BLOCKED OUT PRIOR TO CASTING. THEY SHALL NOT BE PUNCHED OUT.
5. THE CONTRACTOR MAY PLACE EITHER CIRCULAR OR SQUARE CONCRETE PIPE WALL SUPPORTS.

STANDARD PLANS FOR PUBLIC WORKS CONSTRUCTION

TERMINAL CLEANOUT STRUCTURE

STANDARD PLAN METRIC **204–1** SHEET 2 OF 2

ALL DIMENSIONS ARE IN METERS UNLESS OTHERWISE SHOWN

SANITARY SEWER DETAILS
NO SCALE
SSD-24

	REVISED BY	DATE REVISED
YTT	YTT	RK
10/09	04/09	02/08

CALCULATED-DESIGNED BY: YIM T. TSE
CHECKED BY: NGIM NANCY PE
FUNCTIONAL SUPERVISOR: NGIM NANCY PE

STATE OF CALIFORNIA - DEPARTMENT OF TRANSPORTATION
Caltrans OFFICE OF DESIGN A

S:\projects\2159c1\72159cjc024.dgn

LAST REVISION 00-00-00 | DATE PLOTTED => 31-JAN-2011 | TIME PLOTTED => 14:54

Dist	COUNTY	ROUTE	KILOMETER POST TOTAL PROJECT	SHEET No.	TOTAL SHEETS
07	LA	5	2.9/4.9	361	1082

Caltrans Metric

REGISTERED CIVIL ENGINEER 12-23-09 DATE

6-21-10
PLANS APPROVAL DATE

REGISTERED PROFESSIONAL ENGINEER NGIM NANCY PE No. 58161 Exp. 6-30-10 CIVIL STATE OF CALIFORNIA

THE STATE OF CALIFORNIA OR ITS OFFICERS OR AGENTS SHALL NOT BE RESPONSIBLE FOR THE ACCURACY OR COMPLETENESS OF ELECTRONIC COPIES OF THIS PLAN SHEET.

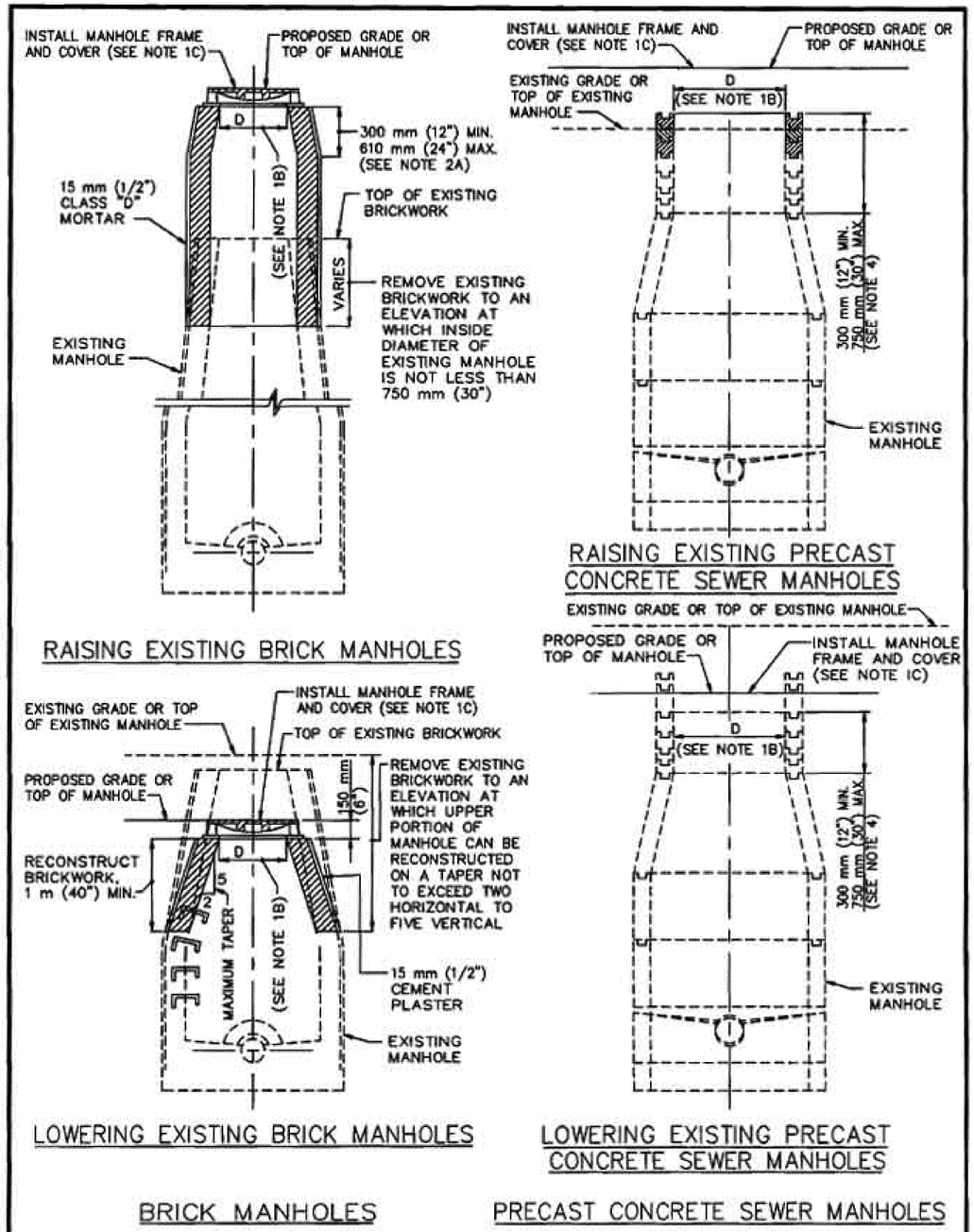

BRICK MANHOLES

PRECAST CONCRETE SEWER MANHOLES

~~STANDARD PLANS FOR PUBLIC WORKS CONSTRUCTION~~

~~PROMULGATED BY THE PUBLIC WORKS STANDARD, INC. GREENBOOK COMMITTEE 1984 REV. 1988~~

SEWER MANHOLE ADJUSTMENT

~~USE WITH STANDARD SPECIFICATIONS FOR PUBLIC WORKS CONSTRUCTION~~

STANDARD PLAN METRIC
205-1
SHEET 1 OF 3

ALL DIMENSIONS ARE IN METERS UNLESS OTHERWISE SHOWN

SANITARY SEWER DETAILS
NO SCALE
SSD-25

YTT	YTT	RK	YIM T. TSE
10/09	04/09	02/08	NGIM NANCY PE
YTT	YTT		
10/09	04/09		

REVISED BY / DATE REVISED

CALCULATED-DESIGNED BY / CHECKED BY

FUNCTIONAL SUPERVISOR: NGIM NANCY PE

STATE OF CALIFORNIA - DEPARTMENT OF TRANSPORTATION
Caltrans OFFICE OF DESIGN A

S:\projects\2159c1\72159cjc025.dgn

LAST REVISION 00-00-00 | DATE PLOTTED => 31-JAN-2011 | TIME PLOTTED => 14:55

Dist	COUNTY	ROUTE	KILOMETER POST TOTAL PROJECT	SHEET No.	TOTAL SHEETS
07	LA	5	2.9/4.9	362	1082

Caltrans Metric

REGISTERED CIVIL ENGINEER 12-23-09 DATE

6-21-10
PLANS APPROVAL DATE

REGISTERED PROFESSIONAL ENGINEER NGIM NANCY PE No. 58161 Exp. 6-30-10 CIVIL STATE OF CALIFORNIA

THE STATE OF CALIFORNIA OR ITS OFFICERS OR AGENTS SHALL NOT BE RESPONSIBLE FOR THE ACCURACY OR COMPLETENESS OF ELECTRONIC COPIES OF THIS PLAN SHEET.

NOTES:

1. GENERAL
   A. EXCEPT AS INDICATED HEREON OR ON THE PLANS, MANHOLES SHALL CONFORM TO: SPPWC 200, PRECAST CONCRETE SEWER MANHOLE AND SPPWC 203, BRICK SEWER MANHOLE.
   B. DIMENSION "D" SHALL BE THE SAME AS THE SIZE OF MANHOLE FRAME AND COVER TO BE USED.
   C. THE CONTRACTOR MAY REUSE THE EXISTING MANHOLE FRAME AND COVER, UNLESS DAMAGED DURING THE WORK OR WHEN OTHERWISE SHOWN IN THE CONTRACT DOCUMENTS. ITEMS DAMAGED BY THE CONTRACTOR SHALL BE REPLACED WITH IDENTICAL NEW ITEMS AT NO EXPENSE TO THE AGENCY.
   D. EXISTING STEPS LOCATED WITHIN REMOVAL LIMITS SHALL BE REPLACED. WHEN REMOVAL OF EXISTING STEPS BEYOND THE MANHOLE REMOVAL LIMITS IS SHOWN ON THE PLANS, THE STEPS SHALL BE REMOVED TO A DEPTH OF 50 mm (2") BEYOND THE INSIDE FACE OF THE BRICK MANHOLE AND THE HOLES SHALL BE FILLED WITH CLASS "D" MORTAR.
2. RAISING EXISTING BRICK MANHOLES
   A. BRICK MANHOLES TO BE RAISED LESS THAN 300 mm (1') MAY BE EXTEND VERTICALLY, PROVIDED THAT AT A DEPTH OF 750 mm (2 1/2') BELOW THE TOP OF THE MANHOLE AT ITS NEW ELEVATION, THE INSIDE DIAMETER OF THE MANHOLE IS 750 mm (30") OR GREATER.
   B. BRICK MANHOLES TO BE RAISED LESS THAN 90 mm (3 1/2") MAY BE RAISED BY APPLYING CLASS "D" MORTAR TO THE TOP OF THE EXISTING BRICKWORK. IF THE BRICK MANHOLE IS TO BE RAISED 90 mm (3 1/2") OR MORE, A NEW COURSE OR COURSES OF BRICKWORK SHALL BE PLACED ON TOP OF THE EXISTING BRICKWORK.
3. LOWERING EXISTING BRICK MANHOLES
   A. WHERE A BRICK MANHOLE IS TO BE LOWERED LESS THAN 300 mm (1'), THE FRAME MAY BE RESET ON THE EXISTING BRICKWORK AND THE 1 m (40") MINIMUM BRICKWORK RECONSTRUCTION OMITTED, PROVIDED THAT THE BASE OF THE FRAME DOES NOT OVERHANG THE BRICKWORK ON THE INSIDE SURFACE OF THE MANHOLE MORE THAN AN AVERAGE OF 35 mm (1 1/2") IN ANY QUADRANT NOR MORE THAN 50 mm (2") AT ANY POINT.
4. RAISING EXISTING PRECAST CONCRETE SEWER MANHOLES
   A. PRECAST CONCRETE MANHOLES TO BE RAISED LESS THAN 75 mm (3") MAY BE RAISED BY APPLYING CLASS "D" MORTAR TO THE TOP OF THE EXISTING MANHOLE, PROVIDED THE TOTAL HEIGHT OF MORTAR, EXISTING AND NEWLY APPLIED, DOES NOT EXCEED 75 mm (3").
   B. WHERE THE PRECAST CONCRETE MANHOLE IS TO BE RAISED 75 mm (3") OR MORE, OR WHERE THE TOTAL HEIGHT OF MORTAR, EXISTING AND NEWLY APPLIED, WOULD EXCEED 75 mm (3"), GRADE RINGS SHALL BE UTILIZED. CLASS "D" MORTAR MAY BE USED FOR FINAL ADJUSTMENT, BUT NOT MORE THAN 75 mm (3") IN HEIGHT. WHERE RAISING THE MANHOLE WOULD RESULT IN THE UPPER SEGMENT OF THE SHAFT BEING MORE THAN 750 mm (30") IN HEIGHT, REMOVE THE REDUCER AND THE UPPER SEGMENT OF THE SHAFT, INSTALL ADDITIONAL RINGS OR PIPE TO THE LOWER SEGMENT OF THE SHAFT, AND REINSTALL THE REDUCER AND GRADE RINGS AS REQUIRED.

~~STANDARD PLANS FOR PUBLIC WORKS CONSTRUCTION~~

SEWER MANHOLE ADJUSTMENT

STANDARD PLAN METRIC **205-1** SHEET 2 OF 3

5. LOWERING EXISTING PRECAST CONCRETE SEWER MANHOLES
   A. REMOVE SUFFICIENT GRADE RINGS TO LOWER THE MANHOLES AS REQUIRED. APPLY CLASS "D" MORTAR TO A HEIGHT NOT EXCEEDING 75 mm (3") FOR ADJUSTMENT TO FINAL GRADE.
   B. WHERE REMOVAL OF GRADE RINGS WOULD RESULT IN THE UPPER SEGMENT OF THE SHAFT BEING LESS THAN 300 mm (12") IN HEIGHT, REMOVE THE REDUCER AND SUFFICIENT SECTIONS OF THE LOWER SEGMENT OF THE SHAFT AND REINSTALL ANY NECESSARY SEGMENT OF THE LOWER SHAFT, THE REDUCER, AND THE GRADE RINGS TO CONFORM TO THE REQUIREMENTS OF THIS PLAN.
   C. EXISTING GRADE RINGS NEED NOT BE REMOVED IF EXISTNG MORTAR IS REMOVED, AND AT LEAST 35 mm (1 1/2") OF MORTAR MAY BE PLACED ON TOP OF THE EXISTING GRADE RINGS TO RESEAT THE FRAME.
6. REPLACEMENT OF BRICK REDUCER WITH PRECAST CONCRETE REDUCER AND SHAFT
   UNLESS OTHERWISE INDICATED ON THE PLANS, THE CONTRACTOR MAY INSTALL A PRECAST CONCENTRIC CONCRETE REDUCER, CONCRETE GRADE RINGS, AND CONCRETE PIPE IN LIEU OF RECONSTRUCTING A BRICK REDUCER, PROVIDED:
   A. THE MAXIMUM ID OF SEWER PIPE CONNNECTED TO THE MANHOLE DOES NOT EXCEED 200 mm (8").
   B. THE CONTRACTOR SECURES PRIOR APPROVAL FROM THE ENGINEER TO INSTALL THE CONCENTRIC REDUCER ONTO THE MANHOLE SHAFT. THE ENGINEER MAY, AS PART OF THE INSTALLATION REQUIREMENTS, REQUIRE THE CONTRACTOR TO COAT THE INSIDE OF THE REDUCER, RINGS, AND PIPE WITH AN APPROVED COATING.
   C. THE CONCRETE GRADE RINGS, THE CONCRETE REDUCER, AND ANY CONCRETE PIPE SHALL BE JOINED TOGETHER AND BEDDED ONTO THE EXISTING BRICK MANHOLE WITH CLASS "D" MORTAR. THE DEPTH, WIDTH, AND THICKNESS OF THE MORTAR SHALL BE OF SUFFICIENT DIMENSIONS TO PROPERLY AND ADEQUATELY JOIN AND BED THE COMPONENT PARTS.

~~STANDARD PLANS FOR PUBLIC WORKS CONSTRUCTION~~

SEWER MANHOLE ADJUSTMENT

STANDARD PLAN METRIC **205-1** SHEET 3 OF 3

ALL DIMENSIONS ARE IN METERS
UNLESS OTHERWISE SHOWN

SANITARY SEWER DETAILS
NO SCALE

SSD-26

YTT	YTT	RK	YIM T. TSE
10/09	04/09	02/08	NGIM NANCY PE
YTT	YTT	RK	REVISED BY
10/09	04/09	02/08	DATE REVISED

CALCULATED-DESIGNED BY: YIM T. TSE
CHECKED BY: NGIM NANCY PE
FUNCTIONAL SUPERVISOR: NGIM NANCY PE

STATE OF CALIFORNIA - DEPARTMENT OF TRANSPORTATION
Caltrans OFFICE OF DESIGN A

S:\projects\2159c1\72159cjc026.dgn

LAST REVISION 00-00-00 | DATE PLOTTED => 31-JAN-2011 | TIME PLOTTED => 14:55

Dist	COUNTY	ROUTE	KILOMETER POST TOTAL PROJECT	SHEET No.	TOTAL SHEETS
07	LA	5	2.9/4.9	363	1082

Caltrans Metric

REGISTERED CIVIL ENGINEER 12-23-09 DATE

6-21-10
PLANS APPROVAL DATE

REGISTERED PROFESSIONAL ENGINEER NGIM NANCY PE No. 58161 Exp. 6-30-10 CIVIL STATE OF CALIFORNIA

THE STATE OF CALIFORNIA OR ITS OFFICERS OR AGENTS SHALL NOT BE RESPONSIBLE FOR THE ACCURACY OR COMPLETENESS OF ELECTRONIC COPIES OF THIS PLAN SHEET.

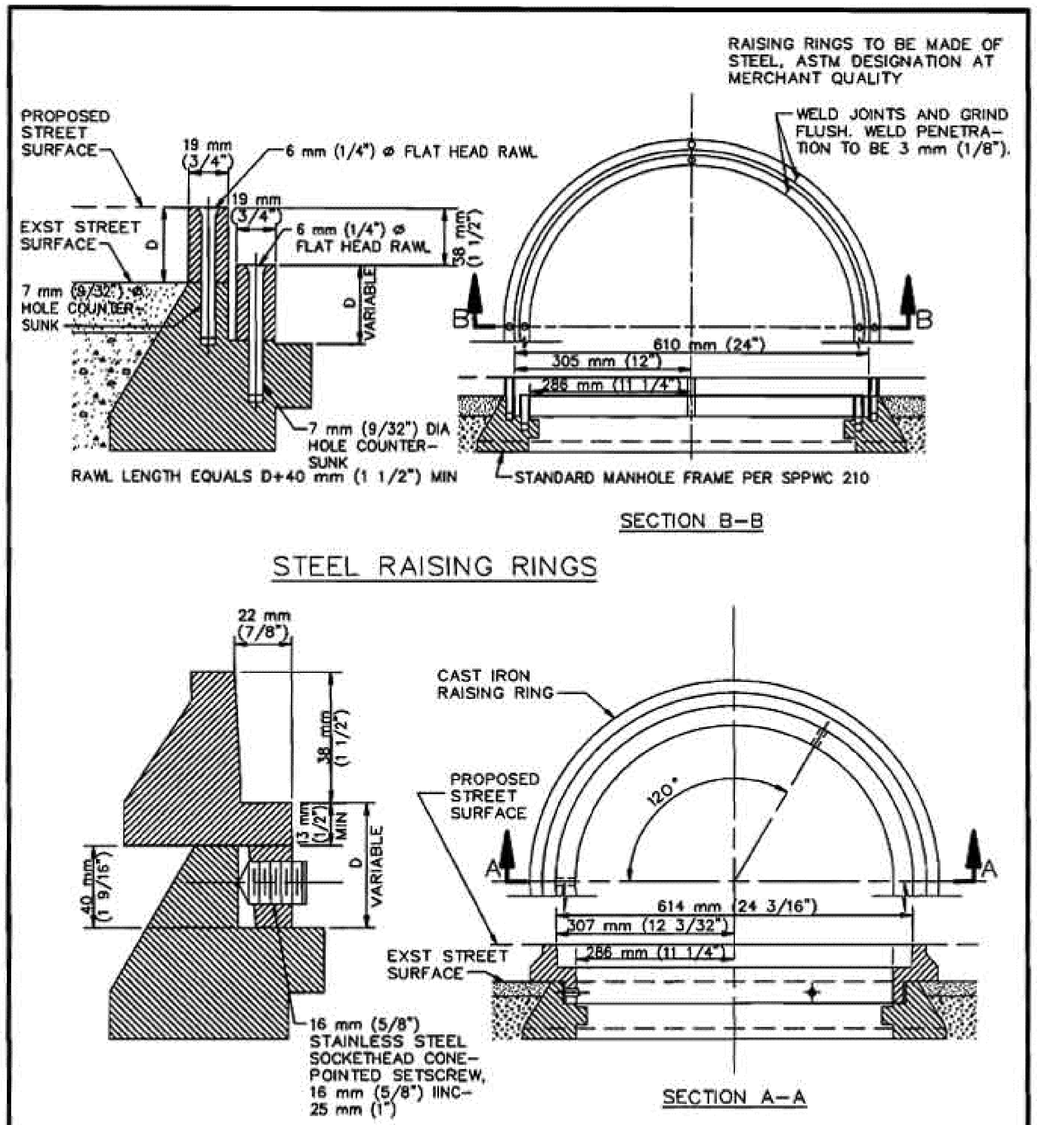

STANDARD PLANS FOR PUBLIC WORKS CONSTRUCTION

PROMULGATED BY THE PUBLIC WORKS STANDARDS INC. GREENBOOK COMMITTEE 1984 REV. 1996

MANHOLE RAISING RINGS

USE WITH STANDARD SPECIFICATIONS FOR PUBLIC WORKS CONSTRUCTION

STANDARD PLAN METRIC 206-1 SHEET 1 OF 2

NOTES:

1. MACHINE SEATS FROM CAST IRON RINGS.
2. THE CAST IRON USED SHALL CONFORM TO SSPWC 206-3.
3. THE METAL RAISING RINGS MAY BE USED IN LIEU OF THE REGULAR METHOD OF ADJUSTMENT UTILIZING MORTAR OR BRICK AND MORTAR UNDER THE FOLLOWING CONDITIONS.
   A. ONLY ONE ADJUSTMENT WITH RAISING RINGS WILL BE ALLOWED ON ANY MANHOLE.
   B. MAXIMUM "D" SHALL BE 75 mm (3").

STANDARD PLANS FOR PUBLIC WORKS CONSTRUCTION

MANHOLE RAISING RINGS

STANDARD PLAN METRIC 206-1 SHEET 2 OF 2

ALL DIMENSIONS ARE IN METERS UNLESS OTHERWISE SHOWN

SANITARY SEWER DETAILS

NO SCALE

SSD-27

YTT	10/09		
YTT	04/09		
RK	02/08	REVISED BY	DATE REVISED
YIM T. TSE	NGIM NANCY PE	CALCULATED-DESIGNED BY	CHECKED BY
FUNCTIONAL SUPERVISOR	NGIM NANCY PE		

STATE OF CALIFORNIA - DEPARTMENT OF TRANSPORTATION
Caltrans OFFICE OF DESIGN A

S:\projects\2159c1\72159cjc027.dgn

LAST REVISION 00-00-00 | DATE PLOTTED => 31-JAN-2011 | TIME PLOTTED => 14:55

Dist	COUNTY	ROUTE	KILOMETER POST TOTAL PROJECT	SHEET No.	TOTAL SHEETS
07	LA	5	2.9/4.9	364	1082

Caltrans Metric

Ngim N. Pe 12-23-09
REGISTERED CIVIL ENGINEER DATE

6-21-10
PLANS APPROVAL DATE

REGISTERED PROFESSIONAL ENGINEER NGIM NANCY PE No. 58161 Exp. 6-30-10 CIVIL STATE OF CALIFORNIA

THE STATE OF CALIFORNIA OR ITS OFFICERS OR AGENTS SHALL NOT BE RESPONSIBLE FOR THE ACCURACY OR COMPLETENESS OF ELECTRONIC COPIES OF THIS PLAN SHEET.

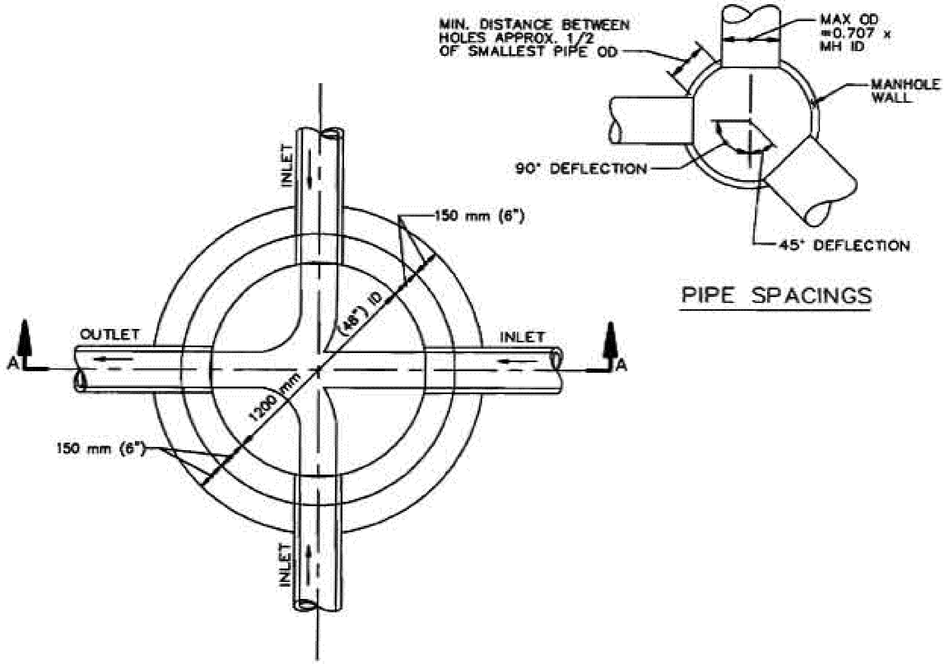

PIPE SPACINGS

PLAN VIEW

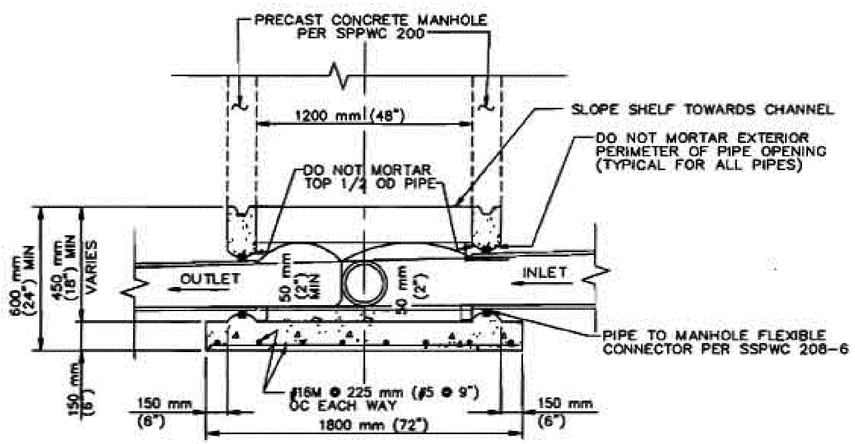

SECTION A–A

~~STANDARD PLANS FOR PUBLIC WORKS CONSTRUCTION~~

~~PROMULGATED BY THE PUBLIC WORKS STANDARDS INC. GREENBOOK COMMITTEE 1964 REV. 1996~~

PRECAST REINFORCED CONCRETE MANHOLE BASE

~~USE WITH STANDARD SPECIFICATIONS FOR PUBLIC WORKS CONSTRUCTION~~

STANDARD PLAN METRIC **207–1** SHEET 1 OF 2

NOTES

1. CONCRETE BASE AND STUB WALLS SHALL BE POURED IN ONE OPERATION.
2. CONCRETE FOR ALL PRECAST UNITS SHALL BE COMPACTLY VIBRATED IN THE FORMS. IT SHALL BE CURED ACCORDING TO APPROVED PRACTICE EITHER BY STEAM, SPRINKLING, MEMBRANE SOLUTION, OR A COMBINATION OF THESE. IT SHALL DEVELOP 25 MPa (3500 PSI) OR GREATER STRENGTH IN 28 DAYS.
3. THE DEPTH OF CHANNEL SHALL EQUAL THE PIPE DIAMETER FOR ALL SIZES OF PIPE. FOR SPECIAL CHANNELS IN TRAP OR GAUGING MANHOLES, SEE SPECIAL PLANS.
4. CEMENT MORTAR INSIDE JOINTS SHALL BE NEATLY STRUCK AND POINTED AND SHALL NOT EXCEED 10 mm (3/8") IN THICKNESS.
5. STUB WALLS AND BASE SHALL CONFORM TO ASTM C 478 AND SHALL HAVE A MINIMUM OF 50 mm (2") COVER THE STEEL ON THE INSIDE FACE.
6. INVERT CHANNELS AND SHELF MAY BE POURED AT THE FACTORY OR IN THE FIELD AT THE OPTION OF THE CONTRACTOR.
7. BEDDING FOR PRECAST BASE SHALL BE EQUAL TO BEDDING FOR PIPE. IF PIPE IS PLACED ON NATIVE MATERIAL USE 150 mm (6") MINIMUM CRUSHED ROCK UNDER BASE.

~~STANDARD PLANS FOR PUBLIC WORKS CONSTRUCTION~~

PRECAST REINFORCED CONCRETE MANHOLE BASE

STANDARD PLAN METRIC **207–1** SHEET 2 OF 2

ALL DIMENSIONS ARE IN METERS UNLESS OTHERWISE SHOWN

SANITARY SEWER DETAILS
NO SCALE
SSD-28

YTT	YTT	RK	YIM T. TSE
10/09	04/09	02/08	NGIM NANCY PE
YTT	YTT	RK	CALCULATED-DESIGNED BY
10/09	04/09	02/08	CHECKED BY
YTT	YTT	RK	FUNCTIONAL SUPERVISOR
10/09	04/09	02/08	NGIM NANCY PE
REVISED BY			
DATE REVISED			

STATE OF CALIFORNIA - DEPARTMENT OF TRANSPORTATION
Caltrans OFFICE OF DESIGN A

S:\projects\2159c1\72159cjc028.dgn

LAST REVISION 00-00-00 | DATE PLOTTED => 31-JAN-2011 | TIME PLOTTED => 14:55

Dist	COUNTY	ROUTE	KILOMETER POST TOTAL PROJECT	SHEET No.	TOTAL SHEETS
07	LA	5	2.9/4.9	365	1082

Caltrans Metric

Ngim N. Pe 12-23-09
REGISTERED CIVIL ENGINEER DATE

6-21-10
PLANS APPROVAL DATE

REGISTERED PROFESSIONAL ENGINEER NGIM NANCY PE No. 58161 Exp. 6-30-10 CIVIL STATE OF CALIFORNIA

THE STATE OF CALIFORNIA OR ITS OFFICERS OR AGENTS SHALL NOT BE RESPONSIBLE FOR THE ACCURACY OR COMPLETENESS OF ELECTRONIC COPIES OF THIS PLAN SHEET.

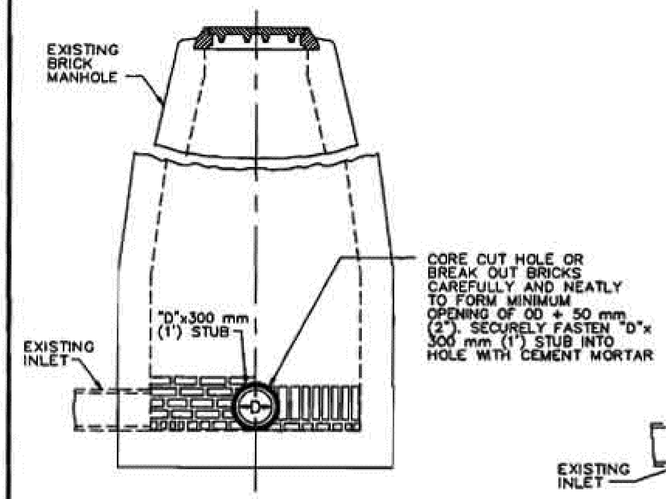

SECTIONAL ELEVATION A–A

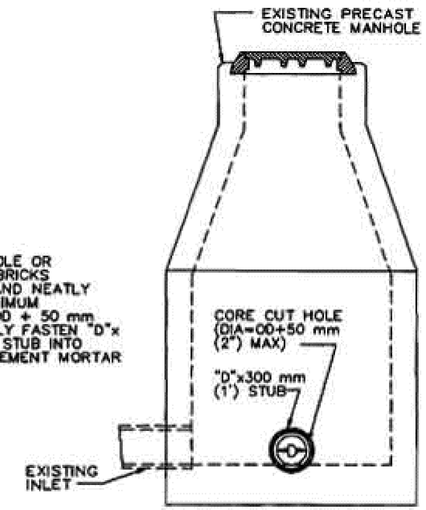

SECTIONAL ELEVATION C–C

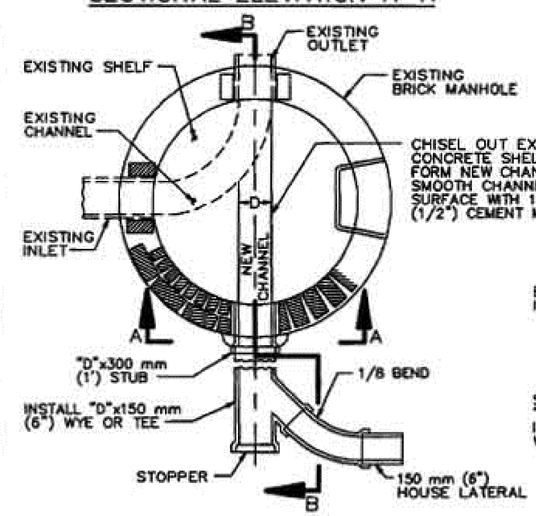

SECTIONAL PLAN OF BASE

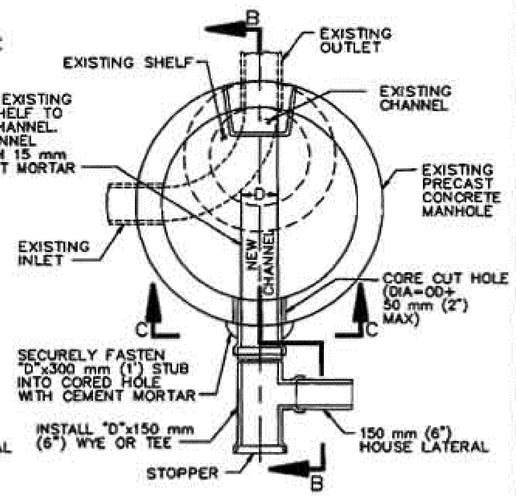

SECTIONAL PLAN OF BASE

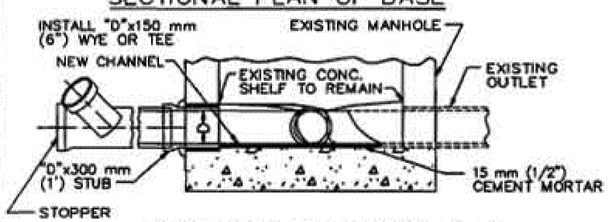

SECTIONAL ELEVATION B–B
CHANNEL BASE

STANDARD PLANS FOR PUBLIC WORKS CONSTRUCTION

PROMULGATED BY THE PUBLIC WORKS STANDARDS, INC., GREENBOOK COMMITTEE 1984 REV. 1988

BREAKING INTO EXISTING MANHOLES

USE WITH STANDARD SPECIFICATIONS FOR PUBLIC WORKS CONSTRUCTION

STANDARD PLAN METRIC **208–1**

SHEET 1 OF 2

NOTES:

1. INVERT ELEVATION OF "D" x 300 mm (1') STUB AT THE INSIDE FACE OF MANHOLE TO BE 30 mm (0.10') HIGHER THAN EXISTING OUTLET INVERT ELEVATION.
2. THE CORE CUT HOLE SHALL BE MADE WITH EQUIPMENT SPECIALLY DESIGNED TO CUT A SMOOTH HOLE WITHOUT SPALLING OR DAMAGE TO THE REINFORCING STEEL OR STRUCTURE.
3. "D" TO BE 200 mm (8") MINIMUM.
4. ALL WORK SHALL BE UNCOVERED AND CONVENIENT FOR THE INSPECTION.
5. ALL CEMENT MORTAR SHALL BE CLASS "D" PER SSPWC 201–5.1.

HOUSE LATERAL NOTES:

1. WYE SHALL BE LAID WITH 3 mm (1/8") RISE PER 300 mm (1") AND 150 mm (6") SPUR AT 45° FROM HORIZONTAL UNLESS OTHERWISE NOTED ON PLANS.
2. "D" X 100 mm (4") WYE OR TEE AND 100 mm (4") HOUSE LATERAL MAY BE SUBSTITUTED FOR "D" x 150 mm (6") WYE OR TEE AND 150 mm (6") HOUSE LATERAL.
3. USE TYPE "D" OR "G" JOINTS PER SSPWC 208–2.

STANDARD PLANS FOR PUBLIC WORKS CONSTRUCTION

BREAKING INTO EXISTING MANHOLES

STANDARD PLAN METRIC **208–1**

SHEET 2 OF 2

ALL DIMENSIONS ARE IN METERS UNLESS OTHERWISE SHOWN

SANITARY SEWER DETAILS
NO SCALE
SSD-29

YTT	YTT	RK	YIM T. TSE
10/09	04/09	02/08	NGIM NANCY PE
		REVISED BY	CALCULATED-DESIGNED BY
		DATE REVISED	CHECKED BY

FUNCTIONAL SUPERVISOR: NGIM NANCY PE

STATE OF CALIFORNIA - DEPARTMENT OF TRANSPORTATION
Caltrans OFFICE OF DESIGN A

S:\projects\2159c1\72159cjc029.dgn

LAST REVISION 00-00-00 | DATE PLOTTED => 31-JAN-2011 | TIME PLOTTED => 14:55

Dist	COUNTY	ROUTE	KILOMETER POST TOTAL PROJECT	SHEET No.	TOTAL SHEETS
07	LA	5	2.9/4.9	366	1082

Caltrans Metric

Ngim N. Pe 12-23-09
REGISTERED CIVIL ENGINEER DATE

6-21-10
PLANS APPROVAL DATE

REGISTERED PROFESSIONAL ENGINEER NGIM NANCY PE No. 58161 Exp. 6-30-10 CIVIL STATE OF CALIFORNIA

THE STATE OF CALIFORNIA OR ITS OFFICERS OR AGENTS SHALL NOT BE RESPONSIBLE FOR THE ACCURACY OR COMPLETENESS OF ELECTRONIC COPIES OF THIS PLAN SHEET.

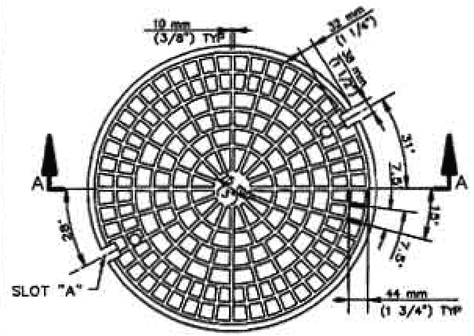

PLAN OF COVER
TOP VIEW

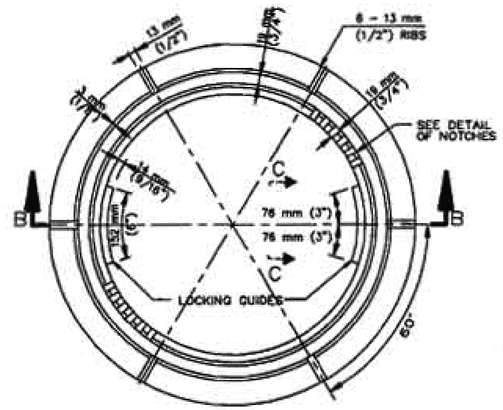

PLAN OF FRAME

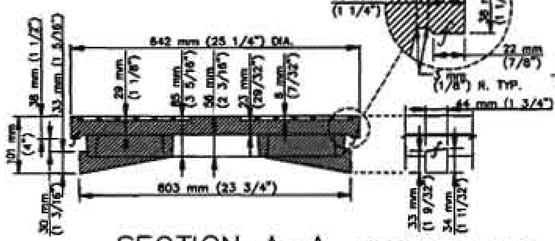

SECTION A–A

COVER LUG
END VIEW

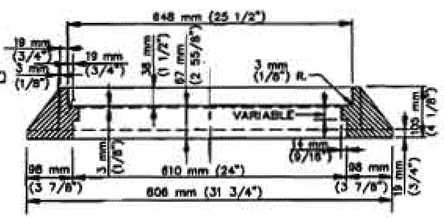

SECTION B–B

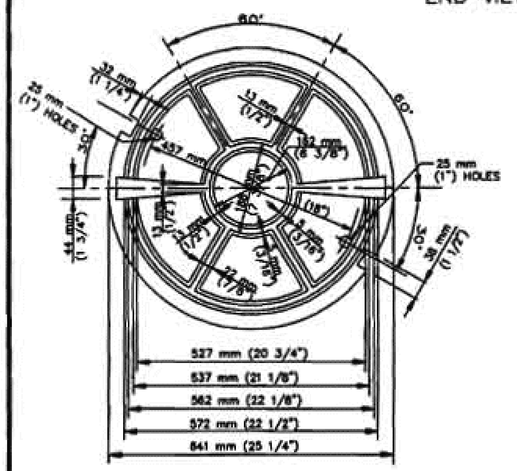

PLAN OF COVER
BOTTOM VIEW

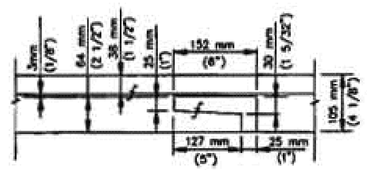

LOCKING GUIDE
SIDE VIEW C–C

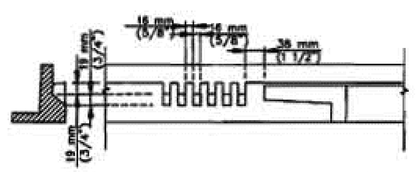

DETAIL OF NOTCHES

NOTES:

1. THE CAST IRON USED SHALL CONFORM TO ASTM A–48 CLASS 35B.
2. THE FRAME AND COVER SHALL BE COATED WITH ASPHALTUM OR BITUMINOUS PAINT AFTER TESTING AND INSPECTION.
3. COVERS SHALL BE CAST WITH THE LETTER "D" FOR STORM DRAINS AND "S" FOR SEWERS AND THE AGENCY IDENTIFICATION IN ACCORDANCE WITH INSTRUCTIONS FURNISHED BY THE AGENCY. THE LETTER "D" OR "S" SHALL BE APPROXIMATELY 65 mm (2 1/2") HIGH WITH 13 mm (1/2") LINE WIDTH AND PLACED IN THE CENTER OF THE COVER. ALL LETTERS SHALL BE FLUSH WITH THE FINISHED SURFACE OF THE COVER.
4. FOUNDRY IDENTIFYING MARK, HEAT AND DATE SHALL BE CAST ON THE BOTTOM OF THE COVER AND ON THE INSIDE OF THE FRAME.
5. IMPORTED COVERS AND FRAMES SHALL HAVE THE COUNTRY OF ORIGIN MARKING IN COMPLIANCE WITH FEDERAL REGULATIONS.
6. WEIGHT OF FRAME SHALL BE 73 kg (160 POUNDS). WEIGHT OF COVER SHALL BE 91 kg (200 POUNDS). ACTUAL WEIGHTS SHALL BE WITHIN A RANGE OF 95% TO 110%.
7. THE MANHOLE FRAME AND COVER SHALL BE INSPECTED BY THE ENGINEER PRIOR TO SHIPMENT TO THE JOB SITE. ACCEPTANCE WILL BE INDICATED BY THE AGENCY'S MARK.
8. THE PROOF–LOAD FOR TEST METHOD B OF SSPWC 206–3.2 IS 228 kN (55,300 POUNDS).
9. COVERS FOR MANHOLES LOCATED IN EASEMENTS, ALLEYS, PARKWAYS AND ALL OTHER PLACES EXCEPT PAVED STREETS SHALL BE PROVIDED WITH SOCKET SET SCREW LOCKING DEVICES. DRILL AND TAP TWO HOLES TO A DEPTH OF 25 mm (1") AT 90 DEGREES TO PICK HOLE AND INSTALL 19 mm x 19 mm (3/4" x 3/4") STAINLESS STEEL SOCKET SET SCREWS WITH 10 mm (3/8") RECESSED HEX HEAD. ALL THREADS SHALL BE N.C.

~~STANDARD PLANS FOR PUBLIC WORKS CONSTRUCTION~~

610 mm (24") MANHOLE FRAME AND COVER LOCKING TYPE

STANDARD PLAN METRIC
210–2
SHEET 2 OF 2

~~STANDARD PLANS FOR PUBLIC WORKS CONSTRUCTION~~

~~PROMULGATED BY THE PUBLIC WORKS STANDARDS, INC., GREENBOOK COMMITTEE 1964 REV. 1993, 1996~~

610 mm (24") MANHOLE FRAME AND COVER LOCKING TYPE

~~USE WITH STANDARD SPECIFICATIONS FOR PUBLIC WORKS CONSTRUCTION~~

STANDARD PLAN METRIC
210–2
SHEET 1 OF 2

ALL DIMENSIONS ARE IN METERS UNLESS OTHERWISE SHOWN

SANITARY SEWER DETAILS
NO SCALE
SSD-30

YTT	YTT	RK	YIM T. TSE
10/09	04/09	02/08	NGIM NANCY PE
		REVISED BY	CALCULATED-DESIGNED BY
		DATE REVISED	CHECKED BY

FUNCTIONAL SUPERVISOR: NGIM NANCY PE

STATE OF CALIFORNIA - DEPARTMENT OF TRANSPORTATION
Caltrans OFFICE OF DESIGN A

S:\projects\2159c1\72159cjc030.dgn

LAST REVISION 00-00-00 | DATE PLOTTED => 31-JAN-2011 | TIME PLOTTED => 14:55

Dist	COUNTY	ROUTE	KILOMETER POST TOTAL PROJECT	SHEET No.	TOTAL SHEETS
07	LA	5	2.9/4.9	367	1082

Caltrans Metric

Ngim N. Pe 12-23-09
REGISTERED CIVIL ENGINEER DATE

6-21-10
PLANS APPROVAL DATE

REGISTERED PROFESSIONAL ENGINEER NGIM NANCY PE No. 58161 Exp. 6-30-10 CIVIL STATE OF CALIFORNIA

THE STATE OF CALIFORNIA OR ITS OFFICERS OR AGENTS SHALL NOT BE RESPONSIBLE FOR THE ACCURACY OR COMPLETENESS OF ELECTRONIC COPIES OF THIS PLAN SHEET.

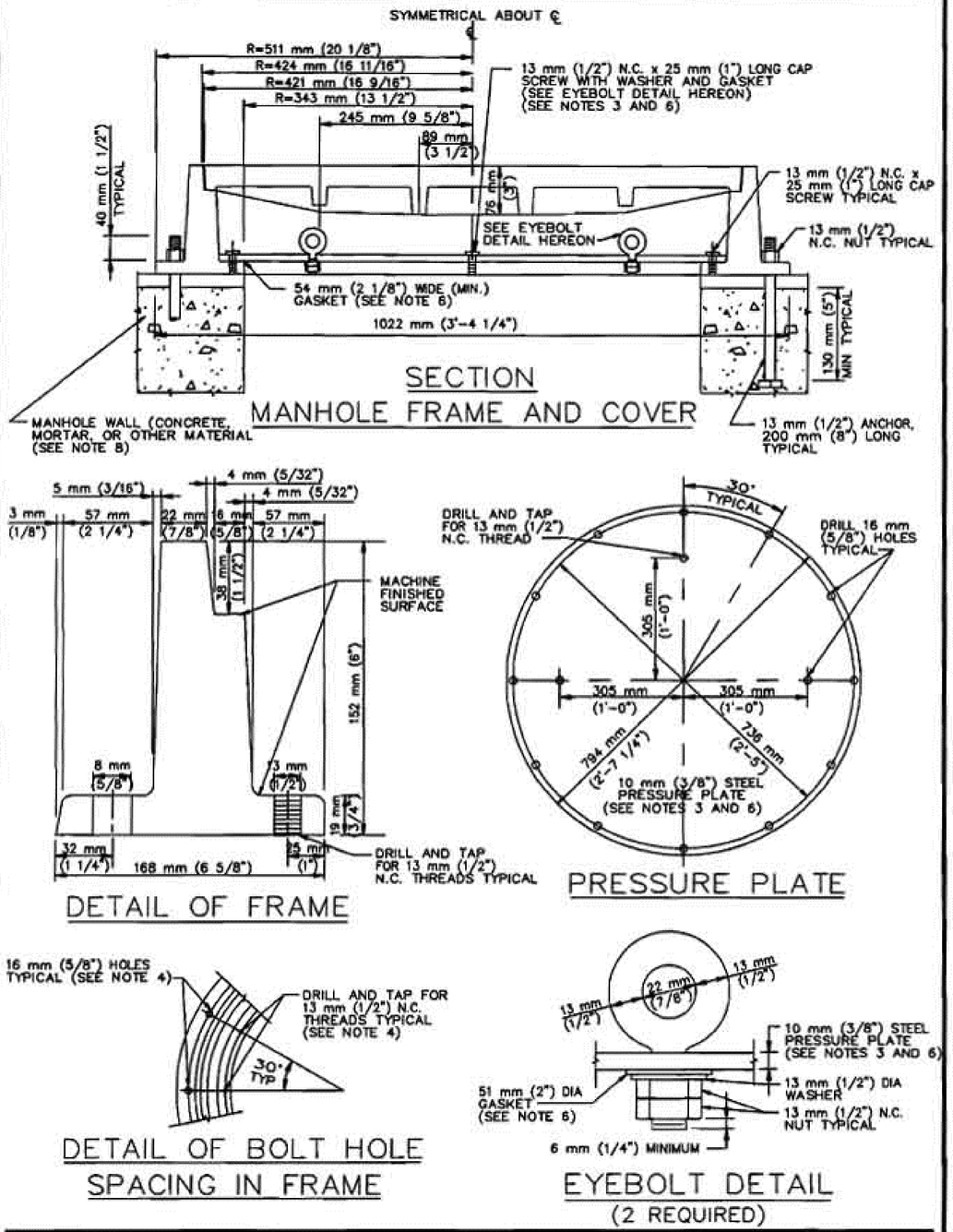

~~STANDARD PLANS FOR PUBLIC WORKS CONSTRUCTION~~

~~PROMULGATED BY THE PUBLIC WORKS STANDARDS, INC., GREENBOOK COMMITTEE 1984 REV. 1996~~

MANHOLE FRAME AND COVER PRESSURE TYPE

~~USE WITH STANDARD SPECIFICATIONS FOR PUBLIC WORKS CONSTRUCTION~~

STANDARD PLAN METRIC **211-1** SHEET 1 OF 2

NOTES:

1. EXCEPT AS OTHERWISE INDICATED, THE MANHOLE FRAME AND COVER SHALL CONFORM TO SPPWC 632, 762 mm (30") MANHOLE FRAME AND COVER.
2. THE PRESSURE PLATE SHALL BE STEEL CONFORMING TO ASTM A36M (A 36), AND SHALL BE GALVANIZED AFTER FABRICATION, BUT BEFORE INSTALLATION OF SCREWS AND BOLTS.
3. CAP SCREWS AND EYEBOLTS, INCLUDING WASHERS AND NUTS ATTACHED THERETO, SHALL BE FABRICATED FROM ANY SERIES 300 STAINLESS STEEL.
4. ALL HOLES IN CAST IRON SHALL BE DRILLED AFTER CASTING, OR PLUGGED PRIOR TO CASTING. THEY SHALL NOT BE PUNCHED.
5. ALL IRON CASTING SHALL RECEIVE AN ASPHALTIC COATING AFTER FABRICATION.
6. GASKET MATERIAL SHALL BE 2 mm (1/16") THICK NEOPRENE RUBBER. PRESSURE PLATE GASKET SHALL BE 794 mm (2'-7 1/4") O.D.
7. ALL NUTS AND BOLTS SHALL BE TIGHTENED TO A MINIMUM TORQUE OF 34 Nm (25 FOOT-POUNDS).
8. FRAME SHALL BE SET ON 13 mm (1/2") THICK MINIMUM WET MORTAR BASE, CLASS "B" MORTAR.
9. MANHOLE FRAME AND COVER AND PRESSURE PLATE ASSEMBLY SHALL BE TESTED FOR ACCURATE FIT PRIOR TO DELIVERY TO JOBSITE AND MARKED IN SETS.

~~STANDARD PLANS FOR PUBLIC WORKS CONSTRUCTION~~

MANHOLE FRAME AND COVER PRESSURE TYPE

STANDARD PLAN METRIC **211-1** SHEET 2 OF 2

ALL DIMENSIONS ARE IN METERS UNLESS OTHERWISE SHOWN

SANITARY SEWER DETAILS

NO SCALE

SSD-31

YTT	YTT	RK	YIM T. TSE
10/09	04/09	02/08	NGIM NANCY PE
REVISED BY	DATE REVISED	CALCULATED-DESIGNED BY	FUNCTIONAL SUPERVISOR
CHECKED BY			

STATE OF CALIFORNIA - DEPARTMENT OF TRANSPORTATION
Caltrans OFFICE OF DESIGN A

S:\projects\2159c1\72159cjc031.dgn

LAST REVISION 00-00-00 | DATE PLOTTED => 31-JAN-2011 | TIME PLOTTED => 14:55

Dist	COUNTY	ROUTE	KILOMETER POST TOTAL PROJECT	SHEET No.	TOTAL SHEETS
07	LA	5	2.9/4.9	368	1082

REGISTERED CIVIL ENGINEER 12-23-09 DATE

6-21-10
PLANS APPROVAL DATE

REGISTERED PROFESSIONAL ENGINEER NGIM NANCY PE No. 58161 Exp. 6-30-10 CIVIL STATE OF CALIFORNIA

THE STATE OF CALIFORNIA OR ITS OFFICERS OR AGENTS SHALL NOT BE RESPONSIBLE FOR THE ACCURACY OR COMPLETENESS OF ELECTRONIC COPIES OF THIS PLAN SHEET.

Caltrans Metric

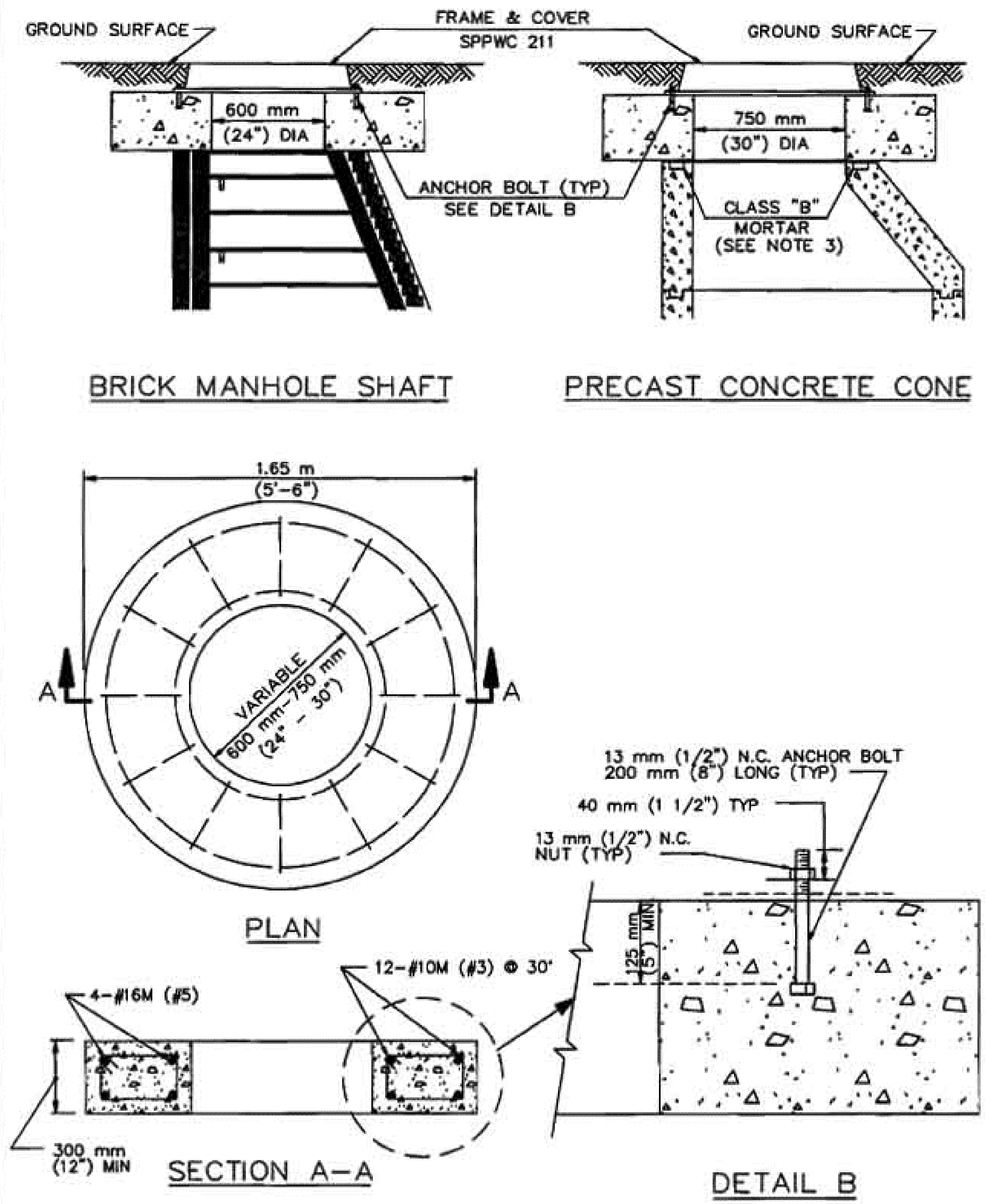

~~STANDARD PLANS FOR PUBLIC WORKS CONSTRUCTION~~

~~PROMULGATED BY THE PUBLIC WORKS STANDARDS, INC., GREENBOOK COMMITTEE 1994 REV. 1998~~

ANCHOR SYSTEM FOR PRESSURE COVER

~~USE WITH STANDARD SPECIFICATIONS FOR PUBLIC WORKS CONSTRUCTION~~

STANDARD PLAN METRIC **212-1** SHEET 1 OF 2

NOTES:

1. ANCHOR SYSTEM DESIGNED FOR LESS THAN 3 m (10') OF HEAD.
2. MINIMUM EMBEDMENT OF 13 mm (1/2") ø ANCHOR BOLT WITH HEAD SHALL BE 130 mm (5")
3. SET CONCRETE ANCHOR ON WET, CLASS "B" MORTAR ON TOP OF BRICK MANHOLE SHAFT OR PRECAST CONCRETE CONE.
4. UNLESS OTHERWISE NOTED, 13 mm (1/2") ø ANCHOR BOLTS AND NUTS ARE REQUIRED AND SHALL BE FABRICATED FROM ANY SERIES 300 STAINLESS STEEL.
5. NUTS ON ANCHOR BOLTS SHALL BE TIGHTENED TO A MINIMUM TORQUE OF 34 Nm (25 FOOT-POUNDS)

~~STANDARD PLANS FOR PUBLIC WORKS CONSTRUCTION~~

ANCHOR SYSTEM FOR PRESSURE COVER

STANDARD PLAN METRIC **212-1** SHEET 2 OF 2

ALL DIMENSIONS ARE IN METERS UNLESS OTHERWISE SHOWN

SANITARY SEWER DETAILS

NO SCALE

SSD-32

YTT	YTT	RK	YIM T. TSE
10/09	04/09	02/08	NGIM NANCY PE
YTT	YTT	RK	YIM T. TSE
10/09	04/09	02/08	NGIM NANCY PE

REVISED BY / DATE REVISED

CALCULATED-DESIGNED BY / CHECKED BY

FUNCTIONAL SUPERVISOR: NGIM NANCY PE

STATE OF CALIFORNIA - DEPARTMENT OF TRANSPORTATION

Caltrans OFFICE OF DESIGN A

S:\projects\2159c1\72159cjc032.dgn

LAST REVISION 00-00-00 DATE PLOTTED => 31-JAN-2011 TIME PLOTTED => 14:55

Dist	COUNTY	ROUTE	KILOMETER POST TOTAL PROJECT	SHEET No.	TOTAL SHEETS
07	LA	5	2.9/4.9	369	1082

Caltrans Metric

REGISTERED CIVIL ENGINEER 12-23-09 DATE

6-21-10
PLANS APPROVAL DATE

REGISTERED PROFESSIONAL ENGINEER NGIM NANCY PE No. 58161 Exp. 6-30-10 CIVIL STATE OF CALIFORNIA

THE STATE OF CALIFORNIA OR ITS OFFICERS OR AGENTS SHALL NOT BE RESPONSIBLE FOR THE ACCURACY OR COMPLETENESS OF ELECTRONIC COPIES OF THIS PLAN SHEET.

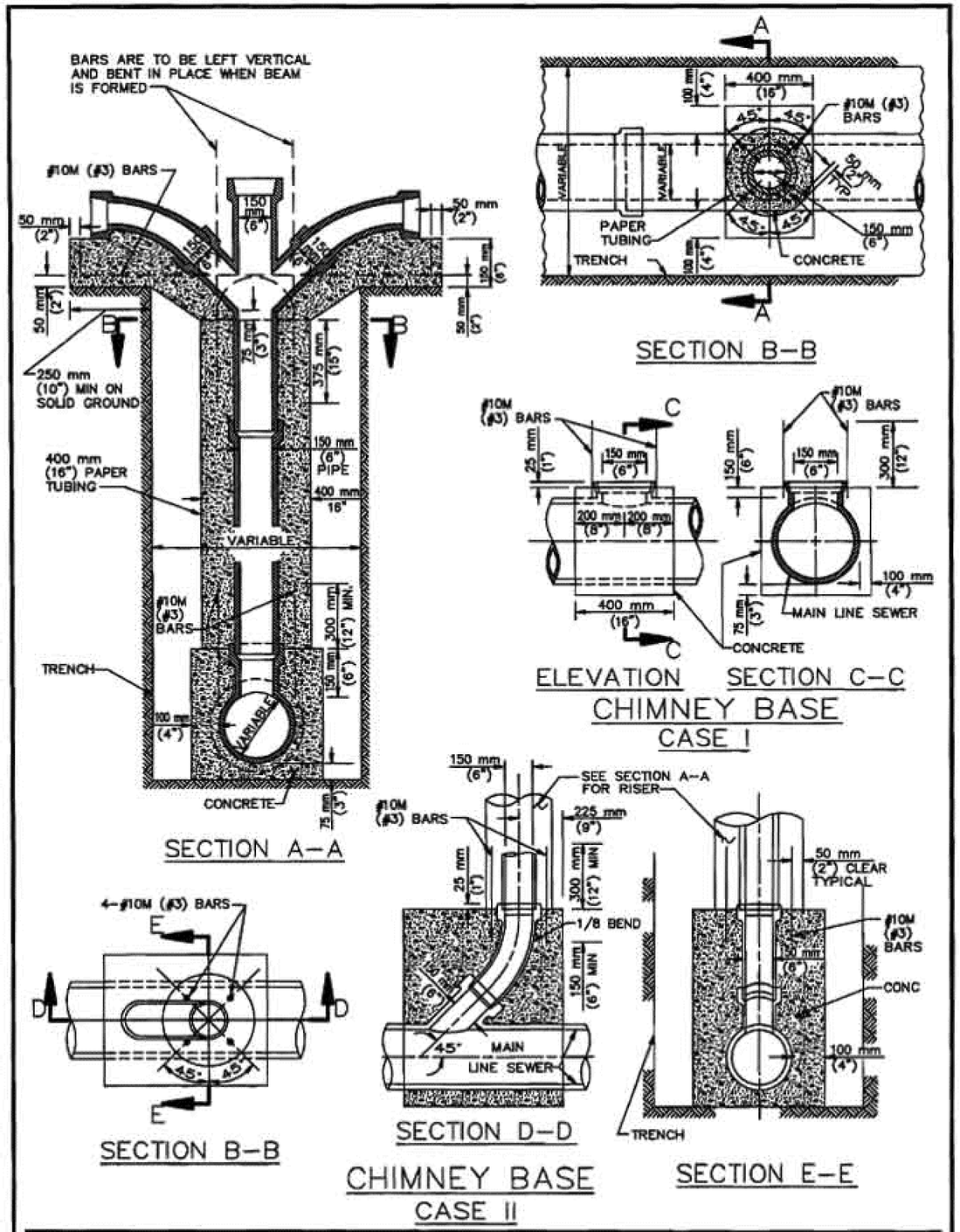

STANDARD PLANS FOR PUBLIC WORKS CONSTRUCTION

PROMULGATED BY THE PUBLIC WORKS STANDARDS INC. GREENBOOK COMMITTEE 1984 REV. 1993, 1996

CHIMNEYS

USE WITH STANDARD SPECIFICATIONS FOR PUBLIC WORKS CONSTRUCTION

STANDARD PLAN METRIC **220–2** SHEET 1 OF 2

NOTES

1. THE UPPER END OF THE CHIMNEY PIPE SHALL BE AT LEAST 2.5 m (8') BELOW THE GRADE OF THE LOWER CURB.
2. NO CONNECTION SHALL BE MADE DIRECTLY TO TOP OF CHIMNEY PIPE.
3. WHERE ONE HOUSE LATERAL IS TO BE JOINED TO THE CHIMNEY PIPE, USE A SINGLE WYE AND FACE WYE TOWARDS PROPERTY TO BE SERVED.
4. WHERE TWO OR MORE HOUSE LATERALS ARE TO BE JOINED TO THE CHIMNEY PIPE, INSTALL WYE BRANCHES AS FOLLOWS:
   A. FOR TWO HOUSE LATERALS, ONE SERVING EACH SIDE OF STREET, USE A DOUBLE WYE BRANCH.
   B. FOR TWO HOUSE LATERALS SERVING THE SAME SIDE OF THE STREET, USE TWO SINGLE WYE'S STACKED WITH BRANCHES FACING THE PROPERTIES SERVED.
   C. FOR THREE OR FOUR HOUSE LATERALS, USE TWO DOUBLE WYE BRANCHES OR ONE DOUBLE AND ONE SINGLE WYE BRANCH STACKED.
5. EACH DOUBLE OR SINGLE WYE BRANCH AND EIGHTH BEND SHALL BE SUPPORTED BY A CONCRETE BEAM AS SHOWN.
6. FOR CHIMNEY BASE, 150 mm (6") TEE BRANCH OR WYE SHALL BE INSTALLED VERTICALLY ON TOP OF THE MAIN LINE SEWER AS SHOWN. THE CHIMNEY BASE MUST BE POURED AND SET WITH DOWELS AS SHOWN 24 HOURS BEFORE THE CHIMNEY CONCRETE IS POURED.
7. ALL CONCRETE SHOWN SHALL BE CLASS 310–C–17 (520–C–2500).
8. CASE I SHALL BE FOR VITRIFIED CLAY PIPE ONLY.
9. CASE II SHALL BE FOR ALL ALLOWABLE PIPE MATERIALS.
10. FOR ABS PIPE USE SOLVENT WELDED JOINTS ONLY.
11. A CAP SHALL BE INSTALLED AT THE OPENING OF THE PIPE RISER AND AT EACH UNCONNECTED BRANCH, SEALED AROUND ITS CIRCUMFERENCE WITH 25 mm (1") THICK TYPE "F" MORTAR.

STANDARD PLANS FOR PUBLIC WORKS CONSTRUCTION

CHIMNEYS

STANDARD PLAN METRIC **220–2** SHEET 2 OF 2

ALL DIMENSIONS ARE IN METERS UNLESS OTHERWISE SHOWN

SANITARY SEWER DETAILS
NO SCALE
SSD-33

YTT	YTT	RK	YIM T. TSE
10/09	04/09	02/08	NGIM NANCY PE
YTT	YTT	RK	YIM T. TSE
10/09	04/09	02/08	NGIM NANCY PE

CALCULATED-DESIGNED BY / CHECKED BY / REVISED BY / DATE REVISED

FUNCTIONAL SUPERVISOR: NGIM NANCY PE

STATE OF CALIFORNIA - DEPARTMENT OF TRANSPORTATION
Caltrans OFFICE OF DESIGN A

S:\projects\2159c1\72159cjc033.dgn

LAST REVISION 00-00-00 | DATE PLOTTED => 31-JAN-2011 | TIME PLOTTED => 14:55

Dist	COUNTY	ROUTE	KILOMETER POST TOTAL PROJECT	SHEET No.	TOTAL SHEETS
07	LA	5	2.9/4.9	370	1082

Caltrans Metric

Ngim N. Pe 12-23-09
REGISTERED CIVIL ENGINEER DATE

6-21-10
PLANS APPROVAL DATE

REGISTERED PROFESSIONAL ENGINEER NGIM NANCY PE No. 58161 Exp. 6-30-10 CIVIL STATE OF CALIFORNIA

THE STATE OF CALIFORNIA OR ITS OFFICERS OR AGENTS SHALL NOT BE RESPONSIBLE FOR THE ACCURACY OR COMPLETENESS OF ELECTRONIC COPIES OF THIS PLAN SHEET.

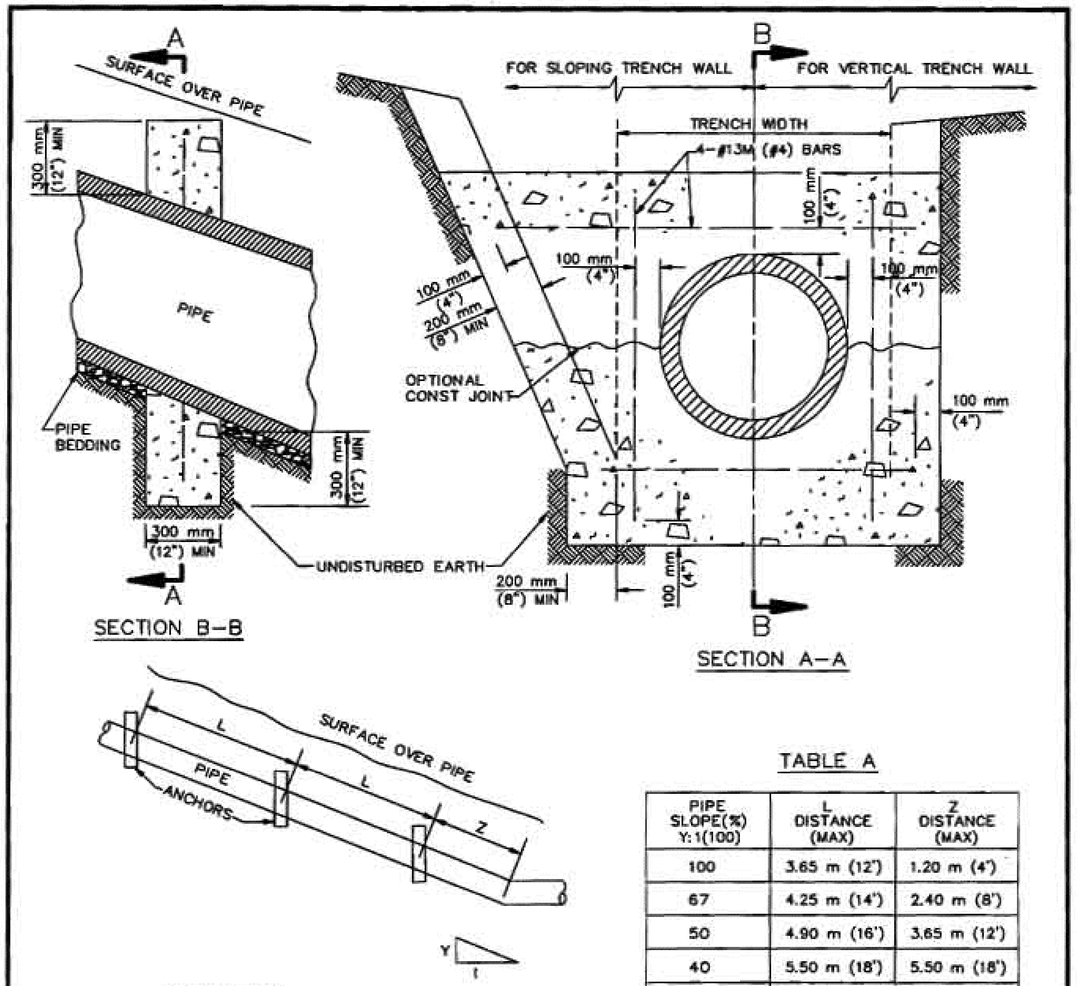

ELEVATION
PIPE ANCHORS

TABLE A

PIPE SLOPE(%) Y:1(100)	L DISTANCE (MAX)	Z DISTANCE (MAX)
100	3.65 m (12')	1.20 m (4')
67	4.25 m (14')	2.40 m (8')
50	4.90 m (16')	3.65 m (12')
40	5.50 m (18')	5.50 m (18')
33	6.00 m (20')	6.00 m (20')

NOTES:

1. ANCHORS SHALL BE CLASS 265-C-14 (450-C-2000) CONCRETE.
2. FOR CLAY PIPE, ANCHORS SHALL NOT BE PLACED WITHIN 150 mm (6") OF THE PIPE JOINT.
3. TRENCH SHALL BE BACKFILL PER NOTE 4 ON SHEET 2.
4. SPACING OF ANCHORS FOR PIPE SLOPES BETWEEN VALUES SHOWN IN TABLE "A" MAY BE PROPORTIONED.

ANCHORS

~~STANDARD PLANS FOR PUBLIC WORKS CONSTRUCTION~~

~~PROMULGATED BY THE PUBLIC WORKS STANDARDS INC. GREENBOOK COMMITTEE 1984 REV. 1994~~

PIPE ANCHORS AND BACKFILL STABILIZERS

~~USE WITH STANDARD SPECIFICATIONS FOR PUBLIC WORKS CONSTRUCTION~~

STANDARD PLAN METRIC
221-1
SHEET 1 OF 2

ALL DIMENSIONS ARE IN METERS UNLESS OTHERWISE SHOWN

SANITARY SEWER DETAILS
NO SCALE
SSD-34

CALCULATED-DESIGNED BY	YIM T. TSE	REVISED BY	YTT
CHECKED BY	NGIM NANCY PE	DATE REVISED	10/09
FUNCTIONAL SUPERVISOR	NGIM NANCY PE	RK	YTT
		02/08	04/09

STATE OF CALIFORNIA - DEPARTMENT OF TRANSPORTATION
Caltrans OFFICE OF DESIGN A

S:\projects\2159c1\72159cjc034.dgn

LAST REVISION 00-00-00 | DATE PLOTTED => 31-JAN-2011 | TIME PLOTTED => 14:55

Dist	COUNTY	ROUTE	KILOMETER POST TOTAL PROJECT	SHEET No.	TOTAL SHEETS
07	LA	5	2.9/4.9	371	1082

Caltrans Metric

REGISTERED CIVIL ENGINEER 12-23-09 DATE

6-21-10
PLANS APPROVAL DATE

REGISTERED PROFESSIONAL ENGINEER NGIM NANCY PE No. 58161 Exp. 6-30-10 CIVIL STATE OF CALIFORNIA

THE STATE OF CALIFORNIA OR ITS OFFICERS OR AGENTS SHALL NOT BE RESPONSIBLE FOR THE ACCURACY OR COMPLETENESS OF ELECTRONIC COPIES OF THIS PLAN SHEET.

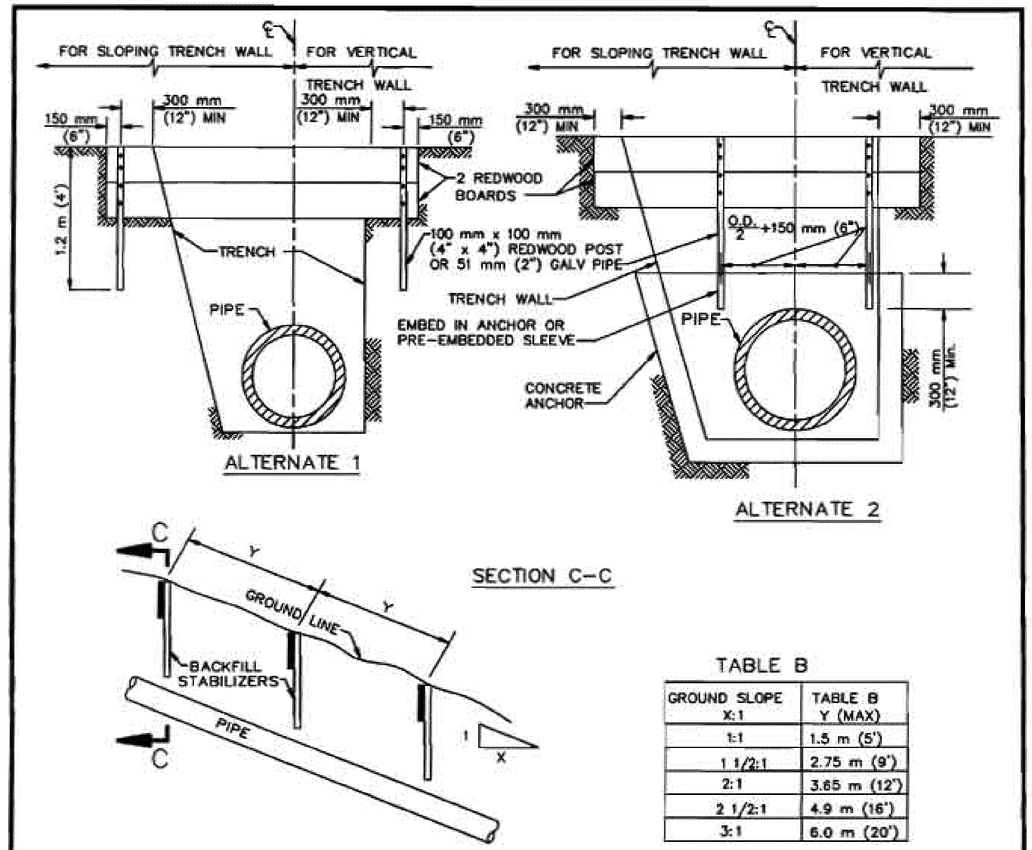

SECTION C–C

ELEVATION

BACKFILL STABILIZERS

TABLE B

GROUND SLOPE X:1	TABLE B Y (MAX)
1:1	1.5 m (5')
1 1/2:1	2.75 m (9')
2:1	3.65 m (12')
2 1/2:1	4.9 m (16')
3:1	6.0 m (20')

NOTES:

1. REDWOOD BOARDS SHALL BE 50 x 300 mm (2" x 12") WHERE DEPTH OF COVER OVER PIPE PERMITS, OTHERWISE USE 50 x 250 mm (2" x 10").
2. REDWOOD BOARDS SHALL BE PLACED ON THE HIGH GROUND SIDE OF THE POSTS.
3. EACH REDWOOD BOARD SHALL BE FASTENED BY USING 2–16d NAILS TO EACH REDWOOD POST OR A 10 mm (3/8") BOLT AND NUT WITH WASHERS TO EACH GALVANIZED PIPE. ALL HARDWARE SHALL BE GALVANIZED.
4. TRENCH BACKFILL SHALL BE CONSOLIDATED BY MECHANICAL COMPACTION. IN LIEU OF MECHANICALLY COMPACTION, SOIL CEMENT MAY BE USED; HOWEVER, THE TOP 300 mm (12") OF BACKFILL SHALL BE NATIVE SOIL, MECHANICALLY COMPACTED.
5. SPACING OF STABILIZERS FOR GROUND SLOPES BETWEEN VALUES SHOWN IN TABLE "B" MAY BE PROPORTIONED.
6. THE CONTRACTOR MAY, AT ITS OPTION, SUBSTITUTE DOUGLAS FIR FOR THE REDWOOD PROVIDED IT HAS BEEN TREATED WITH PRESERVATIVES.

STABILIZERS

~~STANDARD PLANS FOR PUBLIC WORKS CONSTRUCTION~~

PIPE ANCHORS AND BACKFILL STABILIZERS

STANDARD PLAN METRIC
221–1
SHEET 2 OF 2

ALL DIMENSIONS ARE IN METERS UNLESS OTHERWISE SHOWN

SANITARY SEWER DETAILS
NO SCALE
SSD-35

YTT	10/09		
YTT	04/09		
RK	02/08	REVISED BY	DATE REVISED
YIM T. TSE	NGIM NANCY PE	CALCULATED-DESIGNED BY	CHECKED BY
FUNCTIONAL SUPERVISOR	NGIM NANCY PE		

STATE OF CALIFORNIA - DEPARTMENT OF TRANSPORTATION
Caltrans OFFICE OF DESIGN A

S:\projects\2159c1\72159cjc035.dgn

LAST REVISION 00-00-00 DATE PLOTTED => 31-JAN-2011 TIME PLOTTED => 14:55

Dist	COUNTY	ROUTE	KILOMETER POST TOTAL PROJECT	SHEET No.	TOTAL SHEETS
07	LA	5	2.9/4.9	372	1082

Caltrans Metric

Ngim N. Pe 12-23-09
REGISTERED CIVIL ENGINEER DATE

6-21-10
PLANS APPROVAL DATE

REGISTERED PROFESSIONAL ENGINEER NGIM NANCY PE No. 58161 Exp. 6-30-10 CIVIL STATE OF CALIFORNIA

THE STATE OF CALIFORNIA OR ITS OFFICERS OR AGENTS SHALL NOT BE RESPONSIBLE FOR THE ACCURACY OR COMPLETENESS OF ELECTRONIC COPIES OF THIS PLAN SHEET.

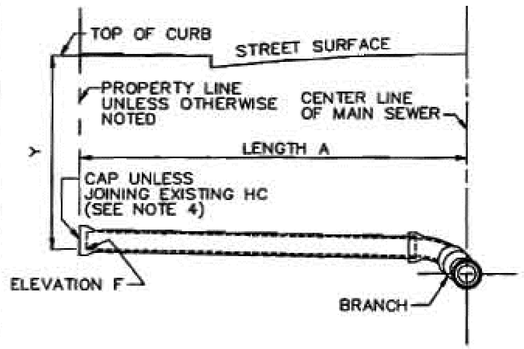

PROFILE
TYPE A

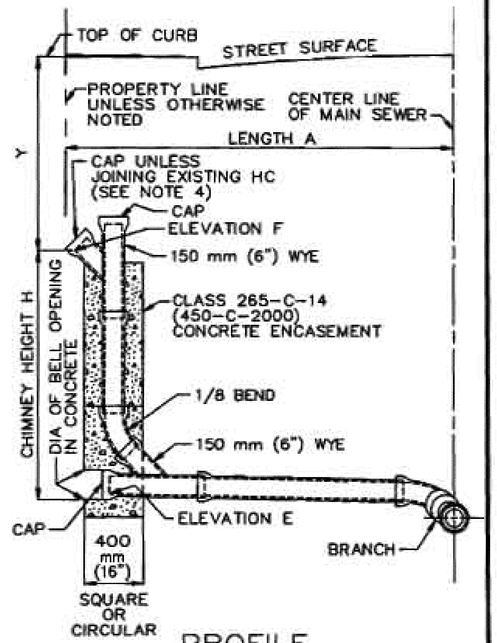

PROFILE
TYPE B

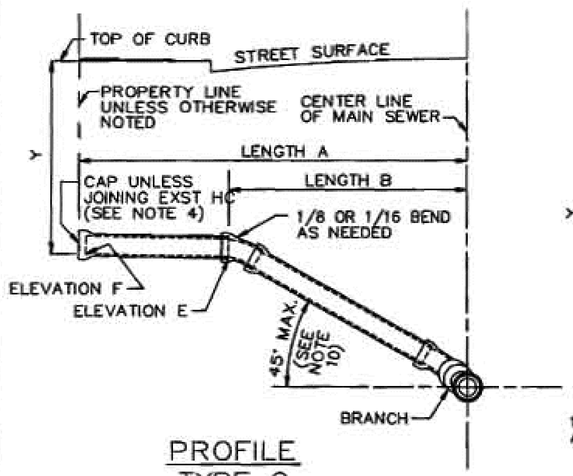

PROFILE
TYPE C

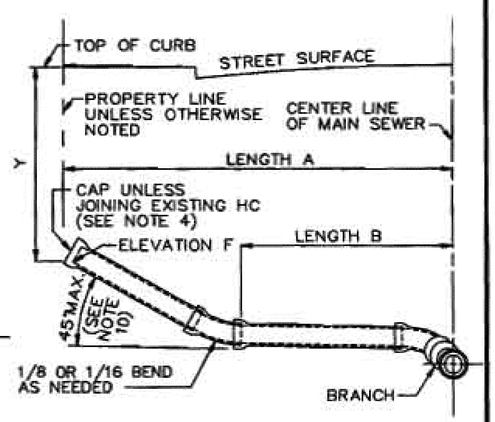

PROFILE
TYPE D

NOTES

1. EXCEPT AS OTHERWISE INDICATED ON THE PLANS, ALL HOUSE CONNECTION SEWERS SHALL BE TYPE "A" AND SHALL BE CONSTRUCTED ON STRAIGHT LINES AND GRADES BETWEEN CONTROL POINTS AND ELEVATIONS.
2. DIMENSIONS:
   A. Y = 1.85 m (6")
   B. LENGTHS "A" AND "B" – SEE PLANS
   C. HEIGHT "H" – SEE PLANS
   D. ELEVATIONS "E" AND "F" – SEE PLANS
3. ALL HOUSE CONNECTION SEWER PIPE SHALL BE 150 mm (6") UNLESS OTHERWISE INDICATED AND MAY BE ANY OF THE FOLLOWING:
   A. VC PIPE
   B. PE PIPE
   C. ABS SOLID WALL PIPE
   D. ABS COMPOSITE PIPE
   E. PVC PLASTIC PIPE

   PROVIDED THAT CHANGES FROM ONE TYPE OF MATERIAL OR SIZE TO ANOTHER SHALL BE MADE ONLY BY MEANS OF SUITABLE ADAPTERS APPROVED BY THE ENGINEER.
4. THE UPPER END OF THE HOUSE CONNECTION SHALL BE SEALED BY INSTALLING A CAP AND SEALING THE CAP WITH 25 mm (1") THICK TYPE "F" MORTAR AROUND THE CIRCUMFERENCE OF THE CAP.
5. EXCEPT AS CONTROLLED BY ELEVATIONS INDICATED ON THE PROJECT PLANS, THE MINIMUM SLOPE FOR ALL PIPE SHALL BE 2% (S=0.02 MINIMUM).
6. THE FIGURE IN A CIRCLE ON THE PLANS ADJACENT TO A HOUSE CONNECTION SEWER STATION INDICATES THE DEPTH IN METERS (FEET) BELOW THE EXISTING TOP OF CURB TO WHICH THE INVERT OF THE UPPER END OF THE HOUSE CONNECTION SEWER SHALL BE CONSTRUCTED. IF NO DEPTH IS INDICATED, THE INVERT OF THE UPPER END SHALL BE THE ELEVATION SHOWN ON THE PROFILE. WHERE NEITHER DEPTH NOR ELEVATION IS INDICATED, THE INVERT SHALL BE 1.85 m (6') BELOW THE TOP OF THE EXISTING CURB.
7. BRANCHES SHALL BE EITHER TEES OR WYES AND SHALL BE ROTATED UPWARD FROM THE HORIZONTAL TO AN ANGLE OF 22-1/2° TO 45° WHEN TEES ARE USED. BENDS ARE NOT REQUIRED BUT MAY BE USED AT THE OPTION OF THE CONTRACTOR. WHEN THE BRANCH ROTATION DOES NOT CONFORM TO THE SLOPE OF THE HOUSE CONNECTION SEWER, PULLED JOINTS MAY BE USED FOR ADJUSTMENT.
8. THE MAXIMUM DEFLECTION AT EACH JOINT FOR 100 mm (4") AND 150 mm (6") VITRIFIED CLAY PIPE HOUSE CONNECTION SEWERS SHALL BE 4°, WHICH IS EQUAL TO A PULL OF 14 mm (9/16") FOR A 150 mm (6") PIPE AND 10 mm (3/8") FOR A 100 mm (4") PIPE. (PULL IS DEFINED AS THE SEPARATION OF THE ABUTTING PIPE ENDS ON THE CONVEX SIDE OF THE CURVE MEASURED AT THE OUTSIDE PIPE BARREL).
9. CONNECTION OF A BUILDING SEWER SMALLER THAN 150 mm (6") TO A 150 mm (6") HOUSE CONNECTION SEWER SHALL BE MADE USING AN APPROVED INCREASER TEE OR AN INCREASER FOLLOWED BY A TEE.
10. ALL HOUSE CONNECTION SEWERS OR PORTIONS THEREOF CONSTRUCTED ON A SLOPE EXCEEDING 45° SHALL BE ANCHORED PER SPPWC 221.
11. HOUSE CONNECTION SEWERS CONSTRUCTED PURSUANT TO A HOUSE CONNECTION PERMIT SHALL CONFORM TO ALL APPLICABLE STATUTES AND ORDINANCES.

~~STANDARD PLANS FOR PUBLIC WORKS CONSTRUCTION~~

HOUSE CONNECTION SEWER

STANDARD PLAN METRIC
222-1
SHEET 2 OF 2

~~STANDARD PLANS FOR PUBLIC WORKS CONSTRUCTION~~

~~PROMULGATED BY THE PUBLIC WORKS STANDARDS INC. GREENBOOK COMMITTEE 1984 REV. 1996~~

HOUSE CONNECTION SEWER

~~USE WITH STANDARD SPECIFICATIONS FOR PUBLIC WORKS CONSTRUCTION~~

STANDARD PLAN METRIC
222-1
SHEET 1 OF 2

ALL DIMENSIONS ARE IN METERS UNLESS OTHERWISE SHOWN

SANITARY SEWER DETAILS

NO SCALE

SSD-36

CALCULATED-DESIGNED BY	YIM T. TSE	REVISED BY	YTT
CHECKED BY	NGIM NANCY PE	DATE REVISED	10/09
FUNCTIONAL SUPERVISOR	NGIM NANCY PE	RK	YTT
		02/08	04/09

STATE OF CALIFORNIA - DEPARTMENT OF TRANSPORTATION
Caltrans OFFICE OF DESIGN A

S:\projects\2159c1\72159cjc036.dgn

LAST REVISION 00-00-00 | DATE PLOTTED => 31-JAN-2011 | TIME PLOTTED => 14:55

Dist	COUNTY	ROUTE	KILOMETER POST TOTAL PROJECT	SHEET No.	TOTAL SHEETS
07	LA	5	2.9/4.9	373	1082

Caltrans Metric

Ngim N. Pe 12-23-09
REGISTERED CIVIL ENGINEER DATE

6-21-10
PLANS APPROVAL DATE

REGISTERED PROFESSIONAL ENGINEER NGIM NANCY PE No. 58161 Exp. 6-30-10 CIVIL STATE OF CALIFORNIA

THE STATE OF CALIFORNIA OR ITS OFFICERS OR AGENTS SHALL NOT BE RESPONSIBLE FOR THE ACCURACY OR COMPLETENESS OF ELECTRONIC COPIES OF THIS PLAN SHEET.

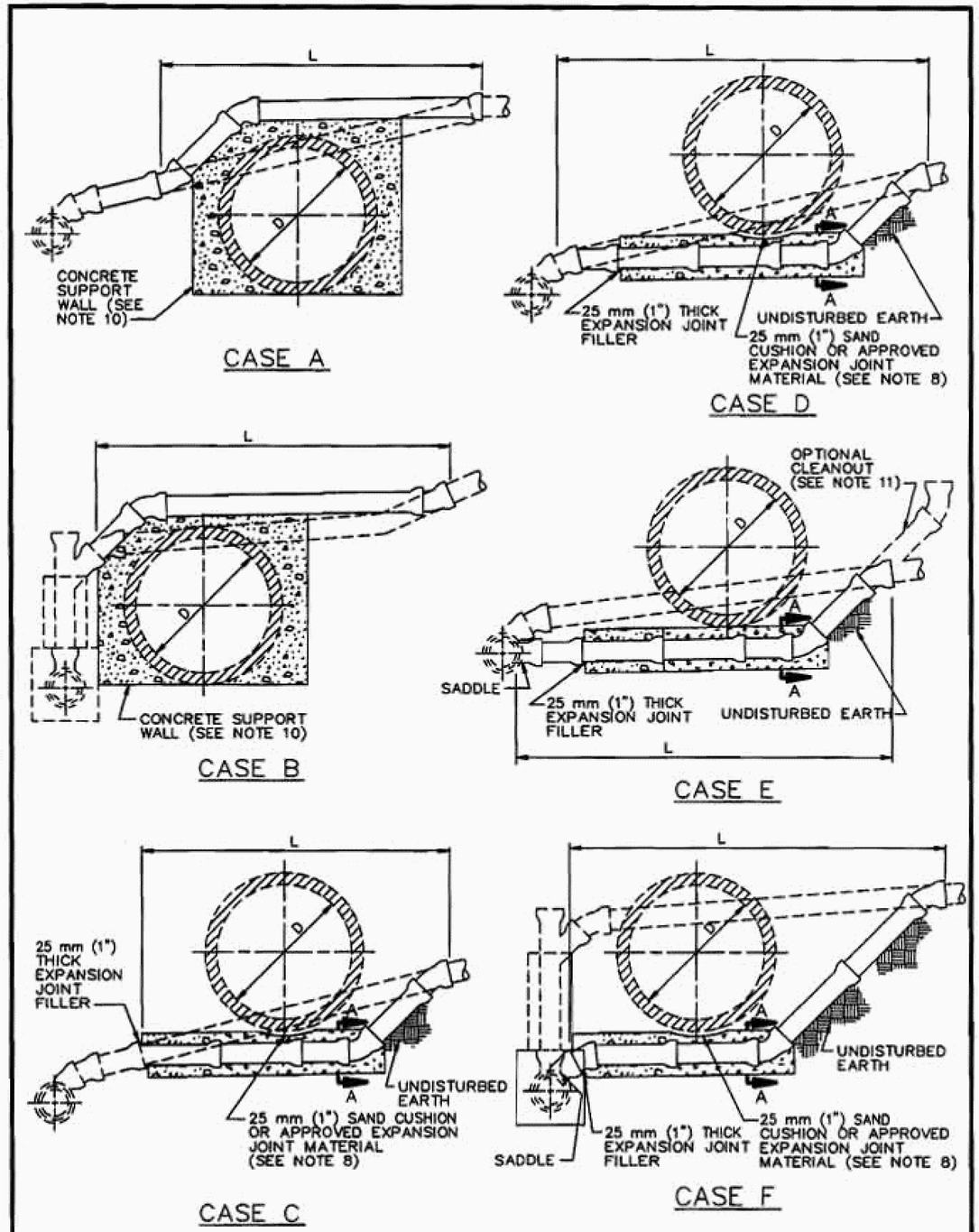

~~STANDARD PLANS FOR PUBLIC WORKS CONSTRUCTION~~

~~PROMULGATED BY THE PUBLIC WORKS STANDARD, INC. GREENSBOROUGH COMMITTEE 1984 REV. 1998~~

HOUSE CONNECTION REMODELING

~~USE WITH STANDARD SPECIFICATIONS FOR PUBLIC WORKS CONSTRUCTION~~

STANDARD PLAN METRIC
223-1
SHEET 1 OF 3

ALL DIMENSIONS ARE IN METERS
UNLESS OTHERWISE SHOWN

SANITARY SEWER DETAILS

NO SCALE

SSD-37

YTT	YTT	RK	YIM T. TSE
10/09	04/09	02/08	NGIM NANCY PE
REVISED BY	DATE REVISED	CALCULATED-DESIGNED BY	CHECKED BY

FUNCTIONAL SUPERVISOR: NGIM NANCY PE

STATE OF CALIFORNIA - DEPARTMENT OF TRANSPORTATION
Caltrans OFFICE OF DESIGN A

S:\projects\2159c1\72159cjc037.dgn

LAST REVISION 00-00-00 | DATE PLOTTED => 31-JAN-2011 | TIME PLOTTED => 13:52

Dist	COUNTY	ROUTE	KILOMETER POST TOTAL PROJECT	SHEET No.	TOTAL SHEETS
07	LA	5	2.9/4.9	374	1082

Caltrans Metric

REGISTERED CIVIL ENGINEER 12-23-09 DATE

6-21-10
PLANS APPROVAL DATE

REGISTERED PROFESSIONAL ENGINEER NGIM NANCY PE No. 58161 Exp. 6-30-10 CIVIL STATE OF CALIFORNIA

THE STATE OF CALIFORNIA OR ITS OFFICERS OR AGENTS SHALL NOT BE RESPONSIBLE FOR THE ACCURACY OR COMPLETENESS OF ELECTRONIC COPIES OF THIS PLAN SHEET.

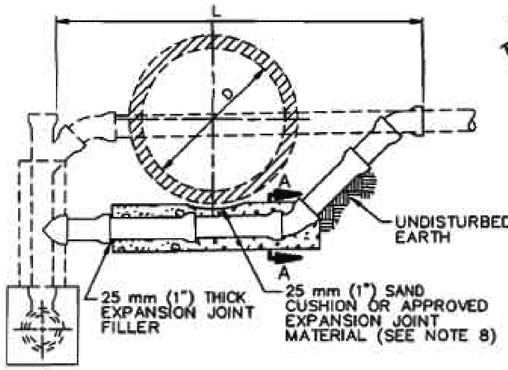

CASE G

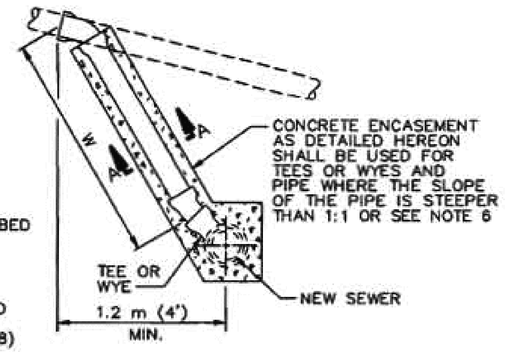

CASE R

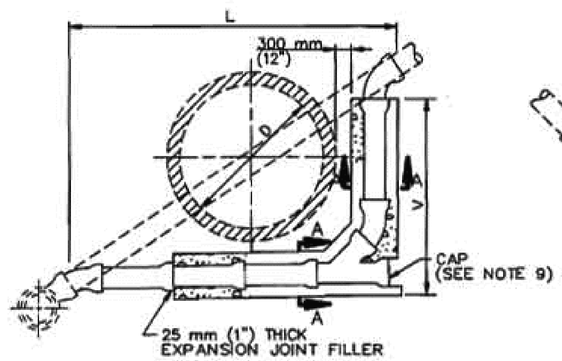

CASE H

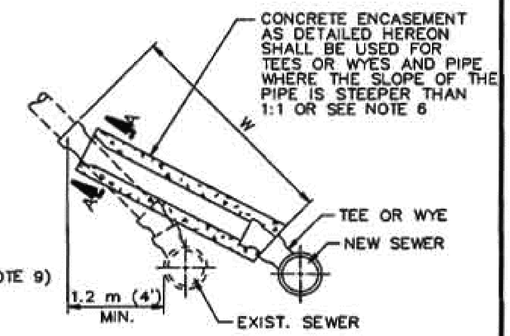

CASE S

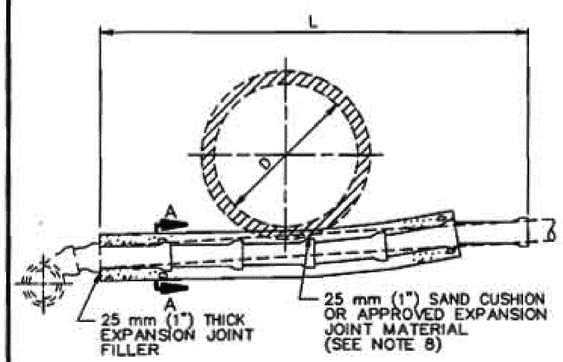

CASE K

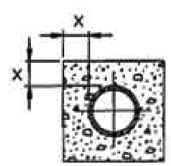

NOMINAL DIAMETER OF PIPE mm (INCHES)	MINIMUM DIMENSIONS X mm (INCHES)
150 (6)	75 (3)
200 (8)	100 (4)
250 (10)	125 (5)
300 (12)	150 (6)

SECTION A–A
CONCRETE ENCASEMENT DETAIL
(SEE NOTE 5)

~~STANDARD PLANS FOR PUBLIC WORKS CONSTRUCTION~~

HOUSE CONNECTION REMODELING

STANDARD PLAN METRIC **223–1** SHEET 2 OF 3

NOTES

1. EXCEPT AS OTHERWISE INDICATED HEREON OR ON THE PLANS, ALL HOUSE CONNECTION REMODELING SHALL CONFORM TO THE APPLICABLE PORTIONS OF SPPWC 222, HOUSE CONNECTION SEWER.
2. SEE PROJECT PLANS FOR VALUES OF D, L, V, AND W. (DIMENSION L IS THE HORIZONTAL LENGTH OF THE HOUSE CONNECTION REMODELING).
3. EXISTING SEWERS ARE INDICATED BY DASHED LINES. HOUSE CONNECTION SEWERS TO BE CONSTRUCTED ARE INDICATED BY SOLID LINES AND SHALL BE OF THE SAME MATERIAL AS THE EXISTING SEWER. THE CONTRACTOR MAY CONSTRUCT THE SEWER WITH OTHER MATERIALS ALLOWED BY SPPWC 222 PROVIDED APPROVED ADAPTORS ARE UTILIZED.
4. 1/16 (22.5°) OR 1/8 (45°) BENDS SHALL BE USED TO REMODEL OR CONSTRUCT ANY SEWER ON A CURVE OR AT ANY CHANGE IN ALIGNMENT. WHERE PHYSICAL OR GEOMETRIC LIMITATIONS PRECLUDE THE USE OF 1/16 (22.5°) OR 1/8 (45°) BENDS, THE CONTRACTOR SHALL SUBMIT TO THE ENGINEER FOR APPROVAL THE PROPOSED METHOD OF REMODELING OR CONSTRUCTION.
5. ALL HOUSE CONNECTION SEWERS TO BE CONSTRUCTED UNDER A PROPOSED CONDUIT SHALL BE ENCASED IN CONCRETE AS SHOWN HEREON. WHEN THE HOUSE CONNECTION SEWER SLOPE EXCEEDS 1:1 THE CONTRACTOR MAY, AT ITS OPTION, PLACE A CIRCULAR CROSS SECTION WITH MINIMUM COVER EQUAL TO DIMENSION "X" AS SHOWN ON SECTION A–A HEREON IN LIEU OF A SQUARE CROSS SECTION OF CONCRETE. CONCRETE BEDDING AND ENCASEMENT SHALL BE CLASS 250–C–14 (450–C–2000) AND SHALL EXTEND TO THE FIRST PIPE JOINT AT LEAST 300 mm (1') BEYOND THE OD OF EACH SIDE OF THE PROPOSED CONDUIT.
6. FOR CASE R AND S, WHEN THE SLOPE OF THE PIPE EXCEEDS 1:1, THE CONTRACTOR MAY, AT ITS OPTION, CONSTRUCT A CHIMNEY CONFORMING TO SPPWC 220 ON THE NEW SEWER IN LIEU OF CONSTRUCTING THE ENCASEMENT SHOWN HEREON.
7. FOR CASES E AND F, SADDLES SHALL BE CONNECTED EITHER TO THE LENGTH OF PIPE CONTAINING THE EXISTING TEE OR WYE OR TO THE ADJACENT DOWNSTREAM PIPE LENGTH.
8. CONDUITS TO BE INSTALLED OVER OR WITHIN 25 mm (1") OF ANY CONCRETE ENCASEMENT OR STRUCTURE, WHETHER EXISTING OR TO BE PLACED IN CONFORMITY WITH THE REQUIREMENTS HEREIN, SHALL BE INSTALLED ON A 25 mm (1") SAND CUSHION OR APPROVED EXPANSION JOINT MATERIAL. CONCRETE ENCASEMENT INSTALLED PURSUANT TO THIS STANDARD PLAN SHALL BE SEPARATED FROM EXISTING CONDUIT WITH 25 mm (1") THICK EXPANSION JOINT MATERIAL.
9. THOSE PORTIONS OF AN ABANDONED PIPE LOCATED BENEATH OR WITHIN 150 mm (6") OF A RELOCATED HOUSE CONNECTION SEWER SHALL BE REMOVED. THE EXCAVATION SHALL BE REFILLED TO THE GRADE OF THE NEW PIPE INVERT WITH CLASS 60–E–0.7 (100–E–100) CONCRETE. THE CONTRACTOR MAY, AT ITS OPTION, SUBSTITUTE MECHANICALLY COMPACTED BACKFILL IN LIEU OF THE CLASS 60–E–0.7 (100–E–100) CONCRETE. THOSE PORTIONS OF ABANDONED PIPE NOT REMOVED SHALL BE SEALED. WHERE CAPS ARE USED, THEY SHALL BE SEALED BY FILLING THE SPACE ABOVE THE CAP WITH SAND AND A 25 mm (1") THICK COATING OF TYPE "F" MORTAR.
10. SUPPORT WALLS SHALL CONFORM TO SPPWC 224.
11. WHEN INDICATED ON THE PLANS OR THE SPECIAL PROVISIONS, A CLEANOUT SHALL BE CONSTRUCTED IN CONJUNCTION WITH CASE E AS FOLLOWS:
    A. SUBSTITUTE A "Y" FOR THE 45° BEND.
    B. PLACE A 45° BEND ON THE UPPER END OF THE "Y".
    C. CAP TOP OF 45° BEND WITH A CAP AND SEAL WITH 25 mm (1") THICK TYPE "F" MORTAR AROUND THE CIRCUMFERENCE OF THE CAP.

~~STANDARD PLANS FOR PUBLIC WORKS CONSTRUCTION~~

HOUSE CONNECTION REMODELING

STANDARD PLAN METRIC **223–1** SHEET 3 OF 3

ALL DIMENSIONS ARE IN METERS UNLESS OTHERWISE SHOWN

SANITARY SEWER DETAILS
NO SCALE
SSD-38

STATE OF CALIFORNIA - DEPARTMENT OF TRANSPORTATION
Caltrans OFFICE OF DESIGN A

FUNCTIONAL SUPERVISOR NGIM NANCY PE
CALCULATED-DESIGNED BY YIM T. TSE
CHECKED BY NGIM NANCY PE
REVISED BY RK YTT YTT
DATE REVISED 02/08 04/09 10/09

S:\projects\2159c1\72159cjc038.dgn

LAST REVISION 00-00-00 DATE PLOTTED => 31-JAN-2011 TIME PLOTTED => 13:52

Dist	COUNTY	ROUTE	KILOMETER POST TOTAL PROJECT	SHEET No.	TOTAL SHEETS
07	LA	5	2.9/4.9	375	1082

Caltrans Metric

REGISTERED CIVIL ENGINEER 12-23-09 DATE

6-21-10
PLANS APPROVAL DATE

REGISTERED PROFESSIONAL ENGINEER NGIM NANCY PE No. 58161 Exp. 6-30-10 CIVIL STATE OF CALIFORNIA

THE STATE OF CALIFORNIA OR ITS OFFICERS OR AGENTS SHALL NOT BE RESPONSIBLE FOR THE ACCURACY OR COMPLETENESS OF ELECTRONIC COPIES OF THIS PLAN SHEET.

CASE I
REINFORCED CONCRETE BEAM
FOR 100 mm (4") TO 610 mm (24") ID PIPE

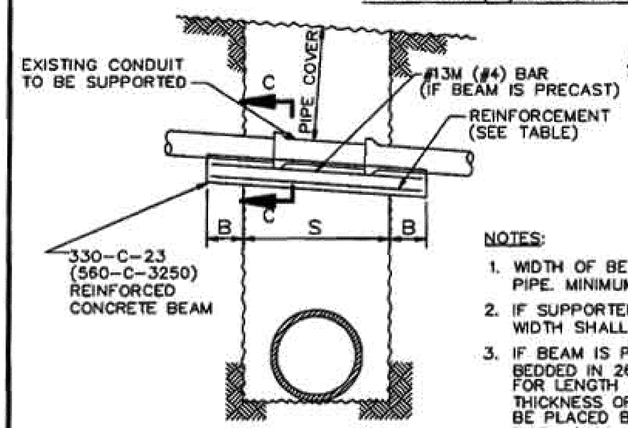

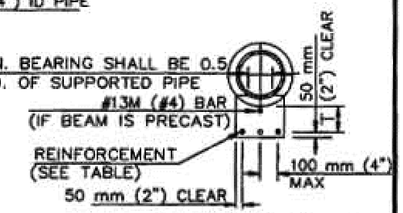

SECTION C-C

NOTES:

1. WIDTH OF BEAM SHALL EQUAL OD OF SUPPORTED PIPE. MINIMUM WIDTH SHALL BE 150 mm (6").
2. IF SUPPORTED PIPE IS BEDDED IN CONCRETE, BEAM WIDTH SHALL EQUAL BEDDING WIDTH.
3. IF BEAM IS PRECAST, ENDS OF BEAM SHALL BE FULLY BEDDED IN 265-C-14 (450-C-2000) CONCRETE FOR LENGTH "B". THE BEDDING SHALL HAVE A MINIMUM THICKNESS OF 100 mm (4"). CLASS "C" MORTAR SHALL BE PLACED BETWEEN TOP OF BEAM AND SUPPORTED PIPE TO PROVIDE MINIMUM BEARING SHOWN.
4. THIS CASE IS PERMITTED ONLY IF THE TRENCH WALLS ARE FIRM AND UNYIELDING.
5. MAXIMUM SPACING OF BARS SHALL BE 100 mm (4") OC.

REINFORCED CONCRETE BEAM (DIMENSIONS AND REINFORCEMENT)

S	PIPE COVER														
	0 m TO 2.4 m			2.4 m TO 3.7 m			3.7 m TO 4.9 m			4.9 m TO 6.0 m			6.0 m TO 7.6 m		
	(0' TO 8'-0")			(8'-0" TO 12'-0")			(12-0" TO 16'-0")			(16'-0" TO 20'-0")			(20'-0" TO 25'-0")		
	T	BARS	B	T	BARS	B	T	BARS	B	T	BARS	B	T	BARS	B
8m TO 1.2m (0" TO 4'-0")	200mm (8")	#13M (#4)	0.50m (1'-6")	200mm (8")	#13M (#4)	0.50m (1'-6")	230mm (9")	#13M (#4)	0.50m (1'-6")	255mm (10")	#13M (#4)	0.50m (1'-6")	270mm (10 1/2")	#13M (#4)	0.50m (1'-6")
1.2m TO 1.50m (4'-0" TO 5'-0")	200mm (8")	#13M (#4)	0.50m (1'-6")	250mm (9 1/2")	#13M (#4)	0.50m (1'-6")	280mm (11")	#13M (#4)	0.50m (1'-6")	305mm (12")	#13M (#4)	0.50m (1'-6")	320mm (12 1/2")	#16M (#5)	0.50m (1'-6")
1.5m TO 1.85m (5'-0" TO 6'-0")	230mm (9")	#13M (#4)	0.50m (1'-6")	280mm (11")	#16M (#5)	0.50m (1'-6")	320mm (12 1/2")	#16M (#5)	0.50m (1'-6")	340mm (13 1/2")	#16M (#5)	0.6m (2'-0")	370mm (14 1/2")	#16M (#5)	0.6m (3'-0")
1.85m TO 2.15m (6'-0" TO 7'-0")	255mm (10")	#16M (#5)	0.50m (1'-6")	320mm (12 1/2")	#16M (#5)	0.6m (2'-0")	370mm (14 1/2")	#16M (#5)	0.6m (2'-0")	395mm (15 1/2")	#16M (#5)	0.6m (2'-0")	420mm (16 1/2")	#19M (#6)	0.6m (2'-0")
2.15m TO 2.45m (7'-0" TO 8'-0")	280mm (11")	#16M (#5)	0.50m (1'-6")	355mm (14")	#16M (#5)	0.6m (2'-0")	410mm (16")	#16M (#5)	0.6m (2'-0")	445mm (17 1/2")	#16M (#5)	0.75m (2'-6")	485mm (19")	#19M (#6)	0.75m (2'-6")
2.45m TO 2.75m (8'-0" TO 9'-0")	320mm (12 1/2")	#16M (#5)	0.6m (2'-0")	395mm (15 1/2")	#19M (#6)	0.75m (2'-6")	445mm (17 1/2")	#19M (#6)	0.90m (3'-0")	495mm (19 1/2")	#19M (#6)	0.75m (2'-6")	535mm (21")	#19M (#6)	0.75m (2'-6")
2.75m TO 3.0m (9'-0" TO 10'-0")	340mm (13 1/2")	#19M (#6)	0.6m (2'-0")	430mm (17")	#19M (#6)	0.75m (2'-6")	495mm (19 1/2")	#19M (#6)	0.90m (3'-0")	545mm (21 1/2")	#19M (#6)	0.9m (3'-0")	585mm (23")	#19M (#6)	0.90m (3'-0")
3.0m TO 3.35m (10'-0" TO 10'-0")	370mm (14 1/2")	#19M (#6)	0.75m (2'-6")	470mm (18 1/2")	#19M (#6)	0.90m (3'-0")	535mm (21")	#19M (#6)	0.90m (3'-0")	595mm (23 1/2")	#22M (#7)	0.9m (3'-0")	635mm (25")	#22M (#7)	0.90m (3'-0")
3.35m TO 3.65m (11'0" TO 12'-0")	395mm (15 1/2")	#19M (#6)	0.75m (2'-6")	510mm (20")	#19M (#6)	0.90m (3'-0")	585mm (23")	#22M (#7)	1.10m (3'-6")	650mm (25 1/2")	#22M (#7)	1.10m (3'-6")	685mm (27")	#22M (#7)	1.10m (3'-6")
3.65m TO 4.00m (12'-0" TO 13'-0")	430mm (17")	#19M (#6)	0.90m (3'-0")	545mm (21 1/2")	#22M (#7)	1.10m (3'-6")	625mm (24 1/2")	#22M (#7)	1.10m (3'-6")	700mm (27 1/2")	#22M (#7)	1.20m (4'-0")	740mm (29")	#22M (#7)	1.20m (4'-0")
4.00m TO 4.25m (13'-1" TO 14'-0")	455mm (18")	#22M (#7)	0.90m (3'-0")	585mm (23")	#22M (#7)	1.10m (3'-6")	675mm (26 1/2")	#22M (#7)	1.20m (4'-0")	750mm (29 1/2")	#22M (#7)	1.20m (4'-0")	800mm (31 1/2")	#22M (#7)	1.20m (4'-0")
4.25m TO 4.60m (14'-0" TO 15'-0")	485mm (19")	#22M (#7)	0.90m (3'-0")	635mm (25")	#22M (#7)	1.20m (4'-0")	710mm (28")	#22M (#7)	1.20m (4'-0")	800mm (31 1/2")	#22M (#7)	1.40m (4'-6")			
4.6m TO 4.90m (15'-0" TO 16'-0")	520mm (20 1/2")	#22M (#7)	1.10m (3'-6")	675mm (26 1/2")	#22M (#7)	1.20m (4'-0")	760mm (30")	#25M (#8)	1.40m (4'-6")						
4.90 TO 5.20m (16'-0" TO 17'-0")	545mm (21 1/2")	#22M (#7)	1.10m (3'-6")	710mm (28")	#25M (#8)	1.40m (4'-6")									
5.20m TO 5.50m (17'-0" TO 18'-0")	570mm (22 1/2")	#25M (#8)	1.40m (4'-6")	750mm (29 1/2")	#25M (#8)	1.40m (4'-6")									

~~STANDARD PLANS FOR PUBLIC WORKS CONSTRUCTION~~

~~PROMULGATED BY THE PUBLIC WORKS STANDARDS INC. GREENBOOK COMMITTEE 1994 REV. 1996~~

SUPPORTS FOR CONDUITS ACROSS TRENCHES

USE WITH STANDARD SPECIFICATIONS FOR PUBLIC WORKS CONSTRUCTION

STANDARD PLAN METRIC
224-1
SHEET 1 OF 3

ALL DIMENSIONS ARE IN METERS UNLESS OTHERWISE SHOWN

SANITARY SEWER DETAILS
NO SCALE
SSD-39

YTT	YTT	RK	YIM T. TSE
10/09	04/09	02/08	NGIM NANCY PE
REVISED BY			CALCULATED-DESIGNED BY
DATE REVISED			CHECKED BY

FUNCTIONAL SUPERVISOR: NGIM NANCY PE

STATE OF CALIFORNIA - DEPARTMENT OF TRANSPORTATION
Caltrans OFFICE OF DESIGN A

S:\projects\2159c1\72159cjc039.dgn

LAST REVISION 00-00-00 DATE PLOTTED => 31-JAN-2011 TIME PLOTTED => 13:52

Dist	COUNTY	ROUTE	KILOMETER POST TOTAL PROJECT	SHEET No.	TOTAL SHEETS
07	LA	5	2.9/4.9	376	1082

Caltrans Metric

Ngim N. Pe 12-23-09
REGISTERED CIVIL ENGINEER DATE

6-21-10
PLANS APPROVAL DATE

REGISTERED PROFESSIONAL ENGINEER NGIM NANCY PE No. 58161 Exp. 6-30-10 CIVIL STATE OF CALIFORNIA

THE STATE OF CALIFORNIA OR ITS OFFICERS OR AGENTS SHALL NOT BE RESPONSIBLE FOR THE ACCURACY OR COMPLETENESS OF ELECTRONIC COPIES OF THIS PLAN SHEET.

CASE 2
CONCRETE WALL

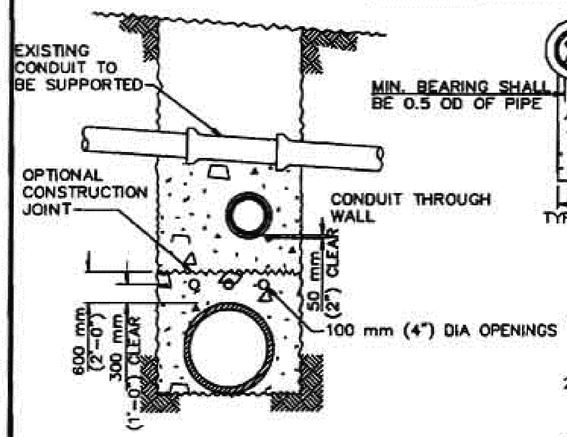

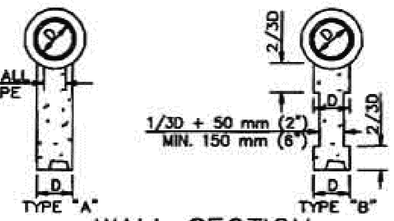

WALL SECTION

NOTES

1. THE SUPPORTING WALL SHALL HAVE A FIRM BEARING ON THE SUBGRADE AND AGAINST THE SIDES OF THE EXCAVATION.
2. ANY CONDUIT PASSING THROUGH THE WALL SHALL HAVE 50 mm (2") CLEARANCE FROM THE WALL.
3. 100 mm (4") DIA OPENING THROUGH THE WALL AT 600 mm (2') OC HORIZONTALLY AND AT 1.5 m (5') OC VERTICALLY SHALL BE PROVIDED TO PREVENT UNEQUAL PRESSURE RESULTING FROM JETTED BACKFILL.
4. IF SUPPORTED PIPE IS BEDDED IN CONCRETE, MINIMUM THICKNESS OF WALL SHALL EQUAL BEDDING WIDTH.
5. BRICK WITH MORTAR JOINTS MAY BE USED IN LIEU OF CONCRETE FOR WALLS UP TO 1.5 m (5') IN HEIGHT OR LENGTH.

CASE 3
DUCTILE IRON PIPE

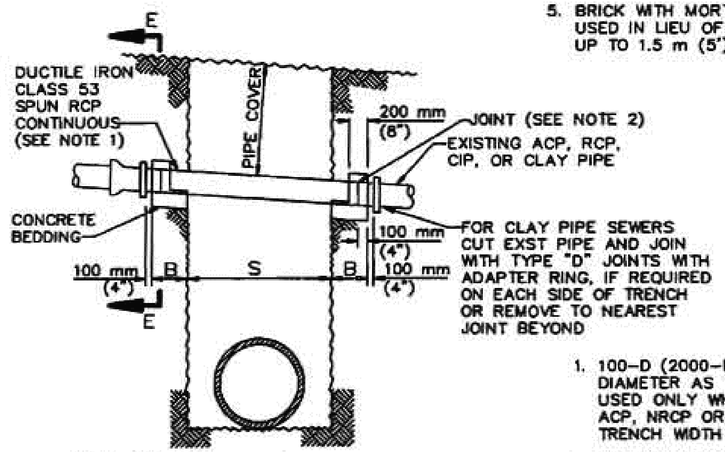

NOTES

1. 100-D (2000-D) SPUN RCP OF SAME DIAMETER AS THE EXISTING PIPE MAY BE USED ONLY WHEN THE EXISTING PIPE IS ACP, NRCP OR RCP AND THE TRENCH WIDTH IS 1.5 m (5') OR LESS.
2. THE CONCRETE COLLAR JOINT SHALL BE USED FOR JOINTS IN STORM DRAIN PIPE.

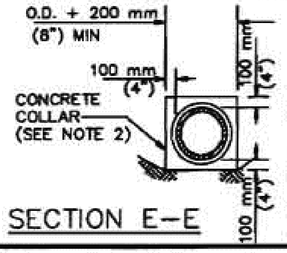

SECTION E-E

ALLOWABLE SPANS AND MIN. REQUIRED BEARING FOR DUCTILE IRON PIPE

DEPTH OF COVER	150 mm (6") PIPE		200 mm (8") PIPE		250 mm (10") PIPE	
	S (Max)	B (Min)	S (Max)	B (Min)	S (Max)	B (Min)
0 m TO 2.45 m (0" TO 8'-0")	3.35 m (11'-0")	0.5 m (1'-6")	4.10 m (13'-6")	0.5 m (1'-6")	5.03 m (16'-6")	0.6 m (2'-0")
2.45 m TO 4.90m (8'-0" TO 16'-0")	2.45 m (8'-0")	0.5 m (1'-6")	3.00 m (10'-0")	0.6 m (2'-0")	3.66 m (12'-0")	0.6 m (2'-0")
4.90 m TO 7.60m (16'-0" TO 25'-0")	2.15 m (7'-0")	0.5 m (1'-6")	2.75 m (9'-0")	0.6 m (2'-0")	3.20 m (10'-6")	0.75 m (2'-6")

~~STANDARD PLANS FOR PUBLIC WORKS CONSTRUCTION~~

SUPPORTS FOR CONDUITS ACROSS TRENCHES

STANDARD PLAN METRIC
224-1
SHEET 2 OF 3

ALL DIMENSIONS ARE IN METERS UNLESS OTHERWISE SHOWN

SANITARY SEWER DETAILS
NO SCALE
SSD-40

YTT	YTT	RK	YIM T. TSE	CALCULATED-DESIGNED BY	FUNCTIONAL SUPERVISOR
10/09	04/09	02/08	NGIM NANCY PE	CHECKED BY	NGIM NANCY PE
		REVISED BY			
		DATE REVISED			

STATE OF CALIFORNIA - DEPARTMENT OF TRANSPORTATION
Caltrans OFFICE OF DESIGN A

S:\projects\2159c1\72159cjc040.dgn

LAST REVISION 00-00-00 | DATE PLOTTED => 31-JAN-2011 | TIME PLOTTED => 13:52

Dist	COUNTY	ROUTE	KILOMETER POST TOTAL PROJECT	SHEET No.	TOTAL SHEETS
07	LA	5	2.9/4.9	377	1082

Caltrans Metric

REGISTERED CIVIL ENGINEER 12-23-09 DATE

6-21-10
PLANS APPROVAL DATE

REGISTERED PROFESSIONAL ENGINEER NGIM NANCY PE No. 58161 Exp. 6-30-10 CIVIL STATE OF CALIFORNIA

THE STATE OF CALIFORNIA OR ITS OFFICERS OR AGENTS SHALL NOT BE RESPONSIBLE FOR THE ACCURACY OR COMPLETENESS OF ELECTRONIC COPIES OF THIS PLAN SHEET.

COLUMN SUPPORT WITH REINFORCED CONCRETE BEAM

CASE 4

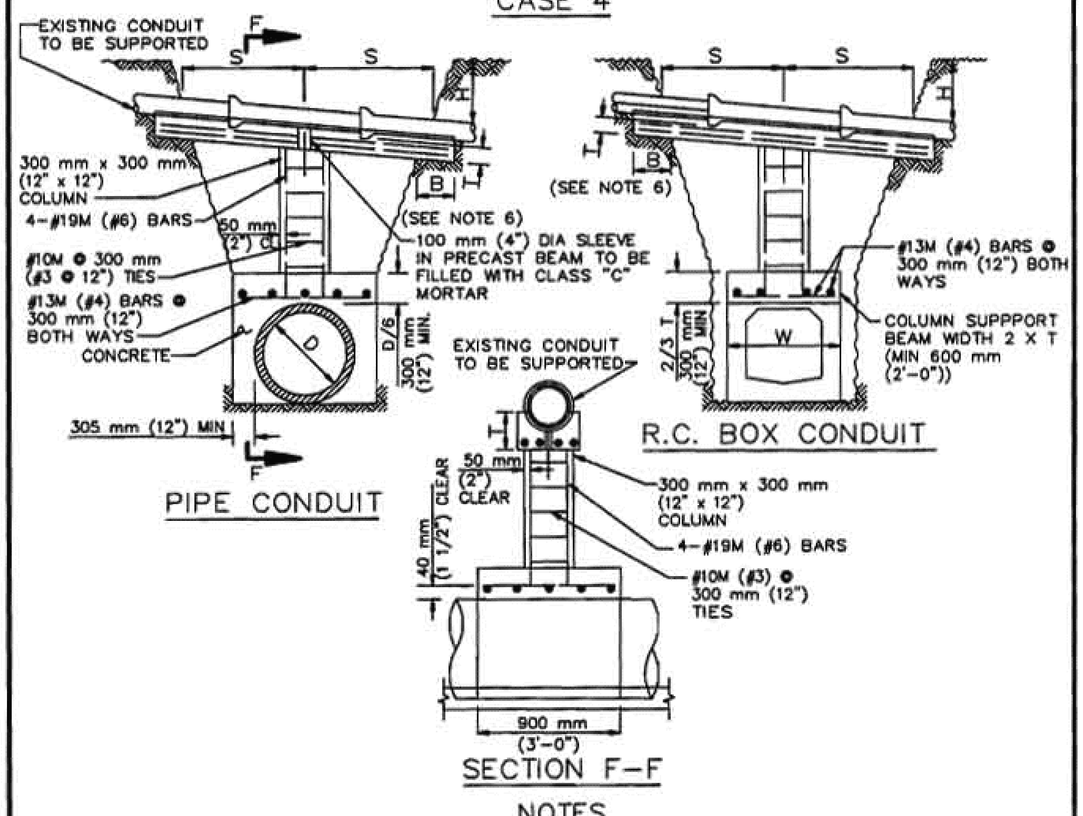

NOTES

1. SPAN "S" SHALL BE MAXIMUM 5.5 m (18') FOR EARTH COVER 2.45 m (8') OR LESS, 3.65 m (12') FOR EARTH COVER 4.9 m (16') OR LESS, AND 3.0 m (10') FOR OVER 4.9 m (16') EARTH COVER.
2. CONCRETE SHALL BE CLASS 330-C-23 (560-B-3250).
3. WHEN THE PIPE TO BE SUPPORTED CROSSES THE TRENCH ON A SKEW ANGLE, THE WALL OR BEAM WHICH SUPPORTS THE COLUMN SHALL BE CONSTRUCTED AT RIGHT ANGLE TO THE TRENCH.
4. SUPPORT SYSTEM MAY BE USED OVER CAST-IN-PLACE STRUCTURES.
5. BACKFILL ABOVE THE SUPPORT BEAM SHALL NOT BE PLACED UNTIL 72 HOURS AFTER THE SUPPORT IS POURED.
6. REINFORCED CONCRETE BEAM DIMENSIONED AND REINFORCED PER TABLE UNDER CASE 1.

GENERAL NOTES

1. "S" IS THE SPAN OF THE PIPE SUPPORT MEASURED ALONG ITS CENTERLINE.
2. "B" IS THE LENGTH OF BEARING OF THE SUPPORT AGAINST UNDISTURBED EARTH MEASURED ALONG THE PIPE CENTERLINE.
3. CASE 2 SHALL BE USED FOR PARTIAL CROSSINGS, EXCEPT THAT WHERE THE DISTANCE FROM A SEWER CHIMNEY TO UNDISTURBED EARTH IS 450 mm (18") OR LESS, THE TRENCH BACKFILL MAY BE DENSIFIED TO 450 mm (18") ABOVE A HOUSE CONNECTION SEWER AND THEN RE-EXCAVATED FOR THE PIPE INSTALLATION.
4. ANY SEWER OR STORM DRAIN EXPOSED OR PARTIALLY EXPOSED IN A TUNNEL EXCAVATION SHALL BE SUPPORTED WITH A WALL, CASE 2.
5. IF BEDDING IS REMOVED FROM THE EXISTING PIPE THAT WILL REMAIN IN PLACE, THE PIPE SHALL BE EMBEDDED WITH CONCRETE AT NO EXTRA COST TO THE AGENCY.
6. UNLESS OTHERWISE INDICATED, CONCRETE SHALL BE CLASS 265-C-14 (450-C-2000).

~~STANDARD PLANS FOR PUBLIC WORKS CONSTRUCTION~~

SUPPORTS FOR CONDUITS ACROSS TRENCHES

STANDARD PLAN METRIC
224-1
SHEET 3 OF 3

ALL DIMENSIONS ARE IN METERS UNLESS OTHERWISE SHOWN

SANITARY SEWER DETAILS

NO SCALE

SSD-41

YTT	YTT	RK	YIM T. TSE
10/09	04/09	02/08	NGIM NANCY PE
YTT	YTT	REVISED BY	FUNCTIONAL SUPERVISOR
10/09	04/09	DATE REVISED	NGIM NANCY PE
CALCULATED-DESIGNED BY			
CHECKED BY			

STATE OF CALIFORNIA - DEPARTMENT OF TRANSPORTATION
Caltrans OFFICE OF DESIGN A

S:\projects\2159c1\72159cjc041.dgn

LAST REVISION 00-00-00 | DATE PLOTTED => 31-JAN-2011 | TIME PLOTTED => 13:52

Dist	COUNTY	ROUTE	KILOMETER POST TOTAL PROJECT	SHEET No.	TOTAL SHEETS
07	LA	5	2.9/4.9	378	1082

Caltrans Metric

REGISTERED CIVIL ENGINEER 12-23-09 DATE

6-21-10
PLANS APPROVAL DATE

REGISTERED PROFESSIONAL ENGINEER NGIM NANCY PE No. 58161 Exp. 6-30-10 CIVIL STATE OF CALIFORNIA

THE STATE OF CALIFORNIA OR ITS OFFICERS OR AGENTS SHALL NOT BE RESPONSIBLE FOR THE ACCURACY OR COMPLETENESS OF ELECTRONIC COPIES OF THIS PLAN SHEET.

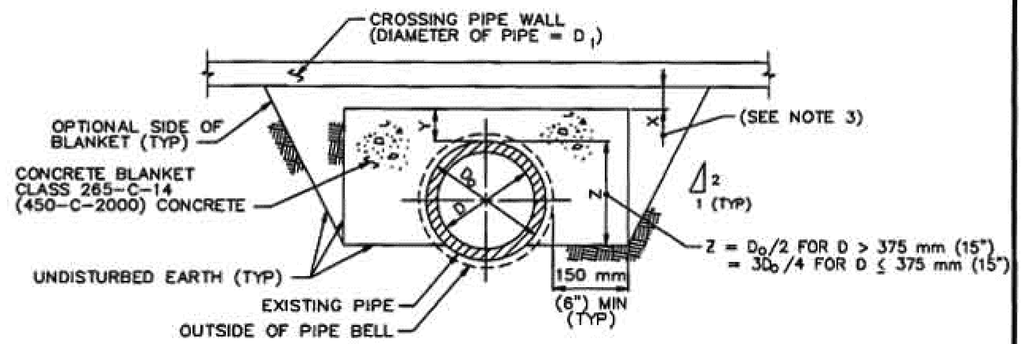

CONCRETE BLANKET
(FOR EXISTING PIPES CROSSED OVER BY A NEW PIPE)

NOTES:

1. CONCRETE BLANKET IS REQUIRED WHEN THE CLEARANCE BETWEEN THE TOP OF THE EXISTING PIPE AND THE BOTTOM OF THE CROSSING PIPE IS LESS THAN 450 mm (18").
2. Y = D/6 (150 mm (6") MIN). WHERE THE CLEARANCE BETWEEN THE TOP OF THE EXISTING PIPE AND THE BOTTOM OF THE CROSSING PIPE IS LESS THAN Y, THE CONCRETE SHALL BE PLACED BETWEEN THE PIPES AND AROUND THE SIDES OF THE CROSSING PIPE UP TO A LEVEL EQUAL TO Y ABOVE THE EXISTING PIPE, OR AS REQUIRED BY NOTE 3 BELOW, WHICHEVER IS HIGHER.
3. X = D/12, MINIMUM, TO PROVIDE BEDDING MATERIAL FOR THE CROSSING CONDUIT. WHEN X IS LESS THAN THIS MINIMUM, THE ENTIRE TOP SURFACE OF THE BLANKET SHALL BE RAISED TO MAKE CONTACT WITH THE LOWER 90° OF THE CROSSING PIPE.
4. THE BLANKET SHALL EXTEND LONGITUDINALLY TO THE FIRST JOINT BEYOND THE TRENCH EXCAVATION AT EACH END OF THE BLANKET, EXCEPT THAT THE BLANKET NEED NOT BE EXTENDED MORE THAN 1.2 m (4') BEYOND THE TRENCH.
5. WHENEVER A PIPE BELL IS ENCOUNTERED WITHIN THE LIMITS OF THE BLANKET, ALL DIMENSIONS SHALL REFER TO THE BELL.

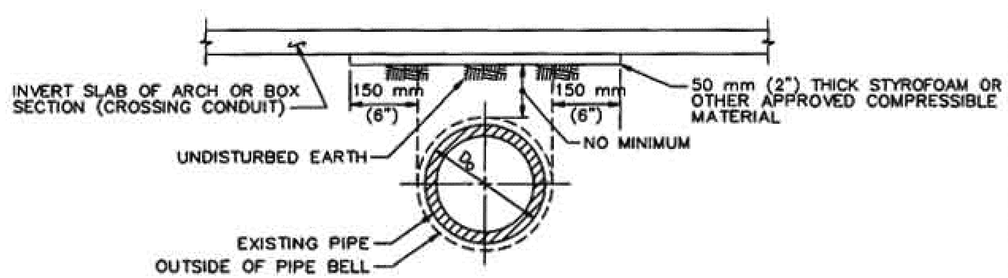

COMPRESSIBLE BLANKET
(FOR EXISTING PIPES CROSSED OVER BY A NEW BOX OR ARCH)

NOTES:

1. COMPRESSIBLE BLANKET IS REQUIRED WHEN THE CLEARANCE BETWEEN THE TOP OF THE EXISTING PIPE AND THE BOTTOM OF THE CROSSING CONDUIT (BOX OR ARCH) IS LESS THAN 450 mm (18").
2. THE BLANKET SHALL EXTEND LONGITUDINALLY FOR THE FULL CROSSING CONDUIT TRENCH WIDTH.

~~STANDARD PLANS FOR PUBLIC WORKS CONSTRUCTION~~

~~PROMULGATED BY THE PUBLIC WORKS STANDARDS INC. GREENBOOK COMMITTEE 1984 REV. 1996~~

BLANKET PROTECTION FOR PIPES

~~USE WITH STANDARD SPECIFICATIONS FOR PUBLIC WORKS CONSTRUCTION~~

STANDARD PLAN METRIC
225-1
SHEET 1 OF 1

ALL DIMENSIONS ARE IN METERS UNLESS OTHERWISE SHOWN

SANITARY SEWER DETAILS
NO SCALE

SSD-42

YTT	YTT	RK	YIM T. TSE
10/09	04/09	02/08	NGIM NANCY PE
DATE REVISED		REVISED BY	

CALCULATED-DESIGNED BY: YIM T. TSE
CHECKED BY: NGIM NANCY PE
FUNCTIONAL SUPERVISOR: NGIM NANCY PE

STATE OF CALIFORNIA - DEPARTMENT OF TRANSPORTATION
Caltrans OFFICE OF DESIGN A

S:\projects\2159c1\72159cjc042.dgn

LAST REVISION 00-00-00 | DATE PLOTTED => 31-JAN-2011 | TIME PLOTTED => 13:52

Dist	COUNTY	ROUTE	KILOMETER POST TOTAL PROJECT	SHEET No.	TOTAL SHEETS
07	LA	5	2.9/4.9	379	1082

Caltrans Metric

REGISTERED CIVIL ENGINEER 12-23-09 DATE

6-21-10
PLANS APPROVAL DATE

REGISTERED PROFESSIONAL ENGINEER NGIM NANCY PE No. 58161 Exp. 6-30-10 CIVIL STATE OF CALIFORNIA

THE STATE OF CALIFORNIA OR ITS OFFICERS OR AGENTS SHALL NOT BE RESPONSIBLE FOR THE ACCURACY OR COMPLETENESS OF ELECTRONIC COPIES OF THIS PLAN SHEET.

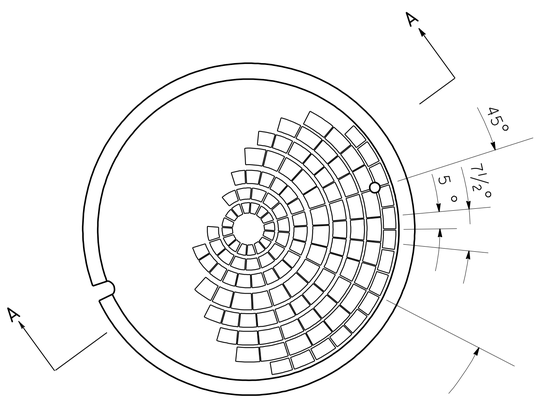

TOP OF COVER

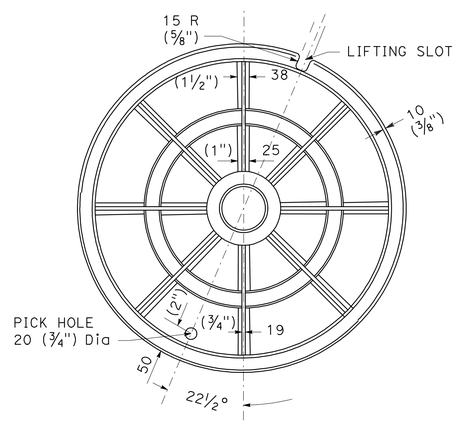

BOTTOM OF COVER

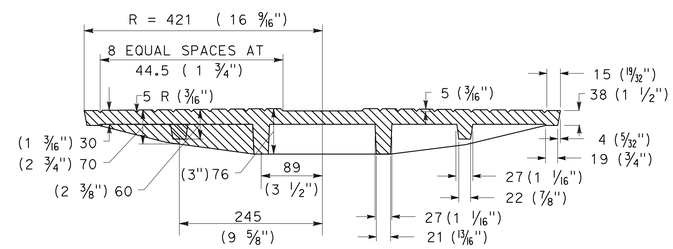

SECTION A-A

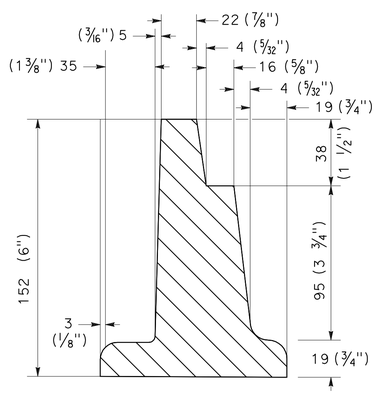

FRAME DETAIL

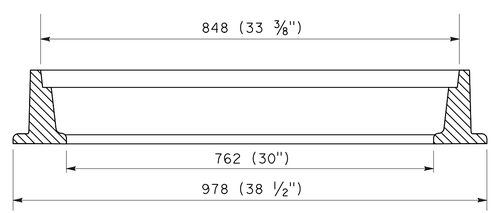

SECTION THRU FRAME

~~STANDARD PLANS FOR PUBLIC WORKS CONSTRUCTION~~

~~PROMULGATED BY THE PUBLIC WORKS STANDARDS INC. GREENBOOK COMMITTEE 1984 REV. 1996~~

763 MM (30") MANHOLE FRAME AND COVER

~~USE WITH STANDARD SPECIFICATIONS FOR PUBLIC WORKS CONSTRUCTION~~

STANDARD PLAN METRIC 632-2 SHEET 1 OF 2

NOTES:

1. COVERS SHALL BE CAST WITH THE LETTER "D" FOR STORM DRAINS AND "S" FOR SEWERS, AND THE AGENCY'S IDENTIFICATION IN ACCORDANCE WITH INSTRUCTIONS FURNISHED BY THE AGENCY. THE LETTER "D" OR "S" SHALL BE APPROXIMATELY 65 mm (2 1/2") HIGH WITH 15 mm (1/2") LINE WIDTH, AND PLACED IN THE CENTER OF THE COVER. ALL LETTERS SHALL BE FLUSH WITH THE FINISHEDSURFACE OF THE COVER.
2. FOUNDRY IDENTIFYING MARK, HEAT AND DATE SHALL BE CAST ON THE BOTTOM OF THE COVER AND ON THE INSIDE OF THE FRAME.
3. WEIGHT OF FRAME SHALL BE 145 kg (320 LBS). WEIGHT OF COVER SHALL BE 138 kg (305 LBS). ACTUAL WEIGHTS SHALL BE WITHIN A RANGE OF 95% TO 110%.
4. COVERS FOR MANHOLES LOCATED IN EASEMENTS, ALLEYS, PARKWAYS, AND ALL PLACES OTHER THAN PAVED STREETS SHALL BE PROVIDED WITH SOCKET-SET SCREW LOCKING DEVICES. DRILL AND TAP TWO HOLES TO A DEPTH OF 25 mm (1") AT 90 DEGRESS TO PICK HOLE AND INSTALL 20 mm X 20 mm (3/4" X 3/4") STAINLESS STEEL SOCKETSET SCREWS WITH 10 mm (3/8") RECESSED HEX HEAD. ALL THREADS SHALL BE N.C.

~~STANDARD PLANS FOR PUBLIC WORKS CONSTRUCTION~~

763 MM (30") MANHOLE FRAME AND COVER

STANDARD PLAN METRIC 632-2 SHEET 2 OF 2

ALL DIMENSIONS ARE IN MILLIMETERS UNLESS OTHERWISE SHOWN

SANITARY SEWER DETAILS

NO SCALE

SSD-43

YTT	YTT	RK	YIM T. TSE
10/09	04/09	02/08	NGIM NANCY PE
DATE REVISED		REVISED BY	

CALCULATED-DESIGNED BY
CHECKED BY

FUNCTIONAL SUPERVISOR
NGIM NANCY PE

STATE OF CALIFORNIA - DEPARTMENT OF TRANSPORTATION
Caltrans OFFICE OF DESIGN A

S:\projects\2159c1\72159cjc043.dgn

LAST REVISION 00-00-00
DATE PLOTTED => 31-JAN-2011
TIME PLOTTED => 13:52

Dist	COUNTY	ROUTE	KILOMETER POST TOTAL PROJECT	SHEET No.	TOTAL SHEETS
07	LA	5	2.9/4.9	380	1082

Caltrans Metric

REGISTERED CIVIL ENGINEER 12-23-09 DATE

6-21-10
PLANS APPROVAL DATE

REGISTERED PROFESSIONAL ENGINEER NGIM NANCY PE No. 58161 Exp. 6-30-10 CIVIL STATE OF CALIFORNIA

THE STATE OF CALIFORNIA OR ITS OFFICERS OR AGENTS SHALL NOT BE RESPONSIBLE FOR THE ACCURACY OR COMPLETENESS OF ELECTRONIC COPIES OF THIS PLAN SHEET.

SANITARY SEWER QUANTITIES

SANITARY SEWER SHEET No.	SYSTEM No.	UNIT No.	200 mm VITRIFIED CLAY SEWER PIPE	250 mm VITRIFIED CLAY SEWER PIPE	375 mm VITRIFIED CLAY SEWER PIPE	450 mm VITRIFIED CLAY SEWER PIPE (EXTRA STRENGTH)	525 mm VITRIFIED CLAY SEWER PIPE (EXTRA STRENGTH)	1220 mm REINFORCED CONCRETE SEWER PIPE	MINOR CONCRETE (PIPE ENCASEMENT)	ABANDON SEWER (200 mm VCP)	ABANDON SEWER (250 mm VCP)	ABANDON SEWER (375 mm VCP)	ABANDON SEWER (450 mm VCP)	ABANDON SEWER (1220 mm RCP)	REMOVE SEWER PIPE	ADJUST MANHOLE TO GRADE	ABANDON SEWER MANHOLE	CAP MANHOLE	REMOVE SEWER MANHOLE	MODIFY SEWER MANHOLE	CONCRETE SEWER MANHOLE	SEWER MANHOLE FRAME AND COVER	CONCRETE SEWER MANHOLE (TYPE E)	SEWER TERMINAL CLEANOUT	150 mm SEWER PIPE (LATERAL)	(N) HEIGHT OF MANHOLE	DESCRIPTION	SYSTEM No.	UNIT No.
			m	m	m	m	m	m	m3	m	m	m	m	m	m	EA	EA	EA	EA	EA	EA	EA	EA	EA	m	m			
SS-1	1	a																			1	1				2.749	SSMH-1	1	a
	1	b		104.85																								1	b
	1	c							26.57																			1	c
	1	d																							6		RECONSTRUCT 150 mm LATERAL	1	d
	1	e																							5		150 mm LATERAL	1	e
	1	f																							6		150 mm LATERAL	1	f
	1	g																			1	1				2.438	SSMH-2	1	g
	1	h		87.24																								1	h
	1	i																							9		150 mm LATERAL	1	i
	1	j																							9		RECONSTRUCT 150 mm LATERAL	1	j
	1	k																			1	1				2.955	SSMH-3	1	k
	1	l																							7		150 mm LATERAL	1	l
	1	m		19.80																								1	m
SS-1,SS-10	1	n																			1	1				3.318	SSMH-4	1	n
	1	o				47.50																						1	o
	1	p							13.89																			1	p
	1	q																			1	1				3.428	SSMH-5	1	q
SS-1,SS-2	1	r			99.50																							1	r
SS-1,SS-2	1	s							13.49																			1	s
SS-1	1	t								17.95																		1	t
	1	u															1										ABANDON SSMH (E)	1	u
	1	v								91.96																		1	v
	1	w															1										ABANDON SSMH (E)	1	w
	1	x								105.25																		1	x
	1	y											40.74															1	y
	1	z															1										ABANDON SSMH (E)	1	z
	1	a1										10.51																1	a1
SS-1,SS-2	1	a2										56.08																1	a2
SS-2	1	a3													50.00												REMOVE 375 mm VCP SEWER PIPE	1	a3
	1	a4																							8		150 mm LATERAL	1	a4
	1	a5																							8		150 mm LATERAL	1	a5
	1	a6														1				1						3.206	MODIFY (BASE), Adj TO GRADE (E) SSMH-6		a6
	1	a7														1										3.031	ADJUST (E) SSMH-7	1	a7
	1	a8														1										2.780	ADJUST (E) SSMH-8	1	a8
SS-3	1	a9														1										2.445	ADJUST (E) SSMH-9	1	a9
	1	b1														1										2.385	ADJUST (E) SSMH-10	1	b1
Sht TOTAL				211.89	99.50	47.50			53.95	215.16		66.59	40.74		50.00	5	3			1	5	5			58				

N = NOT A SEPARATE PAY ITEM. FOR INFORMATION ONLY

SANITARY SEWER QUANTITIES
SSQ-1

YTT 10/09 | YTT 04/09 | RK 02/08 | REVISED BY | DATE REVISED

YIM T. TSE | NGIM NANCY PE | CALCULATED-DESIGNED BY | CHECKED BY | FUNCTIONAL SUPERVISOR | NGIM NANCY PE

STATE OF CALIFORNIA - DEPARTMENT OF TRANSPORTATION
Caltrans OFFICE OF DESIGN A

S:\projects\2159c1\72159cjd001.dgn

LAST REVISION 00-00-00 | DATE PLOTTED => 22-JUN-2010 | TIME PLOTTED => 10:44

Dist	COUNTY	ROUTE	KILOMETER POST TOTAL PROJECT	SHEET No.	TOTAL SHEETS
07	LA	5	2.9/4.9	381	1082

REGISTERED CIVIL ENGINEER 12-23-09 DATE

6-21-10
PLANS APPROVAL DATE

REGISTERED PROFESSIONAL ENGINEER NGIM NANCY PE No. 58161 Exp. 6-30-10 CIVIL STATE OF CALIFORNIA

THE STATE OF CALIFORNIA OR ITS OFFICERS OR AGENTS SHALL NOT BE RESPONSIBLE FOR THE ACCURACY OR COMPLETENESS OF ELECTRONIC COPIES OF THIS PLAN SHEET.

Caltrans Metric

SANITARY SEWER QUANTITIES

SANITARY SEWER SHEET No.	SYSTEM No.	UNIT No.	200 mm VITRIFIED CLAY SEWER PIPE	250 mm VITRIFIED CLAY SEWER PIPE	375 mm VITRIFIED CLAY SEWER PIPE	450 mm VITRIFIED CLAY SEWER PIPE (EXTRA STRENGTH)	525 mm VITRIFIED CLAY SEWER PIPE (EXTRA STRENGTH)	1220 mm REINFORCED CONCRETE SEWER PIPE	MINOR CONCRETE (PIPE ENCASEMENT)	ABANDON SEWER (200 mm VCP)	ABANDON SEWER (250 mm VCP)	ABANDON SEWER (375 mm VCP)	ABANDON SEWER (450 mm VCP)	ABANDON SEWER (1220 mm RCP)	REMOVE SEWER PIPE	ADJUST MANHOLE TO GRADE	ABANDON SEWER MANHOLE	CAP MANHOLE	REMOVE SEWER MANHOLE	MODIFY SEWER MANHOLE	CONCRETE SEWER MANHOLE	SEWER MANHOLE FRAME AND COVER	CONCRETE SEWER MANHOLE (TYPE E)	SEWER TERMINAL CLEANOUT	150 mm SEWER PIPE (LATERAL)	(N) HEIGHT OF MANHOLE	DESCRIPTION	SYSTEM No.	UNIT No.
			m	m	m	m	m	m	m3	m	m	m	m	m	m	EA	EA	EA	EA	EA	EA	EA	EA	EA	m	m			
SS-3	1	b2														1										2.379	ADJUST (E) SSMH-11	1	b2
	1	b3														1										2.357	ADJUST TO GRADE SSMH-12	1	b3
SS-3,SS-6	1	b4																			1	1				2.822	SSMH-13	1	b4
SS-4	1	b5																		1						2.441	MODIFY (BASE) (E) SSMH-14	1	b5
	1	b6																							2		150 mm LATERAL	1	b6
	1	b7			103.8																							1	b7
	1	b8																							2		150 mm LATERAL	1	b8
	1	b9																			1	1				3.307	SSMH-15	1	b9
	1	c1																							2		150 mm LATERAL	1	c1
	1	c2																							2		150 mm LATERAL	1	c2
	1	c3			68.4																							1	c3
	1	c4																			1	1				3.342	SSMH-16	1	c4
	1	c5																							2		150 mm LATERAL	1	c5
	1	c6			46.9																							1	c6
	1	c7																			1	1				3.715	SSMH-17	1	c7
	1	c8			53.9																							1	c8
	1	c9													40.00												REMOVE 375 mm VCP SEWER PIPE	1	c9
	1	d1										64.80																1	d1
	1	d2															1										ABANDON SSMH (E)	1	d2
	1	d3								20.57																		1	d3
	1	d4										84.33																1	d4
	1	d5															1										ABANDON SSMH (E)	1	d5
	1	d6										65.17																1	d6
	1	d7															1										ABANDON SSMH (E)	1	d7
SS-4/SS-5	1	d8										85.18																1	d8
SS-5	1	d9																			1	1				3.834	SSMH-18	1	d9
	1	e1			53.9																							1	e1
	1	e2							9.81																			1	e2
	1	e3														1				1						5.547	MODIFY (BASE), Adj TO GRADE (E) SSMH-19		e3
	1	e4							4.42																			1	e4
	1	e5			18.0																							1	e5
	1	e6													18.0												REMOVE 375 mm VCP SEWER PIPE	1	e6
	1	e7														1				1						6.165	MODIFY (BASE), Adj TO GRADE (E) SSMH-20		e7
	1	e8							7.36																			1	e8
	1	e9														1										3.163	ADJUST TO GRADE SSMH-21	1	e9
	1	f1														1										3.060	ADJUST TO GRADE SSMH-22	1	f1
Sht TOTAL					344.9				21.59	20.57		299.48			58.00	6	3			3	5	5			10				

N = NOT A SEPARATE PAY ITEM. FOR INFORMATION ONLY

SANITARY SEWER QUANTITIES

SSQ-2

YIM T. TSE — REVISED BY — DATE REVISED
NGIM NANCY PE — RK 02/08 — YTT 04/09 — YTT 10/09

CALCULATED-DESIGNED BY
CHECKED BY

FUNCTIONAL SUPERVISOR
NGIM NANCY PE

STATE OF CALIFORNIA - DEPARTMENT OF TRANSPORTATION
Caltrans OFFICE OF DESIGN A

S:\projects\2159c1\72159cjd002.dgn

LAST REVISION 00-00-00 DATE PLOTTED => 22-JUN-2010 TIME PLOTTED => 10:44

Dist	COUNTY	ROUTE	KILOMETER POST TOTAL PROJECT	SHEET No.	TOTAL SHEETS
07	LA	5	2.9/4.9	382	1082

REGISTERED CIVIL ENGINEER 12-23-09 DATE

6-21-10
PLANS APPROVAL DATE

REGISTERED PROFESSIONAL ENGINEER NGIM NANCY PE No. 58161 Exp. 6-30-10 CIVIL STATE OF CALIFORNIA

THE STATE OF CALIFORNIA OR ITS OFFICERS OR AGENTS SHALL NOT BE RESPONSIBLE FOR THE ACCURACY OR COMPLETENESS OF ELECTRONIC COPIES OF THIS PLAN SHEET.

Caltrans Metric

SANITARY SEWER QUANTITIES

SANITARY SEWER SHEET No.	SYSTEM No.	UNIT No.	200 mm VITRIFIED CLAY SEWER PIPE	250 mm VITRIFIED CLAY SEWER PIPE	375 mm VITRIFIED CLAY SEWER PIPE	450 mm VITRIFIED CLAY SEWER PIPE (EXTRA STRENGTH)	525 mm VITRIFIED CLAY SEWER PIPE (EXTRA STRENGTH)	1220 mm REINFORCED CONCRETE SEWER PIPE	MINOR CONCRETE (PIPE ENCASEMENT)	ABANDON SEWER (200 mm VCP)	ABANDON SEWER (250 mm VCP)	ABANDON SEWER (375 mm VCP)	ABANDON SEWER (450 mm VCP)	ABANDON SEWER (1220 mm RCP)	REMOVE SEWER PIPE	ADJUST MANHOLE TO GRADE	ABANDON SEWER MANHOLE	CAP MANHOLE	REMOVE SEWER MANHOLE	MODIFY SEWER MANHOLE	CONCRETE SEWER MANHOLE	SEWER MANHOLE FRAME AND COVER	CONCRETE SEWER MANHOLE (TYPE E)	SEWER TERMINAL CLEANOUT	150 mm SEWER PIPE (LATERAL)	(N) HEIGHT OF MANHOLE	DESCRIPTION	SYSTEM No.	UNIT No.
			m	m	m	m	m	m	m3	m	m	m	m	m	m	EA	EA	EA	EA	EA	EA	EA	EA	EA	m	m			
SS-5	1	f2														1										2.893	ADJUST TO GRADE SSMH-23	1	f2
	1	f3															1										ABANDON SSMH (E)	1	f3
	1	f4										25.15																1	f4
	1	f5															1										ABANDON SSMH (E)	1	f5
	1	f6										21.56																1	f6
SS-6	2	a		42.6																								2	a
	2	b																							9		150 mm LATERAL	2	b
	2	c																			1	1				2.600	SSMH-24	2	c
	2	d																							7		RECONSTRUCT 150mm LATERAL	2	d
	2	e		49.9																								2	e
	2	f																							10		150mm LATERAL	2	f
	2	g																			1	1				2.735	SSMH-25	2	g
	2	h		40.5																								2	h
	2	i							6.97																			2	i
	2	j																							7		150mm LATERAL	2	j
	2	k																	1								REMOVE EXISTING MANHOLE	2	k
	2	l																							2		RECONSTRUCT 150mm LATERAL	2	l
	2	m																			1	1				2.227	SSMH-26	2	m
	2	n																						1			TERMINAL CLEANOUT	2	n
	2	o								83.18																		2	o
SS-7	3	a																				1	1			2.951	SSMH-28	3	a
	3	b						50.30																				3	b
	3	c																				1	1			2.877	SSMH-29	3	c
	3	d						25.30																				3	d
	3	e							23.19																			3	e
	3	f																		1						2.300	MODIFY (BASE), CAP TOP OF (E) SSMH-30		f
	3	g												74.10														3	g
	3	h								19.60																		3	h
	3	i															1	1									ABANDON SSMH (E)	3	i
	3	j								82.14																		3	j
SS-8	4	a																			1	1				1.501	SSMH-31	4	a
	4	b	82.70																									4	b
	4	c																			1	1				1.507	SSMH-32	4	c
	4	d	83.70																									4	d
	4	e																			1	1				1.475	SSMH-33	4	e
	4	f	80.90																									4	f
Sht TOTAL			247.3	133.0				75.60	30.16	184.92		46.71		74.10		1	3	1	1	1	6	8	2	1	35				

N = NOT A SEPARATE PAY ITEM. FOR INFORMATION ONLY

SANITARY SEWER QUANTITIES
SSQ-3

YIM T. TSE — REVISED BY — RK — YTT — YTT
NGIM NANCY PE — DATE REVISED — 02/08 — 04/09 — 10/09

CALCULATED-DESIGNED BY
CHECKED BY

FUNCTIONAL SUPERVISOR
NGIM NANCY PE

STATE OF CALIFORNIA - DEPARTMENT OF TRANSPORTATION
Caltrans OFFICE OF DESIGN A

S:\projects\2159c1\72159cjd003.dgn

LAST REVISION 00-00-00 | DATE PLOTTED => 22-JUN-2010 | TIME PLOTTED => 10:44

Dist	COUNTY	ROUTE	KILOMETER POST TOTAL PROJECT	SHEET No.	TOTAL SHEETS
07	LA	5	2.9/4.9	383	1082

Caltrans Metric

REGISTERED CIVIL ENGINEER 12-23-09 DATE

6-21-10
PLANS APPROVAL DATE

REGISTERED PROFESSIONAL ENGINEER NGIM NANCY PE No. 58161 Exp. 6-30-10 CIVIL STATE OF CALIFORNIA

THE STATE OF CALIFORNIA OR ITS OFFICERS OR AGENTS SHALL NOT BE RESPONSIBLE FOR THE ACCURACY OR COMPLETENESS OF ELECTRONIC COPIES OF THIS PLAN SHEET.

SANITARY SEWER QUANTITIES

SANITARY SEWER SHEET No.	SYSTEM No.	UNIT No.	200 mm VITRIFIED CLAY SEWER PIPE	250 mm VITRIFIED CLAY SEWER PIPE	375 mm VITRIFIED CLAY SEWER PIPE	450 mm VITRIFIED CLAY SEWER PIPE (EXTRA STRENGTH)	525 mm VITRIFIED CLAY SEWER PIPE (EXTRA STRENGTH)	1220 mm REINFORCED CONCRETE SEWER PIPE	MINOR CONCRETE (PIPE ENCASEMENT)	ABANDON SEWER (200 mm VCP)	ABANDON SEWER (250 mm VCP)	ABANDON SEWER (375 mm VCP)	ABANDON SEWER (450 mm VCP)	ABANDON SEWER (1220 mm RCP)	REMOVE SEWER PIPE	ADJUST MANHOLE TO GRADE	ABANDON SEWER MANHOLE	CAP MANHOLE	REMOVE SEWER MANHOLE	MODIFY SEWER MANHOLE	CONCRETE SEWER MANHOLE	SEWER MANHOLE FRAME AND COVER	CONCRETE SEWER MANHOLE (TYPE E)	SEWER TERMINAL CLEANOUT	150 mm SEWER PIPE (LATERAL)	(N) HEIGHT OF MANHOLE	DESCRIPTION	SYSTEM No.	UNIT No.
			m	m	m	m	m	m	m3	m	m	m	m	m	m	EA	EA	EA	EA	EA	EA	EA	EA	EA	m	m			
SS-8	4	g																			1	1				1.475	SSMH-34	4	g
	4	h	84.60																									4	h
	4	i								21.50																		4	i
	4	j															1										ABANDON SSMH (E)	4	j
	4	k								84.00																		4	k
	4	l								21.98																		4	l
	4	m															1										ABANDON SSMH (E)	4	m
	4	n								78.50																		4	n
	4	o								21.83																		4	o
	4	p															1										ABANDON SSMH (E)	4	p
	4	q								81.24																		4	q
SS-9	4	r																			1	1				1.476	SSMH-35	4	r
	4	s	84.2																									4	s
	4	t							3.75																			4	t
	4	u																			1	1				2.389	SSMH-36	4	u
	4	v	1.50																									4	v
	4	w																				1	1			3.194	SSMH-37	4	w
	4	x							23.63																			4	x
	4	y														1										2.904	Adj TO GRADE, CAP TOP OF SSMH-38	4	y
	4	z								21.86																		4	z
	4	a1															1										ABANDON SSMH (E)	4	a1
	4	a2								61.00																		4	a2
	4	a3															1										ABANDON SSMH (E)	4	a3
	4	a4								5.07																		4	a4
	4	a5								19.97																		4	a5
	4	a6															1										ABANDON SSMH (E)	4	a6
	4	a7								1.00																		4	a7
SS-10	5	a				9.79																						5	a
	5	b							2.86																			5	b
	5	c																1		1						1.524	MODIFY (BASE), CAP TOP OF (E) SSMH-43		c
	5	d							1.56																			5	d
SS-10,SS-11	5	e							0.76																			5	e
	5	f																1		1						1.524	MODIFY (BASE), CAP TOP OF (E) SSMH-42		f
	5	g					27.36																					5	g
	5	h							9.36																			5	h
	5	i																			1	1				4.128	SSMH-41	5	i
Sht TOTAL			170.3			9.79	27.36		41.92	417.95						1	6	2		2	4	5	1						

N = NOT A SEPARATE PAY ITEM. FOR INFORMATION ONLY

SANITARY SEWER QUANTITIES

SSQ-4

YIM T. TSE — REVISED BY — RK — YTT — YTT
NGIM NANCY PE — DATE REVISED — 02/08 — 04/09 — 10/09

CALCULATED-DESIGNED BY
CHECKED BY

FUNCTIONAL SUPERVISOR
NGIM NANCY PE

STATE OF CALIFORNIA - DEPARTMENT OF TRANSPORTATION
Caltrans OFFICE OF DESIGN A

S:\projects\2159c1\72159cjd004.dgn

LAST REVISION 00-00-00 DATE PLOTTED => 22-JUN-2010 TIME PLOTTED => 10:44

Dist	COUNTY	ROUTE	KILOMETER POST TOTAL PROJECT	SHEET No.	TOTAL SHEETS
07	LA	5	2.9/4.9	384	1082

REGISTERED CIVIL ENGINEER 12-23-09 DATE

6-21-10
PLANS APPROVAL DATE

REGISTERED PROFESSIONAL ENGINEER NGIM NANCY PE No. 58161 Exp. 6-30-10 CIVIL STATE OF CALIFORNIA

THE STATE OF CALIFORNIA OR ITS OFFICERS OR AGENTS SHALL NOT BE RESPONSIBLE FOR THE ACCURACY OR COMPLETENESS OF ELECTRONIC COPIES OF THIS PLAN SHEET.

Caltrans Metric

SANITARY SEWER QUANTITIES

SANITARY SEWER SHEET No.	SYSTEM No.	UNIT No.	200 mm VITRIFIED CLAY SEWER PIPE	250 mm VITRIFIED CLAY SEWER PIPE	375 mm VITRIFIED CLAY SEWER PIPE	450 mm VITRIFIED CLAY SEWER PIPE (EXTRA STRENGTH)	525 mm VITRIFIED CLAY SEWER PIPE (EXTRA STRENGTH)	1220 mm REINFORCED CONCRETE SEWER PIPE	MINOR CONCRETE (PIPE ENCASEMENT)	ABANDON SEWER (200 mm VCP)	ABANDON SEWER (250 mm VCP)	ABANDON SEWER (375 mm VCP)	ABANDON SEWER (450 mm VCP)	ABANDON SEWER (1220 mm RCP)	REMOVE SEWER PIPE	ADJUST MANHOLE TO GRADE	ABANDON SEWER MANHOLE	CAP MANHOLE	REMOVE SEWER MANHOLE	MODIFY SEWER MANHOLE	CONCRETE SEWER MANHOLE	SEWER MANHOLE FRAME AND COVER	CONCRETE SEWER MANHOLE (TYPE E)	SEWER TERMINAL CLEANOUT	150 mm SEWER PIPE (LATERAL)	(N) HEIGHT OF MANHOLE	DESCRIPTION	SYSTEM No.	UNIT No.
			m	m	m	m	m	m	m3	m	m	m	m	m	m	EA	EA	EA	EA	EA	EA	EA	EA	EA	m	m			
SS-10,SS-11	5	j					17.40																					5	j
	5	k																			1	1				4.518	SSMH-40	5	k
	5	l											30.92															5	l
SS-11	6	a	40.20																									6	a
	6	b																			1	1				3.373	SSMH-44	6	b
	6	c							0.49																			6	c
	6	d	106.0																									6	d
	6	e																							5		RECONSTRUCT 150 mm LATERAL	6	e
	6	f																							5		150 mm LATERAL	6	f
	6	g																			1	1				3.385	SSMH-45	6	g
	6	h																							5		RECONSTRUCT 150 mm LATERAL	6	h
	6	i	100.0																									6	i
	6	j																							5		150 mm LATERAL	6	j
	6	k																			1	1				3.242	SSMH-46	6	k
	6	l																							5		RECONSTRUCT 150 mm LATERAL	6	l
SS-11,SS-12	6	m	100.0																									6	m
SS-11	6	n																							5		150 mm LATERAL	6	n
	6	o								93.47																		6	o
	6	p															1										ABANDON SSMH (E)	6	p
	6	q								105.11																		6	q
	6	r															1										ABANDON SSMH (E)	6	r
	6	s								95.16																		6	s
SS-12	6	t																							5		150 mm LATERAL	6	t
	6	u																			1	1				3.092	SSMH-47	6	u
	6	v	95.40																									6	v
	6	w																							5		RECONSTRUCT 150 mm LATERAL	6	w
	6	x																							5		RECONSTRUCT 150 mm LATERAL	6	x
	6	y																							5		150 mm LATERAL	6	y
	6	z																			1	1				2.940	SSMH-48	6	z
	6	a1	79.20																									6	a1
	6	a2																							5		150 mm LATERAL	6	a2
	6	a3																							5		150 mm LATERAL	6	a3
	6	a4																			1	1				2.858	SSMH-49	6	a4
	6	a5																							5		RECONSTRUCT 150 mm LATERAL	6	a5
	6	a6	100.0																									6	a6
	6	a7																							5		150 mm LATERAL	6	a7
Sht TOTAL			620.8				17.40		0.49	293.74			30.92				2				7	7			70				

N = NOT A SEPARATE PAY ITEM. FOR INFORMATION ONLY

SANITARY SEWER QUANTITIES

SSQ-5

YIM T. TSE — REVISED BY — YTT — 10/09
NGIM NANCY PE — DATE REVISED — 02/08 — 04/09
CALCULATED-DESIGNED BY
CHECKED BY
FUNCTIONAL SUPERVISOR — NGIM NANCY PE

STATE OF CALIFORNIA - DEPARTMENT OF TRANSPORTATION
Caltrans OFFICE OF DESIGN A

S:\projects\2159c1\72159cjd005.dgn

LAST REVISION 00-00-00 DATE PLOTTED => 29-JUN-2010 TIME PLOTTED => 09:07

Dist	COUNTY	ROUTE	KILOMETER POST TOTAL PROJECT	SHEET No.	TOTAL SHEETS
07	LA	5	2.9/4.9	385	1082

Caltrans Metric

REGISTERED CIVIL ENGINEER 12-23-09 DATE

6-21-10
PLANS APPROVAL DATE

REGISTERED PROFESSIONAL ENGINEER NGIM NANCY PE No. 58161 Exp. 6-30-10 CIVIL STATE OF CALIFORNIA

THE STATE OF CALIFORNIA OR ITS OFFICERS OR AGENTS SHALL NOT BE RESPONSIBLE FOR THE ACCURACY OR COMPLETENESS OF ELECTRONIC COPIES OF THIS PLAN SHEET.

SANITARY SEWER QUANTITIES

SANITARY SEWER SHEET No.	SYSTEM No.	UNIT No.	200 mm VITRIFIED CLAY SEWER PIPE	250 mm VITRIFIED CLAY SEWER PIPE	375 mm VITRIFIED CLAY SEWER PIPE	450 mm VITRIFIED CLAY SEWER PIPE (EXTRA STRENGTH)	525 mm VITRIFIED CLAY SEWER PIPE (EXTRA STRENGTH)	1220 mm REINFORCED CONCRETE SEWER PIPE	MINOR CONCRETE (PIPE ENCASEMENT)	ABANDON SEWER (200 mm VCP)	ABANDON SEWER (250 mm VCP)	ABANDON SEWER (375 mm VCP)	ABANDON SEWER (450 mm VCP)	ABANDON SEWER (1220 mm RCP)	REMOVE SEWER PIPE	ADJUST MANHOLE TO GRADE	ABANDON SEWER MANHOLE	CAP MANHOLE	REMOVE SEWER MANHOLE	MODIFY SEWER MANHOLE	CONCRETE SEWER MANHOLE	SEWER MANHOLE FRAME AND COVER	CONCRETE SEWER MANHOLE (TYPE E)	SEWER TERMINAL CLEANOUT	150 mm SEWER PIPE (LATERAL)	(N) HEIGHT OF MANHOLE	DESCRIPTION	SYSTEM No.	UNIT No.
			m	m	m	m	m	m	m3	m	m	m	m	m	m	EA	EA	EA	EA	EA	EA	EA	EA	EA	m	m			
SS-12	6	a8																							5		RECONSTRUCT 150 mm LATERAL	6	a8
	6	a9																			1	1				2.771	SSMH-50	6	a9
SS-12,SS-13	6	b1	96.20																									6	b1
SS-12	6	b2																							5		150 mm LATERAL	6	b2
	6	b3															1										ABANDON SSMH (E)	6	b3
	6	b4								105.50																		6	b4
	6	b5															1										ABANDON SSMH (E)	6	b5
	6	b6								105.08																		6	b6
SS-12	6	b7															1										ABANDON SSMH (E)	6	b7
	6	b8								105.18																		6	b8
	6	b9															1										ABANDON SSMH (E)	6	b9
	6	c1								67.07																		6	c1
SS-13	6	c2																							5		RECONSTRUCT 150 mm LATERAL	6	c2
	6	c3																							5		150 mm LATERAL	6	c3
	6	c4																			1	1				2.565	SSMH-51	6	c4
	6	c5																							5		RECONSTRUCT 150 mm LATERAL	6	c5
	6	c6																							5		RECONSTRUCT 150 mm LATERAL	6	c6
	6	c7	98.70																									6	c7
	6	c8																							5		150 mm LATERAL	6	c8
	6	c9																			1	1				3.075	SSMH-52	6	c9
	6	d1														1											ADJUST TO GRADE SSMH-53	6	d1
	6	d2															1										ABANDON SSMH (E)	6	d2
	6	d3								77.69																		6	d3
	6	d4															1										ABANDON SSMH (E)	6	d4
	6	d5								38.53																		6	d5
	6	d6															1										ABANDON SSMH (E)	6	d6
	6	d7								24.57																		6	d7
SS-14	7	a																			1	1				1.058	SSMH-56	7	a
	7	b		100.0																								7	b
	7	c																							8		150 mm LATERAL	7	c
	7	d																							8		RECONSTRUCT 150 mm LATERAL	7	d
	7	e							17.2																			7	e
	7	f																							8		150 mm LATERAL	7	f
	7	g																			1	1				1.162	SSMH-57	7	g
	7	h																							8		RECONSTRUCT 150 mm LATERAL	7	h
	7	i							17.2																			7	i
Sht TOTAL			194.9	100.0					34.4	523.62						1	7				5	5			67				

N = NOT A SEPARATE PAY ITEM. FOR INFORMATION ONLY

SANITARY SEWER QUANTITIES

SSQ-6

YIM T. TSE — REVISED BY
NGIM NANCY PE — DATE REVISED
RK — 02/08
YTT — 04/09
YTT — 10/09

CALCULATED-DESIGNED BY
CHECKED BY

FUNCTIONAL SUPERVISOR
NGIM NANCY PE

STATE OF CALIFORNIA - DEPARTMENT OF TRANSPORTATION
Caltrans OFFICE OF DESIGN A

S:\projects\2159c1\resubmit7\72159cjd006.dgn

LAST REVISION 00-00-00 | DATE PLOTTED => 22-JUN-2010 | TIME PLOTTED => 10:44

Dist	COUNTY	ROUTE	KILOMETER POST TOTAL PROJECT	SHEET No.	TOTAL SHEETS
07	LA	5	2.9/4.9	386	1082

REGISTERED CIVIL ENGINEER 12-23-09 DATE

6-21-10
PLANS APPROVAL DATE

REGISTERED PROFESSIONAL ENGINEER NGIM NANCY PE No. 58161 Exp. 6-30-10 CIVIL STATE OF CALIFORNIA

THE STATE OF CALIFORNIA OR ITS OFFICERS OR AGENTS SHALL NOT BE RESPONSIBLE FOR THE ACCURACY OR COMPLETENESS OF ELECTRONIC COPIES OF THIS PLAN SHEET.

Caltrans Metric

SANITARY SEWER QUANTITIES

SANITARY SEWER SHEET No.	SYSTEM No.	UNIT No.	200 mm VITRIFIED CLAY SEWER PIPE	250 mm VITRIFIED CLAY SEWER PIPE	375 mm VITRIFIED CLAY SEWER PIPE	450 mm VITRIFIED CLAY SEWER PIPE (EXTRA STRENGTH)	525 mm VITRIFIED CLAY SEWER PIPE (EXTRA STRENGTH)	1220 mm REINFORCED CONCRETE SEWER PIPE	MINOR CONCRETE (PIPE ENCASEMENT)	ABANDON SEWER (200 mm VCP)	ABANDON SEWER (250 mm VCP)	ABANDON SEWER (375 mm VCP)	ABANDON SEWER (450 mm VCP)	ABANDON SEWER (1220 mm RCP)	REMOVE SEWER PIPE	ADJUST MANHOLE TO GRADE	ABANDON SEWER MANHOLE	CAP MANHOLE	REMOVE SEWER MANHOLE	MODIFY SEWER MANHOLE	CONCRETE SEWER MANHOLE	SEWER MANHOLE FRAME AND COVER	CONCRETE SEWER MANHOLE (TYPE E)	SEWER TERMINAL CLEANOUT	150 mm SEWER PIPE (LATERAL)	(N) HEIGHT OF MANHOLE	DESCRIPTION	SYSTEM No.	UNIT No.
			m	m	m	m	m	m	m3	m	m	m	m	m	m	EA	EA	EA	EA	EA	EA	EA	EA	EA	m	m			
SS-14	7	j		100.0																								7	j
	7	k																							8		RECONSTRUCT 150 mm LATERAL	7	k
	7	l																			1	1				1.610	SSMH-58	7	l
	7	m		87.30																								7	m
	7	n																							8		RECONSTRUCT 150 mm LATERAL	7	n
	7	o																							8		150 mm LATERAL	7	o
	7	p																			1	1				2.011	SSMH-59	7	p
SS-14,SS-15	7	q		100.0																								7	q
SS-14	7	r																							8		150 mm LATERAL	7	r
	7	s															1										ABANDON SSMH (E)	7	s
	7	t								91.37																		7	t
	7	u															1										ABANDON SSMH (E)	7	u
	7	v								39.23																		7	v
	7	w															1										ABANDON SSMH (E)	7	w
	7	x								12.59																		7	x
	7	y															1										ABANDON SSMH (E)	7	y
	7	z									112.75																	7	z
	7	a1															1										ABANDON SSMH (E)	7	a1
	7	a2									105.16																	7	a2
	7	a3															1										ABANDON SSMH (E)	7	a3
SS-14,SS-15	7	a4									84.20																	7	a4
SS-15	7	a5																							8		RECONSTRUCT 150 mm LATERAL	7	a5
	7	a6																							8		CONSTRUCT 150 mm LATERAL	7	a6
	7	a7														1				1						2.403	MODIFY (BASE), Adj TO GRADE (E) SSMH-60	7	a7
	7	a8													20.00												REMOVE 250 mm VCP SEWER PIPE	7	a8
SS-16	8	a														1										2.374	ADJUST TO GRADE SSMH-61	8	a
	8	b														1										2.181	ADJUST TO GRADE SSMH-62	8	b
	8	c														1										2.271	ADJUST TO GRADE SSMH-63	8	c
SS-17	9	a														1										2.489	ADJUST TO GRADE SSMH-64	9	a
	9	b														1										1.637	ADJUST TO GRADE SSMH-65	9	b
	9	c														1										1.272	ADJUST TO GRADE SSMH-66	9	c
SS-18	10	a														1										3.686	ADJUST TO GRADE SSMH-67	10	a
	10	b														1										2.418	ADJUST TO GRADE SSMH-68	10	b
	10	c														1										2.361	ADJUST TO GRADE SSMH-69	10	c
Sht TOTAL				287.3						143.19	302.11				20.00	10	6			1	2	2			48				
TOTAL			1233.3	732.19	444.4	57.29	44.76	75.60	182.51	2646.79					128	24	30	4	1	8	34	37	3	1	278				

N = NOT A SEPARATE PAY ITEM. FOR INFORMATION ONLY

SANITARY SEWER QUANTITIES

SSQ-7

	YTT	YTT	YTT
REVISED BY	RK	YTT	YTT
DATE REVISED	02/08	04/09	10/09

YIM T. TSE
NGIM NANCY PE
CALCULATED-DESIGNED BY
CHECKED BY
FUNCTIONAL SUPERVISOR
NGIM NANCY PE

STATE OF CALIFORNIA - DEPARTMENT OF TRANSPORTATION
Caltrans OFFICE OF DESIGN A

S:\projects\2159c1\resubmit7\72159cjd007.dgn

LAST REVISION 00-00-00 | DATE PLOTTED => 22-JUN-2010 | TIME PLOTTED => 10:44

Dist	COUNTY	ROUTE	KILOMETER POST TOTAL PROJECT	SHEET No.	TOTAL SHEETS
07	LA	5	2.9/4.9	387	1082

REGISTERED CIVIL ENGINEER 12-23-09 DATE

6-21-10
PLANS APPROVAL DATE

REGISTERED PROFESSIONAL ENGINEER HAYKAZ AGHAJANIAN No. C53866 Exp. 12-31-11 CIVIL STATE OF CALIFORNIA

THE STATE OF CALIFORNIA OR ITS OFFICERS OR AGENTS SHALL NOT BE RESPONSIBLE FOR THE ACCURACY OR COMPLETENESS OF ELECTRONIC COPIES OF THIS PLAN SHEET.

Caltrans Metric

NOTES:

1. FOR ACCURATE RIGHT OF WAY DATA, CONTACT RIGHT OF WAY ENGINEERING AT THE DISTRICT OFFICE.
2. LOCATION OF UTILITY FACILITIES SHOWN ON THE THESE PLANS ARE APPROXIMATE AND SHALL BE VERIFIED BY THE CONTRACTOR PRIOR TO CONSTRUCTION.
3. FOR POTHOLING INFORMATION, REFER TO SHEETS U-14 AND U-15.
4. FOR RELOCATION PLANS OF UTILITIES, REREF TO PLANS U-17 THRU U-28.
5. UTILITY OWNERSHIP ON THIS PROJECT:
   - ELECTRIC - SOUTHERN CALIFORNIA EDISON (SCE)
   - FIBER OPTICS - ABOVE NET, QWEST, SPRINT, TIME WARNER (TW), LEVEL 3 COMMUNICATIONS, CHARTER COMMUNICATION (CCTV)
   - GAS - SOUTHERN CALIFORNIA GAS COMPANY (SCG)
   - OIL - CHEVRON OIL COMPANY, KINDER MORGAN (KM), STANDARD OIL COMPANY (STD), WILSHIRE OIL COMPANY (WOC), PLAINS ALL AMERICAN (PAALP), UNITED PARADYNE (UP)
   - SEWER - SANITATION DISTRICTS OF LOS ANGELES COUNTY (LACSD), CITY OF SANTA FE SPRINGS (CSFS), CITY OF NORWALK (CN)
   - TELEPHONE - VERIZON TELEPHONE COMPANY (Vzn)
   - WATER - CITY OF SANTA FE SPRINGS (CSFS), CENTRAL BASIN METROPOLITAN WATER DISTRICT (CBMWD), PARK WATER COMPANY (PW), CITY OF NORWALK (CN)

LEGEND: (XXX) - POTHOLE LOCATION

ABBREVIATIONS:

ABS -	ACRYLONITRILE BUTADIENE STYRENE
ACD -	ASPHALT CEMENT DUCT
Asb -	ASBESTOS
Bu Ca -	BURIED CABLE
CF -	CURB FACE
Comm -	COMMUNICATION
Csg -	CASING
DIP -	DUCTILE IRON PIPE
F/O -	FIBER OPTIC
HP -	HIGH PRESSURE
MFN -	MICRO FIBER NETWORK
M -	MEDIUM
Nat Gaso -	NATURAL GASOLINE
PM -	PLASTIC MEDIUM
San Swr -	SANITARY SEWER
Stl -	STEEL
Trans P -	TRANSMISSION POLE
UB -	UTILITY BOX
UG -	UNDER GROUND
WE -	WEST OF EAST
EW-	EAST OF WEST
NS	NORTH OF SOUTH
SN -	SOUTH OF NORTH
Wtr -	WATER

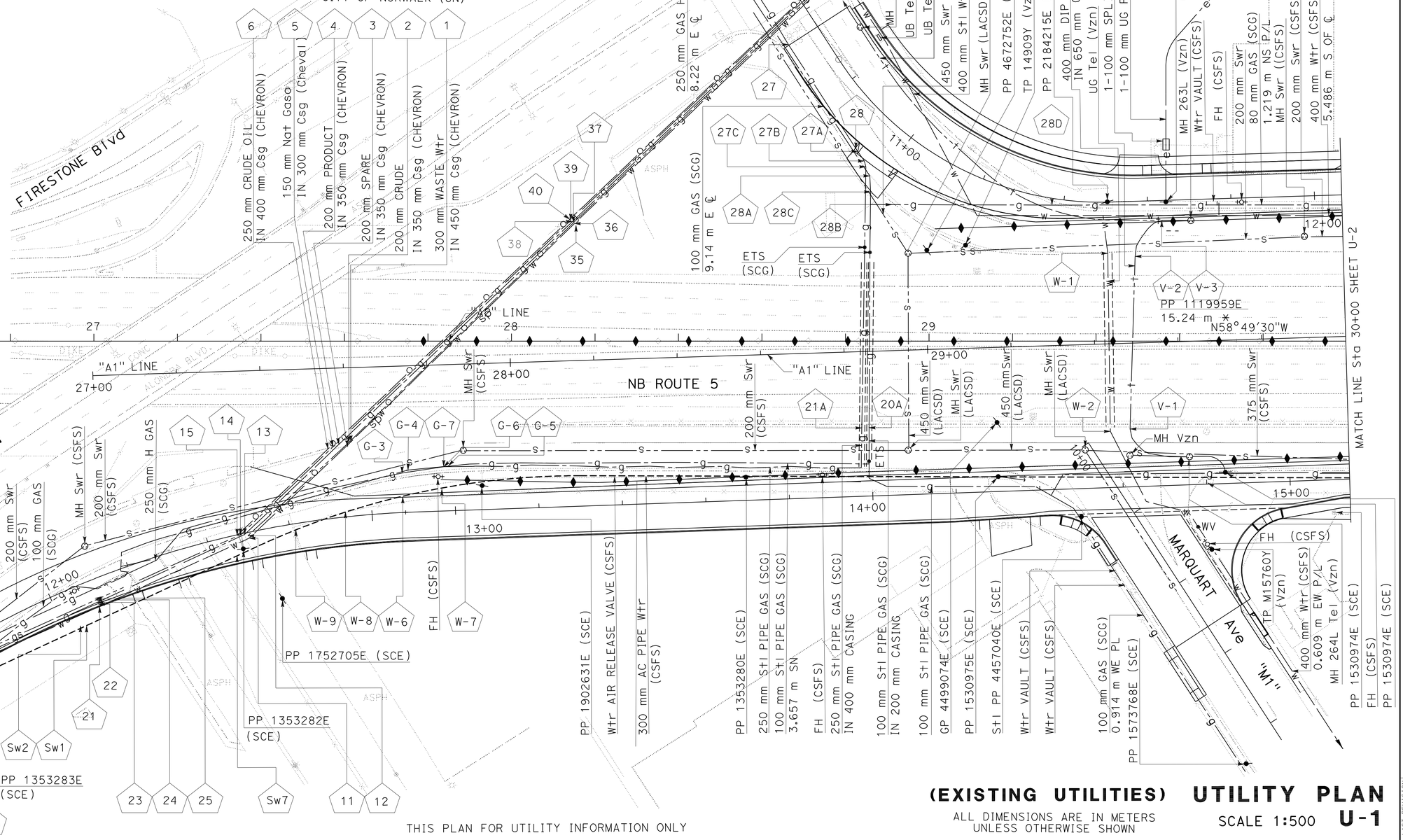

THIS PLAN FOR UTILITY INFORMATION ONLY

(EXISTING UTILITIES) UTILITY PLAN

ALL DIMENSIONS ARE IN METERS UNLESS OTHERWISE SHOWN

SCALE 1:500 **U-1**

KN	9/09	HAYKAZ AGHAJANIAN	NGIM NANCY PE
REVISED BY	DATE REVISED	CALCULATED-DESIGNED BY	CHECKED BY

FUNCTIONAL SUPERVISOR: HAYKAZ AGHAJANIAN

STATE OF CALIFORNIA - DEPARTMENT OF TRANSPORTATION
Caltrans OFFICE OF DESIGN A

S:\projects\2159c1\resubmit9\72159cka001.dgn

LAST REVISION 00-00-00 | DATE PLOTTED => 16-FEB-2011 | TIME PLOTTED => 08:26

NOTE:

1. FOR ACCURATE RIGHT OF WAY DATA, CONTACT RIGHT OF WAY ENGINEERING AT THE DISTRICT OFFICE.
2. REFER TO NOTES 1, 2, 3 AND 4 FROM UTILITY PLAN U-1.

Dist	COUNTY	ROUTE	KILOMETER POST TOTAL PROJECT	SHEET No.	TOTAL SHEETS
07	LA	5	2.9/4.9	388	1082

REGISTERED CIVIL ENGINEER — DATE 12-23-09

6-21-10
PLANS APPROVAL DATE

REGISTERED PROFESSIONAL ENGINEER HAYKAZ AGHAJANIAN No. C53866 Exp. 12-31-11 CIVIL STATE OF CALIFORNIA

THE STATE OF CALIFORNIA OR ITS OFFICERS OR AGENTS SHALL NOT BE RESPONSIBLE FOR THE ACCURACY OR COMPLETENESS OF ELECTRONIC COPIES OF THIS PLAN SHEET.

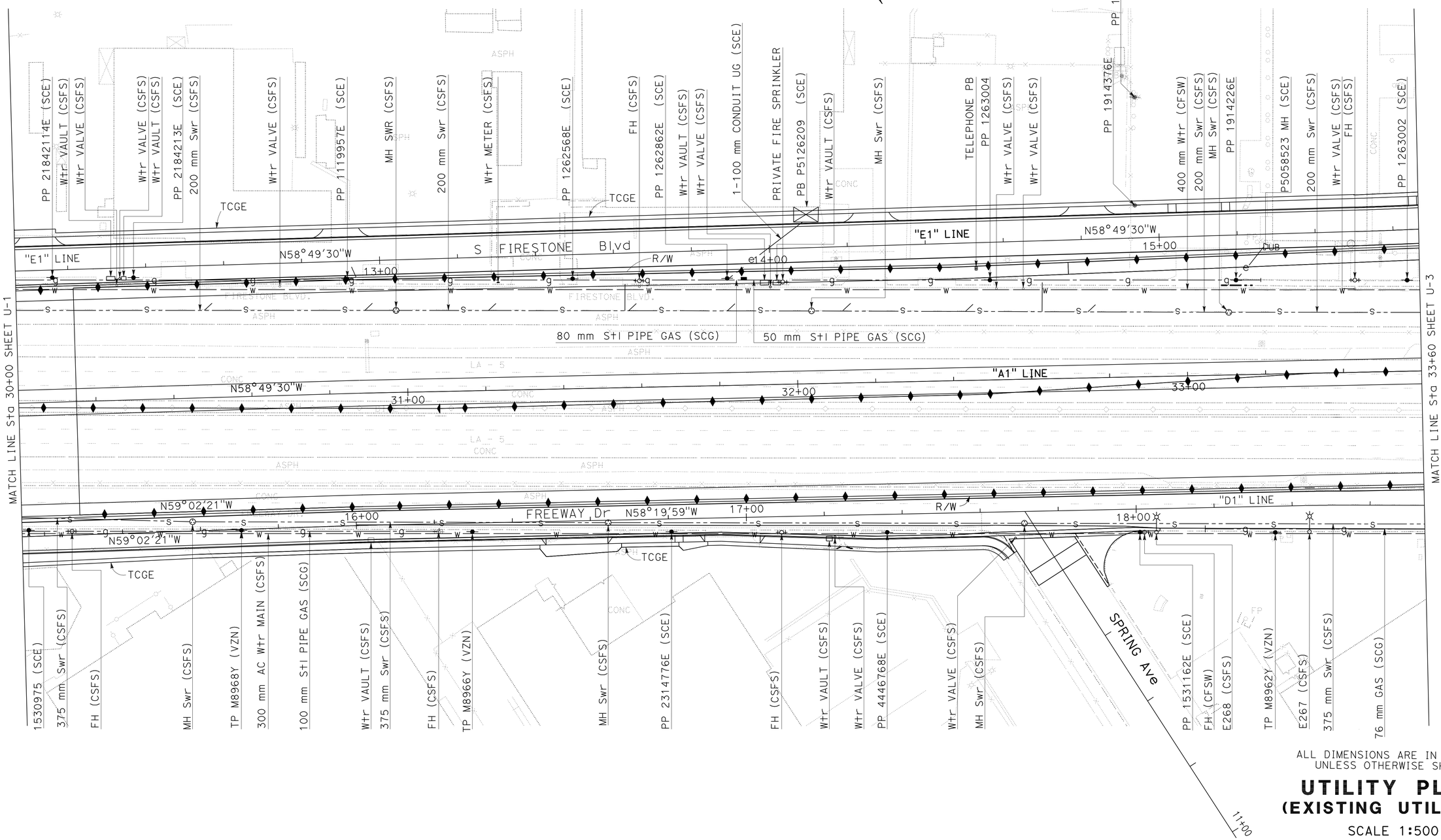

ALL DIMENSIONS ARE IN METERS UNLESS OTHERWISE SHOWN

UTILITY PLAN
(EXISTING UTILITIES)

SCALE 1:500

U-2

THIS PLAN FOR UTILITY INFORMATION ONLY

STATE OF CALIFORNIA - DEPARTMENT OF TRANSPORTATION
Caltrans OFFICE OF DESIGN A

FUNCTIONAL SUPERVISOR: HAYKAZ AGHAJANIAN
CALCULATED-DESIGNED BY: HAYKAZ AGHAJANIAN
CHECKED BY: NGIM NANCY PE
REVISED BY / DATE REVISED

LAST REVISION 00-00-00
DATE PLOTTED => 16-FEB-2011
TIME PLOTTED => 08:27

NOTE:
1. FOR ACCURATE RIGHT OF WAY DATA, CONTACT RIGHT OF WAY ENGINEERING AT THE DISTRICT OFFICE.
2. REFER TO NOTES 1, 2, 3, AND 4 FROM UTILITY PLAN U-1.

Dist	COUNTY	ROUTE	KILOMETER POST TOTAL PROJECT	SHEET No.	TOTAL SHEETS
07	LA	5	2.9/4.9	389	1082

REGISTERED CIVIL ENGINEER 12-23-09 DATE

6-21-10
PLANS APPROVAL DATE

REGISTERED PROFESSIONAL ENGINEER HAYKAZ AGHAJANIAN No. C53866 Exp. 12-31-11 CIVIL STATE OF CALIFORNIA

THE STATE OF CALIFORNIA OR ITS OFFICERS OR AGENTS SHALL NOT BE RESPONSIBLE FOR THE ACCURACY OR COMPLETENESS OF ELECTRONIC COPIES OF THIS PLAN SHEET.

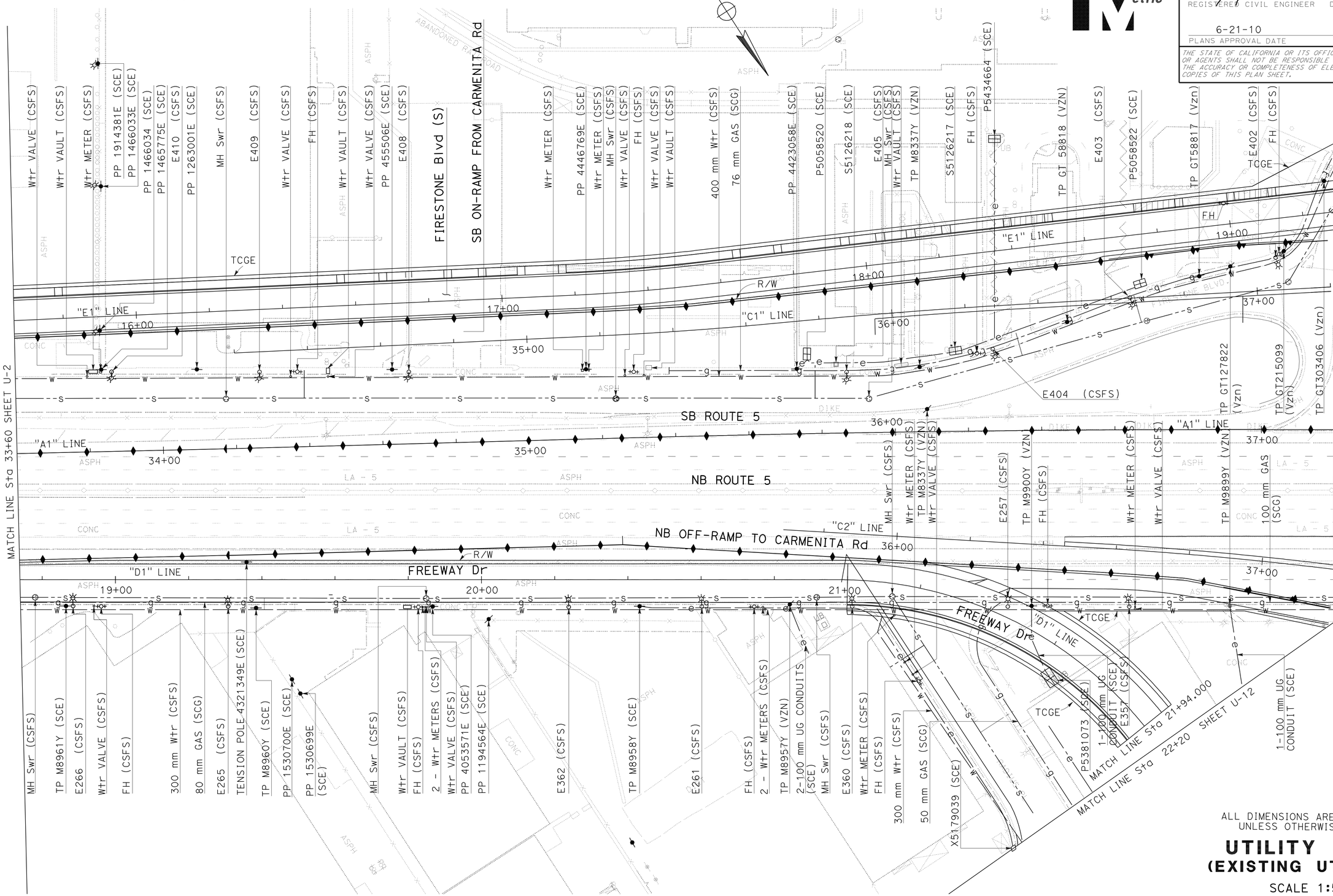

ALL DIMENSIONS ARE IN METERS UNLESS OTHERWISE SHOWN

UTILITY PLAN
(EXISTING UTILITIES)

SCALE 1:500

THIS PLAN FOR UTILITY INFORMATION ONLY

U-3

STATE OF CALIFORNIA - DEPARTMENT OF TRANSPORTATION
Caltrans OFFICE OF DESIGN A

FUNCTIONAL SUPERVISOR: HAYKAZ AGHAJANIAN
CALCULATED-DESIGNED BY: HAYKAZ AGHAJANIAN
CHECKED BY: NGIM NANCY PE
REVISED BY / DATE REVISED

LAST REVISION 00-00-00
DATE PLOTTED => 16-FEB-2011
TIME PLOTTED => 08:27

Dist	COUNTY	ROUTE	KILOMETER POST TOTAL PROJECT	SHEET No.	TOTAL SHEETS
07	LA	5	2.9/4.9	390	1082

REGISTERED CIVIL ENGINEER 12-23-09 DATE

6-21-10
PLANS APPROVAL DATE

REGISTERED PROFESSIONAL ENGINEER HAYKAZ AGHAJANIAN No. C53866 Exp. 12-31-11 CIVIL STATE OF CALIFORNIA

THE STATE OF CALIFORNIA OR ITS OFFICERS OR AGENTS SHALL NOT BE RESPONSIBLE FOR THE ACCURACY OR COMPLETENESS OF ELECTRONIC COPIES OF THIS PLAN SHEET.

Caltrans Metric

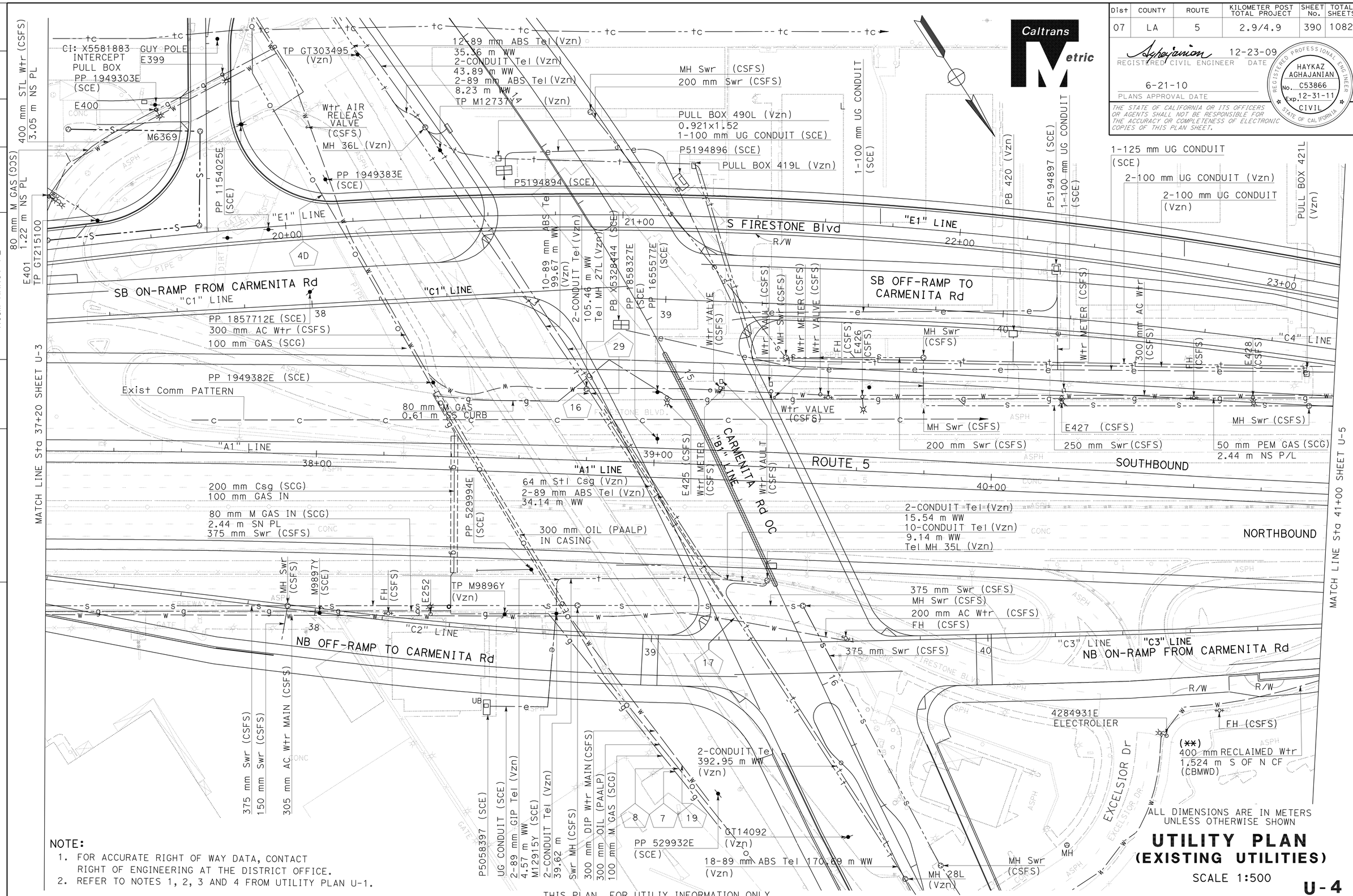

ALL DIMENSIONS ARE IN METERS UNLESS OTHERWISE SHOWN

UTILITY PLAN (EXISTING UTILITIES)

SCALE 1:500

U-4

NOTE:

1. FOR ACCURATE RIGHT OF WAY DATA, CONTACT RIGHT OF ENGINEERING AT THE DISTRICT OFFICE.
2. REFER TO NOTES 1, 2, 3 AND 4 FROM UTILITY PLAN U-1.

THIS PLAN FOR UTILIY INFORMATION ONLY

STATE OF CALIFORNIA - DEPARTMENT OF TRANSPORTATION
Caltrans OFFICE OF DESIGN A

FUNCTIONAL SUPERVISOR: HAYKAZ AGHAJANIAN

CALCULATED-DESIGNED BY: HAYKAZ AGHAJANIAN
CHECKED BY: NGIM NANCY PE

REVISED BY | DATE REVISED

LAST REVISION 00-00-00 | DATE PLOTTED => 16-FEB-2011 | TIME PLOTTED => 08:27

NOTE:

1. FOR ACCURATE RIGHT OF WAY DATA, CONTACT RIGHT OF WAY ENGINEERING AT THE DISTRICT OFFICE.
2. REFER TO NOTES 1, 2, 3, AND 4 FROM UTILITY PLAN U-1.

Dist	COUNTY	ROUTE	KILOMETER POST TOTAL PROJECT	SHEET No.	TOTAL SHEETS
07	LA	5	2.9/4.9	391	1082

Caltrans Metric

REGISTERED CIVIL ENGINEER 12-23-10 DATE

6-21-10
PLANS APPROVAL DATE

REGISTERED PROFESSIONAL ENGINEER HAYKAZ AGHAJANIAN No. C53866 Exp. 12-31-11 CIVIL STATE OF CALIFORNIA

THE STATE OF CALIFORNIA OR ITS OFFICERS OR AGENTS SHALL NOT BE RESPONSIBLE FOR THE ACCURACY OR COMPLETENESS OF ELECTRONIC COPIES OF THIS PLAN SHEET.

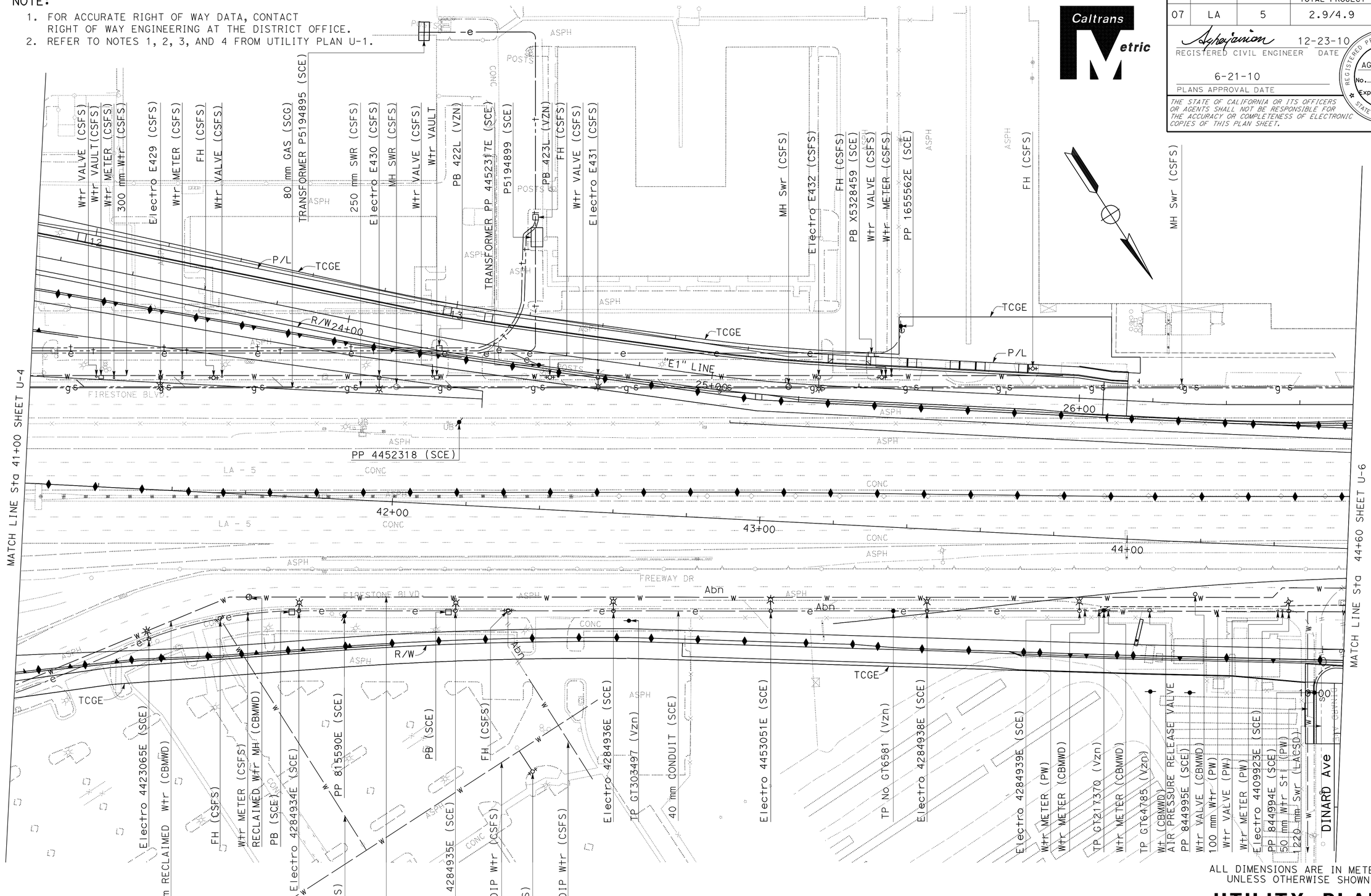

ALL DIMENSIONS ARE IN METERS UNLESS OTHERWISE SHOWN

UTILITY PLAN (EXISTING UTILITIES)

SCALE 1:500

THIS PLAN FOR UTILITY INFORMATION ONLY

U-5

STATE OF CALIFORNIA - DEPARTMENT OF TRANSPORTATION
Caltrans OFFICE OF DESIGN A

FUNCTIONAL SUPERVISOR: HAYKAZ AGHAJANIAN
CALCULATED-DESIGNED BY: HAYKAZ AGHAJANIAN
CHECKED BY: NGIM NANCY PE
REVISED BY / DATE REVISED

LAST REVISION 00-00-00
DATE PLOTTED => 16-FEB-2011
TIME PLOTTED => 08:27

Dist	COUNTY	ROUTE	KILOMETER POST TOTAL PROJECT	SHEET No.	TOTAL SHEETS
07	LA	5	2.9/4.9	392	1082

REGISTERED CIVIL ENGINEER 12-23-09 DATE

6-21-10
PLANS APPROVAL DATE

REGISTERED PROFESSIONAL ENGINEER HAYKAZ AGHAJANIAN No. C53866 Exp. 12-31-11 CIVIL STATE OF CALIFORNIA

THE STATE OF CALIFORNIA OR ITS OFFICERS OR AGENTS SHALL NOT BE RESPONSIBLE FOR THE ACCURACY OR COMPLETENESS OF ELECTRONIC COPIES OF THIS PLAN SHEET.

Caltrans Metric

NOTES:

1. FOR ACCURATE RIGHT OF WAY DATA, CONTACT RIGHT OF WAY ENGINEERING AT THE DISTRICT OFFICE.
2. REFER TO NOTES 1, 2, 3, AND 4 FROM UTILITY PLAN U-1.

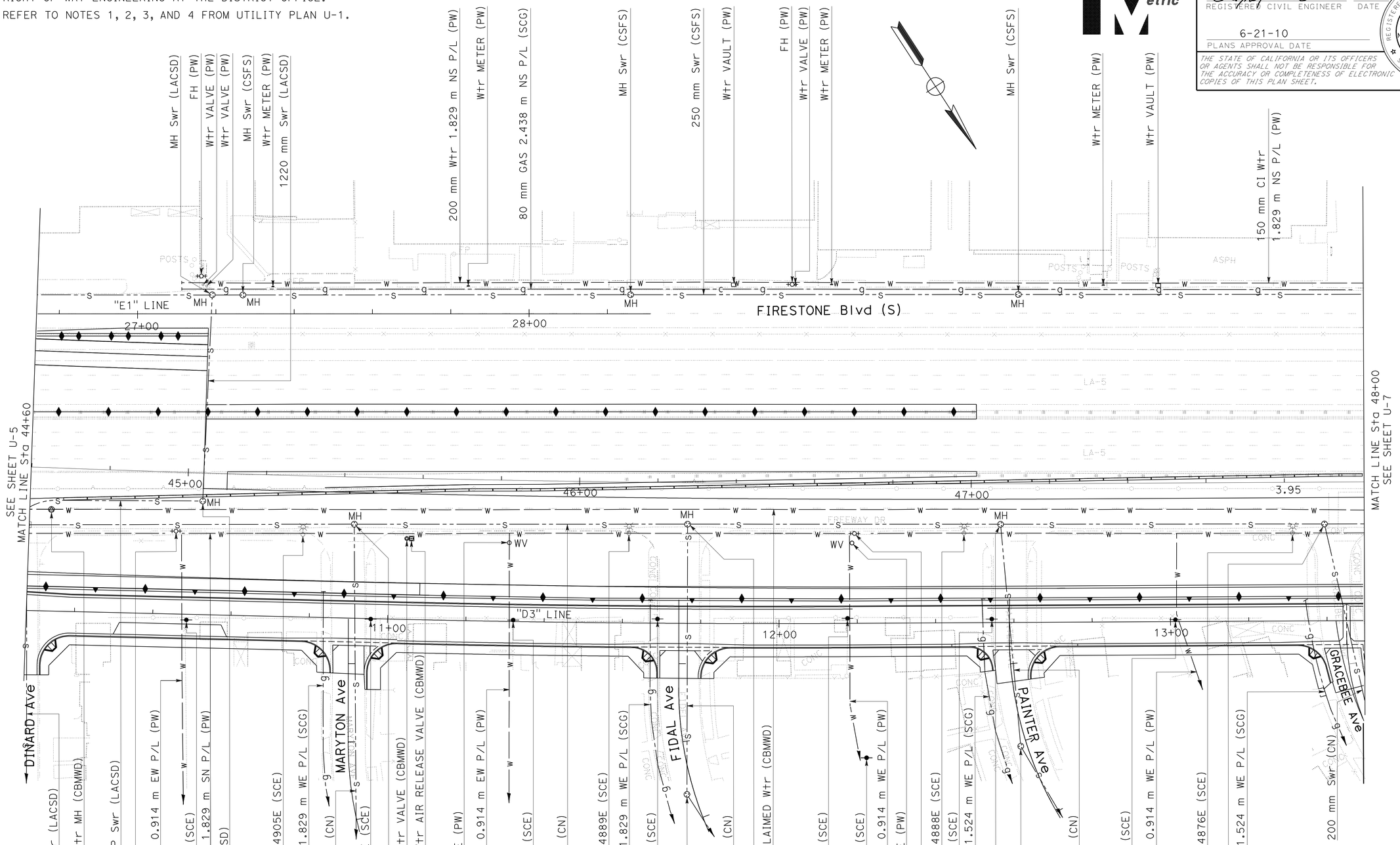

ALL DIMENSIONS ARE IN METERS UNLESS OTHERWISE SHOWN

UTILITY PLAN (EXISTING UTILITIES)

SCALE 1:500

THIS PLAN FOR UTILITY INFORMATION ONLY

U-6

REVISED BY	DATE REVISED

HAYKAZ AGHAJANIAN — NGIM NANCY PE

CALCULATED-DESIGNED BY — CHECKED BY

FUNCTIONAL SUPERVISOR: HAYKAZ AGHAJANIAN

STATE OF CALIFORNIA - DEPARTMENT OF TRANSPORTATION
Caltrans OFFICE OF DESIGN A

S:\projects\2159c1\resubmit9\72159cka006.dgn

LAST REVISION 00-00-00 | DATE PLOTTED => 16-FEB-2011 | TIME PLOTTED => 08:27

BORDER LAST REVISED 3/1/2007 | RELATIVE BORDER SCALE IS IN MILLIMETERS 0 20 40 60 80 | USERNAME => trmikesl | DGN FILE => 72159cka006.dgn | CU 07328 | EA 2159C1

NOTES:

1. FOR ACCURATE RIGHT OF WAY DATA, CONTACT RIGHT OF WAY ENGINEERING AT THE DISTRICT OFFICE.
2. REFER TO NOTES 1, 2, 3, AND 4 FROM UTILITY PLAN U-1.

Dist	COUNTY	ROUTE	KILOMETER POST TOTAL PROJECT	SHEET No.	TOTAL SHEETS
07	LA	5	2.9/4.9	393	1082

REGISTERED CIVIL ENGINEER 12-23-09 DATE

6-21-10
PLANS APPROVAL DATE

REGISTERED PROFESSIONAL ENGINEER HAYKAZ AGHAJANIAN No. C53866 Exp. 12-31-11 CIVIL STATE OF CALIFORNIA

THE STATE OF CALIFORNIA OR ITS OFFICERS OR AGENTS SHALL NOT BE RESPONSIBLE FOR THE ACCURACY OR COMPLETENESS OF ELECTRONIC COPIES OF THIS PLAN SHEET.

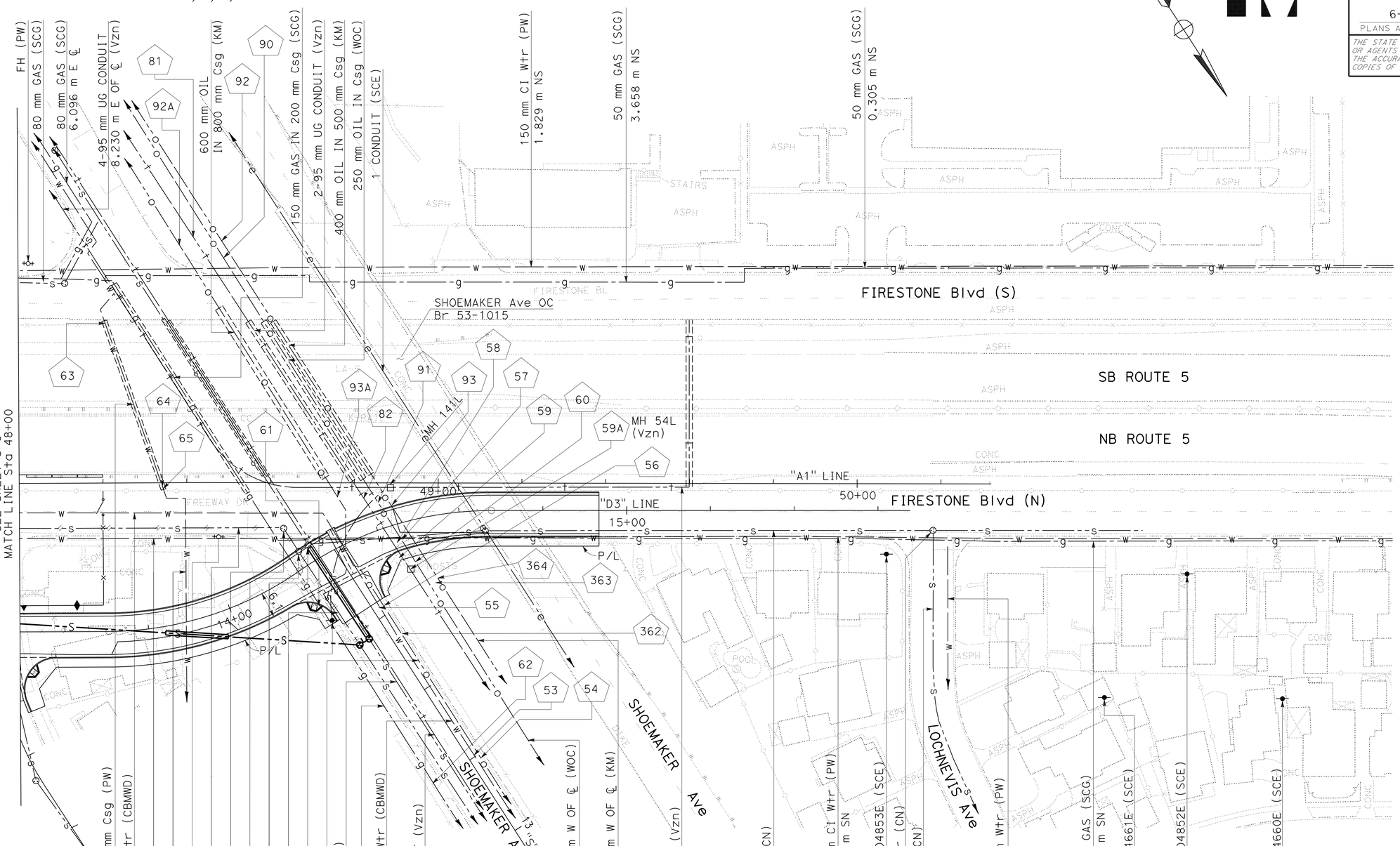

ALL DIMENSIONS ARE IN METERS UNLESS OTHERWISE SHOWN

UTILITY PLAN
(EXISTING UTILITIES)

SCALE 1:500

U-7

THIS PLAN FOR UTILITY INFORMATION ONLY

STATE OF CALIFORNIA - DEPARTMENT OF TRANSPORTATION
Caltrans OFFICE OF DESIGN A

FUNCTIONAL SUPERVISOR: HAYKAZ AGHAJANIAN
CALCULATED-DESIGNED BY: HAYKAZ AGHAJANIAN
CHECKED BY: NGIM NANCY PE
REVISED BY / DATE REVISED

S:\projects\2159c1\resubmit9\72159cka007.dgn

LAST REVISION 00-00-00
DATE PLOTTED => 16-FEB-2011
TIME PLOTTED => 08:28

BORDER LAST REVISED 3/1/2007
RELATIVE BORDER SCALE IS IN MILLIMETERS 0 20 40 60 80
USERNAME => trmikesl
DGN FILE => 72159cka007.dgn
CU 07328
EA 2159C1

NOTE:

1. FOR ACCURATE RIGHT OF WAY DATA, CONTACT RIGHT OF WAY ENGINEERING AT THE DISTRICT OFFICE.
2. REFER TO NOTES 1, 2, 3 AND 4 FROM UTILITY PLAN U-1.

Dist	COUNTY	ROUTE	KILOMETER POST TOTAL PROJECT	SHEET No.	TOTAL SHEETS
07	LA	5	2.9/4.9	394	1082

REGISTERED CIVIL ENGINEER 12-23-09 DATE

6-21-10
PLANS APPROVAL DATE

REGISTERED PROFESSIONAL ENGINEER HAYKAZ AGHAJANIAN No. C53866 Exp. 12-31-11 CIVIL STATE OF CALIFORNIA

THE STATE OF CALIFORNIA OR ITS OFFICERS OR AGENTS SHALL NOT BE RESPONSIBLE FOR THE ACCURACY OR COMPLETENESS OF ELECTRONIC COPIES OF THIS PLAN SHEET.

Caltrans Metric

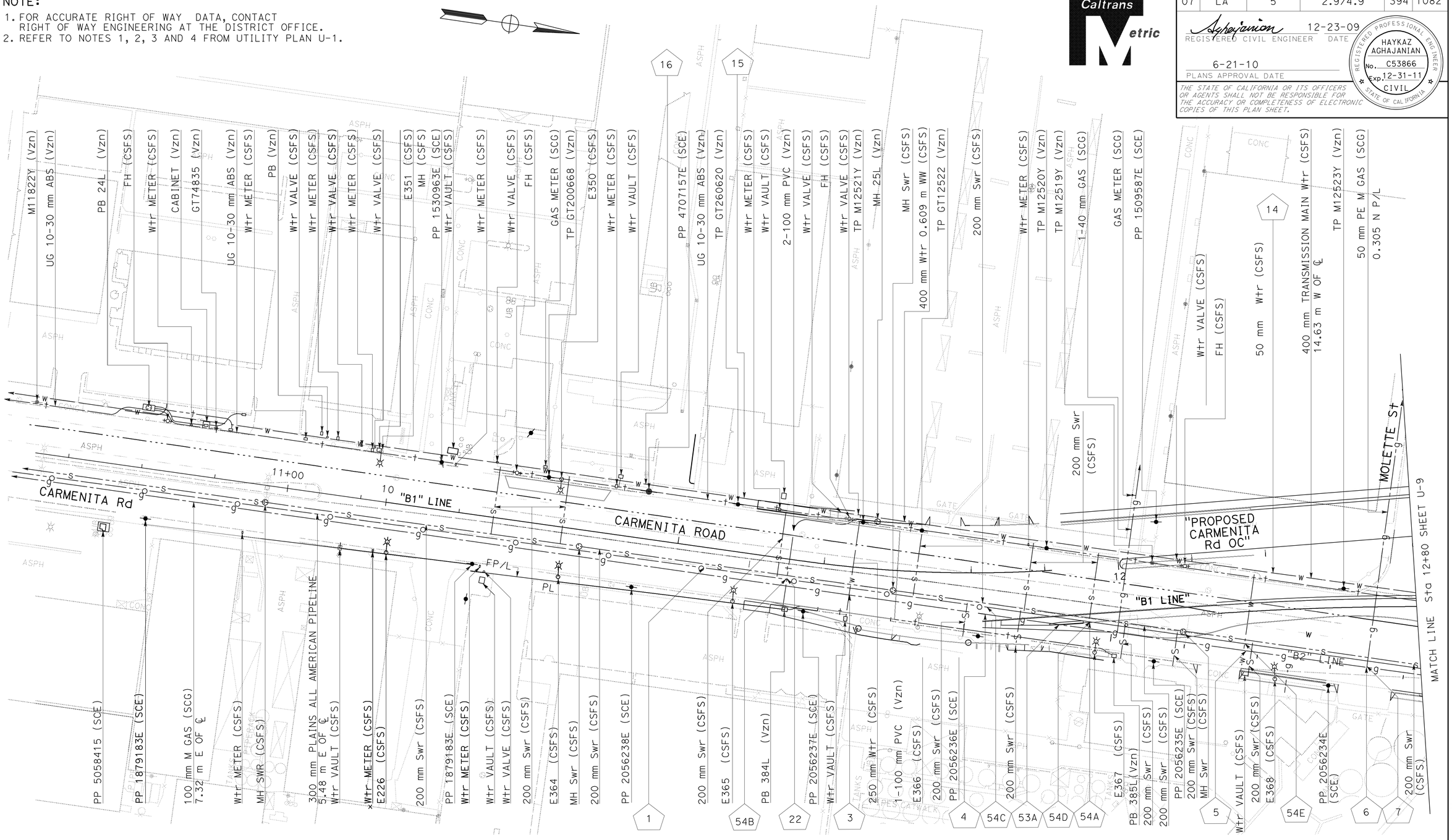

ALL DIMENSIONS ARE IN METERS UNLESS OTHERWISE SHOWN

UTILITY PLAN
(EXISTING UTILITIES)

SCALE 1:500 **U-8**

THIS PLAN FOR UTILITY INFORMATION ONLY

CALCULATED-DESIGNED BY	HAYKAZ AGHAJANIAN	REVISED BY	KN
CHECKED BY	NGIM NANCY PE	DATE REVISED	9/09
FUNCTIONAL SUPERVISOR	HAYKAZ AGHAJANIAN		

STATE OF CALIFORNIA - DEPARTMENT OF TRANSPORTATION
Caltrans OFFICE OF DESIGN A

S:\projects\2159c1\resubmitt9\72159cka008.dgn

LAST REVISION 00-00-00 | DATE PLOTTED => 16-FEB-2011 | TIME PLOTTED => 08:28

BORDER LAST REVISED 3/1/2007 | RELATIVE BORDER SCALE IS IN MILLIMETERS 0 20 40 60 80 | USERNAME => trmikesl | DGN FILE => 72159cka008.dgn | CU 07328 | EA 2159C1

Dist	COUNTY	ROUTE	KILOMETER POST TOTAL PROJECT	SHEET No.	TOTAL SHEETS
07	LA	5	2.9/4.9	395	1082

REGISTERED CIVIL ENGINEER 12-23-09 DATE

6-21-10
PLANS APPROVAL DATE

REGISTERED PROFESSIONAL ENGINEER HAYKAZ AGHAJANIAN No. C53866 Exp. 12-31-11 CIVIL STATE OF CALIFORNIA

THE STATE OF CALIFORNIA OR ITS OFFICERS OR AGENTS SHALL NOT BE RESPONSIBLE FOR THE ACCURACY OR COMPLETENESS OF ELECTRONIC COPIES OF THIS PLAN SHEET.

Caltrans Metric

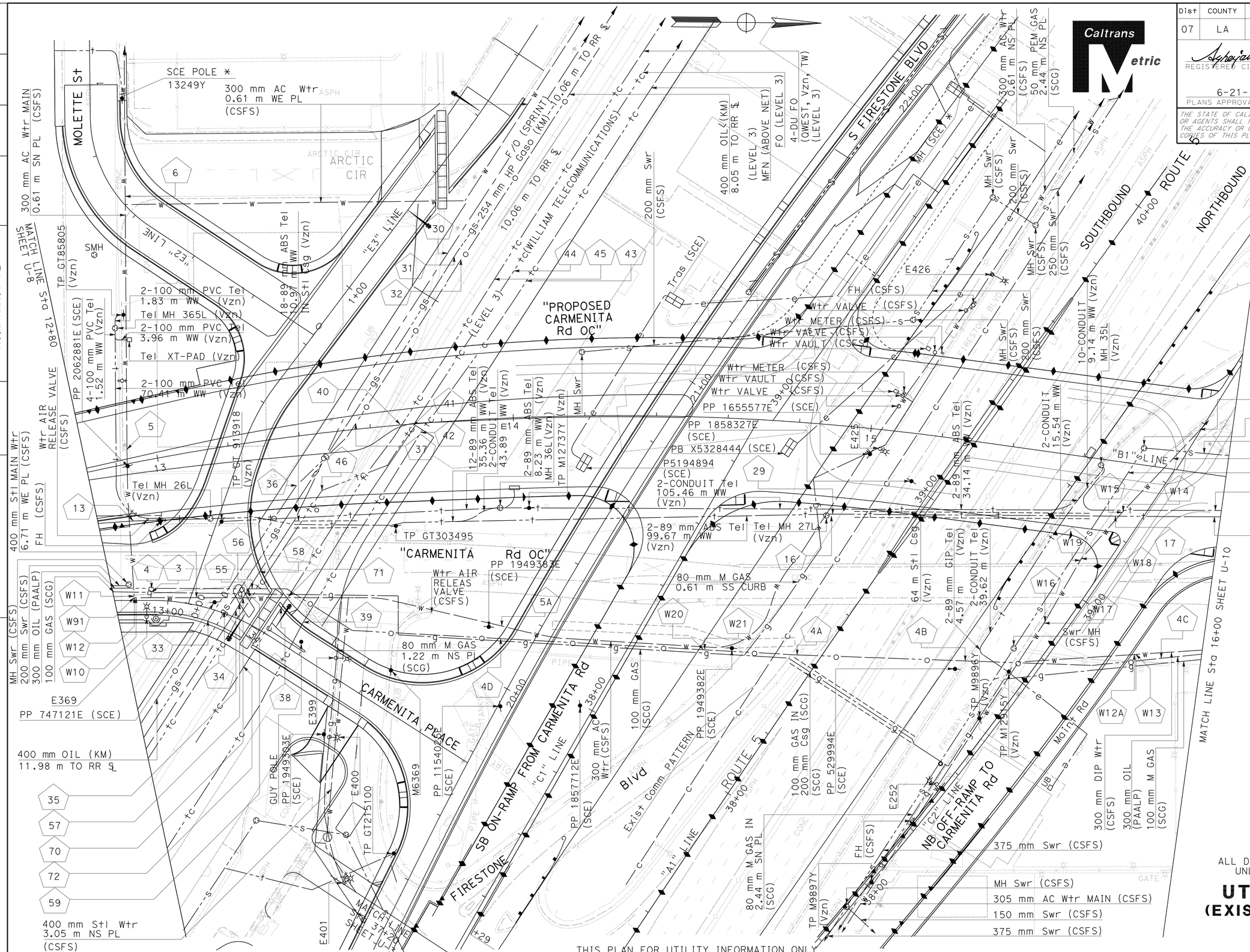

NOTES:

1. FOR ACCURATE RIGHT OF WAY DATA, CONTACT RIGHT OF WAY ENGINEERING AT THE DISTRICT OFFICE.
2. REFER TO NOTES 1, 2, 3 AND 4 FROM UTILITY PLAN U-1.

ALL DIMENSIONS ARE IN METERS UNLESS OTHERWISE SHOWN

UTILITY PLAN (EXISTING UTILITIES)

SCALE 1:500

THIS PLAN FOR UTILITY INFORMATION ONLY

U-9

STATE OF CALIFORNIA - DEPARTMENT OF TRANSPORTATION
Caltrans OFFICE OF DESIGN A

FUNCTIONAL SUPERVISOR: UGO ANAKWENZE
CALCULATED-DESIGNED BY: HAYKAZ AGHAJANIAN
CHECKED BY: NGIM NANCY PE
REVISED BY / DATE REVISED

LAST REVISION 00-00-00 | DATE PLOTTED => 16-FEB-2011 | TIME PLOTTED => 08:28

Dist	COUNTY	ROUTE	KILOMETER POST TOTAL PROJECT	SHEET No.	TOTAL SHEETS
07	LA	5	2.9/4.9	396	1082

REGISTERED CIVIL ENGINEER 12-23-09 DATE

6-21-10
PLANS APPROVAL DATE

REGISTERED PROFESSIONAL ENGINEER HAYKAZ AGHAJANIAN No. C53866 Exp. 12-31-11 CIVIL STATE OF CALIFORNIA

THE STATE OF CALIFORNIA OR ITS OFFICERS OR AGENTS SHALL NOT BE RESPONSIBLE FOR THE ACCURACY OR COMPLETENESS OF ELECTRONIC COPIES OF THIS PLAN SHEET.

NOTE:

1. FOR ACCURATE RIGHT OF WAY AND DATA, CONTACT RIGHT OF WAY ENGINEERING AT THE DISTRICT OFFICE.
2. REFER TO NOTES 1, 2, 3 AND 4 FROM UTILITY PLAN U-1.

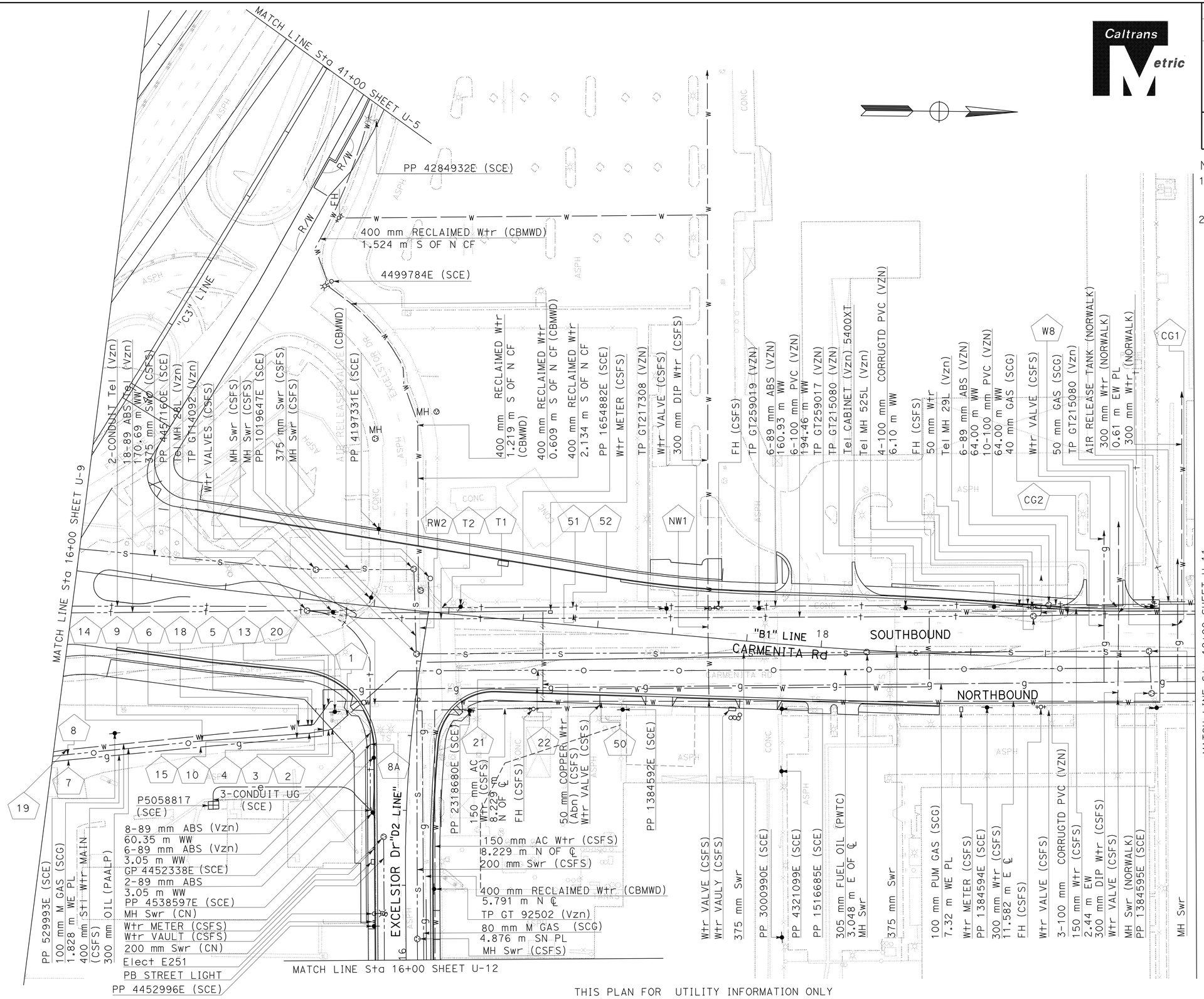

ALL DIMENSIONS ARE IN METERS UNLESS OTHERWISE SHOWN

UTILITY PLAN (EXISTING UTILITIES)

SCALE 1:500

U-10

THIS PLAN FOR UTILITY INFORMATION ONLY

STATE OF CALIFORNIA - DEPARTMENT OF TRANSPORTATION
Caltrans OFFICE OF DESIGN A

FUNCTIONAL SUPERVISOR: HAYKAZ AGHAJANIAN
CALCULATED-DESIGNED BY: HAYKAZ AGHAJANIAN
CHECKED BY: NGIM NANCY PE
REVISED BY
DATE REVISED

LAST REVISION 00-00-00
DATE PLOTTED => 16-FEB-2011
TIME PLOTTED => 08:28

NOTE:

1. FOR ACCURATE RIGHT OF WAY DATA, CONTACT RIGHT OF WAY ENGINEERING AT THE DISTRICT OFFICE.
2. REFER TO NOTES 1, 2, 3 AND 4 FROM UTILITY PLAN U-1.

Dist	COUNTY	ROUTE	KILOMETER POST TOTAL PROJECT	SHEET No.	TOTAL SHEETS
07	LA	5	2.9/4.9	397	1082

Caltrans Metric

REGISTERED CIVIL ENGINEER 12-23-09 DATE

6-21-10
PLANS APPROVAL DATE

REGISTERED PROFESSIONAL ENGINEER HAYKAZ AGHAJANIAN No. C53866 Exp. 12-31-11 CIVIL STATE OF CALIFORNIA

THE STATE OF CALIFORNIA OR ITS OFFICERS OR AGENTS SHALL NOT BE RESPONSIBLE FOR THE ACCURACY OR COMPLETENESS OF ELECTRONIC COPIES OF THIS PLAN SHEET.

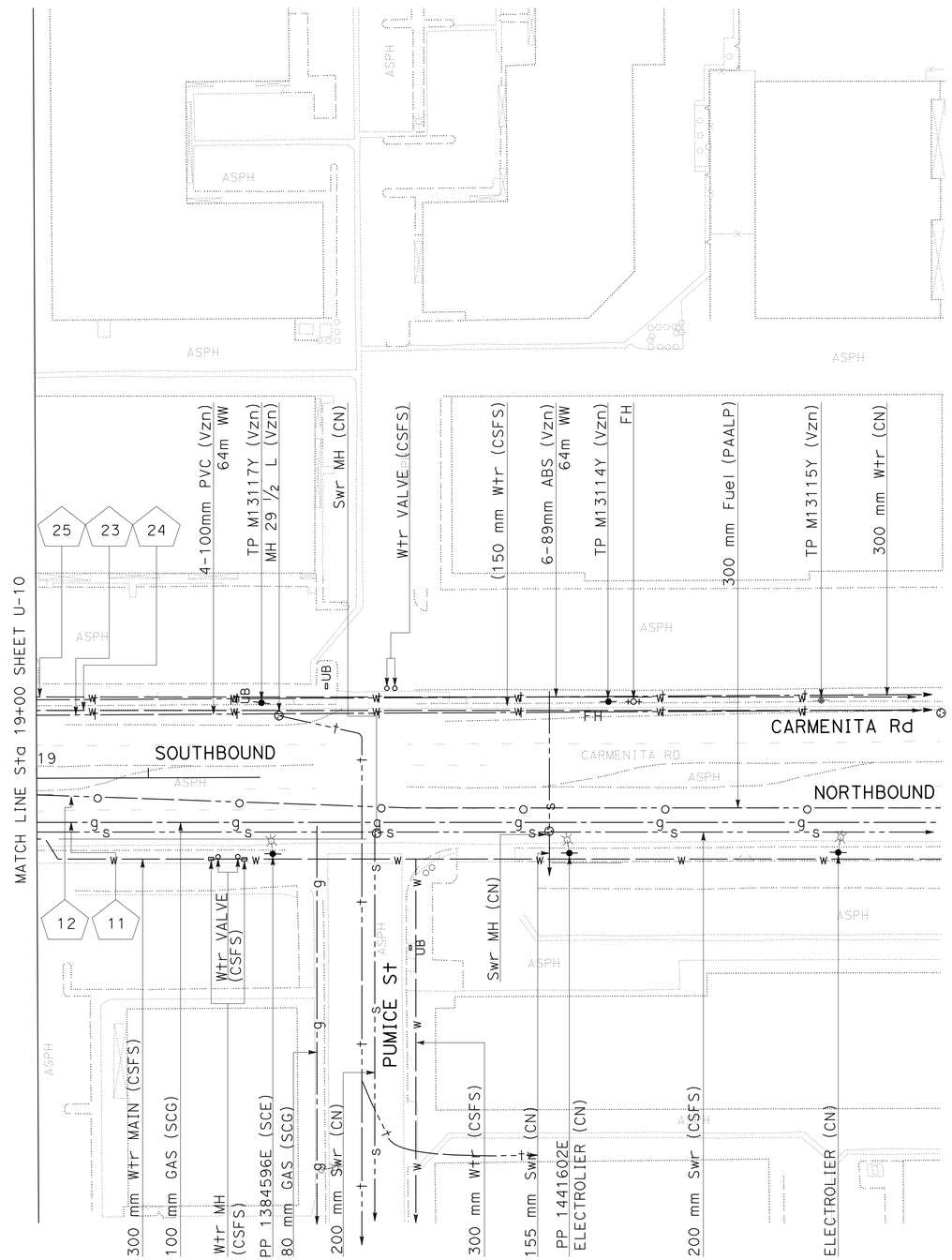

THIS PLAN FOR UTILITIY INFORMATION ONLY

ALL DIMENSIONS ARE IN METERS UNLESS OTHERWISE SHOWN

UTILITY PLAN (EXISTING UTILITIES)

SCALE 1:500

U-11

STATE OF CALIFORNIA - DEPARTMENT OF TRANSPORTATION	
Caltrans OFFICE OF DESIGN A	
FUNCTIONAL SUPERVISOR	HAYKAZ AGHAJANIAN
CALCULATED-DESIGNED BY	HAYKAZ AGHAJANIAN
CHECKED BY	NGIM NANCY PE
REVISED BY	
DATE REVISED	

LAST REVISION 00-00-00 | DATE PLOTTED => 16-FEB-2011 | TIME PLOTTED => 08:28

NOTE:

1. FOR ACCURATE RIGHT OF WAY DATA, CONTACT RIGHT OF WAY ENGINEERING AT THE DISTRICT OFFICE.
2. REFER TO NOTES 1, 2, 3 AND 4 FROM UTILITY PLAN U-1.

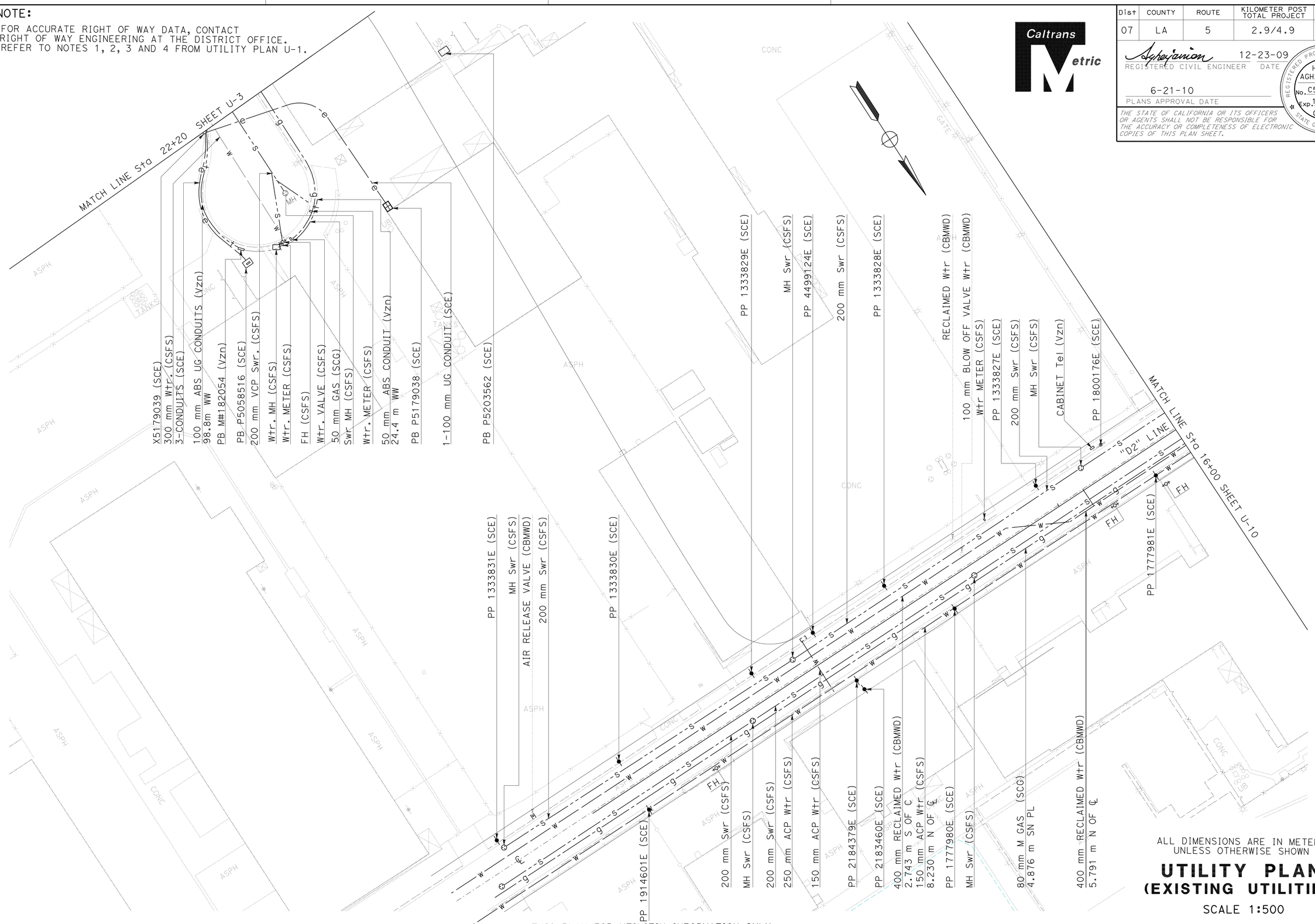

Dist	COUNTY	ROUTE	KILOMETER POST TOTAL PROJECT	SHEET No.	TOTAL SHEETS
07	LA	5	2.9/4.9	398	1082

Caltrans Metric

REGISTERED CIVIL ENGINEER — DATE 12-23-09

6-21-10
PLANS APPROVAL DATE

REGISTERED PROFESSIONAL ENGINEER — HAYKAZ AGHAJANIAN — No. C53866 — Exp. 12-31-11 — CIVIL — STATE OF CALIFORNIA

THE STATE OF CALIFORNIA OR ITS OFFICERS OR AGENTS SHALL NOT BE RESPONSIBLE FOR THE ACCURACY OR COMPLETENESS OF ELECTRONIC COPIES OF THIS PLAN SHEET.

ALL DIMENSIONS ARE IN METERS UNLESS OTHERWISE SHOWN

UTILITY PLAN (EXISTING UTILITIES)

SCALE 1:500

THIS PLAN FOR UTILITIY INFORMATION ONLY

U-12

CALCULATED-DESIGNED BY	HAYKAZ AGHAJANIAN
CHECKED BY	NGIM NANCY PE
FUNCTIONAL SUPERVISOR	HAYKAZ AGHAJANIAN
REVISED BY	
DATE REVISED	

STATE OF CALIFORNIA - DEPARTMENT OF TRANSPORTATION
Caltrans OFFICE OF DESIGN A

LAST REVISION 00-00-00 | DATE PLOTTED => 16-FEB-2011 | TIME PLOTTED => 08:28

Dist	COUNTY	ROUTE	KILOMETER POST TOTAL PROJECT	SHEET No.	TOTAL SHEETS
07	LA	5	2.9/4.9	399	1082

Caltrans Metric

REGISTERED CIVIL ENGINEER 12-23-09 DATE

6-21-10
PLANS APPROVAL DATE

REGISTERED PROFESSIONAL ENGINEER HAYKAZ AGHAJANIAN No. C53866 Exp. 12-31-11 CIVIL STATE OF CALIFORNIA

THE STATE OF CALIFORNIA OR ITS OFFICERS OR AGENTS SHALL NOT BE RESPONSIBLE FOR THE ACCURACY OR COMPLETENESS OF ELECTRONIC COPIES OF THIS PLAN SHEET.

NOTES:

1. FOR ACCURATE RIGHT OF WAY DATA, CONTACT RIGHT OF WAY ENGINEERING AT THE DISTRICT OFFICE.
2. REFER TO NOTES 1, 2, 3 AND 4 FROM UTILITY PLAN U-1.

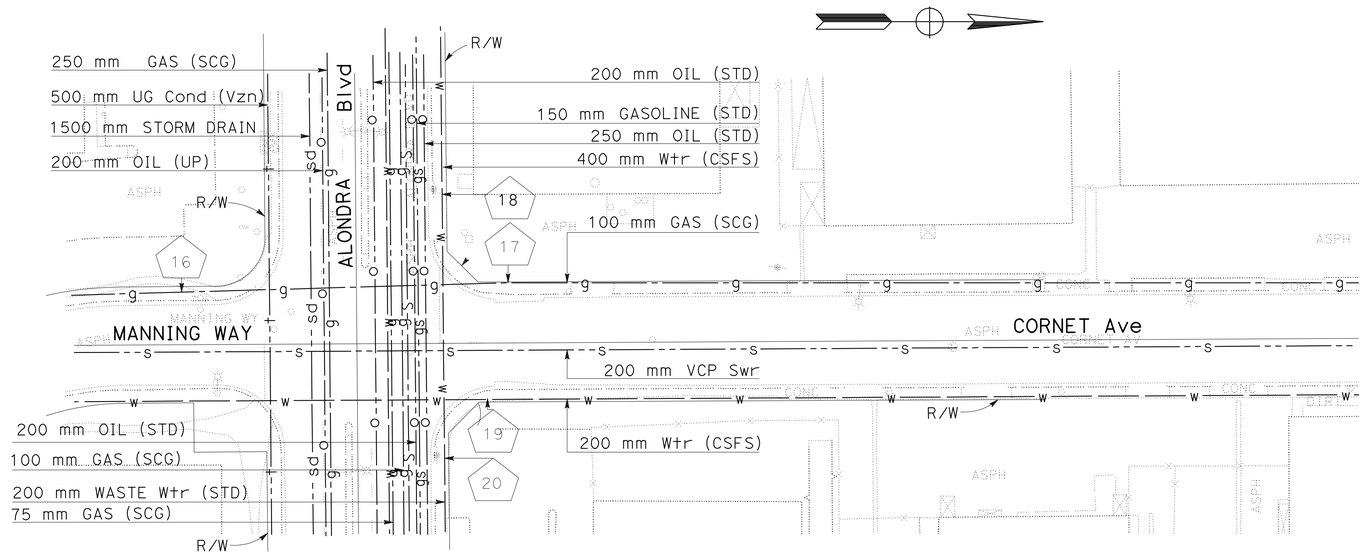

ALL DIMENSIONS ARE IN METERS UNLESS OTHERWISE SHOWN

UTILITY PLAN (EXISTING UTILITIES)

SCALE 1:500

THIS PLAN FOR UTILITIY INFORMATION ONLY

U-13

STATE OF CALIFORNIA - DEPARTMENT OF TRANSPORTATION
Caltrans OFFICE OF DESGIN A

FUNCTIONAL SUPERVISOR: HAYKAZ AGHAJANIAN

CALCULATED-DESIGNED BY: HAYKAZ AGHAJANIAN
CHECKED BY: NGIM NANCY PE

REVISED BY / DATE REVISED

LAST REVISION 00-00-00 DATE PLOTTED => 16-FEB-2011 TIME PLOTTED => 08:28

Dist	COUNTY	ROUTE	KILOMETER POST TOTAL PROJECT	SHEET No.	TOTAL SHEETS
07	LA	5	2.9/4.9	400	1082

Caltrans Metric

REGISTERED CIVIL ENGINEER 12-23-09 DATE

6-21-10
PLANS APPROVAL DATE

REGISTERED PROFESSIONAL ENGINEER HAYKAZ AGHAJANIAN No. C53866 Exp. 12-31-11 CIVIL STATE OF CALIFORNIA

THE STATE OF CALIFORNIA OR ITS OFFICERS OR AGENTS SHALL NOT BE RESPONSIBLE FOR THE ACCURACY OR COMPLETENESS OF ELECTRONIC COPIES OF THIS PLAN SHEET.

U-1

POTHOLE No.	NORTHING/EASTING	UTILITY COMPANY	SURFACE/GROUND ELEVATION (m)	DEPTH (m)
1	543076.303 1996648.079	300 mm WASTE Wtr CHEVRON	20.649	2.012
2	543076.155 1996648.569	200 mm CRUDE OIL CHEVRON	20.670	2.012
3	543076.877 1996649.349	200 mm SPARE CHEVRON	20.655	2.079
4	543075.374 1996650.899	200 mm SPARE CHEVRON	20.650	2.042
5	543074.926 1996652.341	150 mm Nat Gaso CHEVRON	20.652	2.140
6	543074.567 1996653.488	250 mm CRUDE OIL CHEVRON	20.647	2.134
11	543082.392 1996681.104	300 mm WASTE Wtr CHEVRON	20.298	1.829
12	543081.728 1996681.030	200 mm CRUDE OIL CHEVRON	20.350	1.951
13	543081.066 1996681.450	200 mm PRODUCT CHEVRON	20.306	1.914
14	543080.607 1996682.411	150 mm Nat Gaso CHEVRON	20.237	1.945
15	543080.275 1996683.140	250 mm CRUDE OIL CHEVRON	20.203	1.951
20A	543140.999 1996542.138	100 mm GAS (SCG)	20.577	1.524
21	543076.630 1996720.006	300 mm DRY GAS CHEVRON	20.222	1.524
21A	543140.103 1996543.613	250 mm GAS (SCG)	20.586	1.859
22	543075.999 1996719.993	200 mm CRUDE OIL CHEVRON	20.300	1.621
23	543075.478 1996720.002	200 mm PRODUCT CHEVRON	20.300	1.536
24	543074.812 1996719.946	150 mm Nat Gaso CHEVRON	20.383	1.527
25	543074.355 1996719.837	250 mm CRUDE OIL CHEVRON	20.394	1.524
27	543053.509 1996508.381	250 mm GAS (SCG)	21.353	1.804
28	543083.247 1996508.426	100 mm GAS (SCG)	20.860	1.448
29	543068.554 1996756.837	250 mm CRUDE OIL CHEVRON	20.273	1.542
30	543069.171 1996756.980	150 mm Nat Gaso CHEVRON	20.281	1.737
31	543069.965 1996756.933	200 mm PRODUCT CHEVRON	20.423	1.859
32	543070.205 1996756.914	200 mm CRUDE OIL CHEVRON	20.508	1.920
33	543070.793 1996756.853	300 mm WASTE Wtr CHEVRON	20.505	1.829
34	543071.512 1996756.677	SPARE 200 mm CHEVRON	20.373	1.890
35	543062.120 1996574.610	SPARE 200 mm CHEVRON	20.521	1.920
36	543061.557 1996574.746	300 mm WASTE Wtr CHEVRON	20.520	2.164
37	543061.270 1996574.791	200 mm CRUDE OIL CHEVRON	20.520	2.469
38	543060.902 1996574.849	200 mm PRODUCT CHEVRON	20.507	2.469
39	543060.431 1996575.026	150 mm Nat Gaso CHEVRON	20.515	2.457
40	543060.105 1996575.076	250 mm CRUDE OIL CHEVRON	20.500	2.438

THIS PLAN FOR UTILITIY INFORMATION ONLY

U-4

POTHOLE No.	NORTHING/EASTING	UTILITY COMPANY	SURFACE/GROUND ELEVATION (m)	DEPTH (m)
7	543744.534 1995717.821	100 mm GAS (SCG)	24.453	1.600
8	543744.333 1995716.534	300 mm OIL (PAALP)	24.435	1.956
16	543636.621 1995678.283	VERIZON	24.667	1.600
17	543715.867 1995678.324	VERIZON	24.516	3.048
19	543744.060 1995715.077	400 mm Wtr (CSFS)	24.454	1.118
29	543636.955 1995677.751	VERIZON	24.663	1.472

U-7

POTHOLE No.	NORTHING/EASTING	UTILITY COMPANY	SURFACE/GROUND ELEVATION (m)	DEPTH (m)
53	544293.295 1994879.988	400 mm RECLAIMED WATER (CBMWD)	24.145	0.995
54	544294.723 1994878.845	600 mm KINDER MORGAN OIL	24.083	1.173
55	544251.345 1994879.859	400 mm RECLAIMED WATER (CBMWD)	23.963	1.093
56	544251.648 1994878.506	600 mm KINDER MORGAN OIL	23.896	1.236
57	544240.683 1994866.384	400 mm WILSHIRE OIL COMPANY	23.766	1.046
58	544240.673 1994867.713	VERIZON	23.772	1.802
59	544243.977 1994869.342	VERIZON	24.031	1.211
60	544246.991 1994864.612	400 mm PACIFIC OIL CO KINDER MORGAN OIL	24.063	2.633
61	544243.210 1994891.593	80 mm GAS (SCG)	24.062	1.022
62	544293.570 1994891.902	80 mm GAS (SCG)	24.180	0.860
63	544158.830 1994897.692	200 mm AC Wtr IN 400 mm Csg (PW)	24.535	1.570
64	544199.005 1994907.438	200 mm AC Wtr IN 400 mm Csg (PW)	23.682	1.524
65	54199.4748 1994907.530	200 mm AC Wtr IN 400 mm Csg (PW)	23.676	1.524
81	544153.010 1994868.840	2-100 mm PVC VERIZON	24.402	1.829
82	544227.47 1994868.640	2-100 mm PVC VERIZON	23.671	2.435
90	544161.100 1994865.440	250 mm GASOLINE IN 400 mm Csg (WOC)	24.625	3.658
91	544230.210 1994866.340	250 mm GASOLINE IN 400 mm Csg (WOC)	23.704	2.566
92	544157.470 1994863.650	400 mm OIL KINDER MORGAN	24.411	3.252
92A	544152.800 1994872.62	600 mm OIL KINDER MORGAN	24.478	3.658
93	544232.480 1994863.840	400 mm OIL KINDER MORGAN	23.726	2.262
93A	544223.760 1994873.710	600 mm OIL KINDER MORGAN	23.704	2.667
362	544259.57 1994878.58	600 mm OIL KINDER MORGAN	23.915	1.829
363	544253.72 1994865.23	250 mm GASOLINE (WOC)	24.579	3.658
364	544253.09 1994864.19	400 mm OIL KINDER MORGAN	24.427	3.048

U-8

POTHOLE No.	NORTHING/EASTING	UTILITY COMPANY	SURFACE/GROUND ELEVATION (m)	DEPTH (m)
2	543239.408 1995699.625	300 mm OIL (PAALP)	22.861	1.219
14	543392.437 1995678.747	400 mm Wtr (CSFS)	23.587	1.524
15	543247.543 1995679.023	400 mm Wtr (CSFS)	23.06	1.016
53A	543337.038 1995700.776	100 mm GAS IN 300 mm Csg (SCG)	23.085	0.945
54A	543345.130 1995698.929	300 mm OIL (PAALP)	23.065	1.158
22	543262.166 1995699.164	2-100 mm PVC VERIZON	22.893	0.762
16	543220.590 1995679.221	400 mm Wtr (CSFS)	23.039	1.130
54B	543261.965 1995699.238	300 mm OIL (PAALP)	22.891	1.146
3	543279.646 1995700.986	100 mm GAS (SCG)	22.884	1.118
4	543316.782 1995700.847	100 mm GAS (SCG)	22.926	1.143
54C	543316.972 1995698.871	300 mm OIL (PAALP)	22.941	1.095
54D	543345.254 1995698.777	300 mm OIL (PAALP)	22.071	1.156
5	543388.275 1995700.463	100 mm GAS (SCG)	23.287	1.067
54E	543387.660 1995698.598	300 mm OIL (PAALP)	23.305	1.054
6	543421.184 1995700.195	100 mm GAS (SCG)	23.476	1.118
7	543421.269 1995699.926	50 mm GAS (SCG)	23.477	1.035

UTILITY PLAN
(POTHOLE TABLE)

U-14

STATE OF CALIFORNIA - DEPARTMENT OF TRANSPORTATION
Caltrans OFFICE OF DESIGN A

FUNCTIONAL SUPERVISOR: HAYKAZ AGHAJANIAN
CALCULATED-DESIGNED BY: HAYKAZ AGHAJANIAN
CHECKED BY: NGIM NANCY PE
REVISED BY
DATE REVISED

LAST REVISION 00-00-00
DATE PLOTTED => 16-FEB-2011
TIME PLOTTED => 08:29