Dist	COUNTY	ROUTE	KILOMETER POST TOTAL PROJECT	SHEET No.	TOTAL SHEETS
07	LA	5	2.9/4.9	201	1082

REGISTERED CIVIL ENGINEER 12-23-09 DATE

6-21-10
PLANS APPROVAL DATE

REGISTERED PROFESSIONAL ENGINEER RALPH M. SASAKI No. 30849 Exp. 3/31/10 CIVIL STATE OF CALIFORNIA

THE STATE OF CALIFORNIA OR ITS OFFICERS OR AGENTS SHALL NOT BE RESPONSIBLE FOR THE ACCURACY OR COMPLETENESS OF ELECTRONIC COPIES OF THIS PLAN SHEET.

Caltrans Metric

NOTE: THE CONTRACTOR SHALL VERIFY LOCATIONS AND ELEVATIONS OF EXISTING DRAINAGE SYSTEMS BEFORE COMMENCEMENT OF WORK.

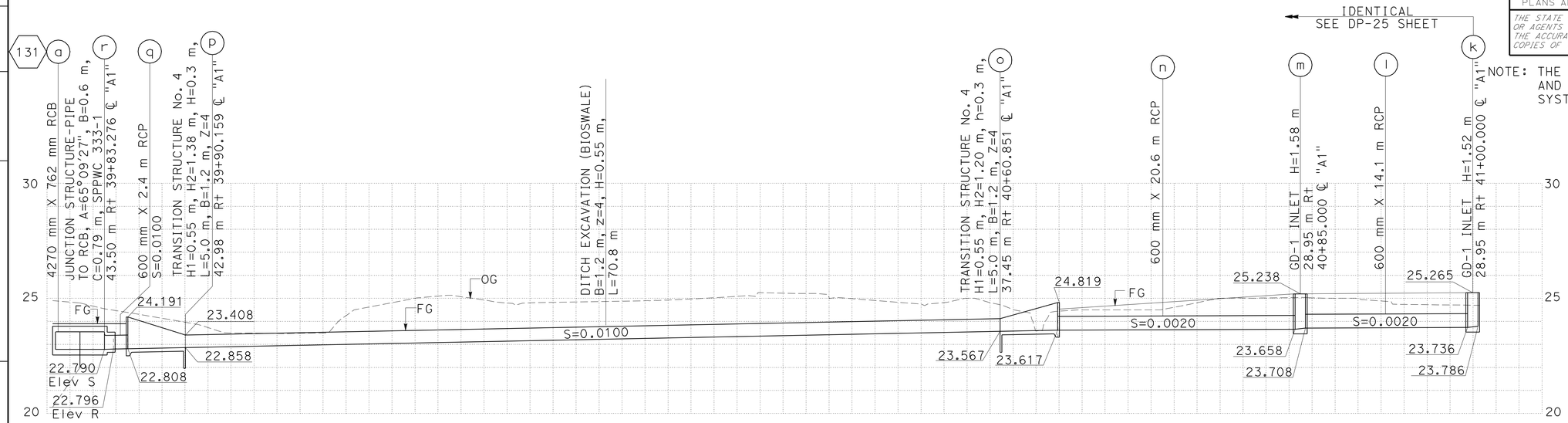

DRAINAGE SYSTEM No. 110

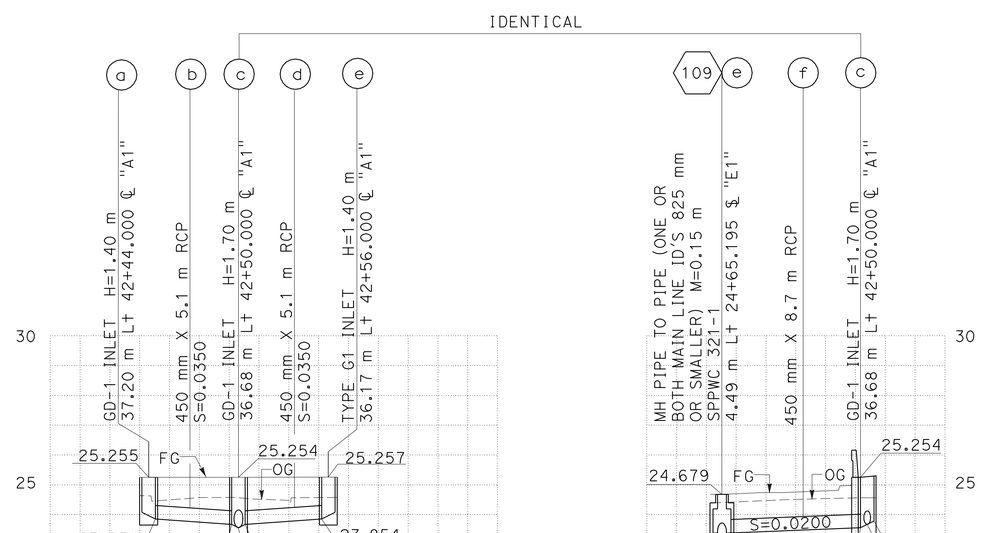

DRAINAGE SYSTEM No. 111

ALL DIMENSIONS ARE IN METERS UNLESS SHOWN OTHERWISE

DRAINAGE PROFILES

SCALE 1:200 Horiz
1:100 Vert

DP-26

STATE OF CALIFORNIA - DEPARTMENT OF TRANSPORTATION
Caltrans
HYDRAULICS

FUNCTIONAL SUPERVISOR: RALPH M. SASAKI
CHECKED BY: R. M. SASAKI
CALCULATED-DESIGNED BY: S. M. TAN, W. Y. LEE
REVISED BY / DATE REVISED

LAST REVISION 00-00-00
DATE PLOTTED => 29-JUN-2010
TIME PLOTTED => 09:07

Dist	COUNTY	ROUTE	KILOMETER POST TOTAL PROJECT	SHEET No.	TOTAL SHEETS
07	LA	5	2.9/4.9	202	1082

Ralph M. Sasaki 12-23-09
REGISTERED CIVIL ENGINEER DATE

6-21-10
PLANS APPROVAL DATE

REGISTERED PROFESSIONAL ENGINEER RALPH M. SASAKI No. 30849 Exp. 3/31/10 CIVIL STATE OF CALIFORNIA

THE STATE OF CALIFORNIA OR ITS OFFICERS OR AGENTS SHALL NOT BE RESPONSIBLE FOR THE ACCURACY OR COMPLETENESS OF ELECTRONIC COPIES OF THIS PLAN SHEET.

NOTE: THE CONTRACTOR SHALL VERIFY LOCATIONS AND ELEVATIONS OF EXISTING DRAINAGE SYSTEMS BEFORE COMMENCEMENT OF WORK.

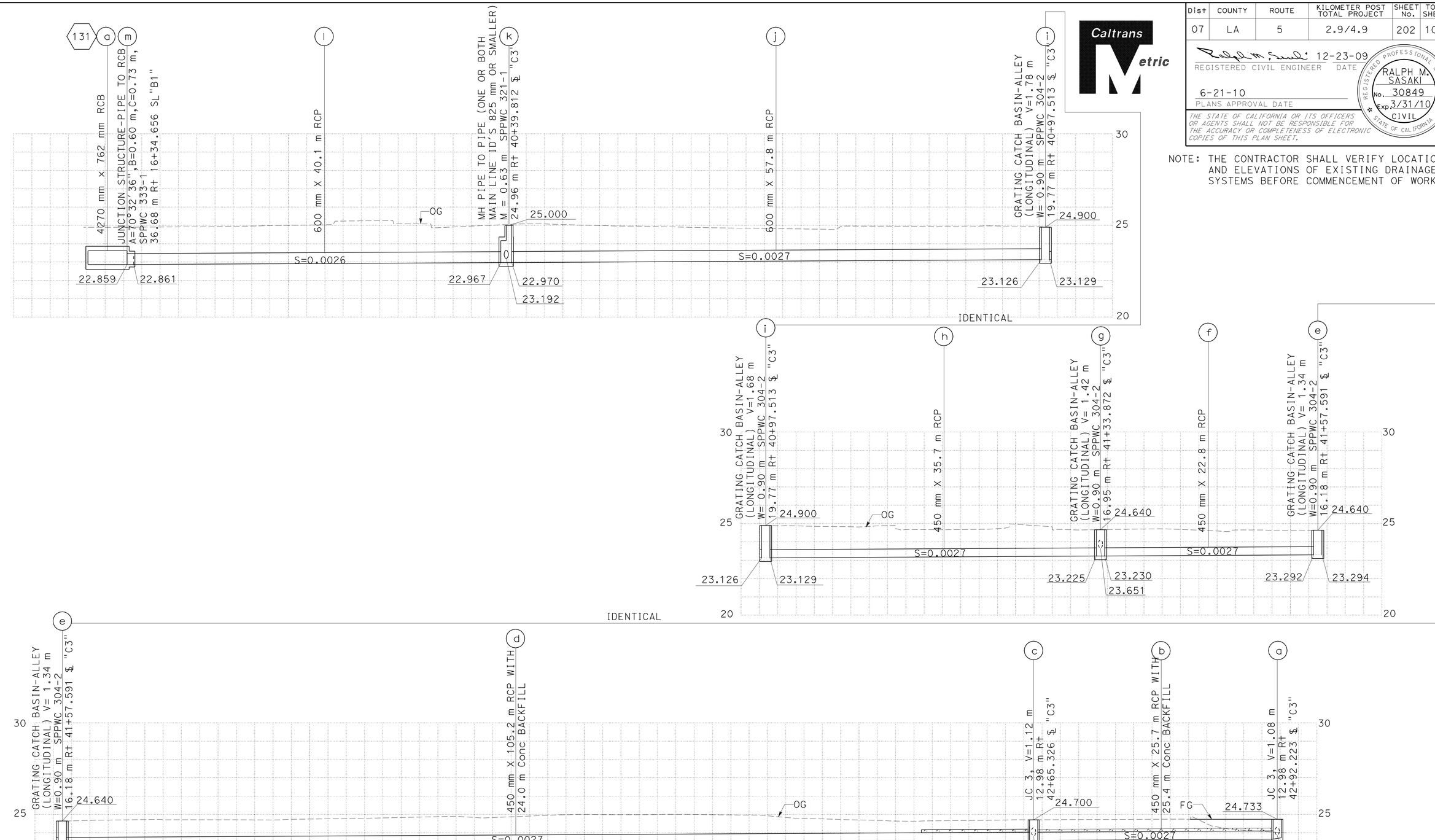

DRAINAGE SYSTEM No. 112

DRAINAGE PROFILES

SCALE 1:200 Horiz
1:100 Vert

ALL DIMENSIONS ARE IN METERS UNLESS SHOWN OTHERWISE

DP-27

CALCULATED-DESIGNED BY	S. M. TAN W. Y. LEE
CHECKED BY	R. M. SASAKI
FUNCTIONAL SUPERVISOR	RALPH M. SASAKI
REVISED BY	
DATE REVISED	

STATE OF CALIFORNIA - DEPARTMENT OF TRANSPORTATION
Caltrans
HYDRAULICS

LAST REVISION 00-00-00
DATE PLOTTED => 22-JUN-2010
TIME PLOTTED => 10:11

Dist	COUNTY	ROUTE	KILOMETER POST TOTAL PROJECT	SHEET No.	TOTAL SHEETS
07	LA	5	2.9/4.9	203	1082

Caltrans Metric

12-23-09
REGISTERED CIVIL ENGINEER DATE

6-21-10
PLANS APPROVAL DATE

REGISTERED PROFESSIONAL ENGINEER RALPH M. SASAKI No. 30849 Exp. 3/31/10 CIVIL STATE OF CALIFORNIA

THE STATE OF CALIFORNIA OR ITS OFFICERS OR AGENTS SHALL NOT BE RESPONSIBLE FOR THE ACCURACY OR COMPLETENESS OF ELECTRONIC COPIES OF THIS PLAN SHEET.

NOTE: THE CONTRACTOR SHALL VERIFY LOCATIONS AND ELEVATIONS OF EXISTING DRAINAGE SYSTEMS BEFORE COMMENCEMENT OF WORK.

IDENTICAL

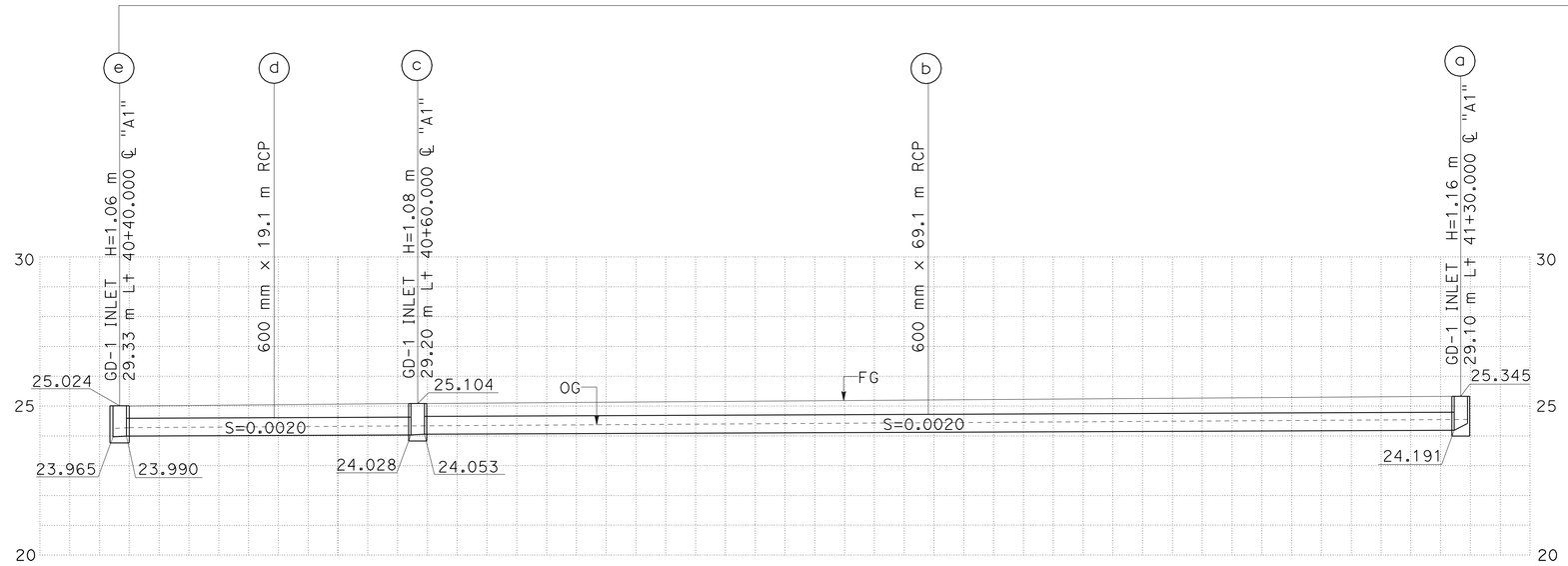

IDENTICAL

AVSF - WALL DESIGN TABLE

Top of Wall Elevation				Top of Footing Elevation		
WE1	WE2	WE3	WE4	FE1	FE2	
25.451	25.859	25.859	25.451	23.622	22.659	

IDENTICAL

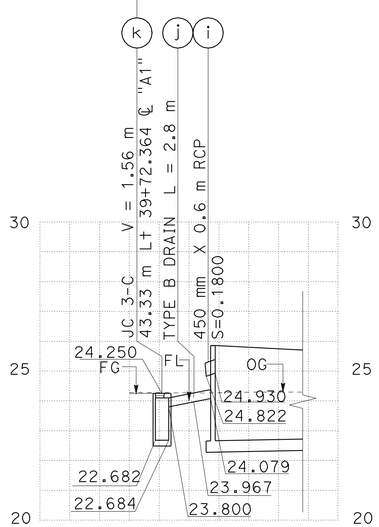

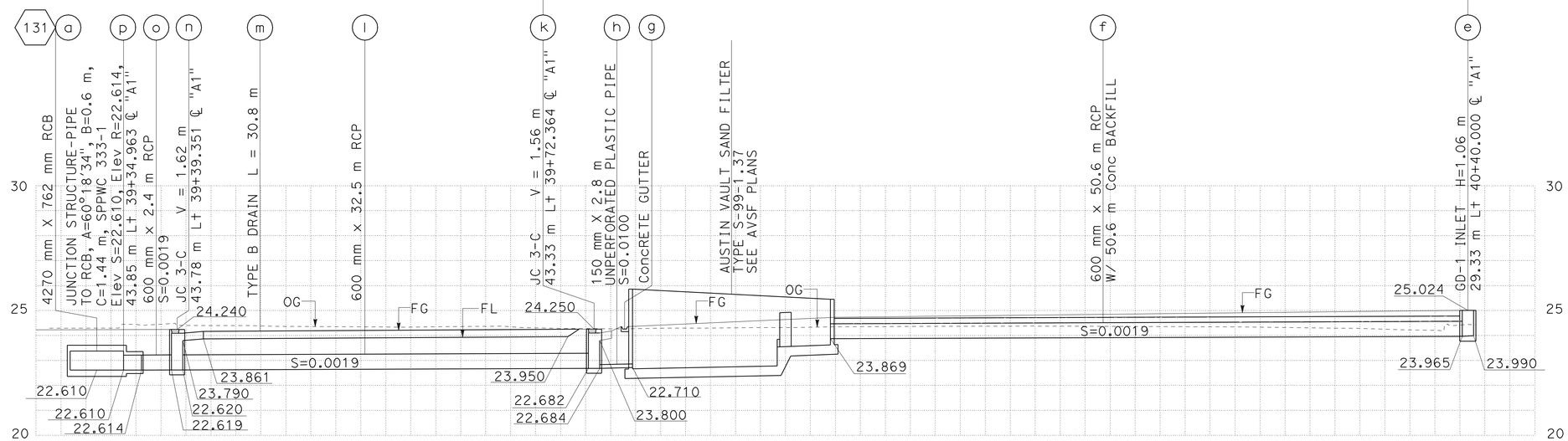

ALL DIMENSIONS ARE IN METERS UNLESS SHOWN OTHERWISE

DRAINAGE PROFILES

SCALE 1:200 Horiz
1:100 Vert

DRAINAGE SYSTEM No. 113

DP-28

REVISED BY	DATE REVISED

CALCULATED-DESIGNED BY: S. M. TAN, W. Y. LEE
CHECKED BY: R. M. SASAKI

FUNCTIONAL SUPERVISOR: RALPH M. SASAKI

STATE OF CALIFORNIA - DEPARTMENT OF TRANSPORTATION
Caltrans
HYDRAULICS

LAST REVISION 00-00-00 | DATE PLOTTED => 22-JUN-2010 | TIME PLOTTED => 10:11

Dist	COUNTY	ROUTE	KILOMETER POST TOTAL PROJECT	SHEET No.	TOTAL SHEETS
07	LA	5	2.9/4.9	204	1082

Caltrans Metric

12-23-09
REGISTERED CIVIL ENGINEER DATE

6-21-10
PLANS APPROVAL DATE

REGISTERED PROFESSIONAL ENGINEER RALPH M. SASAKI No. 30849 Exp. 3/31/10 CIVIL STATE OF CALIFORNIA

THE STATE OF CALIFORNIA OR ITS OFFICERS OR AGENTS SHALL NOT BE RESPONSIBLE FOR THE ACCURACY OR COMPLETENESS OF ELECTRONIC COPIES OF THIS PLAN SHEET.

NOTE: THE CONTRACTOR SHALL VERIFY LOCATIONS AND ELEVATIONS OF EXISTING DRAINAGE SYSTEMS BEFORE COMMENCEMENT OF WORK.

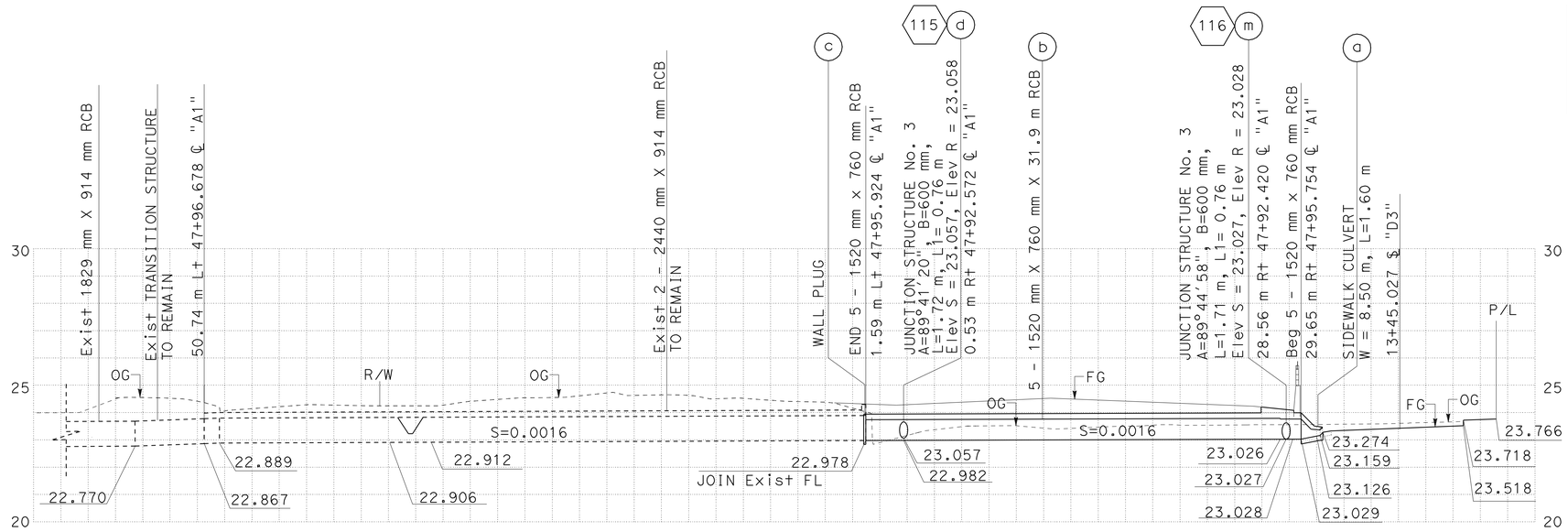

DRAINAGE SYSTEM No. 117
SCALE 1:200 Horiz
1:100 Vert

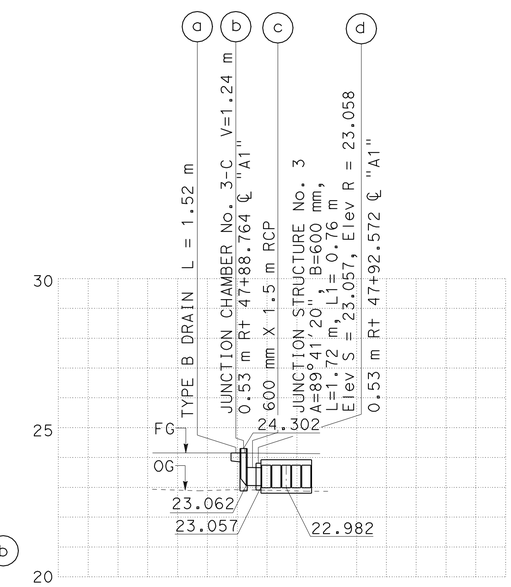

DRAINAGE SYSTEM No. 115
SCALE 1:500 Horiz
1:100 Vert

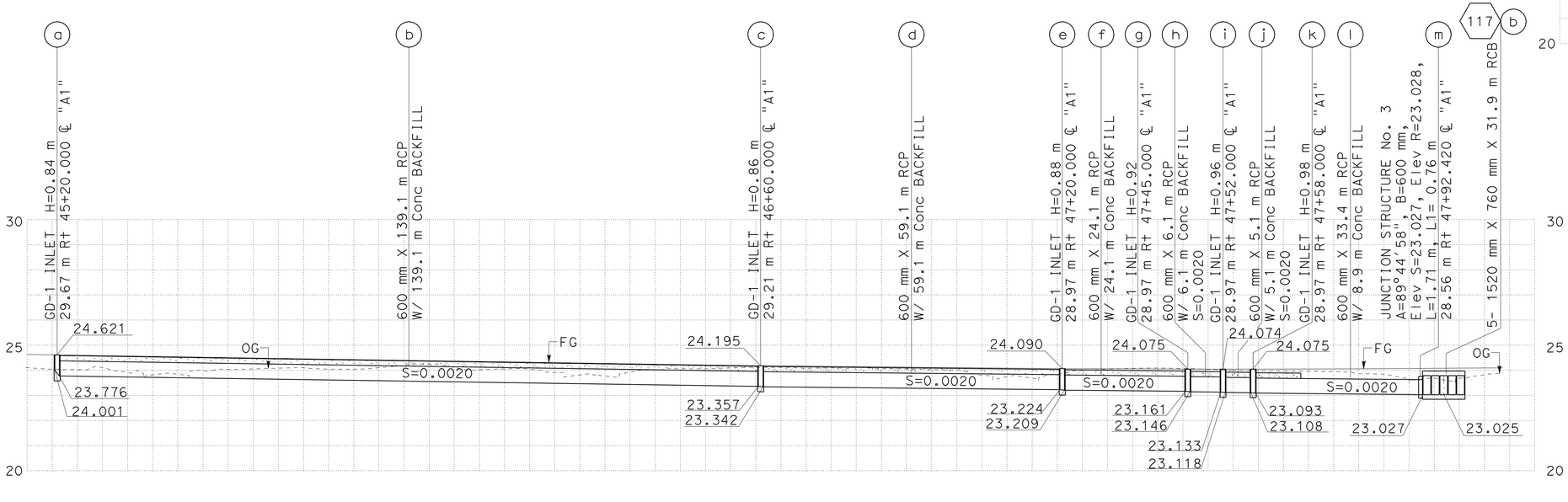

DRAINAGE SYSTEM No. 116
SCALE 1:500 Horiz
1:100 Vert

ALL DIMENSIONS ARE IN METERS UNLESS SHOWN OTHERWISE

DRAINAGE PROFILES

SCALE AS SHOWN

DP-29

REVISED BY	DATE REVISED

CALCULATED-DESIGNED BY: S. M. TAN, W. Y. LEE
CHECKED BY: R. M. SASAKI
FUNCTIONAL SUPERVISOR: RALPH M. SASAKI

STATE OF CALIFORNIA - DEPARTMENT OF TRANSPORTATION
Caltrans
HYDRAULICS

LAST REVISION 00-00-00 | DATE PLOTTED => 22-JUN-2010 | TIME PLOTTED => 10:12

Dist	COUNTY	ROUTE	KILOMETER POST TOTAL PROJECT	SHEET No.	TOTAL SHEETS
07	LA	5	2.9/4.9	205	1082

REGISTERED CIVIL ENGINEER DATE 12-23-09

6-21-10
PLANS APPROVAL DATE

REGISTERED PROFESSIONAL ENGINEER RALPH M. SASAKI No. 30849 Exp. 3/31/10 CIVIL STATE OF CALIFORNIA

THE STATE OF CALIFORNIA OR ITS OFFICERS OR AGENTS SHALL NOT BE RESPONSIBLE FOR THE ACCURACY OR COMPLETENESS OF ELECTRONIC COPIES OF THIS PLAN SHEET.

Caltrans Metric

NOTE: THE CONTRACTOR SHALL VERIFY LOCATIONS AND ELEVATIONS OF EXISTING DRAINAGE SYSTEMS BEFORE COMMENCEMENT OF WORK.

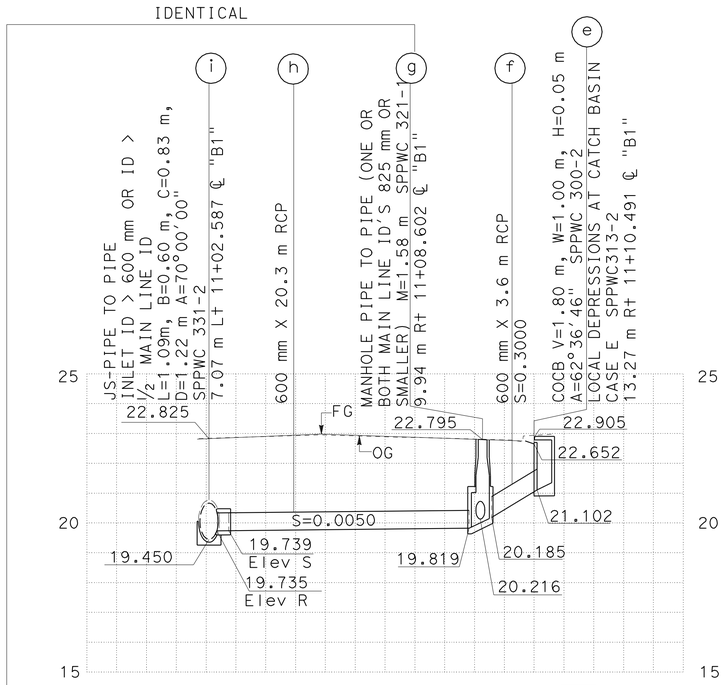

DRAINAGE SYSTEM No. 119

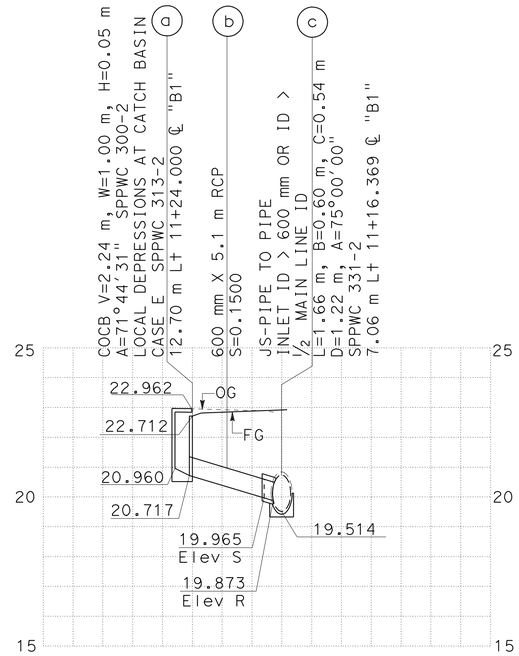

DRAINAGE SYSTEM No. 120

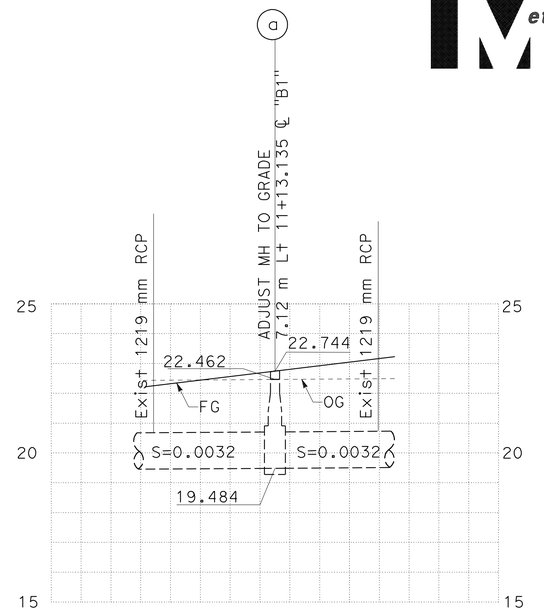

DRAINAGE SYSTEM No. 121

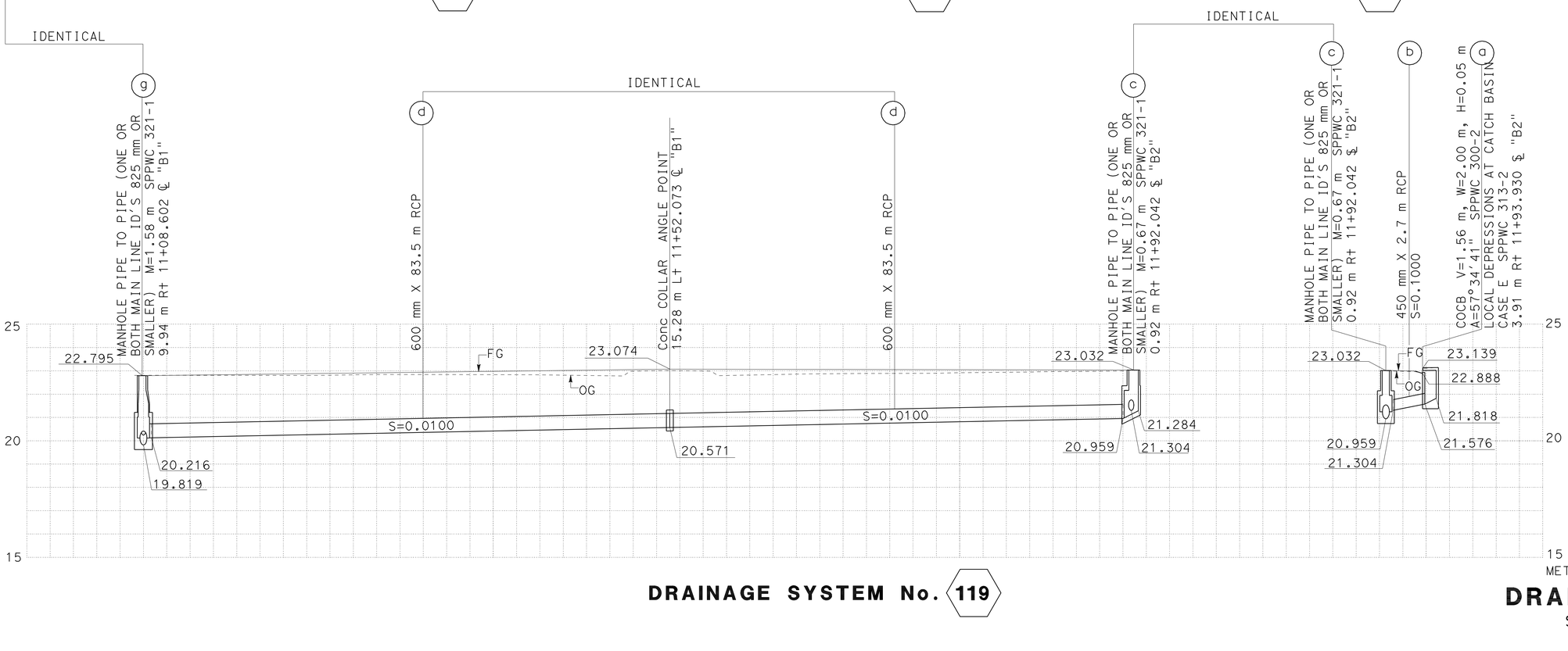

DRAINAGE SYSTEM No. 119

15 ALL DIMENSIONS ARE IN METERS UNLESS SHOWN OTHERWISE

DRAINAGE PROFILES

SCALE 1:200 Horiz
1:100 Vert

DP-30

STATE OF CALIFORNIA - DEPARTMENT OF TRANSPORTATION
Caltrans
HYDRAULICS

FUNCTIONAL SUPERVISOR: RALPH M. SASAKI
CALCULATED-DESIGNED BY: S. M. TAN / W. Y. LEE
CHECKED BY: R. M. SASAKI
REVISED BY / DATE REVISED

LAST REVISION 00-00-00
DATE PLOTTED => 22-JUN-2010
TIME PLOTTED => 11:09

Dist	COUNTY	ROUTE	KILOMETER POST TOTAL PROJECT	SHEET No.	TOTAL SHEETS
07	LA	5	2.9/4.9	206	1082

Caltrans Metric

12-23-09
REGISTERED CIVIL ENGINEER DATE

6-21-10
PLANS APPROVAL DATE

REGISTERED PROFESSIONAL ENGINEER RALPH M. SASAKI No. 30849 Exp. 3/31/10 CIVIL STATE OF CALIFORNIA

THE STATE OF CALIFORNIA OR ITS OFFICERS OR AGENTS SHALL NOT BE RESPONSIBLE FOR THE ACCURACY OR COMPLETENESS OF ELECTRONIC COPIES OF THIS PLAN SHEET.

NOTE: THE CONTRACTOR SHALL VERIFY LOCATIONS AND ELEVATIONS OF EXISTING DRAINAGE SYSTEMS BEFORE COMMENCEMENT OF WORK.

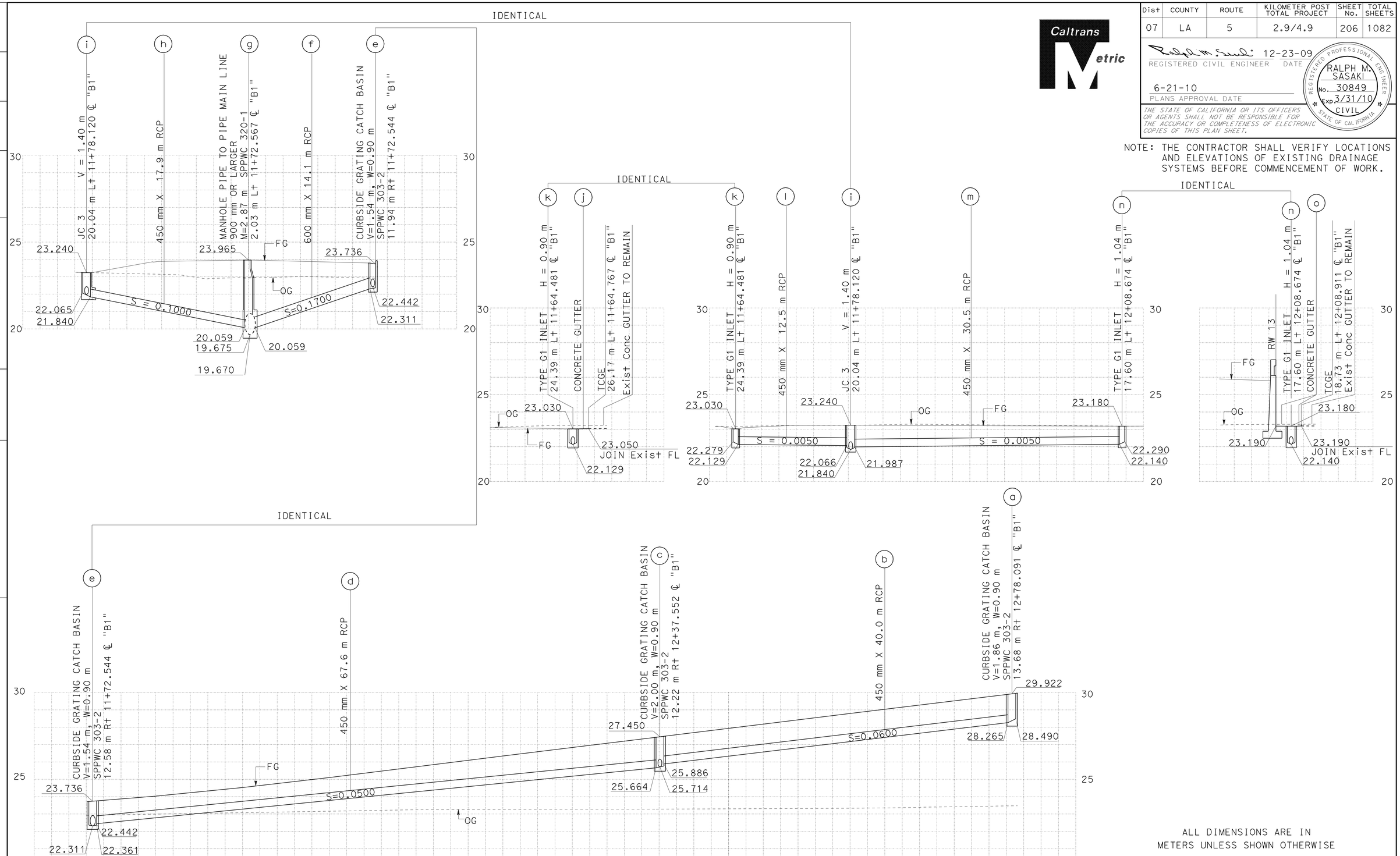

ALL DIMENSIONS ARE IN METERS UNLESS SHOWN OTHERWISE

DRAINAGE PROFILES

SCALE 1:200 Horiz
1:100 Vert

DP-31

DRAINAGE SYSTEM No. 122

STATE OF CALIFORNIA - DEPARTMENT OF TRANSPORTATION
Caltrans
HYDRAULICS

FUNCTIONAL SUPERVISOR: RALPH M. SASAKI
CALCULATED-DESIGNED BY: S. M. TAN, W. Y. LEE
CHECKED BY: R. M. SASAKI
REVISED BY / DATE REVISED

LAST REVISION 00-00-00
DATE PLOTTED => 22-JUN-2010
TIME PLOTTED => 10:12

Dist	COUNTY	ROUTE	KILOMETER POST TOTAL PROJECT	SHEET No.	TOTAL SHEETS
07	LA	5	2.9/4.9	207	1082

Caltrans Metric

REGISTERED CIVIL ENGINEER 12-23-09 DATE

6-21-10
PLANS APPROVAL DATE

REGISTERED PROFESSIONAL ENGINEER RALPH M. SASAKI No. 30849 Exp. 3/31/10 CIVIL STATE OF CALIFORNIA

THE STATE OF CALIFORNIA OR ITS OFFICERS OR AGENTS SHALL NOT BE RESPONSIBLE FOR THE ACCURACY OR COMPLETENESS OF ELECTRONIC COPIES OF THIS PLAN SHEET.

NOTE: THE CONTRACTOR SHALL VERIFY LOCATIONS AND ELEVATIONS OF EXISTING DRAINAGE SYSTEMS BEFORE COMMENCEMENT OF WORK.

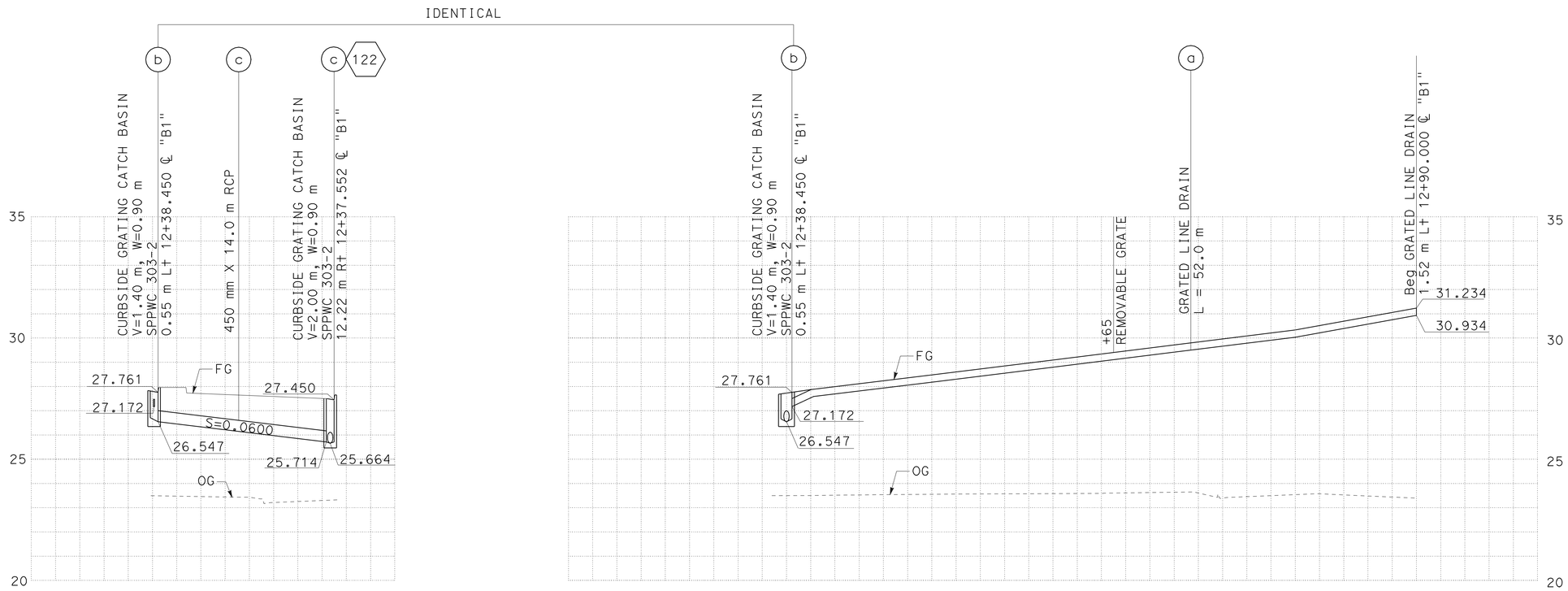

DRAINAGE SYSTEM No. 124

ALL DIMENSIONS ARE IN METERS UNLESS SHOWN OTHERWISE

DRAINAGE PROFILES

SCALE 1:200 Horiz
1:100 Vert

DP-32

CALCULATED-DESIGNED BY	S. M. TAN W. Y. LEE
CHECKED BY	R. M. SASAKI
REVISED BY	
DATE REVISED	
FUNCTIONAL SUPERVISOR	RALPH M. SASAKI

STATE OF CALIFORNIA - DEPARTMENT OF TRANSPORTATION
Caltrans
HYDRAULICS

LAST REVISION 00-00-00
DATE PLOTTED => 22-JUN-2010
TIME PLOTTED => 10:12

Dist	COUNTY	ROUTE	KILOMETER POST TOTAL PROJECT	SHEET No.	TOTAL SHEETS
07	LA	5	2.9/4.9	208	1082

Ralph M. Sasaki 12-23-09
REGISTERED CIVIL ENGINEER DATE

6-21-10
PLANS APPROVAL DATE

REGISTERED PROFESSIONAL ENGINEER RALPH M. SASAKI No. 30849 Exp. 3/31/10 CIVIL STATE OF CALIFORNIA

THE STATE OF CALIFORNIA OR ITS OFFICERS OR AGENTS SHALL NOT BE RESPONSIBLE FOR THE ACCURACY OR COMPLETENESS OF ELECTRONIC COPIES OF THIS PLAN SHEET.

Caltrans Metric

NOTE: THE CONTRACTOR SHALL VERIFY LOCATIONS AND ELEVATIONS OF EXISTING DRAINAGE SYSTEMS BEFORE COMMENCEMENT OF WORK.

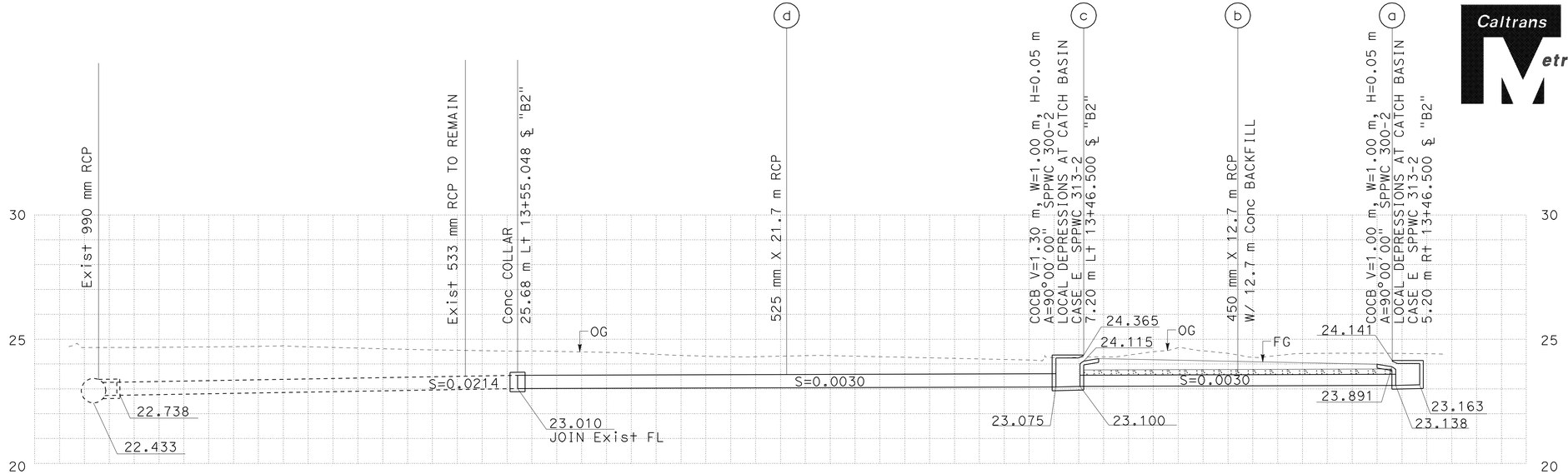

DRAINAGE SYSTEM No. 125

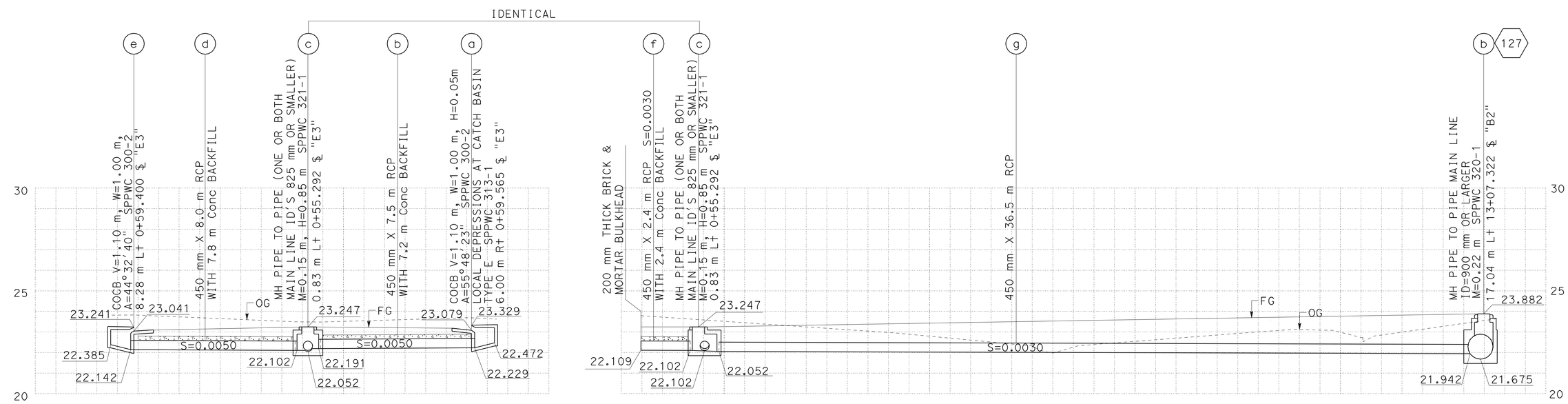

DRAINAGE SYSTEM No. 126

ALL DIMENSIONS ARE IN METERS UNLESS SHOWN OTHERWISE

DRAINAGE PROFILES

SCALE 1:100 Horiz
1:100 Vert

DP-33

STATE OF CALIFORNIA - DEPARTMENT OF TRANSPORTATION
Caltrans
HYDRAULICS

FUNCTIONAL SUPERVISOR: RALPH M. SASAKI
CALCULATED-DESIGNED BY: S. M. TAN / W. Y. LEE
CHECKED BY: R. M. SASAKI
REVISED BY / DATE REVISED

LAST REVISION 00-00-00
DATE PLOTTED => 22-JUN-2010
TIME PLOTTED => 10:12

Dist	COUNTY	ROUTE	KILOMETER POST TOTAL PROJECT	SHEET No.	TOTAL SHEETS
07	LA	5	2.9/4.9	209	1082

Ralph M. Sasaki 12-23-09
REGISTERED CIVIL ENGINEER DATE

6-21-10
PLANS APPROVAL DATE

REGISTERED PROFESSIONAL ENGINEER RALPH M. SASAKI No. 30849 Exp. 3/31/10 CIVIL STATE OF CALIFORNIA

THE STATE OF CALIFORNIA OR ITS OFFICERS OR AGENTS SHALL NOT BE RESPONSIBLE FOR THE ACCURACY OR COMPLETENESS OF ELECTRONIC COPIES OF THIS PLAN SHEET.

Caltrans Metric

NOTE: THE CONTRACTOR SHALL VERIFY LOCATIONS AND ELEVATIONS OF EXISTING DRAINAGE SYSTEMS BEFORE COMMENCEMENT OF WORK.

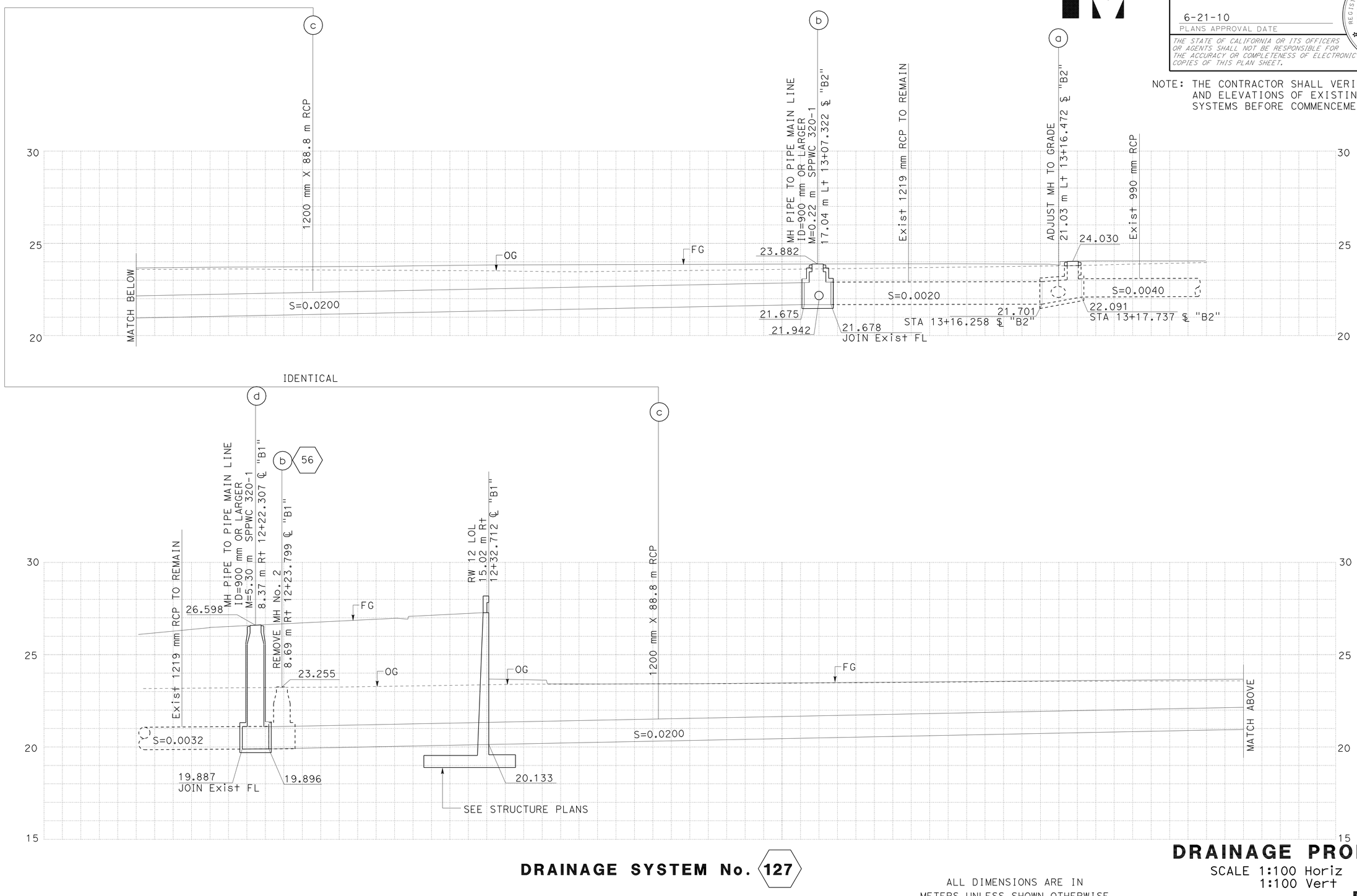

DRAINAGE SYSTEM No. 127

ALL DIMENSIONS ARE IN METERS UNLESS SHOWN OTHERWISE

DRAINAGE PROFILES

SCALE 1:100 Horiz
1:100 Vert

DP-34

STATE OF CALIFORNIA - DEPARTMENT OF TRANSPORTATION
Caltrans
HYDRAULICS

FUNCTIONAL SUPERVISOR: RALPH M. SASAKI
CALCULATED-DESIGNED BY: S. M. TAN / W. Y. LEE
CHECKED BY: R. M. SASAKI
REVISED BY / DATE REVISED

LAST REVISION 00-00-00
DATE PLOTTED => 22-JUN-2010
TIME PLOTTED => 10:12

Dist	COUNTY	ROUTE	KILOMETER POST TOTAL PROJECT	SHEET No.	TOTAL SHEETS
07	LA	5	2.9/4.9	210	1082

Caltrans Metric

REGISTERED CIVIL ENGINEER DATE 12-23-09

PLANS APPROVAL DATE 6-21-10

REGISTERED PROFESSIONAL ENGINEER RALPH M. SASAKI No. 30849 Exp. 3/31/10 CIVIL STATE OF CALIFORNIA

THE STATE OF CALIFORNIA OR ITS OFFICERS OR AGENTS SHALL NOT BE RESPONSIBLE FOR THE ACCURACY OR COMPLETENESS OF ELECTRONIC COPIES OF THIS PLAN SHEET.

NOTE: THE CONTRACTOR SHALL VERIFY LOCATIONS AND ELEVATIONS OF EXISTING DRAINAGE SYSTEMS BEFORE COMMENCEMENT OF WORK.

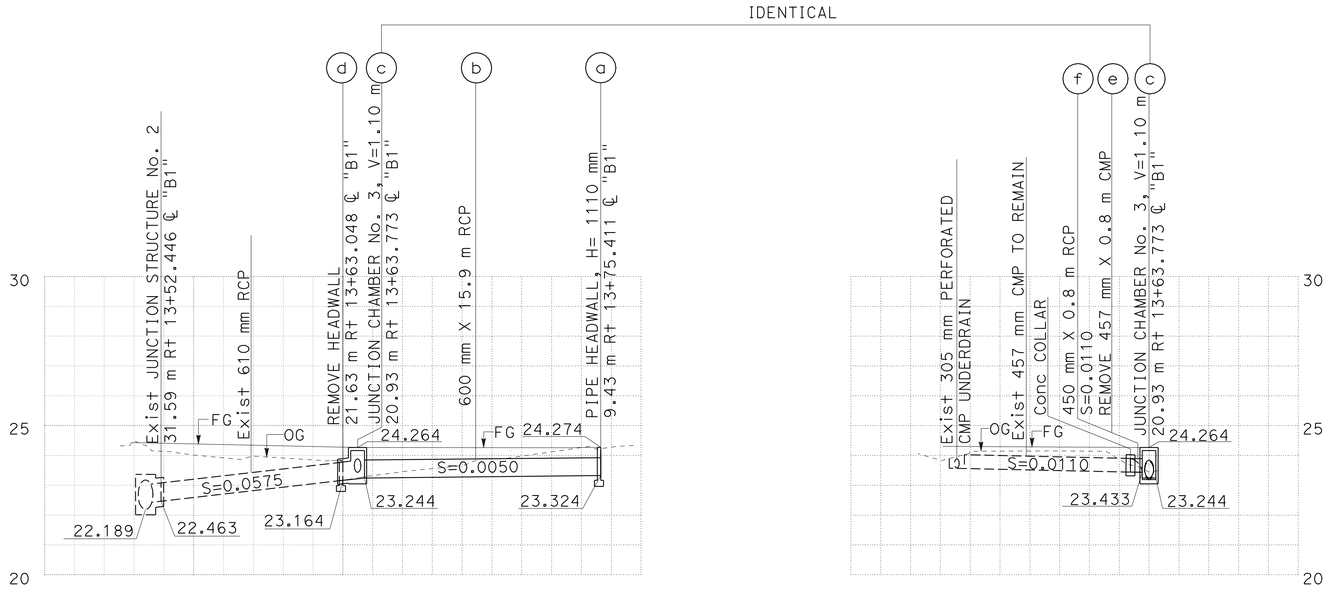

DRAINAGE SYSTEM No. 128

SCALE 1:100 Horiz
1:100 Vert

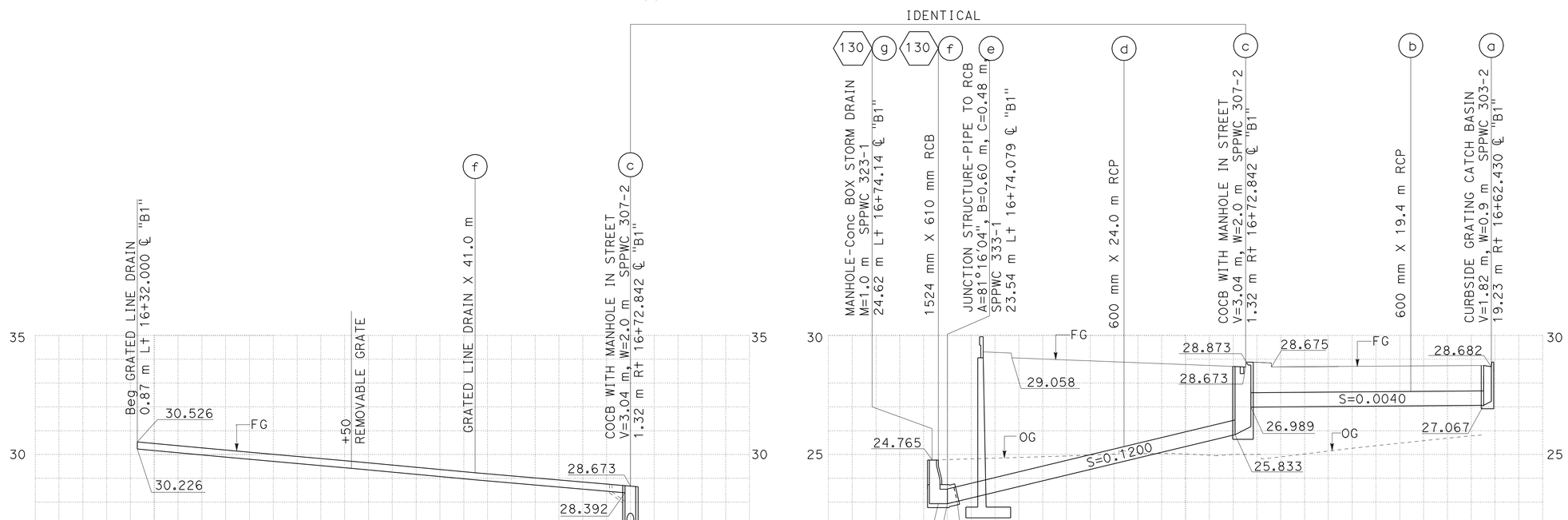

DRAINAGE SYSTEM No. 129

SCALE 1:200 Horiz
1:100 Vert

ALL DIMENSIONS ARE IN METERS UNLESS SHOWN OTHERWISE

DRAINAGE PROFILES

SCALE AS SHOWN

DP-35

STATE OF CALIFORNIA - DEPARTMENT OF TRANSPORTATION
Caltrans
HYDRAULICS

FUNCTIONAL SUPERVISOR: RALPH M. SASAKI
CALCULATED-DESIGNED BY: S. M. TAN, W. Y. LEE
CHECKED BY: R. M. SASAKI
REVISED BY / DATE REVISED

LAST REVISION 00-00-00 | DATE PLOTTED => 22-JUN-2010 | TIME PLOTTED => 10:12

Dist	COUNTY	ROUTE	KILOMETER POST TOTAL PROJECT	SHEET No.	TOTAL SHEETS
07	LA	5	2.9/4.9	211	1082

Caltrans Metric

12-23-09
REGISTERED CIVIL ENGINEER DATE

6-21-10
PLANS APPROVAL DATE

REGISTERED PROFESSIONAL ENGINEER RALPH M. SASAKI No. 30849 Exp. 3/31/10 CIVIL STATE OF CALIFORNIA

THE STATE OF CALIFORNIA OR ITS OFFICERS OR AGENTS SHALL NOT BE RESPONSIBLE FOR THE ACCURACY OR COMPLETENESS OF ELECTRONIC COPIES OF THIS PLAN SHEET.

NOTE: THE CONTRACTOR SHALL VERIFY LOCATIONS AND ELEVATIONS OF EXISTING DRAINAGE SYSTEMS BEFORE COMMENCEMENT OF WORK.

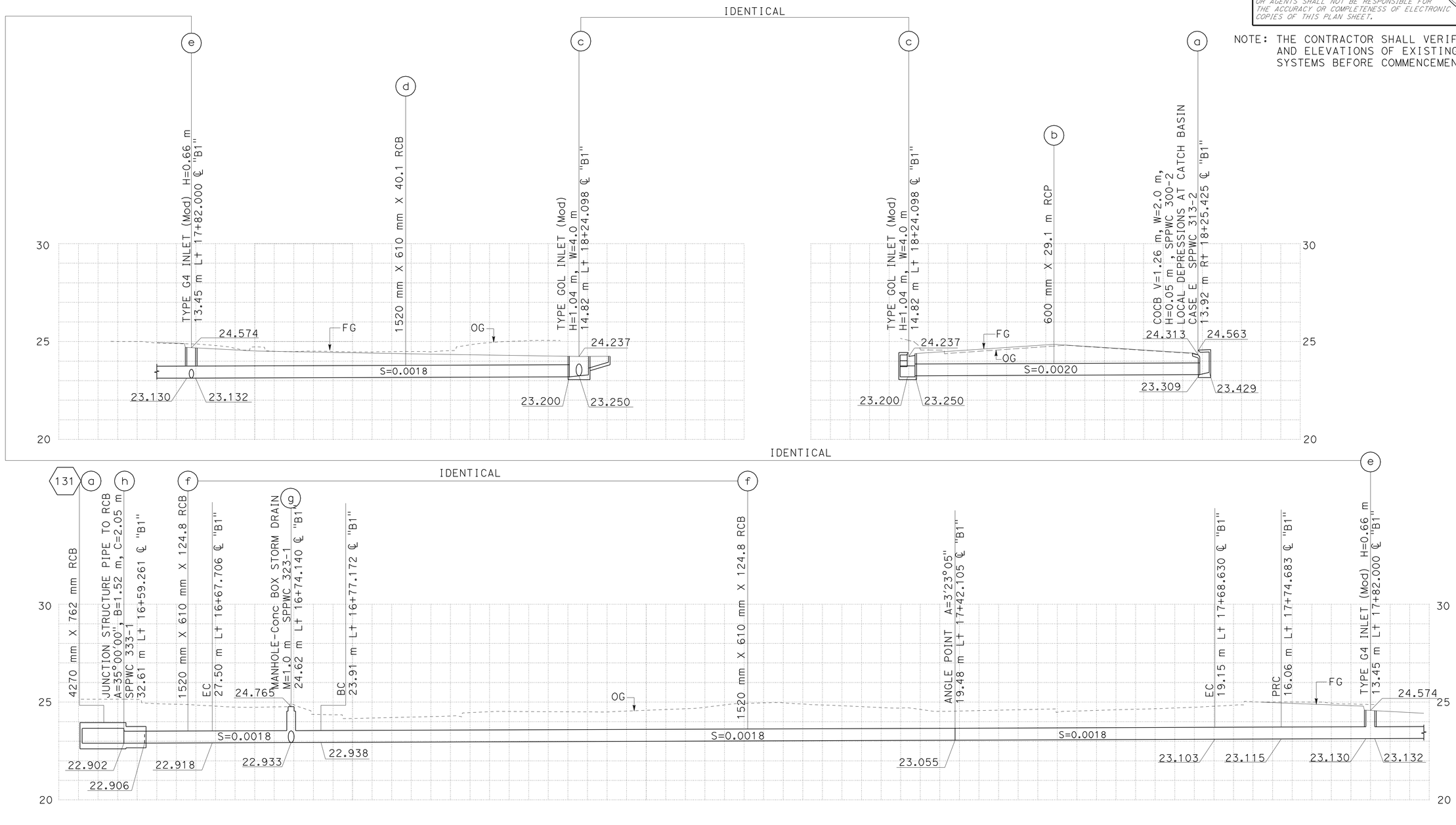

DRAINAGE SYSTEM No. 130

ALL DIMENSIONS ARE IN METERS UNLESS SHOWN OTHERWISE

DRAINAGE PROFILES

SCALE 1:200 Horiz
1:100 Vert

DP-36

STATE OF CALIFORNIA - DEPARTMENT OF TRANSPORTATION
Caltrans
HYDRAULICS

FUNCTIONAL SUPERVISOR: RALPH M. SASAKI
CALCULATED-DESIGNED BY: S. M. TAN, W. Y. LEE
CHECKED BY: R. M. SASAKI
REVISED BY / DATE REVISED

LAST REVISION 00-00-00 | DATE PLOTTED => 22-JUN-2010 | TIME PLOTTED => 10:12

Dist	COUNTY	ROUTE	KILOMETER POST TOTAL PROJECT	SHEET No.	TOTAL SHEETS
07	LA	5	2.9/4.9	212	1082

REGISTERED CIVIL ENGINEER 12-23-09 DATE

6-21-10
PLANS APPROVAL DATE

REGISTERED PROFESSIONAL ENGINEER RALPH M. SASAKI No. 30849 Exp. 3/31/10 CIVIL STATE OF CALIFORNIA

THE STATE OF CALIFORNIA OR ITS OFFICERS OR AGENTS SHALL NOT BE RESPONSIBLE FOR THE ACCURACY OR COMPLETENESS OF ELECTRONIC COPIES OF THIS PLAN SHEET.

Caltrans Metric

NOTE: THE CONTRACTOR SHALL VERIFY LOCATIONS AND ELEVATIONS OF EXISTING DRAINAGE SYSTEMS BEFORE COMMENCEMENT OF WORK.

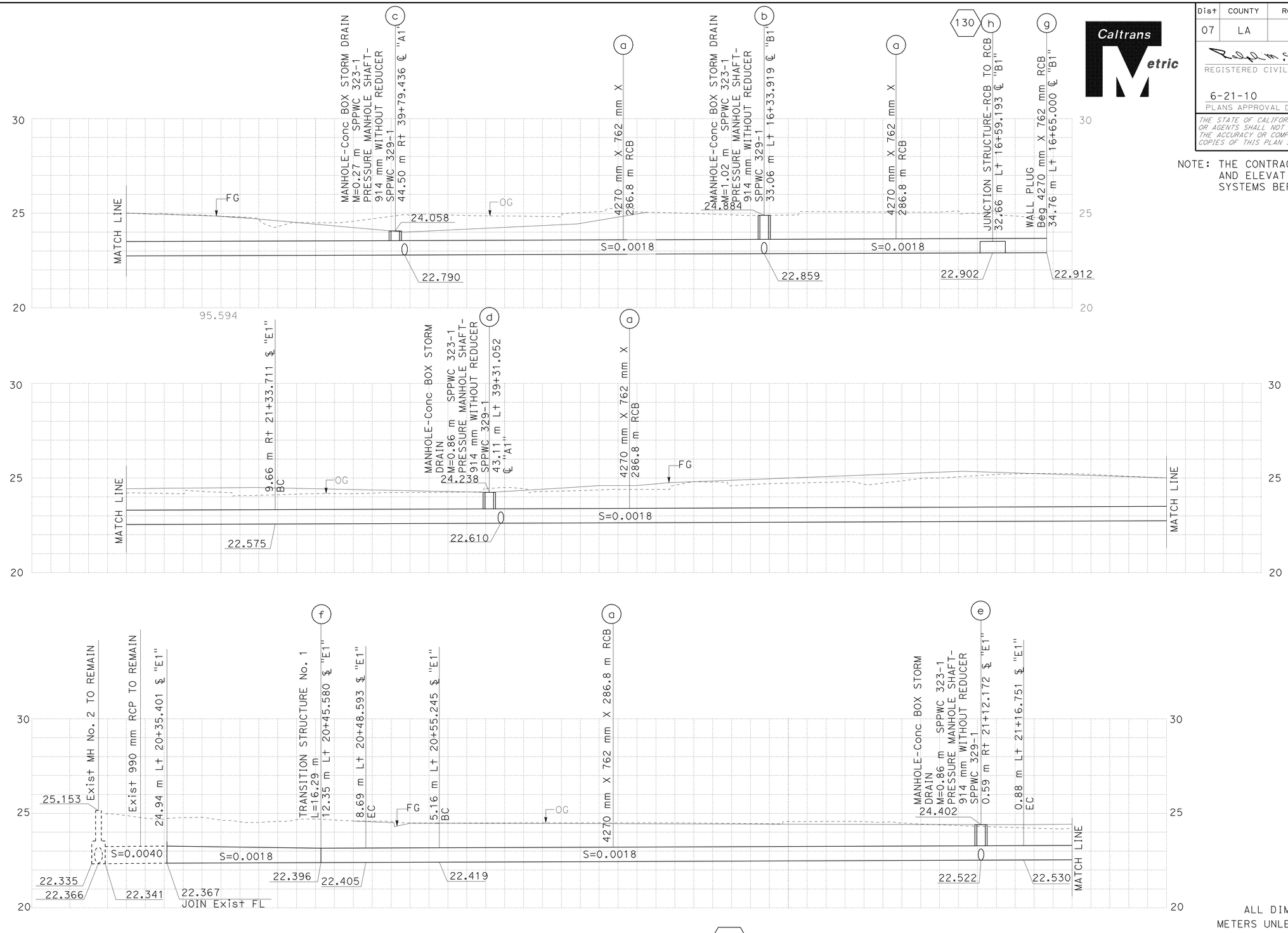

ALL DIMENSIONS ARE IN METERS UNLESS SHOWN OTHERWISE

DRAINAGE SYSTEM No. 131

DRAINAGE PROFILES

SCALE 1:200 Horiz
1:100 Vert

DP-37

STATE OF CALIFORNIA - DEPARTMENT OF TRANSPORTATION
Caltrans
HYDRAULICS

FUNCTIONAL SUPERVISOR RALPH M. SASAKI
CALCULATED-DESIGNED BY S. M. TAN W. Y. LEE
CHECKED BY R. M. SASAKI
REVISED BY
DATE REVISED

LAST REVISION 00-00-00
DATE PLOTTED => 22-JUN-2010
TIME PLOTTED => 10:12

Dist	COUNTY	ROUTE	KILOMETER POST TOTAL PROJECT	SHEET No.	TOTAL SHEETS
07	LA	5	2.9/4.9	213	1082

Ralph M. Sasaki 12-23-09
REGISTERED CIVIL ENGINEER DATE

6-21-10
PLANS APPROVAL DATE

REGISTERED PROFESSIONAL ENGINEER RALPH M. SASAKI No. 30849 Exp. 3/31/10 CIVIL STATE OF CALIFORNIA

THE STATE OF CALIFORNIA OR ITS OFFICERS OR AGENTS SHALL NOT BE RESPONSIBLE FOR THE ACCURACY OR COMPLETENESS OF ELECTRONIC COPIES OF THIS PLAN SHEET.

NOTE: THE CONTRACTOR SHALL VERIFY LOCATIONS AND ELEVATIONS OF EXISTING DRAINAGE SYSTEMS BEFORE COMMENCEMENT OF WORK.

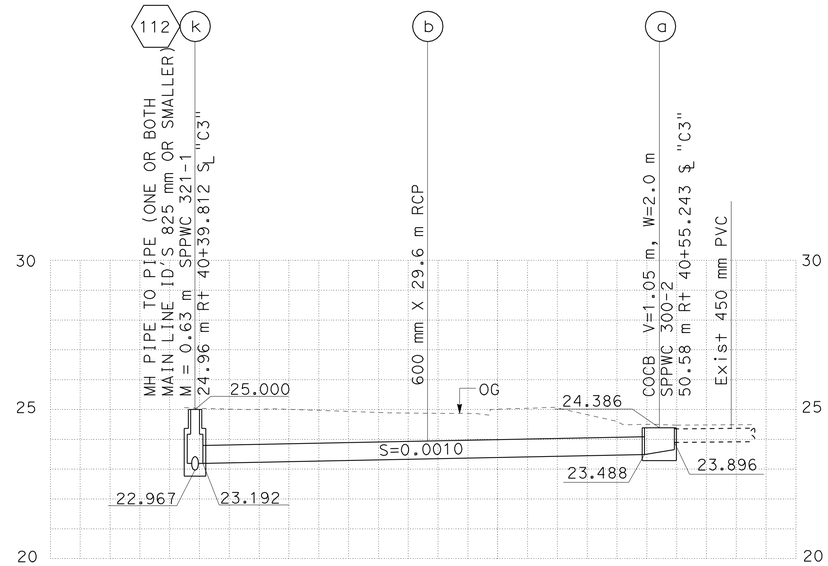

DRAINAGE SYSTEM No. 132

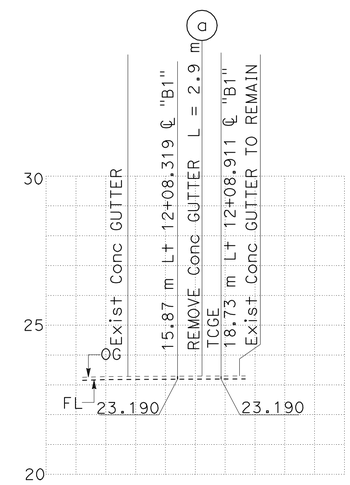

DRAINAGE SYSTEM No. 137

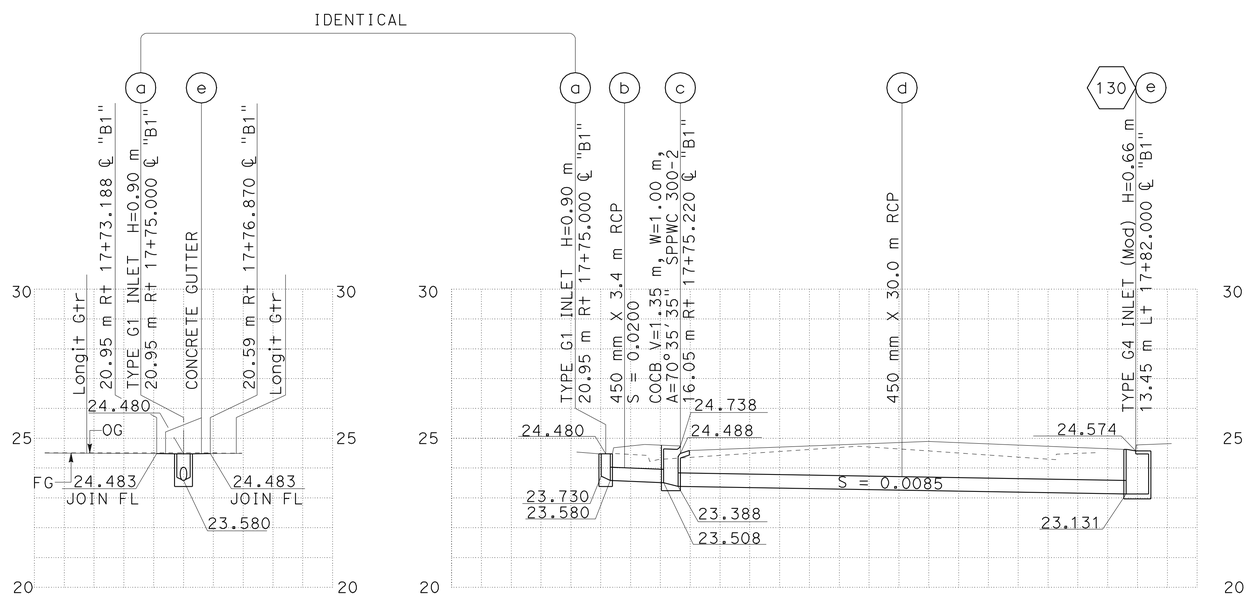

DRAINAGE SYSTEM No. 135

ALL DIMENSIONS ARE IN METERS UNLESS SHOWN OTHERWISE

DRAINAGE PROFILES

SCALE 1:200 Horiz
1:100 Vert

DP-38

CALCULATED-DESIGNED BY	S. M. TAN W. Y. LEE
CHECKED BY	R. M. SASAKI
REVISED BY	
DATE REVISED	
FUNCTIONAL SUPERVISOR	RALPH M. SASAKI

STATE OF CALIFORNIA - DEPARTMENT OF TRANSPORTATION
Caltrans
HYDRAULICS

LAST REVISION 00-00-00
DATE PLOTTED => 22-JUN-2010
TIME PLOTTED => 10:13

Dist	COUNTY	ROUTE	KILOMETER POST TOTAL PROJECT	SHEET No.	TOTAL SHEETS
07	LA	5	2.9/4.9	214	1082

12-23-09
REGISTERED CIVIL ENGINEER DATE

6-21-10
PLANS APPROVAL DATE

REGISTERED PROFESSIONAL ENGINEER RALPH M. SASAKI No. 30849 Exp. 3/31/10 CIVIL STATE OF CALIFORNIA

THE STATE OF CALIFORNIA OR ITS OFFICERS OR AGENTS SHALL NOT BE RESPONSIBLE FOR THE ACCURACY OR COMPLETENESS OF ELECTRONIC COPIES OF THIS PLAN SHEET.

Caltrans Metric

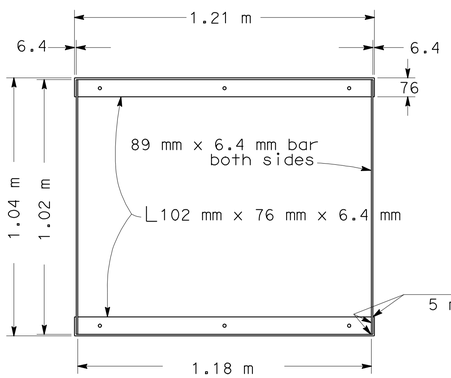

GRATE FRAME DETAIL

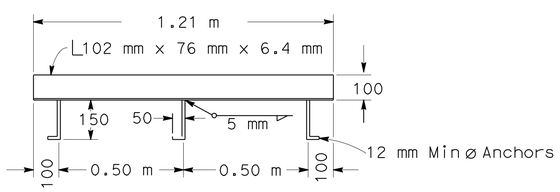

ANCHOR PLACEMENT DETAIL

For grate, frame and anchor placement details see Standard Plans RSP D77A and D77B

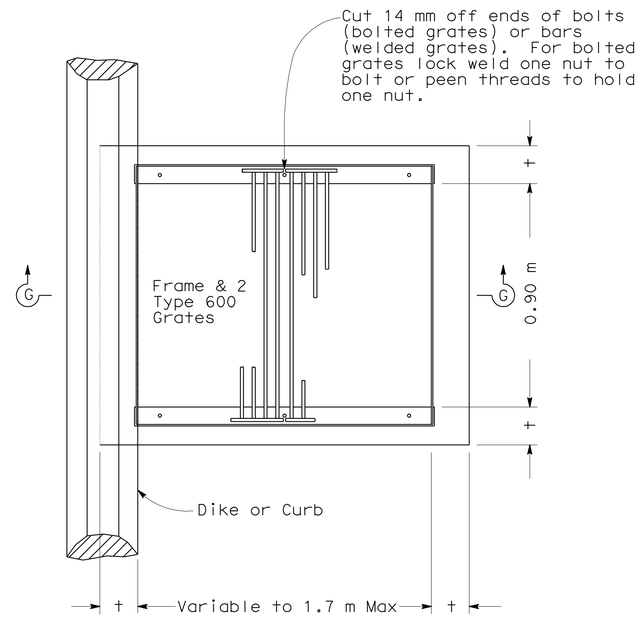

PLAN

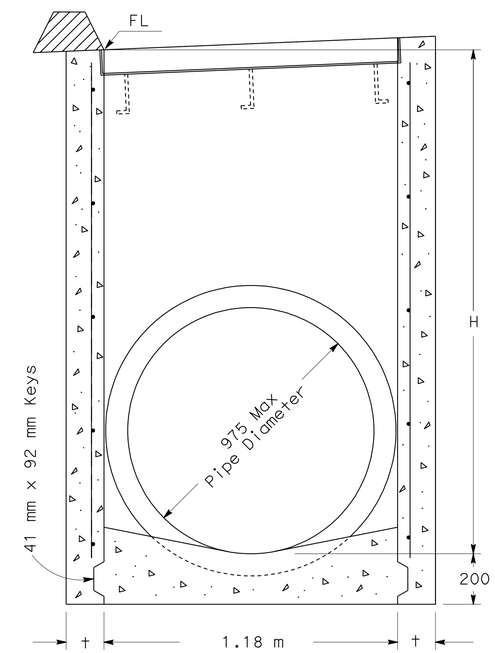

SECTION G-G

(For pipe diameters 975 mm or less)

NOTES

1. 'H' is the difference in elevation between the outlet pipe flow line and the flow line of the grates.
2. Steps - None required when 'H' is 1.07 m or less. Install one step 400 mm± above floor when 'H' is more than 1.07 m and less than 1.52 m. Where 'H' is more than 1.52 m steps shall be evenly spaced @ 300 mm± intervals from 400 mm± above floor to within 300 mm± of the top of the box. Place steps in wall without pipe openings. See Standard Plan D74C for step detail.
3. Pipe(s) can be placed in any wall.
4. Reinforcing steel not required in walls when H=1.8 m or less.
5. Reinforcing steel in walls shall be #13 bars @ 450 mm± centers placed 40 mm clear to inside of box.

MISCELLANEOUS IRON & STEEL

Inlet Type	Grate Type	MASS(kg)
GD-1	600 - 12	264

H	t
2.50 m or less	150 mm
2.51 m to 6.00 m	200 mm

GD-1 INLET

ALL DIMENSIONS ARE IN MILLIMETERS UNLESS SHOWN OTHERWISE

DRAINAGE DETAILS

NO SCALE

DD-1

STATE OF CALIFORNIA - DEPARTMENT OF TRANSPORTATION
Caltrans
HYDRAULICS

FUNCTIONAL SUPERVISOR: RALPH M. SASAKI
CALCULATED-DESIGNED BY: S. M. TAN, W. Y. LEE
CHECKED BY: R. M. SASAKI
REVISED BY / DATE REVISED

LAST REVISION 00-00-00
DATE PLOTTED => 22-JUN-2010
TIME PLOTTED => 12:32

Dist	COUNTY	ROUTE	KILOMETER POST TOTAL PROJECT	SHEET No.	TOTAL SHEETS
07	LA	5	2.9/4.9	215	1082

Caltrans Metric

12-23-09
REGISTERED CIVIL ENGINEER DATE

6-21-10
PLANS APPROVAL DATE

REGISTERED PROFESSIONAL ENGINEER RALPH M. SASAKI No. 30849 Exp. 3/31/10 CIVIL STATE OF CALIFORNIA

THE STATE OF CALIFORNIA OR ITS OFFICERS OR AGENTS SHALL NOT BE RESPONSIBLE FOR THE ACCURACY OR COMPLETENESS OF ELECTRONIC COPIES OF THIS PLAN SHEET.

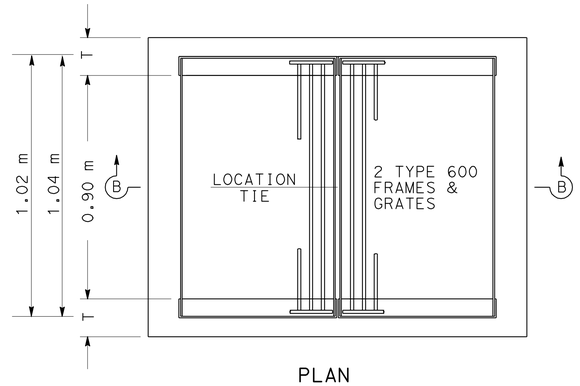

PLAN

FOR GRATE, FRAME AND ANCHOR PLACEMENT DETAILS SEE STANDARD PLANS RSP D77A AND D77B

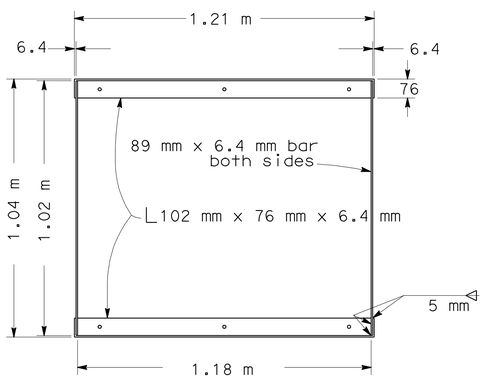

GRATE FRAME DETAIL

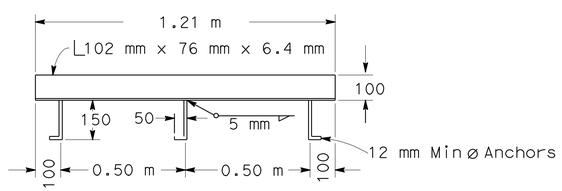

ANCHOR PLACEMENT DETAIL

For grate, frame and anchor placement details see Standard Plans RSP D77A and D77B

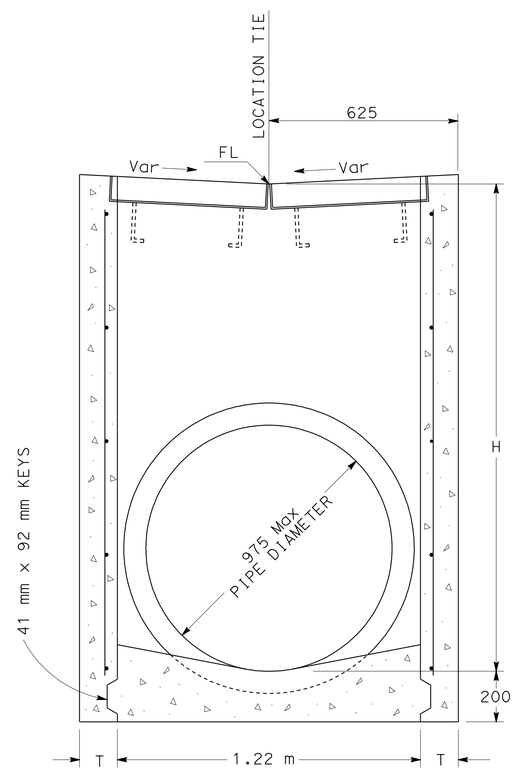

SECTION B-B

(FOR PIPE DIAMETERS 975 mm OR LESS)

NOTES

1. 'H' IS THE DIFFERENCE IN ELEVATION BETWEEN THE OUTLET PIPE FLOW LINE AND THE FLOW LINE OF THE GRATES.
2. STEPS - NONE REQUIRED WHEN 'H' IS 1.07 m OR LESS. INSTALL ONE STEP 400 mm± ABOVE FLOOR WHEN 'H' IS MORE THAN 1.07 m AND LESS THAN 1.52 m. WHERE 'H' IS MORE THAN 1.52 m STEPS SHALL BE EVENLY SPACED @ 300 mm± INTERVALS FROM 400 mm± ABOVE FLOOR TO WITHIN 300 mm± OF THE TOP OF THE BOX. PLACE STEPS IN WALL WITHOUT PIPE OPENINGS. SEE STANDARD PLAN D74C FOR STEP DETAIL.
3. PIPE(S) CAN BE PLACED IN ANY WALL.
4. REINFORCING STEEL NOT REQUIRED IN WALLS WHEN H=1.83 m OR LESS.
5. REINFORCING STEEL IN WALLS SHALL BE #13 BARS @ 460 mm± CENTERS PLACED 40mm CLEAR TO INSIDE OF BOX.

MISCELLANEOUS IRON & STEEL

INLET TYPE	GRATE TYPE	MASS(kg)
GD-3	600 - 12	296

H	t
2.50 m or less	150 mm
2.51 m to 6.00 m	200 mm

GD-3
DRAINAGE INLET

ALL DIMENSIONS ARE IN MILLIMETERS UNLESS SHOWN OTHERWISE

DRAINAGE DETAILS

NO SCALE

DD-2

STATE OF CALIFORNIA - DEPARTMENT OF TRANSPORTATION
Caltrans
HYDRAULICS

FUNCTIONAL SUPERVISOR: RALPH M. SASAKI
CALCULATED-DESIGNED BY: S. M. TAN, W. Y. LEE
CHECKED BY: R. M. SASAKI
REVISED BY
DATE REVISED

LAST REVISION 00-00-00
DATE PLOTTED => 22-JUN-2010
TIME PLOTTED => 12:32

Dist	COUNTY	ROUTE	KILOMETER POST TOTAL PROJECT	SHEET No.	TOTAL SHEETS
07	LA	5	2.9/4.9	216	1082

Caltrans Metric

12-23-09
REGISTERED CIVIL ENGINEER DATE

6-21-10
PLANS APPROVAL DATE

REGISTERED PROFESSIONAL ENGINEER RALPH M. SASAKI No. 30849 Exp. 3/31/10 CIVIL STATE OF CALIFORNIA

THE STATE OF CALIFORNIA OR ITS OFFICERS OR AGENTS SHALL NOT BE RESPONSIBLE FOR THE ACCURACY OR COMPLETENESS OF ELECTRONIC COPIES OF THIS PLAN SHEET.

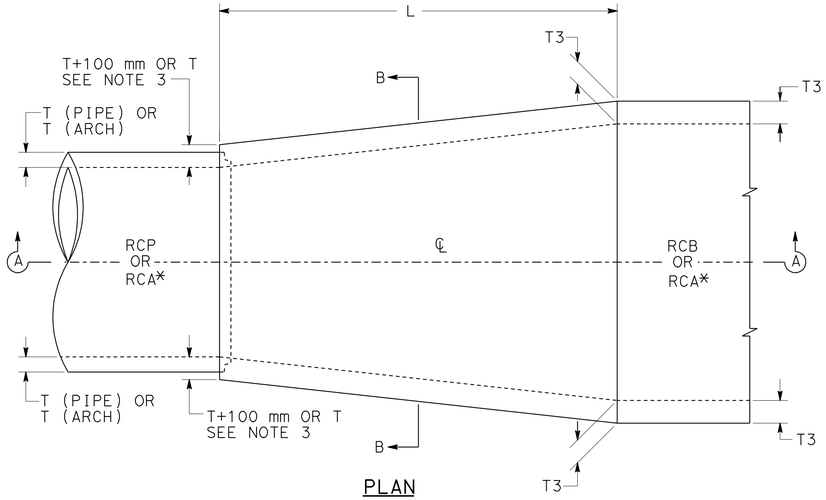

PLAN

* ARCH MAY HAVE A HORSESHOE-SHAPED, CIRCULAR, ELLIPTICAL OR SIMILAR CROSS-SECTION.

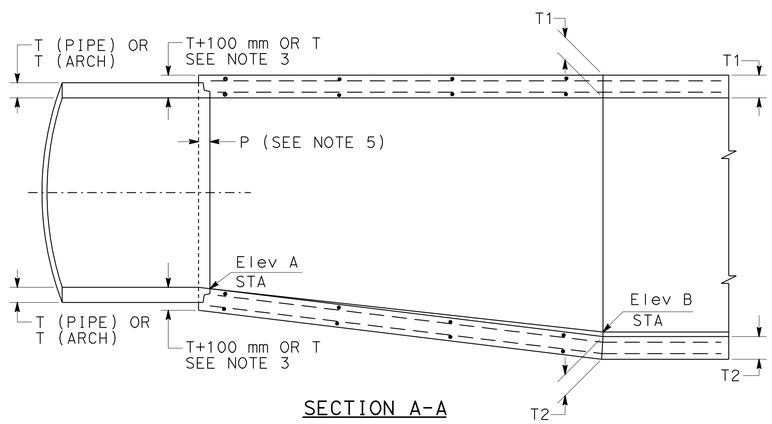

SECTION A-A

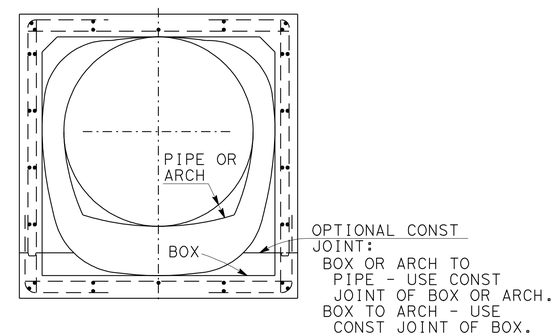

SECTION B-B

NOTES

1. VALUES OF 'L', Elev 'A', Elev 'B', SHALL BE AS SHOWN ON THE DRAINAGE PLANS.
2. REINFORCING STEEL BAR SIZES, SPACING, PATTERN AND COVER OVER THE STEEL SHALL BE AS FOLLOWS:
   BOX TO PIPE AND BOX TO ARCH - THAT OF THE BOX SECTION.
   ARCH TO PIPE - THAT OF THE ARCH SECTION.
   ARCH TO ARCH - THAT OF THE ARCH SECTION HAVING THE THICKER WALLS.
   THE BAR LENGTHS SHALL VARY UNIFORMLY THROUGHOUT THE TRANSITION.
3. THE CONCRETE THICKNESS SHALL BE AS FOLLOWS:
   BOX TO PIPE AND ARCH TO PIPE - THAT OF ARCH OR BOX SECTION UNLESS THE WALL THICKNESS OF THE PIPE PLUS 100 mm IS GREATER, IN WHICH CASE THE CONCRETE THICKNESS SHALL VARY UNIFORMLY FROM THAT OF THE ARCH OR BOX SECTION TO THAT OF THE PIPE WALL PLUS 100 mm.
   BOX TO ARCH AND ARCH TO ARCH - THAT OF THE ADJOINING BOX OR ARCH SECTION AT EACH END OF THE TRANSITION AND SHALL VARY UNIFORMLY BETWEEN THE TWO ENDS.
4. THE INTERIOR SURFACE SHALL BE SMOOTH AND VARY UNIFORMLY BETWEEN THE TWO ADJOINING SECTIONS.
5. AT PIPE JUNCTURE, EMBEDMENT 'P' SHALL BE 125 mm FOR PIPE SIZES OF 2.44 m OR LESS, AND 200 mm FOR PIPE SIZES OVER 2.44 m.
6. KEYED CONSTRUCTION JOINTS OF THE SAME DIMENSIONS AS THOSE OF THE ARCH MAY BE CARRIED THROUGH THE TRANSITION STRUCTURE AT THE CONTRACTOR'S OPTION. SEE SECTION B-B.
7. THE TRANSITION STRUCTURE SHALL BE CONSTRUCTED IN ACCORDANCE WITH THE GENERAL STRUCTURAL NOTES APPLYING TO ARCH SHOWN ON THE STANDARD PLANS.
8. DOWELS ARE REQUIRED WHEN JOINING TO EXISTING STRUCTURES. #13 @ 300 mm TO EXTEND 610 mm INTO EXISTING STRUCTURES.

ALL DIMENSIONS ARE IN MILLIMETERS UNLESS SHOWN OTHERWISE

TRANSITION STRUCTURE No. 1

DRAINAGE DETAILS

NO SCALE

DD-3

STATE OF CALIFORNIA - DEPARTMENT OF TRANSPORTATION
Caltrans
HYDRAULICS

FUNCTIONAL SUPERVISOR: RALPH M. SASAKI
CALCULATED-DESIGNED BY: S. M. TAN / W. Y. LEE
CHECKED BY: R. M. SASAKI
REVISED BY / DATE REVISED

LAST REVISION 00-00-00 | DATE PLOTTED => 22-JUN-2010 | TIME PLOTTED => 12:32

Dist	COUNTY	ROUTE	KILOMETER POST TOTAL PROJECT	SHEET No.	TOTAL SHEETS
07	LA	5	2.9/4.9	217	1082

Caltrans Metric

REGISTERED CIVIL ENGINEER DATE 12-23-09

PLANS APPROVAL DATE 6-21-10

REGISTERED PROFESSIONAL ENGINEER RALPH M. SASAKI No. 30849 Exp. 3/31/10 CIVIL STATE OF CALIFORNIA

THE STATE OF CALIFORNIA OR ITS OFFICERS OR AGENTS SHALL NOT BE RESPONSIBLE FOR THE ACCURACY OR COMPLETENESS OF ELECTRONIC COPIES OF THIS PLAN SHEET.

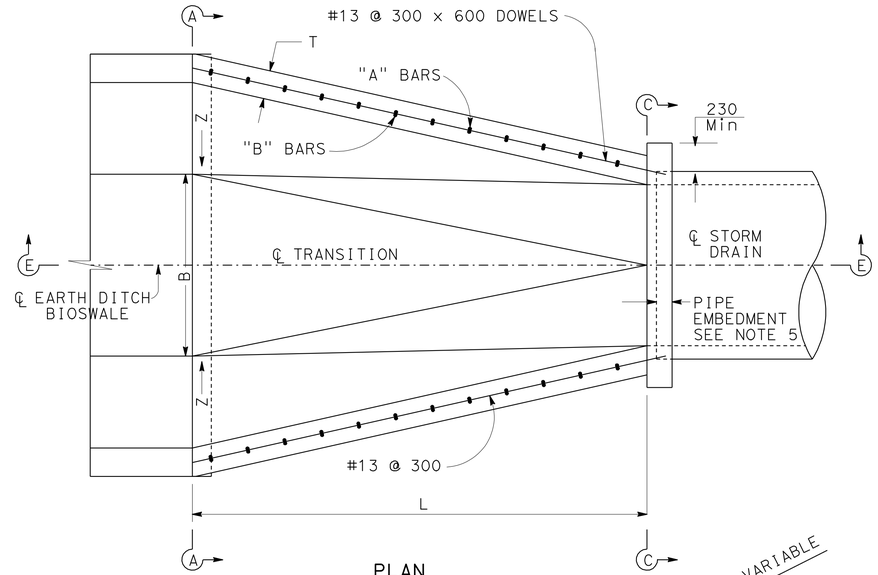

PLAN

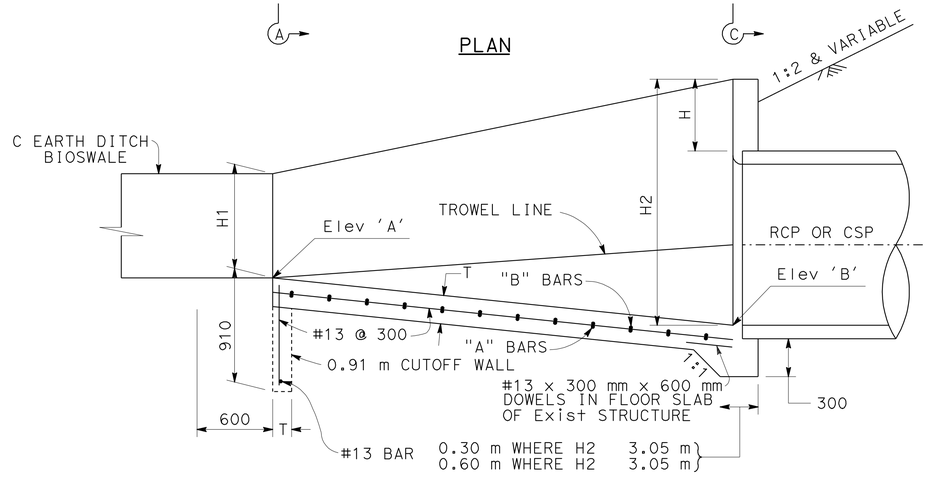

SECTION E-E

TABLE 1

* DESIGN "H"	T (mm)	REINFORCEMENT
0 m - 1.22 m	150	#13 @ 300 mm BOTH WAYS CENTERED IN SLAB
1.22 m - 1.83 m	150	"A" BARS #16 @ 600 mm "B" BARS #16 @ 600 mm
1.83 m - 2.44 m	150	"A" BARS #16 @ 300 mm "B" BARS #16 @ 300 mm
GREATER THAN 2.44 m	250	"A" BARS #19 @ 150 mm "B" BARS #16 @ 300 mm

* DESIGN "H" VARIES THROUGHOUT LENGTH OF TRANSITION. USE LARGER "H" ON SHORT TRANSITIONS (L=4.6 m OR LESS). FOR LONGER TRANSITIONS, VARY REINFORCEMENT AS INDICATED ABOVE.

NOTES:

1. PROVIDE A CONSTRUCTION JOINT BETWEEN THE TRANSITION AND THE STORM DRAIN.
2. IN LIEU OF PLACING THE DOWELS BETWEEN THE TRANSITION AND THE RECTANGULAR STORM DRAIN, THE LONGITUDINAL REINFORCING STEEL OF THE TRANSITION STRUCTURE MAY BE EXTENDED 600 mm INTO THE STORM DRAIN.
3. 'H1', 'H2', 'H', 'L', 'B', Elev 'A' AND Elev 'B', AND 'Z' SHALL BE SHOWN ON THE PLANS.
4. THIS STRUCTURAL DETAIL MAY BE APPLIED TO TRANSITIONS WITH CURVED BOTTOMS AND CURVED SIDE WALLS.
5. PIPE EMBEDMENT SHALL BE 125 mm FOR 2.44 m OR LESS AND 200 mm FOR OVER 2.44 m.

TABLE 2

S OR D	TH (mm)	REINFORCEMENT H=0.15 m TO 1.22 m	REINFORCEMENT H=1.50 m TO 2.44 m
0.46 m TO 1.67 m	150	#13 @ 300 mm	#13 @ 300 mm
1.83 m TO 3.05 m	150	#13 @ 200 mm	#16 @ 230 mm
3.66 m	200	#16 @ 230 mm	#16 @ 150 mm

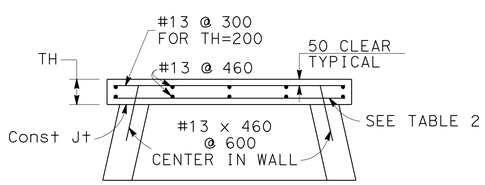

SECTION G-G

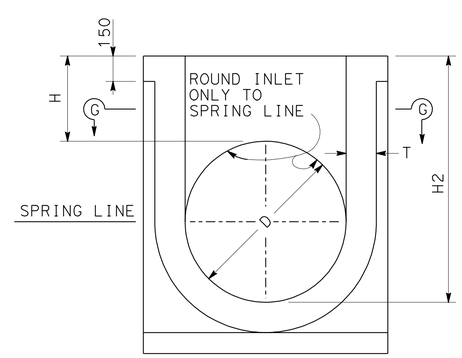

SECTION C-C

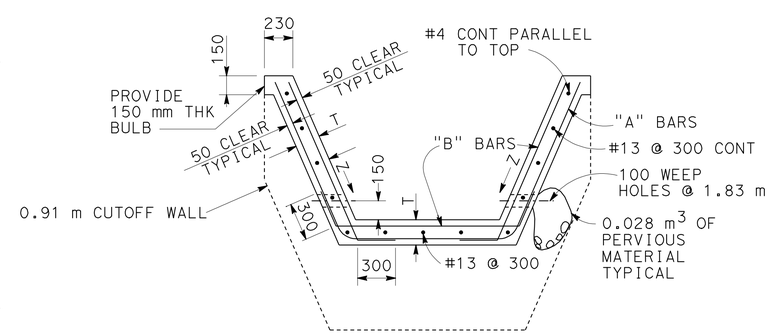

SECTION A-A
TYPICAL

ALL DIMENSIONS ARE IN MILLIMETERS UNLESS SHOWN OTHERWISE

TRANSITION STRUCTURE No. 4

DRAINAGE DETAILS

NO SCALE

DD-4

STATE OF CALIFORNIA - DEPARTMENT OF TRANSPORTATION
Caltrans
HYDRAULICS

FUNCTIONAL SUPERVISOR: RALPH M. SASAKI
CALCULATED-DESIGNED BY: S. M. TAN, W. Y. LEE
CHECKED BY: R. M. SASAKI
REVISED BY / DATE REVISED

LAST REVISION 00-00-00 | DATE PLOTTED => 22-JUN-2010 | TIME PLOTTED => 12:32

Dist	COUNTY	ROUTE	KILOMETER POST TOTAL PROJECT	SHEET No.	TOTAL SHEETS
07	LA	5	2.9/4.9	218	1082

Caltrans Metric

REGISTERED CIVIL ENGINEER DATE 12-23-09

PLANS APPROVAL DATE 6-21-10

REGISTERED PROFESSIONAL ENGINEER RALPH M. SASAKI No. 30849 Exp. 3/31/10 CIVIL STATE OF CALIFORNIA

THE STATE OF CALIFORNIA OR ITS OFFICERS OR AGENTS SHALL NOT BE RESPONSIBLE FOR THE ACCURACY OR COMPLETENESS OF ELECTRONIC COPIES OF THIS PLAN SHEET.

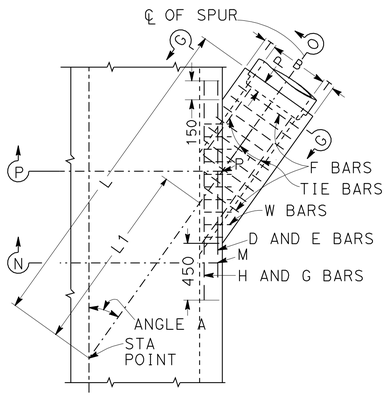

PLAN

TABLE OF VALUES FOR T			
B (mm)	T (mm)	B (mm)	T (mm)
300	100	1575	250
375	107	1650	257
450	115	1725	272
525	125	1800	275
600	132	1950	297
675	140	2100	315
750	150	2250	332
825	157	2400	350
900	165	2550	390
975	180	2700	400
1050	190	2850	415
1125	195	3000	430
1200	200	3150	430
1275	215	3300	445
1350	230	3450	445
1425	235	3600	460
1500	240		

NOTES

1. VALUES FOR 'A', 'B', 'L', 'L1', 'Elev R' AND 'Elev S' ARE SHOWN ON DRAINAGE PLAN.
2. STATIONS SPECIFIED IN DRAINAGE PLAN APPLY AT INTERSECTION OF CENTERLINES OF MAIN LINE AND LATERAL.
3. EMBEDMENT 'P' SHALL BE 125 mm FOR PIPE DIAMETERS 300 mm TO 2400 mm AND 200 mm FOR PIPE DIAMETERS 2550 mm TO 3600 mm.
4. REINFORCING STEEL SHALL BE 40 mm CLEAR FROM FACE OF CONCRETE UNLESS OTHERWISE SHOWN. W BARS ARE OF SIZE AND SPACING SPECIFIED FOR WALL STEEL ON DRAINAGE PLAN, AND SHALL BE CUT IN CENTER OF OPENING AND BENT INTO TOP AND BOTTOM OF JUNCTION STRUCTURE. OMIT H BARS WHEN SOFFIT OF SPUR IS 300 mm OR LESS BELOW SOFFIT OF MAIN LINE, AND OMIT G BARS WHEN INVERT OF SPUR IS 300 mm OR LESS ABOVE FLOOR OF MAIN LINE.
5. STEEL SCHEDULE:

Dia B	D,E,H,G BARS	F BARS
300 TO 975	#16	#13 @ 150 mm C-C
1050 TO 2100	#19	#16 @ 150 mm C-C
2250 TO 3600	#22	#19 @ 150 mm C-C
TIE BARS - #10 @ 460 mm C-C		

6. JUNCTION STRUCTURE SHALL BE POURED MONOLITHIC WITH MAIN LINE STORM DRAIN OR MANHOLE.
7. FLOOR OF STRUCTURE SHALL BE STEEL-TROWELED.

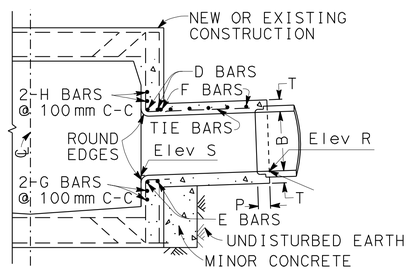

SECTION N-M-P'-O

PROJECTED ON P-P'-O

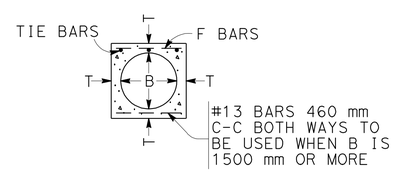

SECTION G-G

JUNCTION STRUCTURE No. 3 (JS 3)

ALL DIMENSIONS ARE IN MILLIMETERS UNLESS SHOWN OTHERWISE

DRAINAGE DETAILS

NO SCALE

DD-5

STATE OF CALIFORNIA - DEPARTMENT OF TRANSPORTATION

Caltrans HYDRAULICS

FUNCTIONAL SUPERVISOR RALPH M. SASAKI

CALCULATED-DESIGNED BY S. M. TAN W. Y. LEE

CHECKED BY R. M. SASAKI

REVISED BY

DATE REVISED

LAST REVISION 00-00-00 DATE PLOTTED => 22-JUN-2010 TIME PLOTTED => 12:32

Dist	COUNTY	ROUTE	KILOMETER POST TOTAL PROJECT	SHEET No.	TOTAL SHEETS
07	LA	5	2.9/4.9	219	1082

Caltrans Metric

12-23-09
REGISTERED CIVIL ENGINEER DATE

6-21-10
PLANS APPROVAL DATE

REGISTERED PROFESSIONAL ENGINEER RALPH M. SASAKI No. 30849 Exp. 3/31/10 CIVIL STATE OF CALIFORNIA

THE STATE OF CALIFORNIA OR ITS OFFICERS OR AGENTS SHALL NOT BE RESPONSIBLE FOR THE ACCURACY OR COMPLETENESS OF ELECTRONIC COPIES OF THIS PLAN SHEET.

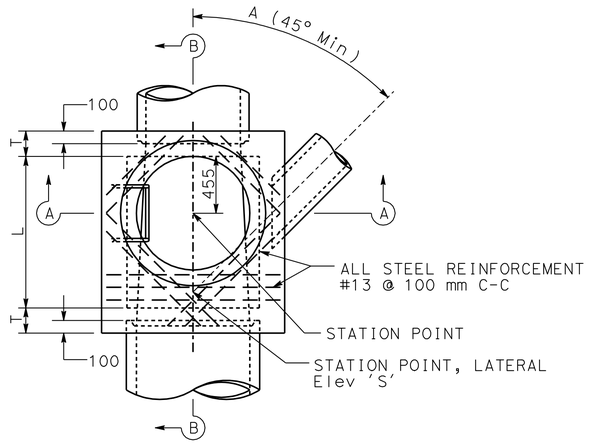

PLAN
(SHAFT NOT SHOWN)

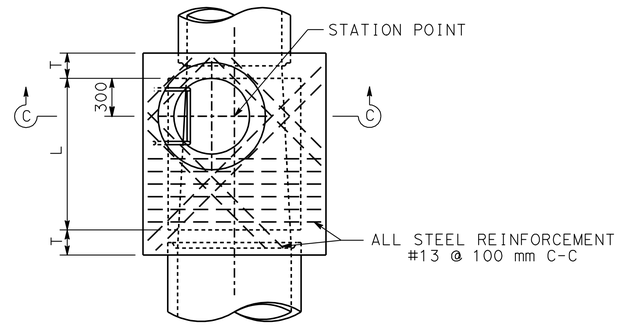

PLAN
DETAIL N
(SHAFT NOT SHOWN)

NOTES

1. HEIGHT "H" (IN SEC A-A AND SEC B-B) SHALL BE NOT LESS THAN 1.40 m, BUT MAY BE INCREASED PROVIDED THAT THE VALUE OF "M" SHALL NOT BE LESS THAN THE MINIMUM SPECIFIED AND THAT THE REDUCER SHALL BE USED. FOR "H" (IN SEC C-C) SEE NOTE 4.
2. LENGTH "L" SHALL BE 1.20 m UNLESS SHOWN OTHERWISE ON DRAINAGE PLAN.
3. SHAFT SHALL BE CONSTRUCTED AS PER SEC C-C AND DETAIL N WHEN DEPTH "M" FROM STREET GRADE TO TOP OF BOX IS LESS THAN 0.87 m FOR PAVED STREETS OR 1.05 m FOR UNPAVED STREETS.
4. DEPTH "P" MAY BE REDUCED TO AN ABSOLUTE LIMIT OF 150 mm WHEN LARGER VALUES OF "P" WOULD REDUCE "H" (IN SEC C-C) TO 1.05 m OR LESS.
5. "T" SHALL BE 200 mm FOR VALUES OF "H" UP TO AND INCLUDING 2.40 m. "T" SHALL BE 250 mm FOR VALUES OF "H" OVER 2.40 m.
6. UNLESS OTHERWISE SHOWN, STEPS SHALL BE PLACED ON 300 mm ON CENTERS. THE LOWEST STEP SHALL BE NOT MORE THAN 400 mm ABOVE THE LEDGE AT THE SIDE OF MANHOLE FLOOR.
7. BODY OF MANHOLE SHALL BE POURED IN ONE CONTINUOUS OPERATION, EXCEPT THAT THE CONTRACTOR SHALL HAVE THE OPTION OF PLACING AT THE SPRING LINE A CONSTRUCTION JOINT WITH A LONGITUDINAL KEYWAY.
8. REINFORCING STEEL SHALL BE 40 mm CLEAR FROM FACE OF CONCRETE.
9. FLOOR OF MANHOLE SHALL BE STEEL-TROWELED TO SPRING LINE.
10. RINGS, REDUCER, AND PIPE FOR ACCESS SHAFT SHALL BE SEATED IN 1:2 CEMENT MORTAR AND NEATLY POINTED OR WIPED INSIDE SHAFT.
11. MANHOLE FRAME AND COVER PER STANDARD PLAN B7-11 DETAIL U45.
12. STEP DETAIL PER STANDARD PLANS D74C AND D75A.

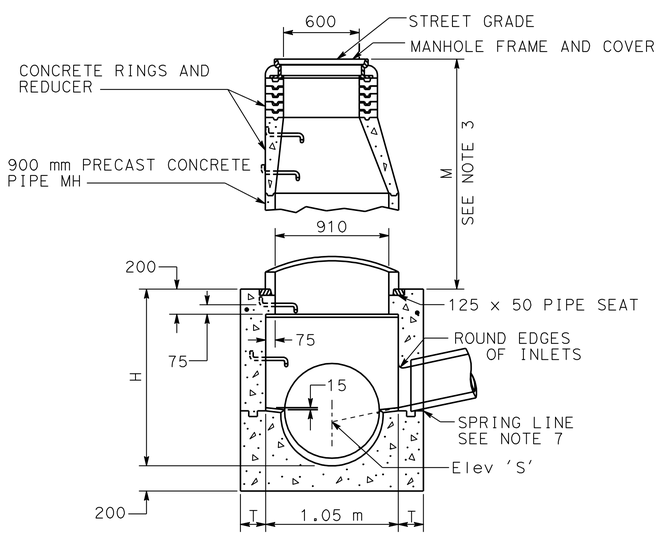

SECTION A-A

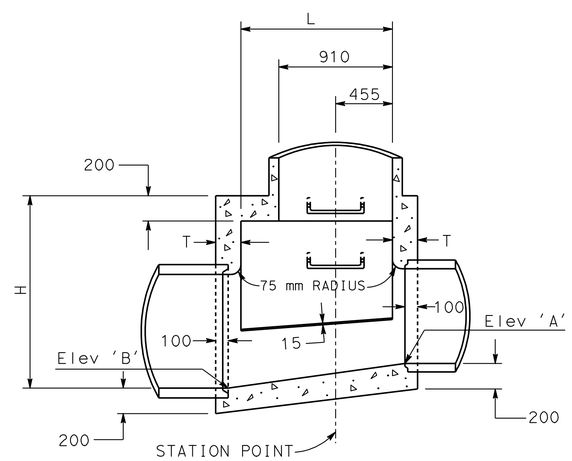

SECTION B-B

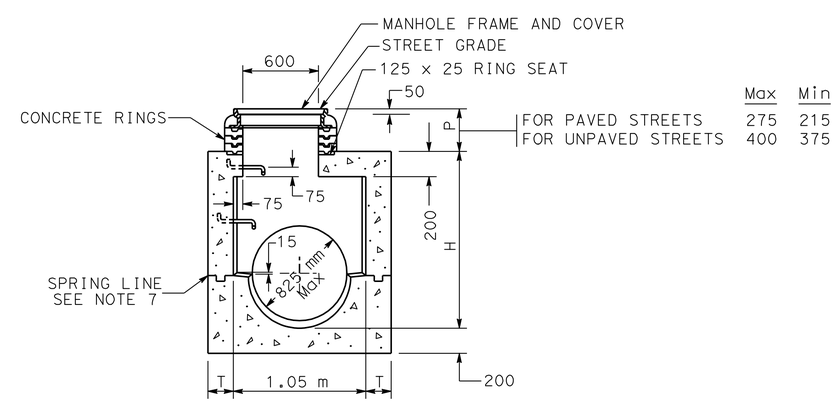

	Max	Min
FOR PAVED STREETS	275	215
FOR UNPAVED STREETS	400	375

SECTION C-C

ALL DIMENSIONS ARE IN MILLIMETERS UNLESS SHOWN OTHERWISE

MANHOLE No. 1 (MH No. 1)

DRAINAGE DETAILS

NO SCALE

DD-6

STATE OF CALIFORNIA - DEPARTMENT OF TRANSPORTATION
Caltrans
HYDRAULICS

FUNCTIONAL SUPERVISOR: RALPH M. SASAKI
CALCULATED-DESIGNED BY: S. M. TAN, W. Y. LEE
CHECKED BY: R. M. SASAKI
REVISED BY / DATE REVISED

LAST REVISION 00-00-00
DATE PLOTTED => 22-JUN-2010
TIME PLOTTED => 12:33

Dist	COUNTY	ROUTE	KILOMETER POST TOTAL PROJECT	SHEET No.	TOTAL SHEETS
07	LA	5	2.9/4.9	220	1082

REGISTERED CIVIL ENGINEER DATE 12-23-09

PLANS APPROVAL DATE 6-21-10

REGISTERED PROFESSIONAL ENGINEER RALPH M. SASAKI No. 30849 Exp. 3/31/10 CIVIL STATE OF CALIFORNIA

THE STATE OF CALIFORNIA OR ITS OFFICERS OR AGENTS SHALL NOT BE RESPONSIBLE FOR THE ACCURACY OR COMPLETENESS OF ELECTRONIC COPIES OF THIS PLAN SHEET.

Caltrans Metric

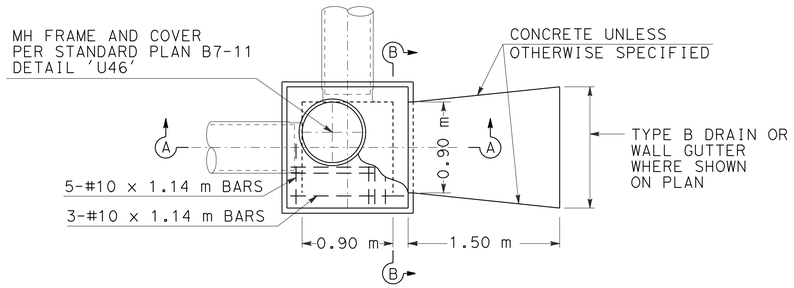

PLAN

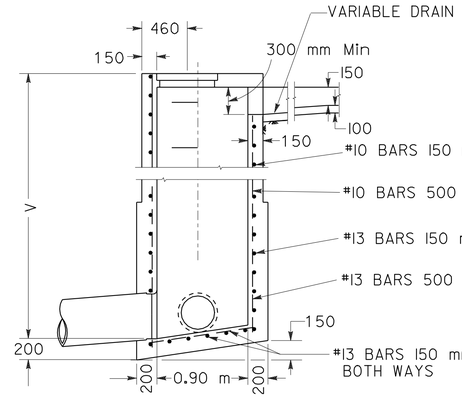

SECTION A-A

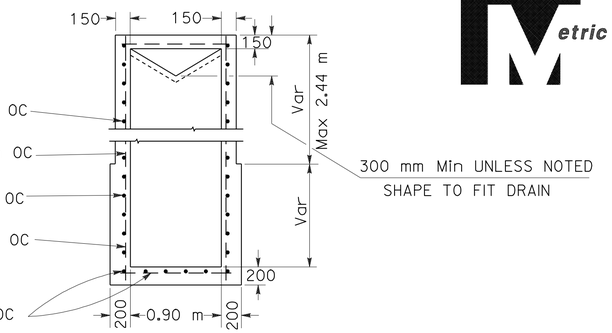

SECTION B-B

NOTES

1. CONNECTION PIPES MAY BE PLACED IN ANY POSITION AROUND THE WALLS PROVIDED THEY POINT IN THE PROPER DIRECTION AND THE POSITION IS OTHERWISE CONSISTENT WITH THE DRAINAGE PLAN.
2. FLOOR OF CHAMBER SHALL BE GIVEN A STEEL-TROWELED FINISH AND SHALL SLOPE FROM ALL DIRECTIONS TO OUTLET.
3. MANHOLE SHALL BE PLACED IN CORNER NEAREST OUTLET.
4. OUTLET PIPE SHALL BE CONNECTED TO JUNCTION CHAMBER WITH MONOLITHIC CONNECTION.
5. STEPS: NONE REQUIRED WHERE V=1.07 m OR LESS.
   INSTALL ONE STEP 400 mm± ABOVE FLOOR WHEN V IS MORE THAN 1.07 m AND LESS THAN 1.50 m.
   WHERE V IS MORE THAN 1.50 m STEPS SHALL BE EVENLY SPACED AT 300 mm± INTERVALS FROM 400 mm± ABOVE FLOOR TO WITHIN 300 mm± OF THE TOP OF THE BOX.

JUNCTION CHAMBER No. 3-C (JC 3-C)

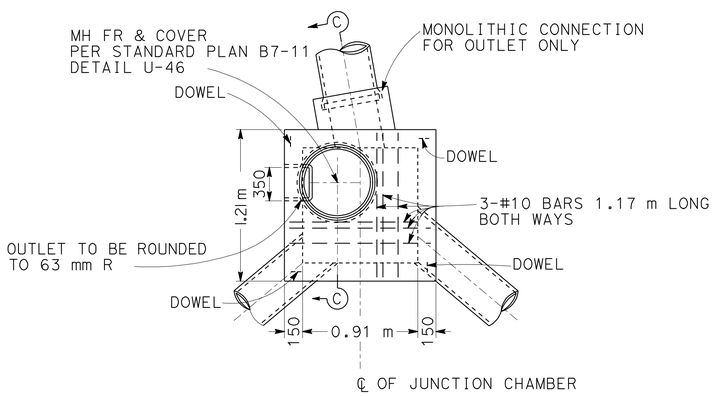

PLAN

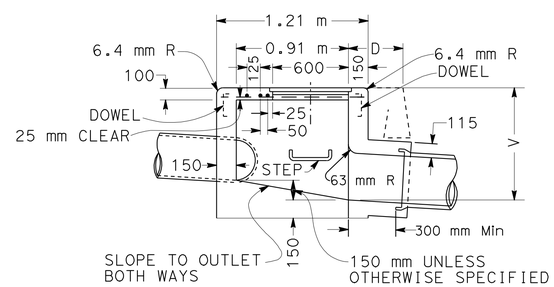

SECTION C-C

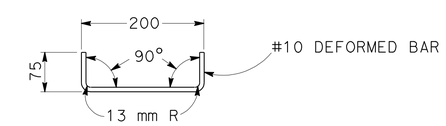

DETAIL OF DOWEL

ONE AT EACH CORNER TO BE USED
WHEN TOP IS POURED SEPARATE

NOTES

1. CONNECTION PIPES MAY BE PLACED IN ANY POSITION AROUND THE WALLS PROVIDED THEY POINT IN THE PROPER DIRECTION AND THE POSITION IS OTHERWISE CONSISTENT WITH THE DRAINAGE PLAN.
2. DIMENSIONS: D=450 mm UNLESS OTHERWISE SPECIFIED.
   V=1.07 m UNLESS OTHERWISE SPECIFIED.
3. EXPOSED SURFACE OF THE JUNCTION CHAMBER SHALL CONFORM IN SLOPE, GRADE, COLOR, FINISH AND SCORING TO EXISTING SIDEWALK ADJACENT TO THE JUNCTION CHAMBER. WHERE NO SIDEWALK EXISTS, THE TOP SHALL BE FINISHED TO CONFORM TO STANDARD SIDEWALK SLOPE AND FINISH, AND SCORING LINES SHALL CONFORM AS NEARLY AS POSSIBLE TO 500 mm SQUARES.
4. FLOOR OF CHAMBER SHALL BE GIVEN A STEEL-TROWELED FINISH AND SHALL SLOPE FROM ALL DIRECTIONS TO OUTLET.
5. MANHOLE SHALL BE PLACED IN CORNER NEAREST OUTLET.
6. OUTLET PIPE SHALL BE CONNECTED TO JUNCTION CHAMBER WITH MONOLITHIC CONNECTION.
7. REINFORCING STEEL NOT REQUIRED IN WALLS WHEN V=1.83 m OR LESS.
8. STEPS: NONE REQUIRED WHERE V=1.07 m OR LESS.
   INSTALL ONE STEP 400 mm± ABOVE FLOOR WHEN V IS MORE THAN 1.07 m AND LESS THAN 1.50 m.
   WHERE V IS MORE THAN 1.50 m STEPS SHALL BE EVENLY SPACED AT 300 mm± INTERVALS FROM 400 mm± ABOVE FLOOR TO WITHIN 300 mm± OF THE TOP OF THE BOX.

JUNCTION CHAMBER No. 3 (JC 3)

ALL DIMENSIONS ARE IN
MILLIMETERS UNLESS SHOWN OTHERWISE

DRAINAGE DETAILS

NO SCALE

DD-7

STATE OF CALIFORNIA - DEPARTMENT OF TRANSPORTATION
Caltrans HYDRAULICS

FUNCTIONAL SUPERVISOR RALPH M. SASAKI
CALCULATED-DESIGNED BY S. M. TAN W. Y. LEE
CHECKED BY R. M. SASAKI
REVISED BY
DATE REVISED

LAST REVISION 00-00-00
DATE PLOTTED => 22-JUN-2010
TIME PLOTTED => 12:33

Dist	COUNTY	ROUTE	KILOMETER POST TOTAL PROJECT	SHEET No.	TOTAL SHEETS
07	LA	5	2.9/4.9	221	1082

REGISTERED CIVIL ENGINEER 12-23-09 DATE

6-21-10
PLANS APPROVAL DATE

REGISTERED PROFESSIONAL ENGINEER RALPH M. SASAKI No. 30849 Exp. 3/31/10 CIVIL STATE OF CALIFORNIA

THE STATE OF CALIFORNIA OR ITS OFFICERS OR AGENTS SHALL NOT BE RESPONSIBLE FOR THE ACCURACY OR COMPLETENESS OF ELECTRONIC COPIES OF THIS PLAN SHEET.

Caltrans Metric

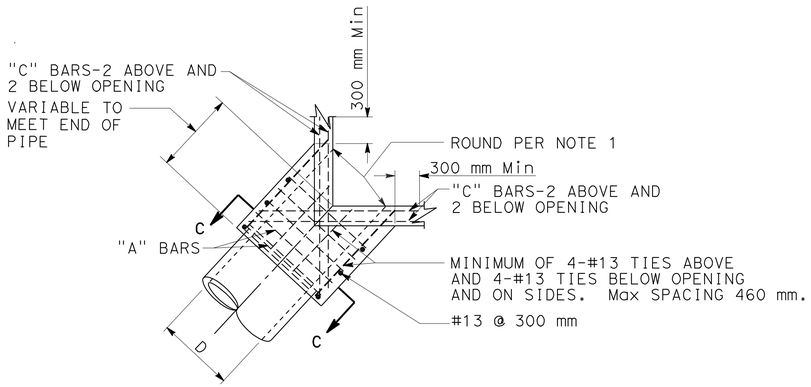

PLAN
CORNER CONNECTION

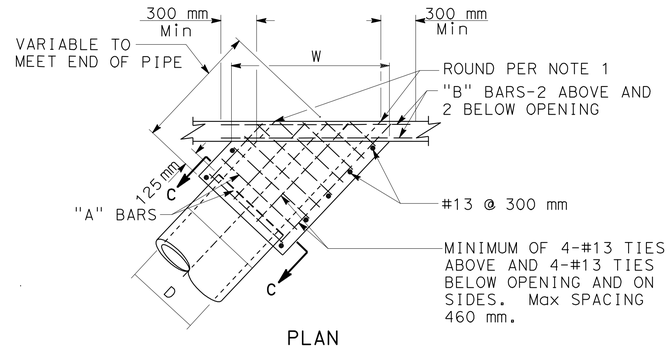

PLAN
SIDE CONNECTION

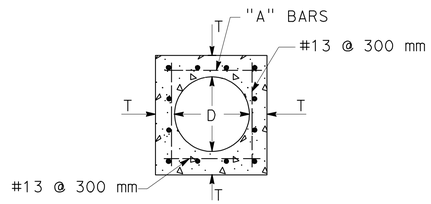

SECTION C-C

NOTES

1. ROUND EDGE OF OUTLET TO 75 mm RADIUS.
2. REINFORCEMENT SHALL BE 40 mm CLEAR FROM THE FACE OF CONCRETE.
3. IN CONNECTING TO AN EXISTING STRUCTURE BREAK OUT PORTIONS OF THE EXISTING STRUCTURE 150 mm OUTSIDE ITS INTERSECTION WITH THE NEW CONNECTION. BEND ENDS OF #13 BARS OVER CONNECTION OPENING AS REQUIRED.

D	T	"A"	"B"-"C"
300 mm	115 mm	#13 @ 150 mm	#16
375 mm	115 mm		
450 mm	125 mm		
525 mm	140 mm		
600 mm	150 mm		
675 mm	165 mm		
750 mm	180 mm		
825 mm	180 mm		
900 mm	190 mm		
975 mm	200 mm		
1050 mm	200 mm		
1125 mm	200 mm	#16 @ 150 mm	#19
1200 mm	200 mm		
1275 mm	200 mm		
1350 mm	200 mm		
1425 mm	250 mm		
1500 mm	250 mm		
1575 mm	250 mm		
1650 mm	275 mm		
1725 mm	275 mm		
1800 mm	275 mm		

MONOLITHIC CONNECTION
FOR PIPES 300 mm TO 1800 mm INCLUSIVE

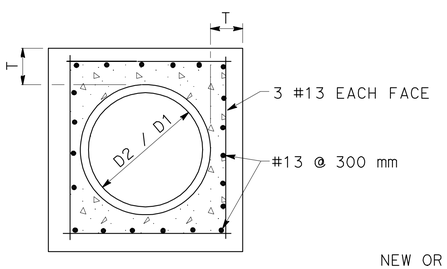

SECTION B-B

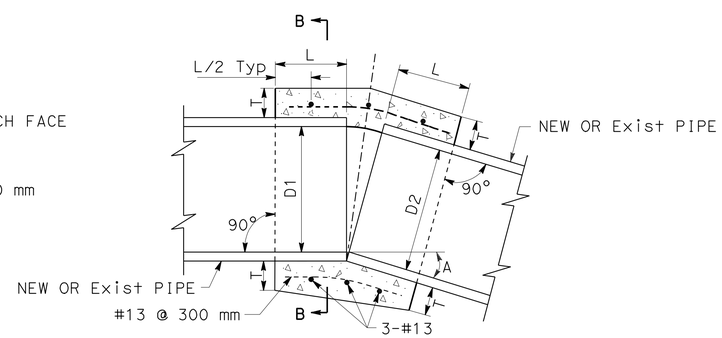

D (mm)	L (mm)	T (mm)
300	300	100
450	300	125
600	300	150
900	460	200
1200	460	250
1350	460	250
1500	530	275
1650	530	275
1800	600	300

NOTES

1. WHERE PIPES OF DIFFERENT DIAMETERS ARE JOINED WITH A CONCRETE COLLAR, 'L' AND 'T' SHALL BE THOSE OF THE LARGER PIPE. D=D1 OR D2, WHICHEVER IS GREATER.
2. FOR PIPE SIZE NOT LISTED USE NEXT SIZE LARGER.
3. OMIT REINFORCING ON PIPES 600 mm AND LESS IN DIAMETER AND ON ALL PIPES WHERE ANGLE A IS LESS THAN 10°.
4. JOIN PIPES AT INVERTS.
5. REINFORCEMENT SHALL BE PLACED 40 mm CLEAR FROM OUTSIDE DIAMETER OF PIPE.

CONCRETE COLLAR

ALL DIMENSIONS ARE IN MILLIMETERS UNLESS SHOWN OTHERWISE

DRAINAGE DETAILS

NO SCALE

DD-8

REVISED BY	DATE REVISED

S. M. TAN
W. Y. LEE
CALCULATED-DESIGNED BY

R. M. SASAKI
CHECKED BY

RALPH M. SASAKI
FUNCTIONAL SUPERVISOR

STATE OF CALIFORNIA - DEPARTMENT OF TRANSPORTATION
Caltrans
HYDRAULICS

LAST REVISION 00-00-00
DATE PLOTTED => 22-JUN-2010
TIME PLOTTED => 12:33

Dist	COUNTY	ROUTE	KILOMETER POST TOTAL PROJECT	SHEET No.	TOTAL SHEETS
07	LA	5	2.9/4.9	222	1082

Caltrans Metric

12-23-09
REGISTERED CIVIL ENGINEER DATE

6-21-10
PLANS APPROVAL DATE

REGISTERED PROFESSIONAL ENGINEER
RALPH M. SASAKI
No. 30849
Exp. 3/31/10
CIVIL
STATE OF CALIFORNIA

THE STATE OF CALIFORNIA OR ITS OFFICERS OR AGENTS SHALL NOT BE RESPONSIBLE FOR THE ACCURACY OR COMPLETENESS OF ELECTRONIC COPIES OF THIS PLAN SHEET.

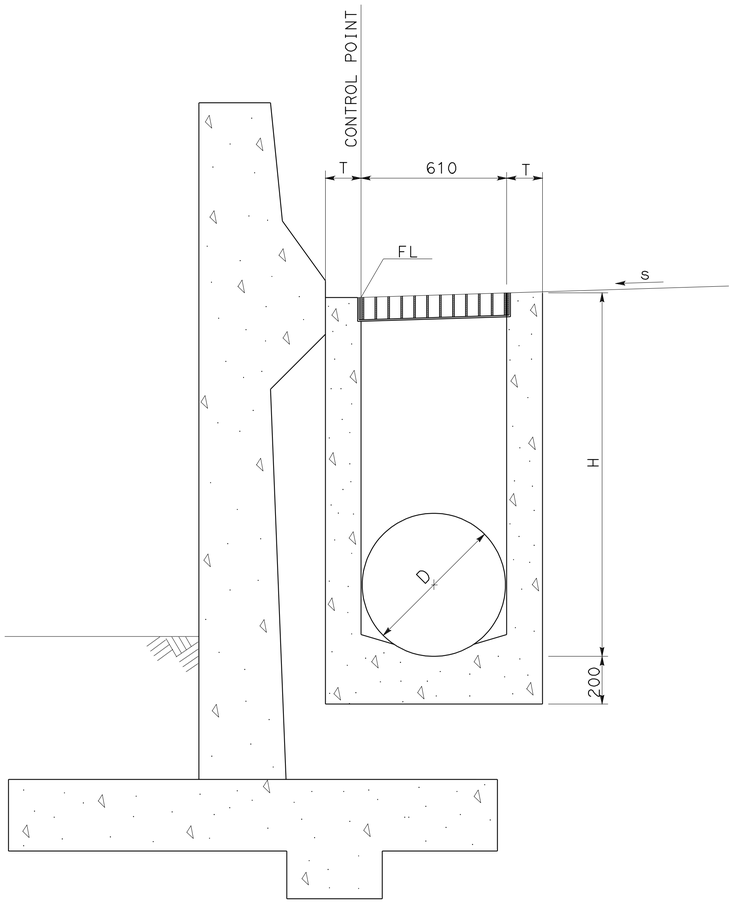

TYPE G1 INLET

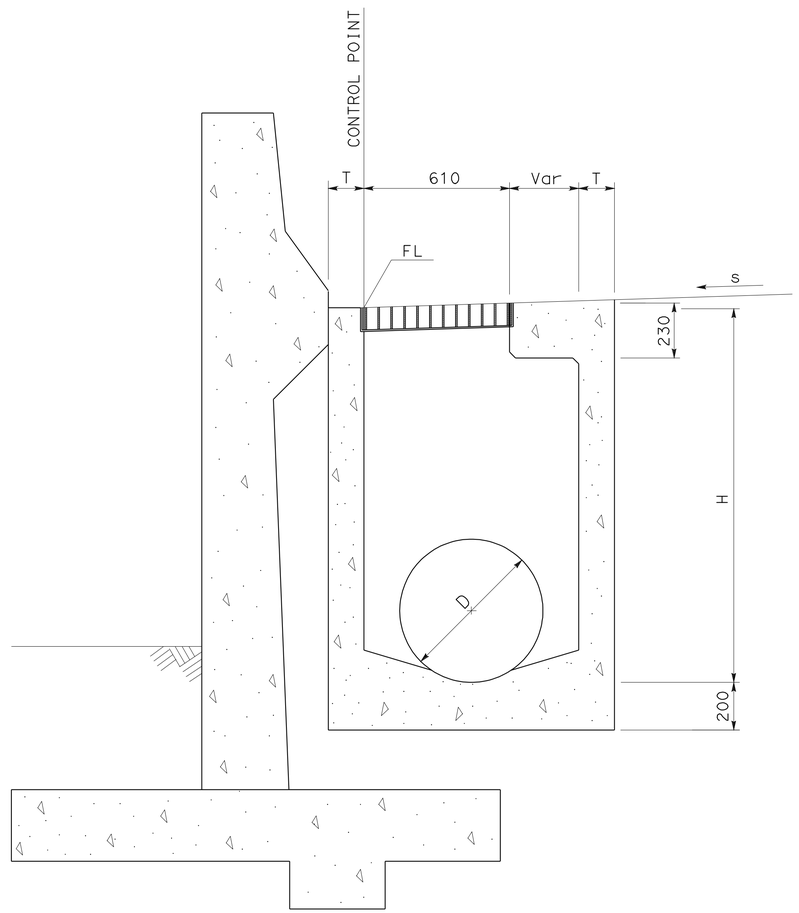

TYPE G2 INLET

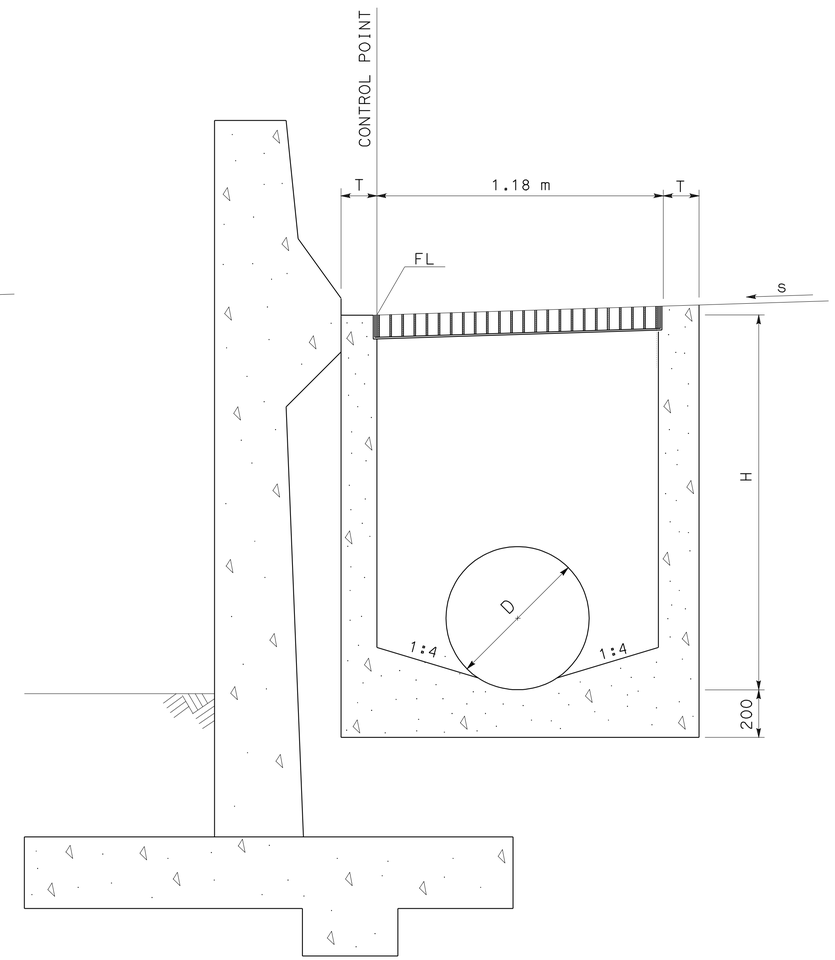

GD-1 INLET

DRAINAGE INLET AT WALL

NO SCALE

NOTE:

1. FOR DETAILS AND INFORMATION NOT SHOWN, REFER TYPE GI AND G2 INLETS ON STANDARD PLAN D73 GD-1 INLET ON SHEET DD-01.

ALL DIMENSIONS ARE IN MILLIMETERS UNLESS SHOWN OTHERWISE

DRAINAGE DETAILS

NO SCALE

DD-9

CALCULATED-DESIGNED BY	S. M. TAN W. Y. LEE
CHECKED BY	R. M. SASAKI
REVISED BY	
DATE REVISED	
FUNCTIONAL SUPERVISOR	RALPH M. SASAKI

STATE OF CALIFORNIA - DEPARTMENT OF TRANSPORTATION
Caltrans
HYDRAULICS

LAST REVISION 00-00-00 | DATE PLOTTED => 22-JUN-2010 | TIME PLOTTED => 12:33

Dist	COUNTY	ROUTE	KILOMETER POST TOTAL PROJECT	SHEET No.	TOTAL SHEETS
07	LA	5	2.9/4.9	223	1082

REGISTERED CIVIL ENGINEER DATE 12-23-09

PLANS APPROVAL DATE 6-21-10

REGISTERED PROFESSIONAL ENGINEER RALPH M. SASAKI No. 30849 Exp. 3/31/10 CIVIL STATE OF CALIFORNIA

THE STATE OF CALIFORNIA OR ITS OFFICERS OR AGENTS SHALL NOT BE RESPONSIBLE FOR THE ACCURACY OR COMPLETENESS OF ELECTRONIC COPIES OF THIS PLAN SHEET.

Caltrans Metric

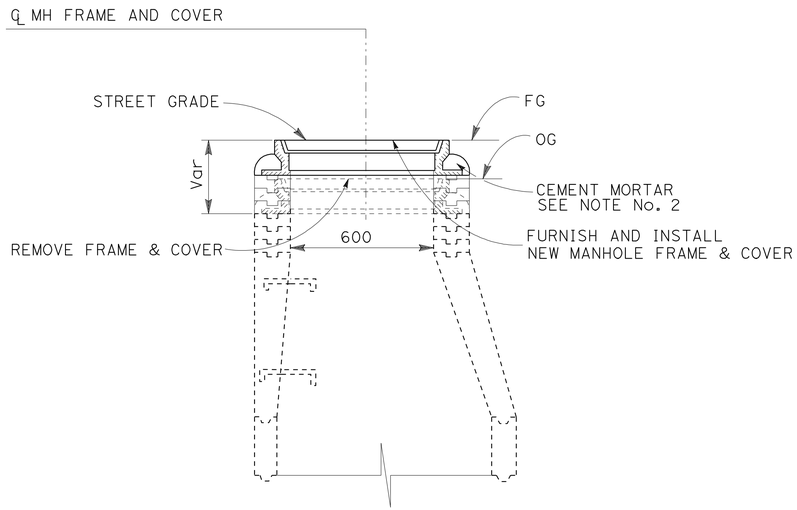

ADJUST MANHOLE

NOTES:

1. FOR DETAILS AND INFORMATION NOT SHOWN SEE MANHOLE DETAIL SPPWC 321-1.
2. COLLAR OF CEMENT MORTAR AROUND COVER FRAME SHALL BE OMITTED IN PAVED AREAS.

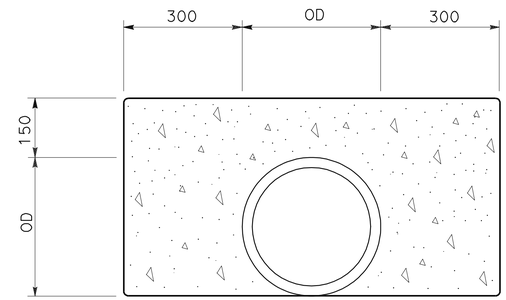

CONCRETE BACKFILL

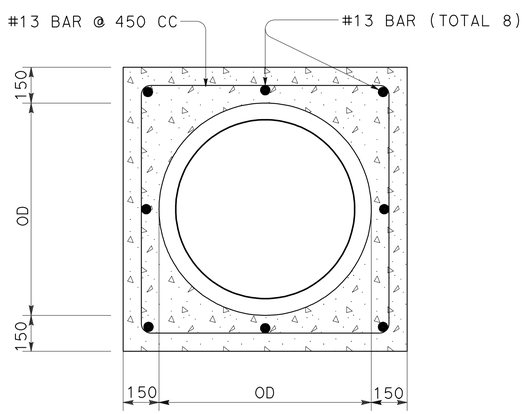

PIPE ENCASEMENT DETAIL

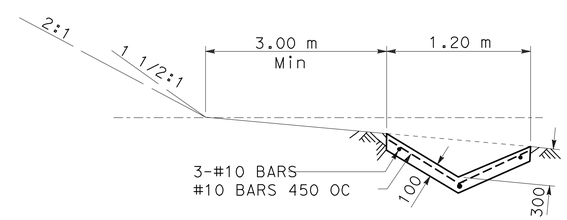

TYPE B DRAIN

ALL DIMENSIONS ARE IN MILLIMETERS UNLESS SHOWN OTHERWISE

DRAINAGE DETAILS

NO SCALE

DD-10

STATE OF CALIFORNIA - DEPARTMENT OF TRANSPORTATION
Caltrans
HYDRAULICS

FUNCTIONAL SUPERVISOR: RALPH M. SASAKI
CALCULATED-DESIGNED BY: S. M. TAN, W. Y. LEE
CHECKED BY: R. M. SASAKI
REVISED BY
DATE REVISED

LAST REVISION 00-00-00
DATE PLOTTED => 22-JUN-2010
TIME PLOTTED => 12:33

Dist	COUNTY	ROUTE	KILOMETER POST TOTAL PROJECT	SHEET No.	TOTAL SHEETS
07	LA	5	2.9/4.9	224	1082

Caltrans Metric

12-23-09
REGISTERED CIVIL ENGINEER DATE

6-21-10
PLANS APPROVAL DATE

REGISTERED PROFESSIONAL ENGINEER RALPH M. SASAKI No. 30849 Exp. 3/31/10 CIVIL STATE OF CALIFORNIA

THE STATE OF CALIFORNIA OR ITS OFFICERS OR AGENTS SHALL NOT BE RESPONSIBLE FOR THE ACCURACY OR COMPLETENESS OF ELECTRONIC COPIES OF THIS PLAN SHEET.

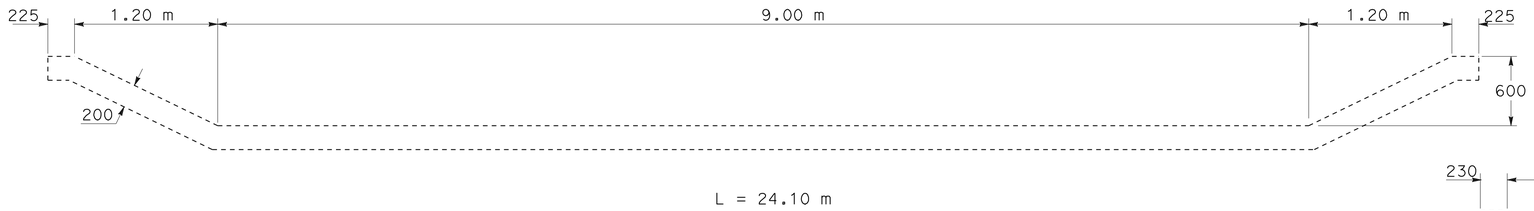

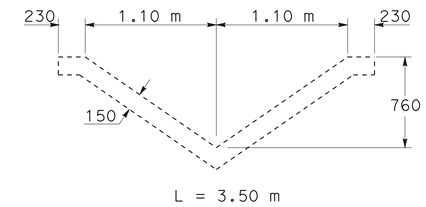

REMOVE CONCRETE CHANNEL

DRAINAGE UNIT (a)

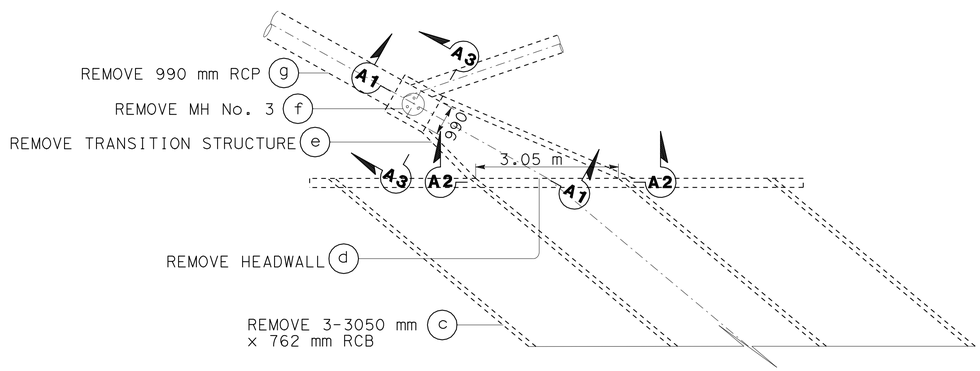

PLAN

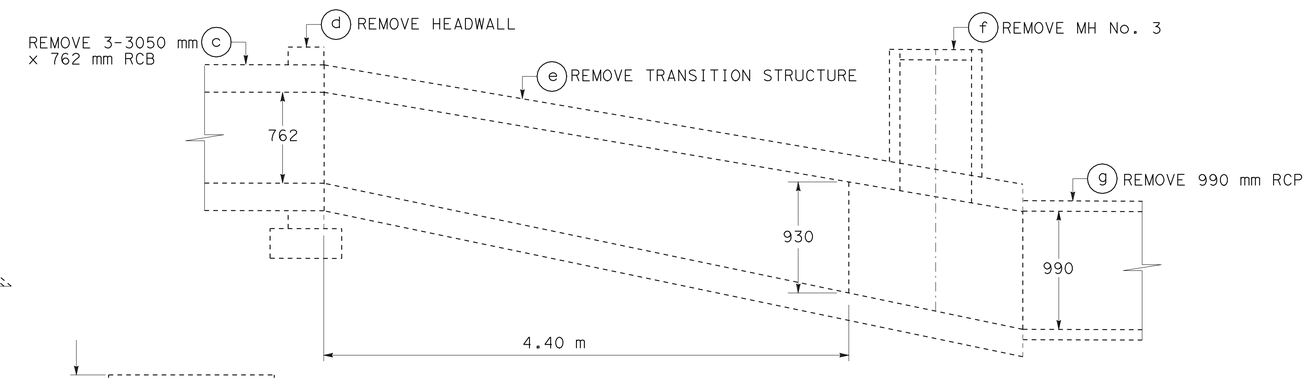

SECTION A1-A1

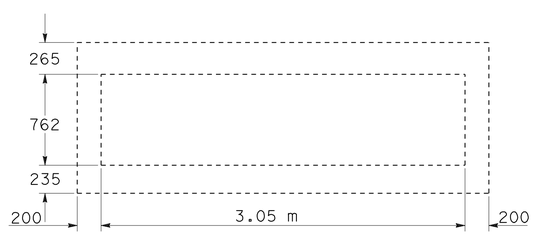

SECTION A2-A2

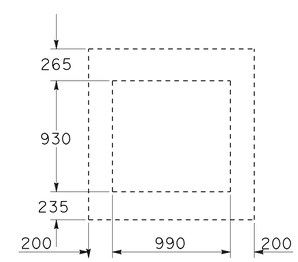

SECTION A3-A3

REMOVE TRANSITION STRUCTURE

DRAINAGE UNIT (e)

DRAINAGE SYSTEM No. 32

ALL DIMENSIONS ARE IN MILLIMETERS UNLESS SHOWN OTHERWISE

DRAINAGE DETAILS

NO SCALE

DD-11

STATE OF CALIFORNIA - DEPARTMENT OF TRANSPORTATION
Caltrans
HYDRAULICS

FUNCTIONAL SUPERVISOR: RALPH M. SASAKI
CALCULATED-DESIGNED BY: S. M. TAN, W. Y. LEE
CHECKED BY: R. M. SASAKI
REVISED BY
DATE REVISED

LAST REVISION 00-00-00
DATE PLOTTED => 22-JUN-2010
TIME PLOTTED => 12:33

Dist	COUNTY	ROUTE	KILOMETER POST TOTAL PROJECT	SHEET No.	TOTAL SHEETS
07	LA	5	2.9/4.9	225	1082

REGISTERED CIVIL ENGINEER DATE 12-23-09

PLANS APPROVAL DATE 6-21-10

REGISTERED PROFESSIONAL ENGINEER RALPH M. SASAKI No. 30849 Exp. 3/31/10 CIVIL STATE OF CALIFORNIA

THE STATE OF CALIFORNIA OR ITS OFFICERS OR AGENTS SHALL NOT BE RESPONSIBLE FOR THE ACCURACY OR COMPLETENESS OF ELECTRONIC COPIES OF THIS PLAN SHEET.

Caltrans Metric

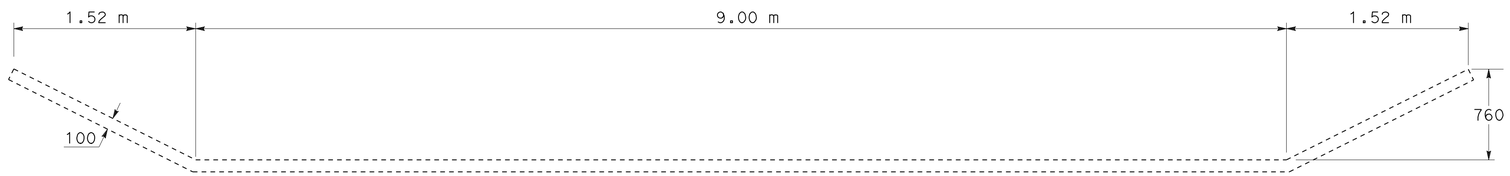

REMOVE TRAPEZOIDAL CHANNEL

DRAINAGE SYSTEM No. 36 a

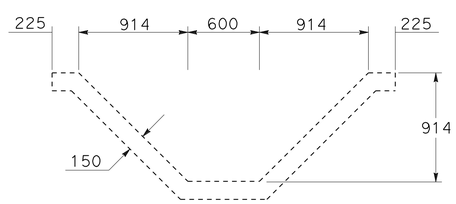

REMOVE TRAPEZOIDAL CHANNEL

DRAINAGE SYSTEM No. 38 d

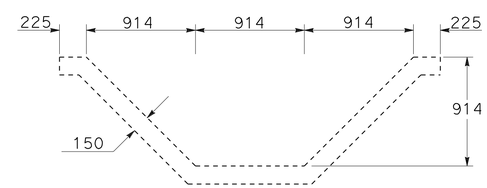

REMOVE TRAPEZOIDAL CHANNEL

DRAINAGE SYSTEM No. 51 e

ALL DIMENSIONS ARE IN MILLIMETERS UNLESS SHOWN OTHERWISE

DRAINAGE DETAILS

NO SCALE

DD-12

STATE OF CALIFORNIA - DEPARTMENT OF TRANSPORTATION
Caltrans
HYDRAULICS

FUNCTIONAL SUPERVISOR: RALPH M. SASAKI
CALCULATED-DESIGNED BY: S. M. TAN, W. Y. LEE
CHECKED BY: R. M. SASAKI
REVISED BY
DATE REVISED

LAST REVISION 00-00-00
DATE PLOTTED => 22-JUN-2010
TIME PLOTTED => 12:33

Dist	COUNTY	ROUTE	KILOMETER POST TOTAL PROJECT	SHEET No.	TOTAL SHEETS
07	LA	5	2.9/4.9	226	1082

12-23-09
REGISTERED CIVIL ENGINEER DATE

6-21-10
PLANS APPROVAL DATE

REGISTERED PROFESSIONAL ENGINEER RALPH M. SASAKI No. 30849 Exp. 3/31/10 CIVIL STATE OF CALIFORNIA

THE STATE OF CALIFORNIA OR ITS OFFICERS OR AGENTS SHALL NOT BE RESPONSIBLE FOR THE ACCURACY OR COMPLETENESS OF ELECTRONIC COPIES OF THIS PLAN SHEET.

Caltrans Metric

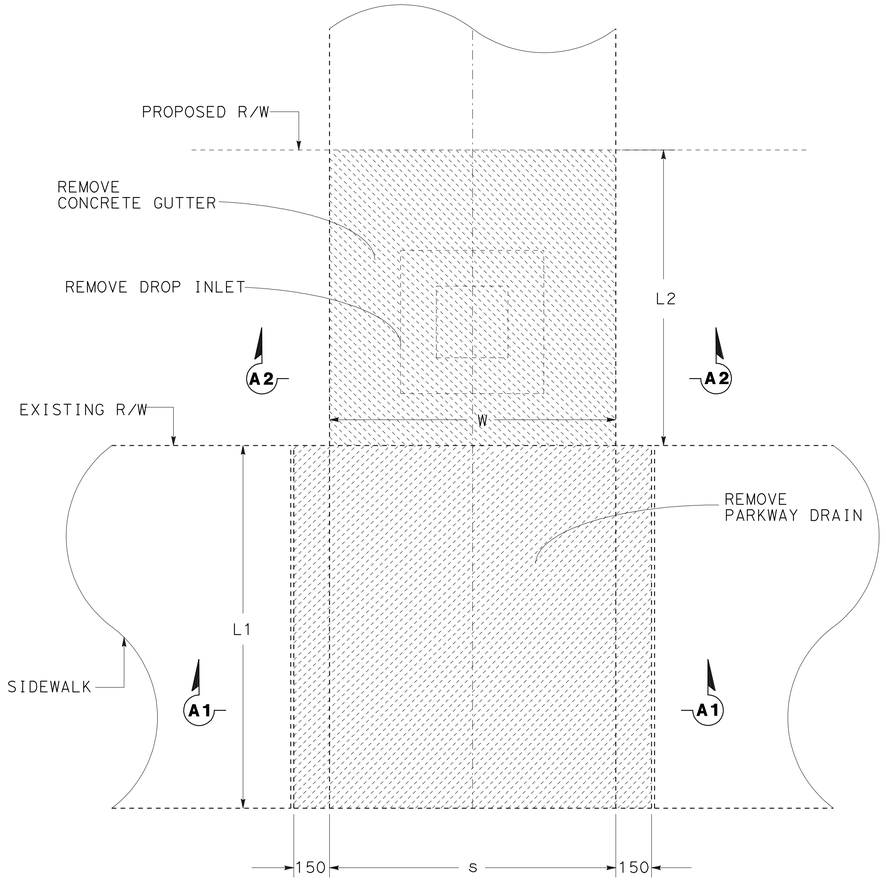

PLAN

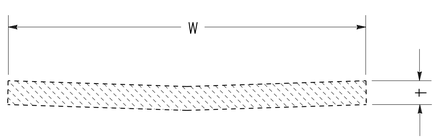

SECTION A2-A2
CASE 1

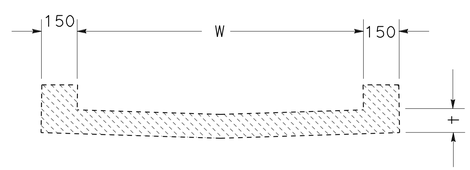

SECTION A2-A2
CASE 2

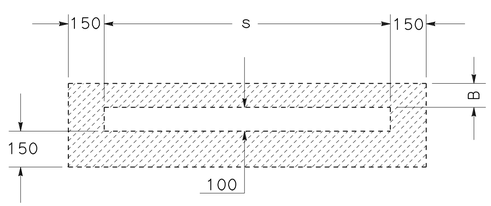

SECTION A1-A1

DRAINAGE SYSTEM No. ⬡	DRAINAGE UNIT ◯	REMOVE PARKWAY DRAIN			DRAINAGE UNIT ◯	REMOVE CONCRETE GUTTER			DRAINAGE UNIT ◯	REMOVE DROP INLET
		L1	s	B		W	t	L2		No. of INLETS
7	b	1.8 m	900	100	a *	900	100	10.0 m		
14	a	8.6 m	1200	100						
15	a	8.5 m	1200	100						
18	b	1.9 m	900	100	a **	900	100	3.3 m		
20	b	2.3 m	1350	100	a **	1300	100	24.2 m		
21	b	2.5 m	1350	100	a **	1200	100	26.9 m		
23	a	1.8 m	900	100						
25	a	3.5 m	900	100						
27	a	6.6 m	1650	100					b	1
28	a	3.0 m	1350	100						
29	a	2.8 m	900	100					b	1
30	a	3.0 m	1350	100						
41	b	2.6 m	1350	100	a **	1200	100	10.3 m		
42	b	1.9 m	1050	100	a **	900	100	24.4 m		
57	b	3.4 m	900	100	a **	900	100	2.9 m		
73	a	2.6 m	600	100						
76	a	4.0 m	1350	100						
81	a	8.0 m	1650	100						

* CASE 1
** CASE 2

ALL DIMENSIONS ARE IN MILLIMETERS UNLESS SHOWN OTHERWISE

DRAINAGE DETAILS

NO SCALE

DD-13

STATE OF CALIFORNIA - DEPARTMENT OF TRANSPORTATION
Caltrans
HYDRAULICS

FUNCTIONAL SUPERVISOR: RALPH M. SASAKI
CALCULATED-DESIGNED BY: S. M. TAN, W. Y. LEE
CHECKED BY: R. M. SASAKI
REVISED BY / DATE REVISED

LAST REVISION 00-00-00
DATE PLOTTED => 22-JUN-2010
TIME PLOTTED => 12:33

Dist	COUNTY	ROUTE	KILOMETER POST TOTAL PROJECT	SHEET No.	TOTAL SHEETS
07	LA	5	2.9/4.9	227	1082

REGISTERED CIVIL ENGINEER 12-23-09 DATE

6-21-10
PLANS APPROVAL DATE

REGISTERED PROFESSIONAL ENGINEER RALPH M. SASAKI No. 30849 Exp. 3/31/10 CIVIL STATE OF CALIFORNIA

THE STATE OF CALIFORNIA OR ITS OFFICERS OR AGENTS SHALL NOT BE RESPONSIBLE FOR THE ACCURACY OR COMPLETENESS OF ELECTRONIC COPIES OF THIS PLAN SHEET.

Caltrans Metric

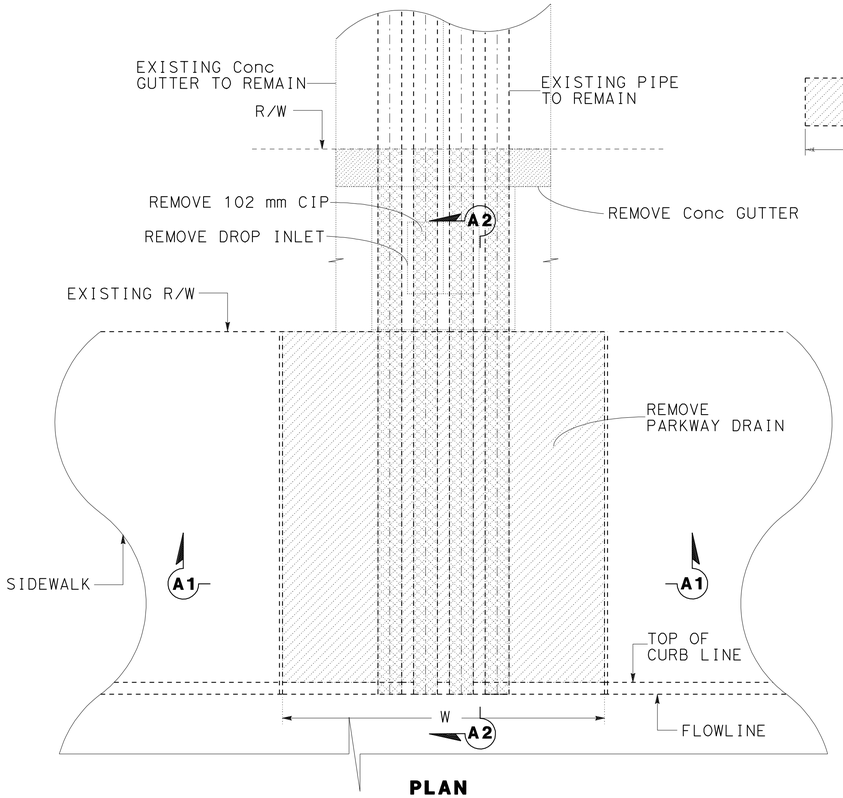

PLAN

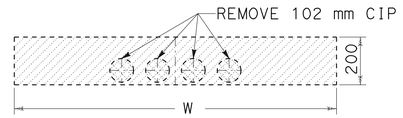

SECTION A1-A1

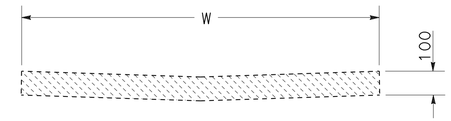

REMOVE CONCRETE GUTTER

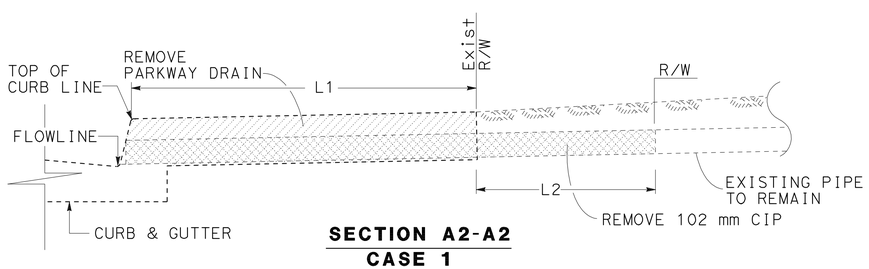

SECTION A2-A2
CASE 1

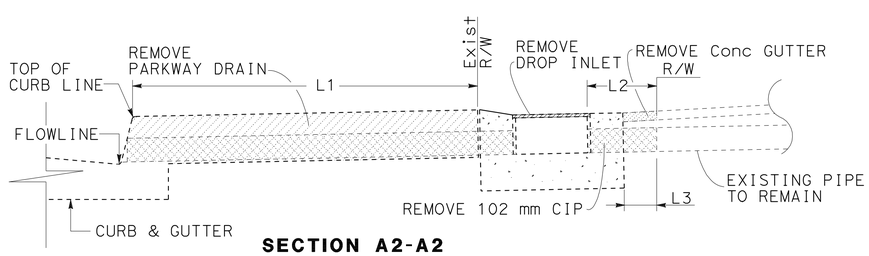

SECTION A2-A2
CASE 2

DRAINAGE SYSTEM No.	DRAINAGE UNIT	REMOVE PARKWAY DRAIN		DRAINAGE UNIT	REMOVE PIPE			DRAINAGE UNIT	REMOVE CONCRETE GUTTER		DRAINAGE UNIT	REMOVE DROP INLET
		L1	W		L1	L2	No. of PIPES		W	L3		No. of INLETS
9 **	c	2.9 m	1050	b	2.9 m		2				a	1
10 *	b	1.7 m	1050	a	11.5 m		2					
11 **	e	5.0 m	1050	d/b	5.0 m	9.4 m	2/1	a	900	9.4 m	c	1
12 *	b	2.7 m	1050	a	2.7 m		2					
13 **	d	2.4 m	1050	c	2.4 m		2	a	900	15.8 m	b	1
16 *	b	3.0 m	900	a	3.0 m		1					
17 *	b	2.8 m	900	a	2.8 m		1					
22 *	b	1.2 m	1050	a	1.2 m		2					
24 *	b	1.8 m	900	a	1.8 m		1					
26 *	b	2.5 m	1450	a	2.5 m		4					
43 *	b	1.8 m	900	a	1.8 m		1					
58 *	b	3.0 m	1450	a	3.0 m		4					
59 *	b	5.1 m	900	a	5.1 m		1					
60 *	b	5.1 m	900	a	5.1 m		1					
61 *	b	5.0 m	900	a	5.0 m		1					
62 *	b	2.2 m	900	a	2.2 m		1					
63 *	b	9.8 m	900	a	9.8 m		1					
64 *	b	9.8 m	900	a	9.8 m		1					
65 *	b	9.7 m	1050	a	9.7 m		2					
66 *	b	9.7 m	900	a	9.7 m		1					
69 *	b	7.5 m	1200	a	7.5 m		3					
70 *	b	2.1 m	1200	a	2.1 m		3					
71 *	b	1.8 m	900	a	1.8 m		1					
72 *	b	2.4 m	900	a	2.4 m		1					
74 *	b	3.2 m	900	a	3.2 m		1					
75 *	b	2.9 m	900	a	2.9 m		1					
77 *	b	2.9 m	900	a	2.9 m		1					
78 *	b	3.1 m	900	a	3.1 m		1					
79 *	b	3.7 m	900	a	3.7 m		1					
80 *	c	8.0 m	1050	b	8.0 m		2					

* CASE 1
** CASE 2

ALL DIMENSIONS ARE IN MILLIMETERS UNLESS SHOWN OTHERWISE

DRAINAGE DETAILS

NO SCALE

DD-14

STATE OF CALIFORNIA - DEPARTMENT OF TRANSPORTATION
Caltrans
HYDRAULICS

FUNCTIONAL SUPERVISOR: RALPH M. SASAKI
CALCULATED-DESIGNED BY: S. M. TAN, W. Y. LEE
CHECKED BY: R. M. SASAKI
REVISED BY / DATE REVISED

LAST REVISION 00-00-00
DATE PLOTTED => 22-JUN-2010
TIME PLOTTED => 12:34

Dist	COUNTY	ROUTE	KILOMETER POST TOTAL PROJECT	SHEET No.	TOTAL SHEETS
07	LA	5	2.9/4.9	228	1082

REGISTERED CIVIL ENGINEER 12-23-09 DATE

6-21-10
PLANS APPROVAL DATE

REGISTERED PROFESSIONAL ENGINEER RALPH M. SASAKI No. 30849 Exp. 3/31/10 CIVIL STATE OF CALIFORNIA

THE STATE OF CALIFORNIA OR ITS OFFICERS OR AGENTS SHALL NOT BE RESPONSIBLE FOR THE ACCURACY OR COMPLETENESS OF ELECTRONIC COPIES OF THIS PLAN SHEET.

Caltrans Metric

NOTES:

1. CONCRETE APRON (@ Dbl BOX CULVERT)-INSIDE CORNER ELEVATION @ WINGWALLS AND HEADWALLS JUNCTION AND AT END OF "L" HEADWALL IS 19.295.
2. FOR INFORMATION AND DETAILS NOT SHOWN, SEE STANDARD PLANS.

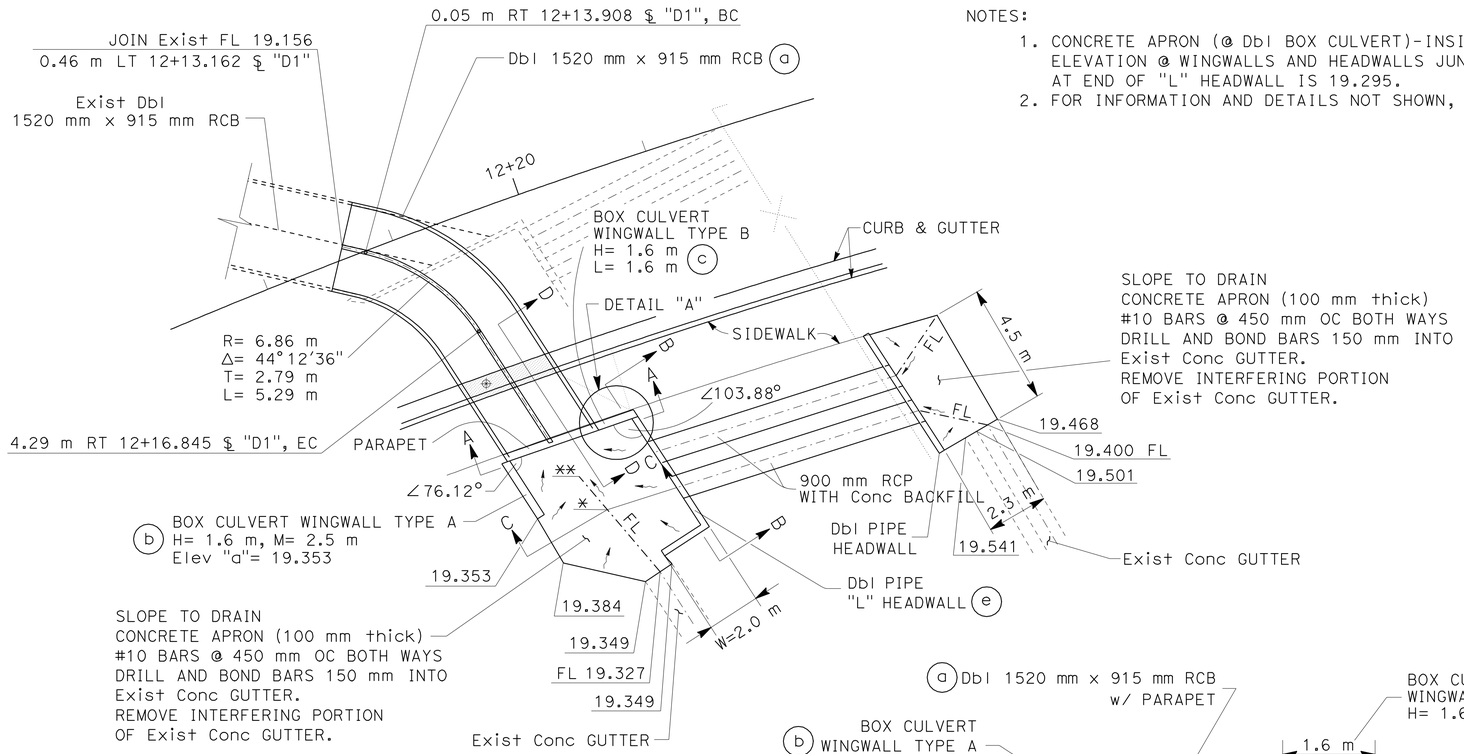

PLAN

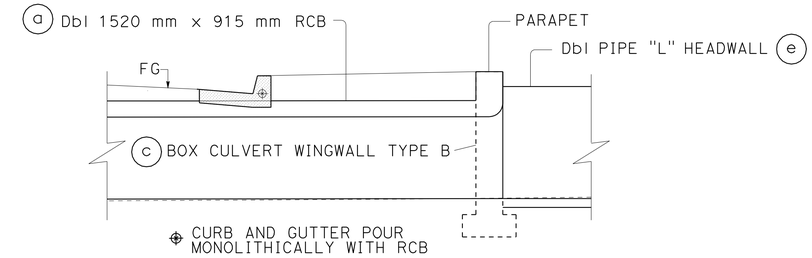

SECTION D-D

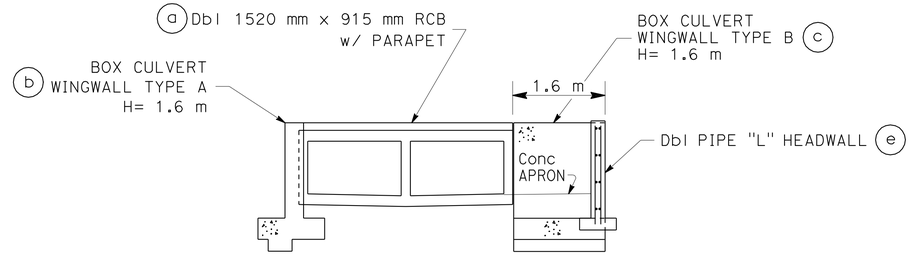

SECTION A-A

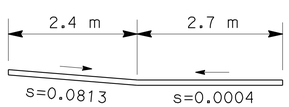

SECTION C-C

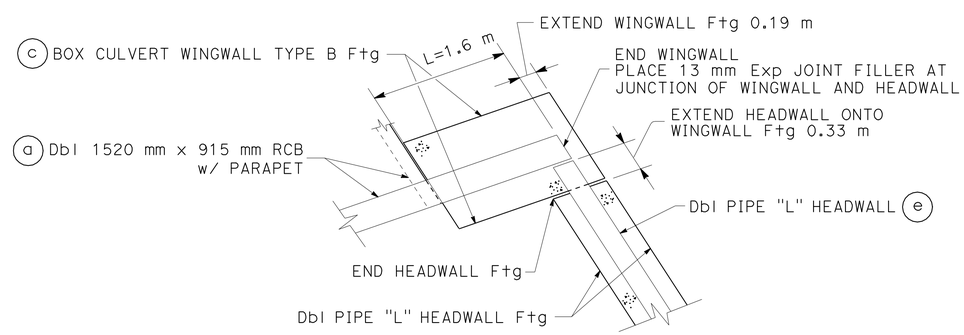

WINGWALL/HEADWALL INTERFACE
DETAIL "A"

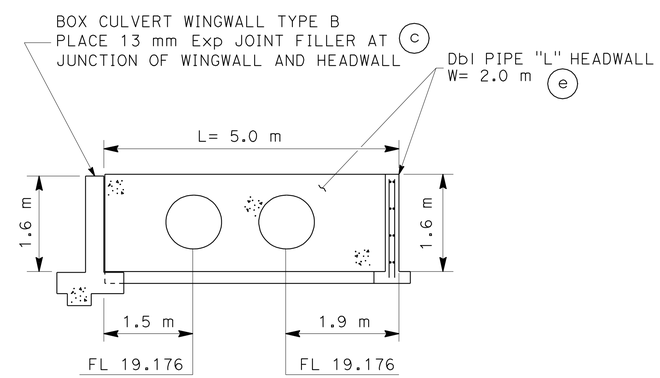

SECTION B-B

Conc APRON @ BOX CULVERT FL ELEVATIONS		
	DISTANCE FROM Exist Conc GUTTER ALONG FL	FL Elev OF APRON
*	3.03 m	19.175
**	4.66 m	19.174

ALL DIMENSIONS ARE IN MILLIMETERS UNLESS SHOWN OTHERWISE

DRAINAGE SYSTEM No. 89

DRAINAGE DETAILS

NO SCALE

DD-15

STATE OF CALIFORNIA - DEPARTMENT OF TRANSPORTATION
Caltrans
HYDRAULICS

FUNCTIONAL SUPERVISOR: RALPH M. SASAKI
CALCULATED-DESIGNED BY: S. M. TAN / W. Y. LEE
CHECKED BY: R. M. SASAKI
REVISED BY / DATE REVISED

LAST REVISION 00-00-00 | DATE PLOTTED => 01-FEB-2011 | TIME PLOTTED => 11:38

Dist	COUNTY	ROUTE	KILOMETER POST TOTAL PROJECT	SHEET No.	TOTAL SHEETS
07	LA	5	2.9/4.9	229	1082

Caltrans Metric

REGISTERED CIVIL ENGINEER 12-23-09 DATE

PLANS APPROVAL DATE 6-21-10

REGISTERED PROFESSIONAL ENGINEER RALPH M. SASAKI No. 30849 Exp. 3/31/10 CIVIL STATE OF CALIFORNIA

THE STATE OF CALIFORNIA OR ITS OFFICERS OR AGENTS SHALL NOT BE RESPONSIBLE FOR THE ACCURACY OR COMPLETENESS OF ELECTRONIC COPIES OF THIS PLAN SHEET.

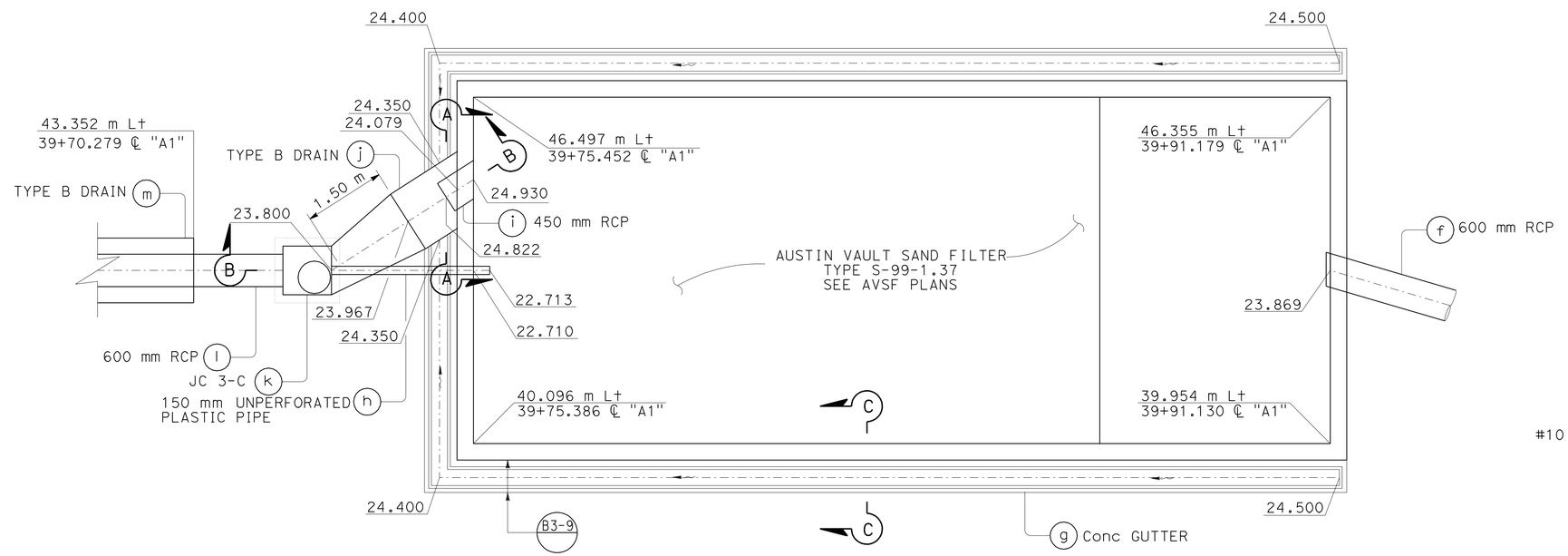

PLAN

NOTE: THE CONTRACTOR SHALL VERIFY LOCATIONS AND ELEVATIONS OF EXISTING DRAINAGE SYSTEMS BEFORE COMMENCEMENT OF WORK.

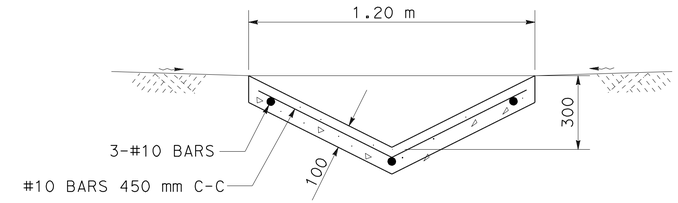

TYPE B DRAIN

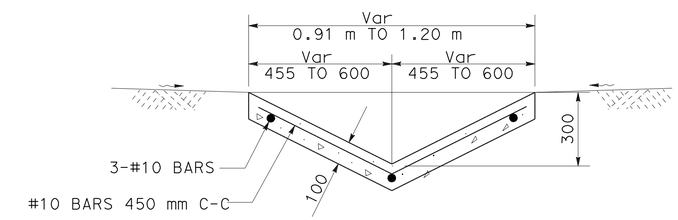

TYPE B DRAIN TO JC 3-C

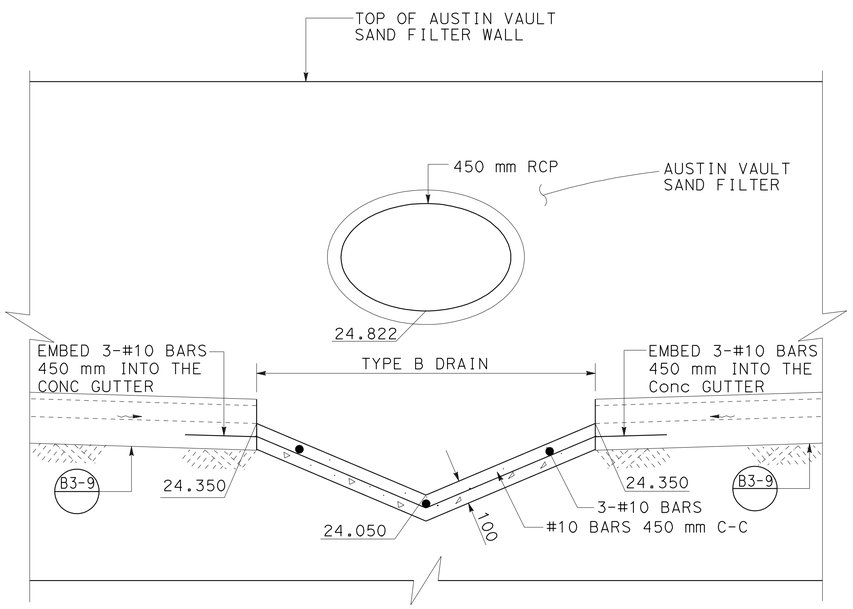

SECTION A-A

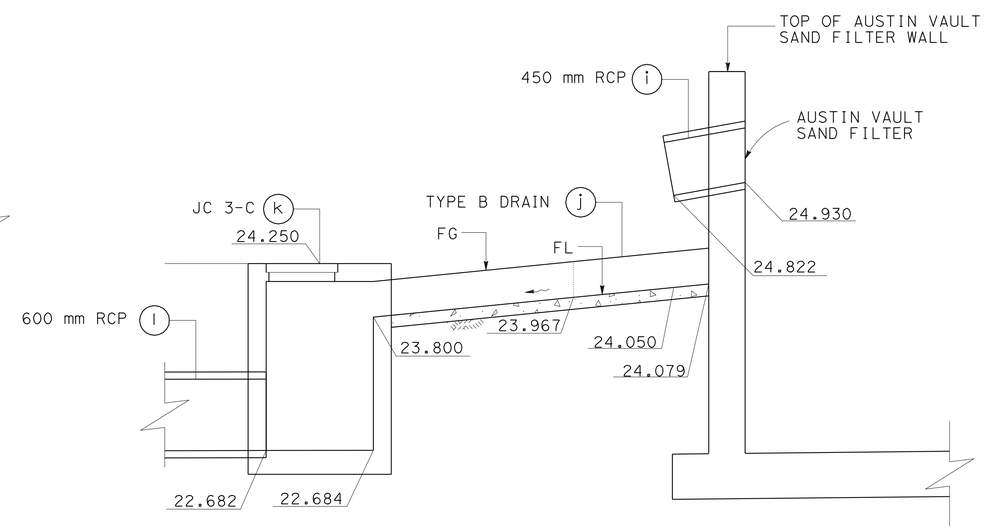

SECTION B-B

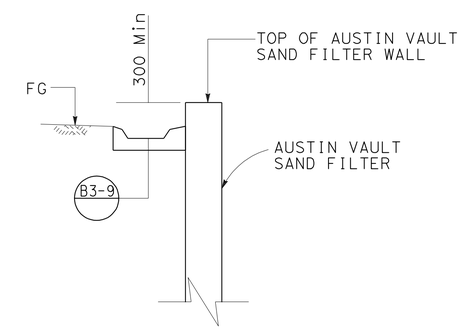

SECTION C-C

ALL DIMENSIONS ARE IN MILLIMETERS UNLESS SHOWN OTHERWISE

DRAINAGE SYSTEM No. 113

DRAINAGE DETAILS

NO SCALE

DD-16

REVISED BY	DATE REVISED

CALCULATED-DESIGNED BY: S. M. TAN, W. Y. LEE
CHECKED BY: R. M. SASAKI

FUNCTIONAL SUPERVISOR: RALPH M. SASAKI

STATE OF CALIFORNIA - DEPARTMENT OF TRANSPORTATION
Caltrans
HYDRAULICS

LAST REVISION 00-00-00 | DATE PLOTTED => 22-JUN-2010 | TIME PLOTTED => 12:34

Dist	COUNTY	ROUTE	KILOMETER POST TOTAL PROJECT	SHEET No.	TOTAL SHEETS
07	LA	5	2.9/4.9	230	1082

Caltrans Metric

REGISTERED CIVIL ENGINEER DATE 12-23-09

PLANS APPROVAL DATE 6-21-10

REGISTERED PROFESSIONAL ENGINEER RALPH M. SASAKI No. 30849 Exp. 3/31/10 CIVIL STATE OF CALIFORNIA

THE STATE OF CALIFORNIA OR ITS OFFICERS OR AGENTS SHALL NOT BE RESPONSIBLE FOR THE ACCURACY OR COMPLETENESS OF ELECTRONIC COPIES OF THIS PLAN SHEET.

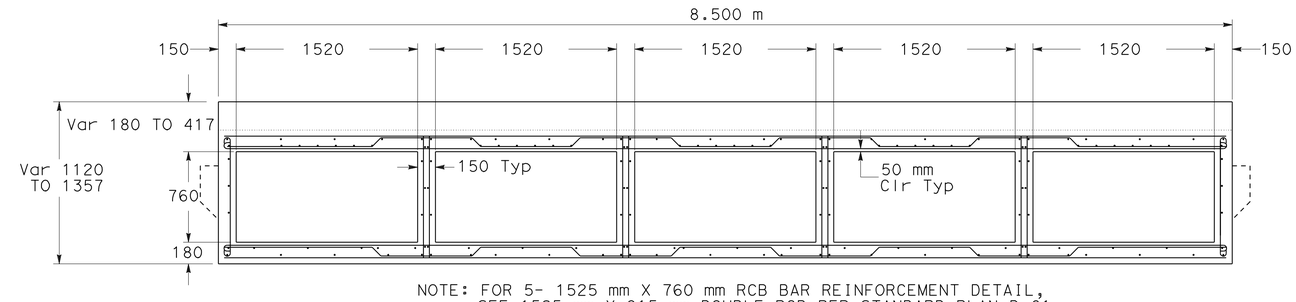

NOTE: FOR 5- 1525 mm X 760 mm RCB BAR REINFORCEMENT DETAIL, SEE 1525 mm X 915 mm DOUBLE RCB PER STANDARD PLAN D-81

SECTION A1-A1

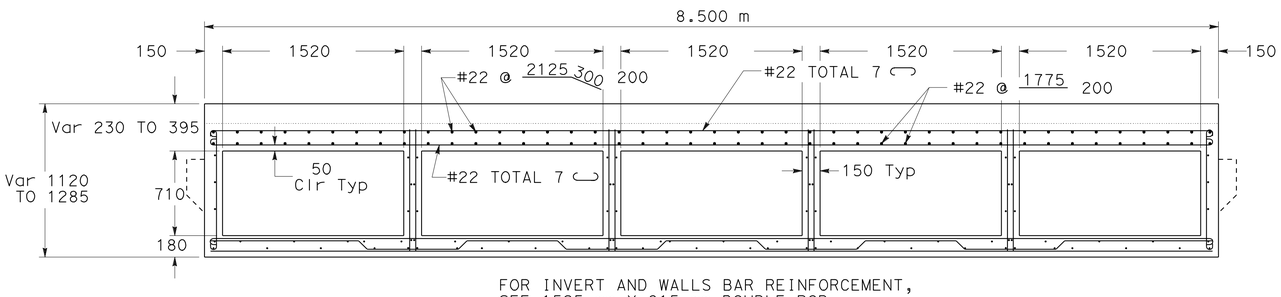

FOR INVERT AND WALLS BAR REINFORCEMENT, SEE 1525 mm X 915 mm DOUBLE RCB PER STD PLAN D-81

SECTION A2-A2

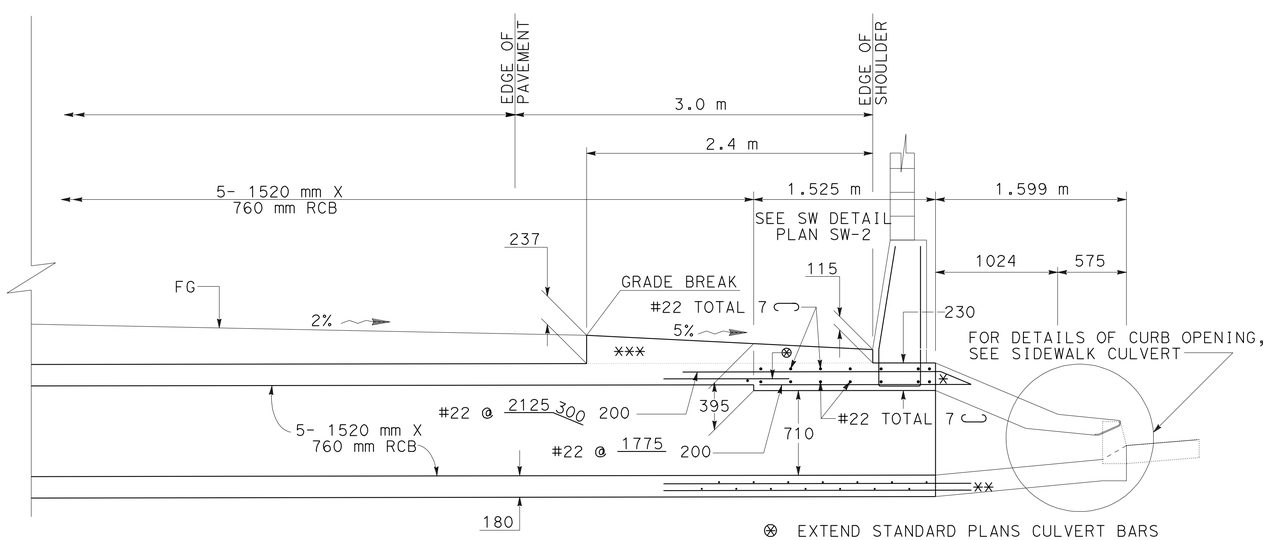

SECTION A3-A3

⊗ EXTEND STANDARD PLANS CULVERT BARS AS SHOWN 300 mm INTO THE MODIFIED SECTION

* EXTEND RCB CULVERT #22 BARS 300 mm INTO THE SIDEWALK CULVERT

** EXTEND STANDARD PLANS RCB CULVERT BARS 300 mm INTO THE SIDEWALK CULVERT

*** CONCRETE PAVEMENT POUR MONOLITHICALLY WITH RCB

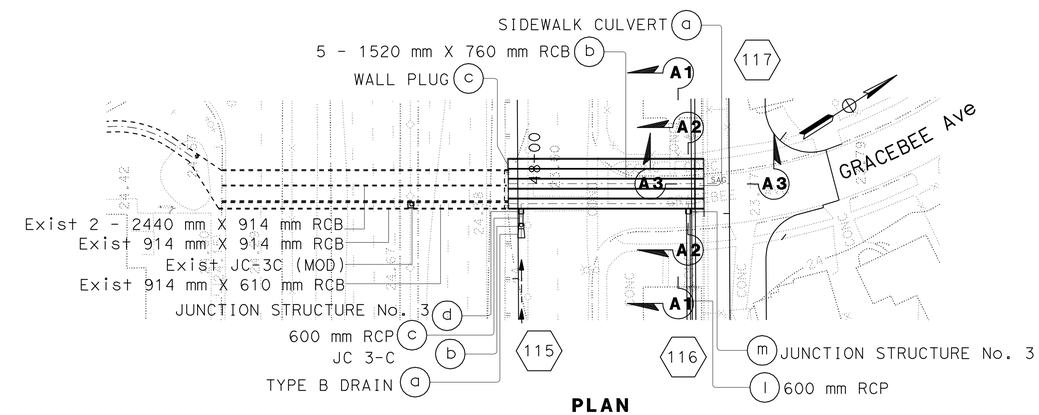

PLAN

SCALE 1:500

ALL DIMENSIONS ARE IN MILLIMETERS UNLESS SHOWN OTHERWISE

DRAINAGE SYSTEM No. 117

DRAINAGE DETAILS

NO SCALE

DD-17

STATE OF CALIFORNIA - DEPARTMENT OF TRANSPORTATION

Caltrans **HYDRAULICS**

FUNCTIONAL SUPERVISOR RALPH M. SASAKI

CALCULATED-DESIGNED BY S. M. TAN W. Y. LEE

CHECKED BY R. M. SASAKI

REVISED BY | DATE REVISED

LAST REVISION 00-00-00 | DATE PLOTTED => 22-JUN-2010 | TIME PLOTTED => 12:34

Dist	COUNTY	ROUTE	KILOMETER POST TOTAL PROJECT	SHEET No.	TOTAL SHEETS
07	LA	5	2.9/4.9	231	1082

Caltrans Metric

12-23-09
REGISTERED CIVIL ENGINEER DATE

6-21-10
PLANS APPROVAL DATE

REGISTERED PROFESSIONAL ENGINEER RALPH M. SASAKI No. 30849 Exp. 3/31/10 CIVIL STATE OF CALIFORNIA

THE STATE OF CALIFORNIA OR ITS OFFICERS OR AGENTS SHALL NOT BE RESPONSIBLE FOR THE ACCURACY OR COMPLETENESS OF ELECTRONIC COPIES OF THIS PLAN SHEET.

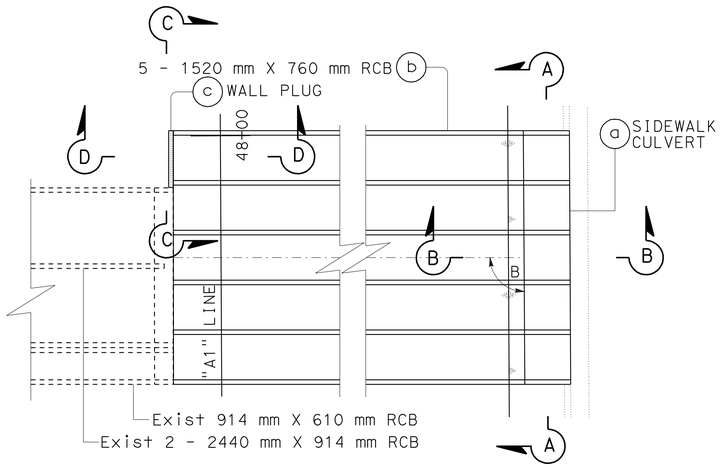

PLAN

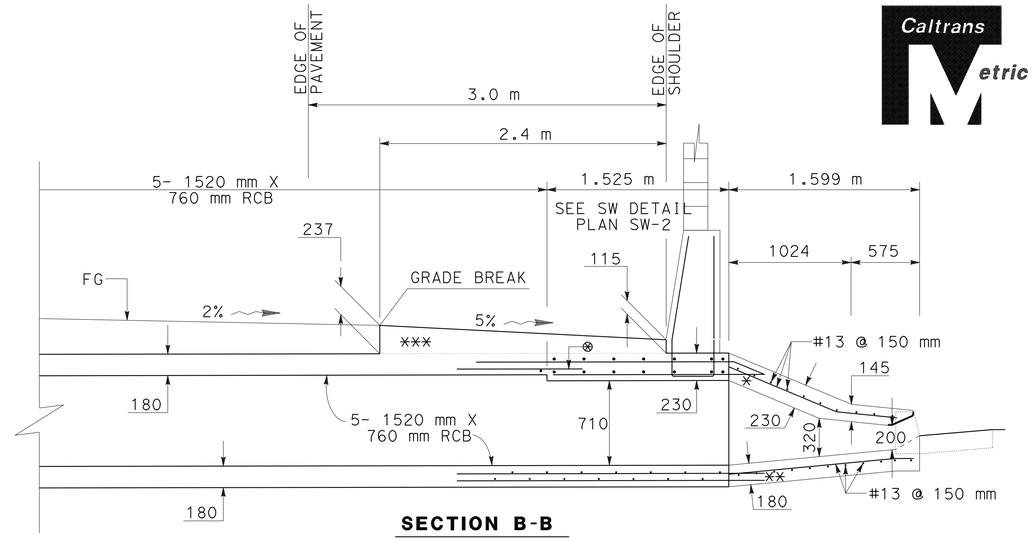

SECTION B-B

⊗ EXTEND STANDARD PLANS CULVERT BARS AS SHOWN 300 mm INTO THE MODIFIED SECTION

* EXTEND RCB CULVERT #22 BARS 300 mm INTO THE SIDEWALK CULVERT

** EXTEND STANDARD PLANS RCB CULVERT BARS 300 mm INTO THE SIDEWALK CULVERT

*** CONCRETE PAVEMENT POUR MONOLITHICALLY WITH RCB

NOTES

1. CONSTRUCT CULVERT OPENINGS WITH Max 2.13 m.
2. SUPPORT BOLTS
   A. SUPPORT BOLTS SHALL BE INSTALLED AT THE NOSE OF EACH DIVIDER WALL.
   B. WHEN NOSING SPAN EXCEEDS 2.13 m INTERMEDIATE SUPPORT BOLT(S) SHALL BE INSTALLED, EQUALLY SPACED AT 2.13 m OC Max SPACING.
   C. SPACING NOTES HEREON SUPERSEDE THOSE SHOWN ON STANDARD PLAN.
   D. SUPPORT BOLTS ARE NOT REQUIRED AT THE DIVIDER WALL NOSE WHEN THE OPENING IS INSIDE THE R/W FENCE.
3. UNLESS OTHERWISE SPECIFIED ON OTHER SHEETS, B=90°.
4. ALL DETAILS ARE APPLICABLE FOR CURB OPENINGS ON A STRAIGHT LINE.
5. CULVERT SHALL BE CONSTRUCTED AS ONE SPAN UNLESS ADDITIONAL CELLS ARE SPECIFIED ON DRAINAGE PLANS.

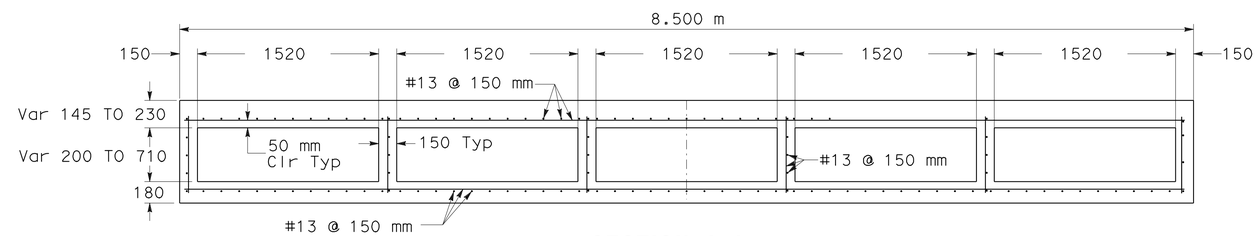

SECTION A-A

SIDEWALK CULVERT

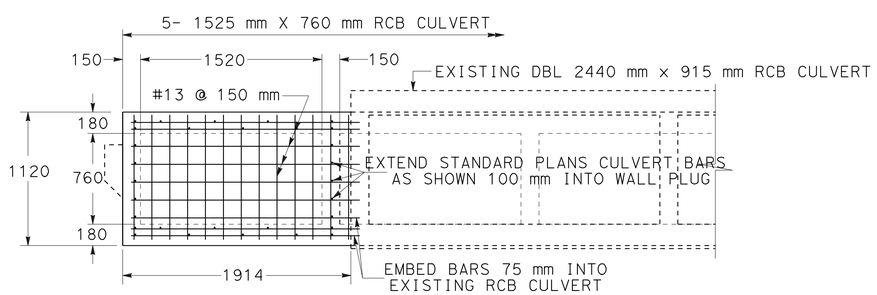

SECTION C-C

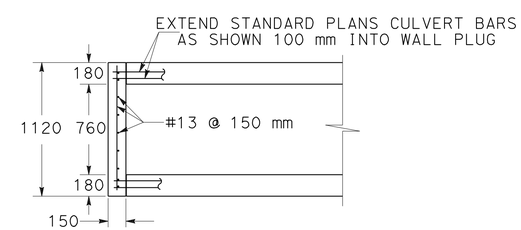

SECTION D-D

WALL PLUG

ALL DIMENSIONS ARE IN MILLIMETERS UNLESS SHOWN OTHERWISE

DRAINAGE SYSTEM No. 117

DRAINAGE DETAILS

NO SCALE

DD-18

REVISED BY	DATE REVISED

CALCULATED-DESIGNED BY: S. M. TAN, W. Y. LEE
CHECKED BY: R. M. SASAKI
FUNCTIONAL SUPERVISOR: RALPH M. SASAKI

STATE OF CALIFORNIA - DEPARTMENT OF TRANSPORTATION
Caltrans
HYDRAULICS

LAST REVISION 00-00-00 | DATE PLOTTED => 22-JUN-2010 | TIME PLOTTED => 12:34

Dist	COUNTY	ROUTE	KILOMETER POST TOTAL PROJECT	SHEET No.	TOTAL SHEETS
07	LA	5	2.9/4.9	232	1082

REGISTERED CIVIL ENGINEER 12-23-09 DATE

6-21-10
PLANS APPROVAL DATE

REGISTERED PROFESSIONAL ENGINEER RALPH M. SASAKI No. 30849 Exp. 3/31/10 CIVIL STATE OF CALIFORNIA

THE STATE OF CALIFORNIA OR ITS OFFICERS OR AGENTS SHALL NOT BE RESPONSIBLE FOR THE ACCURACY OR COMPLETENESS OF ELECTRONIC COPIES OF THIS PLAN SHEET.

Caltrans Metric

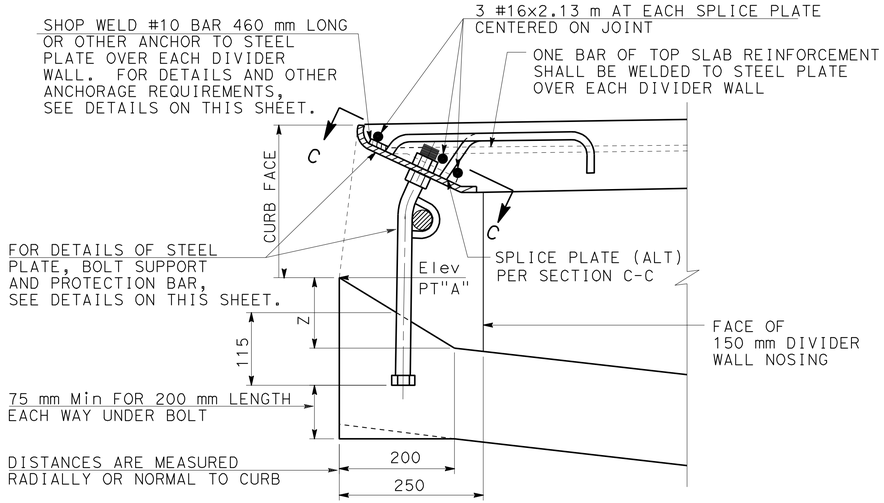

INLET DETAIL

NOTES

1. THE BOTTOM SLAB OF THE SIDEWALK CULVERT SHALL BE CONSTRUCTED ON A UNIFORM GRADE UNLESS OTHERWISE SPECIFIED ON THE PLAN SHEETS.
2. Z=115 mm UNLESS OTHERWISE SPECIFIED ON THE PLAN SHEET.
3. SHOP WELD ONE EXTRA #10 BAR 460 mm LONG OR OTHER ANCHOR (ALT) EACH SIDE OF SPLICE PLATE AND WITHIN 150 mm THEREOF.
4. A. SHOP WELD SPLICE PLATE TO LONGER SPAN SEGMENT.
   B. ALTERNATE SPLICE PLATE MAY BE BOLTED TO EACH SIDE.
5. SPLICE PLATE ALTERNATE SHALL BE USED ONLY WHERE THE SPLICE IS LOCATED OVER SUPPORT BOLTS.

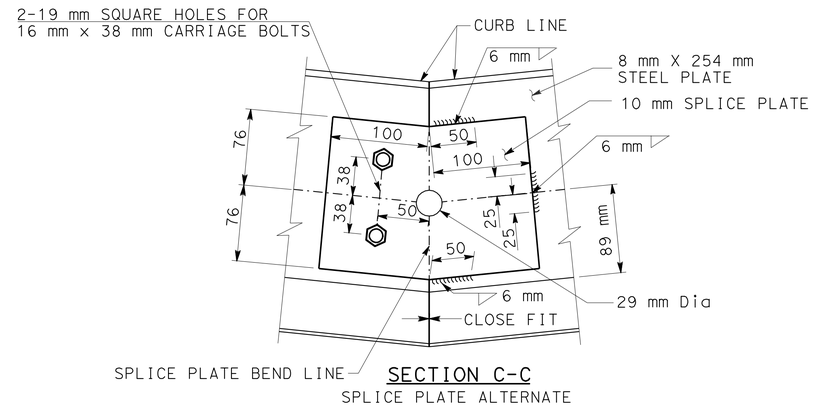

SECTION C-C
SPLICE PLATE ALTERNATE

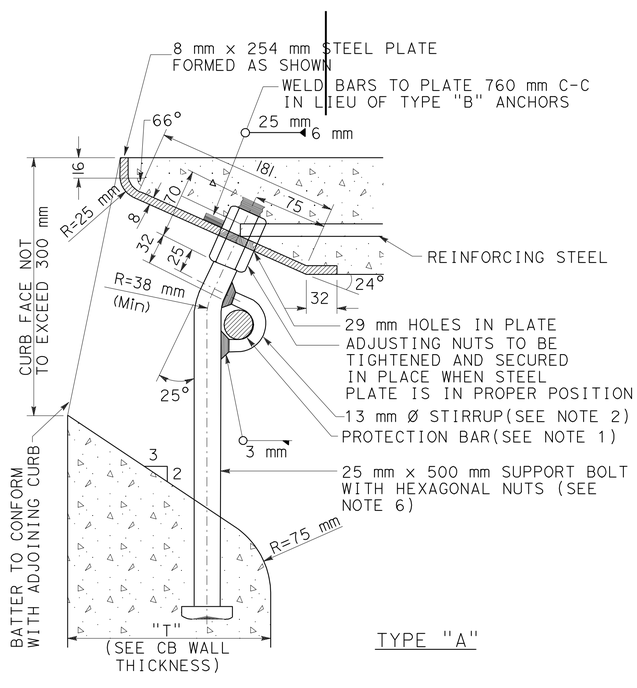

TYPE "A"

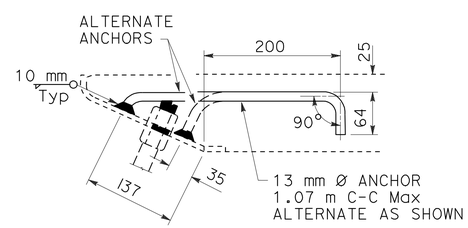

TYPE "B"

STEEL PLATE ANCHORAGE

STEEL PLATE ANCHORAGE NOTES:

1. WHEN CURB FACE EXCEEDS 180 mm A PLAIN ROUND STEEL PROTECTION BAR 25 mm IN DIAMETER SHALL BE INSTALLED. BAR SHALL BE EMBEDDED 125 mm AT EACH END. WHEN LENGTH OF OPENING IS 2.1 m OR LESS, SAID BAR SHALL BE LOCATED 125 mm BEHIND CURB FACE AND 100 mm ABOVE GUTTER FLOW LINE.
2. A STIRRUP SHALL BE WELDED TO EACH BOLT WHEN BOTH A PROTECTION BAR AND SUPPORT BOLT ARE REQUIRED.
3. ALL EXPOSED METAL PARTS SHALL BE GALVANIZED.
4. WHEN REQUIRED BY LENGTH OF OPENING BULB ANGLE MAY BE DELIVERED IN SECTIONS AND BUTT WELDED IN PLACE. ALL GALVANIZING DAMAGED BY WELDING SHALL RECEIVE TWO COATS OF ALUMINUM PAINT.
5. TYPE A OR TYPE B ANCHORAGE MAY BE USED.
6. SUPPORT BOLTS SHALL BE INSTALLED WHEN LENGTH OF OPENING EXCEEDS 2.1 m. SPACING SHALL BE 2.1 m C-C Max AND 1.5 m C-C Min.
7. THE STEEL PLATE SHALL BE FABRICATED FROM 7.9 mm x 250 mm UNIVERSAL MILL PLATES.

SIDEWALK CULVERT

DRAINAGE SYSTEM No. 117

ALL DIMENSIONS ARE IN MILLIMETERS UNLESS SHOWN OTHERWISE

DRAINAGE DETAILS

NO SCALE

DD-19

STATE OF CALIFORNIA - DEPARTMENT OF TRANSPORTATION
Caltrans HYDRAULICS

FUNCTIONAL SUPERVISOR RALPH M. SASAKI
CALCULATED-DESIGNED BY S. M. TAN W. Y. LEE
CHECKED BY R. M. SASAKI
REVISED BY
DATE REVISED

LAST REVISION 00-00-00 DATE PLOTTED => 22-JUN-2010 TIME PLOTTED => 12:34

Dist	COUNTY	ROUTE	KILOMETER POST TOTAL PROJECT	SHEET No.	TOTAL SHEETS
07	LA	5	2.9/4.9	233	1082

12-23-09
REGISTERED CIVIL ENGINEER DATE

6-21-10
PLANS APPROVAL DATE

REGISTERED PROFESSIONAL ENGINEER RALPH M. SASAKI No. 30849 Exp. 3/31/10 CIVIL STATE OF CALIFORNIA

THE STATE OF CALIFORNIA OR ITS OFFICERS OR AGENTS SHALL NOT BE RESPONSIBLE FOR THE ACCURACY OR COMPLETENESS OF ELECTRONIC COPIES OF THIS PLAN SHEET.

Caltrans Metric

NOTES:

1. FOR DETAILS AND INFORMATION NOT SHOWN, REFER TO CALTRANS STANDARD PLANS.
2. FOR FRAME AND GRATE, USE CALTRANS STANDARD PLANS TYPE GT4 INLET FRAME WITH 600-12X GRATING (D74A & D77B).

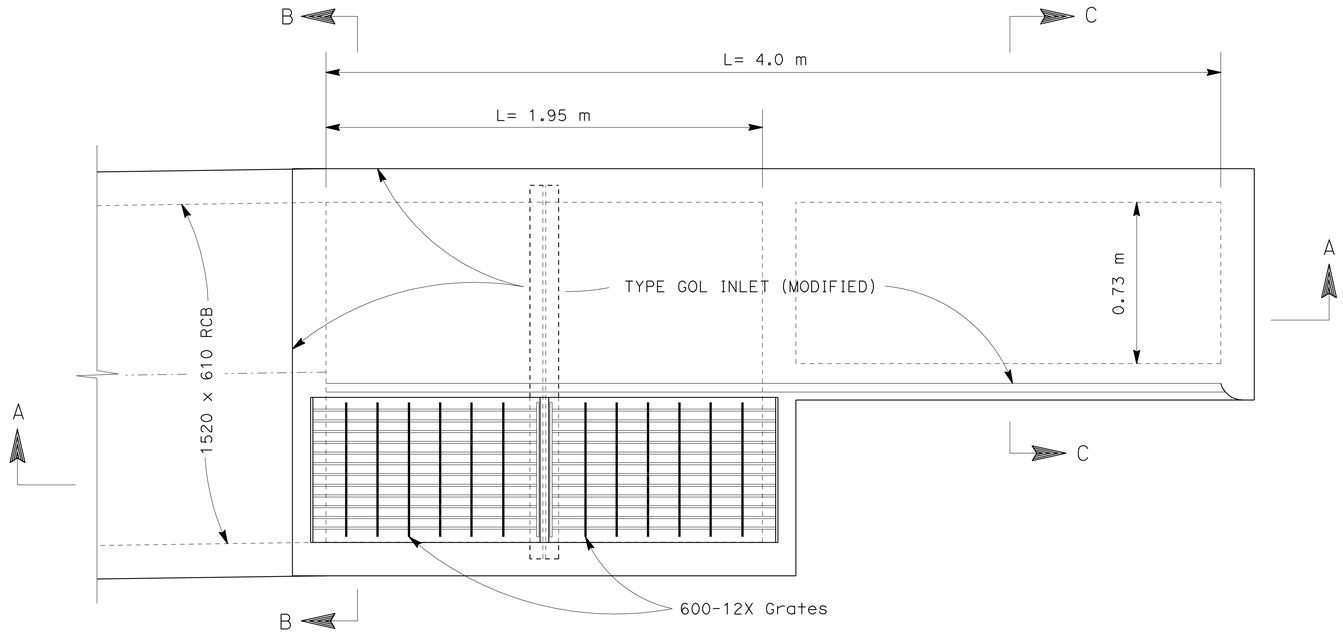

PLAN

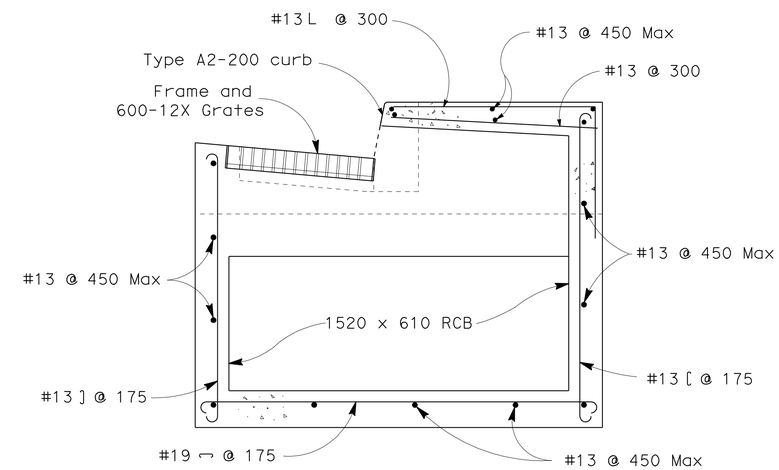

SECTION B-B

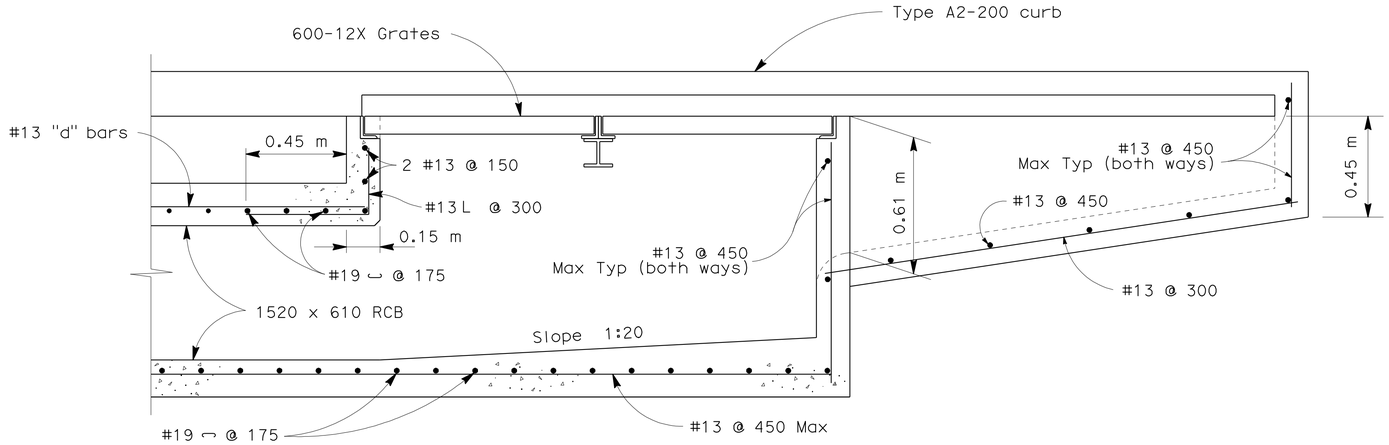

SECTION A-A

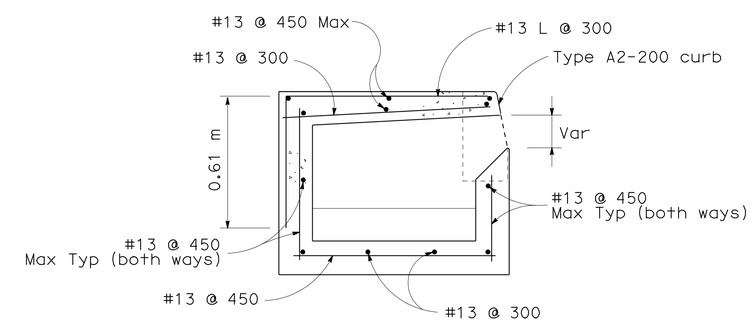

SECTION C-C

TYPE GOL INLET (MOD) WITH RCB OUTLET

DRAINAGE SYSTEM No. 130 c

ALL DIMENSIONS ARE IN MILLIMETERS UNLESS SHOWN OTHERWISE

DRAINAGE DETAILS

NO SCALE

DD-20

STATE OF CALIFORNIA - DEPARTMENT OF TRANSPORTATION
Caltrans
HYDRAULICS

FUNCTIONAL SUPERVISOR: RALPH M. SASAKI
CALCULATED-DESIGNED BY: S. M. TAN, W. Y. LEE
CHECKED BY: R. M. SASAKI
REVISED BY / DATE REVISED

LAST REVISION 00-00-00 | DATE PLOTTED => 22-JUN-2010 | TIME PLOTTED => 12:34

Dist	COUNTY	ROUTE	KILOMETER POST TOTAL PROJECT	SHEET No.	TOTAL SHEETS
07	LA	5	2.9/4.9	234	1082

12-23-09
REGISTERED CIVIL ENGINEER DATE

6-21-10
PLANS APPROVAL DATE

REGISTERED PROFESSIONAL ENGINEER RALPH M. SASAKI No. 30849 Exp. 3/31/10 CIVIL STATE OF CALIFORNIA

THE STATE OF CALIFORNIA OR ITS OFFICERS OR AGENTS SHALL NOT BE RESPONSIBLE FOR THE ACCURACY OR COMPLETENESS OF ELECTRONIC COPIES OF THIS PLAN SHEET.

Caltrans Metric

NOTE:

1. FOR DETAILS AND INFORMATION NOT SHOWN REFER TO CALTRANS STANDARD PLANS D73, D77B, AND D80.

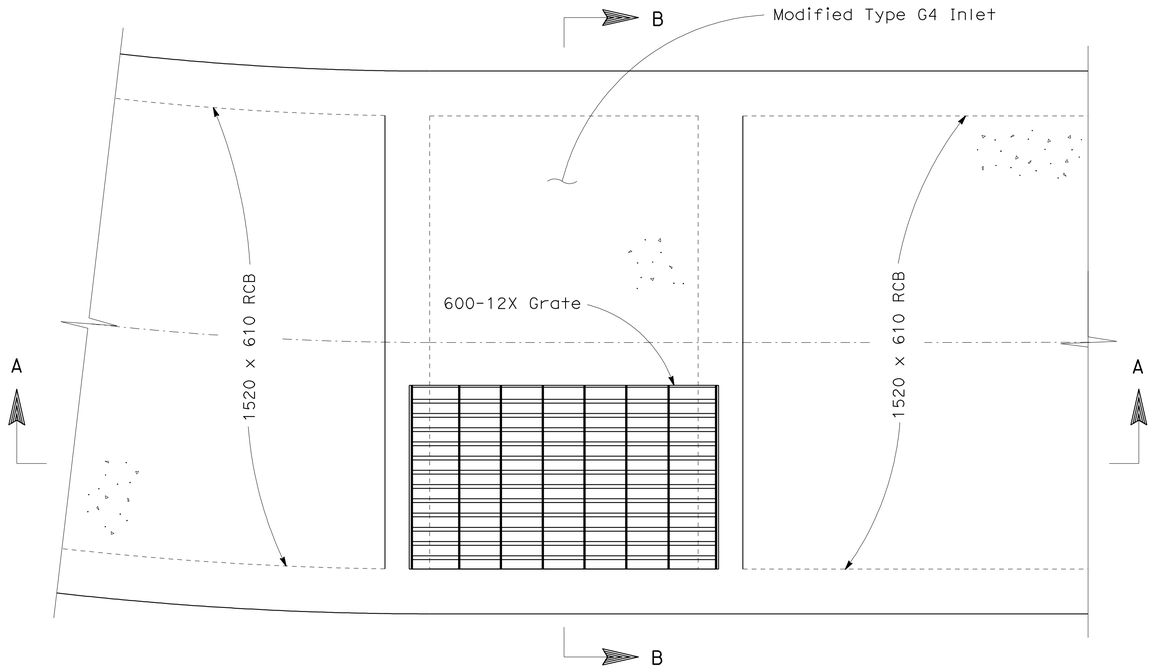

PLAN

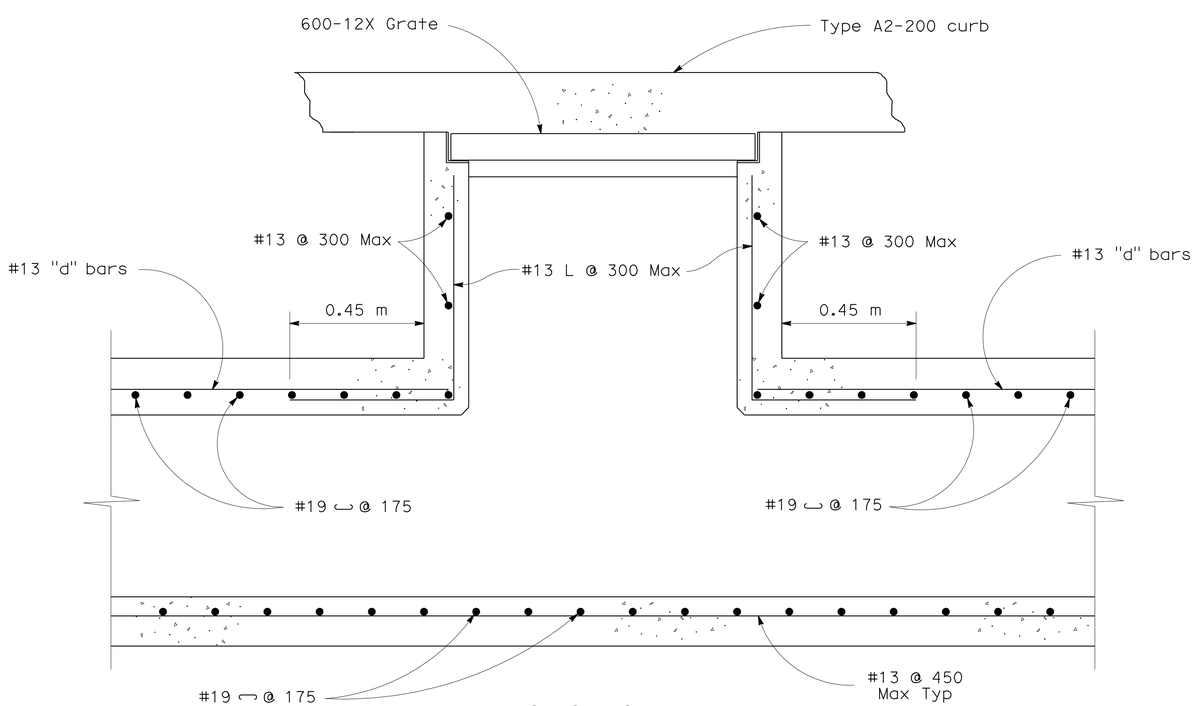

SECTION A-A

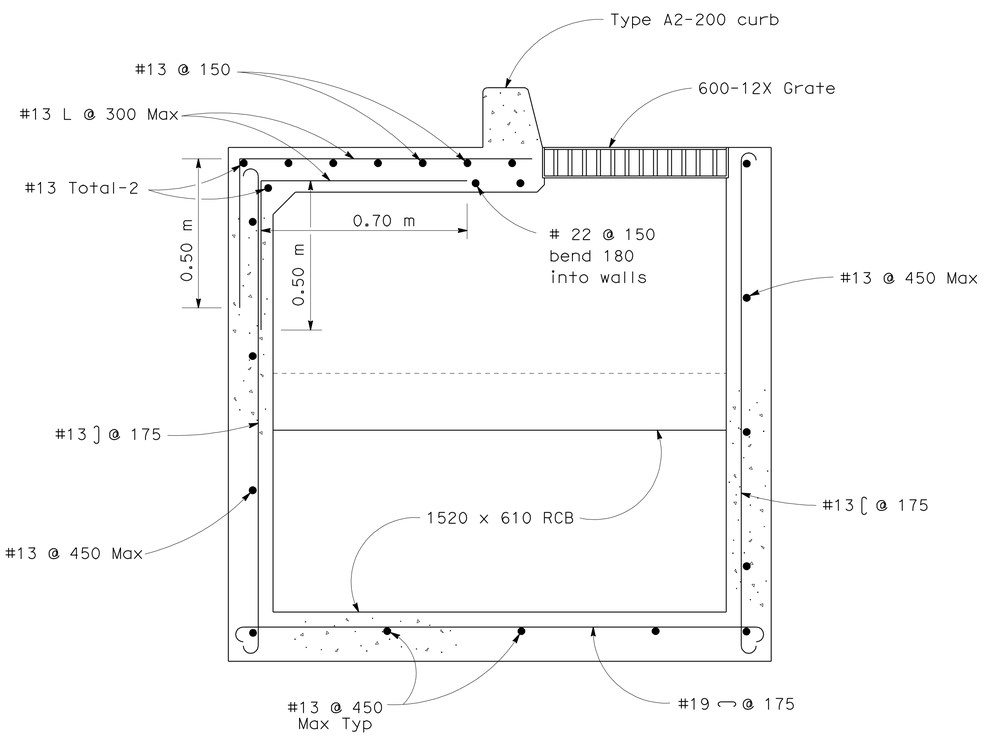

SECTION B-B

TYPE G4 INLET (MOD) ON RCB

DRAINAGE SYSTEM No. 130 e

ALL DIMENSIONS ARE IN MILLIMETERS UNLESS SHOWN OTHERWISE

DRAINAGE DETAILS

NO SCALE

DD-21

STATE OF CALIFORNIA - DEPARTMENT OF TRANSPORTATION
Caltrans
HYDRAULICS

FUNCTIONAL SUPERVISOR: RALPH M. SASAKI
CALCULATED-DESIGNED BY: S. M. TAN, W. Y. LEE
CHECKED BY: R. M. SASAKI
REVISED BY
DATE REVISED

LAST REVISION 00-00-00
DATE PLOTTED => 22-JUN-2010
TIME PLOTTED => 12:34

Dist	COUNTY	ROUTE	KILOMETER POST TOTAL PROJECT	SHEET No.	TOTAL SHEETS
07	LA	5	2.9/4.9	235	1082

Caltrans Metric

12-23-09
REGISTERED CIVIL ENGINEER DATE

6-21-10
PLANS APPROVAL DATE

REGISTERED PROFESSIONAL ENGINEER
RALPH M. SASAKI
No. 30849
Exp. 3/31/10
CIVIL
STATE OF CALIFORNIA

THE STATE OF CALIFORNIA OR ITS OFFICERS OR AGENTS SHALL NOT BE RESPONSIBLE FOR THE ACCURACY OR COMPLETENESS OF ELECTRONIC COPIES OF THIS PLAN SHEET.

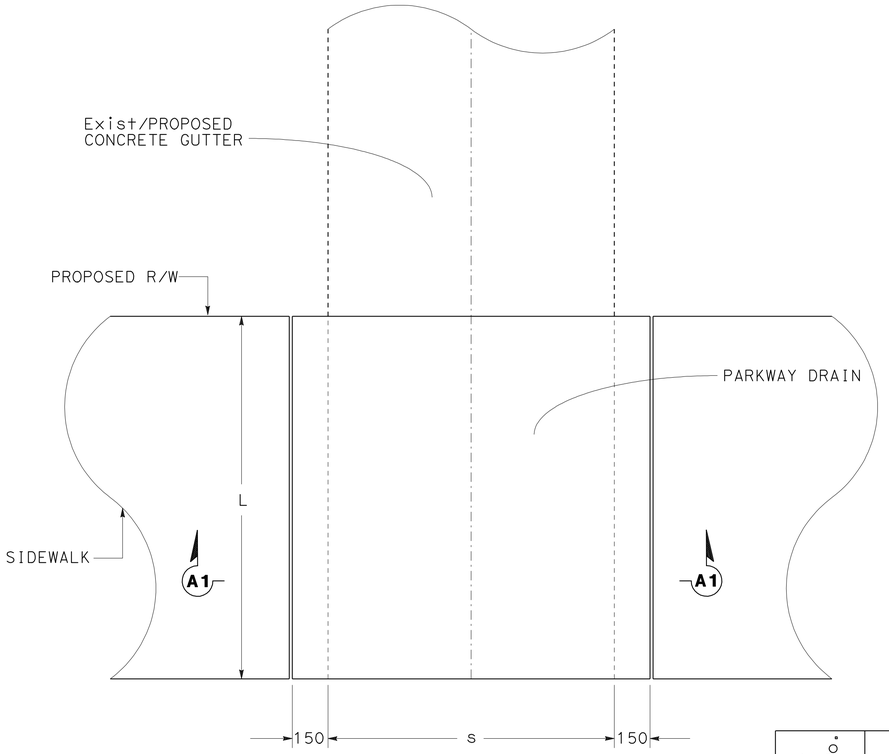

PLAN

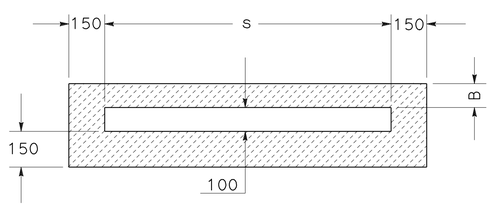

SECTION A1-A1

PARKWAY DRAIN

FOR INFORMATION AND DETAILS NOT SHOWN
SEE SPPWC 151-1

DRAINAGE SYSTEM No. ⬡	DRAINAGE UNIT ◯	PARKWAY DRAIN		
		L	s	B
91	a	2.4 m	900	100
97	a	3.4 m	1200	100
98	a	2.4 m	1200	100
99	a	2.4 m	1200	100
102	a	2.4 m	750	100
104	a	2.4 m	1350	100
105	a	2.4 m	1200	100
106	a	2.4 m	1500	100
114	a	2.4 m	1500	100
123	a	2.9 m	900	100
133	a	2.9 m	600	100
136	a	2.0 m	600	100
95	a	3.5 m	600	100
96	a	3.4 m	900	100
137	a	3.4 m	900	100

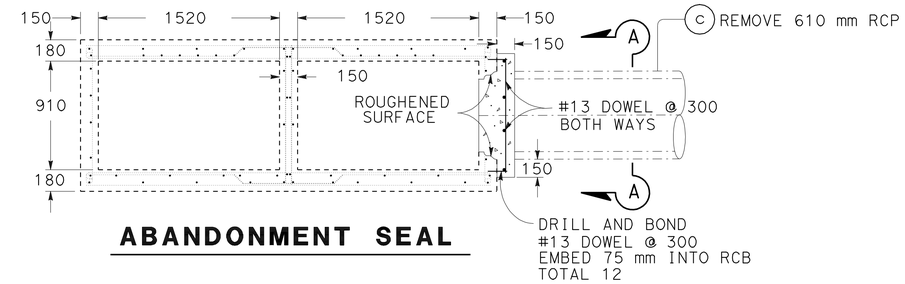

ABANDONMENT SEAL

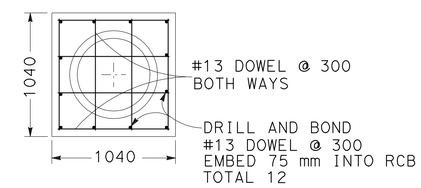

SECTION A-A

DRAINAGE SYSTEM No. ⬡ 3

ALL DIMENSIONS ARE IN
MILLIMETERS UNLESS SHOWN OTHERWISE

DRAINAGE DETAILS

NO SCALE

DD-22

STATE OF CALIFORNIA - DEPARTMENT OF TRANSPORTATION
Caltrans
HYDRAULICS

FUNCTIONAL SUPERVISOR: RALPH M. SASAKI
CALCULATED-DESIGNED BY: S. M. TAN, W. Y. LEE
CHECKED BY: R. M. SASAKI
REVISED BY
DATE REVISED

LAST REVISION 00-00-00
DATE PLOTTED => 01-FEB-2011
TIME PLOTTED => 11:38

Dist	COUNTY	ROUTE	KILOMETER POST TOTAL PROJECT	SHEET No.	TOTAL SHEETS
07	LA	5	2.9/4.9	236	1082

Ralph M. Sasaki 12-23-09
REGISTERED CIVIL ENGINEER DATE

6-21-10
PLANS APPROVAL DATE

REGISTERED PROFESSIONAL ENGINEER RALPH M. SASAKI No. 30849 Exp. 3/31/10 CIVIL STATE OF CALIFORNIA

THE STATE OF CALIFORNIA OR ITS OFFICERS OR AGENTS SHALL NOT BE RESPONSIBLE FOR THE ACCURACY OR COMPLETENESS OF ELECTRONIC COPIES OF THIS PLAN SHEET.

Caltrans Metric

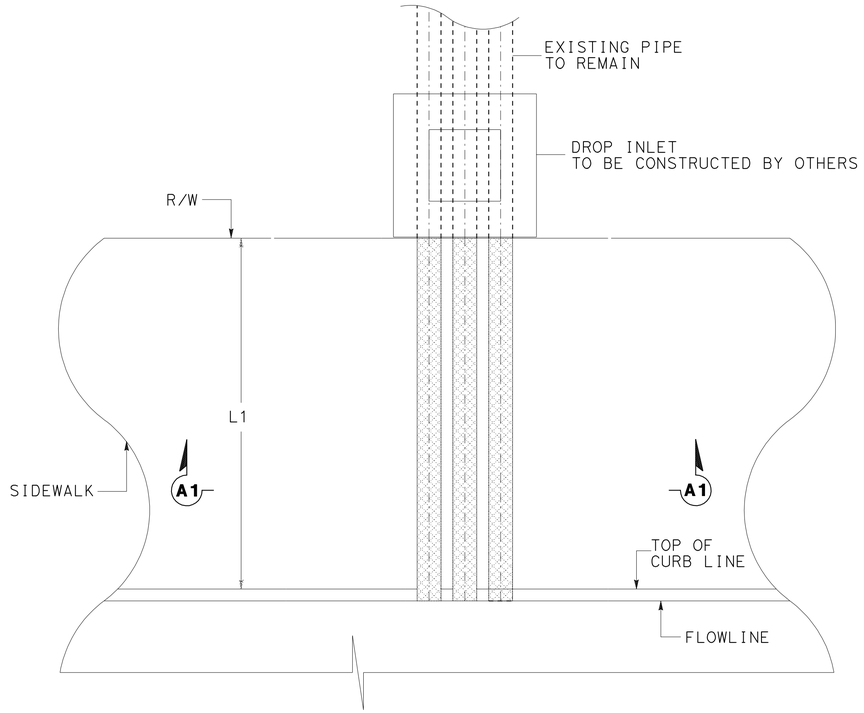

PLAN

DRAINAGE SYSTEM No. ⬡	DRAINAGE UNIT ○	CONCRETE GUTTER TRANSITION		REMOVE CONCRETE GUTTER
		L1	L2	L3
122	j	1.2 m		
	o	0.6 m	1.2 m	
135	e	1.2 m	1.2 m	
137	a			2.9 m

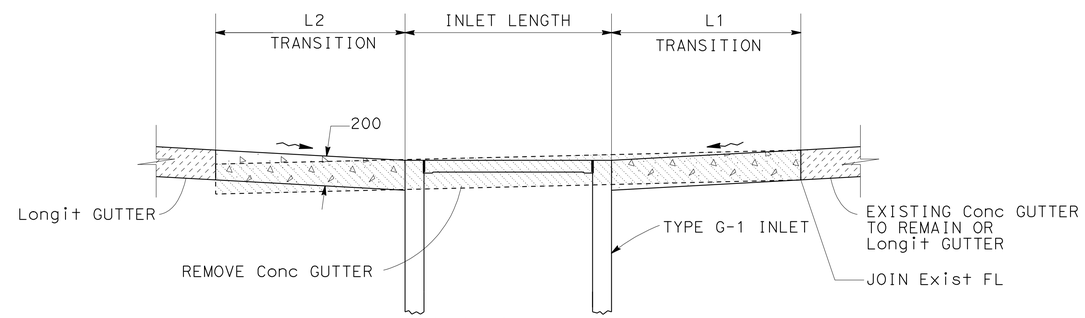

SECTION A-A

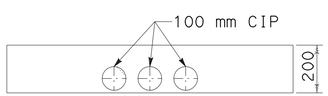

SECTION A1-A1

DRAINAGE SYSTEM No. ⬡	DRAINAGE UNIT ○	CURB DRAIN	
		L1	N
100	a	1.8 m	1
101	a	1.8 m	1
134	a	2.0 m	3

N - Number of pipes

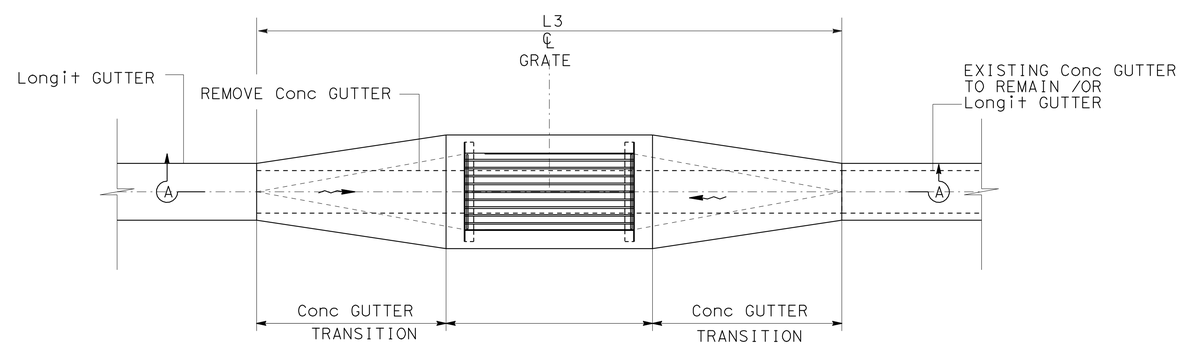

PLAN

CONCRETE GUTTER TRANSITION

CURB DRAIN

FOR INFORMATION AND DETAILS NOT SHOWN
SEE SPPWC 150-2

DRAINAGE SYSTEM No. ⬡ 122 ⬡ 135 ⬡ 137

ALL DIMENSIONS ARE IN
MILLIMETERS UNLESS SHOWN OTHERWISE

DRAINAGE DETAILS

NO SCALE

DD-23

REVISED BY	DATE REVISED

CALCULATED-DESIGNED BY S. M. TAN W. Y. LEE
CHECKED BY R. M. SASAKI

FUNCTIONAL SUPERVISOR RALPH M. SASAKI

STATE OF CALIFORNIA - DEPARTMENT OF TRANSPORTATION
Caltrans
HYDRAULICS

LAST REVISION 00-00-00 DATE PLOTTED => 01-FEB-2011 TIME PLOTTED => 11:39

Dist	COUNTY	ROUTE	KILOMETER POST TOTAL PROJECT	SHEET No.	TOTAL SHEETS
07	LA	5	2.9/4.9	237	1082

REGISTERED CIVIL ENGINEER DATE 12-23-09

PLANS APPROVAL DATE 6-21-10

REGISTERED PROFESSIONAL ENGINEER RALPH M. SASAKI No. 30849 Exp. 3/31/10 CIVIL STATE OF CALIFORNIA

THE STATE OF CALIFORNIA OR ITS OFFICERS OR AGENTS SHALL NOT BE RESPONSIBLE FOR THE ACCURACY OR COMPLETENESS OF ELECTRONIC COPIES OF THIS PLAN SHEET.

Caltrans Metric

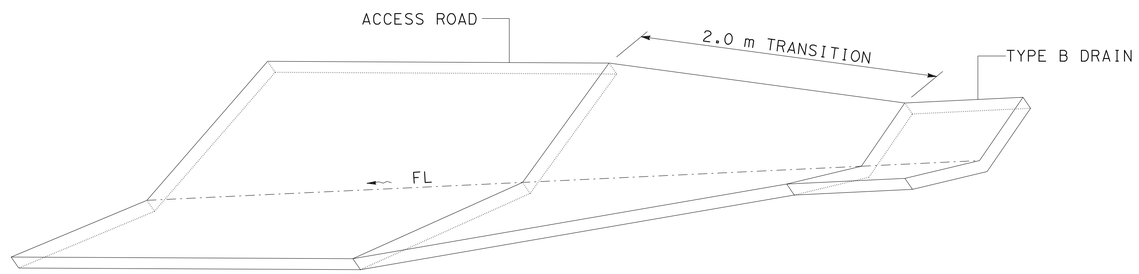

TYPE B DRAIN TRANSITION TO ACCESS ROAD

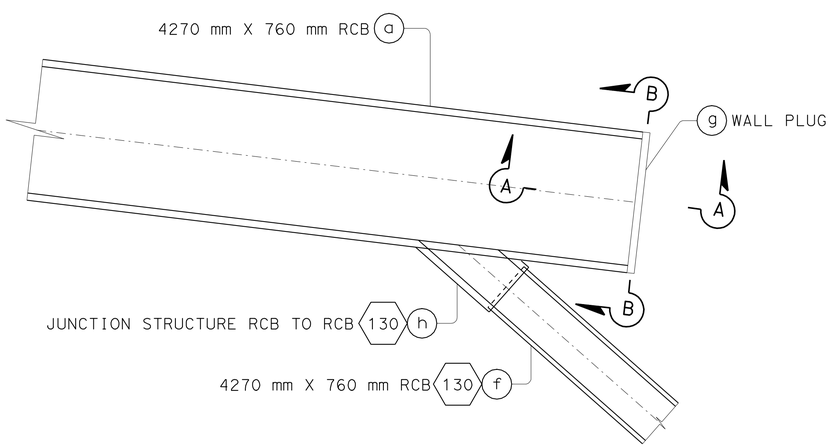

PLAN

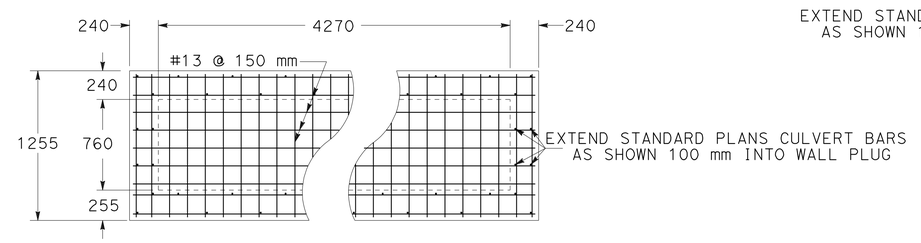

SECTION B-B

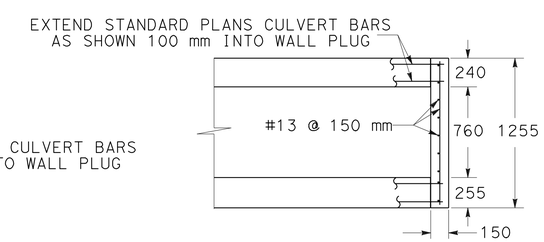

SECTION A-A

WALL PLUG

DRAINAGE SYSTEM No. 131

ALL DIMENSIONS ARE IN MILLIMETERS UNLESS SHOWN OTHERWISE

DRAINAGE DETAILS

NO SCALE

DD-24

STATE OF CALIFORNIA - DEPARTMENT OF TRANSPORTATION
Caltrans
HYDRAULICS

FUNCTIONAL SUPERVISOR RALPH M. SASAKI

CALCULATED-DESIGNED BY S. M. TAN W. Y. LEE
CHECKED BY R. M. SASAKI

REVISED BY
DATE REVISED

LAST REVISION 00-00-00
DATE PLOTTED => 22-JUN-2010
TIME PLOTTED => 12:35

Dist	COUNTY	ROUTE	KILOMETER POST TOTAL PROJECT	SHEET No.	TOTAL SHEETS
07	LA	5	2.9/4.9	238	1082

Caltrans Metric

12-23-09
REGISTERED CIVIL ENGINEER DATE

6-21-10
PLANS APPROVAL DATE

REGISTERED PROFESSIONAL ENGINEER RALPH M. SASAKI No. 30849 Exp. 3/31/10 CIVIL STATE OF CALIFORNIA

THE STATE OF CALIFORNIA OR ITS OFFICERS OR AGENTS SHALL NOT BE RESPONSIBLE FOR THE ACCURACY OR COMPLETENESS OF ELECTRONIC COPIES OF THIS PLAN SHEET.

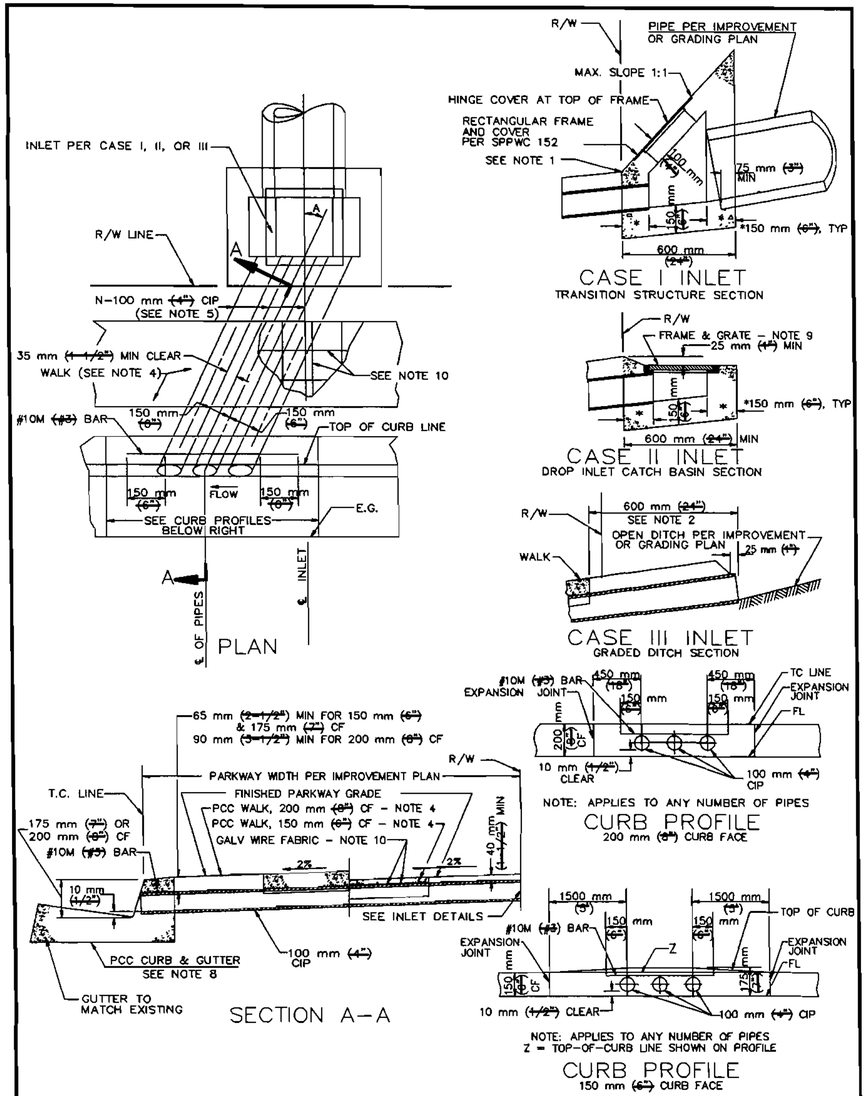

~~STANDARD PLANS FOR PUBLIC WORKS CONSTRUCTION~~

~~PROMULGATED BY THE PUBLIC WORKS STANDARDS INC. GREENBOOK COMMITTEE 1984 REV. 1992, 1996~~

CURB DRAIN

~~USE WITH STANDARD SPECIFICATIONS FOR PUBLIC WORKS CONSTRUCTION~~

STANDARD PLAN METRIC **150–2** SHEET 1 OF 2

NOTES

1. IF THE TOE OF SLOPE IS ALLOWED WITHIN THE R/W, INLET CASE I BEGINS AT THE TOE RATHER THAN THE R/W LINE.
2. FOR OPEN DITCH (CASE INLET III), THE 600 mm (~~24"~~) EXTENSION BEYOND THE R/W LINE IS NOT REQUIRED WHEN BACK OF WALK IS 600 mm (~~24"~~) OR MORE FROM THE R/W LINE; HOWEVER, PIPE SHALL EXTEND TO R/W LINE.
3. TOP OF INLET STRUCTURE (CASE I AND II) TO BE FLUSH WITH ADJACENT SURFACE WHERE PRACTICAL.
4. CONSTRUCT PCC WALK WHEN SPECIFIED ON PLANS. THE CONTRACT PRICE PAID FOR PCC WALK ITEM SHALL INCLUDE WALK CONSTRUCTED IN CONJUNCTION WITH PARKWAY CULVERT.
5. "N" EQUALS NUMBER OF PIPES (MAXIMUM OF THREE) AS SPECIFIED ON PLANS.
6. INLET CASE TO BE SPECIFIED ON PLANS.
7. ANGLE A EQUALS 0°, UNLESS OTHERWISE SPECIFIED.
8. TYPE, DIMENSIONS AND ELEVATIONS OF P.C.C. CURB AND GUTTER PER PLANS.
9. UNLESS OTHERWISE SPECIFIED, FRAME AND GRATE FOR CASE II INLET SHALL BE GALVANIZED CAST IRON. WEIGHT OF FRAME AND GRATE SHALL BE 36 kg (~~80 LBS~~).
10. AT LOCATIONS WITH LESS THAN 200 mm (~~8"~~) CURB FACE, USE 152x152–MW9.1xMW9.1 (~~6x6–10/10~~) GALVANIZED WIRE FABRIC. WIRE FABRIC SHALL EXTEND 200 mm (~~8"~~) BEYOND THE EDGE OF CAST IRON PIPES.

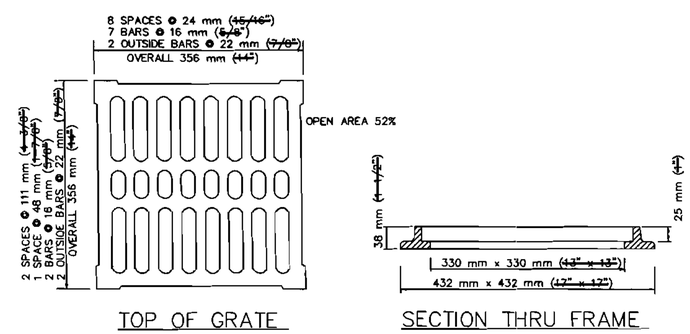

GRATE FOR CASE II INLET

~~STANDARD PLANS FOR PUBLIC WORKS CONSTRUCTION~~

CURB DRAIN

STANDARD PLAN METRIC **150–2** SHEET 2 OF 2

ALL DIMENSIONS ARE IN METERS UNLESS OTHERWISE SHOWN

DRAINAGE DETAILS

NO SCALE

DD-25

STATE OF CALIFORNIA - DEPARTMENT OF TRANSPORTATION
Caltrans **HYDRAULICS**

FUNCTIONAL SUPERVISOR: RALPH M. SASAKI
CALCULATED-DESIGNED BY: S. M. TAN / W. Y. LEE
CHECKED BY: R. M. SASAKI
REVISED BY / DATE REVISED

LAST REVISION 00-00-00 | DATE PLOTTED => 31-JAN-2011 | TIME PLOTTED => 12:52

Dist	COUNTY	ROUTE	KILOMETER POST TOTAL PROJECT	SHEET No.	TOTAL SHEETS
07	LA	5	2.9/4.9	239	1082

Caltrans Metric

REGISTERED CIVIL ENGINEER 12-23-09 DATE

6-21-10
PLANS APPROVAL DATE

REGISTERED PROFESSIONAL ENGINEER RALPH M. SASAKI No. 30849 Exp. 3/31/10 CIVIL STATE OF CALIFORNIA

THE STATE OF CALIFORNIA OR ITS OFFICERS OR AGENTS SHALL NOT BE RESPONSIBLE FOR THE ACCURACY OR COMPLETENESS OF ELECTRONIC COPIES OF THIS PLAN SHEET.

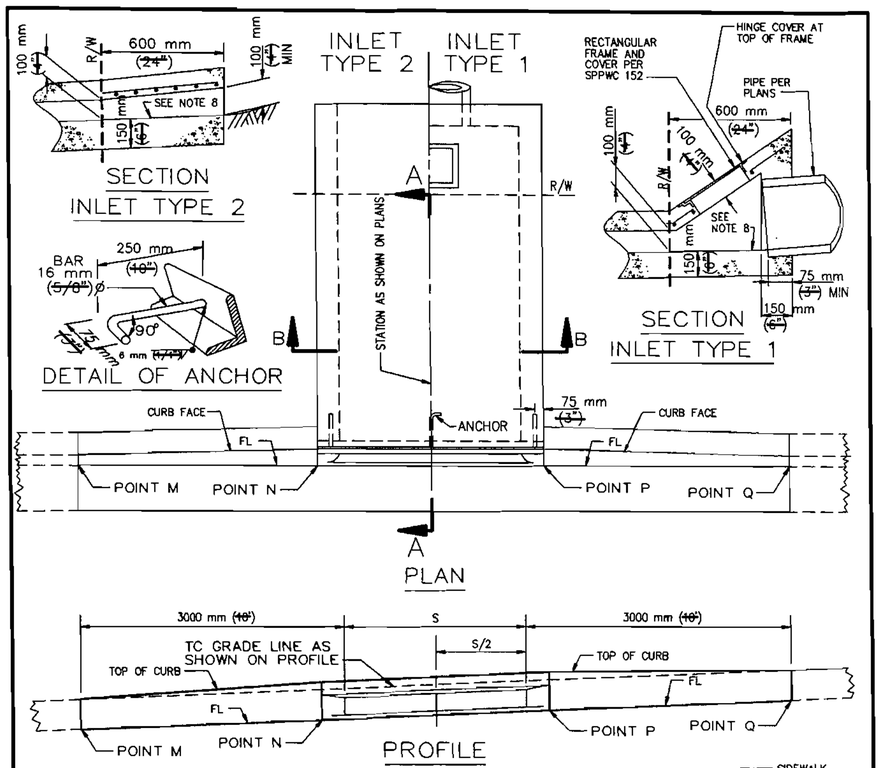

S, mm	J BAR SPACING, mm
300 (12")	240 (7")
450 (18")	240 (7")
600 (24")	240 (7")
750 (30")	240 (7")
900 (36")	240 (7")
1050 (42")	210 (6")
1200 (48")	180 (5")
1350 (54")	225 (6-1/2")
1500 (60")	180 (5")
1650 (66")	180 (4")
1800 (72")	120 (3-1/2")

FOR S = 750 mm (30") AND LESS, USE 2 ANCHORS. OTHERWISE, USE 3 ANCHORS.

FOR S = 1200 mm (48") AND LESS, B = 75 mm (3")
USE 64x51x9.5 (2-1/2"x2"x3/8") GALVANIZED STEEL ANGLE.

OTHERWISE, B = 100 mm (4"). USE 89x76x12.7 (3-1/2"x3"x1/2") GALVANIZED STEEL ANGLE.

J BARS ARE #10M (#3).

~~STANDARD PLANS FOR PUBLIC WORKS CONSTRUCTION~~

~~PROMULGATED BY THE PUBLIC WORKS STANDARDS INC. GREENBOOK COMMITTEE 1993 REV. 1996~~

PARKWAY DRAIN

~~USE WITH STANDARD SPECIFICATIONS FOR PUBLIC WORKS CONSTRUCTION~~

STANDARD PLAN METRIC
151–1
SHEET 1 OF 2

NOTES

1. FLOOR OF BOX SHALL BE TROWLED SMOOTH.
2. IF THE TOE OF SLOPE IS ALLOWED WITHIN THE R/W, INLET TYPE 1 BEGINS AT THE TOE RATHER THAN AT THE R/W LINE.
3. FOR OPEN DITCH (TYPE 2), THE 600 mm (24") EXTENSION BEYOND THE R/W LINE IS NOT REQUIRED WHEN BACK OF WALK IS 600 mm (24") OR MORE FROM THE R/W LINE; HOWEVER, THE PIPE SHALL EXTEND TO THE R/W LINE IN ANY EVENT.
4. TOP OF INLET STRUCTURE (TYPE 1 & 2) SHALL BE FLUSH WITH ADJACENT SURFACE WHERE PRACTICAL.
5. A HEADED STEEL STUD 16 mm x 160 mm WITH A 25 mm HEAD (5/8" x 6-3/8", 1" HEAD) ATTACHED BY A FULL PENETRATION BUTT WELD MAY BE USED AS AN ALTERNATE ANCHOR.
6. NORMAL CURB FACE AT POINT M AND Q. CURB FACE IS B + 125 mm (5") AT POINT N AND P.
7. THE 75 mm (3") LEG OF THE 16 mm (5/8") DIA ANCHORS SHALL BE PARALLEL TO THE TOP OF SIDEWALK.
8. SLOPE = 2.0%.

~~STANDARD PLANS FOR PUBLIC WORKS CONSTRUCTION~~

PARKWAY DRAIN

STANDARD PLAN METRIC
151–1
SHEET 2 OF 2

ALL DIMENSIONS ARE IN METERS UNLESS OTHERWISE SHOWN

DRAINAGE DETAILS

NO SCALE

DD-26

STATE OF CALIFORNIA - DEPARTMENT OF TRANSPORTATION
Caltrans
HYDRAULICS

FUNCTIONAL SUPERVISOR: RALPH M. SASAKI
CALCULATED-DESIGNED BY: S. M. TAN, W. Y. LEE
CHECKED BY: R. M. SASAKI
REVISED BY / DATE REVISED

LAST REVISION 00-00-00
DATE PLOTTED => 31-JAN-2011
TIME PLOTTED => 12:52

Dist	COUNTY	ROUTE	KILOMETER POST TOTAL PROJECT	SHEET No.	TOTAL SHEETS
07	LA	5	2.9/4.9	240	1082

Caltrans Metric

12-23-09
REGISTERED CIVIL ENGINEER DATE

6-21-10
PLANS APPROVAL DATE

REGISTERED PROFESSIONAL ENGINEER RALPH M. SASAKI No. 30849 Exp. 3/31/10 CIVIL STATE OF CALIFORNIA

THE STATE OF CALIFORNIA OR ITS OFFICERS OR AGENTS SHALL NOT BE RESPONSIBLE FOR THE ACCURACY OR COMPLETENESS OF ELECTRONIC COPIES OF THIS PLAN SHEET.

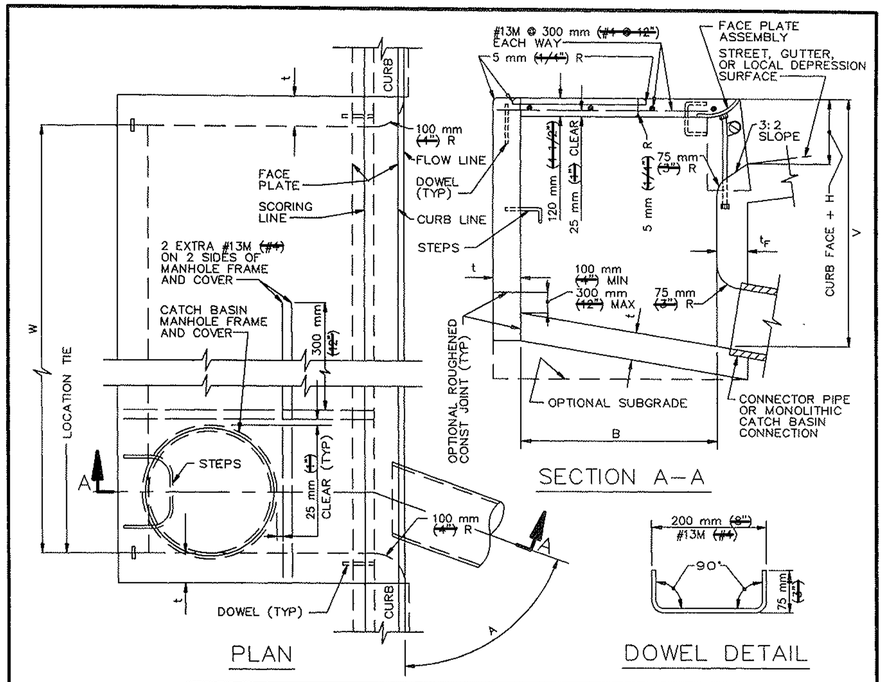

STRUCTURAL DATA

WALL AND SLAB DIMENSIONS AND REINFORCEMENT REQUIREMENTS

MAX W	MAX V	t	t_F	REINFORCEMENT REQUIRED IN: FRONT WALL	REAR WALL	BOTTOM SLAB	END WALL
1.0 m (~~3.5'~~)	2.4 m (~~8'~~)	150 mm (~~6"~~)	150 mm (~~6"~~)	NO REINFORCEMENT REQUIRED			
1.0 m (~~3.5'~~)	3.5 m (~~12'~~)	200 mm (~~8"~~)	200 mm (~~8"~~)				
2.0 m (~~7'~~)	1.8 m (~~6'~~)	150 mm (~~6"~~)	150 mm (~~6"~~)				
2.0 m (~~7'~~)	3.5 m (~~12'~~)	200 mm (~~8"~~)	200 mm (~~8"~~)				
4.0 m (~~14'~~)	1.2 m (~~4'~~)	150 mm (~~6"~~)	150 mm (~~6"~~)	REINFORCEMENT			
	2.4 m (~~8'~~)	150 mm (~~6"~~)	200 mm (~~8"~~)				
4.0 m (~~14'~~)	3.5 m (~~12'~~)	200 mm (~~8"~~)	250 mm (~~10"~~)				
6 m (~~20'~~) AND 9 m (~~28'~~)	1.2 m (~~4'~~)	150 mm (~~6"~~)	150 mm (~~6"~~)			REINFORCEMENT REQUIRED	
	1.8 m (~~6'~~)	150 mm (~~6"~~)	200 mm (~~8"~~)				
	2.4 m (~~8'~~)	200 mm (~~8"~~)	200 mm (~~8"~~)				
	3.0 m (~~10'~~)	200 mm (~~8"~~)	250 mm (~~10"~~)				
	3.5 m (~~12'~~)	200 mm (~~8"~~)	250 mm (~~10"~~)				

FOR W > 9 m (~~28'~~), V > 3.5 m (~~12'~~) OR B > 1.2 m (~~4'~~) SEE PLANS

~~STANDARD PLANS FOR PUBLIC WORKS CONSTRUCTION~~

~~PROMULGATED BY THE PUBLIC WORKS STANDARDS, INC., GREENBOOK COMMITTEE 1984 REV. 1992, 1996~~

CURB OPENING CATCH BASIN

USE WITH STANDARD SPECIFICATIONS FOR PUBLIC WORKS CONSTRUCTION

STANDARD PLAN METRIC 300–2 SHEET 1 OF 2

NOTES:

1. WHERE THE BASIN IS TO BE CONSTRUCTED WITHIN THE LIMITS OF EXISTING OR PROPOSED SIDEWALK OR IS CONTIGUOUS TO SUCH SIDEWALK, THE TOP SLAB OF THE BASIN MAY BE POURED EITHER MONOLITHIC WITH THE SIDEWALK OR SEPARATELY, USING THE SAME CLASS OF CONCRETE AS IN THE BASIN. WHEN POURED MONOLITHICALLY, THE SIDEWALK SHALL BE PROVIDED WITH A WEAKENED PLANE OR A 25 mm (~~1"~~) DEEP SAWCUT CONTINUOUSLY AROUND THE EXTERNAL PERIMETER OF THE CATCH BASIN WALLS, INCLUDING ACROSS THE FULL WIDTH OF THE SIDEWALK. SURFACE OF ALL EXPOSED CONCRETE SHALL CONFORM IN SLOPE, GRADE, COLOR, FINISH, AND SCORING TO EXISTING OR PROPOSED CURB AND WALK ADJACENT TO THE BASIN.
2. ALL CURVED CONCRETE SURFACES SHALL BE FORMED BY CURVED FORMS, AND SHALL NOT BE SHAPED BY PLASTERING.
3. FLOOR OF BASIN SHALL BE GIVEN A STEEL TROWEL FINISH AND SHALL HAVE A LONGITUDINAL AND LATERAL SLOPE OF 1:12 MINIMUM AND 1:3 MAXIMUM, EXCEPT WHERE THE GUTTER GRADE EXCEEDS 8%, IN WHICH CASE THE LONGITUDINAL SLOPE OF THE FLOOR SHALL BE THE SAME AS THE GUTTER GRADE. SLOPE FLOOR FROM ALL DIRECTIONS TO THE OUTLET.
4. DIMENSIONS:
   - B = 970 mm (~~3'-2"~~)
   - V = THE DIFFERENCE IN ELEVATION BETWEEN THE TOP OF THE CURB AND THE INVERT OF THE CATCH BASIN AT THE OUTLET = 1.35 m (~~4.5'~~).
   - V_U = THE DIFFERENCE IN ELEVATION BETWEEN THE TOP OF THE CURB AND THE INVERT AT THE UPSTREAM END OF THE BASIN, AND SHALL BE DETERMINED BY THE REQUIREMENTS OF NOTE 3, BUT SHALL NOT BE LESS THAN CURB FACE PLUS 300 mm (~~12"~~).
   - V_I = THE DIFFERENCE IN ELEVATION BETWEEN THE TOP OF THE CURB AND THE INVERT OF THE INLET, NOTED ON THE PLANS.
   - H = NOTED ON THE PLANS.
   - W = NOTED ON THE PLANS.
   - A = THE ANGLE, IN DEGREES, INTERCEPTED BY THE CENTERLINE OF THE CONNECTOR PIPE AND THE CATCH BASIN WALL TO WHICH THE CONNECTOR PIPE IS ATTACHED.
5. PLACE CONNECTOR PIPES AS INDICATED ON THE PLANS. UNLESS OTHERWISE SPECIFIED, THE CONNECTOR PIPE SHALL BE LOCATED AT THE DOWNSTREAM END OF THE BASIN. WHERE THE CONNECTOR PIPE IS SHOWN AT A CORNER, THE CENTERLINE OF THE PIPE SHALL INTERSECT THE INSIDE CORNER OF THE BASIN. THE PIPE MAY BE CUT AND TRIMMED AT A SKEW NECESSARY TO INSURE MINIMUM 80 mm (~~3"~~) PIPE EMBEDMENT, ALL AROUND, WITHIN THE CATCH BASIN WALL, AND 75 mm (~~3"~~) RADIUS OF ROUNDING OF STRUCTURE CONCRETE, ALL AROUND, ADJACENT TO PIPE ENDS. A MONOLITHIC CATCH BASIN CONNECTION SHALL BE USED TO JOIN THE CONNECTOR PIPE TO THE CATCH BASIN WHENEVER ANGLE "A" IS LESS THAN 70° OR GREATER THAN 110°, OR WHENEVER THE CONNECTOR PIPE IS LOCATED IN A CORNER. THE OPTIONAL USE OF A MONOLITHIC CATCH BASIN CONNECTION IN ANY CASE IS PERMITTED. MONOLITHIC CATCH BASIN CONNECTIONS MAY BE CONSTRUCTED TO AVOID CUTTING STANDARD LENGTHS OF PIPE.
6. STEPS SHALL BE LOCATED AS SHOWN. IF THE CONNECTOR PIPE INTERFERES WITH THE STEPS, THEY SHALL BE LOCATED AT THE CENTERLINE OF THE DOWNSTREAM END WALL. STEPS SHALL BE SPACED 300 mm (~~12"~~) APART. THE TOP STEP SHALL BE 175 mm (~~7"~~) BELOW THE TOP OF THE MANHOLE AND PROJECT 65 mm (~~2 1/2"~~). ALL OTHER STEPS SHALL PROJECT 130 mm (~~5"~~).
7. DOWELS ARE REQUIRED AT EACH CORNER AND AT 2 m (~~7'~~) ON CENTER (MAXIMUM) ALONG THE BACKWALL.
8. THE FOLLOWING SPPWC ARE INCORPORATED HEREIN:
   - 308 MONOLITHIC CATCH BASIN CONNECTION
   - 309 CATCH BASIN REINFORCEMENT
   - 310 CATCH BASIN FACE PLATE ASSEMBLY AND PROTECTION BAR
   - 312 CATCH BASIN MANHOLE FRAME AND COVER
   - 635 STEEL STEP
   - 636 POLYPROPYLENE PLASTIC STEP

~~STANDARD PLANS FOR PUBLIC WORKS CONSTRUCTION~~

CURB OPENING CATCH BASIN

STANDARD PLAN METRIC 300–2 SHEET 2 OF 2

ALL DIMENSIONS ARE IN METERS UNLESS OTHERWISE SHOWN

DRAINAGE DETAILS

NO SCALE

DD-27

FUNCTIONAL SUPERVISOR	CALCULATED-DESIGNED BY	REVISED BY
RALPH M. SASAKI	S. M. TAN / W. Y. LEE	
	CHECKED BY	DATE REVISED
	R. M. SASAKI	

STATE OF CALIFORNIA - DEPARTMENT OF TRANSPORTATION
Caltrans HYDRAULICS

LAST REVISION 00-00-00 | DATE PLOTTED => 31-JAN-2011 | TIME PLOTTED => 12:52

Dist	COUNTY	ROUTE	KILOMETER POST TOTAL PROJECT	SHEET No.	TOTAL SHEETS
07	LA	5	2.9/4.9	241	1082

Caltrans Metric

12-23-09
REGISTERED CIVIL ENGINEER DATE

6-21-10
PLANS APPROVAL DATE

REGISTERED PROFESSIONAL ENGINEER RALPH M. SASAKI No. 30849 Exp. 3/31/10 CIVIL STATE OF CALIFORNIA

THE STATE OF CALIFORNIA OR ITS OFFICERS OR AGENTS SHALL NOT BE RESPONSIBLE FOR THE ACCURACY OR COMPLETENESS OF ELECTRONIC COPIES OF THIS PLAN SHEET.

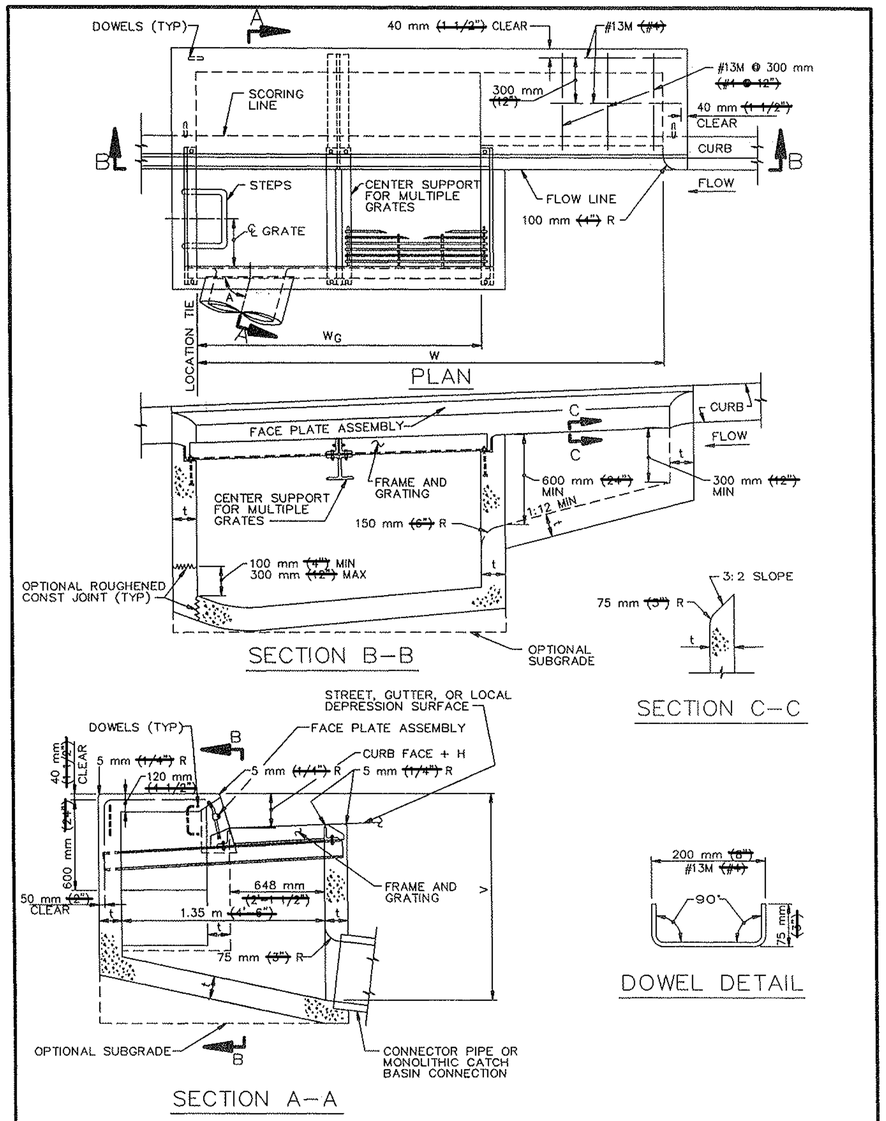

~~STANDARD PLANS FOR PUBLIC WORKS CONSTRUCTION~~

~~PROMULGATED BY THE PUBLIC WORKS STANDARDS, INC., GREENBOOK COMMITTEE 1984 REV. 1992, 1996~~

CURB OPENING CATCH BASIN WITH GRATING(S) AND DEBRIS SKIMMER

~~USE WITH STANDARD SPECIFICATIONS FOR PUBLIC WORKS CONSTRUCTION~~

STANDARD PLAN METRIC 301–2 SHEET 1 OF 3

STRUCTURAL DATA

WALL AND SLAB DIMENSIONS AND REINFORCEMENT REQUIREMENTS

MAXIMUM			t	WALL			FLOOR
W	GRATES	V		FRONT	REAR	END	
2.0 m (7')	1	1.2 m (4')	150 mm (6")	NO REINFORCEMENT REQUIRED			
2.0 m (7')	1	2.4 m (8')	200 mm (8")				
2.0 m (7')	1	3.0 m (10')	250 mm (10")				
4.0 m (14')	3	1.2 m (4')	150 mm (6")				
4.0 m (14')	2	2.4 m (8')	200 mm (8")				
4.0 m (14')	2	3.0 m (10')	250 mm (10")				
4.0 m (14')	2	3.5 m (12')	250 mm (10")				
9.0 m (28')	6	1.2 m (4')	150 mm (6")	REINFORCEMENT REQUIRED			
9.0 m (28')	6	1.8 m (6')	200 mm (8")				
9.0 m (28')	7	1.2 m (4')	150 mm (6")				
9.0 m (28')	7	2.4 m (8')	200 mm (8")				
9.0 m (28')	7	3.0 m (10')	250 mm (10")				
9.0 m (28')	7	3.5 m (12')	250 mm (10")				

FOR W > 9 m (28'), V > 3.5 m (12') OR NO. OF GRATES > 7 SEE PLANS

~~STANDARD PLANS FOR PUBLIC WORKS CONSTRUCTION~~

CURB OPENING CATCH BASIN WITH GRATING(S) AND DEBRIS SKIMMER

STANDARD PLAN METRIC 301–2 SHEET 2 OF 3

ALL DIMENSIONS ARE IN METERS UNLESS OTHERWISE SHOWN

DRAINAGE DETAILS

NO SCALE

DD-28

STATE OF CALIFORNIA - DEPARTMENT OF TRANSPORTATION
Caltrans
HYDRAULICS
FUNCTIONAL SUPERVISOR RALPH M. SASAKI
CALCULATED-DESIGNED BY S. M. TAN W. Y. LEE
CHECKED BY R. M. SASAKI
REVISED BY
DATE REVISED

LAST REVISION 00-00-00 DATE PLOTTED => 31-JAN-2011 TIME PLOTTED => 13:21

Dist	COUNTY	ROUTE	KILOMETER POST TOTAL PROJECT	SHEET No.	TOTAL SHEETS
07	LA	5	2.9/4.9	242	1082

Caltrans Metric

REGISTERED CIVIL ENGINEER DATE 12-23-09

PLANS APPROVAL DATE 6-21-10

REGISTERED PROFESSIONAL ENGINEER RALPH M. SASAKI No. 30849 Exp. 3/31/10 CIVIL STATE OF CALIFORNIA

THE STATE OF CALIFORNIA OR ITS OFFICERS OR AGENTS SHALL NOT BE RESPONSIBLE FOR THE ACCURACY OR COMPLETENESS OF ELECTRONIC COPIES OF THIS PLAN SHEET.

NOTES:

1. WHERE THE BASIN IS TO BE CONSTRUCTED WITHIN THE LIMITS OF EXISTING OR PROPOSED SIDEWALK OR IS CONTIGUOUS TO SUCH SIDEWALK, THE TOP SLAB OF THE BASIN MAY BE POURED EITHER MONOLITHIC WITH THE SIDEWALK OR SEPARATELY, USING THE SAME CLASS OF CONCRETE AS IN THE BASIN. WHEN POURED MONOLITHICALLY, THE SIDEWALK SHALL BE PROVIDED WITH A WEAKENED PLANE OR A 25 mm ~~(1")~~ DEEP SAWCUT CONTINUOUSLY AROUND THE EXTERNAL PERIMETER OF THE CATCH BASIN WALLS, INCLUDING ACROSS THE FULL WIDTH OF THE SIDEWALK. SURFACE OF ALL EXPOSED CONCRETE SHALL CONFORM IN SLOPE, GRADE, COLOR, FINISH, AND SCORING TO EXISTING OR PROPOSED CURB AND WALK ADJACENT TO THE BASIN.

2. ALL CURVED CONCRETE SURFACES SHALL BE FORMED BY CURVED FORMS, AND SHALL NOT BE SHAPED BY PLASTERING.

3. FLOOR OF BASIN SHALL BE GIVEN A STEEL TROWEL FINISH. FLOOR OF GRATING PORTION SHALL HAVE A LONGITUDINAL AND LATERAL SLOPE OF 1:12 MINIMUM AND 1:3 MAXIMUM, EXCEPT WHERE THE GUTTER GRADE EXCEEDS 8%, IN WHICH CASE THE LONGITUDINAL SLOPE OF THE FLOOR SHALL BE THE SAME AS THE GUTTER GRADE, SLOPE FLOOR FROM ALL DIRECTIONS TO THE OUTLET.

4. DIMENSIONS:

   V = THE DIFFERENCE IN ELEVATION BETWEEN THE TOP OF THE CURB AND THE INVERT OF THE CATCH BASIN AT THE OUTLET = 1.35 m ~~(4.5')~~.

   V_I = THE DIFFERENCE IN ELEVATION BETWEEN THE TOP OF THE CURB AND THE INVERT OF THE INLET, NOTED ON THE PLANS.

   H = NOTED ON THE PLANS.

   W = 2 m ~~(7')~~ UNLESS OTHERWISE NOTED ON THE PLANS.

   W_G = 900 mm ~~(2' 11 3/8")~~ FOR ONE GRATING; ADD 1051 mm ~~(3' 5 3/8")~~ FOR EACH ADDITIONAL GRATING. ONE GRATING IS REQUIRED UNLESS OTHERWISE SHOWN ON THE PLANS.

   A = THE ANGLE, IN DEGREES, INTERCEPTED BY THE CENTERLINE OF THE CONNECTOR PIPE AND THE CATCH BASIN WALL TO WHICH THE CONNECTOR PIPE IS ATTACHED.

5. PLACE CONNECTOR PIPES AS INDICATED ON THE PLANS. UNLESS OTHERWISE SPECIFIED, THE CONNECTOR PIPE SHALL BE LOCATED AT THE DOWNSTREAM END OF THE BASIN. WHERE THE CONNECTOR PIPE IS SHOWN AT A CORNER, THE CENTERLINE OF THE PIPE SHALL INTERSECT THE INSIDE CORNER OF THE BASIN. THE PIPE MAY BE CUT AND TRIMMED AT A SKEW NECESSARY TO INSURE MINIMUM 80 mm ~~(3")~~ PIPE EMBEDMENT, ALL AROUND, WITHIN THE CATCH BASIN WALL, AND 75 mm ~~(3")~~ RADIUS OF ROUNDING OF STRUCTURE CONCRETE, ALL AROUND, ADJACENT TO PIPE ENDS. A MONOLITHIC CATCH BASIN CONNECTION SHALL BE USED TO JOIN THE CONNECTOR PIPE TO THE CATCH BASIN WHENEVER ANGLE "A" IS LESS THAN 70° OR GREATER THAN 110°, OR WHENEVER THE CONNECTOR PIPE IS LOCATED IN A CORNER. THE OPTIONAL USE OF A MONOLITHIC CATCH BASIN CONNECTION IN ANY CASE IS PERMITTED. MONOLITHIC CATCH BASIN CONNECTIONS MAY BE CONSTRUCTED TO AVOID CUTTING STANDARD LENGTHS OF PIPE.

6. STEPS SHALL BE LOCATED AS SHOWN. IF THE CONNECTOR PIPE INTERFERES WITH THE STEPS, THEY SHALL BE LOCATED ON THE FRONT WALL AT THE CENTERLINE OF THE DOWNSTREAM GRATING. STEPS SHALL BE SPACED 300 mm ~~(12")~~ APART. THE TOP STEP SHALL BE 175 mm ~~(7")~~ BELOW THE TOP OF THE GRATING AND PROJECT 65 mm ~~(2-1/2")~~. ALL OTHER STEPS SHALL PROJECT 130 mm ~~(5")~~.

7. DOWELS ARE REQUIRED AT EACH CORNER AND AT 2 m ~~(7')~~ ON CENTER (MAXIMUM) ALONG THE BACKWALL.

8. THE FOLLOWING SPPWC ARE INCORPORATED HEREIN:

   308 MONOLITHIC CATCH BASIN CONNECTION
   309 CATCH BASIN REINFORCEMENT
   310 CATCH BASIN FACE PLATE ASSEMBLY AND PROTECTION BAR
   311 FRAME AND GRATING FOR CATCH BASINS
   635 STEEL STEP
   636 POLYPROPYLENE PLASTIC STEP

~~STANDARD PLANS FOR PUBLIC WORKS CONSTRUCTION~~

CURB OPENING CATCH BASIN WITH GRATING(S) AND DEBRIS SKIMMER

STANDARD PLAN METRIC
301-2
SHEET 3 OF 3

ALL DIMENSIONS ARE IN METERS UNLESS OTHERWISE SHOWN

DRAINAGE DETAILS

NO SCALE

DD-29

REVISED BY	DATE REVISED

CALCULATED-DESIGNED BY S. M. TAN W. Y. LEE
CHECKED BY R. M. SASAKI
FUNCTIONAL SUPERVISOR RALPH M. SASAKI

STATE OF CALIFORNIA - DEPARTMENT OF TRANSPORTATION
Caltrans **HYDRAULICS**

LAST REVISION 00-00-00 DATE PLOTTED => 31-JAN-2011 TIME PLOTTED => 13:22

Dist	COUNTY	ROUTE	KILOMETER POST TOTAL PROJECT	SHEET No.	TOTAL SHEETS
07	LA	5	2.9/4.9	243	1082

Caltrans Metric

12-23-09
REGISTERED CIVIL ENGINEER DATE

6-21-10
PLANS APPROVAL DATE

REGISTERED PROFESSIONAL ENGINEER RALPH M. SASAKI No. 30849 Exp. 3/31/10 CIVIL STATE OF CALIFORNIA

THE STATE OF CALIFORNIA OR ITS OFFICERS OR AGENTS SHALL NOT BE RESPONSIBLE FOR THE ACCURACY OR COMPLETENESS OF ELECTRONIC COPIES OF THIS PLAN SHEET.

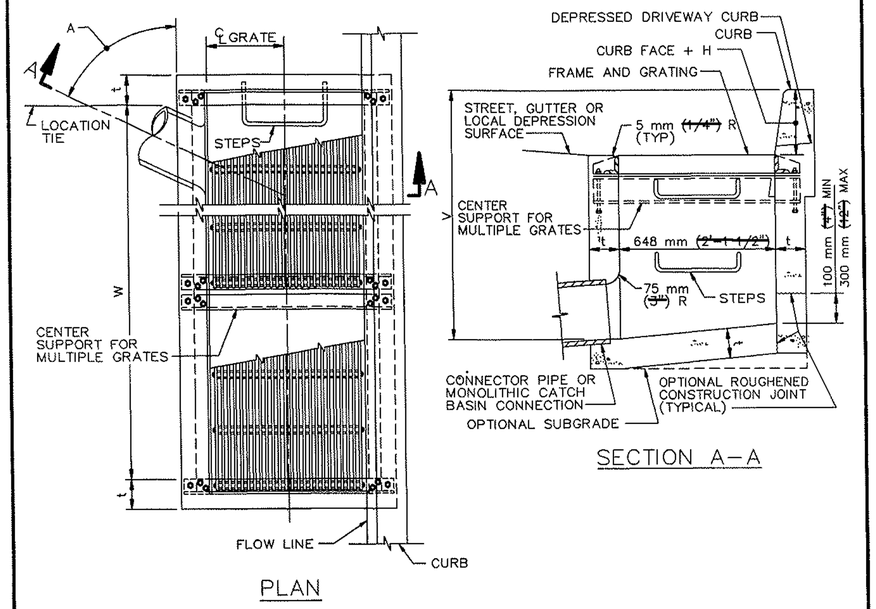

PLAN

SECTION A–A

STRUCTURAL DATA			
WALL AND SLAB DIMENSIONS AND REINFORCEMENT REQUIREMENTS			
NO. OF GRATES	MAX V	t	REINFORCEMENT FOR WALLS AND SLABS
1–2	1.2 m (~~4'~~)	150 mm (~~6"~~)	NOT REQUIRED
1–2	2.4 m (~~8'~~)	200 mm (~~8"~~)	
1–2	3.0 m (~~10'~~)	250 mm (~~10"~~)	
1–2	3.5 m (~~12'~~)	250 mm (~~10"~~)	REQUIRED
3–4	1.2 m (~~4'~~)	150 mm (~~6"~~)	NOT REQUIRED
3–4	2.0 m (~~7'~~)	200 mm (~~8"~~)	
3–4	2.4 m (~~8'~~)	200 mm (~~8"~~)	REQUIRED
3–4	3.5 m (~~12'~~)	250 mm (~~10"~~)	
5–6	1.2 m (~~4'~~)	150 mm (~~6"~~)	NOT REQUIRED
5–6	1.8 m (~~6'~~)	200 mm (~~8"~~)	
5–6	2.4 m (~~8'~~)	200 mm (~~8"~~)	REQUIRED
5–6	3.5 m (~~12'~~)	200 mm (~~8"~~)	
> 6	1.2 m (~~4'~~)	150 mm (~~6"~~)	
> 6	2.4 m (~~8'~~)	200 mm (~~8"~~)	
> 6	3.5 m (~~12'~~)	250 mm (~~10"~~)	

~~STANDARD PLANS FOR PUBLIC WORKS CONSTRUCTION~~

~~PROMULGATED BY THE PUBLIC WORKS STANDARDS, INC., GREENBOOK COMMITTEE 1984 REV. 1992, 1996~~

CURBSIDE GRATING CATCH BASIN

~~USE WITH STANDARD SPECIFICATIONS FOR PUBLIC WORKS CONSTRUCTION~~

STANDARD PLAN METRIC
303–2
SHEET 1 OF 2

NOTES:

1. SURFACE OF ALL EXPOSED CONCRETE SHALL CONFORM IN SLOPE GRADE, COLOR, FINISH, AND SCORING TO THE EXISTING OR PROPOSED CURB ADJACENT TO THE BASIN.
2. ALL CURVED CONCRETE SURFACES SHALL BE FORMED BY CURVED FORMS, AND SHALL NOT BE SHAPED BY PLASTERING.
3. FLOOR OF BASIN SHALL BE GIVEN A STEEL TROWEL FINISH AND SHALL HAVE A LONGITUDINAL AND LATERAL SLOPE OF 1:12 MINIMUM AND 1:3 MAXIMUM, EXCEPT WHERE THE GUTTER GRADE EXCEEDS 8%, IN WHICH CASE THE LONGITUDINAL SLOPE OF THE FLOOR SHALL BE THE SAME AS THE GUTTER GRADE. SLOPE FLOOR FROM ALL DIRECTIONS TO THE OUTLET.
4. ONE GRATING IS REQUIRED UNLESS OTHERWISE SHOWN ON THE PLANS.
5. DIMENSIONS:

   V = THE DIFFERENCE IN ELEVATION BETWEEN THE TOP OF THE CURB AND THE INVERT OF THE CATCH BASIN AT THE OUTLET = 1.35 m (~~4.5'~~).

   V_I = THE DIFFERENCE IN ELEVATION BETWEEN THE TOP OF THE CURB AND THE INVERT AT THE UPSTREAM END OF THE BASIN, AND SHALL BE DETERMINED BY THE REQUIREMENTS OF NOTE 3, BUT SHALL NOT BE LESS THAN CURB FACE PLUS 300 mm (~~12"~~).

   V_U = THE DIFFERENCE IN ELEVATION BETWEEN THE TOP OF THE CURB AND THE INVERT AT THE INLET. NOTED ON THE PLANS.

   H = NOTED ON THE PLANS.

   W = 900 mm (~~2'-11 3/8"~~) FOR ONE GRATING; ADD 1051 mm (~~3'-5 3/8"~~) FOR EACH ADDITIONAL GRATING.

   A = THE ANGLE, IN DEGREES, INTERCEPTED BY THE CENTERLINE OF THE CONNECTOR PIPE AND THE CATCH BASIN WALL TO WHICH THE CONNECTOR PIPE IS ATTACHED.

6. PLACE CONNECTOR PIPES AS INDICATED ON THE PLANS. UNLESS OTHERWISE SPECIFIED, THE CONNECTOR PIPE SHALL BE LOCATED AT THE DOWNSTREAM END OF THE BASIN. WHERE THE CONNECTOR PIPE IS SHOWN AT A CORNER, THE CENTERLINE OF THE PIPE SHALL INTERSECT THE INSIDE CORNER OF THE BASIN. THE PIPE MAY BE CUT AND TRIMMED AT A SKEW NECESSARY TO INSURE MINIMUM 80 mm (~~3"~~) PIPE EMBEDMENT, ALL AROUND, WITHIN THE CATCH BASIN WALL, AND 75 mm (~~3"~~) RADIUS OF ROUNDING OF STRUCTURE CONCRETE, ALL AROUND, ADJACENT TO PIPE ENDS. A MONOLITHIC CATCH BASIN CONNECTION SHALL BE USED TO JOIN THE CONNECTOR PIPE TO THE CATCH BASIN WHENEVER ANGLE "A" IS LESS THAN 70° OR GREATER THAN 110°, OR WHENEVER THE CONNECTOR PIPE IS LOCATED IN A CORNER. THE OPTIONAL USE OF A MONOLITHIC CATCH BASIN CONNECTION IN ANY CASE IS PERMITTED. MONOLITHIC CATCH BASIN CONNECTIONS MAY BE CONSTRUCTED TO AVOID CUTTING STANDARD LENGTHS OF PIPE.
7. STEPS SHALL BE LOCATED AS SHOWN. IF THE CONNECTOR PIPE INTERFERES WITH THE STEPS, THEY SHALL BE LOCATED AT THE CENTERLINE OF THE DOWNSTREAM GRATING. STEPS SHALL BE SPACED 300 mm (~~12"~~) APART. THE TOP STEP SHALL BE 175 mm (~~7"~~) BELOW THE TOP OF THE GRATING AND PROJECT 65 mm (~~2 1/2"~~). ALL OTHER STEPS SHALL PROJECT 130 mm(~~5"~~).
8. THE FOLLOWING SPPWC ARE INCORPORATED HEREIN:
   308 MONOLITHIC CATCH BASIN CONNECTION
   309 CATCH BASIN REINFORCEMENT
   311 FRAME AND GRATING FOR CATCH BASINS
   635 STEEL STEP
   636 POLYPROPYLENE PLASTIC STEP

~~STANDARD PLANS FOR PUBLIC WORKS CONSTRUCTION~~

CURBSIDE GRATING CATCH BASIN

STANDARD PLAN METRIC
303–2
SHEET 2 OF 2

ALL DIMENSIONS ARE IN METERS UNLESS OTHERWISE SHOWN

DRAINAGE DETAILS

NO SCALE

DD-30

STATE OF CALIFORNIA - DEPARTMENT OF TRANSPORTATION
Caltrans HYDRAULICS

FUNCTIONAL SUPERVISOR RALPH M. SASAKI
CALCULATED-DESIGNED BY S. M. TAN W. Y. LEE
CHECKED BY R. M. SASAKI
REVISED BY
DATE REVISED

LAST REVISION 00-00-00
DATE PLOTTED => 31-JAN-2011
TIME PLOTTED => 13:22

Dist	COUNTY	ROUTE	KILOMETER POST TOTAL PROJECT	SHEET No.	TOTAL SHEETS
07	LA	5	2.9/4.9	244	1082

Caltrans Metric

REGISTERED CIVIL ENGINEER 12-23-09 DATE

6-21-10
PLANS APPROVAL DATE

REGISTERED PROFESSIONAL ENGINEER RALPH M. SASAKI No. 30849 Exp. 3/31/10 CIVIL STATE OF CALIFORNIA

THE STATE OF CALIFORNIA OR ITS OFFICERS OR AGENTS SHALL NOT BE RESPONSIBLE FOR THE ACCURACY OR COMPLETENESS OF ELECTRONIC COPIES OF THIS PLAN SHEET.

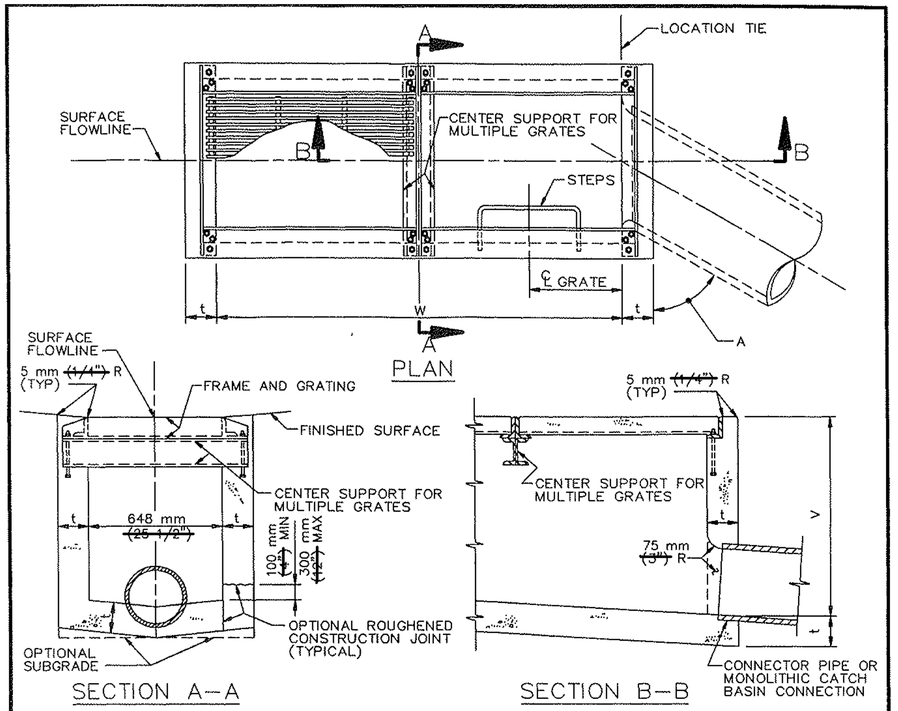

STRUCTURAL DATA			
WALL AND SLAB DIMENSIONS AND REINFORCEMENT REQUIREMENTS			
NO. OF GRATES	MAX V	t	REINFORCEMENT FOR WALLS AND SLABS
1–2	1.2 m ~~(4')~~	150 mm ~~(6")~~	NOT REQUIRED
1–2	2.4 m ~~(8')~~	200 mm ~~(8")~~	
1–2	3.0 m ~~(10')~~	250 mm ~~(10")~~	
1–2	3.5 m ~~(12')~~	250 mm ~~(10")~~	REQUIRED
3–4	1.2 m ~~(4')~~	150 mm ~~(6")~~	NOT REQUIRED
3–4	2.0 m ~~(7')~~	200 mm ~~(8")~~	
3–4	2.4 m ~~(8')~~	200 mm ~~(8")~~	REQUIRED
3–4	3.5 m ~~(12')~~	250 mm ~~(10")~~	
5–6	1.2 m ~~(4')~~	150 mm ~~(6")~~	NOT REQUIRED
5–6	1.8 m ~~(6')~~	200 mm ~~(8")~~	
5–6	2.4 m ~~(8')~~	200 mm ~~(8")~~	REQUIRED
5–6	3.5 m ~~(12')~~	250 mm ~~(10")~~	
> 6	1.2 m ~~(4')~~	150 mm ~~(6")~~	
> 6	2.4 m ~~(8')~~	200 mm ~~(8")~~	
> 6	3.5 m ~~(12')~~	250 mm ~~(10")~~	

~~STANDARD PLANS FOR PUBLIC WORKS CONSTRUCTION~~

PROMULGATED BY THE PUBLIC WORKS STANDARDS, INC., GREENBOOK COMMITTEE 1984 REV. 1992, 1996

GRATING CATCH BASIN–ALLEY (LONGITUDINAL)

~~USE WITH STANDARD SPECIFICATIONS FOR PUBLIC WORKS CONSTRUCTION~~

STANDARD PLAN METRIC **304–2** SHEET 1 OF 2

NOTES:

1. ALL CURVED CONCRETE SURFACES SHALL BE FORMED BY CURVED FORMS, AND SHALL NOT BE SHAPED BY PLASTERING.
2. ONE GRATING IS REQUIRED UNLESS OTHERWISE SHOWN ON THE PLANS.
3. FLOOR OF BASIN SHALL BE GIVEN A STEEL TROWEL FINISH AND SHALL HAVE A LONGITUDINAL AND LATERAL SLOPE OF 1:12 MINIMUM AND 1:3 MAXIMUM, EXCEPT WHERE THE SURFACE GRADE EXCEEDS 8%, IN WHICH CASE THE LONGITUDINAL SLOPE OF THE FLOOR SHALL BE THE SAME AS THE SURFACE GRADE, SLOPE FLOOR FROM ALL DIRECTIONS TO THE OUTLET.
4. DIMENSIONS:

   B = 1.0 m ~~(3' 6")~~

   V_U = THE DEPTH AT THE UPSTREAM END OF THE BASIN AND SHALL BE DETERMINED BY THE REQUIREMENTS OF NOTE 3, BUT SHALL NOT BE LESS THAN 750 mm ~~(2.5')~~.

   V_I = THE DEPTH AT THE INVERT OF THE INLET. NOTED ON THE PLANS.

   W = 900 mm ~~(2'-11 3/8")~~ FOR ONE GRATING; ADD 1051 mm ~~(3'-5 3/8")~~ FOR EACH ADDITIONAL GRATING.

   A = THE ANGLE, IN DEGREES, INTERCEPTED BY THE CENTERLINE OF THE CONNECTOR PIPE AND THE CATCH BASIN WALL TO WHICH THE CONNECTOR PIPE IS ATTACHED.
5. PLACE CONNECTOR PIPES AS INDICATED ON THE PLANS. UNLESS OTHERWISE SPECIFIED, THE CONNECTOR PIPE SHALL BE LOCATED AT THE DOWNSTREAM END OF THE BASIN. WHERE THE CONNECTOR PIPE IS SHOWN AT A CORNER, THE CENTERLINE OF THE PIPE SHALL INTERSECT THE INSIDE CORNER OF THE BASIN. THE PIPE MAY BE CUT AND TRIMMED AT A SKEW NECESSARY TO INSURE MINIMUM 80 mm ~~(3")~~ PIPE EMBEDMENT. ALL AROUND, WITHIN THE CATCH BASIN WALL, AND 75 mm ~~(3")~~ RADIUS OF ROUNDING OF STRUCTURE CONCRETE, ALL AROUND, ADJACENT TO PIPE ENDS. A MONOLITHIC CATCH BASIN CONNECTION SHALL BE USED TO JOIN THE CONNECTOR PIPE TO THE CATCH BASIN WHENEVER ANGLE "A" IS LESS THAN 70° OR GREATER THAN 110°, OR WHENEVER THE CONNECTOR PIPE IS LOCATED IN A CORNER. THE OPTIONAL USE OF A MONOLITHIC CATCH BASIN CONNECTION IN ANY CASE IS PERMITTED. MONOLITHIC CATCH BASIN CONNECTIONS MAY BE CONSTRUCTED TO AVOID CUTTING STANDARD LENGTHS OF PIPE.
6. STEPS SHALL BE LOCATED AS SHOWN. IF THE CONNECTOR PIPE INTERFERES WITH THE STEPS, THEY SHALL BE LOCATED ON THE OPPOSITE WALL AT THE CENTERLINE OF THE DOWNSTREAM GRATING. STEPS SHALL BE BE SPACED 300 mm ~~(12")~~ APART. THE TOP STEP SHALL BE 175 mm ~~(7")~~ BELOW THE TOP OF THE GRATING AND PROJECT 65 mm ~~(2 1/2")~~. ALL OTHER STEPS SHALL PROJECT 130 mm ~~(5")~~.
7. THE FOLLOWING SPPWC ARE INCORPORATED HEREIN:
   - 308 MONOLITHIC CATCH BASIN CONNECTION
   - 309 CATCH BASIN REINFORCEMENT
   - 311 FRAME AND GRATING FOR CATCH BASINS
   - 635 STEEL STEP
   - 636 POLYPROPYLENE PLASTIC STEP

~~STANDARD PLANS FOR PUBLIC WORKS CONSTRUCTION~~

GRATING CATCH BASIN–ALLEY (LONGITUDINAL)

STANDARD PLAN METRIC **304–2** SHEET 2 OF 2

ALL DIMENSIONS ARE IN METERS UNLESS OTHERWISE SHOWN

DRAINAGE DETAILS

NO SCALE

DD-31

STATE OF CALIFORNIA - DEPARTMENT OF TRANSPORTATION
Caltrans HYDRAULICS

FUNCTIONAL SUPERVISOR RALPH M. SASAKI
CALCULATED-DESIGNED BY S. M. TAN W. Y. LEE
CHECKED BY R. M. SASAKI
REVISED BY
DATE REVISED

LAST REVISION 00-00-00 DATE PLOTTED => 31-JAN-2011 TIME PLOTTED => 13:22

Dist	COUNTY	ROUTE	KILOMETER POST TOTAL PROJECT	SHEET No.	TOTAL SHEETS
07	LA	5	2.9/4.9	245	1082

Caltrans Metric

REGISTERED CIVIL ENGINEER 12-23-09 DATE

6-21-10
PLANS APPROVAL DATE

REGISTERED PROFESSIONAL ENGINEER RALPH M. SASAKI No. 30849 Exp. 3/31/10 CIVIL STATE OF CALIFORNIA

THE STATE OF CALIFORNIA OR ITS OFFICERS OR AGENTS SHALL NOT BE RESPONSIBLE FOR THE ACCURACY OR COMPLETENESS OF ELECTRONIC COPIES OF THIS PLAN SHEET.

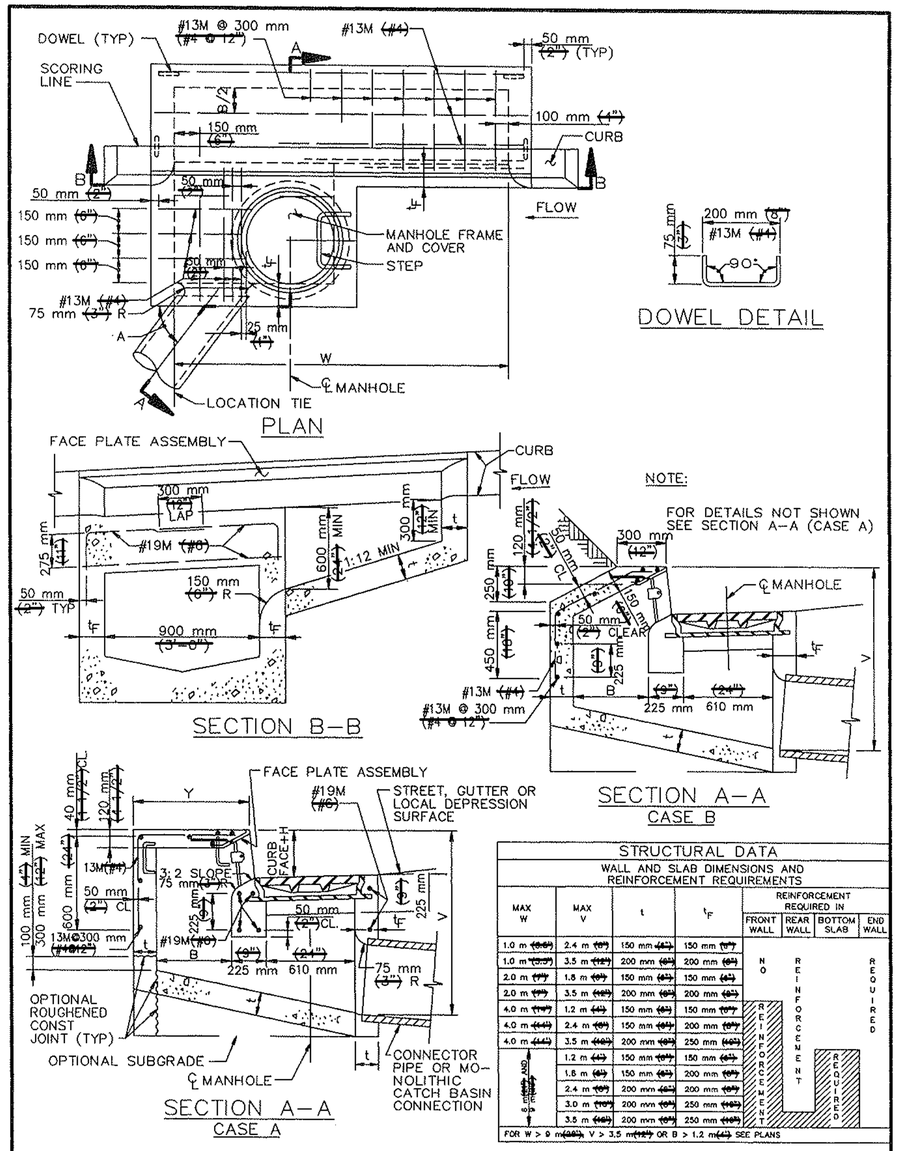

STRUCTURAL DATA

WALL AND SLAB DIMENSIONS AND REINFORCEMENT REQUIREMENTS

MAX W	MAX V	t	t_F	REINFORCEMENT REQUIRED IN: FRONT WALL	REAR WALL	BOTTOM SLAB	END WALL
1.0 m (3'-3")	2.4 m (8')	150 mm (6")	150 mm (6")	NO REINFORCEMENT REQUIRED			
1.0 m (3'-3")	3.5 m (11'-6")	200 mm (8")	200 mm (8")				
2.0 m (7')	1.5 m (5')	150 mm (6")	150 mm (6")				
2.0 m (7')	3.5 m (11'-6")	200 mm (8")	200 mm (8")				
4.0 m (13')	1.2 m (4')	150 mm (6")	150 mm (6")				
4.0 m (13')	2.4 m (8')	150 mm (6")	200 mm (8")				
4.0 m (13')	3.5 m (11'-6")	200 mm (8")	250 mm (10")				
2.0 m (7') AND 4.0 m (13')	1.2 m (4')	150 mm (6")	150 mm (6")	REINFORCEMENT REQUIRED			
	1.8 m (6')	150 mm (6")	200 mm (8")				
	2.4 m (8')	200 mm (8")	200 mm (8")				
	3.0 m (10')	200 mm (8")	250 mm (10")				
	3.5 m (11'-6")	200 mm (8")	250 mm (10")				

FOR W > 9 m (30'), V > 3.5 m (11'-6") OR B > 1.2 m (4') SEE PLANS

~~STANDARD PLANS FOR PUBLIC WORKS CONSTRUCTION~~

PROMULGATED BY THE PUBLIC WORKS STANDARDS, INC., GREENBOOK COMMITTEE 1984 REV. 1992, 1996

CURB OPENING CATCH BASIN WITH MANHOLE IN STREET

~~USE WITH STANDARD SPECIFICATIONS FOR PUBLIC WORKS CONSTRUCTION~~

STANDARD PLAN METRIC 307-2

SHEET 1 OF 2

NOTES:

1. WHERE THE BASIN IS TO BE CONSTRUCTED WITHIN THE LIMITS OF EXISTING OR PROPOSED SIDEWALK OR IS CONTIGUOUS TO SUCH SIDEWALK, THE TOP SLAB OF THE BASIN MAY BE POURED EITHER MONOLITHIC WITH THE SIDEWALK OR SEPARATELY, USING THE SAME CLASS OF CONCRETE AS IN THE BASIN. WHEN POURED MONOLITHICALLY, THE SIDEWALK SHALL BE PROVIDED WITH A WEAKENED PLANE OR A 25 mm (1") DEEP SAWCUT CONTINUOUSLY AROUND THE EXTERNAL PERIMETER OF THE CATCH BASIN WALLS, INCLUDING ACROSS THE FULL WIDTH OF THE SIDEWALK. SURFACE OF ALL EXPOSED CONCRETE SHALL CONFORM IN SLOPE, GRADE, COLOR, FINISH, AND SCORING TO EXISTING OR PROPOSED CURB AND WALK ADJACENT TO THE BASIN.
2. ALL CURVED CONCRETE SURFACES SHALL BE FORMED BY CURVED FORMS, AND SHALL NOT BE SHAPED BY PLASTERING.
3. FLOOR OF BASIN SHALL BE GIVEN A STEEL TROWEL FINISH, FLOOR OF MANHOLE CHAMBER SHALL HAVE A LONGITUDINAL AND LATERAL SLOPE OF 1:12 MINIMUM AND 1:3 MAXIMUM SLOPE FLOOR FROM ALL DIRECTIONS TO THE OUTLET.
4. CATCH BASIN SHALL BE CASE A UNLESS OTHERWISE SPECIFIED.
5. DIMENSIONS:
   - W = 2 m (7')
   - B = 500 mm (20")
   - Y = 600 mm (24")
   - V = THE DIFFERENCE IN ELEVATION BETWEEN THE TOP OF THE CURB AND THE INVERT OF THE CATCH BASIN AT THE OUTLET = 3.5 m (11.5').
   - V_I = THE DIFFERENCE IN ELEVATION BETWEEN THE TOP OF THE CURB AND THE INVERT OF THE INLET, NOTED ON THE PLANS.
   - H = NOTED ON THE PLANS.
   - A = THE ANGLE, IN DEGREES, INTERCEPTED BY THE CENTERLINE OF THE CONNECTOR PIPE AND THE CATCH BASIN WALL TO WHICH THE CONNECTOR PIPE IS ATTACHED.
6. PLACE CONNECTOR PIPES AS INDICATED ON THE PLANS. UNLESS OTHERWISE SPECIFIED, THE CONNECTOR PIPE SHALL BE LOCATED AT THE DOWNSTREAM END OF THE BASIN. WHERE THE CONNECTOR PIPE IS SHOWN AT A CORNER, THE CENTERLINE OF THE PIPE SHALL INTERSECT THE INSIDE CORNER OF THE BASIN. THE PIPE MAY BE CUT AND TRIMMED AT A SKEW NECESSARY TO INSURE MINIMUM 80 mm (3") PIPE EMBEDMENT, ALL AROUND, WITHIN THE CATCH BASIN WALL, AND 75 mm (3") RADIUS OF ROUNDING OF STRUCTURE CONCRETE, ALL AROUND, ADJACENT TO PIPE ENDS. A MONOLITHIC CATCH BASIN CONNECTION SHALL BE USED TO JOIN THE CONNECTOR PIPE TO THE CATCH BASIN WHENEVER ANGLE "A" IS LESS THAN 70° OR GREATER THAN 110°, OR WHENEVER THE CONNECTOR PIPE IS LOCATED IN A CORNER. THE OPTIONAL USE OF A MONOLITHIC CATCH BASIN CONNECTION IN ANY CASE IS PERMITTED. MONOLITHIC CATCH BASIN CONNECTIONS MAY BE CONSTRUCTED TO AVOID CUTTING STANDARD LENGTHS OF PIPE.
7. STEPS SHALL BE LOCATED AS SHOWN. IF THE CONNECTOR PIPE INTERFERES WITH THE STEPS, THEY SHALL BE LOCATED ON THE FRONT WALL OF THE MANHOLE CHAMBER OR THE DOWNSTREAM WALL OF THE MANHOLE CHAMBER AND THE MANHOLE MOVED DOWNSTREAM 300 mm (12"). STEPS SHALL BE SPACED 300 mm (12") APART. THE TOP STEP SHALL BE 175 mm (7") BELOW THE TOP OF THE MANHOLE AND PROJECT 65 mm (2 1/2"). ALL OTHER STEPS SHALL PROJECT 130 mm (5").
8. DOWELS ARE REQUIRED AT EACH CORNER AND AT 2.1 m (7') ON CENTER (MAXIMUM) ALONG THE BACKWALL.
9. THE FOLLOWING SPPWC ARE INCORPORATED HEREIN:
   - 308 MONOLITHIC CATCH BASIN CONNECTION
   - 309 CATCH BASIN REINFORCEMENT
   - 310 CATCH BASIN FACE PLATE ASSEMBLY AND PROTECTION BAR
   - 630 610 mm (24") MANHOLE FRAME AND COVER
   - 635 STEEL STEP

~~STANDARD PLANS FOR PUBLIC WORKS CONSTRUCTION~~

CURB OPENING CATCH BASIN WITH MANHOLE IN STREET

STANDARD PLAN METRIC 307-2

SHEET 2 OF 2

ALL DIMENSIONS ARE IN METERS UNLESS OTHERWISE SHOWN

DRAINAGE DETAILS

NO SCALE

DD-32

STATE OF CALIFORNIA - DEPARTMENT OF TRANSPORTATION
Caltrans HYDRAULICS

FUNCTIONAL SUPERVISOR: RALPH M. SASAKI
CALCULATED-DESIGNED BY: S. M. TAN, W. Y. LEE
CHECKED BY: R. M. SASAKI
REVISED BY / DATE REVISED

LAST REVISION 00-00-00 | DATE PLOTTED => 31-JAN-2011 | TIME PLOTTED => 13:22

Dist	COUNTY	ROUTE	KILOMETER POST TOTAL PROJECT	SHEET No.	TOTAL SHEETS
07	LA	5	2.9/4.9	246	1082

Caltrans Metric

12-23-09
REGISTERED CIVIL ENGINEER DATE

6-21-10
PLANS APPROVAL DATE

REGISTERED PROFESSIONAL ENGINEER RALPH M. SASAKI No. 30849 Exp. 3/31/10 CIVIL STATE OF CALIFORNIA

THE STATE OF CALIFORNIA OR ITS OFFICERS OR AGENTS SHALL NOT BE RESPONSIBLE FOR THE ACCURACY OR COMPLETENESS OF ELECTRONIC COPIES OF THIS PLAN SHEET.

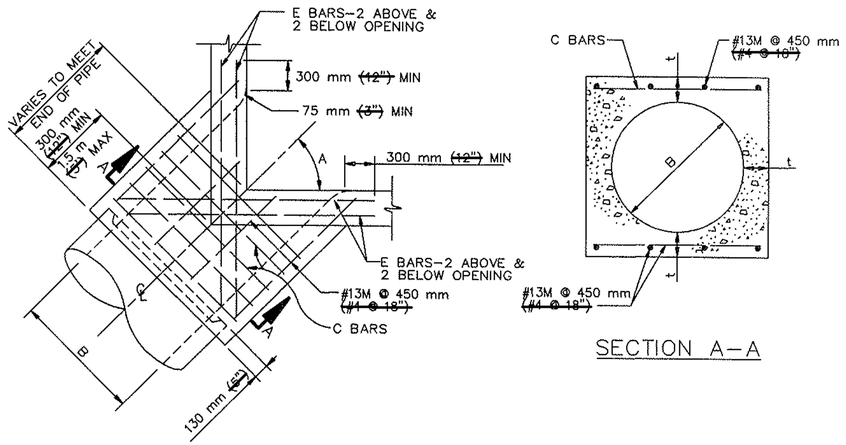

PLAN
CORNER CONNECTION

SECTION A–A

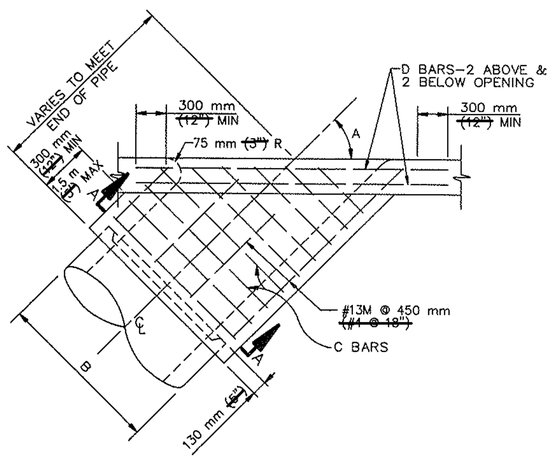

PLAN
SIDE CONNECTION

~~STANDARD PLANS FOR PUBLIC WORKS CONSTRUCTION~~

PROMULGATED BY THE PUBLIC WORKS STANDARDS, INC., GREENBOOK COMMITTEE 1994 REV. 1996

MONOLITHIC CATCH BASIN CONNECTION

~~USE WITH STANDARD SPECIFICATIONS FOR PUBLIC WORKS CONSTRUCTION~~

STANDARD PLAN METRIC **308–1** SHEET 1 OF 2

STRUCTURAL DATA

B	t	C BARS	D&E BARS	B	t	C BARS	D&E BARS
300 mm (12")	115 mm (4")	#13M @ 150 mm (#4 @ 6")	#16M (#5)	1050 mm (42")	190 mm (7 1/2")	#16M @ 150 mm (#5 @ 6")	#19M (#6)
375 mm (15")	115 mm (4 1/4")			1125 mm (46")	190 mm (7 3/4")		
450 mm (18")	115 mm (4 1/2")			1200 mm (48")	215 mm (8")		
525 mm (21")	140 mm (5")			1275 mm (51")	215 mm (8 1/2")		
600 mm (24")	140 mm (5 1/4")			1350 mm (54")	240 mm (9")		
675 mm (27")	140 mm (5 1/2")			1425 mm (57")	240 mm (9 1/4")		
750 mm (30")	165 mm (6")			1500 mm (60")	240 mm (9 1/2")		
825 mm (33")	165 mm (6 1/4")			1575 mm (63")	260 mm (10")		
900 mm (36")	165 mm (6 1/2")			1650 mm (66")	260 mm (10 1/4")		
975 mm (39")	190 mm (7")			1725 mm (69")	280 mm (10 3/4")		
				1800 mm (72")	280 mm (11")		

FOR B GREATER THAN 1800 mm (72") SEE PLANS

NOTES

1. REINFORCING STEEL SHALL BE 40 mm (1 1/2") CLEAR FROM FACE OF CONCRETE UNLESS OTHERWISE SHOWN.
2. REINFORCING STEEL FOR INSIDE FACE OF CATCH BASIN SHALL BE CUT AT CENTER OF OPENING AND BENT INTO WALLS OF MONOLITHIC CATCH BASIN CONNECTION. REINFORCING STEEL FOR OUTSIDE FACE OF CATCH BASIN SHALL BE CUT 50 mm (2") CLEAR OF OPENING.
3. CONNECTION SHALL BE PLACED MONOLITHIC WITH CATCH BASIN. THE ROUNDED EDGE OF OUTLET SHALL BE CONSTRUCTED BY PLACING CONCRETE WITH THE SAME CLASS OF CONCRETE AS THE CATCH BASIN AGAINST A CURVED FORM WITH A RADIUS OF 75 mm (3").
4. CONNECTIONS SHALL BE CONSTRUCTED WHEN:
   (A) PIPES INLET OR OUTLET THROUGH CORNER OF CATCH BASIN
   (B) ANGLE A FOR PIPES THROUGH 750 mm (30") IN DIAMETER IS LESS THAN 70° OR GREATER THAN 110°.

~~STANDARD PLANS FOR PUBLIC WORKS CONSTRUCTION~~

MONOLITHIC CATCH BASIN CONNECTION

STANDARD PLAN METRIC **308–1** SHEET 2 OF 2

ALL DIMENSIONS ARE IN METERS UNLESS OTHERWISE SHOWN

DRAINAGE DETAILS

NO SCALE

DD-33

STATE OF CALIFORNIA - DEPARTMENT OF TRANSPORTATION
Caltrans
HYDRAULICS
FUNCTIONAL SUPERVISOR RALPH M. SASAKI
CALCULATED-DESIGNED BY S. M. TAN W. Y. LEE
CHECKED BY R. M. SASAKI
REVISED BY
DATE REVISED

LAST REVISION 00-00-00 DATE PLOTTED => 31-JAN-2011 TIME PLOTTED => 13:22

Dist	COUNTY	ROUTE	KILOMETER POST TOTAL PROJECT	SHEET No.	TOTAL SHEETS
07	LA	5	2.9/4.9	247	1082

Caltrans Metric

12-23-09
REGISTERED CIVIL ENGINEER DATE

6-21-10
PLANS APPROVAL DATE

REGISTERED PROFESSIONAL ENGINEER
RALPH M. SASAKI
No. 30849
Exp. 3/31/10
CIVIL
STATE OF CALIFORNIA

THE STATE OF CALIFORNIA OR ITS OFFICERS OR AGENTS SHALL NOT BE RESPONSIBLE FOR THE ACCURACY OR COMPLETENESS OF ELECTRONIC COPIES OF THIS PLAN SHEET.

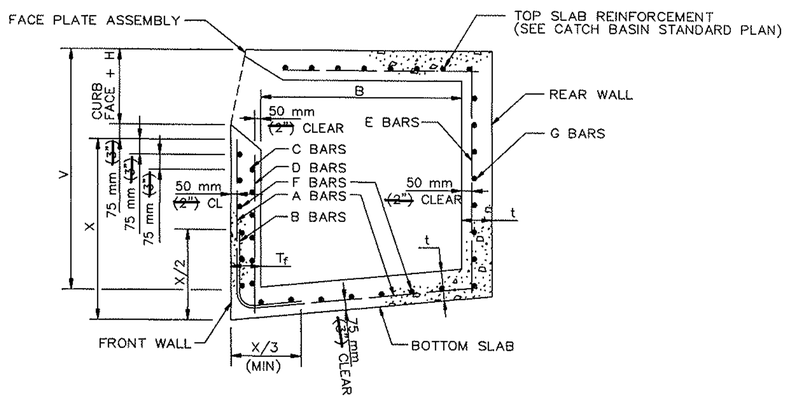

TYPICAL REINFORCEMENT DETAILS

MAX. W	MAX. V	t	tf	A & B BARS	C BARS	D BARS	E BARS	F BARS	G BARS
1 m ~~(3.5')~~	2.4 m ~~(8')~~	150 mm ~~(6")~~	150 mm ~~(6")~~	—	—	—	—	—	—
1 m ~~(3.5')~~	3.5 m ~~(12')~~	200 mm ~~(8")~~	200 mm ~~(8")~~	—	—	—	—	—	—
2 m ~~(7')~~	1.8 m ~~(6')~~	150 mm ~~(6")~~	150 mm ~~(6")~~	—	—	—	—	—	—
2 m ~~(7')~~	3.5 m ~~(12')~~	200 mm ~~(8")~~	200 mm ~~(8")~~	—	—	—	—	—	—
4 m ~~(14')~~	1.2 m ~~(4')~~	150 mm ~~(6")~~	150 mm ~~(6")~~	—	13M @ 300 mm ~~(#4 @ 12")~~	13M @ 450 mm ~~(#4 @ 18")~~	—	—	—
4 m ~~(14')~~	2.4 m ~~(8')~~	150 mm ~~(6")~~	200 mm ~~(8")~~	—	13M @ 300 mm ~~(#4 @ 12")~~	13M @ 450 mm ~~(#4 @ 18")~~	—	—	—
4 m ~~(14')~~	3.5 m ~~(12')~~	200 mm ~~(8")~~	250 mm ~~(10")~~	—	13M @ 150 mm ~~(#4 @ 6")~~	13M @ 450 mm ~~(#4 @ 18")~~	—	—	—
9 m ~~(28')~~	1.2 m ~~(4')~~	150 mm ~~(6")~~	150 mm ~~(6")~~	13M @ 600 mm ~~(#4 @ 24")~~	—	—	—	13M @ 450 mm ~~(#4 @ 18")~~	—
9 m ~~(28')~~	1.5 m ~~(5')~~	150 mm ~~(6")~~	200 mm ~~(8")~~	13M @ 600 mm ~~(#4 @ 24")~~	—	—	—	13M @ 450 mm ~~(#4 @ 18")~~	—
9 m ~~(28')~~	1.8 m ~~(6')~~	150 mm ~~(6")~~	200 mm ~~(8")~~	13M @ 450 mm ~~(#4 @ 18")~~	—	—	—	13M @ 450 mm ~~(#4 @ 18")~~	—
9 m ~~(28')~~	2.1 m ~~(7')~~	200 mm ~~(8")~~	200 mm ~~(8")~~	13M @ 425 mm ~~(#4 @ 17")~~	—	—	—	13M @ 450 mm ~~(#4 @ 18")~~	—
9 m ~~(28')~~	2.4 m ~~(8')~~	200 mm ~~(8")~~	200 mm ~~(8")~~	13M @ 325 mm ~~(#4 @ 13")~~	—	—	—	13M @ 450 mm ~~(#4 @ 18")~~	—
9 m ~~(28')~~	2.7 m ~~(9')~~	200 mm ~~(8")~~	250 mm ~~(10")~~	13M @ 375 mm ~~(#4 @ 16")~~	—	—	—	13M @ 450 mm ~~(#4 @ 18")~~	—
9 m ~~(28')~~	3.0 m ~~(10')~~	200 mm ~~(8")~~	250 mm ~~(10")~~	13M @ 300 mm ~~(#4 @ 12")~~	—	—	—	13M @ 450 mm ~~(#4 @ 18")~~	—
9 m ~~(28')~~	3.3 m ~~(11')~~	200 mm ~~(8")~~	250 mm ~~(10")~~	16M @ 375 mm ~~(#5 @ 15")~~	—	—	13M @ 250 mm ~~(#4 @ 10")~~	13M @ 450 mm ~~(#4 @ 18")~~	13M @ 450 mm ~~(#4 @ 18")~~
9 m ~~(28')~~	3.5 m ~~(12')~~	200 mm ~~(8")~~	250 mm ~~(10")~~	19M @ 450 mm ~~(#6 @ 18")~~	—	—	13M @ 225 mm ~~(#4 @ 9")~~	13M @ 450 mm ~~(#4 @ 18")~~	13M @ 450 mm ~~(#4 @ 18")~~
FOR W > 9 m ~~(28')~~ OR B > 1200 mm ~~(4')~~ SEE PLANS									

CURB OPENING CATCH BASIN REINFORCEMENT

~~STANDARD PLANS FOR PUBLIC WORKS CONSTRUCTION~~

~~PROMULGATED BY THE PUBLIC WORKS STANDARDS, INC., GREENBOOK COMMITTEE 1984 REV. 1996~~

CATCH BASIN REINFORCEMENT

~~USE WITH STANDARD SPECIFICATIONS FOR PUBLIC WORKS CONSTRUCTION~~

STANDARD PLAN METRIC
309-1
SHEET 1 OF 2

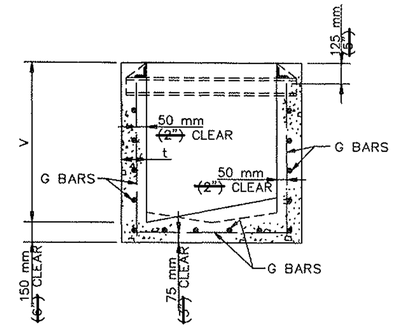

TYPICAL REINFORCEMENT DETAILS

V MAX	t	SIDE AND END WALL STEEL G BARS
1.2 m ~~(4')~~	150 mm ~~(6")~~	#13M @ 250 mm ~~(#4 @ 10")~~
2.4 m ~~(8')~~	200 mm ~~(8")~~	#13M @ 150 mm ~~(#4 @ 6")~~
3.5 m ~~(12')~~	250 mm ~~(10")~~	#16M @ 150 mm ~~(#5 @ 6")~~
FOR V > 3.5 m ~~(12')~~ SEE PLANS		

GRATING CATCH BASIN REINFORCEMENT

NOTE

UNLESS OTHERWISE SPECIFIED, REINFORCEMENT FOR CURB OPENINGS AND GRATING CATCH BASINS SHALL TERMINATE 50 mm ~~(2")~~ FROM FACE OF CONCRETE.

~~STANDARD PLANS FOR PUBLIC WORKS CONSTRUCTION~~

CATCH BASIN REINFORCEMENT

STANDARD PLAN METRIC
309-1
SHEET 2 OF 2

ALL DIMENSIONS ARE IN METERS UNLESS OTHERWISE SHOWN

DRAINAGE DETAILS
NO SCALE

DD-34

STATE OF CALIFORNIA - DEPARTMENT OF TRANSPORTATION
Caltrans
HYDRAULICS

FUNCTIONAL SUPERVISOR: RALPH M. SASAKI
CALCULATED-DESIGNED BY: S. M. TAN / W. Y. LEE
CHECKED BY: R. M. SASAKI
REVISED BY / DATE REVISED

LAST REVISION 00-00-00
DATE PLOTTED => 31-JAN-2011
TIME PLOTTED => 13:22

Dist	COUNTY	ROUTE	KILOMETER POST TOTAL PROJECT	SHEET No.	TOTAL SHEETS
07	LA	5	2.9/4.9	248	1082

Caltrans Metric

12-23-09
REGISTERED CIVIL ENGINEER DATE

6-21-10
PLANS APPROVAL DATE

REGISTERED PROFESSIONAL ENGINEER RALPH M. SASAKI No. 30849 Exp. 3/31/10 CIVIL STATE OF CALIFORNIA

THE STATE OF CALIFORNIA OR ITS OFFICERS OR AGENTS SHALL NOT BE RESPONSIBLE FOR THE ACCURACY OR COMPLETENESS OF ELECTRONIC COPIES OF THIS PLAN SHEET.

SUPPORT BOLT AND FACE PLATE 120 mm ~~(4 1/2")~~ TOP SLAB

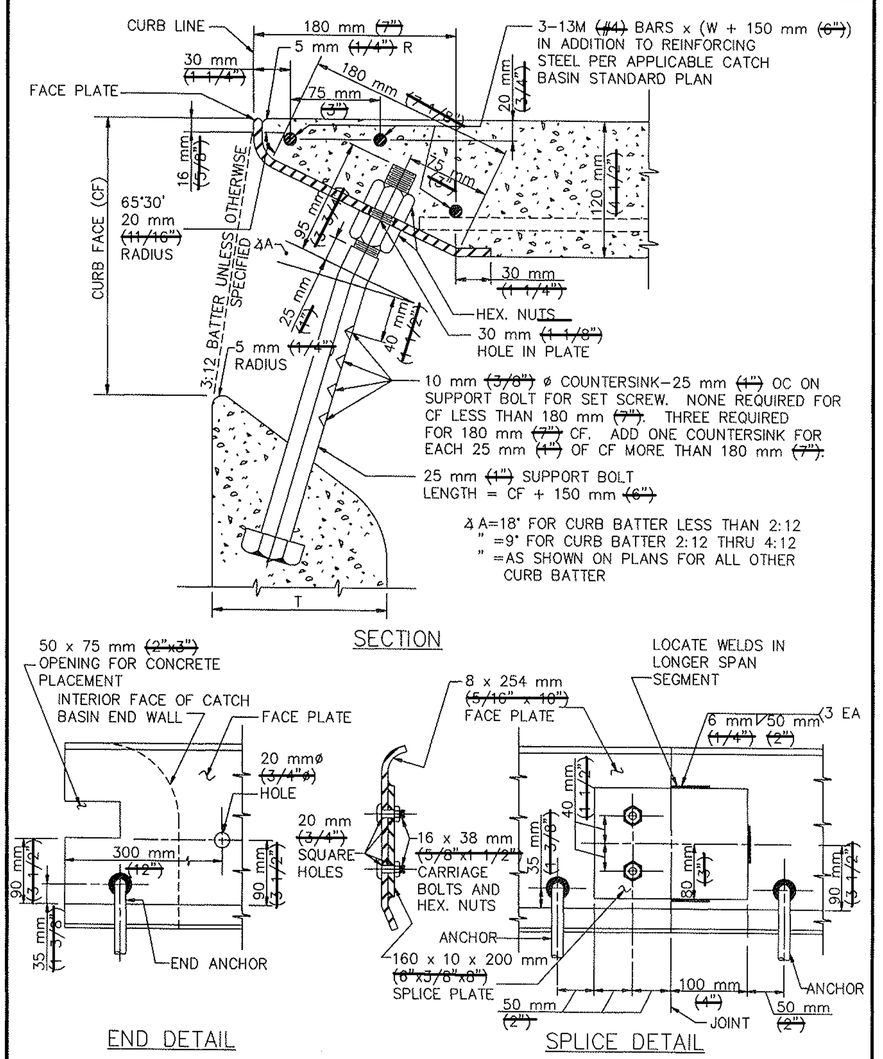

~~STANDARD PLANS FOR PUBLIC WORKS CONSTRUCTION~~

~~PROMULGATED BY THE PUBLIC WORKS STANDARDS INC. GREENBOOK COMMITTEE 1984 REV. 1996, 2005~~

CATCH BASIN FACE PLATE ASSEMBLY AND PROTECTION BAR

~~USE WITH STANDARD SPECIFICATIONS FOR PUBLIC WORKS CONSTRUCTION~~

STANDARD PLAN METRIC **310-2** SHEET 1 OF 6

SUPPORT BOLT AND FACE PLATE 150 mm ~~(6")~~ TOP SLAB

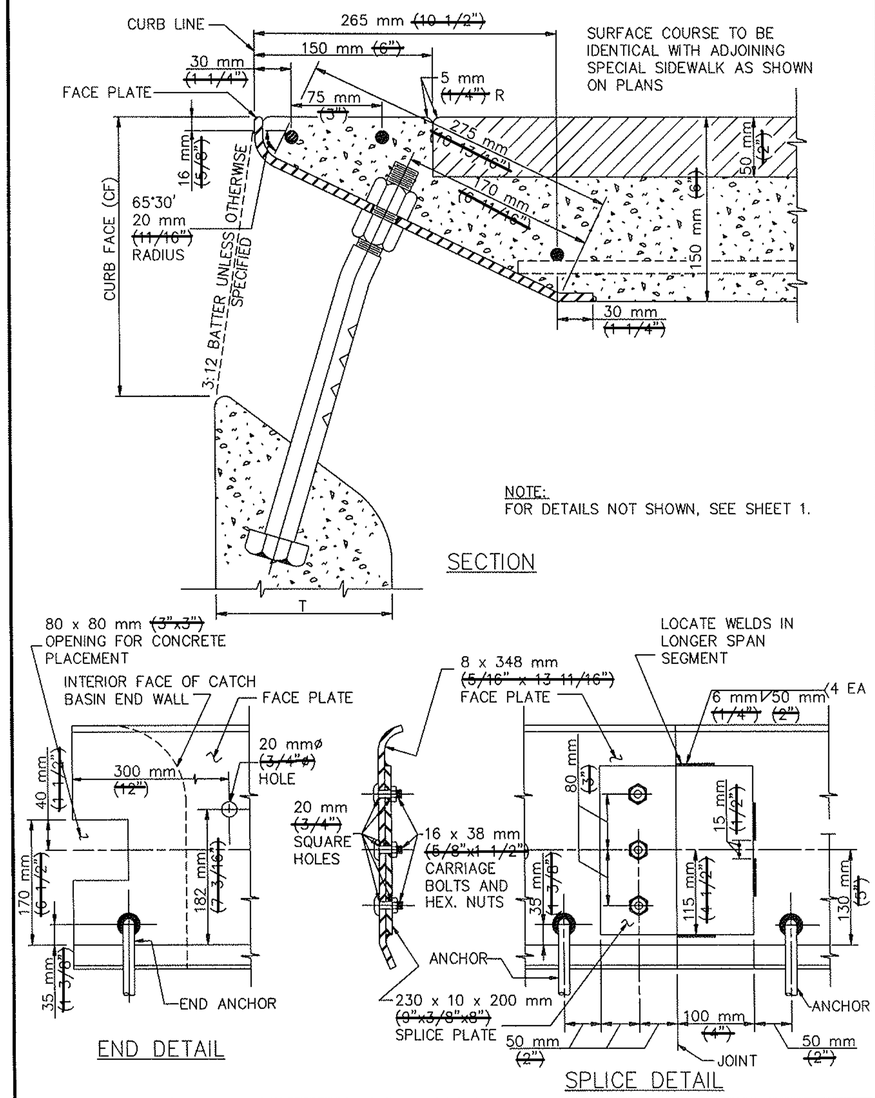

~~STANDARD PLANS FOR PUBLIC WORKS CONSTRUCTION~~

CATCH BASIN FACE PLATE ASSEMBLY AND PROTECTION BAR

STANDARD PLAN METRIC **310-2** SHEET 2 OF 6

ALL DIMENSIONS ARE IN METERS UNLESS OTHERWISE SHOWN

DRAINAGE DETAILS

NO SCALE

DD-35

FUNCTIONAL SUPERVISOR	CALCULATED-DESIGNED BY	CHECKED BY	REVISED BY	DATE REVISED
RALPH M. SASAKI	S. M. TAN W. Y. LEE	R. M. SASAKI		

STATE OF CALIFORNIA - DEPARTMENT OF TRANSPORTATION
Caltrans HYDRAULICS

LAST REVISION 00-00-00 DATE PLOTTED => 31-JAN-2011 TIME PLOTTED => 13:22

Dist	COUNTY	ROUTE	KILOMETER POST TOTAL PROJECT	SHEET No.	TOTAL SHEETS
07	LA	5	2.9/4.9	249	1082

Caltrans Metric

REGISTERED CIVIL ENGINEER DATE 12-23-09

PLANS APPROVAL DATE 6-21-10

REGISTERED PROFESSIONAL ENGINEER RALPH M. SASAKI No. 30849 Exp. 3/31/10 CIVIL STATE OF CALIFORNIA

THE STATE OF CALIFORNIA OR ITS OFFICERS OR AGENTS SHALL NOT BE RESPONSIBLE FOR THE ACCURACY OR COMPLETENESS OF ELECTRONIC COPIES OF THIS PLAN SHEET.

FACE PLATE ANCHORS

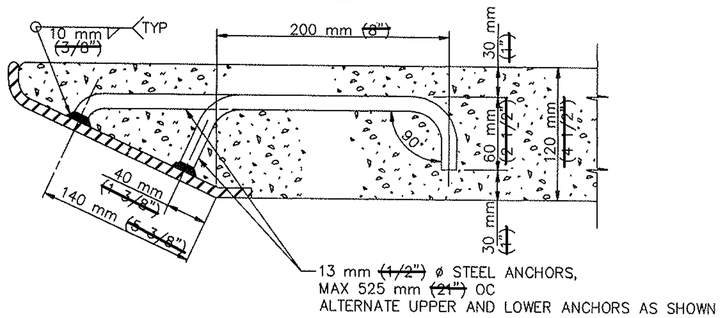

HOOK ANCHOR – 120 mm (4 1/2") TOP SLAB

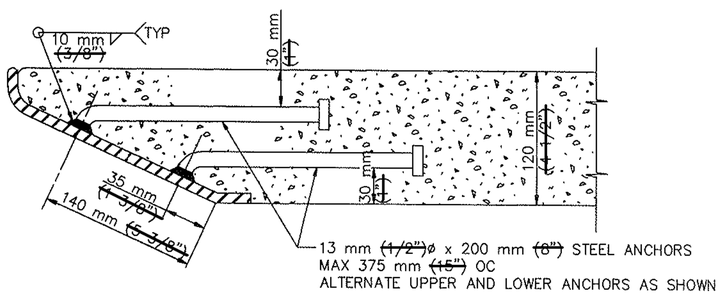

ROUND HEAD ANCHOR – 120 mm (4 1/2") TOP SLAB

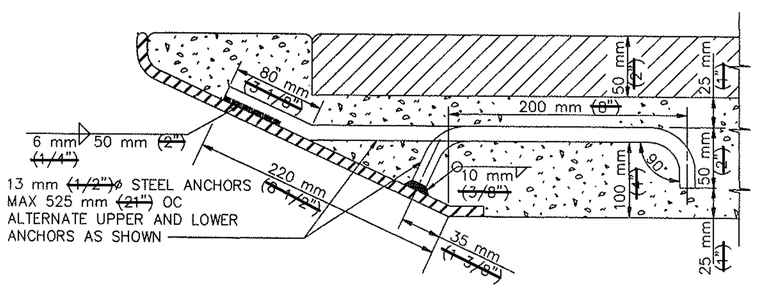

HOOK ANCHOR – 150 mm (6") TOP SLAB

~~STANDARD PLANS FOR PUBLIC WORKS CONSTRUCTION~~

CATCH BASIN FACE PLATE ASSEMBLY AND PROTECTION BAR

STANDARD PLAN METRIC **310–2** SHEET 3 OF 6

PROTECTION BAR AND SUPPORT BOLT(S) WITH ADJUSTABLE STIRRUP(S) – (TYPE A)

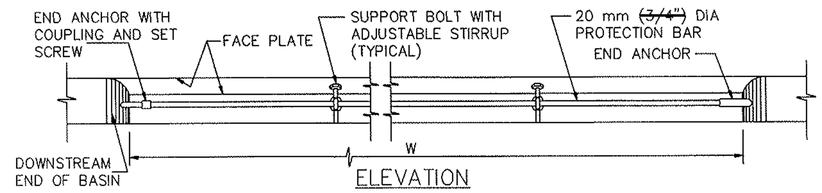

ELEVATION

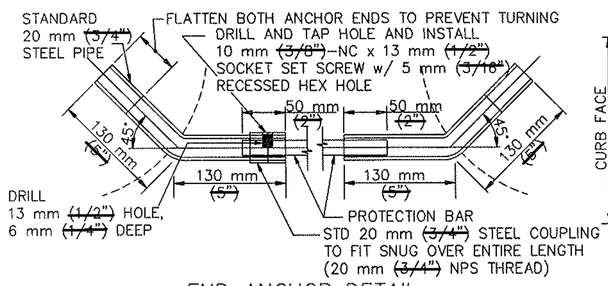

END ANCHOR DETAIL

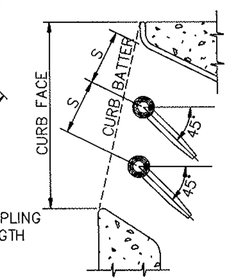

DOUBLE PROTECTION BAR DETAIL

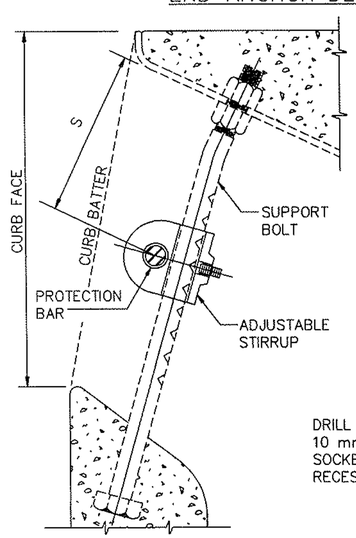

PROTECTION BAR & STIRRUP LOCATION

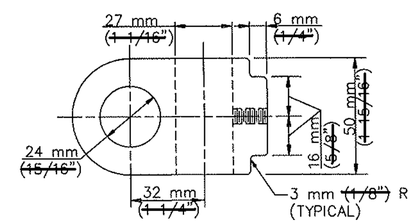

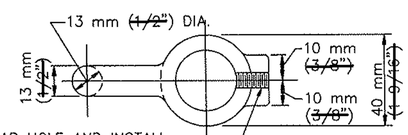

STIRRUP DETAIL

~~STANDARD PLANS FOR PUBLIC WORKS CONSTRUCTION~~

CATCH BASIN FACE PLATE ASSEMBLY AND PROTECTION BAR

STANDARD PLAN METRIC **310–2** SHEET 4 OF 6

ALL DIMENSIONS ARE IN METERS UNLESS OTHERWISE SHOWN

DRAINAGE DETAILS

NO SCALE

DD-36

STATE OF CALIFORNIA - DEPARTMENT OF TRANSPORTATION

Caltrans **HYDRAULICS**

FUNCTIONAL SUPERVISOR RALPH M. SASAKI

CALCULATED-DESIGNED BY S. M. TAN W. Y. LEE

CHECKED BY R. M. SASAKI

REVISED BY | DATE REVISED

LAST REVISION 00-00-00 | DATE PLOTTED => 31-JAN-2011 | TIME PLOTTED => 13:22

Dist	COUNTY	ROUTE	KILOMETER POST TOTAL PROJECT	SHEET No.	TOTAL SHEETS
07	LA	5	2.9/4.9	250	1082

Caltrans Metric

12-23-09
REGISTERED CIVIL ENGINEER DATE

6-21-10
PLANS APPROVAL DATE

REGISTERED PROFESSIONAL ENGINEER RALPH M. SASAKI No. 30849 Exp. 3/31/10 CIVIL STATE OF CALIFORNIA

THE STATE OF CALIFORNIA OR ITS OFFICERS OR AGENTS SHALL NOT BE RESPONSIBLE FOR THE ACCURACY OR COMPLETENESS OF ELECTRONIC COPIES OF THIS PLAN SHEET.

PROTECTION BAR AND SUPPORT BOLT(S) WITH FIXED STIRRUP(S) – (TYPE B)

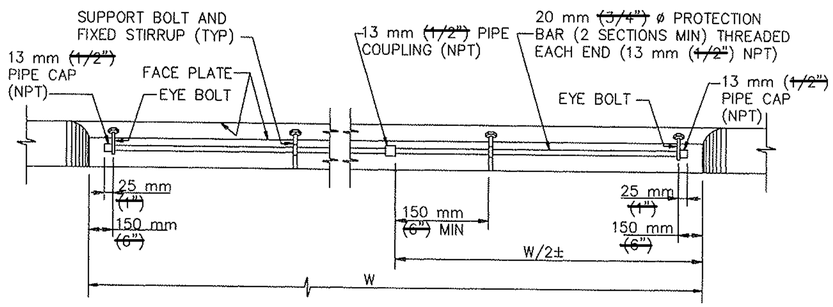

ELEVATION

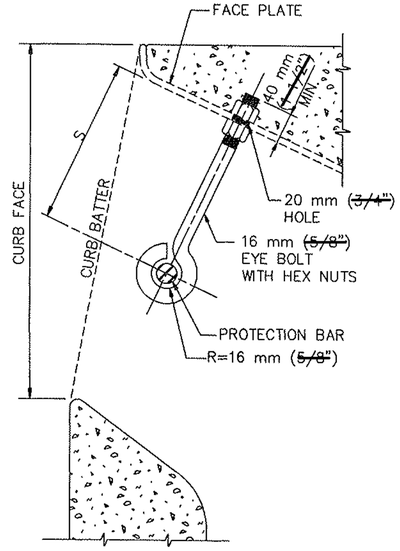

EYE BOLT DETAIL

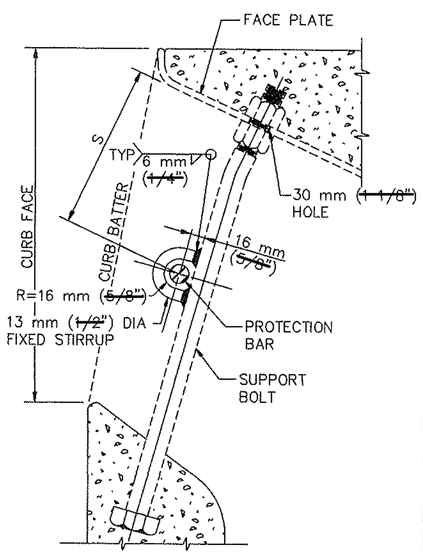

STIRRUP DETAIL

~~STANDARD PLANS FOR PUBLIC WORKS CONSTRUCTION~~

CATCH BASIN FACE PLATE ASSEMBLY AND PROTECTION BAR

STANDARD PLAN METRIC 310–2 SHEET 5 OF 6

NOTES:

GENERAL

1. ALL PARTS SHALL BE STEEL, EXCEPT SET SCREWS, WHICH SHALL BE STAINLESS STEEL OR BRASS.
2. EXCLUDING SET SCREWS, ALL EXPOSED METAL PARTS SHALL BE GALVANIZED AFTER FABRICATION.
3. CURB FACE SHALL BE AS NOTED ON THE PLANS.
4. CURB BATTER SHALL BE 3:12 UNLESS OTHERWISE SPECIFIED.

FACE PLATE

5. FACE PLATE LENGTHS SHALL BE CATCH BASIN W PLUS 300 mm (~~12"~~) EXCEPT AS MODIFIED FOR A "CURB OPENING CATCH BASIN AT DRIVEWAY".
6. WHEN THE LENGTH OF THE FACE PLATE IS BETWEEN 6.5 m (~~22'~~) AND 13 m (~~43'~~), TWO SECTIONS MAY BE USED. WHEN THE LENGTH EXCEEDS 13 m (~~43'~~), THREE SECTIONS MAY BE USED. SECTIONS SHALL BE SPLICED ACCORDING TO THE APPLICABLE SPLICE DETAIL. SPLICE SHALL BE PLACED 300 mm (~~1'~~) FROM A SUPPORT BOLT.
7. WHERE CATCH BASINS ARE TO BE CONSTRUCTED ON CURVES, THE MAXIMUM CHORD LENGTH FOR THE FACE PLATE SHALL BE SUCH THAT THE MAXIMUM PERPENDICULAR DISTANCE TO THE TRUE CURVE SHALL NOT EXCEED 25 mm (~~1"~~). WHERE MORE THAN ONE CHORD IS REQUIRED, CHORD LENGTHS SHALL BE EQUAL. CHORD SECTIONS SHALL BE SPLICED ACCORDING TO THE APPLICABLE SPLICE DETAIL (MODIFIED TO FIT THE CHORD DEFLECTION) AND A SUPPORT BOLT SHALL BE PLACED 300 mm (~~1'~~) FROM THE SPLICE.
8. ROUND HEAD ANCHORS FOR THE FACE PLATE SHALL BE NELSON H–4F SHEAR CONNECTOR, KSN WELDING SYSTEMS DIVISION SHEAR CONNECTOR OR EQUAL.

SUPPORT BOLT

9. SUPPORT BOLTS ARE REQUIRED WHEN THE LENGTH OF THE CATCH BASIN OPENING IS 2 m (~~7'~~) OR GREATER, AND SHALL BE EVENLY SPACED ACROSS THE OPENING. SPACING SHALL NOT BE LESS THAN 1 m (~~3'–6"~~) ON CENTER NOR GREATER THAN 1.5 m (~~5'~~) ON CENTER.

STIRRUP

10. FOR TYPE A, MATERIAL SHALL BE CAST STEEL.

PROTECTION BAR

11. TYPE A SHALL BE USED UNLESS OTHERWISE SPECIFIED.
12. FOR TYPE A, THE BAR SHALL BE CUT TO FIT IN THE FIELD. WHEN "W" IS OVER 6 m (~~21'~~), THE PROTECTION BAR SHALL CONSIST OF 2 OR MORE SECTIONS. A SPECIAL CONNECTOR BETWEEN THE PROTECTION BAR PIECES SHALL CONSIST OF A 125 mm (~~5"~~) LENGTH OF STANDARD 20 mm (~~3/4"~~) PIPE WITH STANDARD COUPLINGS FULLY THREADED ONTO EACH END DRILLED AND TAPPED FOR A SOCKET SET SCREW AS DETAILED FOR THE DOWNSTREAM END ANCHOR.
13. FOR TYPE B, THE BAR SHALL BE TWO PIECES. TWO EYE BOLTS AND A WELDED STIRRUP ON EACH SUPPORT BOLT ARE REQUIRED.
14. NUMBER OF PROTECTION BARS AND LOCATIONS ARE AS FOLLOWS:

CURB BATTER	MAXIMUM CURB FACE, mm (~~INCHES~~)													S DIMENSION
	150 (~~6"~~)	175 (~~7"~~)	200 (~~8"~~)	225 (~~9"~~)	250 (~~10"~~)	275 (~~11"~~)	300 (~~12"~~)	325 (~~13"~~)	350 (~~14"~~)	375 (~~15"~~)	400 (~~16"~~)	425 (~~17"~~)	450 (~~18"~~)	
0:12	0	0	90 (~~3.5"~~)	90 (~~3.5"~~)	115 (~~4.5"~~)	115 (~~4.5"~~)	115 (~~4.5"~~)	140 (~~5.5"~~)	90 (~~3.5"~~)	90 (~~3.5"~~)	115 (~~4.5"~~)	115 (~~4.5"~~)	115 (~~4.5"~~)	
1:12	0	0	90 (~~3.5"~~)	90 (~~3.5"~~)	115 (~~4.5"~~)	115 (~~4.5"~~)	115 (~~4.5"~~)	140 (~~5.5"~~)	90 (~~3.5"~~)	90 (~~3.5"~~)	115 (~~4.5"~~)	115 (~~4.5"~~)	140 (~~5.5"~~)	
2:12	0	0	90 (~~3.5"~~)	90 (~~3.5"~~)	115 (~~4.5"~~)	115 (~~4.5"~~)	140 (~~5.5"~~)	90 (~~3.5"~~)	90 (~~3.5"~~)	115 (~~4.5"~~)	115 (~~4.5"~~)	140 (~~5.5"~~)	140 (~~5.5"~~)	
3:12	0	0	90 (~~3.5"~~)	90 (~~3.5"~~)	115 (~~4.5"~~)	115 (~~4.5"~~)	140 (~~5.5"~~)	90 (~~3.5"~~)	115 (~~4.5"~~)	115 (~~4.5"~~)	140 (~~5.5"~~)	140 (~~5.5"~~)	115 (~~4.5"~~)	
4:12	0	90 (~~3.5"~~)	90 (~~3.5"~~)	115 (~~4.5"~~)	115 (~~4.5"~~)	140 (~~5.5"~~)	90 (~~3.5"~~)	90 (~~3.5"~~)	115 (~~4.5"~~)	115 (~~4.5"~~)	140 (~~5.5"~~)	115 (~~4.5"~~)	115 (~~4.5"~~)	
NUMBER OF PROTECTION BARS	0	1					2*					3*		

FOR OTHER CURB FACE OR BATTER SEE PLANS
* TYPE A PROTECTION BAR ONLY

~~STANDARD PLANS FOR PUBLIC WORKS CONSTRUCTION~~

CATCH BASIN FACE PLATE ASSEMBLY AND PROTECTION BAR

STANDARD PLAN METRIC 310–2 SHEET 6 OF 6

ALL DIMENSIONS ARE IN METERS UNLESS OTHERWISE SHOWN

DRAINAGE DETAILS

NO SCALE

DD-37

REVISED BY	DATE REVISED

CALCULATED-DESIGNED BY: S. M. TAN, W. Y. LEE
CHECKED BY: R. M. SASAKI
FUNCTIONAL SUPERVISOR: RALPH M. SASAKI

STATE OF CALIFORNIA - DEPARTMENT OF TRANSPORTATION
Caltrans HYDRAULICS

LAST REVISION 00-00-00 DATE PLOTTED => 31-JAN-2011 TIME PLOTTED => 13:22

Dist	COUNTY	ROUTE	KILOMETER POST TOTAL PROJECT	SHEET No.	TOTAL SHEETS
07	LA	5	2.9/4.9	251	1082

Caltrans Metric

REGISTERED CIVIL ENGINEER 12-23-09 DATE

6-21-10
PLANS APPROVAL DATE

REGISTERED PROFESSIONAL ENGINEER RALPH M. SASAKI No. 30849 Exp. 3/31/10 CIVIL STATE OF CALIFORNIA

THE STATE OF CALIFORNIA OR ITS OFFICERS OR AGENTS SHALL NOT BE RESPONSIBLE FOR THE ACCURACY OR COMPLETENESS OF ELECTRONIC COPIES OF THIS PLAN SHEET.

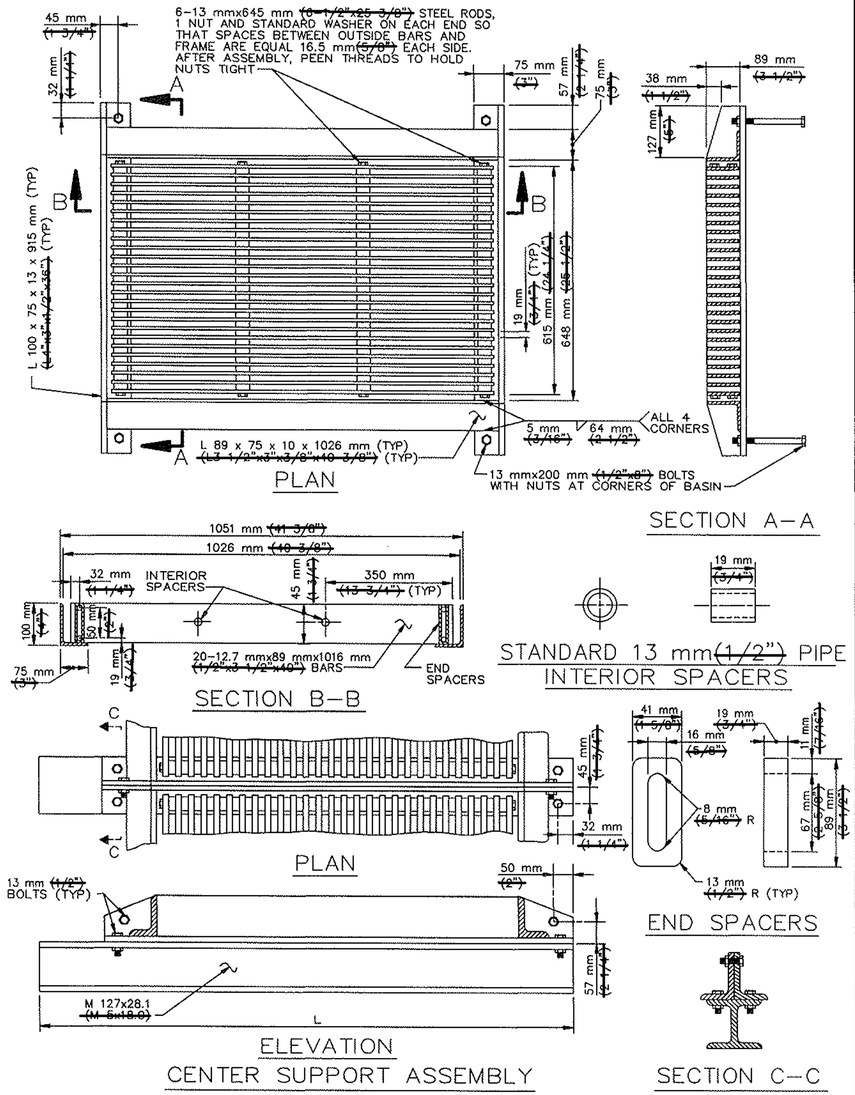

~~STANDARD PLANS FOR PUBLIC WORKS CONSTRUCTION~~

~~PROMULGATED BY THE PUBLIC WORKS STANDARDS, INC., GREENBOOK COMMITTEE 1984 REV. 1993, 1996~~

FRAME AND GRATING FOR CATCH BASINS

~~USE WITH STANDARD SPECIFICATIONS FOR PUBLIC WORKS CONSTRUCTION~~

STANDARD PLAN METRIC **311-2** SHEET 1 OF 2

NOTES:

1. ALL PARTS SHALL BE STEEL, EXCEPT THAT END SPACERS MAY BE CAST IRON.
2. ALL PARTS SHALL BE GALVANIZED AFTER FABRICATION, EXCEPT THAT GRATINGS SHALL BE ASSEMBLED AFTER COMPONENT PARTS ARE GALVANIZED.
3. ALL DIMENSIONS ARE FINISHED DIMENSIONS AND INCLUDE GALVANIZING.
4. ALL BOLT HOLES SHALL BE 16 mm ~~(5/8")~~ DIAMETER.
5. ALL THREADS SHALL BE NATIONAL COARSE SERIES (NC).
6. CENTER SUPPORT ASSEMBLY REQUIRED WHEN TWO OR MORE GRATINGS ARE SPECIFIED ON PLANS.

   L = 1626 mm ~~(64")~~ FOR CURB OPENING CATCH BASIN WITH GRATING(S) AND DEBRIS SKIMMER (SPPWC 301).

   L = 1118 mm ~~(44")~~ FOR CURB OPENING CATCH BASIN WITH GRATING(S) (SPPWC 320.)

   L = 914 mm ~~(36")~~ FOR CURBSIDE GRATING CATCH BASIN (SPPWC 303).

   L = 914 mm ~~(36")~~ FOR GRATING CATCH BASIN-ALLEY (LONGITUDINAL) (SPPWC 304).

~~STANDARD PLANS FOR PUBLIC WORKS CONSTRUCTION~~

FRAME AND GRATING FOR CATCH BASINS

STANDARD PLAN METRIC **311-2** SHEET 2 OF 2

ALL DIMENSIONS ARE IN METERS UNLESS OTHERWISE SHOWN

DRAINAGE DETAILS

NO SCALE

DD-38

STATE OF CALIFORNIA - DEPARTMENT OF TRANSPORTATION
Caltrans
HYDRAULICS

FUNCTIONAL SUPERVISOR: RALPH M. SASAKI
CALCULATED-DESIGNED BY: S. M. TAN / W. Y. LEE
CHECKED BY: R. M. SASAKI
REVISED BY / DATE REVISED

LAST REVISION 00-00-00 | DATE PLOTTED => 31-JAN-2011 | TIME PLOTTED => 13:22

Dist	COUNTY	ROUTE	KILOMETER POST TOTAL PROJECT	SHEET No.	TOTAL SHEETS
07	LA	5	2.9/4.9	252	1082

Caltrans Metric

REGISTERED CIVIL ENGINEER 12-23-09 DATE

6-21-10
PLANS APPROVAL DATE

REGISTERED PROFESSIONAL ENGINEER RALPH M. SASAKI No. 30849 Exp. 3/31/10 CIVIL STATE OF CALIFORNIA

THE STATE OF CALIFORNIA OR ITS OFFICERS OR AGENTS SHALL NOT BE RESPONSIBLE FOR THE ACCURACY OR COMPLETENESS OF ELECTRONIC COPIES OF THIS PLAN SHEET.

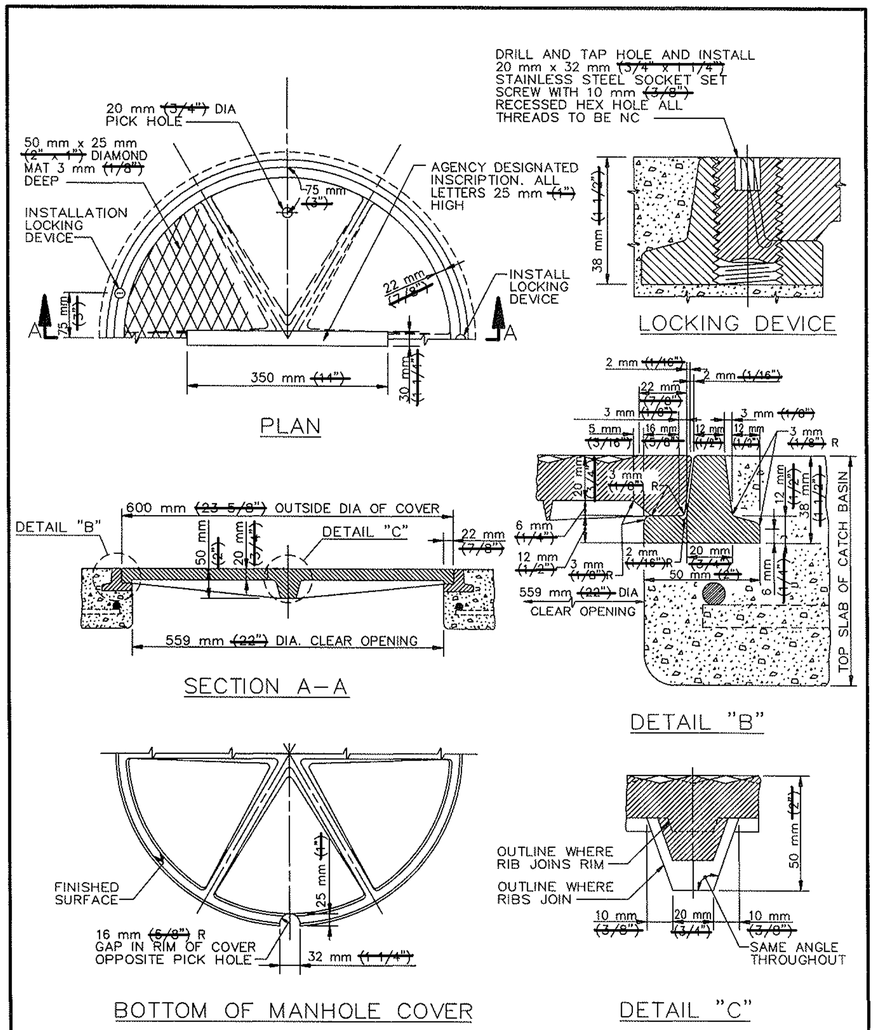

~~STANDARD PLANS FOR PUBLIC WORKS CONSTRUCTION~~

~~PROMULGATED BY THE PUBLIC WORKS STANDARDS INC. GREENBOOK COMMITTEE 1984 REV. 1993, 1998~~

CATCH BASIN MANHOLE FRAME AND COVER

~~USE WITH STANDARD SPECIFICATIONS FOR PUBLIC WORKS CONSTRUCTION~~

STANDARD PLAN METRIC
312–2
SHEET 1 OF 2

NOTES

1. THE CAST IRON USED SHALL CONFORM TO ASTM A48M CLASS 35B.
2. THE FRAME AND COVER SHALL BE COATED WITH ASPHALTUM OR BITUMINOUS PAINT AFTER TESTING AND INSPECTION.
3. FOUNDRY IDENTIFYING MARK, HEAT AND DATE SHALL BE CAST ON THE BOTTOM OF THE COVER AND ON THE INSIDE OF THE FRAME.
4. IMPORTED COVERS AND FRAMES SHALL HAVE THE COUNTRY OF ORIGIN MARKING IN COMPLIANCE WITH FEDERAL REGULATIONS.
5. WEIGHT OF FRAME SHALL BE 15 Kg ~~(30 POUNDS)~~. WEIGHT OF COVER SHALL BE 40 kg ~~(85 POUNDS)~~. ACTUAL WEIGHTS SHALL BE WITHIN A RANGE OF 95% TO 110%.
6. THE MANHOLE FRAME AND COVER SHALL BE INSPECTED BY THE ENGINEER PRIOR TO SHIPMENT TO THE WORK SITE. ACCEPTANCE WILL BE INDICATED BY THE AGENCY'S MARK.
7. THE PROOF–LOAD FOR TEST METHOD B OF SSPWC 206–3.2 IS 127 kN ~~(28,600 POUNDS)~~.
8. AGENCY INSCRIPTION SHALL BE AS SPECIFIED ON THE PLANS OR SPECIAL PROVISIONS.

~~STANDARD PLANS FOR PUBLIC WORKS CONSTRUCTION~~

CATCH BASIN MANHOLE FRAME AND COVER

STANDARD PLAN METRIC
312–2
SHEET 2 OF 2

ALL DIMENSIONS ARE IN METERS UNLESS OTHERWISE SHOWN

DRAINAGE DETAILS

NO SCALE

DD-39

REVISED BY	DATE REVISED

CALCULATED-DESIGNED BY S. M. TAN W. Y. LEE
CHECKED BY R. M. SASAKI
FUNCTIONAL SUPERVISOR RALPH M. SASAKI

STATE OF CALIFORNIA - DEPARTMENT OF TRANSPORTATION
Caltrans HYDRAULICS

LAST REVISION 00-00-00 DATE PLOTTED => 31-JAN-2011 TIME PLOTTED => 13:22

Dist	COUNTY	ROUTE	KILOMETER POST TOTAL PROJECT	SHEET No.	TOTAL SHEETS
07	LA	5	2.9/4.9	253	1082

Ralph M. Sasaki 12-23-09
REGISTERED CIVIL ENGINEER DATE

6-21-10
PLANS APPROVAL DATE

REGISTERED PROFESSIONAL ENGINEER RALPH M. SASAKI No. 30849 Exp. 3/31/10 CIVIL STATE OF CALIFORNIA

THE STATE OF CALIFORNIA OR ITS OFFICERS OR AGENTS SHALL NOT BE RESPONSIBLE FOR THE ACCURACY OR COMPLETENESS OF ELECTRONIC COPIES OF THIS PLAN SHEET.

Caltrans Metric

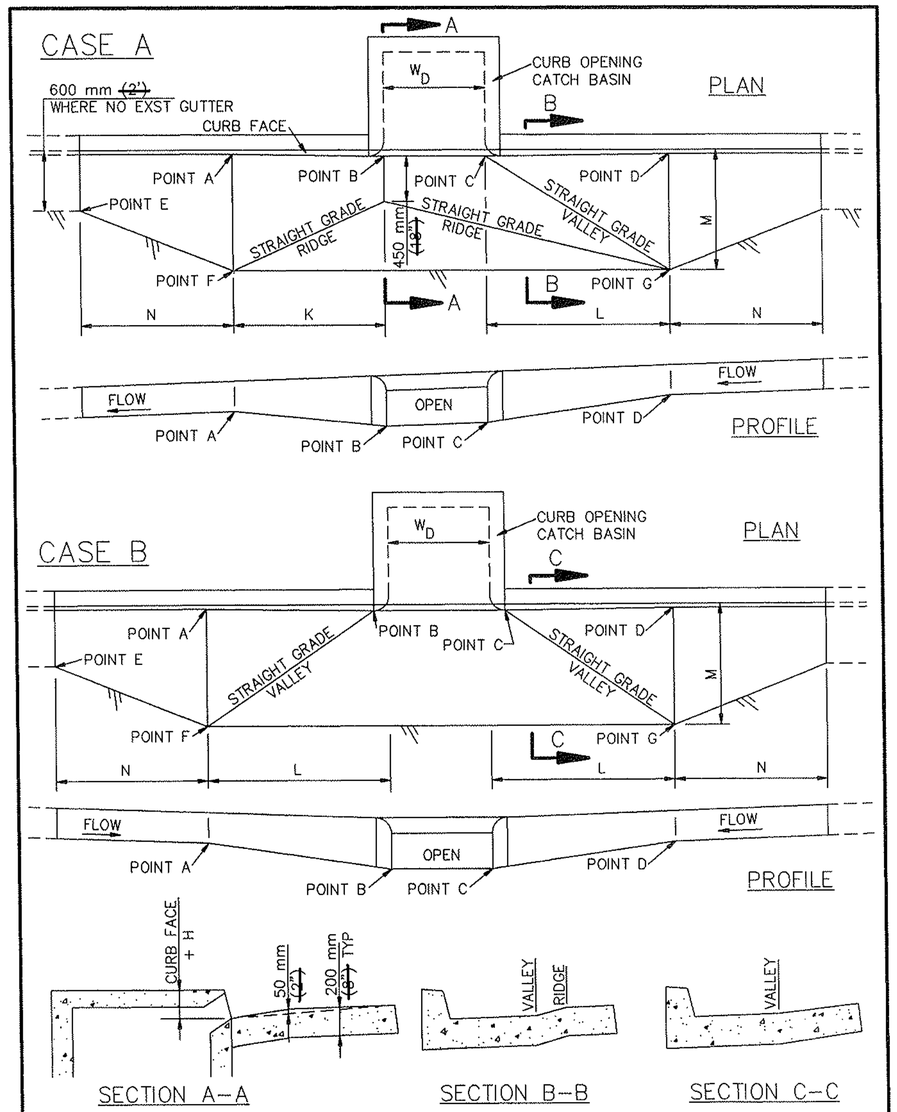

~~STANDARD PLANS FOR PUBLIC WORKS CONSTRUCTION~~

~~PROMULGATED BY THE PUBLIC WORKS STANDARDS INC. GREENBOOK COMMITTEE 1984 REV. 1995, 2005~~

LOCAL DEPRESSIONS AT CATCH BASINS

~~USE WITH STANDARD SPECIFICATIONS FOR PUBLIC WORKS CONSTRUCTION~~

STANDARD PLAN METRIC 313–2 SHEET 1 OF 4

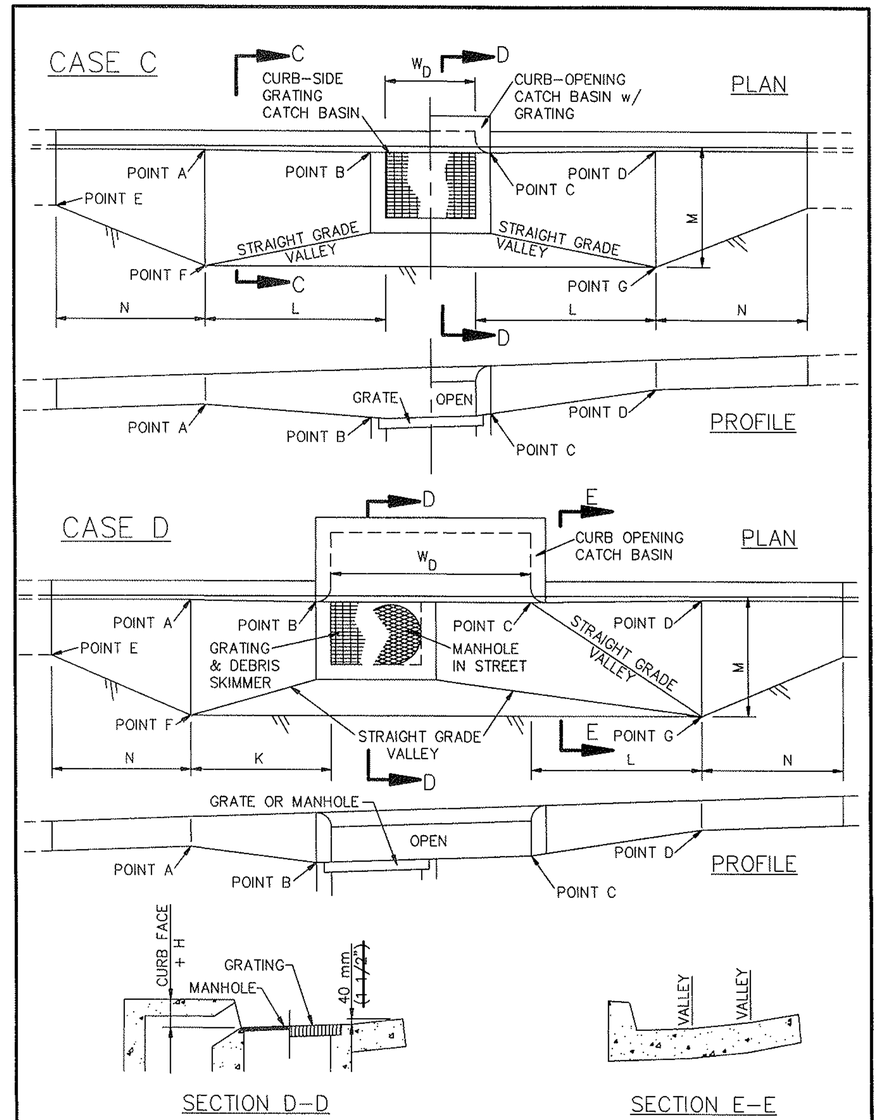

~~STANDARD PLANS FOR PUBLIC WORKS CONSTRUCTION~~

LOCAL DEPRESSIONS AT CATCH BASINS

STANDARD PLAN METRIC 313–2 SHEET 2 OF 4

ALL DIMENSIONS ARE IN METERS UNLESS OTHERWISE SHOWN

DRAINAGE DETAILS

NO SCALE

DD-40

STATE OF CALIFORNIA - DEPARTMENT OF TRANSPORTATION
Caltrans
HYDRAULICS

FUNCTIONAL SUPERVISOR: RALPH M. SASAKI
CALCULATED-DESIGNED BY: S. M. TAN
CHECKED BY: W. Y. LEE
REVISED BY: R. M. SASAKI
DATE REVISED

LAST REVISION 00-00-00 DATE PLOTTED => 31-JAN-2011 TIME PLOTTED => 13:22

Dist	COUNTY	ROUTE	KILOMETER POST TOTAL PROJECT	SHEET No.	TOTAL SHEETS
07	LA	5	2.9/4.9	254	1082

Caltrans Metric

REGISTERED CIVIL ENGINEER 12-23-09 DATE

6-21-10
PLANS APPROVAL DATE

REGISTERED PROFESSIONAL ENGINEER RALPH M. SASAKI No. 30849 Exp. 3/31/10 CIVIL STATE OF CALIFORNIA

THE STATE OF CALIFORNIA OR ITS OFFICERS OR AGENTS SHALL NOT BE RESPONSIBLE FOR THE ACCURACY OR COMPLETENESS OF ELECTRONIC COPIES OF THIS PLAN SHEET.

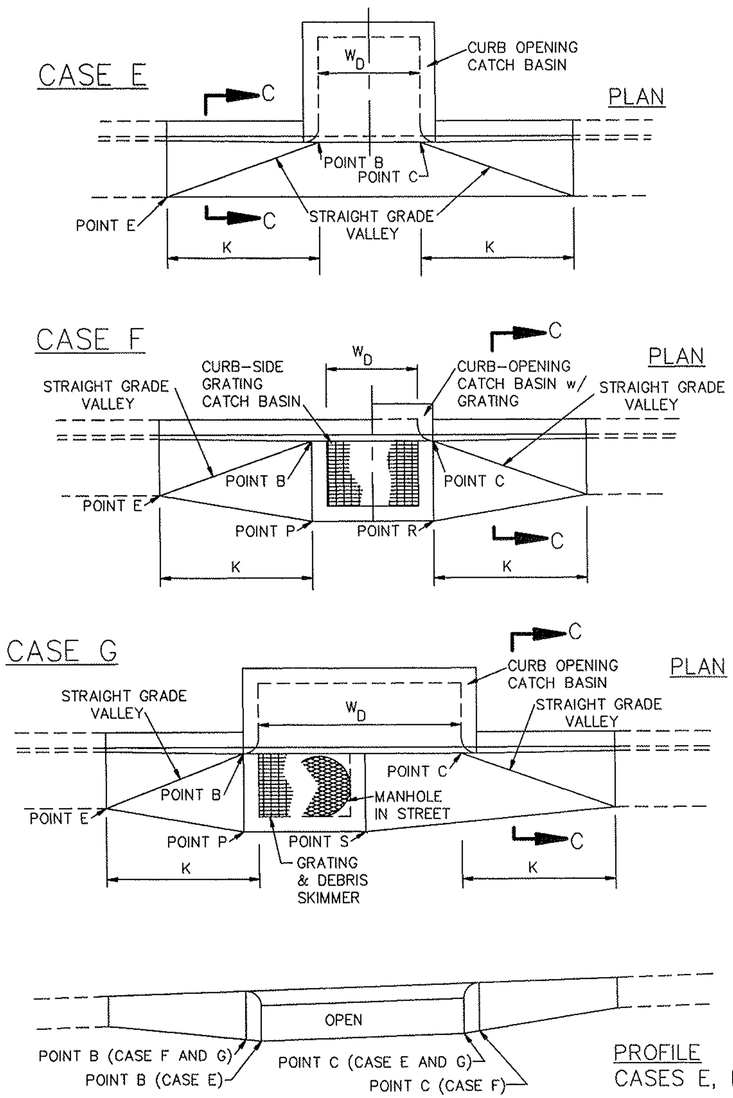

~~STANDARD PLANS FOR PUBLIC WORKS CONSTRUCTION~~

LOCAL DEPRESSIONS AT CATCH BASINS

STANDARD PLAN METRIC
313-2
SHEET 3 OF 4

NOTES:

1. ALL EXPOSED EDGES SHALL BE ROUNDED TO A 15 mm ~~(1/2")~~ RADIUS.
2. THE CURB FACE AT POINTS A AND D SHALL BE THE NORMAL CURB FACE OF THE ADJACENT CURB. AT POINTS B AND C, THE CURB FACE SHALL BE THE NORMAL CURB FACE OF THE ADJACENT CURB PLUS H (SEE APPLICABLE CATCH BASIN STANDARD PLAN.)
3. IN EXISTING STREETS WHERE NO PAVEMENT RECONSTRUCTION IS SPECIFIED ON THE PLANS, THE ELEVATION OF THE OUTER EDGE OF THE LOCAL DEPRESSION SHALL MEET THE FINISHED STREET SURFACE.
4. IN NEW STREETS OR IN EXISTING STREETS WHERE PAVEMENT RECONSTRUCTION IS SPECIFIED ON THE PLANS:

   THE ELEVATIONS OF POINTS F AND G SHALL BE SET H1 HIGHER THAN THE GUTTER FLOW LINE ELEVATIONS AT POINTS A AND D, RESPECTIVELY.

   THE ELEVATIONS OF POINTS P AND R SHALL BE SET H2 HIGHER THAN THE GUTTER FLOW LINE ELEVATIONS AT POINTS B AND C, RESPECTIVELY.

   THE ELEVATION OF POINT S SHALL BE SET H2 HIGHER THAN THE ELEVATION AT THE NEAREST GUTTER FLOW LINE.

   WHERE THERE IS NO GUTTER ADJACENT TO THE LOCAL DEPRESSION, THE ELEVATION OF POINT E SHALL BE SET H3 HIGHER THAN THE ELEVATION AT THE NEAREST TOE OF CURB.
5. DIMENSIONS:

   H, H1, H2 AND H3 SHALL BE AS NOTED ON THE PLANS.

   G = 600 mm ~~(24")~~

   K = 1500 mm ~~(5' 0")~~

   L = 1800 mm ~~(6' 0")~~

   M = 1200 mm ~~(4' 0")~~

   N = 1500 mm ~~(5' 0")~~

   W_D = CATCH BASIN W FOR SINGLE CATCH BASIN OR DISTANCE BETWEEN EXTREME END WALLS FOR MULTIPLE CATCH BASINS.

~~STANDARD PLANS FOR PUBLIC WORKS CONSTRUCTION~~

LOCAL DEPRESSIONS AT CATCH BASINS

STANDARD PLAN METRIC
313-2
SHEET 4 OF 4

ALL DIMENSIONS ARE IN METERS UNLESS OTHERWISE SHOWN

DRAINAGE DETAILS

NO SCALE

DD-41

STATE OF CALIFORNIA - DEPARTMENT OF TRANSPORTATION
Caltrans
HYDRAULICS

FUNCTIONAL SUPERVISOR: RALPH M. SASAKI
CALCULATED-DESIGNED BY: S. M. TAN, W. Y. LEE
CHECKED BY: R. M. SASAKI
REVISED BY
DATE REVISED

LAST REVISION 00-00-00
DATE PLOTTED => 31-JAN-2011
TIME PLOTTED => 13:22

Dist	COUNTY	ROUTE	KILOMETER POST TOTAL PROJECT	SHEET No.	TOTAL SHEETS
07	LA	5	2.9/4.9	255	1082

Caltrans Metric

REGISTERED CIVIL ENGINEER 12-23-09 DATE

6-21-10
PLANS APPROVAL DATE

REGISTERED PROFESSIONAL ENGINEER RALPH M. SASAKI No. 30849 Exp. 3/31/10 CIVIL STATE OF CALIFORNIA

THE STATE OF CALIFORNIA OR ITS OFFICERS OR AGENTS SHALL NOT BE RESPONSIBLE FOR THE ACCURACY OR COMPLETENESS OF ELECTRONIC COPIES OF THIS PLAN SHEET.

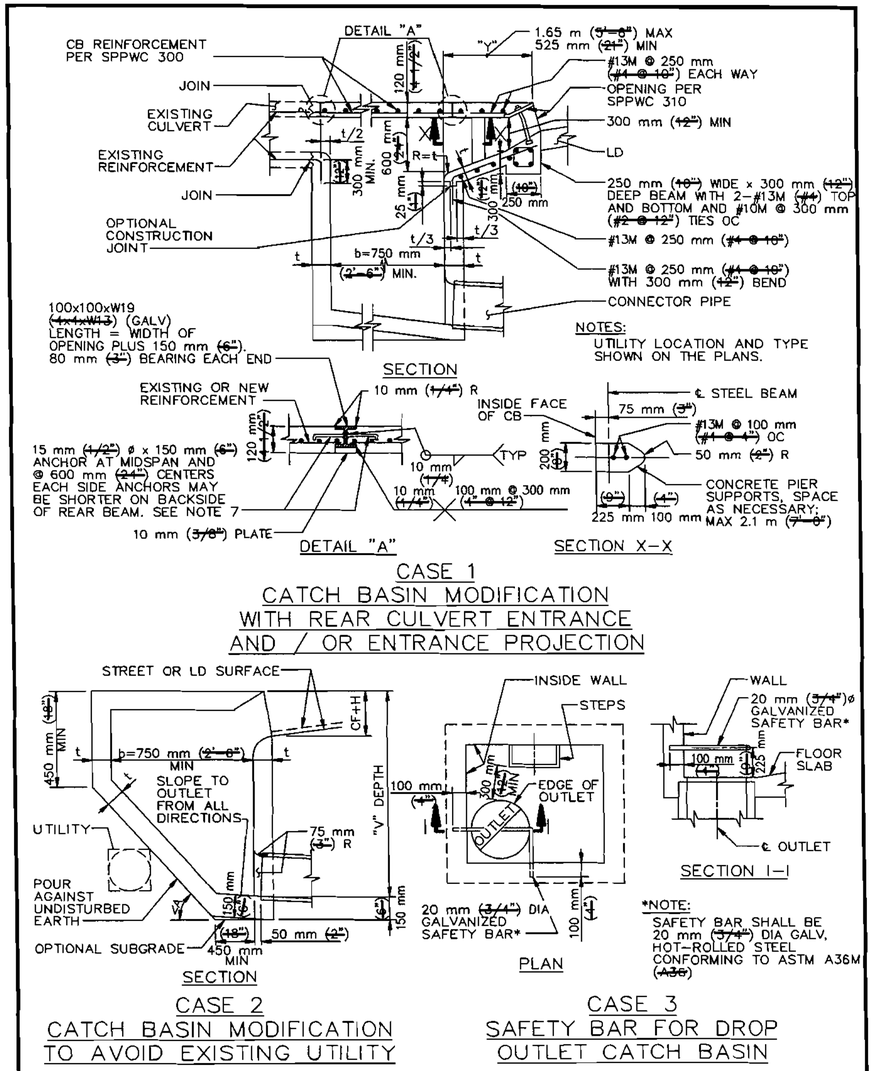

CASE 1
CATCH BASIN MODIFICATION WITH REAR CULVERT ENTRANCE AND / OR ENTRANCE PROJECTION

CASE 2
CATCH BASIN MODIFICATION TO AVOID EXISTING UTILITY

CASE 3
SAFETY BAR FOR DROP OUTLET CATCH BASIN

~~STANDARD PLANS FOR PUBLIC WORKS CONSTRUCTION~~

~~PROMULGATED BY THE PUBLIC WORKS STANDARDS INC. GREENBOOK COMMITTEE 1992 REV. 1993, 1998~~

MODIFICATIONS FOR SIDE OPENING CATCH BASIN

~~USE WITH STANDARD SPECIFICATIONS FOR PUBLIC WORKS CONSTRUCTION~~

STANDARD PLAN METRIC
314-2
SHEET 1 OF 2

NOTES

1. MODIFICATIONS ARE TO BE USED AS REQUIRED BY THE PLANS. ANY ADDITIONAL CHANGES ARE SUBJECT TO THE APPROVAL OF THE ENGINEER.
2. DETAILS NOT SHOWN SHALL BE PER THE APPLICABLE CATCH BASIN STANDARD PLANS.
3. REFER TO THE PLANS FOR DETAILS OF THE UTILITY AND CULVERT.
4. INTERFERING PORTIONS OF EXISTING CULVERTS SHALL BE REMOVED ON A LINE NORMAL TO THE CULVERT CENTER LINE AND A PORTION OF THE CULVERT RECONSTRUCTED IF REQUIRED. SAWCUTTING SHALL BE USED TO PROVIDE A NEAT JOINT ON THE EXPOSED SURFACE AND TRANSVERSE STEEL SHALL BE RETAINED.
5. PLACE STEPS IN END WALL OF CATCH BASIN UNLESS OTHERWISE SHOWN.
6. WHEN REINFORCEMENT IS REQUIRED BY SPPWC 309, IT SHALL BE PLACED TO THE CONFIGURATION OF THE MODIFIED BASIN. IF ANGLE A EXCEEDS 45° THE SLOPING PORTION OF THE INVERT SHALL BE REINFORCED AS THE REAR WALL. LENGTH OF BARS SHALL BE INCREASED AS NECESSARY.
7. ELECTRICALLY WELDED STUDS 15 mm x 200 mm (~~1/2" x 8"~~), NELSON H4F OR EQUAL MAY BE USED IN LIEU OF THE DEFORMED BAR ANCHORS. IF THE TOP SLABS OF THE CATCH BASIN AND THE CULVERT ARE NOT IN THE SAME PLANE THE ANCHORS ON THE CULVERT SIDE SHALL BE OMITTED.
8. THE FOLLOWING SPPWC ARE INCORPORATED HEREIN:

   300 CURB OPENING CATCH BASIN
   308 MONOLITHIC CATCH BASIN CONNECTION
   309 CATCH BASIN REINFORCEMENT
   310 CATCH BASIN FACE PLATE ASSEMBLY AND PROTECTION BAR
   312 CATCH BASIN MANHOLE FRAME AND COVER
   635 STEEL STEP
   636 POLYPROPYLENE PLASTIC STEP

~~STANDARD PLANS FOR PUBLIC WORKS CONSTRUCTION~~

MODIFICATIONS FOR SIDE OPENING CATCH BASIN

STANDARD PLAN METRIC
314-2
SHEET 2 OF 2

ALL DIMENSIONS ARE IN METERS UNLESS OTHERWISE SHOWN

DRAINAGE DETAILS

NO SCALE

DD-42

STATE OF CALIFORNIA - DEPARTMENT OF TRANSPORTATION
Caltrans HYDRAULICS

FUNCTIONAL SUPERVISOR RALPH M. SASAKI
CALCULATED-DESIGNED BY S. M. TAN W. Y. LEE
CHECKED BY R. M. SASAKI
REVISED BY
DATE REVISED

LAST REVISION 00-00-00
DATE PLOTTED => 31-JAN-2011
TIME PLOTTED => 13:23

Dist	COUNTY	ROUTE	KILOMETER POST TOTAL PROJECT	SHEET No.	TOTAL SHEETS
07	LA	5	2.9/4.9	256	1082

Caltrans Metric

REGISTERED CIVIL ENGINEER 12-23-09 DATE

6-21-10
PLANS APPROVAL DATE

REGISTERED PROFESSIONAL ENGINEER RALPH M. SASAKI No. 30849 Exp. 3/31/10 CIVIL STATE OF CALIFORNIA

THE STATE OF CALIFORNIA OR ITS OFFICERS OR AGENTS SHALL NOT BE RESPONSIBLE FOR THE ACCURACY OR COMPLETENESS OF ELECTRONIC COPIES OF THIS PLAN SHEET.

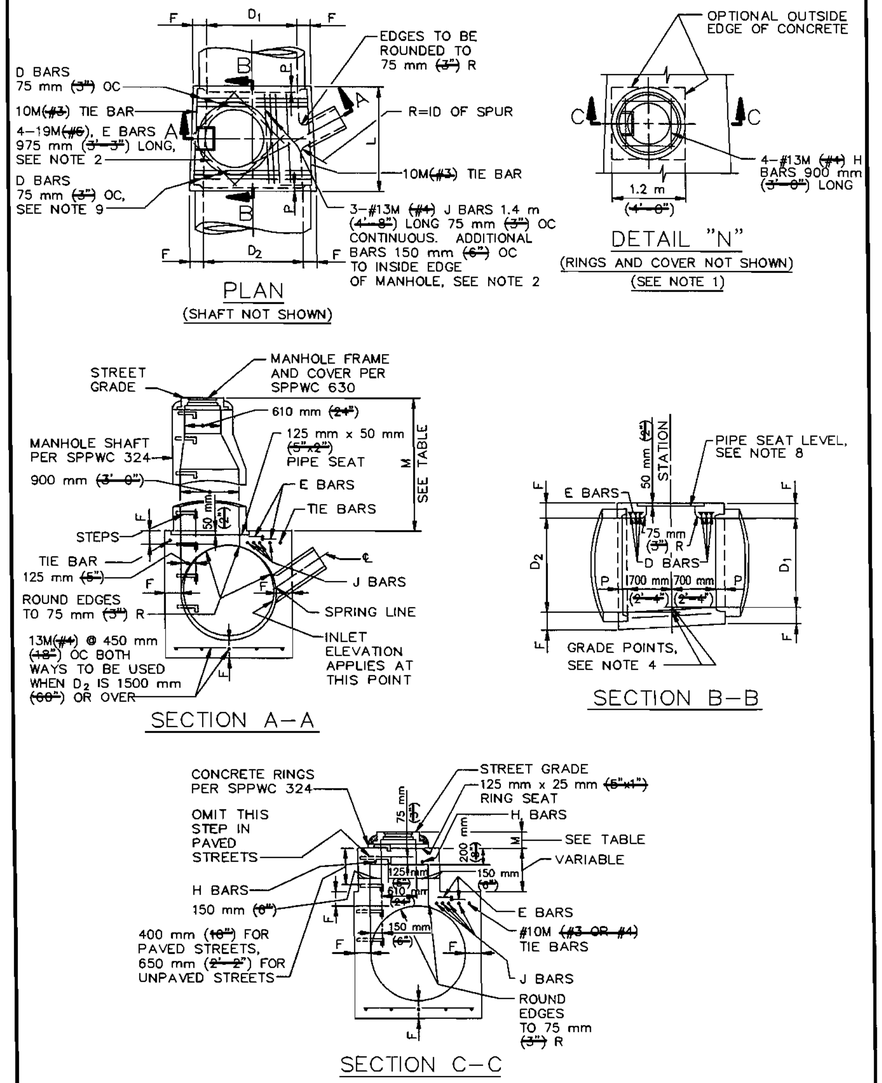

TABLE OF VALUES FOR F	
D_2	F
900 mm (36")	165 mm (6-1/2")
975 mm (39")	180 mm (7")
1050 mm (42")	190 mm (7-1/2")
1125 mm (45")	195 mm (7-3/4")
1200 mm (48")	205 mm (8")
1275 mm (51")	215 mm (8-1/2")
1350 mm (54")	230 mm (9")
1425 mm (57")	235 mm (9-1/4")
1500 mm (60")	240 mm (9-1/2")
1575 mm (63")	255 mm (10")
1650 mm (66")	260 mm (10-1/4")
1725 mm (69")	275 mm (10-3/4")
1800 mm (72")	280 mm (11")
1950 mm (78")	300 mm (11-3/4")
2100 mm (84")	320 mm (12-1/2")
2250 mm (90")	335 mm (13-1/4")
2400 mm (96")	355 mm (14")
2550 mm (102")	395 mm (15-1/2")
2700 mm (108")	405 mm (16")
2850 mm (114")	420 mm (16-1/2")
3000 mm (120")	430 mm (17")
3150 mm (126")	430 mm (17")
3300 mm (132")	445 mm (17-1/2")
3450 mm (138")	445 mm (17-1/2")
3600 mm (144")	455 mm (18")

TABLE OF VALUES FOR M (SEE NOTE 1)				
SECTION	PAVED STREET		UNPAVED STREET	
	MAX	MIN	MAX	MIN
A-A		867 mm (2'-10-1/2")		1060 mm (3'-0")
C-C	282 mm (11")	217 mm (8-1/2")	410 mm (16")	380 mm (15")

STANDARD PLANS FOR PUBLIC WORKS CONSTRUCTION

PROMULGATED BY THE PUBLIC WORKS STANDARDS INC. GREENBOOK COMMITTEE 1962 REV. 1996

MANHOLE PIPE TO PIPE
MAIN LINE ID=900 mm (36") OR LARGER

USE WITH STANDARD SPECIFICATIONS FOR PUBLIC WORKS CONSTRUCTION

STANDARD PLAN METRIC 320-1 SHEET 1 OF 4

STANDARD PLANS FOR PUBLIC WORKS CONSTRUCTION

MANHOLE PIPE TO PIPE
MAIN LINE ID = 900 mm (36") OR LARGER

STANDARD PLAN METRIC 320-1 SHEET 2 OF 4

ALL DIMENSIONS ARE IN METERS UNLESS OTHERWISE SHOWN

DRAINAGE DETAILS

NO SCALE

DD-43

STATE OF CALIFORNIA - DEPARTMENT OF TRANSPORTATION
Caltrans HYDRAULICS
FUNCTIONAL SUPERVISOR RALPH M. SASAKI
CALCULATED-DESIGNED BY S. M. TAN W. Y. LEE
CHECKED BY R. M. SASAKI
REVISED BY
DATE REVISED

LAST REVISION 00-00-00 DATE PLOTTED => 31-JAN-2011 TIME PLOTTED => 13:23

Dist	COUNTY	ROUTE	KILOMETER POST TOTAL PROJECT	SHEET No.	TOTAL SHEETS
07	LA	5	2.9/4.9	257	1082

Caltrans Metric

12-23-09
REGISTERED CIVIL ENGINEER DATE

6-21-10
PLANS APPROVAL DATE

REGISTERED PROFESSIONAL ENGINEER RALPH M. SASAKI No. 30849 Exp. 3/31/10 CIVIL STATE OF CALIFORNIA

THE STATE OF CALIFORNIA OR ITS OFFICERS OR AGENTS SHALL NOT BE RESPONSIBLE FOR THE ACCURACY OR COMPLETENESS OF ELECTRONIC COPIES OF THIS PLAN SHEET.

NOTES

1. WHEN DEPTH M FROM STREET GRADE TO THE TOP OF THE BOX IS LESS THAN 867 mm (~~2'-10 1/2"~~) FOR PAVED STREETS OR 1060 mm (~~3'-6"~~) FOR UNPAVED STREETS, CONSTRUCT MONOLITHIC SHAFT PER SECTION C-C AND DETAIL "N". SHAFT FOR ANY DEPTH OF MANHOLE MAY BE CONSTRUCTED PER SECTION C-C. WHEN DIAMETER D_1 IS 1200 mm (~~48"~~) OR LESS, CENTER OF SHAFT MAY BE LOCATED PER NOTE 2.
2. CENTER OF MANHOLE SHAFT SHALL BE LOCATED OVER CENTER LINE OF STORM DRAIN WHEN DIAMETER D_1 IS 1200 mm (~~48"~~) OR LESS, IN WHICH CASE PLACE E BARS SYMMETRICALLY AROUND SHAFT AT 45° WITH CENTERLINE AND OMIT J BARS.
3. L AND P SHALL HAVE THE FOLLOWING VALUES UNLESS OTHERWISE SHOWN ON THE PROJECT DRAWINGS:
   A. D_2=2400 mm (~~96"~~) OR LESS, L=1.7 m (~~5'-6"~~), P=130 mm (~~5"~~)
   B. D_2 OVER 2400 mm (~~96"~~), L=1.8 m (~~6'-0"~~), P=210 mm (~~8"~~)
   L MAY BE INCREASED OR LOCATION OF MANHOLE SHIFTED TO MEET PIPE ENDS. WHEN L GREATER THAN THAT SHOWN ABOVE IS SPECIFIED, D BARS SHALL BE CONTINUED 150 mm (~~6"~~) OC.
4. STATIONS OF MANHOLES SHOWN ON PLANS APPLY AT CENTERLINE OF SHAFT. ELEVATIONS ARE SHOWN AT CENTERLINE OF SHAFT AND REFER TO THE PROLONGED INVERT GRADE LINES.
5. REINFORCEMENT SHALL CONFORM TO ASTM A 615M, GRADE 300 (~~ASTM A 615, GRADE 40~~), AND SHALL TERMINATE 40 mm (~~1 1/2"~~) CLEAR OF CONCRETE SURFACES UNLESS OTHERWISE SHOWN.
6. FLOOR OF MANHOLE SHALL BE STEEL TROWELED TO SPRING LINE.
7. BODY OF MANHOLE SHALL BE POURED IN ONE CONTINUOUS OPERATION EXCEPT THAT A CONSTRUCTION JOINT WITH A LONGITUDINAL KEYWAY MAY BE PLACED AT SPRING LINE.
8. THICKNESS OF THE DECK SHALL VARY WHEN NECESSARY TO PROVIDE A LEVEL SEAT BUT SHALL NOT BE LESS THAN THE TABULAR VALUES FOR F SHOWN ON SHEET 2.
9. D BARS SHALL BE #13M (~~#4~~) FOR D_2=975 mm (~~39"~~) OR LESS, #16M (~~#5~~) FOR D_2= 1050 mm (~~42"~~) TO 2100 mm (~~84"~~) INCLUSIVE AND #19M (~~#6~~) FOR D_2= 2250 mm (~~90"~~) OR OVER.
10. CENTERLINE OF INLET PIPE SHALL INTERSECT INSIDE FACE OF CONE AT SPRING LINE UNLESS OTHERWISE SHOWN.
11. STEPS SHALL CONFORM TO SPPWC 635 OR 636. UNLESS OTHERWISE SHOWN, STEPS SHALL BE UNIFORMLY SPACED 350 mm (~~14"~~) TO 375 mm (~~15"~~) OC. THE LOWEST STEP SHALL NOT BE MORE THAN 600 mm (~~24"~~) ABOVE THE INVERT.
12. THE FOLLOWING CRITERIA SHALL BE USED FOR THIS MANHOLE:
    A. MAIN LINE = 900 mm (~~36"~~) INSIDE DIAMETER OR LARGER. EXCEPT IF THE MAIN LINE RCP DOWNSTREAM OF MANHOLE IS 900 mm (~~36"~~) TO 1050 mm (~~42"~~) INSIDE DIAMETER AND THE MAIN LINE RCP UPSTREAM IS 825 mm (~~33"~~) OR LESS SPPWC 321 SHALL BE USED.

~~STANDARD PLANS FOR PUBLIC WORKS CONSTRUCTION~~

MANHOLE PIPE TO PIPE
MAIN LINE ID = 900 mm (~~36"~~) OR LARGER

STANDARD PLAN METRIC
320-1
SHEET 3 OF 4

    B. THE OUTSIDE DIAMETER OF THE LATERAL MUST BE LESS THAN OR EQUAL TO 1/2 THE INSIDE DIAMETER OF THE MAIN LINE. IF THE UPSTREAM AND DOWNSTREAM DIAMETERS OF THE MANHOLE ARE NOT THE SAME, THE GOVERNING INSIDE DIAMETER OF THE MAIN LINE SHALL BE CONSIDERED TO BE THAT WHERE THE EXTENDED CENTERLINE OF THE LATERAL ENTERS THE MANHOLE.
    C. IN NO INSTANCE SHALL THE INSIDE DIAMETER OF THE LATERAL TO THE MANHOLE BE GREATER THAN 750 mm (~~30"~~).
13. MANHOLE FRAME AND COVER SHALL CONFORM TO SPPWC 630 UNLESS OTHERWISE SHOWN.
14. MANHOLE SHAFT SHALL CONFORM TO SPPWC 324 UNLESS OTHERWISE SHOWN.
15. WHERE A MANHOLE SHAFT – 900 mm (~~36"~~) WITHOUT REDUCER IS SPECIFIED REFER TO SPPWC 326.
16. WHERE A PRESSURE MANHOLE SHAFT – WITH ECCENTRIC REDUCER IS SPECIFIED REFER TO SPPWC 328.
17. WHERE A PRESSURE MANHOLE SHAFT – 914 mm (~~36"~~) WITHOUT REDUCER IS SPECIFIED REFER TO SPPWC 329.
18. THE FOLLOWING SPPWC ARE INCORPORATED HEREIN:
    324 MANHOLE SHAFT – WITH ECCENTRIC REDUCER
    326 MANHOLE SHAFT – 900 mm (~~36"~~) WITHOUT REDUCER
    328 PRESSURE MANHOLE SHAFT – WITH ECCENTRIC
    329 PRESSURE MANHOLE SHAFT 914 mm (~~36"~~) WITHOUT REDUCER
    630 610 mm (~~24"~~) MANHOLE FRAME AND COVER
    633 914 mm (~~36"~~) MANHOLE FRAME AND COVER
    635 STEEL STEP
    636 POLYPROPYLENE PLASTIC STEP

~~STANDARD PLANS FOR PUBLIC WORKS CONSTRUCTION~~

MANHOLE PIPE TO PIPE
MAIN LINE ID = 900 mm (~~36"~~) OR LARGER

STANDARD PLAN METRIC
320-1
SHEET 4 OF 4

ALL DIMENSIONS ARE IN METERS UNLESS OTHERWISE SHOWN

DRAINAGE DETAILS

NO SCALE

DD-44

STATE OF CALIFORNIA - DEPARTMENT OF TRANSPORTATION
Caltrans HYDRAULICS

FUNCTIONAL SUPERVISOR: RALPH M. SASAKI
CALCULATED-DESIGNED BY: S. M. TAN, W. Y. LEE
CHECKED BY: R. M. SASAKI
REVISED BY
DATE REVISED

LAST REVISION 00-00-00
DATE PLOTTED => 31-JAN-2011
TIME PLOTTED => 14:50

Dist	COUNTY	ROUTE	KILOMETER POST TOTAL PROJECT	SHEET No.	TOTAL SHEETS
07	LA	5	2.9/4.9	258	1082

Caltrans Metric

12-23-09
REGISTERED CIVIL ENGINEER DATE

6-21-10
PLANS APPROVAL DATE

REGISTERED PROFESSIONAL ENGINEER RALPH M. SASAKI No. 30849 Exp. 3/31/10 CIVIL STATE OF CALIFORNIA

THE STATE OF CALIFORNIA OR ITS OFFICERS OR AGENTS SHALL NOT BE RESPONSIBLE FOR THE ACCURACY OR COMPLETENESS OF ELECTRONIC COPIES OF THIS PLAN SHEET.

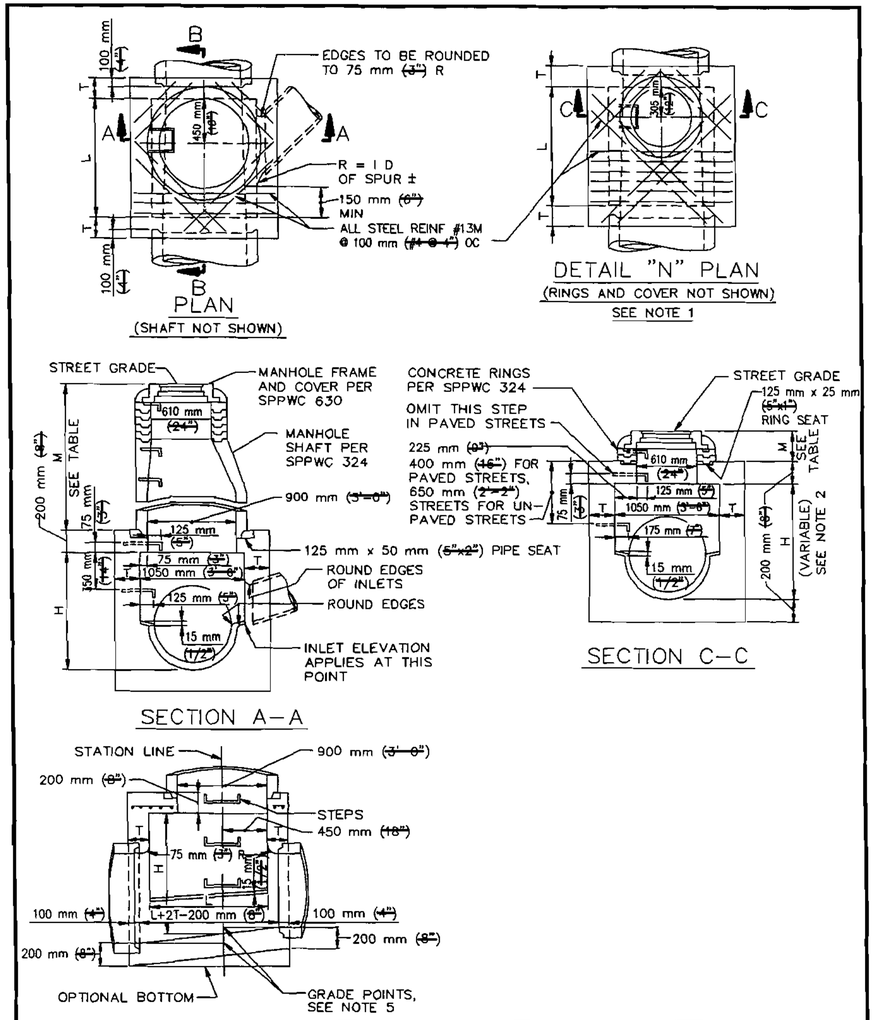

TABLE OF VALUES FOR M (SEE NOTE 1)				
SECTION	PAVED STREET		UNPAVED STREET	
	MAX	MIN	MAX	MIN
A-A		867 mm (2'-10 1/2")		1060 mm (3'-6")
C-C	282 mm (11")	217 mm (8 1/2")	410 mm (16")	380 mm (15")

~~STANDARD PLANS FOR PUBLIC WORKS CONSTRUCTION~~

~~PROMULGATED BY THE PUBLIC WORKS STANDARDS INC. GREENBOOK COMMITTEE 1992 REV. 1996~~

MANHOLE PIPE TO PIPE (ONE OR BOTH MAIN LINE ID'S 825 mm (33") OR SMALLER)

~~USE WITH STANDARD SPECIFICATIONS FOR PUBLIC WORKS CONSTRUCTION~~

STANDARD PLAN METRIC
321-1
SHEET 1 OF 3

NOTES

1. WHEN DEPTH M FROM STREET GRADE TO THE TOP OF THE BOX IS LESS THAN 867 mm (2'-10 1/2") FOR PAVED STREETS OR 1060 mm (3'-6") FOR UNPAVED STREETS, CONSTRUCT SHAFT PER SECTION C-C AND DETAIL "N". DEPTH M MAY BE REDUCED TO AN ABSOLUTE LIMIT OF 150 mm (6") WHEN LARGER VALUES OF M WOULD REDUCE H IN SECTION C-C TO 1060 mm (3'-6") OR LESS.
2. H (IN SECTION A-A AND B-B) SHALL NOT BE LESS THAN 1.2 m (4'-0"), BUT MAY BE INCREASED PROVIDED THAT THE VALUE OF M SHALL NOT BE LESS THAN THE MINIMUM SPECIFIED AND THAT THE REDUCER SHALL BE USED. FOR H (IN SECTION C-C) SEE NOTE 1.
3. L SHALL BE 1.2 m (4'-0") UNLESS OTHERWISE SHOWN. L MAY BE INCREASED OR LOCATION OF MANHOLE SHIFTED TO MEET PIPE ENDS, BUT ANY CHANGE IN LOCATION OF THE SPUR MUST BE APPROVED BY THE ENGINEER.
4. T SHALL BE 200 mm (8") FOR VALUES OF H UP TO AND INCLUDING 2.4 m (8'-0") AND 250 mm (10") FOR VALUES OF H OVER 2.4 m (8'-0").
5. STATIONS OF MANHOLES SHOWN ON PLANS APPLY AT CENTERLINE OF SHAFT. ELEVATIONS ARE SHOWN AT CENTERLINE OF SHAFT AND REFER TO THE PROLONGED INVERT GRADE LINES. SEE NOTE 3.
6. REINFORCEMENT SHALL CONFORM TO ASTM A 615M, GRADE 300 (~~ASTM A 615, GRADE 40~~), AND SHALL TERMINATE 40 mm (1 1/2") CLEAR OF CONCRETE SURFACES UNLESS OTHERWISE SHOWN.
7. FLOOR OF MANHOLE SHALL BE STEEL TROWELED TO SPRING LINE.
8. BODY OF MANHOLE SHALL BE POURED IN ONE CONTINUOUS OPERATION EXCEPT THAT A CONSTRUCTION JOINT WITH A LONGITUDINAL KEYWAY MAY BE PLACED AT SPRING LINE.
9. THICKNESS OF THE DECK SHALL VARY WHEN NECESSARY TO PROVIDE A LEVEL SEAT BUT SHALL NOT BE LESS THAN 200 mm (8").
10. STEPS SHALL CONFORM TO SPPWC 635 OR 636. UNLESS OTHERWISE SHOWN, STEPS SHALL BE UNIFORMLY SPACED 350 mm (14") TO 375 mm (15") OC. THE LOWEST STEP SHALL NOT BE MORE THAN 600 mm (24") ABOVE THE LEDGE AT THE SIDE OF THE MANHOLE.

~~STANDARD PLANS FOR PUBLIC WORKS CONSTRUCTION~~

MANHOLE PIPE TO PIPE (ONE OR BOTH MAIN LINE ID'S 825 mm (33") OR SMALLER)

STANDARD PLAN METRIC
321-1
SHEET 2 OF 3

ALL DIMENSIONS ARE IN METERS UNLESS OTHERWISE SHOWN

DRAINAGE DETAILS

NO SCALE

DD-45

STATE OF CALIFORNIA - DEPARTMENT OF TRANSPORTATION
Caltrans HYDRAULICS

FUNCTIONAL SUPERVISOR: RALPH M. SASAKI
CALCULATED-DESIGNED BY: S. M. TAN, W. Y. LEE
CHECKED BY: R. M. SASAKI
REVISED BY / DATE REVISED

LAST REVISION 00-00-00 | DATE PLOTTED => 31-JAN-2011 | TIME PLOTTED => 14:50

Dist	COUNTY	ROUTE	KILOMETER POST TOTAL PROJECT	SHEET No.	TOTAL SHEETS
07	LA	5	2.9/4.9	259	1082

Ralph M. Sasaki 12-23-09
REGISTERED CIVIL ENGINEER DATE

6-21-10
PLANS APPROVAL DATE

REGISTERED PROFESSIONAL ENGINEER RALPH M. SASAKI No. 30849 Exp. 3/31/10 CIVIL STATE OF CALIFORNIA

THE STATE OF CALIFORNIA OR ITS OFFICERS OR AGENTS SHALL NOT BE RESPONSIBLE FOR THE ACCURACY OR COMPLETENESS OF ELECTRONIC COPIES OF THIS PLAN SHEET.

11. THE FOLLOWING CRITERIA SHALL BE USED FOR THIS MANHOLE:

    A. MAIN LINE = 825 mm (~~33"~~) INSIDE DIAMETER OR LESS. (EXCEPTION – IF THE MAIN LINE RCP DOWNSTREAM OF THE MANHOLE IS 900 mm (~~36"~~) TO 1050 mm (~~42"~~) INSIDE DIAMETER AND THE MAIN LINE RCP UPSTREAM IS 825 mm (~~33"~~) OR LESS.) SPPWC 320 OR 322 IS NOT APPLICABLE WHERE THE MAIN LINE CONDUIT IS LESS THAN 900 mm (~~36"~~) IN DIAMETER.

    B. SEE SECTION A – A. THE MAXIMUM SIZE LATERAL THAT MAY BE CONNECTED TO THIS MANHOLE IS SUCH THAT THE DISTANCE FROM THE OUTSIDE (TOP) OF THE LATERAL TO THE BOTTOM OF THE 200 mm (~~8"~~) THICK TOP OF THE MANHOLE CHAMBER, MEASURED VERTICALLY FROM THE END OF THE RCP, SHALL BE A MINIMUM OF 150 mm (~~6"~~).

    C. IF THE SIZE OF THE LATERAL IS SUCH THAT THE ABOVE–SPECIFIED MINIMUM DISTANCES CANNOT BE MAINTAINED, THEN ONE OF THE FOLLOWING ALTERNATE SOLUTIONS MUST BE USED.

        1. PROVIDE A SPECIAL STRUCTURE.

        2. PROVIDE TWO STANDARD STRUCTURES, CONSISTING OF THIS MANHOLE PLACED UPSTREAM OR DOWNSTREAM FROM THE APPLICABLE JUNCTION STRUCTURE OR TRANSITION STRUCTURE.

12. MANHOLE FRAME AND COVER SHALL CONFORM TO SPPWC 630 UNLESS OTHERWISE SHOWN.

13. MANHOLE SHAFT SHALL CONFORM TO SPPWC 324 UNLESS OTHERWISE SHOWN.

14. WHERE A MANHOLE SHAFT – 900 mm (~~36"~~) WITHOUT REDUCER IS SPECIFIED REFER TO SPPWC 336.

15. WHERE A PRESSURE MANHOLE SHAFT – WITH ECCENTRIC REDUCER IS SPECIFIED REFER TO SPPWC 328.

16. WHERE A PRESSURE MANHOLE SHAFT – 914 mm (~~36"~~) WITHOUT REDUCER IS SPECIFIED REFER TO SPPWC 329.

17. THE FOLLOWING SPPWC ARE INCORPORATED HEREIN:
    324 MANHOLE SHAFT – WITH ECCENTRIC REDUCER
    326 MANHOLE SHAFT – 900 mm (~~36"~~) WITHOUT REDUCER
    328 PRESSURE MANHOLE SHAFT – WITH ECCENTRIC
    329 PRESSURE MANHOLE SHAFT – 914 mm (~~36"~~) WITHOUT REDUCER
    630 610 mm (~~24"~~) MANHOLE FRAME AND COVER
    633 914 mm (~~36"~~) MANHOLE FRAME AND COVER
    635 STEEL STEP
    636 POLYPROPYLENE PLASTIC STEP

~~STANDARD PLANS FOR PUBLIC WORKS CONSTRUCTION~~

MANHOLE PIPE TO PIPE (ONE OR BOTH MAIN LINE ID'S 825 mm (~~33"~~) OR SMALLER)

STANDARD PLAN METRIC
321-1
SHEET 3 OF 3

ALL DIMENSIONS ARE IN METERS UNLESS OTHERWISE SHOWN

DRAINAGE DETAILS

NO SCALE

DD-46

STATE OF CALIFORNIA - DEPARTMENT OF TRANSPORTATION
Caltrans **HYDRAULICS**

FUNCTIONAL SUPERVISOR: RALPH M. SASAKI
CALCULATED-DESIGNED BY: S. M. TAN / W. Y. LEE
CHECKED BY: R. M. SASAKI
REVISED BY
DATE REVISED

LAST REVISION 00-00-00
DATE PLOTTED => 31-JAN-2011
TIME PLOTTED => 14:50

Dist	COUNTY	ROUTE	KILOMETER POST TOTAL PROJECT	SHEET No.	TOTAL SHEETS
07	LA	5	2.9/4.9	260	1082

Caltrans Metric

REGISTERED CIVIL ENGINEER — DATE 12-23-09

6-21-10
PLANS APPROVAL DATE

REGISTERED PROFESSIONAL ENGINEER — RALPH M. SASAKI — No. 30849 — Exp. 3/31/10 — CIVIL — STATE OF CALIFORNIA

THE STATE OF CALIFORNIA OR ITS OFFICERS OR AGENTS SHALL NOT BE RESPONSIBLE FOR THE ACCURACY OR COMPLETENESS OF ELECTRONIC COPIES OF THIS PLAN SHEET.

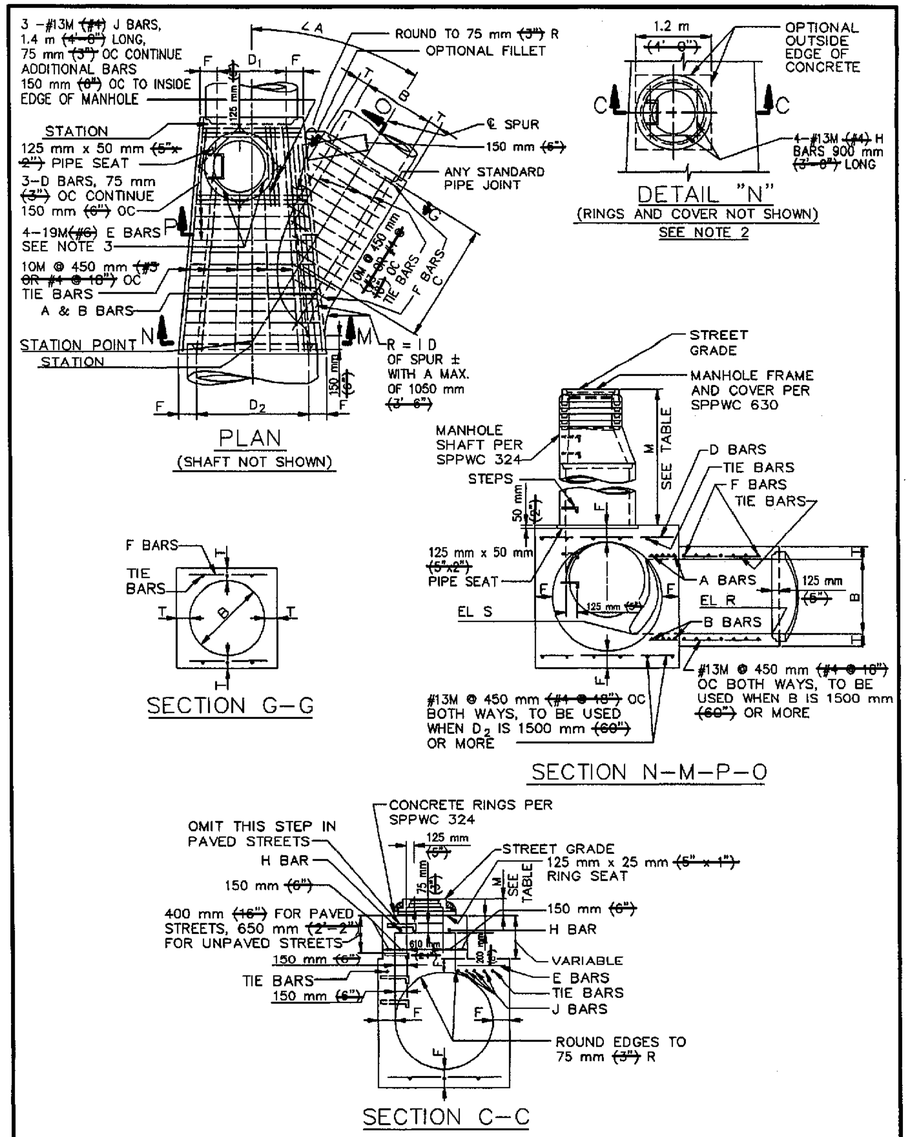

STANDARD PLANS FOR PUBLIC WORKS CONSTRUCTION

PROMULGATED BY THE PUBLIC WORKS STANDARDS INC. GREENBOOK COMMITTEE 1992 REV. 1996

MANHOLE PIPE TO PIPE (LARGE SIDE INLET)

USE WITH STANDARD SPECIFICATIONS FOR PUBLIC WORKS CONSTRUCTION

STANDARD PLAN METRIC 322-1

SHEET 1 OF 4

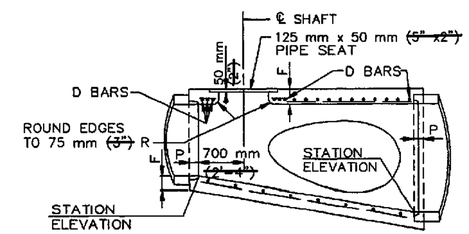

LONGITUDINAL SECTION

TABLE OF BARS SIZES		
D_2 OR B	A & B	D OR F
300 mm (12")-975 mm (39")	#16M @ 75 mm (#5 @ 3")	#13M @ 150 mm (#4 @ 6")
1050 mm (42")-2100 mm (84")	#19M @ 75 mm (#6 @ 3")	#16M @ 150 mm (#5 @ 6")
2250 mm (90")-3600 mm (144")	#22M @ 75 mm (#7 @ 3")	#19M @ 150 mm (#6 @ 6")

TABLE OF VALUES FOR M (SEE NOTE 2)				
SECTION	PAVED STREET		UNPAVED STREET	
	MAX	MIN	MAX	MIN
N-M-P-O		867 mm (2'-10 1/2")		1060 mm (3'-6")
C-C	282 mm (11")	217 mm (8 1/2")	410 mm (16")	380 mm (15")

TABLE OF VALUES FOR F	
D_2	F
900 mm (36")	165 mm (6 1/2")
975 mm (39")	180 mm (7")
1050 mm (42")	190 mm (7 1/2")
1125 mm (45")	195 mm (7 3/4")
1200 mm (48")	205 mm (8")
1275 mm (51")	215 mm (8 1/2")
1350 mm (54")	230 mm (9")
1425 mm (57")	235 mm (9 1/4")
1500 mm (60")	240 mm (9 1/2")
1575 mm (63")	255 mm (10")
1650 mm (66")	260 mm (10 1/4")
1725 mm (69")	275 mm (10 3/4")
1800 mm (72")	280 mm (11")
1950 mm (78")	300 mm (11 3/4")
2100 mm (84")	320 mm (12 1/2")
2250 mm (90")	335 mm (13 1/4")
2400 mm (96")	355 mm (14")
2550 mm (102")	395 mm (15 1/2")
2700 mm (108")	405 mm (16")
2850 mm (114")	420 mm (16 1/2")
3000 mm (120")	430 mm (17")
3150 mm (126")	430 mm (17")
3300 mm (132")	445 mm (17 1/2")
3450 mm (138")	445 mm (17 1/2")
3600 mm (144")	455 mm (18")

TABLE OF VALUES FOR T	
B	T
300 mm (12")	100 mm (4")
375 mm (15")	110 mm (4 1/4")
450 mm (18")	115 mm (4 1/2")
525 mm (21")	125 mm (5")
600 mm (24")	135 mm (5 1/4")
675 mm (27")	140 mm (5 1/2")
750 mm (30")	150 mm (6")
825 mm (33")	160 mm (6 1/4")
900 mm (36")	165 mm (6 1/2")
975 mm (39")	180 mm (7")
1050 mm (42")	190 mm (7 1/2")
1125 mm (45")	195 mm (7 3/4")
1200 mm (48")	205 mm (8")
1275 mm (51")	215 mm (8 1/2")
1350 mm (54")	230 mm (9")
1425 mm (57")	235 mm (9 1/4")
1500 mm (60")	240 mm (9 1/2")
1575 mm (63")	255 mm (10")
1650 mm (66")	260 mm (10 1/4")
1725 mm (69")	275 mm (10 3/4")
1800 mm (72")	280 mm (11")
1950 mm (78")	300 mm (11 3/4")
2100 mm (84")	320 mm (12 1/2")
2250 mm (90")	335 mm (13 1/4")
2400 mm (96")	355 mm (14")
2550 mm (102")	395 mm (15 1/2")
2700 mm (108")	405 mm (16")
2850 mm (114")	420 mm (16 1/2")
3000 mm (120")	430 mm (17")
3150 mm (126")	430 mm (17")
3300 mm (132")	445 mm (17 1/2")
3450 mm (138")	445 mm (17 1/2")
3600 mm (144")	455 mm (18")

STANDARD PLANS FOR PUBLIC WORKS CONSTRUCTION

MANHOLE PIPE TO PIPE (LARGE SIDE INLET)

STANDARD PLAN METRIC 322-1

SHEET 2 OF 4

ALL DIMENSIONS ARE IN METERS UNLESS OTHERWISE SHOWN

DRAINAGE DETAILS

NO SCALE

DD-47

STATE OF CALIFORNIA - DEPARTMENT OF TRANSPORTATION
Caltrans HYDRAULICS

FUNCTIONAL SUPERVISOR: RALPH M. SASAKI
CALCULATED-DESIGNED BY: S. M. TAN, W. Y. LEE
CHECKED BY: R. M. SASAKI
REVISED BY / DATE REVISED

LAST REVISION 00-00-00 DATE PLOTTED => 31-JAN-2011 TIME PLOTTED => 14:50

Dist	COUNTY	ROUTE	KILOMETER POST TOTAL PROJECT	SHEET No.	TOTAL SHEETS
07	LA	5	2.9/4.9	261	1082

Caltrans Metric

Ralph M. Sasaki 12-23-09
REGISTERED CIVIL ENGINEER DATE

6-21-10
PLANS APPROVAL DATE

REGISTERED PROFESSIONAL ENGINEER RALPH M. SASAKI No. 30849 Exp. 3/31/10 CIVIL STATE OF CALIFORNIA

THE STATE OF CALIFORNIA OR ITS OFFICERS OR AGENTS SHALL NOT BE RESPONSIBLE FOR THE ACCURACY OR COMPLETENESS OF ELECTRONIC COPIES OF THIS PLAN SHEET.

NOTES

1. VALUES FOR A, B, C, D_1 D_2 ELEVATION R AND ELEVATION S ARE SHOWN ON THE PLANS. ELEVATION S APPLIES AT INSIDE WALL OF STRUCTURE.
2. WHEN DEPTH M FROM STREET GRADE TO THE TOP OF THE BOX IS LESS THAN 867 mm (~~2'-10 1/2"~~) FOR PAVED STREETS OR 1060 mm (~~3'-6"~~) FOR UNPAVED STREETS, CONSTRUCT MONOLITHIC SHAFT PER SECTION C-C AND DETAIL "N". SHAFT FOR ANY DEPTH OF MANHOLE MAY BE CONSTRUCTED PER SECTION C-C. WHEN DIAMETER D_1 IS 1200 mm (~~48"~~) OR LESS, CENTER OF SHAFT MAY BE LOCATED PER NOTE 3.
3. CENTER OF MANHOLE SHAFT SHALL BE LOCATED OVER CENTERLINE OF STORM DRAIN WHEN DIAMETER D_1 IS 1200 mm(~~48"~~) OR LESS, IN WHICH CASE PLACE E BARS SYMMETRICALLY AROUND SHAFT AT 45° WITH CENTERLINE.
4. LENGTH OF MANHOLE MAY BE INCREASED AT OPTION TO MEET PIPE ENDS, BUT ANY CHANGE IN LOCATION OF SPUR MUST BE APPROVED BY THE ENGINEER.
5. P SHALL BE 125 mm (~~5"~~) FOR D_2=2400 mm (~~96"~~) OR LESS AND 200 mm (~~8"~~) FOR D_2 OVER 2400 mm (~~96"~~).
6. REINFORCEMENT SHALL CONFORM TO ASTM A 615M, GRADE 300 (~~ASTM A 615, GRADE 40~~), AND SHALL TERMINATE 40 mm (~~1 1/2"~~) CLEAR OF CONCRETE SURFACES UNLESS OTHERWISE SHOWN.
7. FLOOR OF MANHOLE SHALL BE STEEL TROWELED TO SPRING LINE.
8. BODY OF MANHOLE SHALL BE POURED IN ONE CONTINUOUS OPERATION EXCEPT THAT A CONSTRUCTION JOINT WITH A LONGITUDINAL KEYWAY MAY BE PLACED AT SPRING LINE.
9. THICKNESS OF THE DECK SHALL VARY WHEN NECESSARY TO PROVIDE A LEVEL SEAT BUT SHALL NOT BE LESS THAN THE TABULAR VALUES OF F SHOWN ON TABLE, SHEET 1.
10. IF LATERALS ENTER ON BOTH SIDES OF MANHOLE, SHAFT SHALL BE LOCATED ON SIDE RECEIVING THE SMALLER LATERAL.
11. STEPS SHALL CONFORM TO SPPWC 635 OR 636. UNLESS OTHERWISE SHOWN, STEPS SHALL BE UNIFORMLY SPACED 350 mm (~~14"~~) TO 375 mm (~~15"~~) OC. THE LOWEST STEP SHALL NOT BE MORE THAN 600 mm (~~24"~~) ABOVE THE INVERT.
12. THE FOLLOWING CRITERIA SHALL BE USED FOR THIS MANHOLE:
    A. THIS STANDARD PLAN IS USED WHEN SPPWC 320 IS INADEQUATE. MAIN LINE = 900 mm (~~36"~~) INSIDE DIAMETER OR LARGER.
    B. LATERAL = 300 mm (~~12"~~) TO 3600 mm (~~144"~~) INSIDE DIAMETER; HOWEVER, THE INSIDE DIAMETER SHALL NOT EXCEED THE INSIDE DIAMETER OF THE MAIN LINE.

~~STANDARD PLANS FOR PUBLIC WORKS CONSTRUCTION~~

MANHOLE PIPE TO PIPE (LARGE SIDE INLET)

STANDARD PLAN METRIC **322-1** SHEET 3 OF 4

13. MANHOLE FRAME AND COVER SHALL CONFORM TO SPPWC 630 UNLESS OTHERWISE SHOWN.
14. MANHOLE SHAFT SHALL CONFORM TO SPPWC 324 UNLESS OTHERWISE SHOWN.
15. WHERE A MANHOLE SHAFT – 900 mm (~~36"~~) WITHOUT REDUCER IS SPECIFIED REFER TO SPPWC 326.
16. WHERE A PRESSURE MANHOLE SHAFT – WITH ECCENTRIC REDUCER IS SPECIFIED REFER TO SPPWC 328.
17. WHERE A PRESSURE MANHOLE SHAFT – 914 mm (~~36"~~) WITHOUT REDUCER IS SPECIFIED REFER TO SPPWC 329.
18. THE FOLLOWING SPPWC ARE INCORPORATED HEREIN:

    324 MANHOLE SHAFT – WITH ECCENTRIC REDUCER
    326 MANHOLE SHAFT – 900 mm (~~36"~~) WITHOUT REDUCER
    328 PRESSURE MANHOLE SHAFT – WITH ECCENTRIC
    329 PRESSURE MANHOLE SHAFT – 914 mm (~~36"~~) WITHOUT REDUCER
    630 610 mm (~~24"~~) MANHOLE FRAME AND COVER
    633 914 mm (~~36"~~) MANHOLE FRAME AND COVER
    635 STEEL STEP
    636 POLYPROPYLENE PLASTIC STEP

~~STANDARD PLANS FOR PUBLIC WORKS CONSTRUCTION~~

MANHOLE PIPE TO PIPE (LARGE SIDE INLET)

STANDARD PLAN METRIC **322-1** SHEET 4 OF 4

ALL DIMENSIONS ARE IN METERS UNLESS OTHERWISE SHOWN

DRAINAGE DETAILS

NO SCALE

DD-48

STATE OF CALIFORNIA - DEPARTMENT OF TRANSPORTATION
Caltrans **HYDRAULICS**

FUNCTIONAL SUPERVISOR: RALPH M. SASAKI
CALCULATED-DESIGNED BY: S. M. TAN, W. Y. LEE
CHECKED BY: R. M. SASAKI
REVISED BY / DATE REVISED

LAST REVISION 00-00-00 DATE PLOTTED => 31-JAN-2011 TIME PLOTTED => 14:50

Dist	COUNTY	ROUTE	KILOMETER POST TOTAL PROJECT	SHEET No.	TOTAL SHEETS
07	LA	5	2.9/4.9	262	1082

Caltrans Metric

REGISTERED CIVIL ENGINEER — DATE 12-23-09

PLANS APPROVAL DATE 6-21-10

REGISTERED PROFESSIONAL ENGINEER RALPH M. SASAKI No. 30849 Exp. 3/31/10 CIVIL STATE OF CALIFORNIA

THE STATE OF CALIFORNIA OR ITS OFFICERS OR AGENTS SHALL NOT BE RESPONSIBLE FOR THE ACCURACY OR COMPLETENESS OF ELECTRONIC COPIES OF THIS PLAN SHEET.

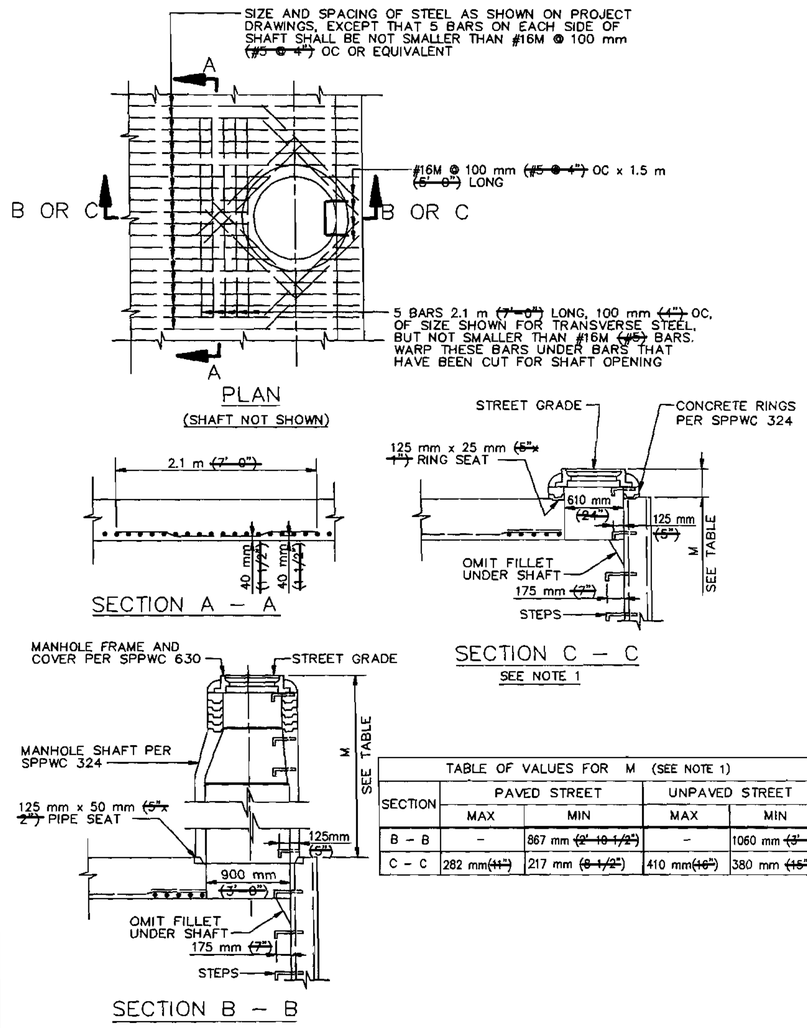

TABLE OF VALUES FOR M (SEE NOTE 1)

SECTION	PAVED STREET		UNPAVED STREET	
	MAX	MIN	MAX	MIN
B – B	–	867 mm (2' 10 1/2")	–	1060 mm (3' 6")
C – C	282 mm (11")	217 mm (8 1/2")	410 mm (16")	380 mm (15")

~~STANDARD PLANS FOR PUBLIC WORKS CONSTRUCTION~~

~~PROMULGATED BY THE PUBLIC WORKS STANDARDS INC. GREENBOOK COMMITTEE 1992 REV. 1996~~

MANHOLE – CONCRETE BOX STORM DRAIN

~~USE WITH STANDARD SPECIFICATIONS FOR PUBLIC WORKS CONSTRUCTION~~

STANDARD PLAN METRIC **323-1** SHEET 1 OF 2

NOTES

1. WHEN DEPTH M FROM STREET GRADE TO THE TOP OF THE BOX IS LESS THAN 867 mm (2' 10 1/2") FOR PAVED STREETS OR 1060 mm (3' 6") FOR UNPAVED STREETS, CONSTRUCT SHAFT PER SECTION C–C.
2. STATIONS OF MANHOLES SHOWN ON PLANS. APPLY AT CENTERLINE LINE OF SHAFT. ELEVATIONS ARE SHOWN AT CENTERLINE OF SHAFT.
3. REINFORCEMENT SHALL CONFORM TO ASTM A 615M, GRADE 300 (ASTM A 615, GRADE 40), AND SHALL TERMINATE 40 mm (1 1/2") CLEAR OF CONCRETE SURFACES UNLESS OTHERWISE SHOWN.
4. STEPS SHALL CONFORM TO SPPWC 635 OR 636. UNLESS OTHERWISE SHOWN, STEPS SHALL BE UNIFORMLY SPACED 350 mm (14") TO 375 mm (15") OC. THE LOWEST STEP SHALL NOT BE MORE THAN 600 mm (24") ABOVE THE INVERT.
5. MANHOLE FRAME AND COVER SHALL CONFORM TO SPPWC 630 UNLESS OTHERWISE SHOWN.
6. MANHOLE SHAFT SHALL CONFORM TO SPPWC 324 UNLESS OTHERWISE SHOWN.
7. WHERE A MANHOLE SHAFT – 900 mm (36") WITHOUT REDUCER IS SPECIFIED REFER TO SPPWC 326.
8. WHERE A PRESSURE MANHOLE SHAFT – WITH ECCENTRIC REDUCER IS SPECIFIED REFER TO SPPWC 328.
9. WHERE A PRESSURE MANHOLE SHAFT – 914 mm (36") WITHOUT REDUCER IS SPECIFIED REFER TO SPPWC 329.
10. THE FOLLOWING SPPWC ARE INCORPORATED HEREIN:

    324 MANHOLE SHAFT – WITH ECCENTRIC REDUCER
    326 MANHOLE SHAFT – 900 mm (36") WITHOUT REDUCER
    328 PRESSURE MANHOLE SHAFT – WITH ECCENTRIC
    329 PRESSURE MANHOLE SHAFT – 914 mm (36") WITHOUT REDUCER
    630 610 mm (24") MANHOLE FRAME AND COVER
    633 914 mm (36") MANHOLE FRAME AND COVER
    635 STEEL STEP
    636 POLYPROPYLENE PLASTIC STEP

~~STANDARD PLANS FOR PUBLIC WORKS CONSTRUCTION~~

MANHOLE – CONCRETE BOX STORM DRAIN

STANDARD PLAN METRIC **323-1** SHEET 2 OF 2

ALL DIMENSIONS ARE IN METERS UNLESS OTHERWISE SHOWN

DRAINAGE DETAILS

NO SCALE

DD-49

STATE OF CALIFORNIA - DEPARTMENT OF TRANSPORTATION

Caltrans **HYDRAULICS**

FUNCTIONAL SUPERVISOR RALPH M. SASAKI

CALCULATED-DESIGNED BY S. M. TAN W. Y. LEE

CHECKED BY R. M. SASAKI

REVISED BY | DATE REVISED

LAST REVISION 00-00-00 | DATE PLOTTED => 31-JAN-2011 | TIME PLOTTED => 14:50

Dist	COUNTY	ROUTE	KILOMETER POST TOTAL PROJECT	SHEET No.	TOTAL SHEETS
07	LA	5	2.9/4.9	263	1082

Caltrans Metric

12-23-09
REGISTERED CIVIL ENGINEER DATE

6-21-10
PLANS APPROVAL DATE

REGISTERED PROFESSIONAL ENGINEER RALPH M. SASAKI No. 30849 Exp. 3/31/10 CIVIL STATE OF CALIFORNIA

THE STATE OF CALIFORNIA OR ITS OFFICERS OR AGENTS SHALL NOT BE RESPONSIBLE FOR THE ACCURACY OR COMPLETENESS OF ELECTRONIC COPIES OF THIS PLAN SHEET.

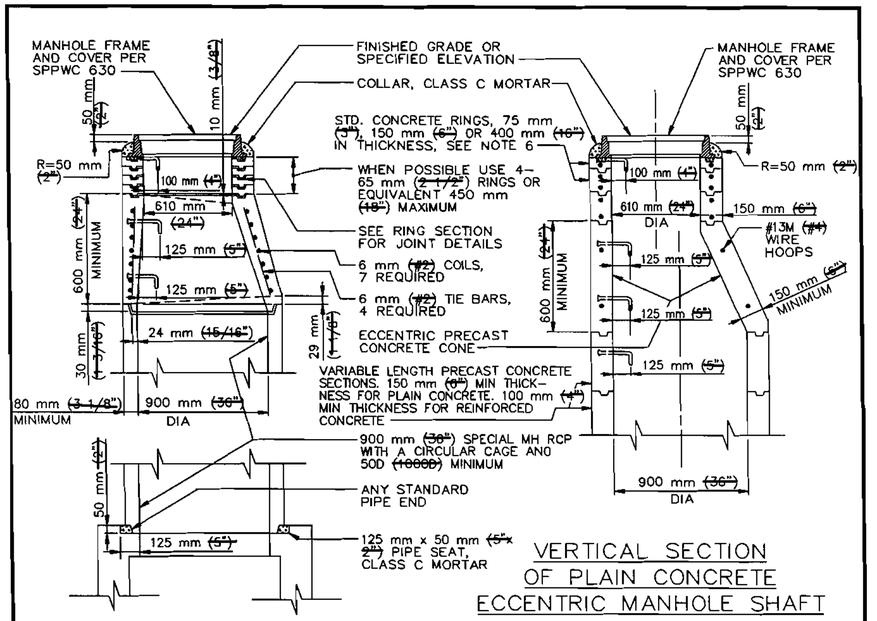

VERTICAL SECTION OF PLAIN CONCRETE ECCENTRIC MANHOLE SHAFT

VERTICAL SECTION OF REINFORCED CONCRETE ECCENTRIC MANHOLE SHAFT

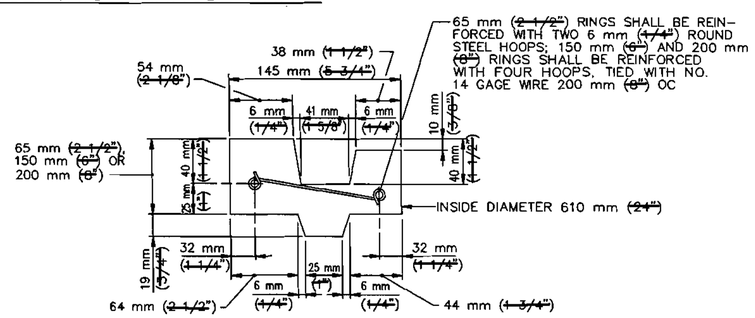

CROSS SECTION OF REINFORCED CONCRETE RING

STANDARD PLANS FOR PUBLIC WORKS CONSTRUCTION

PROMULGATED BY THE PUBLIC WORKS STANDARDS INC. GREENBOOK COMMITTEE 1992 REV. 1996

MANHOLE SHAFT WITH ECCENTRIC REDUCER

USE WITH STANDARD SPECIFICATIONS FOR PUBLIC WORKS CONSTRUCTION

STANDARD PLAN METRIC 324-1 SHEET 1 OF 2

NOTES

1. UNLESS OTHERWISE INDICATED THIS STRUCTURE SHALL CONFORM TO ASTM C 478M (ASTM C 478) AND ALL CONCRETE SHALL BE PER SSPWC 201-1.2.
2. MANHOLE FRAME AND COVER SHALL CONFORM TO SPPWC 630.
3. ALL JOINTS SHALL BE SEALED BY FILLING THE ANNULAR SPACES WITH CLASS C MORTAR. THE INSIDE OF THE SHAFT AT EACH JOINT SHALL BE WIPED CLEAN OF EXCESS MORTAR.
4. PROTECTIVE PLASTIC LINER (T LOCK) OR ENGINEER-APPROVED COATINGS WHERE REQUIRED BY THE PLANS SHALL BE IN ACCORDANCE WITH SSPWC AND THE MANUFACTURER'S DIRECTIONS.
5. STEPS SHALL CONFORM TO SPPWC 635 OR 636. THE TOP STEP SHALL BE PLACED DIRECTLY BENEATH THE MANHOLE FRAME. UNLESS OTHERWISE SHOWN, STEPS SHALL BE UNIFORMLY SPACED 350 mm (14") TO 375 mm (15") OC.
6. THE ECCENTRIC MANHOLE SHAFT REDUCER AND RINGS MAY BE PLAIN CONCRETE. FOR PLAIN CONCRETE SECTIONS THE MINIMUM THICKNESS SHALL BE 150 mm (6").
7. THE PRECAST CONCRETE MANHOLE STRUCTURES WILL BE INSPECTED BY THE ENGINEER WHO WILL INDICATE ACCEPTANCE FOR SHIPMENT TO THE JOB BY MARKING THE STRUCTURES WITH THE AGENCY'S STAMP.
8. THE VERTICAL SIDES OF THE MANHOLE SHAFT AND THE ECCENTRIC REDUCER SHALL BE LOCATED ABOVE AND IN LINE WITH THE SIDE OF THE STORM DRAIN CONDUIT.
9. CONSTRUCT MANHOLE SAFETY LEDGE PER SPPWC 330 IF DEPTH OF MANHOLE TO INVERT IS GREATER THAN 6 m (20') AND MANHOLE SHAFT IS GREATER THAN 3 m (10'). WHEN SAFETY LEDGE IS REQUIRED AND MANHOLE SHAFT IS LESS THAN 4 m (12') SPPWC 326 MUST BE USED.
10. THE FOLLOWING SPPWC ARE INCORPORATED HEREIN:

    630 610 mm (24") MANHOLE FRAME AND COVER
    635 STEEL STEP
    636 POLYPROPYLENE PLASTIC STEP

STANDARD PLANS FOR PUBLIC WORKS CONSTRUCTION

MANHOLE SHAFT WITH ECCENTRIC REDUCER

STANDARD PLAN METRIC 324-1 SHEET 2 OF 2

ALL DIMENSIONS ARE IN METERS UNLESS OTHERWISE SHOWN

DRAINAGE DETAILS

NO SCALE

DD-50

STATE OF CALIFORNIA - DEPARTMENT OF TRANSPORTATION
Caltrans HYDRAULICS

FUNCTIONAL SUPERVISOR RALPH M. SASAKI
CALCULATED-DESIGNED BY S. M. TAN W. Y. LEE
CHECKED BY R. M. SASAKI
REVISED BY
DATE REVISED

LAST REVISION 00-00-00 DATE PLOTTED => 31-JAN-2011 TIME PLOTTED => 14:51

Dist	COUNTY	ROUTE	KILOMETER POST TOTAL PROJECT	SHEET No.	TOTAL SHEETS
07	LA	5	2.9/4.9	264	1082

Caltrans Metric

12-23-09
REGISTERED CIVIL ENGINEER DATE

6-21-10
PLANS APPROVAL DATE

REGISTERED PROFESSIONAL ENGINEER RALPH M. SASAKI No. 30849 Exp. 3/31/10 CIVIL STATE OF CALIFORNIA

THE STATE OF CALIFORNIA OR ITS OFFICERS OR AGENTS SHALL NOT BE RESPONSIBLE FOR THE ACCURACY OR COMPLETENESS OF ELECTRONIC COPIES OF THIS PLAN SHEET.

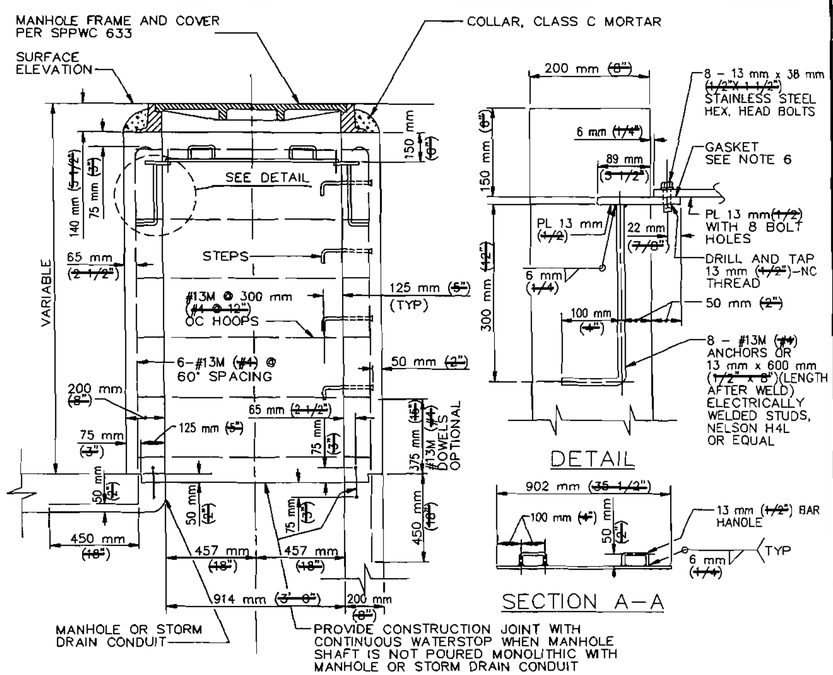

VERTICAL SECTION OF SPECIAL PRESSURE MANHOLE SHAFT

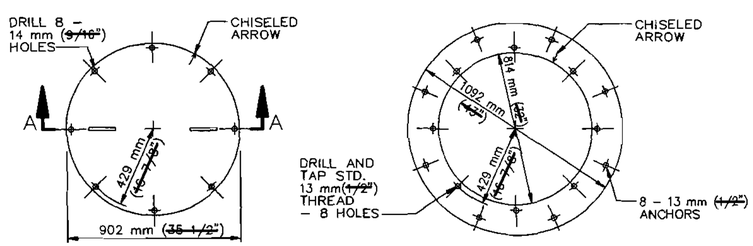

PLAN
PRESSURE PLATE

PLAN
PRESSURE PLATE RING

~~STANDARD PLANS FOR PUBLIC WORKS CONSTRUCTION~~

~~PROMULGATED BY THE PUBLIC WORKS STANDARDS INC. GREENBOOK COMMITTEE 1992 REV. 1998~~

PRESSURE MANHOLE SHAFT AND PRESSURE PLATE DETAIL 914 mm (36") WITHOUT REDUCER

~~USE WITH STANDARD SPECIFICATIONS FOR PUBLIC WORKS CONSTRUCTION~~

STANDARD PLAN METRIC
329-1
SHEET 1 OF 2

NOTES

1. THIS STRUCTURE MAY BE USED FOR HYDROSTATIC HEADS UP TO 7.5 m (~~25'~~) ABOVE THE PRESSURE PLATE.
2. 914 mm (~~36"~~) MANHOLE FRAME AND COVER PER SPPWC 633 SHALL BE USED.
3. REINFORCEMENT SHALL BE PER ASTM A 615, GRADE 40 AND SHALL TERMINATE 40 mm (~~1 1/2"~~) CLEAR OF CONCRETE SURFACES UNLESS OTHERWISE SHOWN. HOOPS MAY BE ELECTRICALLY BUTT WELDED OR THE ENDS LAPPED 450 mm (~~18"~~).
4. THE MANHOLE SHAFT SHALL BE LOCATED ABOVE AND IN LINE WITH THE SIDE OF THE CONDUIT BELOW.
5. STEPS SHALL CONFORM TO SPPWC 635 OR 636. UNLESS OTHERWISE SHOWN, STEPS SHALL BE UNIFORMLY SPACED 350 mm (~~14"~~) TO 375 mm (~~15"~~) OC.
6. GASKET MATERIAL SHALL BE NEOPRENE (OR EQUAL) 2 mm (~~1/16"~~) THICK BY 32 mm (~~1 1/4"~~) WIDE.
7. BOLTS SHALL BE STAINLESS STEEL CONFORMING TO ASTM A 320M (~~ASTM A 320~~), GRADE B8.
8. PRESSURE PLATE AND PRESSURE PLATE RING SHALL BE STEEL CONFORMING TO ASTM A 36M (~~ASTM A 36~~) AND SHALL BE GALVANIZED. PLATES SHALL BE MARKED IN SETS AND A CHISELED ARROW STAMPED ON BOTH PLATES, AFTER DRILLING AND TAPPING, TO FACILITATE FIELD ASSEMBLY.
9. SEE CONTRACT SPECIFICATIONS FOR PHYSICAL REQUIREMENTS OF WATERSTOP.
10. THE FOLLOWING SPPWC ARE INCORPORATED HEREIN:

633 914 mm (~~36"~~) MANHOLE FRAME AND COVER
635 STEEL STEP
636 POLYPROPYLENE PLASTIC STEP

~~STANDARD PLANS FOR PUBLIC WORKS CONSTRUCTION~~

PRESSURE MANHOLE SHAFT AND PRESSURE PLATE DETAIL 914 mm (36") WITHOUT REDUCER

STANDARD PLAN METRIC
329-1
SHEET 2 OF 2

ALL DIMENSIONS ARE IN METERS UNLESS OTHERWISE SHOWN

DRAINAGE DETAILS

NO SCALE

DD-51

STATE OF CALIFORNIA - DEPARTMENT OF TRANSPORTATION
Caltrans
HYDRAULICS

FUNCTIONAL SUPERVISOR: RALPH M. SASAKI
CHECKED BY: R. M. SASAKI
CALCULATED-DESIGNED BY: S. M. TAN, W. Y. LEE
REVISED BY | DATE REVISED

LAST REVISION 00-00-00 | DATE PLOTTED => 31-JAN-2011 | TIME PLOTTED => 14:51

Dist	COUNTY	ROUTE	KILOMETER POST TOTAL PROJECT	SHEET No.	TOTAL SHEETS
07	LA	5	2.9/4.9	265	1082

Caltrans Metric

12-23-09
REGISTERED CIVIL ENGINEER DATE

6-21-10
PLANS APPROVAL DATE

REGISTERED PROFESSIONAL ENGINEER RALPH M. SASAKI No. 30849 Exp. 3/31/10 CIVIL STATE OF CALIFORNIA

THE STATE OF CALIFORNIA OR ITS OFFICERS OR AGENTS SHALL NOT BE RESPONSIBLE FOR THE ACCURACY OR COMPLETENESS OF ELECTRONIC COPIES OF THIS PLAN SHEET.

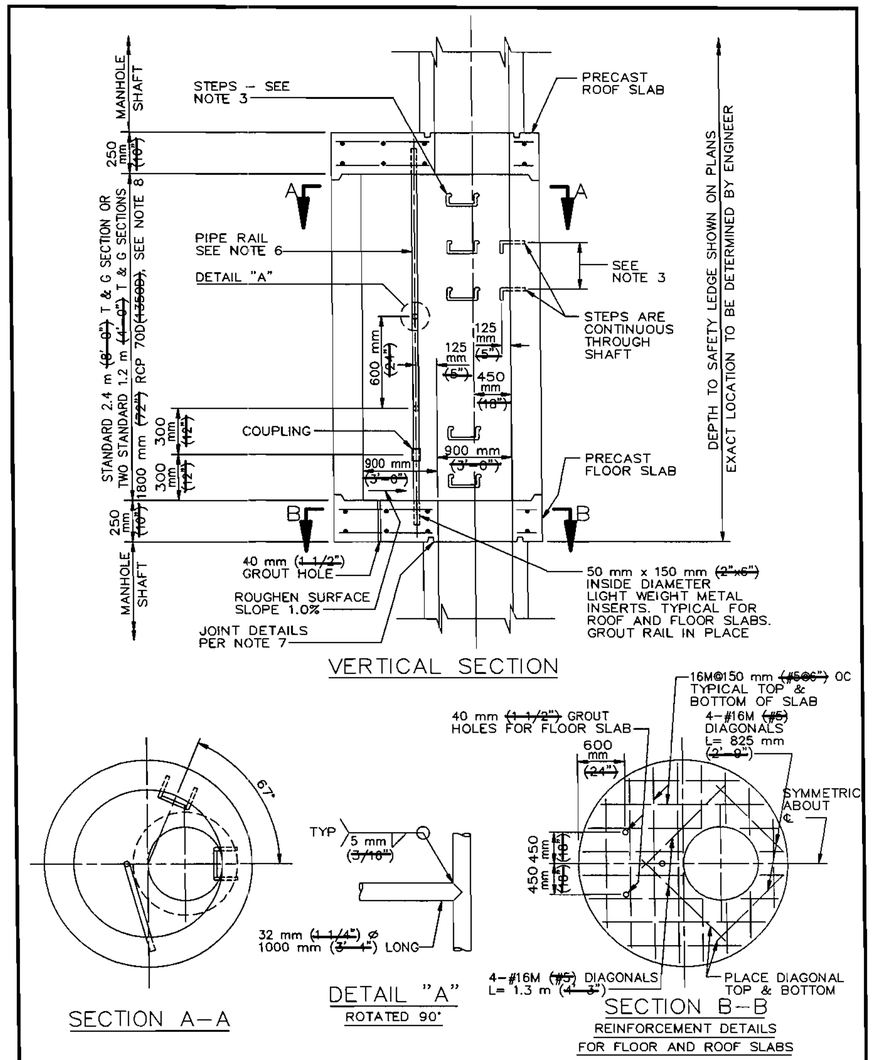

~~STANDARD PLANS FOR PUBLIC WORKS CONSTRUCTION~~

~~PROMULGATED BY THE PUBLIC WORKS STANDARDS INC. GREENBOOK COMMITTEE 1992 REV. 1998~~

MANHOLE SHAFT SAFETY LEDGE

~~USE WITH STANDARD SPECIFICATIONS FOR PUBLIC WORKS CONSTRUCTION~~

STANDARD PLAN METRIC **330–1** SHEET 1 OF 2

NOTES

1. MANHOLE SHAFT SAFETY LEDGE WILL BE NOTED ON THE PLANS WHEN REQUIRED. IT IS TO BE CONSTRUCTED WHEN DEPTH OF MANHOLE TO INVERT IS GREATER THAN 6 m (~~20'~~) AND MANHOLE SHAFT IS GREATER THAN 3 m (~~10'~~).
2. A SAFETY LEDGE SHALL NOT BE USED IF A PRESSURE MANHOLE IS REQUIRED.
3. STEPS SHALL CONFORM TO SPPWC 635 OR 636 AND SHALL BE ANCHORED 100 mm (~~4"~~) IN THE WALL OF THE STRUCTURE. STEPS SHALL BE PLACED TO MATCH THE SPACING OF THE MANHOLE SHAFT.
4. REINFORCEMENT SHALL BE PER ASTM A 615M, GRADE 300 (~~ASTM A 615, GRADE 40~~) AND SHALL TERMINATE 50 mm (~~2"~~) CLEAR OF CONCRETE SURFACE UNLESS OTHERWISE SHOWN.
5. GROUT HOLES, PIPE AND FITTINGS SHALL BE PROVIDED IN THE FLOOR SLAB. PRESSURE GROUTING SHALL BE USED TO FILL VOIDS AND TO SECURE UNIFORM BEARING. THE GROUT SHALL BE NEAT CEMENT GROUT AND GROUTING PRESSURES SHALL BE AS DETERMINED IN THE FIELD BY THE ENGINEER.
6. PIPE RAIL SHALL BE FABRICATED OF 32 mm (~~1 1/4"~~) STANDARD GALVANIZED PIPE COMPOSED OF TWO SECTIONS 2.25 m (~~7' 6"~~) & 450 mm (~~18"~~) IN LENGTH JOINED BY A GALVANIZED COUPLING. THE COUPLING SHALL BE THREADED A MINIMUM OF 50 mm (~~2"~~) ON EACH PIPE LENGTH.
7. ROOF AND FLOOR SLABS SHALL BE PRECAST AND KEYED FOR REINFORCED CONCRETE PIPE SECTIONS AS SHOWN. ALL JOINTS SHALL BE FILLED WITH CLASS C MORTAR AND NEATLY POINTED OR WIPED ON THE INSIDE.
8. 1800 mm (~~72"~~) RCP SHALL BE PROVIDED WITH TWO CIRCULAR CAGES OF REINFORCEMENT.
9. THE FOLLOWING SPPWC ARE INCORPORATED HEREIN:

   324 MANHOLE SHAFT – WITH ECCENTRIC REDUCER
   326 MANHOLE SHAFT – 900mm (~~36"~~) WITHOUT REDUCER
   635 STEEL STEP
   636 POLYPROPYLENE PLASTIC STEP

~~STANDARD PLANS FOR PUBLIC WORKS CONSTRUCTION~~

MANHOLE SHAFT SAFETY LEDGE

STANDARD PLAN METRIC **330–1** SHEET 2 OF 2

ALL DIMENSIONS ARE IN METERS UNLESS OTHERWISE SHOWN

DRAINAGE DETAILS

NO SCALE

DD-52

STATE OF CALIFORNIA - DEPARTMENT OF TRANSPORTATION
Caltrans **HYDRAULICS**

FUNCTIONAL SUPERVISOR: RALPH M. SASAKI
CALCULATED-DESIGNED BY: S. M. TAN, W. Y. LEE
CHECKED BY: R. M. SASAKI
REVISED BY / DATE REVISED

LAST REVISION 00-00-00
DATE PLOTTED => 31-JAN-2011
TIME PLOTTED => 14:51

Dist	COUNTY	ROUTE	KILOMETER POST TOTAL PROJECT	SHEET No.	TOTAL SHEETS
07	LA	5	2.9/4.9	266	1082

Caltrans Metric

12-23-09
REGISTERED CIVIL ENGINEER DATE

6-21-10
PLANS APPROVAL DATE

REGISTERED PROFESSIONAL ENGINEER RALPH M. SASAKI No. 30849 Exp. 3/31/10 CIVIL STATE OF CALIFORNIA

THE STATE OF CALIFORNIA OR ITS OFFICERS OR AGENTS SHALL NOT BE RESPONSIBLE FOR THE ACCURACY OR COMPLETENESS OF ELECTRONIC COPIES OF THIS PLAN SHEET.

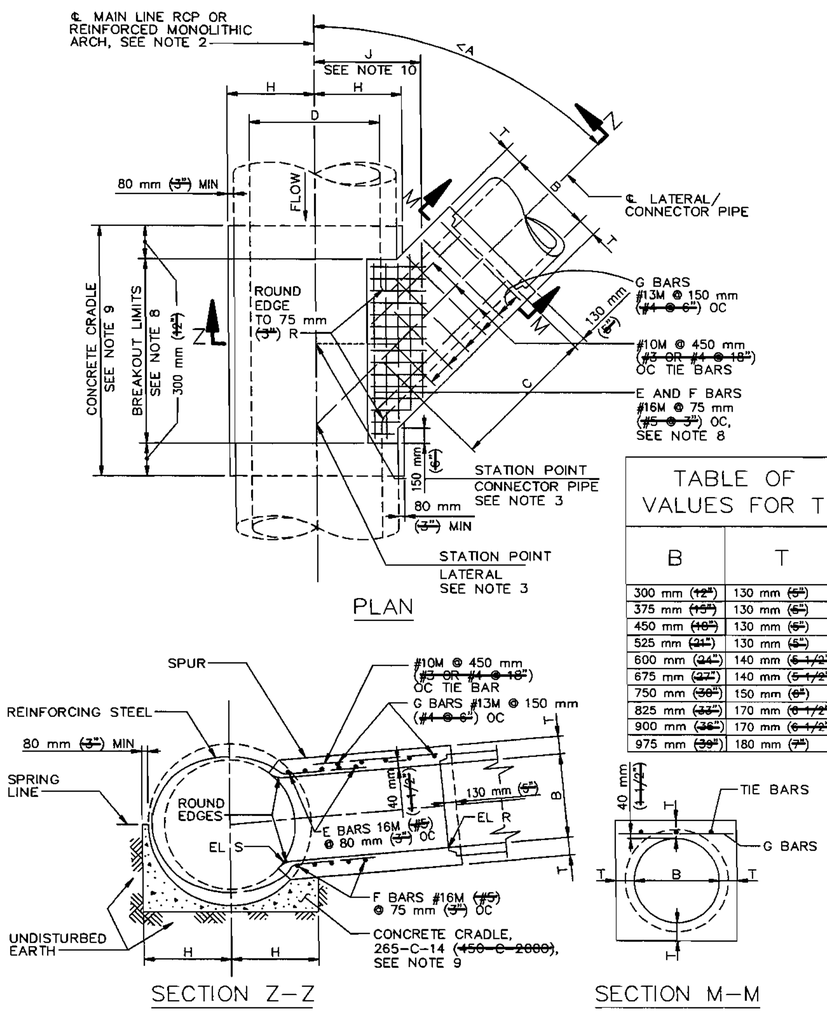

PLAN

TABLE OF VALUES FOR T	
B	T
300 mm (12")	130 mm (6")
375 mm (15")	130 mm (6")
450 mm (18")	130 mm (6")
525 mm (21")	130 mm (6")
600 mm (24")	140 mm (6 1/2")
675 mm (27")	140 mm (5 1/2")
750 mm (30")	150 mm (6")
825 mm (33")	170 mm (6 1/2")
900 mm (36")	170 mm (6 1/2")
975 mm (39")	180 mm (7")

SECTION Z–Z

SECTION M–M

NOTES

1. THIS JUNCTION STRUCTURE SHALL BE USED WHEN THE OUTSIDE DIAMETER OF THE LATERAL IS GREATER THAN 1/2 THE INSIDE DIAMETER D OF THE MAIN LINE; OR WHEN THE INSIDE DIAMETER B OF THE LATERAL IS GREATER THAN 600 mm (24"). B SHALL NOT EXCEED 0.75 D OR 975 mm (39").
2. IF THE MAIN LINE IS A REINFORCED MONOLITHIC ARCH STORM DRAIN, D SHALL REFER TO THE CLEAR SPAN OF THE ARCH. REINFORCING STEEL SHALL BE CUT AND BENT INTO THE JUNCTION STRUCTURE IN THE SAME MANNER AS FOR A PIPE. A CONCRETE CRADLE IS NOT REQUIRED FOR A REINFORCED MONOLITHIC ARCH.
3. STATIONS SHOWN ON THE PLANS FOR LATERALS APPLY AT THE INTERSECTION OF CENTERLINES OF MAIN LINE AND LATERAL. STATIONS SHOWN ON THE PLANS FOR CATCH BASIN CONNECTOR PIPES APPLY AT THE INTERSECTION OF THE INSIDE WALL OF THE MAIN LINE WITH THE CONNECTOR PIPE CENTERLINE.
4. VALUES FOR A, B, C AND D SHALL BE SHOWN ON THE PLANS. ELEVATION R AND ELEVATION S SHALL BE SHOWN ONLY WHEN REQUIRED PER NOTE 5.
5. a. ELEVATIONS R AND S NEED NOT BE SHOWN ON THE PLANS IF THE INLET PIPE IS TO ENTER THE MAIN LINE RADIALLY.
   b. ELEVATION R SHALL BE SHOWN ON THE PLANS ONLY IF A STUB IS TO BE PROVIDED IN THE MAIN LINE FOR FUTURE CONNECTION OF AN INLET PIPE.
   c. ELEVATION S SHALL BE SHOWN ON THE PLANS IF AN INLET PIPE IS TO ENTER THE MAIN LINE OTHER THAN RADIALLY. INLET PIPE SHALL BE LAID ON A STRAIGHT GRADE FROM ELEVATION S TO THE CATCH BASIN OR GRADE BREAK IN LINE.
6. THE INLET PIPE SHALL ENTER THE MAIN LINE RADIALLY UNLESS OTHERWISE INDICATED. THE INLET PIPE MAY ENTER THE MAIN LINE OTHER THAN RADIALLY IF ANGLE A IS GREATER THAN 45°, B IS LESS THAN OR EQUAL TO 600 mm (24") AND THE OUTSIDE DIAMETER OF THE INLET PIPE IS LESS THAN 0.5 D: OTHERWISE, SPPWC 340 SHALL BE USED.
7. NO MORE THAN ONE OPENING SHALL BE MADE IN ANY ONE SECTION OF PIPE.
8. THE OPENING FOR THE BREAKOUT SHALL BE RECTANGULAR AND CUT NORMAL TO THE PIPE SURFACE WITHOUT DAMAGING THE REINFORCING STEEL. THE TRANSVERSE REINFORCEMENT OF THE MAIN LINE SHALL BE CUT AT THE CENTER OF THE OPENING AND BENT INTO THE TOP AND BOTTOM SLABS OF THE SPUR.
9. THE MAIN LINE SHALL BE REINFORCED WITH A CONCRETE CRADLE AND ENCASEMENT (AS APPLICABLE). A CONCRETE ENCASEMENT IS REQUIRED IF A JOINT IN THE MAIN LINE FALLS WITHIN THE LIMITS OF THE CRADLE. THE CONCRETE ENCASEMENT SHALL EXTEND 300 mm (12") ABOVE THE TOP OF THE MAIN LINE AND TO THE LIMITS OF THE CRADLE.
   IF CONNECTING TO AN EXISTING STORM DRAIN, PORTION OF CRADLE OPPOSITE INLET MAY BE OMITTED.
10. REINFORCING STEEL SHALL CONFORM TO ASTM A 615M, GRADE 300, (ASTM A 615, GRADE 40), AND BE PLACED 40 mm (1 1/2") CLEAR FROM CONCRETE SURFACES, UNLESS OTHERWISE SHOWN F BARS SHALL BE CARRIED TO A POINT NOT LESS THAN J DISTANCE FROM CENTER LINE WITH J=7D/12 + 150 mm (6").
11. FLOOR OF THE SPUR SHALL BE STEEL–TROWELED TO THE SPRING LINE OF THE SPUR.

STANDARD PLANS FOR PUBLIC WORKS CONSTRUCTION

PROMULGATED BY THE PUBLIC WORKS STANDARDS INC. GREENBOOK COMMITTEE 1964 REV. 1996, 1999

JUNCTION STRUCTURE–PIPE TO PIPE
INLET ID D 600 mm (24") OR OD > 1/2 MAIN LINE ID

USE WITH STANDARD SPECIFICATIONS FOR PUBLIC WORKS CONSTRUCTION

STANDARD PLAN METRIC 331–2
SHEET 1 OF 2

STANDARD PLANS FOR PUBLIC WORKS CONSTRUCTION

JUNCTION STRUCTURE–PIPE TO PIPE
INLET ID D 600 mm (24") OR OD > 1/2 MAIN LINE ID

STANDARD PLAN METRIC 331–2
SHEET 2 OF 2

ALL DIMENSIONS ARE IN METERS UNLESS OTHERWISE SHOWN

DRAINAGE DETAILS

NO SCALE

DD-53

STATE OF CALIFORNIA - DEPARTMENT OF TRANSPORTATION	FUNCTIONAL SUPERVISOR	CALCULATED-DESIGNED BY	REVISED BY
Caltrans	RALPH M. SASAKI	CHECKED BY	DATE REVISED
HYDRAULICS		R. M. SASAKI	S. M. TAN W. Y. LEE

LAST REVISION 00-00-00 | DATE PLOTTED => 31-JAN-2011 | TIME PLOTTED => 14:51

Dist	COUNTY	ROUTE	KILOMETER POST TOTAL PROJECT	SHEET No.	TOTAL SHEETS
07	LA	5	2.9/4.9	267	1082

Caltrans Metric

REGISTERED CIVIL ENGINEER 12-23-09 DATE

6-21-10
PLANS APPROVAL DATE

REGISTERED PROFESSIONAL ENGINEER RALPH M. SASAKI No. 30849 Exp. 3/31/10 CIVIL STATE OF CALIFORNIA

THE STATE OF CALIFORNIA OR ITS OFFICERS OR AGENTS SHALL NOT BE RESPONSIBLE FOR THE ACCURACY OR COMPLETENESS OF ELECTRONIC COPIES OF THIS PLAN SHEET.

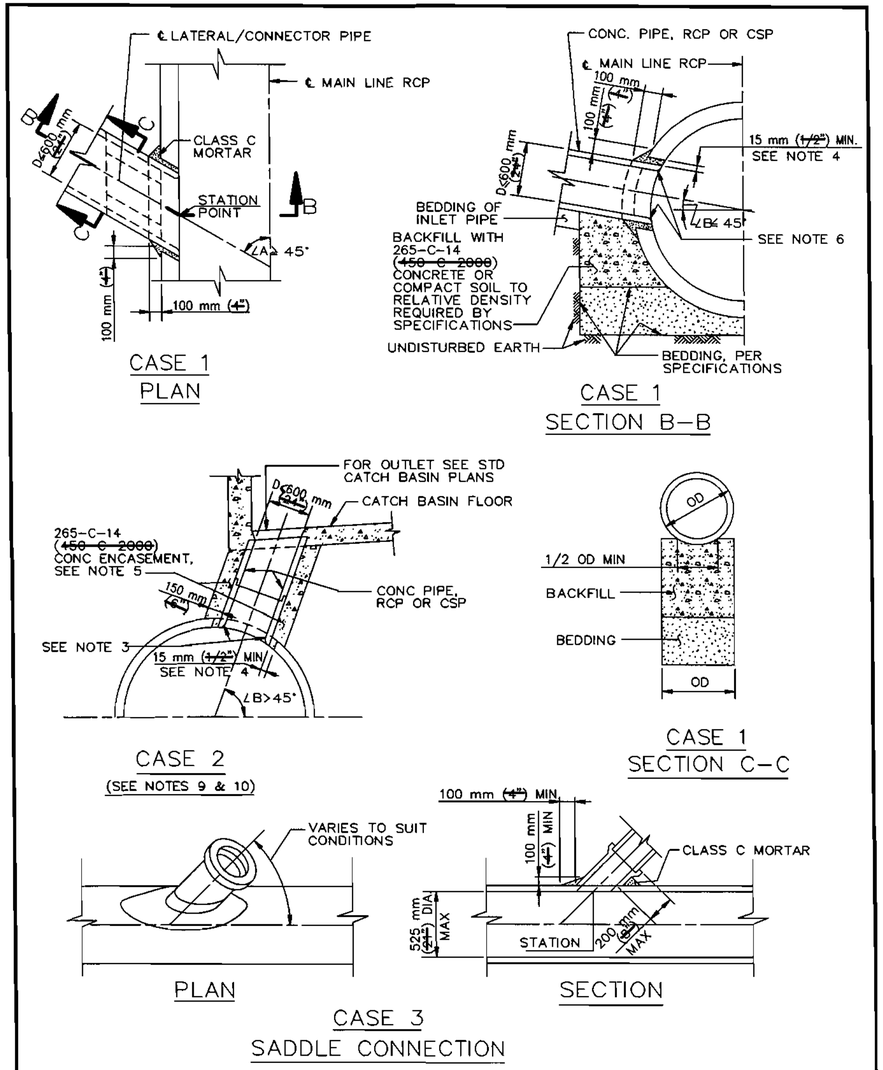

~~STANDARD PLANS FOR PUBLIC WORKS CONSTRUCTION~~

~~PROMULGATED BY THE PUBLIC WORKS STANDARDS INC. GREENBOOK COMMITTEE 1964 REV. 1996~~

JUNCTION STRUCTURE – PIPE TO PIPE (ID ≤600 mm (~~24"~~))

~~USE WITH STANDARD SPECIFICATIONS FOR PUBLIC WORKS CONSTRUCTION~~

STANDARD PLAN METRIC 332-1

SHEET 1 OF 2

NOTES

CASE 1 AND CASE 2

1. IF ANGLE A IS LESS THAN 45° OR IF D IS LARGER THAN 600 mm (~~24"~~), THEN ANOTHER STANDARD STRUCTURE SHALL BE SPECIFIED.
2. THE OUTSIDE DIAMETER OF THE INLET PIPE SHALL NOT EXCEED ONE-HALF THE INSIDE DIAMETER OF THE MAIN LINE.
3. THE INLET PIPE SHALL ENTER THE MAIN LINE RADIALLY. IF THE INLET PIPE CANNOT ENTER RADIALLY, THEN ANOTHER STANDARD STRUCTURE SHALL BE SPECIFIED.
4. THE SIZE OF THE OPENING INTO THE MAIN LINE SHALL BE THE OUTSIDE DIAMETER OF THE INLET PIPE PLUS 30 mm (~~1"~~) MINIMUM TO 75 mm (~~3"~~) MAXIMUM.
5. ALL CONNECTOR PIPES FOR CASE 2 SHALL BE ENCASED IN CONCRETE IF LAID WITHIN THE MAIN LINE EXCAVATED TRENCH OR IF LAID ON FILL WHICH HAS NOT BEEN DENSIFIED.
6. BURN OR CHIP END OF CONNECTOR PIPE FLUSH WITH INNER SURFACE OF MAIN LINE. ROUND EDGE OF CONCRETE PIPE OR RCP.
7. ALL CSP AND FITTINGS SHALL BE GALVANIZED.
8. STATION SPECIFIED ON THE PLANS APPLIES AT THE INTERSECTION OF THE INSIDE WALL OF MAIN LINE AND THE CENTERLINE OF INLET PIPE.
9. CASE 2 SHALL NOT BE USED TO CONNECT TO THE FLOOR OF A GRATING CATCH BASIN WHERE THE GRATE WILL BE SUBJECT TO VEHICLE TRAFFIC.
10. FOR CASE 2, NOT MORE THAN 3.5 m (~~12'~~) OF INLET PIPE SHALL BE LOCATED WITHIN THE MAIN LINE EXCAVATED TRENCH.

CASE 3

11. CONNECTIONS TO PIPES 525 mm (~~21"~~) OR LESS IN DIAMETER WITHOUT JUNCTION STRUCTURES OR PRECAST Y BRANCHES SHALL BE MADE WITH SADDLES.
12. THE OUTSIDE DIAMETER OF THE INLET PIPE SHALL NOT EXCEED ONE-HALF THE INSIDE DIAMETER OF THE MAIN LINE.
13. TRIM OR CUT SADDLE TO FIT SNUGLY OVER THE OUTSIDE OF THE MAIN LINE SO ITS AXIS WILL BE ON THE LINE AND GRADE OF THE CONNECTOR PIPE.
14. THE OPENING INTO THE PIPE SHALL BE CUT AND TRIMMED TO FIT THE SADDLE SO THAT NO PART WILL PROJECT WITHIN THE BORE OF THE SADDLE PIPE.
15. THE CONNECTOR PIPE SHALL BE SUPPORTED AS SHOWN IN CASES 1 AND 2.

~~STANDARD PLANS FOR PUBLIC WORKS CONSTRUCTION~~

JUNCTION STRUCTURE – PIPE TO PIPE (ID ≤600 mm (~~24"~~))

STANDARD PLAN METRIC 332-1

SHEET 2 OF 2

ALL DIMENSIONS ARE IN METERS UNLESS OTHERWISE SHOWN

DRAINAGE DETAILS

NO SCALE

DD-54

STATE OF CALIFORNIA - DEPARTMENT OF TRANSPORTATION

Caltrans **HYDRAULICS**

FUNCTIONAL SUPERVISOR RALPH M. SASAKI

CALCULATED-DESIGNED BY S. M. TAN W. Y. LEE

CHECKED BY R. M. SASAKI

REVISED BY | DATE REVISED

LAST REVISION 00-00-00 | DATE PLOTTED => 31-JAN-2011 | TIME PLOTTED => 14:51

Dist	COUNTY	ROUTE	KILOMETER POST TOTAL PROJECT	SHEET No.	TOTAL SHEETS
07	LA	5	2.9/4.9	268	1082

Caltrans Metric

REGISTERED CIVIL ENGINEER — DATE 12-23-09

6-21-10
PLANS APPROVAL DATE

REGISTERED PROFESSIONAL ENGINEER — RALPH M. SASAKI — No. 30849 — Exp. 3/31/10 — CIVIL — STATE OF CALIFORNIA

THE STATE OF CALIFORNIA OR ITS OFFICERS OR AGENTS SHALL NOT BE RESPONSIBLE FOR THE ACCURACY OR COMPLETENESS OF ELECTRONIC COPIES OF THIS PLAN SHEET.

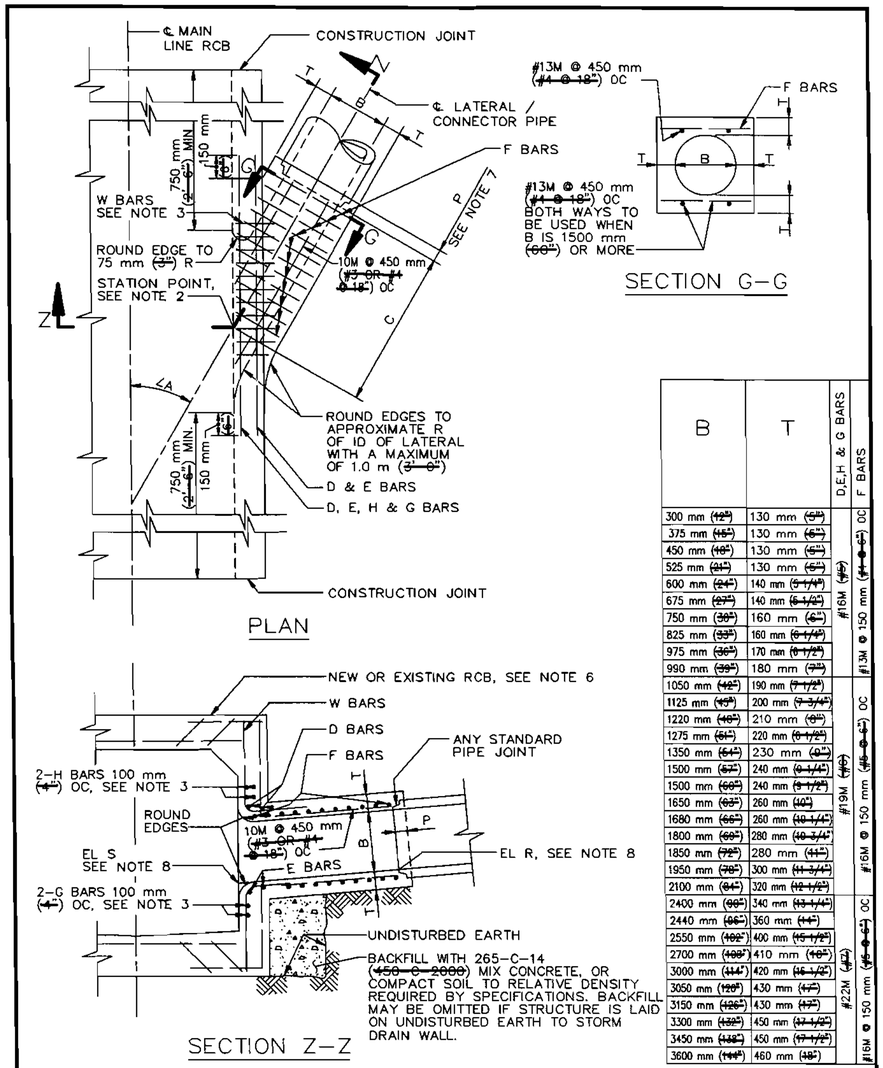

B	T	D,E,H & G BARS	F BARS
300 mm (12")	130 mm (5")	#16M @ 150 mm (#5 @ 6") OC	#13M @ 150 mm (#4 @ 6") OC
375 mm (15")	130 mm (5")		
450 mm (18")	130 mm (5")		
525 mm (21")	130 mm (5")		
600 mm (24")	140 mm (5-1/4")		
675 mm (27")	140 mm (5-1/2")		
750 mm (30")	160 mm (6")		
825 mm (33")	160 mm (6-1/4")		
975 mm (36")	170 mm (6-1/2")		
990 mm (39")	180 mm (7")		
1050 mm (42")	190 mm (7-1/2")	#19M @ 150 mm (#6 @ 6") OC	#16M @ 150 mm (#5 @ 6") OC
1125 mm (45")	200 mm (7-3/4")		
1220 mm (48")	210 mm (8")		
1275 mm (51")	220 mm (8-1/2")		
1350 mm (54")	230 mm (9")		
1500 mm (57")	240 mm (9-1/4")		
1500 mm (60")	240 mm (9-1/2")		
1650 mm (63")	260 mm (10")		
1680 mm (66")	260 mm (10-1/4")		
1800 mm (69")	280 mm (10-3/4")		
1850 mm (72")	280 mm (11")		
1950 mm (78")	300 mm (11-3/4")		
2100 mm (84")	320 mm (12-1/2")		
2400 mm (96")	340 mm (13-1/4")	#22M @ 150 mm (#7 @ 6") OC	#19M @ 150 mm (#6 @ 6") OC
2440 mm (96")	360 mm (14")		
2550 mm (102")	400 mm (15-1/2")		
2700 mm (108")	410 mm (16")		
3000 mm (114")	420 mm (16-1/2")		
3050 mm (120")	430 mm (17")		
3150 mm (126")	430 mm (17")		
3300 mm (132")	450 mm (17-1/2")		
3450 mm (138")	450 mm (17-1/2")		
3600 mm (144")	460 mm (18")		

~~STANDARD PLANS FOR PUBLIC WORKS CONSTRUCTION~~

PROMULGATED BY THE PUBLIC WORKS STANDARDS INC. GREENBOOK COMMITTEE 1984 REV. 1996

JUNCTION STRUCTURE – PIPE TO RCB

~~USE WITH STANDARD SPECIFICATIONS FOR PUBLIC WORKS CONSTRUCTION~~

STANDARD PLAN METRIC **333–1** SHEET 1 OF 2

NOTES

1. VALUES FOR A, B AND C SHALL BE SHOWN ON THE PLANS. ELEVATION R AND ELEVATION S SHALL BE SHOWN WHEN REQUIRED PER NOTE 8.
2. STATIONS SPECIFIED ON THE PLANS APPLY AT THE INTERSECTION OF CENTERLINES OF MAIN LINE AND LATERALS, EXCEPT THAT STATIONS FOR CATCH BASIN CONNECTOR PIPES APPLY AT INSIDE WALL OF STRUCTURE.
3. REINFORCING STEEL SHALL CONFORM TO ASTM A 615M, GRADE 300, (~~ASTM A 615, GRADE 40~~), AND SHALL TERMINATE 40 mm (~~1-1/2"~~) CLEAR OF CONCRETE SURFACE UNLESS OTHERWISE SHOWN.
   a. W BARS ARE OF SIZE AND SPACING SPECIFIED FOR WALL STEEL ON PLANS, AND SHALL BE CUT IN CENTER OF OPENING AND BENT INTO TOP AND BOTTOM OF JUNCTION STRUCTURE.
   b. OMIT H BARS WHEN SOFFIT OF SPUR IS 300 mm (~~12"~~) OR LESS BELOW SOFFIT OF MAIN LINE, AND OMIT G BARS WHEN INVERT OF SPUR IS 300 mm (~~12"~~) OR LESS ABOVE FLOOR OF MAIN LINE.
4. JUNCTION STRUCTURE SHALL BE POURED MONOLITHICALLY WITH MAIN LINE, MANHOLE OR TRANSITION STRUCTURE.
5. FLOOR OF STRUCTURE SHALL BE STEEL–TROWELED TO THE SPRING LINE.
6. WHEN CONNECTING TO EXISTING RCB, BREAKOUT LIMITS AND DETAILS SHALL BE SHOWN ON THE PLANS.
7. EMBEDMENT, P, SHALL BE 130 mm (~~5"~~) FOR B = 2400 mm (~~96"~~) OR LESS 200 mm (~~8"~~) FOR B OVER 2400 mm (~~96"~~).
8. IF ELEVATION R AND ELEVATION S ARE NOT SHOWN ON THE PLANS THEN THE INLET OPENING SHALL FALL 150 mm (~~6"~~) BELOW THE SOFFIT OF THE MAIN LINE WITH THE INLET PIPE LAID ON A STRAIGHT GRADE FROM MAIN LINE TO CATCH BASIN OR TO GRADE BREAK IN INLET LINE. ELEVATION S SHALL BE SHOWN ON THE PLANS IF THE INLET OPENING FALLS MORE THAN 150 mm (~~6"~~) BELOW THE SOFFIT OF THE MAIN LINE WITH THE INLET PIPE LAID ON A STRAIGHT GRADE AS STATED ABOVE.
   ELEVATION R SHALL BE SHOWN ON THE PLANS <u>ONLY</u> WHEN A STUB IS TO BE PROVIDED FOR A FUTURE CONNECTION.
9. LATERALS OR CONNECTOR PIPES 600 mm (~~24"~~) OR LESS IN DIAMETER SHALL BE NO MORE THAN 1.5 m (~~5'~~) ABOVE THE INVERT. LATERALS OR CONNECTOR PIPES 675 mm (~~27"~~) OR LARGER IN DIAMETER SHALL BE NO MORE THAN 450 mm (~~18"~~) ABOVE THE INVERT, WITH THE EXCEPTION THAT CATCH BASIN CONNECTOR PIPES LESS THAN 15 m (~~50'~~) IN LENGTH SHALL NOT BE MORE THAN 1.5 m (~~5'~~) ABOVE THE INVERT.
10. THE NEED FOR AN EDGE BEAM AND/OR ADDITIONAL REINFORCEMENT SHALL BE INVESTIGATED BY THE ENGINEER FOR ANY ONE OF THE FOLLOWING CONDITIONS:
    a. ANGLE A IS LESS THAN 30°
    b. TOP OF INLET PIPE IS LESS THAN 150 mm (~~6"~~) BELOW THE SOFFIT
    c. FLOW LINE OF INLET PIPE IS LESS THAN 180 mm (~~7"~~) ABOVE THE THE FLOOR OF THE RCB AT THE INSIDE FACE

~~STANDARD PLANS FOR PUBLIC WORKS CONSTRUCTION~~

JUNCTION STRUCTURE – PIPE TO RCB

STANDARD PLAN METRIC **333–1** SHEET 2 OF 2

ALL DIMENSIONS ARE IN METERS UNLESS OTHERWISE SHOWN

DRAINAGE DETAILS

NO SCALE

DD-55

STATE OF CALIFORNIA - DEPARTMENT OF TRANSPORTATION
Caltrans **HYDRAULICS**

FUNCTIONAL SUPERVISOR: RALPH M. SASAKI
CALCULATED-DESIGNED BY: S. M. TAN, W. Y. LEE
CHECKED BY: R. M. SASAKI
REVISED BY / DATE REVISED

LAST REVISION 00-00-00 | DATE PLOTTED => 31-JAN-2011 | TIME PLOTTED => 14:51

Dist	COUNTY	ROUTE	KILOMETER POST TOTAL PROJECT	SHEET No.	TOTAL SHEETS
07	LA	5	2.9/4.9	269	1082

Caltrans Metric

REGISTERED CIVIL ENGINEER — DATE 12-23-09

6-21-10
PLANS APPROVAL DATE

REGISTERED PROFESSIONAL ENGINEER RALPH M. SASAKI No. 30849 Exp. 3/31/10 CIVIL STATE OF CALIFORNIA

THE STATE OF CALIFORNIA OR ITS OFFICERS OR AGENTS SHALL NOT BE RESPONSIBLE FOR THE ACCURACY OR COMPLETENESS OF ELECTRONIC COPIES OF THIS PLAN SHEET.

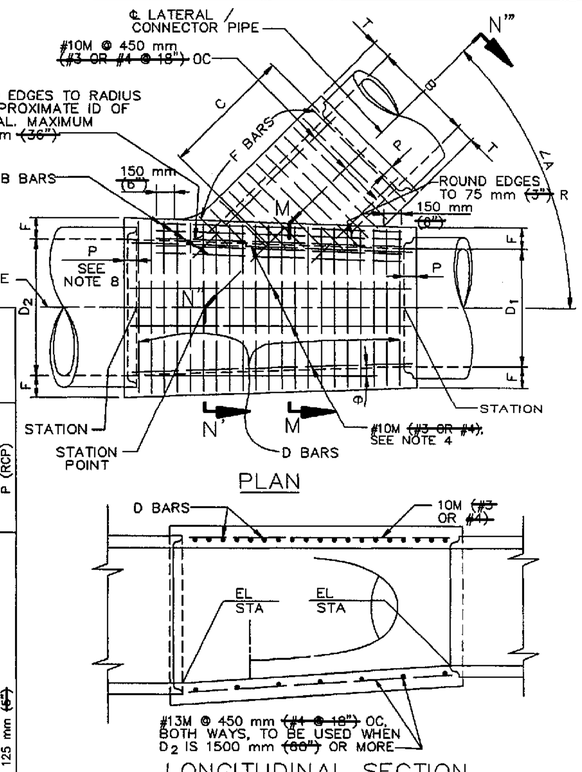

TABLE

FOR DIMENSIONS AND BAR SIZES

D_2 OR B (mm)	~~(INCHES)~~	F OR T (mm)	~~(INCHES)~~	A OR B BARS	D OR F BARS	P (RCP)
300	12	110	4			
375	15	110	4 1/4			
450	18	120	4 1/2			
525	21	130	5			
600	24	140	5 1/4			
675	27	140	5 1/2			
750	30	160	6			
825	33	160	6 1/4			
900	36	170	6 1/2			
975	39	180	7			
1050	42	190	7 1/2			
1125	45	200	7 3/4			
1200	48	210	8			
1275	51	220	8 1/2			
1350	54	230	9			
1425	57	240	9 1/4			
1500	60	250	9 1/2			
1575	63	260	10			
1650	66	260	10 1/4			
1725	69	280	10 3/4			
1800	72	280	11			
1950	78	300	11 3/4			
2100	84	320	12 1/2			
2250	90	340	13 1/4			
2400	96	360	14			
2550	102	400	15 1/2			
2700	108	410	16			
2850	114	420	16 1/2			
3000	120	440	17			
3150	126	440	17			
3300	132	450	17 1/2			
3450	138	450	17 1/2			
3600	144	460	18			

A OR B BARS: 22M @ 75 mm ~~(#7@3")~~ OC; 19M @ 150 mm ~~(#6@6")~~ OC
D OR F BARS: 19M @ 75 mm ~~(#6 @ 3")~~ OC; 16M @ 150 mm ~~(#5 @ 6")~~ OC; 16M @ 75 mm ~~(#5 @ 3")~~ OC; 13M @ 150 mm ~~(#4")~~ OC
P (RCP): 200 mm ~~(8")~~; 125 mm ~~(5")~~

~~STANDARD PLANS FOR PUBLIC WORKS CONSTRUCTION~~

~~PROMULGATED BY THE PUBLIC WORKS STANDARDS INC. GREENBOOK COMMITTEE 1992 REV. 1995~~

TRANSITION STRUCTURE PIPE TO PIPE

~~USE WITH STANDARD SPECIFICATIONS FOR PUBLIC WORKS CONSTRUCTION~~

STANDARD PLAN METRIC 340–1

SHEET 1 OF 2

NOTES

1. THE HORIZONTAL ANGLE OF CONVERGENCE OR DIVERGENCE, θ, SHALL NOT EXCEED 5° 45'.
2. VALUES FOR A, B, C, D_1 AND D_2 ARE SHOWN ON THE PLANS. ELEVATION R AND ELEVATION S ARE SHOWN WHEN REQUIRED BY NOTE 10.
3. FLOOR OF STRUCTURE SHALL BE STEEL TROWELED TO SPRING LINE.
4. REINFORCEMENT STEEL SHALL CONFORM TO ASTM A 615 M ~~(A 615)~~, GRADE 300 ~~(40)~~, AND SHALL TERMINATE 40 mm ~~(1 1/2")~~ CLEAR OF CONCRETE SURFACES UNLESS OTHERWISE SHOWN. LONGITUDINAL BARS SHALL BE #10M @ 450 mm ~~(#3 OR #4 @ 18")~~ OC OR LESS.
5. ELEVATION S APPLIES AT INSIDE WALL OF STRUCTURE.
6. TRANSITION STRUCTURE SHALL BE POURED IN ONE CONTINUOUS OPERATION, EXCEPT THAT THE CONTRACTOR SHALL HAVE THE OPTION OF PLACING AT THE SPRING LINE A CONSTRUCTION JOINT LONGITUDINAL KEYWAY.
7. THE LENGTH OF THE STRUCTURE MAY BE INCREASED AT THE OPTION OF THE CONTRACTOR TO MEET RCP ENDS, USING D BARS, LONGITUDINAL AND BOTTOM REINFORCEMENT IN EXTENDED PORTION OF SAME DIAMETER AND SPACING AS SPECIFIED IN THE TABLE, BUT ANY CHANGE IN THE LOCATION OF SPUR MUST BE APPROVED BY THE ENGINEER.
8. EMBEDMENT P SHALL BE AS SPECIFIED IN THE TABLE, UNLESS OTHERWISE SHOWN ON THE PLANS.
9. WHEN THERE IS NO SPUR REQUIRED, A & B BARS SHALL BE OMITTED.
10. WHEN ELEVATION R AND ELEVATION S ARE NOT SHOWN ON PLANS, INLET PIPE SHALL ENTER MAIN LINE RADIALLY. WHEN INLET PIPE ENTERS MAIN LINE OTHER THAN RADIALLY, ELEVATION S SHALL BE SHOWN ON PLANS, AND INLET PIPE SHALL BE LAID ON A STRAIGHT GRADE FROM ELEVATION S TO CATCH BASIN OR GRADE BREAK IN INLET LINE. ELEVATION R SHALL BE SHOWN ON THE PLANS ONLY WHEN STUB IS TO BE PROVIDED IN MAIN LINE FOR FUTURE CONSTRUCTION OF INLET PIPE.
11. THE MAXIMUM COVER ABOVE THIS STRUCTURE SHALL BE 7.5 m ~~(25')~~. IF THE COVER EXCEEDS 7.5 m ~~(25')~~ A SPECIAL STRUCTURE SHALL BE DESIGNED FOR THE COVER AND DETAILED ON THE PLANS.

~~STANDARD PLANS FOR PUBLIC WORKS CONSTRUCTION~~

TRANSITION STRUCTURE PIPE TO PIPE

STANDARD PLAN METRIC 340–1

SHEET 2 OF 2

ALL DIMENSIONS ARE IN METERS UNLESS OTHERWISE SHOWN

DRAINAGE DETAILS

NO SCALE

DD-56

STATE OF CALIFORNIA - DEPARTMENT OF TRANSPORTATION
Caltrans HYDRAULICS

FUNCTIONAL SUPERVISOR: RALPH M. SASAKI
CALCULATED-DESIGNED BY: S. M. TAN, W. Y. LEE
CHECKED BY: R. M. SASAKI
REVISED BY / DATE REVISED

LAST REVISION 00-00-00 | DATE PLOTTED => 31-JAN-2011 | TIME PLOTTED => 14:51

Dist	COUNTY	ROUTE	KILOMETER POST TOTAL PROJECT	SHEET No.	TOTAL SHEETS
07	LA	5	2.9/4.9	270	1082

Caltrans Metric

12-23-09
REGISTERED CIVIL ENGINEER DATE

6-21-10
PLANS APPROVAL DATE

REGISTERED PROFESSIONAL ENGINEER RALPH M. SASAKI No. 30849 Exp. 3/31/10 CIVIL STATE OF CALIFORNIA

THE STATE OF CALIFORNIA OR ITS OFFICERS OR AGENTS SHALL NOT BE RESPONSIBLE FOR THE ACCURACY OR COMPLETENESS OF ELECTRONIC COPIES OF THIS PLAN SHEET.

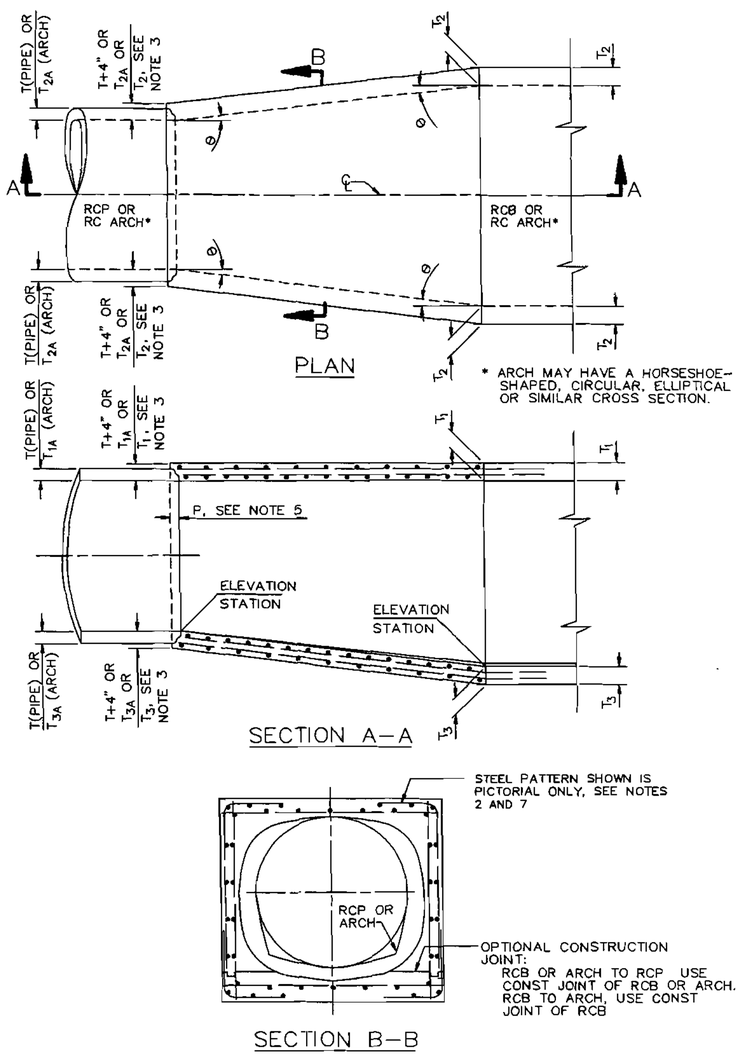

~~STANDARD PLANS FOR PUBLIC WORKS CONSTRUCTION~~

~~PROMULGATED BY THE PUBLIC WORKS STANDARDS INC. GREENBOOK COMMITTEE 1992 REV. 1995~~

TRANSITION STRUCTURE RCB TO PIPE

~~USE WITH STANDARD SPECIFICATIONS FOR PUBLIC WORKS CONSTRUCTION~~

STANDARD PLAN METRIC **342–1**

SHEET 1 OF 2

NOTES

1. THE HORIZONTAL ANGLE OF DIVERGENCE OR CONVERGENCE, θ, SHALL NOT EXCEED 5° 45'.
2. REINFORCING STEEL BAR SIZES, SPACING, PATTERN AND COVER OVER THE STEEL SHALL BE AS FOLLOWS:
   RCB TO RCP AND RCB TO ARCH – THAT OF RCB SECTION.
   ARCH TO RCP – THAT OF ARCH SECTION.
   ARCH TO ARCH – THAT OF ARCH SECTION HAVING THE THICKER WALLS. THE BAR LENGTHS SHALL VARY UNIFORMLY THROUGHOUT THE TRANSITION.
3. THE CONCRETE THICKNESS SHALL BE AS FOLLOWS:
   RCB TO RCP AND ARCH TO RCP – THAT OF ARCH OR RCB SECTION UNLESS THE WALL THICKNESS OF THE RCP PLUS 100 mm (~~4"~~) GREATER, IN WHICH CASE THE CONCRETE THICKNESS SHALL VARY UNIFORMLY FROM THAT OF THE ARCH OR RCB SECTION TO THAT OF THE RCP WALL PLUS 100 mm (~~4"~~).

   RCB TO ARCH AND ARCH TO ARCH – THAT OF THE ADJOINING RCB OR ARCH SECTION AT EACH END OF THE TRANSITION AND SHALL VARY UNIFORMLY BETWEEN THE TWO ENDS.
4. THE INTERIOR SURFACE SHALL BE SMOOTH AND VARY UNIFORMLY BETWEEN THE TWO ADJOINING SECTIONS.
5. AT RCP JUNCTURE, EMBEDMENT P SHALL BE 130 mm (~~5"~~) FOR PIPE SIZE OF 2400 mm (~~96"~~) OR LESS, AND 200 mm (~~8"~~) FOR PIPE SIZES OVER 2400 mm (~~96"~~).
6. f'_c = 28 MPa (~~4000 PSI~~) AT 28 DAYS AND THE CONCRETE SHALL BE THE SAME MIX AS THE ADJACENT RCB.
7. ALL STEEL, EXCEPT LONGITUDINAL STEEL SHALL BE GRADE 400 (~~60~~) BILLET STEEL CONFORMING TO ASTM A 615 M (~~A 615~~) AND SHALL TERMINATE 40 mm (~~1 1/2"~~) CLEAR OF CONCRETE SURFACE UNLESS OTHERWISE SHOWN.
8. KEYED CONSTRUCTION JOINTS OF THE SAME DIMENSIONS AS THOSE OF THE RCB OR ARCH SECTION MAY BE CARRIED THROUGH THE TRANSITION STRUCTURE AT THE CONTRACTOR'S OPTION. SEE SECTION B–B.
9. THE TRANSITION STRUCTURE SHALL BE CONSTRUCTED IN ACCORDANCE THE STRUCTURAL NOTES APPLYING TO RCB OR ARCH STRUCTURES SHOWN ON THE PLANS.

~~STANDARD PLANS FOR PUBLIC WORKS CONSTRUCTION~~

TRANSITION STRUCTURE RCB TO PIPE

STANDARD PLAN METRIC **342–1**

SHEET 2 OF 2

ALL DIMENSIONS ARE IN METERS UNLESS OTHERWISE SHOWN

DRAINAGE DETAILS

NO SCALE

DD-57

FUNCTIONAL SUPERVISOR	CALCULATED-DESIGNED BY	CHECKED BY	REVISED BY	DATE REVISED
RALPH M. SASAKI	S. M. TAN W. Y. LEE	R. M. SASAKI		

STATE OF CALIFORNIA - DEPARTMENT OF TRANSPORTATION

Caltrans **HYDRAULICS**

LAST REVISION 00-00-00 | DATE PLOTTED => 31-JAN-2011 | TIME PLOTTED => 14:51

Dist	COUNTY	ROUTE	KILOMETER POST TOTAL PROJECT	SHEET No.	TOTAL SHEETS
07	LA	5	2.9/4.9	271	1082

Caltrans Metric

REGISTERED CIVIL ENGINEER 12-23-09 DATE

6-21-10
PLANS APPROVAL DATE

REGISTERED PROFESSIONAL ENGINEER RALPH M. SASAKI No. 30849 Exp. 3/31/10 CIVIL STATE OF CALIFORNIA

THE STATE OF CALIFORNIA OR ITS OFFICERS OR AGENTS SHALL NOT BE RESPONSIBLE FOR THE ACCURACY OR COMPLETENESS OF ELECTRONIC COPIES OF THIS PLAN SHEET.

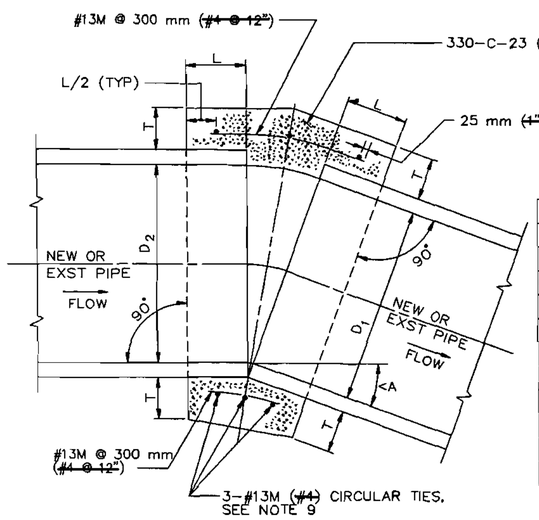

D	L	T
300 mm (~~12"~~)	300 mm (~~12"~~)	100 mm (~~4"~~)
450 mm (~~18"~~)	300 mm (~~12"~~)	125 mm (~~5"~~)
600 mm (~~24"~~)	300 mm (~~12"~~)	150 mm (~~6"~~)
750 mm (~~30"~~)	450 mm (~~18"~~)	175 mm (~~7"~~)
900 mm (~~36"~~)	450 mm (~~18"~~)	225 mm (~~9"~~)
1050 mm (~~42"~~)	450 mm (~~18"~~)	225 mm (~~9"~~)
1200 mm (~~48"~~)	450 mm (~~18"~~)	250 mm (~~10"~~)
1425 mm (~~57"~~)	450 mm (~~18"~~)	250 mm (~~10"~~)
1500 mm (~~60"~~)	525 mm (~~21"~~)	275 mm (~~11"~~)
1650 mm (~~66"~~)	525 mm (~~21"~~)	275 mm (~~11"~~)
1800 mm (~~72"~~)	600 mm (~~24"~~)	300 mm (~~12"~~)

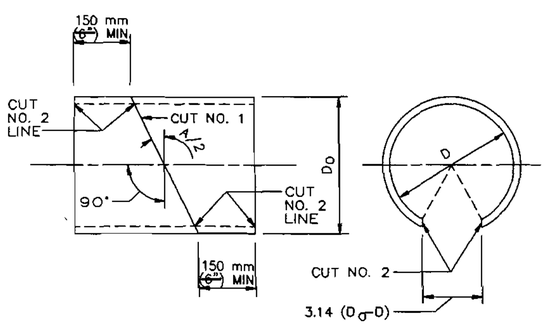

DETAIL "A" (SEE NOTE 10)
SONO-TUBE, OR EQUAL, INTERIOR FORM

CUT NO. 1: SAW THE TUBE AT AN ANGLE OF A/2 WITH THE TRANSVERSE PLANE. REVERSE ONE SECTION AND TAPE BOTH SECTIONS TOGETHER FORMING THE DEFLECTION ANGLE A.
CUT NO. 2: SAW THE TUBE LONGITUDINALLY REMOVING A STRIP 3.14 (D_O-D) WIDE ON THE SIDE OPPOSITE THE OPEN JOINT. BEND THE ENDS OF THE CUT TOGETHER AND INSERT THE TUBE IN THE PIPE.

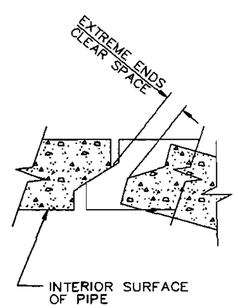

DETAIL "B"
TYPICAL JOINT FOR
REINFORCED CONCRETE PIPE

~~STANDARD PLANS FOR PUBLIC WORKS CONSTRUCTION~~

~~PROMULGATED BY THE PUBLIC WORKS STANDARDS INC. GREENBOOK COMMITTEE 1982 REV. 1996, 1997, 1999~~

CONCRETE COLLAR FOR RCP
300 mm (~~12"~~) THROUGH 1800 mm (~~72"~~)

~~USE WITH STANDARD SPECIFICATIONS FOR PUBLIC WORKS CONSTRUCTION~~

STANDARD PLAN METRIC
380-3
SHEET 1 OF 2

NOTES

1. A CONCRETE COLLAR IS REQUIRED WHERE THE CHANGE IN GRADE EXCEEDS 10%.
2. FOR CURVE JOINTS (SEE DETAIL B, SHEET 1)
   IF THE EXTREME ENDS OF THE PIPE LEAVE A CLEAR SPACE THAT IS GREATER THAN 25 mm (~~1"~~), BUT IS LESS THAN 75 mm (~~3"~~) A CONCRETE COVER IS REQUIRED IN ACCORDANCE WITH SSPWC 306-1.2.4.
   IF THE EXTREME ENDS OF THE PIPE LEAVE A CLEAR SPACE THAT IS EQUAL TO OR GREATER THAN 75 mm (~~3"~~), BUT LESS THAN 150 mm (~~6"~~), A CONCRETE COLLAR IS REQUIRED. IF THE CLEAR SPACE IS 150 mm (~~6"~~) OR GREATER, A TRANSITION STRUCTURE IS REQUIRED.
3. CONCRETE COLLAR SHALL NOT BE USED FOR A SIZE CHANGE ON THE MAIN LINE.
4. CONNECTOR PIPES
   A. WHERE PIPES OF DIFFERENT DIAMETERS ARE JOINED WITH A CONCRETE COLLAR, L AND T SHALL BE THOSE OF THE LARGER PIPE. D=D_1 OR D_2, WHICHEVER IS GREATER.
   B. WHEN D_1 IS EQUAL TO OR LESS THAN D_2, JOIN INVERTS AND WHEN D_1 IS GREATER THAN D_2, JOIN SOFFITS.
5. FOR PIPE LARGER THAN 1800 mm (~~72"~~) SPECIAL COLLAR DETAILS ARE REQUIRED.
6. FOR PIPE SIZE NOT LISTED USE NEXT SIZE LARGER.
7. REINFORCEMENT SHALL CONFORM TO ASTM A 615 M (~~A 615~~) GRADE 300 (~~40~~).
8. WHERE REINFORCING IS REQUIRED THE DIAMETER OF THE CIRCULAR TIES SHALL BE D+(2X WALL THICKNESS) + T.
9. REINFORCING SHALL BE USED WHERE THE PIPE DIAMETER IS GREATER THAN 525 mm (~~21"~~) AND ON ALL PIPES WHERE THE SPACES BETWEEN THE EXTREME OUTER ENDS IS 75 mm (~~3"~~) OR LARGER.

   CIRCULAR TIES:

PIPE DIAMETER	NO. OF CIRCULAR TIES
525 mm (~~21"~~) OR LESS	3
600 mm (~~24"~~) TO 750 mm (~~30"~~)	3
825 mm (~~33"~~) TO 1425 mm (~~57"~~)	4
1500 mm (~~60"~~) TO 1800 mm (~~72"~~)	5

   WHERE THE SPACE BETWEEN PIPE ENDS EXCEEDS 75 mm (~~3"~~), THE NUMBER OF CIRCULAR TIES SHALL BE INCREASED TO MAINTAIN AN APPROXIMATE SPACING OF 150 mm (~~6"~~) O.C.
10. WHERE THE PIPE IS 525 mm (~~21"~~) OR LESS IN DIAMETER AN INTERIOR FORM OF UNSEALED SONO-TUBE OR EQUAL SHALL BE USED TO PROVIDE A SMOOTH INTERIOR JOINT. THE PAPER FORM MAY BE LEFT IN PLACE (SEE DETAIL A). WHEN THE PIPE IS 600 mm (~~24"~~) OR LARGER A REMOVABLE INTERIOR FORM SHALL BE USED OR THE INTERIOR JOINT SHALL BE COMPLETELY FILLED WITH MORTAR AND NEATLY POINTED.

~~STANDARD PLANS FOR PUBLIC WORKS CONSTRUCTION~~

CONCRETE COLLAR FOR RCP
300 mm (~~12"~~) THROUGH 1800 mm (~~72"~~)

STANDARD PLAN METRIC
380-3
SHEET 2 OF 2

ALL DIMENSIONS ARE IN METERS UNLESS OTHERWISE SHOWN

DRAINAGE DETAILS
NO SCALE
DD-58

REVISED BY	DATE REVISED

CALCULATED-DESIGNED BY: S. M. TAN, W. Y. LEE
CHECKED BY: R. M. SASAKI
FUNCTIONAL SUPERVISOR: RALPH M. SASAKI

STATE OF CALIFORNIA - DEPARTMENT OF TRANSPORTATION
Caltrans
HYDRAULICS

LAST REVISION 00-00-00
DATE PLOTTED => 31-JAN-2011
TIME PLOTTED => 14:51

Dist	COUNTY	ROUTE	KILOMETER POST TOTAL PROJECT	SHEET No.	TOTAL SHEETS
07	LA	5	2.9/4.9	272	1082

Caltrans Metric

12-23-09
REGISTERED CIVIL ENGINEER DATE

6-21-10
PLANS APPROVAL DATE

REGISTERED PROFESSIONAL ENGINEER
RALPH M. SASAKI
No. 30849
Exp. 3/31/10
CIVIL
STATE OF CALIFORNIA

THE STATE OF CALIFORNIA OR ITS OFFICERS OR AGENTS SHALL NOT BE RESPONSIBLE FOR THE ACCURACY OR COMPLETENESS OF ELECTRONIC COPIES OF THIS PLAN SHEET.

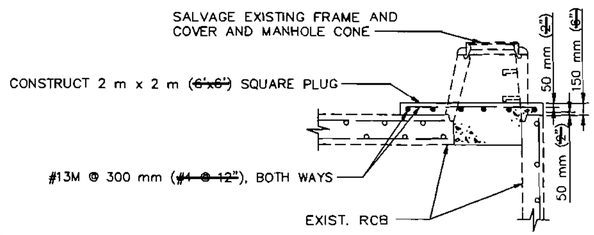

MANHOLE ABANDONMENT
SEAL FOR RCB

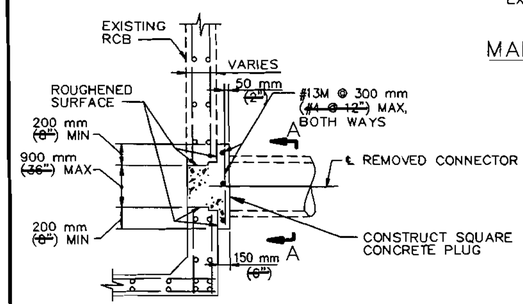

ABANDONMENT SEAL
FOR RCB INLET

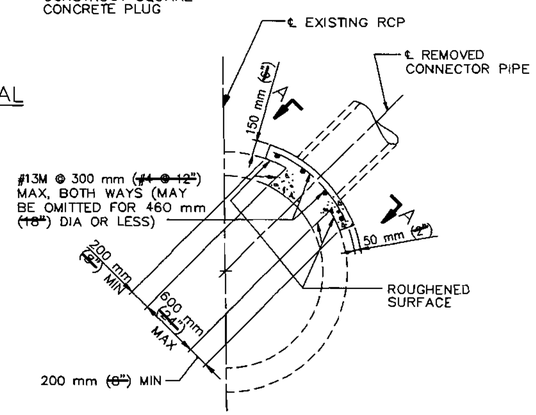

ABANDONMENT SEAL
FOR RCP INLET

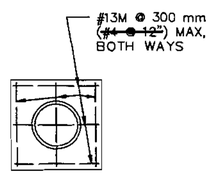

SECTION A–A

~~STANDARD PLANS FOR PUBLIC WORKS CONSTRUCTION~~

~~PROMULGATED BY THE PUBLIC WORKS STANDARDS INC. GREENBOOK COMMITTEE 1994 REV. 1996~~

ABANDONMENT SEALS FOR MANHOLES AND INLETS

~~USE WITH STANDARD SPECIFICATIONS FOR PUBLIC WORKS CONSTRUCTION~~

STANDARD PLAN METRIC
381-1
SHEET 1 OF 1

ALL DIMENSIONS ARE IN METERS UNLESS OTHERWISE SHOWN

DRAINAGE DETAILS

NO SCALE

DD-59

STATE OF CALIFORNIA - DEPARTMENT OF TRANSPORTATION
Caltrans
HYDRAULICS

FUNCTIONAL SUPERVISOR: RALPH M. SASAKI
CHECKED BY: R. M. SASAKI
CALCULATED-DESIGNED BY: S. M. TAN, W. Y. LEE
REVISED BY / DATE REVISED

LAST REVISION 00-00-00
DATE PLOTTED => 31-JAN-2011
TIME PLOTTED => 15:02

Dist	COUNTY	ROUTE	KILOMETER POST TOTAL PROJECT	SHEET No.	TOTAL SHEETS
07	LA	5	2.9/4.9	273	1082

Caltrans Metric

12-23-09
REGISTERED CIVIL ENGINEER DATE

6-21-10
PLANS APPROVAL DATE

REGISTERED PROFESSIONAL ENGINEER RALPH M. SASAKI No. 30849 Exp. 3/31/10 CIVIL STATE OF CALIFORNIA

THE STATE OF CALIFORNIA OR ITS OFFICERS OR AGENTS SHALL NOT BE RESPONSIBLE FOR THE ACCURACY OR COMPLETENESS OF ELECTRONIC COPIES OF THIS PLAN SHEET.

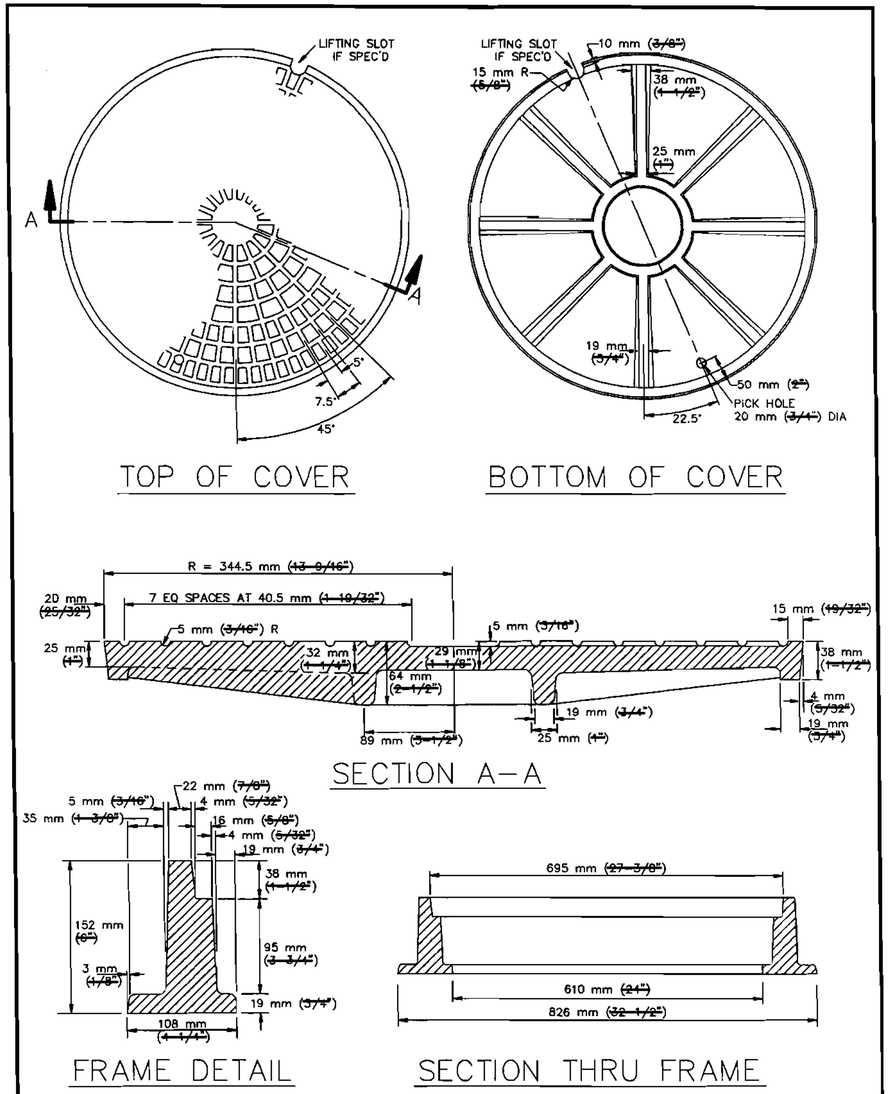

~~STANDARD PLANS FOR PUBLIC WORKS CONSTRUCTION~~

~~PROMULGATED BY THE PUBLIC WORKS STANDARDS INC. GREENBOOK COMMITTEE 1984 REV. 1996~~

610 mm ~~(24")~~ MANHOLE FRAME AND COVER

~~USE WITH STANDARD SPECIFICATIONS FOR PUBLIC WORKS CONSTRUCTION~~

STANDARD PLAN METRIC **630-2** SHEET 1 OF 2

NOTES:

1. THE CAST IRON USED SHALL CONFORM TO ASTM A-48 CLASS 35B.
2. COVERS SHALL BE CAST WITH THE LETTER "D" FOR STORM DRAINS AND "S" FOR SEWERS, AND THE AGENCY'S IDENTIFICATION IN ACCORDANCE WITH INSTRUCTIONS FURNISHED BY THE AGENCY. THE LETTER "D" OR "S" SHALL BE APPROXIMATELY 65 mm ~~(2-1/2")~~ HIGH WITH 15 mm ~~(1/2")~~ LINE WIDTH, AND PLACED IN THE CENTER OF THE COVER. ALL LETTERS SHALL BE FLUSH WITH THE FINISHED SURFACE OF THE COVER.
3. FOUNDRY IDENTIFYING MARK, HEAT AND DATE SHALL BE CAST ON THE BOTTOM OF THE COVER AND ON THE INSIDE OF THE FRAME.
4. IMPORTED COVERS AND FRAMES SHALL HAVE THE COUNTRY OF ORIGIN MARKING IN COMPLIANCE WITH FEDERAL REGULATIONS.
5. WEIGHT OF FRAME SHALL BE 118 kg ~~(260 LBS)~~. WEIGHT OF COVER SHALL BE 79 kg ~~(175 LBS)~~. ACTUAL WEIGHTS SHALL BE WITHIN A RANGE OF 95% TO 110%.
6. THE MANHOLE FRAME AND COVER SHALL BE INSPECTED BY THE ENGINEER PRIOR TO SHIPMENT TO THE JOB SITE. ACCEPTANCE WILL BE INDICATED BY THE AGENCY'S MARK.
7. THE PROOF-LOAD FOR TEST METHOD B OF SSPWC 206-3.2 IS 180 kN ~~(40,700 LBS)~~.
8. COVERS FOR MANHOLES LOCATED IN EASEMENTS, ALLEYS, PARKWAYS AND ALL PLACES OTHER THAN PAVED STREETS SHALL BE PROVIDED WITH SOCKET-SET SCREW LOCKING DEVICES. DRILL AND TAP TWO HOLES TO A DEPTH OF 25 mm ~~(1")~~ AT 90 DEGREES TO PICK HOLE AND INSTALL 20 mm x 20 mm ~~(3/4" x 3/4")~~ STAINLESS STEEL SOCKET-SET SCREWS WITH 10 mm ~~(3/8")~~ RECESSED HEX HEAD. ALL THREADS SHALL BE N.C.

~~STANDARD PLANS FOR PUBLIC WORKS CONSTRUCTION~~

610 mm ~~(24")~~ MANHOLE FRAME & COVER

STANDARD PLAN METRIC **630-2** SHEET 2 OF 2

ALL DIMENSIONS ARE IN METERS UNLESS OTHERWISE SHOWN

DRAINAGE DETAILS

NO SCALE

DD-60

REVISED BY	DATE REVISED

CALCULATED-DESIGNED BY: S. M. TAN, W. Y. LEE
CHECKED BY: R. M. SASAKI
FUNCTIONAL SUPERVISOR: RALPH M. SASAKI

STATE OF CALIFORNIA - DEPARTMENT OF TRANSPORTATION
Caltrans HYDRAULICS

LAST REVISION 00-00-00 DATE PLOTTED => 31-JAN-2011 TIME PLOTTED => 15:02

Dist	COUNTY	ROUTE	KILOMETER POST TOTAL PROJECT	SHEET No.	TOTAL SHEETS
07	LA	5	2.9/4.9	274	1082

Caltrans Metric

REGISTERED CIVIL ENGINEER 12-23-09 DATE

6-21-10
PLANS APPROVAL DATE

REGISTERED PROFESSIONAL ENGINEER RALPH M. SASAKI No. 30849 Exp. 3/31/10 CIVIL STATE OF CALIFORNIA

THE STATE OF CALIFORNIA OR ITS OFFICERS OR AGENTS SHALL NOT BE RESPONSIBLE FOR THE ACCURACY OR COMPLETENESS OF ELECTRONIC COPIES OF THIS PLAN SHEET.

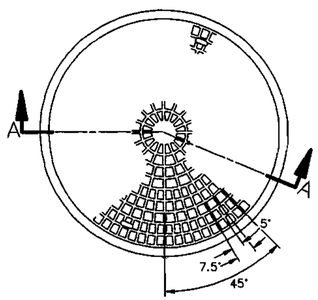

TOP OF COVER

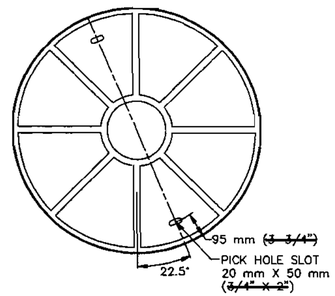

BOTTOM OF COVER

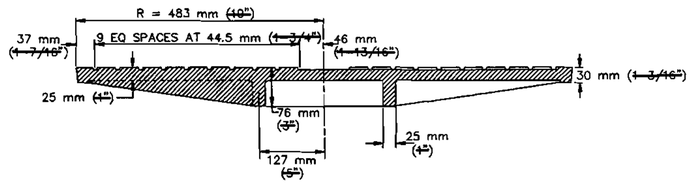

SECTION A–A

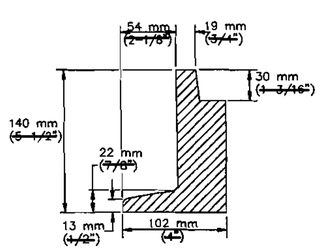

FRAME DETAIL

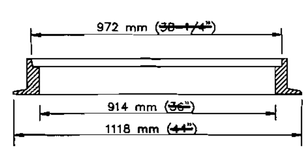

SECTION THRU FRAME

STANDARD PLANS FOR PUBLIC WORKS CONSTRUCTION

PROMULGATED BY THE PUBLIC WORKS STANDARDS INC. GREENBOOK COMMITTEE 1984 REV. 1992, 1996

914 mm (36") MANHOLE FRAME AND COVER

USE WITH STANDARD SPECIFICATIONS FOR PUBLIC WORKS CONSTRUCTION

STANDARD PLAN METRIC 633-2 SHEET 1 OF 2

NOTES:

1. THE CAST IRON USED SHALL CONFORM TO ASTM A-48 CLASS 35B.
2. COVERS SHALL BE CAST WITH THE LETTER "D" FOR STORM DRAINS AND "S" FOR SEWERS, AND THE AGENCY'S IDENTIFICATION IN ACCORDANCE WITH INSTRUCTIONS FURNISHED BY THE AGENCY. THE LETTER "D" OR "S" SHALL BE APPROXIMATELY 65 mm (2-1/2") HIGH WITH 15 mm (1/2") LINE WIDTH, AND PLACED IN THE CENTER OF THE COVER. ALL LETTERS SHALL BE FLUSH WITH THE FINISHED SURFACE OF THE COVER.
3. FOUNDRY IDENTIFYING MARK, HEAT AND DATE SHALL BE CAST ON THE BOTTOM OF THE COVER AND ON THE INSIDE OF THE FRAME.
4. IMPORTED COVERS AND FRAMES SHALL HAVE THE COUNTRY OF ORIGIN MARKING IN COMPLIANCE WITH FEDERAL REGULATIONS.
5. WEIGHT OF FRAME SHALL BE 152 kg (335 LBS). WEIGHT OF COVER SHALL BE 154 kg (340 LBS). ACTUAL WEIGHTS SHALL BE WITHIN A RANGE OF 95% TO 110%.
6. THE MANHOLE FRAME AND COVER SHALL BE INSPECTED BY THE ENGINEER PRIOR TO SHIPMENT TO THE JOB SITE. ACCEPTANCE WILL BE INDICATED BY THE AGENCY'S MARK.
7. THE PROOF-LOAD FOR TEST METHOD B OF SSPWC 206-3.2 IS 183 kN (41,300 LBS).
8. COVERS FOR MANHOLES LOCATED IN EASEMENTS, ALLEYS, PARKWAYS AND ALL PLACES OTHER THAN PAVED STREETS SHALL BE PROVIDED WITH SOCKET-SET SCREW LOCKING DEVICES. DRILL AND TAP TWO HOLES TO A DEPTH OF 25 mm (1") AT 90 DEGREES TO PICK HOLE AND INSTALL 20 mm x 20 mm (3/4" x 3/4") STAINLESS STEEL SOCKET-SET SCREWS WITH 10 mm (3/8") RECESSED HEX HEAD. ALL THREADS SHALL BE N.C.

STANDARD PLANS FOR PUBLIC WORKS CONSTRUCTION

914 mm (36") MANHOLE FRAME & COVER

STANDARD PLAN METRIC 633-2 SHEET 2 OF 2

ALL DIMENSIONS ARE IN METERS UNLESS OTHERWISE SHOWN

DRAINAGE DETAILS

NO SCALE

DD-61

STATE OF CALIFORNIA - DEPARTMENT OF TRANSPORTATION
Caltrans HYDRAULICS

FUNCTIONAL SUPERVISOR: RALPH M. SASAKI
CALCULATED-DESIGNED BY: S. M. TAN, W. Y. LEE
CHECKED BY: R. M. SASAKI
REVISED BY / DATE REVISED

LAST REVISION 00-00-00 DATE PLOTTED => 31-JAN-2011 TIME PLOTTED => 15:02

Dist	COUNTY	ROUTE	KILOMETER POST TOTAL PROJECT	SHEET No.	TOTAL SHEETS
07	LA	5	2.9/4.9	275	1082

Caltrans Metric

12-23-09
REGISTERED CIVIL ENGINEER DATE

6-21-10
PLANS APPROVAL DATE

REGISTERED PROFESSIONAL ENGINEER RALPH M. SASAKI No. 30849 Exp. 3/31/10 CIVIL STATE OF CALIFORNIA

THE STATE OF CALIFORNIA OR ITS OFFICERS OR AGENTS SHALL NOT BE RESPONSIBLE FOR THE ACCURACY OR COMPLETENESS OF ELECTRONIC COPIES OF THIS PLAN SHEET.

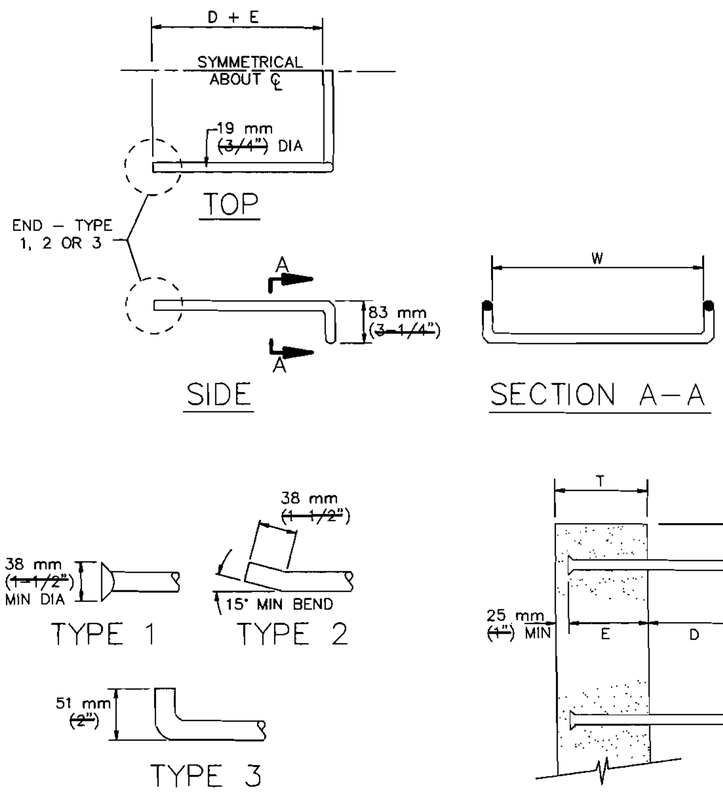

UNLESS OTHERWISE NOTED:

D = 175 mm (7")
E = 150 mm (6") OR T – 25 mm (1"), WHICHEVER IS LESS
MINIMUM E IS 75 mm (3")
S = 300 mm (12") MAX, EVENLY SPACED
W = 400 mm (16") MIN

FOR MANHOLES AND UNDERGROUND VAULTS:
S = 400 mm (16") MAX, EVENLY SPACED
W = 350 mm (14") MIN

~~STANDARD PLANS FOR PUBLIC WORKS CONSTRUCTION~~

~~PROMULGATED BY THE PUBLIC WORKS STANDARDS INC. GREENBOOK COMMITTEE 1984 REV. 1992, 1994~~

STEEL STEP

~~USE WITH STANDARD SPECIFICATIONS FOR PUBLIC WORKS CONSTRUCTION~~

STANDARD PLAN METRIC
635–2
SHEET 1 OF 2

NOTES:

1. STEPS SHALL BE STEEL CONFORMING TO ASTM A307 AND SHALL BE GALVANIZED AFTER FABRICATION. UNLESS OTHERWISE NOTED, STEPS MAY ALSO BE POLYPROPYLENE STEPS, STEEL REINFORCED, CONFORMING TO SPPWC 636.
2. IF STAINLESS STEEL STEPS ARE REQUIRED, THE MATERIAL SHALL CONFORM TO ASTM A276, 300 SERIES.
3. STEP ENDS MAY BE TYPE 1, 2 OR 3, AS SHOWN.
4. BOTTOM STEP SHALL BE A MAXIMUM OF 600 mm (2') ABOVE FLOOR OR SHELF.
5. STEPS WITH TYPE 1 OR 2 ENDS MAY BE CAST IN PLACE, OR PLACED IN THE CENTER OF 40 mm (1-1/2") MIN DIA DRILLED OR FORMED HOLES AND SET WITH HIGH STRENGTH NON–SHRINK GROUT, 40 MPa (6000 PSI) MIN. STEPS WITH TYPE 3 ENDS SHALL BE CAST IN PLACE.

~~STANDARD PLANS FOR PUBLIC WORKS CONSTRUCTION~~

STEEL STEP

STANDARD PLAN METRIC
635–2
SHEET 2 OF 2

ALL DIMENSIONS ARE IN METERS UNLESS OTHERWISE SHOWN

DRAINAGE DETAILS

NO SCALE

DD-62

STATE OF CALIFORNIA - DEPARTMENT OF TRANSPORTATION
Caltrans
HYDRAULICS

FUNCTIONAL SUPERVISOR: RALPH M. SASAKI
CALCULATED-DESIGNED BY: S. M. TAN, W. Y. LEE
CHECKED BY: R. M. SASAKI
REVISED BY / DATE REVISED

LAST REVISION 00-00-00
DATE PLOTTED => 31-JAN-2011
TIME PLOTTED => 15:02

Dist	COUNTY	ROUTE	KILOMETER POST TOTAL PROJECT	SHEET No.	TOTAL SHEETS
07	LA	5	2.9/4.9	276	1082

Caltrans Metric

REGISTERED CIVIL ENGINEER 12-23-09 DATE

6-21-10
PLANS APPROVAL DATE

REGISTERED PROFESSIONAL ENGINEER RALPH M. SASAKI No. 30849 Exp. 3/31/10 CIVIL STATE OF CALIFORNIA

THE STATE OF CALIFORNIA OR ITS OFFICERS OR AGENTS SHALL NOT BE RESPONSIBLE FOR THE ACCURACY OR COMPLETENESS OF ELECTRONIC COPIES OF THIS PLAN SHEET.

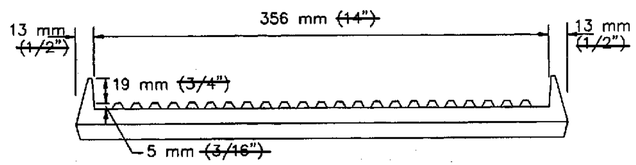

FRONT

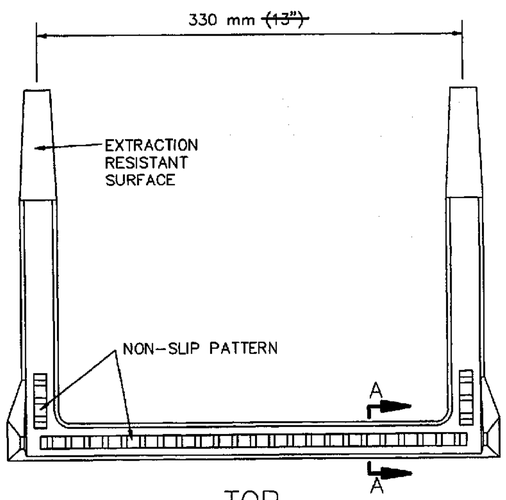

TOP

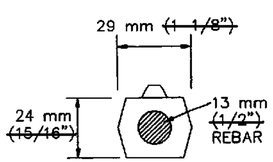

SECTION A–A

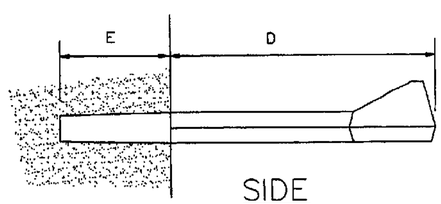

SIDE

STANDARD PLANS FOR PUBLIC WORKS CONSTRUCTION

PROMULGATED BY THE PUBLIC WORKS STANDARDS INC. GREENBOOK COMMITTEE 1991 REV. 1996

POLYPROPYLENE PLASTIC STEP

USE WITH STANDARD SPECIFICATIONS FOR PUBLIC WORKS CONSTRUCTION

STANDARD PLAN METRIC **636–1** SHEET 1 OF 2

NOTES:

1. STEPS SHALL BE STEEL–REINFORCED COPOLYMER POLYPROPYLENE PLASTIC CONFORMING TO:
   (A) ASTM D478 AND C497, EXCEPT THAT THE MINIMUM HORIZONTAL PULLOUT LOAD SHALL BE 6.7 kN (1500 LBS).
   (B) ASTM A615 GRADE 60 DEFORMED REINFORCING STEEL BAR.
   (C) CALIFORNIA CODE OF REGULATIONS TITLE 8, GENERAL INDUSTRY SAFETY ORDERS.
2. STEPS SHALL BE CAPABLE OF WITHSTANDING AN IMPACT LOAD OF 95 N.m (70 FT–LBS) AT –7°C (20°F) WITHOUT CRACKING OR FRACTURING.
3. THE MINIMUM TOTAL CROSS–SECTIONAL AREA OF THE EXPOSED PORTION OF THE STEP, INCLUDING THE DEFORMED STEEL BAR AND EXCLUDING THE NON–SLIP TREAD SURFACE, SHALL BE 645 mm2 (1.0 SQ IN).
4. THE ENTIRE POLYPROPYLENE PLASTIC MATERIAL SURROUNDING THE REINFORCING STEEL BAR SHALL BE CAST MONOLITHICALLY. MINIMUM COVER SHALL BE 5 mm (3/16").
5. A CERTIFICATION OF COMPLIANCE WITH THE REQUIREMENTS OF NOTES 1 THROUGH 4 PREPARED BY AN INDEPENDENT CERTIFIED LABORATORY SHALL BE SUBMITTED TO THE ENGINEER CONCURRENTLY WITH A REQUEST FOR APPROVAL.
6. E = 86 mm (3 3/8"). FOR VAULTS AND MANHOLES, D = 140 mm (5 1/2"). FOR OTHER INSTALLATIONS, D = 190 mm (7 1/2"). THESE DIMENSIONS MAY BE PLUS OR MINUS 6 mm (1/4").
7. STEPS SHALL BE EVENLY SPACED. MAXIMUM VERTICAL SPACING OF STEPS SHALL BE 400 mm (16"), WITH THE BOTTOM STEP A MAXIMUM OF 600 mm (2') ABOVE FLOOR OR SHELF.
8. IF TAPERED STEPS ARE INSTALLED INTO STRAIGHT DRILLED OR FORMED HOLES, APPROVED NON–SHRINK GROUT SHALL BE INJECTED INTO THE HOLE PRIOR TO INSTALLATION. HOLES SHALL BE STRAIGHT AND PARALLEL. EXCEPT AS OTHERWISE NOTED, STEPS SHALL BE INSTALLED IN ACCORDANCE WITH MANUFACTURER'S RECOMMENDED PROCEDURES.
9. A DROP STEP WITH A MINIMUM DROP OF 19 mm (3/4") MAY BE USED. THE DROP STEP SHALL MEET ALL OTHER CRITERIA OF THIS PLAN.

STANDARD PLANS FOR PUBLIC WORKS CONSTRUCTION

POLYPROPYLENE PLASTIC STEP

STANDARD PLAN METRIC **636–1** SHEET 2 OF 2

ALL DIMENSIONS ARE IN METERS UNLESS OTHERWISE SHOWN

DRAINAGE DETAILS

NO SCALE

DD-63

STATE OF CALIFORNIA - DEPARTMENT OF TRANSPORTATION
Caltrans
HYDRAULICS

FUNCTIONAL SUPERVISOR: RALPH M. SASAKI
CALCULATED-DESIGNED BY: S. M. TAN, W. Y. LEE
CHECKED BY: R. M. SASAKI
REVISED BY / DATE REVISED

LAST REVISION 00-00-00 | DATE PLOTTED => 31-JAN-2011 | TIME PLOTTED => 15:02

Dist	COUNTY	ROUTE	KILOMETER POST TOTAL PROJECT	SHEET No.	TOTAL SHEETS
07	LA	5	2.9/4.9	277	1082

Caltrans Metric

REGISTERED CIVIL ENGINEER — DATE 12-23-09

6-21-10
PLANS APPROVAL DATE

REGISTERED PROFESSIONAL ENGINEER — RALPH M. SASAKI — No. 30849 — Exp. 3/31/10 — CIVIL — STATE OF CALIFORNIA

THE STATE OF CALIFORNIA OR ITS OFFICERS OR AGENTS SHALL NOT BE RESPONSIBLE FOR THE ACCURACY OR COMPLETENESS OF ELECTRONIC COPIES OF THIS PLAN SHEET.

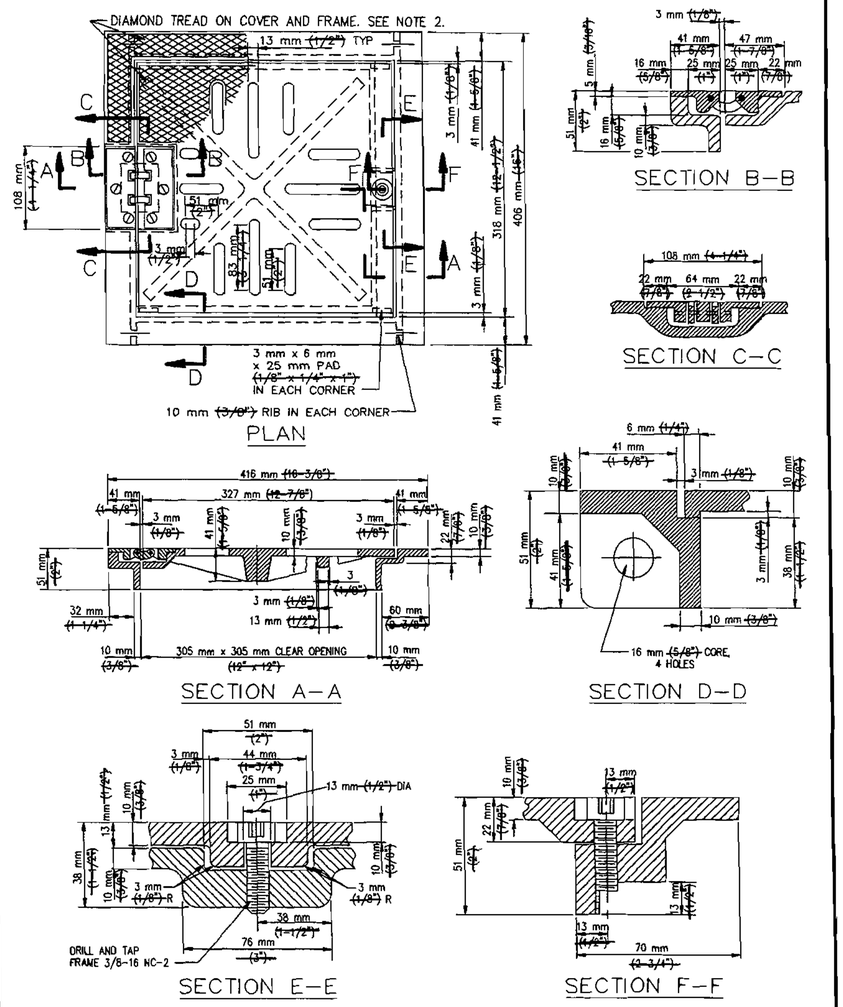

~~STANDARD PLANS FOR PUBLIC WORKS CONSTRUCTION~~

~~PROMULGATED BY THE PUBLIC WORKS STANDARDS INC. GREENBOOK COMMITTEE 1993 REV. 1998~~

RECTANGULAR FRAME AND COVER

~~USE WITH STANDARD SPECIFICATIONS FOR PUBLIC WORKS CONSTRUCTION~~

STANDARD PLAN METRIC **152–1** SHEET 1 OF 2

NOTES

1. FRAME AND COVER SHALL BE CAST IRON.
2. A PLAIN 6 mm ~~(1/4")~~ BORDER SHALL BE TYPICAL FOR ALL BORDERS ON FRAME AND COVER.
3. ALL CASTING RADII SHALL BE 6 mm ~~(1/4")~~ UNLESS OTHERWISE SHOWN.
4. WEIGHT OF FRAME AND COVER SHALL BE 19.5 kg ~~(43 LBS)~~.
5. USE ONE 3/8"–16x1" STAINLESS STEEL SOCKET CAP SCREW. APPLY HIGH ADHESIVE, OPEN GEAR GREASE TO THREADED PORTION PRIOR TO INSERTION.
6. USE 102 mm x 102 mm ~~(4" x 4")~~ CAST ALUMINUM LINK HINGE WITH SST PIN FOR 180° OPENING.

~~STANDARD PLANS FOR PUBLIC WORKS CONSTRUCTION~~

RECTANGULAR FRAME AND COVER

STANDARD PLAN METRIC **152–1** SHEET 2 OF 2

ALL DIMENSIONS ARE IN METERS UNLESS OTHERWISE SHOWN

DRAINAGE DETAILS

NO SCALE

DD-64

STATE OF CALIFORNIA - DEPARTMENT OF TRANSPORTATION
Caltrans **HYDRAULICS**

FUNCTIONAL SUPERVISOR: RALPH M. SASAKI
CALCULATED-DESIGNED BY: S. M. TAN, W. Y. LEE
CHECKED BY: R. M. SASAKI
REVISED BY / DATE REVISED

LAST REVISION 00-00-00 | DATE PLOTTED => 31-JAN-2011 | TIME PLOTTED => 15:02

Dist	COUNTY	ROUTE	KILOMETER POST TOTAL PROJECT	SHEET No.	TOTAL SHEETS
07	LA	5	2.9/4.9	278	1082

Caltrans Metric

REGISTERED CIVIL ENGINEER 12-23-09 DATE

6-21-10
PLANS APPROVAL DATE

REGISTERED PROFESSIONAL ENGINEER RALPH M. SASAKI No. 30849 Exp. 3/31/10 CIVIL STATE OF CALIFORNIA

THE STATE OF CALIFORNIA OR ITS OFFICERS OR AGENTS SHALL NOT BE RESPONSIBLE FOR THE ACCURACY OR COMPLETENESS OF ELECTRONIC COPIES OF THIS PLAN SHEET.

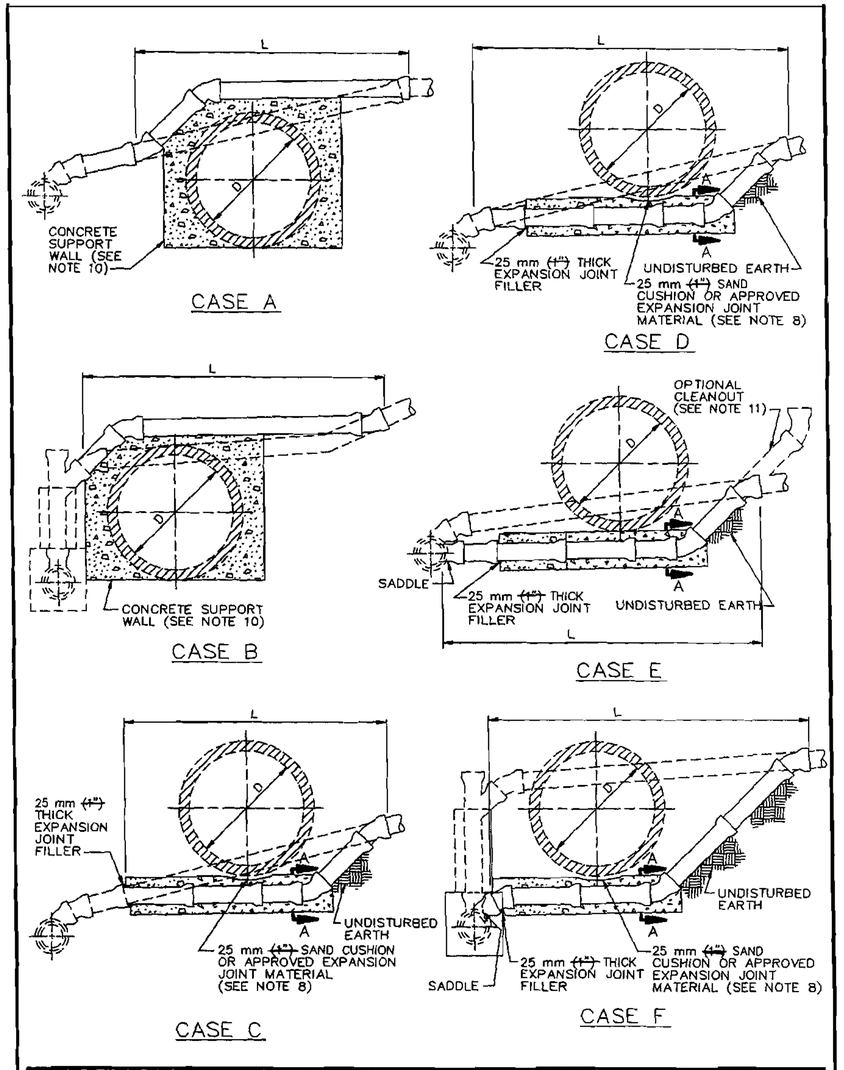

~~STANDARD PLANS FOR PUBLIC WORKS CONSTRUCTION~~

~~PROMULGATED BY THE PUBLIC WORKS STANDARD, INC. GREENBOOK COMMITTEE REV. 1998~~

HOUSE CONNECTION REMODELING

USE WITH STANDARD SPECIFICATIONS FOR PUBLIC WORKS CONSTRUCTION

STANDARD PLAN METRIC **223-1** SHEET 1 OF 3

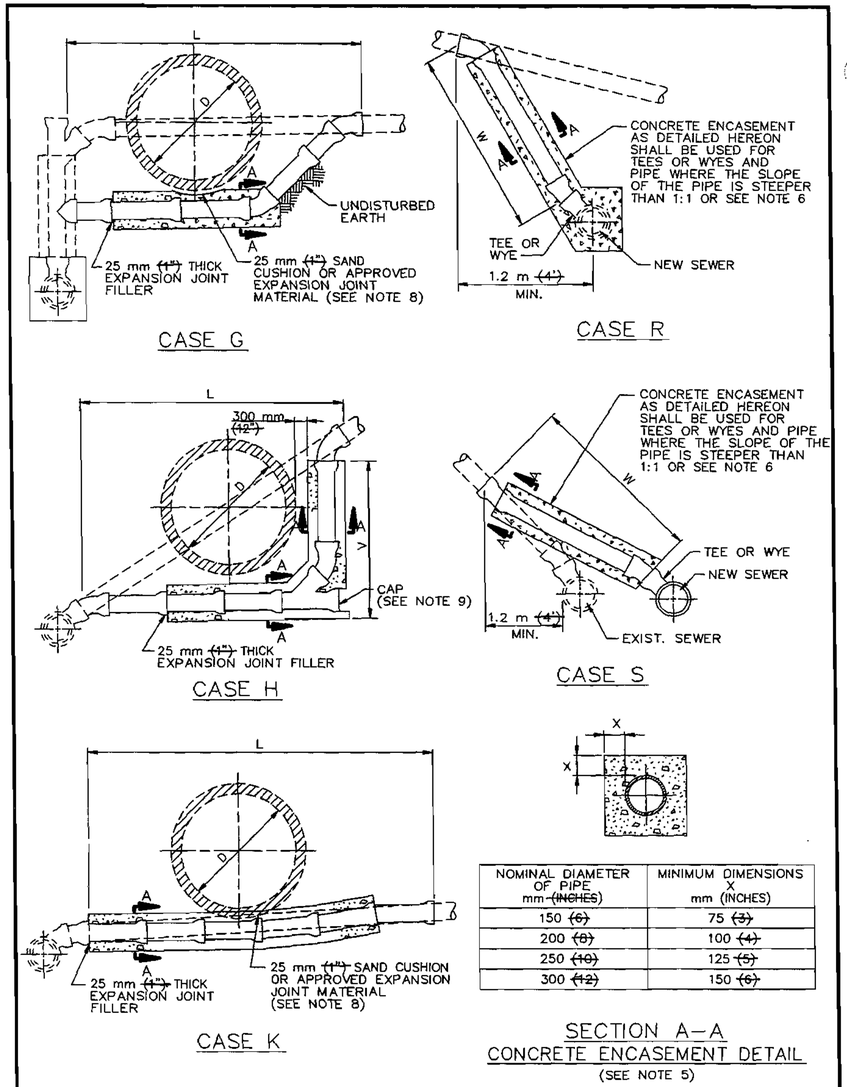

NOMINAL DIAMETER OF PIPE mm ~~(INCHES)~~	MINIMUM DIMENSIONS X mm (INCHES)
150 ~~(6)~~	75 ~~(3)~~
200 ~~(8)~~	100 ~~(4)~~
250 ~~(10)~~	125 ~~(5)~~
300 ~~(12)~~	150 ~~(6)~~

SECTION A–A
CONCRETE ENCASEMENT DETAIL
(SEE NOTE 5)

~~STANDARD PLANS FOR PUBLIC WORKS CONSTRUCTION~~

HOUSE CONNECTION REMODELING

STANDARD PLAN METRIC **223-1** SHEET 2 OF 3

ALL DIMENSIONS ARE IN METERS UNLESS OTHERWISE SHOWN

DRAINAGE DETAILS

NO SCALE

DD-65

STATE OF CALIFORNIA - DEPARTMENT OF TRANSPORTATION
Caltrans
HYDRAULICS

FUNCTIONAL SUPERVISOR: RALPH M. SASAKI
CALCULATED-DESIGNED BY: S. M. TAN, W. Y. LEE
CHECKED BY: R. M. SASAKI
REVISED BY / DATE REVISED

LAST REVISION 00-00-00 DATE PLOTTED => 31-JAN-2011 TIME PLOTTED => 15:02

Dist	COUNTY	ROUTE	KILOMETER POST TOTAL PROJECT	SHEET No.	TOTAL SHEETS
07	LA	5	2.9/4.9	279	1082

Caltrans Metric

12-23-09
REGISTERED CIVIL ENGINEER DATE

6-21-10
PLANS APPROVAL DATE

REGISTERED PROFESSIONAL ENGINEER RALPH M. SASAKI No. 30849 Exp. 3/31/10 CIVIL STATE OF CALIFORNIA

THE STATE OF CALIFORNIA OR ITS OFFICERS OR AGENTS SHALL NOT BE RESPONSIBLE FOR THE ACCURACY OR COMPLETENESS OF ELECTRONIC COPIES OF THIS PLAN SHEET.

NOTES

1. EXCEPT AS OTHERWISE INDICATED HEREON OR ON THE PLANS, ALL HOUSE CONNECTION REMODELING SHALL CONFORM TO THE APPLICABLE PORTIONS OF SPPWC 222, HOUSE CONNECTION SEWER.

2. SEE PROJECT PLANS FOR VALUES OF D, L, V, AND W. (DIMENSION L IS THE HORIZONTAL LENGTH OF THE HOUSE CONNECTION REMODELING).

3. EXISTING SEWERS ARE INDICATED BY DASHED LINES. HOUSE CONNECTION SEWERS TO BE CONSTRUCTED ARE INDICATED BY SOLID LINES AND SHALL BE OF THE SAME MATERIAL AS THE EXISTING SEWER. THE CONTRACTOR MAY CONSTRUCT THE SEWER WITH OTHER MATERIALS ALLOWED BY SPPWC 222 PROVIDED APPROVED ADAPTORS ARE UTILIZED.

4. 1/16 (22.5°) OR 1/8 (45°) BENDS SHALL BE USED TO REMODEL OR CONSTRUCT ANY SEWER ON A CURVE OR AT ANY CHANGE IN ALIGNMENT. WHERE PHYSICAL OR GEO-METRIC LIMITATIONS PRECLUDE THE USE OF 1/16 (22.5°) OR 1/8 (45°) BENDS, THE CONTRACTOR SHALL SUBMIT TO THE ENGINEER FOR APPROVAL THE PROPOSED METHOD OF REMODELING OR CONSTRUCTION.

5. ALL HOUSE CONNECTION SEWERS TO BE CONSTRUCTED UNDER A PROPOSED CONDUIT SHALL BE ENCASED IN CONCRETE AS SHOWN HEREON. WHEN THE HOUSE CONNECTION SEWER SLOPE EXCEEDS 1:1 THE CONTRACTOR MAY, AT ITS OPTION, PLACE A CIRCULAR CROSS SECTION WITH MINIMUM COVER EQUAL TO DIMENSION "X" AS SHOWN ON SECTION A-A HEREON IN LIEU OF A SQUARE CROSS SECTION OF CONCRETE. CONCRETE BEDDING AND ENCASEMENT SHALL BE CLASS 250-C-14 (450-C-2000) AND SHALL EXTEND TO THE FIRST PIPE JOINT AT LEAST 300 mm ~~(1')~~ BEYOND THE OD OF EACH SIDE OF THE PROPOSED CONDUIT.

6. FOR CASE R AND S, WHEN THE SLOPE OF THE PIPE EXCEEDS 1:1, THE CONTRACTOR MAY, AT ITS OPTION, CONSTRUCT A CHIMNEY CONFORMING TO SPPWC 220 ON THE NEW SEWER IN LIEU OF CONSTRUCTING THE ENCASEMENT SHOWN HEREON.

7. FOR CASES E AND F, SADDLES SHALL BE CONNECTED EITHER TO THE LENGTH OF PIPE CONTAINING THE EXISTING TEE OR WYE OR TO THE ADJACENT DOWNSTREAM PIPE LENGTH.

8. CONDUITS TO BE INSTALLED OVER OR WITHIN 25 mm ~~(1")~~ OF ANY CONCRETE ENCASEMENT OR STRUCTURE, WHETHER EXISTING OR TO BE PLACED IN CONFORMITY WITH THE REQUIREMENTS HEREIN, SHALL BE INSTALLED ON A 25 mm ~~(1")~~ SAND CUSHION OR APPROVED EXPANSION JOINT MATERIAL. CONCRETE ENCASEMENT INSTALLED PURSUANT TO THIS STANDARD PLAN SHALL BE SEPARATED FROM EXISTING CONDUIT WITH 25 mm ~~(1")~~ THICK EXPANSION JOINT MATERIAL.

9. THOSE PORTIONS OF AN ABANDONED PIPE LOCATED BENEATH OR WITHIN 150 mm ~~(6")~~ OF A RELOCATED HOUSE CONNECTION SEWER SHALL BE REMOVED. THE EXCAVATION SHALL BE REFILLED TO THE GRADE OF THE NEW PIPE INVERT WITH CLASS 60-E-0.7 (100-E-100) CONCRETE. THE CONTRACTOR MAY, AT ITS OPTION, SUBSTITUTE MECHANICALLY COMPACTED BACKFILL IN LIEU OF THE CLASS 60-E-0.7 (100-E-100) CONCRETE. THOSE PORTIONS OF ABANDONED PIPE NOT REMOVED SHALL BE SEALED. WHERE CAPS ARE USED, THEY SHALL BE SEALED BY FILLING THE SPACE ABOVE THE CAP WITH SAND AND A 25 mm ~~(1")~~ THICK COATING OF TYPE "F" MORTAR.

10. SUPPORT WALLS SHALL CONFORM TO SPPWC 224.

11. WHEN INDICATED ON THE PLANS OR THE SPECIAL PROVISIONS, A CLEANOUT SHALL BE CONSTRUCTED IN CONJUNCTION WITH CASE E AS FOLLOWS:

    A. SUBSTITUTE A "Y" FOR THE 45° BEND.
    B. PLACE A 45° BEND ON THE UPPER END OF THE "Y".
    C. CAP TOP OF 45° BEND WITH A CAP AND SEAL WITH 25 mm ~~(1")~~ THICK TYPE "F" MORTAR AROUND THE CIRCUMFERENCE OF THE CAP.

~~STANDARD PLANS FOR PUBLIC WORKS CONSTRUCTION~~

HOUSE CONNECTION REMODELING

STANDARD PLAN METRIC
223-1
SHEET 3 OF 3

ALL DIMENSIONS ARE IN METERS UNLESS OTHERWISE SHOWN

DRAINAGE DETAILS

NO SCALE

DD-66

STATE OF CALIFORNIA - DEPARTMENT OF TRANSPORTATION
Caltrans
HYDRAULICS

FUNCTIONAL SUPERVISOR: RALPH M. SASAKI
CALCULATED-DESIGNED BY: S. M. TAN, W. Y. LEE
CHECKED BY: R. M. SASAKI
REVISED BY
DATE REVISED

LAST REVISION 00-00-00 | DATE PLOTTED => 31-JAN-2011 | TIME PLOTTED => 15:02

Dist	COUNTY	ROUTE	KILOMETER POST TOTAL PROJECT	SHEET No.	TOTAL SHEETS
07	LA	5	2.9/4.9	280	1082

Caltrans Metric

REGISTERED CIVIL ENGINEER 12-23-09 DATE

6-21-10
PLANS APPROVAL DATE

REGISTERED PROFESSIONAL ENGINEER RALPH M. SASAKI No. 30849 Exp. 3/31/10 CIVIL STATE OF CALIFORNIA

THE STATE OF CALIFORNIA OR ITS OFFICERS OR AGENTS SHALL NOT BE RESPONSIBLE FOR THE ACCURACY OR COMPLETENESS OF ELECTRONIC COPIES OF THIS PLAN SHEET.

CASE 1
REINFORCED CONCRETE BEAM

FOR 100 mm ~~(4")~~ TO 610 mm ~~(24")~~ ID PIPE

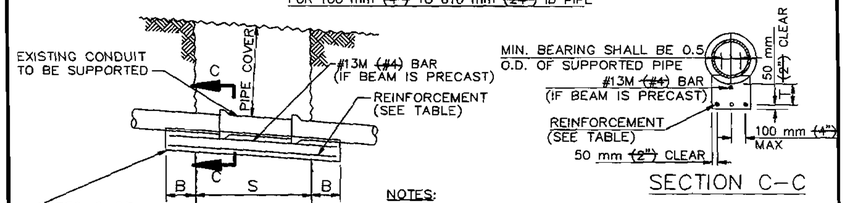

SECTION C-C

NOTES:

1. WIDTH OF BEAM SHALL EQUAL OD OF SUPPORTED PIPE. MINIMUM WIDTH SHALL BE 150 mm ~~(6")~~.
2. IF SUPPORTED PIPE IS BEDDED IN CONCRETE, BEAM WIDTH SHALL EQUAL BEDDING WIDTH.
3. IF BEAM IS PRECAST, ENDS OF BEAM SHALL BE FULLY BEDDED IN 265-C-14 (450-C-2000) CONCRETE FOR LENGTH "B". THE BEDDING SHALL HAVE A MINIMUM THICKNESS OF 100 mm ~~(4")~~. CLASS "C" MORTAR SHALL BE PLACED BETWEEN TOP OF BEAM AND SUPPORTED PIPE TO PROVIDE MINIMUM BEARING SHOWN.
4. THIS CASE IS PERMITTED ONLY IF THE TRENCH WALLS ARE FIRM AND UNYIELDING.
5. MAXIMUM SPACING OF BARS SHALL BE 100 mm ~~(4")~~ OC.

REINFORCED CONCRETE BEAM (DIMENSIONS AND REINFORCEMENT)

S	PIPE COVER														
	0 m TO 2.4 m			2.4 m TO 3.7 m			3.7 m TO 4.9 m			4.9 m TO 6.0 m			6.0 m TO 7.6 m		
	~~(0' TO 8'-0")~~			~~(8'-0" TO 12'-0")~~			~~(12'-0" TO 16'-0")~~			~~(16'-0" TO 20'-0")~~			~~(20'-0" TO 25'-0")~~		
	T	BARS	B	T	BARS	B	T	BARS	B	T	BARS	B	T	BARS	B
8m TO 1.2m ~~(0" TO 4'-0")~~	200mm ~~(8")~~	#13M ~~(#4)~~	0.50m ~~(1'-6")~~	200mm ~~(8")~~	#13M ~~(#4)~~	0.50m ~~(1'-6")~~	230mm ~~(9")~~	#13M ~~(#4)~~	0.50m ~~(1'-6")~~	255mm ~~(10")~~	#13M ~~(#4)~~	0.50m ~~(1'-6")~~	270mm ~~(10 1/2")~~	#13M ~~(#4)~~	0.50m ~~(1'-6")~~
1.2m TO 1.50m ~~(4'-0" TO 5'-0")~~	200mm ~~(8")~~	#13M ~~(#4)~~	0.50m ~~(1'-6")~~	250mm ~~(9 1/2")~~	#13M ~~(#4)~~	0.50m ~~(1'-6")~~	280mm ~~(11")~~	#13M ~~(#4)~~	0.50m ~~(1'-6")~~	305mm ~~(12")~~	#13M ~~(#4)~~	0.50m ~~(1'-6")~~	320mm ~~(12 1/2")~~	#16M ~~(#5)~~	0.50m ~~(1'-6")~~
1.5m TO 1.85m ~~(5'-0" TO 6'-0")~~	230mm ~~(9")~~	#13M ~~(#4)~~	0.50m ~~(1'-6")~~	280mm ~~(11")~~	#16M ~~(#5)~~	0.50m ~~(1'-6")~~	320mm ~~(12 1/2")~~	#16M ~~(#5)~~	0.50m ~~(1'-6")~~	340mm ~~(13 1/2")~~	#16M ~~(#5)~~	0.6m ~~(2'-0")~~	370mm ~~(14 1/2")~~	#16M ~~(#5)~~	0.6m ~~(3'-0")~~
1.85m TO 2.15m ~~(6'-0" TO 7'-0")~~	255mm ~~(10")~~	#16M ~~(#5)~~	0.50m ~~(1'-6")~~	320mm ~~(12 1/2")~~	#16M ~~(#5)~~	0.6m ~~(2'-0")~~	370mm ~~(14 1/2")~~	#16M ~~(#5)~~	0.6m ~~(2'-0")~~	395mm ~~(15 1/2")~~	#16M ~~(#5)~~	0.6m ~~(2'-0")~~	420mm ~~(16 1/2")~~	#19M ~~(#6)~~	0.6m ~~(2'-0")~~
2.15m TO 2.45m ~~(7'-0" TO 8'-0")~~	280mm ~~(11")~~	#16M ~~(#5)~~	0.50m ~~(1'-6")~~	355mm ~~(14")~~	#16M ~~(#5)~~	0.6m ~~(2'-0")~~	410mm ~~(16")~~	#16M ~~(#5)~~	0.6m ~~(2'-0")~~	445mm ~~(17 1/2")~~	#16M ~~(#5)~~	0.75m ~~(2'-6")~~	485mm ~~(19")~~	#19M ~~(#6)~~	0.75m ~~(2'-6")~~
2.45m TO 2.75m ~~(8'-0" TO 9'-0")~~	320mm ~~(12 1/2")~~	#16M ~~(#5)~~	0.6m ~~(2'-0")~~	395mm ~~(15 1/2")~~	#19M ~~(#6)~~	0.75m ~~(2'-6")~~	445mm ~~(17 1/2")~~	#19M ~~(#6)~~	0.90m ~~(3'-0")~~	495mm ~~(19 1/2")~~	#19M ~~(#6)~~	0.75m ~~(2'-6")~~	535mm ~~(21")~~	#19M ~~(#6)~~	0.75m ~~(2'-6")~~
2.75m TO 3.0m ~~(9'-0" TO 10'-0")~~	340mm ~~(13 1/2")~~	#19M ~~(#6)~~	0.6m ~~(2'-0")~~	430mm ~~(17")~~	#19M ~~(#6)~~	0.75m ~~(2'-6")~~	495mm ~~(19 1/2")~~	#19M ~~(#6)~~	0.90m ~~(3'-0")~~	545mm ~~(21 1/2")~~	#19M ~~(#6)~~	0.9m ~~(3'-0")~~	585mm ~~(23")~~	#19M ~~(#6)~~	0.90m ~~(3'-0")~~
3.0m TO 3.35m ~~(10'-0" TO 10'-9")~~	370mm ~~(14 1/2")~~	#19M ~~(#6)~~	0.75m ~~(2'-6")~~	470mm ~~(18 1/2")~~	#19M ~~(#6)~~	0.90m ~~(3'-0")~~	535mm ~~(21")~~	#19M ~~(#6)~~	0.90m ~~(3'-0")~~	595mm ~~(23 1/2")~~	#22M ~~(#7)~~	0.9m ~~(3'-0")~~	635mm ~~(25")~~	#22M ~~(#7)~~	0.90m ~~(3'-0")~~
3.35m TO 3.65m ~~(11'-0" TO 12'-0")~~	395mm ~~(15 1/2")~~	#19M ~~(#6)~~	0.75m ~~(2'-6")~~	510mm ~~(20")~~	#19M ~~(#6)~~	0.90m ~~(3'-0")~~	585mm ~~(23")~~	#22M ~~(#7)~~	1.10m ~~(3'-6")~~	650mm ~~(25 1/2")~~	#22M ~~(#7)~~	1.10m ~~(3'-6")~~	685mm ~~(27")~~	#22M ~~(#7)~~	1.10m ~~(3'-6")~~
3.65m TO 4.00m ~~(12'-0" TO 13'-0")~~	430mm ~~(17")~~	#19M ~~(#6)~~	0.90m ~~(3'-0")~~	545mm ~~(21 1/2")~~	#22M ~~(#7)~~	1.10m ~~(3'-6")~~	625mm ~~(24 1/2")~~	#22M ~~(#7)~~	1.10m ~~(3'-6")~~	700mm ~~(27 1/2")~~	#22M ~~(#7)~~	1.20m ~~(4'-0")~~	740mm ~~(29")~~	#22M ~~(#7)~~	1.20m ~~(4'-0")~~
4.00m TO 4.25m ~~(13'-1" TO 14'-0")~~	455mm ~~(18")~~	#22M ~~(#7)~~	0.90m ~~(3'-0")~~	585mm ~~(23")~~	#22M ~~(#7)~~	1.10m ~~(3'-6")~~	675mm ~~(26 1/2")~~	#22M ~~(#7)~~	1.20m ~~(4'-0")~~	750mm ~~(29 1/2")~~	#22M ~~(#7)~~	1.20m ~~(4'-0")~~	800mm ~~(31 1/2")~~	#22M ~~(#7)~~	1.20m ~~(4'-0")~~
4.25m TO 4.60m ~~(14'-0" TO 15'-0")~~	485mm ~~(19")~~	#22M ~~(#7)~~	0.90m ~~(3'-0")~~	635mm ~~(25")~~	#22M ~~(#7)~~	1.20m ~~(4'-0")~~	710mm ~~(28")~~	#22M ~~(#7)~~	1.20m ~~(4'-0")~~	800mm ~~(31 1/2")~~	#22M ~~(#7)~~	1.40m ~~(4'-6")~~			
4.6m TO 4.90m ~~(15'-0" TO 16'-0")~~	520mm ~~(20 1/2")~~	#22M ~~(#7)~~	1.10m ~~(3'-6")~~	675mm ~~(26 1/2")~~	#22M ~~(#7)~~	1.20m ~~(4'-0")~~	760mm ~~(30")~~	#25M ~~(#8)~~	1.40m ~~(4'-6")~~						
4.90 TO 5.20m ~~(16'-0" TO 17'-0")~~	545mm ~~(21 1/2")~~	#22M ~~(#7)~~	1.10m ~~(3'-6")~~	710mm ~~(28")~~	#25M ~~(#8)~~	1.40m ~~(4'-6")~~									
5.20m TO 5.50m ~~(17'-0" TO 18'-0")~~	570mm ~~(22 1/2")~~	#25M ~~(#8)~~	1.40m ~~(4'-6")~~	750mm ~~(29 1/2")~~	#25M ~~(#8)~~	1.40m ~~(4'-6")~~									

~~STANDARD PLANS FOR PUBLIC WORKS CONSTRUCTION~~

~~PROMULGATED BY THE PUBLIC WORKS STANDARDS INC. GREENBOOK COMMITTEE 1994 REV. 1996~~

SUPPORTS FOR CONDUITS ACROSS TRENCHES

~~USE WITH STANDARD SPECIFICATIONS FOR PUBLIC WORKS CONSTRUCTION~~

STANDARD PLAN METRIC **224-1** SHEET 1 OF 3

CASE 2
CONCRETE WALL

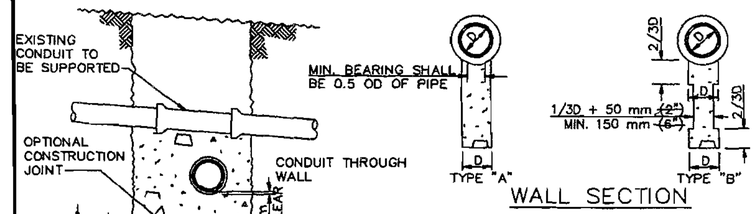

WALL SECTION

NOTES

1. THE SUPPORTING WALL SHALL HAVE A FIRM BEARING ON THE SUBGRADE AND AGAINST THE SLIDES OF THE EXCAVATION.
2. ANY CONDUIT PASSING THROUGH THE WALL SHALL HAVE 50 mm ~~(2")~~ CLEARANCE FROM THE WALL.
3. 100 mm ~~(4")~~ DIA OPENING THROUGH THE WALL AT 600 mm ~~(2')~~ OC HORIZONTALLY AND AT 1.5 m ~~(5')~~ OC VERTICALLY SHALL BE PROVIDED TO PREVENT UNEQUAL PRESSURE RESULTING FROM JETTED BACKFILL.
4. IF SUPPORTED PIPE IS BEDDED IN CONCRETE, MINIMUM THICKNESS OF WALL SHALL EQUAL BEDDING WIDTH.
5. BRICK WITH MORTAR JOINTS MAY BE USED IN LIEU OF CONCRETE FOR WALLS UP TO 1.5 m ~~(5')~~ IN HEIGHT OR LENGTH.

CASE 3
DUCTILE IRON PIPE

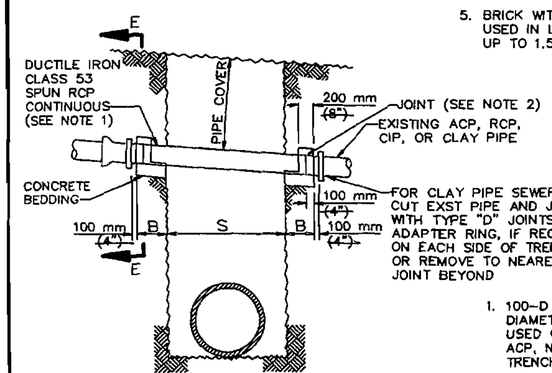

NOTES

1. 100-D (2000-D) SPUN RCP OF SAME DIAMETER AS THE EXISTING PIPE MAY BE USED ONLY WHEN THE EXISTING PIPE IS ACP, NRCP OR RCP AND THE TRENCH WIDTH IS 1.5 m ~~(5')~~ OR LESS.
2. THE CONCRETE COLLAR JOINT SHALL BE USED FOR JOINTS IN STORM DRAIN PIPE.

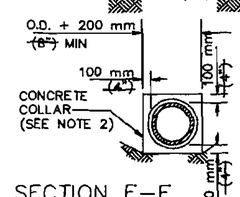

SECTION E-E

ALLOWABLE SPANS AND MIN. REQUIRED BEARING FOR DUCTILE IRON PIPE

DEPTH OF COVER	150 mm ~~(6")~~ PIPE		200 mm ~~(8")~~ PIPE		250 mm ~~(10")~~ PIPE	
	S (Max)	B (Min)	S (Max)	B (Min)	S (Max)	B (Min)
0 m TO 2.45 m ~~(0" TO 8'-0")~~	3.35 m ~~(11'-0")~~	0.5 m ~~(1'-6")~~	4.10 m ~~(13'-6")~~	0.5 m ~~(1'-6")~~	5.03 m ~~(16'-6")~~	0.6 m ~~(2'-0")~~
2.45 m TO 4.90m ~~(8'-0" TO 16'-0")~~	2.45 m ~~(8'-0")~~	0.5 m ~~(1'-6")~~	3.00 m ~~(10'-0")~~	0.6 m ~~(2'-0")~~	3.66 m ~~(12'-0")~~	0.6 m ~~(2'-0")~~
4.90 m TO 7.60m ~~(16'-0" TO 25'-0")~~	2.15 m ~~(7'-0")~~	0.5 m ~~(1'-6")~~	2.75 m ~~(9'-0")~~	0.6 m ~~(2'-0")~~	3.20 m ~~(10'-6")~~	0.75 m ~~(2'-6")~~

~~STANDARD PLANS FOR PUBLIC WORKS CONSTRUCTION~~

SUPPORTS FOR CONDUITS ACROSS TRENCHES

STANDARD PLAN METRIC **224-1** SHEET 2 OF 3

ALL DIMENSIONS ARE IN METERS UNLESS OTHERWISE SHOWN

DRAINAGE DETAILS

NO SCALE

DD-67

STATE OF CALIFORNIA - DEPARTMENT OF TRANSPORTATION
Caltrans **HYDRAULICS**

FUNCTIONAL SUPERVISOR: RALPH M. SASAKI
CALCULATED-DESIGNED BY: S. M. TAN / W. Y. LEE
CHECKED BY: R. M. SASAKI
REVISED BY / DATE REVISED

LAST REVISION 00-00-00 | DATE PLOTTED => 31-JAN-2011 | TIME PLOTTED => 15:02

Dist	COUNTY	ROUTE	KILOMETER POST TOTAL PROJECT	SHEET No.	TOTAL SHEETS
07	LA	5	2.9/4.9	281	1082

Caltrans Metric

REGISTERED CIVIL ENGINEER 12-23-09 DATE

6-21-10
PLANS APPROVAL DATE

REGISTERED PROFESSIONAL ENGINEER RALPH M. SASAKI No. 30849 Exp. 3/31/10 CIVIL STATE OF CALIFORNIA

THE STATE OF CALIFORNIA OR ITS OFFICERS OR AGENTS SHALL NOT BE RESPONSIBLE FOR THE ACCURACY OR COMPLETENESS OF ELECTRONIC COPIES OF THIS PLAN SHEET.

COLUMN SUPPORT WITH REINFORCED CONCRETE BEAM

CASE 4

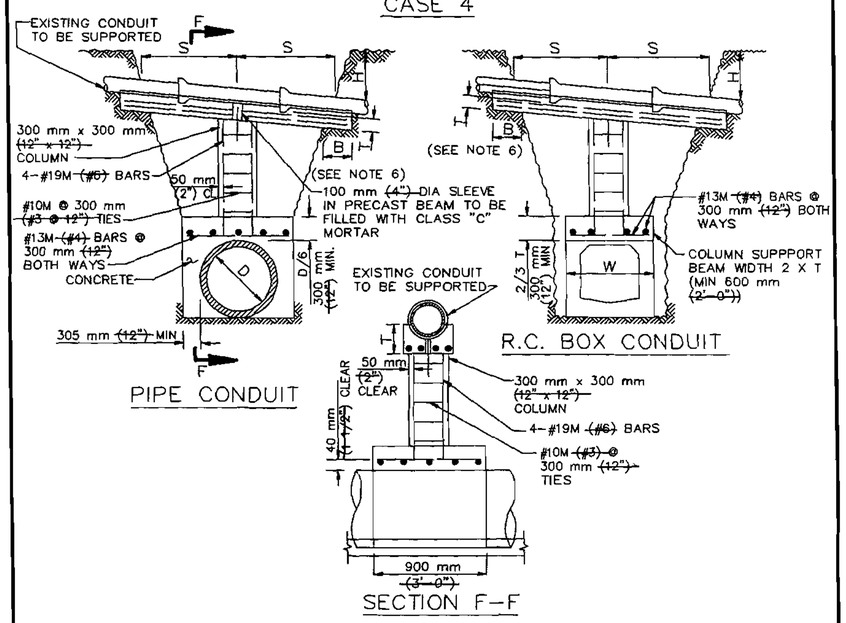

NOTES

1. SPAN "S" SHALL BE MAXIMUM 5.5 m ~~(18')~~ FOR EARTH COVER 2.45 m ~~(8')~~ OR LESS, 3.65 m ~~(12')~~ FOR EARTH COVER 4.9 m ~~(16')~~ OR LESS, AND 3.0 m ~~(10')~~ FOR OVER 4.9 m ~~(16')~~ EARTH COVER.
2. CONCRETE SHALL BE CLASS 330-C-23 (560-B-3250).
3. WHEN THE PIPE TO BE SUPPORTED CROSSES THE TRENCH ON A SKEW ANGLE, THE WALL OR BEAM WHICH SUPPORTS THE COLUMN SHALL BE CONSTRUCTED AT RIGHT ANGLE TO THE TRENCH.
4. SUPPORT SYSTEM MAY BE USED OVER CAST-IN-PLACE STRUCTURES.
5. BACKFILL ABOVE THE SUPPORT BEAM SHALL NOT BE PLACED UNTIL 72 HOURS AFTER THE SUPPORT IS POURED.
6. REINFORCED CONCRETE BEAM DIMENSIONED AND REINFORCED PER TABLE UNDER CASE 1.

GENERAL NOTES

1. "S" IS THE SPAN OF THE PIPE SUPPORT MEASURED ALONG ITS CENTERLINE.
2. "B" IS THE LENGTH OF BEARING OF THE SUPPORT AGAINST UNDISTURBED EARTH MEASURED ALONG THE PIPE CENTERLINE.
3. CASE 2 SHALL BE USED FOR PARTIAL CROSSINGS, EXCEPT THAT WHERE THE DISTANCE FROM A SEWER CHIMNEY TO UNDISTURBED EARTH IS 450 mm ~~(18")~~ OR LESS, THE TRENCH BACKFILL MAY BE DENSIFIED TO 450 mm ~~(18")~~ ABOVE A HOUSE CONNECTION SEWER AND THEN RE-EXCAVATED FOR THE PIPE INSTALLATION.
4. ANY SEWER OR STORM DRAIN EXPOSED OR PARTIALLY EXPOSED IN A TUNNEL EXCAVATION SHALL BE SUPPORTED WITH A WALL, CASE 2.
5. IF BEDDING IS REMOVED FROM THE EXISTING PIPE THAT WILL REMAIN IN PLACE, THE PIPE SHALL BE EMBEDDED WITH CONCRETE AT NO EXTRA COST TO THE AGENCY.
6. UNLESS OTHERWISE INDICATED, CONCRETE SHALL BE CLASS 265-C-14 (450-C-2000).

~~STANDARD PLANS FOR PUBLIC WORKS CONSTRUCTION~~

SUPPORTS FOR CONDUITS ACROSS TRENCHES

STANDARD PLAN METRIC
224-1
SHEET 3 OF 3

ALL DIMENSIONS ARE IN METERS UNLESS OTHERWISE SHOWN

DRAINAGE DETAILS

NO SCALE

DD-68

STATE OF CALIFORNIA - DEPARTMENT OF TRANSPORTATION	Caltrans	HYDRAULICS	
FUNCTIONAL SUPERVISOR	RALPH M. SASAKI	CALCULATED-DESIGNED BY	S. M. TAN W. Y. LEE
		CHECKED BY	R. M. SASAKI
		REVISED BY	
		DATE REVISED	

LAST REVISION 00-00-00 DATE PLOTTED => 31-JAN-2011 TIME PLOTTED => 15:02

Dist	COUNTY	ROUTE	KILOMETER POST TOTAL PROJECT	SHEET No.	TOTAL SHEETS
07	LA	5	2.9/4.9	282	1082

Ralph M. Sasaki 12-23-09
REGISTERED CIVIL ENGINEER DATE

6-21-10
PLANS APPROVAL DATE

REGISTERED PROFESSIONAL ENGINEER RALPH M. SASAKI No. 30849 Exp. 3/31/10 CIVIL STATE OF CALIFORNIA

THE STATE OF CALIFORNIA OR ITS OFFICERS OR AGENTS SHALL NOT BE RESPONSIBLE FOR THE ACCURACY OR COMPLETENESS OF ELECTRONIC COPIES OF THIS PLAN SHEET.

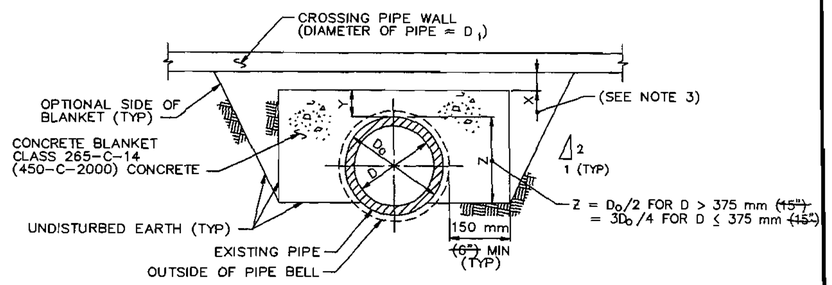

CONCRETE BLANKET
(FOR EXISTING PIPES CROSSED OVER BY A NEW PIPE)

NOTES:

1. CONCRETE BLANKET IS REQUIRED WHEN THE CLEARANCE BETWEEN THE TOP OF THE EXISTING PIPE AND THE BOTTOM OF THE CROSSING PIPE IS LESS THAN 450 mm ~~(18")~~.
2. Y = D/6 (150 mm ~~(6")~~ MIN). WHERE THE CLEARANCE BETWEEN THE TOP OF THE EXISTING PIPE AND THE BOTTOM OF THE CROSSING PIPE IS LESS THAN Y, THE CONCRETE SHALL BE PLACED BETWEEN THE PIPES AND AROUND THE SIDES OF THE CROSSING PIPE UP TO A LEVEL EQUAL TO Y ABOVE THE EXISTING PIPE, OR AS REQUIRED BY NOTE 3 BELOW, WHICHEVER IS HIGHER.
3. X = D/12, MINIMUM, TO PROVIDE BEDDING MATERIAL FOR THE CROSSING CONDUIT. WHEN X IS LESS THAN THIS MINIMUM, THE ENTIRE TOP SURFACE OF THE BLANKET SHALL BE RAISED TO MAKE CONTACT WITH THE LOWER 90° OF THE CROSSING PIPE.
4. THE BLANKET SHALL EXTEND LONGITUDINALLY TO THE FIRST JOINT BEYOND THE TRENCH EXCAVATION AT EACH END OF THE BLANKET, EXCEPT THAT THE BLANKET NEED NOT BE EXTENDED MORE THAN 1.2 m ~~(4')~~ BEYOND THE TRENCH.
5. WHENEVER A PIPE BELL IS ENCOUNTERED WITHIN THE LIMITS OF THE BLANKET, ALL DIMENSIONS SHALL REFER TO THE BELL.

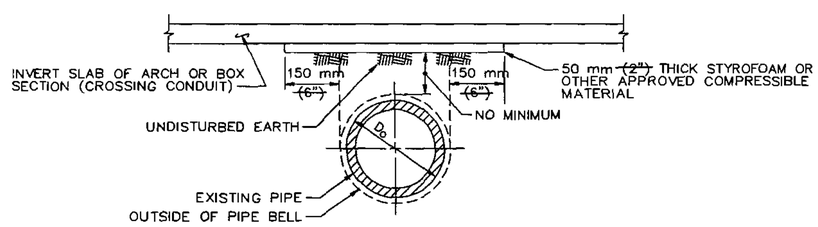

COMPRESSIBLE BLANKET
(FOR EXISTING PIPES CROSSED OVER BY A NEW BOX OR ARCH)

NOTES:

1. COMPRESSIBLE BLANKET IS REQUIRED WHEN THE CLEARANCE BETWEEN THE TOP OF THE EXISTING PIPE AND THE BOTTOM OF THE CROSSING CONDUIT (BOX OR ARCH) IS LESS THAN 450 mm ~~(18")~~.
2. THE BLANKET SHALL EXTEND LONGITUDINALLY FOR THE FULL CROSSING CONDUIT TRENCH WIDTH.

~~STANDARD PLANS FOR PUBLIC WORKS CONSTRUCTION~~

~~PROMULGATED BY THE PUBLIC WORKS STANDARDS INC. GREENBOOK COMMITTEE 1994 REV. 1996~~

BLANKET PROTECTION FOR PIPES

~~USE WITH STANDARD SPECIFICATIONS FOR PUBLIC WORKS CONSTRUCTION~~

STANDARD PLAN METRIC
225-1
SHEET 1 OF 1

ALL DIMENSIONS ARE IN METERS UNLESS OTHERWISE SHOWN

DRAINAGE DETAILS

NO SCALE

DD-69

STATE OF CALIFORNIA - DEPARTMENT OF TRANSPORTATION
Caltrans
HYDRAULICS

FUNCTIONAL SUPERVISOR: RALPH M. SASAKI
CALCULATED-DESIGNED BY: S. M. TAN, W. Y. LEE
CHECKED BY: R. M. SASAKI
REVISED BY / DATE REVISED

LAST REVISION 00-00-00 | DATE PLOTTED => 31-JAN-2011 | TIME PLOTTED => 15:02

Dist	COUNTY	ROUTE	KILOMETER POST TOTAL PROJECT	SHEET No.	TOTAL SHEETS
07	LA	5	2.9/4.9	283	1082

REGISTERED CIVIL ENGINEER 12-23-09 DATE

6-21-10
PLANS APPROVAL DATE

REGISTERED PROFESSIONAL ENGINEER RALPH M. SASAKI No. 30849 Exp. 3/31/10 CIVIL STATE OF CALIFORNIA

THE STATE OF CALIFORNIA OR ITS OFFICERS OR AGENTS SHALL NOT BE RESPONSIBLE FOR THE ACCURACY OR COMPLETENESS OF ELECTRONIC COPIES OF THIS PLAN SHEET.

Caltrans Metric

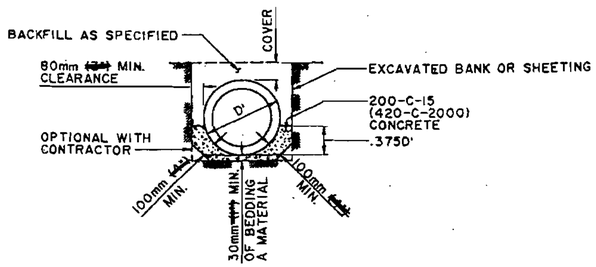

CASE 1

NOTE:

CASE 1 BEDDING (LOAD FACTOR 2.1)

SHALL BE USED WHERE SPECIFIED ON PROJECT DRAWINGS OR WHERE REQUIRED AS AN ALTERNATIVE TO CASE 2 OR CASE 3 BEDDING AS PROVIDED HEREON AND ON SH. 2. CASE 4 BEDDING SHALL BE USED INSTEAD OF CASE 1 AGAINST SHEETING OR UNSTABLE TRENCH SIDES IF SO REQUIRED BY THE ENGINEER.

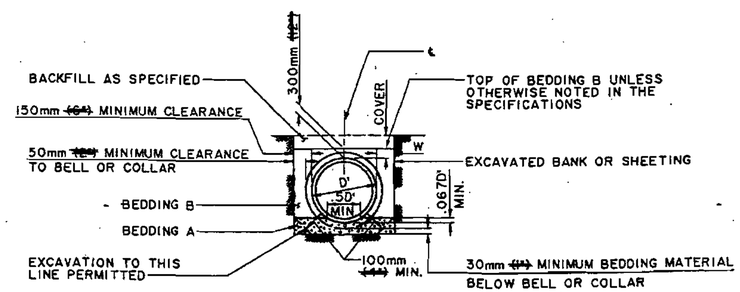

CASE 2
VITRIFIED CLAY AND PLAIN CONCRETE PIPE

NOTES:

CASE 2 BEDDING & BACKFILL AROUND PIPE (LOAD FACTOR 1.8)

(a) W AT SPRING LINE SHALL NOT BE LESS THAN 150mm ~~(6")~~ FOR ANY DEPTH OF TRENCH. THIS DIMENSION MAY INCLUDE THE THICKNESS OF ANY SHEETING.
(b) WHERE COVER IS 2.5m ~~(8'-2")~~ OR LESS, W MEASURED AT TOP OF PIPE MAY BE ANY DIMENSION GREATER THAN 150mm ~~(6")~~.
(c) WHERE COVER IS GREATER THAN 2.5m ~~(8'-2")~~, W MEASURED AT TOP OF PIPE SHALL NOT BE GREATER THAN 200mm ~~(8")~~ UNLESS THE CONTRACTOR AT HIS OWN EXPENSE PROVIDES CASE 1 BEDDING OR STRONGER PIPE. THE STATED 200mm ~~(8")~~ INCLUDES THE THICKNESS OF ANY SHEETING.
(d) SCREED BEDDING A TO FIT CURVATURE AND GRADE OF PIPE. TYPE OF SCREED AND THE METHOD OF USE TO BE APPROVED BY THE ENGINEER.

~~LOS ANGELES COUNTY DEPARTMENT OF PUBLIC WORKS~~

PIPE BEDDING IN TRENCHES

STANDARD PLAN METRIC
3080-2
SHEET 1 OF 3

~~APPROVED~~ Thomas A. Tridemanson ~~5/31/1992~~
DIRECTOR OF PUBLIC WORKS DATE

1995, 1999
REVISIONS

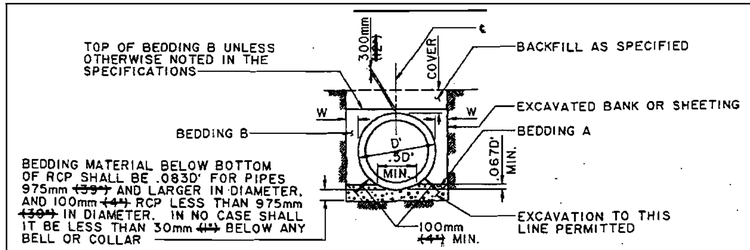

CASE 3
REINFORCED CONCRETE PIPE

NOTES:

CASE 3 BEDDING & BACKFILL AROUND RCP (LOAD FACTOR 1.8)

(a) W AT SPRING LINE SHALL NOT BE LESS THAN THE FOLLOWING: 150mm ~~(6")~~ FOR RCP 1500mm ~~(60")~~ OR LESS IN DIAMETER, 250mm ~~(10")~~ FOR RCP 1575mm ~~(63")~~ TO 2700mm ~~(108")~~ INCLUSIVE IN DIAMETER, AND 300mm ~~(12")~~ FOR PIPE LARGER THAN 2700mm ~~(108")~~ IN DIAMETER. THESE DIMENSIONS MAY INCLUDE THE THICKNESS OF ANY SHEETING.
(b) WHERE COVER IS 3m ~~(10'-0")~~ OR LESS, W MEASURED AT THE TOP OF THE RCP MAY BE ANY DIMENSION GREATER THAN THE ABOVE SPECIFIED MINIMUM, UNLESS OTHERWISE SPECIFIED ON THE PROJECT DRAWINGS.
(c) WHERE COVER IS GREATER THAN 3m ~~(10'-0")~~, W MEASURED AT TOP OF PIPE SHALL NOT BE GREATER THAN 250mm ~~(10")~~ FOR RCP 2700mm ~~(108")~~ IN DIAMETER OR LESS, OR 300mm ~~(12")~~ FOR RCP OVER 2700mm ~~(108")~~ IN DIAMETER UNLESS THE CONTRACTOR AT HIS OWN EXPENSE PROVIDES CASE 1 BEDDING OR STRONGER RCP. THESE DIMENSIONS INCLUDE THE THICKNESS OF ANY SHEETING.
(d) SCREED BEDDING A TO FIT CURVATURE AND GRADE OF RCP. TYPE OF SCREED AND THE METHOD OF USE TO BE APPROVED BY THE ENGINEER.

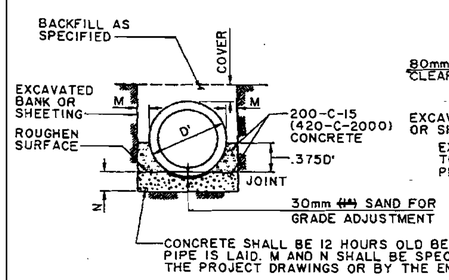

CASE 4.

NOTE:

CASE 4 BEDDING (LOAD FACTOR 3.0)

WHERE REQUIRED BY THE ENGINEER AS AN ALTERNATIVE TO CASE 1 OR CASE 3 TO MEET CONDITIONS ARISING DURING CONSTRUCTION.

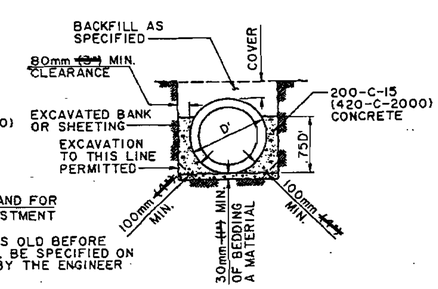

CASE 5

NOTE:

CASE 5 BEDDING (LOAD FACTOR 2.7)

SHALL BE USED WHERE SPECIFIED ON THE PROJECT DRAWINGS. CASE 4 BEDDING SHALL BE USED INSTEAD OF CASE 5 AGAINST SHEETING OR UNSTABLE TRENCH WALLS IF SO REQUIRED BY THE ENGINEER.

~~LOS ANGELES COUNTY DEPARTMENT OF PUBLIC WORKS~~

PIPE BEDDING IN TRENCHES

STANDARD PLAN METRIC
3080-2
SHEET 2 OF 3

ALL DIMENSIONS ARE IN METERS UNLESS OTHERWISE SHOWN

DRAINAGE DETAILS

NO SCALE

DD-70

CALCULATED-DESIGNED BY	S. M. TAN W. Y. LEE	REVISED BY
CHECKED BY	R. M. SASAKI	DATE REVISED
FUNCTIONAL SUPERVISOR	RALPH M. SASAKI	

STATE OF CALIFORNIA - DEPARTMENT OF TRANSPORTATION
Caltrans HYDRAULICS

LAST REVISION 00-00-00 DATE PLOTTED => 31-JAN-2011 TIME PLOTTED => 15:02

Dist	COUNTY	ROUTE	KILOMETER POST TOTAL PROJECT	SHEET No.	TOTAL SHEETS
07	LA	5	2.9/4.9	284	1082

Caltrans Metric

REGISTERED CIVIL ENGINEER DATE 12-23-09

6-21-10
PLANS APPROVAL DATE

REGISTERED PROFESSIONAL ENGINEER RALPH M. SASAKI No. 30849 Exp. 3/31/10 CIVIL STATE OF CALIFORNIA

THE STATE OF CALIFORNIA OR ITS OFFICERS OR AGENTS SHALL NOT BE RESPONSIBLE FOR THE ACCURACY OR COMPLETENESS OF ELECTRONIC COPIES OF THIS PLAN SHEET.

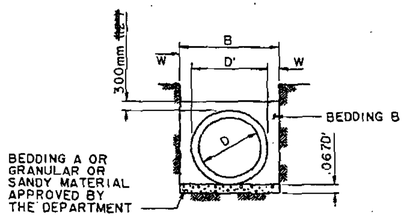

CASE 6

NOTES:

CASE 6 BEDDING (LOAD FACTOR 1.5)

(a)

NOTES (a), (b), AND (c) FROM CASE 3 SHALL APPLY.

(b) WHERE SUBGRADE IS COMPOSED OF OTHER THAN GRANULAR OR SANDY MATERIAL, THE TRENCH SHALL BE EXCAVATED TO A DEPTH OF AT LEAST 80mm ~~(3")~~ BELOW THE PIPE AND BACKFILLED WITH A BEDDING MATERIAL OR OTHER MATERIALS AS MAY BE SPECIFIED OR OTHERWISE APPROVED BY THE DEPARTMENT.

NOTES

1. USE CASE 3 FOR RCP, CASE 2 FOR VITRIFIED CLAY, PLASTIC AND PLAIN CONCRETE PIPE UNLESS OTHERWISE SPECIFIED OR SHOWN ON THE PROJECT DRAWINGS.
2. FOR RCP 675mm ~~(27")~~ IN DIAMETER AND LARGER, BEDDING A SHALL COMPOSED OF SAND, 20mm ~~(3/4")~~ OR 15mm ~~(1/2")~~ CRUSHED ROCK, 5mm ~~(NO.3 OR 4)~~ CONCRETE AGGREGATE OR GRAVEL OR OTHER GRANULAR MATERIAL AS SPECIFIED AND SHALL HAVE A SAND EQUIVALENT VALUE OF NOT LESS THAN 20 UNLESS OTHERWISE APPROVED BY THE ENGINEER.
3. WHERE RCP SMALLER THAN 675mm ~~(27")~~ IN DIAMETER IS USED, THE REQUIREMENTS IN NOTE 2 SHALL BE MET EXCEPT THAT A GRADATION COARSER THAN 4.75mm ~~(NO.4)~~ CONCRETE AGGREGATE OR NO COARSER THAN 15mm ~~(1/2")~~ CRUSHED ROCK SHALL BE USED.
4. BEDDING B SHALL BE COMPOSED OF SAND OR OTHER GRANULAR MATERIAL AND SHALL HAVE A SAND EQUIVALENT VALUE NOT LESS THAN 20 AS SPECIFIED IN SUBSECTION 306-1.2.1 AS AMENDED UNLESS OTHERWISE APPROVED BY THE ENGINEER AND SHALL BE COMPLETED PRIOR TO PLACING THE BALANCE OF THE BACKFILL. THE MAXIMUM ROCK SIZE FOR BEDDING B SHALL BE 100mm ~~(4")~~ IN THE GREATEST DIMENSION. NESTING OF ROCKS WILL NOT BE PERMITTED.
5. UNLESS SPECIFIED ON THE PROJECT DRAWINGS, CONCRETE SHALL BE 200-C-15 (420-C-2000).
6. CONCRETE BACKFILL SHALL BE POURED FROM WALL TO WALL OF THE TRENCH AND FROM THE BOTTOM OF THE TRENCH TO A MINIMUM DEPTH OF 100mm ~~(4")~~ OVER THE TOP OF THE PIPE.
7. CONCRETE BACKFILL SHALL BE PROVIDED FOR RCP 525mm ~~(21")~~ IN DIAMETER OR LESS WHERE THE COVER IS EQUAL TO OR LESS THAN 600mm ~~(24")~~, FOR RCP GREATER THAN 525m ~~(21")~~ IN DIAMETER BUT LESS THAN 975mm ~~(39")~~ WHERE THE COVER IS LESS THAN 375mm ~~(15")~~ AND FOR RCP 975mm ~~(39")~~ OR GREATER WHERE THE COVER IS LESS THAN 300mm ~~(12")~~. CONCRETE BACKFILL SHALL BE IN ACCORDANCE WITH NOTES 5 AND 6.
8. 3-EDGE BEARING TEST LOAD FACTOR = 1.0.
9. DIMENSIONS SHOWN ON THIS PLAN FOR METRIC AND ENGLISH UNITS ARE NOT EXACT EQUAL VALUES. IF METRIC VALUES ARE USED, ALL VALUES USED FOR CONSTRUCTION SHALL BE METRIC VALUES. IF ENGLISH UNITS ARE USED, ALL VALUES USED FOR CONSTRUCTION SHALL BE ENGLISH UNITS.

~~LOS ANGELES COUNTY DEPARTMENT OF PUBLIC WORKS~~

PIPE BEDDING IN TRENCHES

STANDARD PLAN
~~METRIC~~
3080-2
SHEET 3 OF 3

ALL DIMENSIONS ARE IN METERS UNLESS OTHERWISE SHOWN

DRAINAGE DETAILS

NO SCALE

DD-71

STATE OF CALIFORNIA - DEPARTMENT OF TRANSPORTATION
Caltrans
HYDRAULICS

FUNCTIONAL SUPERVISOR: RALPH M. SASAKI
CALCULATED-DESIGNED BY: S. M. TAN, W. Y. LEE
CHECKED BY: R. M. SASAKI
REVISED BY
DATE REVISED

LAST REVISION 00-00-00
DATE PLOTTED => 31-JAN-2011
TIME PLOTTED => 14:08

Dist	COUNTY	ROUTE	KILOMETER POST TOTAL PROJECT	SHEET No.	TOTAL SHEETS
07	LA	5	2.9/4.9	285	1082

REGISTERED CIVIL ENGINEER 12-23-09 DATE

6-21-10
PLANS APPROVAL DATE

REGISTERED PROFESSIONAL ENGINEER RALPH M. SASAKI No. 30849 Exp. 3/31/10 CIVIL STATE OF CALIFORNIA

THE STATE OF CALIFORNIA OR ITS OFFICERS OR AGENTS SHALL NOT BE RESPONSIBLE FOR THE ACCURACY OR COMPLETENESS OF ELECTRONIC COPIES OF THIS PLAN SHEET.

Caltrans Metric

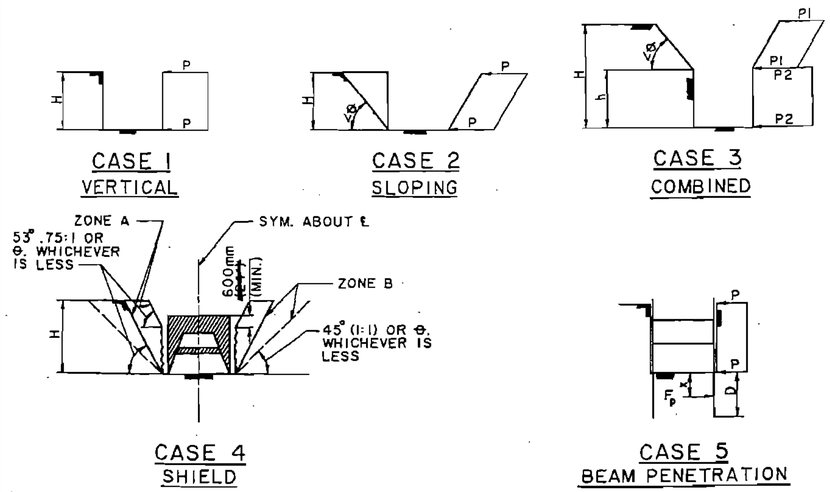

NOTE:

IF THE TRENCH WALLS ARE SLOPED, K_w = 25 VALUES MAY BE REDUCED BY THE PERCENTAGES TABULATED BELOW. FOR K_w VALUES OTHER THAN 25 THE PERCENTAGE REDUCTION SHALL VARY UNIFORMLY FROM 0 AT A VERTICAL SLOPE TO 100 AT A SLOPE EQUAL TO THE ANGLE OF REPOSE OF THE SOIL BUT NOT GREATER THAN THE REDUCTION SHOWN FOR K_w = 25.

SLOPE RATIO (HORIZONTAL TO VERTICAL)	PERCENTAGE REDUCTION
1:5.1 TO VERTICAL	0
1:2.1 TO 1:5	33
.75:1.1 TO 1:2	67
HORIZONTAL TO .75:1	100

LEGEND

P = UNIT PRESSURE IN PSF
P1 = UNIT PRESSURE IN PSF (USE Kw VALUE REQUIRED BY THE SLOPE)
P2 = UNIT PRESSURE IN PSF (VERTICAL PORTION), VARIED FROM A VALUE EQUAL TO .8KwHT WHEN θ = 90° TO A VALUE EQUAL TO .8Kw [h+(.25(H-h)) TAN θ] WHEN θ = 53°
K = COEFFICIENT OF ACTIVE EARTH PRESSURE
w = UNIT WEIGHT OF SOIL IN PCF
H = DEPTH OF EXCAVATION IN FEET
h = DEPTH OF VERTICAL PORTION OF EXCAVATION IN FEET
θ = EXCAVATION ANGLE. NO SHORING IS REQUIRED AT THE ANGLE OF REPOSE AT WHICH THE SOIL WILL SAFELY STAND, BUT IN NO CASE SHALL THIS ANGLE BE GREATER THAN 53°
D = DEPTH OF PENETRATION IN FEET
F_p = RESULTANT FORCE IN POUND PER FOOT OF BEAM WIDTH
x = DISTANCE TO F_p FROM SUBGRADE IN FEET

~~LOS ANGELES COUNTY DEPARTMENT OF PUBLIC WORKS~~

CRITERIA FOR THE DESIGN OF SHORING FOR EXCAVATIONS

STANDARD PLAN METRIC 3090-1 SHEET 1 OF 4

~~APPROVED~~ ~~5/31/1992~~ DIRECTOR OF PUBLIC WORKS DATE | 1999 REVISIONS

GENERAL MINIMUM REQUIREMENTS

NOTES

DESIGN

1. A SHORING SYSTEM SHALL CONSIST OF MAIN HORIZONTAL AND VERTICAL BRACING THAT WILL FUNCTION AS A TEMPORARY EARTH SUPPORTING STRUCTURE, SUPPORT FOR EXISTING IMPROVEMENTS, AND FOR PROTECTION OF WORKERS. SHORING FOR EXCAVATIONS SHALL BE DESIGNED TO WITHSTAND NOT LESS THAN THE LOADS INDICATED ON SH. 1 AND SHALL COMPLY WITH THE STATE OF CALIFORNIA, DEPARTMENT OF INDUSTRIAL RELATIONS, CONSTRUCTION SAFETY ORDERS UNLESS MODIFIED ON THIS DRAWING OR IN THE SPECIAL PROVISIONS OF THE SPECIFICATIONS.

A. SOIL PARAMETERS Kw

Kw IS THE PRODUCT OF THE COEFFICIENT OF ACTIVE EARTH PRESSURE (K) AND THE UNIT WEIGHT OF SOIL (w). VALUES OF Kw SHALL NOT BE LESS THAN NOTED IN THE SPECIAL PROVISIONS OF THE SPECIFICATIONS.

B. VERTICAL OR HORIZONTAL SHORES

SHORES SHALL BE DESIGNED FOR P = 0.8KwH UNLESS SOLID SUPPORT SHORES ARE USED IN WHICH CASE P = 0.6KwH MAY BE USED. SHORES SHALL NOT BE LESS THAN 50mm~~(2")~~ THICK AND 200mm~~(8")~~ WIDE, SPACED A MAXIMUM OF 2.5m ~~(8' 0")~~ OC HORIZONTALLY, AND EXTEND FROM TOP TO BOTTOM OF EXCAVATION. WHEN PILES ARE USED FOR VERTICAL SHORES, THE EMBEDMENT LENGTH AND ANY ANCHOR DETAILS SPECIFIED MUST BE SUPPORTED BY CALCULATIONS. RESULTANT FORCE F_p SHALL BE PER SUBSECTION 306-1.1.6.2 AS AMENDED.

DEFINITIONS

1. SHEETING - A WALL OF PLANKS PLACED AGAINST THE TRENCH EARTH FACE, SPANNING VERTICALLY BETWEEN HORIZONTAL SUPPORTS.
2. LAGGING - A WALL OF PLANKS PLACED AGAINST THE TRENCH EARTH FACE, SPANNING HORIZONTALLY BETWEEN VERTICAL SUPPORTS.
3. TYPE A SOLID SUPPORT SHORES - EITHER CONTINUOUS ABUTTING SHEETING OR LAGGING (LAGGING MAY BE INTERMITTENTLY SPACED IF THE LOAD CONDITIONS PERMIT) PLACED IMMEDIATELY AFTER THE EXCAVATION REACHES THE SUBGRADE.
4. TYPE B SOLID SUPPORT SHORES - EITHER ABUTTING SHEETING OR ABUTTING LAGGING PLACED IMMEDIATELY SUBSEQUENT TO EXCAVATION AND ESTABLISHMENT OF THE TRENCH WALL. IN NO CASE SHALL THE DEPTH OF THE UNSUPPORTED TRENCH WALL EXCEED 600mm~~(24")~~.

C. HORIZONTAL BRACES OR STRUTS

STRUTS SHALL BE DESIGNED FOR P = 0.8KwH AND A 1780N~~(400 LB.)~~. CONCENTRATED LOAD AT THE CENTER LINE. HORIZONTAL SPACING OF BRACES OR STRUTS SHALL NOT EXCEED 2.5m~~(9' 0")~~ OC, UNLESS AN APPROVED WALER SYSTEM IS UTILIZED. THE WALERS MUST BE OF SUFFICIENT STRENGTH TO SUSTAIN THE REACTIONS FROM THE VERTICAL MEMBERS, AND BE OF SUFFICIENT STIFFNESS TO MINIMIZE DEFLECTIONS OF THE VERTICAL MEMBERS. TO FACILITATE PLACEMENT OF PIPE THE CONTRACTOR MAY:

1. REMOVE THE CROSS BRACING BELOW THE LEVEL OF THE TOP OF THE PIPE. REMOVAL OF BRACES SHALL BE LIMITED TO A DISTANCE OF 4m~~(14' 0")~~ IN ADVANCE OF THE PLACEMENT OF PIPE.
2. REMOVE AN ENTIRE VERTICAL SHORING SET PROVIDED THAT THE MAXIMUM SPACING BETWEEN THE REMAINING SETS DOES NOT EXCEED 4m~~(14' 0")~~ OC.
3. IF ITEMS 1 OR 2 ABOVE ARE USED, WORKERS WILL NOT BE PERMITTED IN THAT PORTION OF THE TRENCH WHERE THE SUPPORT HAS BEEN REMOVED.

IMMEDIATELY SUBSEQUENT TO PLACEMENT OF THE PIPE THE CONTRACTOR SHALL REPLACE THE VERTICAL SHORING SET PREVIOUSLY REMOVED WITH A SET DESIGNED TO SUPPORT THE EXCAVATION WALL FROM THE TOP OF THE PIPE TO THE GROUND SURFACE. TO FACILITATE CONSTRUCTION OF POURED-IN-PLACE STRUCTURES THE 1.5m~~(5')~~ LIMITATION NOTED IN THE CONSTRUCTION SAFETY ORDERS ON SPACING OF CROSS BRACING WILL BE WAIVED FOR THE AREA BELOW THE TOP OF THE STRUCTURE.

~~LOS ANGELES COUNTY DEPARTMENT OF PUBLIC WORKS~~

CRITERIA FOR THE DESIGN OF SHORING FOR EXCAVATIONS

STANDARD PLAN METRIC 3090-1 SHEET 2 OF 4

ALL DIMENSIONS ARE IN METERS UNLESS OTHERWISE SHOWN

DRAINAGE DETAILS

NO SCALE

DD-72

STATE OF CALIFORNIA - DEPARTMENT OF TRANSPORTATION	S. M. TAN W. Y. LEE		
Caltrans	HYDRAULICS	R. M. SASAKI	
	FUNCTIONAL SUPERVISOR	CALCULATED-DESIGNED BY	REVISED BY
	RALPH M. SASAKI	CHECKED BY	DATE REVISED

LAST REVISION 00-00-00 | DATE PLOTTED => 31-JAN-2011 | TIME PLOTTED => 14:08

Dist	COUNTY	ROUTE	KILOMETER POST TOTAL PROJECT	SHEET No.	TOTAL SHEETS
07	LA	5	2.9/4.9	286	1082

Caltrans Metric

12-23-09
REGISTERED CIVIL ENGINEER DATE

6-21-10
PLANS APPROVAL DATE

REGISTERED PROFESSIONAL ENGINEER RALPH M. SASAKI No. 30849 Exp. 3/31/10 CIVIL STATE OF CALIFORNIA

THE STATE OF CALIFORNIA OR ITS OFFICERS OR AGENTS SHALL NOT BE RESPONSIBLE FOR THE ACCURACY OR COMPLETENESS OF ELECTRONIC COPIES OF THIS PLAN SHEET.

GENERAL MINIMUM REQUIREMENTS (CONT.)

D. WALERS OR STRINGERS
WALERS SHALL BE DESIGNED FOR P = .8KwH. SPECIAL ATTENTION SHALL BE EXERCISED IN DESIGNING FOR HORIZONTAL SHEAR AND FOR THE CONDITION WHERE INTERMEDIATE WALERS AND/OR CROSS BRACING ARE REMOVED.

E. EXISTING IMPROVEMENTS AND SURCHARGE LOADS
ALL EXISTING IMPROVEMENTS MUST BE CONSIDERED IN THE DESIGN OF THE SHORING SYSTEM AND PROTECTED IN PLACE UNLESS OTHERWISE INDICATED ON THE PROJECT DRAWINGS OR SPECIFICATIONS. PARALLEL UTILITIES EXCEPT FOR METALLIC CONDUITS USED FOR THE PURPOSE OF CONTAINING ELECTRICAL CABLES AND PIPES 100mm~~(4")~~ OR LESS IN DIAMETER USED FOR LOW PRESSURE GAS DISTRIBUTION SYSTEMS OUTSIDE OF THE LIMITS OF VERTICAL EXCAVATIONS MUST NOT BE EXPOSED BY USING SLOPING EXCAVATIONS. ALSO, EXISTING IMPROVEMENTS SHALL NOT IMPOSE ADVERSE LOADS ON THE SHORING OR BE SUBJECTED TO ADVERSE LOADS CAUSED BY THE SHORING IN addition TO THE EARTH LOADS. THE SHORING SYSTEM MUST SUSTAIN LOADS IMPOSED BY TRAFFIC, CONSTRUCTION EQUIPMENT, ADJACENT STRUCTURES, OR ANY OTHER SURCHARGE LOADS. THE LOAD IMPOSED ON THE SHORING SYSTEM BY NORMAL STREET VEHICULAR TRAFFIC MAY BE ASSUMED TO BE EQUAL TO THE LOAD IMPOSED BY 600mm~~(24")~~ OF EARTH.

2. DIMENSIONS SHOWN ON THIS PLAN FOR METRIC AND ENGLISH UNITS ARE NOT EXACT EQUAL VALUES. IF METRIC VALUES ARE USED, ALL VALUES USED FOR CONSTRUCTION SHALL BE METRIC VALUES. IF ENGLISH UNITS ARE USED, ALL VALUES USED FOR CONSTRUCTION SHALL BE ENGLISH UNITS.

MATERIALS GENERAL
ALL MATERIALS USED FOR SHORING, SHEETING, AND LAGGING IN COMPLYING WITH THE PROVISIONS OF THIS STANDARD DRAWING, MAY BE NEW OR USED BUT SHALL BE FREE FROM DEFECTS AND DAMAGE THAT MIGHT IN ANY WAY IMPAIR THEIR PROTECTIVE FUNCTION. ALLOWABLE STRESSES SPECIFIED IN THE PUBLICATIONS LISTED HEREON MAY BE INCREASED BY 1/3.

A. LUMBER
DESIGN FOR LUMBER SHALL BE IN ACCORDANCE WITH NATIONAL DESIGN SPECIFICATIONS FOR STRESS-GRADE LUMBER. THE GRADE OR STRUCTURAL PROPERTIES OF LUMBER USED FOR SHORING, SHALL CORRESPOND TO THAT SPECIFIED IN CURRENT STANDARD GRADING AND DRESSING RULES OR THE WEST COAST LUMBER INSPECTION BUREAU. ALL LUMBER MUST BEAR THE GRADE STAMP. USED MATERIAL MAY BE DESIGNED IN ACCORDANCE WITH THE STANDARD GRADING AND DRESSING RULES IN EFFECT AT THE TIME THE LUMBER WAS GRADED. THE MAXIMUM PERMISSABLE FLEXURAL STRESS SHALL NOT EXCEED 15MPa~~(2000 PSI)~~. THE 15MPa~~(2000 PSI)~~ STRESS LIMITATION INCLUDES THE .1/3 INCREASE NOTED HEREINABOVE. NON-STRESS GRADE LUMBER FOR SOLID SUPPORT SHORES MAY BE USED WHEN $Kw \leq 471ON/m^3$~~(30 PCF)~~ PROVIDING THE FOLLOWING THICKNESS AND SPACING REQUIREMENTS ARE OBSERVED.

MINIMUM ROUGH THICKNESS OF SHEETING OR LAGGING	MAXIMUM VERTICAL SPACING OF WALERS FOR SOLID SHEETING	MAXIMUM HORIZ. SPACING OF UPRIGHTS FOR LAGGING
50mm~~(2")~~	1m~~(4'-0")~~	1m~~(4'-0")~~
80mm~~(3")~~	2m~~(7'-0")~~	2m~~(7'-0")~~

HOWEVER, THE MINIMUM ROUGH THICKNESS AND MAXIMUM SPACING TABULATED ABOVE FOR NON-STRESS GRADE LUMBER MAY BE DISREGARDED PROVIDED STRESS GRADE LUMBER OR STEEL IS DESIGNED TO BE USED FOR SOLID SUPPORT SHORES.

B. STRUCTURAL STEEL
DIMENSIONS, PROPERTIES, AND DESIGN SHALL BE IN ACCORDANCE WITH THE CURRENT AISC MANUAL OF STEEL CONSTRUCTION.

~~LOS ANGELES COUNTY DEPARTMENT OF PUBLIC WORKS~~

CRITERIA FOR THE DESIGN OF SHORING FOR EXCAVATIONS

STANDARD PLAN METRIC 3090-1
SHEET 3 OF 4

GENERAL MINIMUM REQUIREMENTS (CONT.)

C. SPECIAL SHORING SYSTEMS
SYSTEMS SUCH AS SPEED-SHORE, TREN-SHORE, ETC., WILL BE ALLOWED ONLY IF THE CONTRACTOR FILES OR HAS FILED WITH THE DEPARTMENT SUBSTANTIATING CERTIFIED TESTS CLEARLY DENOTING THE CAPACITY OF THE SYSTEM. UNTESTED MEMBERS OF SPECIAL SYSTEMS, COMPOSITE MEMBERS, BUILT-UP MEMBERS, ETC., MUST BE THEORETICALLY DESIGNED. VERTICAL SHORES MUST BE AT LEAST 200mm~~(8")~~ WIDE. STRUTS TESTED UNDER IDEAL OR LABORATORY CONDITIONS SHALL BE USED WITH A MINIMUM SAFETY FACTOR OF 1.5.

D. SHIELDS
1. SHIELDS ARE ACCEPTABLE AS A MEANS OF SHORING EXCAVATIONS, AS SHOWN ON CASE 4, WITH THE FOLLOWING RESTRICTIONS.
   a. ZONE A SHALL NOT INTERCEPT PROPERTY LINES OR INTERCEPT AN AREA REQUIRED BY THE SPECIFICATIONS FOR TRAFFIC.
   b. ZONE A SHALL NOT CONTAIN ANY EXISTING UTILITY OTHER THAN METALLIC ELECTRIC CONDUITS OR PIPE 100mm~~(4")~~ OR LESS IN DIAMETER USED FOR LOW PRESSURE GAS DISTRIBUTION.
   c. ZONES A AND B SHALL NOT SUPPORT SURCHARGE DEAD LOADS SUCH AS PILING OR BUILDINGS.

   THE RESTRICTIONS STATED IN b ABOVE WILL BE WAIVED PROVIDED THE CONTRACTOR SUBMITS WRITTEN APPROVAL FROM THE OWNER OF THE UTILITY FOR THE PROPOSED CONSTRUCTION METHOD. THE CONTRACTOR COMPLIES WITH ANY SUPPORT OR PROTECTION METHODS REQUIRED BY THE UTILITY COMPANY, AND THE OWNER OF THE UTILITY STATES, IN WRITING, THAT THEY WILL ACCEPT RESPONSIBILITY FOR ALL CLAIMS FOR DAMAGES THAT MAY ARISE AS A RESULT OF DISTURBANCE TO THE UTILITY. AN ACCEPTABLE SHORING SYSTEM MUST BE INSTALLED WHEN THE SHIELD IS REMOVED.
2. THE LENGTH OF UNSUPPORTED TRENCH IN FRONT OF THE SHIELD SHALL BE 2.5m~~(8'-0")~~ MAXIMUM FROM THE FORWARD EDGE OF THE SHIELD TO THE TOE OF SLOPE BEING EXCAVATED.
3. SHIELDS SHALL CONFORM TO THE DESIGN CRITERIA NOTED HEREON.

E. TEMPORARY BRIDGES
PLANS AND CALCULATIONS FOR SHORING SYSTEMS AT TEMPORARY BRIDGES SHALL MEET THE REQUIREMENTS OF SUBSECTION 7-10.3.6(7) AS AMENDED.

CALCULATIONS AND DRAWINGS
SHORING SYSTEMS SHALL BE DESIGNED BY A CIVIL OR STRUCTURAL ENGINEER REGISTERED IN THE STATE OF CALIFORNIA.

A. COMPLETE CALCULATIONS MUST BE SUBMITTED TO THE DEPARTMENT NOTING ALL ASSUMPTIONS AND REFERENCES. CALCULATIONS SHALL BE BASED ON STANDARD METHODS AND PROCEDURES BY RECOGNIZED AUTHORITIES. COMPUTER PRINTOUTS AND OTHER SUBMITTALS THAT DO NOT CLEARLY INDICATE THE COMPUTATION METHOD WILL NOT BE ACCEPTED. CROSS-SECTIONS OR SKETCHES SHOWING THE LOCATION OF EXISTING IMPROVEMENTS AND UTILITIES SHALL BE INCLUDED WHEN THE TYPE OF SHORING IS AFFECTED.
B. DEPARTMENT STANDARD PLAN 3091 SHOWS THE FORMAT THAT IS TO BE USED. HOWEVER, THE SUPPORTING CALCULATIONS MAY BE ATTACHED ON LETTER-SIZED PAPER.

ACCEPTANCE
IF FOUND IN CONFORMANCE WITH THIS DRAWING AND THE SPECIFICATIONS, THE DEPARTMENT WILL INDICATE ACCEPTANCE BY SIGNING THE SUBMITTED DRAWINGS. IF THE METHOD SELECTED AND ACCEPTED BY THE DEPARTMENT DOES NOT PROVIDE ADEQUATE SUPPORT UNDER ACTUAL FIELD CONDITIONS, IT SHALL BE REPLACED WITH AN ACCEPTED ALTERNATE. THE DETAILS ARE ALSO SUBJECT TO THE REVIEW OF THE DIVISION OF INDUSTRIAL SAFETY. ANY DEVIATION FROM THE ACCEPTED DESIGN MUST BE APPROVED BY THE DEPARTMENT.

~~LOS ANGELES COUNTY DEPARTMENT OF PUBLIC WORKS~~

CRITERIA FOR THE DESIGN OF SHORING FOR EXCAVATIONS

STANDARD PLAN METRIC 3090-1
SHEET 4 OF 4

ALL DIMENSIONS ARE IN METERS UNLESS OTHERWISE SHOWN

DRAINAGE DETAILS

NO SCALE

DD-73

CALCULATED-DESIGNED BY	S. M. TAN W. Y. LEE	REVISED BY	
CHECKED BY	R. M. SASAKI	DATE REVISED	
FUNCTIONAL SUPERVISOR	RALPH M. SASAKI		

STATE OF CALIFORNIA - DEPARTMENT OF TRANSPORTATION
Caltrans HYDRAULICS

LAST REVISION 00-00-00 DATE PLOTTED => 31-JAN-2011 TIME PLOTTED => 14:08

Dist	COUNTY	ROUTE	KILOMETER POST TOTAL PROJECT	SHEET No.	TOTAL SHEETS
07	LA	5	2.9/4.9	287	1082

Caltrans Metric

12-23-09
REGISTERED CIVIL ENGINEER DATE

6-21-10
PLANS APPROVAL DATE

REGISTERED PROFESSIONAL ENGINEER RALPH M. SASAKI No. 30849 Exp. 3/31/10 CIVIL STATE OF CALIFORNIA

THE STATE OF CALIFORNIA OR ITS OFFICERS OR AGENTS SHALL NOT BE RESPONSIBLE FOR THE ACCURACY OR COMPLETENESS OF ELECTRONIC COPIES OF THIS PLAN SHEET.

SKETCH

DETAILS OF SHORING INDICATING SIZE AND SPACING OF ALL MEMBERS.

SEQUENCE OF PLACEMENT AND REMOVAL OF MEMBERS SHALL BE NOTED AS REQUIRED TO INSURE SAFETY OF WORKERS.

DESIGN CRITERIA

1. DESIGN LOADS BASED ON LACFCD CRITERIA FOR THE DESIGN OF SHORING FOR EXCAVATIONS.
2. SOIL TYPE _____
   K.w = _____ N/m³ ~~(pcf)~~
   θ = _____ °
3. ALL TIMBER SHALL BE _____ GRADE.
4. ALLOWABLE STRESSES:

STRESS	WOOD	STEEL
FLEXURAL		
AXIAL COMPRESSION		
SHEAR		
MODULUS.E.		

5. MAXIMUM EXCAVATION DEPTH _____ METERS ~~(FEET)~~.

CALCULATIONS

CASE _____ : SHORING FOR _____ EXCAVATIONS

APPLICABLE REACHES:

STA. _____ TO STA. _____
STA. _____ TO STA. _____

NOTES:

REACHES GIVEN ARE APPROXIMATE. IF A TYPE OF SOIL IS ENCOUNTERED WITHIN THE ABOVE REACHES WHICH, IN ACCORDANCE WITH THE CRITERIA SET FORTH ON STANDARD PLAN 3090, REQUIRES THE USE OF A DIFFERENT METHOD OF SHORING, THEN SHORING DETAILS WILL BE REVISED AS PROVIDED IN THE PROJECT SPECIFICATIONS.

CALCULATIONS BY
NAME _____
R.C.E. NO. _____
ADDRESS _____
PHONE _____
DATE _____
SIGNATURE _____

LOS ANGELES COUNTY
DEPARTMENT OF PUBLIC WORKS

ACCEPTED BY _____ PROJECT NO. _____

DATE _____ EXCAVATION SHORING SYSTEM

~~LOS ANGELES COUNTY DEPARTMENT OF PUBLIC WORKS~~

SAMPLE SHEET
FOR USE AS A GUIDE IN PREPARING CALCULATIONS FOR SHORING OF EXCAVATIONS

~~APPROVED~~ Thomas A. Tidemanson ~~5/31/1992~~
DIRECTOR OF PUBLIC WORKS DATE

1999
REVISIONS

STANDARD PLAN METRIC
3091-1
SHEET 1 OF 1

ALL DIMENSIONS ARE IN METERS UNLESS OTHERWISE SHOWN

DRAINAGE DETAILS

NO SCALE

DD-74

REVISED BY	DATE REVISED

CALCULATED-DESIGNED BY: S. M. TAN, W. Y. LEE
CHECKED BY: R. M. SASAKI
FUNCTIONAL SUPERVISOR: RALPH M. SASAKI

STATE OF CALIFORNIA - DEPARTMENT OF TRANSPORTATION
Caltrans
HYDRAULICS

LAST REVISION 00-00-00 | DATE PLOTTED => 31-JAN-2011 | TIME PLOTTED => 14:08

Dist	COUNTY	ROUTE	KILOMETER POST TOTAL PROJECT	SHEET No.	TOTAL SHEETS
07	LA	5	2.9/4.9	288	1082

Caltrans Metric

REGISTERED CIVIL ENGINEER DATE 12-23-09

PLANS APPROVAL DATE 6-21-10

REGISTERED PROFESSIONAL ENGINEER RALPH M. SASAKI No. 30849 Exp. 3/31/10 CIVIL STATE OF CALIFORNIA

THE STATE OF CALIFORNIA OR ITS OFFICERS OR AGENTS SHALL NOT BE RESPONSIBLE FOR THE ACCURACY OR COMPLETENESS OF ELECTRONIC COPIES OF THIS PLAN SHEET.

UNIFIED SOIL CLASSIFICATION
(INCLUDING IDENTIFICATION AND DESCRIPTION)

MAJOR DIVISIONS			GROUP SYMBOLS	TYPICAL NAMES	FIELD IDENTIFICATION PROCEDURES (EXCLUDING PARTICLES LARGER THAN 80mm ~~(3")~~ AND BASING FRACTION ON ESTIMATED WEIGHTS)		
1	2		3	4	5		
COARSE-GRAINED SOILS MORE THAN HALF OF MATERIAL IS LARGER THAN 75 µm ~~(NO. 200)~~ SIEVE SIZE. THE SMALLEST PARTICLE VISIBLE TO THE NAKED EYE.	GRAVELS MORE THAN HALF OF COARSE FRACTION IS LARGER THAN 4.75mm ~~(NO. 4)~~ SIEVE SIZE. (FOR VISUAL CLASSIFICATION, THE 6mm (1/4") SIZE MAY BE USED AS EQUIVALENT TO THE 4.75mm ~~(NO. 4)~~ SIEVE SIZE)	CLEAN GRAVELS (LITTLE OR NO FINES)	GW	WELL-GRADED GRAVELS, GRAVEL-SAND MIXTURES, LITTLE OR NO FINES.	WIDE RANGE IN GRAIN SIZES AND SUBSTANTIAL AMOUNTS OF ALL INTERMEDIATE PARTICLE SIZES.		
			GP	POORLY-GRADED GRAVELS, GRAVEL-SAND MIXTURES, LITTLE OR NO FINES.	PREDOMINATELY ONE SIZE OR A RANGE OF SIZES WITH SOME INTERMEDIATE SIZES MISSING.		
		GRAVELS WITH FINES (APPRECIABLE AMOUNT OF FINES)	GM	SILTY GRAVELS, GRAVEL-SAND-SILT MIXTURES.	NONPLASTIC FINES OR FINES WITH LOW PLASTICITY. (FOR IDENTIFICATION PROCEDURES SEE ML BELOW)		
			GC	CLAYEY GRAVELS, GRAVEL-SAND-CLAY MIXTURES.	PLASTIC FINES (FOR IDENTIFICATION PROCEDURES SEE CL BELOW)		
	SANDS MORE THAN HALF OF COARSE FRACTION IS SMALLER THAN 4.75mm ~~(NO. 4)~~ SIEVE SIZE.	CLEAN SANDS (LITTLE OR NO FINES)	SW	WELL-GRADED SANDS, GRAVELLY SANDS, LITTLE OR NO FINES.	WIDE RANGE IN GRAIN SIZES AND SUBSTANTIAL AMOUNTS OF ALL INTERMEDIATE PARTICLE SIZES.		
			SP	POORLY-GRADED SANDS, GRAVELLY SANDS, LITTLE OR NO FINES.	PREDOMINANTLY ONE SIZE OR A RANGE OF SIZES WITH SOME INTERMEDIATE SIZES MISSING.		
		SANDS WITH FINES (APPRECIABLE AMOUNT OF FINES)	SM	SILTY SANDS, SAND-SILT MIXTURES.	NONPLASTIC FINES OR FINES WITH LOW PLASTICITY. (FOR IDENTIFICATION PROCEDURES SEE ML BELOW)		
			SC	CLAYEY SANDS, SAND-CLAY MIXTURES.	PLASTIC FINES (FOR IDENTIFICATION PROCEDURES SEE CL BELOW)		
FINE-GRAINED SOILS MORE THAN HALF OF MATERIAL IS SMALLER THAN 75 µm ~~(NO. 200)~~ SIEVE SIZE. THE 75 µm ~~(NO. 200)~~ SIEVE SIZE IS ABOUT THE SMALLEST PARTICLE VISIBLE TO THE NAKED EYE.	SILTS AND CLAYS	LIQUID LIMIT LESS THAN 50			IDENTIFICATION PROCEDURES ON FRACTION SMALLER THAN 450 µm (NO. 40) SIEVE SIZE		
					DRY STRENGTH (CRUSHING CHARACTERISTICS)	DILATANCY (REACTION TO SHAKING)	TOUGHNESS (CONSISTENCY NEAR PL.)
			ML	INORGANIC SILTS AND VERY FINE SANDS, ROCK FLOUR, SILTY OR CLAYEY FINE SANDS OR CLAYEY SILTS WITH SLIGHT PLASTICITY.	NONE TO SLIGHT	QUICK TO SLOW	NONE
			CL	INORGANIC CLAYS OF LOW TO MEDIUM PLASTICITY, GRAVELLY CLAYS, SANDY CLAYS, SILTY CLAYS, LEAN CLAYS.	MEDIUM TO HIGH	NONE TO VERY SLOW	MEDIUM
			OL	ORGANIC SILTS AND ORGANIC SILTY CLAYS OF LOW PLASTICITY.	SLIGHT TO MEDIUM	SLOW	SLIGHT
	SILTS AND CLAYS	LIQUID LIMIT GREATER THAN 50	MH	INORGANIC SILTS, MICACEOUS OR DIATOMACEOUS FINE SANDY OR SILTY SOILS, ELASTIC SILTS.	SLIGHT TO MEDIUM	SLOW TO NONE	SLIGHT TO MEDIUM
			CH	INORGANIC CLAYS OF HIGH PLASTICITY, FAT CLAYS.	HIGH TO VERY HIGH	NONE	HIGH
			OH	ORGANIC CLAYS OF MEDIUM TO HIGH PLASTICITY, ORGANIC SILTS.	MEDIUM TO HIGH	NONE TO VERY SLOW	SLIGHT TO MEDIUM
HIGHLY ORGANIC SOILS			PT	PEAT AND OTHER HIGHLY ORGANIC SOILS.	READILY IDENTIFIED BY COLOR, ODOR, SPONGY FEEL AND FREQUENTLY BY FIBROUS TEXTURE.		

(1) BOUNDARY CLASSIFICATIONS: SOILS POSSESSING CHARACTERISTICS OF TWO GROUPS ARE DESIGNATED BY COMBINATIONS OF GROUP SYMBOLS. FOR EXAMPLE GW-GC, WELL-GRADED GRAVEL-SAND MIXTURE WITH CLAY BINDER. (2) ALL SIEVE SIZES ON THIS CHART ARE U.S. STANDARD.

~~LOS ANGELES COUNTY DEPARTMENT OF PUBLIC WORKS~~

UNIFIED SOIL CLASSIFICATION SYSTEM

STANDARD PLAN METRIC 3093-1 SHEET 1 OF 3

~~APPROVED~~ ~~Thomas A. Gilbertson~~ ~~5/31/1992~~
~~DIRECTOR OF PUBLIC WORKS~~ ~~DATE~~

1999 REVISIONS

UNIFIED SOIL CLASSIFICATION
(INCLUDING IDENTIFICATION AND DESCRIPTION)

INFORMATION REQUIRED FOR DESCRIBING SOILS	LABORATORY CLASSIFICATION CRITERIA			GROUP SYMBOLS
6	7			8
FOR UNDISTURBED SOILS ADD INFORMATION ON STRATIFICATION, DEGREE OF COMPACTNESS, CEMENTATION, MOISTURE CONDITIONS AND DRAINAGE CHARACTERISTICS.	USE GRAIN SIZE CURVE IN IDENTIFYING THE FRACTIONS AS GIVEN UNDER FIELD IDENTIFICATION. DETERMINE PERCENTAGES OF GRAVEL AND SAND FROM GRAIN-SIZE CURVE, DEPENDING ON PERCENTAGE OF FINES (FRACTION SMALLER THAN 75 µm (NO. 200) SIEVE SIZE) COARSE-GRAINED SOILS ARE CLASSIFIED AS FOLLOWS: LESS THAN 5% GW, GP, SW, SP, GM, GC, SM, SC. MORE THAN 12% BORDERLINE CASES REQUIRING USE OF DUAL SYMBOLS. 5% TO 12%	$C_u = \frac{D_{60}}{D_{10}}$ GREATER THAN 4; $C_c = \frac{(D_{30})^2}{D_{10} \times D_{60}}$ BETWEEN ONE AND 3		GW
		NOT MEETING ALL GRADATION REQUIREMENTS FOR GW		GP
GIVE TYPICAL NAME: INDICATE APPROXIMATE PERCENTAGES OF SAND AND GRAVEL, MAX. SIZE: ANGULARITY, SURFACE CONDITION, AND HARDNESS OF THE COARSE GRAINS: LOCAL OR GEOLOGIC NAME AND OTHER PERTINENT DESCRIPTIVE INFORMATION: AND SYMBOL IN PARENTHESIS.		ATTERBERG LIMITS BELOW "A" LINE OR PI LESS THAN 4	ABOVE "A" LINE WITH PI BETWEEN 4 AND 7 ARE BORDERLINE CASES REQUIRING USE OF DUAL SYMBOLS.	GM
EXAMPLE: SILTY SAND, GRAVELLY: ABOUT 20% HARD, ANGULAR GRAVEL PARTICLES 10mm (1/2") MAX. SIZE: ROUNDED AND SUBANGULAR SAND GRAINS COARSE TO FINE: ABOUT 15% NONPLASTIC FINES WITH LOW DRY STRENGTH: WELL COMPACTED AND MOIST IN PLACE: ALLUVIAL SAND: (SM).		ATTERBERG LIMITS ABOVE "A" LINE WITH PI GREATER THAN 7		GC
		$C_u = \frac{D_{60}}{D_{10}}$ GREATER THAN 6; $C_c = \frac{(D_{30})^2}{D_{10} \times D_{60}}$ BETWEEN ONE AND 3		SW
		NOT MEETING ALL GRADATION REQUIREMENTS FOR SW		SP
		ATTERBERG LIMITS BELOW "A" LINE OR PI LESS THAN 4	LIMITS PLOTTING IN HATCHED ZONE WITH PI BETWEEN 4 AND 7 ARE BORDERLINE CASES REQUIRING USE OF DUAL SYMBOLS.	SM
		ATTERBERG LIMITS ABOVE "A" LINE WITH PI GREATER THAN 7		SC
GIVE TYPICAL NAME, INDICATE DEGREE AND CHARACTER OF PLASTICITY, AMOUNT AND MAX. SIZE OF COARSE GRAINS, COLOR IN WET CONDITION, ODOR IF ANY, LOCAL OR GEOLOGIC NAME, AND OTHER PERTINENT DESCRIPTIVE INFORMATION: AND SYMBOL IN PARENTHESIS.	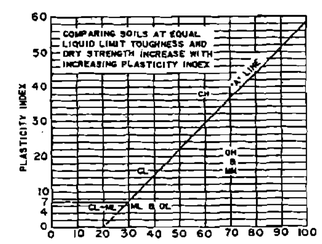			
FOR UNDISTURBED SOILS ADD INFORMATION ON STRUCTURE, STRATIFICATION, CONSISTENCY IN UNDISTURBED AND REMOLDED STATES, MOISTURE AND DRAINAGE CONDITIONS.				
XAMPLE: CLAYET SILT, BROWN, SLIGHTLY PLASTIC, SMALL PERCENTAGE OF FINE SAND, NUMEROUS VERTICAL ROOT HOLES, FIRM AND DRY IN PLACE, LOESS, (ML).				

PLASTICITY CHART
FOR LABORATORY CLASSIFICATION OF FINE-GRAINED SOILS

(1) BOUNDARY CLASSIFICATIONS: SOILS POSSESSING CHARACTERISTICS OF TWO GROUPS ARE DESIGNATED BY COMBINATIONS OF GROUP SYMBOLS. FOR EXAMPLE GW-GC, WELL-GRADED GRAVEL-SAND MIXTURE WITH CLAY BINDER. (2) ALL SIEVE SIZES ON THIS CHART ARE U.S. STANDARD.

~~LOS ANGELES COUNTY DEPARTMENT OF PUBLIC WORKS~~

UNIFIED SOIL CLASSIFICATION SYSTEM

STANDARD PLAN METRIC 3093-1 SHEET 2 OF 3

ALL DIMENSIONS ARE IN METERS UNLESS OTHERWISE SHOWN

DRAINAGE DETAILS

NO SCALE

DD-75

CALCULATED-DESIGNED BY	S. M. TAN W. Y. LEE	REVISED BY
CHECKED BY	R. M. SASAKI	DATE REVISED
FUNCTIONAL SUPERVISOR	RALPH M. SASAKI	

STATE OF CALIFORNIA - DEPARTMENT OF TRANSPORTATION
Caltrans HYDRAULICS

LAST REVISION 00-00-00 DATE PLOTTED => 31-JAN-2011 TIME PLOTTED => 14:08

Dist	COUNTY	ROUTE	KILOMETER POST TOTAL PROJECT	SHEET No.	TOTAL SHEETS
07	LA	5	2.9/4.9	289	1082

Caltrans Metric

REGISTERED CIVIL ENGINEER 12-23-09 DATE

6-21-10
PLANS APPROVAL DATE

REGISTERED PROFESSIONAL ENGINEER RALPH M. SASAKI No. 30849 Exp. 3/31/10 CIVIL STATE OF CALIFORNIA

THE STATE OF CALIFORNIA OR ITS OFFICERS OR AGENTS SHALL NOT BE RESPONSIBLE FOR THE ACCURACY OR COMPLETENESS OF ELECTRONIC COPIES OF THIS PLAN SHEET.

GENERAL NOTE

1. DIMENSIONS SHOWN ON THIS PLAN FOR METRIC AND ENGLISH UNITS ARE NOT EXACT EQUAL VALUES. IF METRIC VALUES ARE USED. ALL VALUES USED FOR CONSTRUCTION SHALL BE METRIC VALUES. IF ENGLISH UNITS ARE USED. ALL VALUES USED FOR CONSTRUCTION SHALL BE ENGLISH UNITS.

FIELD IDENTIFICATION PROCEDURES FOR FINE-GRADED SOILS OR FRACTIONS

THESE PROCEDURES ARE TO BE PERFORMED ON THE MINUS 450 µm ~~(NO. 40)~~ SIEVE SIZE PARTICLES, APPROXIMATELY .4mm ~~(1/64")~~. FOR FIELD CLASSIFICATION PURPOSES, SCREENING IS NOT INTENDED; SIMPLY REMOVE BY HAND THE COARSE PARTICLES THAT INTEREFERE WITH THE TESTS.

DILATANCY (REACTION TO SHAKING)

AFTER REMOVING PARTICLES LARGER THAN 450 µm ~~(NO. 40)~~ SIEVE SIZE, PREPARE A PAT OF MOIST SOIL WITH A VOLUME OF ABOUT 6.504mm^3 ~~(1/2 CUBIC INCH)~~. ADD ENOUGH WATER IF NECESSARY TO MAKE THE SOIL SOFT BUT NOT STICKY. PLACE THE PAT IN THE OPEN PALM OF ONE HAND AND SHAKE HORIZONTALLY, STRIKING VIGOROUSLY AGAINST THE OTHER HAND SEVERAL TIMES. A POSITIVE REACTION CONSISTS OF THE APPEARANCE OF WATER ON THE SURFACE OF THE PAT WHICH CHANGES TO A LIVERY CONSISTENCY AND BECOMES GLOSSY. WHEN THE SAMPLE IS SQUEEZED BETWEEN THE FINGERS, THE WATER AND GLOSS DISAPPEAR FROM THE SURFACE, THE PAT STIFFENS AND FINALLY IT CRACKS OR CRUMBLES. THE RAPIDITY OF APPEARANCE OF WATER DURING SHAKING AND OF ITS DISAPPEARANCE DURING SQUEEZING ASSIST IN IDENTIFYING THE CHARACTER OF THE FINES IN A SOIL.

VERY FINE CLEAN SANDS, GIVE THE QUICKEST AND MOST DISTINCT REACTION WHEREAS A PLASTIC CLAY HAS NO REACTION. INORGANIC SILTS SUCH AS A TYPICAL ROCK FLOUR, SHOW A MODERATELY QUICK REACTION.

DRY STRENGTH (CRUSHING CHARACTERISTICS)

AFTER REMOVING PARTICLES LARGER THAN 450 µm ~~(NO. 40)~~ SIEVE SIZE, MOLD A PAT OF SOIL TO THE CONSISTENCY OF PUTTY, ADDING WATER IF NECESSARY. ALLOW THE PAT TO DRY COMPLETELY BY OVEN, SUN, OR AIR DRYING AND THEN TEST ITS STRENGTH BY BREAKING AND CRUMBLING BETWEEN THE FINGERS. THIS STRENGTH IS A MEASURE OF THE CHARACTER AND QUANTITY OF THE COLLOIDAL FRACTION CONTAINED IN THE SOIL. THE DRY STRENGTH INCREASES WITH INCREASING PLASTICITY.

HIGH DRY STRENGTH IS CHARACTERISTIC FOR CLAYS OF THE CH GROUP. A TYPICAL INORGANIC SILT POSSESSES ONLY VERY SLIGHT DRY STRENGTH. SILTY FINE SANDS AND SILTS HAVE ABOUT THE SAME SLIGHT DRY STRENGTH, BUT CAN BE DISTINGUISHED BY THE FEEL WHEN POWDERING THE DRIED SPECIMEN. FINE SAND FEELS GRITTY WHEREAS A TYPICAL SILT HAS THE SMOOTH FEEL OF FLOUR.

TOUGHNESS (CONSISTENCY NEAR PLASTIC LIMIT)

AFTER REMOVING PARTICLES LARGER THAN THE 450 µm ~~(NO. 40)~~ SIEVE SIZE, A SPECIMEN OF SOIL ABOUT 6.504mm^3 ~~(1/2 CUBIC INCH)~~ IN SIZE IS MOLDED TO THE CONSISTENCY OF PUTTY. IF TOO DRY, WATER MUST BE ADDED AND IF STICKY, THE SPECIMEN SHOULD BE SPREAD OUT IN A THIN LAYER AND ALLOWED TO LOSE SOME OF ITS MOISTURE BY EVAPORATION. THEN THE SPECIMEN IS ROLLED OUT BY HAND ON A SMOOTH SURFACE OR BETWEEN THE PALMS INTO A THREAD ABOUT 3mm ~~(1/8")~~ IN DIAMETER. THE THREAD IS THEN FOLDED AND REROLLED REPEATEDLY. DURING THIS MANIPULATION THE MOISTURE CONTENT IS GRADUALLY REDUCED AND THE SPECIMEN STIFFENS, FINALLY LOSES ITS PLASTICITY, AND CRUMBLES WHEN THE PLASTIC LIMIT IS REACHED.

AFTER THE THREAD CRUMBLES, THE PIECES SHOULD BE LUMPED TOGETHER AND A SLIGHT KNEADING ACTION CONTINUED UNTIL THE LUMP CRUMBLES.

THE TOUGHER THE THREAD NEAR THE PLASTIC LIMIT AND THE STIFFER THE LUMP WHEN IT FINALLY CRUMBLES, THE MORE POTENT IS THE COLLOIDAL CLAY FRACTION IN THE SOIL. WEAKNESS OF THE THREAD AT THE PLASTIC LIMIT AND QUICK LOSS OF COHERENCE OF THE LUMP BELOW THE PLASTIC LIMIT INDICATE EITHER INORGANIC CLAY OF LOW PLASTICITY, OR MATERIALS SUCH AS KAOLIN-TYPE CLAYS AND ORGANIC CLAYS WHICH OCCUR BELOW THE A-LINE.

HIGHLY ORGANIC CLAYS HAVE A VERY WEAK AND SPONGY FEEL AT THE PLASTIC LIMIT.

~~LOS ANGELES COUNTY DEPARTMENT OF PUBLIC WORKS~~

UNIFIED SOIL CLASSIFICATION SYSTEM

STANDARD PLAN METRIC
3093-1
SHEET 3 OF 3

ALL DIMENSIONS ARE IN METERS UNLESS OTHERWISE SHOWN

DRAINAGE DETAILS

NO SCALE

DD-76

STATE OF CALIFORNIA - DEPARTMENT OF TRANSPORTATION
Caltrans
HYDRAULICS

FUNCTIONAL SUPERVISOR: RALPH M. SASAKI
CALCULATED-DESIGNED BY: S. M. TAN, W. Y. LEE
CHECKED BY: R. M. SASAKI
REVISED BY
DATE REVISED

LAST REVISION 00-00-00
DATE PLOTTED => 31-JAN-2011
TIME PLOTTED => 14:08

Dist	COUNTY	ROUTE	KILOMETER POST TOTAL PROJECT	SHEET No.	TOTAL SHEETS
07	LA	5	2.9/4.9	290	1082

Caltrans Metric

REGISTERED CIVIL ENGINEER 12-23-09 DATE

6-21-10
PLANS APPROVAL DATE

REGISTERED PROFESSIONAL ENGINEER RALPH M. SASAKI No. 30849 Exp. 3/31/10 CIVIL STATE OF CALIFORNIA

THE STATE OF CALIFORNIA OR ITS OFFICERS OR AGENTS SHALL NOT BE RESPONSIBLE FOR THE ACCURACY OR COMPLETENESS OF ELECTRONIC COPIES OF THIS PLAN SHEET.

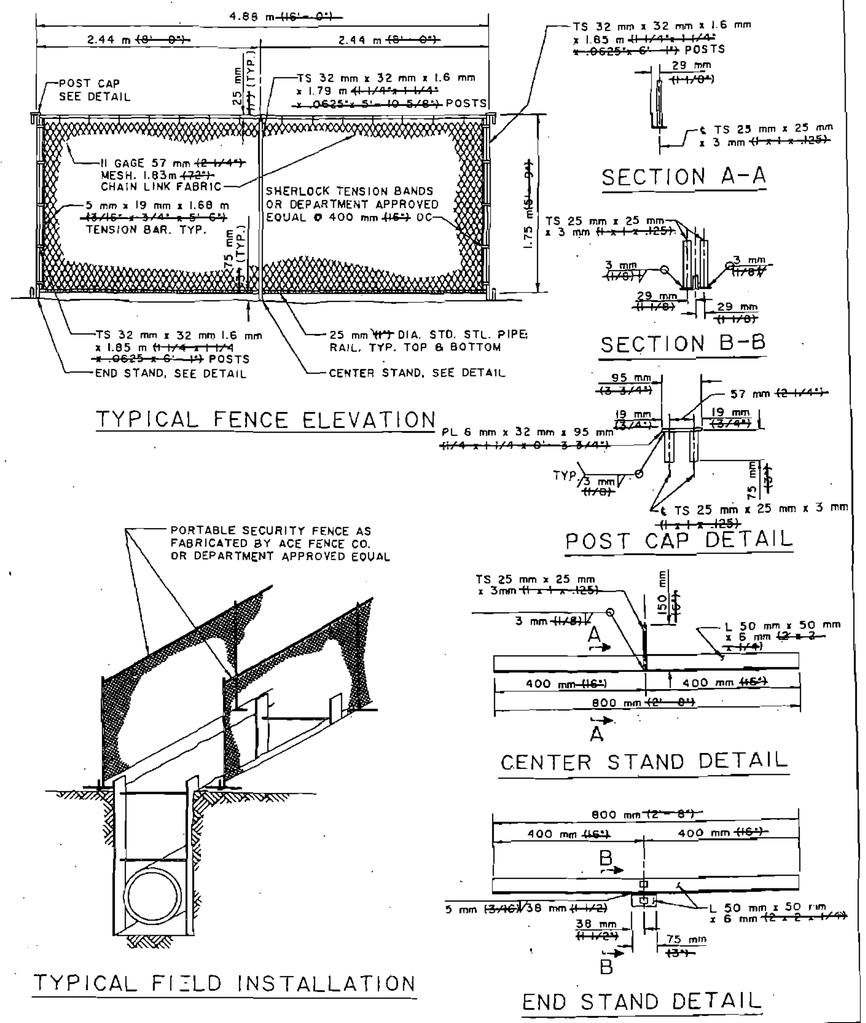

~~LOS ANGELES COUNTY DEPARTMENT OF PUBLIC WORKS~~

PORTABLE SECURITY FENCE FOR OPEN TRENCHES

STANDARD PLAN METRIC
6002-1
SHEET 1 OF 2

~~APPROVED~~ ~~Thomas A. Gilbertson~~ ~~5/31/1992~~
~~DIRECTOR OF PUBLIC WORKS~~ ~~DATE~~

1999
REVISIONS

NOTES

1. ALL CHAIN LINK FENCE MATERIAL SHALL CONFORM TO "STANDARD SPECIFICATIONS" UNLESS OTHERWISE SPECIFIED.
2. FABRIC SHALL BE TIED TO TOP AND BOTTOM RAILS AND CENTER POSTS WITH 3mm (11 GA.) WIRE AT MAX. 375mm (15") INTERVAL.
3. POST RAIL JOINTS SHALL BE WELDED ALL AROUND WITH 3 mm (1/8") FILLET WELD.
4. IN LIEU OF GALVANIZING, POSTS MAY BE PAINTED WITH A ZINC CHROMATE PRIMER COAT AND AN ALL PURPOSE ALUMINUM FINISH COAT.
5. FENCE PANELS SHALL BE HOSED OFF WITH WATER WHEN NECESSARY TO REMOVE ACCUMULATED DIRT SO THAT A CLEAN APPEARANCE IS MAINTAINED AT ALL TIMES.
6. SAND BAGS SHALL BE PLACED ON THE END STANDS TO INCREASE STABILITY WHEN OVERTURNING IS A PROBLEM, AS DETERMINED BY THE ENGINEER.
7. DIMENSIONS SHOWN ON THIS PLAN FOR METRIC AND ENGLISH UNITS ARE NOT EXACT EQUAL VALUES. IF METRIC VALUES ARE USED, ALL VALUES USED FOR CONSTRUCTION SHALL BE METRIC VALUES. IF ENGLISH UNITS ARE USED, ALL VALUES USED FOR CONSTRUCTION SHALL BE ENGLISH UNITS.

~~LOS ANGELES COUNTY DEPARTMENT OF PUBLIC WORKS~~

PORTABLE SECURITY FENCE FOR OPEN TRENCHES

STANDARD PLAN METRIC
6002-1
SHEET 2 OF 2

ALL DIMENSIONS ARE IN METERS UNLESS OTHERWISE SHOWN

DRAINAGE DETAILS

NO SCALE

DD-77

STATE OF CALIFORNIA - DEPARTMENT OF TRANSPORTATION
Caltrans
HYDRAULICS

FUNCTIONAL SUPERVISOR: RALPH M. SASAKI
CALCULATED-DESIGNED BY: S. M. TAN / W. Y. LEE
CHECKED BY: R. M. SASAKI
REVISED BY / DATE REVISED

LAST REVISION 00-00-00 DATE PLOTTED => 31-JAN-2011 TIME PLOTTED => 14:09

Dist	COUNTY	ROUTE	KILOMETER POST TOTAL PROJECT	SHEET No.	TOTAL SHEETS
07	LA	5	2.9/4.9	291	1082

Caltrans Metric

12-23-09
REGISTERED CIVIL ENGINEER DATE

6-21-10
PLANS APPROVAL DATE

REGISTERED PROFESSIONAL ENGINEER RALPH M. SASAKI No. 30849 Exp. 3/31/10 CIVIL STATE OF CALIFORNIA

THE STATE OF CALIFORNIA OR ITS OFFICERS OR AGENTS SHALL NOT BE RESPONSIBLE FOR THE ACCURACY OR COMPLETENESS OF ELECTRONIC COPIES OF THIS PLAN SHEET.

PRIOR TO THE END OF EACH WORKDAY, AND WHENEVER WORKERS ARE NOT WITHIN VISUAL SIGHT OF THE EXCAVATION, THE CONTRACTOR SHALL EITHER BACKFILL THE EXCAVATION OR ERECT AND MAINTAIN FENCES AROUND THE EXCAVATION OR COVER THE EXCAVATION. THE FOLLOWING ARE MINIMUM ACCEPTABLE MEASURES ONLY AND COMPLIANCE WITH THIS STANDARD DOES NOT RELIEVE THE CONTRACTOR OF HIS OBLIGATION TO PROTECT THE PUBLIC BY ALL NECESSARY MEANS.

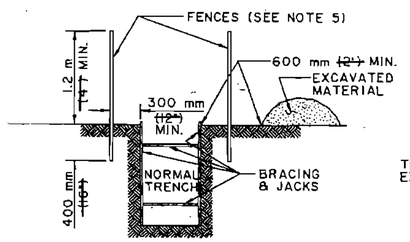

CASE A

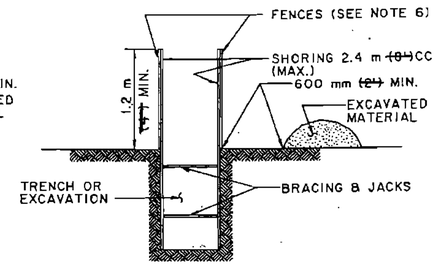

CASE C

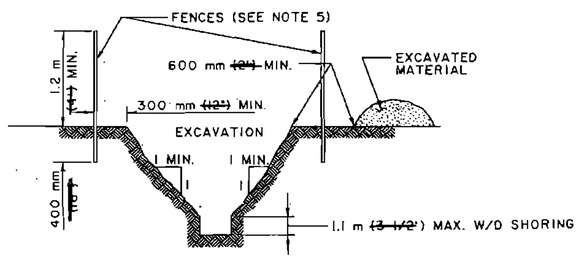

CASE B

FENCES

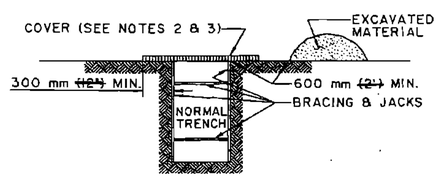

COVER

~~LOS ANGELES COUNTY DEPARTMENT OF PUBLIC WORKS~~

MINIMUM PUBLIC SAFETY REQUIREMENT FOR OPEN EXCAVATIONS

STANDARD PLAN METRIC 6008-1 SHEET 1 OF 2

~~APPROVED~~ Thomas A. Tatusanos ~~5/31/1992~~
DIRECTOR OF PUBLIC WORKS DATE

1999 REVISIONS

NOTES

1. EXCEPTIONS: FENCES OR COVERS WILL BE OPTIONAL WITH THE CONTRACTOR IF THE EXCAVATION IS EITHER:

   A. LESS THAN 900 mm ~~(3')~~ DEEP UNLESS UNUSUALLY HAZARDOUS CONDITIONS EXIST.
   B. LESS THAN 1.5 m ~~(5')~~ DEEP WITH SUFFICIENT WARNING DEVICES SUCH AS LANTERNS, FLASHERS, OR BARRICADES.
   C. FOR CASE B, LESS THAN 1.1 m ~~(3 1/2')~~ DEEP IN THE VERTICAL PORTION WITH UPPER SIDE SLOPES OF 1:1 OR FLATTER.
   D. IN AN AREA THAT IS NOT ACCESSIBLE TO THE PUBLIC.

2. COVERS FOR NON-VEHICULAR TRAFFIC MAY BE:

   A. 6 mm ~~(1/4")~~ STEEL PLATES.
   B. 50 mm ~~(2")~~ PLANKS.
   C. 19 mm ~~(3/4")~~ PLYWOOD.

3. STEEL PLATE COVER FOR VEHICULAR TRAFFIC REQUIRES PROPER TRENCH BRACING AND STEEL PLATES WITH SUFFICIENT STRENGTH TO WITHSTAND TRAFFIC LOADING IN ACCORDANCE WITH THE REQUIREMENTS OF THE EXCAVATION PERMIT.

4. POSTS FOR FENCES SHALL BE 50 mmx100 mm ~~(2"x4")~~ WOOD OR EQUIVALENT STEEL OR PIPE. IN PAVED AREAS, POSTS MAY BE FLUSH WITH SURFACE IF SUFFICIENTLY ANCHORED AND BRACED. RAILS SHALL BE 25 mmx100 mm ~~(1"x4")~~ WOOD.

5. FOR CASE A AND B, FENCES MAY BE:

   A. WOOD PICKETS TIED WITH WIRE AND POSTS 2.4 m ~~(8')~~ CC.
   B. 50 mmx100 mm ~~(2"x4")~~ POSTS 2.4 m ~~(8')~~ CC AND WIRE MESH.
   C. 50 mmx100 mm ~~(2"x4")~~ POSTS 2.4 m ~~(8')~~ CC WITH TOP AND BOTTOM RAIL AND CHICKEN WIRE.
   D. SAME AS NOTE 6 ITEM C.

6. FOR CASE C, FENCES MAY BE:

   A. WOOD PICKETS TIED WITH WIRE AND BOTTOM RAIL.
   B. TOP AND BOTTOM RAIL WITH CHICKEN WIRE.
   C. THREE RAILS EQUALLY SPACED WITH BOTTOM RAIL 150 mm ~~(6")~~ ABOVE GROUND.

7. IT SHALL BE THE CONTRACTOR'S RESPONSIBILITY TO PROVIDE ADEQUATE SHORING, BRACING AND/OR COVERS OVER ANY EXCAVATION IN ACCORDANCE WITH SECTIONS 7-10.4 AND 306-1.1.6 OF THE STANDARD SPECIFICATIONS.

8. DIMENSIONS SHOWN ON THIS PLAN FOR METRIC AND ENGLISH UNITS ARE NOT EXACT EQUAL VALUES. IF METRIC VALUES ARE USED, ALL VALUES USED FOR CONSTRUCTION SHALL BE METRIC VALUES. IF ENGLISH UNITS ARE USED, ALL VALUES USED FOR CONSTRUCTION SHALL BE ENGLISH UNITS.

~~LOS ANGELES COUNTY DEPARTMENT OF PUBLIC WORKS~~

MINIMUM PUBLIC SAFETY REQUIREMENT FOR OPEN EXCAVATIONS

STANDARD PLAN METRIC 6008-1 SHEET 2 OF 2

ALL DIMENSIONS ARE IN METERS UNLESS OTHERWISE SHOWN

DRAINAGE DETAILS

NO SCALE

DD-78

STATE OF CALIFORNIA - DEPARTMENT OF TRANSPORTATION
Caltrans HYDRAULICS

FUNCTIONAL SUPERVISOR: RALPH M. SASAKI
CALCULATED-DESIGNED BY: S. M. TAN, W. Y. LEE
CHECKED BY: R. M. SASAKI
REVISED BY / DATE REVISED

LAST REVISION 00-00-00 DATE PLOTTED => 31-JAN-2011 TIME PLOTTED => 14:09

NOTES: PIPE JOINTS ARE STANDARD JOINTS.
(N) NOT A SEPARATE PAY ITEM, FOR INFORMATION ONLY.

Caltrans Metric

Dist	COUNTY	ROUTE	KILOMETER POST TOTAL PROJECT	SHEET No.	TOTAL SHEETS
07	LA	5	2.9/4.9	292	1082

REGISTERED CIVIL ENGINEER 12-23-09 DATE
6-21-10
PLANS APPROVAL DATE

REGISTERED PROFESSIONAL ENGINEER RALPH M. SASAKI No. 30849 Exp. 3/31/10 CIVIL STATE OF CALIFORNIA

THE STATE OF CALIFORNIA OR ITS OFFICERS OR AGENTS SHALL NOT BE RESPONSIBLE FOR THE ACCURACY OR COMPLETENESS OF ELECTRONIC COPIES OF THIS PLAN SHEET.

SUMMARY OF DRAINAGE QUANTITIES

DRAINAGE PLAN	DRAINAGE SYSTEM No. ⬡	DRAINAGE UNIT ◯	"H" OR "V" (N) m	MINOR CONCRETE (MINOR STRUCTURE) m3	MISCELLANEOUS IRON AND STEEL kg	CLASS 1 CONCRETE (BOX CULVERT) m3	BAR REINFORCING STEEL (BOX CULVERT) kg	MINOR CONCRETE (BACKFILL) m3	MINOR CONCRETE (DITCH LINING) m3	MINOR CONCRETE (GUTTER LINING) m3	MINOR CONCRETE (GUTTER DEPRESSION) m3	450 mm RCP m	525 mm RCP m	600 mm RCP m	750 mm RCP m	900 mm RCP m	1050 mm RCP m	1200 mm RCP m	1425 mm RCP m	450 mm SCSP (2.01 mm THICK) m	150 mm UNPERFORATED PP * m	GRATED LINE DRAIN m	900 mm PRECAST CONCRETE PIPE MANHOLE m	PLACE HMA (MISC AREA) * m2	HOT MIX ASPHALT * tonne	DITCH EXCAVATION m3	REMOVE CONCRETE m3	REMOVE PIPE m	REMOVE INLET EA	REMOVE HEADWALL EA	REMOVE MANHOLE EA	ADJUST MANHOLE EA	CURB DRAIN EA	600 mm MH FRAME AND COVER (N) EA	610 mm MH FRAME AND COVER (N) EA	914 mm MH FRAME AND COVER (N) EA	CATCH BASIN MH FRAME AND COVER (N) EA	TYPE 600-12 FRAME AND GRATE (N) EA	TYPE 600-12X FRAME AND GRATE (N) EA	FRAME AND GRATING FOR CATCH BASINS (N) EA	MAXIMUM COVER (N) m	DESCRIPTION	STATION
D-1	1	a																										1														REMOVE COCB	5.63 m L+ 11+13.990 ℄ "E1"
		b																									17.9															REMOVE 457 mm RCP	
	2	a																								44.80																REMOVE Dbl 1524 mm X 910 mm RCB	
		b																											1													REMOVE HEADWALL	1.57 m R+ 12+16.232 ℄ "D1"
		c																											1													REMOVE HEADWALL	2.38 m R+ 12+19.802 ℄ "D1"
		d																									8.4															REMOVE 910 mm CMP	
		e																									8.4															REMOVE 910 mm CMP	
		f																											1													REMOVE HEADWALL	1.13 m R+ 12+27.983 ℄ "D1"
	3	a																										1														REMOVE INLET	15.33 m L+ 12+18.669 ℄ "D1"
		b																											1													REMOVE HEADWALL	15.26 m L+ 12+18.360 ℄ "D1"
		c																									19.6															REMOVE 610 mm RCP	
	4	a																									23.3															REMOVE 1448 mm RCP	
		b																												1												REMOVE MANHOLE No. 2	12.19 m L+ 12+34.736 ℄ "D1"
		c																									140.2															REMOVE 1448 mm RCP	
		d																												1												REMOVE MANHOLE No. 2	17.39 m L+ 13+72.353 ℄ "D1"
		e																									42.8															REMOVE 1448 mm RCP	
		f																								5.60																REMOVE TRANSITION STRUCTURE No. 3	6.74 m L+ 14+47.467 ℄ "D1"
		g																									31.2															REMOVE 1067 mm RCP	
		h																												1												REMOVE MANHOLE No. 4	12.35 m L+ 14+80.387 ℄ "D1"
		i																									1.2															REMOVE 1067 mm RCP	
		j																									11.6															REMOVE 762 mm RCP	
D-1		k																										1														REMOVE COCB	12.35 m L+ 14+86.765 ℄ "D1"
SHEET TOTAL																										50.40	304.6	3	4	3												SHEET TOTAL	

* TO BE COMBINED WITH HIGHWAY QUANTITIES

DRAINAGE QUANTITIES
DQ-01

S. M. TAN
W. Y. LEE
CALCULATED-DESIGNED BY
R. M. SASAKI
CHECKED BY
REVISED BY
DATE REVISED
FUNCTIONAL SUPERVISOR
RALPH M. SASAKI

STATE OF CALIFORNIA - DEPARTMENT OF TRANSPORTATION
Caltrans
HYDRAULICS

LAST REVISION 00-00-00
DATE PLOTTED => 22-JUN-2010
TIME PLOTTED => 09:09

NOTES: PIPE JOINTS ARE STANDARD JOINTS.
(N) NOT A SEPARATE PAY ITEM, FOR INFORMATION ONLY.

Caltrans Metric

Dist	COUNTY	ROUTE	KILOMETER POST TOTAL PROJECT	SHEET No.	TOTAL SHEETS
07	LA	5	2.9/4.9	293	1082

12-23-09
REGISTERED CIVIL ENGINEER DATE

6-21-10
PLANS APPROVAL DATE

REGISTERED PROFESSIONAL ENGINEER RALPH M. SASAKI No. 30849 Exp. 3/31/10 CIVIL STATE OF CALIFORNIA

THE STATE OF CALIFORNIA OR ITS OFFICERS OR AGENTS SHALL NOT BE RESPONSIBLE FOR THE ACCURACY OR COMPLETENESS OF ELECTRONIC COPIES OF THIS PLAN SHEET.

SUMMARY OF DRAINAGE QUANTITIES

DRAINAGE PLAN	DRAINAGE SYSTEM No. ⬡	DRAINAGE UNIT ◯	"H" OR "V" (N)	MINOR CONCRETE (MINOR STRUCTURE)	MISCELLANEOUS IRON AND STEEL	CLASS 1 CONCRETE (BOX CULVERT)	BAR REINFORCING STEEL (BOX CULVERT)	MINOR CONCRETE (BACKFILL)	MINOR CONCRETE (DITCH LINING)	MINOR CONCRETE (GUTTER LINING)	MINOR CONCRETE (GUTTER DEPRESSION)	450 mm RCP	525 mm RCP	600 mm RCP	750 mm RCP	900 mm RCP	1050 mm RCP	1200 mm RCP	1425 mm RCP	450 mm SCSP (2.01 mm THICK)	150 mm UNPERFORATED PP *	GRATED LINE DRAIN	900 mm PRECAST CONCRETE PIPE MANHOLE	PLACE HMA (MISC AREA) *	HOT MIX ASPHALT *	DITCH EXCAVATION	REMOVE CONCRETE	REMOVE PIPE	REMOVE INLET	REMOVE HEADWALL	REMOVE MANHOLE	ADJUST MANHOLE	CURB DRAIN	600 mm MH FRAME AND COVER (N)	610 mm MH FRAME AND COVER (N)	914 mm MH FRAME AND COVER (N)	CATCH BASIN MH FRAME AND COVER (N)	TYPE 600-12 FRAME AND GRATE (N)	TYPE 600-12X FRAME AND GRATE (N)	FRAME AND GRATING FOR CATCH BASINS (N)	MAXIMUM COVER (N)	DESCRIPTION	STATION
			m	m3	kg	m3	kg	m3	m3	m3	m3	m	m	m	m	m	m	m	m	m	m	m	m	m2	tonne	m3	m3	m	EA	EA	EA	EA	EA	EA	EA	EA	EA	EA	EA	EA	EA	m		
D-1	5	a																										34.0														REMOVE 914 mm RCP	
		b																													1											REMOVE MANHOLE No. 1	20.79 m R† 14+63.986 ℄ "D1"
		c																										16.5														REMOVE 457 mm RCP	
		d																											1													REMOVE COCB	17.08 m R† 14+81.100 ℄ "D1"
		e																										3.1														REMOVE 533 mm RCP	
	6	a																											1													REMOVE COCB	1.84 m L† 12+36.023 ℄ "D1"
		b																										9.3														REMOVE 457 mm RCP	
		c																										17.0														REMOVE 457 mm RCP	
	7	a																									0.90															REMOVE CONCRETE GUTTER	
		b																									0.59															REMOVE PARKWAY DRAIN	
D-1	8	a																									0.51															REMOVE CONCRETE GUTTER	
D-2	9	a																											1													REMOVE DROP INLET	33.32 m L† 30+10.653 ℄ "A1"
		b																										5.8														REMOVE 2-102 mm CIP	
		c																									0.61															REMOVE CURB DRAIN	30.24 m L† 30+09.759 ℄ "A1"
	10	a																										23.0														REMOVE 2-102 mm CIP	
		b																									0.36															REMOVE CURB DRAIN	28.51 m L† 30+70.660 ℄ "A1"
	11	a																									0.85															REMOVE CONCRETE GUTTER	
		b																										9.4														REMOVE 102 mm PP	
D-2		c																											1													REMOVE DROP INLET	33.92 m L† 30+85.111 ℄ "A1"
SHEET TOTAL																											3.82	118.1	4		1											SHEET TOTAL	

* TO BE COMBINED WITH HIGHWAY QUANTITIES

DRAINAGE QUANTITIES
DQ-02

STATE OF CALIFORNIA - DEPARTMENT OF TRANSPORTATION
Caltrans HYDRAULICS

CALCULATED-DESIGNED BY S. M. TAN W. Y. LEE
CHECKED BY R. M. SASAKI
FUNCTIONAL SUPERVISOR RALPH M. SASAKI
REVISED BY
DATE REVISED

LAST REVISION 00-00-00
DATE PLOTTED => 22-JUN-2010
TIME PLOTTED => 09:09

NOTES: PIPE JOINTS ARE STANDARD JOINTS.
(N) NOT A SEPARATE PAY ITEM, FOR INFORMATION ONLY.

Caltrans Metric

Dist	COUNTY	ROUTE	KILOMETER POST TOTAL PROJECT	SHEET No.	TOTAL SHEETS
07	LA	5	2.9/4.9	294	1082

REGISTERED CIVIL ENGINEER 12-23-09 DATE
6-21-10
PLANS APPROVAL DATE

REGISTERED PROFESSIONAL ENGINEER RALPH M. SASAKI No. 30849 Exp. 3/31/10 CIVIL STATE OF CALIFORNIA

THE STATE OF CALIFORNIA OR ITS OFFICERS OR AGENTS SHALL NOT BE RESPONSIBLE FOR THE ACCURACY OR COMPLETENESS OF ELECTRONIC COPIES OF THIS PLAN SHEET.

SUMMARY OF DRAINAGE QUANTITIES

DRAINAGE PLAN	DRAINAGE SYSTEM No. ⬡	DRAINAGE UNIT ○	"H" OR "V" (N)	MINOR CONCRETE (MINOR STRUCTURE)	MISCELLANEOUS IRON AND STEEL	CLASS 1 CONCRETE (BOX CULVERT)	BAR REINFORCING STEEL (BOX CULVERT)	MINOR CONCRETE (BACKFILL)	MINOR CONCRETE (DITCH LINING)	MINOR CONCRETE (GUTTER LINING)	MINOR CONCRETE (GUTTER DEPRESSION)	450 mm RCP	525 mm RCP	600 mm RCP	750 mm RCP	900 mm RCP	1050 mm RCP	1200 mm RCP	1425 mm RCP	450 mm SCSP (2.01 mm THICK)	150 mm UNPERFORATED PP *	GRATED LINE DRAIN	900 mm PRECAST CONCRETE PIPE MANHOLE	PLACE HMA (MISC AREA) *	HOT MIX ASPHALT *	DITCH EXCAVATION	REMOVE CONCRETE	REMOVE PIPE	REMOVE INLET	REMOVE HEADWALL	REMOVE MANHOLE	ADJUST MANHOLE	CURB DRAIN	600 mm MH FRAME AND COVER (N)	610 mm MH FRAME AND COVER (N)	914 mm MH FRAME AND COVER (N)	CATCH BASIN MH FRAME AND COVER (N)	TYPE 600-12 FRAME AND GRATE (N)	TYPE 600-12X FRAME AND GRATE (N)	FRAME AND GRATING FOR CATCH BASINS (N)	MAXIMUM COVER (N)	DESCRIPTION	STATION
			m	m3	kg	m3	kg	m3	m3	m3	m3	m	m	m	m	m	m	m	m	m	m	m	m	m2	tonne	m3	m3	m	EA	EA	EA	EA	EA	EA	EA	EA	EA	EA	EA	EA	m		
D-2	11	d																										10.0														REMOVE 2-102 mm CIP	
		e																									1.05															REMOVE CURB DRAIN	27.90 m L+ 30+85.960 ℄ "A1"
	12	a																										5.4														REMOVE 2-102 mm CIP	
		b																									0.57															REMOVE CURB DRAIN	27.21 m L+ 31+22.682 ℄ "A1"
	13	a																									1.42															REMOVE CONCRETE GUTTER	
		b																											1													REMOVE DROP INLET	27.88 m L+ 32+755.00 ℄ "A1"
		c																										4.8														REMOVE 2-102 mm CIP	
		d																									0.50															REMOVE CURB DRAIN	24.85 m L+ 32+28.255 ℄ "A1"
	14	a																									3.48															REMOVE PARKWAY DRAIN	23.29 m L+ 32+94.315 ℄ "A1"
	15	a																									3.44															REMOVE PARKWAY DRAIN	21.78 m L+ 33+56.408 ℄ "A1"
	16	a																									0.54															REMOVE CURB DRAIN	35.21 m R+ 31+00.011 ℄ "A1"
		b																										3.0														REMOVE 102 mm CIP	
	17	a																										2.8														REMOVE 102 mm CIP	
		b																									0.50															REMOVE CURB DRAIN	36.08 m R+ 31+35.730 ℄ "A1"
	18	a																									0.30															REMOVE CONCRETE GUTTER	
D-2		b																									0.63															REMOVE PARKWAY DRAIN	37.93 m R+ 32+10.186 ℄ "A1"
SHEET TOTAL																											12.43	26.0	1													SHEET TOTAL	

* TO BE COMBINED WITH HIGHWAY QUANTITIES

DRAINAGE QUANTITIES
DQ-03

STATE OF CALIFORNIA - DEPARTMENT OF TRANSPORTATION
Caltrans
HYDRAULICS

CALCULATED-DESIGNED BY S. M. TAN W. Y. LEE
CHECKED BY R. M. SASAKI
FUNCTIONAL SUPERVISOR RALPH M. SASAKI
REVISED BY
DATE REVISED

LAST REVISION 00-00-00
DATE PLOTTED => 22-JUN-2010
TIME PLOTTED => 09:09

NOTES: PIPE JOINTS ARE STANDARD JOINTS.
(N) NOT A SEPARATE PAY ITEM, FOR INFORMATION ONLY.

Caltrans Metric

Dist	COUNTY	ROUTE	KILOMETER POST TOTAL PROJECT	SHEET No.	TOTAL SHEETS
07	LA	5	2.9/4.9	295	1082

REGISTERED CIVIL ENGINEER 12-23-09 DATE
6-21-10
PLANS APPROVAL DATE

REGISTERED PROFESSIONAL ENGINEER RALPH M. SASAKI No. 30849 Exp. 3/31/10 CIVIL STATE OF CALIFORNIA

THE STATE OF CALIFORNIA OR ITS OFFICERS OR AGENTS SHALL NOT BE RESPONSIBLE FOR THE ACCURACY OR COMPLETENESS OF ELECTRONIC COPIES OF THIS PLAN SHEET.

SUMMARY OF DRAINAGE QUANTITIES

DRAINAGE PLAN	DRAINAGE SYSTEM No. ⬡	DRAINAGE UNIT ○	"H" OR "V" (N)	MINOR CONCRETE (MINOR STRUCTURE)	MISCELLANEOUS IRON AND STEEL	CLASS 1 CONCRETE (BOX CULVERT)	BAR REINFORCING STEEL (BOX CULVERT)	MINOR CONCRETE (BACKFILL)	MINOR CONCRETE (DITCH LINING)	MINOR CONCRETE (GUTTER LINING)	MINOR CONCRETE (GUTTER DEPRESSION)	450 mm RCP	525 mm RCP	600 mm RCP	750 mm RCP	900 mm RCP	1050 mm RCP	1200 mm RCP	1425 mm RCP	450 mm SCSP (2.01 mm THICK)	150 mm UNPERFORATED PP *	GRATED LINE DRAIN	900 mm PRECAST CONCRETE PIPE MANHOLE	PLACE HMA (MISC AREA) *	HOT MIX ASPHALT *	DITCH EXCAVATION	REMOVE CONCRETE	REMOVE PIPE	REMOVE INLET	REMOVE HEADWALL	REMOVE MANHOLE	ADJUST MANHOLE	CURB DRAIN	600 mm MH FRAME AND COVER (N)	610 mm MH FRAME AND COVER (N)	914 mm MH FRAME AND COVER (N)	CATCH BASIN MH FRAME AND COVER (N)	TYPE 600-12 FRAME AND GRATE (N)	TYPE 600-12X FRAME AND GRATE (N)	FRAME AND GRATING FOR CATCH BASINS (N)	MAXIMUM COVER (N)	DESCRIPTION	STATION
			m	m3	kg	m3	kg	m3	m3	m3	m3	m	m	m	m	m	m	m	m	m	m	m	m	m2	tonne	m3	m3	m	EA	EA	EA	EA	EA	EA	EA	EA	EA	EA	EA	EA	m		
D-3	19	a																										21.6														REMOVE 737 mm X 457 mm CMPA	
	20	a																									3.15															REMOVE CONCRETE GUTTER	
		b																									1.02															REMOVE PARKWAY DRAIN	21.08 m L+ 33+84.460 ℄ "A1"
	21	a																									3.23															REMOVE CONCRETE GUTTER	
		b																									1.11															REMOVE PARKWAY DRAIN	18.88 m L+ 34+66.042 ℄ "A1"
	22	a																										2.4														REMOVE 2-102 mm CIP	
		b																									0.25															REMOVE CURB DRAIN	18.23 m L+ 34+96.869 ℄ "A1"
	23	a																									0.59															REMOVE PARKWAY DRAIN	16.26 m L+ 35+81.595 ℄ "A1"
	24	a																										1.8														REMOVE 102 mm CIP	
		b																									0.32															REMOVE CURB DRAIN	21.49 m L+ 36+25.874 ℄ "A1"
	25	a																									1.16															REMOVE PARKWAY DRAIN	22.22 m L+ 36+28.143 ℄ "A1"
	26	a																										10.0														REMOVE 4-102 mm CIP	
		b																									0.73															REMOVE CURB DRAIN	35.89 m L+ 36+65.565 ℄ "A1"
	27	a																									3.42															REMOVE PARKWAY DRAIN	15.60 m R+ 21+42.990 ⅊ "D1"
D-3		b																											1													REMOVE DROP INLET	15.07 m R+ 21+46.348 ⅊ "D1"
SHEET TOTAL																											14.98	35.8	1													SHEET TOTAL	

* TO BE COMBINED WITH HIGHWAY QUANTITIES

DRAINAGE QUANTITIES
DQ-04

STATE OF CALIFORNIA - DEPARTMENT OF TRANSPORTATION
Caltrans
HYDRAULICS

FUNCTIONAL SUPERVISOR: RALPH M. SASAKI
CALCULATED-DESIGNED BY: S. M. TAN / W. Y. LEE
CHECKED BY: R. M. SASAKI
REVISED BY
DATE REVISED

LAST REVISION 00-00-00
DATE PLOTTED => 22-JUN-2010
TIME PLOTTED => 09:09

NOTES: PIPE JOINTS ARE STANDARD JOINTS.
(N) NOT A SEPARATE PAY ITEM, FOR INFORMATION ONLY.

Caltrans Metric

Dist	COUNTY	ROUTE	KILOMETER POST TOTAL PROJECT	SHEET No.	TOTAL SHEETS
07	LA	5	2.9/4.9	296	1082

REGISTERED CIVIL ENGINEER 12-23-09 DATE
6-21-10
PLANS APPROVAL DATE

REGISTERED PROFESSIONAL ENGINEER RALPH M. SASAKI No. 30849 Exp. 3/31/10 CIVIL STATE OF CALIFORNIA

THE STATE OF CALIFORNIA OR ITS OFFICERS OR AGENTS SHALL NOT BE RESPONSIBLE FOR THE ACCURACY OR COMPLETENESS OF ELECTRONIC COPIES OF THIS PLAN SHEET.

SUMMARY OF DRAINAGE QUANTITIES

DRAINAGE PLAN	DRAINAGE SYSTEM No. ⬡	DRAINAGE UNIT ○	"H" OR "V" (N)	MINOR CONCRETE (MINOR STRUCTURE)	MISCELLANEOUS IRON AND STEEL	CLASS 1 CONCRETE (BOX CULVERT)	BAR REINFORCING STEEL (BOX CULVERT)	MINOR CONCRETE (BACKFILL)	MINOR CONCRETE (DITCH LINING)	MINOR CONCRETE (GUTTER LINING)	MINOR CONCRETE (GUTTER DEPRESSION)	450 mm RCP	525 mm RCP	600 mm RCP	750 mm RCP	900 mm RCP	1050 mm RCP	1200 mm RCP	1425 mm RCP	450 mm SCSP (2.01 mm THICK)	150 mm UNPERFORATED PP *	GRATED LINE DRAIN	900 mm PRECAST CONCRETE PIPE MANHOLE	PLACE HMA (MISC AREA) *	HOT MIX ASPHALT *	DITCH EXCAVATION	REMOVE CONCRETE	REMOVE PIPE	REMOVE INLET	REMOVE HEADWALL	REMOVE MANHOLE	ADJUST MANHOLE	CURB DRAIN	600 mm MH FRAME AND COVER (N)	610 mm MH FRAME AND COVER (N)	914 mm MH FRAME AND COVER (N)	CATCH BASIN MH FRAME AND COVER (N)	TYPE 600-12 FRAME AND GRATE (N)	TYPE 600-12X FRAME AND GRATE (N)	FRAME AND GRATING FOR CATCH BASINS (N)	MAXIMUM COVER (N)	DESCRIPTION	STATION
			m	m3	kg	m3	kg	m3	m3	m3	m3	m	m	m	m	m	m	m	m	m	m	m	m	m2	tonne	m3	m3	m	EA	EA	EA	EA	EA	EA	EA	EA	EA	EA	EA	EA	EA	m		
D-3	28	a																									1.33																REMOVE PARKWAY DRAIN	41.16 m R+ 21+71.547 ℄ "D1"
	29	a																									0.92																REMOVE PARKWAY DRAIN	47.71 m R+ 36+66.938 ℄ "A1"
		b																											1														REMOVE DROP INLET	49.59 m R+ 36+69.070 ℄ "A1"
D-3	30	a																									1.33																REMOVE PARKWAY DRAIN	47.77 m R+ 36+88.137 ℄ "A1"
D-4	31	a																												1													REMOVE HEADWALL	25.70 m L+ 37+59.246 ℄ "A1"
		b																										14.9															REMOVE 737 mm X 457 mm CMPA	
		c																											1														REMOVE CATCH BASIN	40.35 m L+ 37+63.176 ℄ "A1"
		d																										46.1															REMOVE 457 mm RCP	
		e																											1														REMOVE COCB	24.98 m L+ 38+07.495 ℄ "A1"
		f																										16.7															REMOVE 457 mm RCP	
		g																											1														REMOVE DROP INLET	31.04 m L+ 38+24.675 ℄ "A1"
		h																										80.5															REMOVE 457 mm RCP	
		i																											1														REMOVE COCB	14.58 m L+ 13+62.363 ℄ "B2"
		j																										10.0															REMOVE 533 mm RCP	
	32	a																									60.10																REMOVE Conc CHANNEL	
		b																												1													REMOVE HEADWALL	32.27 m R+ 39+83.961 ℄ "A1"
		c																									460.10																REMOVE TRIPLE 3050 mm X 762 mm RCB	
		d																												1													REMOVE HEADWALL	21.68 m L+ 39+13.500 ℄ "A1"
		e																									6.80																REMOVE TRANSITION STRUCTURE	
		f																													1												REMOVE MANHOLE No. 3	24.19 m L+ 39+08.565 ℄ "A1"
D-4		g																										89.7															REMOVE 990 mm RCP	
SHEET TOTAL																											530.58	257.9	5	3	1												SHEET TOTAL	

* TO BE COMBINED WITH HIGHWAY QUANTITIES

DRAINAGE QUANTITIES
DQ-05

STATE OF CALIFORNIA - DEPARTMENT OF TRANSPORTATION
Caltrans HYDRAULICS

FUNCTIONAL SUPERVISOR: RALPH M. SASAKI
CALCULATED-DESIGNED BY: S. M. TAN / W. Y. LEE
CHECKED BY: R. M. SASAKI
REVISED BY / DATE REVISED

LAST REVISION 00-00-00 DATE PLOTTED => 22-JUN-2010 TIME PLOTTED => 09:09

NOTES: PIPE JOINTS ARE STANDARD JOINTS.
(N) NOT A SEPARATE PAY ITEM, FOR INFORMATION ONLY.

Caltrans Metric

Dist	COUNTY	ROUTE	KILOMETER POST TOTAL PROJECT	SHEET No.	TOTAL SHEETS
07	LA	5	2.9/4.9	297	1082

REGISTERED CIVIL ENGINEER 12-23-09 DATE
6-21-10
PLANS APPROVAL DATE

REGISTERED PROFESSIONAL ENGINEER RALPH M. SASAKI No. 30849 Exp. 3/31/10 CIVIL STATE OF CALIFORNIA

THE STATE OF CALIFORNIA OR ITS OFFICERS OR AGENTS SHALL NOT BE RESPONSIBLE FOR THE ACCURACY OR COMPLETENESS OF ELECTRONIC COPIES OF THIS PLAN SHEET.

SUMMARY OF DRAINAGE QUANTITIES

DRAINAGE PLAN	DRAINAGE SYSTEM No. ⬡	DRAINAGE UNIT ◯	"H" OR "V" (N)	MINOR CONCRETE (MINOR STRUCTURE)	MISCELLANEOUS IRON AND STEEL	CLASS 1 CONCRETE (BOX CULVERT)	BAR REINFORCING STEEL (BOX CULVERT)	MINOR CONCRETE (BACKFILL)	MINOR CONCRETE (DITCH LINING)	MINOR CONCRETE (GUTTER LINING)	MINOR CONCRETE (GUTTER DEPRESSION)	450 mm RCP	525 mm RCP	600 mm RCP	750 mm RCP	900 mm RCP	1050 mm RCP	1200 mm RCP	1425 mm RCP	450 mm SCSP (2.01 mm THICK)	150 mm UNPERFORATED PP *	GRATED LINE DRAIN	900 mm PRECAST CONCRETE PIPE MANHOLE	PLACE HMA (MISC AREA) *	HOT MIX ASPHALT *	DITCH EXCAVATION	REMOVE CONCRETE	REMOVE PIPE	REMOVE INLET	REMOVE HEADWALL	REMOVE MANHOLE	ADJUST MANHOLE	CURB DRAIN	600 mm MH FRAME AND COVER (N)	610 mm MH FRAME AND COVER (N)	914 mm MH FRAME AND COVER (N)	CATCH BASIN MH FRAME AND COVER (N)	TYPE 600-12 FRAME AND GRATE (N)	TYPE 600-12X FRAME AND GRATE (N)	FRAME AND GRATING FOR CATCH BASINS (N)	MAXIMUM COVER (N)	DESCRIPTION	STATION
			m	m3	kg	m3	kg	m3	m3	m3	m3	m	m	m	m	m	m	m	m	m	m	m	m	m2	tonne	m3	m3	m	EA	EA	EA	EA	EA	EA	EA	EA	EA	EA	EA	EA	EA	m		
D-4	32	h																													1												REMOVE MANHOLE No. 2	7.17 m Lt 20+49.808 ℄ "E1"
		i																										22.3															REMOVE 990 mm RCP	
	33	a																												1													REMOVE HEADWALL	7.00 m Lt 39+43.650 ℄ "A1"
		b																									32.50																REMOVE TRIPLE 1524 mm X 610 mm RCB	
		c																												1													REMOVE HEADWALL	21.05 m Lt 39+37.881 ℄ "A1"
		d																										32.4															REMOVE 610 mm RCP	
	34	a																										19.1															REMOVE 610 mm RCP	
		b																												1													REMOVE HEADWALL	20.27 m Lt 20+13.842 ℄ "E1"
	35	a																											1														REMOVE COCB	16.77 m Lt 20+65.496 ℄ "E1"
		b																										11.0															REMOVE 457 mm RCP	
	36	a																									113.08																REMOVE TRAPEZOIDAL Conc CHANNEL	
	37	a																												1													REMOVE HEADWALL	53.71 m Rt 39+71.433 ℄ "A1"
		b																									39.80																REMOVE TRIPLE 524 mm X 610 mm RCB	
		c																												1													REMOVE HEADWALL	36.32 m Rt 39+64.789 ℄ "A1"
	38	a																											1														REMOVE CATCH BASIN No. 37	29.50 m Rt 40+61.118 ℄ "A1"
		b																										4.9															REMOVE 457 mm RCP	
		c																												1													REMOVE HEADWALL	35.64 m Rt 40+63.992 ℄ "A1"
D-4		d																									3.43																REMOVE TRAPEZOIDAL Conc CHANNEL	
SHEET TOTAL																											188.81	89.7	2	6	1												SHEET TOTAL	

* TO BE COMBINED WITH HIGHWAY QUANTITIES

DRAINAGE QUANTITIES
DQ-06

STATE OF CALIFORNIA - DEPARTMENT OF TRANSPORTATION
Caltrans
HYDRAULICS

CALCULATED-DESIGNED BY S. M. TAN W. Y. LEE
CHECKED BY R. M. SASAKI
FUNCTIONAL SUPERVISOR RALPH M. SASAKI
REVISED BY
DATE REVISED

LAST REVISION 00-00-00
DATE PLOTTED => 22-JUN-2010
TIME PLOTTED => 09:09

NOTES: PIPE JOINTS ARE STANDARD JOINTS.
(N) NOT A SEPARATE PAY ITEM, FOR INFORMATION ONLY.

Caltrans Metric

Dist	COUNTY	ROUTE	KILOMETER POST TOTAL PROJECT	SHEET No.	TOTAL SHEETS
07	LA	5	2.9/4.9	298	1082

REGISTERED CIVIL ENGINEER 12-23-09 DATE
6-21-10
PLANS APPROVAL DATE

REGISTERED PROFESSIONAL ENGINEER RALPH M. SASAKI No. 30849 Exp. 3/31/10 CIVIL STATE OF CALIFORNIA

THE STATE OF CALIFORNIA OR ITS OFFICERS OR AGENTS SHALL NOT BE RESPONSIBLE FOR THE ACCURACY OR COMPLETENESS OF ELECTRONIC COPIES OF THIS PLAN SHEET.

SUMMARY OF DRAINAGE QUANTITIES

DRAINAGE PLAN	DRAINAGE SYSTEM No. ⬡	DRAINAGE UNIT ○	"H" OR "V" (N)	MINOR CONCRETE (MINOR STRUCTURE)	MISCELLANEOUS IRON AND STEEL	CLASS 1 CONCRETE (BOX CULVERT)	BAR REINFORCING STEEL (BOX CULVERT)	MINOR CONCRETE (BACKFILL)	MINOR CONCRETE (DITCH LINING)	MINOR CONCRETE (GUTTER LINING)	MINOR CONCRETE (GUTTER DEPRESSION)	450 mm RCP	525 mm RCP	600 mm RCP	750 mm RCP	900 mm RCP	1050 mm RCP	1200 mm RCP	1425 mm RCP	450 mm SCSP (2.01 mm THICK)	150 mm UNPERFORATED PP *	GRATED LINE DRAIN	900 mm PRECAST CONCRETE PIPE MANHOLE	PLACE HMA (MISC AREA) *	HOT MIX ASPHALT *	DITCH EXCAVATION	REMOVE CONCRETE	REMOVE PIPE	REMOVE INLET	REMOVE HEADWALL	REMOVE MANHOLE	ADJUST MANHOLE	CURB DRAIN	600 mm MH FRAME AND COVER (N)	610 mm MH FRAME AND COVER (N)	914 mm MH FRAME AND COVER (N)	CATCH BASIN MH FRAME AND COVER (N)	TYPE 600-12 FRAME AND GRATE (N)	TYPE 600-12X FRAME AND GRATE (N)	FRAME AND GRATING FOR CATCH BASINS (N)	MAXIMUM COVER (N)	DESCRIPTION	STATION
			m	m3	kg	m3	kg	m3	m3	m3	m3	m	m	m	m	m	m	m	m	m	m	m	m	m2	tonne	m3	m3	m	EA	EA	EA	EA	EA	EA	EA	EA	EA	EA	EA	EA	m		
D-4	39	a																											1													REMOVE CATCH BASIN No. 37	30.53 m R+ 39+91.960 ℄ "A1"
		b																										2.1														REMOVE 457 mm RCP	
	40	a																											1													REMOVE CATCH BASIN No. 37	34.27 m R+ 40+14.729 ℄ "A1"
		b																										3.1														REMOVE 457 mm RCP	
	41	a																									1.24															REMOVE CONCRETE GUTTER	
		b																									1.15															REMOVE PARKWAY DRAIN	46.87 m R+ 37+98.669 ℄ "A1"
	42	a																									2.20															REMOVE CONCRETE GUTTER	
		b																									0.70															REMOVE PARKWAY DRAIN	46.71 m R+ 38+06.252 ℄ "A1"
	43	a																										1.8														REMOVE 102 mm CIP	
		b																									0.32															REMOVE CURB DRAIN	46.12 m R+ 38+33.792 ℄ "A1"
	44	a																									2.62															REMOVE CONCRETE GUTTER	
	45	a																									1.47															REMOVE TYPE B DRAIN	
	46	a																										13.7														REMOVE 457 mm CMP	
D-4	47	a																										12.2														REMOVE 457 mm CMP	
SHEET TOTAL																											9.70	32.9	2													SHEET TOTAL	

* TO BE COMBINED WITH HIGHWAY QUANTITIES

S. M. TAN
W. Y. LEE
CALCULATED-DESIGNED BY

R. M. SASAKI
CHECKED BY

REVISED BY
DATE REVISED

RALPH M. SASAKI
FUNCTIONAL SUPERVISOR

STATE OF CALIFORNIA - DEPARTMENT OF TRANSPORTATION
Caltrans
HYDRAULICS

DRAINAGE QUANTITIES
DQ-07

LAST REVISION 00-00-00
DATE PLOTTED => 22-JUN-2010
TIME PLOTTED => 09:09

NOTES: PIPE JOINTS ARE STANDARD JOINTS.
(N) NOT A SEPARATE PAY ITEM, FOR INFORMATION ONLY.

Caltrans Metric

Dist	COUNTY	ROUTE	KILOMETER POST TOTAL PROJECT	SHEET No.	TOTAL SHEETS
07	LA	5	2.9/4.9	299	1082

REGISTERED CIVIL ENGINEER 12-23-09 DATE
6-21-10
PLANS APPROVAL DATE

REGISTERED PROFESSIONAL ENGINEER RALPH M. SASAKI No. 30849 Exp. 3/31/10 CIVIL STATE OF CALIFORNIA

THE STATE OF CALIFORNIA OR ITS OFFICERS OR AGENTS SHALL NOT BE RESPONSIBLE FOR THE ACCURACY OR COMPLETENESS OF ELECTRONIC COPIES OF THIS PLAN SHEET.

SUMMARY OF DRAINAGE QUANTITIES

DRAINAGE PLAN	DRAINAGE SYSTEM No. ⬡	DRAINAGE UNIT ○	"H" OR "V" (N)	MINOR CONCRETE (MINOR STRUCTURE)	MISCELLANEOUS IRON AND STEEL	CLASS 1 CONCRETE (BOX CULVERT)	BAR REINFORCING STEEL (BOX CULVERT)	MINOR CONCRETE (BACKFILL)	MINOR CONCRETE (DITCH LINING)	MINOR CONCRETE (GUTTER LINING)	MINOR CONCRETE (GUTTER DEPRESSION)	450 mm RCP	525 mm RCP	600 mm RCP	750 mm RCP	900 mm RCP	1050 mm RCP	1200 mm RCP	1425 mm RCP	450 mm SCSP (2.01 mm THICK)	150 mm UNPERFORATED PP *	GRATED LINE DRAIN	900 mm PRECAST CONCRETE PIPE MANHOLE	PLACE HMA (MISC AREA) *	HOT MIX ASPHALT *	DITCH EXCAVATION	REMOVE CONCRETE	REMOVE PIPE	REMOVE INLET	REMOVE HEADWALL	REMOVE MANHOLE	ADJUST MANHOLE	CURB DRAIN	600 mm MH FRAME AND COVER (N)	610 mm MH FRAME AND COVER (N)	914 mm MH FRAME AND COVER (N)	CATCH BASIN MH FRAME AND COVER (N)	TYPE 600-12 FRAME AND GRATE (N)	TYPE 600-12X FRAME AND GRATE (N)	FRAME AND GRATING FOR CATCH BASINS (N)	MAXIMUM COVER (N)	DESCRIPTION	STATION
			m	m3	kg	m3	kg	m3	m3	m3	m3	m	m	m	m	m	m	m	m	m	m	m	m	m2	tonne	m3	m3	m	EA	EA	EA	EA	EA	EA	EA	EA	EA	EA	EA	EA	m		
D-5	48	a																											1													REMOVE CATCH BASIN No. 7	8.83 m L+ 24+36.419 ℄ "E1"
		b																										47.7														REMOVE 533 mm RCP	
		c																													1											REMOVE MANHOLE No. 1	1.42 m R+ 23+89.658 ℄ "E1"
		d																										59.4														REMOVE 610 mm RCP	
	49	a																										3.2														REMOVE 610 mm RCP	
		b																											1													REMOVE CATCH BASIN No. 37	16.35 m R+ 41+82.338 ℄ "A1"
		c																										15.9														REMOVE 610 mm RCP	
		d																											1													REMOVE CATCH BASIN No. 37	0.48 m L+ 41+81.497 ℄ "A1"
		e																										17.5														REMOVE 737 mm X 457 mm CMPA	
		f																											1													REMOVE CATCH BASIN No. 37	18.85 m L+ 41+80.503 ℄ "A1"
		g																										13.0														REMOVE 737 mm X 457 mm CMPA	
		h																											1													REMOVE COCB	32.11 m L+ 41+79.920 ℄ "A1"
		i																										17.0														REMOVE 610 mm RCP	
	50	a																											1													REMOVE COCB	6.13 m R+ 41+54.168 ℄ "C3"
		b																										9.8														REMOVE 457 mm PVC W/ Conc ENCASEMENT	
		c																											1													REMOVE COCB	6.40 m R+ 41+42.382 ℄ "C3"
		d																										8.6														REMOVE 457 mm PVC W/ Conc ENCASEMENT	
		e																											1													REMOVE COCB	4.35 m R+ 41+32.325 ℄ "C3"
		f																										37.1														REMOVE 305 mm PVC W/ Conc ENCASEMENT	
		g																											1													REMOVE COCB	22.52 m R+ 40+98.866 ℄ "C3"
		h																										12.3														REMOVE 457 mm PVC W/ Conc ENCASEMENT	
D-5		i																									16.50															REMOVE 1829 mm X 457 mm RCB	
SHEET TOTAL																											16.50	241.5	9		1												SHEET TOTAL	

* TO BE COMBINED WITH HIGHWAY QUANTITIES

S. M. TAN
W. Y. LEE
CALCULATED-DESIGNED BY

R. M. SASAKI
CHECKED BY

REVISED BY
DATE REVISED

RALPH M. SASAKI
FUNCTIONAL SUPERVISOR

STATE OF CALIFORNIA - DEPARTMENT OF TRANSPORTATION
Caltrans
HYDRAULICS

DRAINAGE QUANTITIES
DQ-08

LAST REVISION 00-00-00
DATE PLOTTED => 22-JUN-2010
TIME PLOTTED => 09:09

NOTES: PIPE JOINTS ARE STANDARD JOINTS.
(N) NOT A SEPARATE PAY ITEM, FOR INFORMATION ONLY.

Caltrans Metric

Dist	COUNTY	ROUTE	KILOMETER POST TOTAL PROJECT	SHEET No.	TOTAL SHEETS
07	LA	5	2.9/4.9	300	1082

REGISTERED CIVIL ENGINEER 12-23-09 DATE
6-21-10
PLANS APPROVAL DATE

REGISTERED PROFESSIONAL ENGINEER RALPH M. SASAKI No. 30849 Exp. 3/31/10 CIVIL STATE OF CALIFORNIA

THE STATE OF CALIFORNIA OR ITS OFFICERS OR AGENTS SHALL NOT BE RESPONSIBLE FOR THE ACCURACY OR COMPLETENESS OF ELECTRONIC COPIES OF THIS PLAN SHEET.

SUMMARY OF DRAINAGE QUANTITIES

DRAINAGE PLAN	DRAINAGE SYSTEM No. ⬡	DRAINAGE UNIT ◯	"H" OR "V" (N)	MINOR CONCRETE (MINOR STRUCTURE)	MISCELLANEOUS IRON AND STEEL	CLASS 1 CONCRETE (BOX CULVERT)	BAR REINFORCING STEEL (BOX CULVERT)	MINOR CONCRETE (BACKFILL)	MINOR CONCRETE (DITCH LINING)	MINOR CONCRETE (GUTTER LINING)	MINOR CONCRETE (GUTTER DEPRESSION)	450 mm RCP	525 mm RCP	600 mm RCP	750 mm RCP	900 mm RCP	1050 mm RCP	1200 mm RCP	1425 mm RCP	450 mm SCSP (2.01 mm THICK)	150 mm UNPERFORATED PP *	GRATED LINE DRAIN	900 mm PRECAST CONCRETE PIPE MANHOLE	PLACE HMA (MISC AREA) *	HOT MIX ASPHALT *	DITCH EXCAVATION	REMOVE CONCRETE	REMOVE PIPE	REMOVE INLET	REMOVE HEADWALL	REMOVE MANHOLE	ADJUST MANHOLE	CURB DRAIN	600 mm MH FRAME AND COVER (N)	610 mm MH FRAME AND COVER (N)	914 mm MH FRAME AND COVER (N)	CATCH BASIN MH FRAME AND COVER (N)	TYPE 600-12 FRAME AND GRATE (N)	TYPE 600-12X FRAME AND GRATE (N)	FRAME AND GRATING FOR CATCH BASINS (N)	MAXIMUM COVER (N)	DESCRIPTION	STATION
			m	m3	kg	m3	kg	m3	m3	m3	m3	m	m	m	m	m	m	m	m	m	m	m	m	m2	tonne	m3	m3	m	EA	EA	EA	EA	EA	EA	EA	EA	EA	EA	EA	EA	m		
D-5	51	a																										99.9														REMOVE 686 mm RCP	
		b																											1													REMOVE CATCH BASIN No. 37	19.70 m R† 41+82.460 ℄ "A1"
		c																										47.7														REMOVE 686 mm RCP	
		d																									15.80															REMOVE 1219 mm X 910 mm RCB	
		e																									33.30															REMOVE TRAPEZOIDAL CHANNEL	
		f																												1												REMOVE HEADWALL	42.73 m R† 40+59.927 ℄ "A1"
		g																										111.2														REMOVE 2-762 mm RCP	
	52	a																										16.9														REMOVE 457 mm RCP	
		b																											1													REMOVE COCB	24.73 m R† 42+84.250 ℄ "A1"
		c																									10.90															REMOVE 1829 mm X 457 mm RCB	
		d																											1													REMOVE CATCH BASIN DbI No.37	14.50 m R† 42+82.951 ℄ "A1"
		e																										2.8														REMOVE 457 mm RCP	
		f																											1													REMOVE CATCH BASIN No. 37	10.99 m R† 42+83.512 ℄ "A1"
		g																										23.3														REMOVE 457 mm PVC	
	53	a																												1												REMOVE HEADWALL	5.08 m R† 43+95.506 ℄ "A1"
		b																										16.4														REMOVE 610 mm RCP	
		c																											1													REMOVE CATCH BASIN No. 37	11.30 m L† 43+94.594 ℄ "A1"
		d																										29.6														REMOVE 737 mm X 457 mm CMPA	
D-5		e																												1												REMOVE HEADWALL	43.22 m L† 43+93.022 ℄ "A1"
D-6	54	a																												1												REMOVE HEADWALL	1.79 m L† 46+23.988 ℄ "A1"
		b																										15.8														REMOVE 610 mm RCP	
SHEET TOTAL																											60.00	363.6	5	4												SHEET TOTAL	

* TO BE COMBINED WITH HIGHWAY QUANTITIES

DRAINAGE QUANTITIES
DQ-09

STATE OF CALIFORNIA - DEPARTMENT OF TRANSPORTATION
Caltrans HYDRAULICS

FUNCTIONAL SUPERVISOR: RALPH M. SASAKI
CALCULATED-DESIGNED BY: S. M. TAN / W. Y. LEE
CHECKED BY: R. M. SASAKI
REVISED BY / DATE REVISED

LAST REVISION 00-00-00
DATE PLOTTED => 22-JUN-2010
TIME PLOTTED => 09:09