IM-005-2(949)N

| Dist | COUNTY | ROUTE | KILOMETER POST TOTAL PROJECT | SHEET No. | TOTAL SHEETS |
|---|---|---|---|---|---|
| 07 | LA | 5 | 2.9/4.9 | 1 | 1082 |

STATE OF CALIFORNIA

# DEPARTMENT OF TRANSPORTATION

# PROJECT PLANS FOR CONSTRUCTION ON STATE HIGHWAY

## IN LOS ANGELES COUNTY IN SANTA FE SPRINGS AND NORWALK FROM ALONDRA BOULEVARD OVERCROSSING TO SHOEMAKER AVENUE OVERCROSSING

TO BE SUPPLEMENTED BY STANDARD PLANS DATED JULY 2004

INDEX OF SHEETS


| SHEET No. | DESCRIPTION |
|---|---|
| 1 | TITLE AND LOCATION MAP |
| 2-18 | TYPICAL CROSS SECTIONS |
| 19 | KEY MAP AND LINE INDEX |
| 20-30 | LAYOUTS |
| 31-59 | PROFILES AND SUPERELEVATION |
| 60-138 | CONSTRUCTION DETAILS |
| 139-142 | TEMPORARY WATER POLLUTION CONTROL DETAILS |
| 143-153 | CONTOUR GRADING |
| 154-318 | DRAINAGE PLANS, PROFILES, DETAILS AND QUANTITIES |
| 319-386 | SANITARY SEWER PLANS, DETAILS AND QUANTITIES |
| 387-414 | UTILITY PLANS |
| 415 | CONSTRUCTION AREA SIGNS |
| 416-553 | STAGE CONSTRUCTION PLANS, DETAILS AND QUANTITIES |
| 554-558 | TRAFFIC HANDLING PLANS DETAILS |
| 559-575 | PAVEMENT DELINEATION PLANS, DETAILS AND QUANTITIES |
| 576-633 | SIGN PLANS, DETAILS AND QUANTITIES |
| 634-637 | SUMMARY OF QUANTITIES |
| 638-651 | RETAINING WALL AND SOUND WALL PLANS |
| 652-663 | HIGHWAY PLANT LIST, PLANTING, IRRIGATION AND LANDSCAPE DETAILS |
| 664-755 | ELECTRICAL PLANS |
| 756 | PROJECT CONTROL |
| 757-764 | MOTORIST INFORMATION PLAN AND QUANTITIES |
| 765-766 | RIGHT OF WAY |
| 767-827 | REVISED STANDARD PLANS |

STRUCTURE PLANS

| | |
|---|---|
| 828-954 | CARMENITA Rd OVERCROSSING/OVERHEAD Br No. 53-3018 |
| 955-983 | CARMENITA Rd SB OFF-RAMP Br No. 53-3018K |
| 984-1009 | CARMENITA Rd NB ON-RAMP Br No. 53-3018S |
| 1010-1037 | CARMENITA Rd NB OFF-RAMP Br No. 53-3019K |
| 1038-1063 | CARMENITA Rd SB ON-RAMP Br No. 53-3019S |
| 1064-1082 | RETAINING WALLS 12, 13, 16, AND 17 |


THE STANDARD PLANS LIST APPLICABLE TO THIS CONTRACT IS INCLUDED IN THE NOTICE TO BIDDERS AND SPECIAL PROVISIONS BOOK.

LOCATION MAP

Caltrans

Caltrans Metric

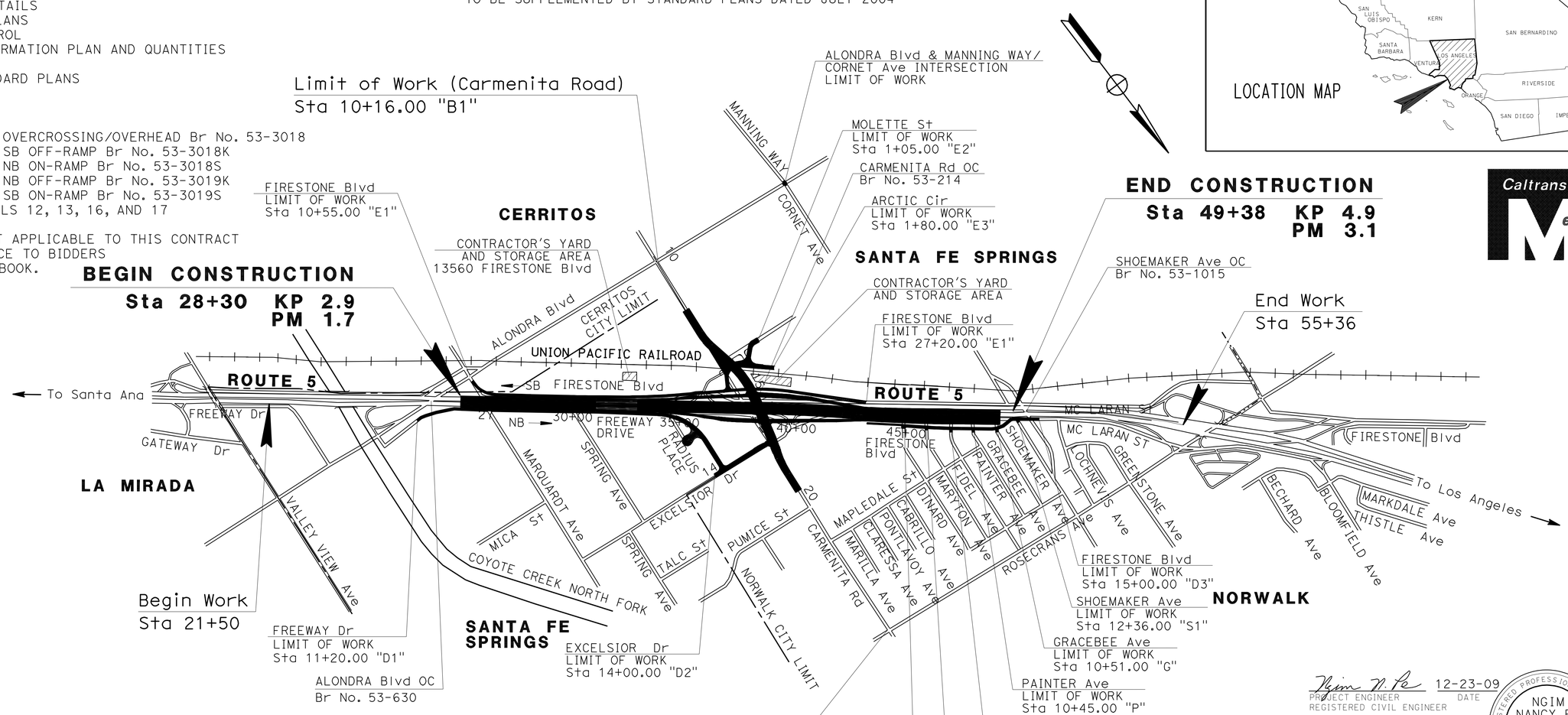


HUB AND TMC BUILDING LOCATIONS

| LOCATION | DESCRIPTION |
|---|---|
| Rte 2/134 SEPARATION | TRANSPORTATION MANAGEMENT CENTER |
| Rte 5/605 SEPARATION | NORWALK HUB BUILDING |

THE BIDDER SHALL POSSESS THE CLASS (OR CLASSES) OF LICENSE AS SPECIFIED IN THE ''NOTICE TO BIDDERS.''

NO SCALE

Ngim N. Pe 12-23-09
PROJECT ENGINEER DATE
REGISTERED CIVIL ENGINEER

REGISTERED PROFESSIONAL ENGINEER NGIM NANCY PE No. 58161 Exp. 6-30-10 CIVIL STATE OF CALIFORNIA

June 21, 2010
PLANS APPROVAL DATE

*THE STATE OF CALIFORNIA OR ITS OFFICERS OR AGENTS SHALL NOT BE RESPONSIBLE FOR THE ACCURACY OR COMPLETENESS OF ELECTRONIC COPIES OF THIS PLAN SHEET.*

PROJECT MANAGER ZAREH SHAHBAZIAN

DESIGN ENGINEER KEVIN Q. NGUYEN

| CONTRACT No. | 07-2159C4 |
|---|---|
| PROJECT ID | 0700000339 |

LAST REVISION 00-00-00

DATE PLOTTED => 23-FEB-2011
TIME PLOTTED => 07:17

| Dist | COUNTY | ROUTE | KILOMETER POST TOTAL PROJECT | SHEET No. | TOTAL SHEETS |
|---|---|---|---|---|---|
| 07 | LA | 5 | 2.9/4.9 | 2 | 1082 |

REGISTERED CIVIL ENGINEER 12-14-09 DATE

6-21-10
PLANS APPROVAL DATE

REGISTERED PROFESSIONAL ENGINEER NGIM NANCY PE No. 58161 Exp. 6-30-10 CIVIL STATE OF CALIFORNIA

*THE STATE OF CALIFORNIA OR ITS OFFICERS OR AGENTS SHALL NOT BE RESPONSIBLE FOR THE ACCURACY OR COMPLETENESS OF ELECTRONIC COPIES OF THIS PLAN SHEET.*

Caltrans Metric

## PROPOSED STRUCTURAL SECTIONS

### NOTES:

1. DIMENSIONS OF THE PAVEMENT STRUCTURES ARE SUBJECT TO TOLERANCES SPECIFIED IN THE STANDARD SPECIFICATIONS.
2. SUPERELEVATION AS SHOWN OR AS DIRECTED BY THE ENGINEER.
3. SECTIONS FOR DETOURS ARE SHOWN ON SC-SHEETS.
4. COLD PLANE AC PAVEMENT & OVERLAY HOT MIX ASPHALT FROM NB/SB STA 29+94 TO 30+15.
5. SEE LAYOUT PLANS FOR EXACT LIMIT OF RETAINING CURB.
6. TCGE: TEMPORARY CONSTRUCTION AND GRADING EASEMENT.

1 — 315 mm JOINTED PLAIN CONCRETE PAVEMENT (JPCP)
150 mm LEAN CONCRETE BASE
210 mm CLASS 3 AGGREGATE BASE

2 — 240 mm PORTLAND CEMENT CONCRETE
105 mm LEAN CONCRETE BASE
150 mm CLASS 3 AGGREGATE BASE

3 — 270 mm JOINTED PLAIN CONCRETE PAVEMENT (JPCP)
150 mm LEAN CONCRETE BASE
210 mm CLASS 3 AGGREGATE BASE

4 — 50 mm HOT MIX ASPHALT (Misc AREA)

5 — 150 mm PORTLAND CEMENT CONCRETE (RAPID STRENGTH CONCRETE)
150 mm CLASS 2 AGGREGATE BASE

6 — 150 mm PORTLAND CEMENT CONCRETE
150 mm CLASS 2 AGGREGATE BASE

7 — 180 mm HOT MIX ASPHALT (TYPE B)
300 mm CLASS 2 AGGREGATE BASE
360 mm CLASS 4 AGGREGATE SUBBASE

8 — 195 mm HOT MIX ASPHALT (TYPE B)
330 mm CLASS 2 AGGREGATE BASE
390 mm CLASS 4 AGGREGATE SUBBASE

9 — 180 mm HOT MIX ASPHALT (TYPE B)
180 mm CLASS 3 AGGREGATE BASE

10 — 50 mm-850 mm OVERLAY HOT MIX ASPHALT (TYPE B)

11 — 100 mm PORTLAND CEMENT CONCRETE
150 mm CLASS 3 AGGREGATE BASE

12 — 200 mm PORTLAND CEMENT CONCRETE
330 mm CLASS 2 AGGREGATE BASE
385 mm CLASS 4 AGGREGATE SUBBASE

13 — 180 mm HOT MIX ASPHALT (TYPE B)
285 mm CLASS 2 AGGREGATE BASE
330 mm CLASS 4 AGGREGATE SUBBASE

### DESIGN DESIGNATION:

2005 ADT = 171,289 D=56%
2030 ADT = 280,914 T=10%
DHV = 4838 V=115 km/h

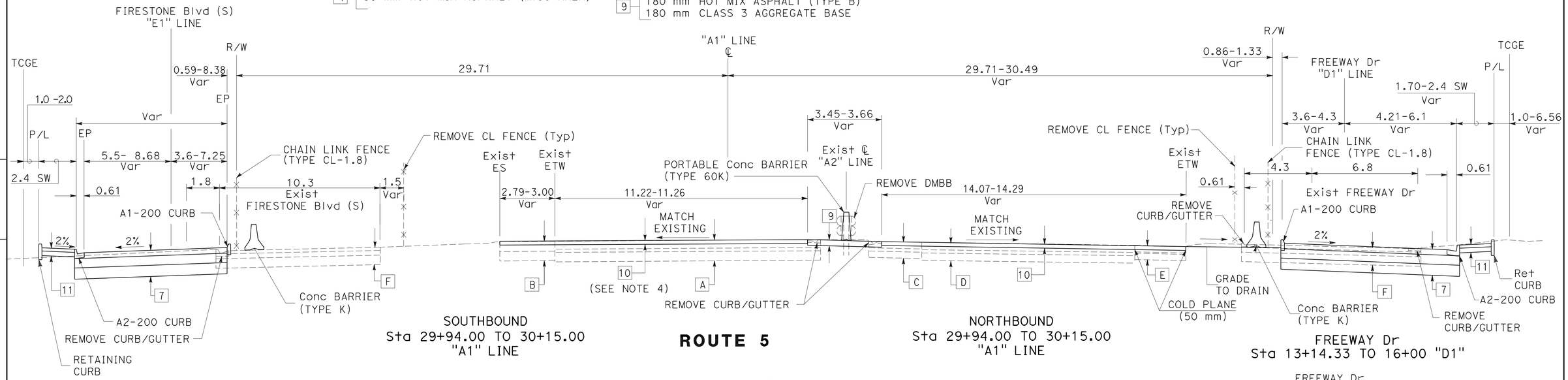


ALL DIMENSIONS ARE IN METERS UNLESS OTHERWISE SHOWN

# TYPICAL CROSS SECTIONS

NO SCALE

**X-1**

| | | | |
|---|---|---|---|
| KEVIN Q NGUYEN | KN | 9/09 | |
| NGIM NANCY PE | REVISED BY | DATE REVISED | |
| CALCULATED-DESIGNED BY | CHECKED BY | | |
| FUNCTIONAL SUPERVISOR | NGIM NANCY PE | | |

STATE OF CALIFORNIA - DEPARTMENT OF TRANSPORTATION
Caltrans OFFICE OF DESIGN A

LAST REVISION 00-00-00
DATE PLOTTED => 23-JUN-2010
TIME PLOTTED => 07:52

| Dist | COUNTY | ROUTE | KILOMETER POST TOTAL PROJECT | SHEET No. | TOTAL SHEETS |
|---|---|---|---|---|---|
| 07 | LA | 5 | 2.9/4.9 | 3 | 1082 |

REGISTERED CIVIL ENGINEER 12-14-09 DATE

6-21-10
PLANS APPROVAL DATE

REGISTERED PROFESSIONAL ENGINEER NGIM NANCY PE No. 58161 Exp. 6-30-10 CIVIL STATE OF CALIFORNIA

*THE STATE OF CALIFORNIA OR ITS OFFICERS OR AGENTS SHALL NOT BE RESPONSIBLE FOR THE ACCURACY OR COMPLETENESS OF ELECTRONIC COPIES OF THIS PLAN SHEET.*

Caltrans Metric

## NOTES:

1. COLD PLANE AC PAVMENT AND OVERLAY HMA ONLY FROM Sta 16+00.00 TO Sta 21+00.00 "D1".
2. SEE LAYOUT FOR TYPE AND LIMIT OF CONCRETE BARRIER.

## EXISTING STRUCTURAL SECTIONS

A — 250 mm AC (TYPE B)
200 mm CTB
305 mm & Var IMPORTED SUBBASE MATERIAL

B — 150 mm AC (TYPE B)
205 mm CTB
305 mm & Var IMPORTED SUBBASE MATERIAL

C — 205 mm PCC
200 mm CTB
205 mm & Var IMPORTED SUBBASE MATERIAL

D — 230 mm PCC
200 mm CTB
205 mm & Var IMPORTED SUBBASE MATERIAL

E — 290 mm AC (TYPE B)
200 mm IMPORTED SUBBASE MATERIAL

F — 100 mm AC (TYPE B)
200 mm UNTREATED ROCK BASE
305 mm IMPORTED SUBBASE MATERIAL

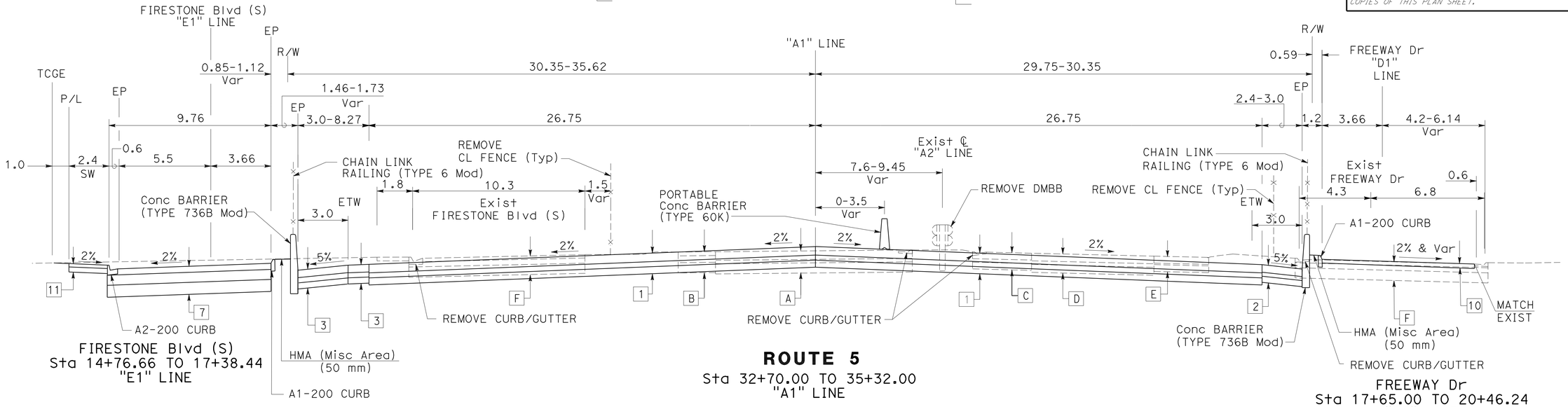


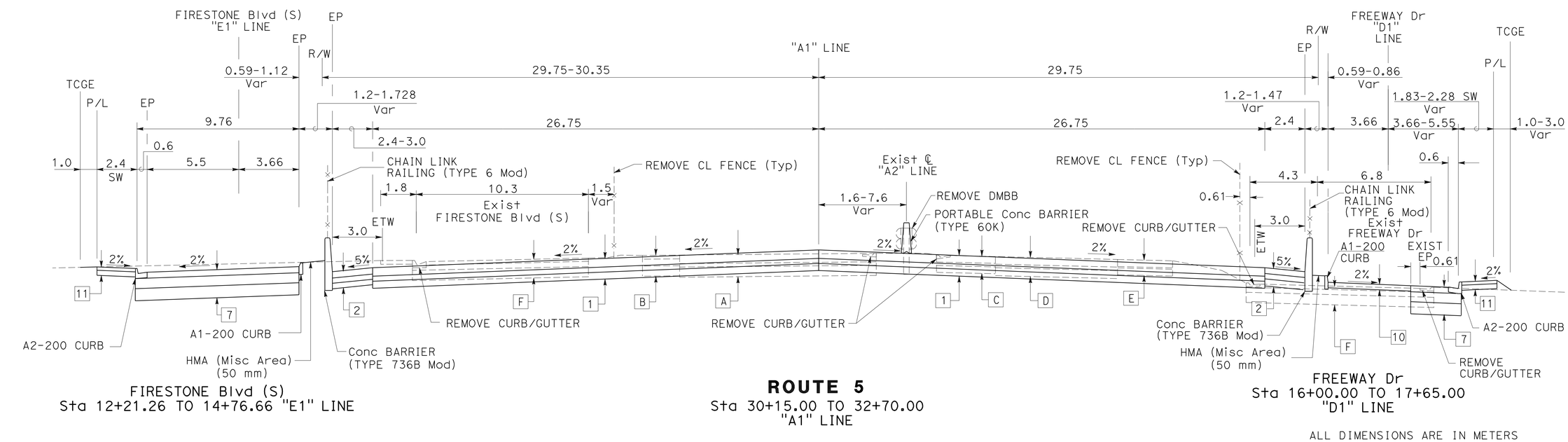


ALL DIMENSIONS ARE IN METERS
UNLESS OTHERWISE SHOWN

# TYPICAL CROSS SECTIONS

NO SCALE

**X-2**

| | |
|---|---|
| REVISED BY | KN |
| DATE REVISED | 9/09 |
| CALCULATED-DESIGNED BY | KEVIN Q NGUYEN |
| CHECKED BY | NGIM NANCY PE |
| FUNCTIONAL SUPERVISOR | NGIM NANCY PE |

STATE OF CALIFORNIA - DEPARTMENT OF TRANSPORTATION
Caltrans OFFICE OF DESIGN A

LAST REVISION 00-00-00
DATE PLOTTED => 22-JUN-2010
TIME PLOTTED => 07:49

CU 07225 EA 2159C1

| Dist | COUNTY | ROUTE | KILOMETER POST TOTAL PROJECT | SHEET No. | TOTAL SHEETS |
|---|---|---|---|---|---|
| 07 | LA | 5 | 2.9/4.9 | 4 | 1082 |

Ngim N. Pe 12-23-09
REGISTERED CIVIL ENGINEER DATE

6-21-10
PLANS APPROVAL DATE

REGISTERED PROFESSIONAL ENGINEER NGIM NANCY PE No. 58161 Exp. 6-30-10 CIVIL STATE OF CALIFORNIA

*THE STATE OF CALIFORNIA OR ITS OFFICERS OR AGENTS SHALL NOT BE RESPONSIBLE FOR THE ACCURACY OR COMPLETENESS OF ELECTRONIC COPIES OF THIS PLAN SHEET.*

Caltrans Metric

## NOTES:

1. SEE LAYOUT SHEETS FOR TYPE AND LIMIT OF CONCRETE BARRIER (TYPE 60G), MBGR, HMA DIKE AND ROCK BLANKET.
2. COLD PLANE AND HMA OVERLAY ONLY "D1" FROM Sta 16+00.00 TO Sta 21+00.00
3. FOR FIRESTONE Blvd (SOUTH) DETAIL, SEE X-17.

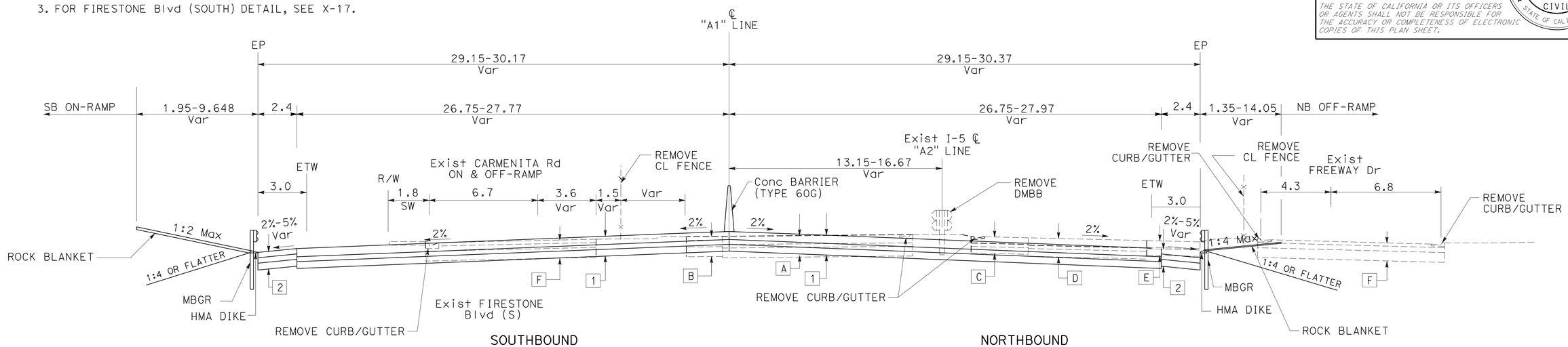


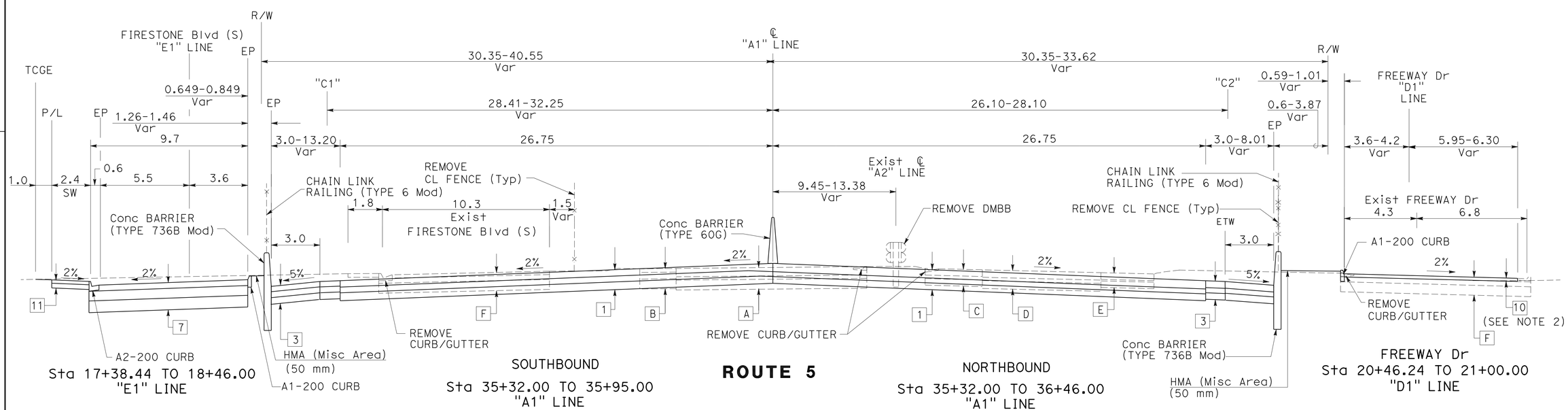


ALL DIMENSIONS ARE IN METERS UNLESS OTHERWISE SHOWN

# TYPICAL CROSS SECTIONS

NO SCALE

**X-3**

| REVISED BY | DATE REVISED |
|---|---|
| KN | 9/09 |

CALCULATED-DESIGNED BY: KEVIN Q. NGUYEN
CHECKED BY: NGIM NANCY PE
FUNCTIONAL SUPERVISOR: NGIM NANCY PE

STATE OF CALIFORNIA - DEPARTMENT OF TRANSPORTATION
Caltrans OFFICE OF DESIGN A

LAST REVISION 00-00-00
DATE PLOTTED => 23-JUN-2010
TIME PLOTTED => 07:58

| Dist | COUNTY | ROUTE | KILOMETER POST TOTAL PROJECT | SHEET No. | TOTAL SHEETS |
|---|---|---|---|---|---|
| 07 | LA | 5 | 2.9/4.9 | 5 | 1082 |

REGISTERED CIVIL ENGINEER 12-23-09 DATE

6-21-10
PLANS APPROVAL DATE

REGISTERED PROFESSIONAL ENGINEER NGIM NANCY PE No. 58161 Exp. 6-30-10 CIVIL STATE OF CALIFORNIA

*THE STATE OF CALIFORNIA OR ITS OFFICERS OR AGENTS SHALL NOT BE RESPONSIBLE FOR THE ACCURACY OR COMPLETENESS OF ELECTRONIC COPIES OF THIS PLAN SHEET.*

Caltrans Metric

NOTE:

SEE LAYOUT SHEETS FOR TYPE AND LIMIT OF CONCRETE BARRIER.

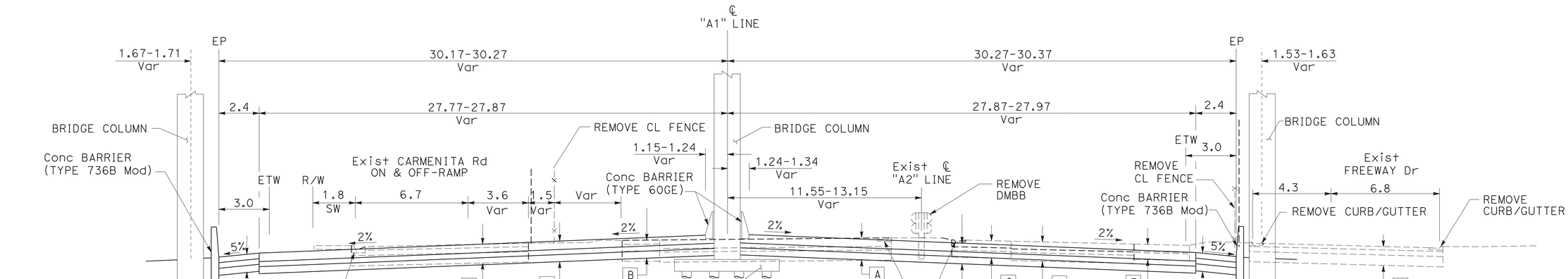


**ROUTE 5**
Sta 38+98.20 TO 39+40.70
"A1" LINE

ALL DIMENSIONS ARE IN METERS
UNLESS OTHERWISE SHOWN

# TYPICAL CROSS SECTIONS

NO SCALE

**X-4**

STATE OF CALIFORNIA - DEPARTMENT OF TRANSPORTATION
Caltrans OFFICE OF DESIGN A

FUNCTIONAL SUPERVISOR: NGIM NANCY PE
CALCULATED-DESIGNED BY: KEVIN Q NGUYEN
CHECKED BY: NGIM NANCY PE
REVISED BY: KN
DATE REVISED: 9/09

LAST REVISION 00-00-00
DATE PLOTTED => 22-JUN-2010
TIME PLOTTED => 07:49

| Dist | COUNTY | ROUTE | KILOMETER POST TOTAL PROJECT | SHEET No. | TOTAL SHEETS |
|---|---|---|---|---|---|
| 07 | LA | 5 | 2.9/4.9 | 6 | 1082 |

REGISTERED CIVIL ENGINEER 12-23-09 DATE

6-21-10
PLANS APPROVAL DATE

REGISTERED PROFESSIONAL ENGINEER NGIM NANCY PE No. 58161 Exp. 6-30-10 CIVIL STATE OF CALIFORNIA

*THE STATE OF CALIFORNIA OR ITS OFFICERS OR AGENTS SHALL NOT BE RESPONSIBLE FOR THE ACCURACY OR COMPLETENESS OF ELECTRONIC COPIES OF THIS PLAN SHEET.*

Caltrans Metric

NOTE:

SEE LAYOUT SHEETS FOR TYPE AND LIMIT OF CONCRETE BARRIER, MBGR, HMA DIKE AND ROCK BLANKET.

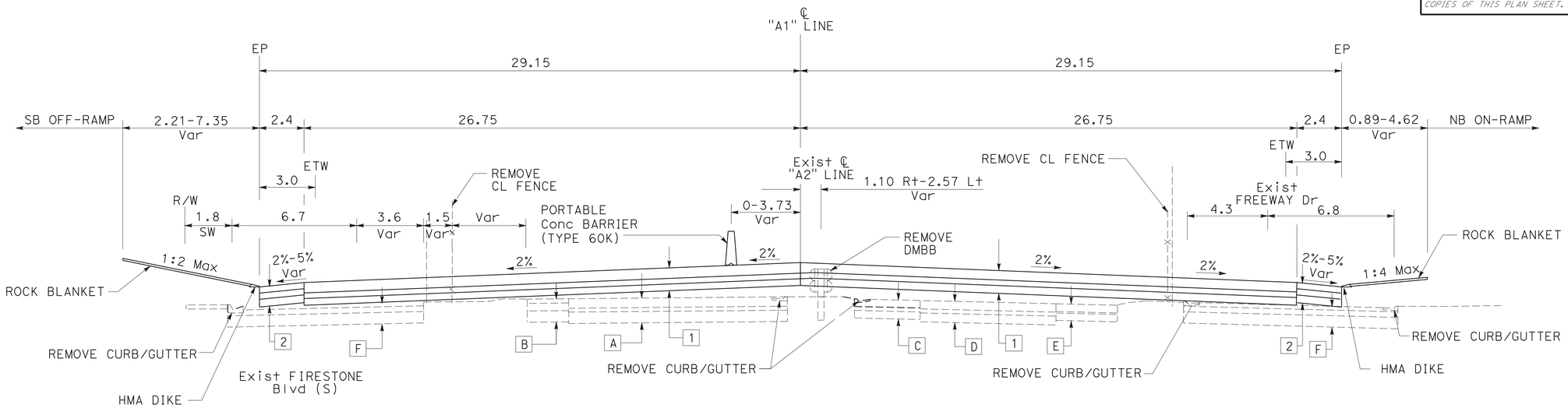


SOUTHBOUND
Sta 41+51.04 TO 42+23.00
"A1" LINE

NORTHBOUND
Sta 41+51.04 TO 41+91.00
"A1" LINE

**ROUTE 5**

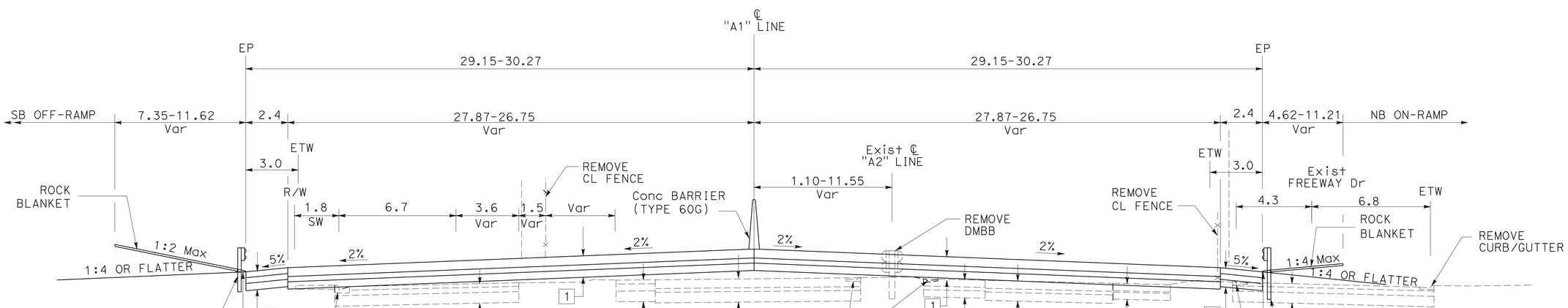


**ROUTE 5**
Sta 39+40.70 TO 41+51.04
"A1" LINE

ALL DIMENSIONS ARE IN METERS UNLESS OTHERWISE SHOWN

# TYPICAL CROSS SECTIONS

NO SCALE

**X-5**

STATE OF CALIFORNIA - DEPARTMENT OF TRANSPORTATION
Caltrans **OFFICE OF DESIGN A**

FUNCTIONAL SUPERVISOR: NGIM NANCY PE
CALCULATED-DESIGNED BY: KEVIN Q NGUYEN
CHECKED BY: NGIM NANCY PE
REVISED BY: KN
DATE REVISED: 9/09

LAST REVISION 00-00-00
DATE PLOTTED => 22-JUN-2010
TIME PLOTTED => 07:50

| Dist | COUNTY | ROUTE | KILOMETER POST TOTAL PROJECT | SHEET No. | TOTAL SHEETS |
|---|---|---|---|---|---|
| 07 | LA | 5 | 2.9/4.9 | 7 | 1082 |

Caltrans Metric

REGISTERED CIVIL ENGINEER 12-23-09 DATE

6-21-10
PLANS APPROVAL DATE

REGISTERED PROFESSIONAL ENGINEER NGIM NANCY PE No. 58161 Exp. 6-30-10 CIVIL STATE OF CALIFORNIA

*THE STATE OF CALIFORNIA OR ITS OFFICERS OR AGENTS SHALL NOT BE RESPONSIBLE FOR THE ACCURACY OR COMPLETENESS OF ELECTRONIC COPIES OF THIS PLAN SHEET.*

**NOTE:**

SEE LAYOUT SHEETS FOR TYPE AND LIMIT OF CONCRETE BARRIER.

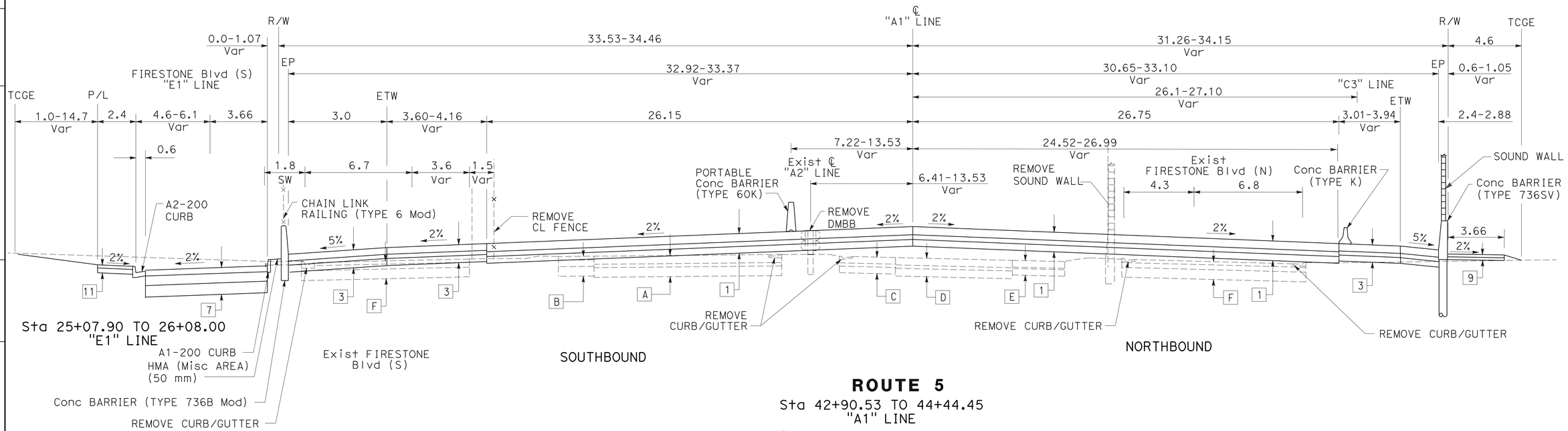


**ROUTE 5**

Sta 42+90.53 TO 44+44.45
"A1" LINE

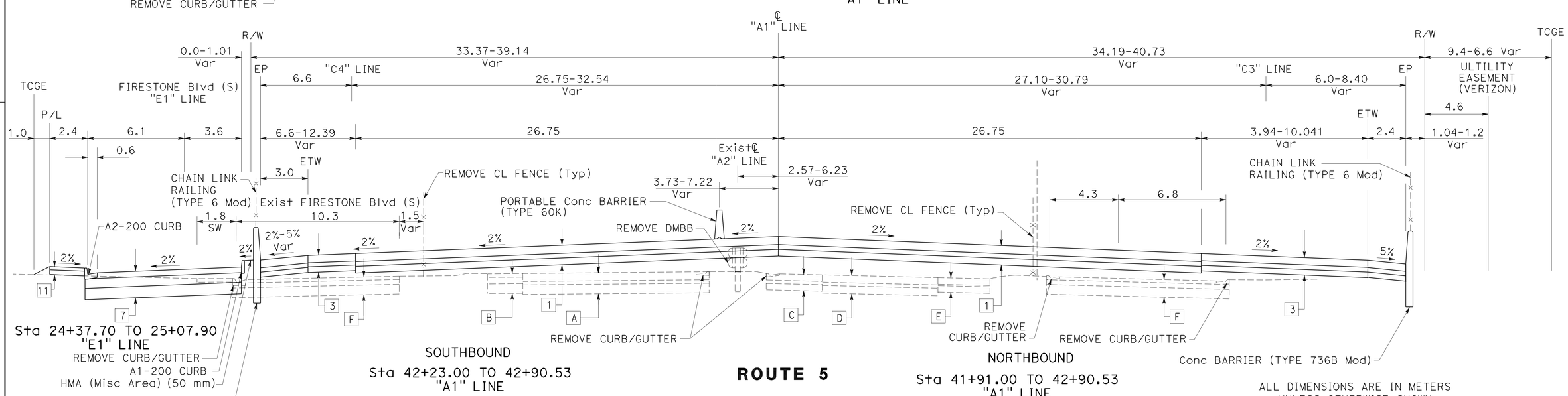


**ROUTE 5**

ALL DIMENSIONS ARE IN METERS UNLESS OTHERWISE SHOWN

# TYPICAL CROSS SECTIONS

NO SCALE

**X-6**

| | |
|---|---|
| KEVIN Q. NGUYEN | KN |
| NGIM NANCY PE | 9/09 |
| REVISED BY | DATE REVISED |
| CALCULATED-DESIGNED BY | |
| CHECKED BY | |
| FUNCTIONAL SUPERVISOR | |
| NGIM NANCY PE | |

STATE OF CALIFORNIA - DEPARTMENT OF TRANSPORTATION
Caltrans OFFICE OF DESIGN A

LAST REVISION 00-00-00 | DATE PLOTTED => 22-JUN-2010 | TIME PLOTTED => 07:50

| Dist | COUNTY | ROUTE | KILOMETER POST TOTAL PROJECT | SHEET No. | TOTAL SHEETS |
|---|---|---|---|---|---|
| 07 | LA | 5 | 2.9/4.9 | 8 | 1082 |

REGISTERED CIVIL ENGINEER 12-23-09 DATE

6-21-10
PLANS APPROVAL DATE

REGISTERED PROFESSIONAL ENGINEER NGIM NANCY PE No. 58161 Exp. 6-30-10 CIVIL STATE OF CALIFORNIA

*THE STATE OF CALIFORNIA OR ITS OFFICERS OR AGENTS SHALL NOT BE RESPONSIBLE FOR THE ACCURACY OR COMPLETENESS OF ELECTRONIC COPIES OF THIS PLAN SHEET.*

Caltrans Metric

NOTE:

SEE LAYOUT SHEETS FOR TYPE AND LIMIT OF CONCRETE BARRIER AND LIMIT OF 12.

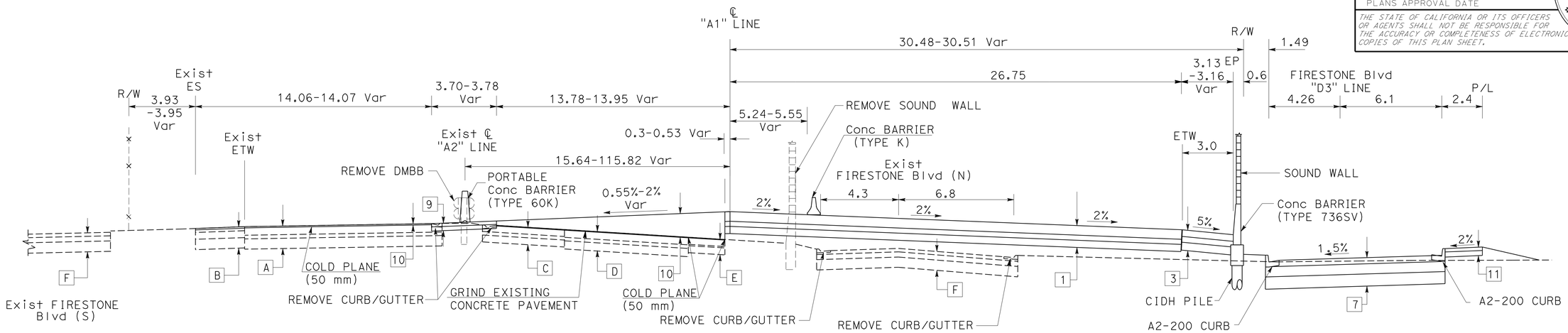


SOUTHBOUND

STA 45+04.00 TO 45+10.00
"A1" LINE

**ROUTE 5**

NORTHBOUND

STA 45+04.00 to 45+10.00
"A1" LINE

STA 10+50.00 to 10+52.00
"D3" LINE

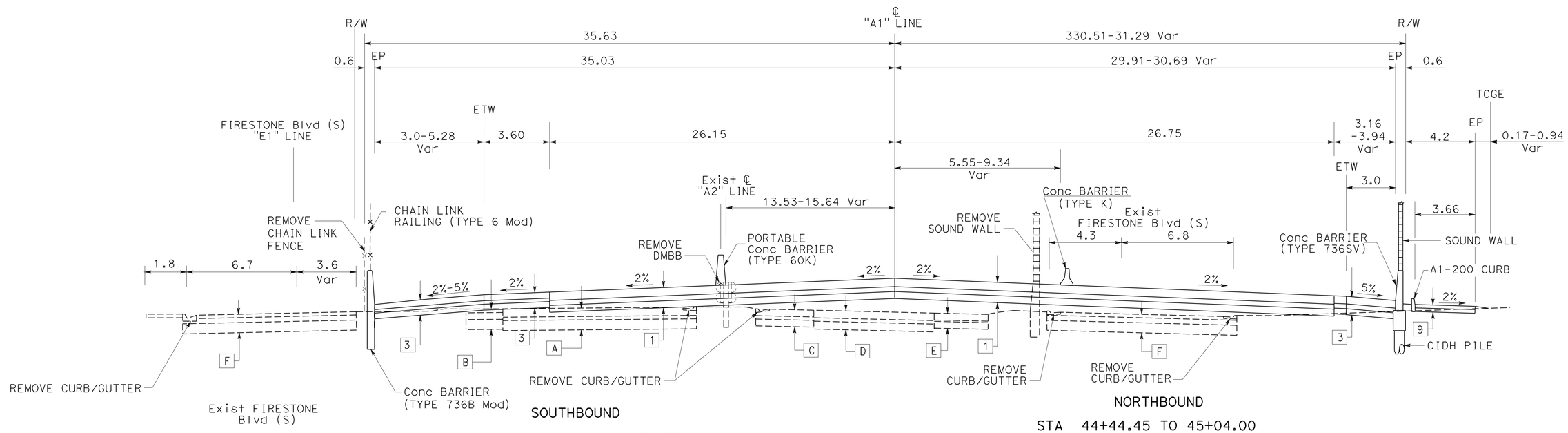


SOUTHBOUND

STA 44+44.45 TO 45+04.00
"A1" LINE

**ROUTE 5**

NORTHBOUND

STA 44+44.45 TO 45+04.00
"A1" LINE

# TYPICAL CROSS SECTIONS

NO SCALE

ALL DIMENSIONS ARE IN METERS
UNLESS OTHERWISE SHOWN

**X-7**

STATE OF CALIFORNIA - DEPARTMENT OF TRANSPORTATION
Caltrans **OFFICE OF DESIGN A**

FUNCTIONAL SUPERVISOR: NGIM NANCY PE
CALCULATED-DESIGNED BY: KEVIN Q. NGUYEN
CHECKED BY: NGIM NANCY PE
REVISED BY / DATE REVISED

LAST REVISION 00-00-00 | DATE PLOTTED => 22-JUN-2010 | TIME PLOTTED => 07:50

| Dist | COUNTY | ROUTE | KILOMETER POST TOTAL PROJECT | SHEET No. | TOTAL SHEETS |
|---|---|---|---|---|---|
| 07 | LA | 5 | 2.9/4.9 | 9 | 1082 |

REGISTERED CIVIL ENGINEER 12-23-09 DATE

6-21-10
PLANS APPROVAL DATE

REGISTERED PROFESSIONAL ENGINEER NGIM NANCY PE No. 58161 Exp. 6-30-10 CIVIL STATE OF CALIFORNIA

*THE STATE OF CALIFORNIA OR ITS OFFICERS OR AGENTS SHALL NOT BE RESPONSIBLE FOR THE ACCURACY OR COMPLETENESS OF ELECTRONIC COPIES OF THIS PLAN SHEET.*

Caltrans Metric

NOTE:

SEE LAYOUT SHEETS FOR TYPE AND LIMIT OF CONCRETE BARRIER.

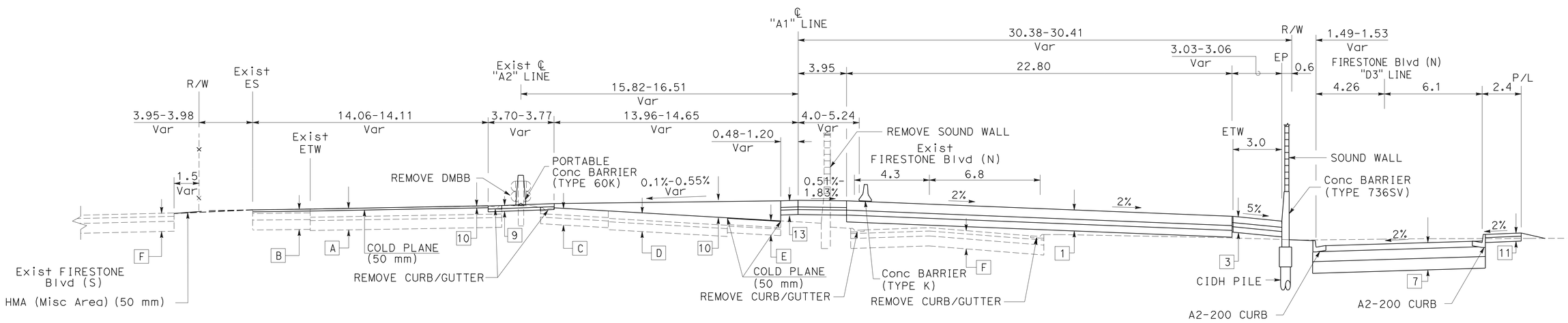


**ROUTE 5**
Sta 45+04.00 TO 45+35.00
"A1" LINE

Sta 10+52.00 TO 10+83.00
"D3" LINE

ALL DIMENSIONS ARE IN METERS
UNLESS OTHERWISE SHOWN

# TYPICAL CROSS SECTIONS

NO SCALE

**X-8**

| | |
|---|---|
| CALCULATED-DESIGNED BY | KEVIN Q. NGUYEN |
| CHECKED BY | NGIM NANCY PE |
| FUNCTIONAL SUPERVISOR | NGIM NANCY PE |
| REVISED BY | KN |
| DATE REVISED | 9/09 |

STATE OF CALIFORNIA - DEPARTMENT OF TRANSPORTATION
Caltrans OFFICE OF DESIGN A

LAST REVISION 00-00-00 DATE PLOTTED => 22-JUN-2010 TIME PLOTTED => 07:50

| Dist | COUNTY | ROUTE | KILOMETER POST TOTAL PROJECT | SHEET No. | TOTAL SHEETS |
|---|---|---|---|---|---|
| 07 | LA | 5 | 2.9/4.9 | 10 | 1082 |

Ngim N. Pe 12-23-09
REGISTERED CIVIL ENGINEER DATE

6-21-10
PLANS APPROVAL DATE

REGISTERED PROFESSIONAL ENGINEER NGIM NANCY PE No. 58161 Exp. 6-30-10 CIVIL STATE OF CALIFORNIA

*THE STATE OF CALIFORNIA OR ITS OFFICERS OR AGENTS SHALL NOT BE RESPONSIBLE FOR THE ACCURACY OR COMPLETENESS OF ELECTRONIC COPIES OF THIS PLAN SHEET.*

Caltrans Metric

## NOTES:

1. SEE LAYOUT SHEETS FOR TYPE AND LIMIT OF CONCRETE BARRIER.
2. SEE CONCRETE BARRIER PROFILE SHEET FOR FUTURE PG.

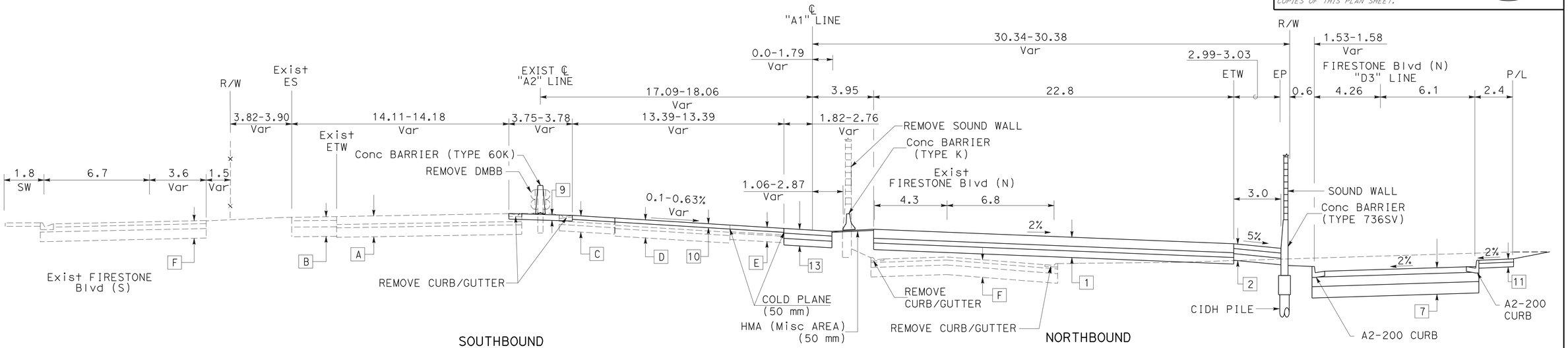


**ROUTE 5**

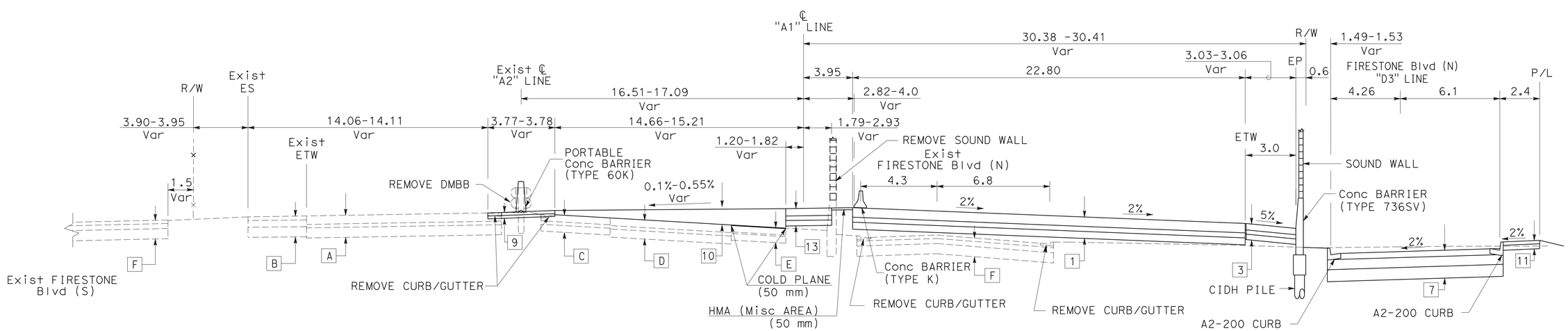


**ROUTE 5**
Sta 45+35.00 TO 45+60.00
"A1" LINE

ALL DIMENSIONS ARE IN METERS
UNLESS OTHERWISE SHOWN

# TYPICAL CROSS SECTIONS

NO SCALE

**X-9**

| | | | |
|---|---|---|---|
| KEVIN Q. NGUYEN | KN | CALCULATED-DESIGNED BY | |
| NGIM NANCY PE | 9/09 | CHECKED BY | |
| REVISED BY | | FUNCTIONAL SUPERVISOR | |
| DATE REVISED | | NGIM NANCY PE | |

STATE OF CALIFORNIA - DEPARTMENT OF TRANSPORTATION
Caltrans OFFICE OF DESIGN A

LAST REVISION 00-00-00
DATE PLOTTED => 22-JUN-2010
TIME PLOTTED => 07:50

| Dist | COUNTY | ROUTE | KILOMETER POST TOTAL PROJECT | SHEET No. | TOTAL SHEETS |
|---|---|---|---|---|---|
| 07 | LA | 5 | 2.9/4.9 | 11 | 1082 |

REGISTERED CIVIL ENGINEER 12-23-09 DATE

6-21-10
PLANS APPROVAL DATE

REGISTERED PROFESSIONAL ENGINEER NGIM NANCY PE No. 58161 Exp. 6-30-10 CIVIL STATE OF CALIFORNIA

*THE STATE OF CALIFORNIA OR ITS OFFICERS OR AGENTS SHALL NOT BE RESPONSIBLE FOR THE ACCURACY OR COMPLETENESS OF ELECTRONIC COPIES OF THIS PLAN SHEET.*

Caltrans Metric

NOTE:
SEE LAYOUT FOR TYPE AND/OR LIMIT OF CONCRETE BARRIER.

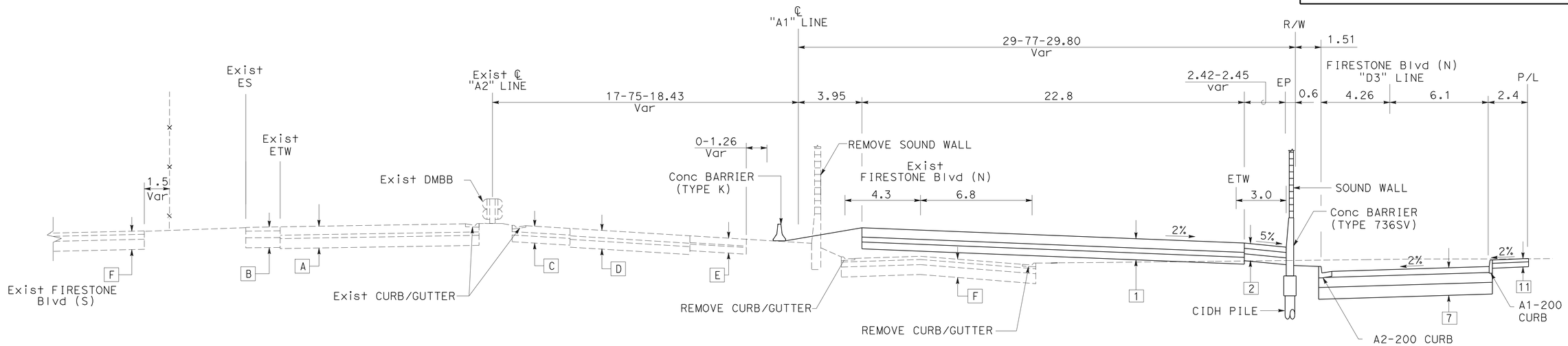


**ROUTE 5**
Sta 47+01.39 TO 48+00.00
"A1" LINE

Sta 12+50.70 TO 13+49.30
"D3" LINE

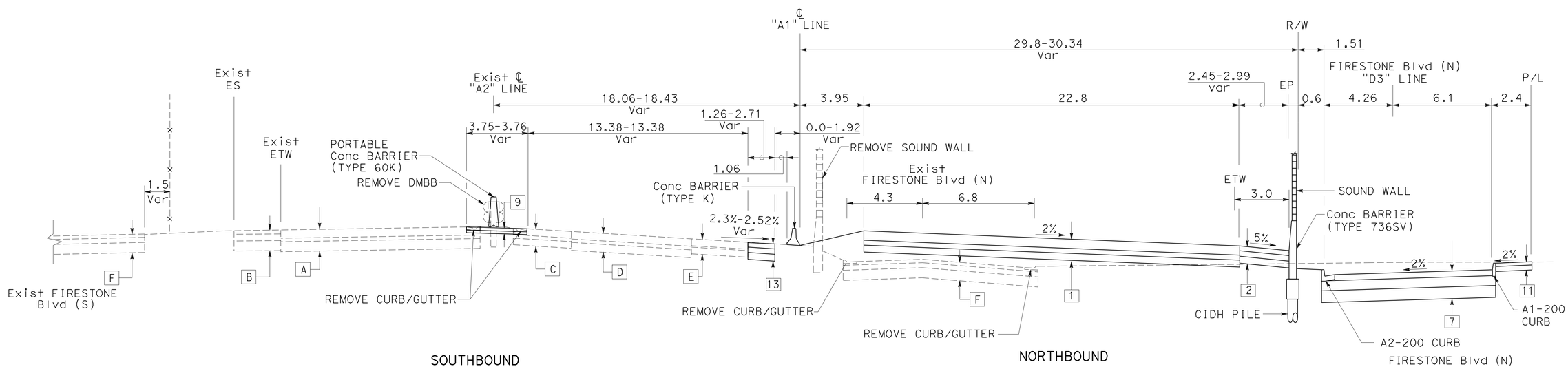


**ROUTE 5**
Sta 46+20 TO 47+01.39
"A1" LINE

Sta 11+96.90 TO 12+50.70
"D3" LINR

ALL DIMENSIONS ARE IN METERS
UNLESS OTHERWISE SHOWN

# TYPICAL CROSS SECTIONS

NO SCALE

**X-10**

| REVISED BY | DATE REVISED |
|---|---|
| KN | 9/09 |

CALCULATED-DESIGNED BY: KEVIN Q. NGUYEN
CHECKED BY: NGIM NANCY PE
FUNCTIONAL SUPERVISOR: NGIM NANCY PE

STATE OF CALIFORNIA - DEPARTMENT OF TRANSPORTATION
Caltrans OFFICE OF DESIGN A

LAST REVISION 00-00-00
DATE PLOTTED => 22-JUN-2010
TIME PLOTTED => 07:50

| Dist | COUNTY | ROUTE | KILOMETER POST TOTAL PROJECT | SHEET No. | TOTAL SHEETS |
|---|---|---|---|---|---|
| 07 | LA | 5 | 2.9/4.9 | 12 | 1082 |

REGISTERED CIVIL ENGINEER 12-23-09 DATE

6-21-10
PLANS APPROVAL DATE

REGISTERED PROFESSIONAL ENGINEER NGIM NANCY PE No. 58161 Exp. 6-30-10 CIVIL STATE OF CALIFORNIA

*THE STATE OF CALIFORNIA OR ITS OFFICERS OR AGENTS SHALL NOT BE RESPONSIBLE FOR THE ACCURACY OR COMPLETENESS OF ELECTRONIC COPIES OF THIS PLAN SHEET.*

Caltrans Metric

**NOTE:**

SEE STRUCTURE PLANS FOR BRIDGE COLUMN AND RETAINING WALL DETAILS.

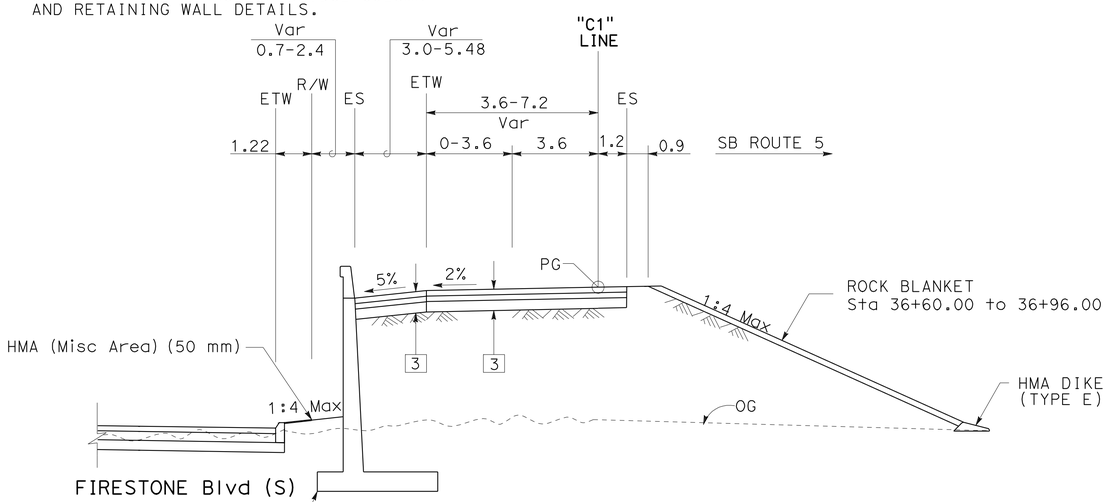


**SB ON-RAMP**
Sta 36+60.00 TO 37+29.00
"C1" LINE

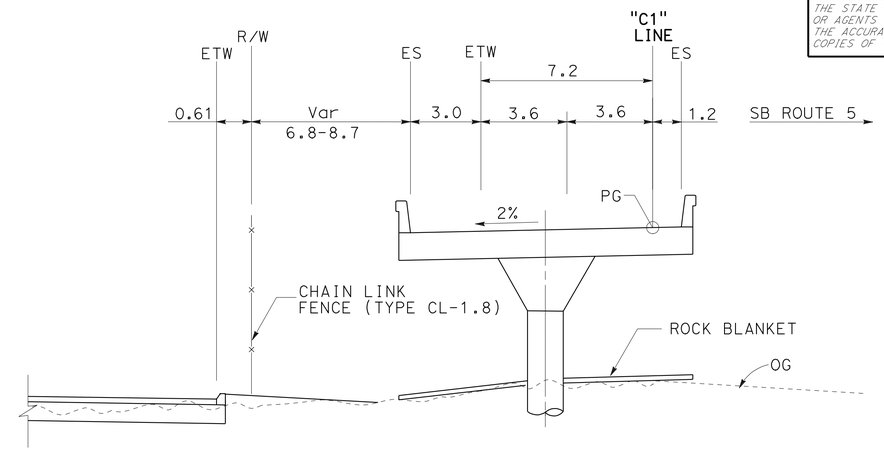


**SB ON-RAMP**
Sta 37+51.00 TO 38+66.00
"C1" LINE

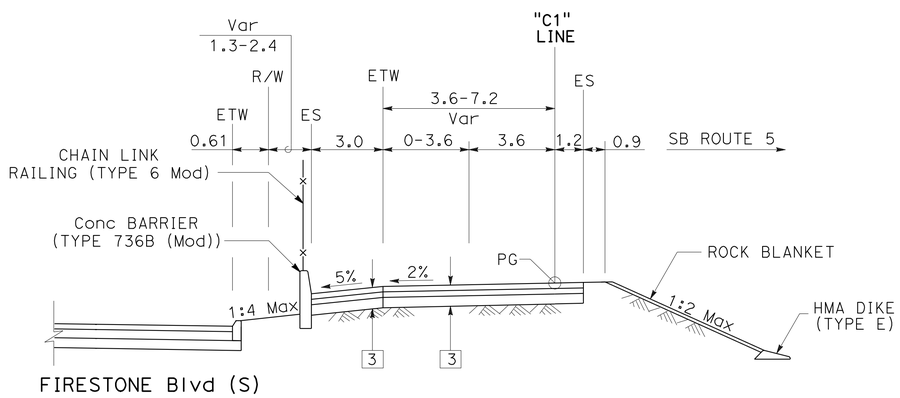


**SB ON-RAMP**
Sta 36+00.00 TO 36+60.00
"C1" LINE

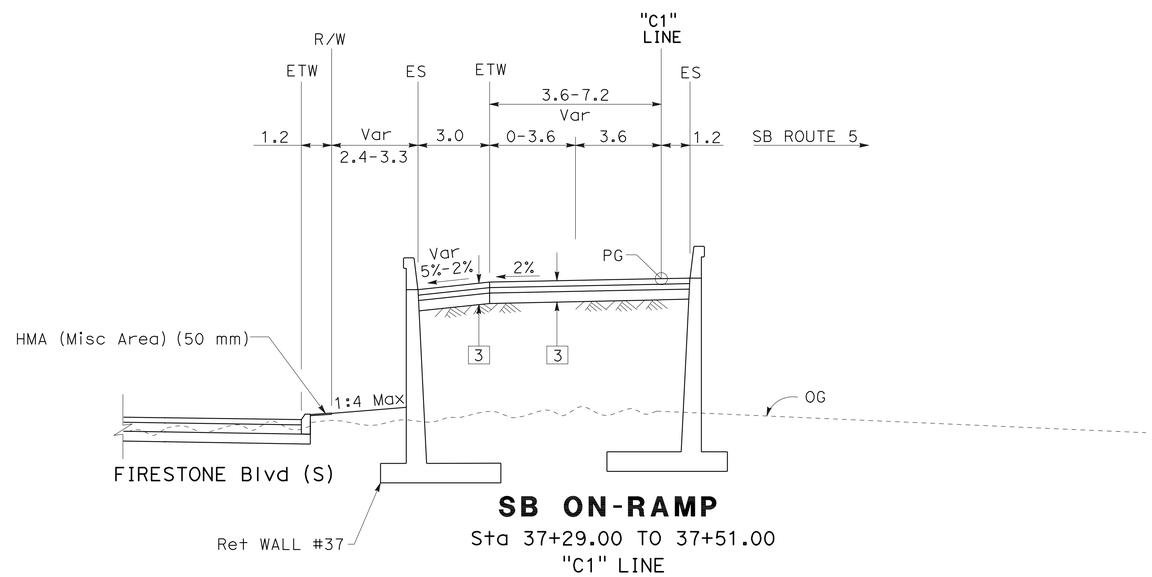


**SB ON-RAMP**
Sta 37+29.00 TO 37+51.00
"C1" LINE

ALL DIMENSIONS ARE IN METERS
UNLESS OTHERWISE SHOWN

# TYPICAL CROSS-SECTIONS

NO SCALE

**X-11**

| | |
|---|---|
| KEVIN Q NGUYEN | KN |
| NGIM NANCY PE | 9/09 |
| REVISED BY | DATE REVISED |
| CALCULATED-DESIGNED BY | |
| CHECKED BY | |
| FUNCTIONAL SUPERVISOR | |
| NGIM NANCY PE | |

STATE OF CALIFORNIA - DEPARTMENT OF TRANSPORTATION
Caltrans **OFFICE OF DESIGN A**

LAST REVISION 00-00-00
DATE PLOTTED => 22-JUN-2010
TIME PLOTTED => 07:50

| Dist | COUNTY | ROUTE | KILOMETER POST TOTAL PROJECT | SHEET No. | TOTAL SHEETS |
|---|---|---|---|---|---|
| 07 | LA | 5 | 2.9/4.9 | 13 | 1082 |

REGISTERED CIVIL ENGINEER 12-23-09 DATE

6-21-10
PLANS APPROVAL DATE

REGISTERED PROFESSIONAL ENGINEER NGIM NANCY PE No. 58161 Exp. 6-30-10 CIVIL STATE OF CALIFORNIA

*THE STATE OF CALIFORNIA OR ITS OFFICERS OR AGENTS SHALL NOT BE RESPONSIBLE FOR THE ACCURACY OR COMPLETENESS OF ELECTRONIC COPIES OF THIS PLAN SHEET.*

Caltrans Metric

NOTE:

SEE CONSTRUCTION DETAILS PLANS FOR ROCK BLANKET DETAILS.

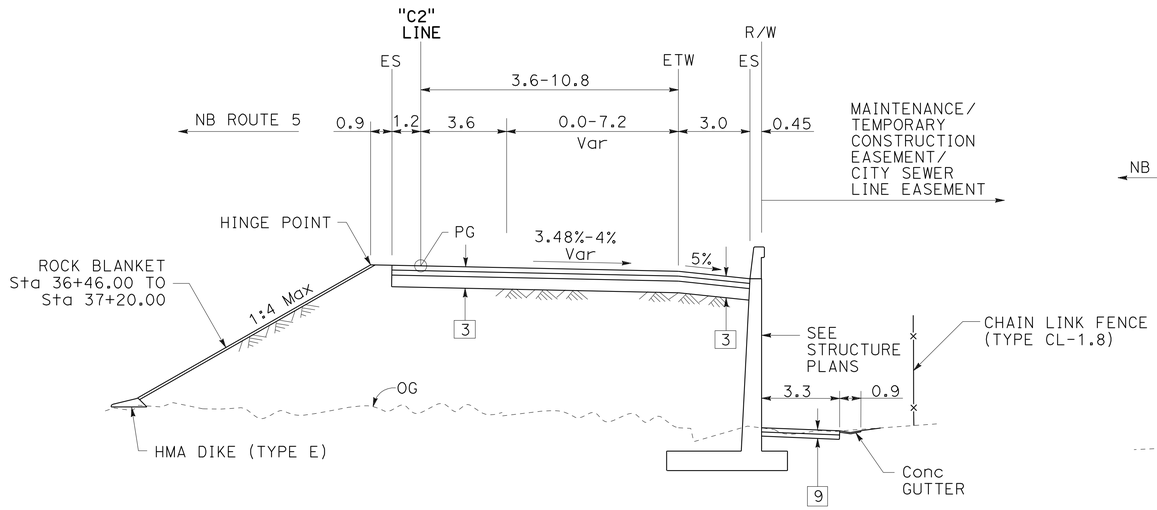


**NB OFF-RAMP**
Sta 36+90.00 TO 37+80.00
"C2" LINE

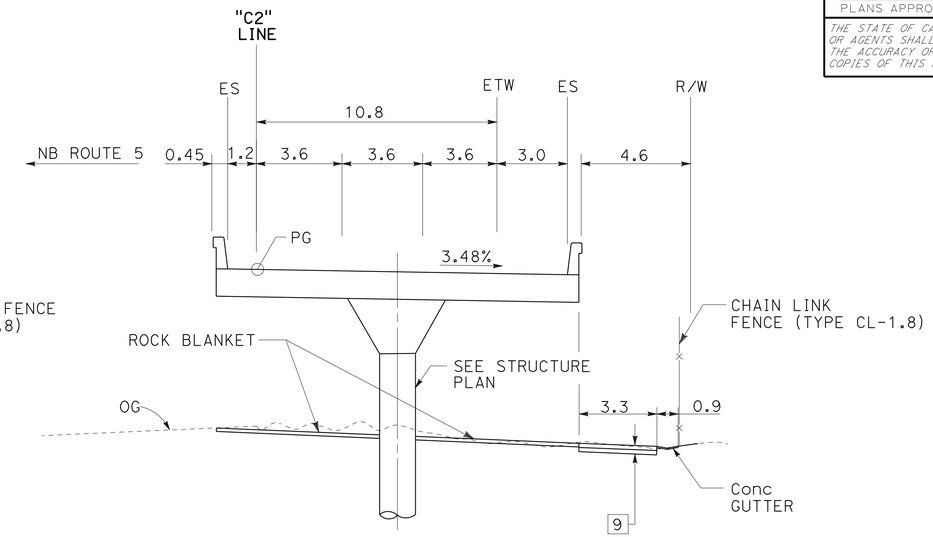


**NB OFF-RAMP**
Sta 38+36.00 TO 39+19.70
"C2" LINE

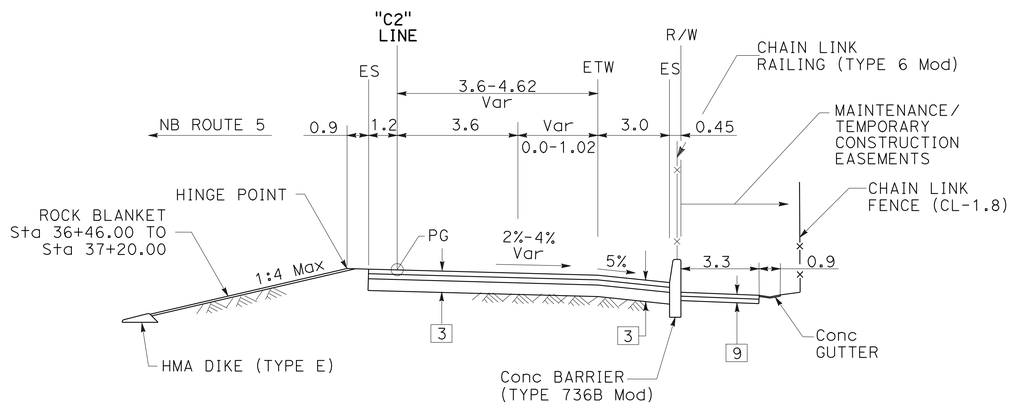


**NB OFF-RAMP**
Sta 36+05.79 TO 36+90.00
"C2" LINE

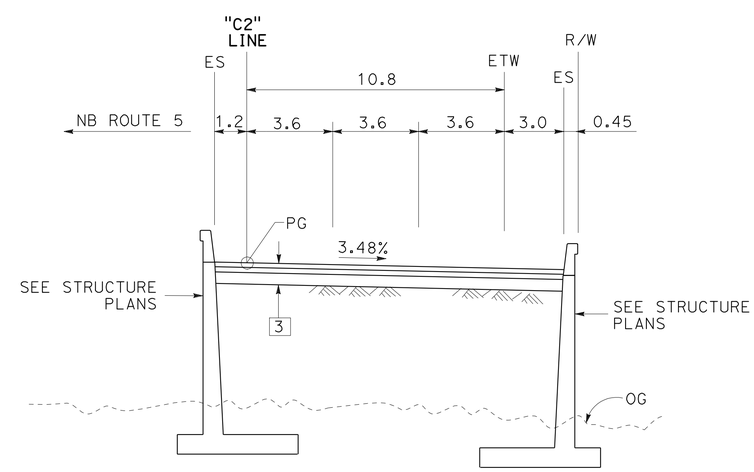


**NB OFF-RAMP**
Sta 37+80.00 TO 38+36.00
"C2" LINE

ALL DIMENSIONS ARE IN METERS
UNLESS OTHERWISE SHOWN

# TYPICAL CROSS-SECTIONS

NO SCALE

**X-12**

| | |
|---|---|
| KEVIN Q NGUYEN | KN |
| NGIM NANCY PE | 9/09 |
| CALCULATED-DESIGNED BY | REVISED BY |
| CHECKED BY | DATE REVISED |
| FUNCTIONAL SUPERVISOR | |
| NGIM NANCY PE | |

STATE OF CALIFORNIA - DEPARTMENT OF TRANSPORTATION
Caltrans OFFICE OF DESIGN A

LAST REVISION 00-00-00 | DATE PLOTTED => 22-JUN-2010 | TIME PLOTTED => 07:50

| Dist | COUNTY | ROUTE | KILOMETER POST TOTAL PROJECT | SHEET No. | TOTAL SHEETS |
|---|---|---|---|---|---|
| 07 | LA | 5 | 2.9/4.9 | 14 | 1082 |

REGISTERED CIVIL ENGINEER 12-23-09 DATE

6-21-10
PLANS APPROVAL DATE

REGISTERED PROFESSIONAL ENGINEER NGIM NANCY PE No. 58161 Exp. 6-30-10 CIVIL STATE OF CALIFORNIA

*THE STATE OF CALIFORNIA OR ITS OFFICERS OR AGENTS SHALL NOT BE RESPONSIBLE FOR THE ACCURACY OR COMPLETENESS OF ELECTRONIC COPIES OF THIS PLAN SHEET.*

Caltrans Metric

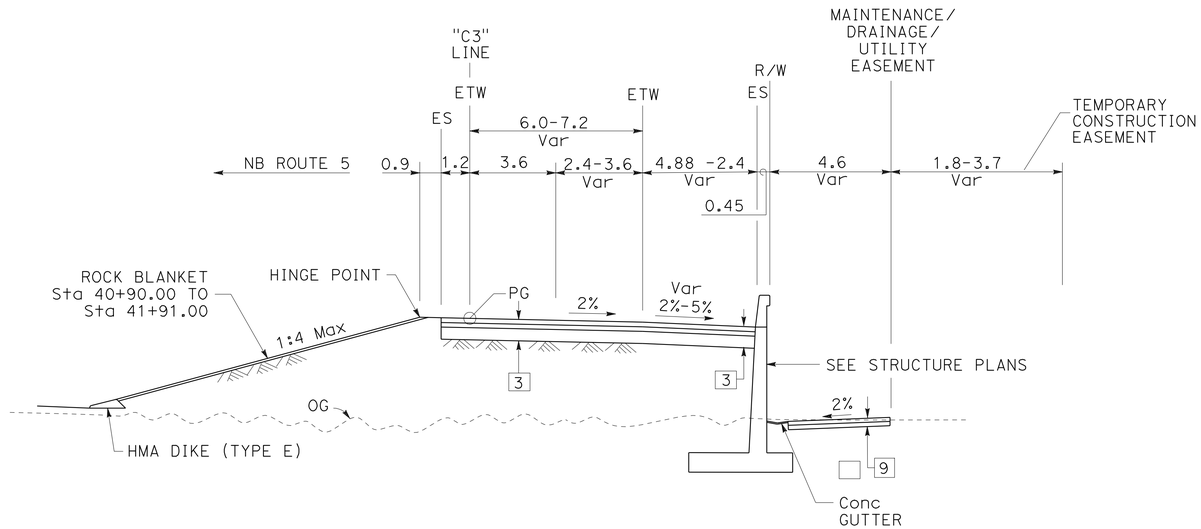


## NB ON-RAMP
Sta 40+90.00 TO 41+90.41
"C3" LINE

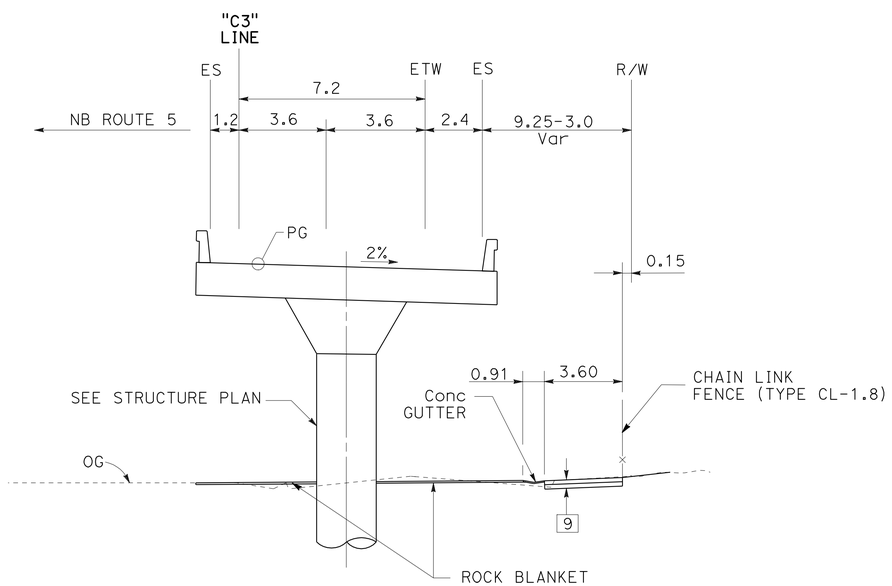


## NB ON-RAMP
Sta 39+79.29 TO 40+79.55
"C3" LINE

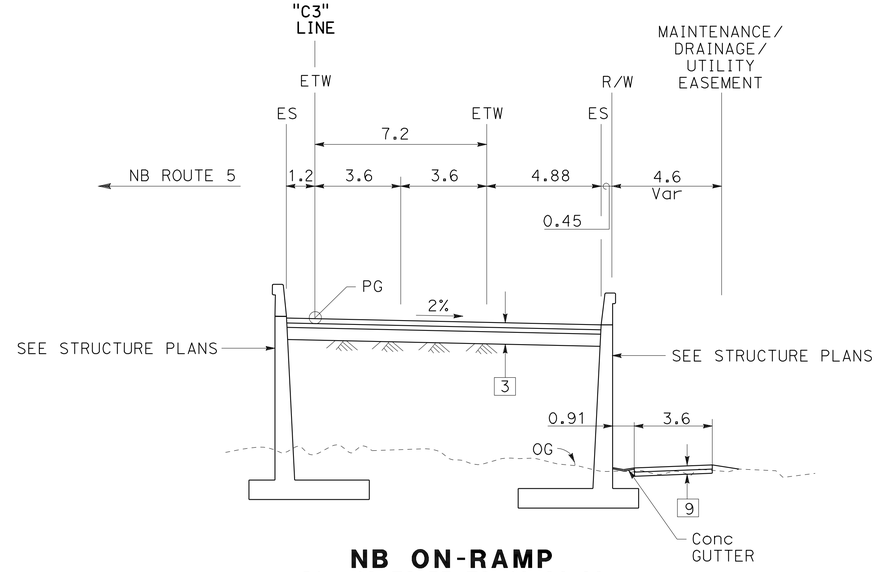


## NB ON-RAMP
Sta 40+79.55 TO 40+90.00
"C3" LINE

ALL DIMENSIONS ARE IN METERS
UNLESS OTHERWISE SHOWN

# TYPICAL CROSS SECTIONS
NO SCALE

**X-13**

| | |
|---|---|
| KEVIN Q NGUYEN | KN |
| NGIM NANCY PE | 9/09 |
| REVISED BY | DATE REVISED |
| CALCULATED-DESIGNED BY | |
| CHECKED BY | |
| FUNCTIONAL SUPERVISOR | NGIM NANCY PE |

STATE OF CALIFORNIA - DEPARTMENT OF TRANSPORTATION
Caltrans OFFICE OF DESIGN A

LAST REVISION 00-00-00 DATE PLOTTED => 22-JUN-2010 TIME PLOTTED => 07:50

| Dist | COUNTY | ROUTE | KILOMETER POST TOTAL PROJECT | SHEET No. | TOTAL SHEETS |
|---|---|---|---|---|---|
| 07 | LA | 5 | 2.9/4.9 | 15 | 1082 |

REGISTERED CIVIL ENGINEER 12-23-09 DATE

6-21-10
PLANS APPROVAL DATE

REGISTERED PROFESSIONAL ENGINEER NGIM NANCY PE No. 58161 Exp. 6-30-10 CIVIL STATE OF CALIFORNIA

*THE STATE OF CALIFORNIA OR ITS OFFICERS OR AGENTS SHALL NOT BE RESPONSIBLE FOR THE ACCURACY OR COMPLETENESS OF ELECTRONIC COPIES OF THIS PLAN SHEET.*

Caltrans Metric

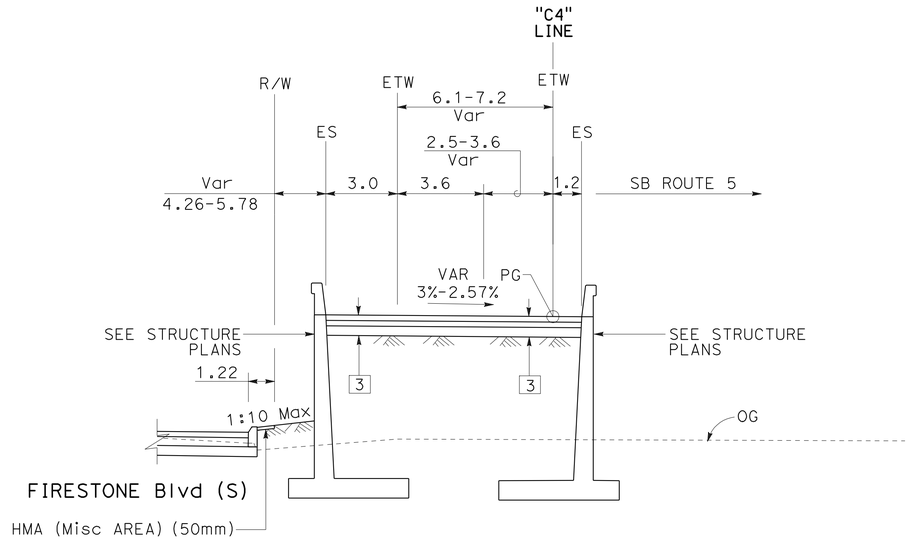


**SB OFF-RAMP**
Sta 40+56.38 TO 41+12.00
"C4" LINE

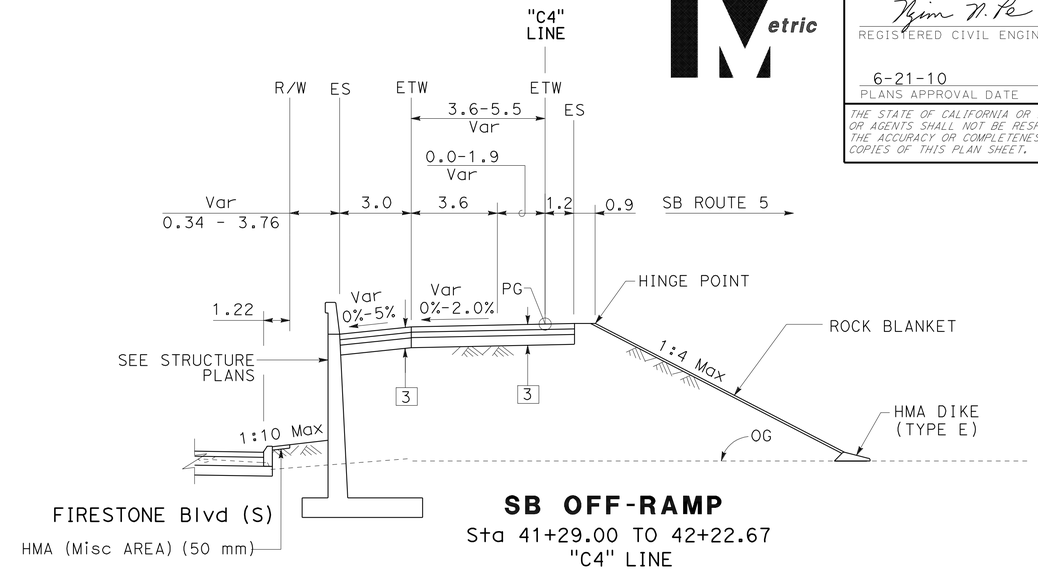


**SB OFF-RAMP**
Sta 41+29.00 TO 42+22.67
"C4" LINE

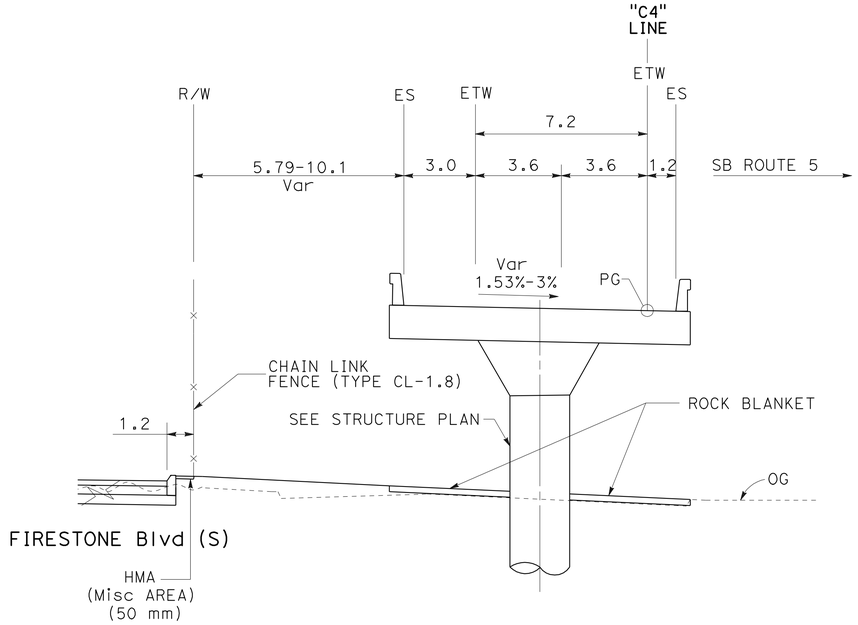


**SB OFF-RAMP**
Sta 39+17.00 TO 40+56.38
"C4" LINE

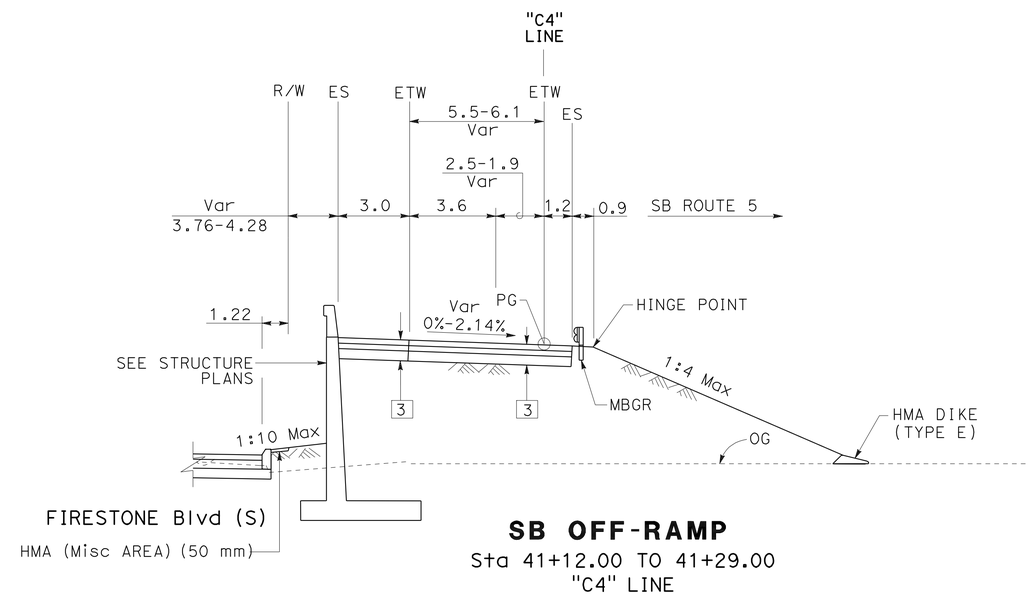


**SB OFF-RAMP**
Sta 41+12.00 TO 41+29.00
"C4" LINE

ALL DIMENSIONS ARE IN METERS
UNLESS OTHERWISE SHOWN

# TYPICAL CROSS SECTIONS

NO SCALE

**X-14**

| REVISED BY | DATE REVISED |
|---|---|
| KN | 9/09 |

CALCULATED-DESIGNED BY: KEVIN Q NGUYEN
CHECKED BY: NGIM NANCY PE
FUNCTIONAL SUPERVISOR: NGIM NANCY PE

STATE OF CALIFORNIA - DEPARTMENT OF TRANSPORTATION
Caltrans OFFICE OF DESIGN A

LAST REVISION 00-00-00
DATE PLOTTED => 22-JUN-2010
TIME PLOTTED => 07:50

| Dist | COUNTY | ROUTE | KILOMETER POST TOTAL PROJECT | SHEET No. | TOTAL SHEETS |
|---|---|---|---|---|---|
| 07 | LA | 5 | 2.9/4.9 | 16 | 1082 |

REGISTERED CIVIL ENGINEER 12-23-09 DATE

6-21-10
PLANS APPROVAL DATE

REGISTERED PROFESSIONAL ENGINEER NGIM NANCY PE No. 58161 Exp. 6-30-10 CIVIL STATE OF CALIFORNIA

*THE STATE OF CALIFORNIA OR ITS OFFICERS OR AGENTS SHALL NOT BE RESPONSIBLE FOR THE ACCURACY OR COMPLETENESS OF ELECTRONIC COPIES OF THIS PLAN SHEET.*

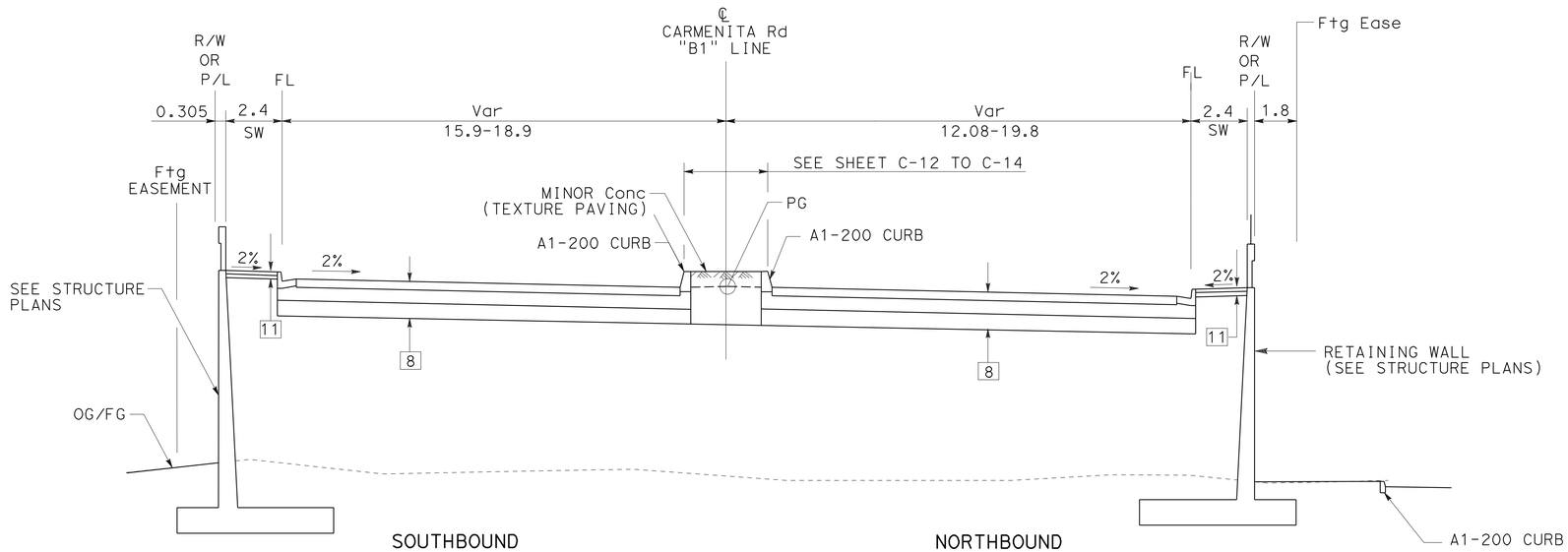


SOUTHBOUND
Sta 11+80.00 TO 13+02.00
Sta 16+21.00 TO 17+71.99
"B1" LINE

NORTHBOUND
Sta 11+62.91 TO 13+02.00
Sta 16+21.00 TO 16+80.00
"B1" LINE

**CARMENITA ROAD**

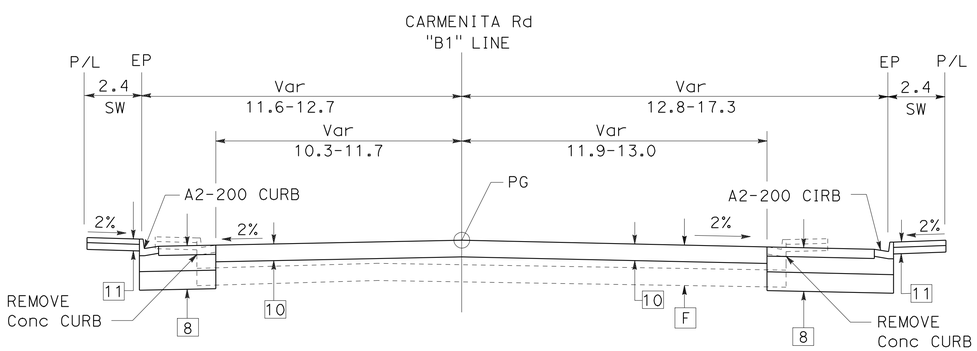


**CARMENITA ROAD**
Sta 11+00.00 TO 11+40.00
"B1" LINE

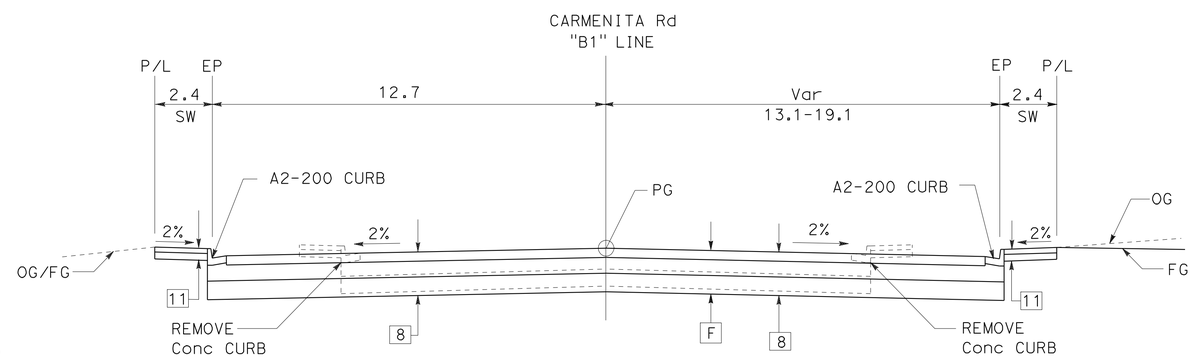


SOUTHBOUND
Sta 11+40.00 TO 11+80.00
"B1" LINE

NORTHBOUND
Sta 11+40.00 TO 11+62.91
"B1" LINE

**CARMENITA ROAD**

ALL DIMENSIONS ARE IN METERS
UNLESS OTHERWISE SHOWN

# TYPICAL CROSS SECTIONS

NO SCALE

**X-15**

STATE OF CALIFORNIA - DEPARTMENT OF TRANSPORTATION
Caltrans OFFICE OF DESIGN A

FUNCTIONAL SUPERVISOR: NGIM NANCY PE
CALCULATED-DESIGNED BY: WILL CARPIO
CHECKED BY: NANCY PE
REVISED BY / DATE REVISED

LAST REVISION 00-00-00
DATE PLOTTED => 22-JUN-2010
TIME PLOTTED => 07:51

| Dist | COUNTY | ROUTE | KILOMETER POST TOTAL PROJECT | SHEET No. | TOTAL SHEETS |
|---|---|---|---|---|---|
| 07 | LA | 5 | 2.9/4.9 | 17 | 1082 |

Caltrans Metric

Ngim N. Pe 12-23-09
REGISTERED CIVIL ENGINEER DATE

6-21-10
PLANS APPROVAL DATE

REGISTERED PROFESSIONAL ENGINEER NGIM NANCY PE No. 58161 Exp. 6-30-10 CIVIL STATE OF CALIFORNIA

*THE STATE OF CALIFORNIA OR ITS OFFICERS OR AGENTS SHALL NOT BE RESPONSIBLE FOR THE ACCURACY OR COMPLETENESS OF ELECTRONIC COPIES OF THIS PLAN SHEET.*

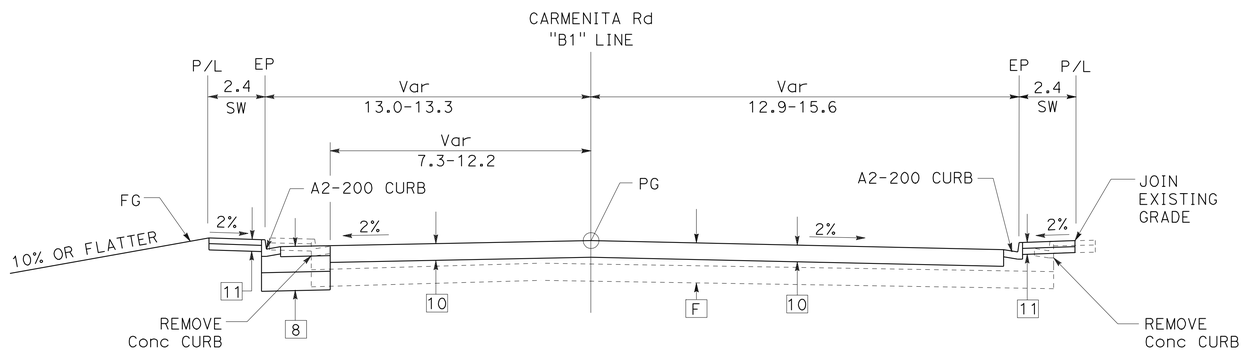


## CARMENITA ROAD

Sta 17+80.00 TO 18+81.95
"B1" LINE

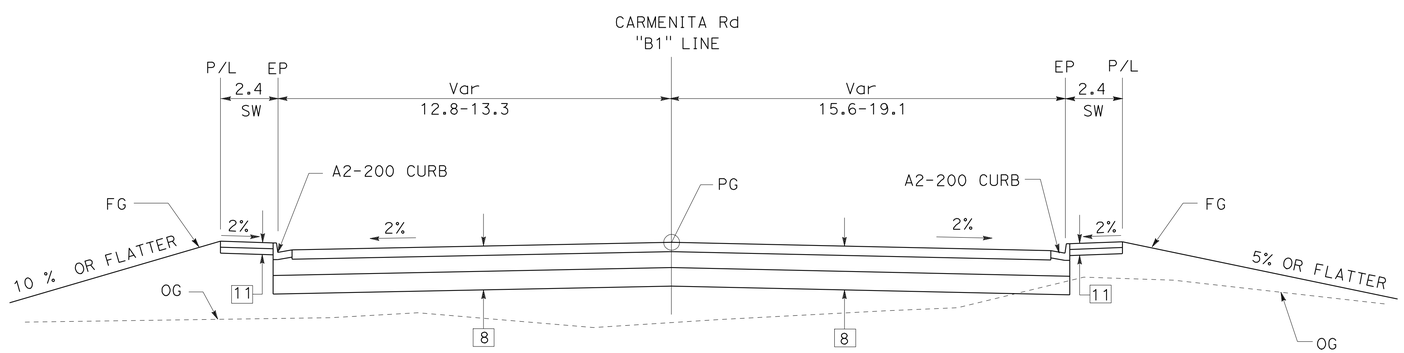


SOUTHBOUND
Sta 17+72.00 TO 17+80.00
"B1" LINE

NORTHBOUND
Sta 16+80.00 TO 17+80.00
"B1" LINE

## CARMENITA ROAD

ALL DIMENSIONS ARE IN METERS
UNLESS OTHERWISE SHOWN

# TYPICAL CROSS SECTIONS

NO SCALE

**X-16**

STATE OF CALIFORNIA - DEPARTMENT OF TRANSPORTATION
Caltrans OFFICE OF DESIGN A

FUNCTIONAL SUPERVISOR: NGIM NANCY PE
CALCULATED-DESIGNED BY: KEVIN Q. NGUYEN
CHECKED BY: NANCY PE
REVISED BY: KN
DATE REVISED: 9/09

LAST REVISION 00-00-00
DATE PLOTTED => 22-JUN-2010
TIME PLOTTED => 07:51

| Dist | COUNTY | ROUTE | KILOMETER POST TOTAL PROJECT | SHEET No. | TOTAL SHEETS |
|---|---|---|---|---|---|
| 07 | LA | 5 | 2.9/4.9 | 18 | 1082 |

REGISTERED CIVIL ENGINEER — DATE 12-23-09

6-21-10
PLANS APPROVAL DATE

REGISTERED PROFESSIONAL ENGINEER — NGIM NANCY PE — No. 58161 — Exp. 6-30-10 — CIVIL — STATE OF CALIFORNIA

*THE STATE OF CALIFORNIA OR ITS OFFICERS OR AGENTS SHALL NOT BE RESPONSIBLE FOR THE ACCURACY OR COMPLETENESS OF ELECTRONIC COPIES OF THIS PLAN SHEET.*

Caltrans Metric

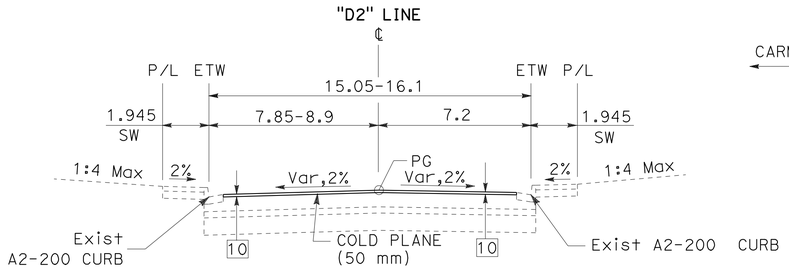


**EXCELSIOR DRIVE**
Sta 14+00.00-15+70.00
"D2" LINE

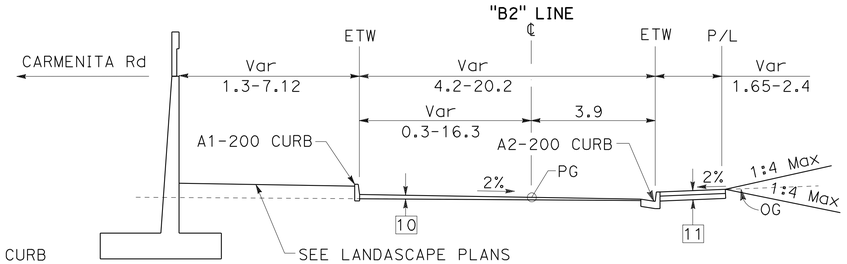


**CARMENITA PLACE**
Sta 11+70.00 - 13+00.00
"B2" LINE

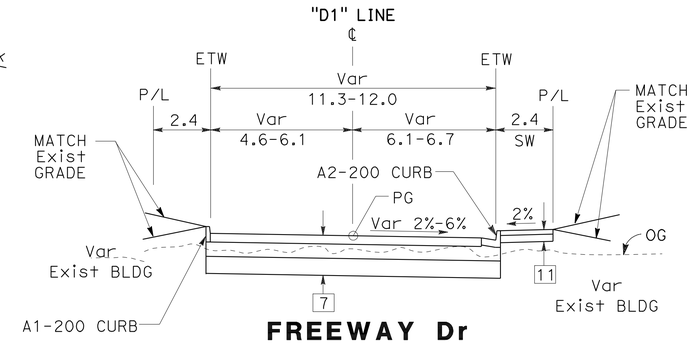


**FREEWAY Dr**
Sta 21+00.00 - 24+26.00
"D1" LINE

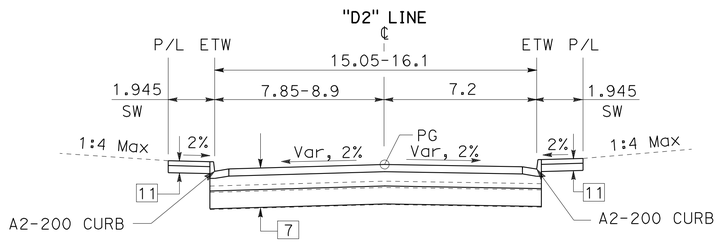


**EXCELSIOR DRIVE**
Sta 15+70-16+10.00
"D2" LINE
(SEE LAYOUT SHEETS FOR SW LIMIT)

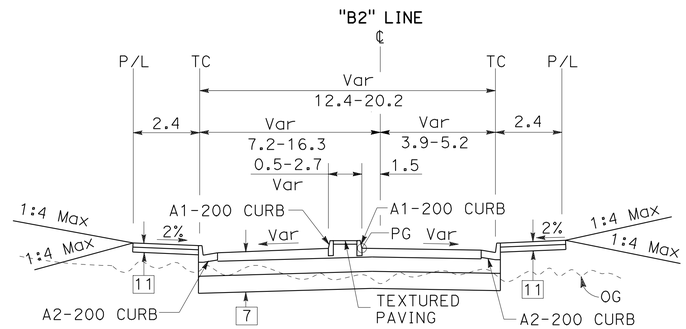


**CARMENITA PLACE**
Sta 13+00.00 - 13+85.00
"B2" LINE

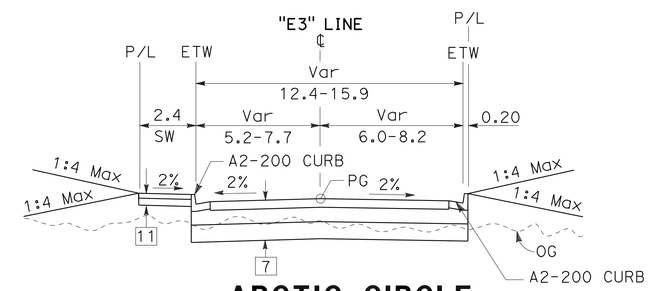


**ARCTIC CIRCLE**
"E3" LINE

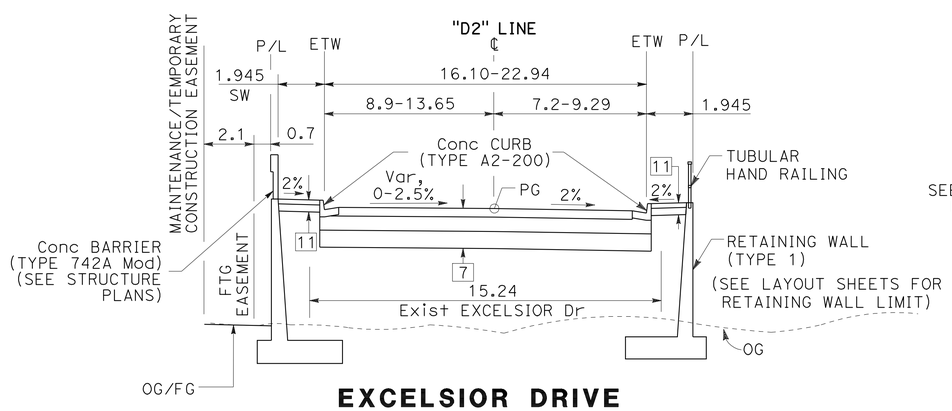


**EXCELSIOR DRIVE**
Sta 16+10.00 - 16+67.00
"D2" LINE

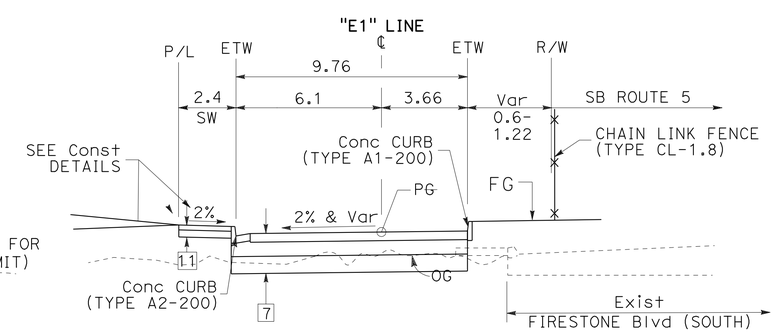


**FIRESTONE Blvd (SOUTH)**
Sta 18+46.00 - 24+37.70
"E1" LINE

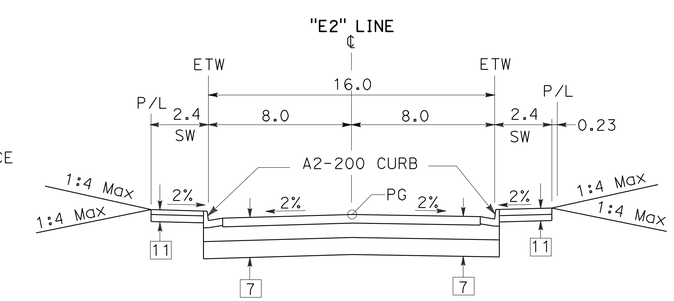


**MOLETTE STREET**
"E2" LINE

ALL DIMENSIONS ARE IN METERS
UNLESS OTHERWISE SHOWN

# TYPICAL CROSS SECTIONS

NO SCALE

**X-17**

| | |
|---|---|
| KEVIN Q. NGUYEN | KN |
| NGIM NANCY PE | 9/09 |
| CALCULATED-DESIGNED BY | REVISED BY |
| CHECKED BY | DATE REVISED |
| FUNCTIONAL SUPERVISOR | |
| NGIM NANCY PE | |

STATE OF CALIFORNIA - DEPARTMENT OF TRANSPORTATION
Caltrans OFFICE OF DESIGN A

LAST REVISION 00-00-00 | DATE PLOTTED => 22-JUN-2010 | TIME PLOTTED => 07:51

| Dist | COUNTY | ROUTE | KILOMETER POST TOTAL PROJECT | SHEET No. | TOTAL SHEETS |
|---|---|---|---|---|---|
| 07 | LA | 5 | 2.9/4.9 | 19 | 1082 |

REGISTERED CIVIL ENGINEER 12-23-09 DATE

6-21-10
PLANS APPROVAL DATE

REGISTERED PROFESSIONAL ENGINEER
NGIM
NANCY PE
No. 58161
Exp. 6-30-10
CIVIL
STATE OF CALIFORNIA

*THE STATE OF CALIFORNIA OR ITS OFFICERS OR AGENTS SHALL NOT BE RESPONSIBLE FOR THE ACCURACY OR COMPLETENESS OF ELECTRONIC COPIES OF THIS PLAN SHEET.*

Caltrans Metric

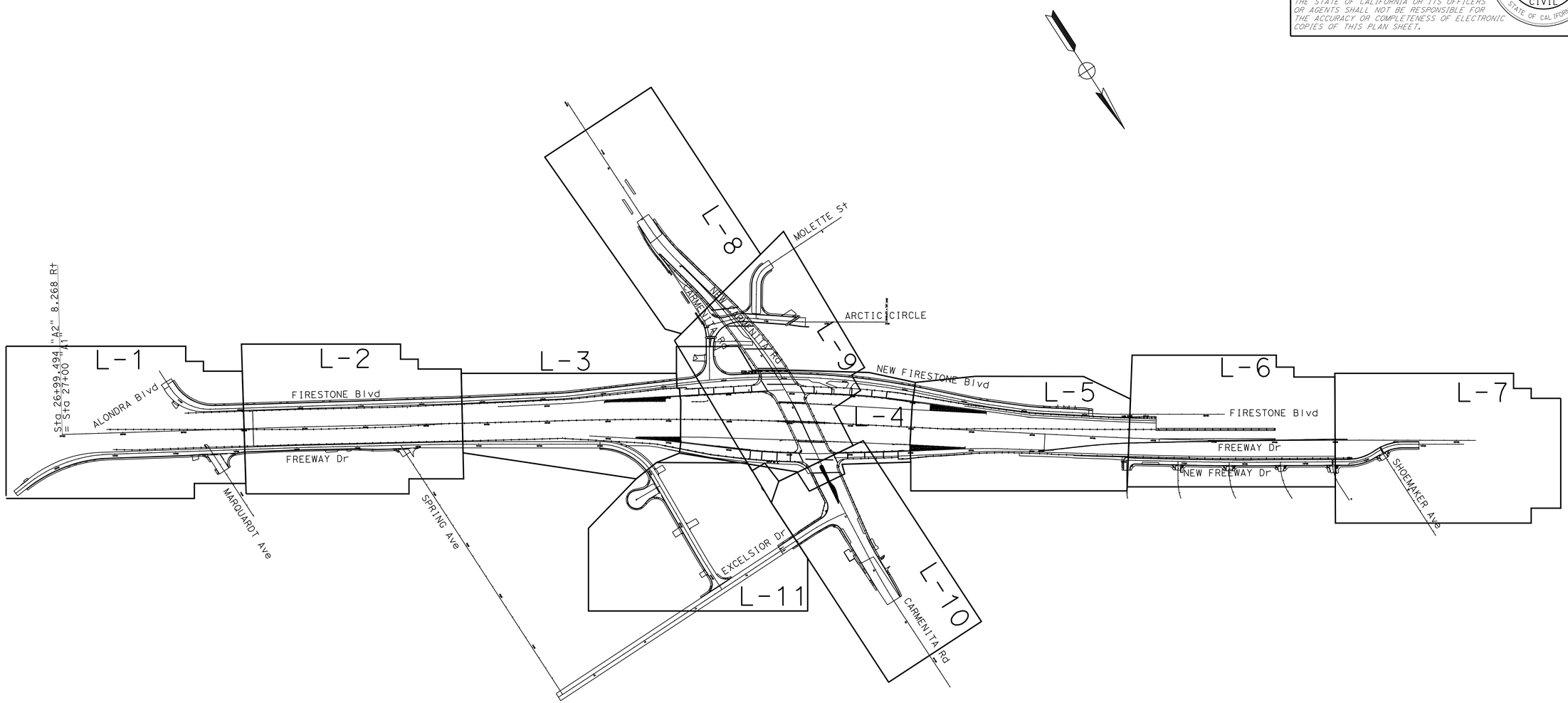


# KEY MAP

SCALE 1:3500

**K-1**

| | |
|---|---|
| REVISED BY | |
| DATE REVISED | |
| CALCULATED-DESIGNED BY | WILL CARPIO |
| CHECKED BY | NGIM NANCY PE |
| FUNCTIONAL SUPERVISOR | NGIM NANCY PE |

STATE OF CALIFORNIA - DEPARTMENT OF TRANSPORTATION
Caltrans OFFICE OF DESIGN A

S:\projects\2159c1\72159cda001.dgn

LAST REVISION 00-00-00 DATE PLOTTED => 22-JUN-2010 TIME PLOTTED => 08:14

| Dist | COUNTY | ROUTE | KILOMETER POST TOTAL PROJECT | SHEET No. | TOTAL SHEETS |
|---|---|---|---|---|---|
| 07 | LA | 5 | 2.9/4.9 | 20 | 1082 |

Ngim N. Pe 12-23-09
REGISTERED CIVIL ENGINEER DATE

6-21-10
PLANS APPROVAL DATE

REGISTERED PROFESSIONAL ENGINEER NGIM NANCY PE No. 58161 Exp. 6-30-10 CIVIL STATE OF CALIFORNIA

*THE STATE OF CALIFORNIA OR ITS OFFICERS OR AGENTS SHALL NOT BE RESPONSIBLE FOR THE ACCURACY OR COMPLETENESS OF ELECTRONIC COPIES OF THIS PLAN SHEET.*

Caltrans Metric

## NOTES:

1. FOR ACCURATE RIGHT OF WAY AND ACCESS DATA, CONTACT RIGHT OF WAY ENGINEERING AT THE DISTRICT OFFICE.
2. CURVES No. 50, 51, 52, 53 ARE NON-CONCENTRATED TO STATION LINE.
3. REFER TO RI-1 AND RI-2 SHEETS FOR PARCEL MAP INFORMATION.

## LEGEND:

- # TYPICAL STRUCTURAL SECTION (SEE TYPICAL CROSS SECTIONS)
- MINOR CONCRETE (TEXTURED PAVING)
- ROCK BLANKET
- MINOR CONCRETE (RAPID STRENGTH CONCRETE)

## ABBREVIATIONS:

TCGE: TEMPORARY CONSTRUCTION AND GRADING EASEMENT

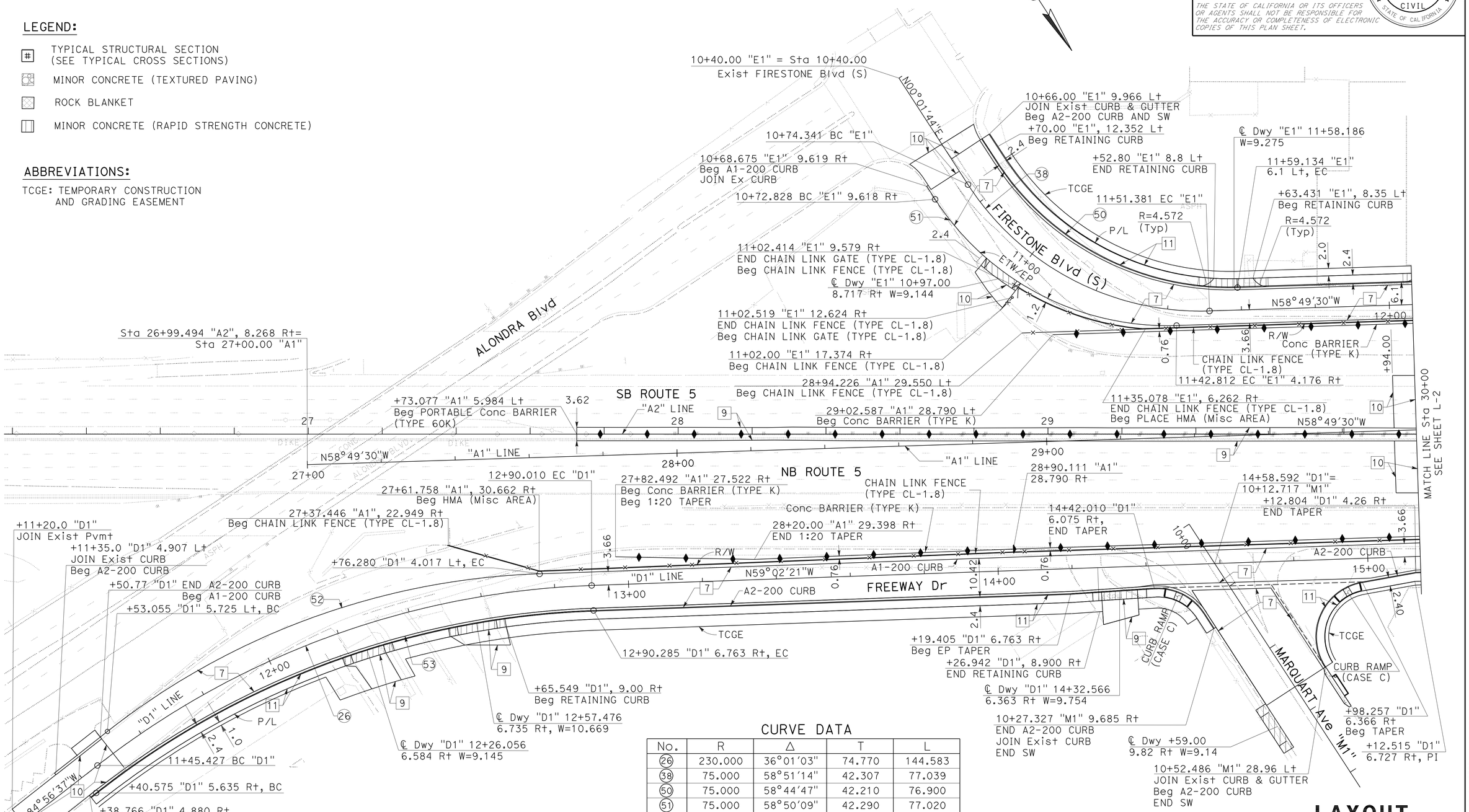


## CURVE DATA

| No. | R | Δ | T | L |
|---|---|---|---|---|
| 26 | 230.000 | 36°01'03" | 74.770 | 144.583 |
| 38 | 75.000 | 58°51'14" | 42.307 | 77.039 |
| 50 | 75.000 | 58°44'47" | 42.210 | 76.900 |
| 51 | 75.000 | 58°50'09" | 42.290 | 77.020 |
| 52 | 200.000 | 36°09'10" | 65.278 | 126.197 |
| 53 | 230.000 | 36°17'27" | 75.378 | 145.681 |

ALL DIMENSIONS ARE IN METERS UNLESS OTHERWISE SHOWN

# LAYOUT

SCALE 1:500

L-1

| | |
|---|---|
| KEVIN Q. NGUYEN | KN |
| NGIM NANCY PE | 9/09 |
| CALCULATED-DESIGNED BY | REVISED BY |
| CHECKED BY | DATE REVISED |
| FUNCTIONAL SUPERVISOR | |
| NGIM NANCY PE | |

STATE OF CALIFORNIA - DEPARTMENT OF TRANSPORTATION
Caltrans OFFICE OF DESIGN A

S:\projects\2159c1\resubmit9\72159cea001.dgn

LAST REVISION 00-00-00 DATE PLOTTED => 16-FEB-2011 TIME PLOTTED => 08:25

| Dist | COUNTY | ROUTE | KILOMETER POST TOTAL PROJECT | SHEET No. | TOTAL SHEETS |
|---|---|---|---|---|---|
| 07 | LA | 5 | 2.9/4.9 | 21 | 1082 |

Ngim N. Pe 12-23-09
REGISTERED CIVIL ENGINEER DATE

6-21-10
PLANS APPROVAL DATE

REGISTERED PROFESSIONAL ENGINEER NGIM NANCY PE No. 58161 Exp. 6-30-10 CIVIL STATE OF CALIFORNIA

*THE STATE OF CALIFORNIA OR ITS OFFICERS OR AGENTS SHALL NOT BE RESPONSIBLE FOR THE ACCURACY OR COMPLETENESS OF ELECTRONIC COPIES OF THIS PLAN SHEET.*

Caltrans Metric

1. FOR ACCURATE RIGHT OF WAY AND ACCESS DATA, CONTACT RIGHT OF WAY ENGINEERING AT THE DISTRICT OFFICE.

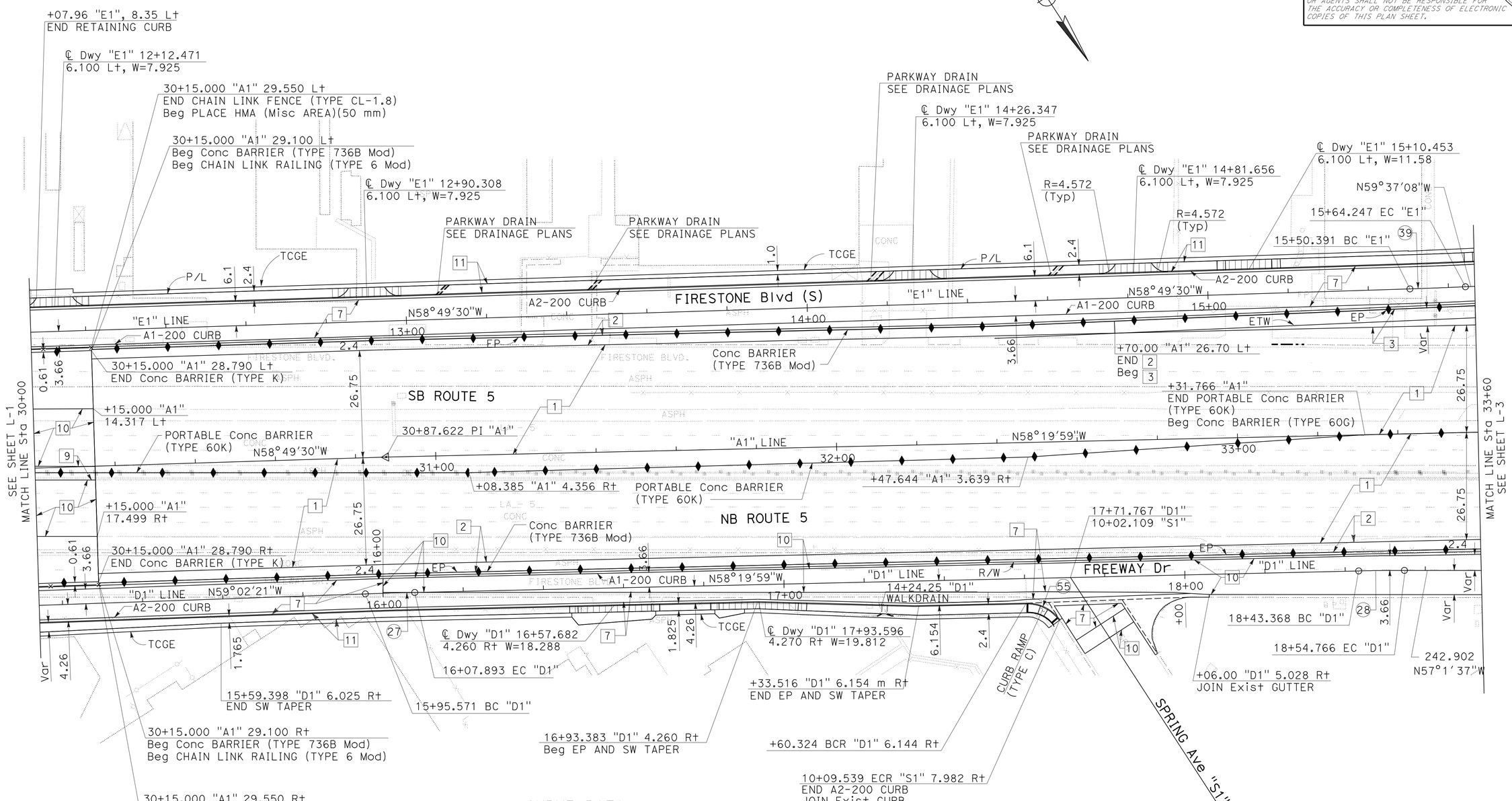


## CURVE DATA

| No. | R | Δ | T | L |
|---|---|---|---|---|
| 27 | 1000.000 | 00°42'22" | 6.161 | 12.322 |
| 28 | 500.000 | 1°18'22" | 5.699 | 11.398 |
| 39 | 1000.000 | 00°47'38" | 6.928 | 13.856 |
| 55 | 10.000 | 55°40'51" | 5.281 | 9.718 |

ALL DIMENSIONS ARE IN METERS
UNLESS OTHERWISE SHOWN

**LAYOUT**
SCALE 1:500

**L-2**

| REVISED BY | DATE REVISED |
|---|---|
| KN | 9/09 |

KEVIN Q. NGUYEN
NGIM NANCY PE
CALCULATED-DESIGNED BY
CHECKED BY
FUNCTIONAL SUPERVISOR
NGIM NANCY PE

STATE OF CALIFORNIA - DEPARTMENT OF TRANSPORTATION
Caltrans OFFICE OF DESIGN A

S:\projects\2159c1\resubmit9\72159cea002.dgn

LAST REVISION 00-00-00 | DATE PLOTTED => 16-FEB-2011 | TIME PLOTTED => 0825

| Dist | COUNTY | ROUTE | KILOMETER POST TOTAL PROJECT | SHEET No. | TOTAL SHEETS |
|---|---|---|---|---|---|
| 07 | LA | 5 | 2.9/4.9 | 22 | 1082 |

REGISTERED CIVIL ENGINEER 12-23-09 DATE

6-21-10
PLANS APPROVAL DATE

REGISTERED PROFESSIONAL ENGINEER NGIM NANCY PE No. 58161 Exp. 6-30-10 CIVIL STATE OF CALIFORNIA

*THE STATE OF CALIFORNIA OR ITS OFFICERS OR AGENTS SHALL NOT BE RESPONSIBLE FOR THE ACCURACY OR COMPLETENESS OF ELECTRONIC COPIES OF THIS PLAN SHEET.*

Caltrans Metric

NOTE:

FOR ACCURATE RIGHT OF WAY AND ACCESS DATA, CONTACT RIGHT OF WAY ENGINEERING AT THE DISTRICT OFFICE.

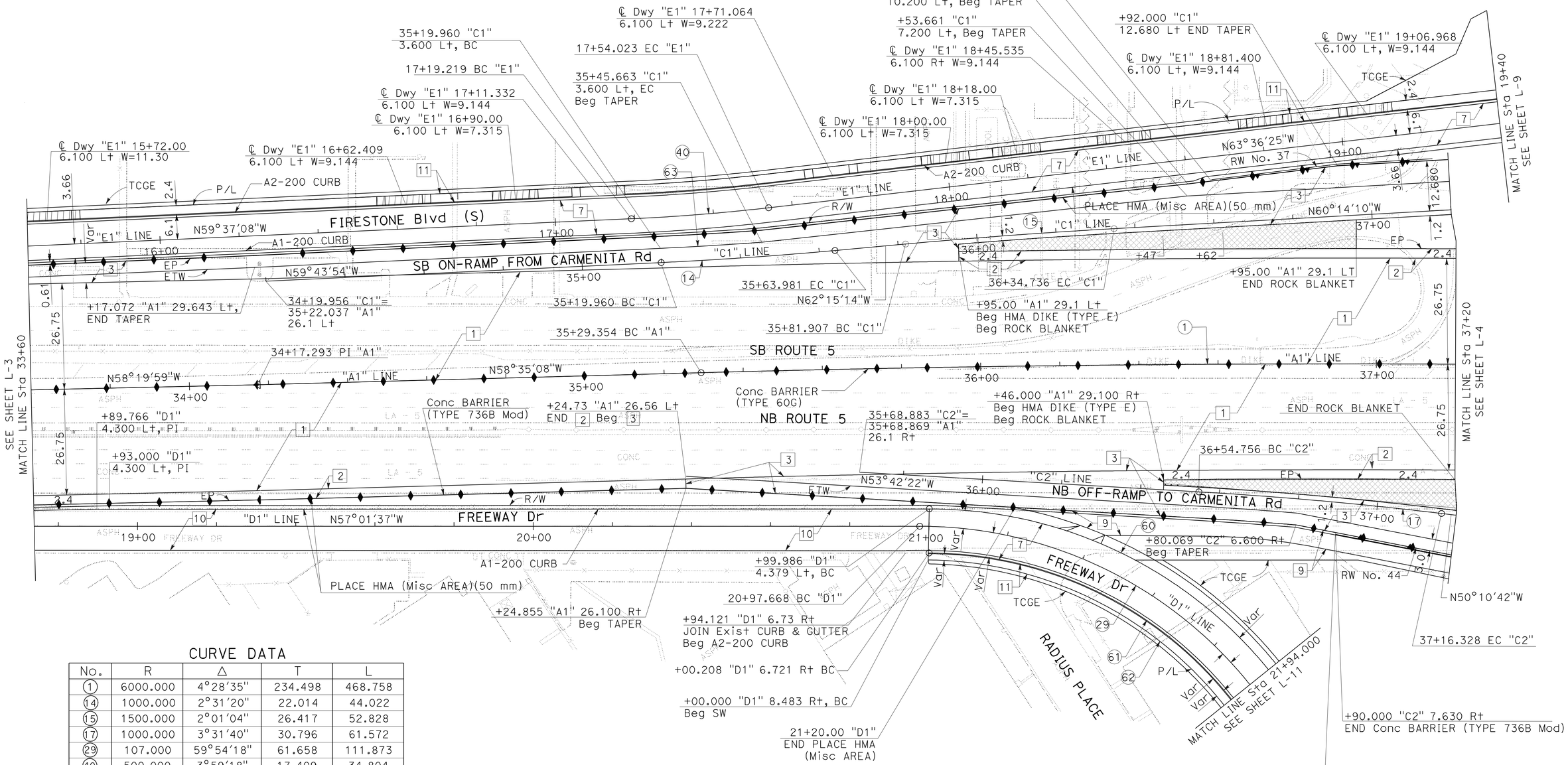


CURVE DATA

| No. | R | Δ | T | L |
|---|---|---|---|---|
| 1 | 6000.000 | 4°28'35" | 234.498 | 468.758 |
| 14 | 1000.000 | 2°31'20" | 22.014 | 44.022 |
| 15 | 1500.000 | 2°01'04" | 26.417 | 52.828 |
| 17 | 1000.000 | 3°31'40" | 30.796 | 61.572 |
| 29 | 107.000 | 59°54'18" | 61.658 | 111.873 |
| 40 | 500.000 | 3°59'18" | 17.409 | 34.804 |
| 60 | 110.130 | 60°04'01" | 63.670 | 115.457 |
| 61 | 97.536 | 54°45'04" | 50.505 | 93.204 |
| 62 | 96.668 | 54°08'51" | 49.411 | 91.356 |
| 63 | 996.400 | 1°28'22" | 12.806 | 25.611 |

ALL DIMENSIONS ARE IN METERS UNLESS OTHERWISE SHOWN

**LAYOUT**
SCALE 1:500

**L-3**

| | | | |
|---|---|---|---|
| CALCULATED-DESIGNED BY | KEVIN Q. NGUYEN | REVISED BY | KN |
| CHECKED BY | NGIM NANCY PE | DATE REVISED | 9/09 |
| FUNCTIONAL SUPERVISOR | NGIM NANCY PE | | |

STATE OF CALIFORNIA - DEPARTMENT OF TRANSPORTATION
Caltrans OFFICE OF DESIGN A

S:\projects\2159c1\replace1\72159cea003.dgn

LAST REVISION 00-00-00 | DATE PLOTTED => 22-JUN-2010 | TIME PLOTTED => 07:56

| Dist | COUNTY | ROUTE | KILOMETER POST TOTAL PROJECT | SHEET No. | TOTAL SHEETS |
|---|---|---|---|---|---|
| 07 | LA | 5 | 2.9/4.9 | 23 | 1082 |

REGISTERED CIVIL ENGINEER 12-23-09 DATE

6-21-10
PLANS APPROVAL DATE

REGISTERED PROFESSIONAL ENGINEER NGIM NANCY PE No. 58161 Exp. 6-30-10 CIVIL STATE OF CALIFORNIA

*THE STATE OF CALIFORNIA OR ITS OFFICERS OR AGENTS SHALL NOT BE RESPONSIBLE FOR THE ACCURACY OR COMPLETENESS OF ELECTRONIC COPIES OF THIS PLAN SHEET.*

Caltrans Metric

**NOTE:**

FOR ACCURATE RIGHT OF WAY AND ACCESS DATA, CONTACT RIGHT OF WAY ENGINEERING AT THE DISTRICT OFFICE.

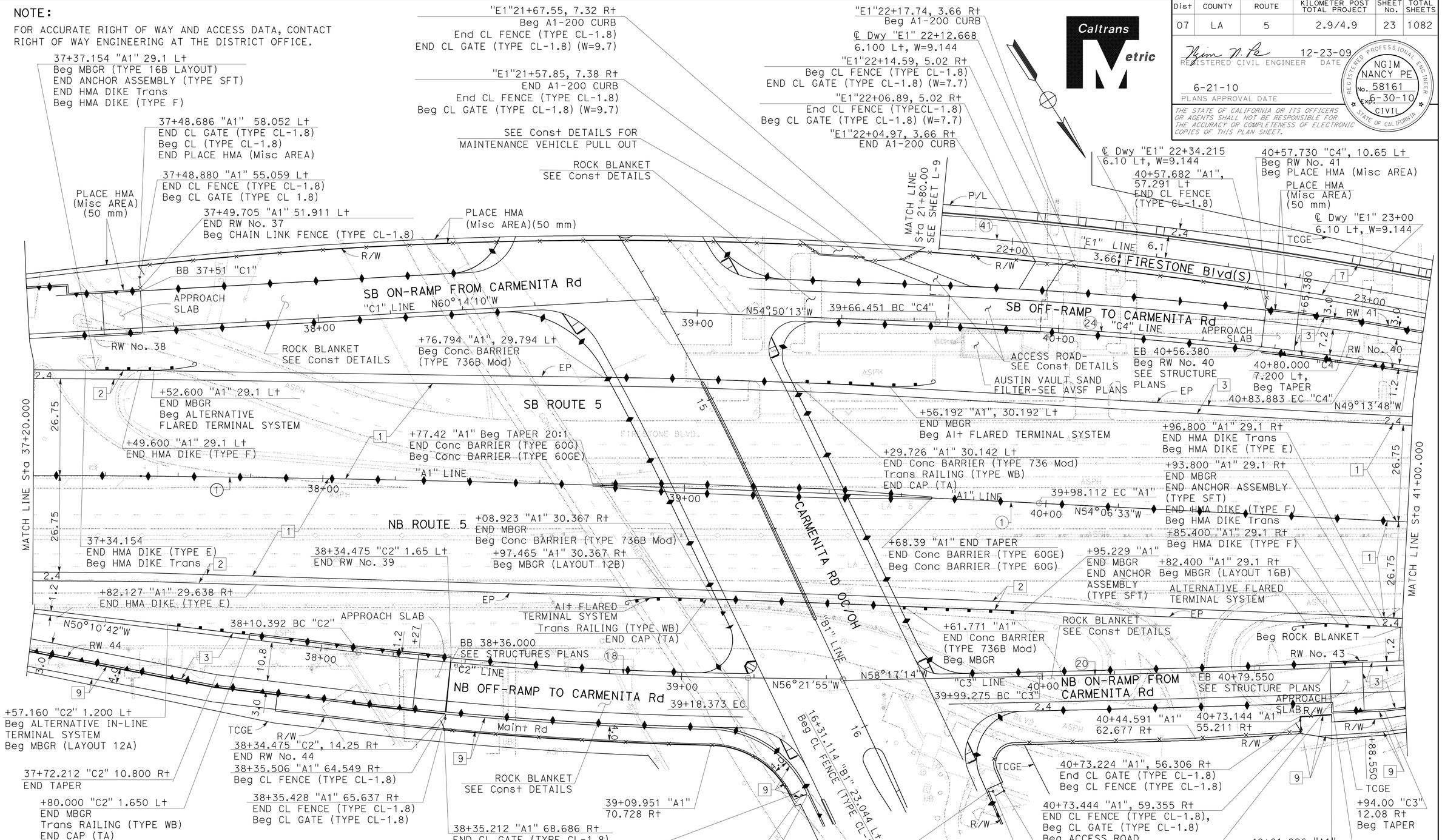


## CURVE DATA

| No. | R | Δ | T | L |
|---|---|---|---|---|
| 1 | 6000.000 | 4°28'35" | 234.498 | 468.758 |
| 18 | 1000.000 | 6°11'13" | 54.043 | 107.981 |
| 20 | 6000.000 | 01°11'42" | 62.575 | 125.146 |
| 24 | 1200.000 | 5°36'25" | 58.763 | 117.432 |
| 41 | 1200.000 | 18°03'52" | 190.754 | 378.342 |

ALL DIMENSIONS ARE IN METERS UNLESS OTHERWISE SHOWN

# LAYOUT

SCALE 1:500

**L-4**

| REVISED BY | DATE REVISED |
|---|---|
| KN | 9/09 |

CALCULATED-DESIGNED BY: KEVIN Q. NGUYEN
CHECKED BY: NGIM NANCY PE
FUNCTIONAL SUPERVISOR: NGIM NANCY PE

STATE OF CALIFORNIA - DEPARTMENT OF TRANSPORTATION
Caltrans OFFICE OF DESIGN A

S:\projects\2159c1\replace1\72159cea004.dgn

LAST REVISION 00-00-00 | DATE PLOTTED => 22-JUN-2010 | TIME PLOTTED => 07:56

| Dist | COUNTY | ROUTE | KILOMETER POST TOTAL PROJECT | SHEET No. | TOTAL SHEETS |
|---|---|---|---|---|---|
| 07 | LA | 5 | 2.9/4.9 | 24 | 1082 |

REGISTERED CIVIL ENGINEER 12-23-09 DATE

6-21-10
PLANS APPROVAL DATE

REGISTERED PROFESSIONAL ENGINEER NGIM NANCY PE No. 58161 Exp. 6-30-10 CIVIL STATE OF CALIFORNIA

*THE STATE OF CALIFORNIA OR ITS OFFICERS OR AGENTS SHALL NOT BE RESPONSIBLE FOR THE ACCURACY OR COMPLETENESS OF ELECTRONIC COPIES OF THIS PLAN SHEET.*

Caltrans Metric

NOTES:

1. FOR ACCURATE RIGHT OF WAY AND ACCESS DATA, CONTACT RIGHT OF WAY ENGINEERING AT THE DISTRICT OFFICE.
2. FOR FIRESTONE Blvd (N) "D3" LINE CONSTRUCTION, SEE CONSTRUCTION DETAILS.

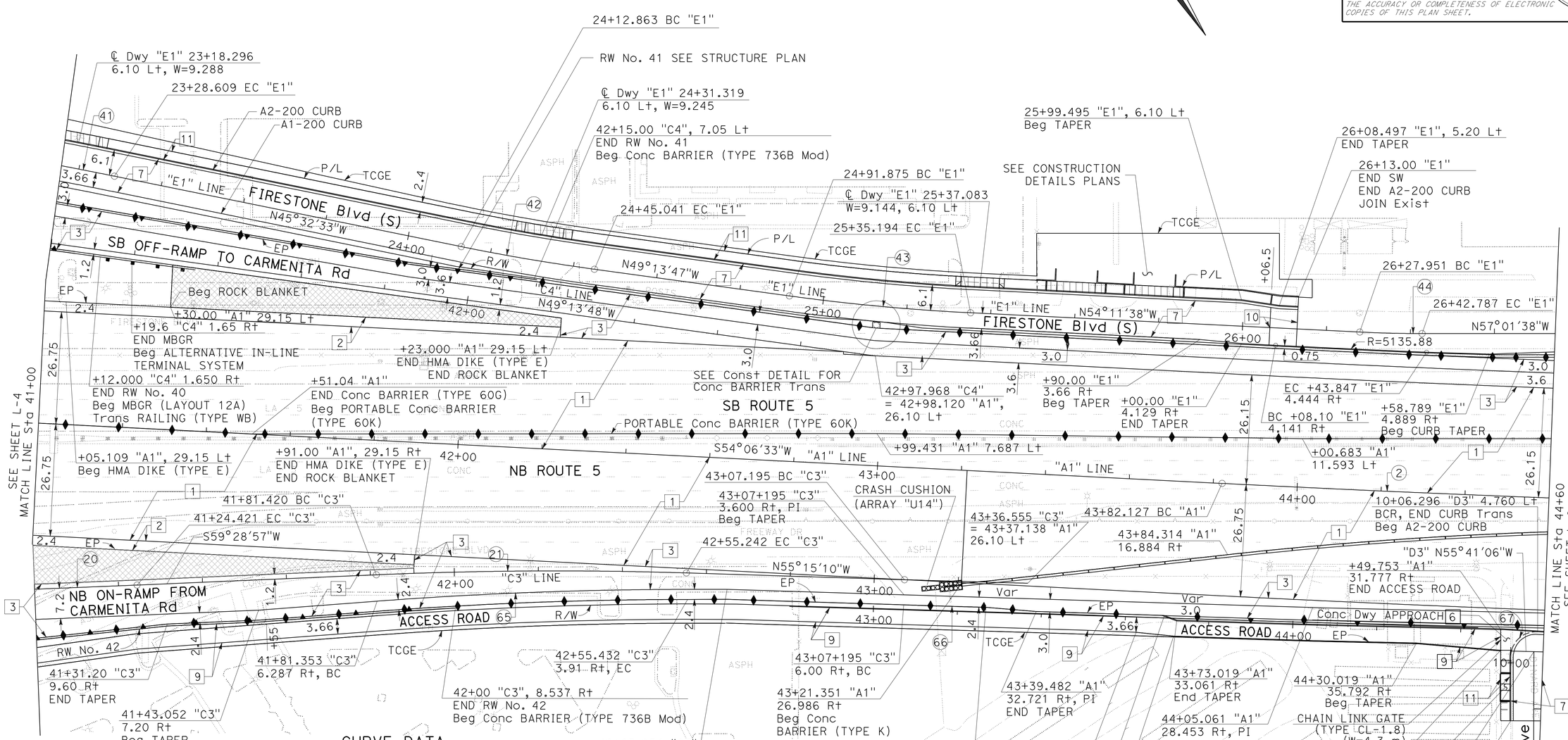


## CURVE DATA

| No. | R | Δ | T | L |
|---|---|---|---|---|
| 2 | 6000.00 | 3°13'45" | 169.116 | 338.098 |
| 20 | 6000.00 | 1°11'42" | 62.575 | 125.144 |
| 21 | 1000.00 | 4°13'47" | 36.928 | 73.823 |
| 22 | 6523.70 | 0°10'18" | 9.78 | 19.56 |
| 41 | 1200.00 | 18°03'52" | 190.754 | 378.342 |
| 42 | 500.00 | 3°41'14" | 16.095 | 32.173 |
| 43 | 500.00 | 4°57'50" | 21.673 | 43.318 |
| 44 | 300.00 | 2°50'0" | 7.419 | 14.834 |
| 65 | 996.40 | 4°14'25" | 36.8871 | 73.741 |
| 66 | 6529.70 | 0°10'18" | 9.780 | 19.559 |
| 67 | 6.00 | 93°53'40" | 6.422 | 9.833 |

ALL DIMENSIONS ARE IN METERS UNLESS OTHERWISE SHOWN

**LAYOUT**
SCALE 1:500

**L-5**

| | | | |
|---|---|---|---|
| KEVIN Q. NGUYEN | KN | REVISED BY | 9/09 DATE REVISED |
| NGIM NANCY PE | | | |
| CALCULATED-DESIGNED BY | CHECKED BY | | |
| FUNCTIONAL SUPERVISOR | NGIM NANCY PE | | |

STATE OF CALIFORNIA - DEPARTMENT OF TRANSPORTATION
Caltrans OFFICE OF DESIGN A

S:\projects\2159c1\replace1\72159cea005.dgn

LAST REVISION 00-00-00 | DATE PLOTTED => 22-JUN-2010 | TIME PLOTTED => 07:56

| Dist | COUNTY | ROUTE | KILOMETER POST TOTAL PROJECT | SHEET No. | TOTAL SHEETS |
|---|---|---|---|---|---|
| 07 | LA | 5 | 2.9/4.9 | 25 | 1082 |

Ngim N. Pe 12-23-09
REGISTERED CIVIL ENGINEER DATE

6-21-10
PLANS APPROVAL DATE

REGISTERED PROFESSIONAL ENGINEER NGIM NANCY PE No. 58161 Exp. 6-30-10 CIVIL STATE OF CALIFORNIA

*THE STATE OF CALIFORNIA OR ITS OFFICERS OR AGENTS SHALL NOT BE RESPONSIBLE FOR THE ACCURACY OR COMPLETENESS OF ELECTRONIC COPIES OF THIS PLAN SHEET.*

Caltrans Metric

NOTES:

1. FOR ACCURATE RIGHT OF WAY AND ACCESS DATA, CONTACT RIGHT OF WAY ENGINEERING AT THE DISTRICT OFFICE.
2. FOR FIRESTONE Blvd (N) "D3" LINE CONSTRUCTION, SEE CONSTRUCTION DETAILS.

CURVE DATA

| No. | R | Δ | T | L |
|---|---|---|---|---|
| 2 | 6000.00 | 3°13'45" | 169.116 | 338.143 |
| 34 | 4000.00 | 1°39'11" | 57.711 | 115.414 |
| 70 | 91.445 | 33°08'44" | 27.214 | 52.901 |
| 71 | 91.440 | 25°52'01" | 20.999 | 41.282 |

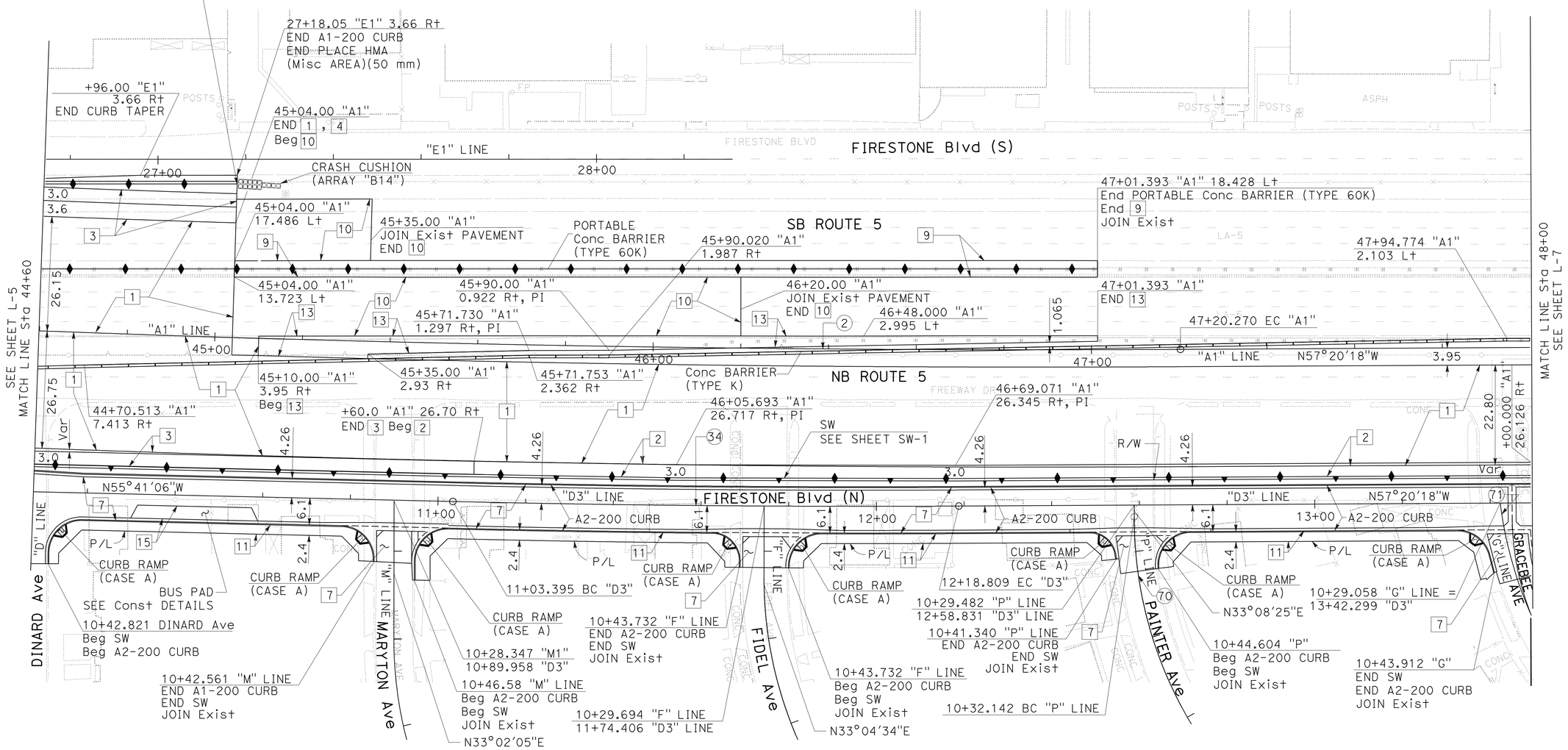


ALL DIMENSIONS ARE IN METERS
UNLESS OTHERWISE SHOWN

**LAYOUT**
SCALE 1:500

**L-6**

KEVIN Q. NGUYEN | KN | 9/09
NGIM NANCY PE | REVISED BY | DATE REVISED
CALCULATED-DESIGNED BY
CHECKED BY
FUNCTIONAL SUPERVISOR
NGIM NANCY PE

STATE OF CALIFORNIA - DEPARTMENT OF TRANSPORTATION
Caltrans OFFICE OF DESIGN A

S:\projects\2159c1\replace1\72159cea006.dgn

LAST REVISION 00-00-00 | DATE PLOTTED => 22-JUN-2010 | TIME PLOTTED => 07:56

| Dist | COUNTY | ROUTE | KILOMETER POST TOTAL PROJECT | SHEET No. | TOTAL SHEETS |
|---|---|---|---|---|---|
| 07 | LA | 5 | 2.9/4.9 | 26 | 1082 |

REGISTERED CIVIL ENGINEER 12-23-09 DATE

6-21-10
PLANS APPROVAL DATE

REGISTERED PROFESSIONAL ENGINEER NGIM NANCY PE No. 58161 Exp. 6-30-10 CIVIL STATE OF CALIFORNIA

*THE STATE OF CALIFORNIA OR ITS OFFICERS OR AGENTS SHALL NOT BE RESPONSIBLE FOR THE ACCURACY OR COMPLETENESS OF ELECTRONIC COPIES OF THIS PLAN SHEET.*

Caltrans Metric

NOTES:

1. FOR ACCURATE RIGHT OF WAY AND ACCESS DATA, CONTACT RIGHT OF WAY ENGINEERING AT THE DISTRICT OFFICE.
2. FOR FIRESTONE Blvd (N) "D3" LINE CONSTRUCTION, SEE CONSTRUCTION DETAILS.

CURVE DATA

| No. | R | Δ | T | L |
|---|---|---|---|---|
| 35 | 80.00 | 34°39'7" | 24.957 | 48.383 |
| 36 | 80.00 | 34°57'48" | 25.196 | 48.818 |

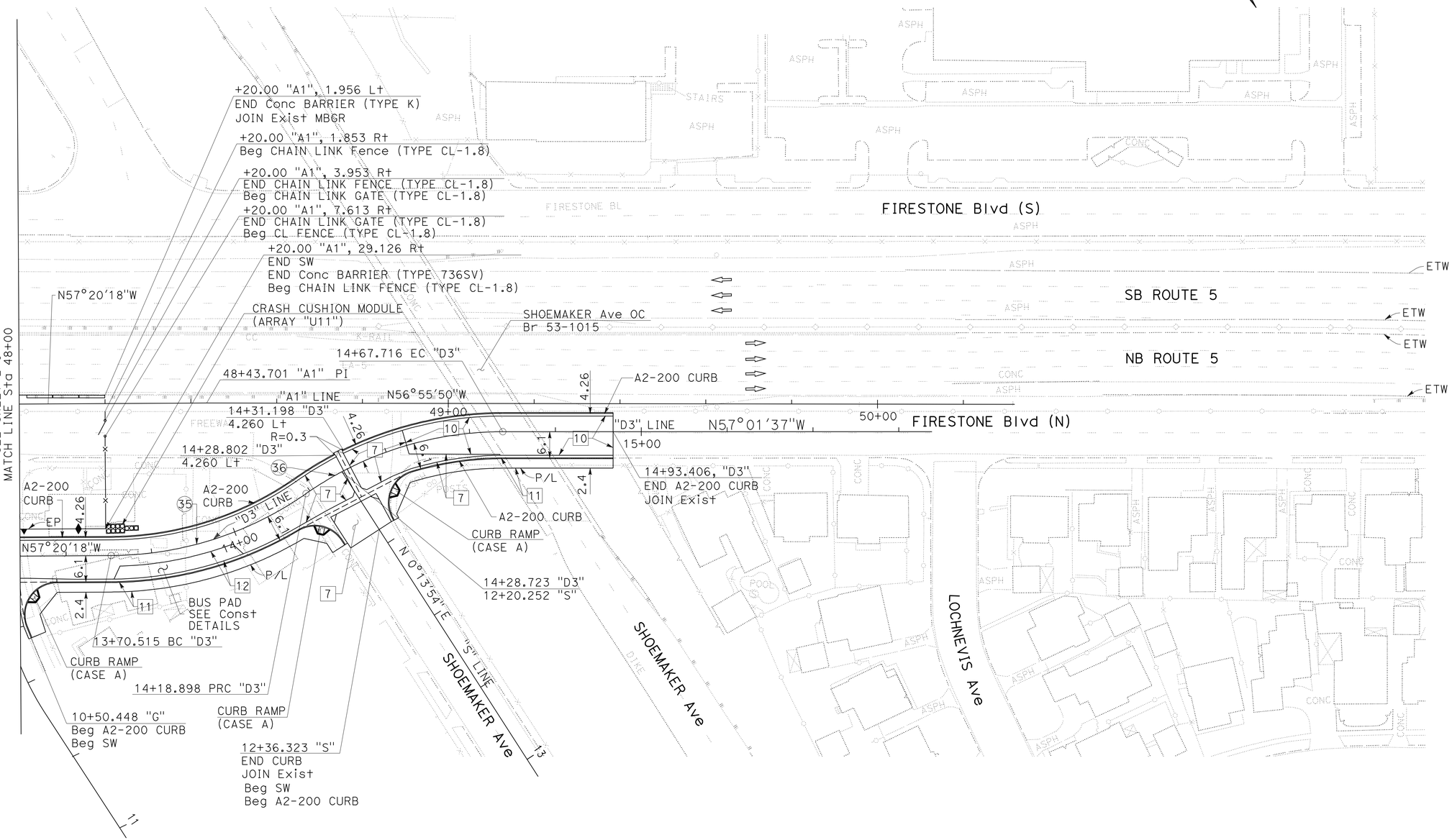


ALL DIMENSIONS ARE IN METERS
UNLESS OTHERWISE SHOWN

**LAYOUT**
SCALE 1:500

**L-7**

| | | | |
|---|---|---|---|
| KN | 9/09 | KEVIN Q. NGUYEN | NGIM NANCY PE |
| REVISED BY | DATE REVISED | CALCULATED-DESIGNED BY | CHECKED BY |
| FUNCTIONAL SUPERVISOR | NGIM NANCY PE | | |

STATE OF CALIFORNIA - DEPARTMENT OF TRANSPORTATION
Caltrans OFFICE OF DESIGN A

S:\projects\2159c1\replace1\72159cea007.dgn

LAST REVISION 00-00-00 | DATE PLOTTED => 22-JUN-2010 | TIME PLOTTED => 07:56

| Dist | COUNTY | ROUTE | KILOMETER POST TOTAL PROJECT | SHEET No. | TOTAL SHEETS |
|---|---|---|---|---|---|
| 07 | LA | 5 | 2.9/4.9 | 27 | 1082 |

REGISTERED CIVIL ENGINEER 12-23-09 DATE

6-21-10
PLANS APPROVAL DATE

REGISTERED PROFESSIONAL ENGINEER NGIM NANCY PE No. 58161 Exp. 6-30-10 CIVIL STATE OF CALIFORNIA

*THE STATE OF CALIFORNIA OR ITS OFFICERS OR AGENTS SHALL NOT BE RESPONSIBLE FOR THE ACCURACY OR COMPLETENESS OF ELECTRONIC COPIES OF THIS PLAN SHEET.*

Caltrans Metric

NOTES:

1. FOR ACCURATE RIGHT OF WAY AND ACCESS DATA, CONTACT RIGHT OF WAY ENGINEERING AT THE DISTRICT OFFICE.
2. FOR STRUCTURE, SEE STRUCTURE PLANS.

CURVE DATA

| No. | R | Δ | T | L |
|---|---|---|---|---|
| 4 | 333.00 | 11°44′1" | 34.217 | 68.195 |
| 8 | 200.00 | 6°0′26" | 10.494 | 20.970 |
| 9 | 200.00 | 6°0′26" | 10.494 | 20.970 |
| 80 | 286.303 | 6°1′15" | 15.056 | 30.085 |
| 81 | 302.40 | 10°38′22" | 28.158 | 56.154 |
| 82 | 780.00 | 4°45′30" | 32.407 | 64.777 |
| 83 | 0.90 | 174°0′0" | 17.173 | 2.733 |

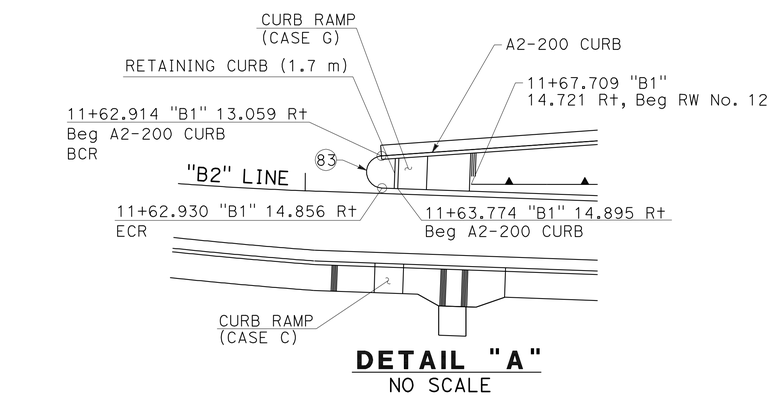


**DETAIL "A"**
NO SCALE

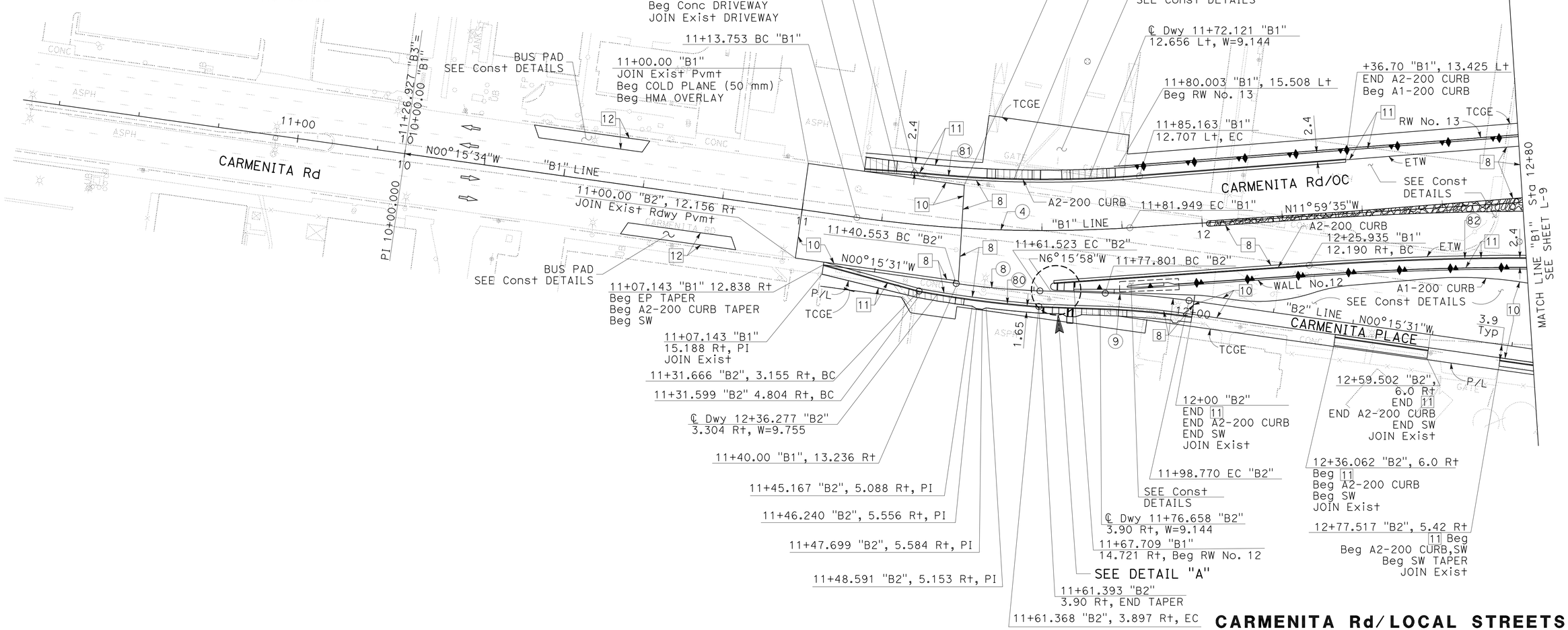


**CARMENITA Rd/LOCAL STREETS**
**LAYOUT**
SCALE 1:500

**L-8**

ALL DIMENSIONS ARE IN METERS
UNLESS OTHERWISE SHOWN

KEVIN Q. NGUYEN | KN | 9/09
NGIM NANCY PE | REVISED BY | DATE REVISED
CALCULATED-DESIGNED BY | CHECKED BY
FUNCTIONAL SUPERVISOR
NGIM NANCY PE

STATE OF CALIFORNIA - DEPARTMENT OF TRANSPORTATION
Caltrans OFFICE OF DESIGN A

S:\projects\2159c1\replace1\72159cea008.dgn

LAST REVISION 00-00-00 | DATE PLOTTED => 22-JUN-2010 | TIME PLOTTED => 07:57

| Dist | COUNTY | ROUTE | KILOMETER POST TOTAL PROJECT | SHEET No. | TOTAL SHEETS |
|---|---|---|---|---|---|
| 07 | LA | 5 | 2.9/4.9 | 28 | 1082 |

Ngim N. Pe 12-23-09
REGISTERED CIVIL ENGINEER DATE

6-21-10
PLANS APPROVAL DATE

REGISTERED PROFESSIONAL ENGINEER NGIM NANCY PE No. 58161 Exp. 6-30-10 CIVIL STATE OF CALIFORNIA

*THE STATE OF CALIFORNIA OR ITS OFFICERS OR AGENTS SHALL NOT BE RESPONSIBLE FOR THE ACCURACY OR COMPLETENESS OF ELECTRONIC COPIES OF THIS PLAN SHEET.*

Caltrans Metric

**NOTE:**

FOR ACCURATE RIGHT OF WAY AND ACCESS DATA, CONTACT RIGHT OF WAY ENGINEERING AT THE DISTRICT OFFICE.

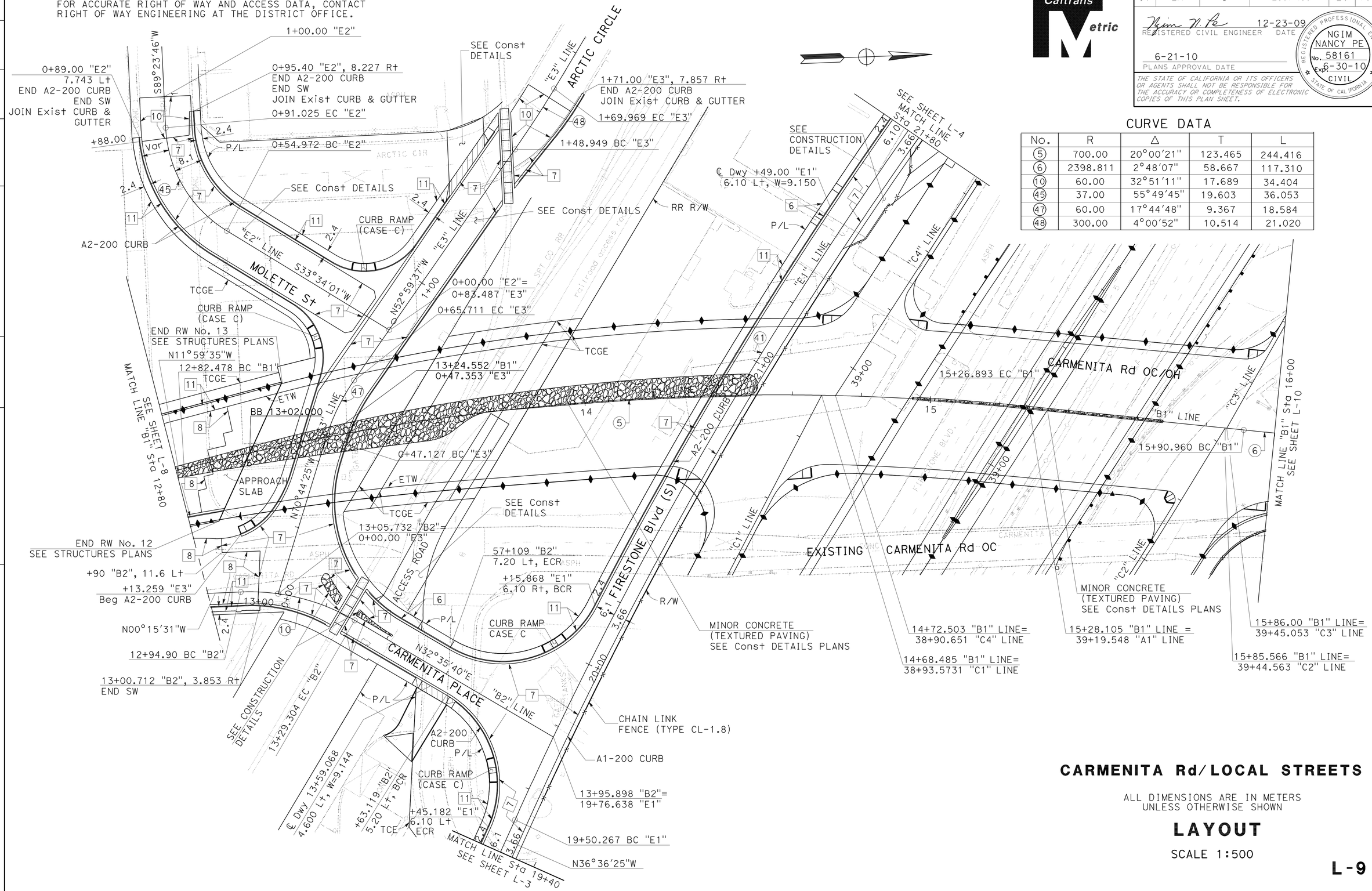


## CURVE DATA

| No. | R | Δ | T | L |
|---|---|---|---|---|
| 5 | 700.00 | 20°00'21" | 123.465 | 244.416 |
| 6 | 2398.811 | 2°48'07" | 58.667 | 117.310 |
| 10 | 60.00 | 32°51'11" | 17.689 | 34.404 |
| 45 | 37.00 | 55°49'45" | 19.603 | 36.053 |
| 47 | 60.00 | 17°44'48" | 9.367 | 18.584 |
| 48 | 300.00 | 4°00'52" | 10.514 | 21.020 |

# CARMENITA Rd/LOCAL STREETS

ALL DIMENSIONS ARE IN METERS
UNLESS OTHERWISE SHOWN

## LAYOUT

SCALE 1:500

**L-9**

| REVISED BY | DATE REVISED |
|---|---|
| KN | 9/09 |

CALCULATED-DESIGNED BY: KEVIN Q. NGUYEN
CHECKED BY: NGIM NANCY PE
FUNCTIONAL SUPERVISOR: NGIM NANCY PE

STATE OF CALIFORNIA - DEPARTMENT OF TRANSPORTATION
Caltrans OFFICE OF DESIGN A

S:\projects\2159c1\replace1\72159cea009.dgn

LAST REVISION 00-00-00 | DATE PLOTTED => 22-JUN-2010 | TIME PLOTTED => 07:57

| Dist | COUNTY | ROUTE | KILOMETER POST TOTAL PROJECT | SHEET No. | TOTAL SHEETS |
|---|---|---|---|---|---|
| 07 | LA | 5 | 2.9/4.9 | 29 | 1082 |

Ngim N. Pe 12-23-09
REGISTERED CIVIL ENGINEER DATE

6-21-10
PLANS APPROVAL DATE

REGISTERED PROFESSIONAL ENGINEER NGIM NANCY PE No. 58161 Exp. 6-30-10 CIVIL STATE OF CALIFORNIA

*THE STATE OF CALIFORNIA OR ITS OFFICERS OR AGENTS SHALL NOT BE RESPONSIBLE FOR THE ACCURACY OR COMPLETENESS OF ELECTRONIC COPIES OF THIS PLAN SHEET.*

Caltrans Metric

NOTE:
FOR ACCURATE RIGHT OF WAY AND ACCESS DATA, CONTACT RIGHT OF WAY ENGINEERING AT THE DISTRICT OFFICE.

CURVE DATA

| No. | R | Δ | T | L |
|---|---|---|---|---|
| 6 | 2398.811 | 2°48'07" | 58.667 | 117.310 |
| 7 | 1000.00 | 5°27'57" | 47.735 | 95.397 |
| 20 | 6000.00 | 1°11'42" | 62.575 | 125.146 |
| 32 | 350.00 | 9°24'11" | 28.784 | 57.439 |

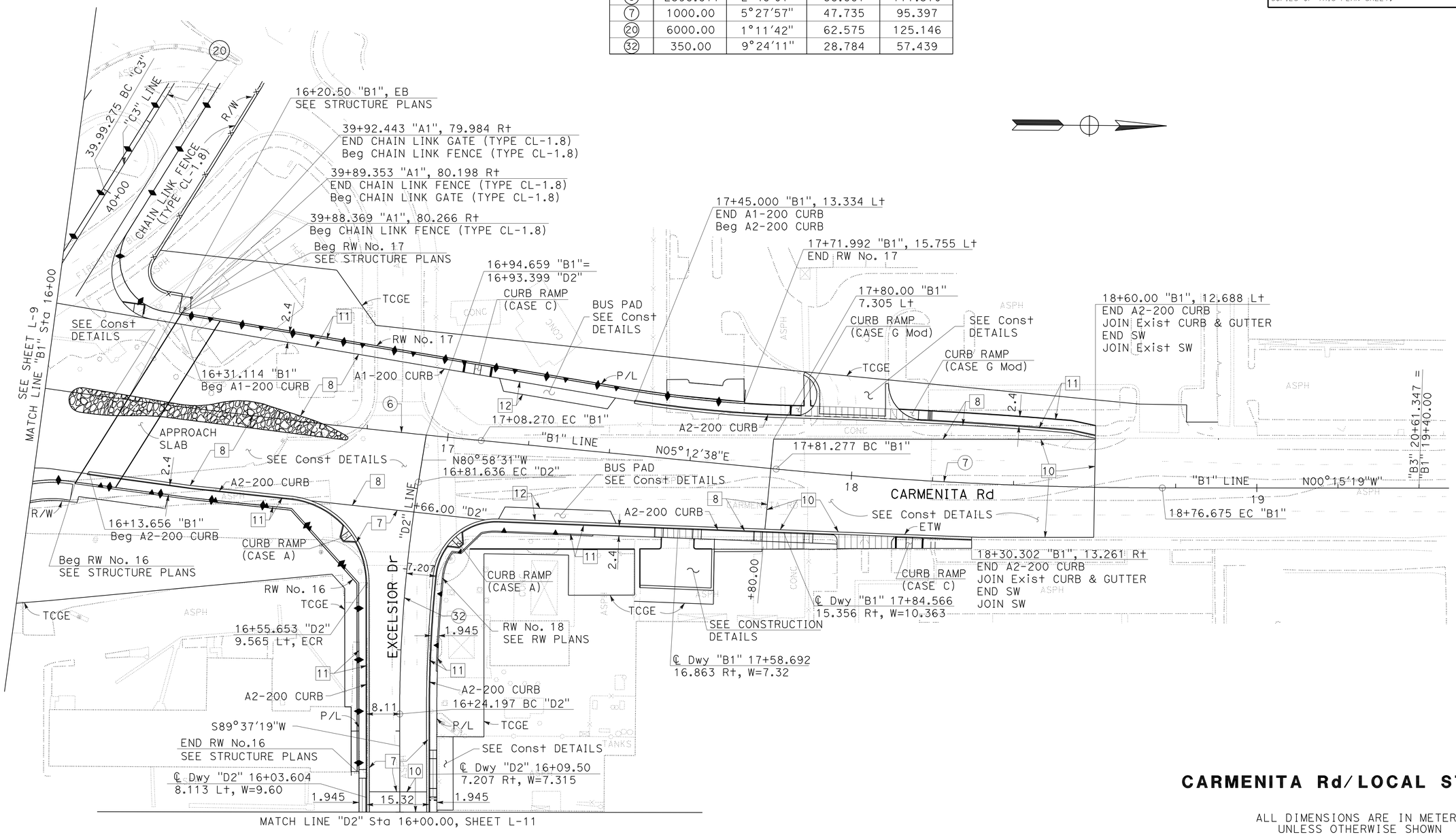


**CARMENITA Rd/LOCAL STREETS**

ALL DIMENSIONS ARE IN METERS
UNLESS OTHERWISE SHOWN

**LAYOUT**

SCALE 1:500

**L-10**

| | | | |
|---|---|---|---|
| KN | 9/09 | KEVIN Q. NGUYEN | NGIM NANCY PE |
| REVISED BY | DATE REVISED | CALCULATED-DESIGNED BY | CHECKED BY |
| FUNCTIONAL SUPERVISOR | NGIM NANCY PE | | |

STATE OF CALIFORNIA - DEPARTMENT OF TRANSPORTATION
Caltrans OFFICE OF DESIGN A

S:\projects\2159c1\replace1\72159cea010.dgn

LAST REVISION 00-00-00 DATE PLOTTED => 22-JUN-2010 TIME PLOTTED => 07:57

| Dist | COUNTY | ROUTE | KILOMETER POST TOTAL PROJECT | SHEET No. | TOTAL SHEETS |
|---|---|---|---|---|---|
| 07 | LA | 5 | 2.9/4.9 | 30 | 1082 |

REGISTERED CIVIL ENGINEER 12-23-09 DATE

6-21-10
PLANS APPROVAL DATE

REGISTERED PROFESSIONAL ENGINEER NGIM NANCY PE No. 58161 Exp. 6-30-10 CIVIL STATE OF CALIFORNIA

*THE STATE OF CALIFORNIA OR ITS OFFICERS OR AGENTS SHALL NOT BE RESPONSIBLE FOR THE ACCURACY OR COMPLETENESS OF ELECTRONIC COPIES OF THIS PLAN SHEET.*

Caltrans Metric

NOTE:

1. FOR ACCURATE RIGHT OF WAY AND ACCESS DATA, CONTACT RIGHT OF WAY ENGINEERING AT THE DISTRICT OFFICE.

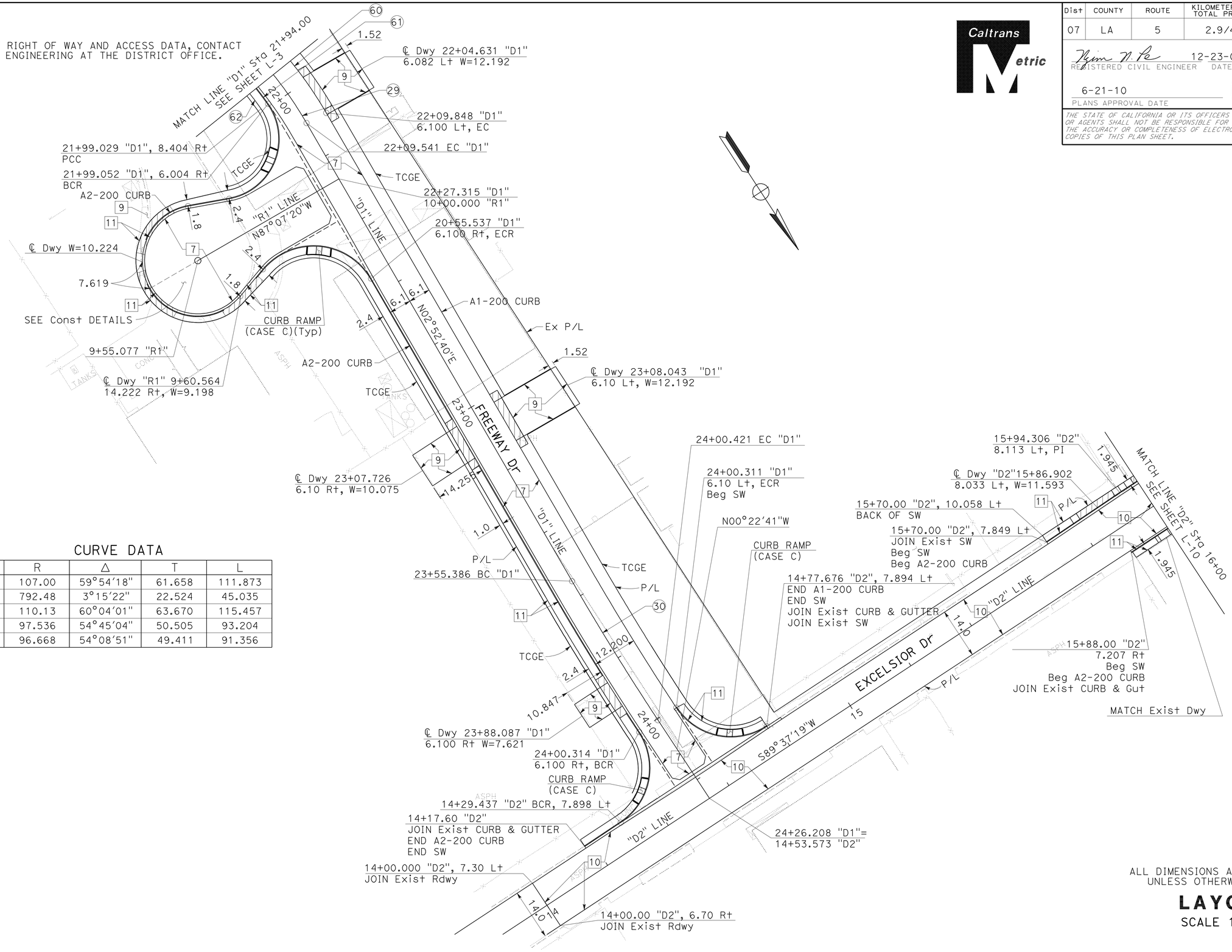


CURVE DATA

| No. | R | Δ | T | L |
|---|---|---|---|---|
| 29 | 107.00 | 59°54′18" | 61.658 | 111.873 |
| 30 | 792.48 | 3°15′22" | 22.524 | 45.035 |
| 60 | 110.13 | 60°04′01" | 63.670 | 115.457 |
| 61 | 97.536 | 54°45′04" | 50.505 | 93.204 |
| 62 | 96.668 | 54°08′51" | 49.411 | 91.356 |

ALL DIMENSIONS ARE IN METERS UNLESS OTHERWISE SHOWN

**LAYOUT**

SCALE 1:500

**L-11**

| CALCULATED-DESIGNED BY | KEVIN Q. NGUYEN | FUNCTIONAL SUPERVISOR | REVISED BY | KN |
|---|---|---|---|---|
| CHECKED BY | NGIM NANCY PE | NGIM NANCY PE | DATE REVISED | 9/09 |

STATE OF CALIFORNIA - DEPARTMENT OF TRANSPORTATION
Caltrans OFFICE OF DESIGN A

S:\projects\2159c1\resubmit9\72159cea011.dgn

LAST REVISION 00-00-00 | DATE PLOTTED => 16-FEB-2011 | TIME PLOTTED => 08:25

| Dist | COUNTY | ROUTE | KILOMETER POST TOTAL PROJECT | SHEET No. | TOTAL SHEETS |
|---|---|---|---|---|---|
| 07 | LA | 5 | 2.9/4.9 | 31 | 1082 |

Caltrans Metric

Ngim N. Pe 12-23-09
REGISTERED CIVIL ENGINEER DATE

6-21-10
PLANS APPROVAL DATE

REGISTERED PROFESSIONAL ENGINEER NGIM NANCY PE No. 58161 Exp. 6-30-10 CIVIL STATE OF CALIFORNIA

*THE STATE OF CALIFORNIA OR ITS OFFICERS OR AGENTS SHALL NOT BE RESPONSIBLE FOR THE ACCURACY OR COMPLETENESS OF ELECTRONIC COPIES OF THIS PLAN SHEET.*

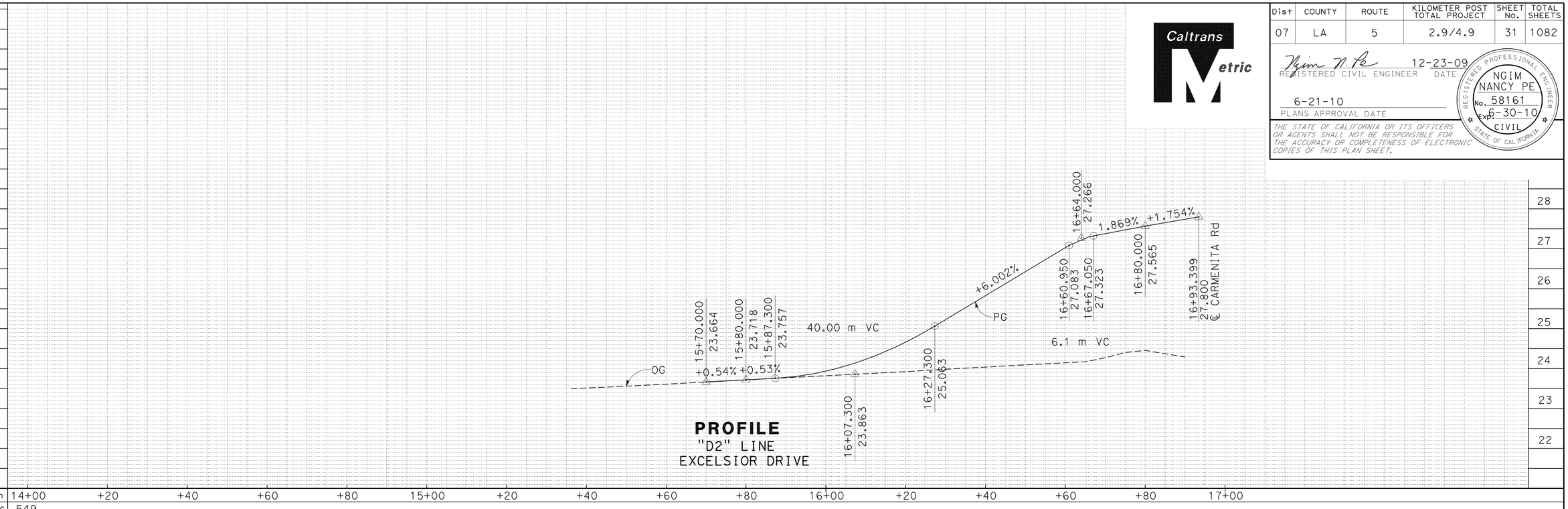


**PROFILE**
"D2" LINE
EXCELSIOR DRIVE

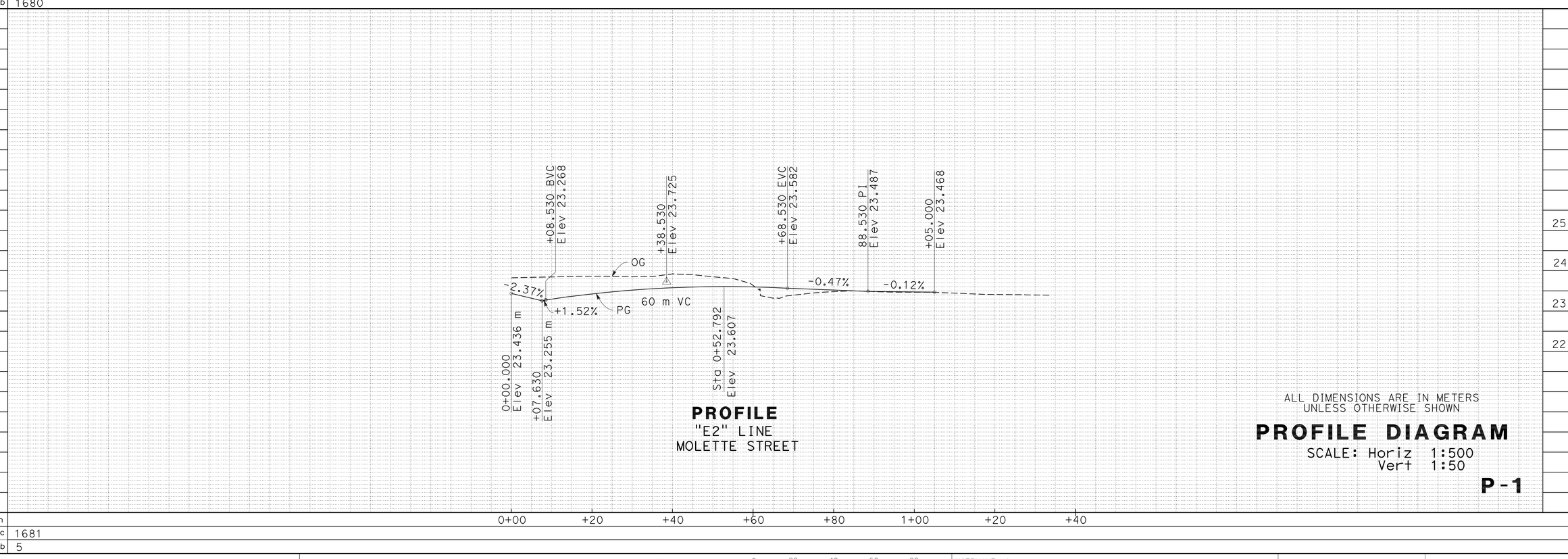


**PROFILE**
"E2" LINE
MOLETTE STREET

ALL DIMENSIONS ARE IN METERS
UNLESS OTHERWISE SHOWN

# PROFILE DIAGRAM

SCALE: Horiz 1:500
Vert 1:50

**P-1**

REVISED BY NGIM NANCY PE
DATE REVISED NGIM NANCY PE
CALCULATED-DESIGNED BY
CHECKED BY
FUNCTIONAL SUPERVISOR NGIM NANCY PE

STATE OF CALIFORNIA - DEPARTMENT OF TRANSPORTATION
Caltrans OFFICE OF DESIGN A

S:\projects\2159c\replace1\72159cfa001.dgn

LAST REVISION 00-00-00 DATE PLOTTED => 22-JUN-2010 TIME PLOTTED => 07:57

| Dist | COUNTY | ROUTE | KILOETER POST TOTAL PROJECT | SHEET No. | TOTAL SHEETS |
|---|---|---|---|---|---|
| 07 | LA | 5 | 2.9/4.9 | 32 | 1082 |

REGISTERED CIVIL ENGINEER 12-23-09 DATE

6-21-10
PLANS APPROVAL DATE

REGISTERED PROFESSIONAL ENGINEER NGIM NANCY PE No. 58161 Exp. 6-30-10 CIVIL STATE OF CALIFORNIA

*THE STATE OF CALIFORNIA OR ITS OFFICERS OR AGENTS SHALL NOT BE RESPONSIBLE FOR THE ACCURACY OR COPLETENESS OF ElevECTRONIC COPIES OF THIS PLAN SHEET.*

Caltrans Metric

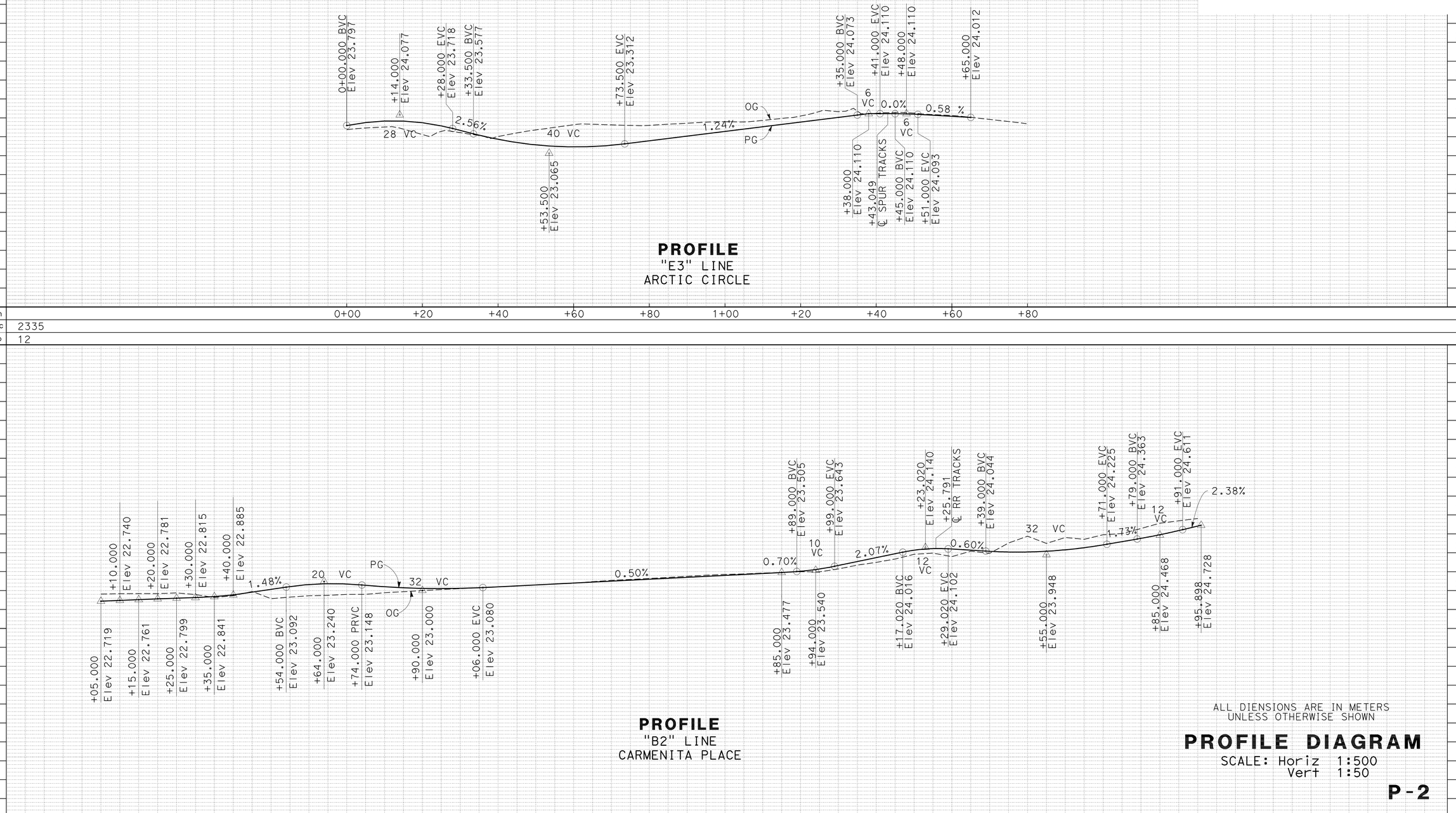


**PROFILE**
"E3" LINE
ARCTIC CIRCLE

**PROFILE**
"B2" LINE
CARMENITA PLACE

ALL DIENSIONS ARE IN METERS
UNLESS OTHERWISE SHOWN

**PROFILE DIAGRAM**
SCALE: Horiz 1:500
Vert 1:50

**P-2**

STATE OF CALIFORNIA - DEPARTENT OF TRANSPORTATION
Caltrans OFFICE OF DESIGN A

FUNCTIONAL SUPERVISOR: NGI NANCY PE

CALCULATED-DESIGNED BY: NGIM NANCY PE
CHECKED BY: KEVIN Q NGUYEN

REVISED BY | DATE REVISED

LAST REVISION 00-00-00
DATE PLOTTED => 22-JUN-2010
TIE PLOTTED => $TIE

BORDER LAST REVISED 3/1/2007

RElevATIVE BORDER SCALE IS IN ILLIETERS 0 20 40 60 80

USERNAE => trmnguye
DGN FILE => 72159cfa002.dgn

CU 07225

EA 2159C1

| Dist | COUNTY | ROUTE | KILOMETER POST TOTAL PROJECT | SHEET No. | TOTAL SHEETS |
|---|---|---|---|---|---|
| 07 | LA | 5 | 2.9/4.9 | 33 | 1082 |

Caltrans Metric

Ngim N. Pe 12-23-09
REGISTERED CIVIL ENGINEER DATE

6-21-10
PLANS APPROVAL DATE

REGISTERED PROFESSIONAL ENGINEER NGIM NANCY PE No. 58161 Exp. 6-30-10 CIVIL STATE OF CALIFORNIA

*THE STATE OF CALIFORNIA OR ITS OFFICERS OR AGENTS SHALL NOT BE RESPONSIBLE FOR THE ACCURACY OR COMPLETENESS OF ELECTRONIC COPIES OF THIS PLAN SHEET.*

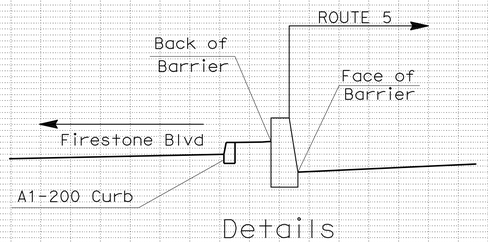


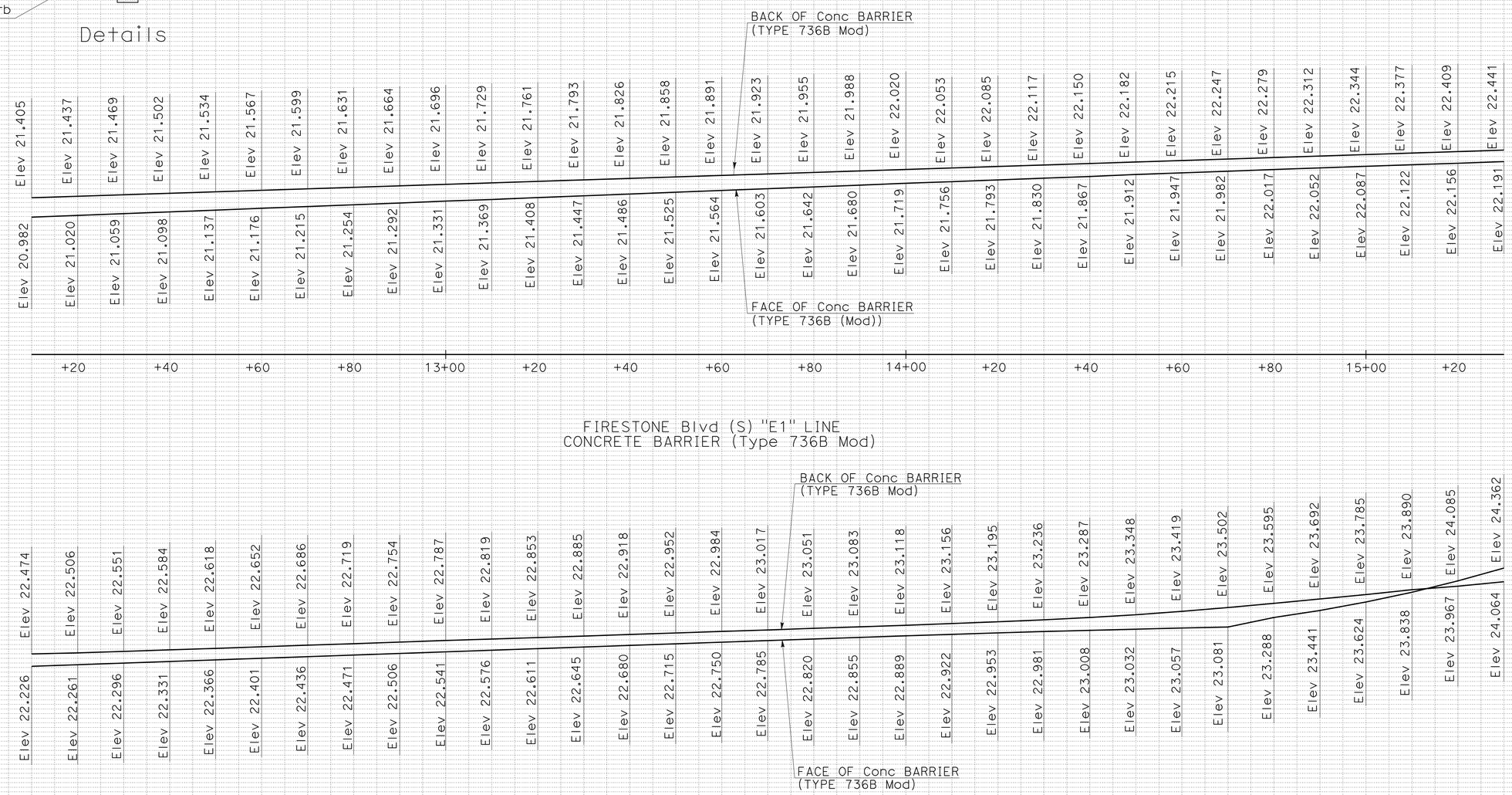


ALL DIMENSIONS ARE IN METERS UNLESS OTHERWISE SHOWN

# CONCRETE BARRIER PROFILE

SCALE: Horiz 1:500
Vert 1:50

**P-3**

STATE OF CALIFORNIA - DEPARTMENT OF TRANSPORTATION
Caltrans OFFICE OF DESIGN A

FUNCTIONAL SUPERVISOR: NGIM NANCY PE

CALCULATED-DESIGNED BY: MAHBUB MURSHED
CHECKED BY: NGIM NANCY PE

REVISED BY: A BAWANA
DATE REVISED: 08-05-08

LAST REVISION 00-00-00
DATE PLOTTED => 16-FEB-2011
TIME PLOTTED => 08:26

| Dist | COUNTY | ROUTE | KILOMETER POST TOTAL PROJECT | SHEET No. | TOTAL SHEETS |
|---|---|---|---|---|---|
| 07 | LA | 5 | 2.9/4.9 | 34 | 1082 |

Ngim N. Pe 12-23-09
REGISTERED CIVIL ENGINEER DATE

6-21-10
PLANS APPROVAL DATE

REGISTERED PROFESSIONAL ENGINEER NGIM NANCY PE No. 58161 Exp. 6-30-10 CIVIL STATE OF CALIFORNIA

*THE STATE OF CALIFORNIA OR ITS OFFICERS OR AGENTS SHALL NOT BE RESPONSIBLE FOR THE ACCURACY OR COMPLETENESS OF ElveECTRONIC COPIES OF THIS PLAN SHEET.*

Caltrans Metric

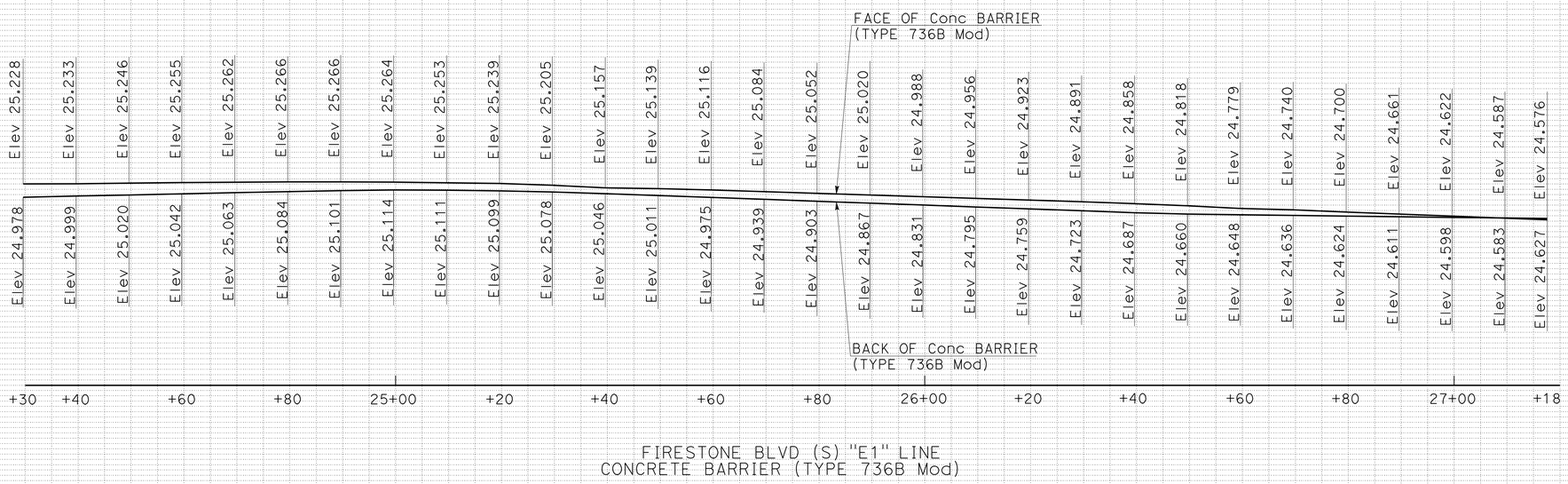


FIRESTONE BLVD (S) "E1" LINE
CONCRETE BARRIER (TYPE 736B Mod)

ALL DIMENSIONS ARE IN METERS
UNLESS OTHERWISE SHOWN

# CONCRETE BARRIER PROFILE

SCALE: Horiz 1:500
Vert 1:50

**P-4**

REVISED BY A BAWANA
DATE REVISED 08-11-08

CALCULATED-DESIGNED BY MAHBUB MURSHED
CHECKED BY NGIM NANCY PE

FUNCTIONAL SUPERVISOR NGIM NANCY PE

STATE OF CALIFORNIA - DEPARTMENT OF TRANSPORTATION
Caltrans OFFICE OF DESIGN A

Station
$m^3$ Exc
Emb

LAST REVISION 00-00-00
DATE PLOTTED => 22-JUN-2010
TIME PLOTTED => 07:57

| Dist | COUNTY | ROUTE | KILOMETER POST TOTAL PROJECT | SHEET No. | TOTAL SHEETS |
|---|---|---|---|---|---|
| 07 | LA | 5 | 2.9/4.9 | 35 | 1082 |

REGISTERED CIVIL ENGINEER 12-23-09 DATE

6-21-10
PLANS APPROVAL DATE

REGISTERED PROFESSIONAL ENGINEER NGIM NANCY PE No. 58161 Exp. 6-30-10 CIVIL STATE OF CALIFORNIA

*THE STATE OF CALIFORNIA OR ITS OFFICERS OR AGENTS SHALL NOT BE RESPONSIBLE FOR THE ACCURACY OR COMPLETENESS OF ElevECTRONIC COPIES OF THIS PLAN SHEET.*

Caltrans Metric

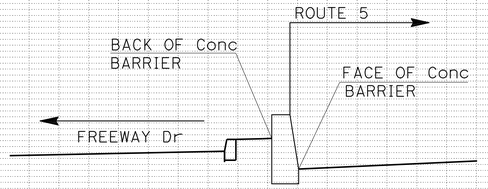


DETAILS

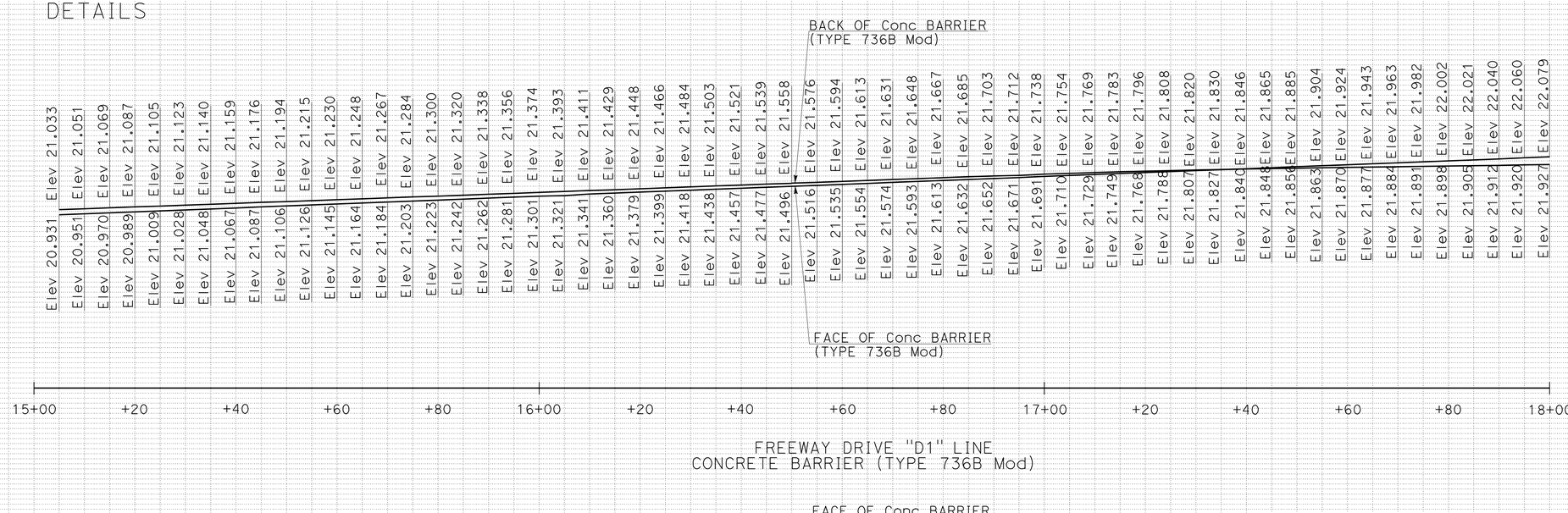


FREEWAY DRIVE "D1" LINE
CONCRETE BARRIER (TYPE 736B Mod)

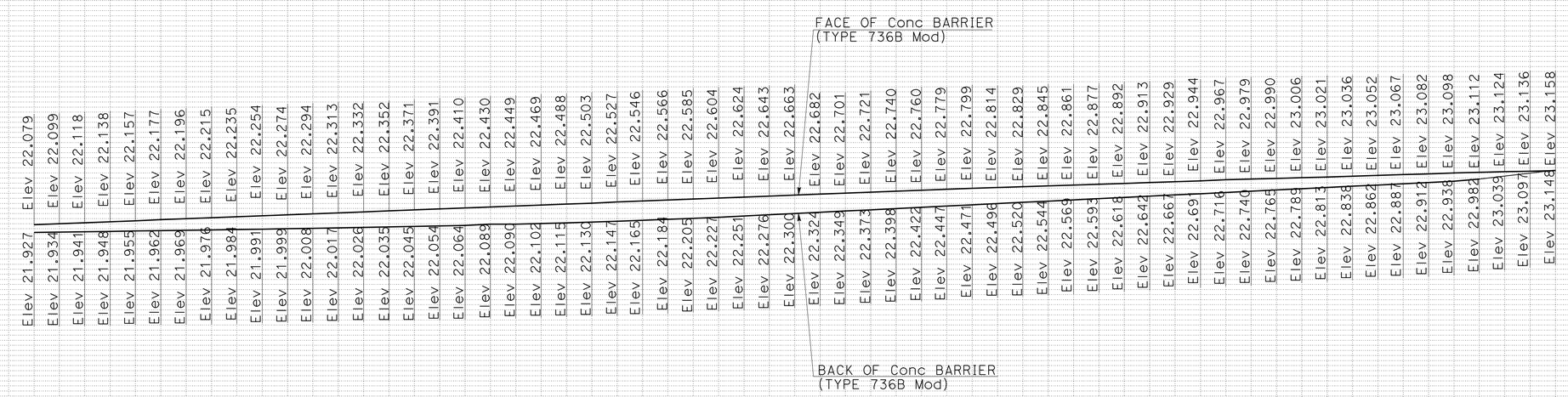


FREEWAY DRIVE "D1" LINE
CONCRETE BARRIER (TYPE 736B Mod)

ALL DIMENSIONS ARE IN METERS
UNLESS OTHERWISE SHOWN

# CONCRETE BARRIER PROFILE

SCALE: Horiz 1:500
Vert 1:50

**P-5**

Station 18+00 +20 +40 +60 +80 19+00 +20 +40 +60 +80 20+00 +20 +40 +60 +80 21+00

$m^3$ Exc / Emb

STATE OF CALIFORNIA - DEPARTMENT OF TRANSPORTATION
Caltrans OFFICE OF DESIGN A

FUNCTIONAL SUPERVISOR: NGIM NANCY PE

CALCULATED-DESIGNED BY: MAHBUB MURSHED
CHECKED BY: NGIM NANCY PE

REVISED BY: A BAWANA
DATE REVISED: 08-05-08

LAST REVISION 00-00-00
DATE PLOTTED => 22-JUN-2010
TIME PLOTTED => 07:58

| Dist | COUNTY | ROUTE | KILOMETER POST TOTAL PROJECT | SHEET No. | TOTAL SHEETS |
|---|---|---|---|---|---|
| 07 | LA | 5 | 2.9/4.9 | 36 | 1082 |

Caltrans Metric

REGISTERED CIVIL ENGINEER 12-23-09 DATE

6-21-10
PLANS APPROVAL DATE

REGISTERED PROFESSIONAL ENGINEER NGIM NANCY PE No. 58161 Exp. 6-30-10 CIVIL STATE OF CALIFORNIA

*THE STATE OF CALIFORNIA OR ITS OFFICERS OR AGENTS SHALL NOT BE RESPONSIBLE FOR THE ACCURACY OR COMPLETENESS OF ELECTRONIC COPIES OF THIS PLAN SHEET.*

REVISED BY | DATE REVISED

KEVIN Q NGUYEN | HAN L NG

CALCULATED-DESIGNED BY | CHECKED BY

FUNCTIONAL SUPERVISOR: NGIM NANCY PE

STATE OF CALIFORNIA - DEPARTMENT OF TRANSPORTATION
Caltrans OFFICE OF DESIGN A

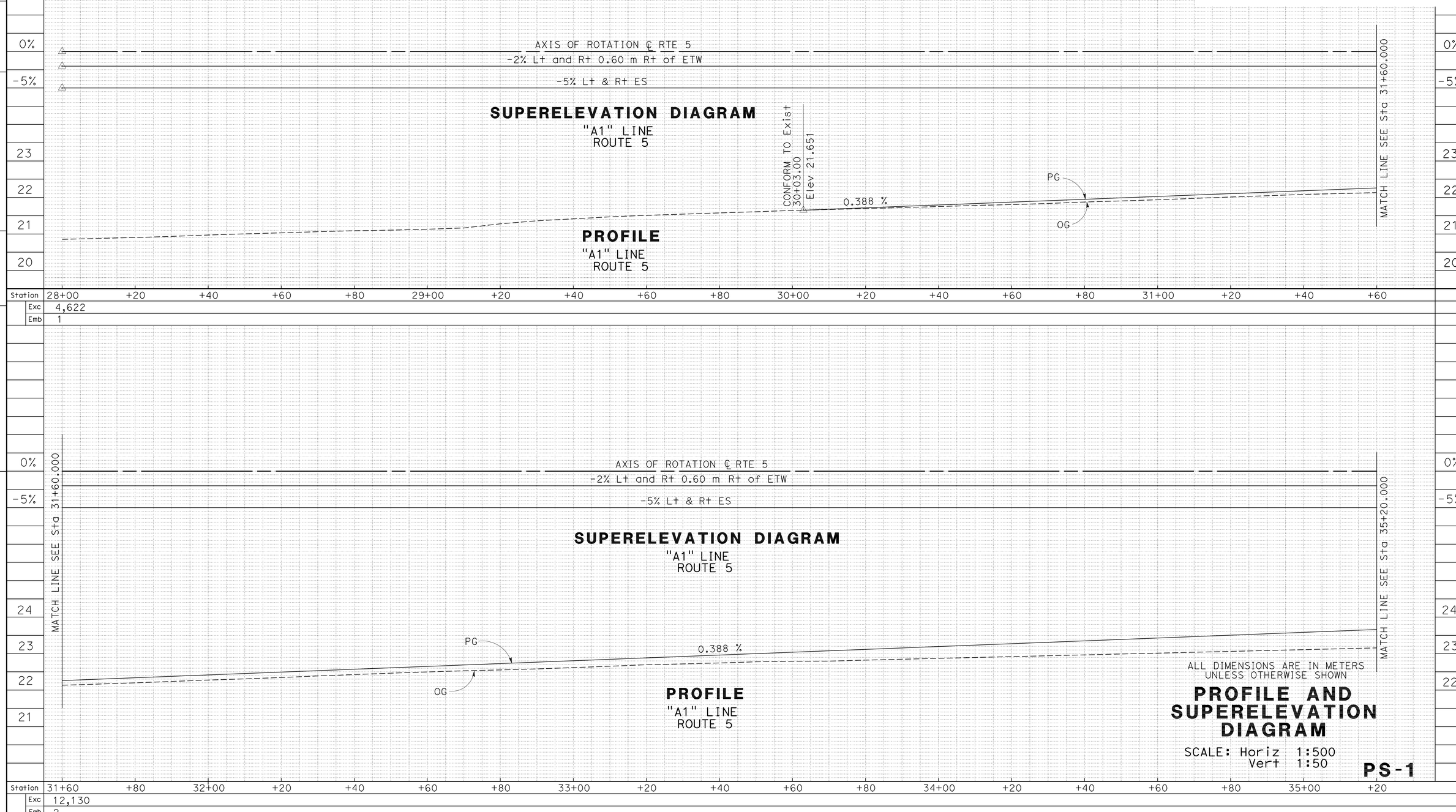


ALL DIMENSIONS ARE IN METERS UNLESS OTHERWISE SHOWN

# PROFILE AND SUPERELEVATION DIAGRAM

SCALE: Horiz 1:500
Vert 1:50

**PS-1**

LAST REVISION 00-00-00 | DATE PLOTTED => 22-JUN-2010 | TIME PLOTTED => 07:58

| Dist | COUNTY | ROUTE | KILOMETER POST TOTAL PROJECT | SHEET No. | TOTAL SHEETS |
|---|---|---|---|---|---|
| 07 | LA | 5 | 2.9/4.9 | 37 | 1082 |

Caltrans Metric

Ngim N. Pe 12-23-09
REGISTERED CIVIL ENGINEER DATE

6-21-10
PLANS APPROVAL DATE

REGISTERED PROFESSIONAL ENGINEER NGIM NANCY PE No. 58161 Exp. 6-30-10 CIVIL STATE OF CALIFORNIA

*THE STATE OF CALIFORNIA OR ITS OFFICERS OR AGENTS SHALL NOT BE RESPONSIBLE FOR THE ACCURACY OR COMPLETENESS OF ELECTRONIC COPIES OF THIS PLAN SHEET.*

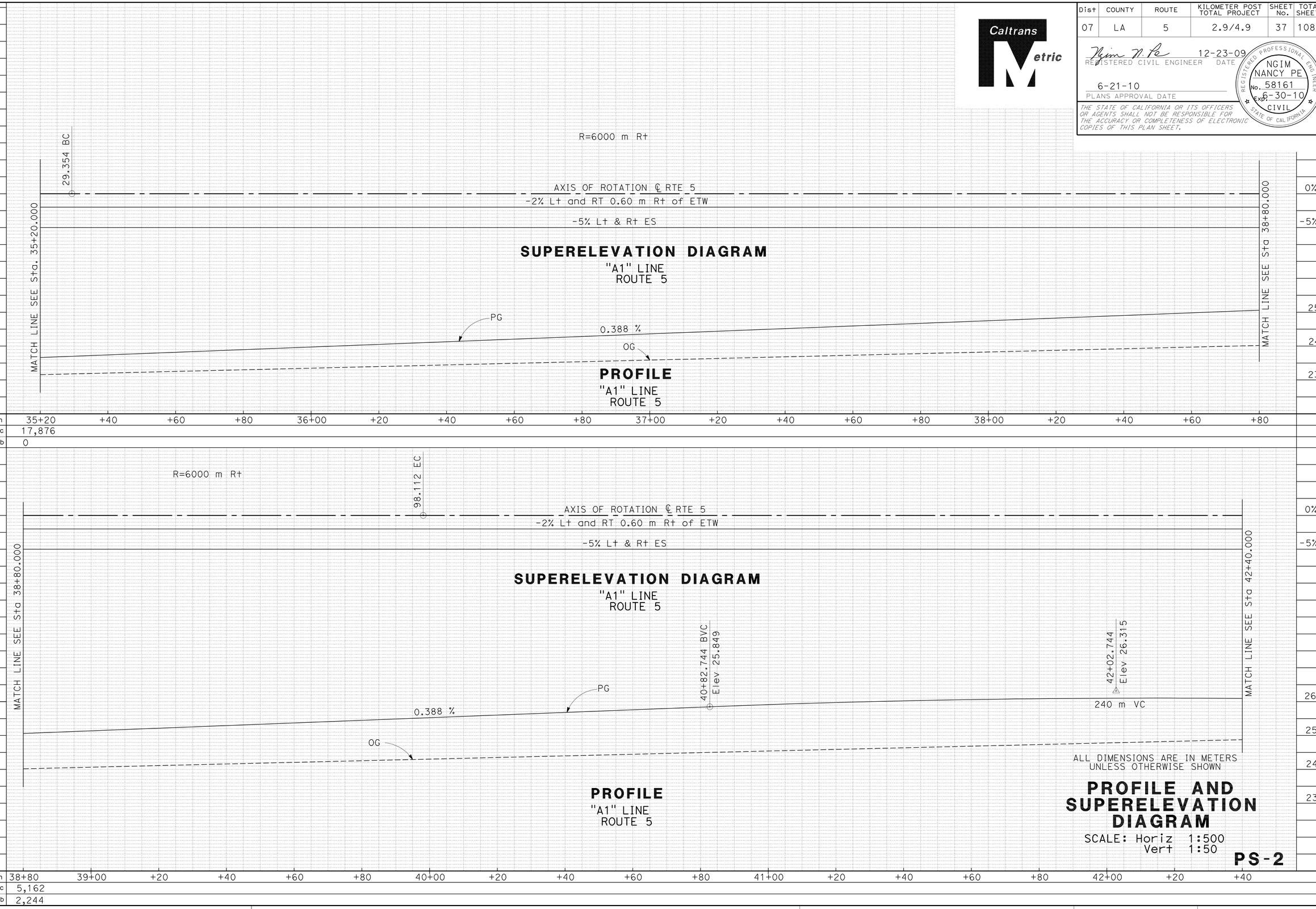


ALL DIMENSIONS ARE IN METERS UNLESS OTHERWISE SHOWN

# PROFILE AND SUPERELEVATION DIAGRAM

SCALE: Horiz 1:500
Vert 1:50

**PS-2**

REVISED BY | DATE REVISED

KEVIN Q NGUYEN
NGIM NANCY PE

CALCULATED-DESIGNED BY
CHECKED BY

FUNCTIONAL SUPERVISOR
NGIM NANCY PE

STATE OF CALIFORNIA - DEPARTMENT OF TRANSPORTATION
Caltrans OFFICE OF DESIGN A

LAST REVISION 00-00-00 | DATE PLOTTED => 23-JUN-2010 | TIME PLOTTED => 08:58

| Dist | COUNTY | ROUTE | KILOMETER POST TOTAL PROJECT | SHEET No. | TOTAL SHEETS |
|---|---|---|---|---|---|
| 07 | LA | 5 | 2.9/4.9 | 38 | 1082 |

Ngim N. Pe 12-23-09
REGISTERED CIVIL ENGINEER DATE

6-21-10
PLANS APPROVAL DATE

REGISTERED PROFESSIONAL ENGINEER NGIM NANCY PE No. 58161 Exp. 6-30-10 CIVIL STATE OF CALIFORNIA

*THE STATE OF CALIFORNIA OR ITS OFFICERS OR AGENTS SHALL NOT BE RESPONSIBLE FOR THE ACCURACY OR COMPLETENESS OF ELECTRONIC COPIES OF THIS PLAN SHEET.*

Caltrans Metric

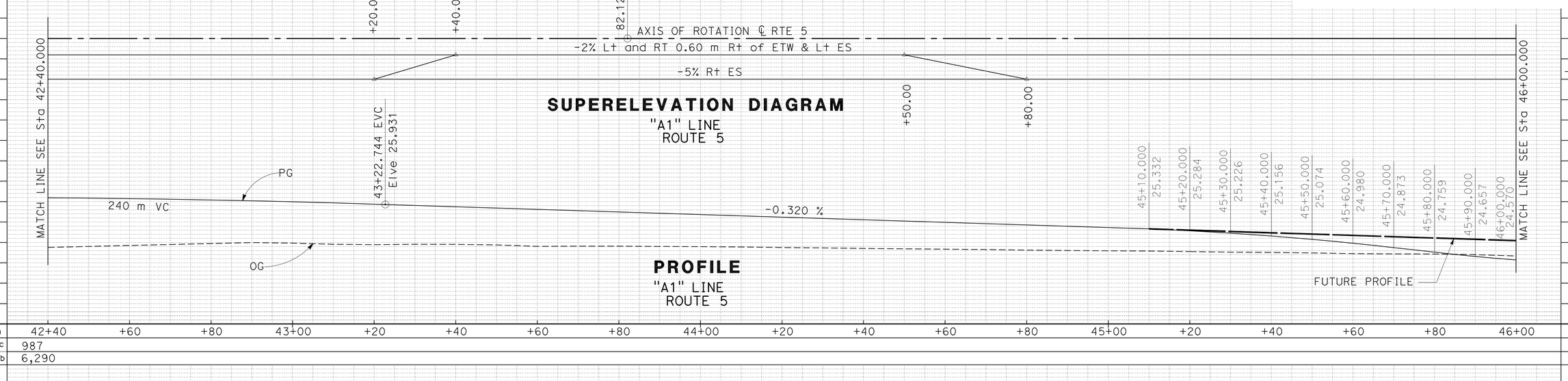


**SUPERELEVATION DIAGRAM**
"A1" LINE
ROUTE 5

**PROFILE**
"A1" LINE
ROUTE 5

| | | |
|---|---|---|
| 3 | Exc | 987 |
| | Emb | 6,290 |

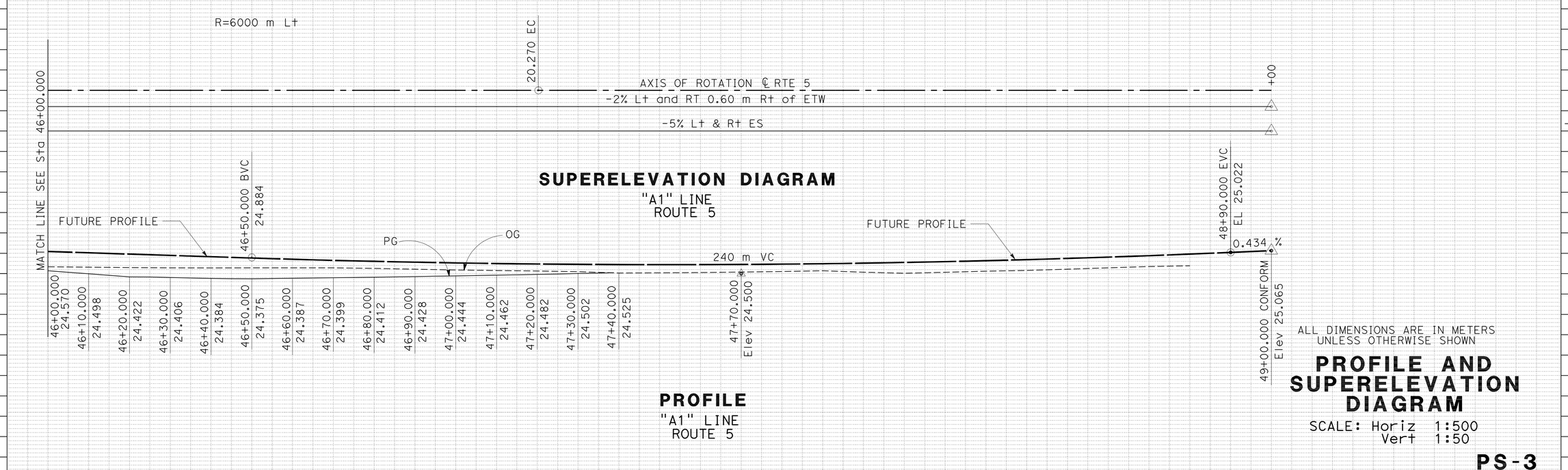


**SUPERELEVATION DIAGRAM**
"A1" LINE
ROUTE 5

**PROFILE**
"A1" LINE
ROUTE 5

| | | |
|---|---|---|
| m³ | Exc | 661 |
| | Emb | 1,303 |

ALL DIMENSIONS ARE IN METERS UNLESS OTHERWISE SHOWN

# PROFILE AND SUPERELEVATION DIAGRAM

SCALE: Horiz 1:500
Vert 1:50

**PS-3**

| REVISED BY | DATE REVISED |
|---|---|
| KEVIN Q NGUYEN | NGIM NANCY PE |

CALCULATED-DESIGNED BY
CHECKED BY

FUNCTIONAL SUPERVISOR: NGIM NANCY PE

STATE OF CALIFORNIA - DEPARTMENT OF TRANSPORTATION
Caltrans OFFICE OF DESIGN A

LAST REVISION 00-00-00
DATE PLOTTED => 22-JUN-2010
TIME PLOTTED => 07:58

| Dist | COUNTY | ROUTE | KILOMETER POST TOTAL PROJECT | SHEET No. | TOTAL SHEETS |
|---|---|---|---|---|---|
| 07 | LA | 5 | 2.9/4.9 | 39 | 1082 |

Caltrans Metric

REGISTERED CIVIL ENGINEER 12-23-09 DATE

6-21-10
PLANS APPROVAL DATE

REGISTERED PROFESSIONAL ENGINEER NGIM NANCY PE No. 58161 Exp. 6-30-10 CIVIL STATE OF CALIFORNIA

*THE STATE OF CALIFORNIA OR ITS OFFICERS OR AGENTS SHALL NOT BE RESPONSIBLE FOR THE ACCURACY OR COMPLETENESS OF ELECTRONIC COPIES OF THIS PLAN SHEET.*

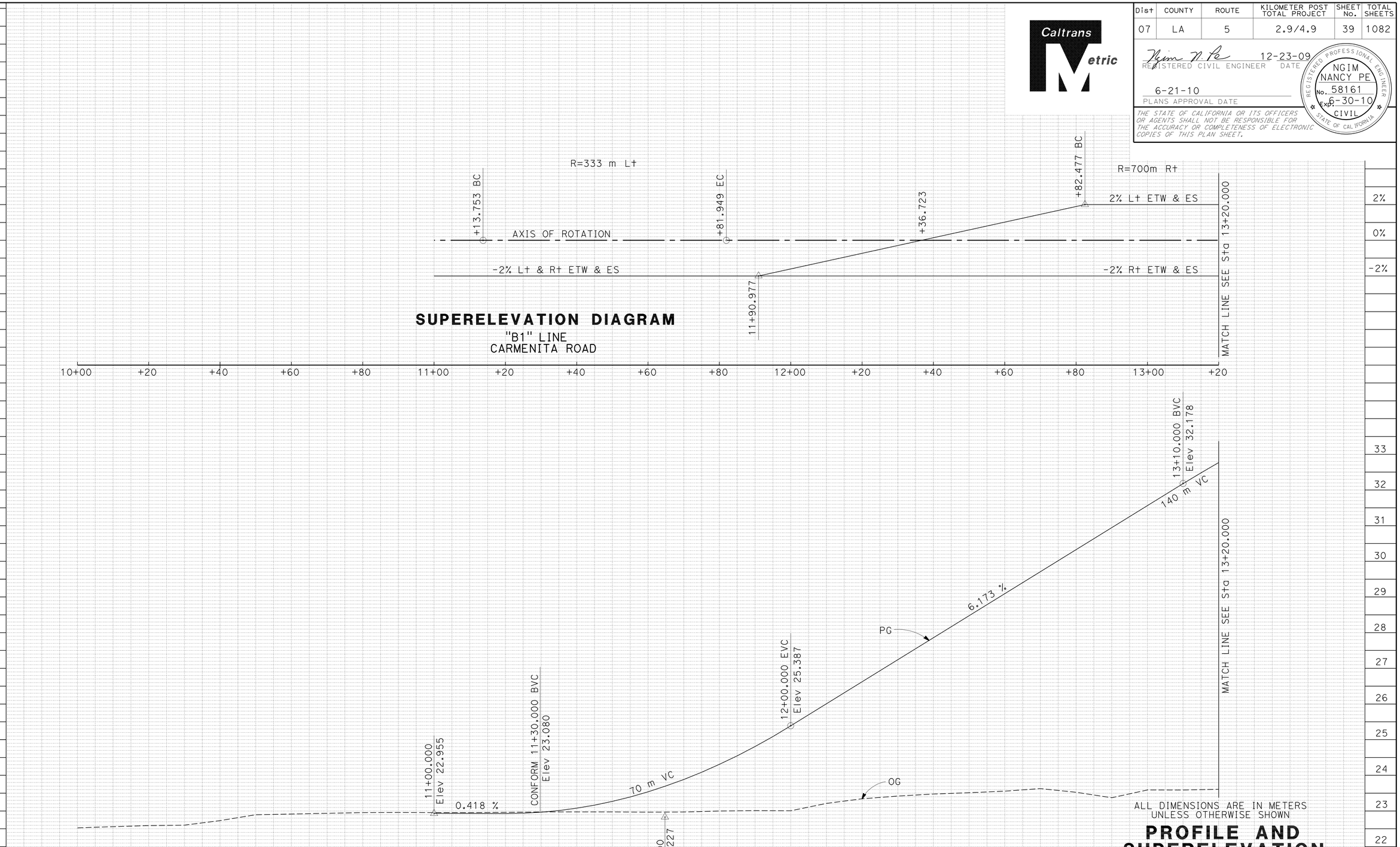


ALL DIMENSIONS ARE IN METERS
UNLESS OTHERWISE SHOWN

# PROFILE AND SUPERELEVATION DIAGRAM

SCALE: Horiz 1:500
Vert 1:50

**PS-4**

| Station | | 10+00 | +20 | +40 | +60 | +80 | 11+00 | +20 | +40 | +60 | +80 | 12+00 | +20 | +40 | +60 | +80 | 13+00 | +20 |
|---|---|---|---|---|---|---|---|---|---|---|---|---|---|---|---|---|---|---|
| $m^3$ | Exc | 1,485 | | | | | | | | | | | | | | | | |
| | Emb | 11,737 | | | | | | | | | | | | | | | | |

STATE OF CALIFORNIA - DEPARTMENT OF TRANSPORTATION
Caltrans OFFICE OF DESIGN A

FUNCTIONAL SUPERVISOR: NGIM NANCY PE
CALCULATED-DESIGNED BY: KEVIN Q NGUYEN
CHECKED BY: NGIM NANCY PE

REVISED BY | DATE REVISED

LAST REVISION 00-00-00 DATE PLOTTED => 22-JUN-2010 TIME PLOTTED => 07:58

| Dist | COUNTY | ROUTE | KILOMETER POST TOTAL PROJECT | SHEET No. | TOTAL SHEETS |
|---|---|---|---|---|---|
| 07 | LA | 5 | 2.9/4.9 | 40 | 1082 |

REGISTERED CIVIL ENGINEER 12-23-09 DATE

6-21-10
PLANS APPROVAL DATE

REGISTERED PROFESSIONAL ENGINEER NGIM NANCY PE No. 58161 Exp. 6-30-10 CIVIL STATE OF CALIFORNIA

*THE STATE OF CALIFORNIA OR ITS OFFICERS OR AGENTS SHALL NOT BE RESPONSIBLE FOR THE ACCURACY OR COMPLETENESS OF ELECTRONIC COPIES OF THIS PLAN SHEET.*

Caltrans Metric

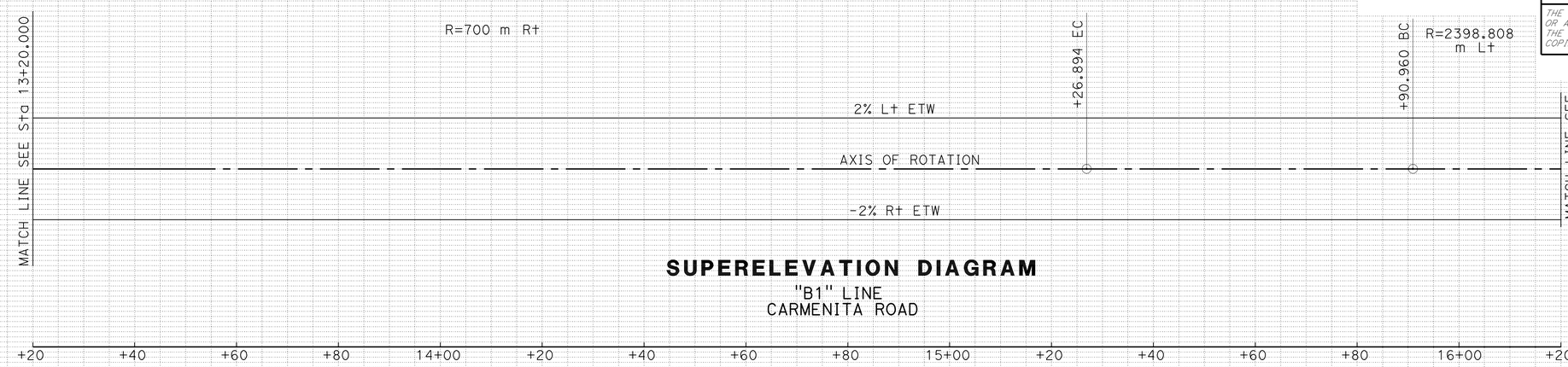


## SUPERELEVATION DIAGRAM
"B1" LINE
CARMENITA ROAD

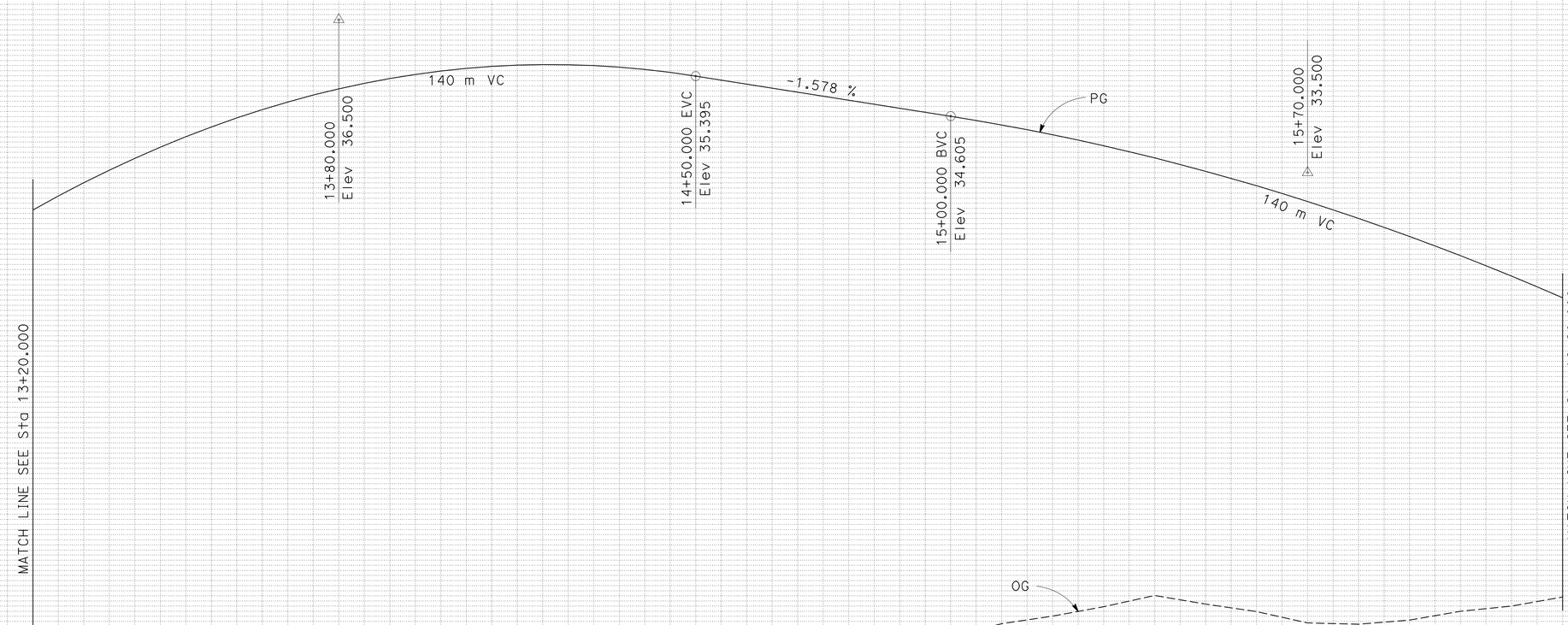


## PROFILE
"B1" LINE
CARMENITA ROAD

ALL DIMENSIONS ARE IN METERS UNLESS OTHERWISE SHOWN

## PROFILE AND SUPERELEVATION DIAGRAM

SCALE: Horiz 1:500
Vert 1:50

**PS-5**

| Station | | +20 | +40 | +60 | +80 | 14+00 | +20 | +40 | +60 | +80 | 15+00 | +20 | +40 | +60 | +80 | 16+00 | +20 |
|---|---|---|---|---|---|---|---|---|---|---|---|---|---|---|---|---|---|
| $m^3$ | Exc | 13,036 | | | | | | | | | | | | | | | |
| | Emb | 8 | | | | | | | | | | | | | | | |

REVISED BY | DATE REVISED

KEVIN Q NGUYEN | NGIM NANCY PE

CALCULATED-DESIGNED BY | CHECKED BY

FUNCTIONAL SUPERVISOR | NGIM NANCY PE

STATE OF CALIFORNIA - DEPARTMENT OF TRANSPORTATION
Caltrans OFFICE OF DESIGN A

LAST REVISION 00-00-00 | DATE PLOTTED => 22-JUN-2010 | TIME PLOTTED => 07:58

| Dist | COUNTY | ROUTE | KILOMETER POST TOTAL PROJECT | SHEET No. | TOTAL SHEETS |
|---|---|---|---|---|---|
| 07 | LA | 5 | 2.9/4.9 | 41 | 1082 |

REGISTERED CIVIL ENGINEER 12-23-09 DATE

6-21-10
PLANS APPROVAL DATE

REGISTERED PROFESSIONAL ENGINEER NGIM NANCY PE No. 58161 Exp. 6-30-10 CIVIL STATE OF CALIFORNIA

*THE STATE OF CALIFORNIA OR ITS OFFICERS OR AGENTS SHALL NOT BE RESPONSIBLE FOR THE ACCURACY OR COMPLETENESS OF ELECTRONIC COPIES OF THIS PLAN SHEET.*

Caltrans Metric

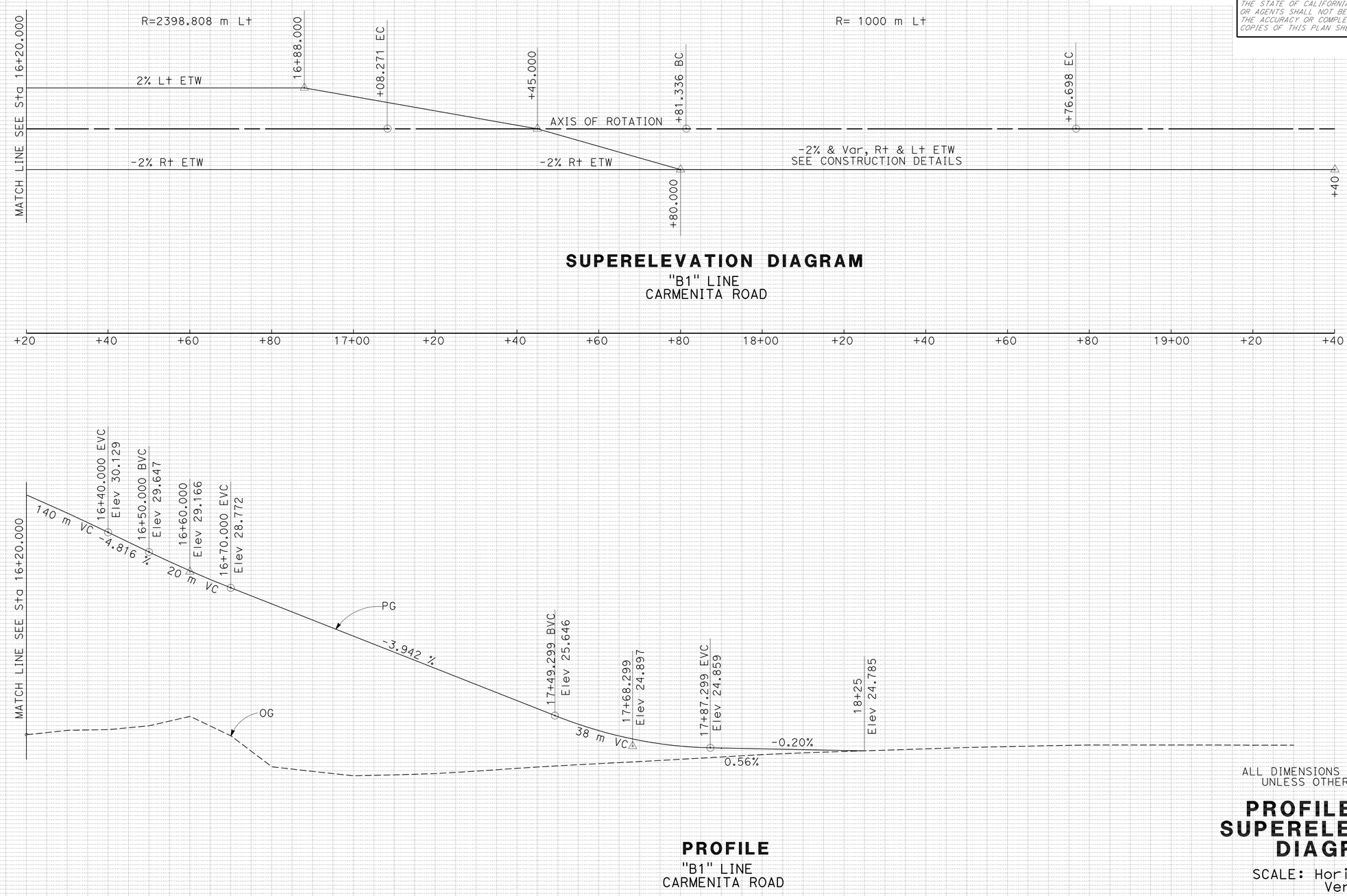


## SUPERELEVATION DIAGRAM

"B1" LINE
CARMENITA ROAD

## PROFILE

"B1" LINE
CARMENITA ROAD

ALL DIMENSIONS ARE IN METERS
UNLESS OTHERWISE SHOWN

## PROFILE AND SUPERELEVATION DIAGRAM

SCALE: Horiz 1:500
Vert 1:50

**PS-6**

| Station | +20 | +40 | +60 | +80 | 17+00 | +20 | +40 | +60 | +80 | 18+00 | +20 | +40 | +60 | +80 | 19+00 | +20 | +40 |
|---|---|---|---|---|---|---|---|---|---|---|---|---|---|---|---|---|---|
| $m^3$ Exc | 2,207 | | | | | | | | | | | | | | | | |
| $m^3$ Emb | 13,793 | | | | | | | | | | | | | | | | |

REVISED BY | DATE REVISED

KEVIN Q NGUYEN
NGIM NANCY PE

CALCULATED-DESIGNED BY
CHECKED BY

FUNCTIONAL SUPERVISOR
NGIM NANCY PE

STATE OF CALIFORNIA - DEPARTMENT OF TRANSPORTATION
Caltrans OFFICE OF DESIGN A

LAST REVISION 00-00-00
DATE PLOTTED => 22-JUN-2010
TIME PLOTTED => 07:58

| Dist | COUNTY | ROUTE | KILOMETER POST TOTAL PROJECT | SHEET No. | TOTAL SHEETS |
|---|---|---|---|---|---|
| 07 | LA | 5 | 2.9/4.9 | 42 | 1082 |

Caltrans Metric

REGISTERED CIVIL ENGINEER 12-23-09 DATE

6-21-10
PLANS APPROVAL DATE

REGISTERED PROFESSIONAL ENGINEER NGIM NANCY PE No. 58161 Exp. 6-30-10 CIVIL STATE OF CALIFORNIA

*THE STATE OF CALIFORNIA OR ITS OFFICERS OR AGENTS SHALL NOT BE RESPONSIBLE FOR THE ACCURACY OR COMPLETENESS OF ELECTRONIC COPIES OF THIS PLAN SHEET.*

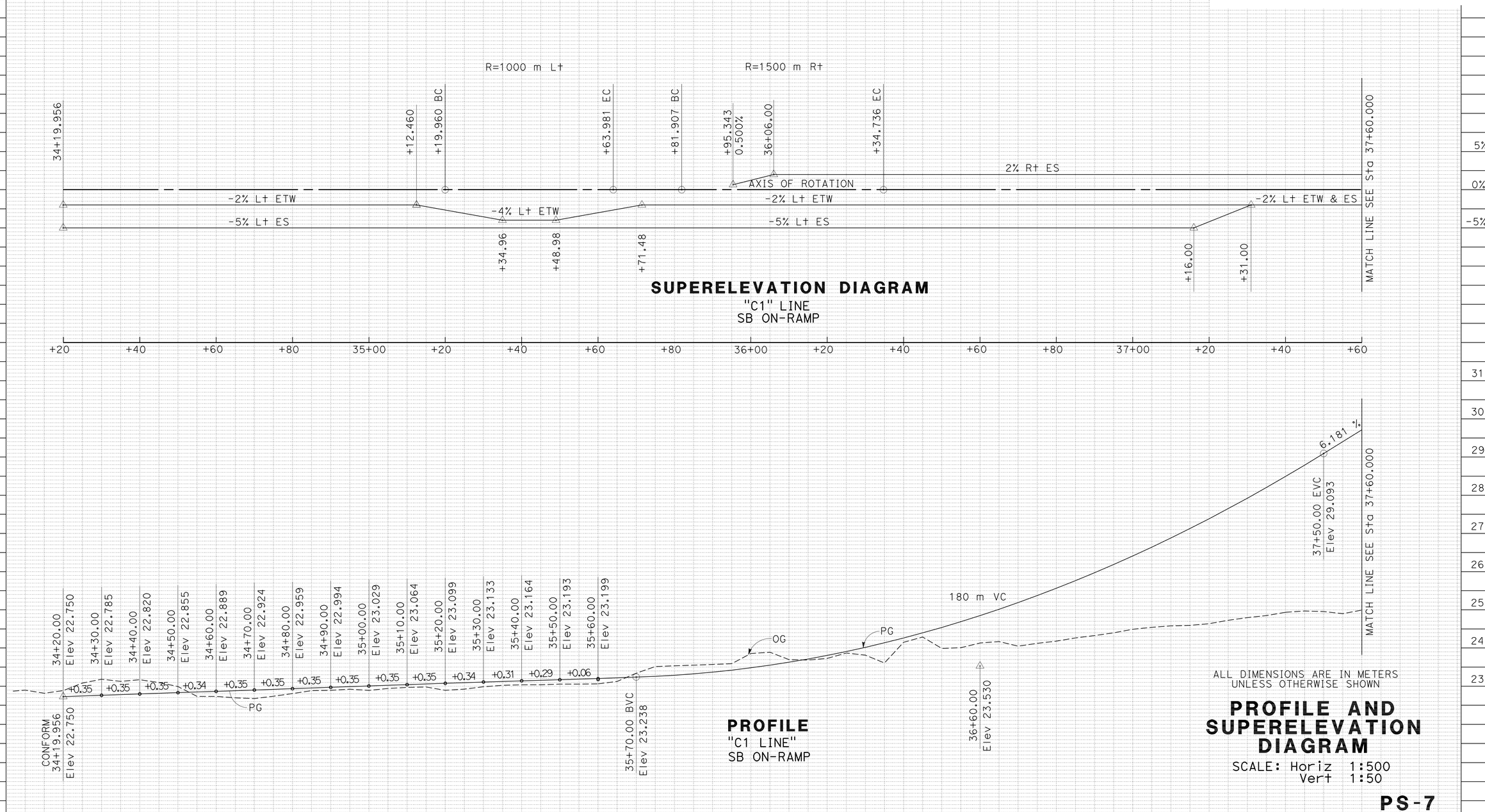


**SUPERELEVATION DIAGRAM**
"C1" LINE
SB ON-RAMP

**PROFILE**
"C1 LINE"
SB ON-RAMP

ALL DIMENSIONS ARE IN METERS UNLESS OTHERWISE SHOWN

# PROFILE AND SUPERELEVATION DIAGRAM

SCALE: Horiz 1:500
Vert 1:50

**PS-7**

| m³ | |
|---|---|
| Exc | 367 |
| Emb | 2,088 |

REVISED BY | DATE REVISED

KEVIN Q NGUYEN | HAN L NG

CALCULATED-DESIGNED BY | CHECKED BY

FUNCTIONAL SUPERVISOR: NGIM NANCY PE

STATE OF CALIFORNIA - DEPARTMENT OF TRANSPORTATION
Caltrans OFFICE OF DESIGN A

LAST REVISION 00-00-00 | DATE PLOTTED => 22-JUN-2010 | TIME PLOTTED => 07:58

| Dist | COUNTY | ROUTE | KILOMETER POST TOTAL PROJECT | SHEET No. | TOTAL SHEETS |
|---|---|---|---|---|---|
| 07 | LA | 5 | 2.9/4.9 | 43 | 1082 |

REGISTERED CIVIL ENGINEER 12-23-09 DATE

6-21-10
PLANS APPROVAL DATE

REGISTERED PROFESSIONAL ENGINEER NGIM NANCY PE No. 58161 Exp. 6-30-10 CIVIL STATE OF CALIFORNIA

*THE STATE OF CALIFORNIA OR ITS OFFICERS OR AGENTS SHALL NOT BE RESPONSIBLE FOR THE ACCURACY OR COMPLETENESS OF ELECTRONIC COPIES OF THIS PLAN SHEET.*

Caltrans Metric

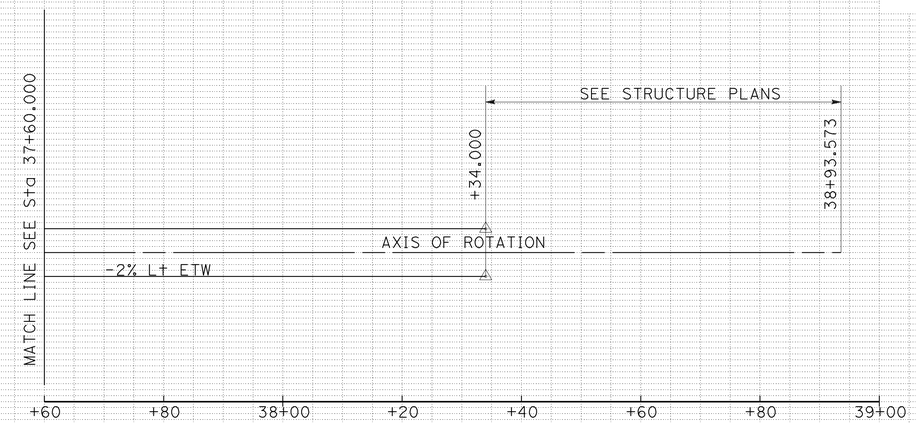


## SUPERELEVATION DIAGRAM

"C1" LINE
SB ON-RAMP

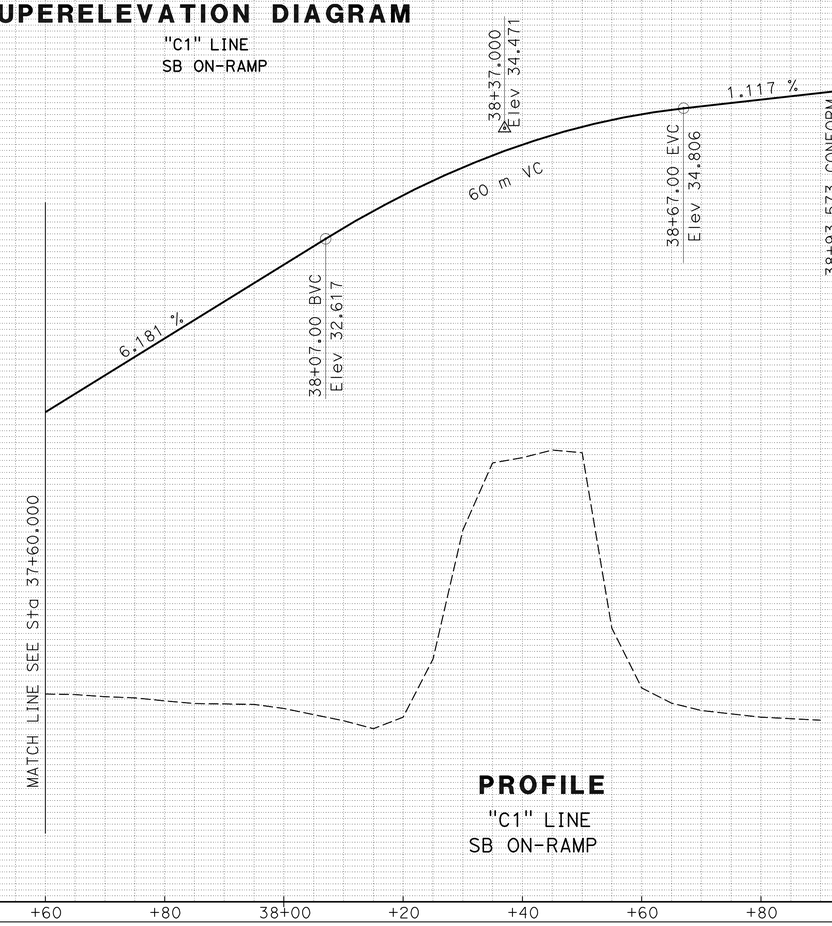


## PROFILE

"C1" LINE
SB ON-RAMP

ALL DIMENSIONS ARE IN METERS
UNLESS OTHERWISE SHOWN

# PROFILE AND SUPERELEVATION DIAGRAM

SCALE: Horiz 1:500
Vert 1:50

**PS-8**

| | |
|---|---|
| REVISED BY | KEVIN Q NGUYEN |
| DATE REVISED | NGIM NANCY PE |
| CALCULATED-DESIGNED BY | NGIM NANCY PE |
| CHECKED BY | |
| FUNCTIONAL SUPERVISOR | |

STATE OF CALIFORNIA - DEPARTMENT OF TRANSPORTATION
Caltrans OFFICE OF DESIGN A

Station: +60 +80 38+00 +20 +40 +60 +80 39+00
$m^3$ Exc / Emb

LAST REVISION 00-00-00
DATE PLOTTED => 22-JUN-2010
TIME PLOTTED => 07:58

| Dist | COUNTY | ROUTE | KILOMETER POST TOTAL PROJECT | SHEET No. | TOTAL SHEETS |
|---|---|---|---|---|---|
| 07 | LA | 5 | 2.9/4.9 | 44 | 1082 |

REGISTERED CIVIL ENGINEER 12-23-09 DATE

6-21-10
PLANS APPROVAL DATE

REGISTERED PROFESSIONAL ENGINEER NGIM NANCY PE No. 58161 Exp. 6-30-10 CIVIL STATE OF CALIFORNIA

*THE STATE OF CALIFORNIA OR ITS OFFICERS OR AGENTS SHALL NOT BE RESPONSIBLE FOR THE ACCURACY OR COMPLETENESS OF ELECTRONIC COPIES OF THIS PLAN SHEET.*

Caltrans Metric

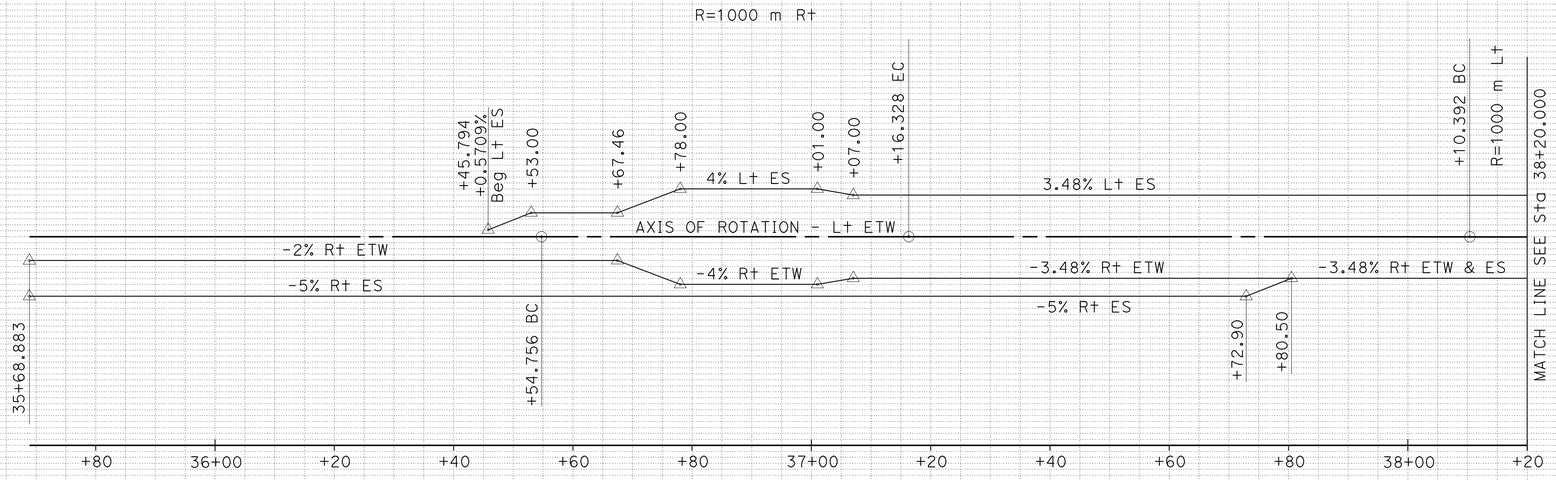


## SUPERELEVATION DIAGRAM

"C2" LINE

NB OFF-RAMP

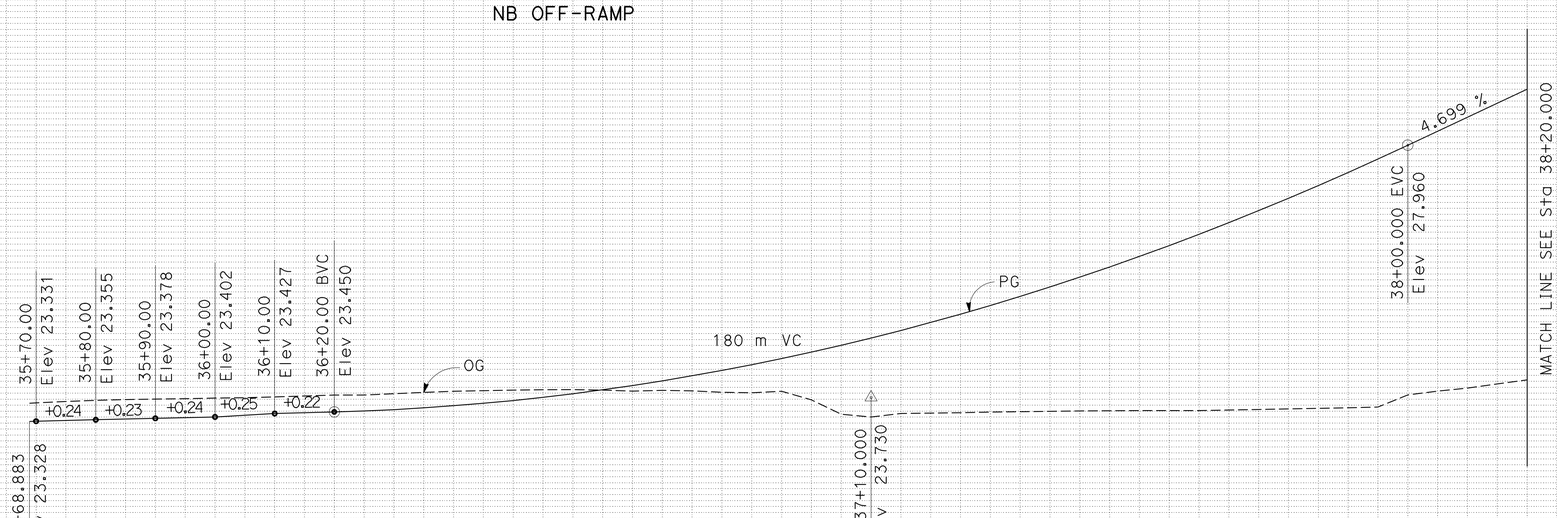


## PROFILE

"C2" LINE

NB OFF-RAMP

ALL DIMENSIONS ARE IN METERS
UNLES OTHERWISE SHOWN

# PROFILE AND SUPERELEVATION DIAGRAM

**PS-9**

| Station | +20 | +40 | +60 | +80 | 36+00 | +20 | +40 | +60 | +80 | 37+00 | +20 | +40 | +60 | +80 | 38+00 | +20 |
|---|---|---|---|---|---|---|---|---|---|---|---|---|---|---|---|---|
| $m^3$ Exc | 145 | | | | | | | | | | | | | | | |
| $m^3$ Emb | 3,372 | | | | | | | | | | | | | | | |

REVISED BY | DATE REVISED

KEVIN Q NGUYEN | NGIM NANCY PE

CALCULATED-DESIGNED BY | CHECKED BY

FUNCTIONAL SUPERVISOR: NGIM NANCY PE

STATE OF CALIFORNIA - DEPARTMENT OF TRANSPORTATION
Caltrans OFFICE OF DESIGN A

LAST REVISION 00-00-00 DATE PLOTTED => 22-JUN-2010 TIME PLOTTED => 07:59

| Dist | COUNTY | ROUTE | KILOMETER POST TOTAL PROJECT | SHEET No. | TOTAL SHEETS |
|---|---|---|---|---|---|
| 07 | LA | 5 | 2.9/4.9 | 45 | 1082 |

REGISTERED CIVIL ENGINEER 12-23-09 DATE

6-21-10
PLANS APPROVAL DATE

REGISTERED PROFESSIONAL ENGINEER NGIM NANCY PE No. 58161 Exp. 6-30-10 CIVIL STATE OF CALIFORNIA

*THE STATE OF CALIFORNIA OR ITS OFFICERS OR AGENTS SHALL NOT BE RESPONSIBLE FOR THE ACCURACY OR COMPLETENESS OF ELECTRONIC COPIES OF THIS PLAN SHEET.*

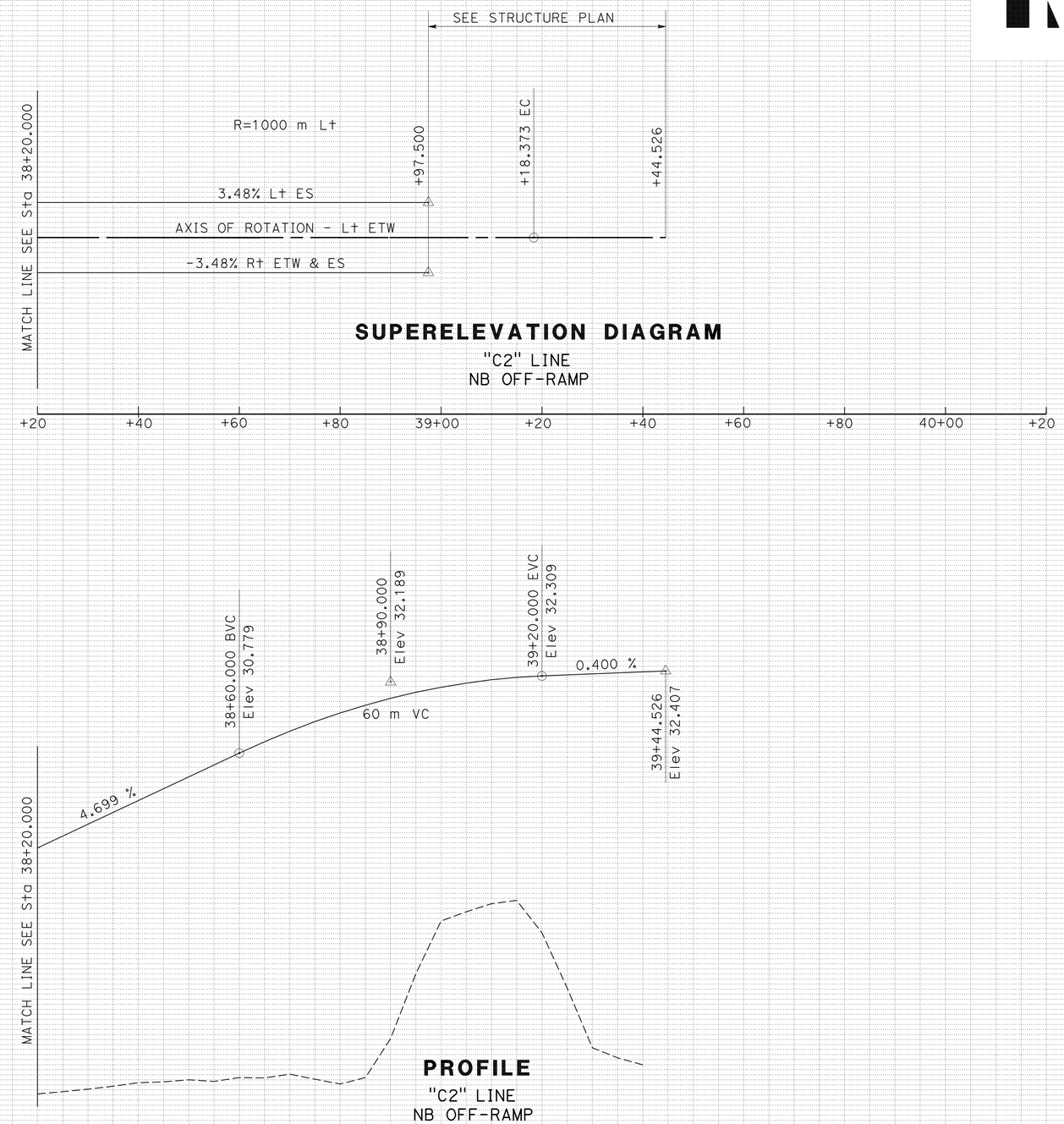


ALL DIMENSIONS ARE IN METERS
UNLESS OTHERWISE SHOWN

# PROFILE AND SUPERELEVATION DIAGRAM

SCALE: Horiz 1:500
Vert 1:50

**PS-10**

| Station | +20 | +40 | +60 | +80 | 39+00 | +20 | +40 | +60 | +80 | 40+00 | +20 |
|---|---|---|---|---|---|---|---|---|---|---|---|
| $m^3$ Exc | 0 | | | | | | | | | | |
| $m^3$ Emb | 853 | | | | | | | | | | |

REVISED BY / DATE REVISED

KEVIN Q NGUYEN
NGIM NANCY PE

CALCULATED-DESIGNED BY / CHECKED BY

FUNCTIONAL SUPERVISOR
NGIM NANCY PE

STATE OF CALIFORNIA - DEPARTMENT OF TRANSPORTATION
Caltrans OFFICE OF DESIGN A

LAST REVISION 00-00-00 DATE PLOTTED => 22-JUN-2010 TIME PLOTTED => 07:59

| Dist | COUNTY | ROUTE | KILOMETER POST TOTAL PROJECT | SHEET No. | TOTAL SHEETS |
|---|---|---|---|---|---|
| 07 | LA | 5 | 2.9/4.9 | 46 | 1082 |

REGISTERED CIVIL ENGINEER 12-23-09 DATE

6-21-10
PLANS APPROVAL DATE

REGISTERED PROFESSIONAL ENGINEER NGIM NANCY PE No. 58161 Exp. 6-30-10 CIVIL STATE OF CALIFORNIA

*THE STATE OF CALIFORNIA OR ITS OFFICERS OR AGENTS SHALL NOT BE RESPONSIBLE FOR THE ACCURACY OR COMPLETENESS OF ELECTRONIC COPIES OF THIS PLAN SHEET.*

Caltrans Metric

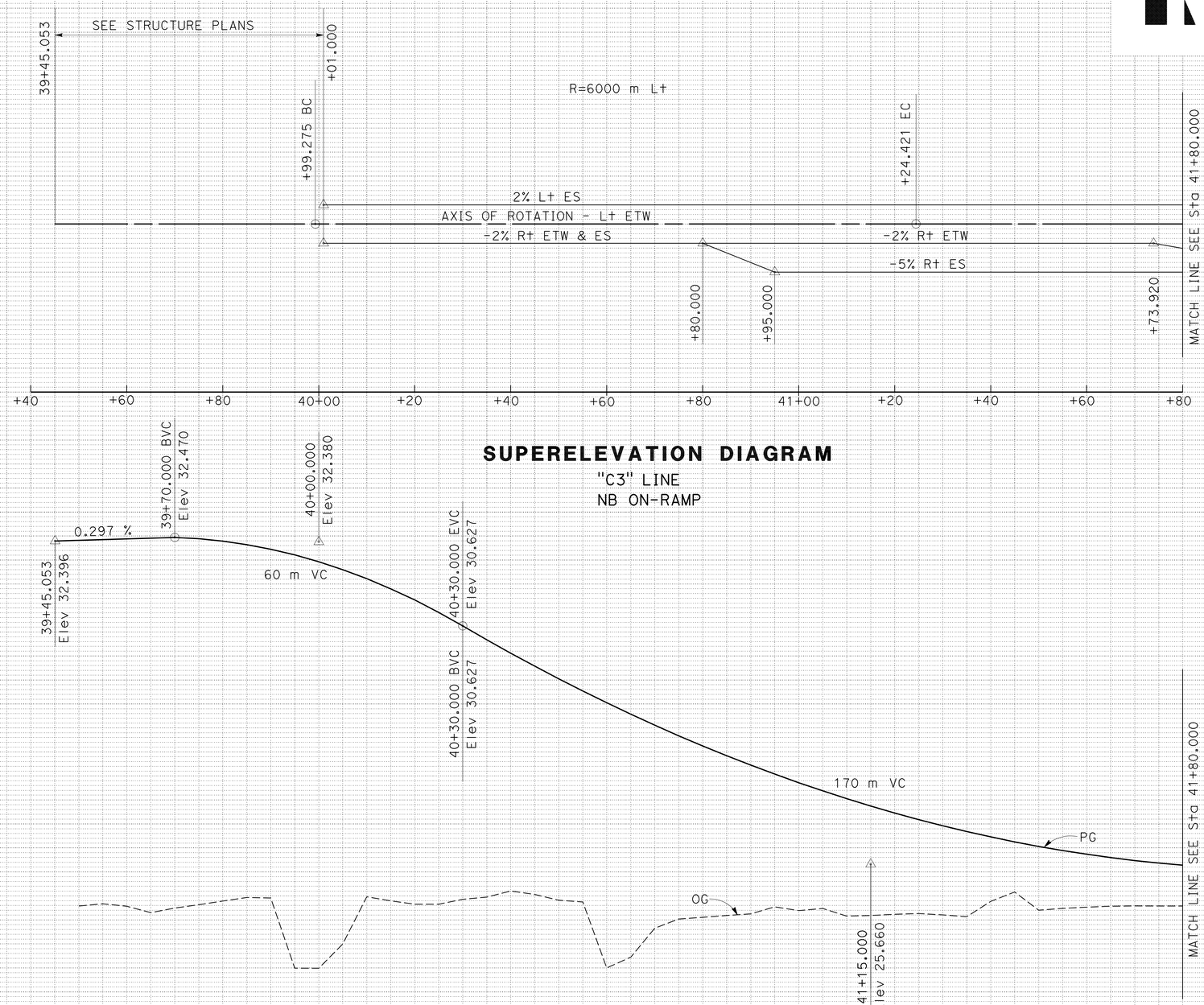


**SUPERELEVATION DIAGRAM**
"C3" LINE
NB ON-RAMP

**PROFILE**
"C3" LINE
NB ON-RAMP

ALL DIMENSIONS ARE IN METERS
UNLESS OTHERWISE SHOWN

# PROFILE AND SUPERELEVATION DIAGRAM

SCALE: Horiz 1:500
Vert 1:50

**PS-11**

| Station | +40 | +60 | +80 | 40+00 | +20 | +40 | +60 | +80 | 41+00 | +20 | +40 | +60 | +80 |
|---|---|---|---|---|---|---|---|---|---|---|---|---|---|
| $m^3$ Exc | 0 | | | | | | | | | | | | |
| $m^3$ Emb | 2,037 | | | | | | | | | | | | |

REVISED BY | DATE REVISED
KEVIN Q NGUYEN | NGIM NANCY PE
CALCULATED-DESIGNED BY | CHECKED BY
FUNCTIONAL SUPERVISOR | NGIM NANCY PE

STATE OF CALIFORNIA - DEPARTMENT OF TRANSPORTATION
Caltrans OFFICE OF DESIGN A

LAST REVISION 00-00-00 | DATE PLOTTED => 22-JUN-2010 | TIME PLOTTED => 07:59

| Dist | COUNTY | ROUTE | KILOMETER POST TOTAL PROJECT | SHEET No. | TOTAL SHEETS |
|---|---|---|---|---|---|
| 07 | LA | 5 | 2.9/4.9 | 47 | 1082 |

Caltrans Metric

REGISTERED CIVIL ENGINEER 12-23-09 DATE

6-21-10
PLANS APPROVAL DATE

REGISTERED PROFESSIONAL ENGINEER NGIM NANCY PE No. 58161 Exp. 6-30-10 CIVIL STATE OF CALIFORNIA

*THE STATE OF CALIFORNIA OR ITS OFFICERS OR AGENTS SHALL NOT BE RESPONSIBLE FOR THE ACCURACY OR COMPLETENESS OF ELECTRONIC COPIES OF THIS PLAN SHEET.*

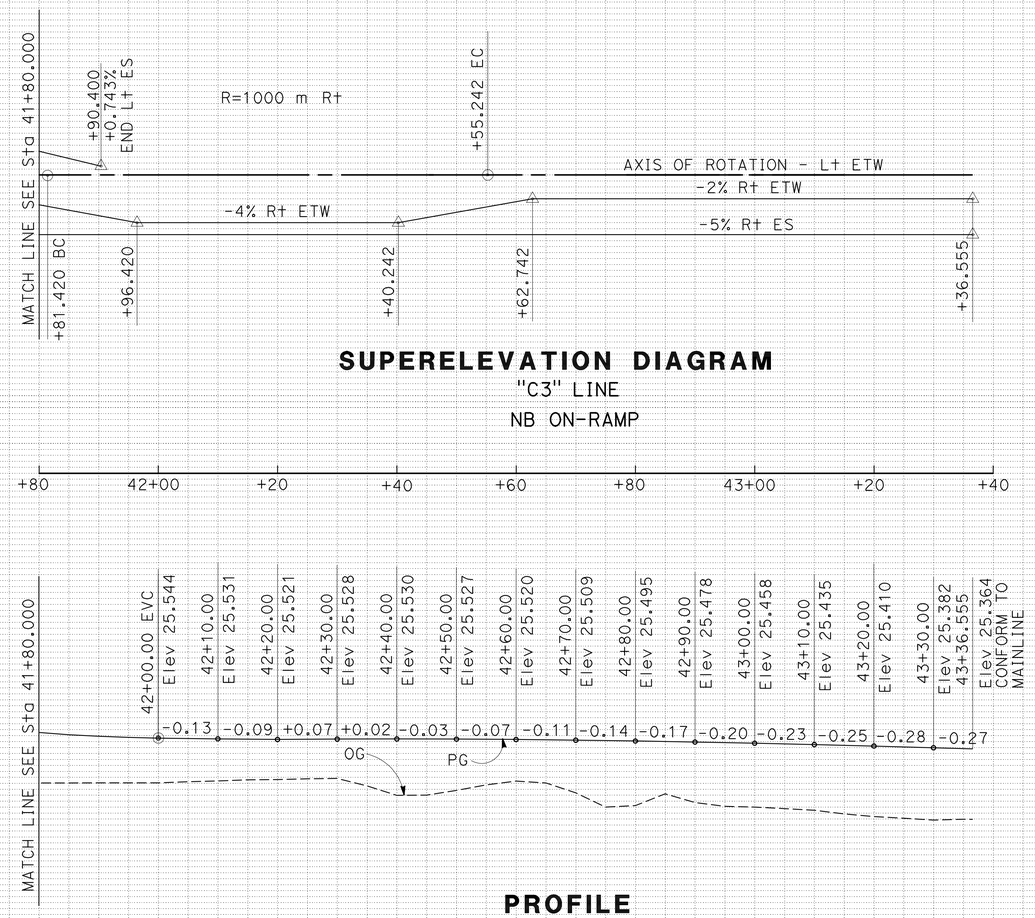


## SUPERELEVATION DIAGRAM
"C3" LINE
NB ON-RAMP

## PROFILE
"C3" LINE
NB ON-RAMP

ALL DIMENSIONS ARE IN METERS
UNLESS OTHERWISE SHOWN

# PROFILE AND SUPERELEVATION DIAGRAM

SCALE: Horiz 1:500
Vert 1:50

**PS-12**

| Station | | +80 | 42+00 | +20 | +40 | +60 | +80 | 43+00 | +20 | +40 |
|---|---|---|---|---|---|---|---|---|---|---|
| $m^3$ | Exc | 22 | | | | | | | | |
| | Emb | 37 | | | | | | | | |

5% 0% -5% 27 26 25 24 23

REVISED BY | DATE REVISED
KEVIN Q NGUYEN | NGIM NANCY PE
CALCULATED-DESIGNED BY | CHECKED BY
FUNCTIONAL SUPERVISOR | NGIM NANCY PE

STATE OF CALIFORNIA - DEPARTMENT OF TRANSPORTATION
Caltrans OFFICE OF DESIGN A

LAST REVISION 00-00-00 | DATE PLOTTED => 22-JUN-2010 | TIME PLOTTED => 07:59

| Dist | COUNTY | ROUTE | KILOMETER POST TOTAL PROJECT | SHEET No. | TOTAL SHEETS |
|---|---|---|---|---|---|
| 07 | LA | 5 | 2.9/4.9 | 48 | 1082 |

Ngim N Pe 12-23-09
REGISTERED CIVIL ENGINEER DATE

6-21-10
PLANS APPROVAL DATE

REGISTERED PROFESSIONAL ENGINEER NGIM NANCY PE No. 58161 Exp. 6-30-10 CIVIL STATE OF CALIFORNIA

*THE STATE OF CALIFORNIA OR ITS OFFICERS OR AGENTS SHALL NOT BE RESPONSIBLE FOR THE ACCURACY OR COMPLETENESS OF ELECTRONIC COPIES OF THIS PLAN SHEET.*

Caltrans Metric

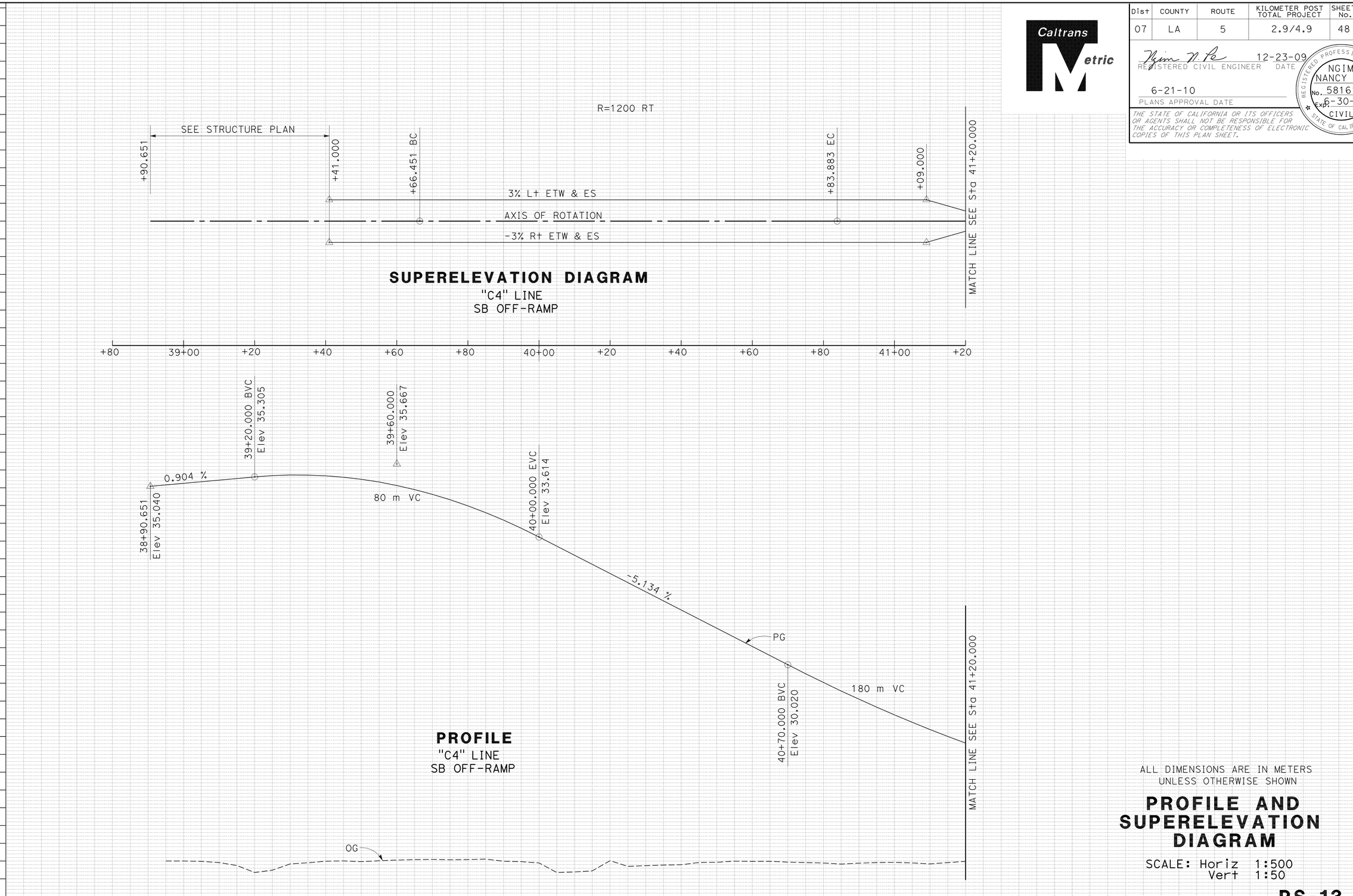


ALL DIMENSIONS ARE IN METERS
UNLESS OTHERWISE SHOWN

# PROFILE AND SUPERELEVATION DIAGRAM

SCALE: Horiz 1:500
Vert 1:50

**PS-13**

REVISED BY | DATE REVISED

KEVIN Q NGUYEN | NGIM NANCY PE

CALCULATED-DESIGNED BY | CHECKED BY

FUNCTIONAL SUPERVISOR | NGIM NANCY PE

STATE OF CALIFORNIA - DEPARTMENT OF TRANSPORTATION
Caltrans OFFICE OF DESIGN A

LAST REVISION 00-00-00 | DATE PLOTTED => 22-JUN-2010 | TIME PLOTTED => 07:59

| Dist | COUNTY | ROUTE | KILOMETER POST TOTAL PROJECT | SHEET No. | TOTAL SHEETS |
|---|---|---|---|---|---|
| 07 | LA | 5 | 2.9/4.9 | 49 | 1082 |

REGISTERED CIVIL ENGINEER 12-23-09 DATE

6-21-10
PLANS APPROVAL DATE

REGISTERED PROFESSIONAL ENGINEER NGIM NANCY PE No. 58161 Exp. 6-30-10 CIVIL STATE OF CALIFORNIA

*THE STATE OF CALIFORNIA OR ITS OFFICERS OR AGENTS SHALL NOT BE RESPONSIBLE FOR THE ACCURACY OR COMPLETENESS OF ELECTRONIC COPIES OF THIS PLAN SHEET.*

Caltrans Metric

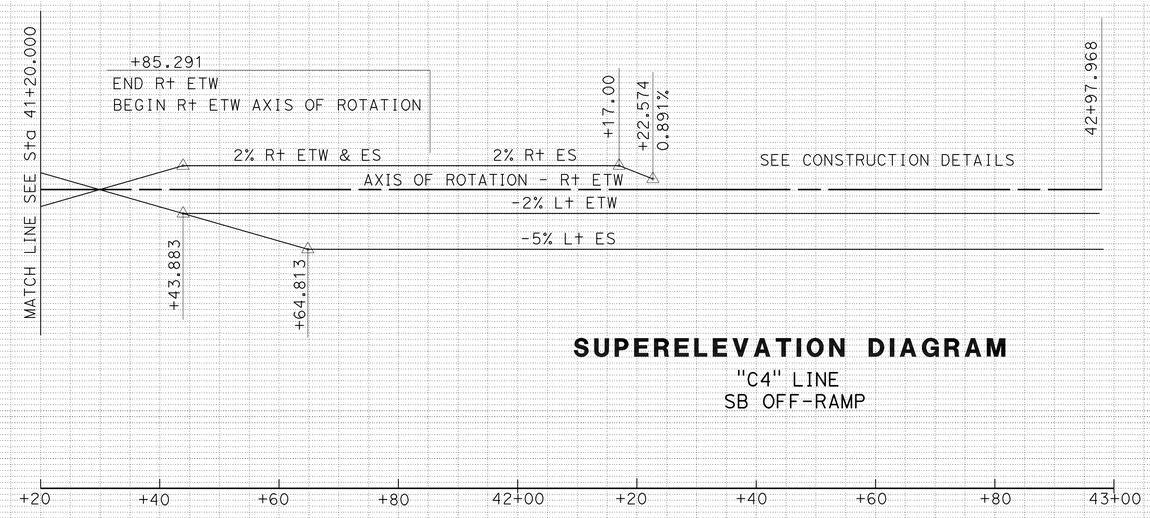


## SUPERELEVATION DIAGRAM

"C4" LINE
SB OFF-RAMP

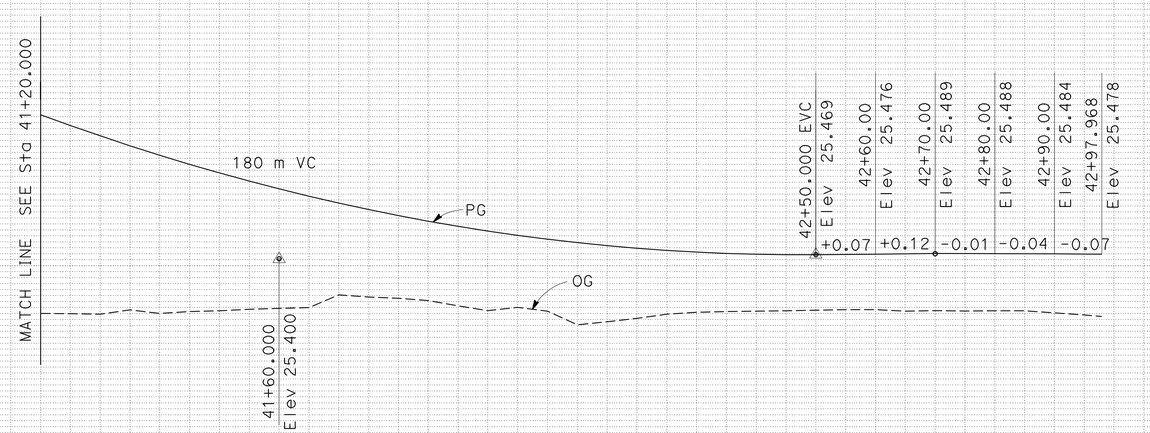


## PROFILE

"C4" LINE
SB OFF-RAMP

ALL DIMENSIONS ARE IN METERS
UNLESS OTHERWISE SHOWN

# PROFILE AND SUPERELEVATION DIAGRAM

SCALE: Horiz 1:500
Vert 1:50

**PS-14**

| Station | | +20 | +40 | +60 | +80 | 42+00 | +20 | +40 | +60 | +80 | 43+00 |
|---|---|---|---|---|---|---|---|---|---|---|---|
| $m^3$ | Exc | 0 | | | | | | | | | |
| | Emb | 1,891 | | | | | | | | | |

REVISED BY / DATE REVISED

KEVIN Q NGUYEN / NGIM NANCY PE — 5% 0% -5%

CALCULATED-DESIGNED BY / CHECKED BY

FUNCTIONAL SUPERVISOR — NGIM NANCY PE

STATE OF CALIFORNIA - DEPARTMENT OF TRANSPORTATION
Caltrans OFFICE OF DESIGN A

LAST REVISION 00-00-00 | DATE PLOTTED => 22-JUN-2010 | TIME PLOTTED => 07:59

| Dist | COUNTY | ROUTE | KILOMETER POST TOTAL PROJECT | SHEET No. | TOTAL SHEETS |
|---|---|---|---|---|---|
| 07 | LA | 5 | 2.9/4.9 | 50 | 1082 |

Ngim N. Pe 12-23-09
REGISTERED CIVIL ENGINEER DATE

6-21-10
PLANS APPROVAL DATE

REGISTERED PROFESSIONAL ENGINEER NGIM NANCY PE No. 58161 Exp. 6-30-10 CIVIL STATE OF CALIFORNIA

*THE STATE OF CALIFORNIA OR ITS OFFICERS OR AGENTS SHALL NOT BE RESPONSIBLE FOR THE ACCURACY OR COMPLETENESS OF ELECTRONIC COPIES OF THIS PLAN SHEET.*

Caltrans Metric

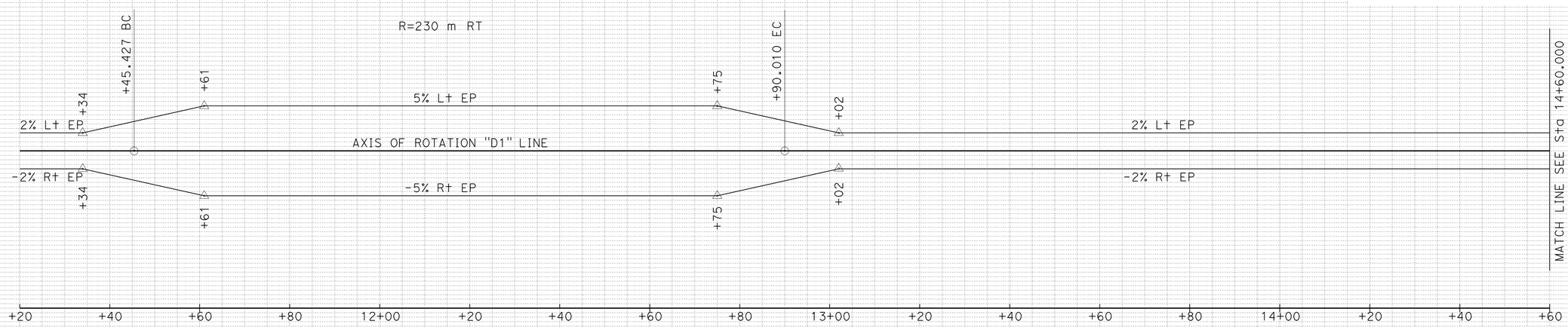


## SUPERELEVATION DIAGRAM

"D1" LINE
FREEWAY Dr

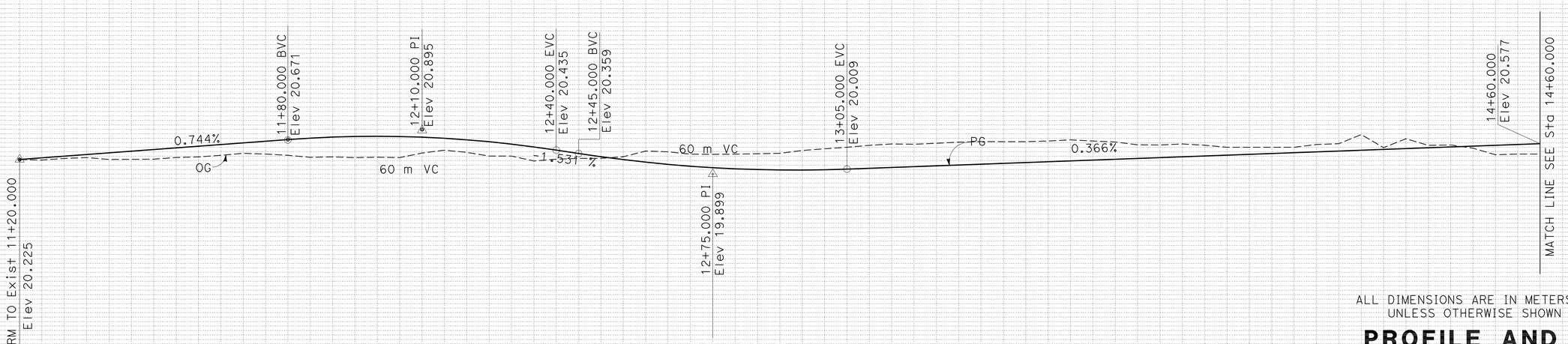


## PROFILE

"D1" LINE
FREEWAY Dr

ALL DIMENSIONS ARE IN METERS
UNLESS OTHERWISE SHOWN

# PROFILE AND SUPERELEVATION DIAGRAM

SCALE: Horiz 1:500
Vert 1:50

**PS-15**

| Station | +20 | +40 | +60 | +80 | 12+00 | +20 | +40 | +60 | +80 | 13+00 | +20 | +40 | +60 | +80 | 14+00 | +20 | +40 | +60 |
|---|---|---|---|---|---|---|---|---|---|---|---|---|---|---|---|---|---|---|
| $m^3$ Exc | 3,809 | | | | | | | | | | | | | | | | | |
| $m^3$ Emb | 59 | | | | | | | | | | | | | | | | | |

STATE OF CALIFORNIA - DEPARTMENT OF TRANSPORTATION
Caltrans OFFICE OF DESIGN A

FUNCTIONAL SUPERVISOR: NGIM NANCY PE
CALCULATED-DESIGNED BY: KEVIN Q NGUYEN
CHECKED BY: NGIM NANCY PE
REVISED BY / DATE REVISED

LAST REVISION 00-00-00
DATE PLOTTED => 22-JUN-2010
TIME PLOTTED => 07:59

| Dist | COUNTY | ROUTE | KILOMETER POST TOTAL PROJECT | SHEET No. | TOTAL SHEETS |
|---|---|---|---|---|---|
| 07 | LA | 5 | 2.9/4.9 | 51 | 1082 |

REGISTERED CIVIL ENGINEER 12-23-09 DATE

6-21-10
PLANS APPROVAL DATE

REGISTERED PROFESSIONAL ENGINEER NGIM NANCY PE No. 58161 Exp. 6-30-10 CIVIL STATE OF CALIFORNIA

*THE STATE OF CALIFORNIA OR ITS OFFICERS OR AGENTS SHALL NOT BE RESPONSIBLE FOR THE ACCURACY OR COMPLETENESS OF ELECTRONIC COPIES OF THIS PLAN SHEET.*

Caltrans Metric

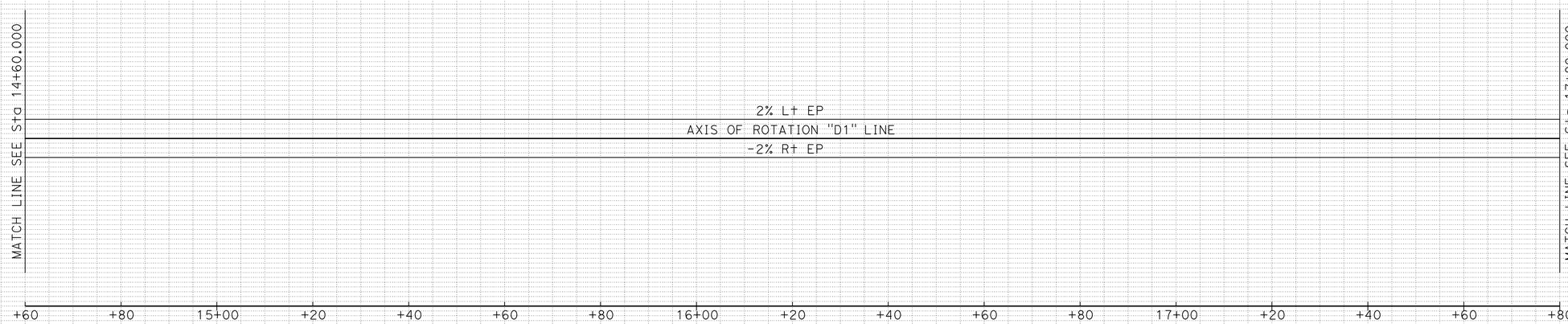


## SUPERELEVATION DIAGRAM

"D1" LINE
FREEWAY Dr

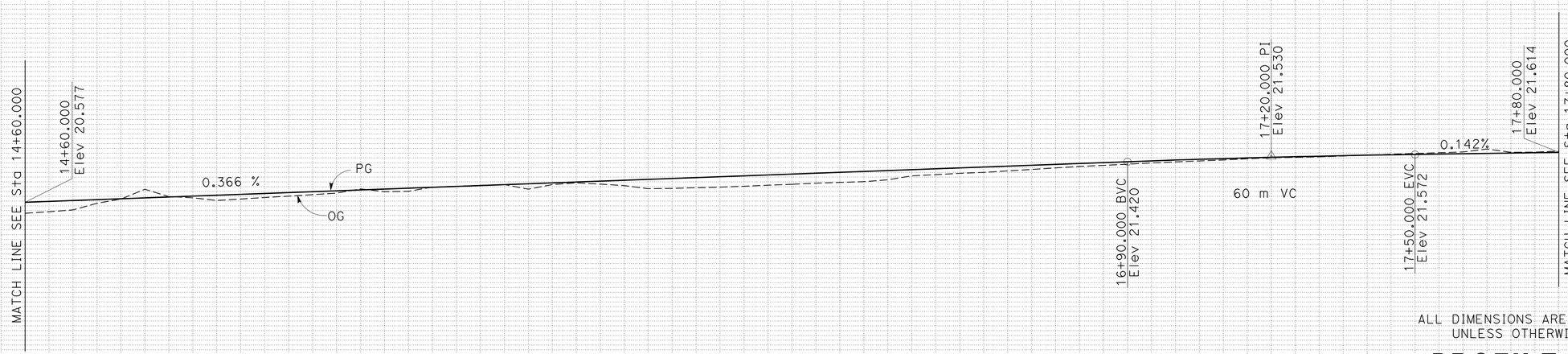


## PROFILE

"D1" LINE
FREEWAY Dr

ALL DIMENSIONS ARE IN METERS
UNLESS OTHERWISE SHOWN

## PROFILE AND SUPERELEVATION DIAGRAM

SCALE: Horiz 1:500
Vert 1:50

**PS-16**

| Station | +60 | +80 | 15+00 | +20 | +40 | +60 | +80 | 16+00 | +20 | +40 | +60 | +80 | 17+00 | +20 | +40 | +60 | +80 |
|---|---|---|---|---|---|---|---|---|---|---|---|---|---|---|---|---|---|
| $m^3$ Exc | 2,135 | | | | | | | | | | | | | | | | |
| $m^3$ Emb | 4 | | | | | | | | | | | | | | | | |

REVISED BY | DATE REVISED
KEVIN Q NGUYEN
NGIM NANCY PE
CALCULATED-DESIGNED BY
CHECKED BY
FUNCTIONAL SUPERVISOR
NGIM NANCY PE

STATE OF CALIFORNIA - DEPARTMENT OF TRANSPORTATION
Caltrans OFFICE OF DESIGN A

LAST REVISION 00-00-00
DATE PLOTTED => 22-JUN-2010
TIME PLOTTED => 07:59

| Dist | COUNTY | ROUTE | KILOMETER POST TOTAL PROJECT | SHEET No. | TOTAL SHEETS |
|---|---|---|---|---|---|
| 07 | LA | 5 | 2.9/4.9 | 52 | 1082 |

Ngim N Pe 12-23-09
REGISTERED CIVIL ENGINEER DATE

6-21-10
PLANS APPROVAL DATE

REGISTERED PROFESSIONAL ENGINEER NGIM NANCY PE No. 58161 Exp. 6-30-10 CIVIL STATE OF CALIFORNIA

*THE STATE OF CALIFORNIA OR ITS OFFICERS OR AGENTS SHALL NOT BE RESPONSIBLE FOR THE ACCURACY OR COMPLETENESS OF ELECTRONIC COPIES OF THIS PLAN SHEET.*

Caltrans Metric

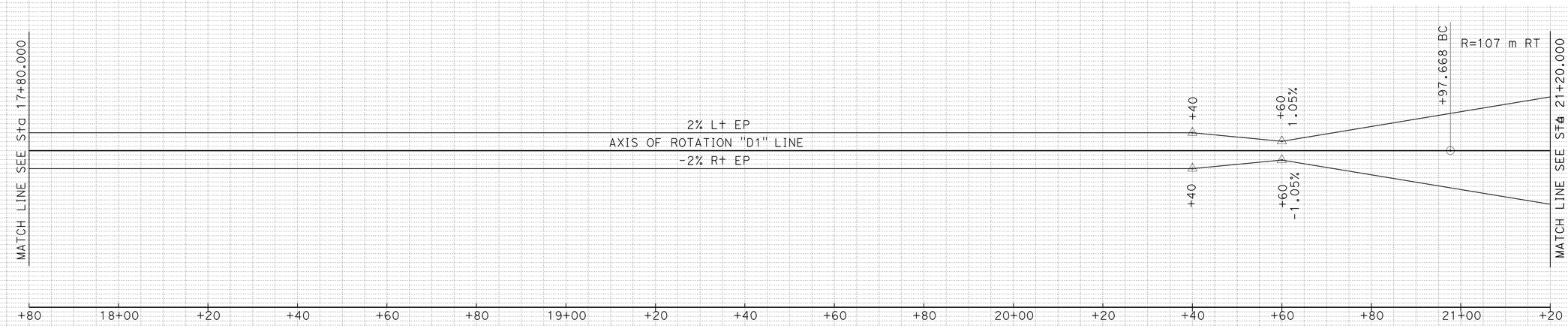


## SUPERELEVATION DIAGRAM

"D1" LINE
FREEWAY Dr

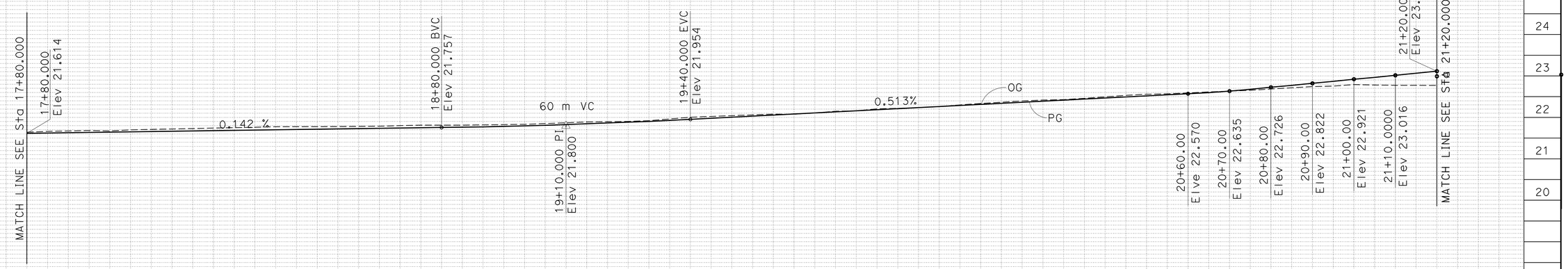


## PROFILE

"D1" LINE
FREEWAY Dr

ALL DIMENSIONS ARE IN METERS
UNLESS OTHERWISE SHOWN

# PROFILE AND SUPERELEVATION DIAGRAM

SCALE: Horiz 1:500
Vert 1:50

**PS-17**

| Station | +80 | 18+00 | +20 | +40 | +60 | +80 | 19+00 | +20 | +40 | +60 | +80 | 20+00 | +20 | +40 | +60 | +80 | 21+00 | +20 |
|---|---|---|---|---|---|---|---|---|---|---|---|---|---|---|---|---|---|---|
| $m^3$ Exc | 2,185 | | | | | | | | | | | | | | | | | |
| $m^3$ Emb | 0 | | | | | | | | | | | | | | | | | |

STATE OF CALIFORNIA - DEPARTMENT OF TRANSPORTATION
Caltrans OFFICE OF DESIGN A

FUNCTIONAL SUPERVISOR: NGIM NANCY PE
CALCULATED-DESIGNED BY: KEVIN Q NGUYEN
CHECKED BY: NGIM NANCY PE
REVISED BY / DATE REVISED

LAST REVISION 00-00-00
DATE PLOTTED => 22-JUN-2010
TIME PLOTTED => 07:59

| Dist | COUNTY | ROUTE | KILOMETER POST TOTAL PROJECT | SHEET No. | TOTAL SHEETS |
|---|---|---|---|---|---|
| 07 | LA | 5 | 2.9/4.9 | 53 | 1082 |

Caltrans Metric

REGISTERED CIVIL ENGINEER — DATE 12-23-09

6-21-10
PLANS APPROVAL DATE

REGISTERED PROFESSIONAL ENGINEER — NGIM NANCY PE No. 58161 Exp. 6-30-10 CIVIL — STATE OF CALIFORNIA

*THE STATE OF CALIFORNIA OR ITS OFFICERS OR AGENTS SHALL NOT BE RESPONSIBLE FOR THE ACCURACY OR COMPLETENESS OF ELECTRONIC COPIES OF THIS PLAN SHEET.*

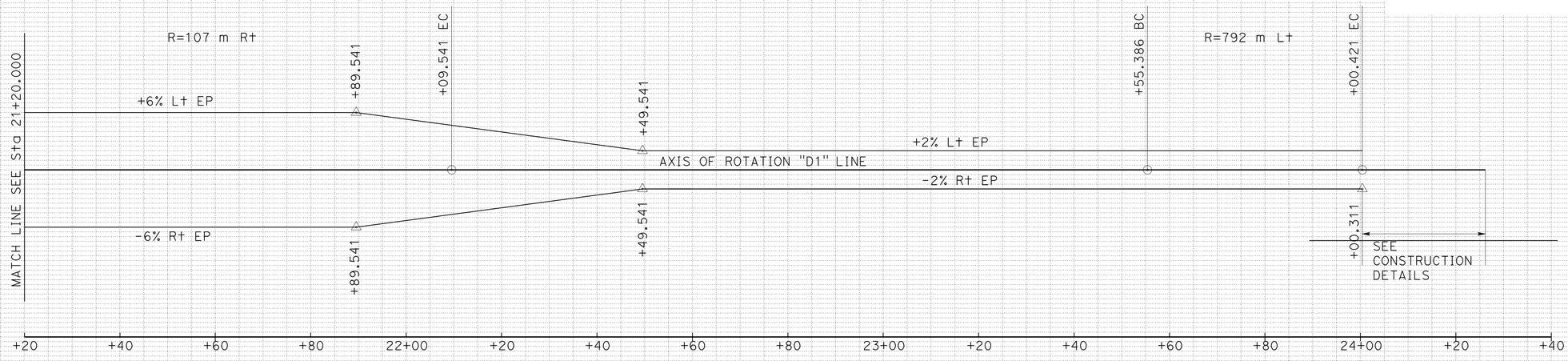


## SUPERELEVATION DIAGRAM

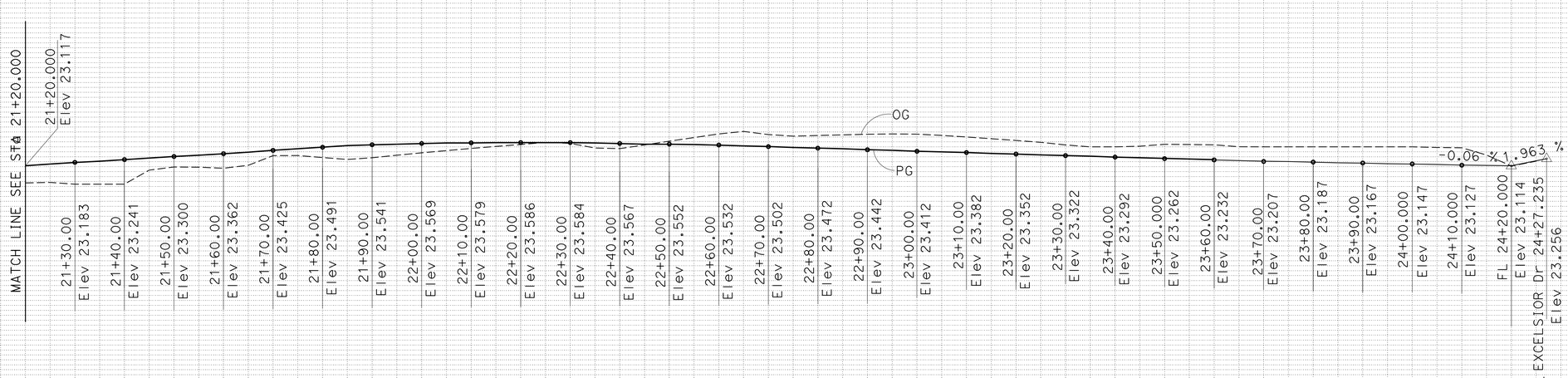


## PROFILE

"D1" LINE
FREEWAY Dr

ALL DIMENSIONS ARE IN METERS UNLESS OTHERWISE SHOWN

# PROFILE AND SUPERELEVATION DIAGRAM

SCALE: Horiz 1:500
Vert 1:50

**PS-18**

| Station | | +20 | +40 | +60 | +80 | 22+00 | +20 | +40 | +60 | +80 | 23+00 | +20 | +40 | +60 | +80 | 24+00 | +20 | +40 |
|---|---|---|---|---|---|---|---|---|---|---|---|---|---|---|---|---|---|---|
| $m^3$ | Exc | 4,774 | | | | | | | | | | | | | | | | |
| | Emb | 0 | | | | | | | | | | | | | | | | |

REVISED BY — DATE REVISED
KEVIN Q NGUYEN — NGIM NANCY PE
CALCULATED-DESIGNED BY — CHECKED BY
FUNCTIONAL SUPERVISOR — NGIM NANCY PE

STATE OF CALIFORNIA - DEPARTMENT OF TRANSPORTATION
Caltrans OFFICE OF DESIGN A

LAST REVISION 00-00-00 — DATE PLOTTED => 22-JUN-2010 — TIME PLOTTED => 08:00

| Dist | COUNTY | ROUTE | KILOMETER POST TOTAL PROJECT | SHEET No. | TOTAL SHEETS |
|---|---|---|---|---|---|
| 07 | LA | 5 | 2.9/4.9 | 54 | 1082 |

REGISTERED CIVIL ENGINEER 12-23-09 DATE

6-21-10
PLANS APPROVAL DATE

REGISTERED PROFESSIONAL ENGINEER NGIM NANCY PE No. 58161 Exp. 6-30-10 CIVIL STATE OF CALIFORNIA

*THE STATE OF CALIFORNIA OR ITS OFFICERS OR AGENTS SHALL NOT BE RESPONSIBLE FOR THE ACCURACY OR COMPLETENESS OF ELECTRONIC COPIES OF THIS PLAN SHEET.*

Caltrans Metric

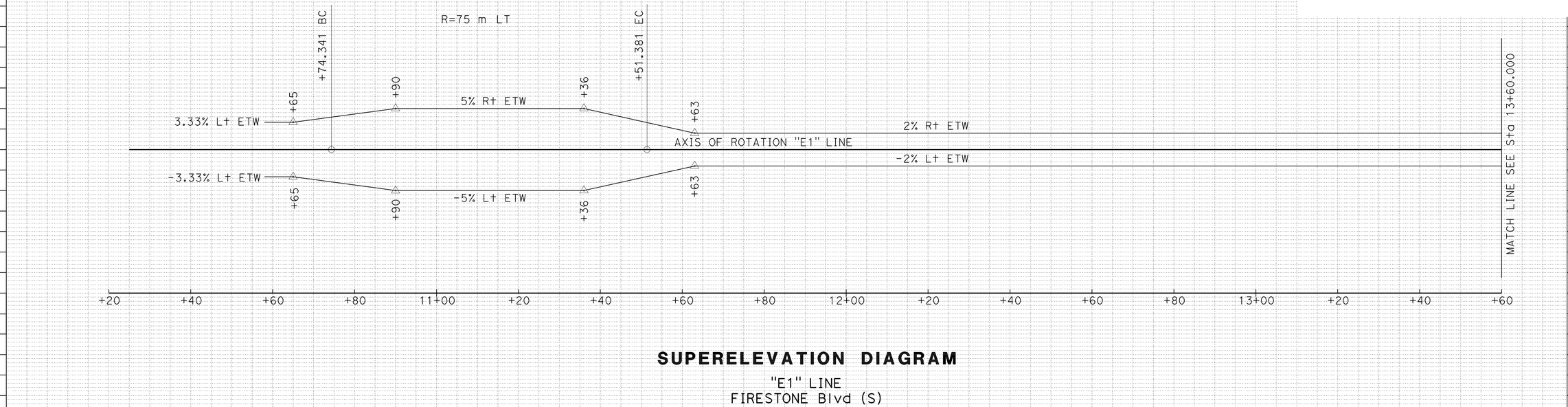


## SUPERELEVATION DIAGRAM

"E1" LINE
FIRESTONE Blvd (S)

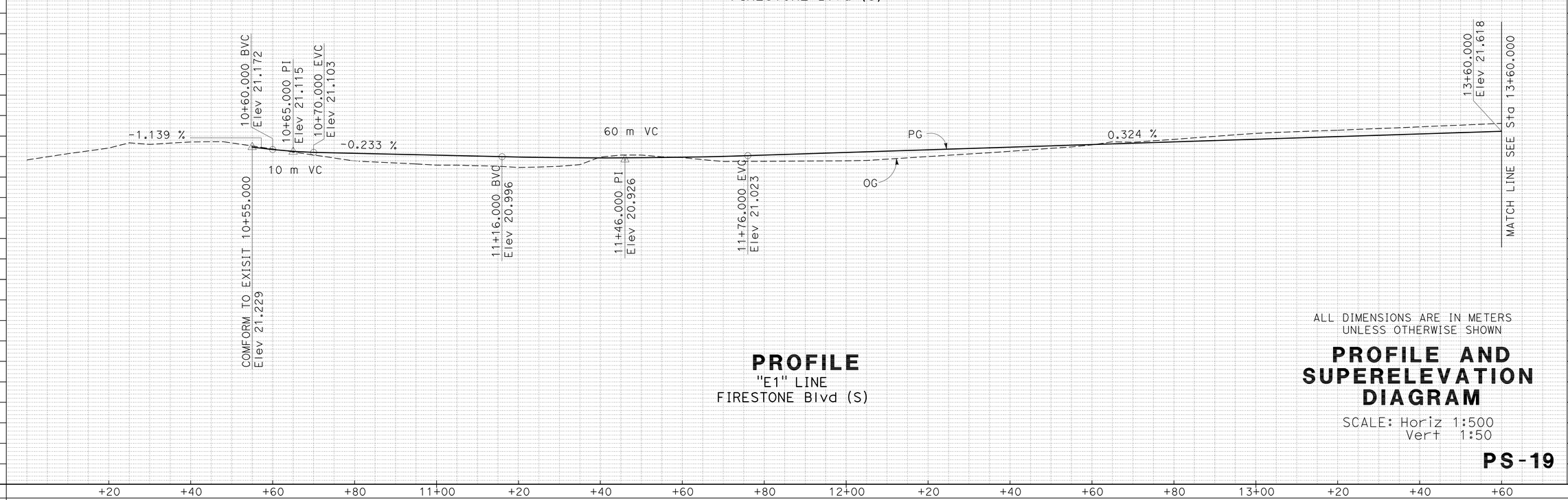


## PROFILE

"E1" LINE
FIRESTONE Blvd (S)

ALL DIMENSIONS ARE IN METERS
UNLESS OTHERWISE SHOWN

## PROFILE AND SUPERELEVATION DIAGRAM

SCALE: Horiz 1:500
Vert 1:50

**PS-19**

| Station | +20 | +40 | +60 | +80 | 11+00 | +20 | +40 | +60 | +80 | 12+00 | +20 | +40 | +60 | +80 | 13+00 | +20 | +40 | +60 |
|---|---|---|---|---|---|---|---|---|---|---|---|---|---|---|---|---|---|---|
| $m^3$ Exc | 2,300 | | | | | | | | | | | | | | | | | |
| $m^3$ Emb | 225 | | | | | | | | | | | | | | | | | |

REVISED BY | DATE REVISED

KEVIN Q NGUYEN | NGIM NANCY PE

CALCULATED-DESIGNED BY | CHECKED BY

FUNCTIONAL SUPERVISOR: NGIM NANCY PE

STATE OF CALIFORNIA - DEPARTMENT OF TRANSPORTATION
Caltrans OFFICE OF DESIGN A

LAST REVISION 00-00-00 | DATE PLOTTED => 16-FEB-2011 | TIME PLOTTED => 08:26

| Dist | COUNTY | ROUTE | KILOMETER POST TOTAL PROJECT | SHEET No. | TOTAL SHEETS |
|---|---|---|---|---|---|
| 07 | LA | 5 | 2.9/4.9 | 55 | 1082 |

REGISTERED CIVIL ENGINEER 12-23-09 DATE

6-21-10
PLANS APPROVAL DATE

REGISTERED PROFESSIONAL ENGINEER NGIM NANCY PE No. 58161 Exp. 6-30-10 CIVIL STATE OF CALIFORNIA

*THE STATE OF CALIFORNIA OR ITS OFFICERS OR AGENTS SHALL NOT BE RESPONSIBLE FOR THE ACCURACY OR COMPLETENESS OF ELECTRONIC COPIES OF THIS PLAN SHEET.*

Caltrans Metric

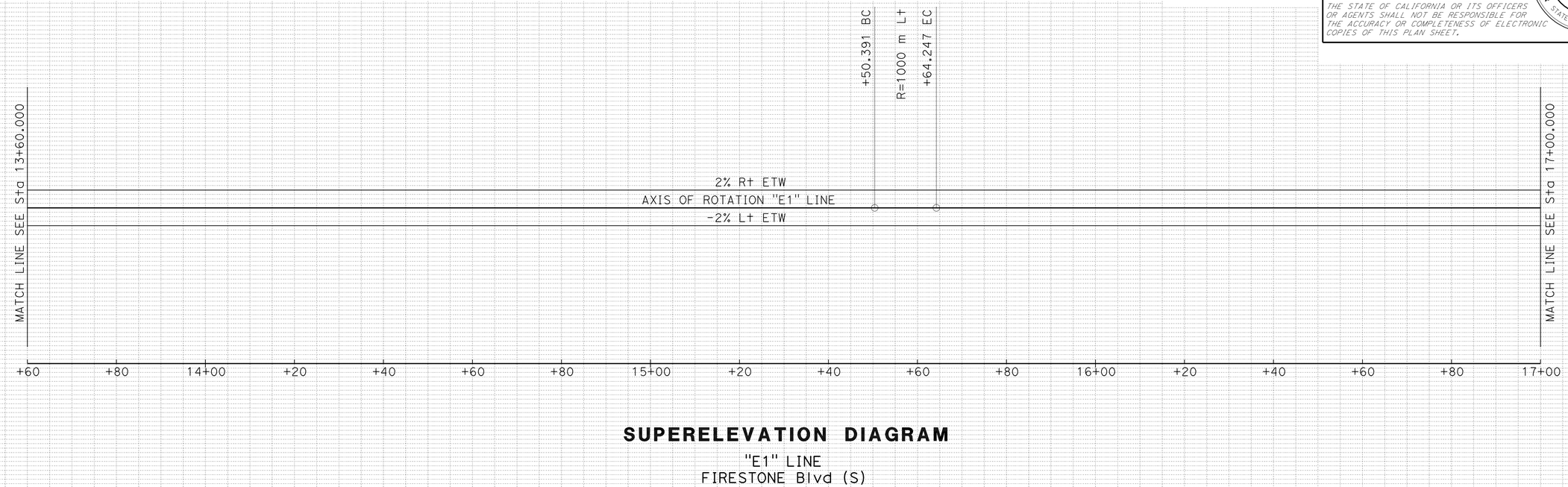


## SUPERELEVATION DIAGRAM

"E1" LINE
FIRESTONE Blvd (S)

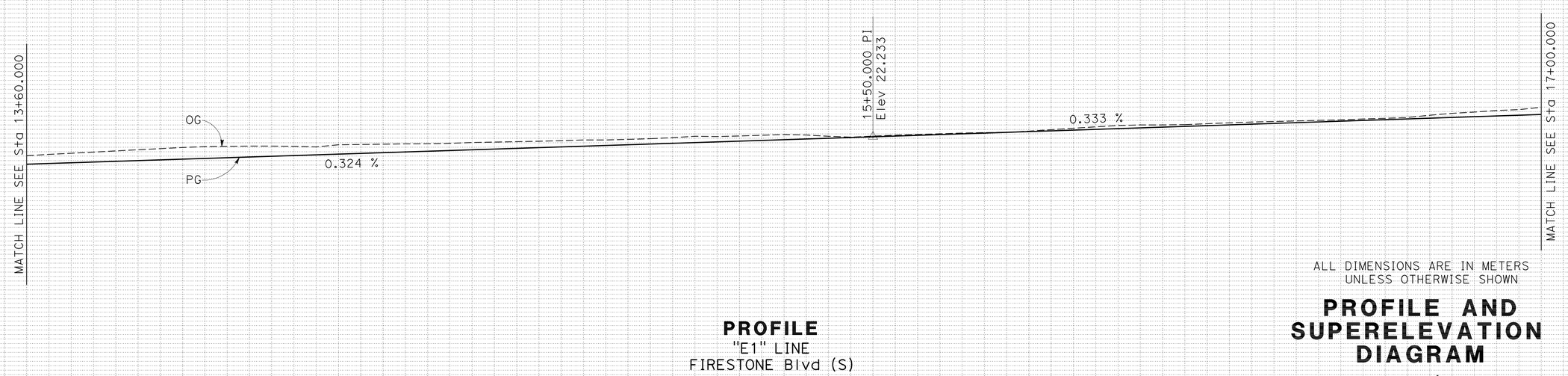


## PROFILE

"E1" LINE
FIRESTONE Blvd (S)

ALL DIMENSIONS ARE IN METERS
UNLESS OTHERWISE SHOWN

# PROFILE AND SUPERELEVATION DIAGRAM

SCALE: Horiz 1:500
Vert 1:50

**PS-20**

| Station | +60 | +80 | 14+00 | +20 | +40 | +60 | +80 | 15+00 | +20 | +40 | +60 | +80 | 16+00 | +20 | +40 | +60 | +80 | 17+00 |
|---|---|---|---|---|---|---|---|---|---|---|---|---|---|---|---|---|---|---|
| $m^3$ Exc | 4,533 | | | | | | | | | | | | | | | | | |
| $m^3$ Emb | 22 | | | | | | | | | | | | | | | | | |

REVISED BY | DATE REVISED

KEVIN Q NGUYEN | NGIM NANCY PE

CALCULATED-DESIGNED BY | CHECKED BY

FUNCTIONAL SUPERVISOR | NGIM NANCY PE

STATE OF CALIFORNIA - DEPARTMENT OF TRANSPORTATION
Caltrans OFFICE OF DESIGN A

LAST REVISION 00-00-00 | DATE PLOTTED => 16-FEB-2011 | TIME PLOTTED => 08:26

| Dist | COUNTY | ROUTE | KILOMETER POST TOTAL PROJECT | SHEET No. | TOTAL SHEETS |
|---|---|---|---|---|---|
| 07 | LA | 5 | 2.9/4.9 | 56 | 1082 |

Ngim N. Pe 12-23-09
REGISTERED CIVIL ENGINEER DATE

6-21-10
PLANS APPROVAL DATE

REGISTERED PROFESSIONAL ENGINEER NGIM NANCY PE No. 58161 Exp. 6-30-10 CIVIL STATE OF CALIFORNIA

*THE STATE OF CALIFORNIA OR ITS OFFICERS OR AGENTS SHALL NOT BE RESPONSIBLE FOR THE ACCURACY OR COMPLETENESS OF ELECTRONIC COPIES OF THIS PLAN SHEET.*

Caltrans Metric

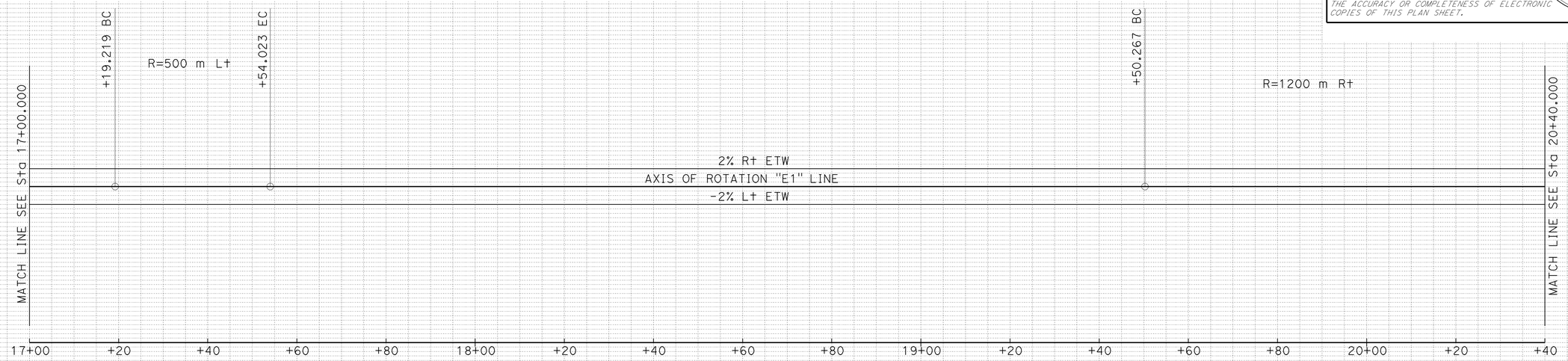


## SUPERELEVATION DIAGRAM

"E1" LINE
FIRESTONE Blvd (S)

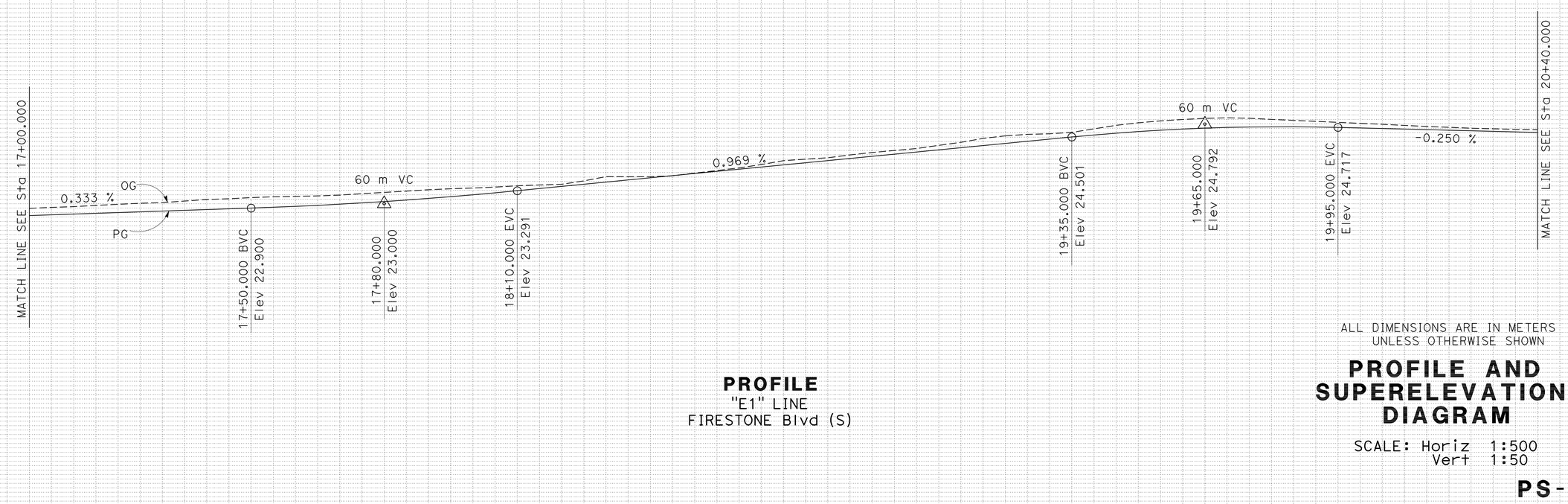


## PROFILE

"E1" LINE
FIRESTONE Blvd (S)

ALL DIMENSIONS ARE IN METERS
UNLESS OTHERWISE SHOWN

# PROFILE AND SUPERELEVATION DIAGRAM

SCALE: Horiz 1:500
Vert 1:50

**PS-21**

| REVISED BY | DATE REVISED |
|---|---|
| KEVIN Q NGUYEN | |
| NGIM NANCY PE | |

CALCULATED-DESIGNED BY
CHECKED BY

FUNCTIONAL SUPERVISOR
NGIM NANCY PE

STATE OF CALIFORNIA - DEPARTMENT OF TRANSPORTATION
Caltrans OFFICE OF DESIGN A

LAST REVISION 00-00-00 DATE PLOTTED => 22-JUN-2010 TIME PLOTTED => 08:00

| Dist | COUNTY | ROUTE | KILOMETER POST TOTAL PROJECT | SHEET No. | TOTAL SHEETS |
|---|---|---|---|---|---|
| 07 | LA | 5 | 2.9/4.9 | 57 | 1082 |

REGISTERED CIVIL ENGINEER 12-23-09 DATE

6-21-10
PLANS APPROVAL DATE

REGISTERED PROFESSIONAL ENGINEER NGIM NANCY PE No. 58161 Exp. 6-30-10 CIVIL STATE OF CALIFORNIA

*THE STATE OF CALIFORNIA OR ITS OFFICERS OR AGENTS SHALL NOT BE RESPONSIBLE FOR THE ACCURACY OR COMPLETENESS OF ELECTRONIC COPIES OF THIS PLAN SHEET.*

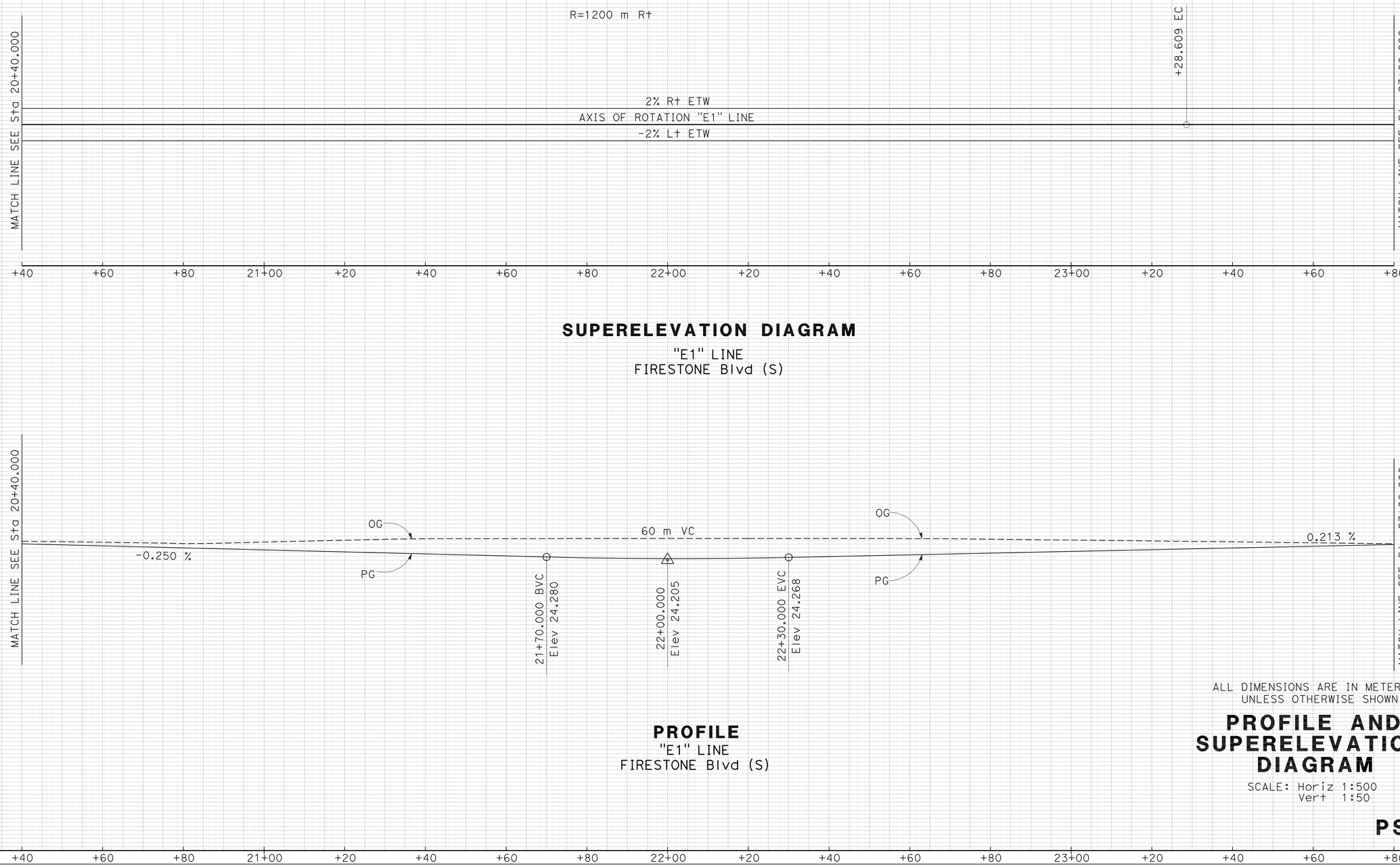


ALL DIMENSIONS ARE IN METERS UNLESS OTHERWISE SHOWN

# PROFILE AND SUPERELEVATION DIAGRAM

SCALE: Horiz 1:500
Vert 1:50

**PS-22**

| REVISED BY | DATE REVISED |
|---|---|
| KEVIN Q NGUYEN | |
| NGIM NANCY PE | |

CALCULATED-DESIGNED BY
CHECKED BY

FUNCTIONAL SUPERVISOR
NGIM NANCY PE

STATE OF CALIFORNIA - DEPARTMENT OF TRANSPORTATION
Caltrans OFFICE OF DESIGN A

LAST REVISION 00-00-00
DATE PLOTTED => 22-JUN-2010
TIME PLOTTED => 08:00

| Dist | COUNTY | ROUTE | KILOMETER POST TOTAL PROJECT | SHEET No. | TOTAL SHEETS |
|---|---|---|---|---|---|
| 07 | LA | 5 | 2.9/4.9 | 58 | 1082 |

REGISTERED CIVIL ENGINEER 12-23-09 DATE

6-21-10
PLANS APPROVAL DATE

REGISTERED PROFESSIONAL ENGINEER NGIM NANCY PE No. 58161 Exp. 6-30-10 CIVIL STATE OF CALIFORNIA

*THE STATE OF CALIFORNIA OR ITS OFFICERS OR AGENTS SHALL NOT BE RESPONSIBLE FOR THE ACCURACY OR COMPLETENESS OF ELECTRONIC COPIES OF THIS PLAN SHEET.*

Caltrans Metric

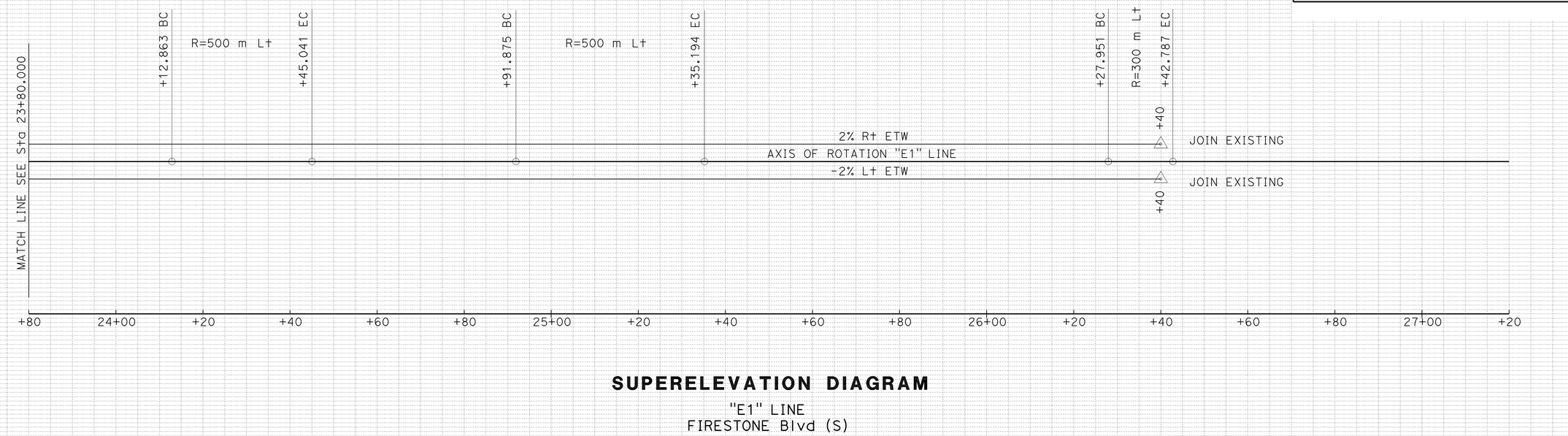


## SUPERELEVATION DIAGRAM

"E1" LINE
FIRESTONE Blvd (S)

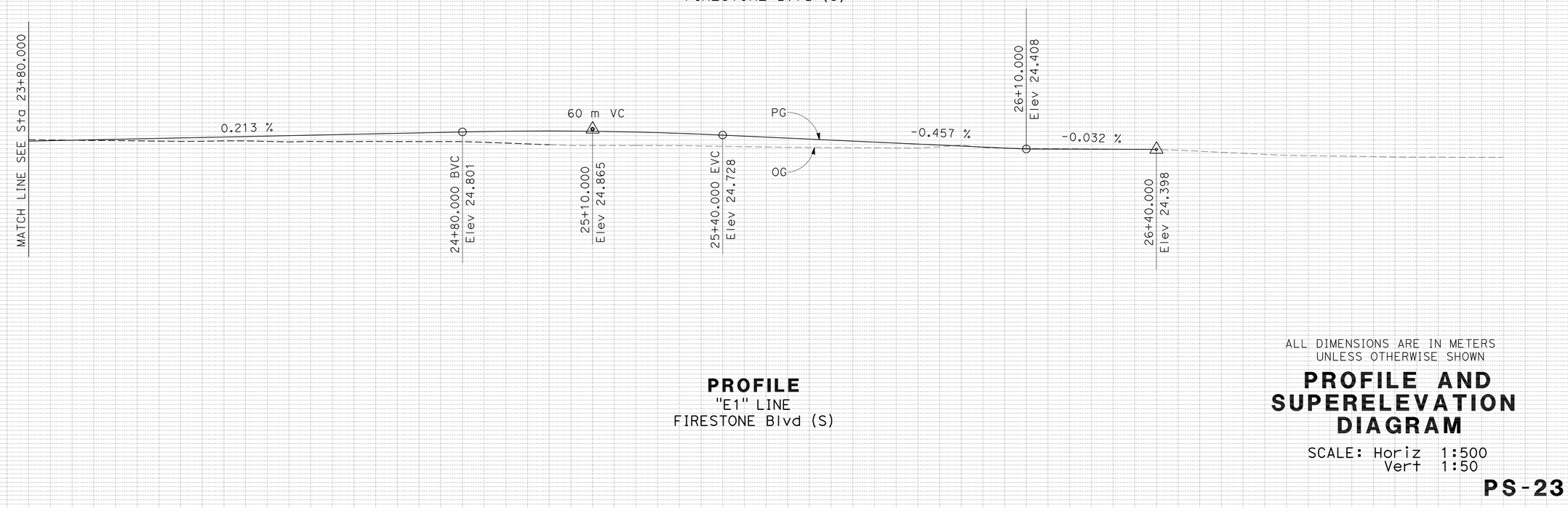


## PROFILE

"E1" LINE
FIRESTONE Blvd (S)

ALL DIMENSIONS ARE IN METERS
UNLESS OTHERWISE SHOWN

# PROFILE AND SUPERELEVATION DIAGRAM

SCALE: Horiz 1:500
Vert 1:50

**PS-23**

| Station | +80 | 24+00 | +20 | +40 | +60 | +80 | 25+00 | +20 | +40 | +60 | +80 | 26+00 | +20 | +40 | +60 | +80 | 27+00 | +20 |
|---|---|---|---|---|---|---|---|---|---|---|---|---|---|---|---|---|---|---|
| $m^3$ Exc | 1,614 | | | | | | | | | | | | | | | | | |
| $m^3$ Emb | 45 | | | | | | | | | | | | | | | | | |

STATE OF CALIFORNIA - DEPARTMENT OF TRANSPORTATION
Caltrans OFFICE OF DESIGN A

FUNCTIONAL SUPERVISOR: NGIM NANCY PE
CALCULATED-DESIGNED BY: KEVIN Q NGUYEN
CHECKED BY: NGIM NANCY PE
REVISED BY / DATE REVISED

LAST REVISION 00-00-00
DATE PLOTTED => 22-JUN-2010
TIME PLOTTED => 08:00

| Dist | COUNTY | ROUTE | KILOMETER POST TOTAL PROJECT | SHEET No. | TOTAL SHEETS |
|---|---|---|---|---|---|
| 07 | LA | 5 | 2.9/4.9 | 59 | 1082 |

REGISTERED CIVIL ENGINEER 12-23-09 DATE

6-21-10
PLANS APPROVAL DATE

REGISTERED PROFESSIONAL ENGINEER NGIM NANCY PE No. 58161 Exp. 6-30-10 CIVIL STATE OF CALIFORNIA

*THE STATE OF CALIFORNIA OR ITS OFFICERS OR AGENTS SHALL NOT BE RESPONSIBLE FOR THE ACCURACY OR COMPLETENESS OF ELECTRONIC COPIES OF THIS PLAN SHEET.*

Caltrans Metric

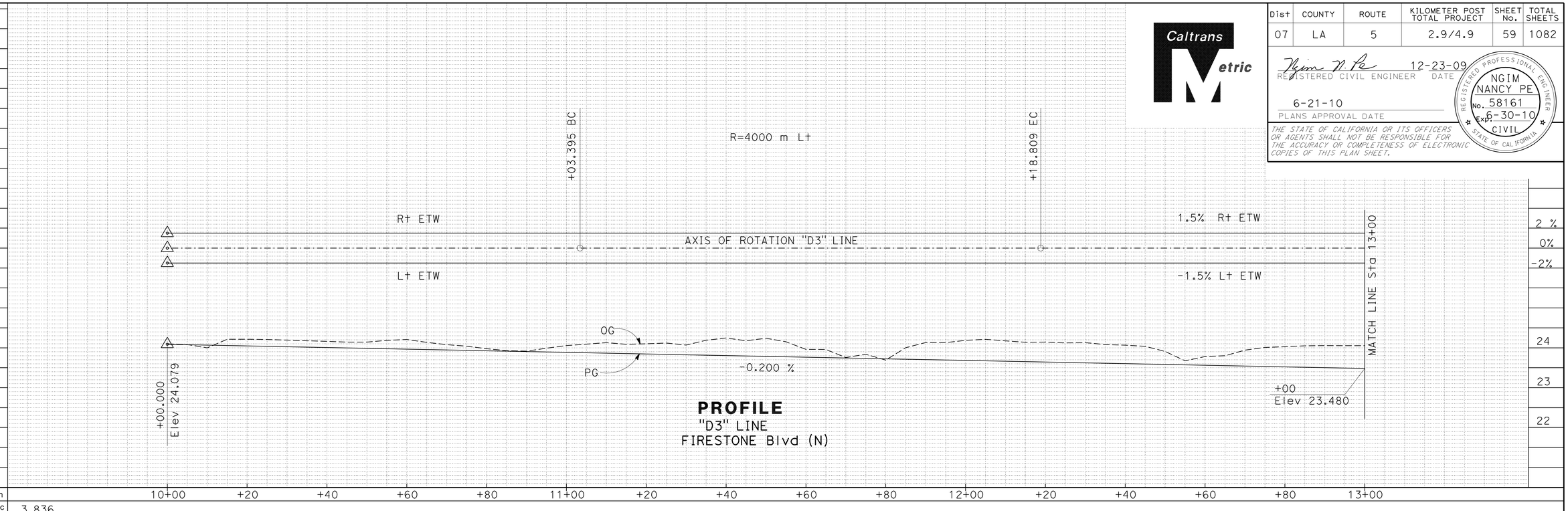


**PROFILE**
"D3" LINE
FIRESTONE Blvd (N)

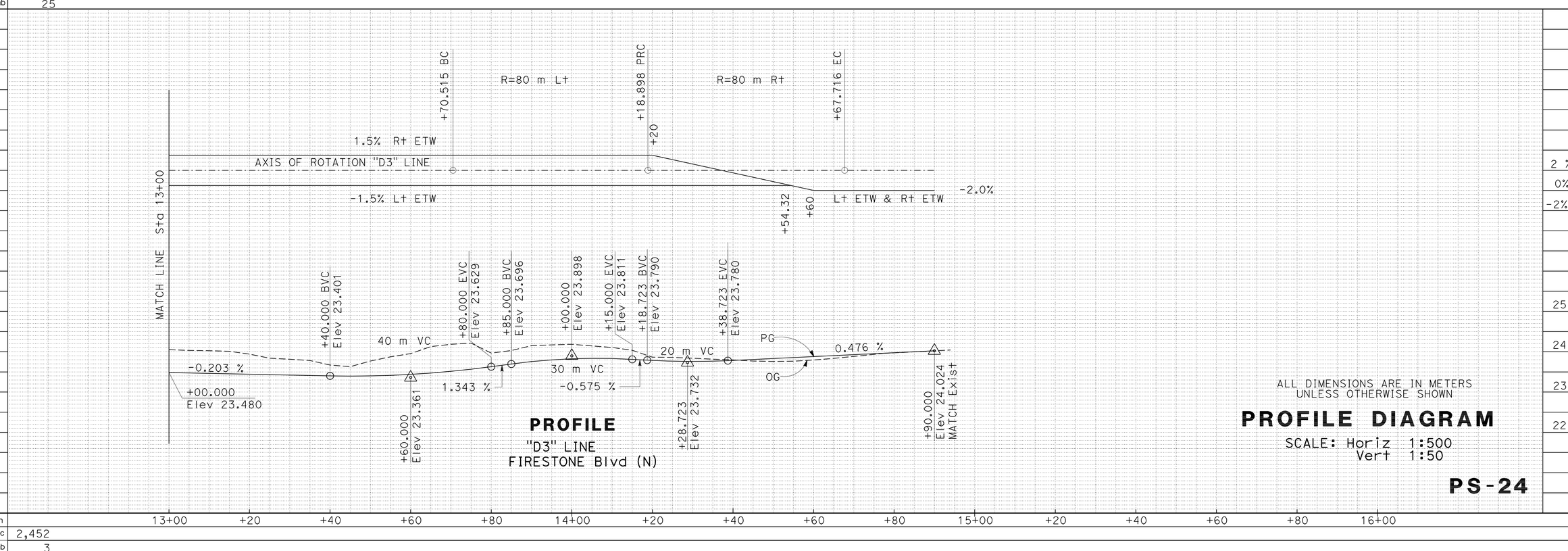


**PROFILE**
"D3" LINE
FIRESTONE Blvd (N)

ALL DIMENSIONS ARE IN METERS
UNLESS OTHERWISE SHOWN

# PROFILE DIAGRAM

SCALE: Horiz 1:500
Vert 1:50

**PS-24**

REVISED BY | DATE REVISED

KEVIN Q NGUYEN | NGIM NANCY PE

CALCULATED-DESIGNED BY | CHECKED BY

FUNCTIONAL SUPERVISOR | NGIM NANCY PE

STATE OF CALIFORNIA - DEPARTMENT OF TRANSPORTATION
Caltrans OFFICE OF DESIGN A

LAST REVISION 00-00-00 | DATE PLOTTED => 22-JUN-2010 | TIME PLOTTED => 08:00

| Dist | COUNTY | ROUTE | KILOMETER POST TOTAL PROJECT | SHEET No. | TOTAL SHEETS |
|---|---|---|---|---|---|
| 07 | LA | 5 | 2.9/4.9 | 60 | 1082 |

REGISTERED CIVIL ENGINEER 12-23-09 DATE

6-21-10
PLANS APPROVAL DATE

REGISTERED PROFESSIONAL ENGINEER NGIM NANCY PE No. 58161 Exp. 6-30-10 CIVIL STATE OF CALIFORNIA

*THE STATE OF CALIFORNIA OR ITS OFFICERS OR AGENTS SHALL NOT BE RESPONSIBLE FOR THE ACCURACY OR COMPLETENESS OF ELECTRONIC COPIES OF THIS PLAN SHEET.*

Caltrans Metric

## NOTE:

FOR ACCURATE RIGHT OF WAY AND ACCESS DATA, CONTACT RIGHT OF WAY ENGINEERING AT THE DISTRICT OFFICE.

## LEGEND:

- REMOVE CONCRETE (SIDEWALK & DRIVEWAY)
- REMOVE PCC PAVEMENT
- REMOVE AC SURFACING

## ABBREVIATIONS:

BSW - BACK OF SIDEWALK

LIP - LIP OF GUTTER

TCGE - TEMPORARY CONSTRUCTION AND GRADING EASEMENT

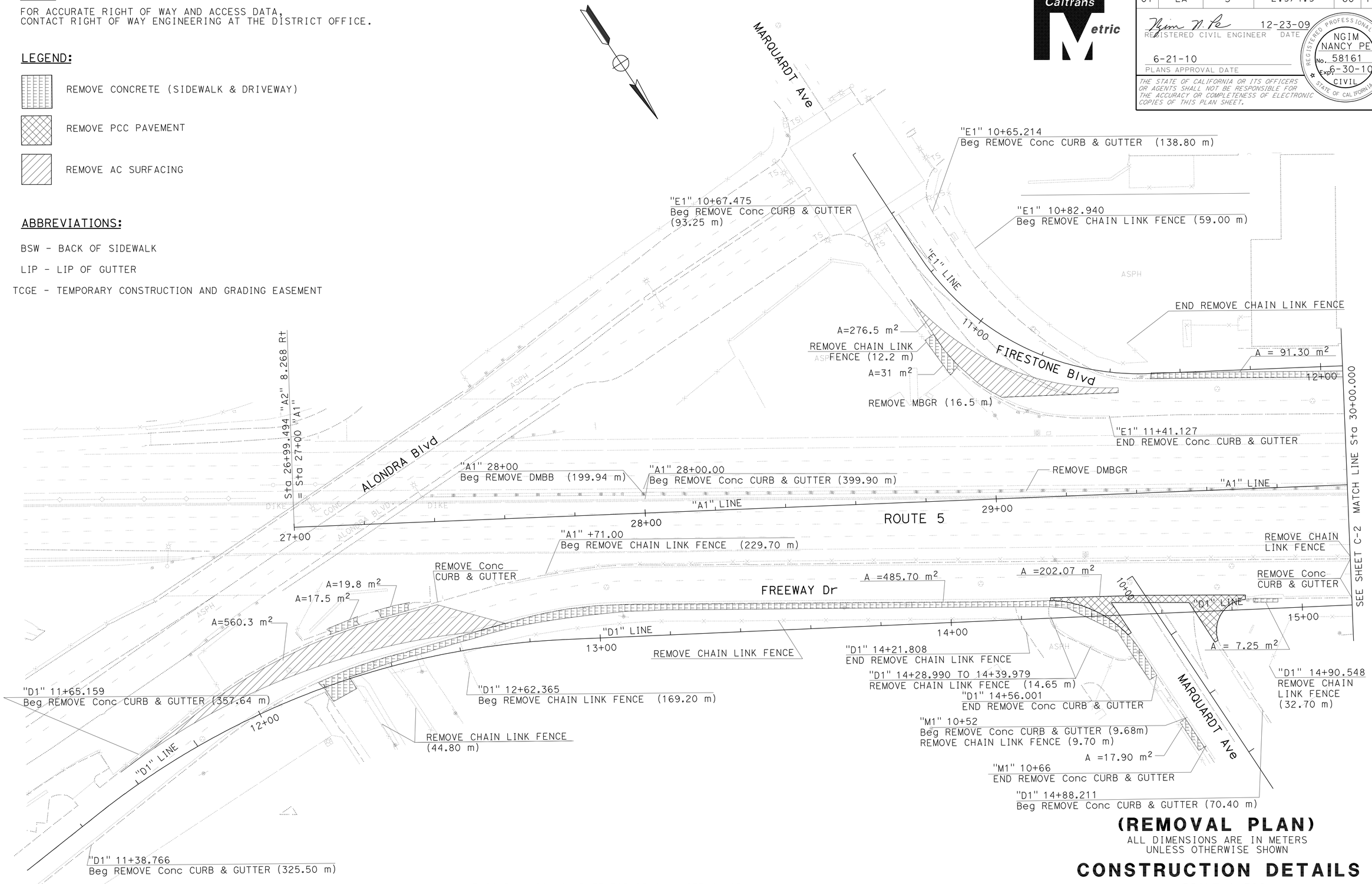


THIS PLAN IS ACCURATE FOR REMOVAL ITEMS WORK ONLY.

# (REMOVAL PLAN)

ALL DIMENSIONS ARE IN METERS
UNLESS OTHERWISE SHOWN

# CONSTRUCTION DETAILS

SCALE 1:500

C-1

| | |
|---|---|
| REVISED BY | 3/07 |
| DATE REVISED | 6/07 |
| CALCULATED-DESIGNED BY | KEVIN Q NGUYEN |
| CHECKED BY | NGIM NANCY PE |
| FUNCTIONAL SUPERVISOR | NGIM NANCY PE |

STATE OF CALIFORNIA - DEPARTMENT OF TRANSPORTATION
Caltrans OFFICE OF DESIGN A

S:\projects\2159c1\72159cga001.dgn

LAST REVISION 00-00-00
DATE PLOTTED => 22-JUN-2010
TIME PLOTTED => 0955

| Dist | COUNTY | ROUTE | KILOMETER POST TOTAL PROJECT | SHEET No. | TOTAL SHEETS |
|---|---|---|---|---|---|
| 07 | LA | 5 | 2.9/4.9 | 61 | 1082 |

REGISTERED CIVIL ENGINEER 12-23-09 DATE

6-21-10
PLANS APPROVAL DATE

REGISTERED PROFESSIONAL ENGINEER NGIM NANCY PE No. 58161 Exp. 6-30-10 CIVIL STATE OF CALIFORNIA

*THE STATE OF CALIFORNIA OR ITS OFFICERS OR AGENTS SHALL NOT BE RESPONSIBLE FOR THE ACCURACY OR COMPLETENESS OF ELECTRONIC COPIES OF THIS PLAN SHEET.*

Caltrans Metric

**NOTE:**

FOR ACCURATE RIGHT OF WAY AND ACCESS DATA,
CONTACT RIGHT OF WAY ENGINEERING AT THE DISTRICT OFFICE.

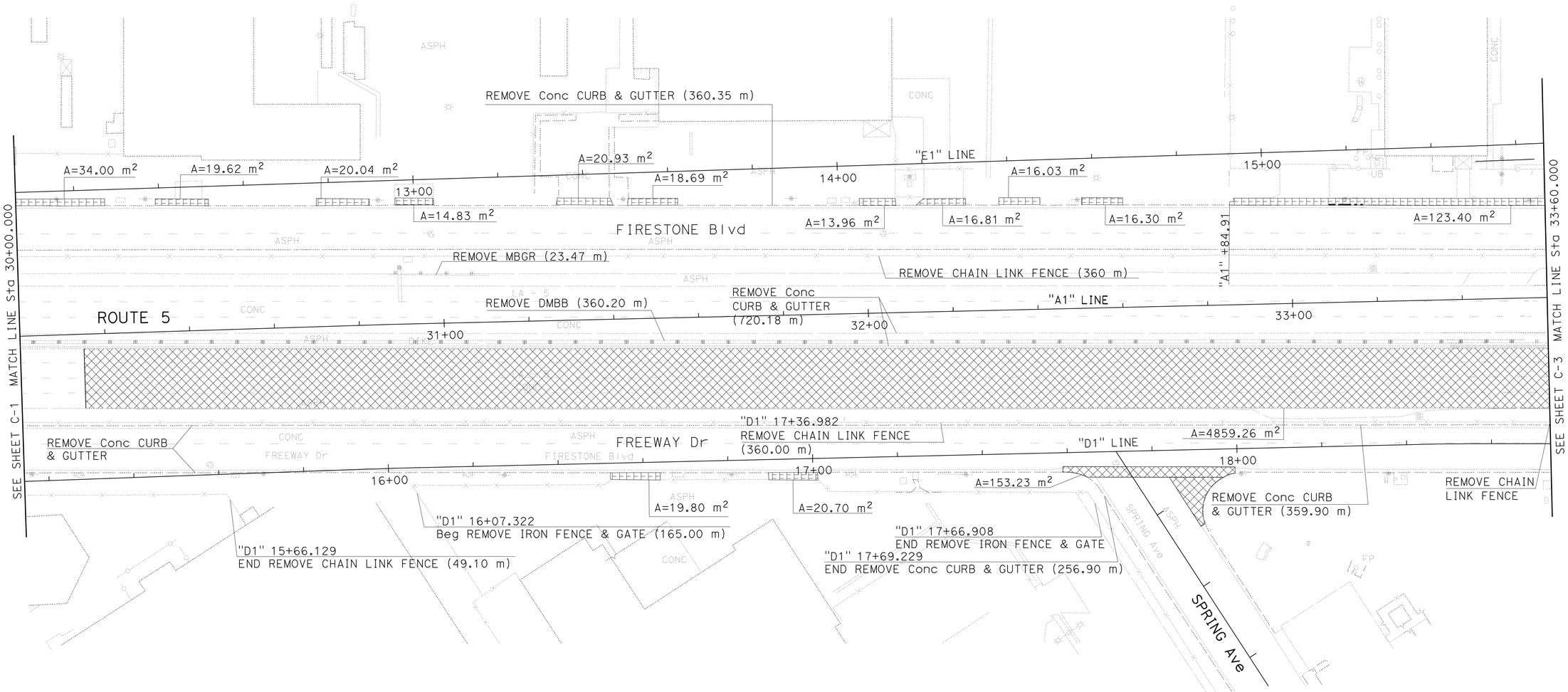


## (REMOVAL PLAN)

ALL DIMENSIONS ARE IN METERS
UNLESS OTHERWISE SHOWN

## CONSTRUCTION DETAILS

SCALE 1:500

C-2

THIS PLAN IS ACCURATE FOR REMOVAL ITEMS WORK ONLY.

| | |
|---|---|
| KEVIN Q NGUYEN | REVISED BY 3/07 |
| NGIM NANCY PE | DATE REVISED 6/07 |
| CALCULATED-DESIGNED BY | |
| CHECKED BY | |
| FUNCTIONAL SUPERVISOR | |
| NGIM NANCY PE | |

STATE OF CALIFORNIA - DEPARTMENT OF TRANSPORTATION
Caltrans OFFICE OF DESIGN A

S:\projects\2159c1\72159cga002.dgn

LAST REVISION 00-00-00 DATE PLOTTED => 22-JUN-2010 TIME PLOTTED => 09:56

| Dist | COUNTY | ROUTE | KILOMETER POST TOTAL PROJECT | SHEET No. | TOTAL SHEETS |
|---|---|---|---|---|---|
| 07 | LA | 5 | 2.9/4.9 | 62 | 1082 |

REGISTERED CIVIL ENGINEER 12-23-09 DATE

6-21-10
PLANS APPROVAL DATE

REGISTERED PROFESSIONAL ENGINEER NGIM NANCY PE No. 58161 Exp. 6-30-10 CIVIL STATE OF CALIFORNIA

*THE STATE OF CALIFORNIA OR ITS OFFICERS OR AGENTS SHALL NOT BE RESPONSIBLE FOR THE ACCURACY OR COMPLETENESS OF ELECTRONIC COPIES OF THIS PLAN SHEET.*

Caltrans Metric

**NOTE:**

FOR ACCURATE RIGHT OF WAY AND ACCESS DATA,
CONTACT RIGHT OF WAY ENGINEERING AT THE DISTRICT OFFICE.

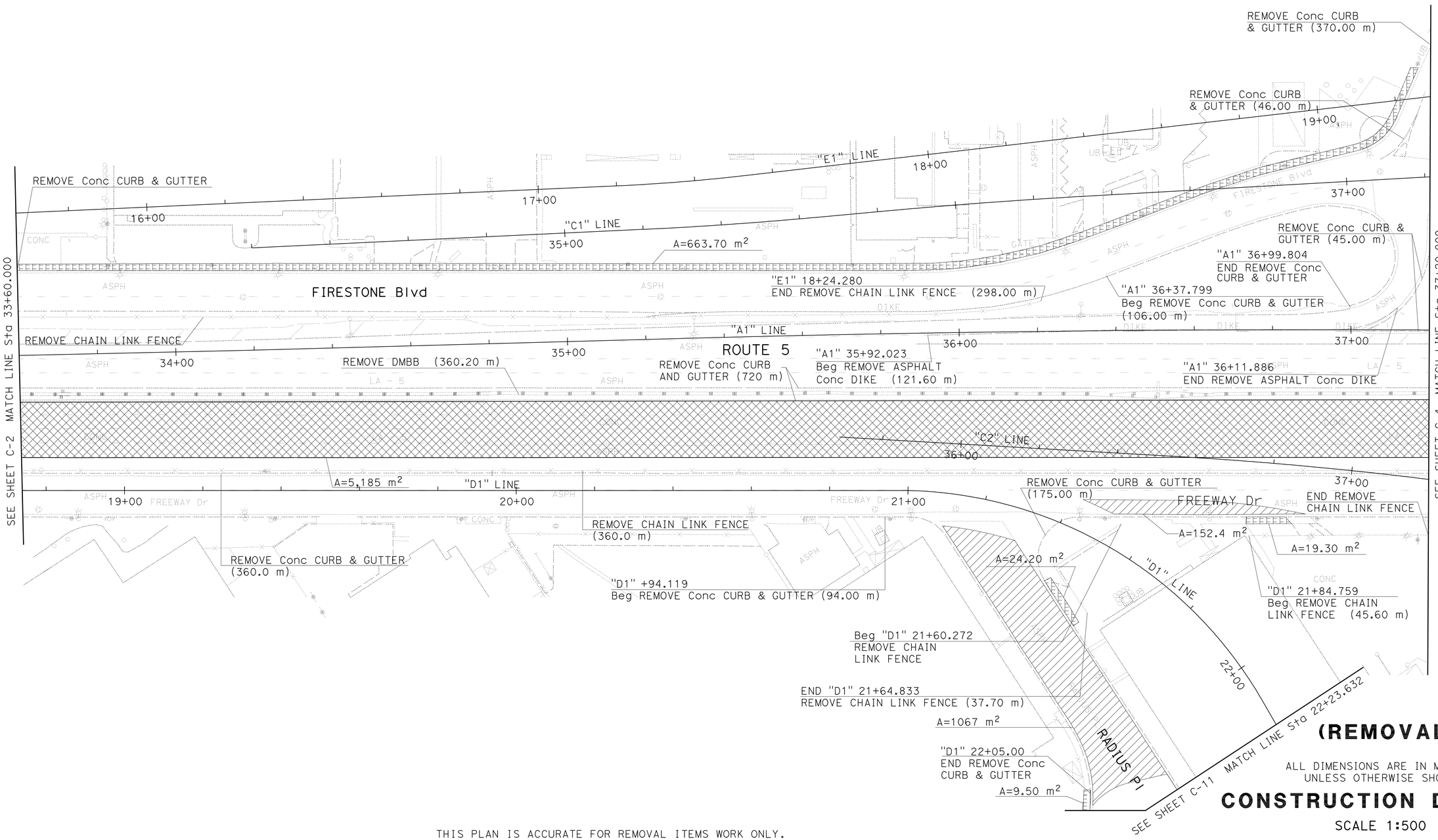


# (REMOVAL PLAN)

ALL DIMENSIONS ARE IN METERS
UNLESS OTHERWISE SHOWN

## CONSTRUCTION DETAILS

SCALE 1:500

C-3

THIS PLAN IS ACCURATE FOR REMOVAL ITEMS WORK ONLY.

| | |
|---|---|
| CALCULATED-DESIGNED BY | KEVIN Q NGUYEN |
| CHECKED BY | NGIM NANCY PE |
| REVISED BY | 3/07 |
| DATE REVISED | 6/07 |
| FUNCTIONAL SUPERVISOR | NGIM NANCY PE |

STATE OF CALIFORNIA - DEPARTMENT OF TRANSPORTATION
Caltrans OFFICE OF DESIGN A

S:\projects\2159c1\72159cga003.dgn

LAST REVISION 00-00-00 | DATE PLOTTED => 22-JUN-2010 | TIME PLOTTED => 09:56

| Dist | COUNTY | ROUTE | KILOMETER POST TOTAL PROJECT | SHEET No. | TOTAL SHEETS |
|---|---|---|---|---|---|
| 07 | LA | 5 | 2.9/4.9 | 63 | 1082 |

REGISTERED CIVIL ENGINEER 12-23-09 DATE

6-21-10
PLANS APPROVAL DATE

REGISTERED PROFESSIONAL ENGINEER NGIM NANCY PE No. 58161 Exp. 6-30-10 CIVIL STATE OF CALIFORNIA

*THE STATE OF CALIFORNIA OR ITS OFFICERS OR AGENTS SHALL NOT BE RESPONSIBLE FOR THE ACCURACY OR COMPLETENESS OF ELECTRONIC COPIES OF THIS PLAN SHEET.*

Caltrans Metric

**NOTE:**
FOR ACCURATE RIGHT OF WAY AND ACCESS DATA,
CONTACT RIGHT OF WAY ENGINEERING AT THE DISTRICT OFFICE.

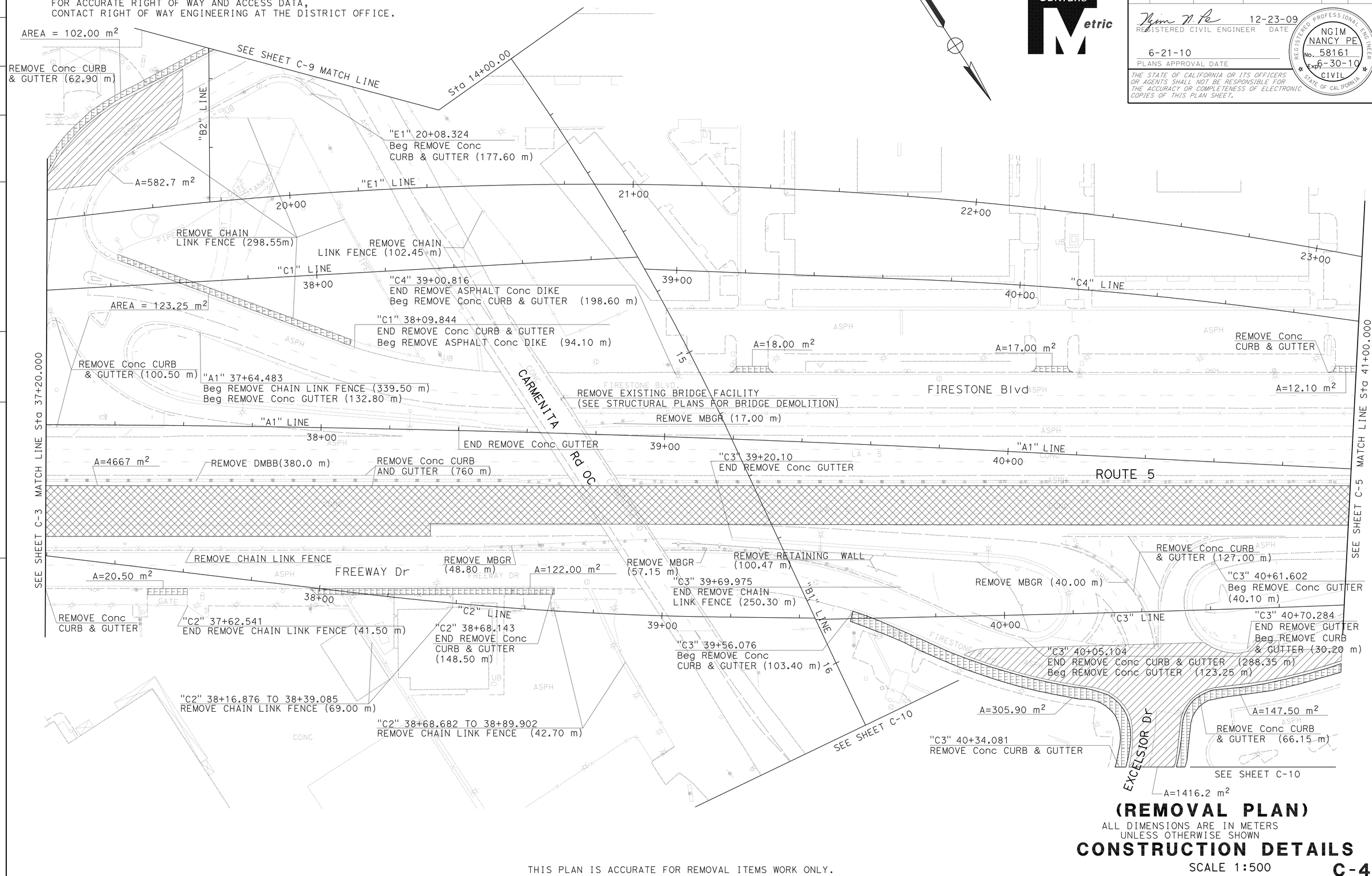


# (REMOVAL PLAN)

ALL DIMENSIONS ARE IN METERS
UNLESS OTHERWISE SHOWN

# CONSTRUCTION DETAILS

SCALE 1:500

**C-4**

THIS PLAN IS ACCURATE FOR REMOVAL ITEMS WORK ONLY.

| | |
|---|---|
| REVISED BY | 3/07 |
| DATE REVISED | 6/07 |
| CALCULATED-DESIGNED BY | KEVIN Q NGUYEN |
| CHECKED BY | NGIM NANCY PE |
| FUNCTIONAL SUPERVISOR | NGIM NANCY PE |

STATE OF CALIFORNIA - DEPARTMENT OF TRANSPORTATION
Caltrans **OFFICE OF DESIGN A**

S:\projects\2159c1\72159cga004.dgn

LAST REVISION 00-00-00 | DATE PLOTTED => 22-JUN-2010 | TIME PLOTTED => 09:56

| Dist | COUNTY | ROUTE | KILOMETER POST TOTAL PROJECT | SHEET No. | TOTAL SHEETS |
|---|---|---|---|---|---|
| 07 | LA | 5 | 2.9/4.9 | 64 | 1082 |

Ngim N. Pe 12-23-09
REGISTERED CIVIL ENGINEER DATE

6-21-10
PLANS APPROVAL DATE

REGISTERED PROFESSIONAL ENGINEER NGIM NANCY PE No. 58161 Exp. 6-30-10 CIVIL STATE OF CALIFORNIA

*THE STATE OF CALIFORNIA OR ITS OFFICERS OR AGENTS SHALL NOT BE RESPONSIBLE FOR THE ACCURACY OR COMPLETENESS OF ELECTRONIC COPIES OF THIS PLAN SHEET.*

Caltrans Metric

**NOTE:**

FOR ACCURATE RIGHT OF WAY AND ACCESS DATA,
CONTACT RIGHT OF WAY ENGINEERING AT THE DISTRICT OFFICE.

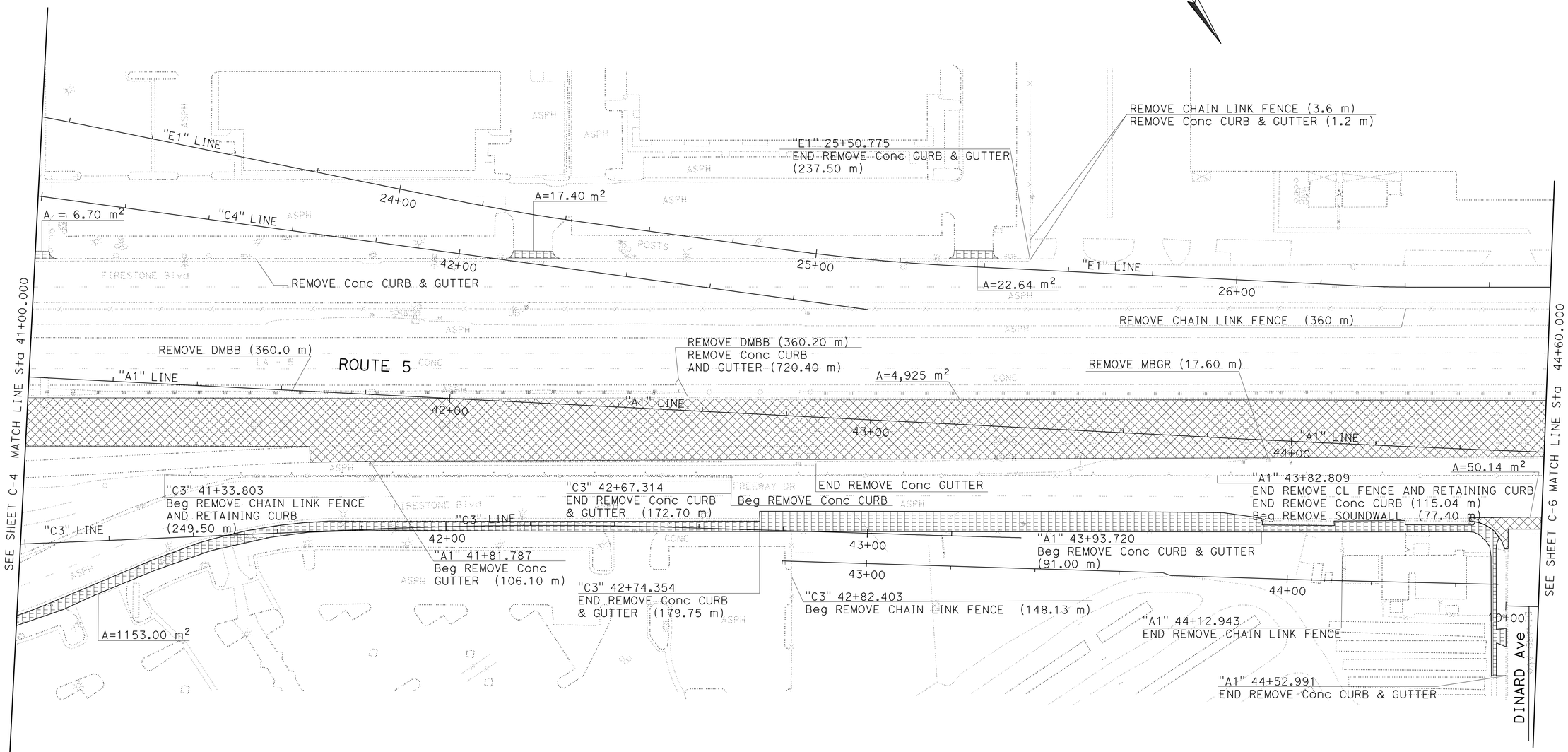


## (REMOVAL PLAN)

ALL DIMENSIONS ARE IN METERS
UNLESS OTHERWISE SHOWN

## CONSTRUCTION DETAILS

SCALE 1:500

THIS PLAN IS ACCURATE FOR REMOVAL ITEMS WORK ONLY.

C-5

| | |
|---|---|
| REVISED BY | 3/07 |
| DATE REVISED | 6/07 |
| CALCULATED-DESIGNED BY | KEVIN Q NGUYEN |
| CHECKED BY | NGIM NANCY PE |
| FUNCTIONAL SUPERVISOR | NGIM NANCY PE |

STATE OF CALIFORNIA - DEPARTMENT OF TRANSPORTATION
Caltrans OFFICE OF DESIGN A

S:\projects\2159c1\72159cga005.dgn

LAST REVISION 00-00-00 | DATE PLOTTED => 22-JUN-2010 | TIME PLOTTED => 08:59

| Dist | COUNTY | ROUTE | KILOMETER POST TOTAL PROJECT | SHEET No. | TOTAL SHEETS |
|---|---|---|---|---|---|
| 07 | LA | 5 | 2.9/4.9 | 65 | 1082 |

REGISTERED CIVIL ENGINEER 12-23-09 DATE

6-21-10
PLANS APPROVAL DATE

REGISTERED PROFESSIONAL ENGINEER NGIM NANCY PE No. 58161 Exp. 6-30-10 CIVIL STATE OF CALIFORNIA

*THE STATE OF CALIFORNIA OR ITS OFFICERS OR AGENTS SHALL NOT BE RESPONSIBLE FOR THE ACCURACY OR COMPLETENESS OF ELECTRONIC COPIES OF THIS PLAN SHEET.*

Caltrans Metric

**NOTE:**

FOR ACCURATE RIGHT OF WAY AND ACCESS DATA,
CONTACT RIGHT OF WAY ENGINEERING AT THE DISTRICT OFFICE.

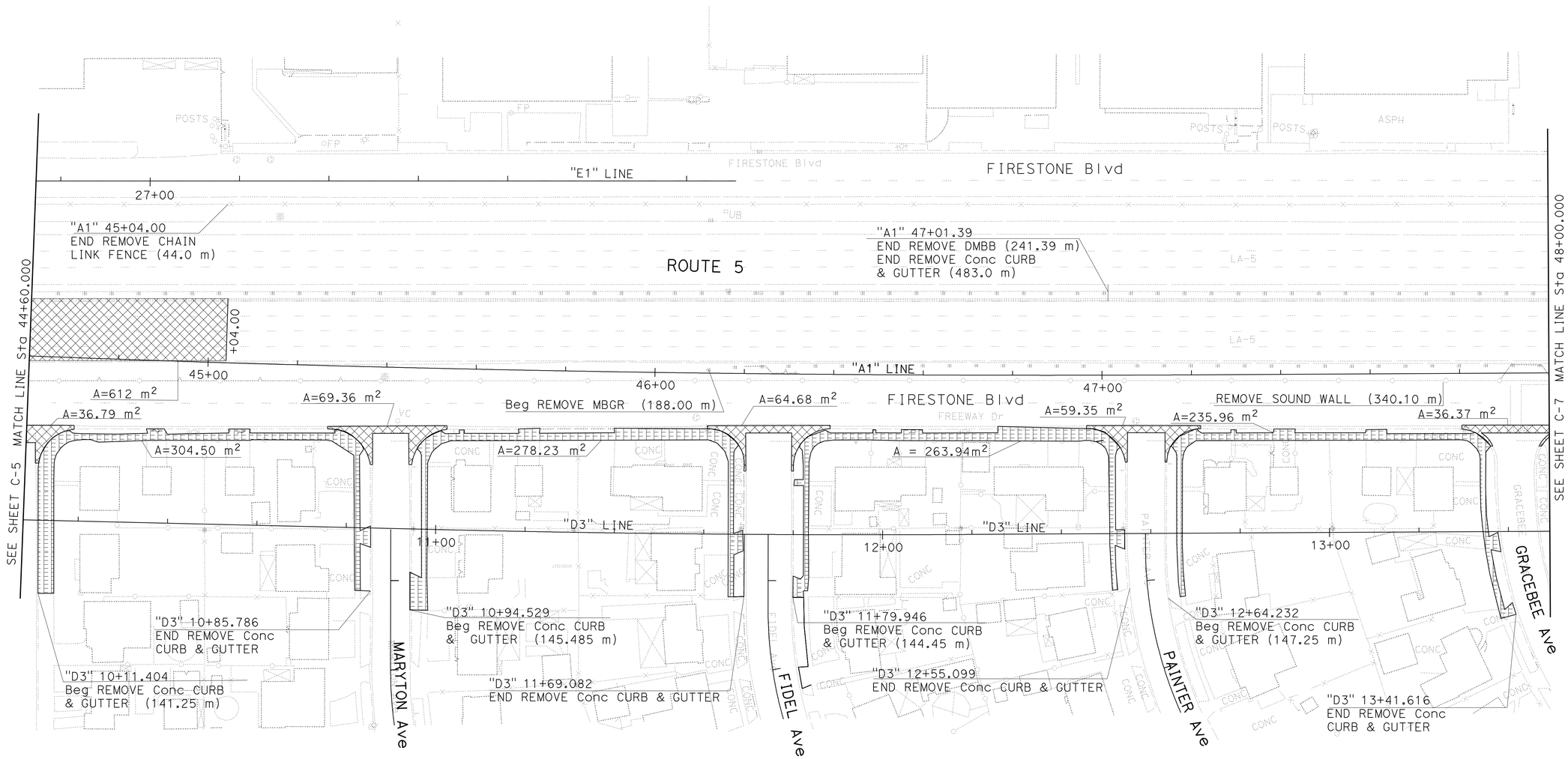


# (REMOVAL PLAN)

ALL DIMENSIONS ARE IN METERS
UNLESS OTHERWISE SHOWN

## CONSTRUCTION DETAILS

SCALE 1:500

THIS PLAN IS ACCURATE FOR REMOVAL ITEMS WORK ONLY.

C-6

| | | | |
|---|---|---|---|
| CALCULATED-DESIGNED BY | KEVIN Q NGUYEN | REVISED BY | KN |
| CHECKED BY | NGIM NANCY PE | DATE REVISED | 9/09 |
| FUNCTIONAL SUPERVISOR | NGIM NANCY PE | | |

STATE OF CALIFORNIA - DEPARTMENT OF TRANSPORTATION
Caltrans OFFICE OF DESIGN A

S:\projects\2159c1\72159cga006.dgn

LAST REVISION 00-00-00 DATE PLOTTED => 22-JUN-2010 TIME PLOTTED => 08:59

| Dist | COUNTY | ROUTE | KILOMETER POST TOTAL PROJECT | SHEET No. | TOTAL SHEETS |
|---|---|---|---|---|---|
| 07 | LA | 5 | 2.9/4.9 | 66 | 1082 |

REGISTERED CIVIL ENGINEER 12-23-09 DATE

6-21-10
PLANS APPROVAL DATE

REGISTERED PROFESSIONAL ENGINEER NGIM NANCY PE No. 58161 Exp. 6-30-10 CIVIL STATE OF CALIFORNIA

*THE STATE OF CALIFORNIA OR ITS OFFICERS OR AGENTS SHALL NOT BE RESPONSIBLE FOR THE ACCURACY OR COMPLETENESS OF ELECTRONIC COPIES OF THIS PLAN SHEET.*

Caltrans Metric

**NOTE:**

FOR ACCURATE RIGHT OF WAY AND ACCESS DATA,
CONTACT RIGHT OF WAY ENGINEERING AT THE DISTRICT OFFICE.

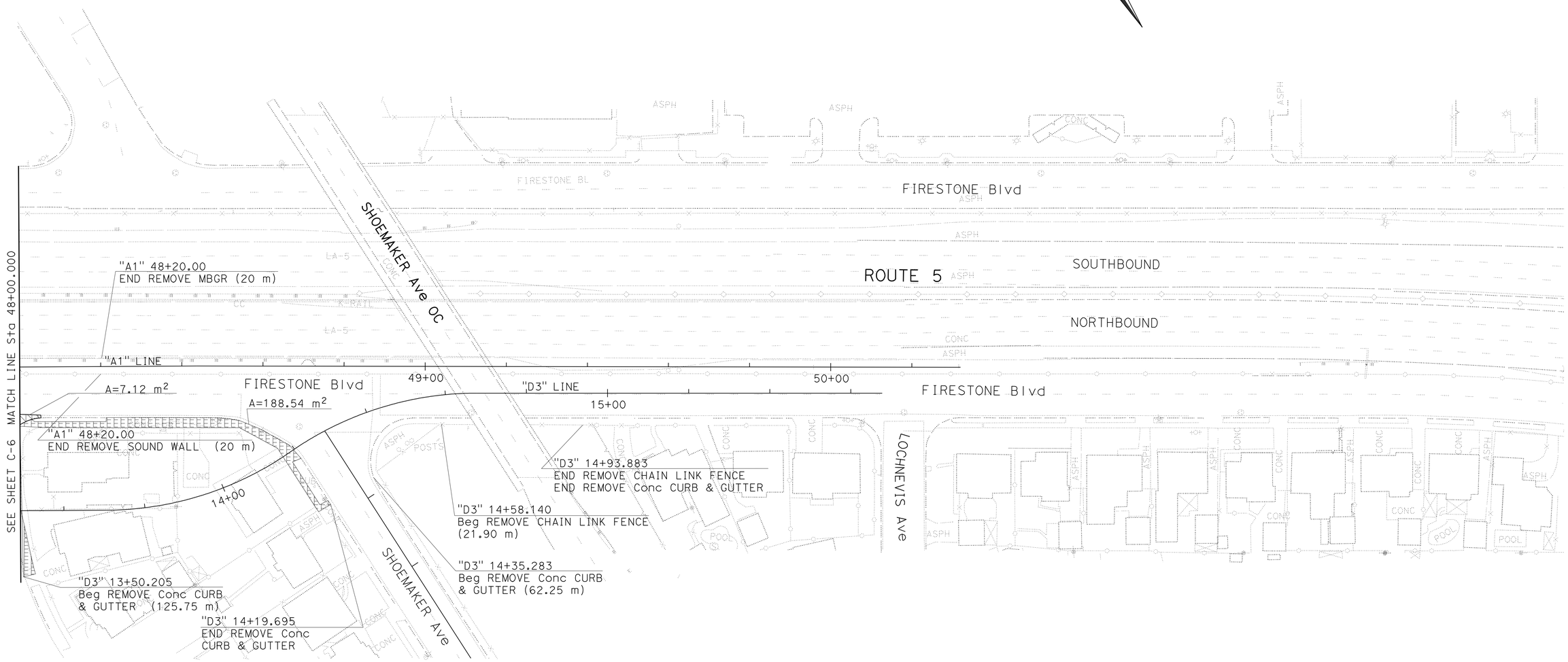


# (REMOVAL PLAN)

ALL DIMENSIONS ARE IN METERS
UNLESS OTHERWISE SHOWN

# CONSTRUCTION DETAILS

SCALE 1:500

C-7

THIS PLAN IS ACCURATE FOR REMOVAL ITEMS WORK ONLY.

| | |
|---|---|
| KEVIN Q NGUYEN | KN |
| NGIM NANCY PE | 9/09 |
| CALCULATED-DESIGNED BY | REVISED BY |
| CHECKED BY | DATE REVISED |
| FUNCTIONAL SUPERVISOR | |
| NGIM NANCY PE | |

STATE OF CALIFORNIA - DEPARTMENT OF TRANSPORTATION
Caltrans OFFICE OF DESIGN A

S:\projects\2159c1\72159cga007.dgn

LAST REVISION 00-00-00 | DATE PLOTTED => 22-JUN-2010 | TIME PLOTTED => 08:59

| Dist | COUNTY | ROUTE | KILOMETER POST TOTAL PROJECT | SHEET No. | TOTAL SHEETS |
|---|---|---|---|---|---|
| 07 | LA | 5 | 2.9/4.9 | 67 | 1082 |

Ngim N. Pe 12-23-09
REGISTERED CIVIL ENGINEER DATE

6-21-10
PLANS APPROVAL DATE

REGISTERED PROFESSIONAL ENGINEER NGIM NANCY PE No. 58161 Exp. 6-30-10 CIVIL STATE OF CALIFORNIA

*THE STATE OF CALIFORNIA OR ITS OFFICERS OR AGENTS SHALL NOT BE RESPONSIBLE FOR THE ACCURACY OR COMPLETENESS OF ELECTRONIC COPIES OF THIS PLAN SHEET.*

Caltrans Metric

NOTE:
FOR ACCURATE RIGHT OF WAY AND ACCESS DATA,
CONTACT RIGHT OF WAY ENGINEERING AT THE DISTRICT OFFICE.

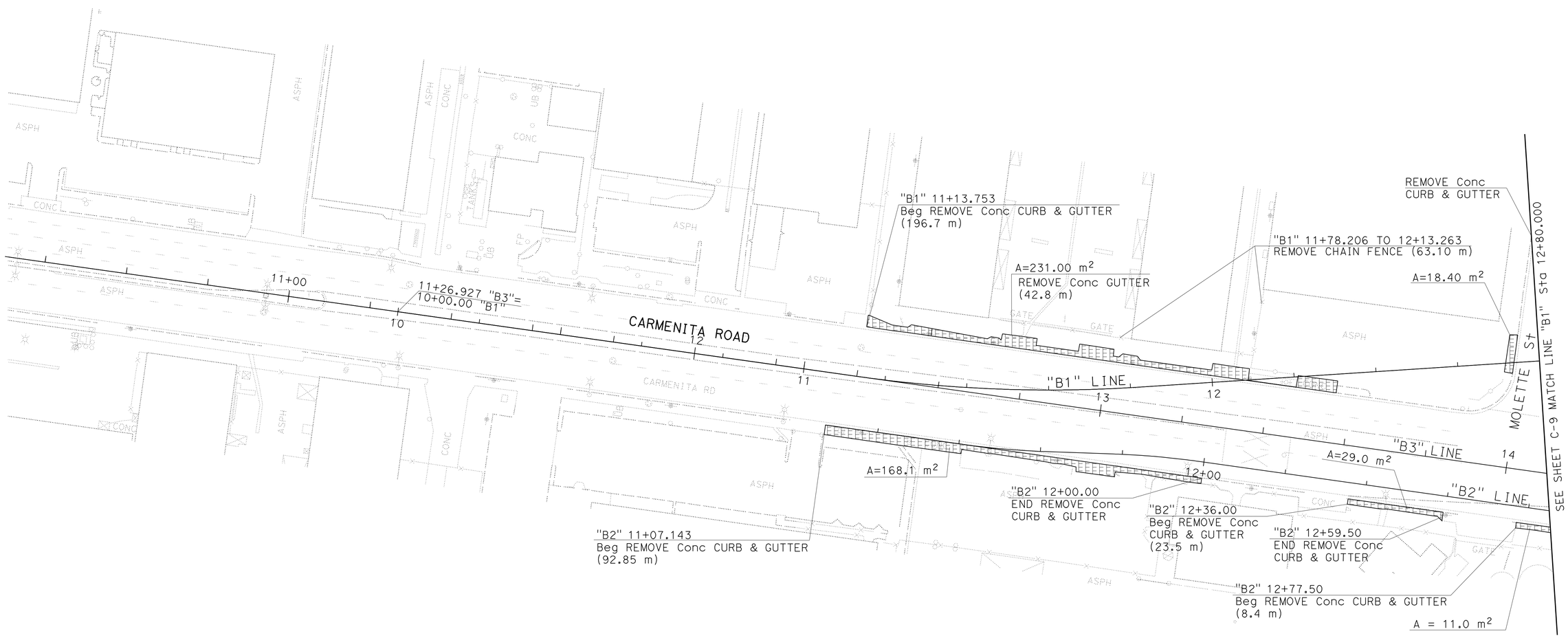


# (REMOVAL PLAN)

ALL DIMENSIONS ARE IN METERS
UNLESS OTHERWISE SHOWN

# CONSTRUCTION DETAILS

SCALE 1:500

C-8

THIS PLAN IS ACCURATE FOR REMOVAL ITEMS WORK ONLY.

| | | | |
|---|---|---|---|
| CALCULATED-DESIGNED BY | KEVIN Q NGUYEN | REVISED BY | KN |
| CHECKED BY | NGIM NANCY PE | DATE REVISED | 9/09 |
| FUNCTIONAL SUPERVISOR | NGIM NANCY PE | | |

STATE OF CALIFORNIA - DEPARTMENT OF TRANSPORTATION
Caltrans OFFICE OF DESIGN A

S:\projects\2159c1\72159cga008.dgn

LAST REVISION 00-00-00 DATE PLOTTED => 22-JUN-2010 TIME PLOTTED => 08:59

| Dist | COUNTY | ROUTE | KILOMETER POST TOTAL PROJECT | SHEET No. | TOTAL SHEETS |
|---|---|---|---|---|---|
| 07 | LA | 5 | 2.9/4.9 | 68 | 1082 |

Ngim N Pe 12-23-09
REGISTERED CIVIL ENGINEER DATE

6-21-10
PLANS APPROVAL DATE

REGISTERED PROFESSIONAL ENGINEER NGIM NANCY PE No. 58161 Exp. 6-30-10 CIVIL STATE OF CALIFORNIA

*THE STATE OF CALIFORNIA OR ITS OFFICERS OR AGENTS SHALL NOT BE RESPONSIBLE FOR THE ACCURACY OR COMPLETENESS OF ELECTRONIC COPIES OF THIS PLAN SHEET.*

Caltrans Metric

**NOTE:**

FOR ACCURATE RIGHT OF WAY AND ACCESS DATA, CONTACT RIGHT OF WAY ENGINEERING AT THE DISTRICT OFFICE.

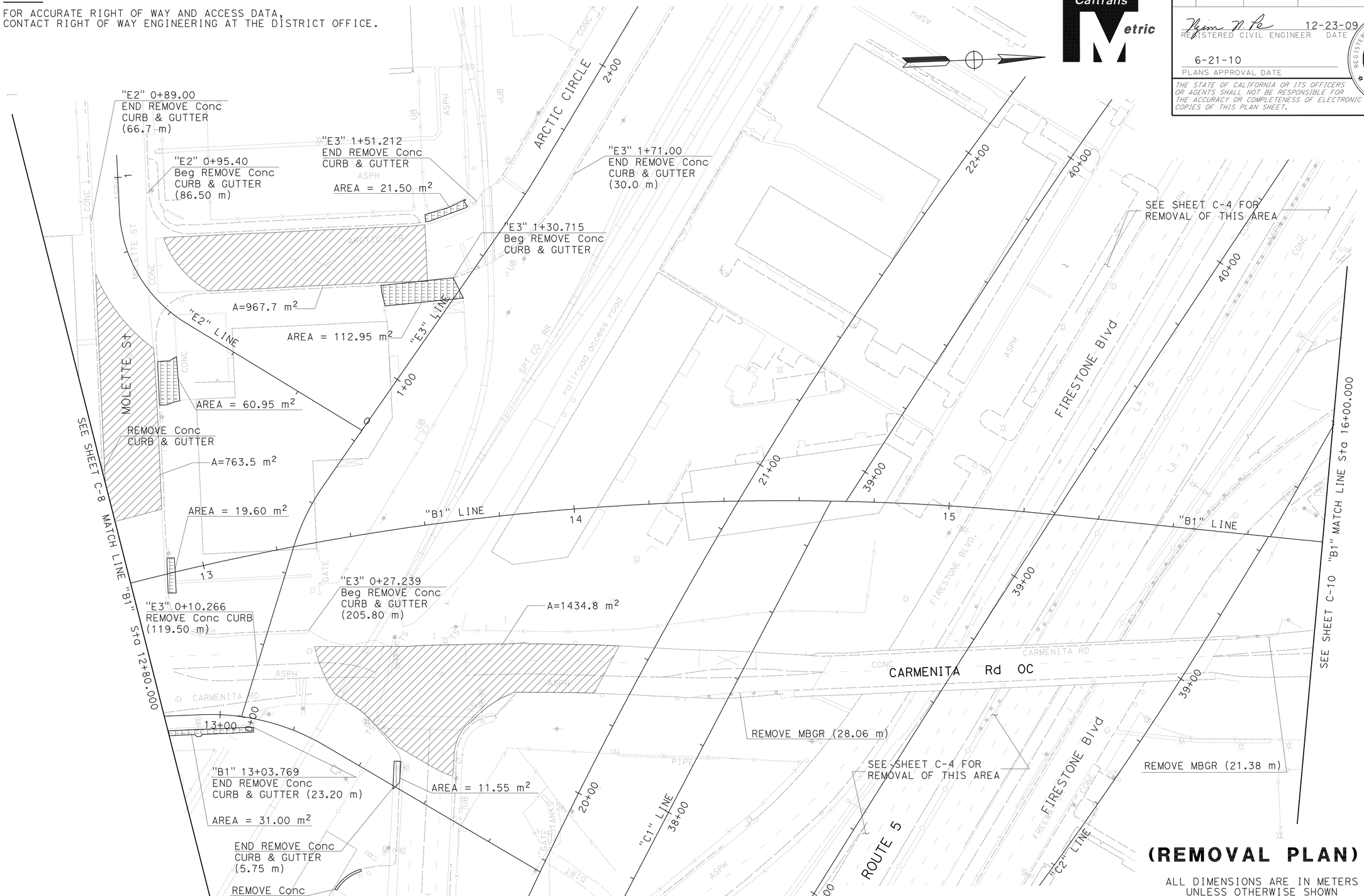


# (REMOVAL PLAN)

ALL DIMENSIONS ARE IN METERS
UNLESS OTHERWISE SHOWN

# CONSTRUCTION DETAILS

SCALE 1:500

**C-9**

THIS PLAN IS ACCURATE FOR REMOVAL ITEMS WORK ONLY

| | | | |
|---|---|---|---|
| KEVIN Q NGUYEN | KN | REVISED BY | 9/09 |
| NGIM NANCY PE | | DATE REVISED | |
| CALCULATED-DESIGNED BY | | | |
| CHECKED BY | | | |
| FUNCTIONAL SUPERVISOR | | | |
| NGIM NANCY PE | | | |

STATE OF CALIFORNIA - DEPARTMENT OF TRANSPORTATION
Caltrans OFFICE OF DESIGN A

S:\projects\2159c1\72159cga009.dgn

LAST REVISION 00-00-00 DATE PLOTTED => 23-JUN-2010 TIME PLOTTED => 09:41

| Dist | COUNTY | ROUTE | KILOMETER POST TOTAL PROJECT | SHEET No. | TOTAL SHEETS |
|---|---|---|---|---|---|
| 07 | LA | 5 | 2.9/4.9 | 69 | 1082 |

REGISTERED CIVIL ENGINEER 12-23-09 DATE

6-21-10
PLANS APPROVAL DATE

REGISTERED PROFESSIONAL ENGINEER NGIM NANCY PE No. 58161 Exp. 6-30-10 CIVIL STATE OF CALIFORNIA

*THE STATE OF CALIFORNIA OR ITS OFFICERS OR AGENTS SHALL NOT BE RESPONSIBLE FOR THE ACCURACY OR COMPLETENESS OF ELECTRONIC COPIES OF THIS PLAN SHEET.*

Caltrans Metric

**NOTE:**
FOR ACCURATE RIGHT OF WAY AND ACCESS DATA,
CONTACT RIGHT OF WAY ENGINEERING AT THE DISTRICT OFFICE.

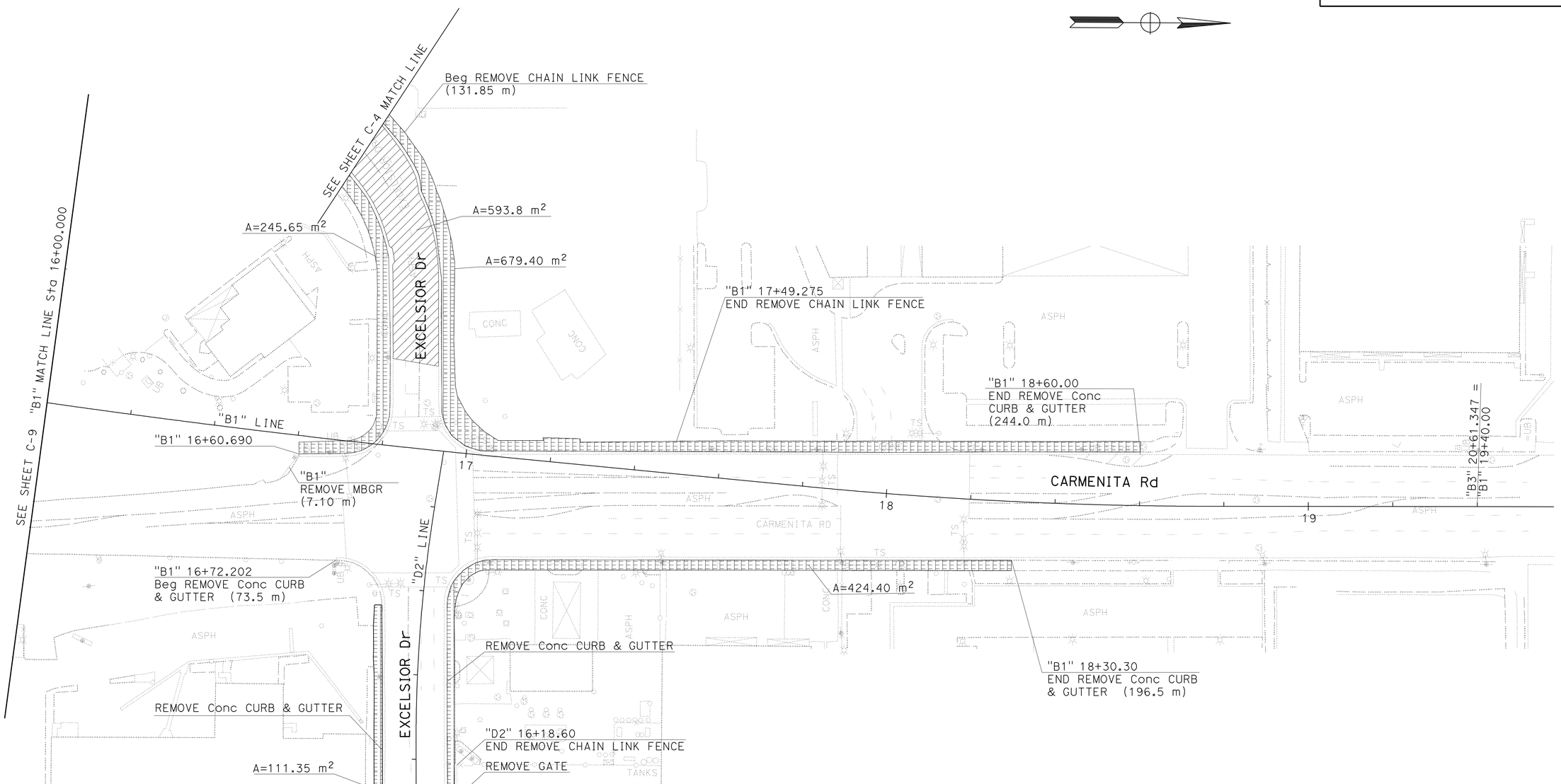


# (REMOVAL PLAN)

ALL DIMENSIONS ARE IN METERS
UNLESS OTHERWISE SHOWN

# CONSTRUCTION DETAILS

SCALE 1:500

**C-10**

THIS PLAN IS ACCURATE FOR REMOVAL ITEMS WORK ONLY

| | |
|---|---|
| KEVIN Q NGUYEN | KN |
| NGIM NANCY PE | 9/09 |
| CALCULATED-DESIGNED BY | REVISED BY |
| CHECKED BY | DATE REVISED |
| FUNCTIONAL SUPERVISOR | |
| NGIM NANCY PE | |

STATE OF CALIFORNIA - DEPARTMENT OF TRANSPORTATION
Caltrans OFFICE OF DESIGN A

S:\projects\2159c1\72159cga010.dgn

LAST REVISION 00-00-00 | DATE PLOTTED => 22-JUN-2010 | TIME PLOTTED => 08:59

| Dist | COUNTY | ROUTE | KILOMETER POST TOTAL PROJECT | SHEET No. | TOTAL SHEETS |
|---|---|---|---|---|---|
| 07 | LA | 5 | 2.9/4.9 | 70 | 1082 |

Ngim N. Pe 12-23-09
REGISTERED CIVIL ENGINEER DATE

6-21-10
PLANS APPROVAL DATE

REGISTERED PROFESSIONAL ENGINEER NGIM NANCY PE No. 58161 Exp. 6-30-10 CIVIL STATE OF CALIFORNIA

*THE STATE OF CALIFORNIA OR ITS OFFICERS OR AGENTS SHALL NOT BE RESPONSIBLE FOR THE ACCURACY OR COMPLETENESS OF ELECTRONIC COPIES OF THIS PLAN SHEET.*

Caltrans Metric

**NOTE:**

FOR ACCURATE RIGHT OF WAY AND ACCESS DATA,
CONTACT RIGHT OF WAY ENGINEERING AT THE DISTRICT OFFICE.

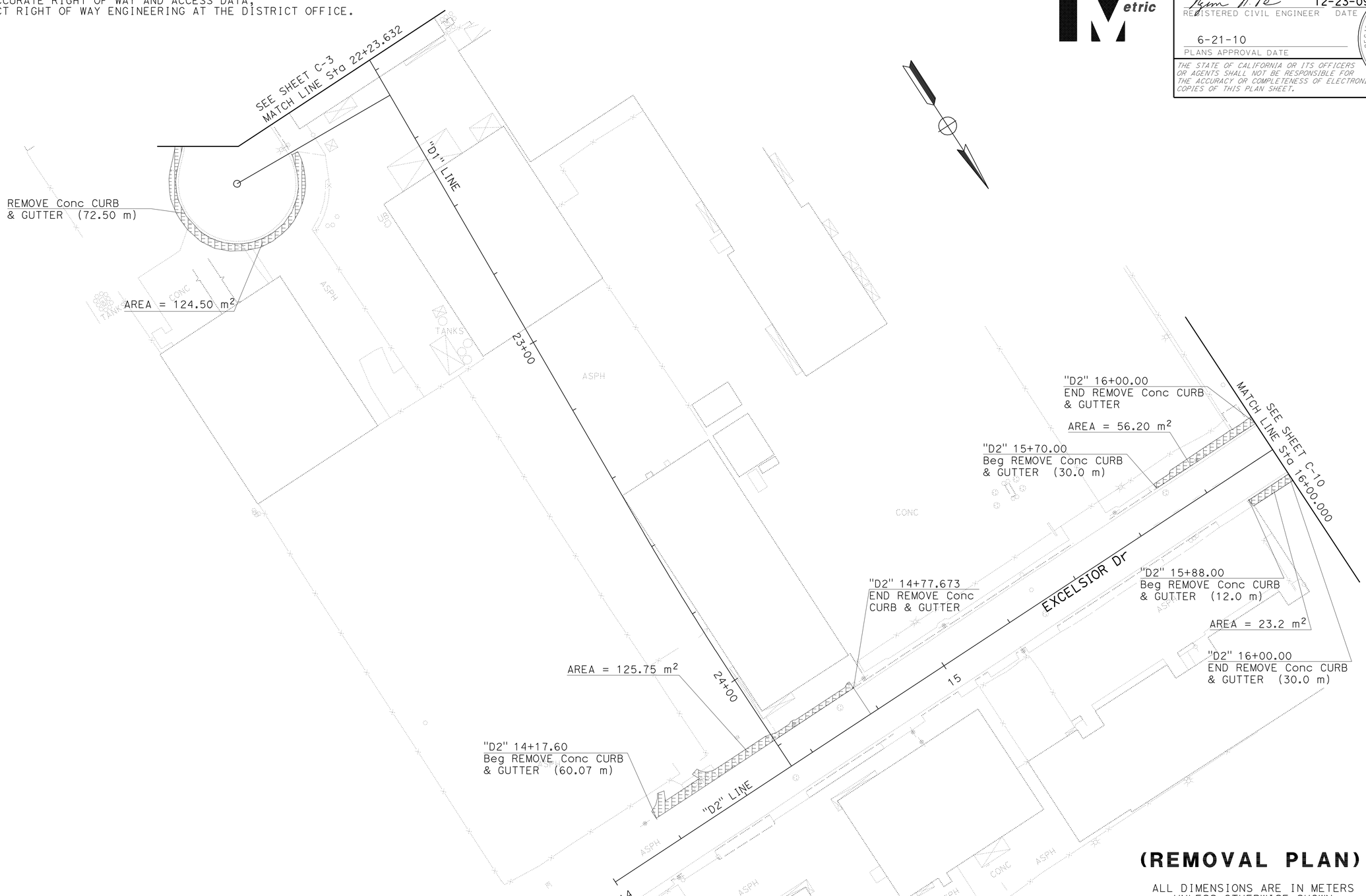


# (REMOVAL PLAN)

ALL DIMENSIONS ARE IN METERS
UNLESS OTHERWISE SHOWN

# CONSTRUCTION DETAILS (REMOVAL PLAN)

SCALE 1:500

**C-11**

THIS PLAN IS ACCURATE FOR REMOVAL ITEMS WORK ONLY.

| REVISED BY | DATE REVISED |
|---|---|
| KN | 9/09 |

CALCULATED-DESIGNED BY: KEVIN Q NGUYEN
CHECKED BY: NGIM NANCY PE
FUNCTIONAL SUPERVISOR: NGIM NANCY PE

STATE OF CALIFORNIA - DEPARTMENT OF TRANSPORTATION
Caltrans OFFICE OF DESIGN A

S:\projects\2159c1\72159cga011.dgn

LAST REVISION 00-00-00 | DATE PLOTTED => 22-JUN-2010 | TIME PLOTTED => 08:59

| Dist | COUNTY | ROUTE | KILOMETER POST TOTAL PROJECT | SHEET No. | TOTAL SHEETS |
|---|---|---|---|---|---|
| 07 | LA | 5 | 2.9/4.9 | 71 | 1082 |

REGISTERED CIVIL ENGINEER 12-23-09 DATE

6-21-10
PLANS APPROVAL DATE

REGISTERED PROFESSIONAL ENGINEER NGIM NANCY PE No. 58161 Exp. 6-30-10 CIVIL STATE OF CALIFORNIA

*THE STATE OF CALIFORNIA OR ITS OFFICERS OR AGENTS SHALL NOT BE RESPONSIBLE FOR THE ACCURACY OR COMPLETENESS OF ELECTRONIC COPIES OF THIS PLAN SHEET.*

Caltrans Metric

NOTE:
SEE STRUCTURE PLANS FOR DETAILS NOT SHOWN.

CURVE DATA

| No. | R | Δ | T | L |
|---|---|---|---|---|
| 1 | 612.273 | 12°23'16" | 66.448 | 132.378 |
| 2 | 827.505 | 7°10'23" | 51.867 | 103.599 |

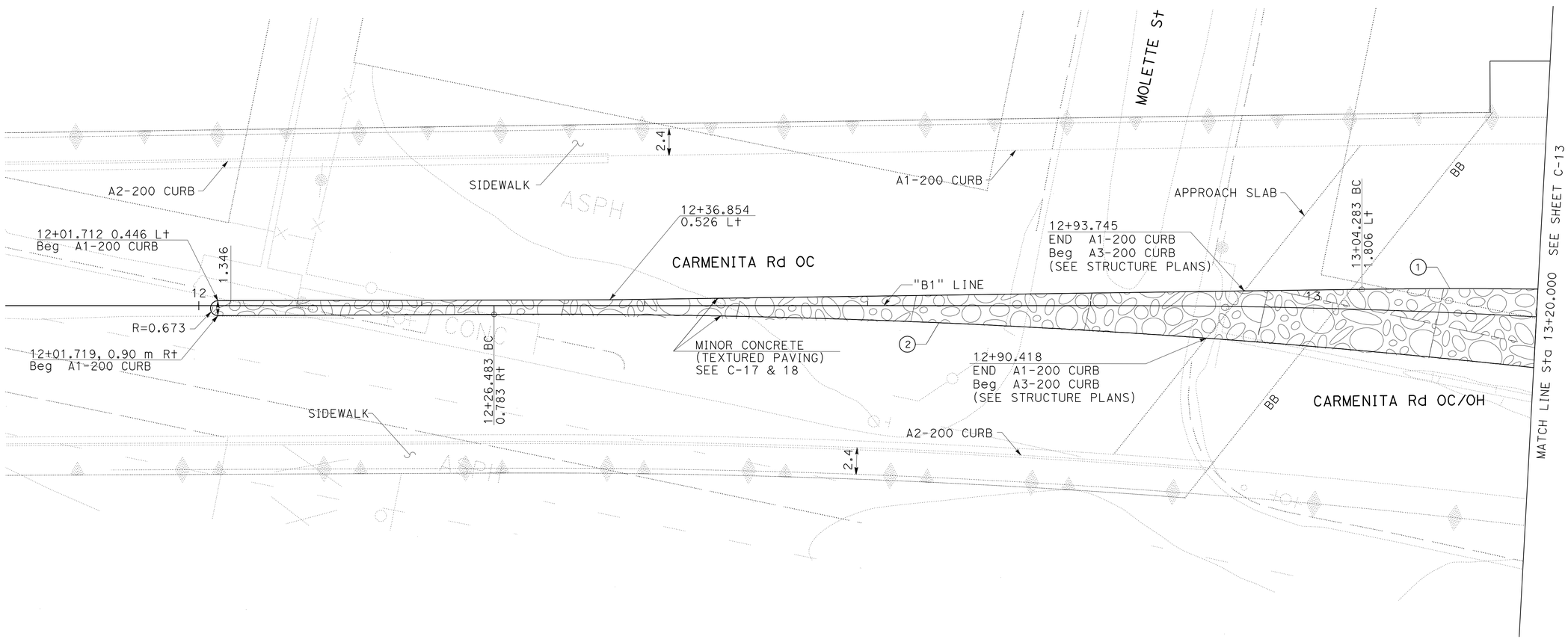


# ISLAND PAVING

ALL DIMENSION ARE IN
METTERS UNLESS OTHERWISE SHOWN

# CONSTRUCTION DETAILS

SCALE 1:200

C-12

STATE OF CALIFORNIA - DEPARTMENT OF TRANSPORTATION
Caltrans OFFICE OF DESIGN A

FUNCTIONAL SUPERVISOR: NGIM NANCY PE
CALCULATED-DESIGNED BY: STEVEN TRIEU
CHECKED BY: NGIM NANCY PE
REVISED BY: S.T.
DATE REVISED: 5/09

S:\projects\2159c1\72159cga012.dgn

LAST REVISION 00-00-00
DATE PLOTTED => 22-JUN-2010
TIME PLOTTED => 08:59

BORDER LAST REVISED 3/1/2007
RELATIVE BORDER SCALE IS IN MILLIMETERS 0 20 40 60 80
USERNAME => trmartin
DGN FILE => 72159cga012.dgn
CU 07225
EA 2159C1

| Dist | COUNTY | ROUTE | KILOMETER POST TOTAL PROJECT | SHEET No. | TOTAL SHEETS |
|---|---|---|---|---|---|
| 07 | LA | 5 | 2.9/4.9 | 72 | 1082 |

REGISTERED CIVIL ENGINEER 12-23-09 DATE

6-21-10
PLANS APPROVAL DATE

REGISTERED PROFESSIONAL ENGINEER NGIM NANCY PE No. 58161 Exp. 6-30-10 CIVIL STATE OF CALIFORNIA

*THE STATE OF CALIFORNIA OR ITS OFFICERS OR AGENTS SHALL NOT BE RESPONSIBLE FOR THE ACCURACY OR COMPLETENESS OF ELECTRONIC COPIES OF THIS PLAN SHEET.*

Caltrans Metric

**NOTE:**
SEE STRUCTURE PLANS FOR DETAILS NOT SHOWN.

CURVE DATA

| No. | R | Δ | T | L |
|---|---|---|---|---|
| 1 | 612.273 | 12°23'16" | 66.448 | 132.378 |
| 2 | 827.505 | 7°10'23" | 51.867 | 103.599 |
| 3 | 14.695 | 29°46'42" | 3.907 | 7.637 |
| 4 | 15.305 | 32°20'07" | 4.437 | 8.637 |
| 5 | 699.695 | 4°1'31" | 24.588 | 49.156 |
| 6 | 586.500 | 1°5'38" | 5.599 | 11.198 |

# ISLAND PAVING

ALL DIMENSION ARE IN
METTERS UNLESS OTHERWISE SHOWN

# CONSTRUCTION DETAILS

SCALE 1:200

C-13

STATE OF CALIFORNIA - DEPARTMENT OF TRANSPORTATION
Caltrans OFFICE OF DESIGN A

FUNCTIONAL SUPERVISOR NGIM NANCY PE
CALCULATED-DESIGNED BY STEVEN TRIEU
CHECKED BY NGIM NANCY PE
REVISED BY S.T.
DATE REVISED 5/09

S:\projects\2159c1\72159cga013.dgn

LAST REVISION 00-00-00
DATE PLOTTED => 22-JUN-2010
TIME PLOTTED => 09:00

| Dist | COUNTY | ROUTE | KILOMETER POST TOTAL PROJECT | SHEET No. | TOTAL SHEETS |
|---|---|---|---|---|---|
| 07 | LA | 5 | 2.9/4.9 | 73 | 1082 |

REGISTERED CIVIL ENGINEER 12-23-09 DATE

6-21-10
PLANS APPROVAL DATE

REGISTERED PROFESSIONAL ENGINEER NGIM NANCY PE No. 58161 Exp. 6-30-10 CIVIL STATE OF CALIFORNIA

*THE STATE OF CALIFORNIA OR ITS OFFICERS OR AGENTS SHALL NOT BE RESPONSIBLE FOR THE ACCURACY OR COMPLETENESS OF ELECTRONIC COPIES OF THIS PLAN SHEET.*

Caltrans Metric

NOTE:
SEE STRUCTURE PLANS FOR DETAILS NOT SHOWN.

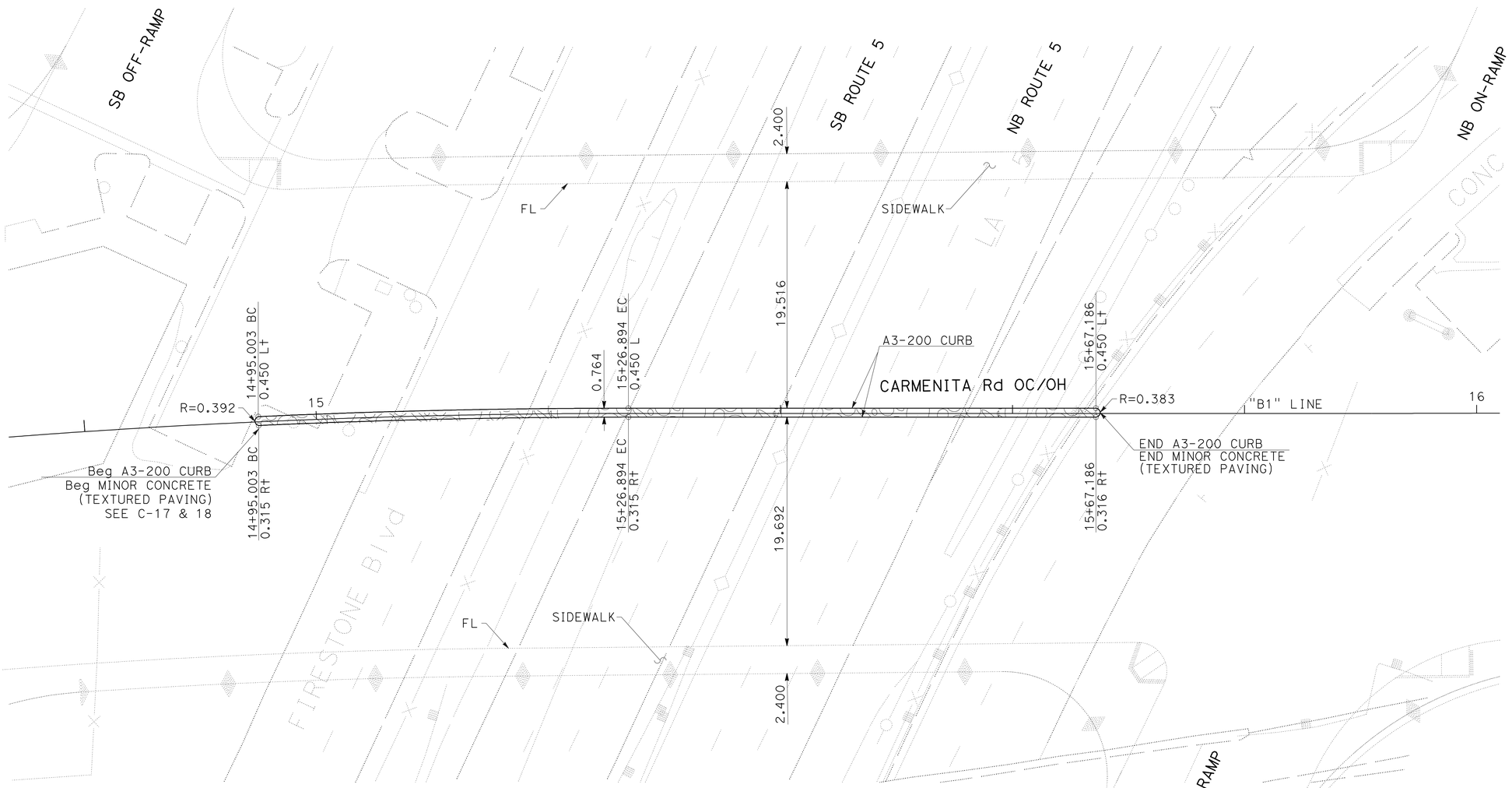


## ISLAND PAVING

ALL DIMENSION ARE IN
METTERS UNLESS OTHERWISE SHOWN

## CONSTRUCTION DETAILS

SCALE 1:200

C-14

| | |
|---|---|
| S.T. | 5/09 |
| REVISED BY | DATE REVISED |
| STEVEN TRIEU | |
| NGIM NANCY PE | |
| CALCULATED-DESIGNED BY | |
| CHECKED BY | |
| FUNCTIONAL SUPERVISOR | |
| NGIM NANCY PE | |

STATE OF CALIFORNIA - DEPARTMENT OF TRANSPORTATION
Caltrans OFFICE OF DESIGN A

S:\projects\2159c1\72159cga014.dgn

LAST REVISION 00-00-00 | DATE PLOTTED => 22-JUN-2010 | TIME PLOTTED => 09:00

| Dist | COUNTY | ROUTE | KILOMETER POST TOTAL PROJECT | SHEET No. | TOTAL SHEETS |
|---|---|---|---|---|---|
| 07 | LA | 5 | 2.9/4.9 | 74 | 1082 |

Ngim N. Pe 12-23-09
REGISTERED CIVIL ENGINEER DATE

6-21-10
PLANS APPROVAL DATE

REGISTERED PROFESSIONAL ENGINEER NGIM NANCY PE No. 58161 Exp. 6-30-10 CIVIL STATE OF CALIFORNIA

*THE STATE OF CALIFORNIA OR ITS OFFICERS OR AGENTS SHALL NOT BE RESPONSIBLE FOR THE ACCURACY OR COMPLETENESS OF ELECTRONIC COPIES OF THIS PLAN SHEET.*

Caltrans Metric

**NOTE:**

SEE STRUCTURE PLANS FOR DETAILS ON BRIDGE NOT SHOWN.

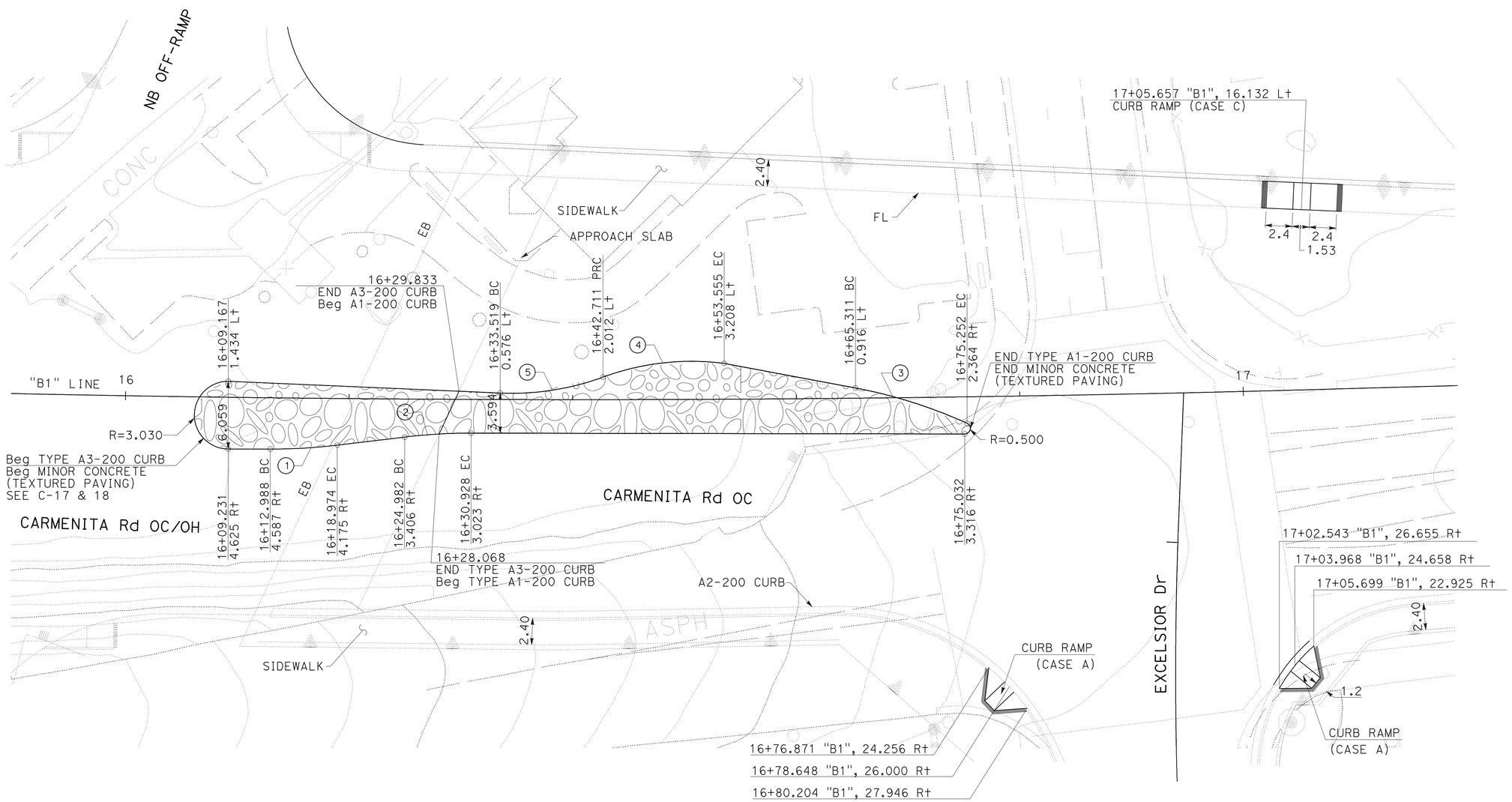


CURVE DATA

| No. | R | Δ | T | L |
|---|---|---|---|---|
| 1 | 49.437 | 6°58′16" | 3.011 | 6.015 |
| 2 | 49.437 | 6°55′05" | 2.988 | 5.969 |
| 3 | 44.541 | 13°30′06" | 5.272 | 10.496 |
| 4 | 23.085 | 27°21′6" | 5.617 | 11.020 |
| 5 | 23.695 | 22°37′10" | 4.739 | 9.354 |

# ISLAND PAVING

ALL DIMENSION ARE IN
METTERS UNLESS OTHERWISE SHOWN

# CONSTRUCTION DETAILS

SCALE 1:200

**C-15**

| | | | |
|---|---|---|---|
| | | S.T. | 5/09 |
| | | REVISED BY | DATE REVISED |
| CALCULATED-DESIGNED BY | STEVEN TRIEU | | |
| CHECKED BY | NGIM NANCY PE | | |
| FUNCTIONAL SUPERVISOR | NGIM NANCY PE | | |

STATE OF CALIFORNIA - DEPARTMENT OF TRANSPORTATION
Caltrans OFFICE OF DESIGN A

S:\projects\2159c1\72159cga015.dgn

LAST REVISION 00-00-00 DATE PLOTTED => 22-JUN-2010 TIME PLOTTED => 09:00

| Dist | COUNTY | ROUTE | KILOMETER POST TOTAL PROJECT | SHEET No. | TOTAL SHEETS |
|---|---|---|---|---|---|
| 07 | LA | 5 | 2.9/4.9 | 75 | 1082 |

Ngim N. Pe 12-23-09
REGISTERED CIVIL ENGINEER DATE

6-21-10
PLANS APPROVAL DATE

REGISTERED PROFESSIONAL ENGINEER NGIM NANCY PE No. 58161 Exp. 6-30-10 CIVIL STATE OF CALIFORNIA

*THE STATE OF CALIFORNIA OR ITS OFFICERS OR AGENTS SHALL NOT BE RESPONSIBLE FOR THE ACCURACY OR COMPLETENESS OF ELECTRONIC COPIES OF THIS PLAN SHEET.*

Caltrans Metric

**NOTE:**

SEE SHEET C-18 FOR ROCK BLANKET.

**LEGEND:**

ROCK BLANKET

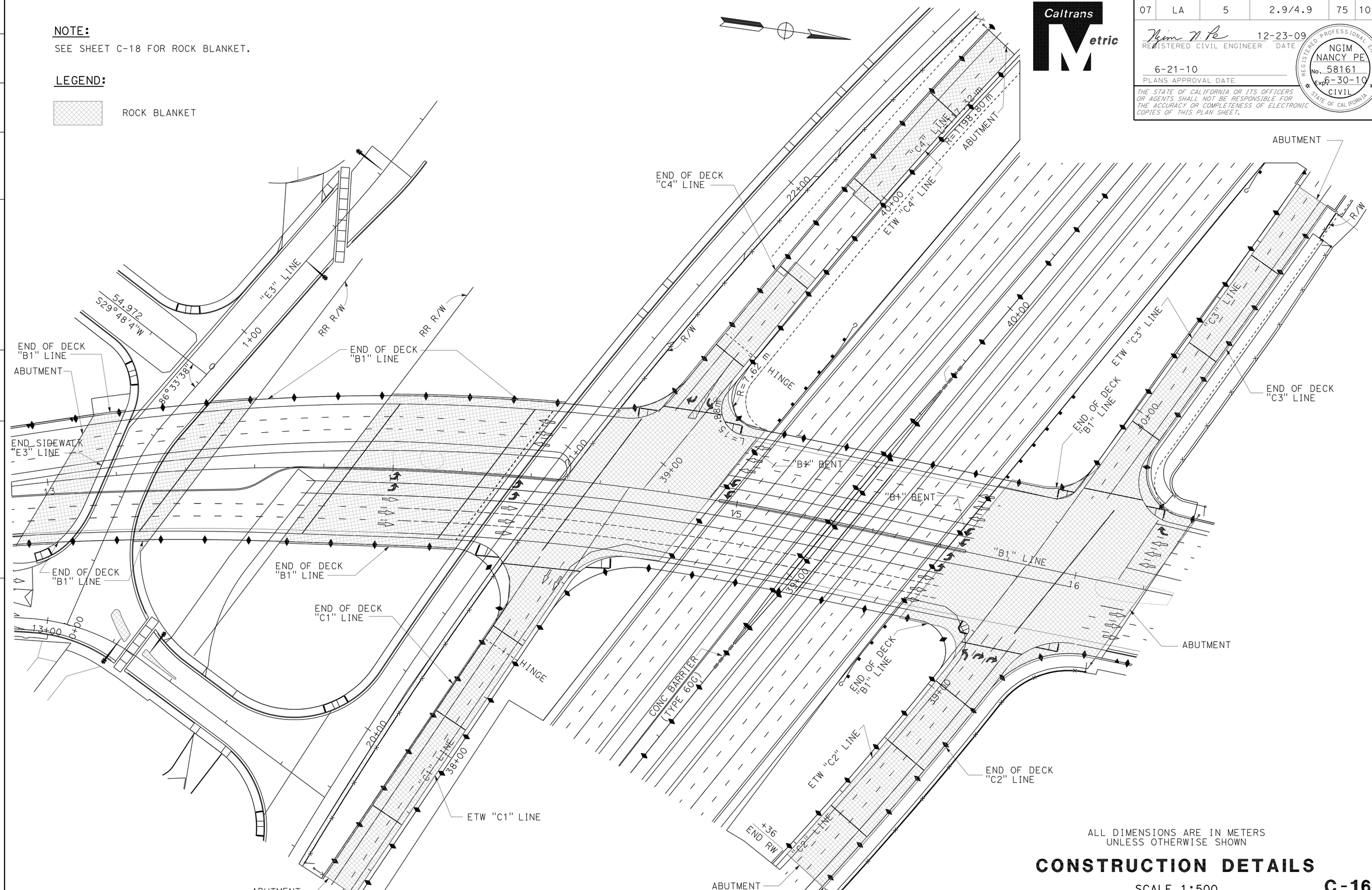


ALL DIMENSIONS ARE IN METERS
UNLESS OTHERWISE SHOWN

# CONSTRUCTION DETAILS

SCALE 1:500

C-16

STATE OF CALIFORNIA - DEPARTMENT OF TRANSPORTATION
Caltrans OFFICE OF DESIGN A

FUNCTIONAL SUPERVISOR: NGIM NANCY PE
CALCULATED-DESIGNED BY: KEVIN Q. NGUYEN
CHECKED BY: NGIM NANCY PE
REVISED BY
DATE REVISED

LAST REVISION 00-00-00
DATE PLOTTED => 22-JUN-2010
TIME PLOTTED => 09:00

| Dist | COUNTY | ROUTE | KILOMETER POST TOTAL PROJECT | SHEET No. | TOTAL SHEETS |
|---|---|---|---|---|---|
| 07 | LA | 5 | 2.9/4.9 | 76 | 1082 |

12-23-09
LICENSED LANDSCAPE ARCHITECT

6-21-10
PLANS APPROVAL DATE

LICENSED LANDSCAPE ARCHITECT
JENNIFER TAIRA
No. 4625
Signature
08/31/11
Renewal Date
Date
STATE OF CALIFORNIA

*THE STATE OF CALIFORNIA OR ITS OFFICERS OR AGENTS SHALL NOT BE RESPONSIBLE FOR THE ACCURACY OR COMPLETENESS OF ELECTRONIC COPIES OF THIS PLAN SHEET.*

Caltrans Metric

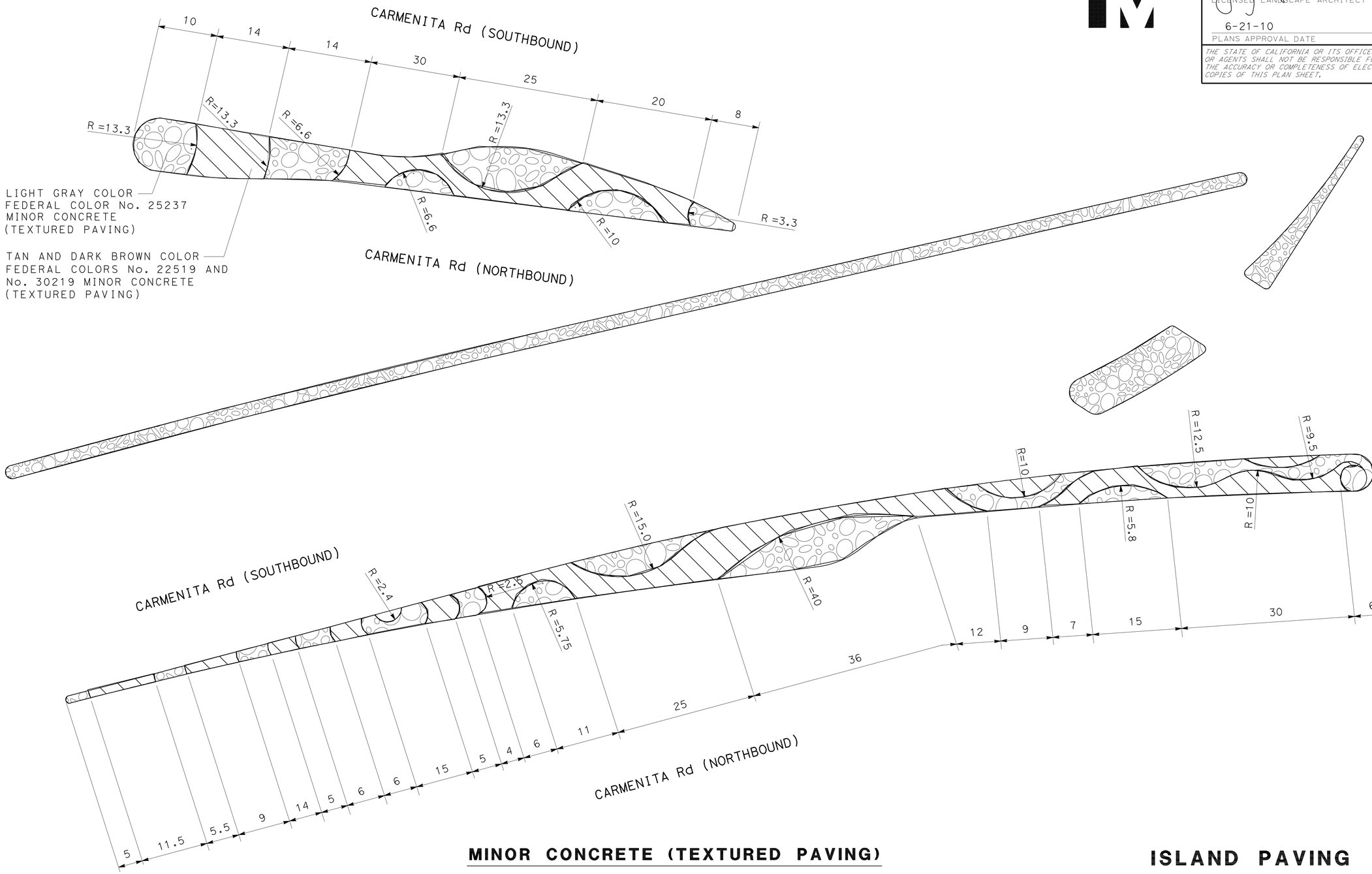


**MINOR CONCRETE (TEXTURED PAVING)**

# ISLAND PAVING

ALL DIMENSIONS ARE IN METERS
UNLESS OTHERWISE SHOWN.

# CONSTRUCTION DETAILS

NO SCALE

**C-17**

| REVISED BY | DATE REVISED |
|---|---|
| | |

RICH KESTER
JENNIFER TAIRA

CALCULATED-DESIGNED BY
CHECKED BY

SENIOR LANDSCAPE ARCHITECT
JENNIFER TAIRA

STATE OF CALIFORNIA - DEPARTMENT OF TRANSPORTATION
Caltrans LANDSCAPE ARCHITECTURE

LAST REVISION 00-00-00
DATE PLOTTED => 15-FEB-2011
TIME PLOTTED => 11:48

| Dist | COUNTY | ROUTE | KILOMETER POST TOTAL PROJECT | SHEET No. | TOTAL SHEETS |
|---|---|---|---|---|---|
| 07 | LA | 5 | 2.9/4.9 | 77 | 1082 |

LICENSED LANDSCAPE ARCHITECT

6-21-10
PLANS APPROVAL DATE

LICENSED LANDSCAPE ARCHITECT JENNIFER TAIRA NO. 4625 STATE OF CALIFORNIA
08/31/11
Renewal Date

*THE STATE OF CALIFORNIA OR ITS OFFICERS OR AGENTS SHALL NOT BE RESPONSIBLE FOR THE ACCURACY OR COMPLETENESS OF ELECTRONIC COPIES OF THIS PLAN SHEET.*

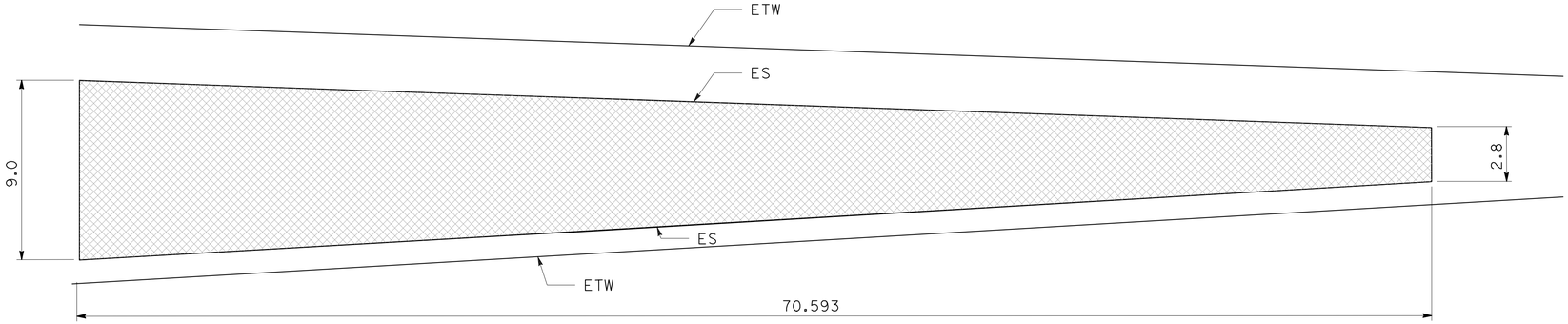


ROCK BLANKET

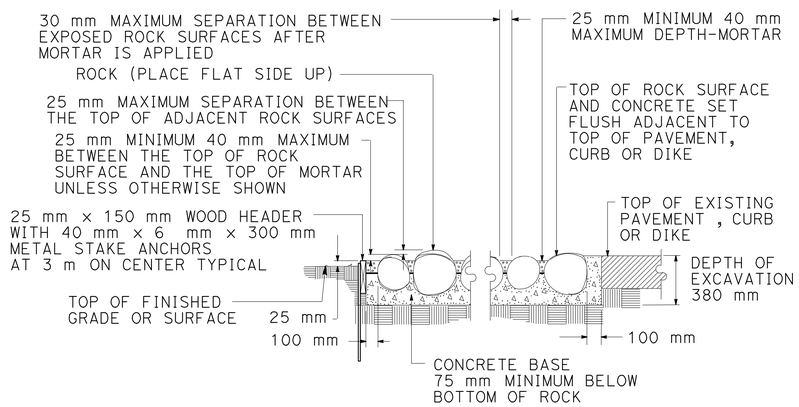


SECTION

ROCK BLANKET

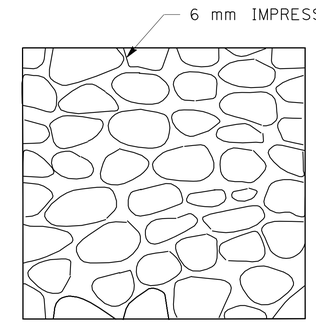


MINOR CONCRETE (TEXTURED PAVING)

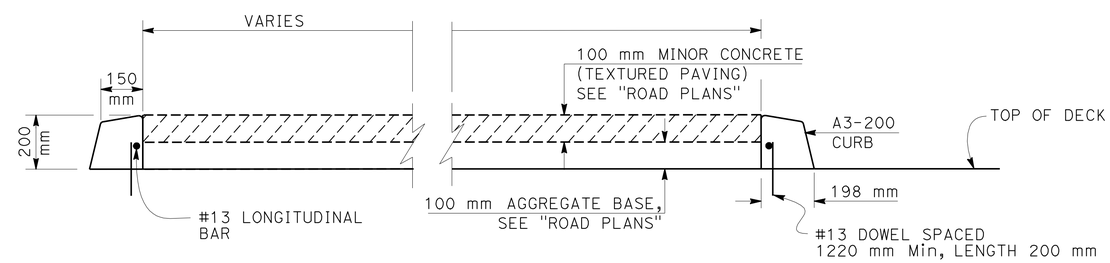


RAISED MEDIAN ON BRIDGE & APPROACH SLABS DETAIL

Sta 13+03.30 TO Sta 14+50.10 "B1"
Sta 14+94.70 TO Sta 15+67.55 "B1"

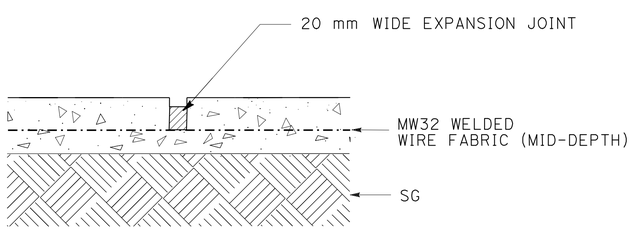


EXPANSION JOINT DETAIL

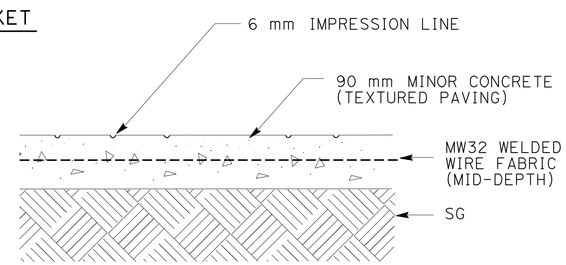


SECTION

MINOR CONCRETE (TEXTURED PAVING)

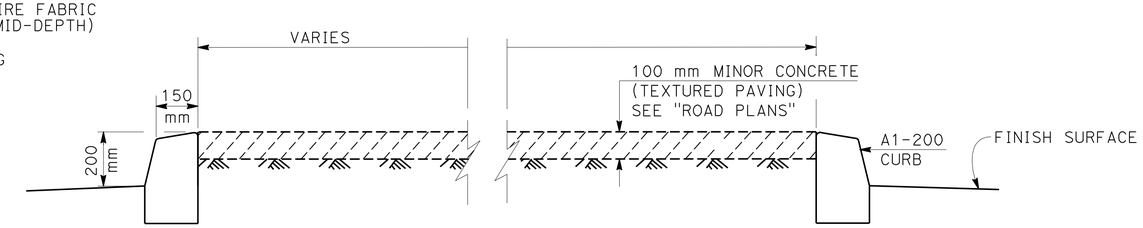


RAISED MEDIAN ON ROADWAY DETAIL

Sta 12+01.00 TO Sta 13+03.30 "B1"
Sta 16+06.20 TO Sta 16+75.55 "B1"

ALL DIMENSIONS ARE IN METERS UNLESS OTHERWISE SHOWN.

# CONSTRUCTION DETAILS TEXTURED PAVING ROCK BLANKET

NO SCALE

C-18

STATE OF CALIFORNIA - DEPARTMENT OF TRANSPORTATION
Caltrans LANDSCAPE ARCHITECTURE

SENIOR LANDSCAPE ARCHITECT: JENNIFER TAIRA
CALCULATED-DESIGNED BY: RICH KESTER
CHECKED BY: JENNIFER TAIRA
REVISED BY / DATE REVISED

LAST REVISION 00-00-00 | DATE PLOTTED => 22-JUN-2010 | TIME PLOTTED => 09:00

| Dist | COUNTY | ROUTE | KILOMETER POST TOTAL PROJECT | SHEET No. | TOTAL SHEETS |
|---|---|---|---|---|---|
| 07 | LA | 5 | 2.9/4.9 | 78 | 1082 |

Ngim N. Fe 12-23-09
REGISTERED CIVIL ENGINEER DATE

6-21-10
PLANS APPROVAL DATE

REGISTERED PROFESSIONAL ENGINEER NGIM NANCY PE No. 58161 Exp. 6-30-10 CIVIL STATE OF CALIFORNIA

*THE STATE OF CALIFORNIA OR ITS OFFICERS OR AGENTS SHALL NOT BE RESPONSIBLE FOR THE ACCURACY OR COMPLETENESS OF ELECTRONIC COPIES OF THIS PLAN SHEET.*

Caltrans Metric

NOTES:

1. WEAKENED PLANE AND/OR CONTACT JOINTS SHALL BE PLACED IN CURB AND GUTTER AT LOCATIONS SHOWN ON THE TYPICAL JOINT PLAN HEREON.
2. WEAKENED PLANE JOINTS SHALL BE PLASTIC CONTROL JOINTS OR 40 mm DEEP SAW CUTS. CONCRETE SAWING SHALL TAKE PLACE WITHIN 24 HOURS AFTER CONCRETE IS PLACED.
3. DOWELS FOR CONTACT JOINTS SHALL BE #13M BARS 450 mm LONG.
4. PLACE A WEAKENED PLANE OR CONTACT JOINT WHERE LONGITUDINAL ALLEY GUTTER JOINS CONCRETE ALLEY INTERSECTION.
5. ALL EXPOSED CORNERS ON PCC GUTTERS SHALL BE ROUNDED WITH 15 mm RADIUS.
6. CONCRETE SHALL BE INTEGRAL WITH CURB UNLESS OTHERWISE SPECIFIED.
7. SIDEWALK OR RAMP THICKNESS "T", SHALL BE 100 mm MINIMUM.
8. FOR DETAILS AND NOTES NOT SHOWN, SEE STANDARD PLANS A87A AND A88A.

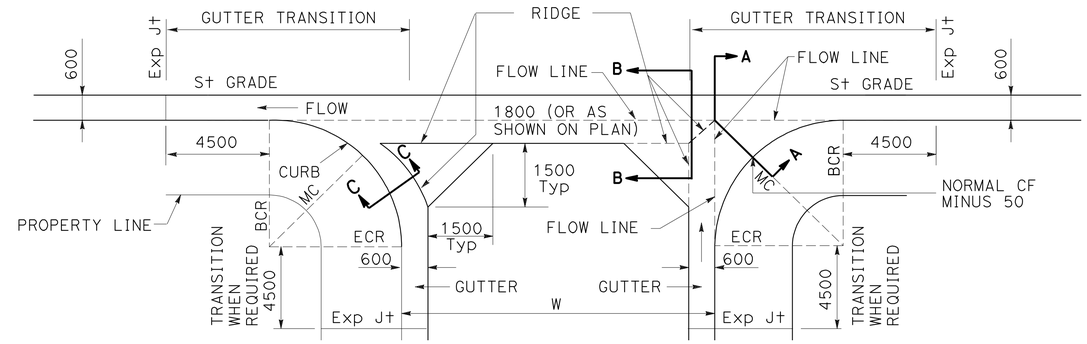


## TYPICAL CROSS GUTTER PLAN

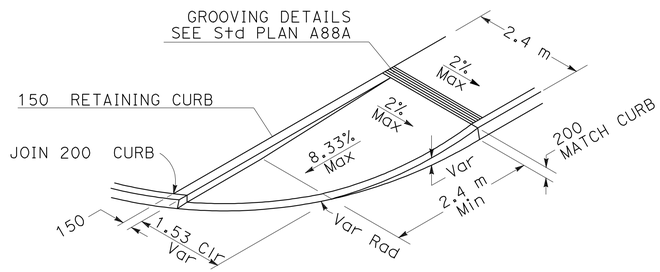


## CURB RAMP (CASE H)

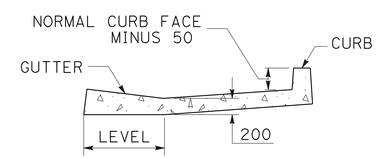


## SECTION A-A

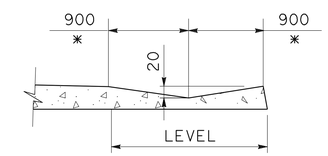


* OR AS SHOWN ON PLAN

## SECTION B-B

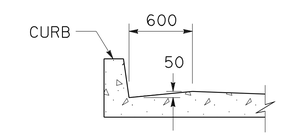


## SECTION C-C

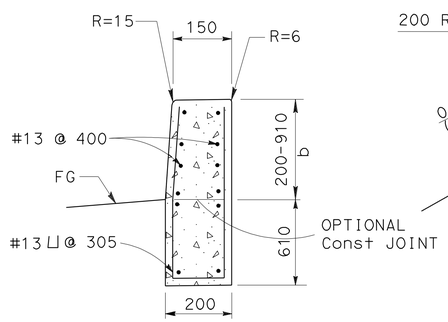


## RETAINING CURB

NOTE:
IF b IS LESS THAN 305 mm, REINFORCEMENT IS NOT REQUIRED

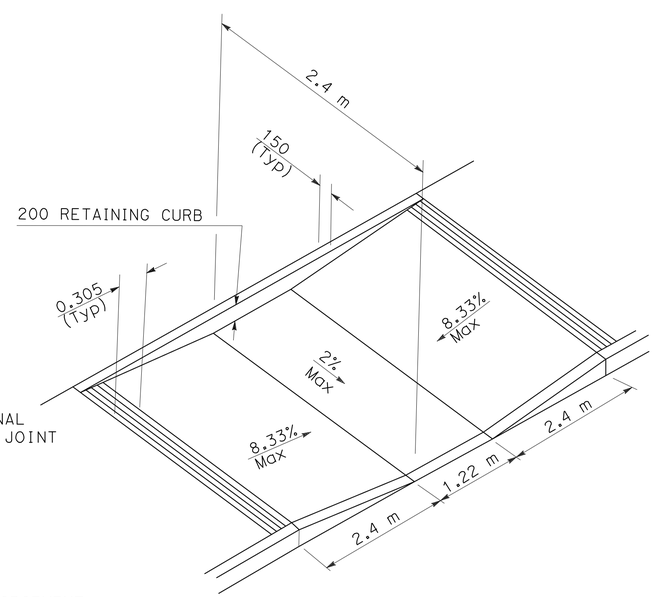


## CURB RAMP CASE C (Mod)

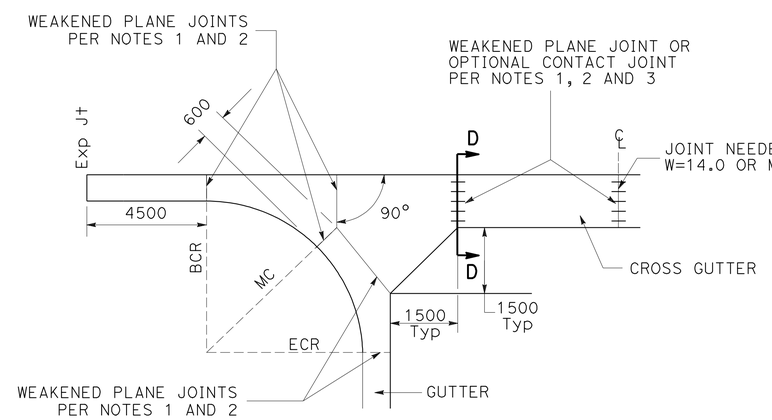


## TYPICAL JOINT PLAN

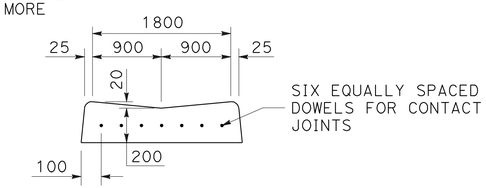


## SECTION D-D

ALL DIMENSIONS ARE IN MILLIMETERS UNLESS OTHERWISE SHOWN

# CONSTRUCTION DETAILS

## CURBS, CURB RAMPS AND CROSS GUTTER

NO SCALE

C-19

| REVISED BY | DATE REVISED |
|---|---|
| YTT | 05/09 |

CALCULATED-DESIGNED BY: WILL CARPIO
CHECKED BY: NGIM NANCY PE
FUNCTIONAL SUPERVISOR: NGIM NANCY PE

Caltrans STATE OF CALIFORNIA - DEPARTMENT OF TRANSPORTATION OFFICE OF DESIGN A

S:\projects\2159C1\72159cga019.dgn

LAST REVISION 00-00-00 | DATE PLOTTED => 22-JUN-2010 | TIME PLOTTED => 09:00

| Dist | COUNTY | ROUTE | KILOMETER POST TOTAL PROJECT | SHEET No. | TOTAL SHEETS |
|---|---|---|---|---|---|
| 07 | LA | 5 | 2.9/4.9 | 79 | 1082 |

Caltrans Metric

REGISTERED CIVIL ENGINEER — DATE 12-23-09

PLANS APPROVAL DATE 6-21-10

REGISTERED PROFESSIONAL ENGINEER — NGIM NANCY PE No. 58161 Exp. 6-30-10 CIVIL — STATE OF CALIFORNIA

*THE STATE OF CALIFORNIA OR ITS OFFICERS OR AGENTS SHALL NOT BE RESPONSIBLE FOR THE ACCURACY OR COMPLETENESS OF ELECTRONIC COPIES OF THIS PLAN SHEET.*

NOTES:

1. SEE STANDARD PLAN A76F FOR NOTES AND DETAILS OF CONCRETE BARRIER (TYPE 60GE) NOT SHOWN.
2. CONTRACTOR OPTIONS FOR FILL BETWEEN BARRIER WALLS.
   - (A) PLACE 610 mm PORTLAND CEMENT CONCRETE AT BASE BETWEEN BARRIER WALLS.
   - (B) PLACE GRANULAR MATERIAL FROM BASE TO BOTTOM OF 100 mm CAP.
3. SEE STANDARD PLANS FOR ELECTROLIER CIDH DETAILS.
4. SEE SHEET C-22 (CHAIN RAILING (TYPE 6 Mod) FOR ADDITIONAL DETAILS FOR CONCRETE BARRIER (TYPE 736B Mod).

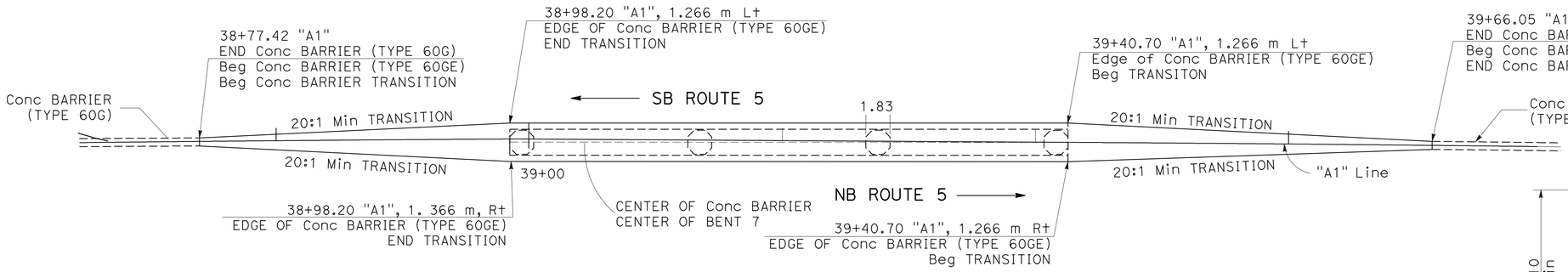


## CONCRETE BARRIER (TYPE 60GE) LAYOUT

AT CARMENITA ROAD BRIDGE, BENT No. 7

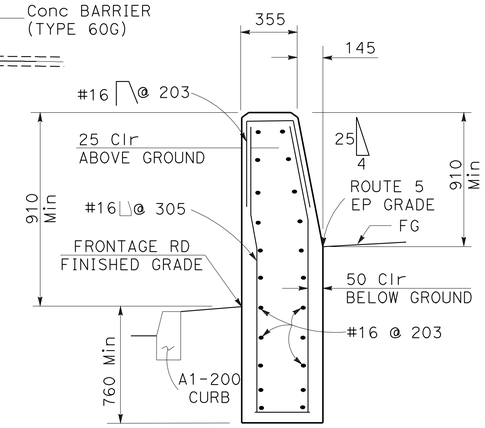


## CONCRETE BARRIER (TYPE 736B (Mod))

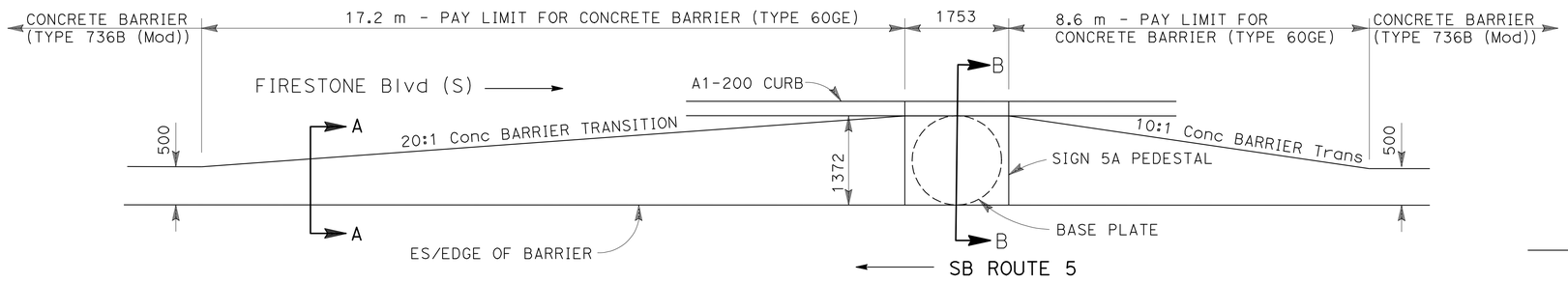


## CONCRETE BARRIER TRANSITION

AT STATION 42+98.00, FOUNDATION FOR SIGN 5A

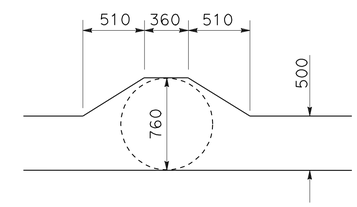


## PLAN VIEW

BARRIER MODIFICATION
AT ELECTROLIER LOCATION

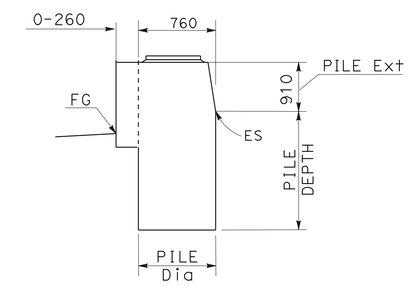


## SIDE VIEW

BARRIER MODIFICATION
AT ELECTROLIER LOCATION

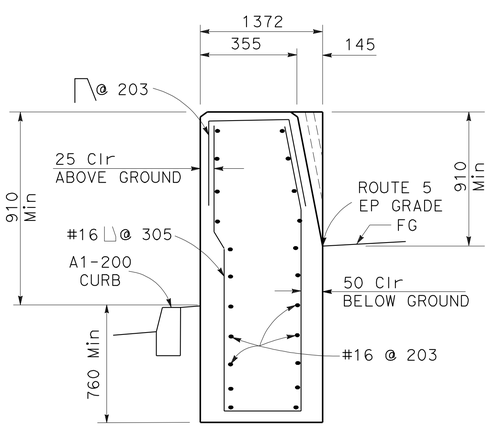


## SECTION A-A

CONCRETE BARRIER TRANSITION

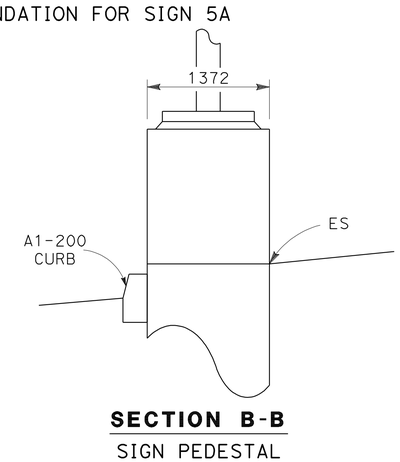


## SECTION B-B

SIGN PEDESTAL
SEE SIGN PLANS (SD-17)

ALL DIMENSIONS ARE IN MILLIMETERS UNLESS OTHERWISE SHOWN

# CONSTRUCTION DETAILS
# CONCRETE BARRIER MODIFICATION AND TRANSITION

NO SCALE

**C-20**

| REVISED BY | DATE REVISED |
|---|---|
| YTT | 05/09 |

CALCULATED-DESIGNED BY: WILL CARPIO
CHECKED BY: NGIM NANCY PE
FUNCTIONAL SUPERVISOR: NGIM NANCY PE

STATE OF CALIFORNIA - DEPARTMENT OF TRANSPORTATION
Caltrans OFFICE OF DESIGN A

S:\projects\2159c1\replace1\72159cga020.dgn

LAST REVISION 00-00-00 — DATE PLOTTED => 01-FEB-2011 — TIME PLOTTED => 11:38

| Dist | COUNTY | ROUTE | KILOMETER POST TOTAL PROJECT | SHEET No. | TOTAL SHEETS |
|---|---|---|---|---|---|
| 07 | LA | 5 | 2.9/4.9 | 80 | 1082 |

LICENSED LANDSCAPE ARCHITECT

6-21-10
PLANS APPROVAL DATE

LICENSED LANDSCAPE ARCHITECT JENNIFER TAIRA NO. 4625 STATE OF CALIFORNIA
08/31/11 RENEWAL DATE
12/23/09 DATE

*THE STATE OF CALIFORNIA OR ITS OFFICERS OR AGENTS SHALL NOT BE RESPONSIBLE FOR THE ACCURACY OR COMPLETENESS OF ELECTRONIC COPIES OF THIS PLAN SHEET.*

Caltrans Metric

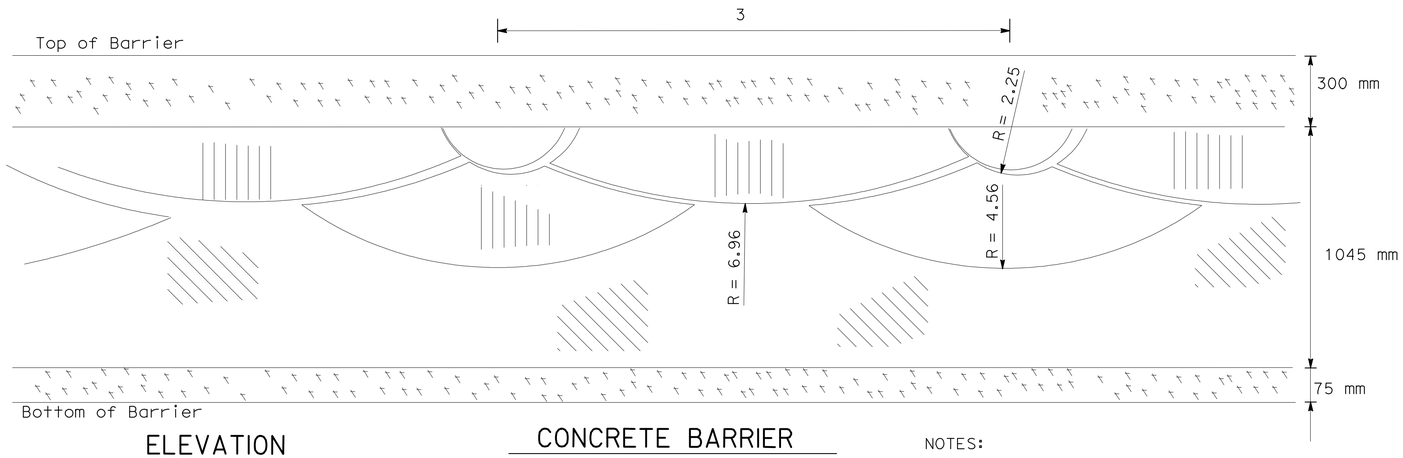


ELEVATION

## CONCRETE BARRIER

ARCHITECTURAL SURFACE TREATMENT
(SCALLOP WALL PATTERN)

NOTES:

1. Pattern repeats every 3 meters O/C.
2. Quantity of concrete barrier architectural treatment measured along vertical barrier height and length.

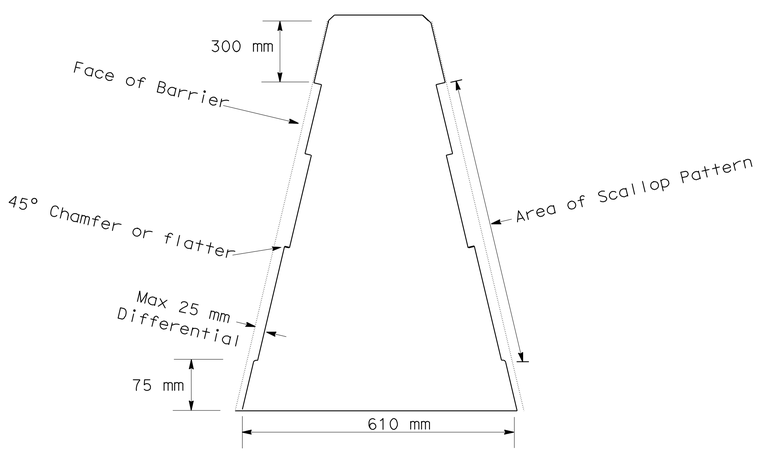


CONCRETE BARRIER (TYPE 60G)
(Scallop Pattern Differential)

## SURFACE TEXTURES AND FINISHES:

- Smooth Finish
- Light Fractured Granite
- Heavy Fractured Granite

ALL DIMENSIONS ARE IN METERS
UNLESS OTHERWISE SHOWN.

# CONSTRUCTION BARRIER TYPE 60
# ARCHITECTURAL TREATMENT
# CONSTRUCTION DETAILS

NO SCALE

C-21

STATE OF CALIFORNIA - DEPARTMENT OF TRANSPORTATION
Caltrans LANDSCAPE ARCHITECTURE

SENIOR LANDSCAPE ARCHITECT: JENNIFER TAIRA
CALCULATED-DESIGNED BY: RICH KESTER
CHECKED BY: JENNIFER TAIRA
REVISED BY
DATE REVISED

LAST REVISION 00-00-00
DATE PLOTTED => 22-JUN-2010
TIME PLOTTED => 07:35

| Dist | COUNTY | ROUTE | KILOMETER POST TOTAL PROJECT | SHEET No. | TOTAL SHEETS |
|---|---|---|---|---|---|
| 07 | LA | 5 | 2.9/4.9 | 81 | 1082 |

Caltrans Metric

Ngim N. Pe 12-23-09
REGISTERED CIVIL ENGINEER DATE

6-21-10
PLANS APPROVAL DATE

REGISTERED PROFESSIONAL ENGINEER NGIM NANCY PE No. 58161 Exp. 6-30-10 CIVIL STATE OF CALIFORNIA

*THE STATE OF CALIFORNIA OR ITS OFFICERS OR AGENTS SHALL NOT BE RESPONSIBLE FOR THE ACCURACY OR COMPLETENESS OF ELECTRONIC COPIES OF THIS PLAN SHEET.*

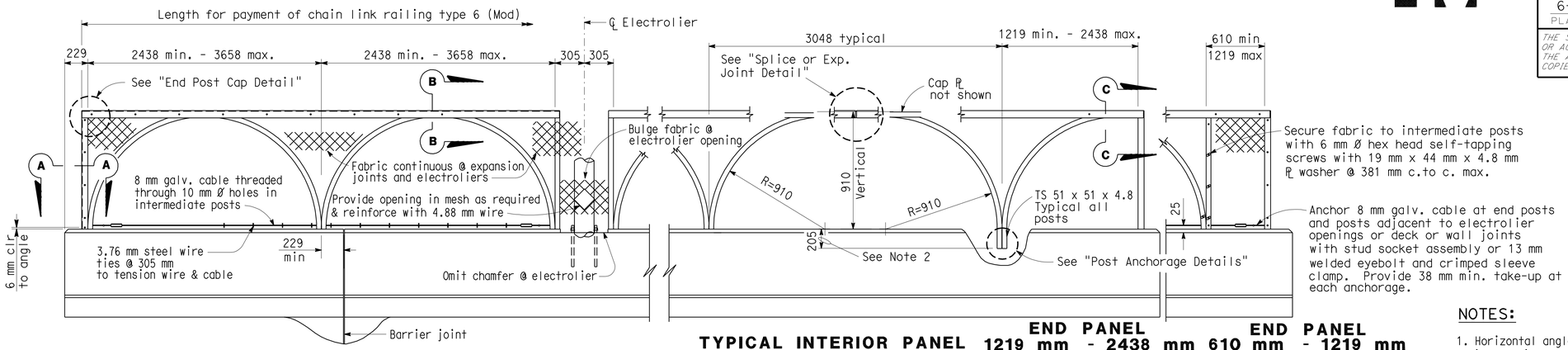


## ELEVATION

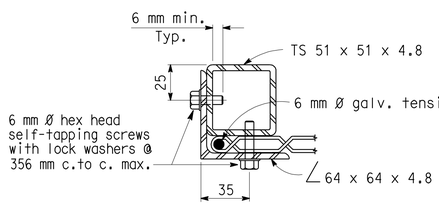


## SECTION A-A

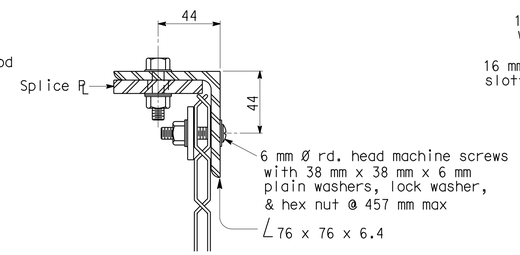


## SECTION B-B

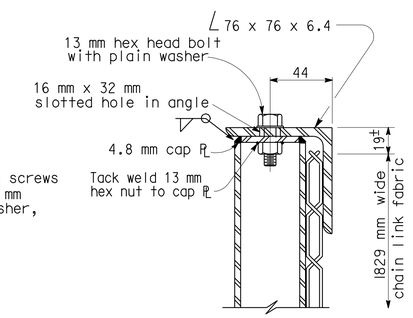


## SECTION C-C

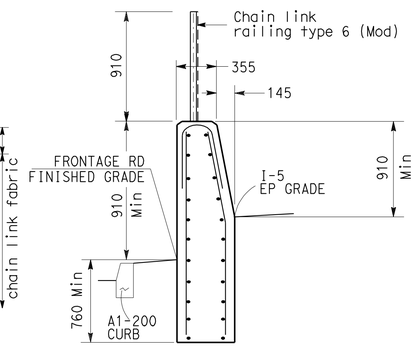


CONCRETE BARRIER TYPE 736B (Mod)

## TYPICAL SECTION

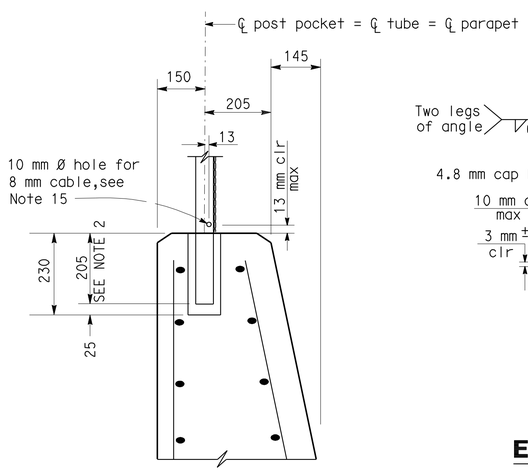


## POST ANCHORAGE DETAIL

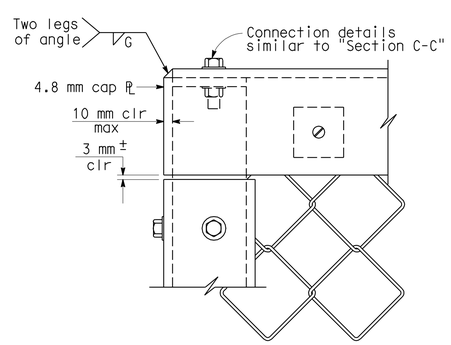


## END POST CAP DETAIL

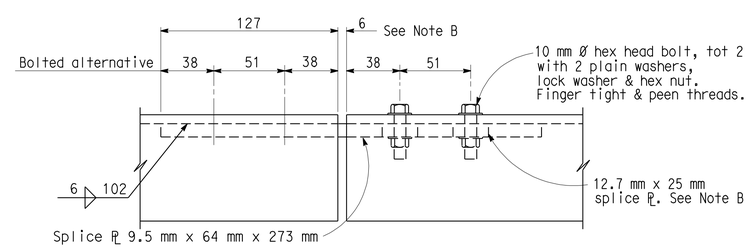


## SPLICE OR EXPANSION JOINT DETAIL

Note B: Expansion joint same dimension as expansion joint in concrete barrier. Increase slotted hole length and splice PL length correspondingly.

## NOTES:

1. Horizontal angle shall be continuous over not less than two intermediate posts except that a shorter length is permitted at expansion joints, electroliers and other rail discontinuities.
2. One post may be embedded 152 mm minimum to accomodate grade changes, otherwise fabricate post lengths as required.
3. Curved posts may be rotated in plan within its post pocket to accomodate curved horizontal alignment.
4. Straight posts and straight portions of curved posts shall be installed normal to freeway profile grade.
5. Top horizontal angle shall be parallel to freeway profile grade and shall be shop bent to fit horizontal curves.
6. When railing is on slope, fabric shall be placed parallel to slope.
7. Alternative details may be submitted by Contractor for Engineer's approval.
8. Railing assembly except chain link fabric shall be galvanized after fabrication.
9. For details and reinforcement not shown, see Construction Details Sheet, C-20, Concrete Barrier Type 736B Mod.
10. See Layout Plans for limits of Chain Link Railing Type 6 Mod.
11. Provide thimbles at all cable loops.
12. Chain link fabric to be 1829 mm wide with 25 mm mesh and with knuckled selvage top and bottom.
13. When railing is placed on a horizontal alignment with a radius of 45.72 m or less, thread 8 mm cable through 10 mm Ø welded eye rods embedded 102 mm into the top of the concrete parapet and equally spaced to limit the middle ordinate distance between the 8 mm cable and the curve to 25 mm max.
14. Splices and expansion joints shall be located at ℄ panel.
15. Holes in posts for 8 mm cable and its anchorage may be field drilled and painted with zinc rich paint.

# CONSTRUCTION DETAILS
## CHAIN LINK RAILING TYPE 6 MOD

NO SCALE

C-22

STATE OF CALIFORNIA - DEPARTMENT OF TRANSPORTATION
Caltrans OFFICE OF DESIGN A

FUNCTIONAL SUPERVISOR: NGIM NANCY PE
CALCULATED-DESIGNED BY: WILL CARPIO
CHECKED BY: NGIM NANCY PE
REVISED BY / DATE REVISED

LAST REVISION 00-00-00 | DATE PLOTTED => 16-FEB-2011 | TIME PLOTTED => 08:26

| Dist | COUNTY | ROUTE | KILOMETER POST TOTAL PROJECT | SHEET No. | TOTAL SHEETS |
|---|---|---|---|---|---|
| 07 | LA | 5 | 2.9/4.9 | 82 | 1082 |

Caltrans Metric

REGISTERED CIVIL ENGINEER 12-23-09 DATE

6-21-10
PLANS APPROVAL DATE

REGISTERED PROFESSIONAL ENGINEER NGIM NANCY PE No. 58161 Exp. 6-30-10 CIVIL STATE OF CALIFORNIA

*THE STATE OF CALIFORNIA OR ITS OFFICERS OR AGENTS SHALL NOT BE RESPONSIBLE FOR THE ACCURACY OR COMPLETENESS OF ELECTRONIC COPIES OF THIS PLAN SHEET.*

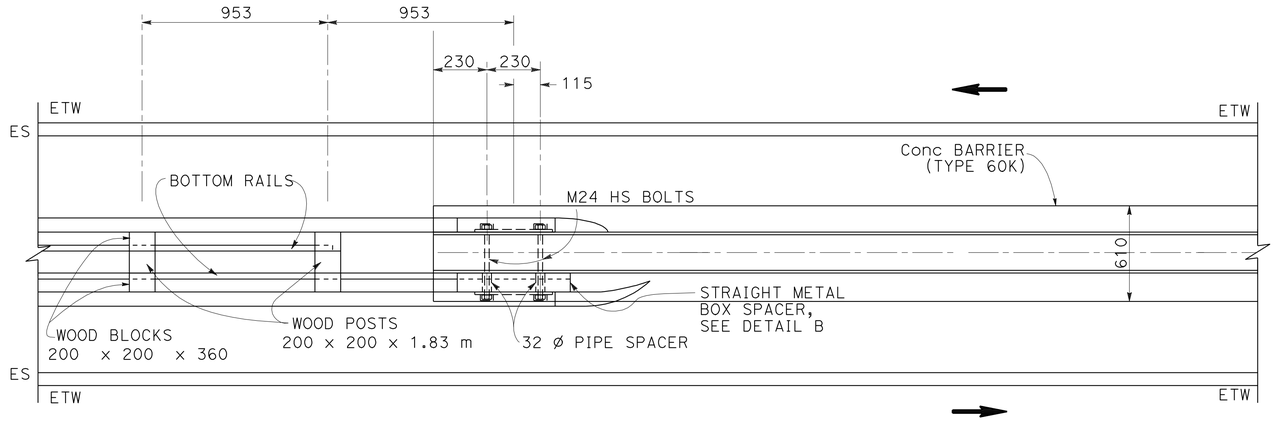


## PLAN

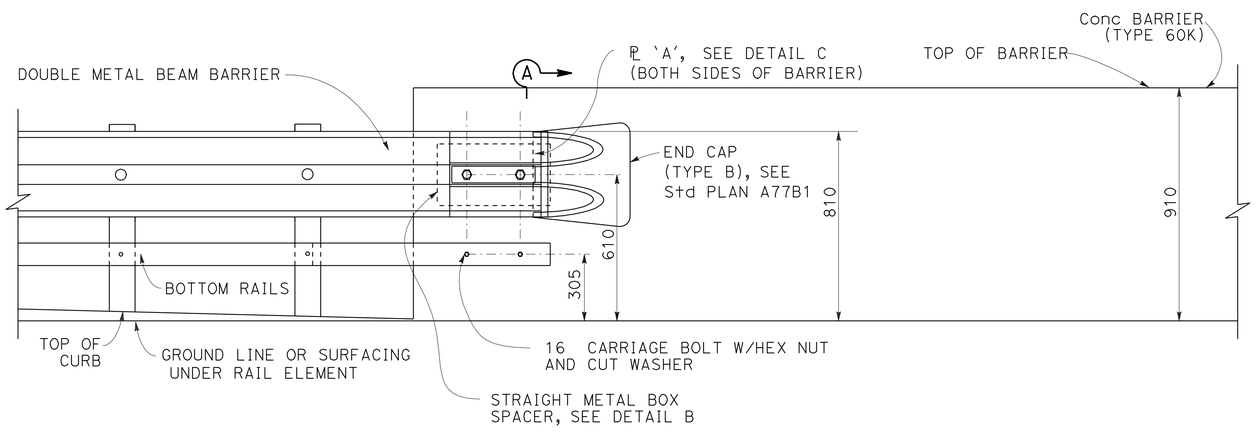


## ELEVATION

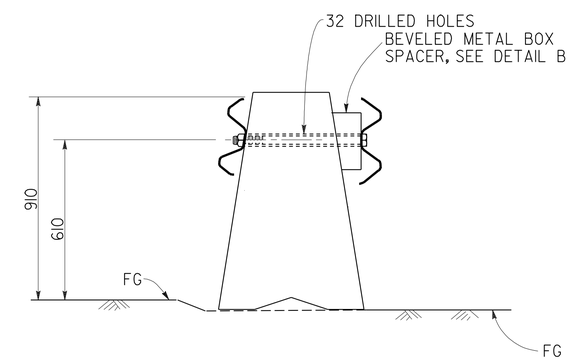


## SECTION A-A

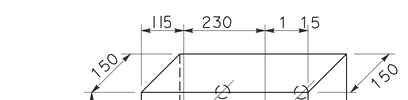


## DETAIL B

STRAIGHT METAL BOX SPACER
SEE NOTE 1

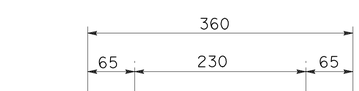


## DETAIL C

NOTES:

1. 32 Ø x 125 PIPE SPACERS ON M24 HS BOLTS PASSSING THROUGH INTERIOR OF BOX.
2. DIRECTION OF TRAFFIC →

**CONCRETE BARRIER (TYPE 60K)**
**CONNECTION TO DOUBLE METAL BEAM BARRIER**

ALL DIMENSIONS ARE IN
MILLIMETERS UNLESS OTHERWISE SHOWN

# CONSTRUCTION DETAIL

NO SCALE

**C-23**

| REVISED BY | DATE REVISED |
|---|---|
| NGIM NANCY PE | KEVIN Q NGUYEN |

CALCULATED-DESIGNED BY
CHECKED BY

FUNCTIONAL SUPERVISOR
NGIM NANCY PE

STATE OF CALIFORNIA - DEPARTMENT OF TRANSPORTATION
Caltrans OFFICE OF DESIGN A

S:\projects\2159C1\72159cga023.dgn

LAST REVISION 00-00-00 | DATE PLOTTED => 22-JUN-2010 | TIME PLOTTED => 07:35

| Dist | COUNTY | ROUTE | KILOMETER POST TOTAL PROJECT | SHEET No. | TOTAL SHEETS |
|---|---|---|---|---|---|
| 07 | LA | 5 | 2.9/4.9 | 83 | 1082 |

REGISTERED CIVIL ENGINEER 12-23-09 DATE

6-21-10
PLANS APPROVAL DATE

REGISTERED PROFESSIONAL ENGINEER NGIM NANCY PE No. 58161 Exp. 6-30-10 CIVIL STATE OF CALIFORNIA

*THE STATE OF CALIFORNIA OR ITS OFFICERS OR AGENTS SHALL NOT BE RESPONSIBLE FOR THE ACCURACY OR COMPLETENESS OF ELECTRONIC COPIES OF THIS PLAN SHEET.*

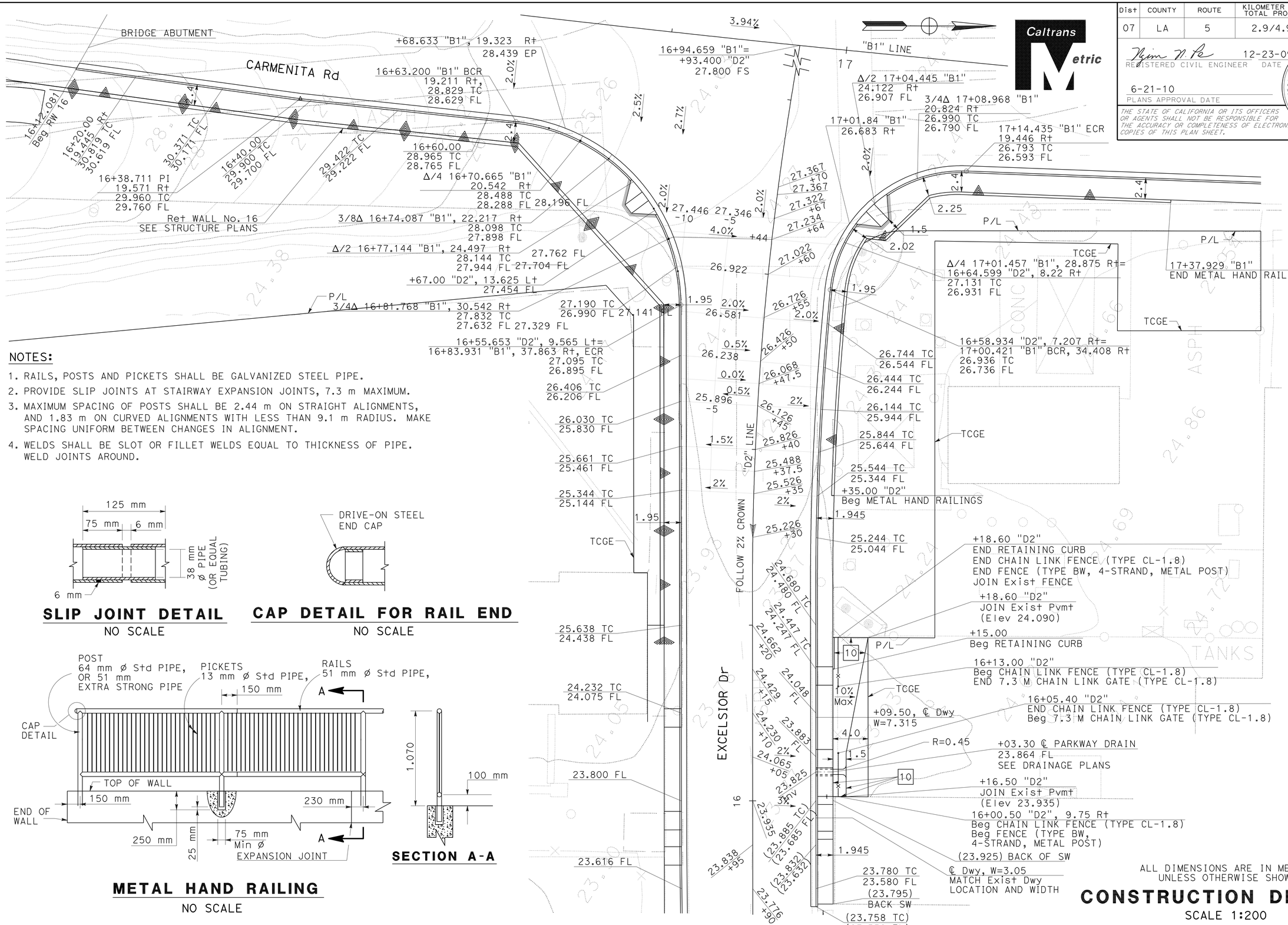


## NOTES:

1. RAILS, POSTS AND PICKETS SHALL BE GALVANIZED STEEL PIPE.
2. PROVIDE SLIP JOINTS AT STAIRWAY EXPANSION JOINTS, 7.3 m MAXIMUM.
3. MAXIMUM SPACING OF POSTS SHALL BE 2.44 m ON STRAIGHT ALIGNMENTS, AND 1.83 m ON CURVED ALIGNMENTS WITH LESS THAN 9.1 m RADIUS. MAKE SPACING UNIFORM BETWEEN CHANGES IN ALIGNMENT.
4. WELDS SHALL BE SLOT OR FILLET WELDS EQUAL TO THICKNESS OF PIPE. WELD JOINTS AROUND.




**SLIP JOINT DETAIL**
NO SCALE




**CAP DETAIL FOR RAIL END**
NO SCALE




**SECTION A-A**

**METAL HAND RAILING**
NO SCALE

ALL DIMENSIONS ARE IN METERS UNLESS OTHERWISE SHOWN

# CONSTRUCTION DETAILS
SCALE 1:200

C-24

STATE OF CALIFORNIA - DEPARTMENT OF TRANSPORTATION
Caltrans OFFICE OF DESIGN A

FUNCTIONAL SUPERVISOR: NGIM NANCY PE
CALCULATED-DESIGNED BY: NGIM NANCY PE
CHECKED BY: KEVIN Q NGUYEN
REVISED BY: YTT
DATE REVISED: 05/09

S:\projects\2159c1\replace1\72159cga024.dgn

LAST REVISION 00-00-00
DATE PLOTTED => 22-JUN-2010
TIME PLOTTED => 07:35

| Dist | COUNTY | ROUTE | KILOMETER POST TOTAL PROJECT | SHEET No. | TOTAL SHEETS |
|---|---|---|---|---|---|
| 07 | LA | 5 | 2.9/4.9 | 84 | 1082 |

REGISTERED CIVIL ENGINEER 12-23-09 DATE

6-21-10
PLANS APPROVAL DATE

REGISTERED PROFESSIONAL ENGINEER NGIM NANCY PE No. 58161 Exp. 6-30-10 CIVIL STATE OF CALIFORNIA

*THE STATE OF CALIFORNIA OR ITS OFFICERS OR AGENTS SHALL NOT BE RESPONSIBLE FOR THE ACCURACY OR COMPLETENESS OF ELECTRONIC COPIES OF THIS PLAN SHEET.*

Caltrans Metric

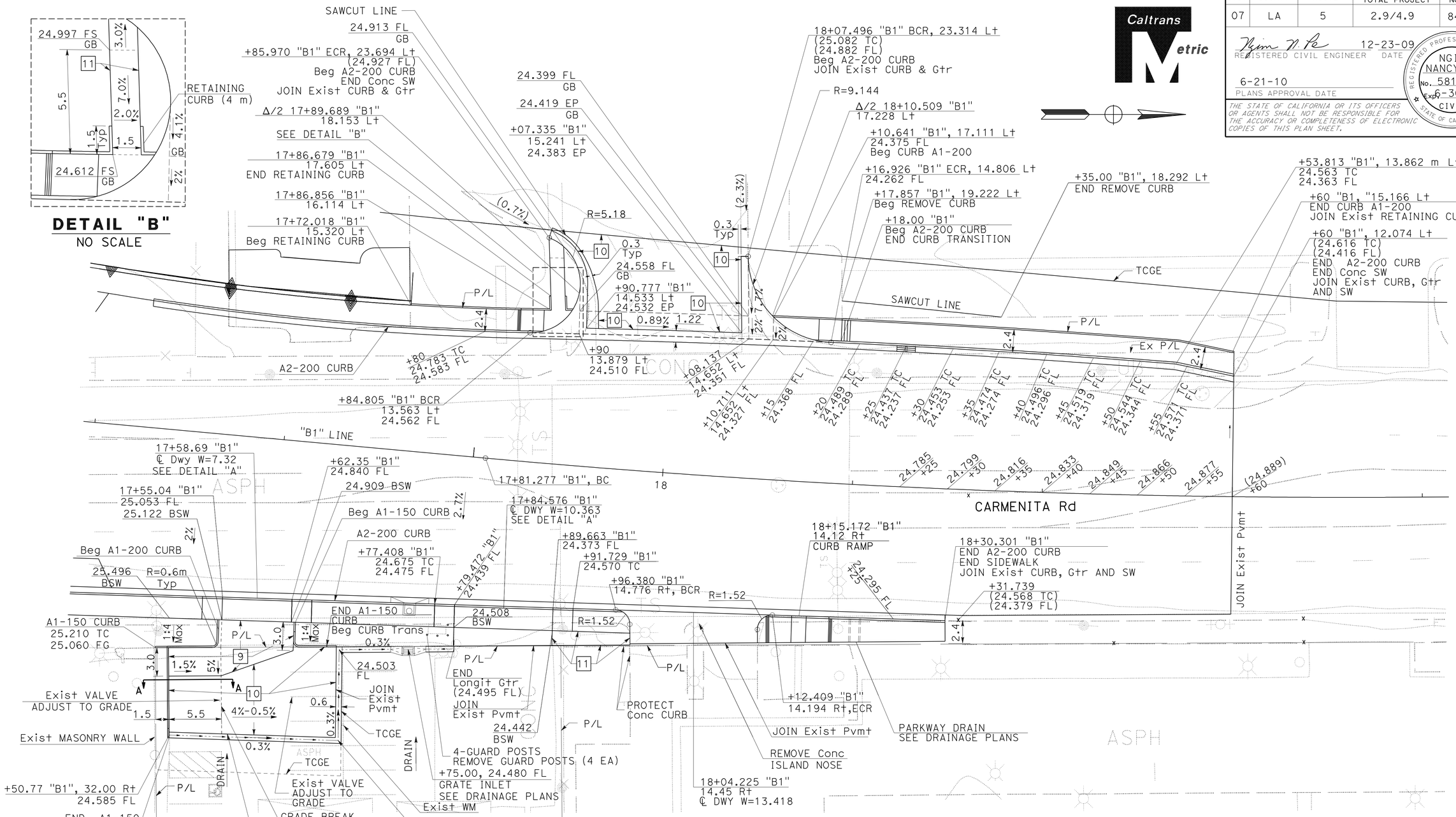


ALL DIMENSIONS ARE IN METERS UNLESS OTHERWISE SHOWN

# CONSTRUCTION DETAILS

SCALE 1:200

C-25

| | |
|---|---|
| YTT | 05/09 |
| REVISED BY | DATE REVISED |
| NGIM NANCY PE | KEVIN Q NGUYEN |
| CALCULATED-DESIGNED BY | CHECKED BY |
| FUNCTIONAL SUPERVISOR | NGIM NANCY PE |

STATE OF CALIFORNIA - DEPARTMENT OF TRANSPORTATION
Caltrans OFFICE OF DESIGN A

S:\projects\2159c1\replace1\72159cga025.dgn

LAST REVISION 00-00-00 | DATE PLOTTED => 22-JUN-2010 | TIME PLOTTED => 07:35

| Dist | COUNTY | ROUTE | KILOMETER POST TOTAL PROJECT | SHEET No. | TOTAL SHEETS |
|---|---|---|---|---|---|
| 07 | LA | 5 | 2.9/4.9 | 85 | 1082 |

REGISTERED CIVIL ENGINEER 12-23-09 DATE

6-21-10
PLANS APPROVAL DATE

REGISTERED PROFESSIONAL ENGINEER NGIM NANCY PE No. 58161 Exp. 6-30-10 CIVIL STATE OF CALIFORNIA

*THE STATE OF CALIFORNIA OR ITS OFFICERS OR AGENTS SHALL NOT BE RESPONSIBLE FOR THE ACCURACY OR COMPLETENESS OF ELECTRONIC COPIES OF THIS PLAN SHEET.*

Caltrans Metric

## CURVE DATA

| No. | R | Δ | T | L |
|---|---|---|---|---|
| 1 | 15.00 | 60°58'16" | 8.83 | 15.96 |
| 2 | 15.00 | 112°46'27" | 22.57 | 29.52 |

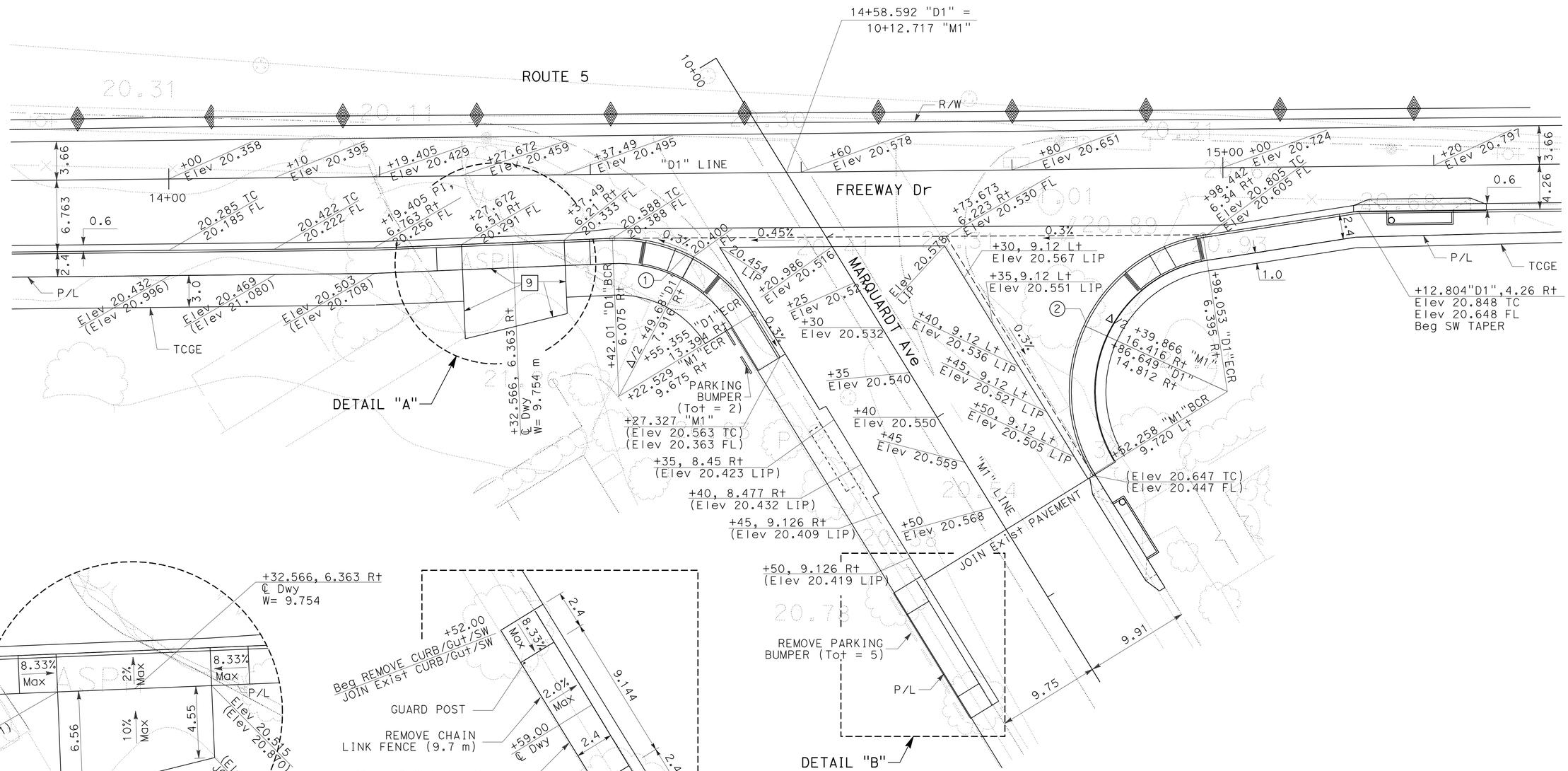


ALL DIMENSIONS ARE IN METERS UNLESS OTHERWISE SHOWN.

# CONSTRUCTION DETAILS

SCALE 1:200

**C-26**

**DETAIL "A"**
NO SCALE

**DETAIL "B"**
NO SCALE

STATE OF CALIFORNIA - DEPARTMENT OF TRANSPORTATION
Caltrans OFFICE OF DESIGN A

FUNCTIONAL SUPERVISOR: NGIM NANCY PE
CALCULATED-DESIGNED BY: NGIM NANCY PE
CHECKED BY: KEVIN Q NGUYEN
REVISED BY: YTT
DATE REVISED: 05/09

S:\projects\2159c1\replace1\72159cga026.dgn

LAST REVISION 00-00-00
DATE PLOTTED => 22-JUN-2010
TIME PLOTTED => 07:36

| Dist | COUNTY | ROUTE | KILOMETER POST TOTAL PROJECT | SHEET No. | TOTAL SHEETS |
|---|---|---|---|---|---|
| 07 | LA | 5 | 2.9/4.9 | 86 | 1082 |

Ngim N. Pe 12-23-09
REGISTERED CIVIL ENGINEER DATE

6-21-10
PLANS APPROVAL DATE

REGISTERED PROFESSIONAL ENGINEER NGIM NANCY PE No. 58161 Exp. 6-30-10 CIVIL STATE OF CALIFORNIA

*THE STATE OF CALIFORNIA OR ITS OFFICERS OR AGENTS SHALL NOT BE RESPONSIBLE FOR THE ACCURACY OR COMPLETENESS OF ELECTRONIC COPIES OF THIS PLAN SHEET.*

Caltrans Metric

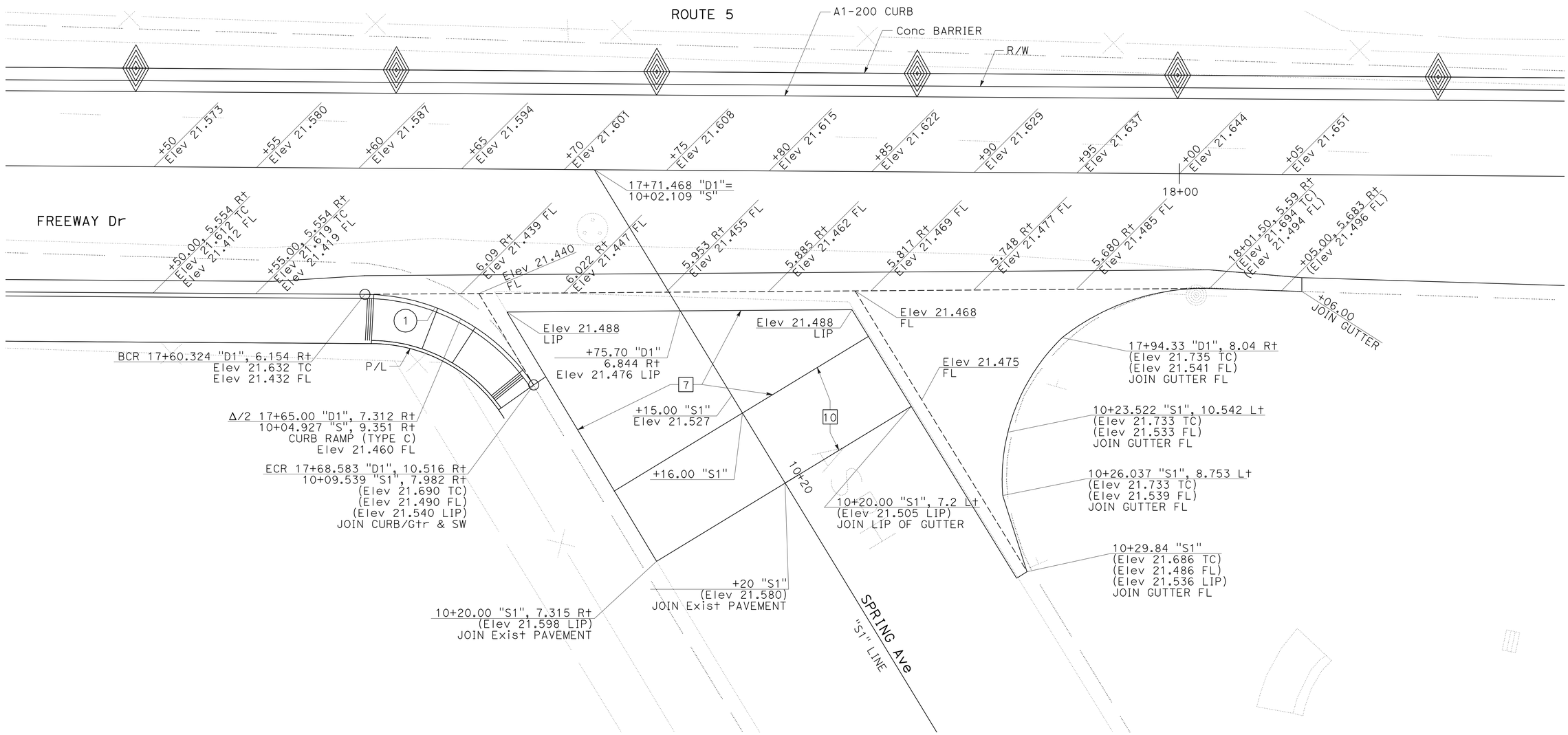


CURVE DATA

| No. | R | Δ | T | L |
|---|---|---|---|---|
| 1 | 10.00 | 55°40'51" | 5.281 | 9.718 |

ALL DIMENSIONS ARE IN METERS
UNLESS OTHERWISE SHOWN.

# CONSTRUCTION DETAILS

SCALE 1:200

C-27

STATE OF CALIFORNIA - DEPARTMENT OF TRANSPORTATION
Caltrans OFFICE OF DESIGN A

FUNCTIONAL SUPERVISOR: NGIM NANCY PE

CALCULATED-DESIGNED BY: WILL CARPIO
CHECKED BY: NGIM NANCY PE

REVISED BY | DATE REVISED

LAST REVISION 00-00-00 | DATE PLOTTED => 22-JUN-2010 | TIME PLOTTED => 07:36

| Dist | COUNTY | ROUTE | KILOMETER POST TOTAL PROJECT | SHEET No. | TOTAL SHEETS |
|---|---|---|---|---|---|
| 07 | LA | 5 | 2.9/4.9 | 87 | 1082 |

Ngim N. Pe 12-23-09
REGISTERED CIVIL ENGINEER DATE

6-21-10
PLANS APPROVAL DATE

REGISTERED PROFESSIONAL ENGINEER NGIM NANCY PE No. 58161 Exp. 6-30-10 CIVIL STATE OF CALIFORNIA

*THE STATE OF CALIFORNIA OR ITS OFFICERS OR AGENTS SHALL NOT BE RESPONSIBLE FOR THE ACCURACY OR COMPLETENESS OF ELECTRONIC COPIES OF THIS PLAN SHEET.*

Caltrans Metric

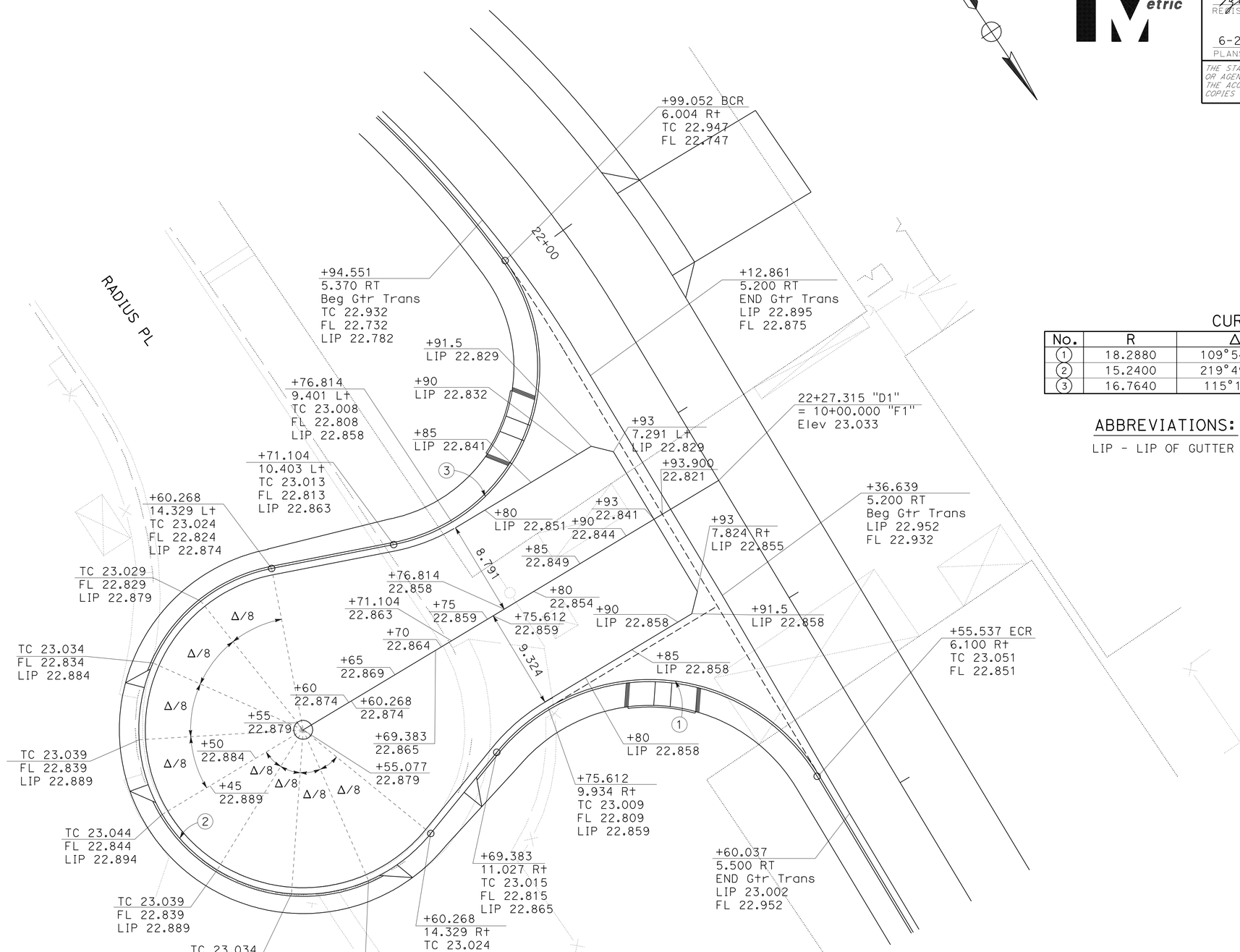


## CURVE DATA

| No. | R | Δ | T | L |
|---|---|---|---|---|
| 1 | 18.2880 | 109°54'51" | 26.0764 | 35.0830 |
| 2 | 15.2400 | 219°49'42" | 42.0675 | 58.4717 |
| 3 | 16.7640 | 115°1'46" | 26.3292 | 33.6561 |

## ABBREVIATIONS:

LIP - LIP OF GUTTER

ALL DIMENSIONS ARE IN METERS
UNLESS OTHERWISE SHOWN.

# CONSTRUCTION DETAILS

SCALE 1:200

**C-28**

| | | | |
|---|---|---|---|
| CALCULATED-DESIGNED BY | HAN NG | REVISED BY | YTT |
| CHECKED BY | NGIM NANCY PE | DATE REVISED | 05/09 |
| FUNCTIONAL SUPERVISOR | NGIM NANCY PE | | |

STATE OF CALIFORNIA - DEPARTMENT OF TRANSPORTATION
Caltrans OFFICE OF DESIGN A

S:\projects\2159C1\72159cga028.dgn

LAST REVISION 00-00-00 DATE PLOTTED => 22-JUN-2010 TIME PLOTTED => 07:36

| Dist | COUNTY | ROUTE | KILOMETER POST TOTAL PROJECT | SHEET No. | TOTAL SHEETS |
|---|---|---|---|---|---|
| 07 | LA | 5 | 2.9/4.9 | 88 | 1082 |

12-23-09
REGISTERED CIVIL ENGINEER DATE

6-21-10
PLANS APPROVAL DATE

REGISTERED PROFESSIONAL ENGINEER NGIM NANCY PE No. 58161 Exp. 6-30-10 CIVIL STATE OF CALIFORNIA

*THE STATE OF CALIFORNIA OR ITS OFFICERS OR AGENTS SHALL NOT BE RESPONSIBLE FOR THE ACCURACY OR COMPLETENESS OF ELECTRONIC COPIES OF THIS PLAN SHEET.*

Caltrans Metric

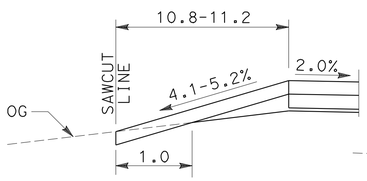


**SECTION A-A**
NO SCALE

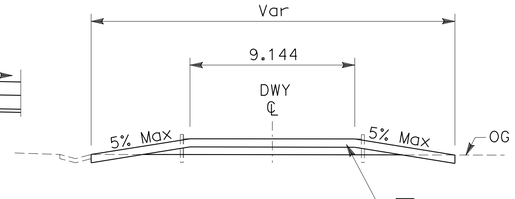


**SECTION B-B**
NO SCALE

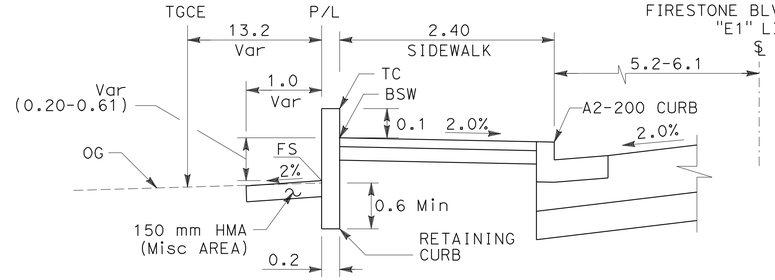


**SECTION C-C**
NO SCALE

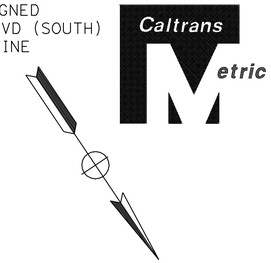


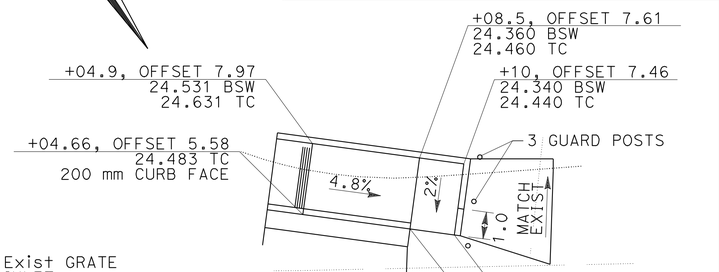


**DETAIL "A"**
SCALE: 1:100

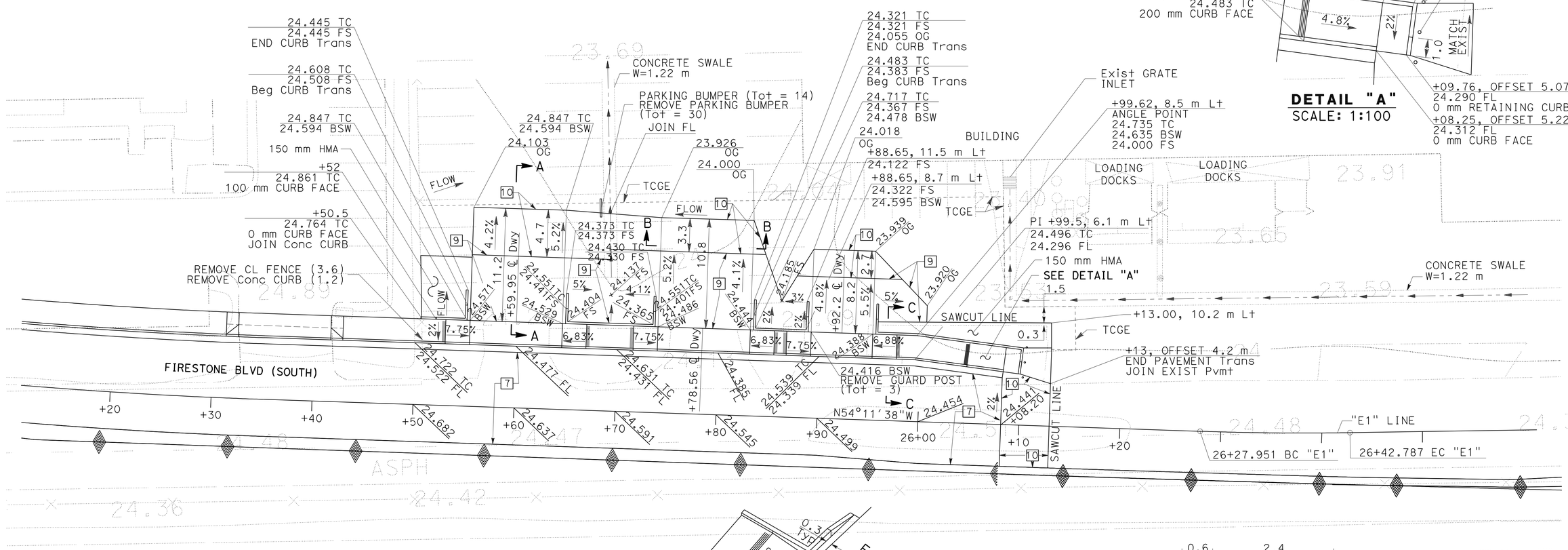


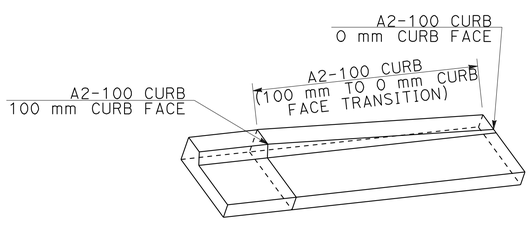


**CURB TRANSITION DETAIL**
NO SCALE

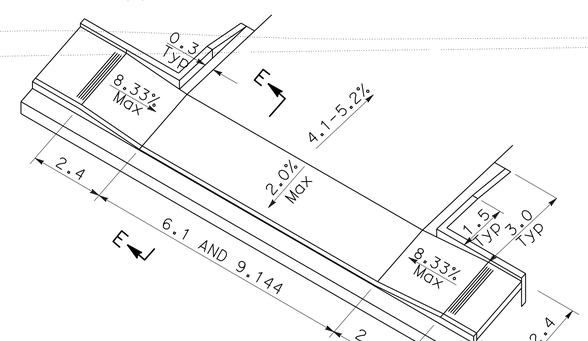


**COMMERCIAL DRIVEWAY**
NO SCALE

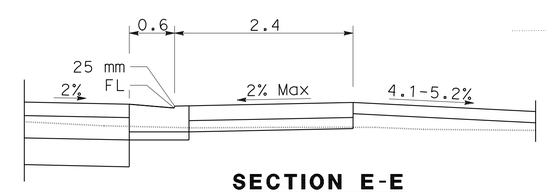


**SECTION E-E**
NO SCALE

ALL DIMENSION ARE IN
METERS UNLESS OTHERWISE SHOWN

ABBREVIATIONS:

TCGE - TEMPORARY CONSTRUCTION AND GRADING EASEMENT
BSW - BACK OF SIDEWALK

# CONSTRUCTION DETAILS
SCALE 1:200

C-29

| | | | |
|---|---|---|---|
| CALCULATED-DESIGNED BY | NGIM NANCY PE | REVISED BY | YTT |
| CHECKED BY | KEVIN Q NGUYEN | DATE REVISED | 05/09 |
| FUNCTIONAL SUPERVISOR | NGIM NANCY PE | | |

STATE OF CALIFORNIA - DEPARTMENT OF TRANSPORTATION
Caltrans OFFICE OF DESIGN A

S:\projects\2159c1\replace1\72159cga029.dgn

LAST REVISION 00-00-00 | DATE PLOTTED => 22-JUN-2010 | TIME PLOTTED => 07:36

| Dist | COUNTY | ROUTE | KILOMETER POST TOTAL PROJECT | SHEET No. | TOTAL SHEETS |
|---|---|---|---|---|---|
| 07 | LA | 5 | 2.9/4.9 | 89 | 1082 |

Caltrans Metric

REGISTERED CIVIL ENGINEER 12-23-09 DATE

6-21-10
PLANS APPROVAL DATE

REGISTERED PROFESSIONAL ENGINEER NGIM NANCY PE No. 58161 Exp. 6-30-10 CIVIL STATE OF CALIFORNIA

*THE STATE OF CALIFORNIA OR ITS OFFICERS OR AGENTS SHALL NOT BE RESPONSIBLE FOR THE ACCURACY OR COMPLETENESS OF ELECTRONIC COPIES OF THIS PLAN SHEET.*

## CURVE DATA

| No. | R | Δ | T | L |
|---|---|---|---|---|
| 1 | 10.718 | 59°30'34" | 6.127 | 11.132 |
| 2 | 10.718 | 67°31'59" | 7.166 | 12.633 |
| 3 | 2.438 | 102°35'45" | 3.043 | 4.366 |

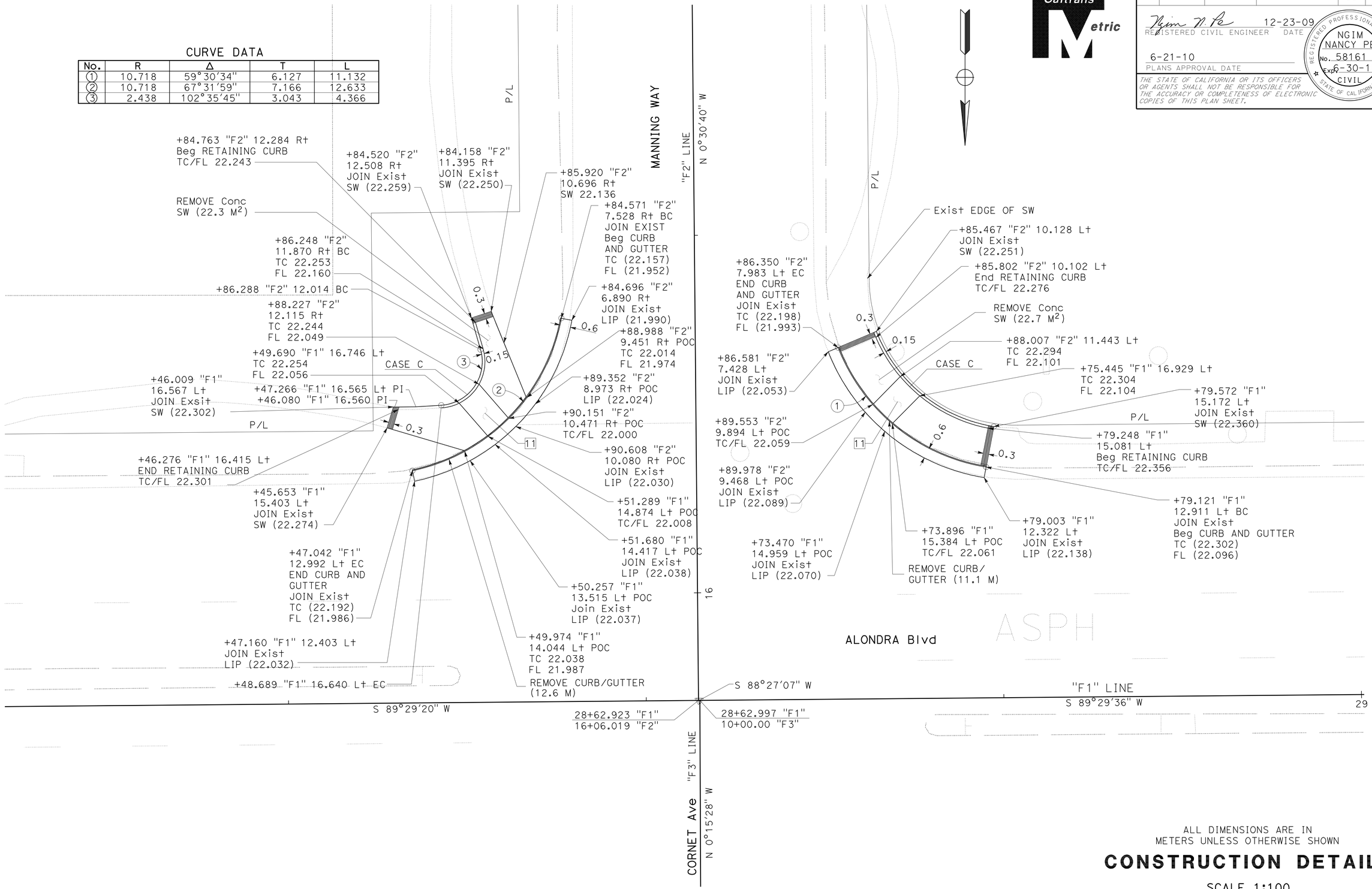


ALL DIMENSIONS ARE IN METERS UNLESS OTHERWISE SHOWN

# CONSTRUCTION DETAIL

SCALE 1:100

C-30

| REVISED BY | DATE REVISED |
|---|---|
| YTT | 05/09 |

HAN NG — NGIM NANCY PE — CALCULATED-DESIGNED BY — CHECKED BY

FUNCTIONAL SUPERVISOR — NGIM NANCY PE

STATE OF CALIFORNIA - DEPARTMENT OF TRANSPORTATION
Caltrans OFFICE OF DESIGN A

S:\projects\2159c1\replace1\72159cga030.dgn

LAST REVISION 00-00-00 — DATE PLOTTED => 22-JUN-2010 — TIME PLOTTED => 07:36

| Dist | COUNTY | ROUTE | KILOMETER POST TOTAL PROJECT | SHEET No. | TOTAL SHEETS |
|---|---|---|---|---|---|
| 07 | LA | 5 | 2.9/4.9 | 90 | 1082 |

REGISTERED CIVIL ENGINEER 12-23-09 DATE

6-21-10
PLANS APPROVAL DATE

REGISTERED PROFESSIONAL ENGINEER NGIM NANCY PE No. 58161 Exp. 6-30-10 CIVIL STATE OF CALIFORNIA

*THE STATE OF CALIFORNIA OR ITS OFFICERS OR AGENTS SHALL NOT BE RESPONSIBLE FOR THE ACCURACY OR COMPLETENESS OF ELECTRONIC COPIES OF THIS PLAN SHEET.*

Caltrans Metric

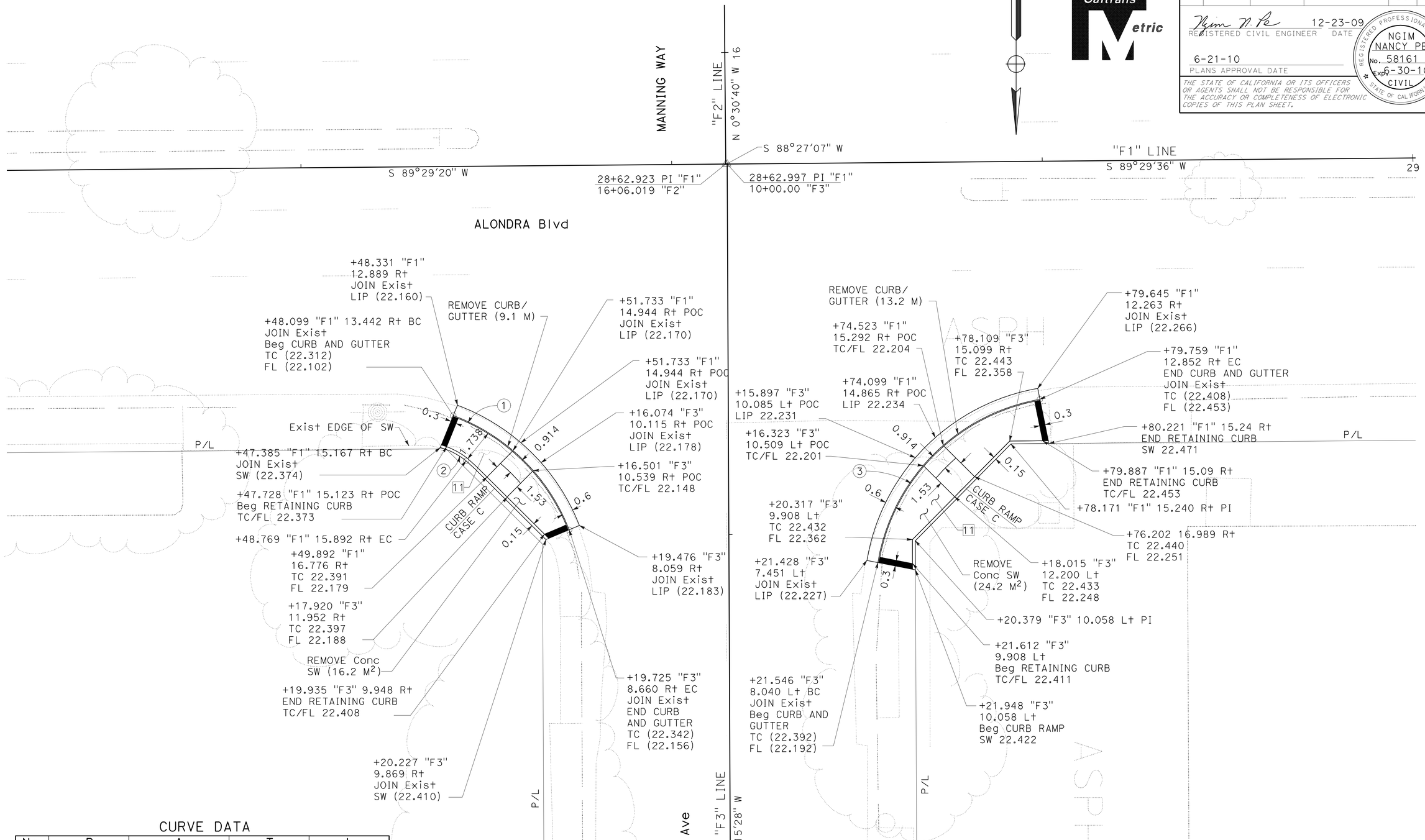


CURVE DATA

| No. | R | Δ | T | L |
|---|---|---|---|---|
| 1 | 10.718 | 48°23'07" | 4.815 | 9.051 |
| 2 | 3.851 | 23°24'38" | 0.798 | 1.574 |
| 3 | 10.718 | 70°43'17" | 7.606 | 13.229 |

ALL DIMENSIONS ARE IN
METERS UNLESS OTHERWISE SHOWN

# CONSTRUCTION DETAILS

## ALONDRA BLVD/CORNET AVE INTERSECTION

SCALE 1:100

C-31

| | |
|---|---|
| HAN NG | REVISED BY |
| NGIM NANCY PE | DATE REVISED |
| YTT | 05/09 |
| CALCULATED-DESIGNED BY | FUNCTIONAL SUPERVISOR |
| CHECKED BY | NGIM NANCY PE |

STATE OF CALIFORNIA - DEPARTMENT OF TRANSPORTATION
Caltrans OFFICE OF DESIGN A

S:\projects\2159c1\replace1\72159cga031.dgn

LAST REVISION 00-00-00 | DATE PLOTTED => 22-JUN-2010 | TIME PLOTTED => 07:36

| Dist | COUNTY | ROUTE | KILOMETER POST TOTAL PROJECT | SHEET No. | TOTAL SHEETS |
|---|---|---|---|---|---|
| 07 | LA | 5 | 2.9/4.9 | 91 | 1082 |

REGISTERED CIVIL ENGINEER 12-23-09 DATE

6-21-10
PLANS APPROVAL DATE

REGISTERED PROFESSIONAL ENGINEER NGIM NANCY PE No. 58161 Exp. 6-30-10 CIVIL STATE OF CALIFORNIA

*THE STATE OF CALIFORNIA OR ITS OFFICERS OR AGENTS SHALL NOT BE RESPONSIBLE FOR THE ACCURACY OR COMPLETENESS OF ELECTRONIC COPIES OF THIS PLAN SHEET.*

Caltrans Metric

NOTES:

9 180 mm HOT MIX ASPHALT (TYPE B)
180 mm CLASS 3 AGGREGATE BASE

11 100 mm PORTLAND CEMENT CONCRETE
150 mm CLASS 3 AGGREGATE BASE

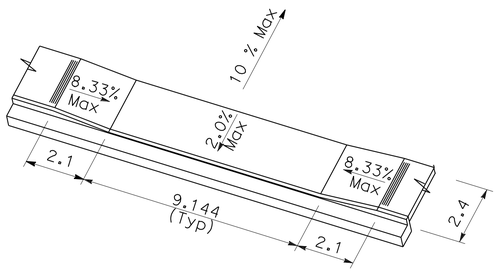


DRIVEWAY APPROACH DETAIL
NO SCALE

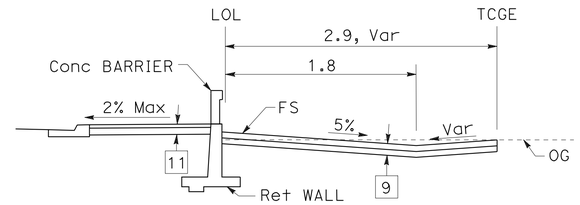


TYPICAL SECTION
NO SCALE

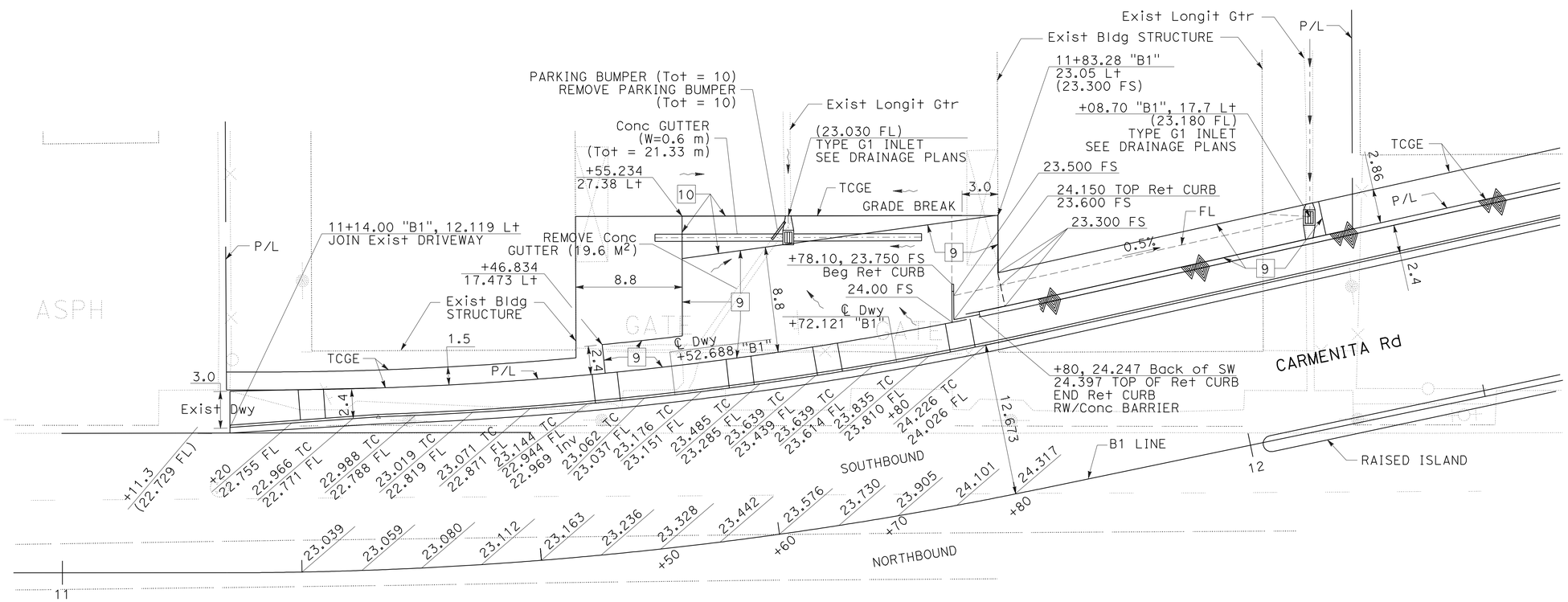


ALL DIMENSIONS ARE IN METERS
UNLESS OTHERWISE SHOWN.

# CONSTRUCTION DETAILS

SCALE 1:200

C-32

| | |
|---|---|
| YTT | 05/09 |
| REVISED BY | DATE REVISED |
| NGIM NANCY PE | |
| KEVIN Q NGUYEN | |
| CALCULATED-DESIGNED BY | |
| CHECKED BY | |
| FUNCTIONAL SUPERVISOR | |
| NGIM NANCY PE | |

STATE OF CALIFORNIA - DEPARTMENT OF TRANSPORTATION
Caltrans OFFICE OF DESIGN A

S:\projects\2159c1\resubmit3\72159cga032.dgn

LAST REVISION 00-00-00 | DATE PLOTTED => 22-JUN-2010 | TIME PLOTTED => 07:36

| Dist | COUNTY | ROUTE | KILOMETER POST TOTAL PROJECT | SHEET No. | TOTAL SHEETS |
|---|---|---|---|---|---|
| 07 | LA | 5 | 2.9/4.9 | 92 | 1082 |

REGISTERED CIVIL ENGINEER 12-23-09 DATE

6-21-10
PLANS APPROVAL DATE

REGISTERED PROFESSIONAL ENGINEER NGIM NANCY PE No. 58161 Exp. 6-30-10 CIVIL STATE OF CALIFORNIA

*THE STATE OF CALIFORNIA OR ITS OFFICERS OR AGENTS SHALL NOT BE RESPONSIBLE FOR THE ACCURACY OR COMPLETENESS OF ELECTRONIC COPIES OF THIS PLAN SHEET.*

Caltrans Metric

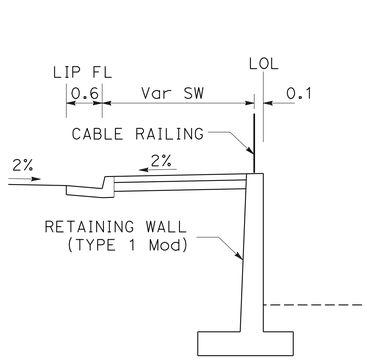


SECTION A-A
NO SCALE

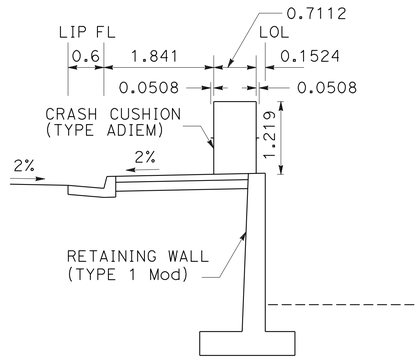


SECTION B-B
NO SCALE

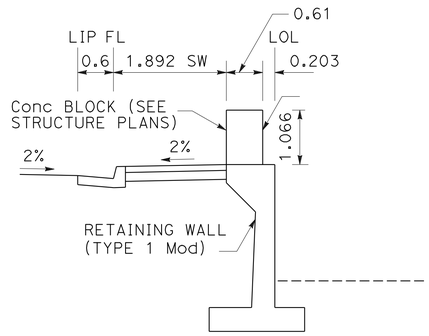


SECTION C-C
NO SCALE

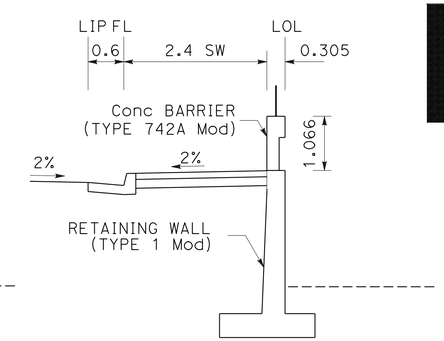


SECTION D-D
NO SCALE




DETAIL "A"
NO SCALE

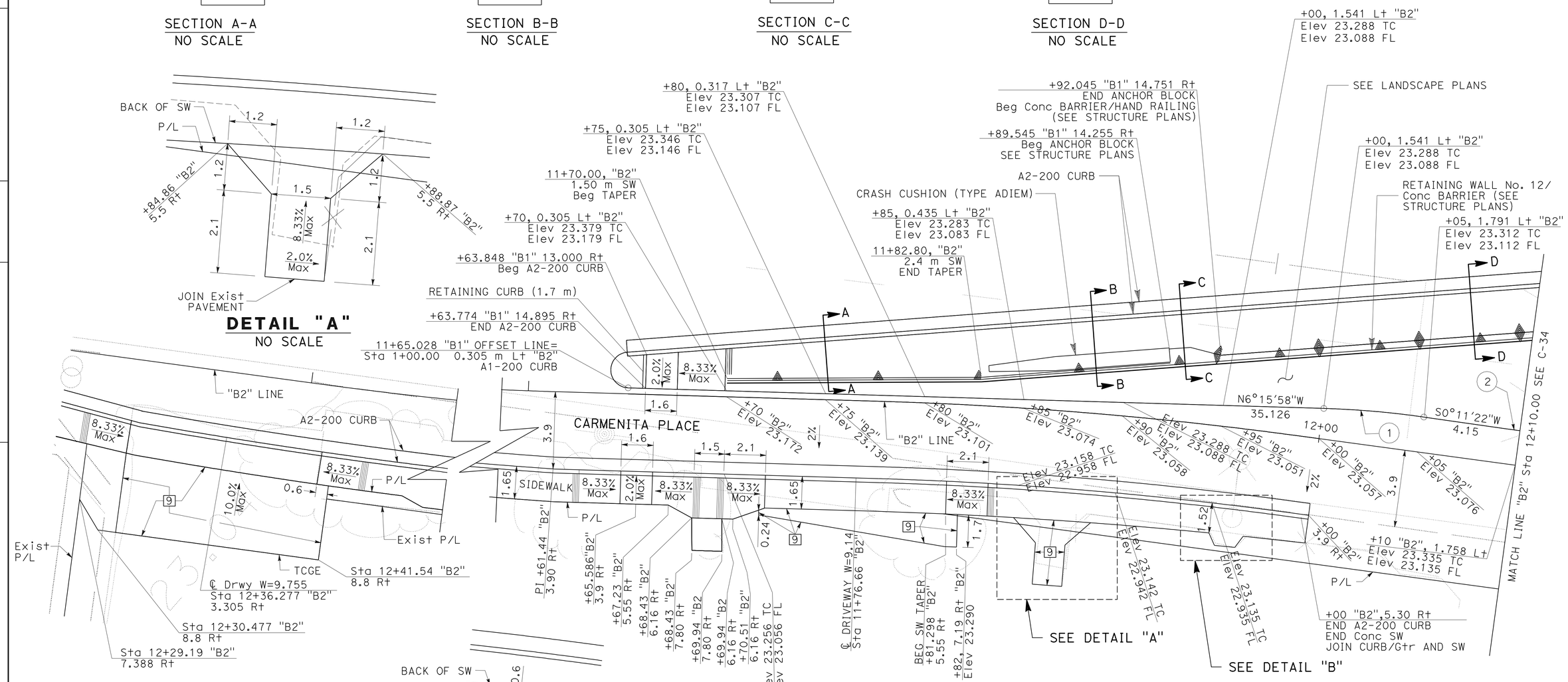


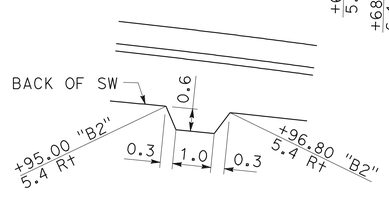


DETAIL "B"
NO SCALE

CURVE DATA

| No. | R | Δ | T | L |
|---|---|---|---|---|
| 1 | 45.00 | 6°27'19" | 2.54 | 5.07 |
| 2 | 45.00 | 25°58'39" | 10.38 | 20.40 |

ALL DIMENSIONS ARE IN METERS
UNLESS OTHERWISE SHOWN.

# CONSTRUCTION DETAILS

SCALE 1:100

C-33

| | | | |
|---|---|---|---|
| YTT | 05/09 | HAN NG | NGIM NANCY PE |
| REVISED BY | DATE REVISED | CALCULATED-DESIGNED BY | CHECKED BY |

FUNCTIONAL SUPERVISOR: NGIM NANCY PE

STATE OF CALIFORNIA - DEPARTMENT OF TRANSPORTATION
Caltrans OFFICE OF DESIGN A

S:\projects\2159c1\72159cga033.dgn

LAST REVISION 00-00-00 | DATE PLOTTED => 22-JUN-2010 | TIME PLOTTED => 07:37

| Dist | COUNTY | ROUTE | KILOMETER POST TOTAL PROJECT | SHEET No. | TOTAL SHEETS |
|---|---|---|---|---|---|
| 07 | LA | 5 | 2.9/4.9 | 93 | 1082 |

Ngim N. Pe 12-23-09
REGISTERED CIVIL ENGINEER DATE

6-21-10
PLANS APPROVAL DATE

REGISTERED PROFESSIONAL ENGINEER NGIM NANCY PE No. 58161 Exp. 6-30-10 CIVIL STATE OF CALIFORNIA

*THE STATE OF CALIFORNIA OR ITS OFFICERS OR AGENTS SHALL NOT BE RESPONSIBLE FOR THE ACCURACY OR COMPLETENESS OF ELECTRONIC COPIES OF THIS PLAN SHEET.*

Caltrans Metric

## CURVE DATA

| No. | R | Δ | T | L |
|---|---|---|---|---|
| 1 | 45.00 | 25°58'39" | 10.38 | 20.40 |
| 2 | 40.23 | 13°33'24" | 4.78 | 9.52 |
| 3 | 100.00 | 17°53'54" | 15.75 | 31.24 |

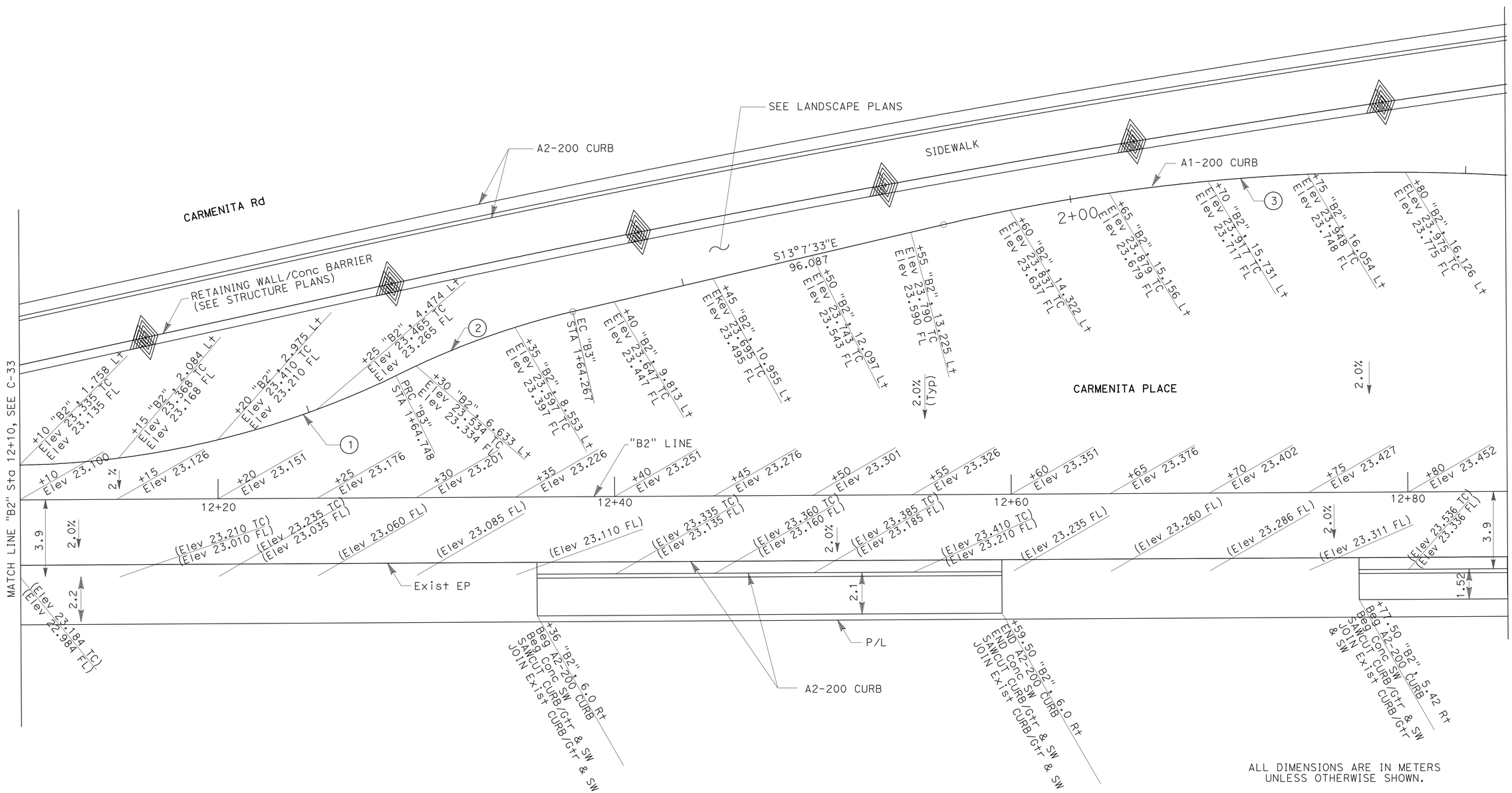


ALL DIMENSIONS ARE IN METERS UNLESS OTHERWISE SHOWN.

# CONSTRUCTION DETAILS

SCALE 1:100

C-34

STATE OF CALIFORNIA - DEPARTMENT OF TRANSPORTATION
Caltrans OFFICE OF DESIGN A

FUNCTIONAL SUPERVISOR: NGIM NANCY PE
CALCULATED-DESIGNED BY: WILL CARPIO
CHECKED BY: NANCY PE
REVISED BY
DATE REVISED

LAST REVISION 00-00-00 | DATE PLOTTED => 22-JUN-2010 | TIME PLOTTED => 07:37

| Dist | COUNTY | ROUTE | KILOMETER POST TOTAL PROJECT | SHEET No. | TOTAL SHEETS |
|---|---|---|---|---|---|
| 07 | LA | 5 | 2.9/4.9 | 94 | 1082 |

REGISTERED CIVIL ENGINEER 12-23-09 DATE

6-21-10
PLANS APPROVAL DATE

REGISTERED PROFESSIONAL ENGINEER NGIM NANCY PE No. 58161 Exp. 6-30-10 CIVIL STATE OF CALIFORNIA

*THE STATE OF CALIFORNIA OR ITS OFFICERS OR AGENTS SHALL NOT BE RESPONSIBLE FOR THE ACCURACY OR COMPLETENESS OF ELECTRONIC COPIES OF THIS PLAN SHEET.*

Caltrans Metric

## CURVE DATA

| No. | R | Δ | T | L |
|---|---|---|---|---|
| 1 | 20.00 | 56°0′09" | 10.63 | 19.55 |
| 2 | 39.10 | 49°26′03" | 18.00 | 33.74 |
| 3 | 44.40 | 31°23′28" | 12.48 | 24.33 |
| 4 | 39.10 | 17°26′31" | 6.00 | 11.90 |
| 5 | 35.00 | 19°25′34" | 5.99 | 11.87 |

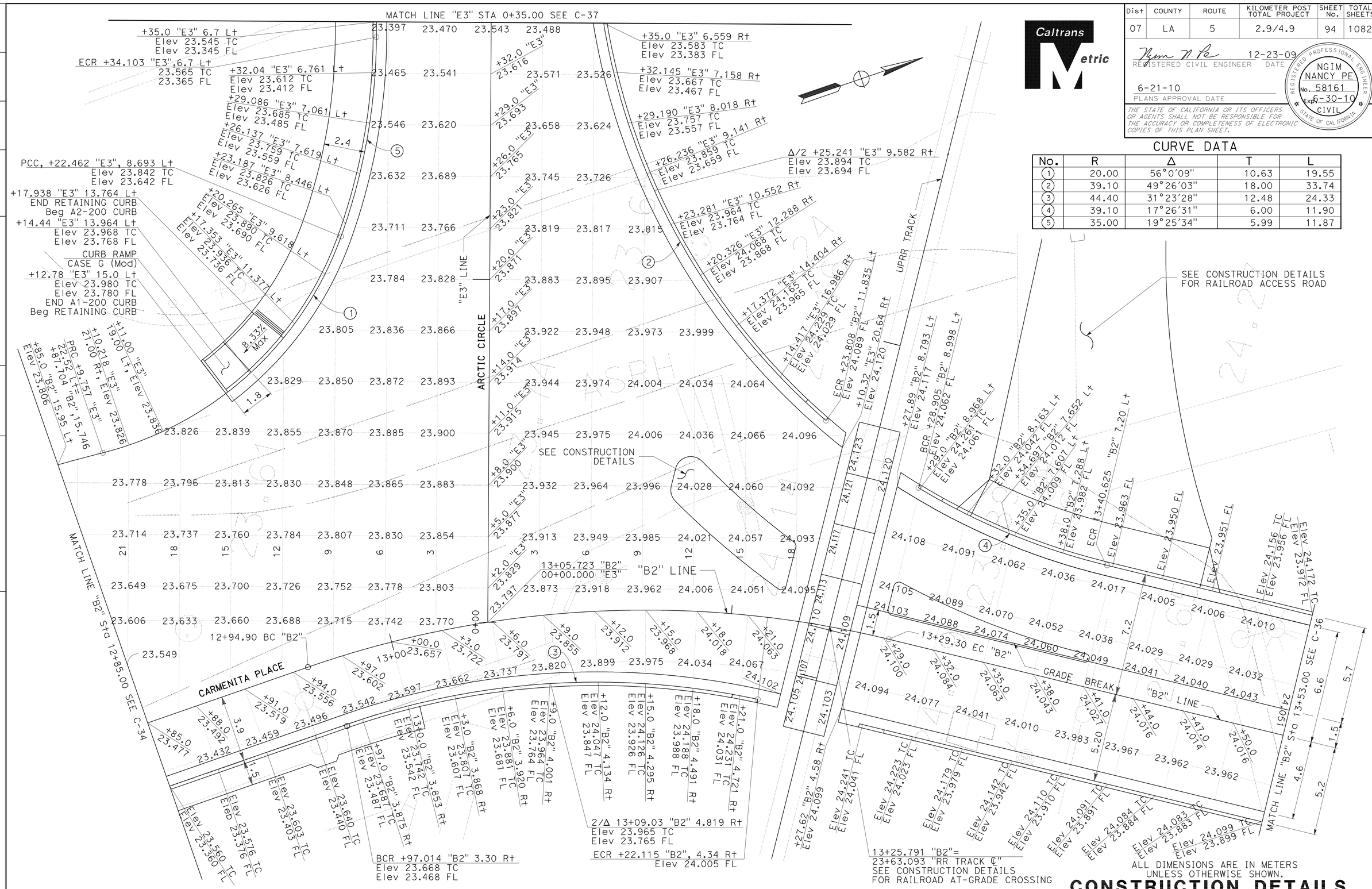


ALL DIMENSIONS ARE IN METERS UNLESS OTHERWISE SHOWN.

# CONSTRUCTION DETAILS

SCALE 1:100

**C-35**

STATE OF CALIFORNIA - DEPARTMENT OF TRANSPORTATION
Caltrans OFFICE OF DESIGN A

FUNCTIONAL SUPERVISOR: NGIM NANCY PE
CALCULATED-DESIGNED BY: WILL CARPIO
CHECKED BY: NGIM NANCY PE
REVISED BY / DATE REVISED

LAST REVISION 00-00-00
DATE PLOTTED => 22-JUN-2010
TIME PLOTTED => 07:37

| Dist | COUNTY | ROUTE | KILOMETER POST TOTAL PROJECT | SHEET No. | TOTAL SHEETS |
|---|---|---|---|---|---|
| 07 | LA | 5 | 2.9/4.9 | 95 | 1082 |

REGISTERED CIVIL ENGINEER 12-23-09 DATE

6-21-10
PLANS APPROVAL DATE

REGISTERED PROFESSIONAL ENGINEER NGIM NANCY PE No. 58161 Exp. 6-30-10 CIVIL STATE OF CALIFORNIA

*THE STATE OF CALIFORNIA OR ITS OFFICERS OR AGENTS SHALL NOT BE RESPONSIBLE FOR THE ACCURACY OR COMPLETENESS OF ELECTRONIC COPIES OF THIS PLAN SHEET.*

Caltrans Metric

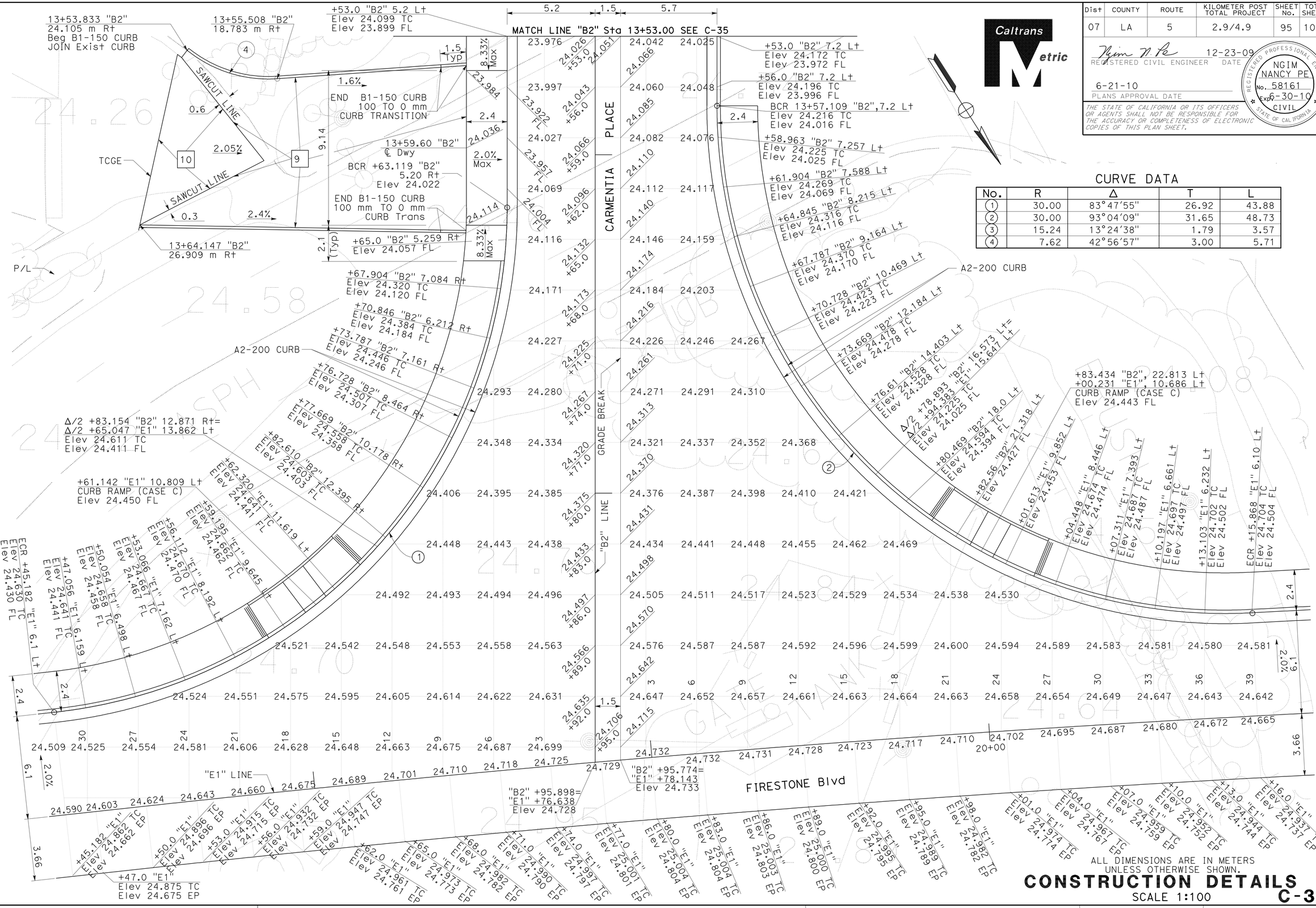


## CURVE DATA

| No. | R | Δ | T | L |
|---|---|---|---|---|
| 1 | 30.00 | 83°47'55" | 26.92 | 43.88 |
| 2 | 30.00 | 93°04'09" | 31.65 | 48.73 |
| 3 | 15.24 | 13°24'38" | 1.79 | 3.57 |
| 4 | 7.62 | 42°56'57" | 3.00 | 5.71 |

ALL DIMENSIONS ARE IN METERS UNLESS OTHERWISE SHOWN.

# CONSTRUCTION DETAILS

SCALE 1:100

C-36

STATE OF CALIFORNIA - DEPARTMENT OF TRANSPORTATION
Caltrans OFFICE OF DESIGN A

FUNCTIONAL SUPERVISOR: NGIM NANCY PE
CALCULATED-DESIGNED BY: WILL CARPIO
CHECKED BY: NGIM NANCY PE
REVISED BY / DATE REVISED

LAST REVISION DATE PLOTTED => 22-JUN-2010
00-00-00 TIME PLOTTED => 07:37

| Dist | COUNTY | ROUTE | KILOMETER POST TOTAL PROJECT | SHEET No. | TOTAL SHEETS |
|---|---|---|---|---|---|
| 07 | LA | 5 | 2.9/4.9 | 96 | 1082 |

REGISTERED CIVIL ENGINEER 12-23-09 DATE

6-21-10
PLANS APPROVAL DATE

REGISTERED PROFESSIONAL ENGINEER NGIM NANCY PE No. 58161 Exp. 6-30-10 CIVIL STATE OF CALIFORNIA

*THE STATE OF CALIFORNIA OR ITS OFFICERS OR AGENTS SHALL NOT BE RESPONSIBLE FOR THE ACCURACY OR COMPLETENESS OF ELECTRONIC COPIES OF THIS PLAN SHEET.*

Caltrans Metric

## CURVE DATA

| No. | R | Δ | T | L |
|---|---|---|---|---|
| 1 | 39.10 | 49°26'03" | 18.00 | 33.74 |
| 2 | 54.00 | 17°44'48" | 8.43 | 16.73 |
| 3 | 18.29 | 75°41'33" | 14.21 | 24.16 |
| 4 | 18.29 | 86°33'38" | 17.22 | 27.63 |

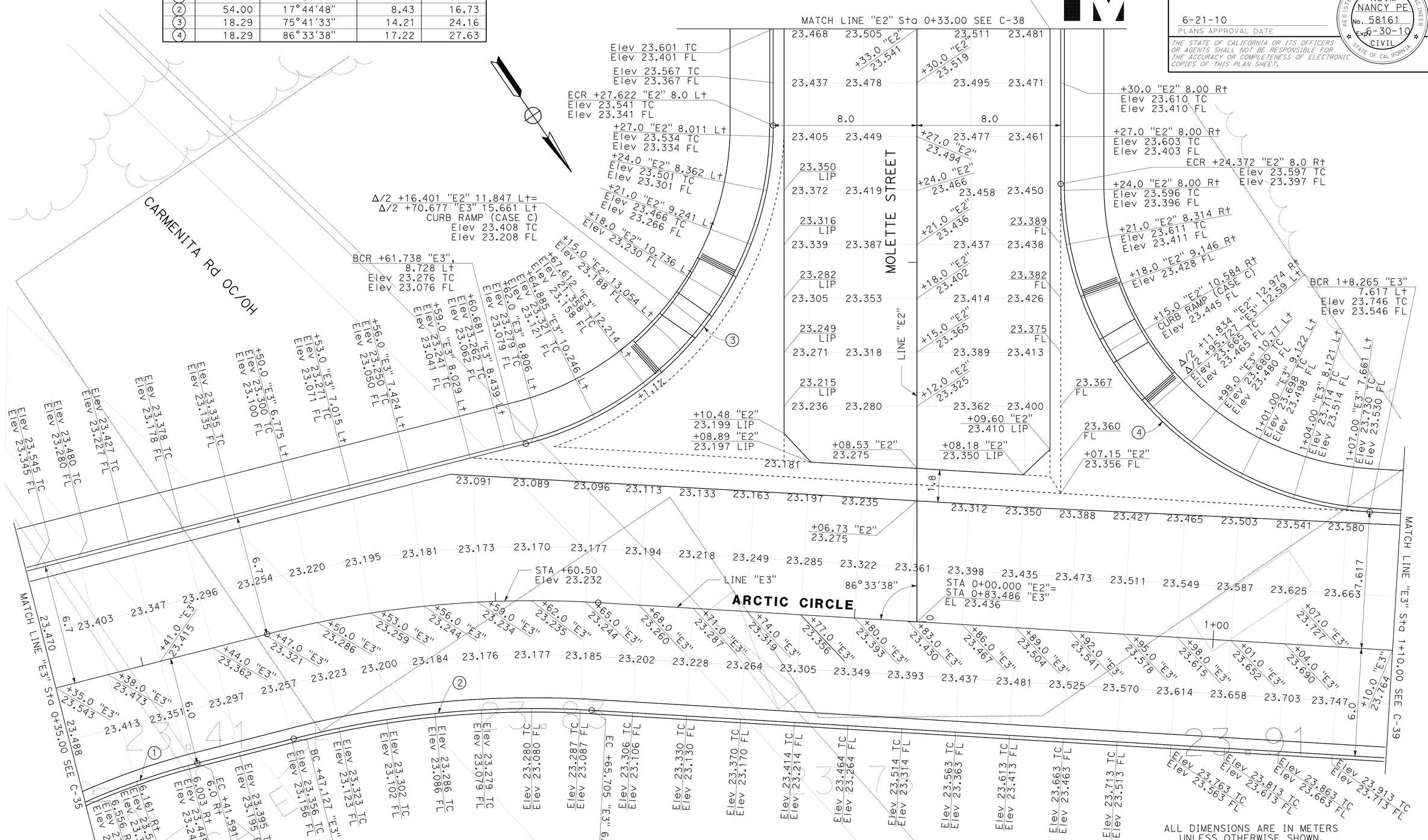


# CONSTRUCTION DETAILS

SCALE 1:100

C-37

| | |
|---|---|
| STATE OF CALIFORNIA - DEPARTMENT OF TRANSPORTATION | Caltrans OFFICE OF DESIGN A |
| FUNCTIONAL SUPERVISOR | NGIM NANCY PE |
| CALCULATED-DESIGNED BY | WILL CARPIO |
| CHECKED BY | NGIM NANCY PE |
| REVISED BY | |
| DATE REVISED | |

S:\projects\2159C1\72159cga037.dgn

LAST REVISION 00-00-00 | DATE PLOTTED => 22-JUN-2010 | TIME PLOTTED => 07:37

| Dist | COUNTY | ROUTE | KILOMETER POST TOTAL PROJECT | SHEET No. | TOTAL SHEETS |
|---|---|---|---|---|---|
| 07 | LA | 5 | 2.9/4.9 | 97 | 1082 |

REGISTERED CIVIL ENGINEER 12-23-09 DATE

6-21-10
PLANS APPROVAL DATE

REGISTERED PROFESSIONAL ENGINEER NGIM NANCY PE No. 58161 Exp. 6-30-10 CIVIL STATE OF CALIFORNIA

*THE STATE OF CALIFORNIA OR ITS OFFICERS OR AGENTS SHALL NOT BE RESPONSIBLE FOR THE ACCURACY OR COMPLETENESS OF ELECTRONIC COPIES OF THIS PLAN SHEET.*

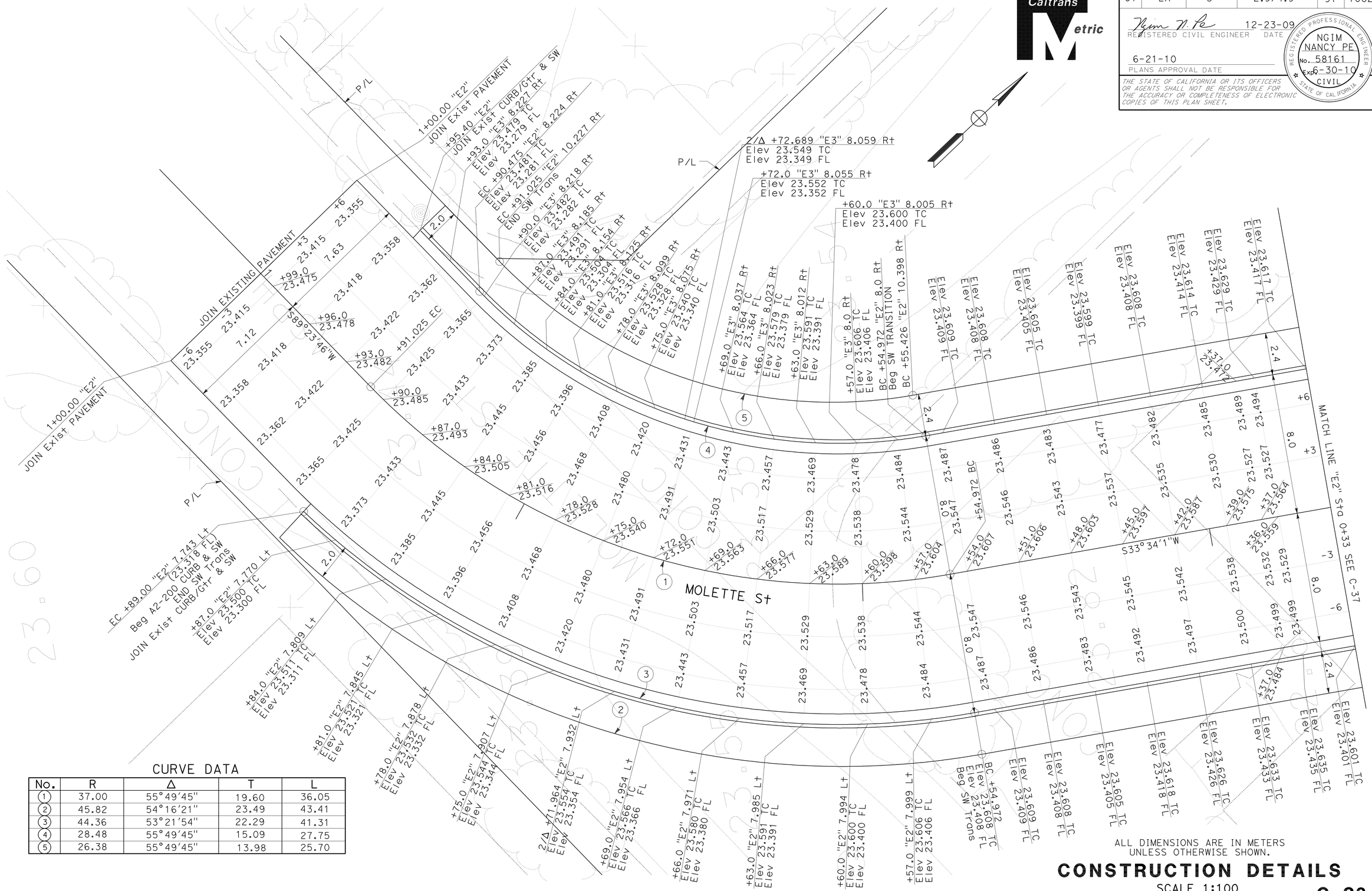


## CURVE DATA

| No. | R | Δ | T | L |
|---|---|---|---|---|
| 1 | 37.00 | 55°49'45" | 19.60 | 36.05 |
| 2 | 45.82 | 54°16'21" | 23.49 | 43.41 |
| 3 | 44.36 | 53°21'54" | 22.29 | 41.31 |
| 4 | 28.48 | 55°49'45" | 15.09 | 27.75 |
| 5 | 26.38 | 55°49'45" | 13.98 | 25.70 |

ALL DIMENSIONS ARE IN METERS UNLESS OTHERWISE SHOWN.

# CONSTRUCTION DETAILS

SCALE 1:100

C-38

| | |
|---|---|
| CALCULATED-DESIGNED BY | WILL CARPIO |
| CHECKED BY | NGIM NANCY PE |
| FUNCTIONAL SUPERVISOR | NGIM NANCY PE |
| REVISED BY | |
| DATE REVISED | |

STATE OF CALIFORNIA - DEPARTMENT OF TRANSPORTATION
Caltrans OFFICE OF DESIGN A

LAST REVISION 00-00-00 DATE PLOTTED => 22-JUN-2010 TIME PLOTTED => 07:37

| Dist | COUNTY | ROUTE | KILOMETER POST TOTAL PROJECT | SHEET No. | TOTAL SHEETS |
|---|---|---|---|---|---|
| 07 | LA | 5 | 2.9/4.9 | 98 | 1082 |

Ngim N. Pe 12-23-09
REGISTERED CIVIL ENGINEER DATE

6-21-10
PLANS APPROVAL DATE

REGISTERED PROFESSIONAL ENGINEER NGIM NANCY PE No. 58161 Exp. 6-30-10 CIVIL STATE OF CALIFORNIA

*THE STATE OF CALIFORNIA OR ITS OFFICERS OR AGENTS SHALL NOT BE RESPONSIBLE FOR THE ACCURACY OR COMPLETENESS OF ELECTRONIC COPIES OF THIS PLAN SHEET.*

Caltrans Metric

STRUCTURAL SECTION

7 180 mm HMA (Type B)
300 mm CLASS 2 AB
360 mm CLASS 4 AS

9 180 mm HOT MIX ASPHALST (Type B)
180 mm CLASS 3 AGGREGATE BASE

10 50 - 850 mm OVERLAY HMA (TYPE B)
COLD PLANE AC Pvmt (45 mm Max)

CURVE DATA

| No. | R | Δ | T | L |
|---|---|---|---|---|
| 1 | 100.00 | 7°59'46" | 6.99 | 13.96 |

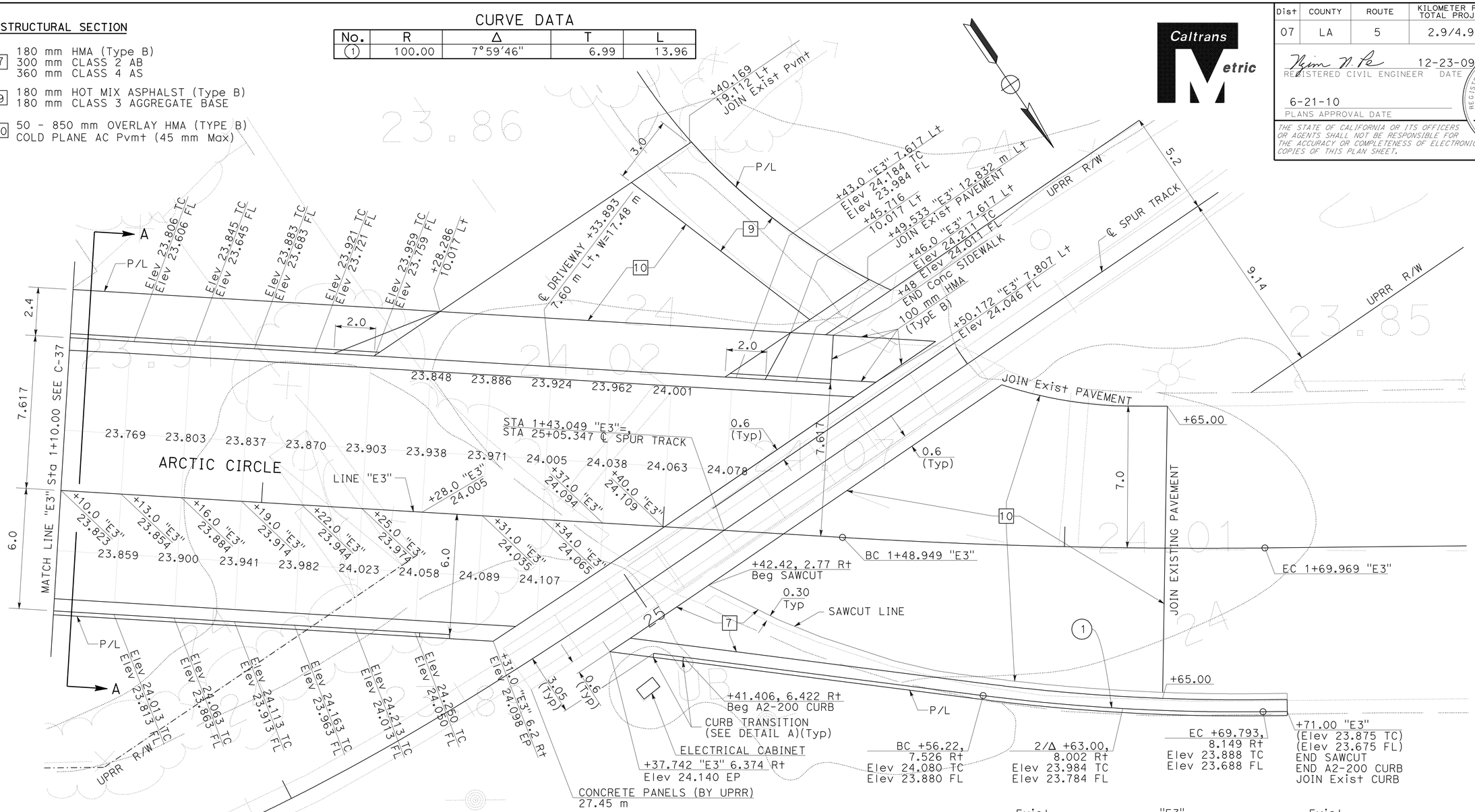


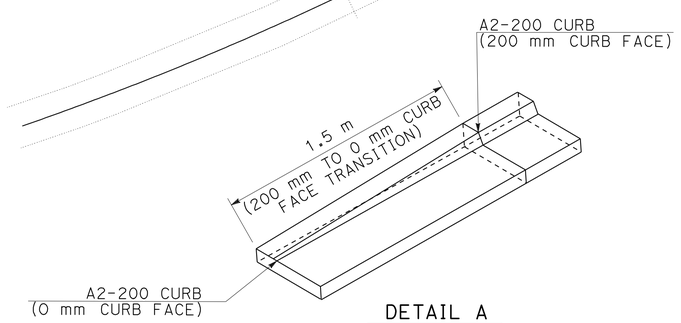


DETAIL A
NO SCALE

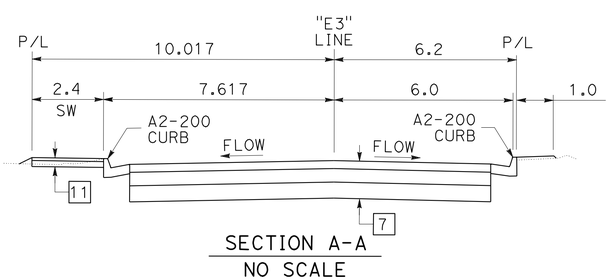


SECTION A-A
NO SCALE

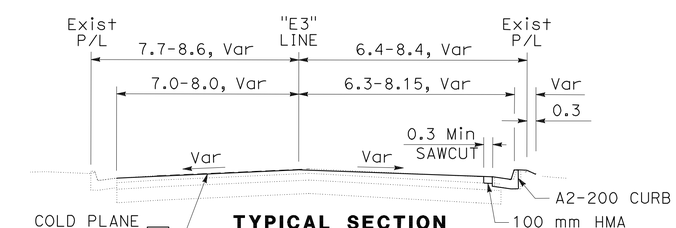


TYPICAL SECTION
Sta 1+37.742 TO Sta 1+65.00
NO SCALE

ALL DIMENSIONS ARE IN METERS UNLESS OTHERWISE SHOWN.

**ARCTIC CIRCLE/ AT-GRADE RAILROAD CROSSING**

# CONSTRUCTION DETAILS

SCALE 1:100

C-39

STATE OF CALIFORNIA - DEPARTMENT OF TRANSPORTATION
Caltrans OFFICE OF DESIGN A

FUNCTIONAL SUPERVISOR NGIM NANCY PE
CALCULATED-DESIGNED BY WILL CARPIO
CHECKED BY NGIM NANCY PE
REVISED BY
DATE REVISED

LAST REVISION 00-00-00 DATE PLOTTED => 22-JUN-2010 TIME PLOTTED => 07:37

| Dist | COUNTY | ROUTE | KILOMETER POST TOTAL PROJECT | SHEET No. | TOTAL SHEETS |
|---|---|---|---|---|---|
| 07 | LA | 5 | 2.9/4.9 | 99 | 1082 |

Ngim N. Pe 12-23-09
REGISTERED CIVIL ENGINEER DATE

6-21-10
PLANS APPROVAL DATE

REGISTERED PROFESSIONAL ENGINEER NGIM NANCY PE No. 58161 Exp. 6-30-10 CIVIL STATE OF CALIFORNIA

*THE STATE OF CALIFORNIA OR ITS OFFICERS OR AGENTS SHALL NOT BE RESPONSIBLE FOR THE ACCURACY OR COMPLETENESS OF ELECTRONIC COPIES OF THIS PLAN SHEET.*

Caltrans Metric

## STRUCTURAL SECTION

9 180 mm HMA (TYPE B)
180 mm CLASS 3 AGGREGATE BASE

10 50 mm - 850 mm OVERLAY HMA (TYPE B)

## ABBREVIATIONS:

UPRR - UNION PACIFIC RAILROAD
HMA - HOT MIX ASPHALT

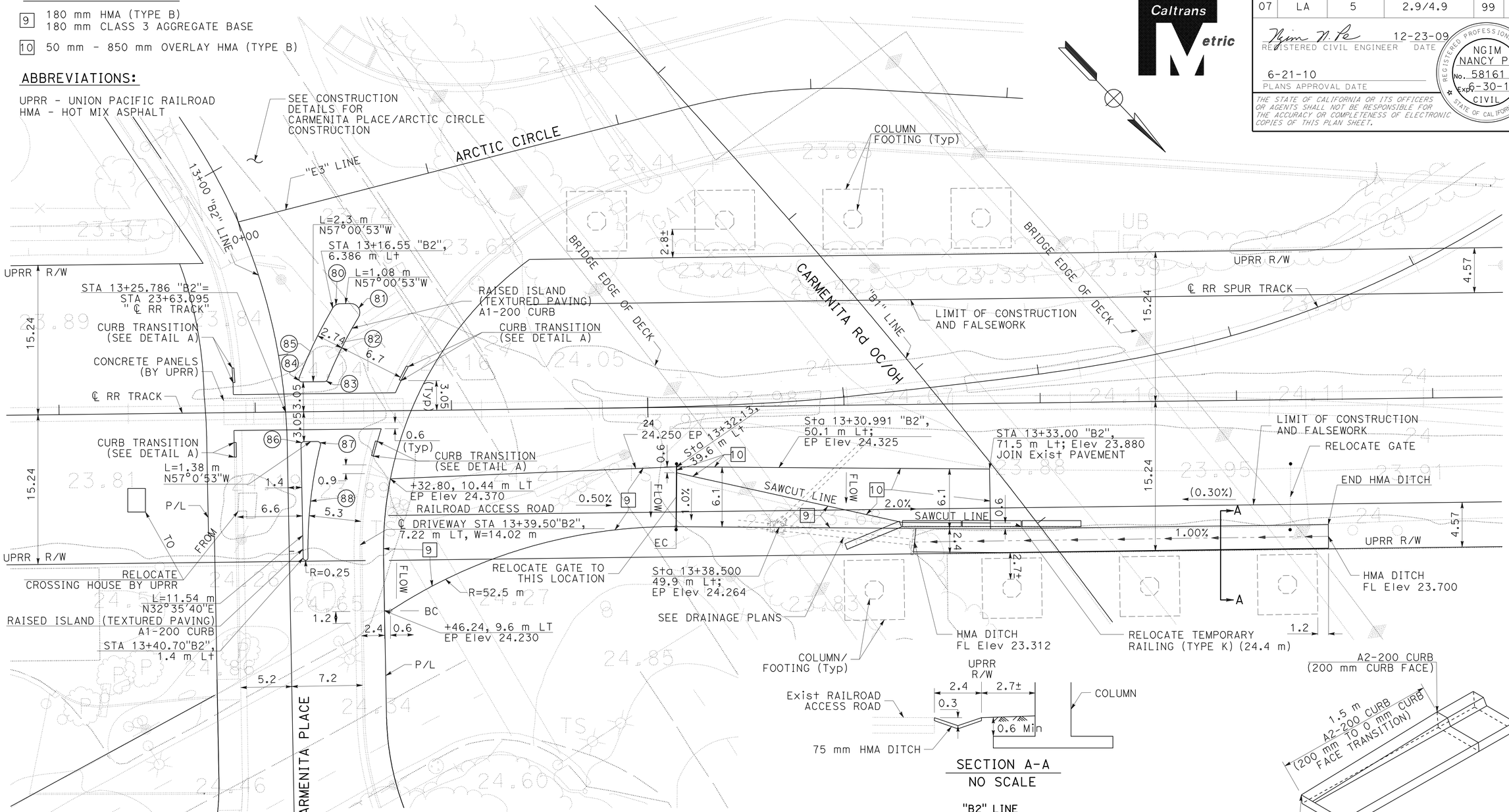





SECTION A-A
NO SCALE

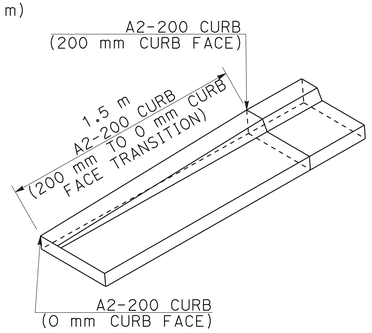


DETAIL A
NO SCALE

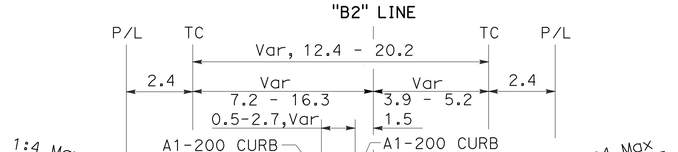


CARMENITA PLACE
STA 13+00.00 - 13+85.00
NO SCALE

CURVE DATA

| No. | R | Δ | T | L |
|---|---|---|---|---|
| 80 | 0.91 | 58°56'18" | 0.51 | 0.94 |
| 81 | 0.91 | 121°44'38" | 1.63 | 1.93 |
| 82 | 45.80 | 8°56'19" | 3.58 | 7.15 |
| 83 | 0.30 | 67°11'42" | 0.20 | 0.36 |
| 84 | 0.30 | 111°44'43" | 0.45 | 0.59 |
| 85 | 48.54 | 9°18'59" | 3.96 | 7.89 |
| 86 | 0.30 | 90°23'27" | 0.31 | 0.48 |
| 87 | 0.30 | 104°27'22" | 0.39 | 0.56 |
| 88 | 44.40 | 14°56'38" | 5.82 | 11.58 |

**RAILROAD AT-GRADE CROSSING AND ACCCESS ROAD**

ALL DIMENSIONS ARE IN METERS UNLESS OTHERWISE SHOWN

# CONSTRUCTION DETAILS

SCALE 1:200

C-40

REVISED BY | DATE REVISED
WILL CARPIO | NGIM NANCY PE
CALCULATED-DESIGNED BY | CHECKED BY
FUNCTIONAL SUPERVISOR | NGIM NANCY PE

STATE OF CALIFORNIA - DEPARTMENT OF TRANSPORTATION
Caltrans OFFICE OF DESIGN A

LAST REVISION 00-00-00 | DATE PLOTTED => 22-JUN-2010 | TIME PLOTTED => 07:38

| Dist | COUNTY | ROUTE | KILOMETER POST TOTAL PROJECT | SHEET No. | TOTAL SHEETS |
|---|---|---|---|---|---|
| 07 | LA | 5 | 2.9/4.9 | 100 | 1082 |

Ngim N. Pe 12-23-09
REGISTERED CIVIL ENGINEER DATE

6-21-10
PLANS APPROVAL DATE

REGISTERED PROFESSIONAL ENGINEER NGIM NANCY PE No. 58161 Exp. 6-30-10 CIVIL STATE OF CALIFORNIA

*THE STATE OF CALIFORNIA OR ITS OFFICERS OR AGENTS SHALL NOT BE RESPONSIBLE FOR THE ACCURACY OR COMPLETENESS OF ELECTRONIC COPIES OF THIS PLAN SHEET.*

Caltrans Metric

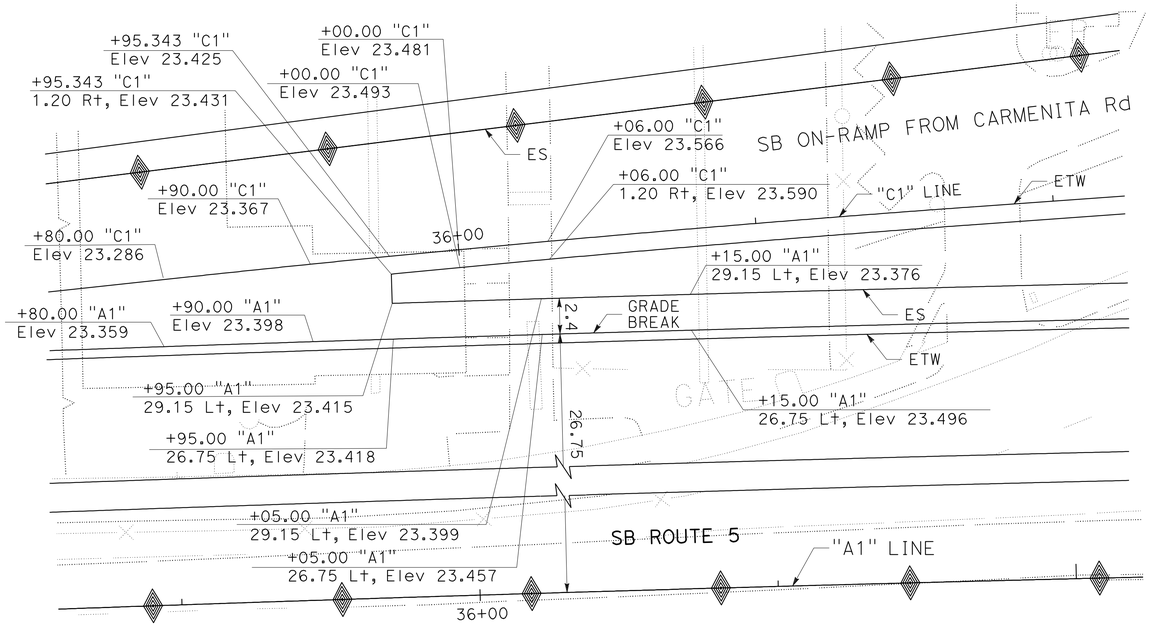


SB ON-RAMP

"C1" LINE

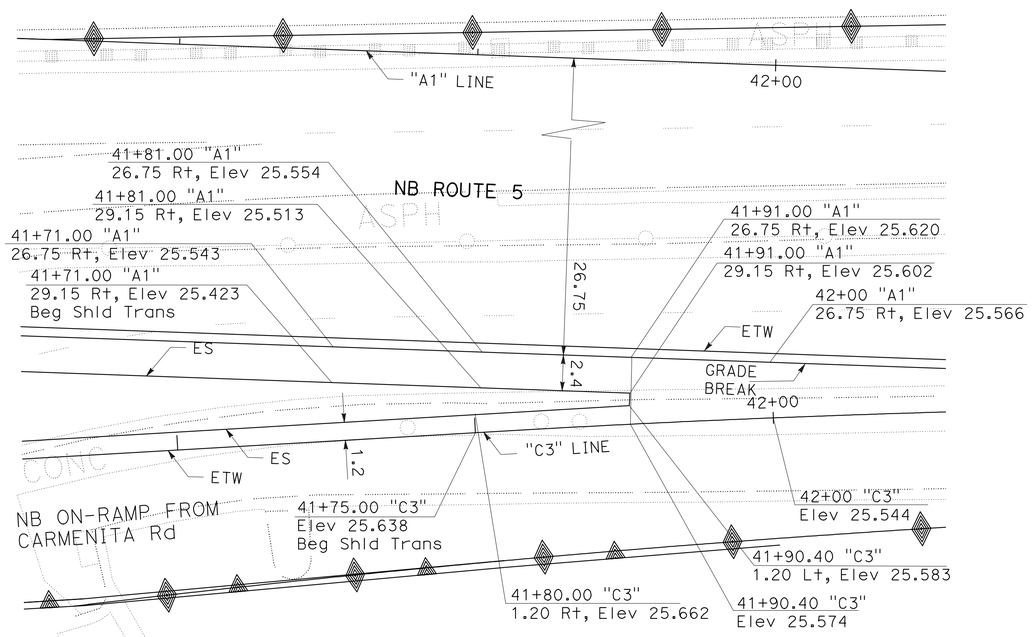


NB ON-RAMP

"C3" LINE

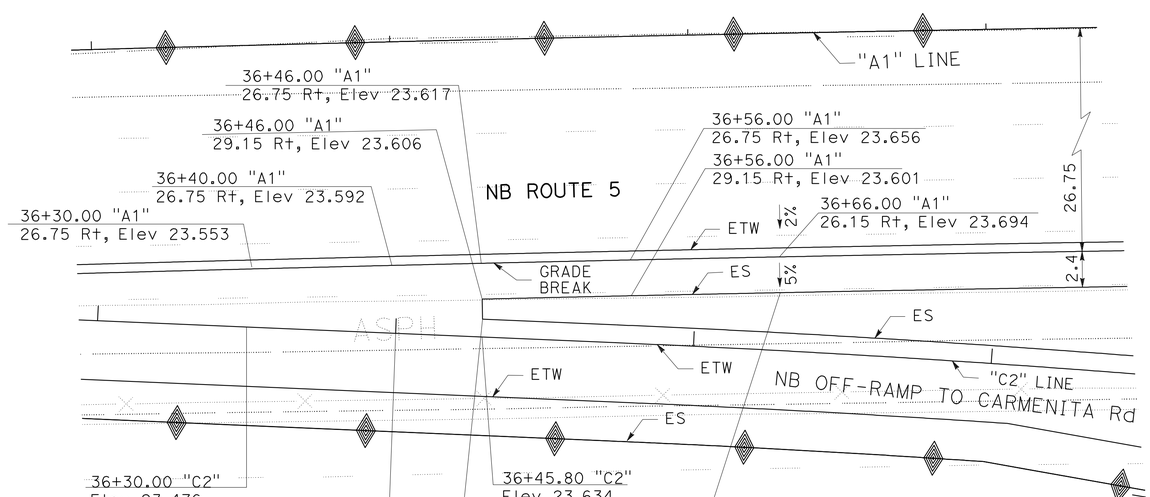


NB OFF-RAMP

"C2" LINE

**SHOULDER TRANSITION AT RAMP GORE AREA**

ALL DIMENSION ARE IN METERS UNLESS OTHERWISE SHOWN

# CONSTRUCTION DETAILS

SCALE 1:200

**C-41**

REVISED BY | DATE REVISED
NGIM NANCY PE | NGIM NANCY PE
CALCULATED-DESIGNED BY | CHECKED BY
FUNCTIONAL SUPERVISOR
NGIM NANCY PE

STATE OF CALIFORNIA - DEPARTMENT OF TRANSPORTATION
Caltrans OFFICE OF DESIGN A

S:\projects\2159C1\72159cga041.dgn

LAST REVISION 00-00-00 | DATE PLOTTED => 22-JUN-2010 | TIME PLOTTED => 07:44