NOTES:

1. ▭ Indicates Bottom of footing elevation.
2. Existing contours shown, for final countours, see "ROAD PLANS".
3. For footing dimensions and pile layout, see "Structure Plan" sheets.
4. Underground utilities as shown are approximate. See "ROAD PLANS" for details.

No.	R	Δ	T	L
1	5905.51′	25°29′58.2"	1336.25′	2628.25′
2	5803.01′	20°07′24.2"	1029.67′	2038.13′

DIST	COUNTY	ROUTE	POST MILES TOTAL PROJECT	SHEET No.	TOTAL SHEETS
07	LA	5	4.0/5.9	1301	1597

REGISTERED CIVIL ENGINEER — DATE 2/12/11

4-9-12
PLANS APPROVAL DATE

REGISTERED PROFESSIONAL ENGINEER FRANK HSIAOSHIH WEI No. C 52918 Exp. 12-31-12 CIVIL STATE OF CALIFORNIA

The State of California or its officers or agents shall not be responsible for the accuracy or completeness of electronic copies of this plan sheet.

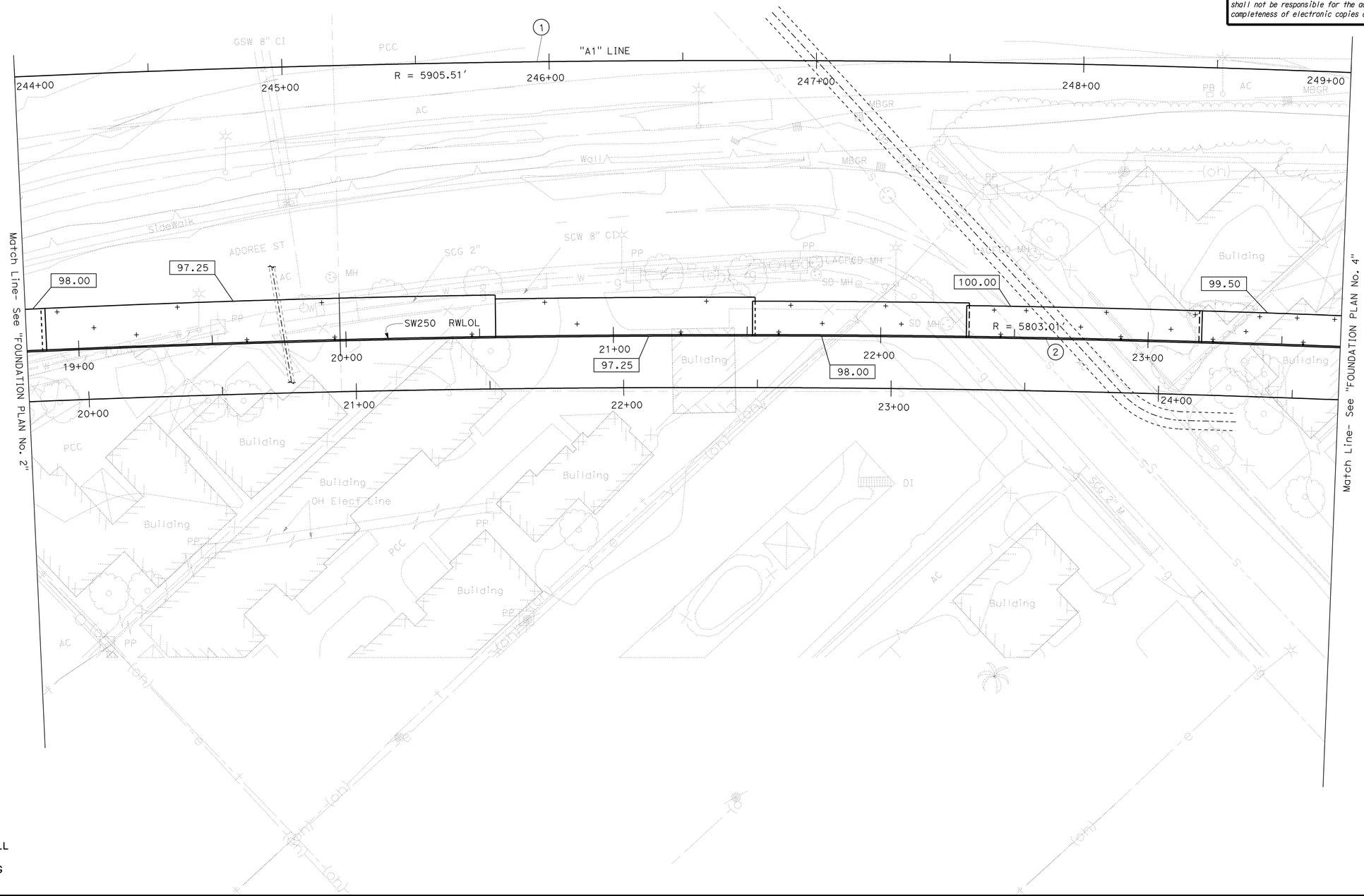

NOTE:
THE CONTRACTOR SHALL VERIFY ALL CONTROLLING FIELD DIMENSIONS BEFORE ORDERING OR FABRICATING ANY MATERIAL.

PRELIMINARY INVESTIGATION SECTION					
SCALE 1"=20′	VERT.DATUM NAVD88	PHOTOGRAMMETRY AS OF: X			
	HORZ.DATUM NAD83	SURVEYED	BY D7	CHECKED	BY X
ALIGNMENT TIES Dist. Traverse Sheet		DRAFTED	BY C. Pham	CHECKED	BY E. vigjar

DESIGN	BY L. SANCHEZ-MANZO	CHECKED F. WEI
DETAILS	BY P. PEREZ	CHECKED L. SANCHEZ-MANZO
QUANTITIES	BY L. SANCHEZ-MANZO	CHECKED V. Wami

STATE OF CALIFORNIA
DEPARTMENT OF TRANSPORTATION

DIVISION OF ENGINEERING SERVICES
STRUCTURE DESIGN
DESIGN BRANCH 21

BRIDGE NO. 53E0187
POST MILE 4.46

SOUNDWALL NO. 250
FOUNDATION PLAN NO. 3

STRUCTURES FOUNDATION PLAN SHEET (ENGLISH) (REV. 09-01-10)

ORIGINAL SCALE IN INCHES FOR REDUCED PLANS 0 1 2 3

UNIT: 3623
PROJECT NUMBER & PHASE: 0700001834 & 1 CONTRACT NO.: 07-215941

DISREGARD PRINTS BEARING EARLIER REVISION DATES → REVISION DATES 09/30/11 11/25/11 12/07/11 03/22/12

SHEET 15 OF 44

FILE => 53-E0187-e-fdpl03.dgn

USERNAME => s128843 DATE PLOTTED => 14-APR-2012 TIME PLOTTED => 10:29

DIST	COUNTY	ROUTE	POST MILES TOTAL PROJECT	SHEET No.	TOTAL SHEETS
07	LA	5	4.0/5.9	1302	1597

REGISTERED CIVIL ENGINEER 12/12/11 DATE

4-9-12
PLANS APPROVAL DATE

REGISTERED PROFESSIONAL ENGINEER FRANK HSIAOSHIH WEI No. C 52918 Exp. 12-31-12 CIVIL STATE OF CALIFORNIA

The State of California or its officers or agents shall not be responsible for the accuracy or completeness of electronic copies of this plan sheet.

NOTES:

1. ☐ Indicates Bottom of footing elevation.
2. Existing contours shown, for final countours, see "ROAD PLANS".
3. For footing dimensions and pile layout, see "Structure Plan" sheets.
4. Underground utilities as shown are approximate. See "ROAD PLANS" for details.

No.	R	Δ	T	L
1	5905.51′	25°29′58.2"	1336.25′	2628.25′
2	5803.01′	20°07′24.2"	1029.67′	2038.13′

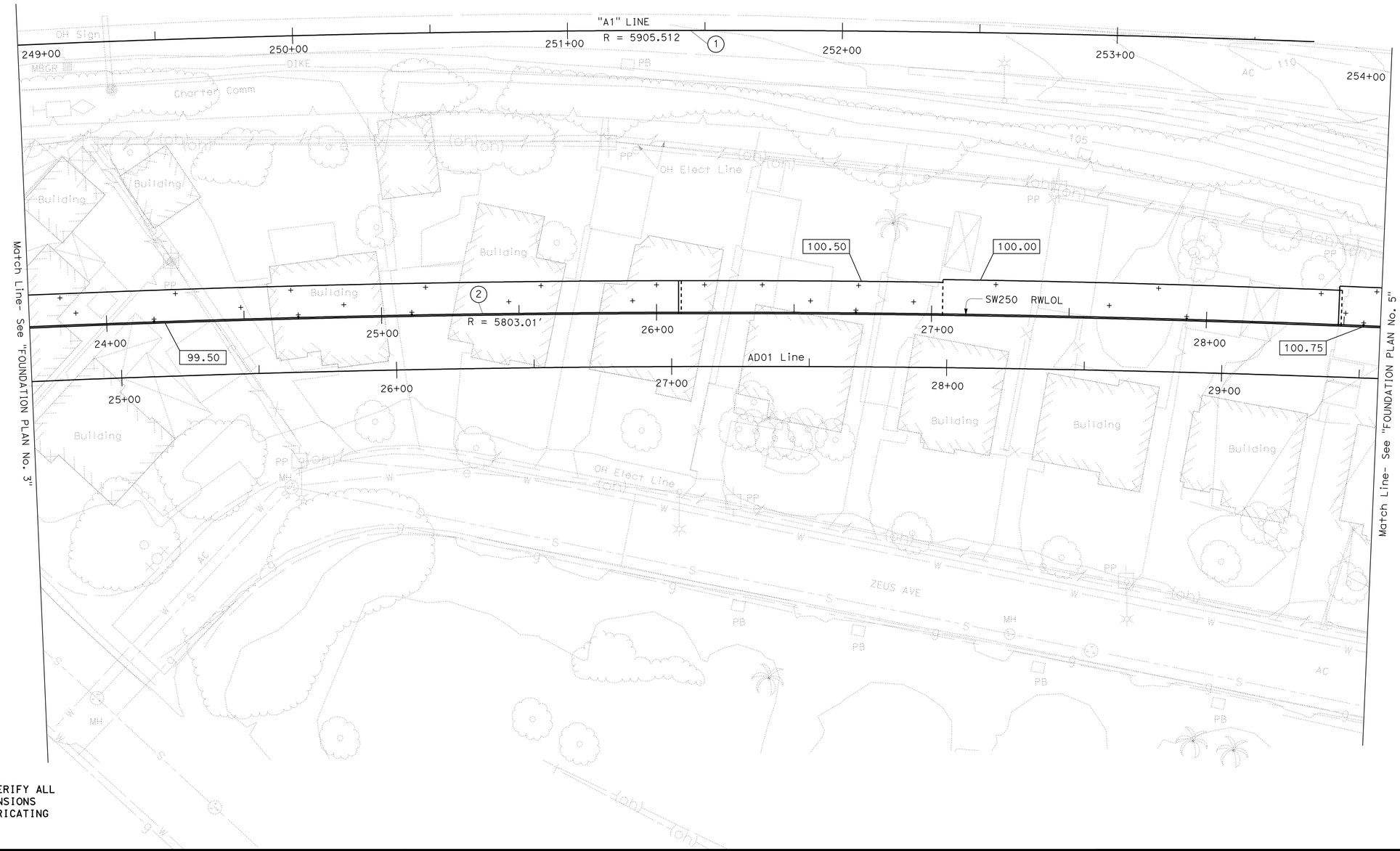

NOTE:
THE CONTRACTOR SHALL VERIFY ALL CONTROLLING FIELD DIMENSIONS BEFORE ORDERING OR FABRICATING ANY MATERIAL.

PRELIMINARY INVESTIGATION SECTION					
SCALE 1"=20′	VERT.DATUM NAVD88	PHOTOGRAMMETRY AS OF: X			
	HORZ.DATUM NAD83	SURVEYED	BY D7	CHECKED	BY X
ALIGNMENT TIES Dist. Traverse Sheet		DRAFTED	BY C. Pham	CHECKED	BY E. Vigjar

DESIGN	BY L. SANCHEZ-MANZO	CHECKED F. WEI	
DETAILS	BY P. PEREZ	CHECKED L. SANCHEZ-MANZO	
QUANTITIES	BY L. SANCHEZ-MANZO	CHECKED V. Wami	

STATE OF CALIFORNIA
DEPARTMENT OF TRANSPORTATION

DIVISION OF ENGINEERING SERVICES
STRUCTURE DESIGN
DESIGN BRANCH 21

BRIDGE NO. 53E0187
POST MILE 4.46

SOUND WALL NO. 250
FOUNDATION PLAN NO. 4

STRUCTURES FOUNDATION PLAN SHEET (ENGLISH) (REV. 09-01-10)

ORIGINAL SCALE IN INCHES FOR REDUCED PLANS 0 1 2 3

UNIT: 3623
PROJECT NUMBER & PHASE: 0700001834 & 1 CONTRACT NO.: 07-215941

DISREGARD PRINTS BEARING EARLIER REVISION DATES

REVISION DATES: 09/30/11 11/25/11 12/07/11 03/22/12

SHEET 16 OF 44

FILE => 53-E0187-e-fdpl04.dgn

USERNAME => s128843 DATE PLOTTED => 14-APR-2012 TIME PLOTTED => 10:29

DIST	COUNTY	ROUTE	POST MILES TOTAL PROJECT	SHEET No.	TOTAL SHEETS
07	LA	5	4.0/5.9	1303	1597

REGISTERED CIVIL ENGINEER — DATE 12/12/11

4-9-12
PLANS APPROVAL DATE

REGISTERED PROFESSIONAL ENGINEER — FRANK HSIAOSHIH WEI — No. C 52918 — Exp. 12-31-12 — CIVIL — STATE OF CALIFORNIA

The State of California or its officers or agents shall not be responsible for the accuracy or completeness of electronic copies of this plan sheet.

NOTES:

1. ☐ Indicates Bottom of footing elevation.
2. Existing contours shown, for final countours, see "ROAD PLANS".
3. For footing dimensions and pile layout, see "Structure Plan" sheets.
4. Underground utilities as shown are approximate. See "ROAD PLANS" for details.

No.	R	Δ	T	L
1	5905.51′	25°29′58.2"	1336.25′	2628.25′
2	5803.01′	20°07′24.2"	1029.67′	2038.13′

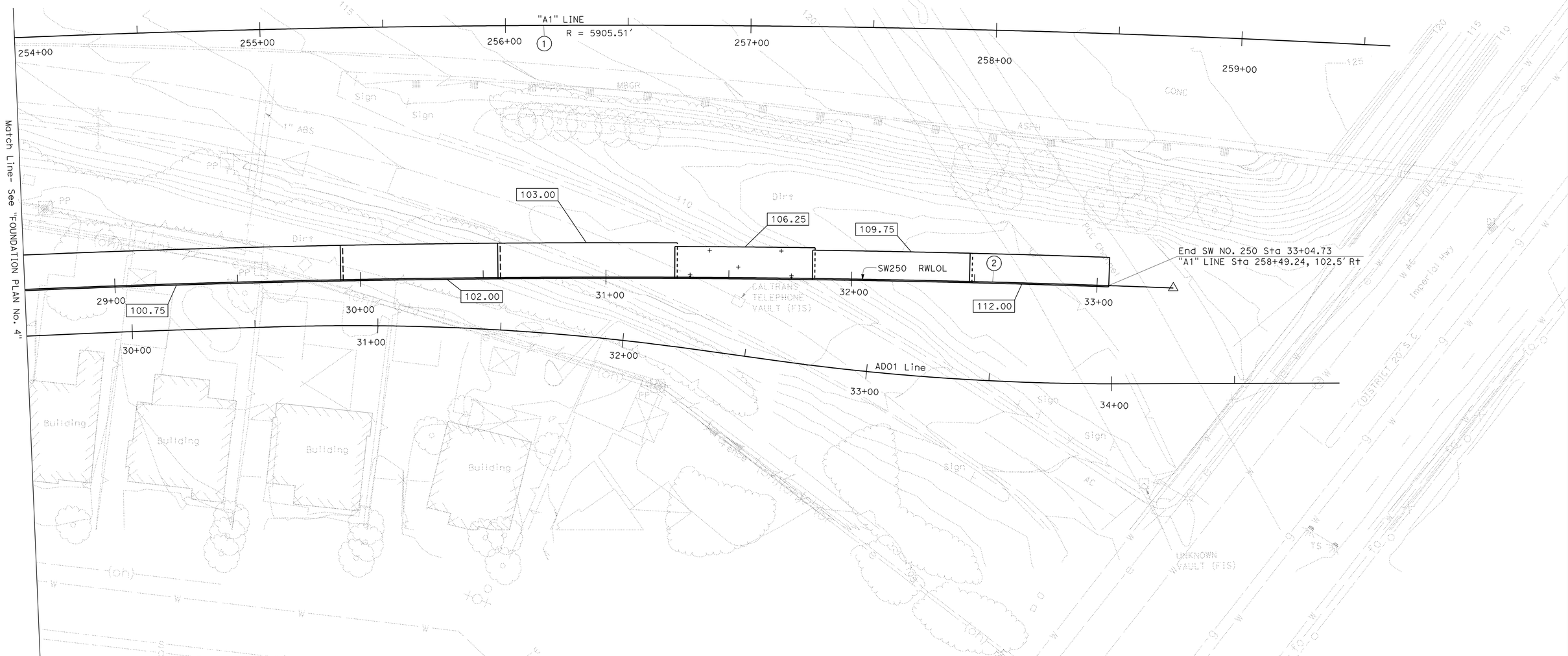

NOTE:
THE CONTRACTOR SHALL VERIFY ALL CONTROLLING FIELD DIMENSIONS BEFORE ORDERING OR FABRICATING ANY MATERIAL.

PRELIMINARY INVESTIGATION SECTION

SCALE 1"=20′	VERT.DATUM NAVD88	PHOTOGRAMMETRY AS OF: X		
	HORZ.DATUM NAD83	SURVEYED	BY D7	CHECKED BY X
ALIGNMENT TIES Dist. Traverse Sheet		DRAFTED	BY C. Pham	CHECKED BY E. Viajar

DESIGN	BY L. SANCHEZ-MANZO	CHECKED F. WEI
DETAILS	BY P. PEREZ	CHECKED L. SANCHEZ-MANZO
QUANTITIES	BY L. SANCHEZ-MANZO	CHECKED V. Wami

STATE OF CALIFORNIA
DEPARTMENT OF TRANSPORTATION

DIVISION OF ENGINEERING SERVICES
STRUCTURE DESIGN
DESIGN BRANCH 21

BRIDGE NO. 53E0187
POST MILE 4.46

SOUND WALL NO. 250
FOUNDATION PLAN NO. 5

STRUCTURES FOUNDATION PLAN SHEET (ENGLISH) (REV. 09-01-10)

ORIGINAL SCALE IN INCHES FOR REDUCED PLANS 0 1 2 3

UNIT: 3623
PROJECT NUMBER & PHASE: 0700001834 & 1 CONTRACT NO.: 07-215941

DISREGARD PRINTS BEARING EARLIER REVISION DATES → 09/30/11 11/25/11 12/07/11 03/22/12

SHEET 17 OF 44

FILE => 53-E0187-e-fdpl05.dgn

USERNAME => s128843 DATE PLOTTED => 14-APR-2012 TIME PLOTTED => 10:29

DIST	COUNTY	ROUTE	POST MILES TOTAL PROJECT	SHEET No.	TOTAL SHEETS
07	LA	5	4.0/5.9	1304	1597

REGISTERED CIVIL ENGINEER 12/12/11 DATE

4-9-12
PLANS APPROVAL DATE

REGISTERED PROFESSIONAL ENGINEER FRANK HSIAOSHIH WEI No. C 52918 Exp. 12-31-12 CIVIL STATE OF CALIFORNIA

The State of California or its officers or agents shall not be responsible for the accuracy or completeness of electronic copies of this plan sheet.

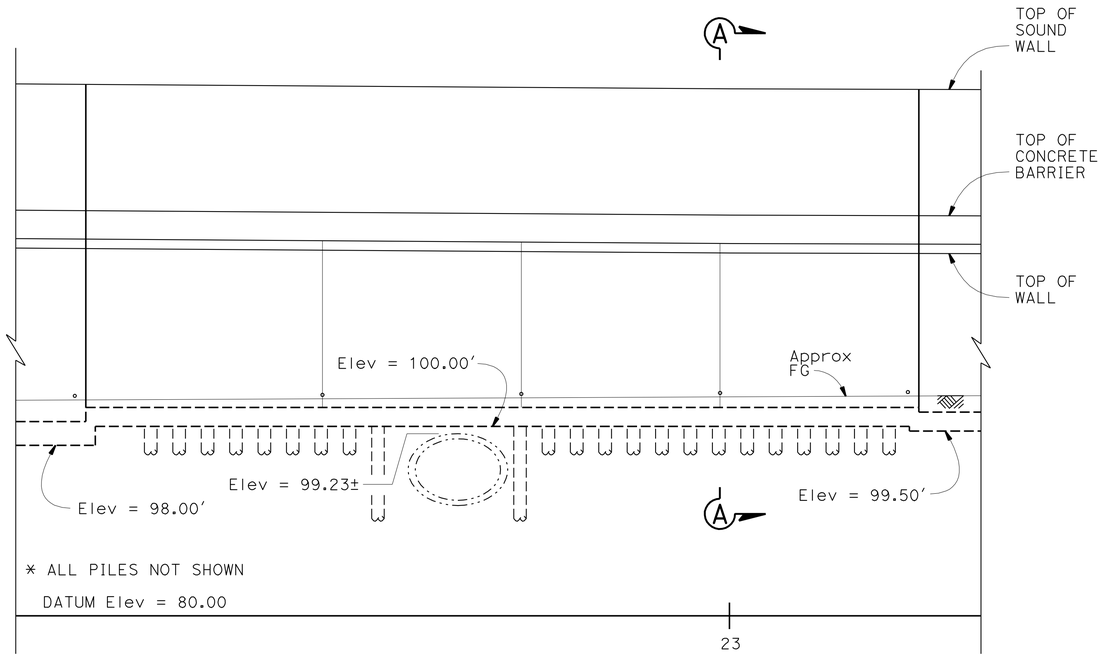

ELEVATION
1/8" = 1'-0"

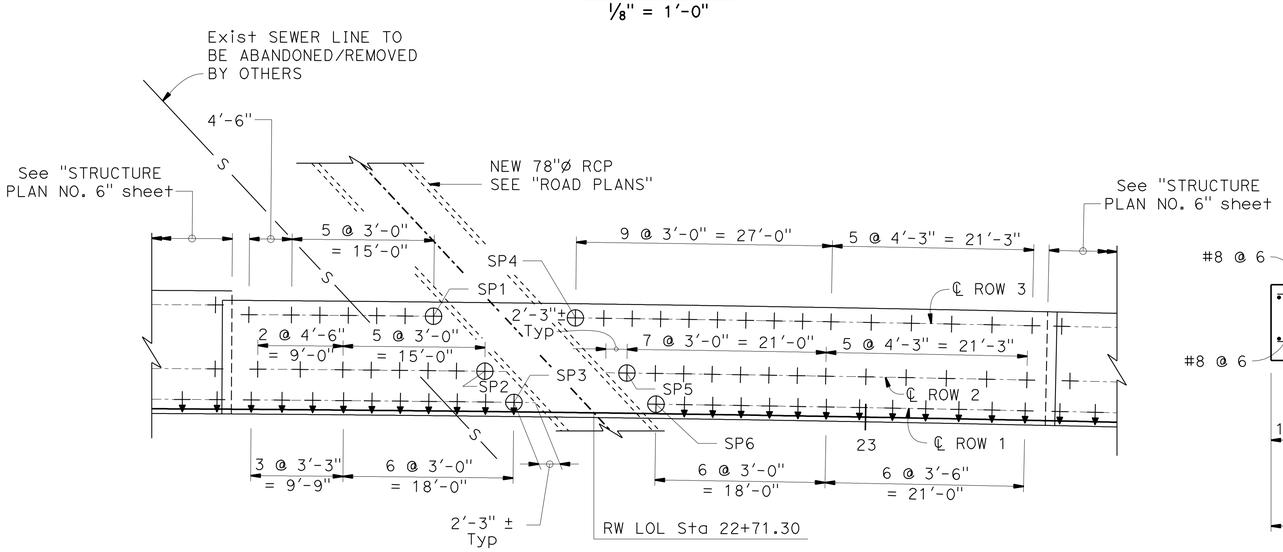

PLAN
1/8" = 1'-0"

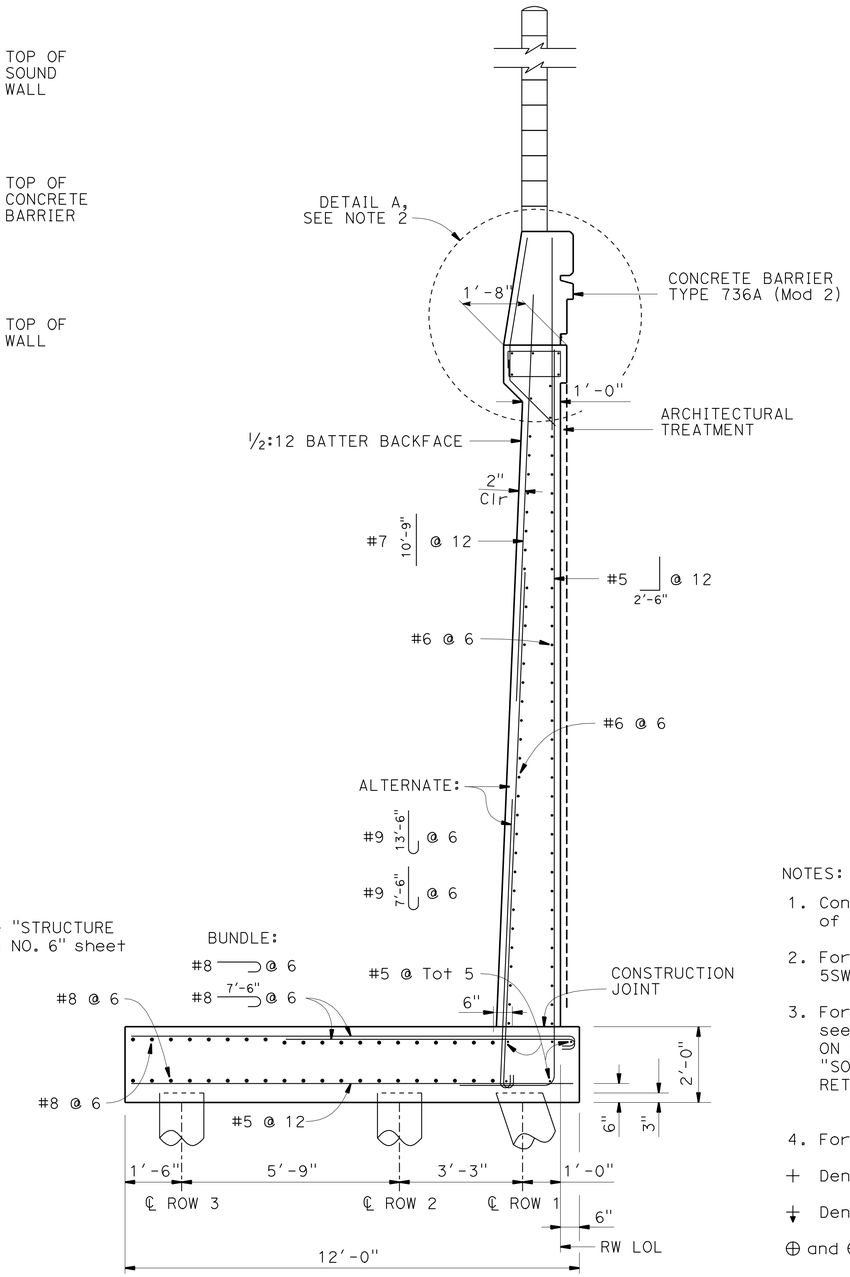

SECTION A-A
1/2" = 1'-0"

WORKING POINT	RW LOL STATION AND OFFSET
SP1	22+54.26, 10.00' Lt
SP2	22+59.74, 4.25' Lt
SP3	22+62.84, 1.00' Lt
SP4	22+69.22, 10.00' Lt
SP5	22+74.73, 4.25' Lt
SP6	22+77.85, 1.00' Lt

NOTES:

1. Contractor shall field verify the location of RCP prior to pile installation.
2. For Detail A, see "RETAINING WALL TYPE 5SWBP - DETAILS NO. 2" sheet.
3. For sound wall and and barrier reinforcement, see "SOUNDWALL - MASONRY BLOCK WITH BARRIER ON RETAINING WALL DETAILS NO. 1" and "SOUNDWALL - MASONRY BLOCK WITH BARRIER ON RETAINING WALL DETAILS NO. 2" sheets.
4. For drainage notes and details, see B3-8

\+ Denotes Vertical Pile

⊕ Denotes 1:3 Battered Pile

⊕ and ⊕ Predrilled holes required

NOTE:
THE CONTRACTOR SHALL VERIFY ALL CONTROLLING FIELD DIMENSIONS BEFORE ORDERING OR FABRICATING ANY MATERIAL.

	BY	CHECKED
DESIGN	L. SANCHEZ-MANZO	F. WEI
DETAILS	P. PEREZ	L. SANCHEZ-MANZO
QUANTITIES	L. SANCHEZ-MANZO	V. Wami

STATE OF CALIFORNIA
DEPARTMENT OF TRANSPORTATION

DIVISION OF ENGINEERING SERVICES
STRUCTURE DESIGN
DESIGN BRANCH 21

BRIDGE NO. 53E0187
POST MILE 4.46

SOUND WALL NO. 250
RETAINING WALL DETAILS

STRUCTURES DESIGN DETAIL SHEET (ENGLISH) (REV. 09-01-10)

ORIGINAL SCALE IN INCHES FOR REDUCED PLANS 0 1 2 3

UNIT: 3623
PROJECT NUMBER & PHASE: 0700001834 & 1 CONTRACT NO.: 07-215941

DISREGARD PRINTS BEARING EARLIER REVISION DATES

REVISION DATES 09/30/11 11/25/11 12/07/11 03/22/12

SHEET 18 OF 44

FILE => 53-E0187-g-rw_dt01.dgn

USERNAME => s128843 DATE PLOTTED => 14-APR-2012 TIME PLOTTED => 10:29

DIST	COUNTY	ROUTE	POST MILES TOTAL PROJECT	SHEET No.	TOTAL SHEETS
07	LA	5	4.0/5.9	1305	1597

REGISTERED CIVIL ENGINEER — DATE 12/11

4-9-12
PLANS APPROVAL DATE

REGISTERED PROFESSIONAL ENGINEER FRANK HSIAOSHIH WEI No. C 52918 Exp. 12-31-12 CIVIL STATE OF CALIFORNIA

The State of California or its officers or agents shall not be responsible for the accuracy or completeness of electronic copies of this plan sheet.

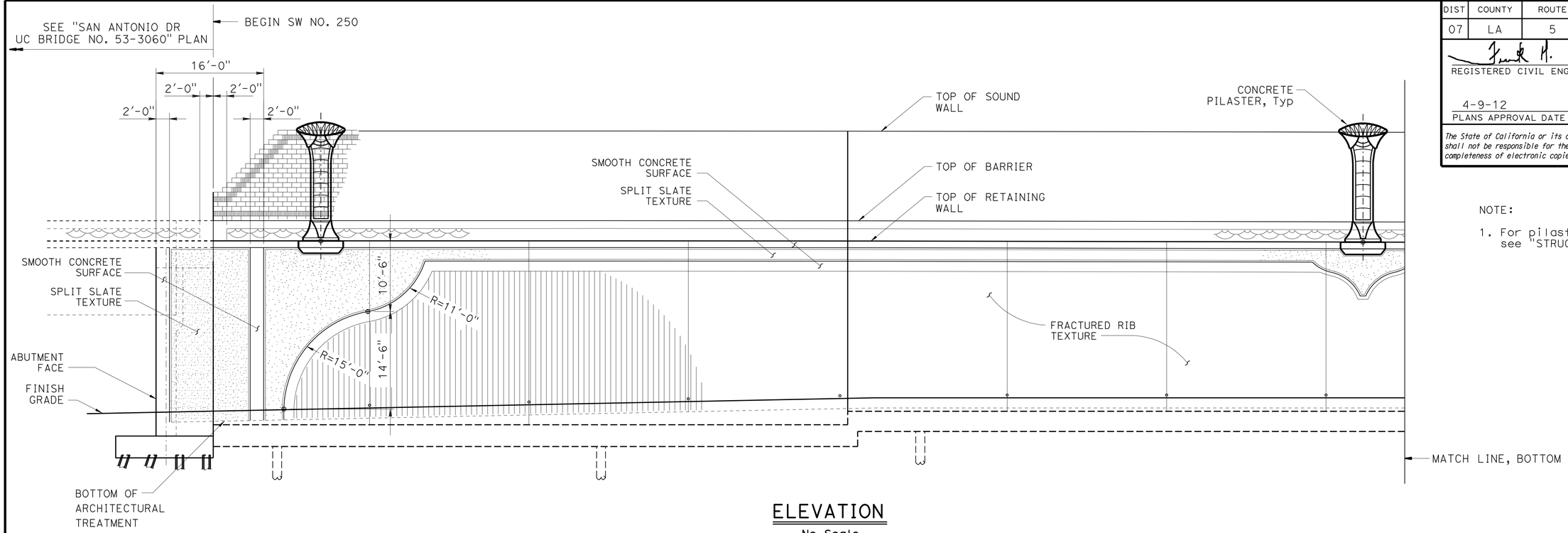

ELEVATION
No Scale

NOTE:

1. For pilaster spacing, see "STRUCTURE PLAN" sheets.

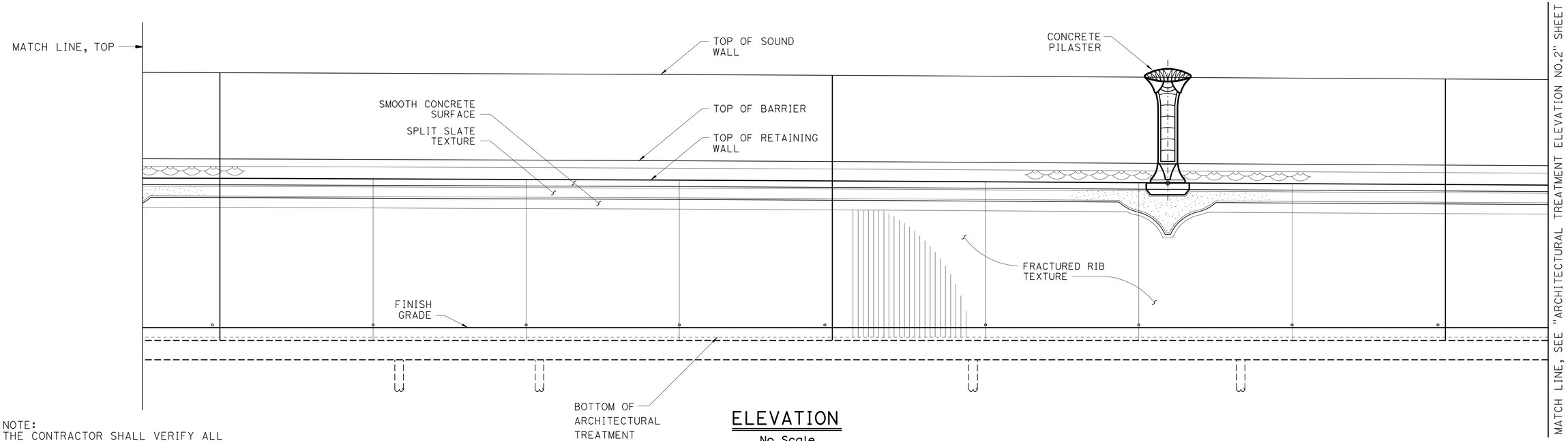

ELEVATION
No Scale

NOTE:
THE CONTRACTOR SHALL VERIFY ALL CONTROLLING FIELD DIMENSIONS BEFORE ORDERING OR FABRICATING ANY MATERIAL.

	BY	CHECKED
DESIGN	I. TASABIA	F. WEI
DETAILS	P. PEREZ	L. SANCHEZ-MANZO
QUANTITIES	L. SANCHEZ-MANZO	V. WAMI

STATE OF CALIFORNIA
DEPARTMENT OF TRANSPORTATION

DIVISION OF ENGINEERING SERVICES
STRUCTURE DESIGN
DESIGN BRANCH 21

BRIDGE NO. 53E0187
POST MILE 4.46

SOUND WALL NO. 250
ARCHITECTURAL TREATMEMT ELEVATION NO. 1

STRUCTURES DESIGN DETAIL SHEET (ENGLISH) (REV. 09-01-10)

ORIGINAL SCALE IN INCHES FOR REDUCED PLANS 0 1 2 3

UNIT: 3623
PROJECT NUMBER & PHASE: 07 00001834 1
CONTRACT NO.: 07-215941

DISREGARD PRINTS BEARING EARLIER REVISION DATES
REVISION DATES 11/23/11 12/02/11 03/22/12

SHEET 19 OF 44

FILE => 53-E0187-I-arch_treat_elev01.dgn

USERNAME => s128843 DATE PLOTTED => 14-APR-2012 TIME PLOTTED => 10:30

DIST	COUNTY	ROUTE	POST MILES TOTAL PROJECT	SHEET No.	TOTAL SHEETS
07	LA	5	4.0/5.9	1306	1597

REGISTERED CIVIL ENGINEER 12/12/11 DATE

4-9-12
PLANS APPROVAL DATE

REGISTERED PROFESSIONAL ENGINEER FRANK HSIAOSHIH WEI No. C 52918 Exp. 12-31-12 CIVIL STATE OF CALIFORNIA

The State of California or its officers or agents shall not be responsible for the accuracy or completeness of electronic copies of this plan sheet.

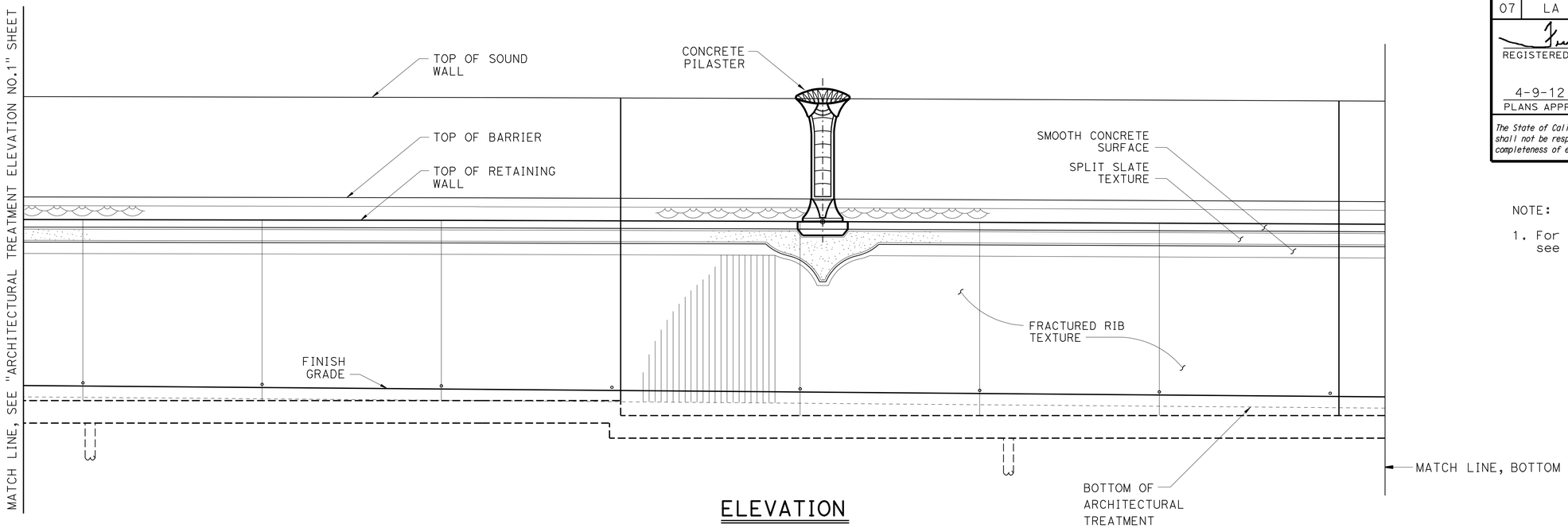

ELEVATION
No Scale

NOTE:

1. For pilaster spacing, see "STRUCTURE PLAN" sheets.

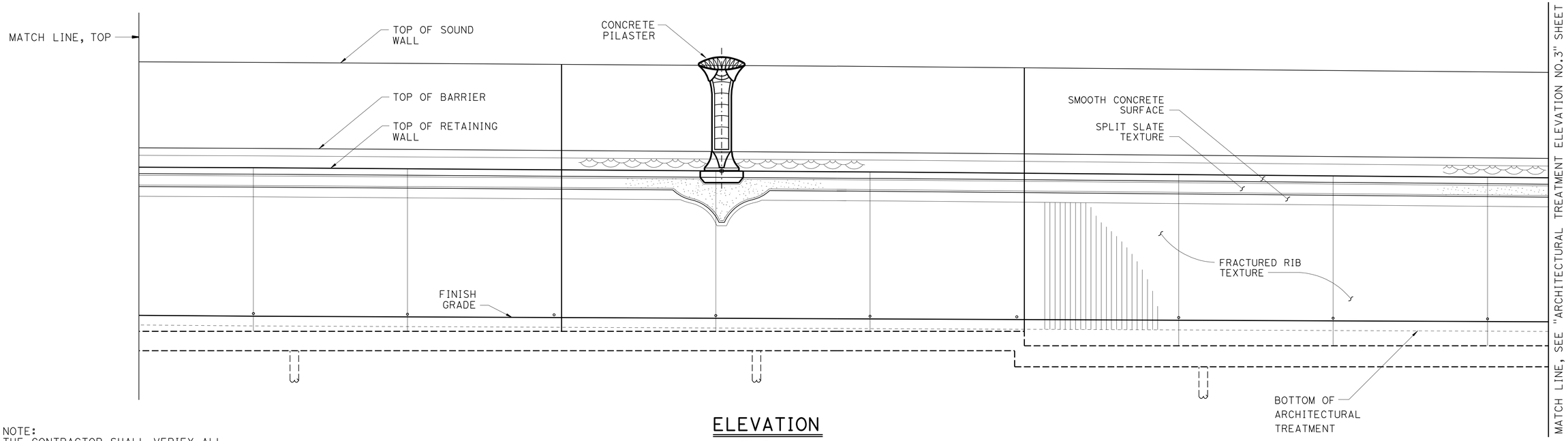

ELEVATION
No Scale

NOTE:
THE CONTRACTOR SHALL VERIFY ALL CONTROLLING FIELD DIMENSIONS BEFORE ORDERING OR FABRICATING ANY MATERIAL.

	BY	CHECKED
DESIGN	I. TASABIA	F. WEI
DETAILS	P. PEREZ	L. SANCHEZ-MANZO
QUANTITIES	L. SANCHEZ-MANZO	V. WAMI

STATE OF CALIFORNIA
DEPARTMENT OF TRANSPORTATION

DIVISION OF ENGINEERING SERVICES
STRUCTURE DESIGN
DESIGN BRANCH 21

BRIDGE NO. 53E0187
POST MILE 4.46

SOUND WALL NO. 250
ARCHITECTURAL TREATMEMT ELEVATION NO. 2

STRUCTURES DESIGN DETAIL SHEET (ENGLISH) (REV. 09-01-10)

ORIGINAL SCALE IN INCHES FOR REDUCED PLANS 0 1 2 3

UNIT: 3623
PROJECT NUMBER & PHASE: 07 00001834 1 CONTRACT NO.: 07-215941

DISREGARD PRINTS BEARING EARLIER REVISION DATES → 11/25/11 12/12/11 03/22/12

SHEET 20 OF 44

FILE => 53-E0187-I-arch_treat_elev02.dgn

USERNAME => s128813 DATE PLOTTED => 14-APR-2012 TIME PLOTTED => 10:30

DIST	COUNTY	ROUTE	POST MILES TOTAL PROJECT	SHEET No.	TOTAL SHEETS
07	LA	5	4.0/5.9	1307	1597

REGISTERED CIVIL ENGINEER 12/12/11 DATE

4-9-12
PLANS APPROVAL DATE

REGISTERED PROFESSIONAL ENGINEER FRANK HSIAOSHIH WEI No. C 52918 Exp. 12-31-12 CIVIL STATE OF CALIFORNIA

The State of California or its officers or agents shall not be responsible for the accuracy or completeness of electronic copies of this plan sheet.

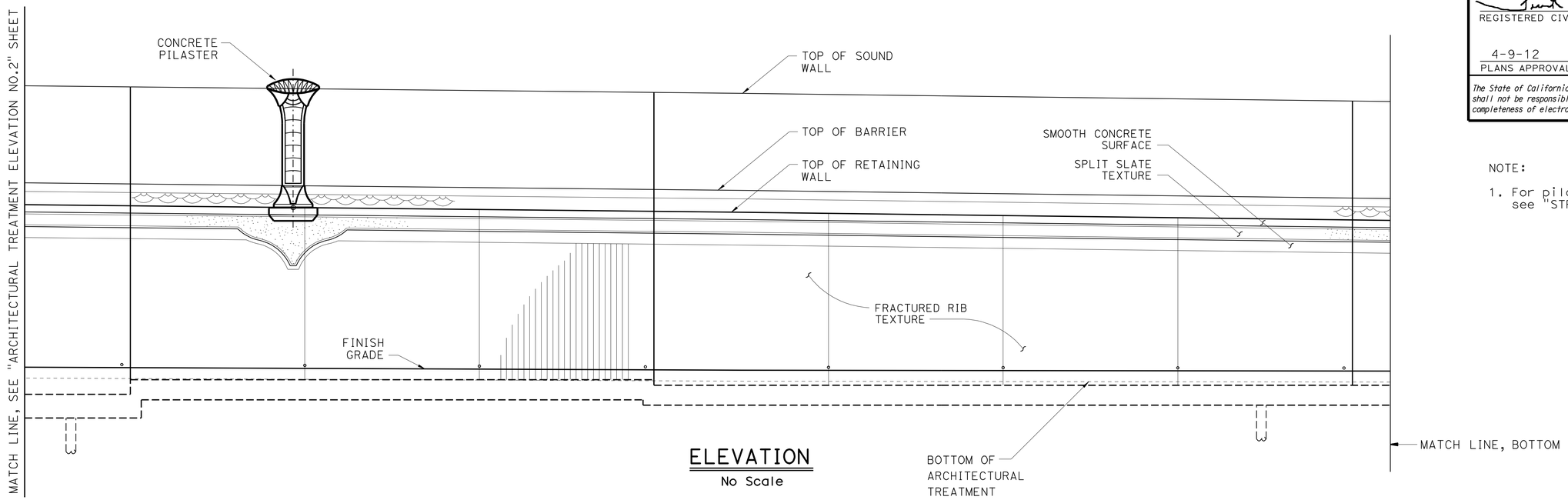

ELEVATION
No Scale

NOTE:

1. For pilaster spacing, see "STRUCTURE PLAN" sheets.

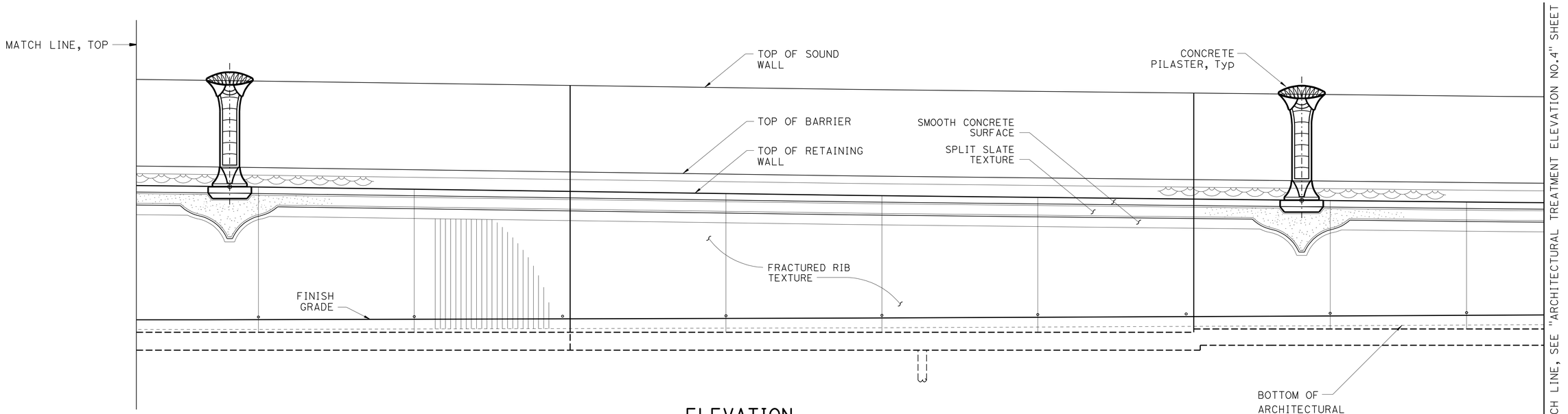

ELEVATION
No Scale

NOTE:
THE CONTRACTOR SHALL VERIFY ALL CONTROLLING FIELD DIMENSIONS BEFORE ORDERING OR FABRICATING ANY MATERIAL.

	BY	CHECKED
DESIGN	I. TASABIA	F. WEI
DETAILS	P. PEREZ	L. SANCHEZ-MANZO
QUANTITIES	L. SANCHEZ-MANZO	V. WAMI

STATE OF CALIFORNIA
DEPARTMENT OF TRANSPORTATION

DIVISION OF ENGINEERING SERVICES
STRUCTURE DESIGN
DESIGN BRANCH 21

BRIDGE NO. 53E0187
POST MILE 4.46

SOUND WALL NO. 250
ARCHITECTURAL TREATMEMT ELEVATION NO. 3

STRUCTURES DESIGN DETAIL SHEET (ENGLISH) (REV. 09-01-10)

ORIGINAL SCALE IN INCHES FOR REDUCED PLANS 0 1 2 3

UNIT: 3623
PROJECT NUMBER & PHASE: 07 00001834 1 CONTRACT NO.: 07-215941

DISREGARD PRINTS BEARING EARLIER REVISION DATES

REVISION DATES 11/23/11 12/12/11 03/22/12

SHEET 21 OF 44

FILE => 53-E0187-1-arch_treat_elev03.dgn

USERNAME => s128843 DATE PLOTTED => 14-APR-2012 TIME PLOTTED => 10:30

DIST	COUNTY	ROUTE	POST MILES TOTAL PROJECT	SHEET No.	TOTAL SHEETS
07	LA	5	4.0/5.9	1308	1597

REGISTERED CIVIL ENGINEER 12/12/11 DATE

4-9-12
PLANS APPROVAL DATE

REGISTERED PROFESSIONAL ENGINEER FRANK HSIAOSHIH WEI No. C 52918 Exp. 12-31-12 CIVIL STATE OF CALIFORNIA

The State of California or its officers or agents shall not be responsible for the accuracy or completeness of electronic copies of this plan sheet.

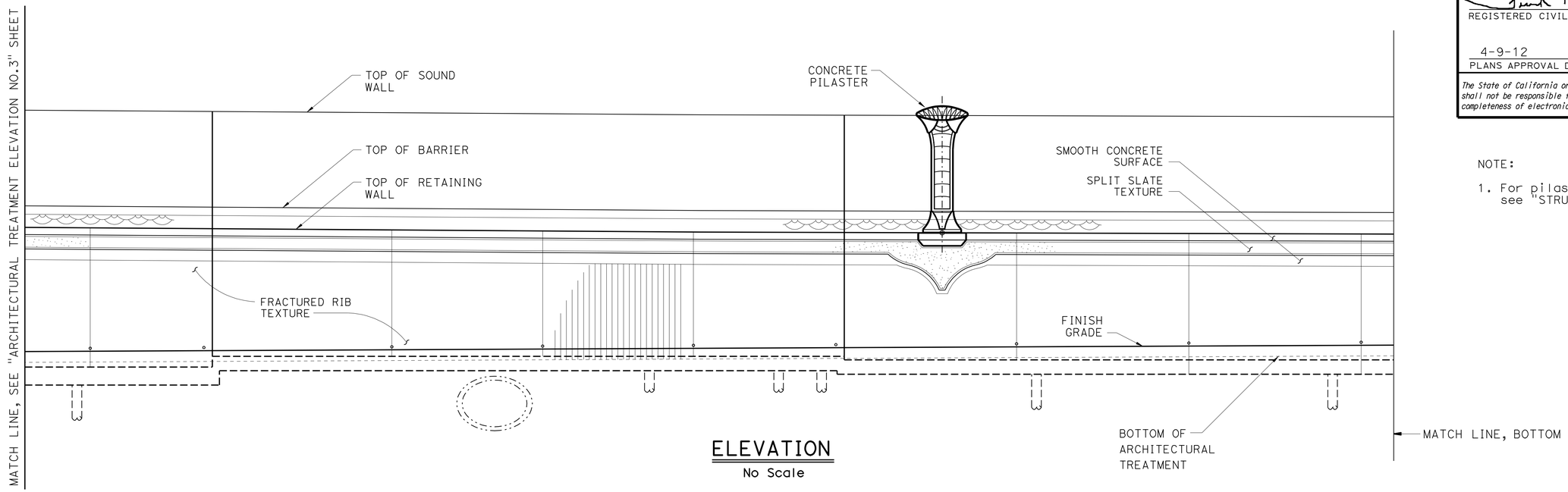

ELEVATION
No Scale

NOTE:

1. For pilaster spacing, see "STRUCTURE PLAN" sheets.

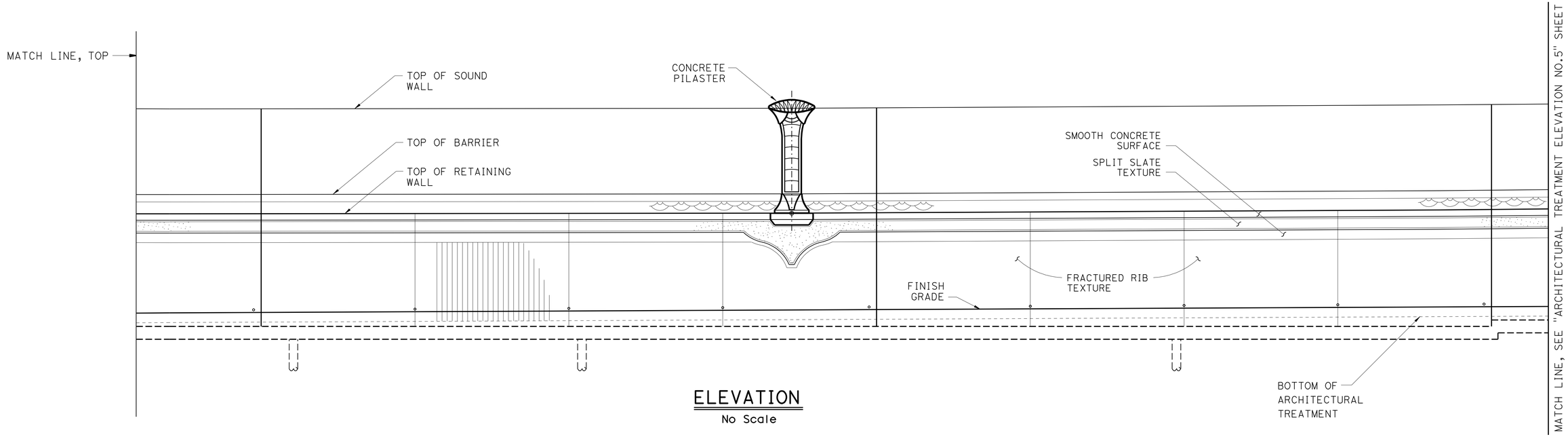

ELEVATION
No Scale

NOTE:
THE CONTRACTOR SHALL VERIFY ALL CONTROLLING FIELD DIMENSIONS BEFORE ORDERING OR FABRICATING ANY MATERIAL.

	BY	CHECKED
DESIGN	I. TASABIA	F. WEI
DETAILS	P. PEREZ	L. SANCHEZ-MANZO
QUANTITIES	L. SANCHEZ-MANZO	V. WAMI

STATE OF CALIFORNIA
DEPARTMENT OF TRANSPORTATION

DIVISION OF ENGINEERING SERVICES
STRUCTURE DESIGN
DESIGN BRANCH 21

BRIDGE NO. 53E0187
POST MILE 4.46

SOUND WALL NO. 250
ARCHITECTURAL TREATMEMT ELEVATION NO. 4

STRUCTURES DESIGN DETAIL SHEET (ENGLISH) (REV. 09-01-10)

ORIGINAL SCALE IN INCHES FOR REDUCED PLANS 0 1 2 3

UNIT: 3623
PROJECT NUMBER & PHASE: 07 00001834 1 CONTRACT NO.: 07-215941

DISREGARD PRINTS BEARING EARLIER REVISION DATES

REVISION DATES 11/25/11 12/08/11 03/22/12

SHEET 22 OF 44

FILE => 53-E0187-1-arch_treat_elev04.dgn

USERNAME => s128843 DATE PLOTTED => 14-APR-2012 TIME PLOTTED => 10:30

DIST	COUNTY	ROUTE	POST MILES TOTAL PROJECT	SHEET No.	TOTAL SHEETS
07	LA	5	4.0/5.9	1309	1597

REGISTERED CIVIL ENGINEER 12/12/11 DATE

4-9-12
PLANS APPROVAL DATE

REGISTERED PROFESSIONAL ENGINEER FRANK HSIAOSHIH WEI No. C 52918 Exp. 12-31-12 CIVIL STATE OF CALIFORNIA

The State of California or its officers or agents shall not be responsible for the accuracy or completeness of electronic copies of this plan sheet.

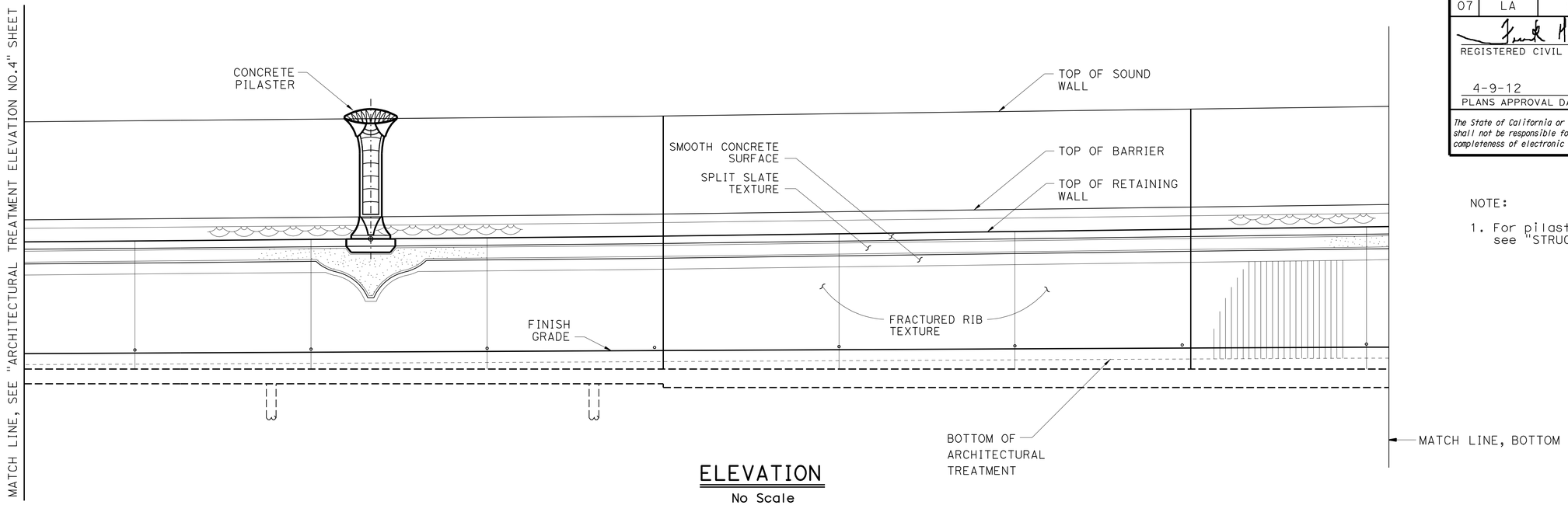

ELEVATION

No Scale

NOTE:

1. For pilaster spacing, see "STRUCTURE PLAN" sheets.

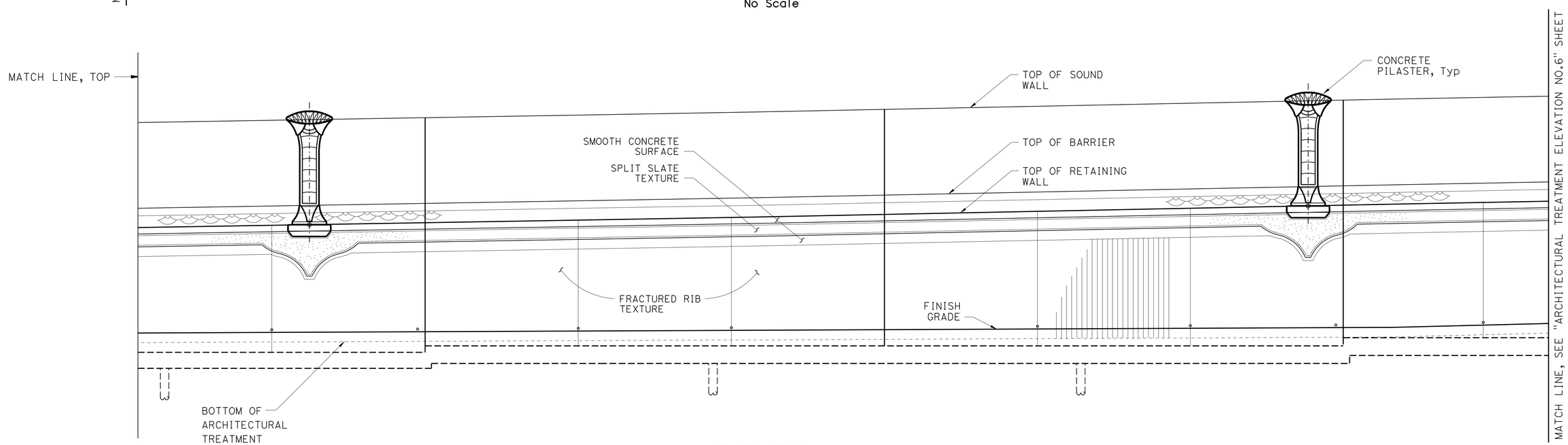

ELEVATION

No Scale

NOTE:
THE CONTRACTOR SHALL VERIFY ALL CONTROLLING FIELD DIMENSIONS BEFORE ORDERING OR FABRICATING ANY MATERIAL.

	BY	CHECKED
DESIGN	I. TASABIA	F. WEI
DETAILS	P. PEREZ	L. SANCHEZ-MANZO
QUANTITIES	L. SANCHEZ-MANZO	V. WAMI

STATE OF CALIFORNIA
DEPARTMENT OF TRANSPORTATION

DIVISION OF ENGINEERING SERVICES
STRUCTURE DESIGN
DESIGN BRANCH 21

BRIDGE NO. 53E0187
POST MILE 4.46

SOUND WALL NO. 250

ARCHITECTURAL TREATMEMT ELEVATION NO. 5

STRUCTURES DESIGN DETAIL SHEET (ENGLISH) (REV. 09-01-10)

ORIGINAL SCALE IN INCHES FOR REDUCED PLANS 0 1 2 3

UNIT: 3623
PROJECT NUMBER & PHASE: 07 00001834 1 CONTRACT NO.: 07-215941

DISREGARD PRINTS BEARING EARLIER REVISION DATES

REVISION DATES 11/23/11 12/12/11 03/22/12

SHEET 23 OF 44

FILE => 53-E0187-1-arch_treat_elev05.dgn

USERNAME => s128843 DATE PLOTTED => 14-APR-2012 TIME PLOTTED => 10:30

DIST	COUNTY	ROUTE	POST MILES TOTAL PROJECT	SHEET No.	TOTAL SHEETS
07	LA	5	4.0/5.9	1310	1597

REGISTERED CIVIL ENGINEER 12/12/11 DATE

4-9-12
PLANS APPROVAL DATE

REGISTERED PROFESSIONAL ENGINEER FRANK HSIAOSHIH WEI No. C 52918 Exp. 12-31-12 CIVIL STATE OF CALIFORNIA

The State of California or its officers or agents shall not be responsible for the accuracy or completeness of electronic copies of this plan sheet.

NOTE:

1. For pilaster spacing, see "STRUCTURE PLAN" sheets.

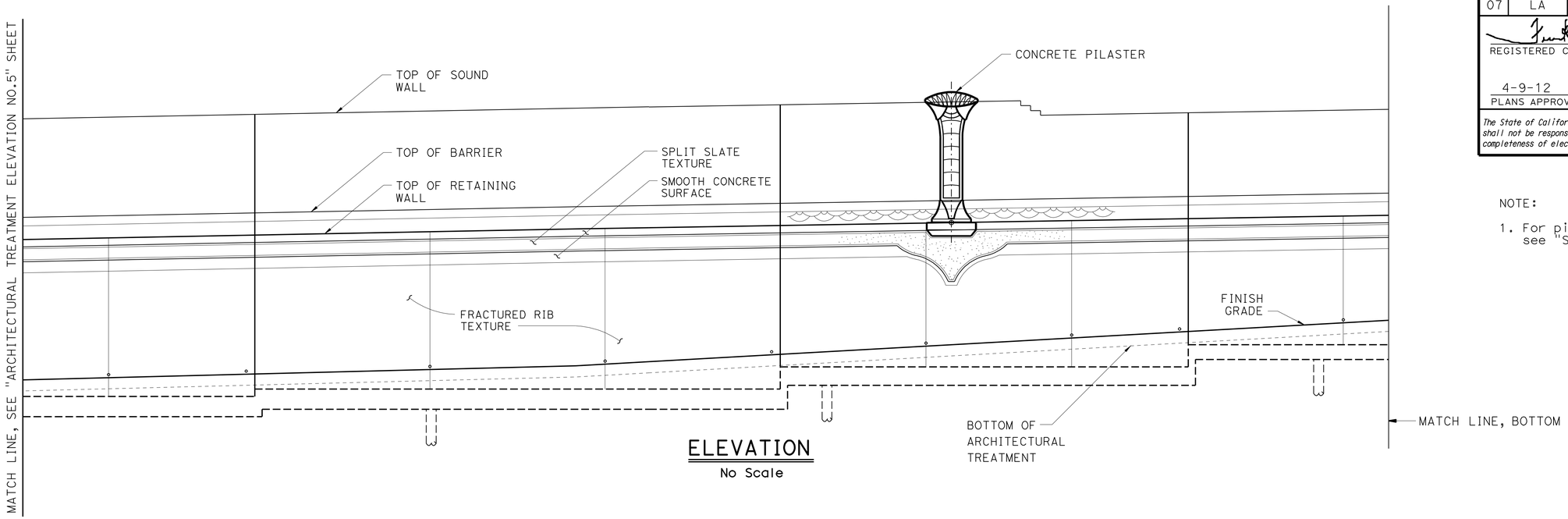

ELEVATION
No Scale

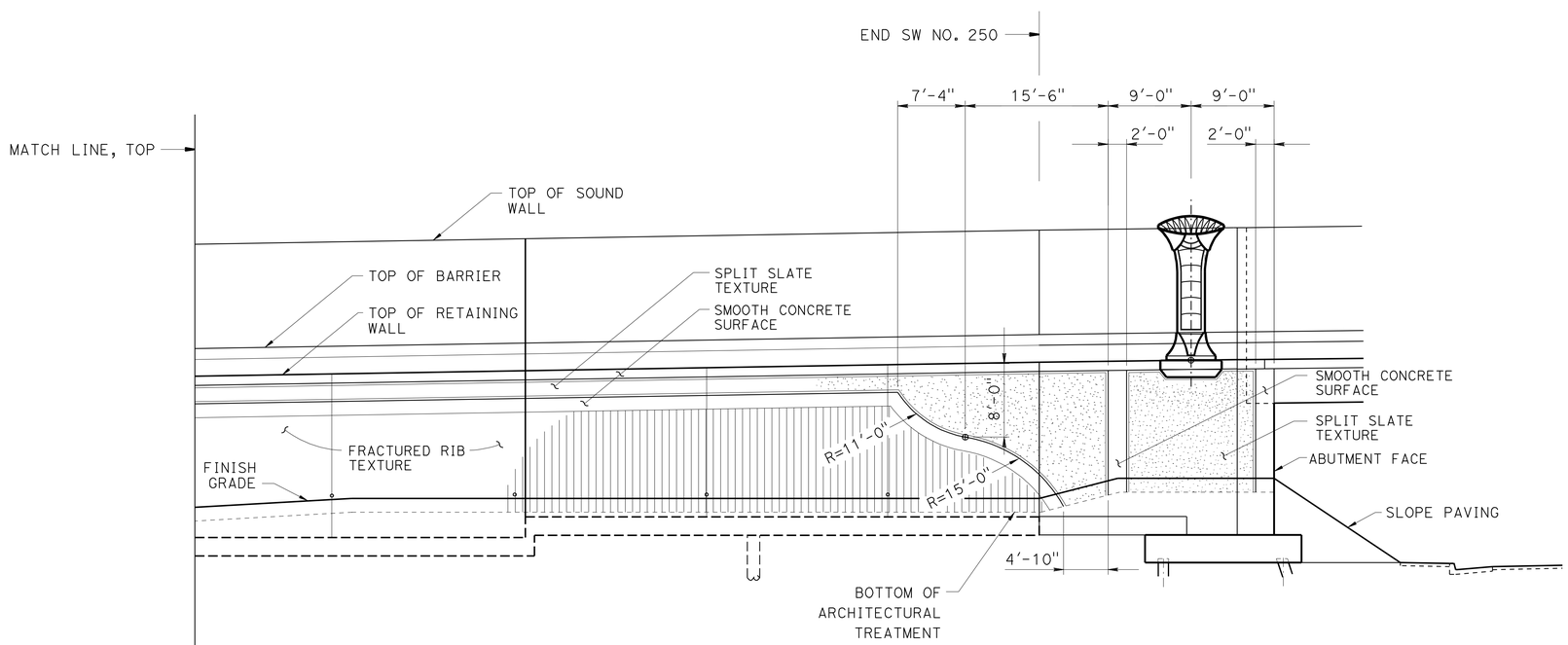

ELEVATION
No Scale

NOTE:
THE CONTRACTOR SHALL VERIFY ALL CONTROLLING FIELD DIMENSIONS BEFORE ORDERING OR FABRICATING ANY MATERIAL.

DESIGN	BY I. TASABIA	CHECKED F. WEI	
DETAILS	BY P. PEREZ	CHECKED L. SANCHEZ-MANZO	
QUANTITIES	BY L. SANCHEZ-MANZO	CHECKED V. WAMI	

STATE OF CALIFORNIA
DEPARTMENT OF TRANSPORTATION

DIVISION OF ENGINEERING SERVICES
STRUCTURE DESIGN
DESIGN BRANCH 21

BRIDGE NO. 53E0187
POST MILE 4.46

SOUND WALL NO. 250
ARCHITECTURAL TREATMEMT ELEVATION NO. 6

STRUCTURES DESIGN DETAIL SHEET (ENGLISH) (REV. 09-01-10)

ORIGINAL SCALE IN INCHES FOR REDUCED PLANS 0 1 2 3

UNIT: 3623
PROJECT NUMBER & PHASE: 07 00001834 1 CONTRACT NO.: 07-215941

DISREGARD PRINTS BEARING EARLIER REVISION DATES

REVISION DATES 11/23/11 12/12/11 03/22/12

SHEET 24 OF 44

FILE => 53-E0187-I-arch_treat_elev06.dgn

USERNAME => s128843 DATE PLOTTED => 14-APR-2012 TIME PLOTTED => 10:30

DIST	COUNTY	ROUTE	POST MILES TOTAL PROJECT	SHEET No.	TOTAL SHEETS
07	LA	5	4.0/5.9	1311	1597

REGISTERED CIVIL ENGINEER — DATE 2/12/11

4-9-12
PLANS APPROVAL DATE

REGISTERED PROFESSIONAL ENGINEER — FRANK HSIAOSHIH WEI — No. C 52918 — Exp. 12-31-12 — CIVIL — STATE OF CALIFORNIA

The State of California or its officers or agents shall not be responsible for the accuracy or completeness of electronic copies of this plan sheet.

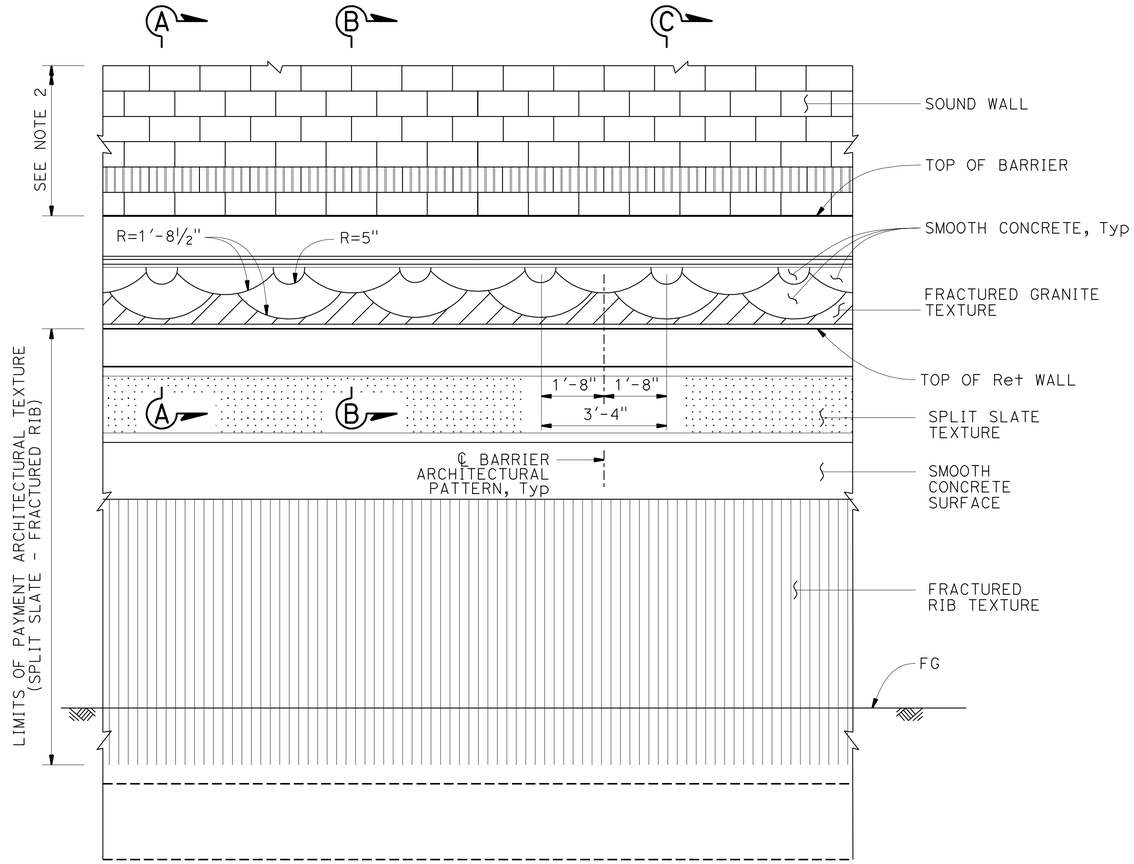

PART ELEVATION

½" = 1'-0"

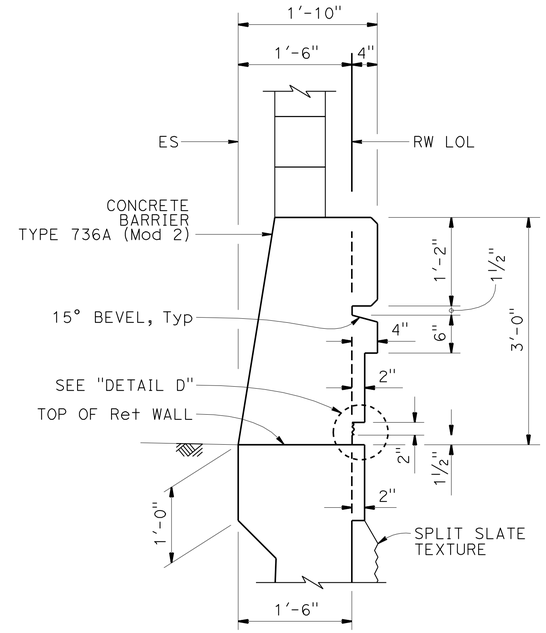

SECTION A-A

1" = 1'-0"

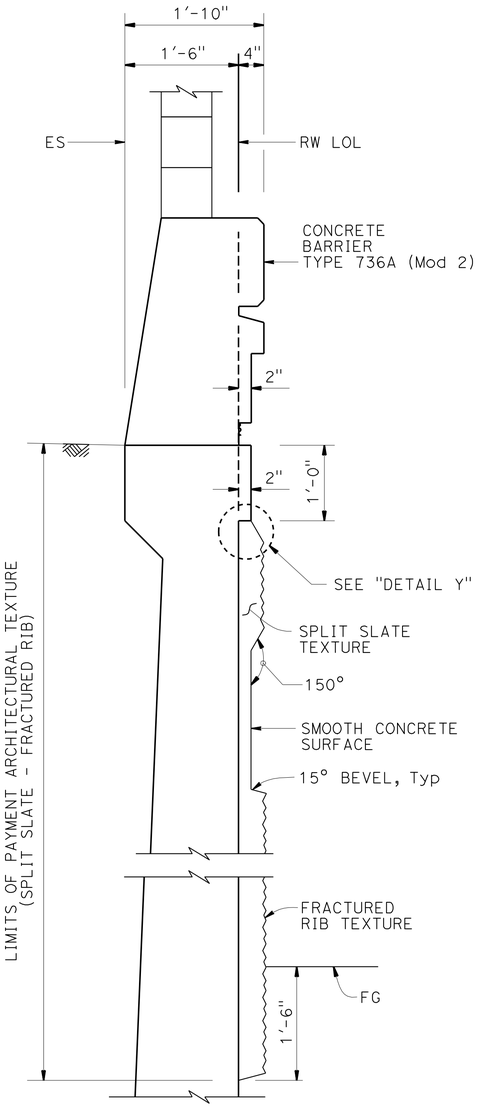

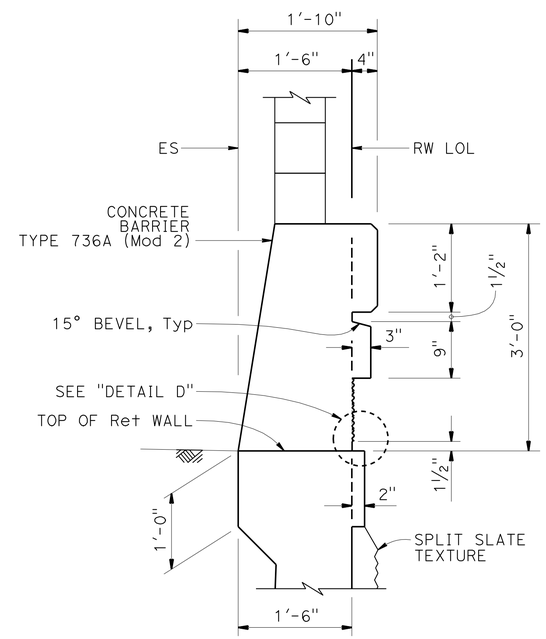

SECTION B-B

1" = 1'-0"

SECTION C-C

1" = 1'-0"

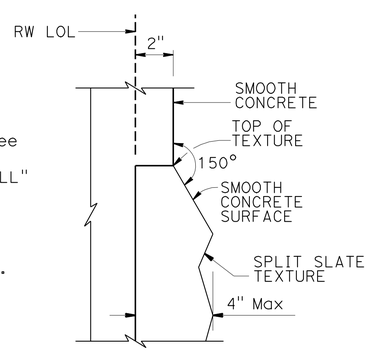

DETAIL Y

NO SCALE

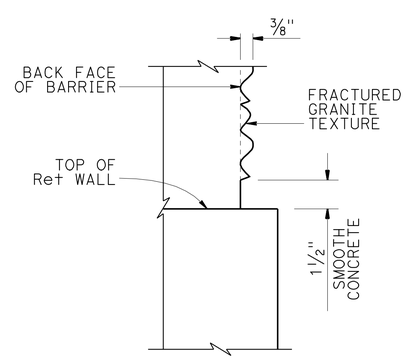

DETAIL D

NO SCALE

NOTES:

1. For Barrier Reinforcement, see "SOUND WALL - MASONRY BLOCK WITH BARRIER ON RETAINING WALL" sheet.
2. For sound wall architectural treatment, see "SOUND WALL ARCHITECTURAL DETAILS" sheet.

NOTE:
THE CONTRACTOR SHALL VERIFY ALL CONTROLLING FIELD DIMENSIONS BEFORE ORDERING OR FABRICATING ANY MATERIAL.

	BY	CHECKED
DESIGN	L. Sanchez-Manzo	F. Wei
DETAILS	P. Perez	L. Sanchez-Manzo
QUANTITIES	L. Sanchez-Manzo	V. Wami

STATE OF CALIFORNIA
DEPARTMENT OF TRANSPORTATION

DIVISION OF ENGINEERING SERVICES
STRUCTURE DESIGN
DESIGN BRANCH 21

BRIDGE NO. 53E0187
POST MILE 4.46

SOUND WALL NO. 250

RETAINING WALL AND BARRIER ARCHITECTURAL DETAILS

STRUCTURES DESIGN DETAIL SHEET (ENGLISH) (REV. 09-01-10)

ORIGINAL SCALE IN INCHES FOR REDUCED PLANS 0 1 2 3

UNIT: 3623
PROJECT NUMBER & PHASE: 0700001834 & 1 CONTRACT NO.: 07-215-941

DISREGARD PRINTS BEARING EARLIER REVISION DATES

REVISION DATES: 09/30/11 11/25/11 12/22/11 03/22/12

SHEET 25 OF 44

FILE => 53-E0187-K-rw_bar_arch_dt.dgn

USERNAME => s128843 DATE PLOTTED => 14-APR-2012 TIME PLOTTED => 10:30

DIST	COUNTY	ROUTE	POST MILES TOTAL PROJECT	SHEET No.	TOTAL SHEETS
07	LA	5	4.0/5.9	1312	1597

REGISTERED CIVIL ENGINEER — DATE 12/12/11

4-9-12
PLANS APPROVAL DATE

REGISTERED PROFESSIONAL ENGINEER FRANK HSIAOSHIH WEI No. C 52918 Exp. 12-31-12 CIVIL STATE OF CALIFORNIA

The State of California or its officers or agents shall not be responsible for the accuracy or completeness of electronic copies of this plan sheet.

NOTE:
1. See "RETAINING WALL AND BARRIER ARCHITECTURAL DETAILS" sheet.

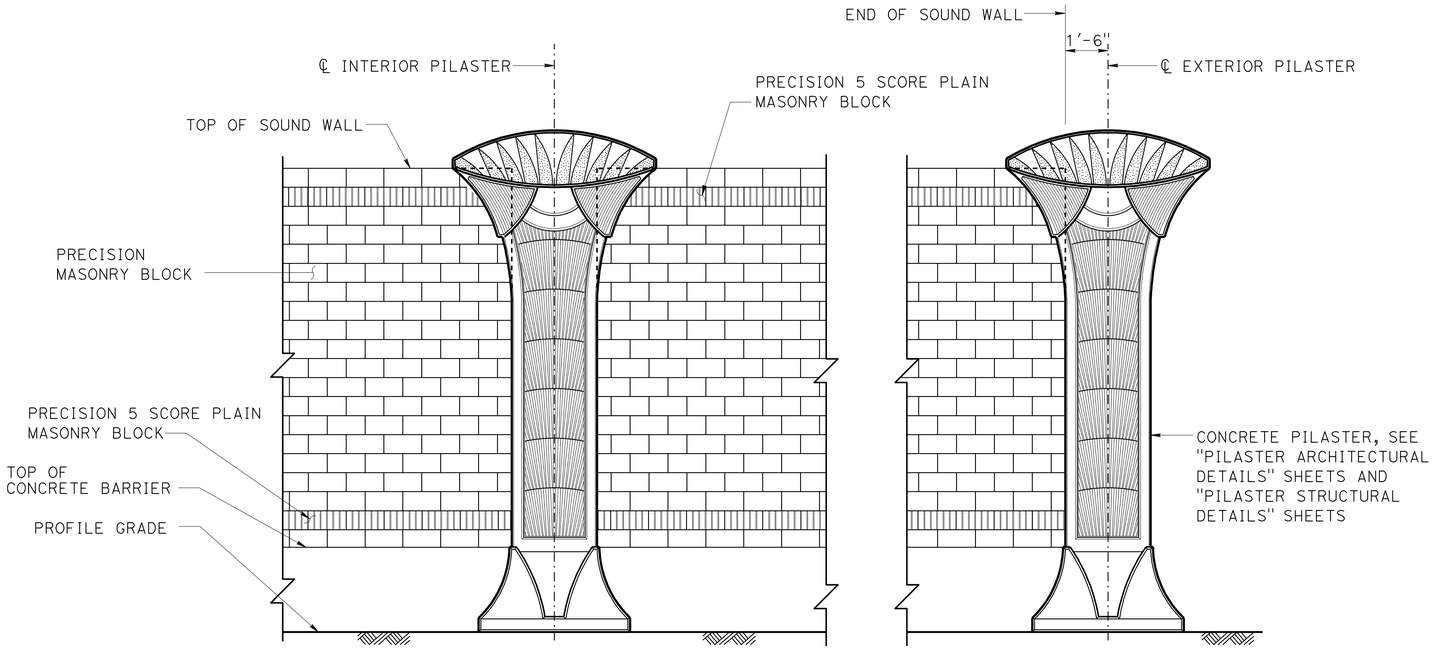

PART SOUND WALL ELEVATION - FREEWAY SIDE

NO SCALE

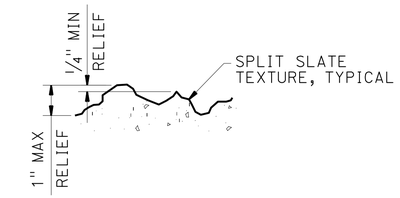

SPLIT SLATE TEXTURE DETAIL

NO SCALE

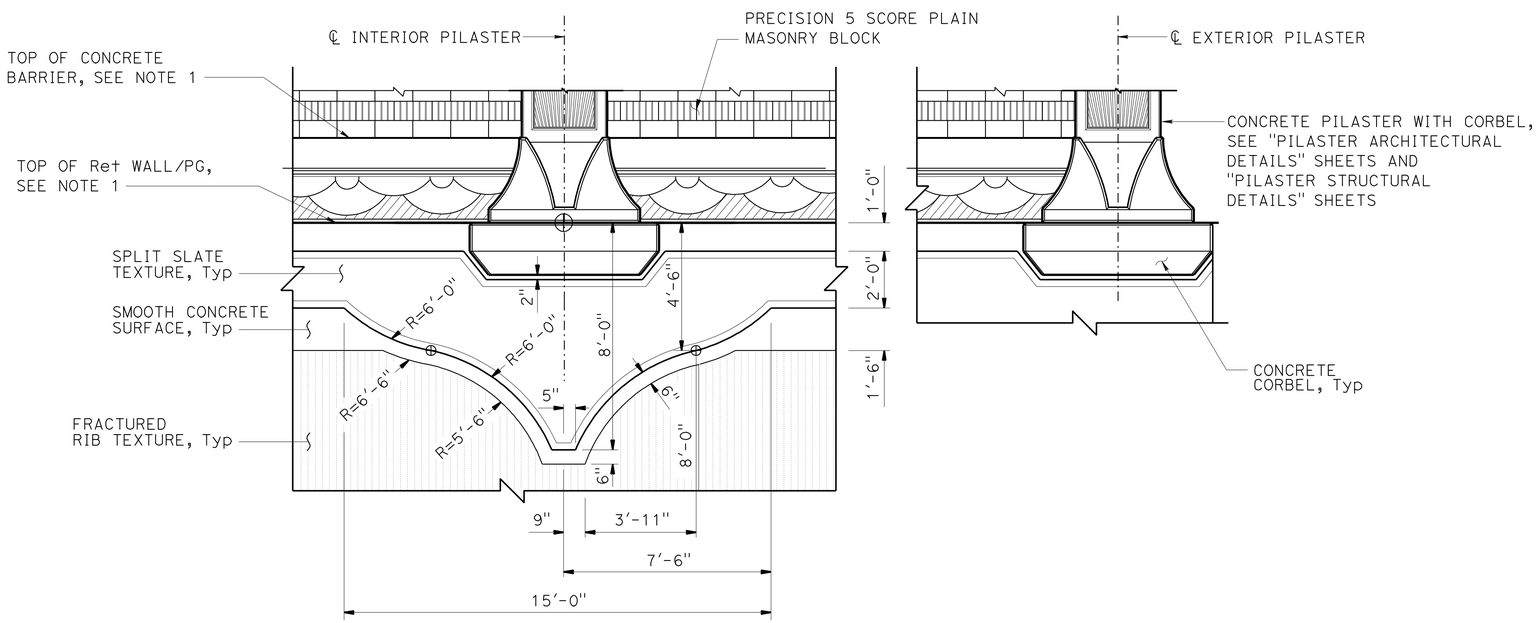

PART SOUND WALL ELEVATION - BACK SIDE

NO SCALE

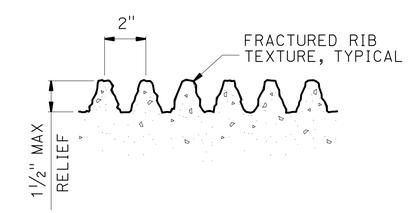

FRACTURED RIB TEXTURE DETAIL

NO SCALE

NOTE:
THE CONTRACTOR SHALL VERIFY ALL CONTROLLING FIELD DIMENSIONS BEFORE ORDERING OR FABRICATING ANY MATERIAL.

	BY	CHECKED
DESIGN	H. CHAVEZ	I. TASABIA
DETAILS	J. VALENCIA	F. WEI/I. TASABIA
QUANTITIES	L. Sanchez-Manzo	V. Wami

STATE OF CALIFORNIA
DEPARTMENT OF TRANSPORTATION

DIVISION OF ENGINEERING SERVICES
STRUCTURE DESIGN
DESIGN BRANCH 21

BRIDGE NO. 53E0187
POST MILE 4.46

SOUND WALL NO. 250
SOUND WALL ARCHITECTURAL DETAILS

STRUCTURES DESIGN DETAIL SHEET (ENGLISH) (REV. 09-01-10)

ORIGINAL SCALE IN INCHES FOR REDUCED PLANS 0 1 2 3

UNIT: 3623
PROJECT NUMBER & PHASE: 0700001834 & 1 CONTRACT NO.: 07-215941

DISREGARD PRINTS BEARING EARLIER REVISION DATES → 09/30/11 11/29/11 12/07/11 03/22/12

SHEET 26 OF 44

FILE => 53-E0187-m-sw_arch_dt.dgn

USERNAME => s128843 DATE PLOTTED => 14-APR-2012 TIME PLOTTED => 10:31

DIST	COUNTY	ROUTE	POST MILES TOTAL PROJECT	SHEET No.	TOTAL SHEETS
07	LA	5	4.0/5.9	1313	1597

REGISTERED CIVIL ENGINEER 12/12/11 DATE

4-9-12
PLANS APPROVAL DATE

REGISTERED PROFESSIONAL ENGINEER FRANK HSIAOSHIH WEI No. C 52918 Exp. 12-31-12 CIVIL STATE OF CALIFORNIA

The State of California or its officers or agents shall not be responsible for the accuracy or completeness of electronic copies of this plan sheet.

NOTES:

1. All dimensions symetrical about ℄ Pilaster.
2. Beveled edges are 45° unless otherwise noted
3. All vertical dimensions are measured along the ℄ Pilaster (Pilaster shall be vertical).

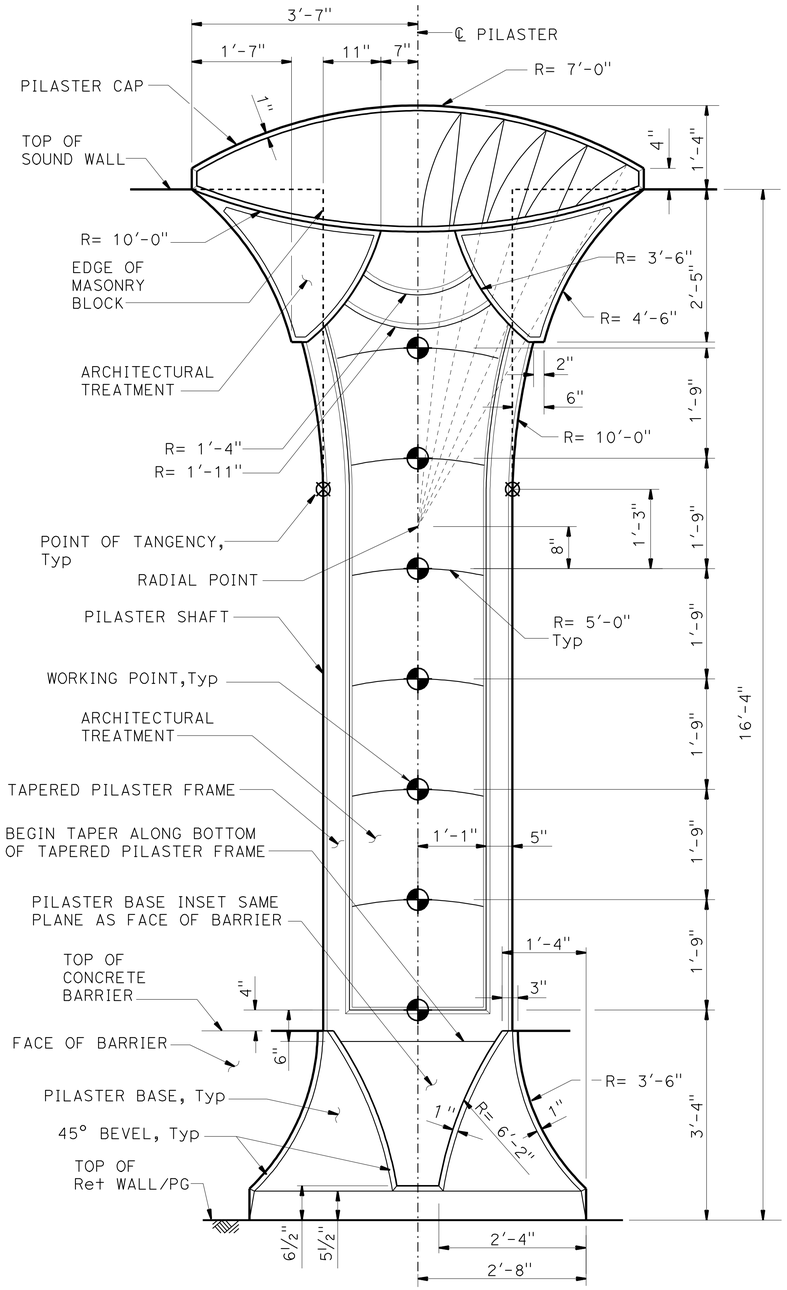

16'-4" SOUND WALL

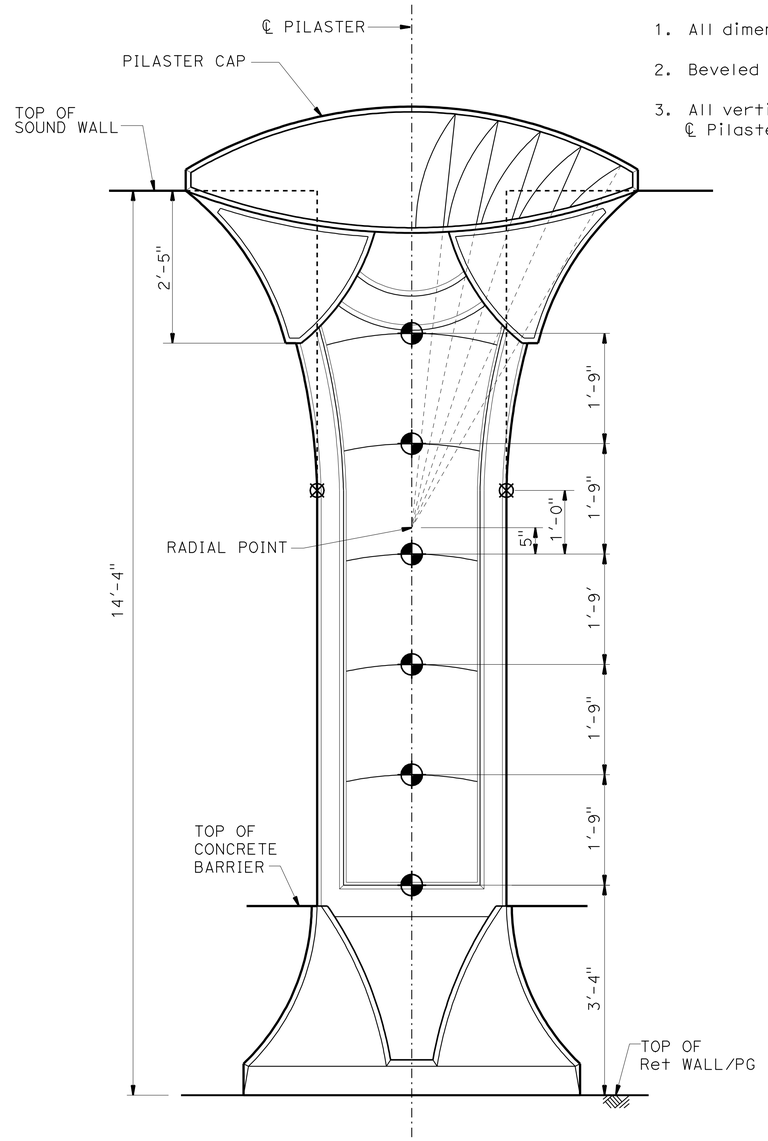

NOTE: For dimensions and details not shown, see "16'-4" SOUND WALL" details

14'-4" SOUND WALL

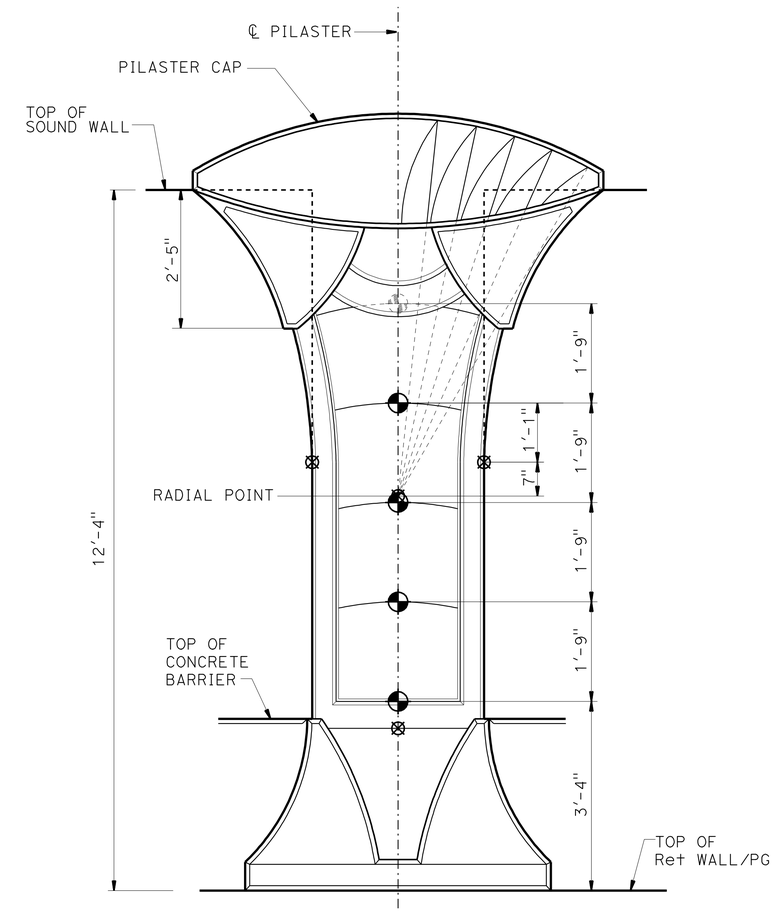

NOTE: For dimensions and details not shown, see"16'-4" SOUND WALL" details

12'-4" SOUND WALL

NOTE:
THE CONTRACTOR SHALL VERIFY ALL CONTROLLING FIELD DIMENSIONS BEFORE ORDERING OR FABRICATING ANY MATERIAL.

PILASTER ELEVATION - FREEWAY SIDE

NO SCALE

	BY	CHECKED
DESIGN	H. CHAVEZ	I. TASABIA
DETAILS	J. VALENCIA	F. WEI
QUANTITIES	L. Sanchez-Manzo	V. Wami

STATE OF CALIFORNIA
DEPARTMENT OF TRANSPORTATION

DIVISION OF ENGINEERING SERVICES
STRUCTURE DESIGN
DESIGN BRANCH 21

BRIDGE NO. 53E0187
POST MILE 4.46

SOUND WALL NO. 250
PILASTER ARCHITECTURAL DETAILS NO. 1

STRUCTURES DESIGN DETAIL SHEET (ENGLISH) (REV. 09-01-10)

ORIGINAL SCALE IN INCHES FOR REDUCED PLANS 0 1 2 3

UNIT: 3623
PROJECT NUMBER & PHASE: 0700001834 & 1 CONTRACT NO.: 07-215941

DISREGARD PRINTS BEARING EARLIER REVISION DATES

REVISION DATES: 09/30/11 11/25/11 12/07/11 03/22/12

SHEET 27 OF 44

FILE => 53-E0187-o-pll_arch_dt01.dgn

USERNAME => s128843 DATE PLOTTED => 14-APR-2012 TIME PLOTTED => 10:31

DIST	COUNTY	ROUTE	POST MILES TOTAL PROJECT	SHEET No.	TOTAL SHEETS
07	LA	5	4.0/5.9	1314	1597

REGISTERED CIVIL ENGINEER — DATE 2/12/11

4-9-12
PLANS APPROVAL DATE

REGISTERED PROFESSIONAL ENGINEER — FRANK HSIAOSHIH WEI — No. C 52918 — Exp. 12-31-12 — CIVIL — STATE OF CALIFORNIA

The State of California or its officers or agents shall not be responsible for the accuracy or completeness of electronic copies of this plan sheet.

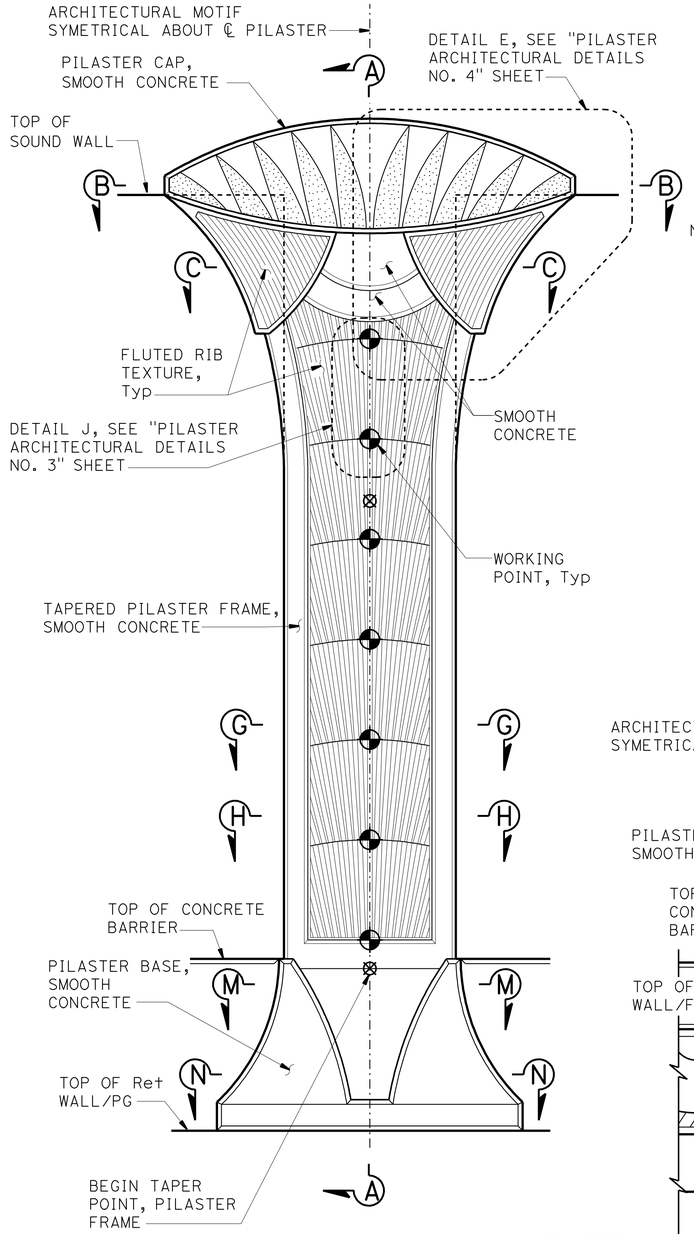

NOTE: For additional details not shown, see "16'-4" SOUND WALL - PILASTER ELEVATION" on "PILASTER ARCHITECTURAL DETAILS NO. 1" sheet.

FREEWAY SIDE

NOTES:

1. For "SECTION B-B", "SECTION C-C", "SECTION G-G","SECTION H-H" and "SECTION L-L", see "PILASTER ARCHITECTURAL DETAILS NO. 3" sheet.
2. For "SECTION M-M" and "SECTION N-N"' see "PILASTER ARCHITECTURAL DETAIL NO. 4" sheet.
3. Pilaster Sections on Retaining Wall shown, for Pilaster on Barrier Type 736SV (Mod), see "PILASTER SECTION ON TYPE 736SV (Mod) BARRIER" on "PILASTER ARCHITECTURAL DETAILS NO. 4" sheet.
4. All dimensions symetrical about ℄ pilaster.
5. Beveled edges are 45° unless otherwise noted
6. All vertical dimensions are measured along the ℄ Pilaster (Pilaster shall be vertical).

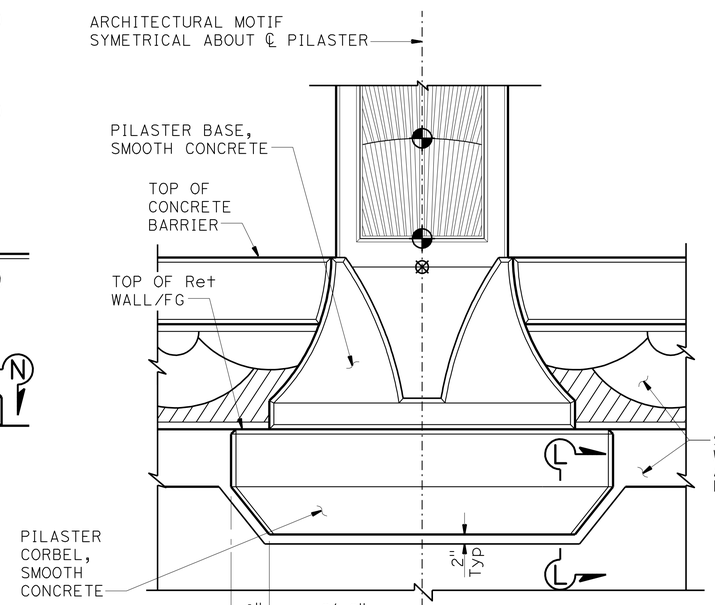

NOTE: For additional details not shown, see "FREEWAY SIDE" details.

BACK SIDE

NOTE:
THE CONTRACTOR SHALL VERIFY ALL CONTROLLING FIELD DIMENSIONS BEFORE ORDERING OR FABRICATING ANY MATERIAL.

PILASTER ARCHITECTURAL MOTIF

¾" = 1'-0"

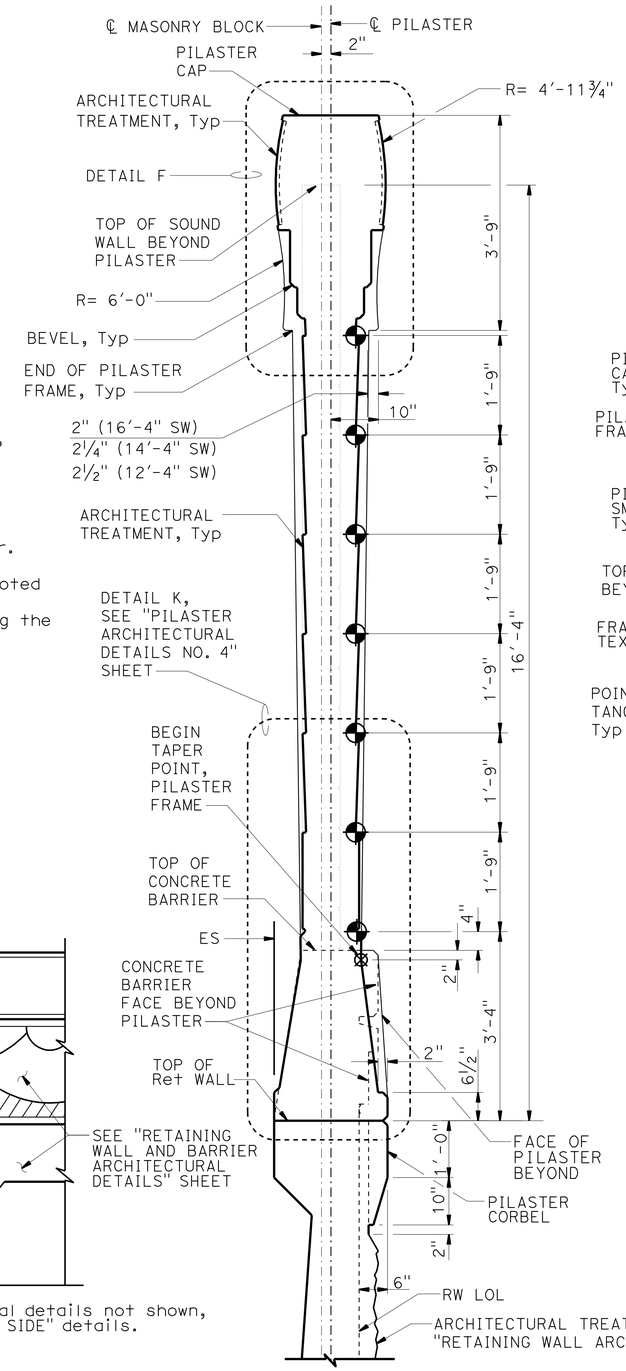

SECTION A-A

¾" = 1'-0"

NOTE: Pilaster for 16'-4" Sound Wall shown, Pilaster at 12'-4" Sound Wall similar.

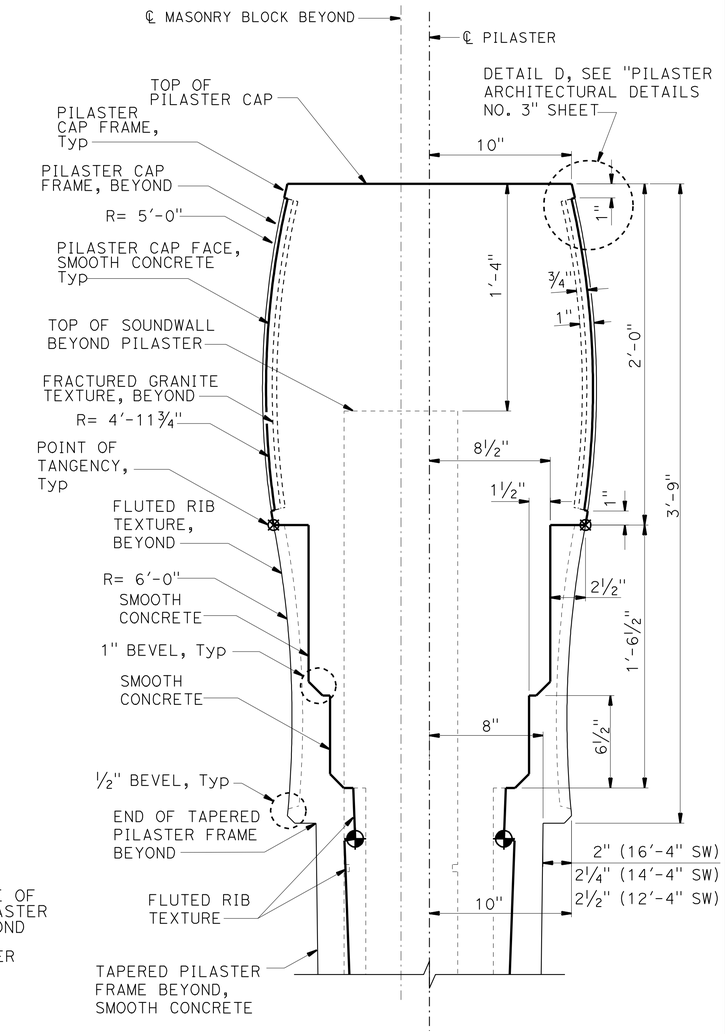

DETAIL F

NO SCALE

DESIGN	BY H. CHAVEZ	CHECKED I. TASABIA	
DETAILS	BY J. VALENCIA	CHECKED F. WEI	
QUANTITIES	BY L. Sanchez-Manzo	CHECKED V. Wami	

STATE OF CALIFORNIA
DEPARTMENT OF TRANSPORTATION

DIVISION OF ENGINEERING SERVICES
STRUCTURE DESIGN
DESIGN BRANCH 21

BRIDGE NO. 53E0187
POST MILE 4.46

SOUND WALL NO. 250

PILASTER ARCHITECTURAL DETAILS NO. 2

STRUCTURES DESIGN DETAIL SHEET (ENGLISH) (REV. 09-01-10)

ORIGINAL SCALE IN INCHES FOR REDUCED PLANS 0 1 2 3

UNIT: 3623
PROJECT NUMBER & PHASE: 0700001834 & 1 CONTRACT NO.: 07-215941

DISREGARD PRINTS BEARING EARLIER REVISION DATES — REVISION DATES 09/30/11 11/25/11 12/02/11 03/22/12 — SHEET 28 OF 44

FILE => 53-E0187-a-pil_arch_dt02.dgn

USERNAME => s128843 DATE PLOTTED => 14-APR-2012 TIME PLOTTED => 10:31

DIST	COUNTY	ROUTE	POST MILES TOTAL PROJECT	SHEET No.	TOTAL SHEETS
07	LA	5	4.0/5.9	1315	1597

REGISTERED CIVIL ENGINEER — DATE 12/12/11

4-9-12
PLANS APPROVAL DATE

REGISTERED PROFESSIONAL ENGINEER — FRANK HSIAOSHIH WEI — No. C 52918 — Exp. 12-31-12 — CIVIL — STATE OF CALIFORNIA

The State of California or its officers or agents shall not be responsible for the accuracy or completeness of electronic copies of this plan sheet.

NOTES:

1. All notes and dimensions symetrical about ℄ pilaster.
2. Beveled edges are 45° unless otherwise noted.
3. For location of "DETAIL J", "DETAIL D" and "SECTION B-B", "SECTION C-C", "SECTION G-G", "SECTION H-H" and "SECTION L-L", see "PILASTER ARCHITECTURAL DETAILS NO. 2" sheet.
4. For Retaining Wall split slate texture, see "RETAINING WALL AND BARRIER ARCHITECTURAL DETAILS" sheet.

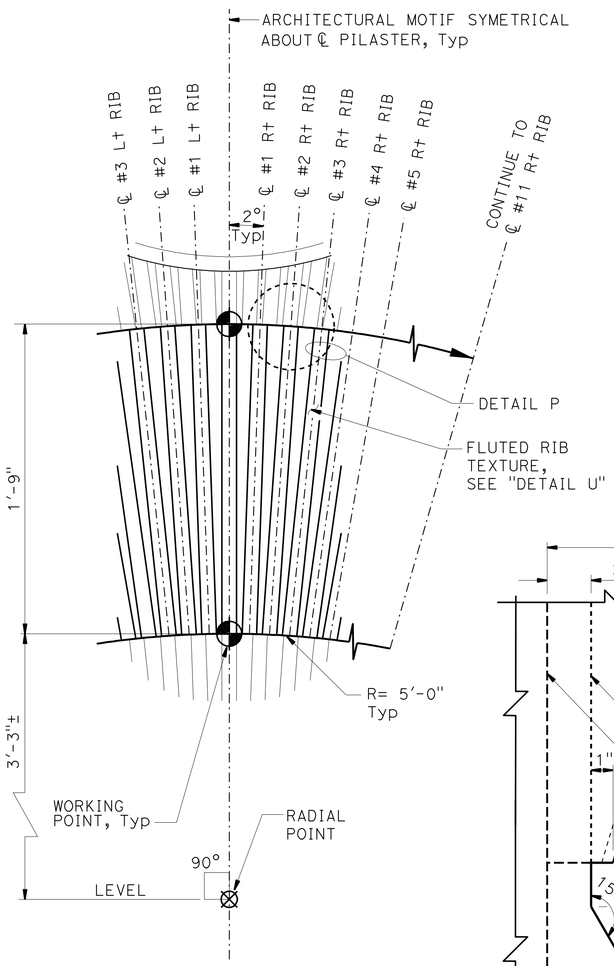

DETAIL J
NO SCALE

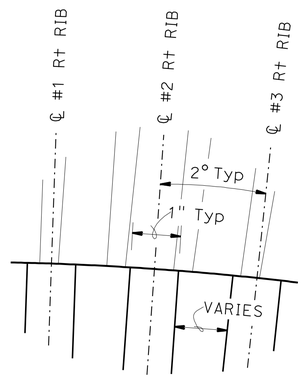

DETAIL P
NO SCALE

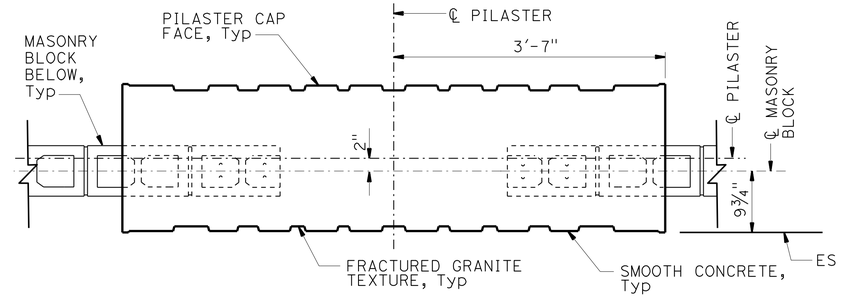

SECTION B-B
1" = 1'-0"

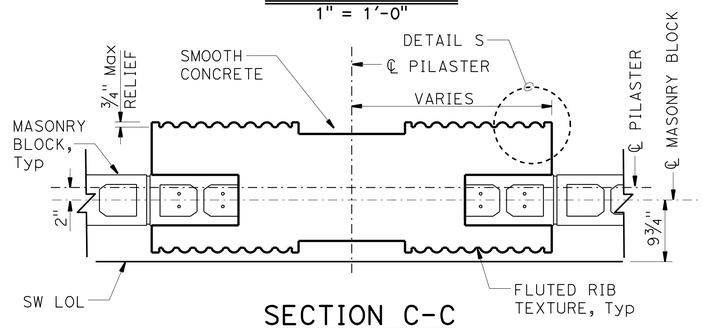

SECTION C-C
1" = 1'-0"

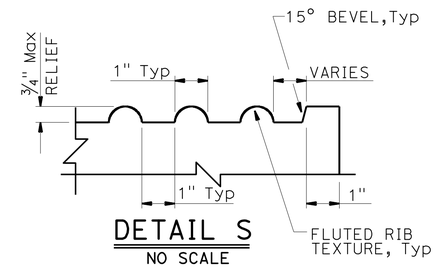

DETAIL S
NO SCALE

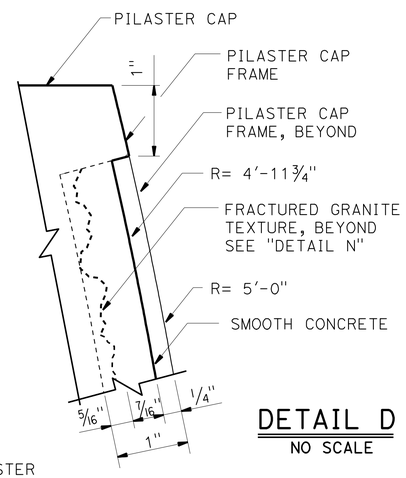

DETAIL D
NO SCALE

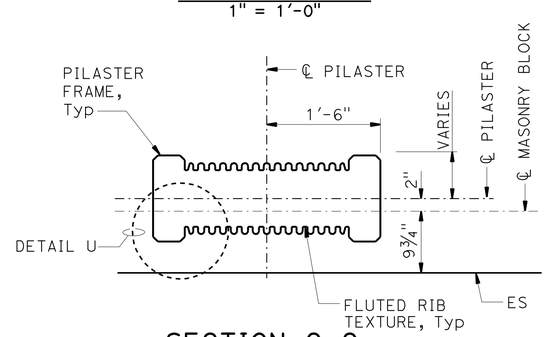

SECTION G-G
1" = 1'-0"

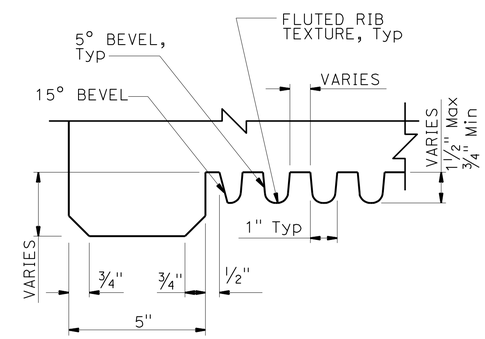

DETAIL U
NO SCALE

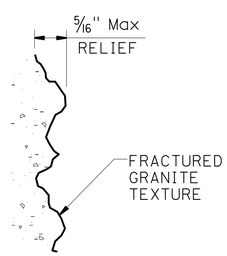

DETAIL N
NO SCALE

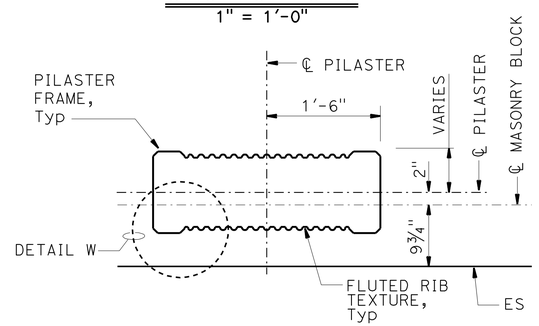

SECTION H-H
1" = 1'-0"

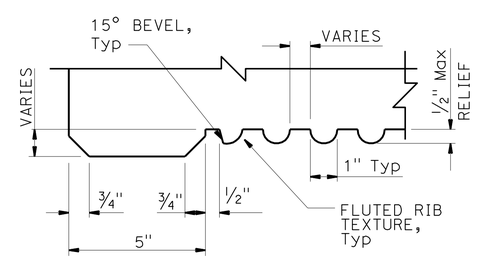

DETAIL W
NO SCALE

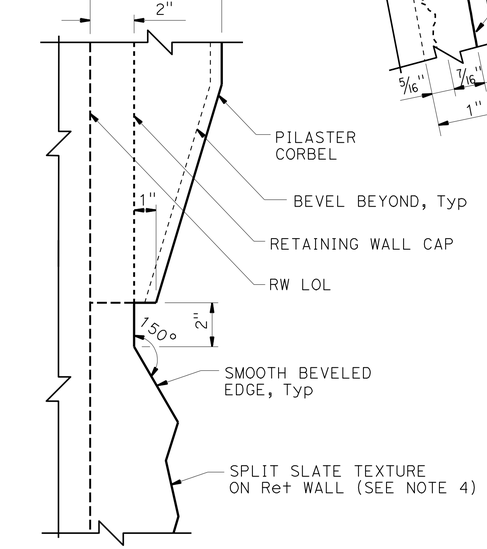

SECTION L-L
NO SCALE

NOTE:
THE CONTRACTOR SHALL VERIFY ALL CONTROLLING FIELD DIMENSIONS BEFORE ORDERING OR FABRICATING ANY MATERIAL.

DESIGN	BY H. CHAVEZ	CHECKED I. TASABIA	
DETAILS	BY J. VALENCIA	CHECKED F. WEI	
QUANTITIES	BY L. Sanchez-Manzo	CHECKED V. Wami	

STATE OF CALIFORNIA
DEPARTMENT OF TRANSPORTATION

DIVISION OF ENGINEERING SERVICES
STRUCTURE DESIGN
DESIGN BRANCH 21

BRIDGE NO. 53E0187
POST MILE 4.46

SOUND WALL NO. 250
PILASTER ARCHITECTURAL DETAILS NO. 3

STRUCTURES DESIGN DETAIL SHEET (ENGLISH) (REV. 09-01-10)

ORIGINAL SCALE IN INCHES FOR REDUCED PLANS 0 1 2 3

UNIT: 3623
PROJECT NUMBER & PHASE: 0700001834 & 1 CONTRACT NO.: 07-215941

DISREGARD PRINTS BEARING EARLIER REVISION DATES

REVISION DATES: 09/30/11 11/25/11 12/07/11 03/22/12

SHEET 29 OF 44

FILE => 53-E0187-o-pll_arch_dt03.dgn

USERNAME => s128843 DATE PLOTTED => 14-APR-2012 TIME PLOTTED => 10:31

DIST	COUNTY	ROUTE	POST MILES TOTAL PROJECT	SHEET No.	TOTAL SHEETS
07	LA	5	4.0/5.9	1316	1597

REGISTERED CIVIL ENGINEER — DATE 2/12/11

4-9-12
PLANS APPROVAL DATE

REGISTERED PROFESSIONAL ENGINEER FRANK HSIAOSHIH WEI No. C 52918 Exp. 12-31-12 CIVIL STATE OF CALIFORNIA

The State of California or its officers or agents shall not be responsible for the accuracy or completeness of electronic copies of this plan sheet.

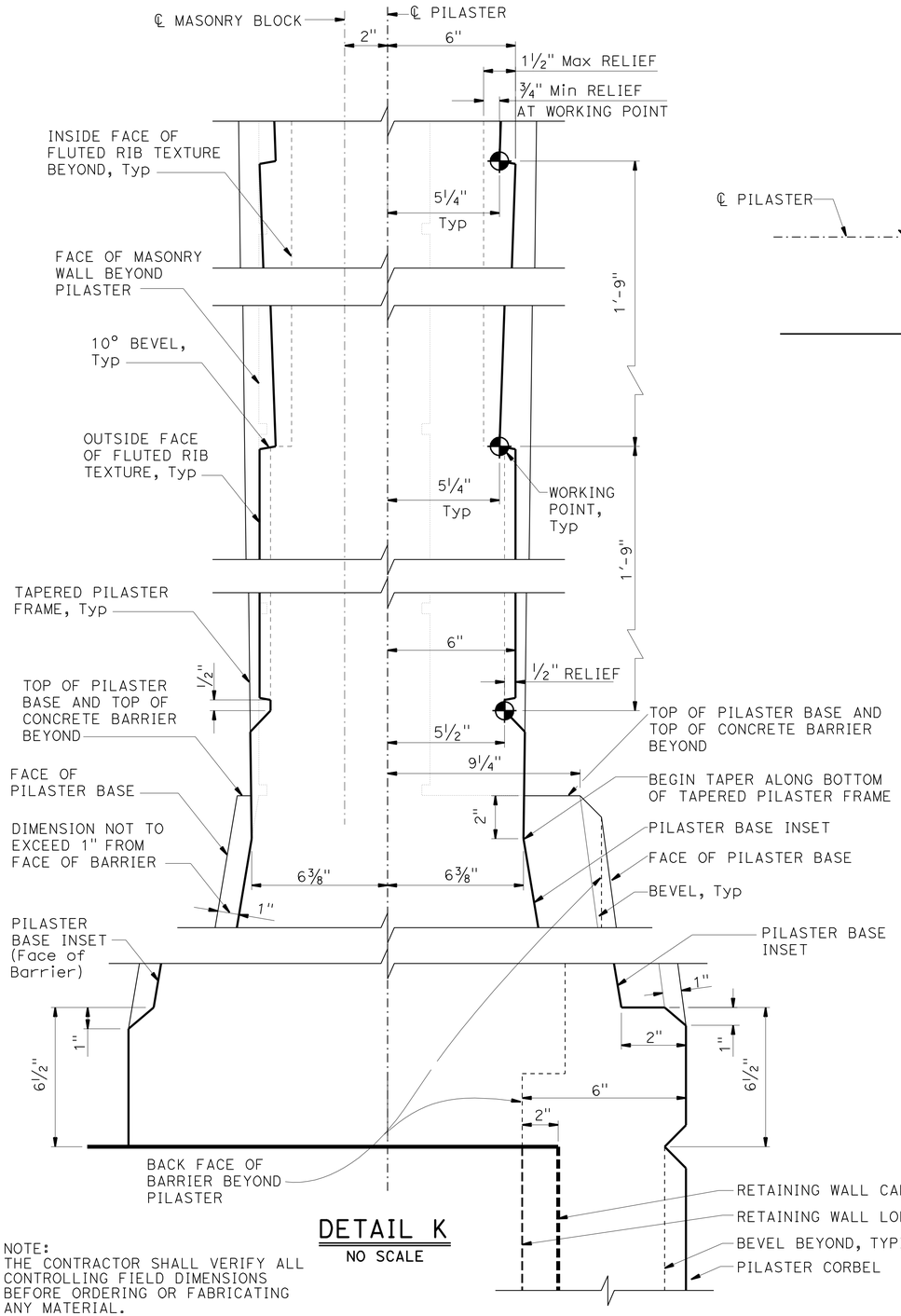

DETAIL K
NO SCALE

NOTE:
THE CONTRACTOR SHALL VERIFY ALL CONTROLLING FIELD DIMENSIONS BEFORE ORDERING OR FABRICATING ANY MATERIAL.

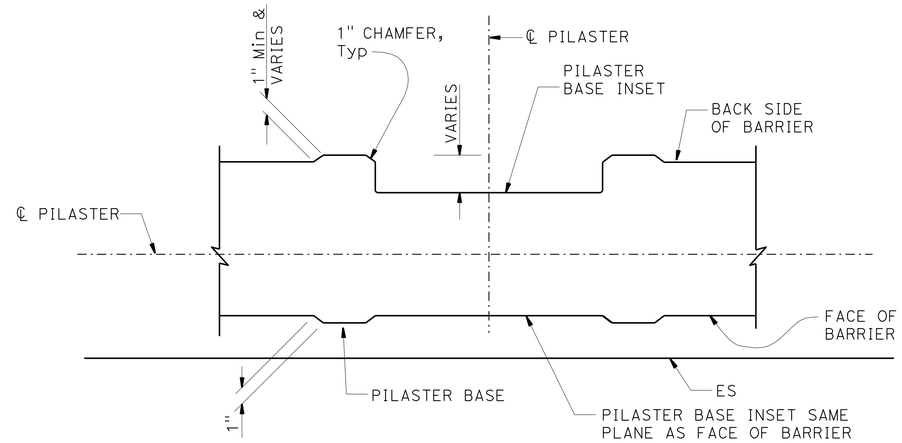

SECTION M-M
1½" = 1'-0"

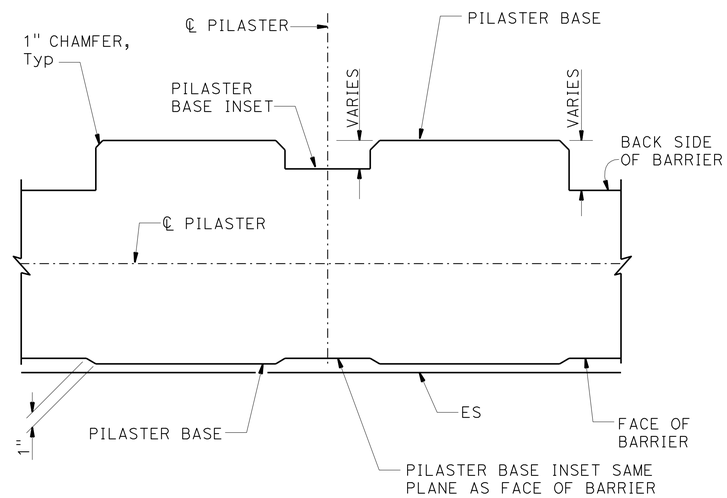

SECTION N-N
1½" = 1'-0"

NOTES:

1. For location of "SECTION M-M", "SECTION N-N" and "DETAIL K", see "PILASTER ARCHITECTURAL DETAILS NO. 2" sheet.
2. All dimensions symetrical about ℄ Pilaster.
3. All vertical dimensions are measured along the ℄ Pilaster (Pilaster shall be vertical).
4. For location of Detail E, see "PILASTER ARCHITECTURAL DETAILS NO. 2" sheet.

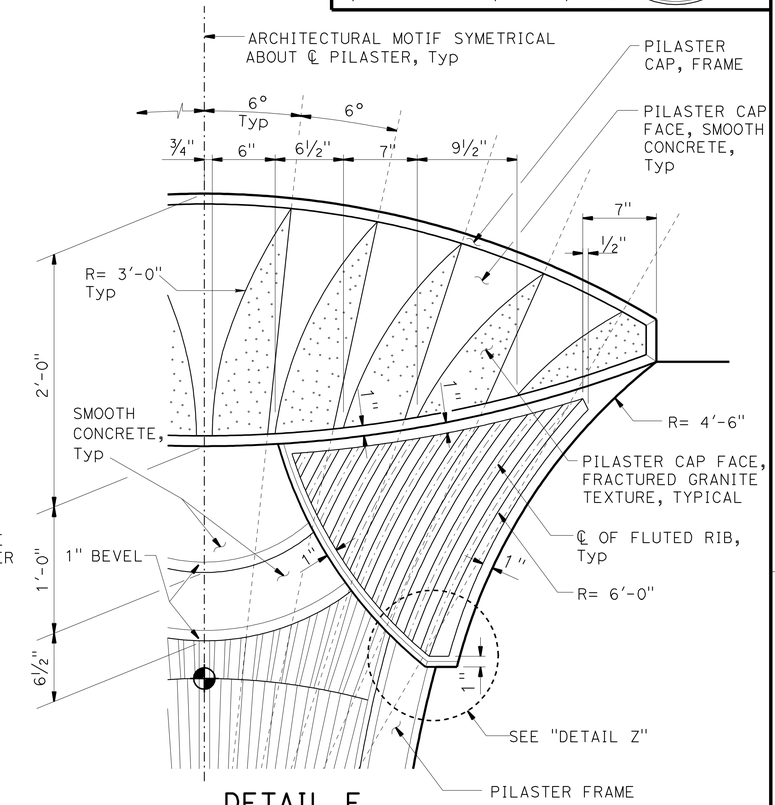

DETAIL E
NO SCALE

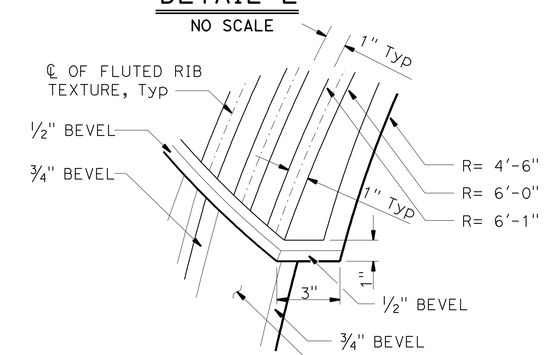

DETAIL Z
NO SCALE

DESIGN	BY H. CHAVEZ	CHECKED I. TASABIA	
DETAILS	BY J. VALENCIA	CHECKED F. WEI	
QUANTITIES	BY L. Sanchez-Manzo	CHECKED V. Wami	

STATE OF CALIFORNIA
DEPARTMENT OF TRANSPORTATION

DIVISION OF ENGINEERING SERVICES
STRUCTURE DESIGN
DESIGN BRANCH 21

BRIDGE NO. 53E0187
POST MILE 4.46

SOUND WALL NO. 250
PILASTER ARCHITECTURAL DETAILS NO. 4

STRUCTURES DESIGN DETAIL SHEET (ENGLISH) (REV. 09-01-10)

ORIGINAL SCALE IN INCHES FOR REDUCED PLANS 0 1 2 3

UNIT: 3623
PROJECT NUMBER & PHASE: 0700001834 & 1 CONTRACT NO.: 07-215941

DISREGARD PRINTS BEARING EARLIER REVISION DATES

REVISION DATES 09/30/11 11/29/11 12/09/11 03/22/12

SHEET 30 OF 44

FILE => 53-E0187-o-pil_arch_dt04.dgn

USERNAME => s128843 DATE PLOTTED => 14-APR-2012 TIME PLOTTED => 10:31

DIST	COUNTY	ROUTE	POST MILES TOTAL PROJECT	SHEET No.	TOTAL SHEETS
07	LA	5	4.0/5.9	1317	1597

REGISTERED CIVIL ENGINEER 2/12/11 DATE

4-9-12
PLANS APPROVAL DATE

REGISTERED PROFESSIONAL ENGINEER FRANK HSIAOSHIH WEI No. C 52918 Exp. 12-31-12 CIVIL STATE OF CALIFORNIA

The State of California or its officers or agents shall not be responsible for the accuracy or completeness of electronic copies of this plan sheet.

NOTES:

1. For "SECTION B-B", "SECTION C-C", "SECTION D-D" and "SECTION G-G", see "PILASTER STRUCTURAL DETAILS NO. 2" sheet.
2. 16'-4" height Pilaster shown. 12'-4" and 14'-4" height Pilaster similar.

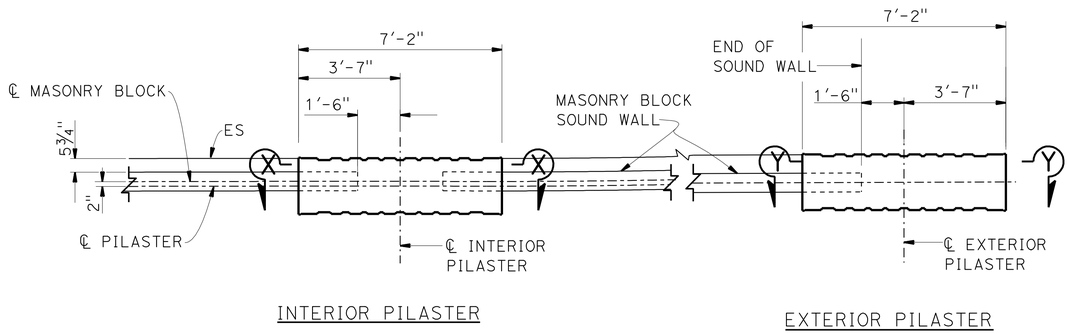

PART SOUND WALL PLAN

⅜" = 1'-0"

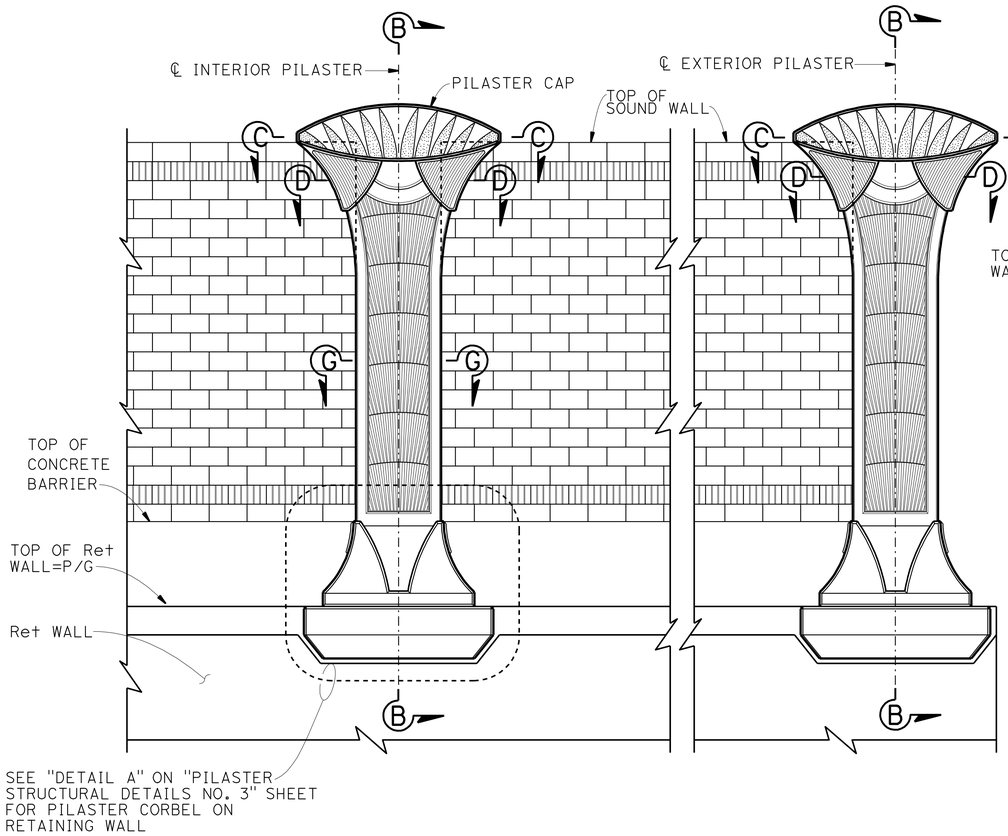

PART SOUND WALL ELEVATION

⅜" = 1'-0"

NOTE:
THE CONTRACTOR SHALL VERIFY ALL CONTROLLING FIELD DIMENSIONS BEFORE ORDERING OR FABRICATING ANY MATERIAL.

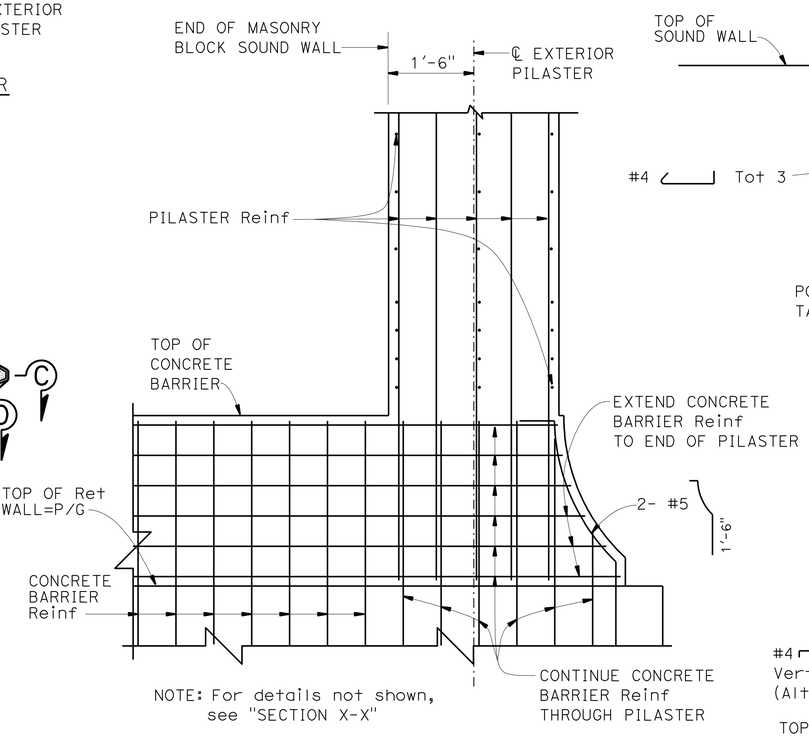

NOTE: For details not shown, see "SECTION X-X"

SECTION Y-Y

¾" = 1'-0"

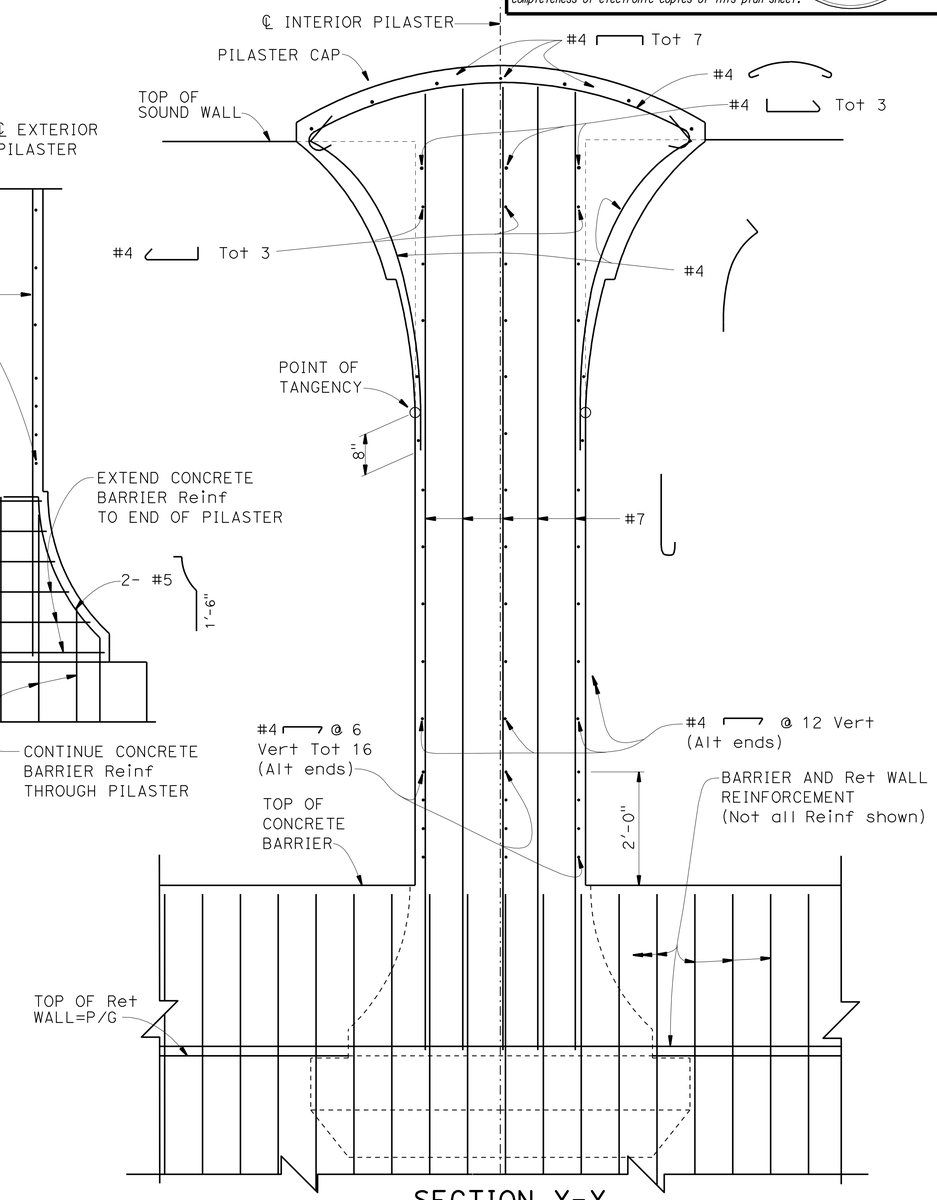

NOTE: Pilaster corbel reinf not shown.

SECTION X-X

¾" = 1'-0"

DESIGN	BY H. CHAVEZ	CHECKED I. TASABIA	
DETAILS	BY J. VALENCIA	CHECKED F. WEI	
QUANTITIES	BY L. Sanchez-Manzo	CHECKED V. Wami	

STATE OF CALIFORNIA
DEPARTMENT OF TRANSPORTATION

DIVISION OF ENGINEERING SERVICES
STRUCTURE DESIGN
DESIGN BRANCH 21

BRIDGE NO. 53E0187
POST MILE 4.46

SOUND WALL NO. 250
PILASTER STRUCTURAL DETAILS NO. 1

STRUCTURES DESIGN DETAIL SHEET (ENGLISH) (REV. 09-01-10)

ORIGINAL SCALE IN INCHES FOR REDUCED PLANS 0 1 2 3

UNIT: 3623
PROJECT NUMBER & PHASE: 0700001834 & 1 CONTRACT NO.: 07-215941

DISREGARD PRINTS BEARING EARLIER REVISION DATES

REVISION DATES 09/30/11 11/25/11 12/28/11 03/22/12

SHEET 31 OF 44

FILE => 53-E0187-q-pil_str_dt01.dgn

USERNAME => s128843 DATE PLOTTED => 14-APR-2012 TIME PLOTTED => 10:31

DIST	COUNTY	ROUTE	POST MILES TOTAL PROJECT	SHEET No.	TOTAL SHEETS
07	LA	5	4.0/5.9	1318	1597

REGISTERED CIVIL ENGINEER 2/12/11 DATE

4-9-12
PLANS APPROVAL DATE

REGISTERED PROFESSIONAL ENGINEER FRANK HSIAOSHIH WEI No. C 52918 Exp. 12-31-12 CIVIL STATE OF CALIFORNIA

The State of California or its officers or agents shall not be responsible for the accuracy or completeness of electronic copies of this plan sheet.

NOTES:

1. For location of "SECTION B-B", "SECTION C-C", "SECTION D-D" and "SECTION G-G", see "PILASTER STRUCTURAL DETAILS NO. 1" sheet.
2. For Pilaster geometry, dimensions and architectural treatments, see "PILASTER ARCHITECTURAL DETAILS" sheets.
3. 16'-4" height Pilaster shown, 12'-4" and 14'-4" height Pilaster similar.

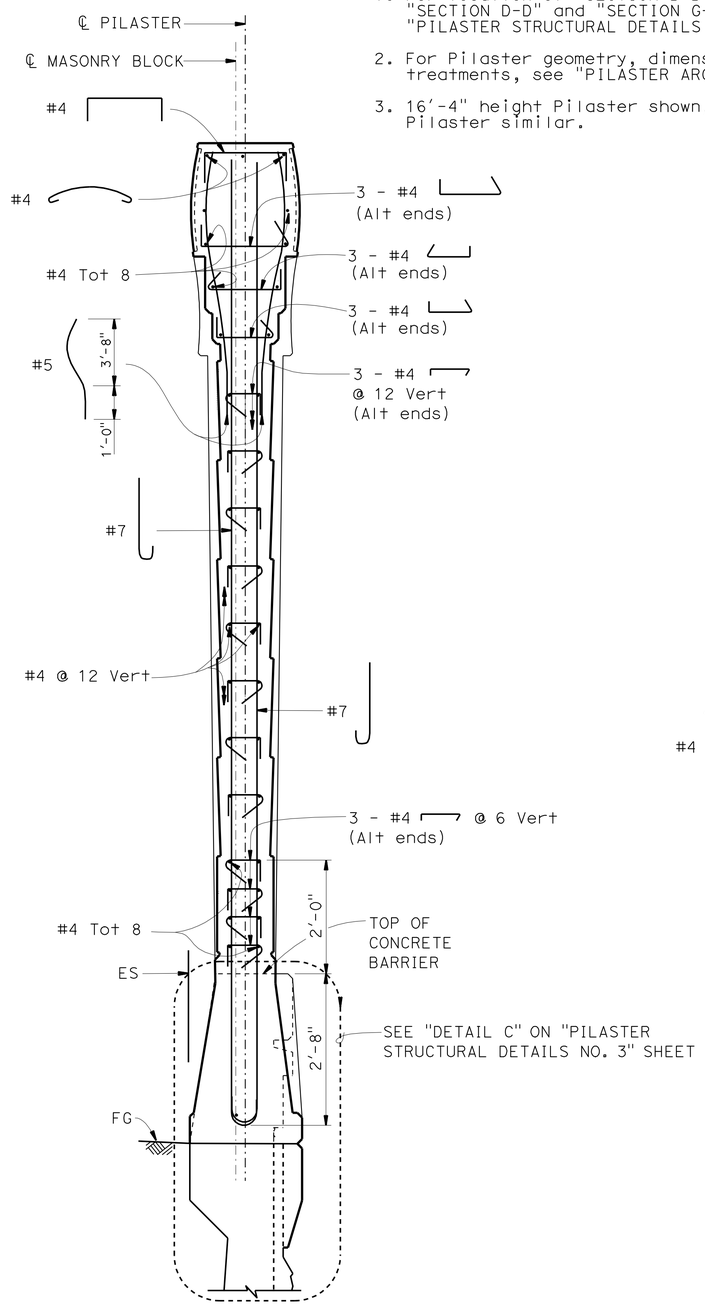

SECTION B-B

¾" = 1'-0"

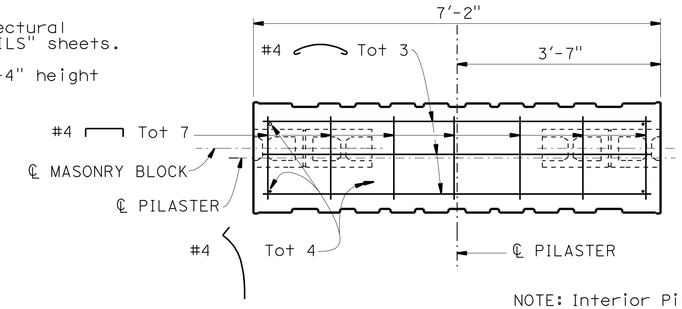

NOTE: Interior Pilaster shown, Exterior Pilaster similar.

SECTION C-C

¾" = 1'-0"

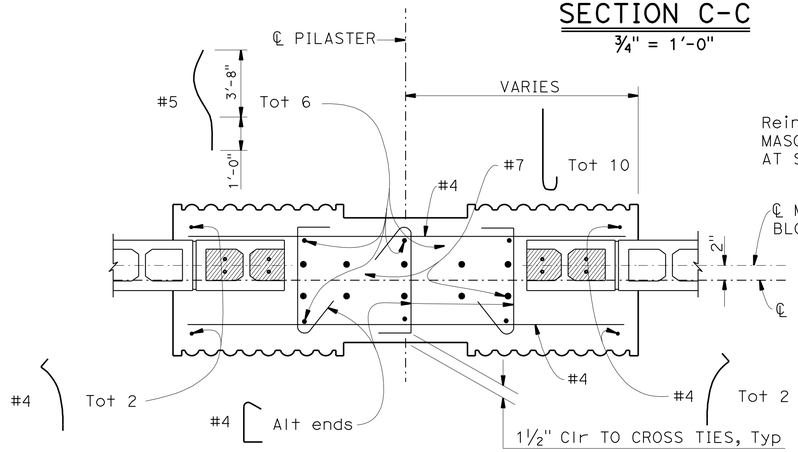

INTERIOR PILASTER

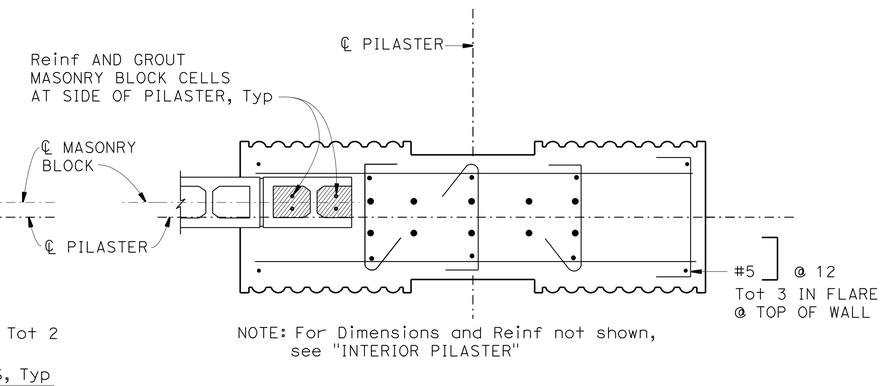

NOTE: For Dimensions and Reinf not shown, see "INTERIOR PILASTER"

EXTERIOR PILASTER

SECTION D-D

1" = 1'-0"

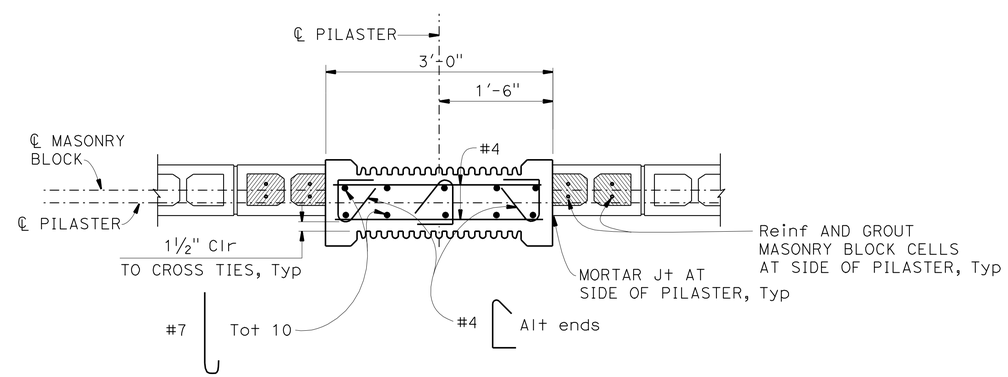

SECTION G-G

1" = 1'-0"

NOTE:
THE CONTRACTOR SHALL VERIFY ALL CONTROLLING FIELD DIMENSIONS BEFORE ORDERING OR FABRICATING ANY MATERIAL.

	BY	CHECKED
DESIGN	H. CHAVEZ	I. TASABIA
DETAILS	J. VALENCIA	F. WEI
QUANTITIES	L. Sanchez-Manzo	V. Wami

STATE OF CALIFORNIA DEPARTMENT OF TRANSPORTATION

DIVISION OF ENGINEERING SERVICES STRUCTURE DESIGN DESIGN BRANCH 21

BRIDGE NO. 53E0187
POST MILE 4.46

SOUND WALL NO. 250
PILASTER STRUCTURAL DETAILS NO. 2

STRUCTURES DESIGN DETAIL SHEET (ENGLISH) (REV. 09-01-10)

ORIGINAL SCALE IN INCHES FOR REDUCED PLANS 0 1 2 3

UNIT: 3623
PROJECT NUMBER & PHASE: 0700001834 & 1 CONTRACT NO.: 07-215941

DISREGARD PRINTS BEARING EARLIER REVISION DATES

REVISION DATES 09/30/11 11/28/11 12/09/11 03/22/12

SHEET 32 OF 44

FILE => 53-E0187-q-pil_str_dt02.dgn

USERNAME => s128843 DATE PLOTTED => 14-APR-2012 TIME PLOTTED => 10:31

DIST	COUNTY	ROUTE	POST MILES TOTAL PROJECT	SHEET No.	TOTAL SHEETS
07	LA	5	4.0/5.9	1319	1597

REGISTERED CIVIL ENGINEER 12/12/11 DATE

4-9-12
PLANS APPROVAL DATE

REGISTERED PROFESSIONAL ENGINEER FRANK HSIAOSHIH WEI No. C 52918 Exp. 12-31-12 CIVIL STATE OF CALIFORNIA

The State of California or its officers or agents shall not be responsible for the accuracy or completeness of electronic copies of this plan sheet.

NOTES:

1. For location of "DETAIL A", see "PILASTER STRUCTURAL DETAILS NO. 1" sheet.
2. For location of "DETAIL C", see "PILASTER STRUCTURAL DETAILS NO. 2" sheet.
3. See "RETAINING WALL AND BARRIER ARCHITECTURAL DETAILS" sheet.

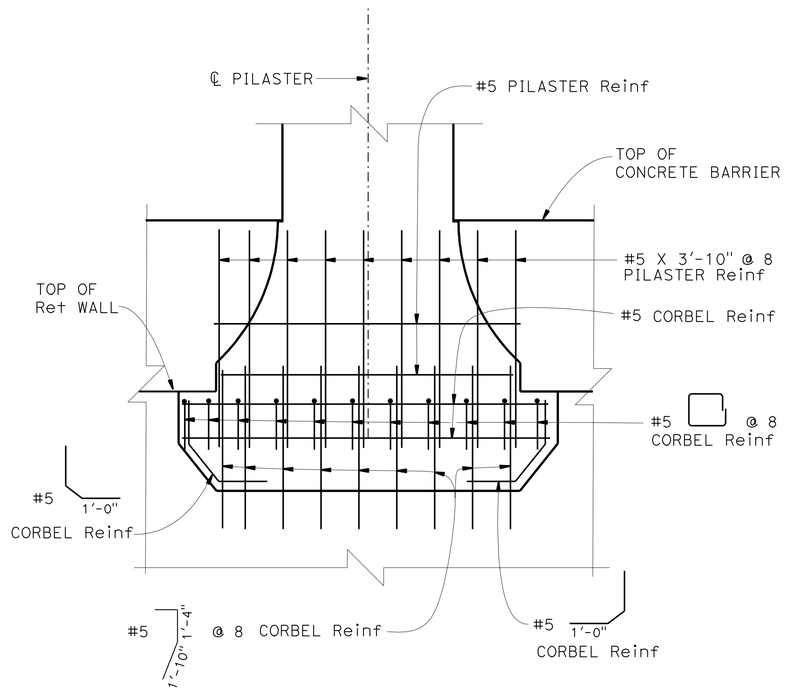

NOTE: Concrete Barrier/Ret Wall reinf not shown.

DETAIL A

¾" = 1'-0"

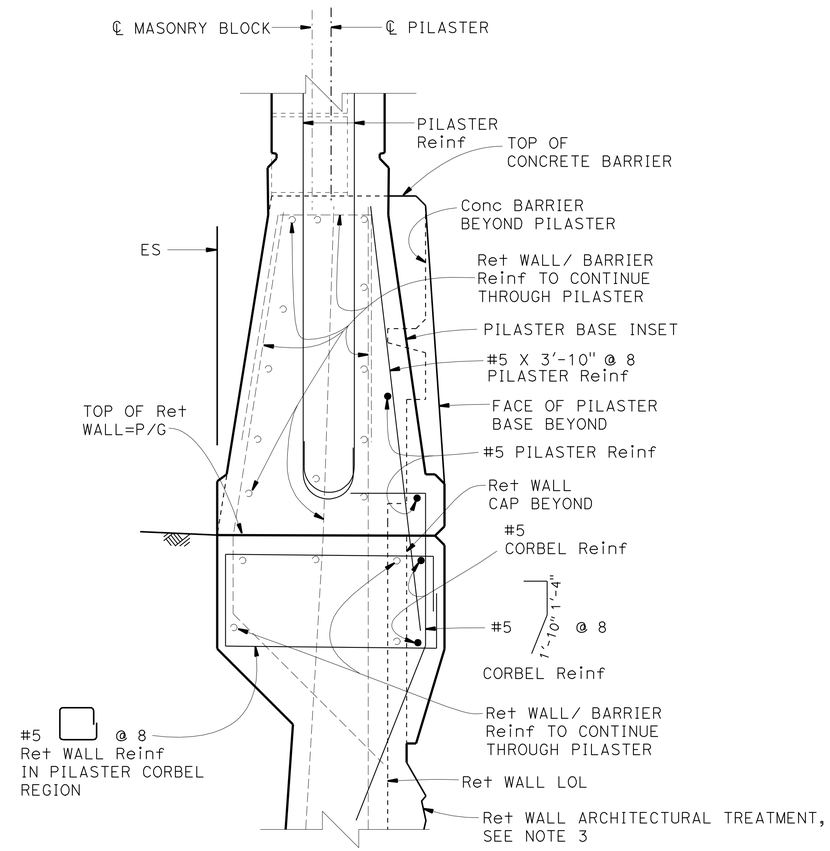

DETAIL C

1½" = 1'-0"

NOTE:
THE CONTRACTOR SHALL VERIFY ALL CONTROLLING FIELD DIMENSIONS BEFORE ORDERING OR FABRICATING ANY MATERIAL.

	BY	CHECKED
DESIGN	H. CHAVEZ	I. TASABIA
DETAILS	J. VALENCIA	F. WEI
QUANTITIES	L. Sanchez-Manzo	V. Wami

STATE OF CALIFORNIA
DEPARTMENT OF TRANSPORTATION

DIVISION OF ENGINEERING SERVICES
STRUCTURE DESIGN
DESIGN BRANCH 21

BRIDGE NO. 53E0187
POST MILE 4.46

SOUND WALL NO. 250
PILASTER STRUCTURAL DETAILS NO. 3

STRUCTURES DESIGN DETAIL SHEET (ENGLISH) (REV. 09-01-10)

ORIGINAL SCALE IN INCHES FOR REDUCED PLANS 0 1 2 3

UNIT: 3623
PROJECT NUMBER & PHASE: 0700001834 & 1 CONTRACT NO.: 07-215941

DISREGARD PRINTS BEARING EARLIER REVISION DATES

REVISION DATES 09/30/11 11/25/11 12/07/11 03/22/12

SHEET 33 OF 44

FILE => 53-E0187-q-pil_str_dt03.dgn

USERNAME => 8128843 DATE PLOTTED => 14-APR-2012 TIME PLOTTED => 10:32

DIST	COUNTY	ROUTE	POST MILES TOTAL PROJECT	SHEET No.	TOTAL SHEETS
07	LA	5	4.0/5.9	1320	1597

REGISTERED CIVIL ENGINEER 2/12/11 DATE

4-9-12
PLANS APPROVAL DATE

REGISTERED PROFESSIONAL ENGINEER FRANK HSIAOSHIH WEI No. C 52918 Exp. 12-31-12 CIVIL STATE OF CALIFORNIA

The State of California or its officers or agents shall not be responsible for the accuracy or completeness of electronic copies of this plan sheet.

Symbol:

Ȣ : 2 bar bundle

Note: Total ⓔ bars shown are total number of top and bottom bars combined.

TABLE 1: TABLE OF REINFORCING STEEL DIMENSIONS AND DATA ◇1

DESIGN H	6′	8′	10′	12′	14′	16′	18′	20′	22′	24′	26′	28′	30′	32′
W	8′- 3"	8′- 6"	9′- 0"	9′- 6"	10′- 0"	10′- 9"	11′- 3"	12′- 0"	13′- 3"	14′- 3"	15′- 9"	16′- 9"	18′- 0"	19′- 9"
C	2′- 9"	2′- 9"	3′- 0"	3′- 3"	3′- 4"	3′- 6"	3′- 9"	4′- 0"	4′- 3"	4′- 9"	5′- 3"	5′- 6"	5′- 9"	6′- 7"
B	5′- 6"	5′- 9"	6′- 0"	6′- 3"	6′- 8"	7′- 3"	7′- 6"	8′- 0"	9′- 0"	9′- 6"	10′- 6"	11′- 3"	12′- 3"	13′- 2"
F PILE FOOTING	1′- 6"	1′- 6"	1′- 6"	1′- 6"	1′- 9"	2′- 0"	2′- 0"	2′- 6"	2′- 9"	2′- 9"	3′- 0"	3′- 3"	3′- 9"	4′- 0"
M	1′- 3"	1′- 6"	1′- 6"	1′- 9"	1′- 10"	2′- 0"	2′- 3"	2′- 6"	2′- 9"	3′- 3"	3′- 9"	4′- 0"	4′- 3"	5′- 1"
N	4′- 0"	4′- 3"	4′- 6"	4′- 9"	5′- 2"	5′- 9"	6′- 0"	6′- 6"	7′- 6"	8′-0"	9′-0"	9′- 9"	10′- 9"	11′- 9"
~~ROW 1 SPACING~~	~~12′- 3"~~	~~10′- 3"~~	~~8′- 9"~~	~~7′- 6"~~	~~6′- 3"~~	~~5′- 3"~~	~~4′- 9"~~	~~4′- 0"~~	~~3′- 9"~~	~~3′- 9"~~	~~4′-0"~~	~~3′- 9"~~	~~3′- 9"~~	~~3′- 9"~~
~~ROW 2 SPACING~~	~~14′- 0"~~	~~12′- 9"~~	~~11′- 6"~~	~~10′- 3"~~	~~9′- 3"~~	~~8′- 3"~~	~~7′- 9"~~	~~6′- 6"~~	~~7′- 6"~~	~~6′- 0"~~	~~4′- 0"~~	~~4′- 0"~~	~~3′- 9"~~	~~3′-9"~~
~~ROW 3 SPACING~~									~~6′- 0"~~	~~5′- 3"~~	~~5′- 0"~~	~~4′- 0"~~	~~6′- 0"~~	~~4′- 0"~~
~~ROW 4 SPACING~~													~~3′- 9"~~	~~3′- 9"~~
STEM WITH HAUNCH, BATTER	0	½:12	½:12	½:12	½:12	½:12	½:12	½:12	½:12	⅝:12	¾:12	⅞:12	1:12	1:12
~~STEM WITHOUT HAUNCH, BATTER~~	~~0~~	~~0~~	~~0~~	~~0~~	~~0~~	~~0~~	~~0~~	~~0~~	~~¼:12~~	~~¼:12~~	~~½:12~~	~~¾:12~~	~~¾:12~~	~~¾:12~~
ⓐ BARS						#7 @ 15	#7 @ 12	#7 @ 12	#8 @ 12	#6 @ 6	#6 @ 6	#6 @ 6	#8 @ 9	#9 @ 9
ⓑ BARS	#8 @ 12	#7 @ 9	#7 @ 6	#7 @ 6	#7 @ 6	#9 @ 7.5	#9 @ 6	#10 @ 6	#10 @ 6	#8 @ 6Ȣ	#8 @ 6Ȣ	#8 @ 6Ȣ	#10 @ 9Ȣ	#11 @ 9Ȣ
ha			5′- 0"	6′- 0"	7′- 0"	7′ - 0"	6′- 0"	7′- 0"	7′- 0"	7′- 6"	8′- 6"	9′- 3"	15′- 0"	11′- 3"
hb						11′ - 6"	12′- 0"	13′- 3"	16′- 0"	15′- 6"	17′- 6"	18′- 9"	21′- 0"	20′- 9"
ⓒ BARS	#6 @ 12	#6 @ 9	#6 @ 6	#6 @ 6	#6 @ 6	#8 @ 7.5	#8 @ 6	#9 @ 6	#9 @ 6	#10 @ 6	#10 @ 6	#11 @ 6	#10 @ 9Ȣ	#10 @ 9Ȣ
ⓓ BARS	#5 @ 12	#5 @ 9	#5 @ 12	#5 @ 12	#5 @ 12	#6 @ 15	#5 @ 12	#5 @ 12	#6 @ 12	#6 @ 12	#6 @ 12	#7 @ 12	#6 @ 9	#9 @ 9
ⓔ BARS	10-#7 @ 6	8-#7 @ 7	10-#6 @ 6	8-#6 @ 6	6-#6 @ 12	6-#5 @ 12	6-#5 @ 12	6-#5@15	#5 @ 18	#5 @ 18	#5 @ 18	#5 @ 18	#5 @ 18	#5 @ 18
ⓕ BARS	10-#8 @ 7	10-#8 @ 6	10-#7 @ 8	12-#6 @ 7	8-#7 @ 11	7-#6 @ 13	8-#6 @ 12	8-#5@15	#5 @ 18	#5 @ 18	#5 @ 18	#5 @ 18	#5 @ 18	#5 @ 18

◇2 Note:

1. For location of Detail A, see "RETAINING WALL TYPE 1SWBP - DETAILS NO. 2" sheet.

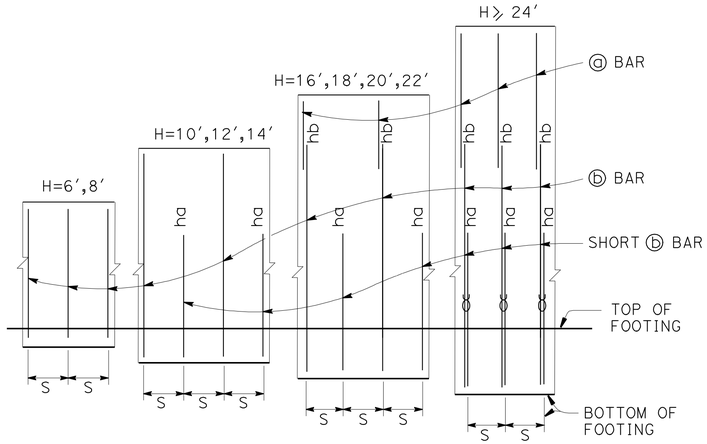

ELEVATION

Note:
"ha" and "hb" above ⓑ bars indicate distance from top of footing to upper end of ⓑ bars, see table.
"s" is ⓑ bar spacing, see table.
Ȣ :2 bar bundle

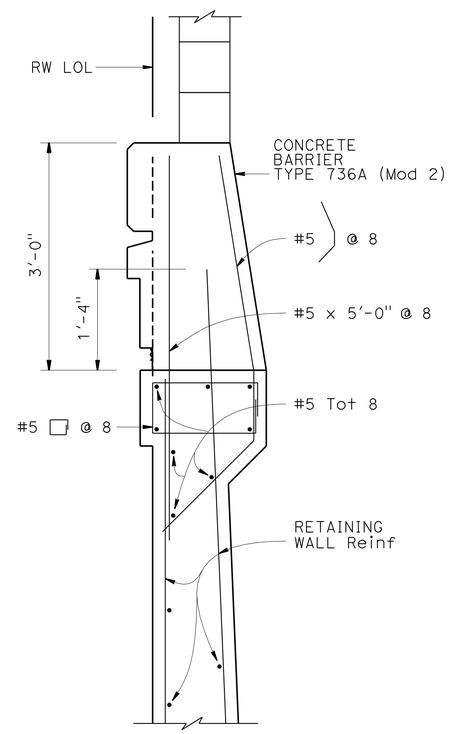

◇3 DETAIL A
1" = 1′-0"

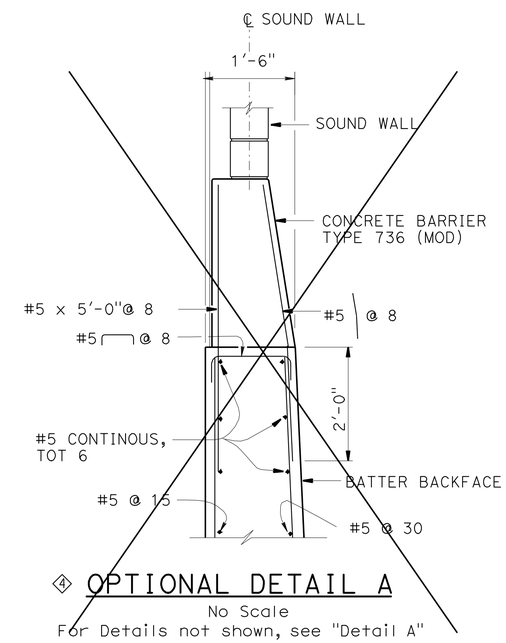

◇4 OPTIONAL DETAIL A
No Scale
For Details not shown, see "Detail A"

DESIGN DATA

Design: AASHTO LRFD Bridge Design Specifications 4th edition with California Amendments

WS: 33 psf on Soundwall and Barrier

LS: Varied surcharge on level ground surface

CT: 54 kip maximum traffic impact loading evenly distributed over 10 feet at top of the barrier and 1:1 distribution down and outward

EQE: Mononobe-Okabe Method
K_h = 0.3
K_v = 0.0

Soil: ϕ = 34°
γ = 120 pcf

Reinforced Concrete: f′c = 3600 psi
fy = 60,000 psi

Load Combinations and Limit States

Service I Q=1.00DC+1.00EV+1.00EH+1.00LS+0.30WS

Service II Q=1.00DC+1.00EV+1.00EH+1.00WS

Strength I Q=aDC+BEV+1.50EH+1.75LS
Q=1.25DC + 1.35EV + 0.90EH +1.75LS (for piles at heel)

Strength III Q=aDC+BEV+1.50EH+1.40WS

Strength V Q=aDC+BEV+1.50EH+1.35LS+0.40WS

Extreme I Q=1.00DC+1.00EV+1.00EH+1.00EQD+1.00EQE

Extreme II Q=1.00DC+1.00EV+1.00EH+1.00CT

Where:

Q: Force Effects
a: 1.25 or 0.90, Which ever Controls Design
β: 1.35 or 1.00, which ever Controls Design
DC: Dead Load of Structure Components
EV: Vertical Earth Fill Pressure
LS: Live Load Surcharge
EQE: Seismic Earth Pressure
EQD: Soil and Structure Components Inertia. Soil inertia ignored for stem design
WS: Wind Load on Soundwall and Barrier
CT: Vehicular Collision Force

SPECIAL DETAILS

REVISED STANDARD DRAWING
FILE NO. xs14-320-1
APPROVAL DATE July 2011

◇1 Modified Table ◇3 Revised Detail
◇2 Revised Note ◇4 Deleted Detail

STATE OF CALIFORNIA DEPARTMENT OF TRANSPORTATION

DIVISION OF ENGINEERING SERVICES

BRIDGE NO. 53E0187
POST MILE 4.46

SOUND WALL NO. 250
RETAINING WALL TYPE 1SWBP - DETAIL NO. 1

DS OSD 2147A (ENGLISH STANDARD DRAWING "XS" BORDER REV. (02-02-11)

ORIGINAL SCALE IN INCHES FOR REDUCED PLANS 0 1 2 3

UNIT: 3623
PROJECT NUMBER & PHASE: 0700001834 & 1 CONTRACT NO.: 07-215941

DISREGARD PRINTS BEARING EARLIER REVISION DATES

REVISION DATES 09/30/11 11/25/11 12/07/11 03/22/12

SHEET 34 OF 44

FILE => 53-E0187-s-rw_typ1_dt01.dgn

USERNAME => s128843 DATE PLOTTED => 14-APR-2012 TIME PLOTTED => 10:32

DIST	COUNTY	ROUTE	POST MILES TOTAL PROJECT	SHEET No.	TOTAL SHEETS
07	LA	5	4.0/5.9	1321	1597

REGISTERED CIVIL ENGINEER 12/12/11 DATE

4-9-12
PLANS APPROVAL DATE

The State of California or its officers or agents shall not be responsible for the accuracy or completeness of electronic copies of this plan sheet.

REGISTERED PROFESSIONAL ENGINEER FRANK HSIAOSHIH WEI No. C 52918 Exp. 12-31-12 CIVIL STATE OF CALIFORNIA

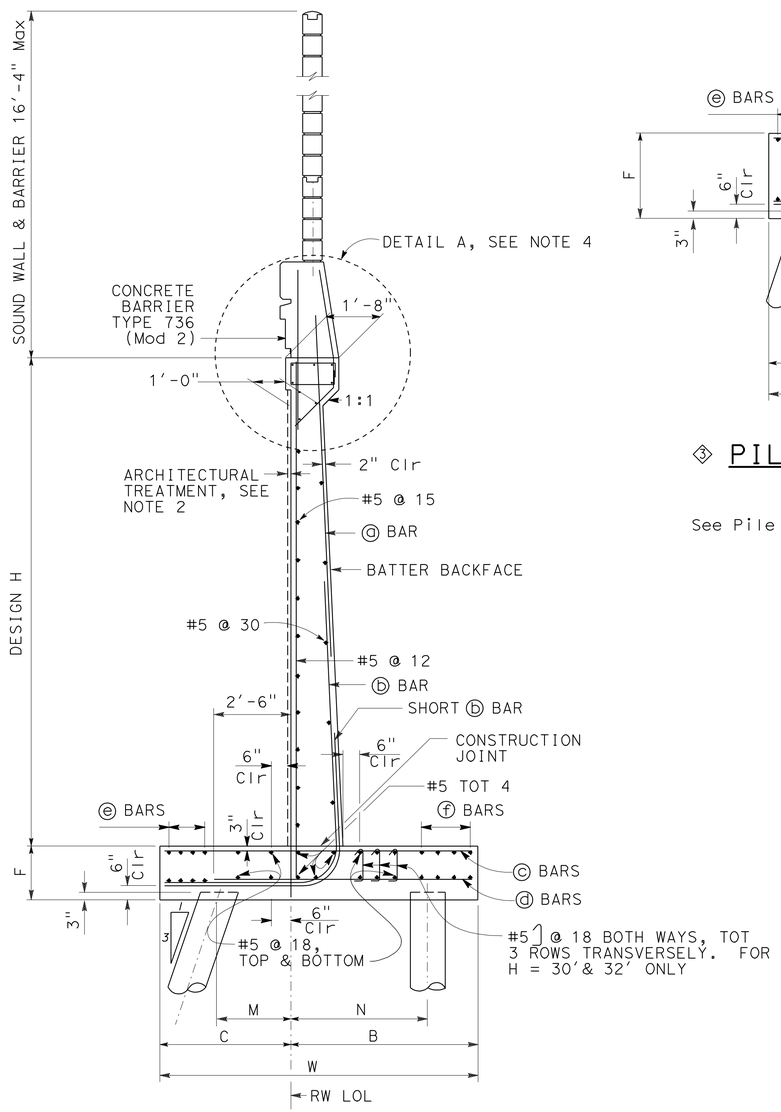

② PILE FOOTING SECTION

NO SCALE
All piles not shown

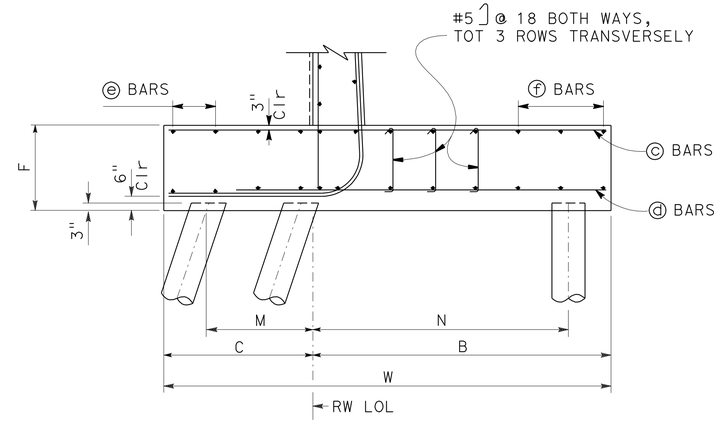

③ PILE FOOTING SECTION OVER SEWER - KALNOR LINE

NO SCALE
See Pile Footing Section for information not shown

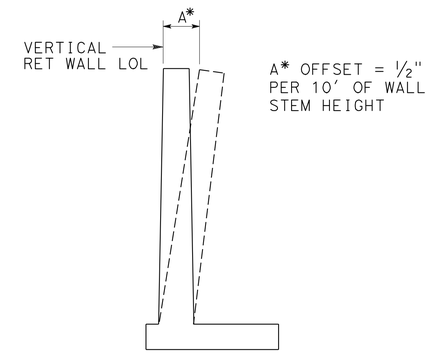

WALL OFFSET

NO SCALE
Values for offsetting forms to be determined by the engineer

① Notes:

1. For pile spacing, see "STRUCTURE PLAN NO. 1" and "STRUCTURE PLAN NO. 2" sheets.
2. For architectural treatment, see "RETAINING WALL AND BARRIER ARCHITECTURAL DETAILS" sheet.
3. For details not shown and drainage notes, see (B3-8)
4. For "Detail A", see "RETAINING WALL TYPE 1 SWBP - DETAILS NO. 1" sheet.
5. For sound wall and barrer reinforcement, see "SOUND WALL - MASONRY BLOCK WITH BARRER ON RETAINING WALL DETAILS NO.1" and "SOUND WALL - MASONRY BLOCK WITH BARRER ON RETAINING WALL DETAILS NO.2" sheets.
6. For H=6' through 14', extend ⓑ bars into barrier.
7. For H≥16', extend ⓐ bars into barrier.
8. For table of reinforcing steel dimensions and data, see "RETAINING WALL TYPE 1 SWBP - DETAILS NO. 1" sheet.

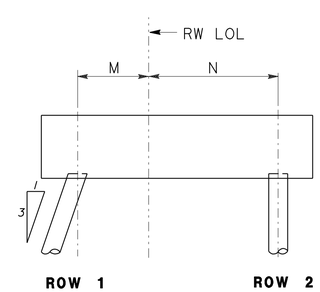

H = 6' through 20'

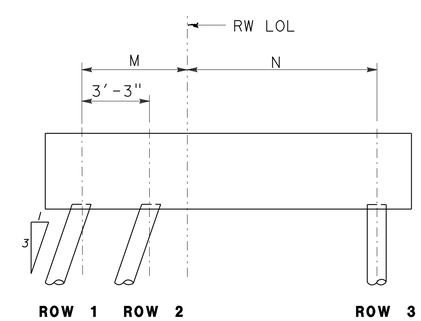

H = 22' through 28'

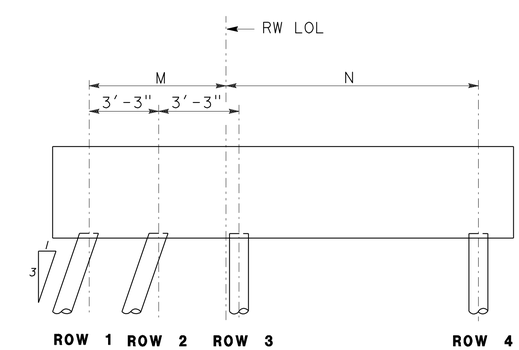

H = 30' and 32'

PILE PATTERN

NO SCALE

SPECIAL DETAILS

REVISED STANDARD DRAWING

FILE NO. xs14-320-2

APPROVAL DATE July 2011

① Added Notes ③ Added Detail
② Modified Detail

STATE OF CALIFORNIA DEPARTMENT OF TRANSPORTATION

DIVISION OF ENGINEERING SERVICES

BRIDGE NO. 53E0187
POST MILE 4.46

SOUND WALL NO. 250
RETAINING WALL TYPE 1SWBP - DETAIL NO. 2

DS OSD 2147A (ENGLISH STANDARD DRAWING "XS" BORDER REV. (02-02-11)

ORIGINAL SCALE IN INCHES FOR REDUCED PLANS 0 1 2 3

UNIT: 3623
PROJECT NUMBER & PHASE: 0700001834 & 1 CONTRACT NO.: 07-215941

DISREGARD PRINTS BEARING EARLIER REVISION DATES → REVISION DATES 09/30/11 11/25/11 12/07/11 03/22/12

SHEET 35 OF 44

FILE => 53-E0187-s-rw_typ1_dt02.dgn

USERNAME => s128843 DATE PLOTTED => 14-APR-2012 TIME PLOTTED => 11:08

DIST	COUNTY	ROUTE	POST MILES TOTAL PROJECT	SHEET No.	TOTAL SHEETS
07	LA	5	4.0/5.9	1322	1597

REGISTERED CIVIL ENGINEER 12/12/11 DATE

4-9-12
PLANS APPROVAL DATE

The State of California or its officers or agents shall not be responsible for the accuracy or completeness of electronic copies of this plan sheet.

REGISTERED PROFESSIONAL ENGINEER FRANK HSIAOSHIH WEI No. C 52918 Exp. 12-31-12 CIVIL STATE OF CALIFORNIA

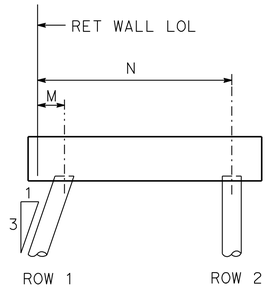

H = 6′ THROUGH 16′

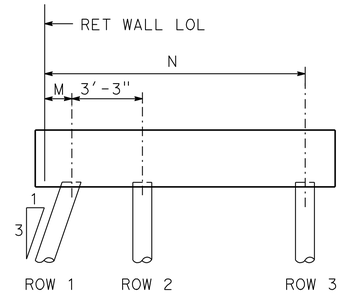

H = 18′ THROUGH 22′

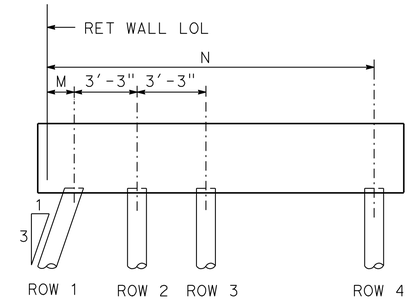

H = 24′

PILE PATTERN

No scale

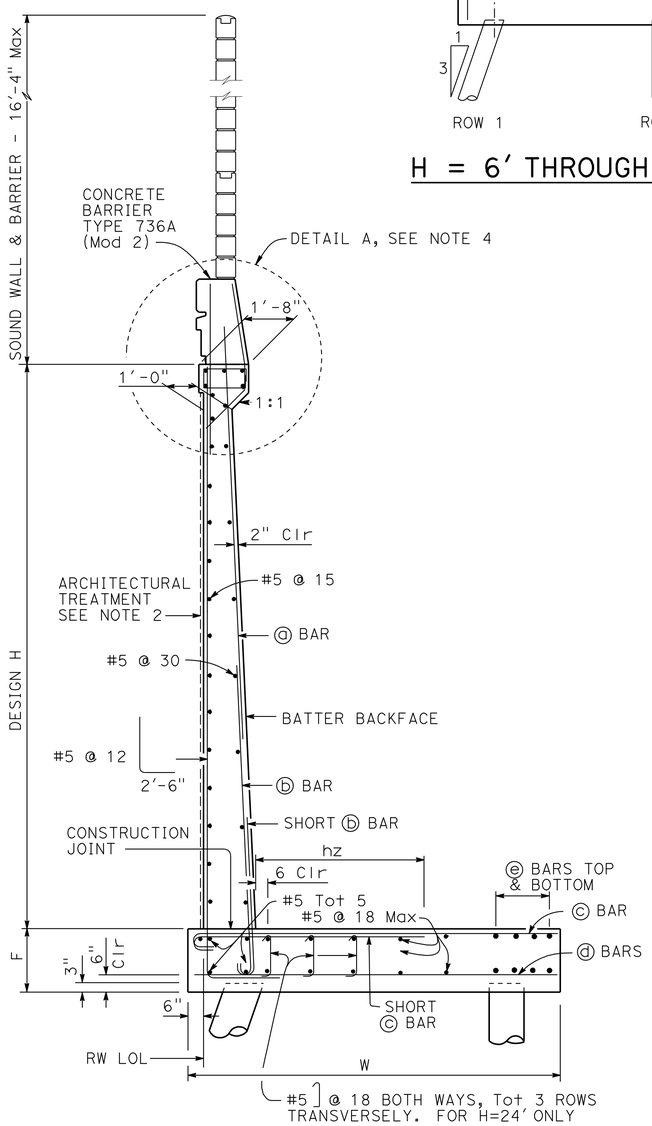

② PILE FOOTING SECTION

No scale
All piles are not shown

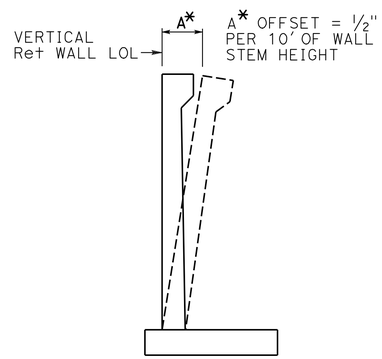

WALL OFFSET

No scale

Values for offsetting forms to be determined by the engineer

① NOTES:

1. For pile spacing, see "STRUCTURE PLAN" sheets.
2. For architectural treatment, see "RETAINING WALL AND BARRIER ARCHITECTURAL DETAILS" sheet.
3. For details not shown and drainage notes, see B3-8
4. For "DETAIL A", see "RETAINING WALL TYPE 5SWBP - DETAILS NO. 2" sheet.
5. For sound wall and Barrier reinforcements see "SOUND WALL - MASONRY BLOCK WITH BARRIER ON RETAINING WALL" sheets.
6. For H=6′ through 14′, extend ⓑ bars into Barrier for stem with haunch.
7. For H≥16′, extend ⓐ bars into Barrier for stem with haunch.

③ TABLE OF WALL DIMENSIONS, PILE SPACINGS AND REINFORCING STEEL

DESIGN H	6′	8′	10′	12′	14′	16′	18′	20′	22′	24′
W	8′-9″	9′-0″	9′-3″	9′-9″	10′-3″	10′-9″	12′-0″	13′-0″	14′-6″	16′-0″
F PILE FOOTING	1′-6″	1′-6″	1′-6″	1′-6″	1′-9″	2′-0″	2′-0″	2′-6″	2′-9″	2′-9″
M	1′-0″	1′-0″	1′-0″	1′-0″	1′-0″	1′-0″	1′-0″	1′-0″	1′-0″	1′-0″
N	6′-9″	7′-0″	7′-3″	7′-9″	8′-3″	8′-9″	10′-0″	11′-0″	12′-6″	14′-0″
~~ROW 1 SPACING~~	~~8′-6″~~	~~7′-3″~~	~~6′-3″~~	~~5′-3″~~	~~4′-6″~~	~~3′-9″~~	~~3′-9″~~	~~3′-9″~~	~~3′-9″~~	~~3′-9″~~
~~ROW 2 SPACING~~	~~13′-6″~~	~~12′-0″~~	~~11′-6″~~	~~10′-3″~~	~~9′-3″~~	~~6′-6″~~	~~7′-0″~~	~~6′-0″~~	~~4′-0″~~	~~3′-9″~~
~~ROW 3 SPACING~~							~~7′-6″~~	~~6′-0″~~	~~5′-6″~~	~~5′-6″~~
~~ROW 4 SPACING~~										~~4′-6″~~
STEM WITH HUNCH, BATTER	0	½:12	½:12	½:12	½:12	½:12	½:12	½:12	½:12	⅝:12
~~STEM WITHOUT HUNCH, BATTER~~	~~0~~	~~0~~	~~0~~	~~0~~	~~0~~	~~0~~	~~0~~	~~0~~	~~¼:12~~	~~¼:12~~
ⓐ BARS						#7@15	#7@12	#7@12	#8@12	#6@6
ⓑ BARS	#8@12	#8@12	#7@6	#7@6	#7@6	#9@7.5	#9@6	#10@6	#10@6	#8@6 ℧
ha			5′-0″	6′-0″	7′-0″	7′-0″	6′-0″	7′-0″	7′-0″	7′-6″
hb						11′-6″	12′-0″	13′-3″	16′-0″	15′-6″
ⓒ BARS	#6@6	#6@6	#7@6	#8@6	#9@6	#10@7.5	#8@6 ℧	#9@6 ℧	#9@6 ℧	#10@6 ℧
hz	3′-6″	3′-6″	3′-6″	4′-0″	4′-3″	7′-0″	4′-9″	5′-6″	6′-3″	7′-6″
ⓓ BARS	#6@12	#5@12	#5@12	#5@12	#5@12	#5@15	#5@12	#5@12	#6@12	#5@12
ⓔ BARS	8-#8@11	8-#7@11	8-#7@11	8-#7@13	8-#7@16	10-#5@15	8-#5@12	#5@18	#5@18	#5@18

NOTES:

1. ℧ indicates 2 bar bundle.
2. Total ⓔ bars are top and bottom combined.

SPECIAL DETAILS

REVISED STANDARD DRAWING

FILE NO. xs14-370-1

APPROVAL DATE July 2011

① Add Notes ③ Modified Table
② Modified Detail

STATE OF CALIFORNIA DEPARTMENT OF TRANSPORTATION

DIVISION OF ENGINEERING SERVICES

BRIDGE NO. 53E0187
POST MILE 4.46

SOUND WALL NO. 250
RETAINING WALL TYPE 5SWBP - DETAIL NO. 1

DS OSD 2147A (ENGLISH STANDARD DRAWING "XS" BORDER REV. (02-02-11)

ORIGINAL SCALE IN INCHES FOR REDUCED PLANS 0 1 2 3

UNIT: 3623
PROJECT NUMBER & PHASE: 0700001834 & 1 CONTRACT NO.: 07-215941

DISREGARD PRINTS BEARING EARLIER REVISION DATES

REVISION DATES: 09/30/11 11/25/11 12/09/11 03/22/12

SHEET 36 OF 44

FILE => 53-E0187-t-rw_typ5_dt01.dgn

USERNAME => s128843 DATE PLOTTED => 14-APR-2012 TIME PLOTTED => 11:08

DIST	COUNTY	ROUTE	POST MILES TOTAL PROJECT	SHEET No.	TOTAL SHEETS
07	LA	5	4.0/5.9	1323	1597

REGISTERED CIVIL ENGINEER — DATE 12/12/11

4-9-12
PLANS APPROVAL DATE

REGISTERED PROFESSIONAL ENGINEER FRANK HSIAOSHIH WEI No. C 52918 Exp. 12-31-12 CIVIL STATE OF CALIFORNIA

The State of California or its officers or agents shall not be responsible for the accuracy or completeness of electronic copies of this plan sheet.

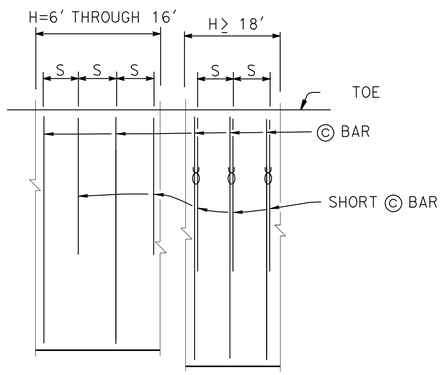

PLAN
NO SCALE

NOTES:
Only ⓒ bars shown
"S" is ⓒ bar spacing, see table
ϒ indicates 2 bar bundle.

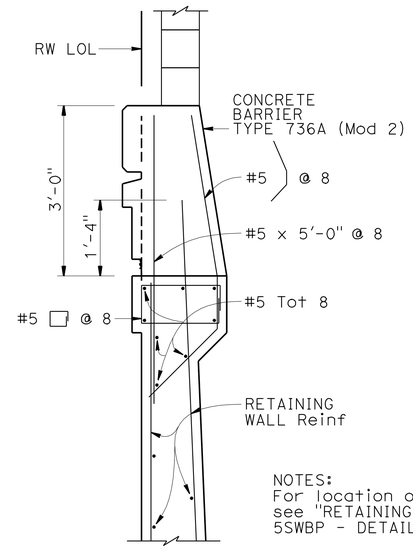

NOTES:
For location of Detail A, see "RETAINING WALL TYPE 5SWBP - DETAIL NO. 1" sheet

① DETAIL A
¾″ = 1′-0″

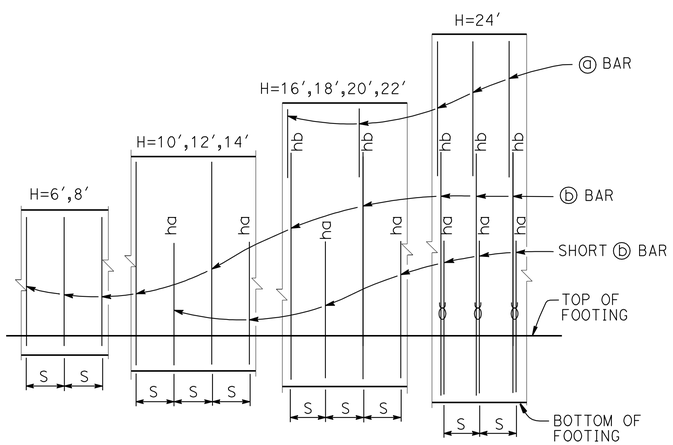

ELEVATION
No scale

NOTES:
"ha" and "hb" above ⓑ bars indicate distance from top of footing to upper end of ⓑ bars, see table.
"S" is ⓑ bar spacing, see table.
ϒ indicates 2 bar bundle.

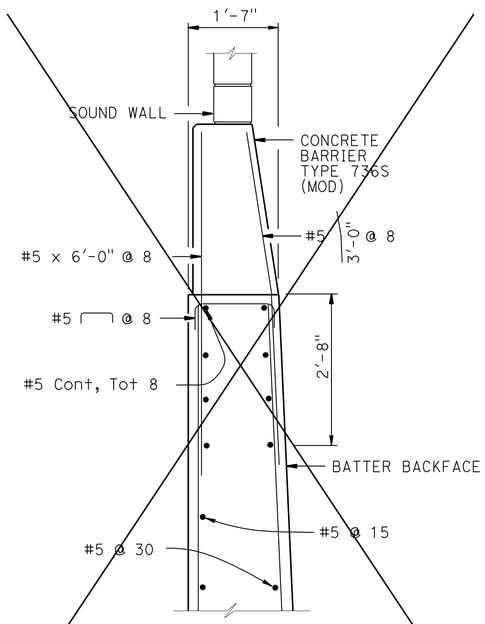

② OPTIONAL DETAIL A
¾″ = 1′-0″

For details not shown, see "DETAIL A"

DESIGN DATA

Design: AASHTO LRFD Bridge Design Specifications 4th edition with California Amendments

WS: 33 psf on sound wall and barrier

LS: Varied surcharge on level ground surface

CT: 54 kip maximum traffic impact loading evenly distributed over 10 feet at top of the barrier and 1:1 distribution down and outward

EQE: Mononobe-Okabe Method
K_h = 0.3
K_v = 0.0

Soil: ϕ = 34°
γ = 120 pcf

Reinforced Concrete: f′c = 3600 psi
fy = 60,000 psi

Load Combinations and Limit States

Service I	Q=1.00DC+1.00EV+1.00EH+1.00LS+0.30WS
Service II	Q=1.00DC+1.00EV+1.00EH+1.00WS
Strength I	Q=αDC+βEV+1.50EH+1.75LS Q=1.25DC+1.35EV+0.90EH+1.75LS (for piles at heel)
Strength III	Q=αDC+βEV+1.50EH+1.40WS
Strength V	Q=αDC+βEV+1.50EH+1.35LS+0.40WS
Extreme I	Q=1.00DC+1.00EV+1.00EH+1.00EQD+1.00EQE
Extreme II	Q=1.00DC+1.00EV+1.00EH+1.00CT

Where:

Q: Force Effects
α: 1.25 or 0.90, Which ever Controls Design
β: 1.35 or 1.00, which ever Controls Design
DC: Dead Load of Structure Components
EV: Vertical Earth Fill Pressure
LS: Live Load Surcharge
EQE: Seismic Earth Pressure
EQD: Soil and Structure Components Inertia. Soil inertia ignored for stem design
WS: Wind Load on Sound Wall and Barrier
CT: Vehicular Collision Force

SPECIAL DETAILS

REVISED STANDARD DRAWING
FILE NO. xs14-370-2
APPROVAL DATE July 2011

① Revised Detail
② Deleted Detail

STATE OF CALIFORNIA DEPARTMENT OF TRANSPORTATION

DIVISION OF ENGINEERING SERVICES

BRIDGE NO. 53E0187
POST MILE 4.46

SOUND WALL NO. 250
RETAINING WALL TYPE 5SWBP - DETAIL NO. 2

DS OSD 2147A (ENGLISH STANDARD DRAWING "XS" BORDER REV. (02-02-11)

ORIGINAL SCALE IN INCHES FOR REDUCED PLANS 0 1 2 3

UNIT: 3623
PROJECT NUMBER & PHASE: 0700001834 & 1 CONTRACT NO.: 07-215941

DISREGARD PRINTS BEARING EARLIER REVISION DATES
REVISION DATES 09/30/11 11/25/11 12/07/11 03/22/12
SHEET 37 OF 44

FILE => 53-E0187-t-rw_typ5_dt02.dgn

USERNAME => s128843 DATE PLOTTED => 14-APR-2012 TIME PLOTTED => 11:08

DIST	COUNTY	ROUTE	POST MILES TOTAL PROJECT	SHEET No.	TOTAL SHEETS
07	LA	5	4.0/5.9	1324	1597

REGISTERED CIVIL ENGINEER 12/12/11 DATE

4-9-12
PLANS APPROVAL DATE

REGISTERED PROFESSIONAL ENGINEER FRANK HSIAOSHIH WEI No. C 52918 Exp. 12-31-12 CIVIL STATE OF CALIFORNIA

The State of California or its officers or agents shall not be responsible for the accuracy or completeness of electronic copies of this plan sheet.

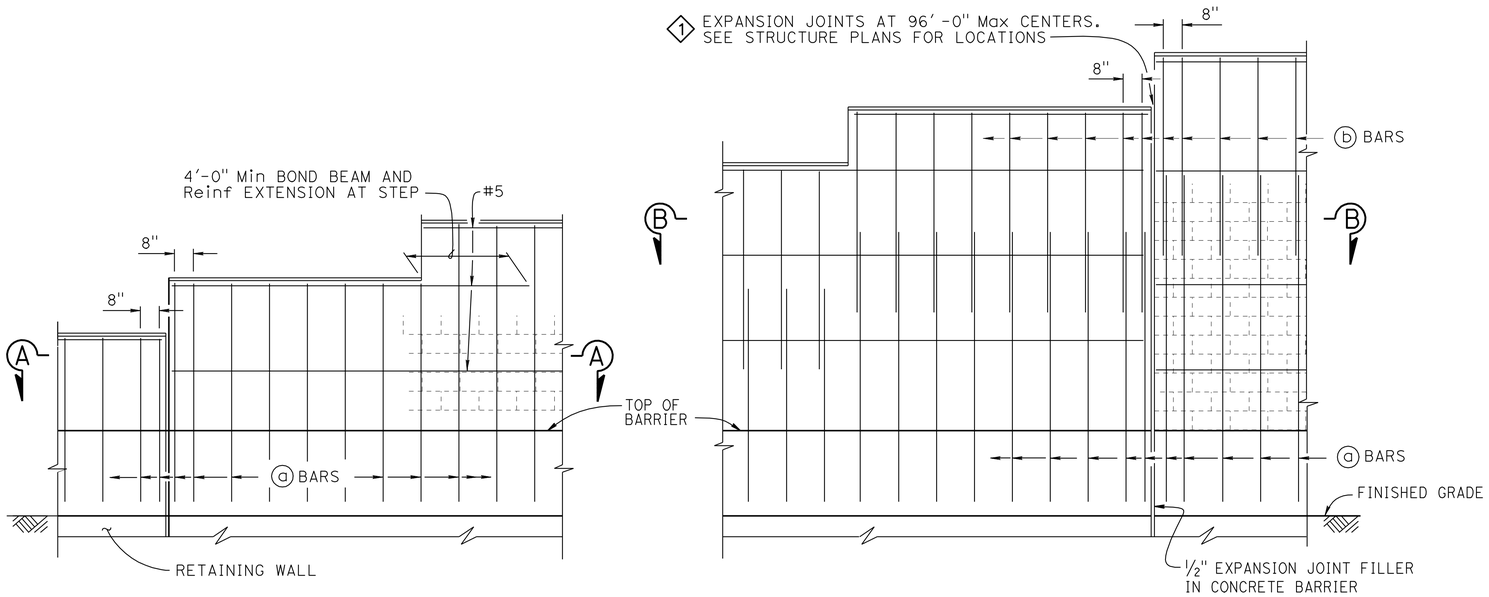

H=6'-4" THRU H=10'-4"

H=12'-4" THRU H=16'-4"

PART ELEVATION

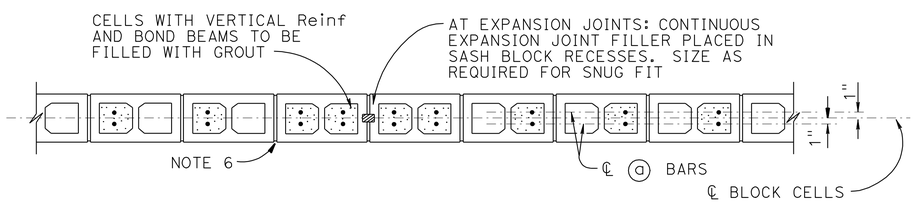

SECTION A-A

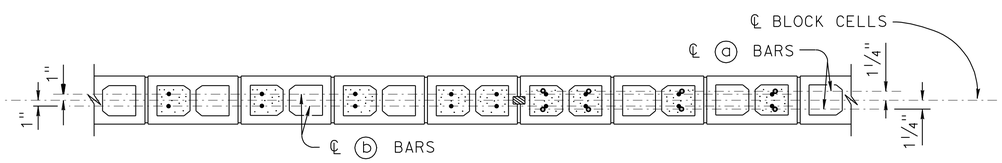

SECTION B-B

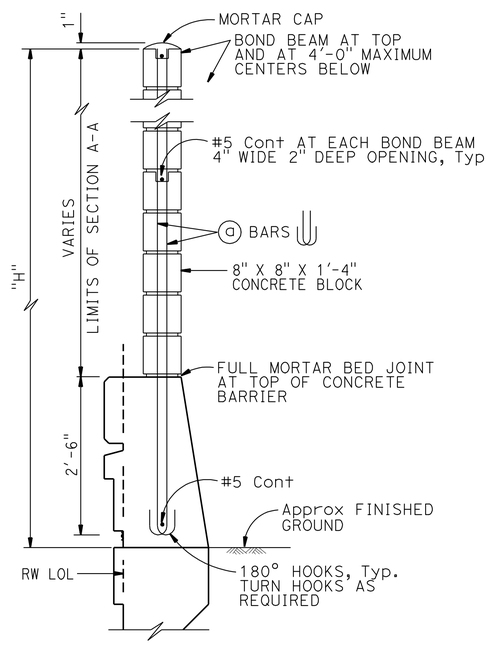

H=6'-4" THRU H=10'-4"

For details not shown, see H=12'-4" thru H=16'-4"

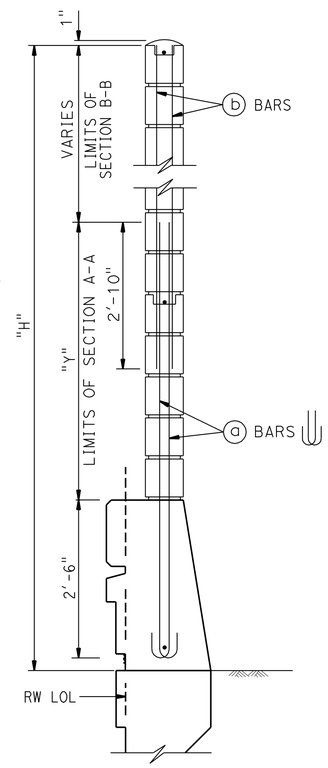

H=12'-4" THRU H=16'-4"

For details not shown, see H=6'-4" thru H=10'-4"

2 TYPICAL SECTION

SOUND WALL REINFORCEMENT TABLE

MAXIMUM "H"	ⓐ BARS @ 1'-4" Max	ⓑ BARS @ 1'-4" Max	"Y"	f'm (psi)	COMPRESSIVE STRENGTH OF CMU (psi)	MAXIMUM "H"
6'-4"	#4	———	———	1500	1900	6'-4"
8'-4"	#4	———	———	1500	1900	8'-4"
10'-4"	#4	———	———	1500	1900	10'-4"
12'-4"	#5	#4	5'-0"	1500	1900	12'-4"
14'-4"	#6	#4	7'-0"	1500	1900	14'-4"
16'-4"	#6	#4	9'-0"	2500	3700	16'-4"

NOTES:

1. For details not shown, see "SOUND WALL - MASONRY BLOCK WITH BARRIER ON RETAINING WALL - DETAILS NO. 2" sheet
2. Slope ground at traffic side of barrier to drain. Maximum slope ±10%
3. See STANDARD PLANS B15-9 for other details
4. For type of block and joint finish, see other sheets
5. When blocks are laid in stacked bond, ladder type, galvanized joint reinforcement shall be provided. A minimum of 2-9 gauge wire continuous at 4'-0" maximum to be used. Locate reinforcement in joints that are at the approximate midpoint between bond beams
6. Horizontal joints shall be tooled concave or may be weathered. Vertical joints shall be tooled concave or may be raked
7. For intermediate wall heights that are between the "H's" given, use the tabular information for the next higher "H"
8. Masonry strengths are listed in "SOUND WALL REINFORCEMENT TABLE"
9. Concrete to be used for the barrier shall contain not less than 590 pounds of cementitious material per cubic yard

SPECIAL DETAILS

NO SCALE

REVISED STANDARD DRAWING

FILE NO. xs15-130-1e

APPROVAL DATE 10-22-09

1 Revised Call Out

2 Modified Detail

STATE OF CALIFORNIA DEPARTMENT OF TRANSPORTATION

DIVISION OF ENGINEERING SERVICES

BRIDGE NO. 53E0187

POST MILE 4.46

SOUND WALL NO. 250

SOUNDWALL - MASONRY BLOCK WITH BARRIER ON RETAINING WALL DETAILS NO. 1

DS OSD 2147A (ENGLISH STANDARD DRAWING "XS" BORDER REV. (02-02-11)

ORIGINAL SCALE IN INCHES FOR REDUCED PLANS 0 1 2 3

UNIT: 3623
PROJECT NUMBER & PHASE: 0700001834 & 1 CONTRACT NO.: 07-215941

DISREGARD PRINTS BEARING EARLIER REVISION DATES

REVISION DATES 09/30/11 11/25/11 12/12/11 03/22/13

SHEET 38 OF 44

FILE => 53-E0187-u-sw_mas_blk_dt01.dgn

USERNAME => s128643 DATE PLOTTED => 14-APR-2012 TIME PLOTTED => 11:08

DIST	COUNTY	ROUTE	POST MILES TOTAL PROJECT	SHEET No.	TOTAL SHEETS
07	LA	5	4.0/5.9	1325	1597

REGISTERED CIVIL ENGINEER 12/12/11 DATE

4-9-12
PLANS APPROVAL DATE

The State of California or its officers or agents shall not be responsible for the accuracy or completeness of electronic copies of this plan sheet.

REGISTERED PROFESSIONAL ENGINEER FRANK HSIAOSHIH WEI No. C 52918 Exp. 12-31-12 CIVIL STATE OF CALIFORNIA

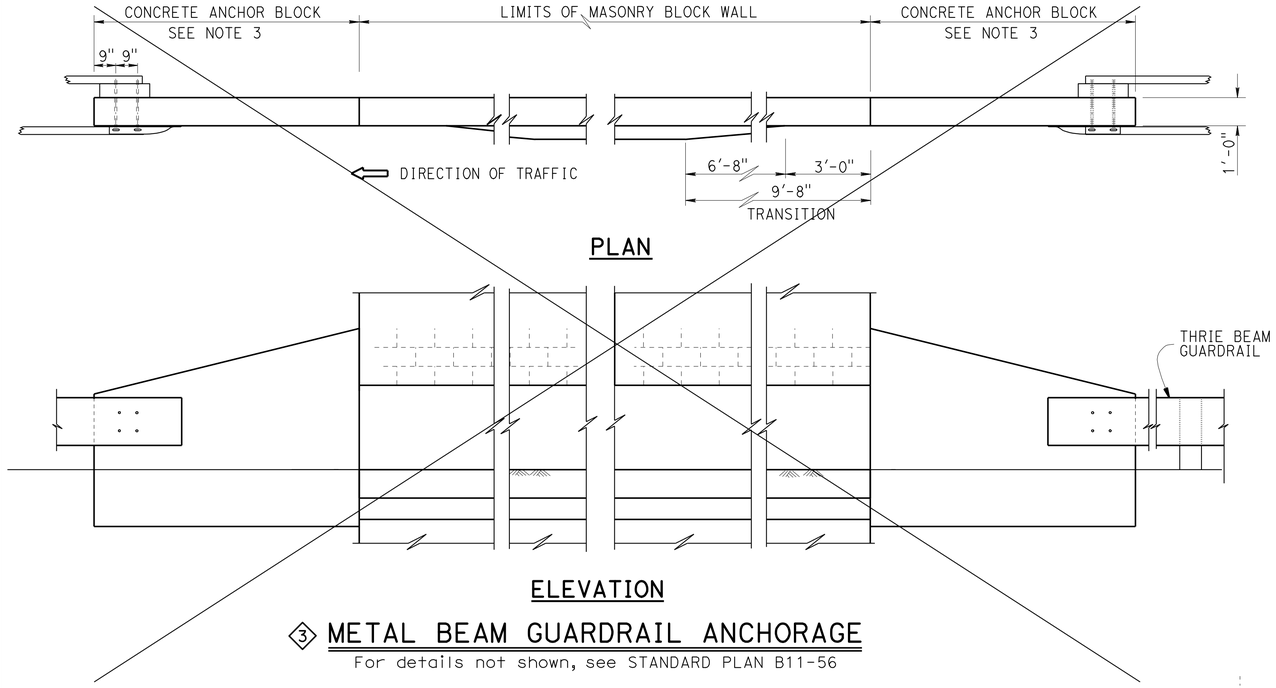

③ METAL BEAM GUARDRAIL ANCHORAGE

For details not shown, see STANDARD PLAN B11-56

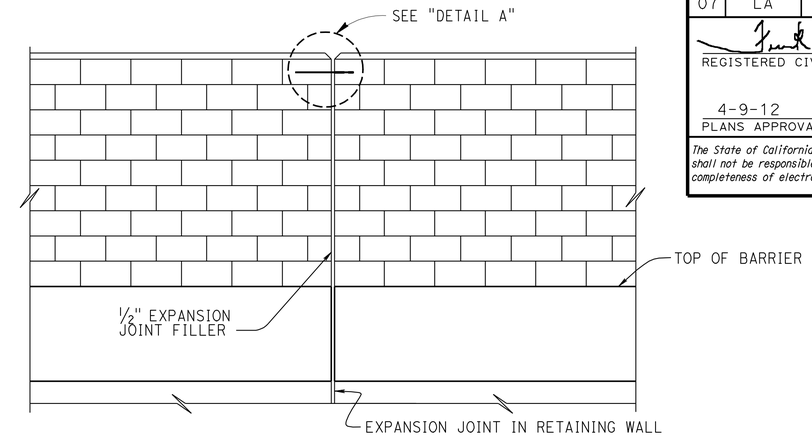

ALIGNMENT KEY DETAIL

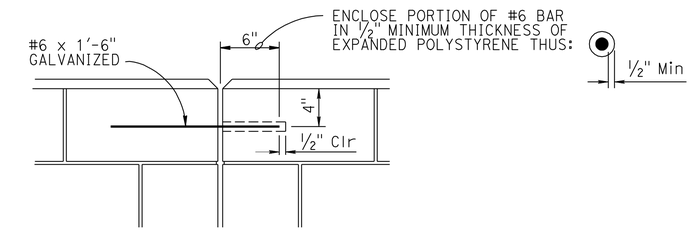

DETAIL A

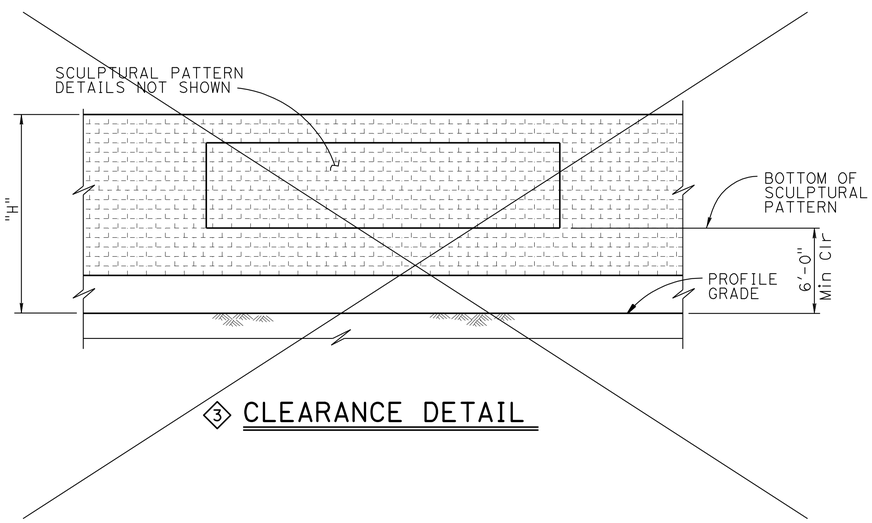

③ CLEARANCE DETAIL

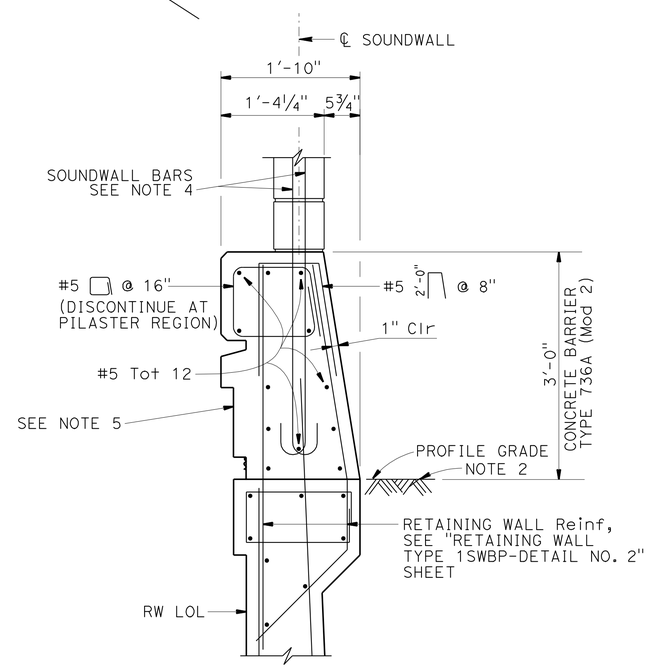

① BARRIER SECTION

DESIGN NOTES

DESIGN
Uniform Building Code, 1997 Edition and the Bridge Design Specifications

DESIGN WIND LOAD
33 psf

DESIGN SEISMIC LOAD
0.57 Dead load

CONCRETE MASONRY

REINFORCED CONCRETE
f'c = 3600 psi
fy = 60 ksi

REGULAR STRENGTH	HIGH STRENGTH	
f'm = 1500 psi	f'm = 2000 psi	f'm = 2500 psi
fb = 495 psi	fb = 660 psi	fb = 830 psi
fs = 24,000 psi	fs = 24,000 psi	fs = 24,000 psi
n = 25.8	n = 19.3	n = 15.5

② NOTES:

1. For details not shown, see REVISED STANDARD PLAN B15-6.
2. Slope ground at traffic side of barrier to drain. Maximum slope ±10% See STANDARD PLAN B11-56, Note D.
3. ~~For Concrete Anchor Block and connection details, see "CONNNECTION DETAIL DD" on STANDARD PLAN A77J3~~
4. See "TYPICAL SECTIONS" on "SOUNDWALL - MASONRY BLOCK WITH BARRIER ON RETAINING WALL DETAILS NO. 1" sheet.
5. For barrier architectural details, see "RETAINING WALL AND BARRIER ARCHITECTURAL DETAILS" sheet.

SPECIAL DETAILS

NO SCALE

REVISED STANDARD DRAWING
FILE NO. xs15-130-2e
APPROVAL DATE 10-22-09

① Modified Detail ③ Deleted Detail
② Revised Notes

STATE OF CALIFORNIA DEPARTMENT OF TRANSPORTATION

DIVISION OF ENGINEERING SERVICES

BRIDGE NO. 53E0187
POST MILE 4.46

SOUND WALL NO. 250

SOUNDWALL - MASONRY BLOCK WITH BARRIER ON RETAINING WALL DETAILS NO. 2

DS OSD 2147A (ENGLISH STANDARD DRAWING "XS" BORDER REV. (02-02-11)

ORIGINAL SCALE IN INCHES FOR REDUCED PLANS 0 1 2 3

UNIT: 3623
PROJECT NUMBER & PHASE: 0700001834 & 1 CONTRACT NO.: 07-215941

DISREGARD PRINTS BEARING EARLIER REVISION DATES

REVISION DATES 09/30/11 11/25/11 12/12/11 03/22/12

SHEET 39 OF 44

FILE => 53-E0187-u-sw_mas_blk_dt02.dgn

USERNAME => s128643 DATE PLOTTED => 14-APR-2012 TIME PLOTTED => 11:09

DIST	COUNTY	ROUTE	POST MILES TOTAL PROJECT	SHEET No.	TOTAL SHEETS
07	LA	5	4.0/5.9	1326	1597

REGISTERED CIVIL ENGINEER DATE

4-9-12
PLANS APPROVAL DATE

REGISTERED PROFESSIONAL ENGINEER MICHAEL G. SMITH No. 2229 Exp. 3-31-2012 GEOTECHNICAL STATE OF CALIFORNIA

The State of California or its officers or agents shall not be responsible for the accuracy or completeness of electronic copies of this plan sheet.

This LOTB sheet was prepared in accordance with the Caltrans Soil & Rock Logging, Classification, & Presentation Manual (2010 Edition).

BENCH MARK

ELEVATION 105.78 FT
LA 5 PM 4.8, 1995
FOUND 2-1/2 INCH CADT DISK IN CONCRETE CURB, FLUSH, STAMPED "LA5 4.8 1995"
THE MARK IS LOCATED ON THE EASTERLY CURB OF THE OFFRAMP GORE FROM
THE SOUTH BOUND 5 (SANTA ANA FWY) TO NORWALK BLVD. AND SAN ANTONIO ST.
NORTHING 1791107.943
EASTING 6538243.925
VERTICAL NAVD88, 0405-CALIFORNIA 5 US FEET.

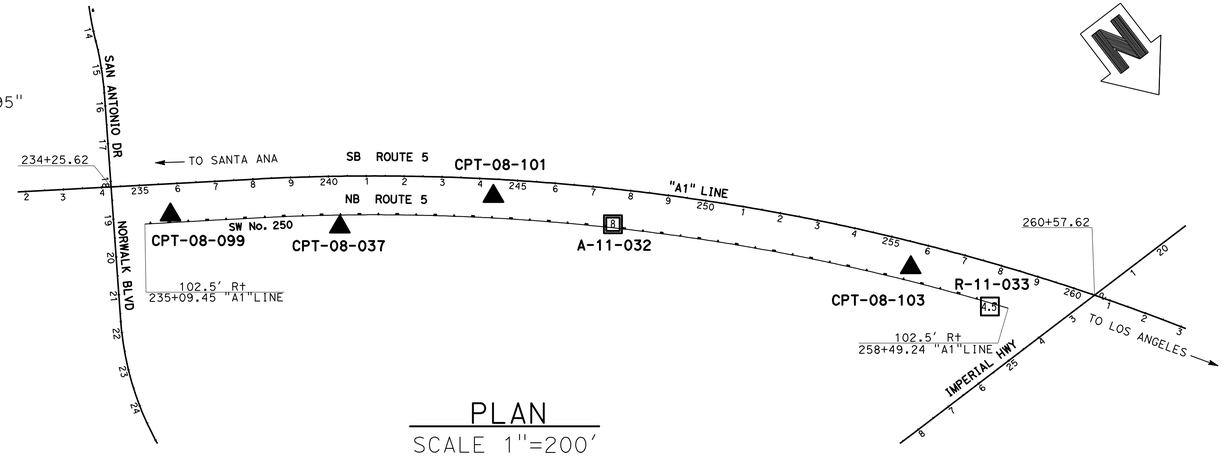

PLAN
SCALE 1"=200'

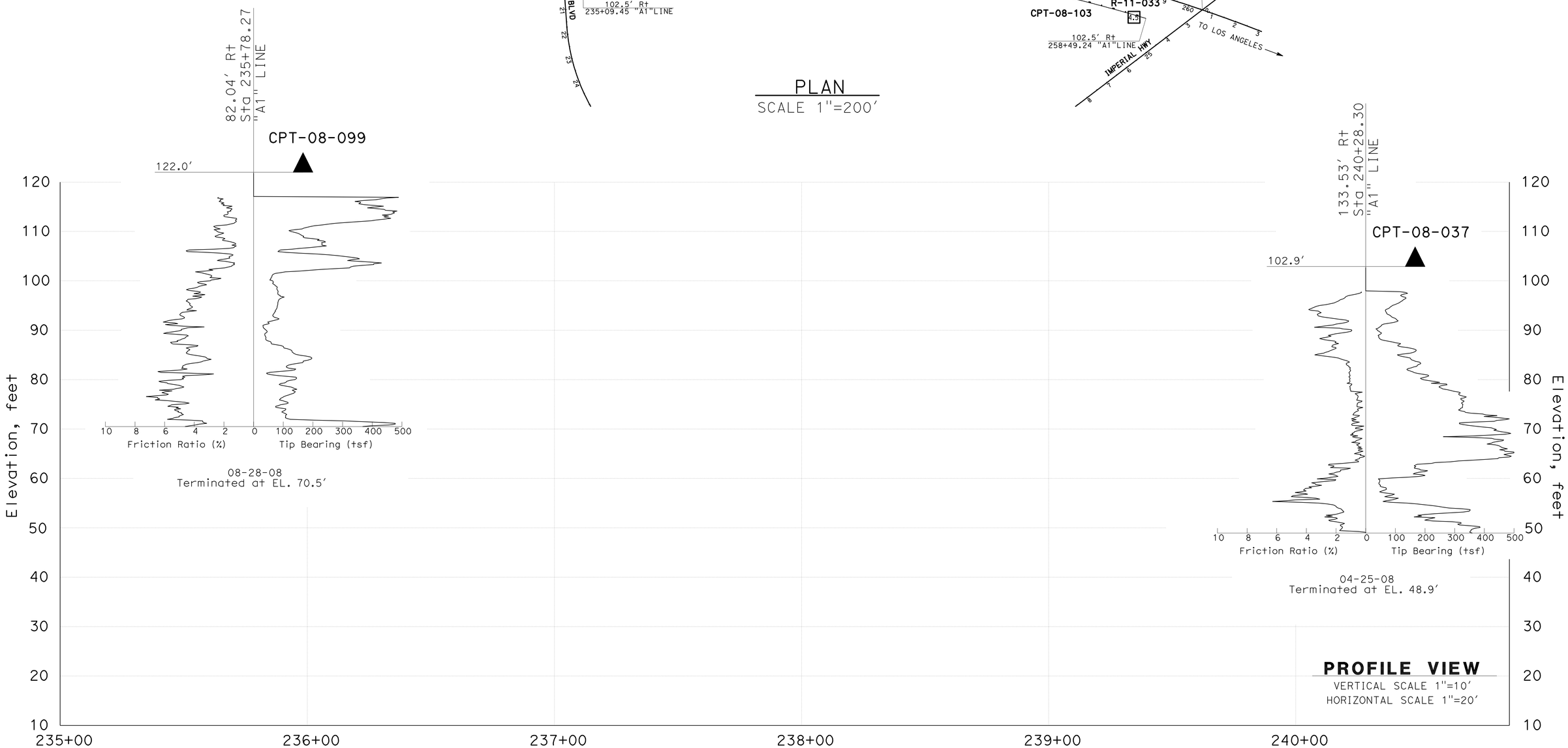

PROFILE VIEW
VERTICAL SCALE 1"=10'
HORIZONTAL SCALE 1"=20'

ENGINEERING SERVICES	MATERIALS AND GEOTECHNICAL SERVICES	STATE OF CALIFORNIA DEPARTMENT OF TRANSPORTATION	DIVISION OF ENGINEERING SERVICES STRUCTURE DESIGN DESIGN BRANCH 21	BRIDGE NO. 53E0187 POST MILE 4.46	SOUND WALL NO. 250
FUNCTIONAL SUPERVISOR NAME: M.SMITH	DRAWN BY: P.QUACH / T.Panah (URS CORP) CHECKED BY: F.GERAMI	FIELD INVESTIGATION BY: P.MCDONALD			LOG OF TEST BORINGS SHEET 1 OF 5

OGS CIVIL LOG OF TEST BORINGS SHEET

ORIGINAL SCALE IN INCHES FOR REDUCED PLANS 0 1 2 3

UNIT: 3658
PROJECT NUMBER & PHASE: 07 00001834 1 CONTRACT NO.: 07-215941

DISREGARD PRINTS BEARING EARLIER REVISION DATES → 12/14/11

REVISION DATES | SHEET 40 OF 44

FILE => 53-E0187-z-lotb_01.dgn

USERNAME => s128843 DATE PLOTTED => 14-APR-2012 TIME PLOTTED => 11:09

DIST	COUNTY	ROUTE	POST MILES TOTAL PROJECT	SHEET No.	TOTAL SHEETS
07	LA	5	4.0/5.9	1327	1597

REGISTERED CIVIL ENGINEER DATE

4-9-12
PLANS APPROVAL DATE

REGISTERED PROFESSIONAL ENGINEER
Amare Tsegie
No. C67529
Exp. 6-30-13
CIVIL
STATE OF CALIFORNIA

The State of California or its officers or agents shall not be responsible for the accuracy or completeness of electronic copies of this plan sheet.

This LOTB sheet was prepared in accordance with the Caltrans Soil & Rock Logging, Classification, & Presentation Manual (2010 Edition).

FOR PLAN VIEW, SEE
"LOG OF TEST BORINGS" 1 OF 5

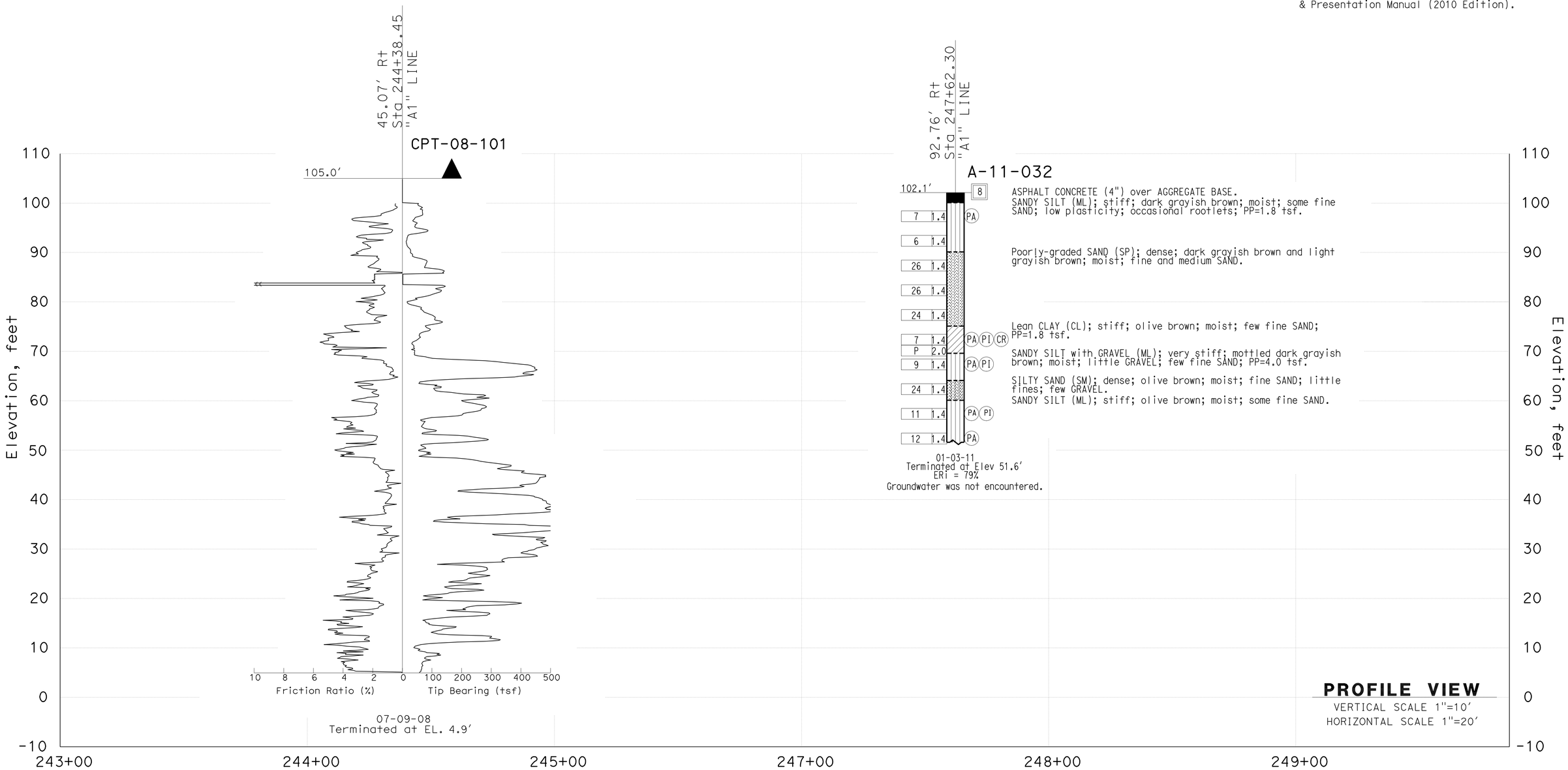

PROFILE VIEW
VERTICAL SCALE 1"=10'
HORIZONTAL SCALE 1"=20'

ENGINEERING SERVICES	MATERIALS AND GEOTECHNICAL SERVICES	STATE OF CALIFORNIA DEPARTMENT OF TRANSPORTATION	DIVISION OF ENGINEERING SERVICES STRUCTURE DESIGN DESIGN BRANCH 21	BRIDGE NO. 53E0187 POST MILE 4.46	SOUND WALL NO. 250
FUNCTIONAL SUPERVISOR NAME: CHI-TSENG LIU	DRAWN BY: P.QUACH / T.Panah (URS CORP) CHECKED BY: F.GERAMI	FIELD INVESTIGATION BY: A.TSEGIE/M.ISLAM/P.MCDONALD			LOG OF TEST BORINGS SHEET 2 OF 5

OGS CIVIL LOG OF TEST BORINGS SHEET

ORIGINAL SCALE IN INCHES FOR REDUCED PLANS 0 1 2 3

UNIT: 3658
PROJECT NUMBER & PHASE: 07 00001834 1 CONTRACT NO.: 07-215941

DISREGARD PRINTS BEARING EARLIER REVISION DATES

REVISION DATES 12/14/11

SHEET 41 OF 44

FILE => 53-E0187-z-lotb_02.dgn

USERNAME => s128843 DATE PLOTTED => 14-APR-2012 TIME PLOTTED => 11:09

DIST	COUNTY	ROUTE	POST MILES TOTAL PROJECT	SHEET No.	TOTAL SHEETS
07	LA	5	4.0/5.9	1328	1597

REGISTERED CIVIL ENGINEER — DATE

4-9-12
PLANS APPROVAL DATE

REGISTERED PROFESSIONAL ENGINEER — Amare Tsegie — No. C67529 — Exp. 6-30-13 — CIVIL — STATE OF CALIFORNIA

The State of California or its officers or agents shall not be responsible for the accuracy or completeness of electronic copies of this plan sheet.

This LOTB sheet was prepared in accordance with the Caltrans Soil & Rock Logging, Classification, & Presentation Manual (2010 Edition).

FOR PLAN VIEW, SEE
"LOG OF TEST BORINGS" 1 OF 5

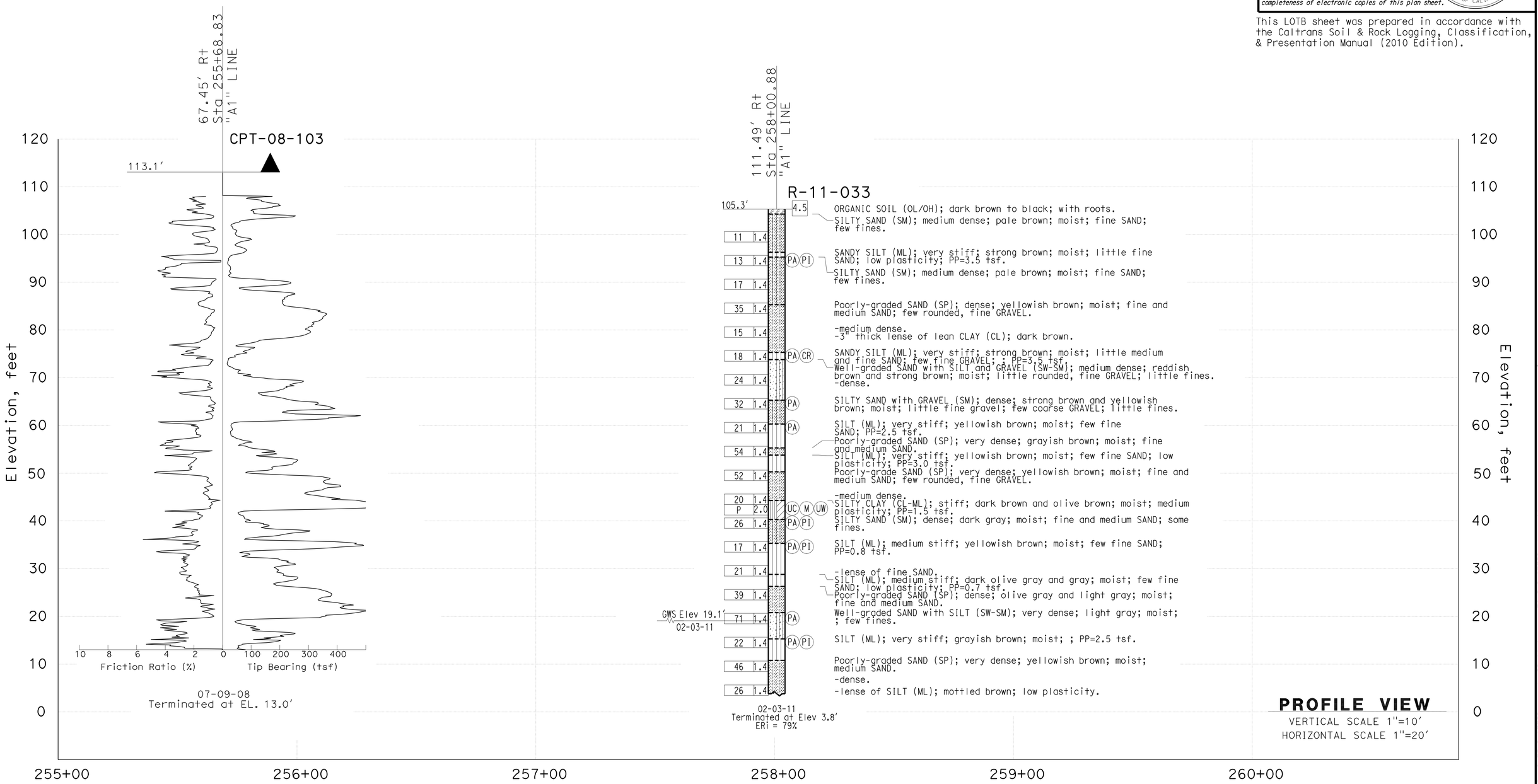

ENGINEERING SERVICES	MATERIALS AND GEOTECHNICAL SERVICES	STATE OF CALIFORNIA DEPARTMENT OF TRANSPORTATION	DIVISION OF ENGINEERING SERVICES STRUCTURE DESIGN DESIGN BRANCH 21	BRIDGE NO. 53E0187 POST MILE 4.46	SOUND WALL NO. 250
FUNCTIONAL SUPERVISOR NAME: CHI-TSENG LIU	DRAWN BY: P.QUACH / T.Panah (URS CORP) CHECKED BY: F.GERAMI	FIELD INVESTIGATION BY: A.TSEGIE/M.ISLAM/P.MCDONALD			LOG OF TEST BORINGS SHEET 3 OF 5

OGS CIVIL LOG OF TEST BORINGS SHEET

ORIGINAL SCALE IN INCHES FOR REDUCED PLANS 0 1 2 3

UNIT: 3658
PROJECT NUMBER & PHASE: 07 00001834 1 CONTRACT NO.: 07-215941

DISREGARD PRINTS BEARING EARLIER REVISION DATES → 12/14/11

REVISION DATES | SHEET 42 | OF 44

FILE => 53-E0187-z-lotb_03.dgn

USERNAME => s128843 DATE PLOTTED => 14-APR-2012 TIME PLOTTED => 11:09

REFERENCE: CALTRANS SOIL & ROCK LOGGING, CLASSIFICATION, AND PRESENTATION MANUAL (2010)

DIST	COUNTY	ROUTE	POST MILES TOTAL PROJECT	SHEET No.	TOTAL SHEETS
07	LA	5	4.0/5.9	1329	1597

REGISTERED CIVIL ENGINEER DATE

4-9-12
PLANS APPROVAL DATE

REGISTERED PROFESSIONAL ENGINEER
Amare Tsegie
No. C67529
Exp. 6-30-13
CIVIL
STATE OF CALIFORNIA

The State of California or its officers or agents shall not be responsible for the accuracy or completeness of electronic copies of this plan sheet.

This LOTB sheet was prepared in accordance with the Caltrans Soil & Rock Logging, Classification, & Presentation Manual (2010 Edition).

CEMENTATION

Description	Criteria
Weak	Crumbles or breaks with handling or little finger pressure.
Moderate	Crumbles or breaks with considerable finger pressure.
Strong	Will not crumble or break with finger pressure.

BOREHOLE IDENTIFICATION

Symbol	Hole Type	Description
Size	A	Auger Boring (hollow or solid stem bucket)
Size	R RW RC P	Rotary drilled boring (conventional) Rotary drilled with self-casing wire-line Rotary core with continuously-sampled, self-casing wire-line Rotary percussion boring (air)
Size	R	Rotary drilled diamond core
Size	HD HA	Hand driven (1-inch soil tube) Hand Auger
●	D	Dynamic Cone Penetration Boring
▲	CPT	Cone Penetration Test (ASTM D 5778)
⬚	O	Other (note on LOTB)

Note: Size in inches.

CONSISTENCY OF COHESIVE SOILS

Description	Shear Strength (tsf)	Pocket Penetrometer Measurement, PP, (tsf)	Torvane Measurement, TV, (tsf)	Vane Shear Measurement, VS, (tsf)
Very Soft	Less than 0.12	Less than 0.25	Less than 0.12	Less than 0.12
Soft	0.12 - 0.25	0.25 - 0.5	0.12 - 0.25	0.12 - 0.25
Medium Stiff	0.25 - 0.5	0.5 - 1	0.25 - 0.5	0.25 - 0.5
Stiff	0.5 - 1	1 - 2	0.5 - 1	0.5 - 1
Very Stiff	1 - 2	2 - 4	1 - 2	1 - 2
Hard	Greater than 2	Greater than 4	Greater than 2	Greater than 2

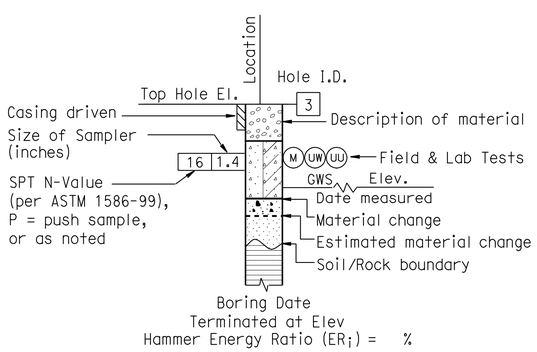

ROTARY BORING

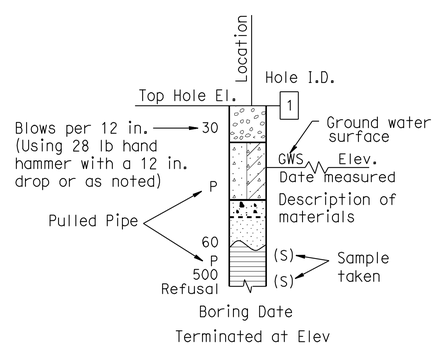

HAND BORING

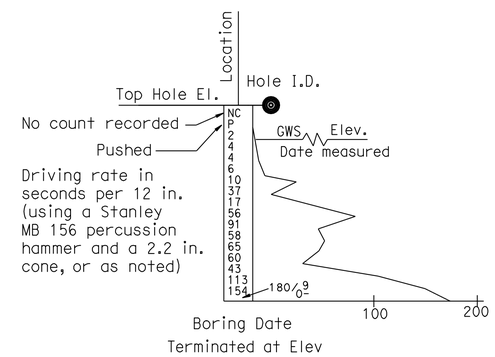

DYNAMIC CONE PENETRATION BORING

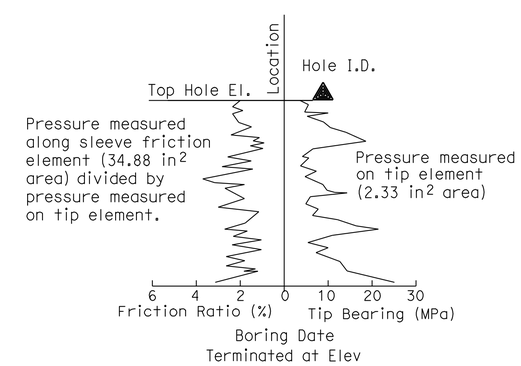

CONE PENETRATION TEST (CPT) BORING

ENGINEERING SERVICES	MATERIALS AND GEOTECHNICAL SERVICES	STATE OF CALIFORNIA DEPARTMENT OF TRANSPORTATION	DIVISION OF ENGINEERING SERVICES STRUCTURE DESIGN DESIGN BRANCH 21	BRIDGE NO. 53E0187 POST MILE 4.46	SOUND WALL NO. 250
FUNCTIONAL SUPERVISOR NAME: CHI-TSENG LIU	DRAWN BY: P.QUACH / T.Panah (URS CORP) CHECKED BY: F.GERAMI	FIELD INVESTIGATION BY: A.TSEGIE/M.ISLAM/P.MCDONALD			LOG OF TEST BORINGS SHEET 4 OF 5

OGS CIVIL LOG OF TEST BORINGS SHEET

ORIGINAL SCALE IN INCHES FOR REDUCED PLANS 0 1 2 3

UNIT: 3658
PROJECT NUMBER & PHASE: 07 00001834 1 CONTRACT NO.: 07-215941

DISREGARD PRINTS BEARING EARLIER REVISION DATES → 12/14/11

SHEET 43 OF 44

FILE => 53-E0187-z-lotb_04.dgn

USERNAME => s128843 DATE PLOTTED => 14-APR-2012 TIME PLOTTED => 11:09

REFERENCE: CALTRANS SOIL & ROCK LOGGING, CLASSIFICATION, AND PRESENTATION MANUAL (2010)

DIST	COUNTY	ROUTE	POST MILES TOTAL PROJECT	SHEET No.	TOTAL SHEETS
07	LA	5	4.0/5.9	1330	1597

REGISTERED CIVIL ENGINEER DATE

4-9-12
PLANS APPROVAL DATE

REGISTERED PROFESSIONAL ENGINEER Amare Tsegie No. C67529 Exp. 6-30-13 CIVIL STATE OF CALIFORNIA

The State of California or its officers or agents shall not be responsible for the accuracy or completeness of electronic copies of this plan sheet.

This LOTB sheet was prepared in accordance with the Caltrans Soil & Rock Logging, Classification, & Presentation Manual (2010 Edition).

GROUP SYMBOLS AND NAMES

Graphic/Symbol	Group Names	Graphic/Symbol	Group Names
GW	Well-graded GRAVEL Well-graded GRAVEL with SAND	CL	Lean CLAY Lean CLAY with SAND Lean CLAY with GRAVEL SANDY lean CLAY SANDY lean CLAY with GRAVEL GRAVELLY lean CLAY GRAVELLY lean CLAY with SAND
GP	Poorly-graded GRAVEL Poorly-graded GRAVEL with SAND		
GW-GM	Well-graded GRAVEL with SILT Well-graded GRAVEL with SILT and SAND	CL-ML	SILTY CLAY SILTY CLAY with SAND SILTY CLAY with GRAVEL SANDY SILTY CLAY SANDY SILTY CLAY with GRAVEL GRAVELLY SILTY CLAY GRAVELLY SILTY CLAY with SAND
GW-GC	Well-graded GRAVEL with CLAY (or SILTY CLAY) Well-graded GRAVEL with CLAY and SAND (or SILTY CLAY and SAND)		
GP-GM	Poorly-graded GRAVEL with SILT Poorly-graded GRAVEL with SILT and SAND	ML	SILT SILT with SAND SILT with GRAVEL SANDY SILT SANDY SILT with GRAVEL GRAVELLY SILT GRAVELLY SILT with SAND
GP-GC	Poorly-graded GRAVEL with CLAY (or SILTY CLAY) Poorly-graded GRAVEL with CLAY and SAND (or SILTY CLAY and SAND)		
GM	SILTY GRAVEL SILTY GRAVEL with SAND	OL	ORGANIC lean CLAY ORGANIC lean CLAY with SAND ORGANIC lean CLAY with GRAVEL SANDY ORGANIC lean CLAY SANDY ORGANIC lean CLAY with GRAVEL GRAVELLY ORGANIC lean CLAY GRAVELLY ORGANIC lean CLAY with SAND
GC	CLAYEY GRAVEL CLAYEY GRAVEL with SAND		
GC-GM	SILTY, CLAYEY GRAVEL SILTY, CLAYEY GRAVEL with SAND	OL	ORGANIC SILT ORGANIC SILT with SAND ORGANIC SILT with GRAVEL SANDY ORGANIC SILT SANDY ORGANIC SILT with GRAVEL GRAVELLY ORGANIC SILT GRAVELLY ORGANIC SILT with SAND
SW	Well-graded SAND Well-graded SAND with GRAVEL		
SP	Poorly-graded SAND Poorly-graded SAND with GRAVEL	CH	Fat CLAY Fat CLAY with SAND Fat CLAY with GRAVEL SANDY fat CLAY SANDY fat CLAY with GRAVEL GRAVELLY fat CLAY GRAVELLY fat CLAY with SAND
SW-SM	Well-graded SAND with SILT Well-graded SAND with SILT and GRAVEL		
SW-SC	Well-graded SAND with CLAY (or SILTY CLAY) Well-graded SAND with CLAY and GRAVEL (or SILTY CLAY and GRAVEL)	MH	Elastic SILT Elastic SILT with SAND Elastic SILT with GRAVEL SANDY elastic SILT SANDY elastic SILT with GRAVEL GRAVELLY elastic SILT GRAVELLY elastic SILT with SAND
SP-SM	Poorly-graded SAND with SILT Poorly-graded SAND with SILT and GRAVEL		
SP-SC	Poorly-graded SAND with CLAY (or SILTY CLAY) Poorly-graded SAND with CLAY and GRAVEL (or SILTY CLAY and GRAVEL)	OH	ORGANIC fat CLAY ORGANIC fat CLAY with SAND ORGANIC fat CLAY with GRAVEL SANDY ORGANIC fat CLAY SANDY ORGANIC fat CLAY with GRAVEL GRAVELLY ORGANIC fat CLAY GRAVELLY ORGANIC fat CLAY with SAND
SM	SILTY SAND SILTY SAND with GRAVEL		
SC	CLAYEY SAND CLAYEY SAND with GRAVEL	OH	ORGANIC elastic SILT ORGANIC elastic SILT with SAND ORGANIC elastic SILT with GRAVEL SANDY ORGANIC elastic SILT SANDY ORGANIC elastic SILT with GRAVEL GRAVELLY ORGANIC elastic SILT GRAVELLY ORGANIC elastic SILT with SAND
SC-SM	SILTY, CLAYEY SAND SILTY, CLAYEY SAND with GRAVEL		
PT	PEAT	OL/OH	ORGANIC SOIL ORGANIC SOIL with SAND ORGANIC SOIL with GRAVEL SANDY ORGANIC SOIL SANDY ORGANIC SOIL with GRAVEL GRAVELLY ORGANIC SOIL GRAVELLY ORGANIC SOIL with SAND
	COBBLES COBBLES and BOULDERS BOULDERS		

FIELD AND LABORATORY TESTING

- (C) Consolidation (ASTM D 2435)
- (CL) Collapse Potential (ASTM D 5333)
- (CP) Compaction Curve (CTM 216)
- (CR) Corrosivity Testing (CTM 643, CTM 422, CTM 417)
- (CU) Consolidated Undrained Triaxial (ASTM D 4767)
- (DS) Direct Shear (ASTM D 3080)
- (EI) Expansion Index (ASTM D 4829)
- (M) Moisture Content (ASTM D 2216)
- (OC) Organic Content-% (ASTM D 2974)
- (P) Permeability (CTM 220)
- (PA) Particle Size Analysis (ASTM D 422)
- (PI) Plasticity Index (AASHTO T 90) Liquid Limit (AASHTO T 89)
- (PL) Point Load Index (ASTM D 5731)
- (PM) Pressure Meter
- (R) R-Value (CTM 301)
- (SE) Sand Equivalent (CTM 217)
- (SG) Specific Gravity (AASHTO T 100)
- (SL) Shrinkage Limit (ASTM D 427)
- (SW) Swell Potential (ASTM D 4546)
- (UC) Unconfined Compression-Soil (ASTM D 2166) Unconfined Compression-Rock (ASTM D 2938)
- (UU) Unconsolidated Undrained Triaxial (ASTM D 2850)
- (UW) Unit Weight (ASTM D 4767)

APPARENT DENSITY OF COHESIONLESS SOILS

Description	SPT N_{60} (Blows / 12 in.)
Very Loose	0 - 5
Loose	5 - 10
Medium Dense	10 - 30
Dense	30 - 50
Very Dense	Greater than 50

MOISTURE

Description	Criteria
Dry	No discernable moisture
Moist	Moisture present, but no free water
Wet	Visible free water

PERCENT OR PROPORTION OF SOILS

Description	Criteria
Trace	Particles are present but estimated to be less than 5%
Few	5% - 10%
Little	15% - 25%
Some	30% - 45%
Mostly	50% - 100%

PARTICLE SIZE

Description		Size (in.)
Boulder		Greater than 12
Cobble		3 - 12
Gravel	Coarse	3/4 - 3
	Fine	1/5 - 3/4
Sand	Coarse	1/16 - 1/5
	Medium	1/64 - 1/16
	Fine	1/300 - 1/64
Silt and Clay		Less than 1/300

ENGINEERING SERVICES | MATERIALS AND GEOTECHNICAL SERVICES

FUNCTIONAL SUPERVISOR
NAME: CHI-TSENG LIU

DRAWN BY: P.QUACH / T.Panah (URS CORP)
CHECKED BY: F.GERAMI

FIELD INVESTIGATION BY:
A.TSEGIE/M.ISLAM/P.MCDONALD

STATE OF CALIFORNIA
DEPARTMENT OF TRANSPORTATION

DIVISION OF ENGINEERING SERVICES
STRUCTURE DESIGN
DESIGN BRANCH 21

BRIDGE NO. 53E0187
POST MILE 4.46

SOUND WALL NO. 250
LOG OF TEST BORINGS SHEET 5 OF 5

OGS CIVIL LOG OF TEST BORINGS SHEET

ORIGINAL SCALE IN INCHES FOR REDUCED PLANS 0 1 2 3

UNIT: 3658
PROJECT NUMBER & PHASE: 07 00001834 1 CONTRACT NO.: 07-215941

DISREGARD PRINTS BEARING EARLIER REVISION DATES 12/14/11

SHEET 44 OF 44

FILE => 53-E0187-z-lotb_05.dgn

USERNAME => s128843 DATE PLOTTED => 14-APR-2012 TIME PLOTTED => 11:10

DIST	COUNTY	ROUTE	POST MILES TOTAL PROJECT	SHEET No.	TOTAL SHEETS
07	LA	5	4.0/5.9	1331	1597

REGISTERED CIVIL ENGINEER — DATE 2/12/11

4-9-12
PLANS APPROVAL DATE

REGISTERED PROFESSIONAL ENGINEER — FRANK HSIAOSHIH WEI — No. C 52918 — Exp. 12-31-12 — CIVIL — STATE OF CALIFORNIA

The State of California or its officers or agents shall not be responsible for the accuracy or completeness of electronic copies of this plan sheet.

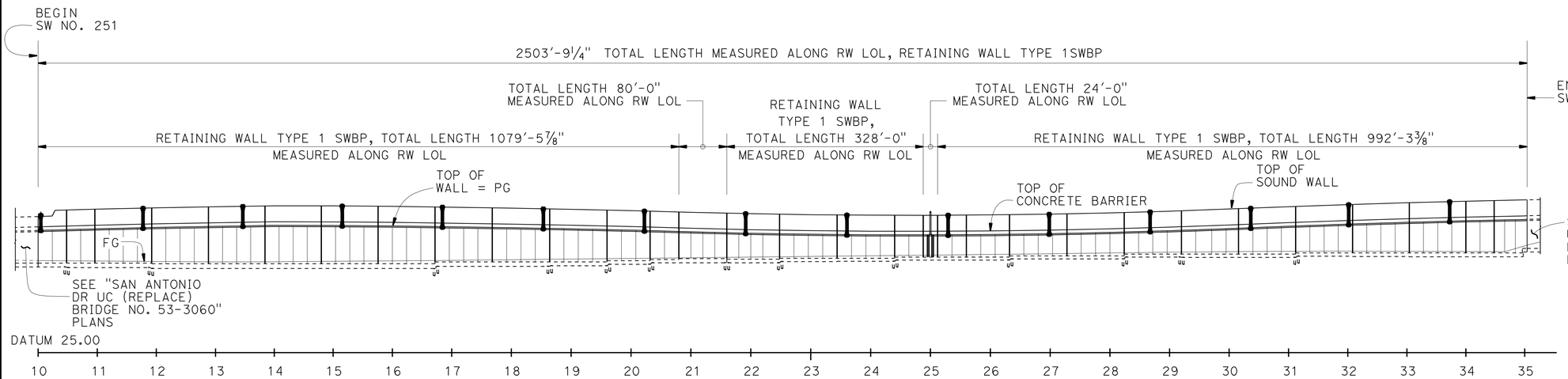

MIRRORED ELEVATION

HORIZ 1" = 100'
VERT 1" = 50'

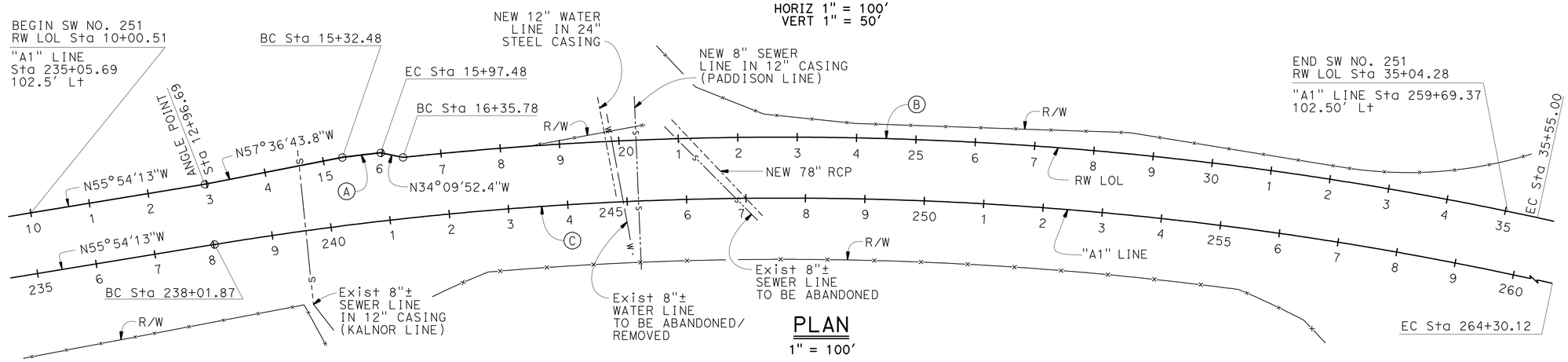

PLAN

1" = 100'

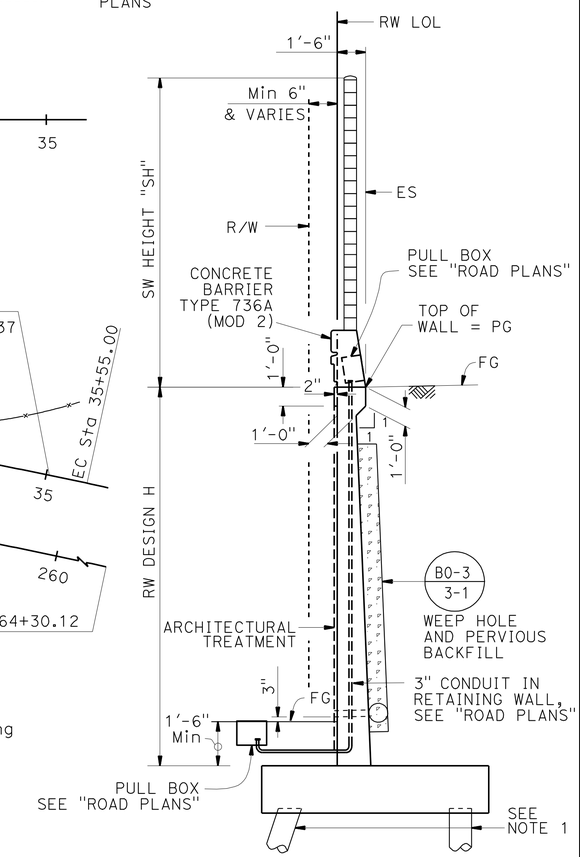

RETAINING WALL TYPE 1SWBP TYPICAL SECTION

¼" = 1'-0"

CURVE DATA:

No.	R	Δ	T	L
A	6019.66'	0°37'7.1"	32.50'	65.00'
B	6008.01'	18°18'10.1"	967.86'	1919.22'	
C	5905.51'	25°29'58.2"	1336.25'	2628.25'

QUANTITIES

STRUCTURE EXCAVATION (RETAINING WALL)	6,600	CY
STRUCTURE EXCAVATION (TYPE Y-1) (AERIALLY DEPOSITED LEAD)	4,180	CY
STRUCTURE BACKFILL (RETAINING WALL)	21,500	CY
PERVIOUS BACKFILL MATERIAL (RETAINING WALL)	1,800	CY
FURNISH PILING (CLASS 90)(ALTERNATIVE X)	62,177	LF
DRIVE PILE (CLASS 90)(ALTERNATIVE X)	1,794	EA
FURNISH PILING (CLASS 140)(ALTERNATIVE X)	3,841	LF
DRIVE PILE (CLASS 140)(ALTERNATIVE X)	97	EA
STRUCTURAL CONCRETE, RETAINING WALL	9,050	CY
PILASTER, SOUND WALL	36	CY
ARCHITECTURAL TEXTURE (SPLIT SLATE - FRACTURED RIB)	60,000	SQFT
SOUND WALL (MASONRY BLOCK)	32,700	SQFT
BAR REINFORCING STEEL (RETAINING WALL)	1,490,000	LB
CONCRETE BARRIER (TYPE 736A MODIFIED 2)	2,460	LF

NOTES:

1. All piles not shown. For retaining wall pile layout, see "STRUCTURE PLAN" sheets.
2. For Design Notes, see "RETAINING WALL TYPE 1SWBP - DETAILS NO. 1" sheet and "SOUND WALL - MASONRY BLOCK WITH BARRIER ON RETAINING WALL DETAILS NO. 2" sheet.
3. Architectural Treatment on concrete barrier face and retaining wall face not shown in Elevation for clarity. Not all piles shown in Elevation.
4. For Pile Data Table, see "INDEX TO PLANS" sheet.

NOTE:
THE CONTRACTOR SHALL VERIFY ALL CONTROLLING FIELD DIMENSIONS BEFORE ORDERING OR FABRICATING ANY MATERIAL.

CHUNG-YUAN WEN
DESIGN ENGINEER

	BY	CHECKED
DESIGN	V. Wami	F. Wei
DETAILS	M. Kingra	F. Wei
QUANTITIES	L. Sanchez-Manzo	S. Yeh

LOAD & RESISTANCE FACTOR DESIGN — LIVE LOADING: HL93 W/"LOW-BOY"; PERMIT DESIGN VEHICLE

	BY	CHECKED
LAYOUT	M. Kingra	F. Wei
SPECIFICATIONS	J. Jiang	J. Jiang (PLANS AND SPECS COMPARED)

STATE OF CALIFORNIA
DEPARTMENT OF TRANSPORTATION

DIVISION OF ENGINEERING SERVICES
STRUCTURE DESIGN
DESIGN BRANCH 21

BRIDGE NO. 53E0188
POST MILE 4.46

SOUND WALL NO. 251
GENERAL PLAN

ORIGINAL SCALE IN INCHES FOR REDUCED PLANS 0 1 2 3

UNIT: 3623
PROJECT NUMBER & PHASE: 0700001834 & 1 CONTRACT NO.: 07-215941

DISREGARD PRINTS BEARING EARLIER REVISION DATES — REVISION DATES 09/30/11 11/29/11 12/29/11 03/22/12

SHEET 1 OF 50

FILE => 53-E0188-a-gp.dgn

STRUCTURES DESIGN GENERAL PLAN SHEET (ENGLISH) (REV.09-01-10)

USERNAME => s128843 DATE PLOTTED => 14-APR-2012 TIME PLOTTED => 11:10

DIST	COUNTY	ROUTE	POST MILES TOTAL PROJECT	SHEET No.	TOTAL SHEETS
07	LA	5	4.0/5.9	1332	1597

REGISTERED CIVIL ENGINEER 2/12/11 DATE

4-9-12
PLANS APPROVAL DATE

REGISTERED PROFESSIONAL ENGINEER FRANK HSIAOSHIH WEI No. C 52918 Exp. 12-31-12 CIVIL STATE OF CALIFORNIA

The State of California or its officers or agents shall not be responsible for the accuracy or completeness of electronic copies of this plan sheet.

INDEX TO PLANS

Sheet No.	Title
1.	GENERAL PLAN
2.	INDEX TO PLANS
3.	STRUCTURE PLAN NO. 1
4.	STRUCTURE PLAN NO. 2
5.	STRUCTURE PLAN NO. 3
6.	STRUCTURE PLAN NO. 4
7.	STRUCTURE PLAN NO. 5
8.	STRUCTURE PLAN NO. 6
9.	STRUCTURE PLAN NO. 7
10.	STRUCTURE PLAN NO. 8
11.	STRUCTURE PLAN NO. 9
12.	STRUCTURE PLAN NO. 10
13.	STRUCTURE PLAN NO. 11
14.	STRUCTURE PLAN NO. 12
15.	FOUNDATION PLAN NO. 1
16.	FOUNDATION PLAN NO. 2
17.	FOUNDATION PLAN NO. 3
18.	FOUNDATION PLAN NO. 4
19.	FOUNDATION PLAN NO. 5
20.	FOUNDATION PLAN NO. 6
21.	RETAINING WALL DETAILS
22.	RETAINING WALL DETAILS AT SIGN 6A
23.	GENERAL NOTES AT SIGN STRUCTURE 6A
24.	ARCHITECTURAL TREATMENT ELEVATION NO. 1
25.	ARCHITECTURAL TREATMENT ELEVATION NO. 2
26.	ARCHITECTURAL TREATMENT ELEVATION NO. 3
27.	ARCHITECTURAL TREATMENT ELEVATION NO. 4
28.	ARCHITECTURAL TREATMENT ELEVATION NO. 5
29.	ARCHITECTURAL TREATMENT ELEVATION NO. 6
30.	ARCHITECTURAL TREATMENT ELEVATION NO. 7
31.	RETAINING WALL AND BARRIER ARCHITECTURAL DETAILS
32.	SOUND WALL ARCHITECTURAL DETAILS
33.	PILASTER ARCHITECTURAL DETAILS NO. 1
34.	PILASTER ARCHITECTURAL DETAILS NO. 2
35.	PILASTER ARCHITECTURAL DETAILS NO. 3
36.	PILASTER ARCHITECTURAL DETAILS NO. 4
37.	PILASTER STRUCTURAL DETAILS NO. 1
38.	PILASTER STRUCTURAL DETAILS NO. 2
39.	PILASTER STRUCTURAL DETAILS NO. 3
40.	RETAINING WALL TYPE 1SWBP - DETAIL NO. 1
41.	RETAINING WALL TYPE 1SWBP - DETAIL NO. 2
42.	SOUND WALL - MASONRY BLOCK WITH BARRIER ON RETAINING WALL DETAILS NO.1
43.	SOUND WALL - MASONRY BLOCK WITH BARRIER ON RETAINING WALL DETAILS NO.2
44.	LOG OF TEST BORINGS SHEET 1 OF 7
45.	LOG OF TEST BORINGS SHEET 2 OF 7
46.	LOG OF TEST BORINGS SHEET 3 OF 7
47.	LOG OF TEST BORINGS SHEET 4 OF 7
48.	LOG OF TEST BORINGS SHEET 5 OF 7
49.	LOG OF TEST BORINGS SHEET 6 OF 7
50.	LOG OF TEST BORINGS SHEET 7 OF 7

STANDARD PLANS DATED MAY 2006

A10A	ACRONYMS AND ABBREVIATIONS (SHEET 1 OF 2)
A10B	ACRONYMS AND ABBREVIATIONS (SHEET 2 OF 2)
A62B	LIMITS OF PAYMENT FOR EXCAVATION AND BACKFILL - BRIDGE SURCHARGE AND WALL
B0-1	BRIDGE DETAILS
B0-3	BRIDGE DETAILS
B2-5	PILE DETAILS CLASS 90 AND CLASS 140
B3-8	RETAINING WALL DETAILS NO. 1
B11-56	CONCRETE BARRIER TYPE 736
RSP B15-6	SOUND WALL MASONRY BLOCK ON TYPE 736S/SV BARRIER DETAILS (1)
B15-9	SOUND WALL MASONRY BLOCK MISCELLANEOUS DETAILS

STANDARD PLAN SHEET NO.

DETAIL NO.

NOTE:
THE CONTRACTOR SHALL VERIFY ALL CONTROLLING FIELD DIMENSIONS BEFORE ORDERING OR FABRICATING ANY MATERIAL.

PILE DATA TABLE

RW DESIGN HEIGHT/ LOCATION	PILE * TYPE	BOTTOM OF FOOTING ELEVATION (FT)	DESIGN LOADING (Kips)	NOMINAL RESISTANCE (Kips)		SPECIFIED TIP ELEVATION (FT)
				COMPRESSION	TENSION	
H=28	CLASS 90, ALT. "X", T=14"	96.50	90	180	90	63
H=30	CLASS 90, ALT. "X", T=14"	96.00	90	180	90	63
H=32	CLASS 90, ALT. "X", T=14"	95.25	90	180	90	62
OVER KALNOR 8" SEWER LINE	CLASS 90, ALT. "X", T=14"	95.25	90	180	90	55**
H=30	CLASS 90, ALT. "X", T=14"	97.00	90	180	90	64
H=28	CLASS 90, ALT. "X", T=14"	97.50	90	180	90	64
H=26	CLASS 90, ALT. "X", T=14"	98.75	90	180	90	65
OVER PADDISON NEW 8" SEWER LINE	CLASS 90, ALT. "X", T=14"	98.75	90	180	90	53**
H=24	CLASS 90, ALT. "X", T=14"	100.00	90	180	90	67
Over 78" RCP	CLASS 140, ALT. "X", T=14"	100.00	140	280	140	62
Over 78" RCP	CLASS 140, ALT. "X", T=14"	100.00	140	280	140	54**
H=22	CLASS 90, ALT. "X", T=14"	101.00	90	180	90	68
H=20	CLASS 90, ALT. "X", T=14"	101.25	90	180	90	68
H=20	CLASS 90, ALT. "X", T=14"	102.25	90	180	90	69
H=20	CLASS 90, ALT. "X", T=14"	103.25	90	180	90	70
H=20	CLASS 90, ALT. "X", T=14"	104.75	90	180	90	71
H=22,24	CLASS 90, ALT. "X", T=14"	104.50	90	180	90	71
H=24	CLASS 90, ALT. "X", T=14"	105.50	90	180	90	72
H=26	CLASS 90, ALT. "X", T=14"	105.25	90	180	90	72
H=28	CLASS 90, ALT. "X", T=14"	105.00	90	180	90	72
H=26	CLASS 90, ALT. "X", T=14"	109.00	90	180	90	76
AT SIGN 6A	CLASS 140, ALT. "X", T=14"	102.25	125	250	N/A	67

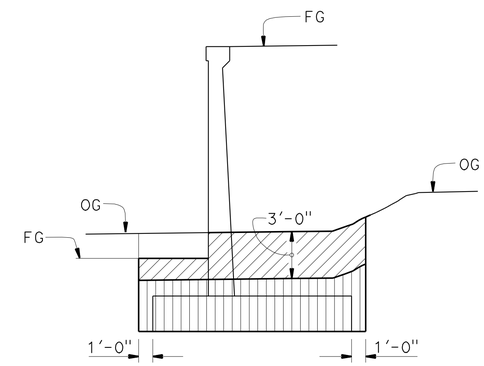

LIMITS OF EXCAVATION

NO SCALE

LEGEND:

STRUCTURE EXCAVATION (TYPE Y-1, Aerially Deposited Lead)

STRUCTURE EXCAVATION (RETAINING WALL)

* For Class 90 or Class 140 Alt X pile, "T" value in Standard Plan B2-5 is modified to 1'-2". P_f value also needs to be modified in accordance with Standard Plan B2-5 Design Notes. T=14" is required to provide the needed pile lateral capacity. No substitution for other Standard Pile types is allowed.

** Predrilled holes are required. See "STRUCTURE PLAN NO.3", "STRUCTURE PLAN NO. 5", and "RETAINING WALL DETAILS" sheets for locations of required predrilled holes. Please refer to the Standard Special Provisions for elevation of bottom of predrilled holes.

	BY	CHECKED
DESIGN	V. Wami	F. Wei
DETAILS	P. Perez	F. Wei
QUANTITIES	L. Sanchez-Manzo	S. Yeh

STATE OF CALIFORNIA
DEPARTMENT OF TRANSPORTATION

DIVISION OF ENGINEERING SERVICES
STRUCTURE DESIGN
DESIGN BRANCH 21

BRIDGE NO. 53E0188
POST MILE 4.46

SOUND WALL NO. 251
INDEX TO PLANS

STRUCTURES DESIGN DETAIL SHEET (ENGLISH) (REV. 09-01-10)

ORIGINAL SCALE IN INCHES FOR REDUCED PLANS 0 1 2 3

UNIT: 3623
PROJECT NUMBER & PHASE: 0700001834 & 1 CONTRACT NO.: 07-215941

DISREGARD PRINTS BEARING EARLIER REVISION DATES → REVISION DATES ~~09/30/11~~ ~~11/25/11~~ ~~12/02/11~~ 03/22/12

SHEET 2 OF 50

FILE => 53-E0188-b-ltp.dgn

USERNAME => s128843 DATE PLOTTED => 14-APR-2012 TIME PLOTTED => 11:11

DIST	COUNTY	ROUTE	POST MILES TOTAL PROJECT	SHEET No.	TOTAL SHEETS
07	LA	5	4.0/5.9	1333	1597

REGISTERED CIVIL ENGINEER — DATE 12/12/11

4-9-12
PLANS APPROVAL DATE

REGISTERED PROFESSIONAL ENGINEER FRANK HSIAOSHIH WEI No. C 52918 Exp. 12-31-12 CIVIL STATE OF CALIFORNIA

The State of California or its officers or agents shall not be responsible for the accuracy or completeness of electronic copies of this plan sheet.

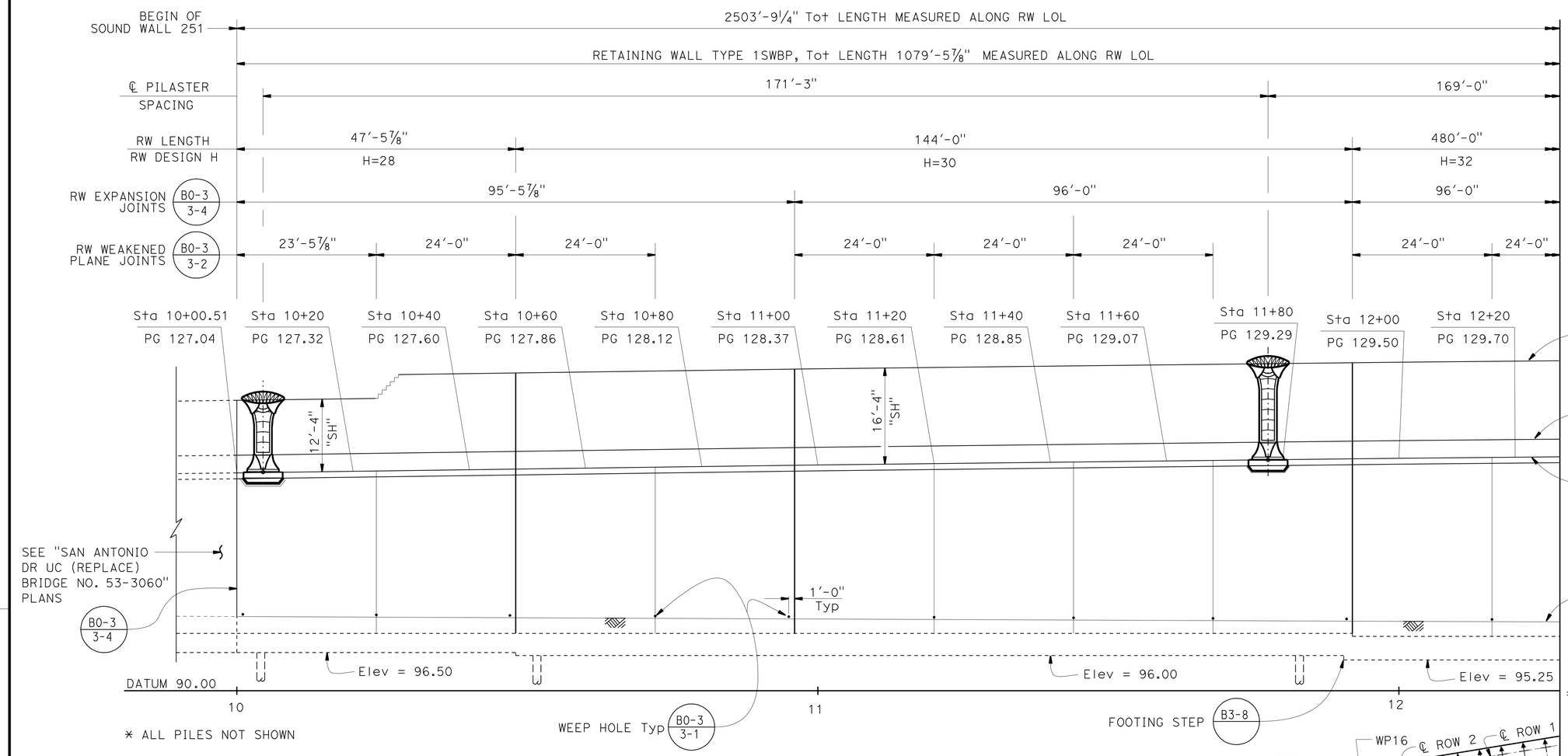

MIRRORED ELEVATION

1" = 10'

WORKING POINT	RW LOL STATION AND OFFSET
WP11	10+02.01, 4.0' Lt
WP12	10+02.46, 9.75' Rt
WP13	10+49.88
WP14	10+50.25, 2.25' Rt
WP15	11+92.38
WP16	11+94.00, 1.416' Rt

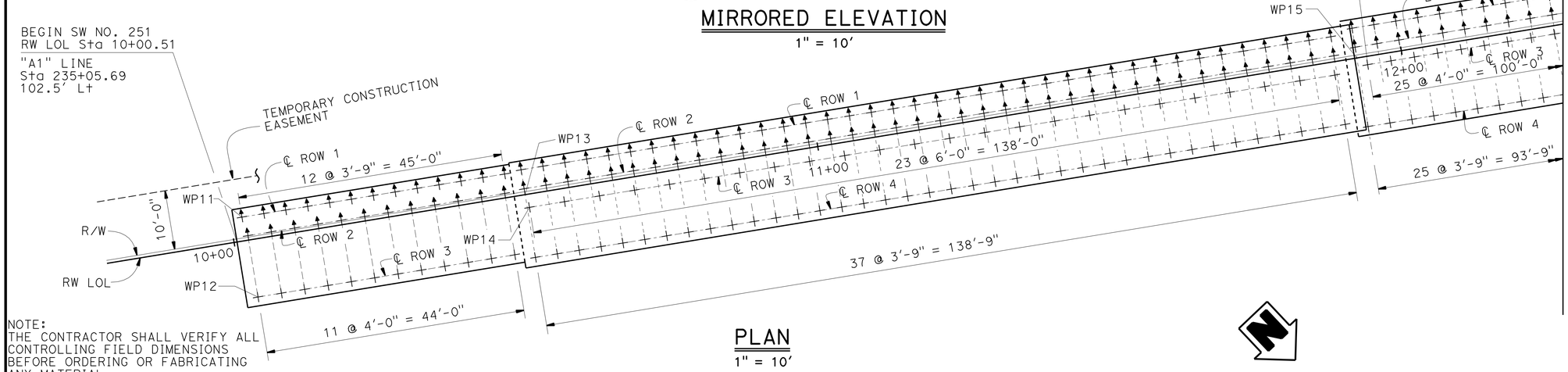

PLAN

1" = 10'

NOTE:
THE CONTRACTOR SHALL VERIFY ALL CONTROLLING FIELD DIMENSIONS BEFORE ORDERING OR FABRICATING ANY MATERIAL.

NOTES:

1. For Sound Wall and Barrier Details, see "SOUNDWALL - MASONRY BLOCK WITH BARRIER ON RETAINING WALL DETAILS NO. 1" and "SOUNDWALL - MASONRY BLOCK WITH BARRIER ON RETAINING WALL DETAILS NO. 2" sheets.
2. For retaining wall details, see "RETAINING WALL TYPE 1SBWP - DETAILS NO. 1" and "RETAINING WALL TYPE 1SBWP - DETAILS NO. 2" sheets.
3. For Expansion Joint details in the Masonry Block Soundwall, see "SOUNDWALL - MASONRY BLOCK WITH BARRIER ON RETAINING WALL DETAILS NO. 1" and "SOUNDWALL - MASONRY BLOCK WITH BARRIER ON RETAINING WALL DETAILS NO. 2" sheets.
4. See "GENERAL PLAN" for RW LOL alignment information.
5. See "INDEX TO PLANS" sheet for Pile Data Table.

\+ Denotes Vertical Pile

⸸ Denotes 1:3 Battered Pile

	BY	CHECKED
DESIGN	V. Wami	F. Wei
DETAILS	M. Kingra	F. Wei
QUANTITIES	L. Sanchez-Manzo	S. Yeh

STATE OF CALIFORNIA
DEPARTMENT OF TRANSPORTATION

DIVISION OF ENGINEERING SERVICES
STRUCTURE DESIGN
DESIGN BRANCH 21

BRIDGE NO. 53E0188
POST MILE 4.46

SOUND WALL NO. 251
STRUCTURE PLAN NO. 1

STRUCTURES DESIGN DETAIL SHEET (ENGLISH) (REV. 09-01-10)

ORIGINAL SCALE IN INCHES FOR REDUCED PLANS 0 1 2 3

UNIT: 3623
PROJECT NUMBER & PHASE: 0700001834 & 1 CONTRACT NO.: 07-215941

DISREGARD PRINTS BEARING EARLIER REVISION DATES

REVISION DATES: 09/30/11 11/28/11 12/09/11 03/22/12

SHEET 3 OF 50

FILE => 53-E0188-c-sp01.dgn

USERNAME => s128843 DATE PLOTTED => 14-APR-2012 TIME PLOTTED => 11:11

DIST	COUNTY	ROUTE	POST MILES TOTAL PROJECT	SHEET No.	TOTAL SHEETS
07	LA	5	4.0/5.9	1334	1597

REGISTERED CIVIL ENGINEER 2/12/11 DATE

4-9-12
PLANS APPROVAL DATE

REGISTERED PROFESSIONAL ENGINEER FRANK HSIAOSHIH WEI No. C 52918 Exp. 12-31-12 CIVIL STATE OF CALIFORNIA

The State of California or its officers or agents shall not be responsible for the accuracy or completeness of electronic copies of this plan sheet.

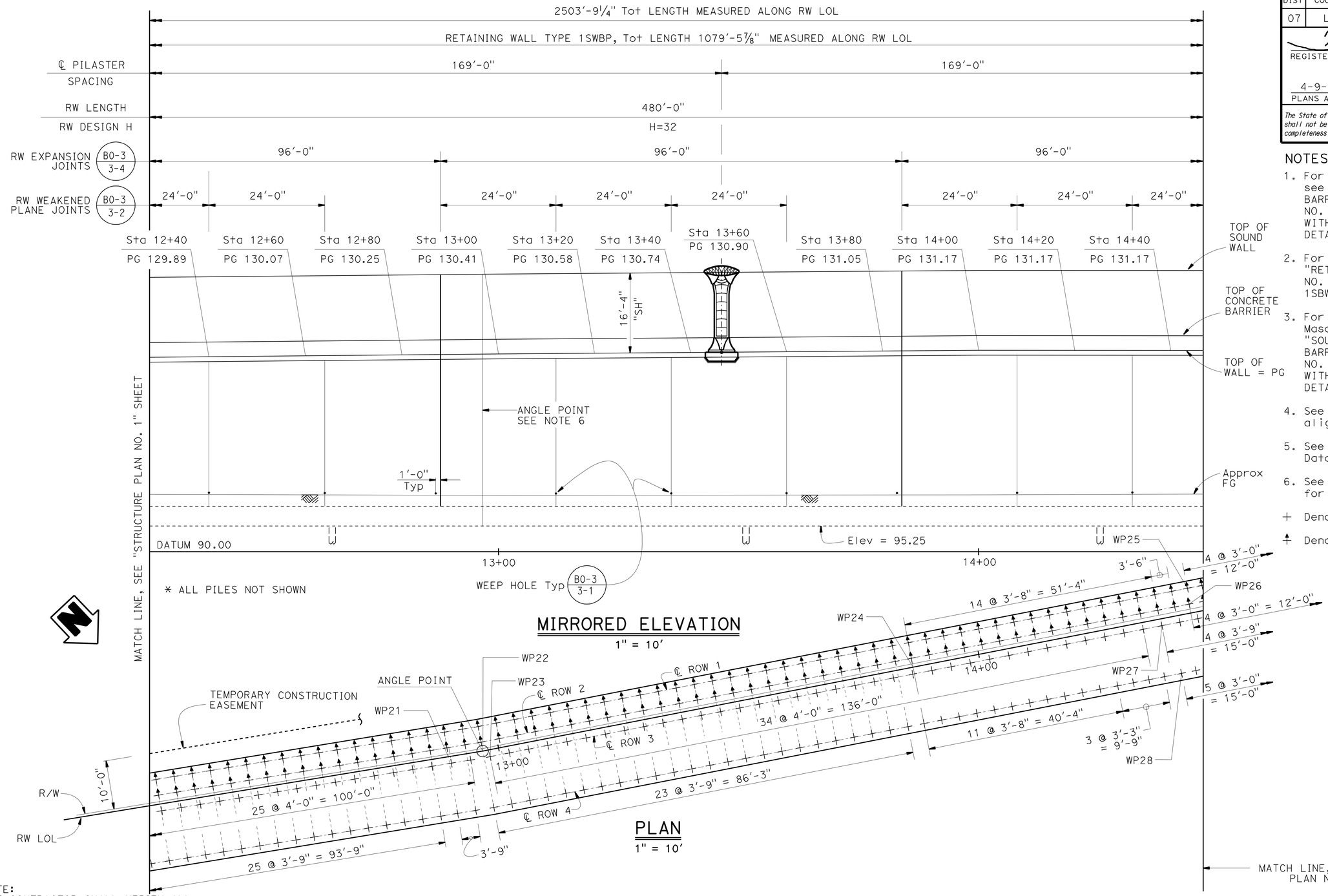

NOTES:

1. For Sound Wall and Barrier Details, see "SOUNDWALL - MASONRY BLOCK WITH BARRIER ON RETAINING WALL DETAILS NO. 1" and "SOUNDWALL - MASONRY BLOCK WITH BARRIER ON RETAINING WALL DETAILS NO. 2" sheets.
2. For retaining wall details, see "RETAINING WALL TYPE 1SBWP - DETAILS NO. 1" and "RETAINING WALL TYPE 1SBWP - DETAILS NO. 2" sheets.
3. For Expansion Joint details in the Masonry Block Soundwall, see "SOUNDWALL - MASONRY BLOCK WITH BARRIER ON RETAINING WALL DETAILS NO. 1" and "SOUNDWALL - MASONRY BLOCK WITH BARRIER ON RETAINING WALL DETAILS NO. 2" sheets.
4. See "GENERAL PLAN" for RW LOL alignment information.
5. See "INDEX TO PLANS" sheet for Pile Data Table.
6. See "STRUCTURE PLAN NO. 12" sheet for wall and footing corner details.

+ Denotes Vertical Pile

+ Denotes 1:3 Battered Pile

WORKING POINT	RW LOL STATION AND OFFSET
WP21	12+89.60
WP22	12+96.75
WP23	12+98.00, 1.42' R+
WP24	13+86.33
WP25	14+44.47, 5.08' L+
WP26	14+44.17, 1.83 L+
WP27	14+37.88, 1.42' R+
WP28	14+39.95, 11.75' R+

NOTE:
THE CONTRACTOR SHALL VERIFY ALL CONTROLLING FIELD DIMENSIONS BEFORE ORDERING OR FABRICATING ANY MATERIAL.

	BY	CHECKED
DESIGN	V. Wami	F. Wei
DETAILS	M. Kingra	F. Wei
QUANTITIES	L. Sanchez-Manzo	S. Yeh

STATE OF CALIFORNIA
DEPARTMENT OF TRANSPORTATION

DIVISION OF ENGINEERING SERVICES
STRUCTURE DESIGN
DESIGN BRANCH 21

BRIDGE NO. 53E0188
POST MILE 4.46

SOUND WALL NO. 251
STRUCTURE PLAN NO. 2

STRUCTURES DESIGN DETAIL SHEET (ENGLISH) (REV. 09-01-10)

ORIGINAL SCALE IN INCHES FOR REDUCED PLANS 0 1 2 3

UNIT: 3623
PROJECT NUMBER & PHASE: 0700001834 & 1 CONTRACT NO.: 07-215941

DISREGARD PRINTS BEARING EARLIER REVISION DATES

REVISION DATES 9/30/11 11/25/11 12/07/11 03/22/12

SHEET 4 OF 50

FILE => 53-E0188-c-sp02.dgn

USERNAME => s128843 DATE PLOTTED => 14-APR-2012 TIME PLOTTED => 11:12

DIST	COUNTY	ROUTE	POST MILES TOTAL PROJECT	SHEET No.	TOTAL SHEETS
07	LA	5	4.0/5.9	1335	1597

REGISTERED CIVIL ENGINEER — DATE 2/12/11

4-9-12
PLANS APPROVAL DATE

REGISTERED PROFESSIONAL ENGINEER FRANK HSIAOSHIH WEI No. C 52918 Exp. 12-31-12 CIVIL STATE OF CALIFORNIA

The State of California or its officers or agents shall not be responsible for the accuracy or completeness of electronic copies of this plan sheet.

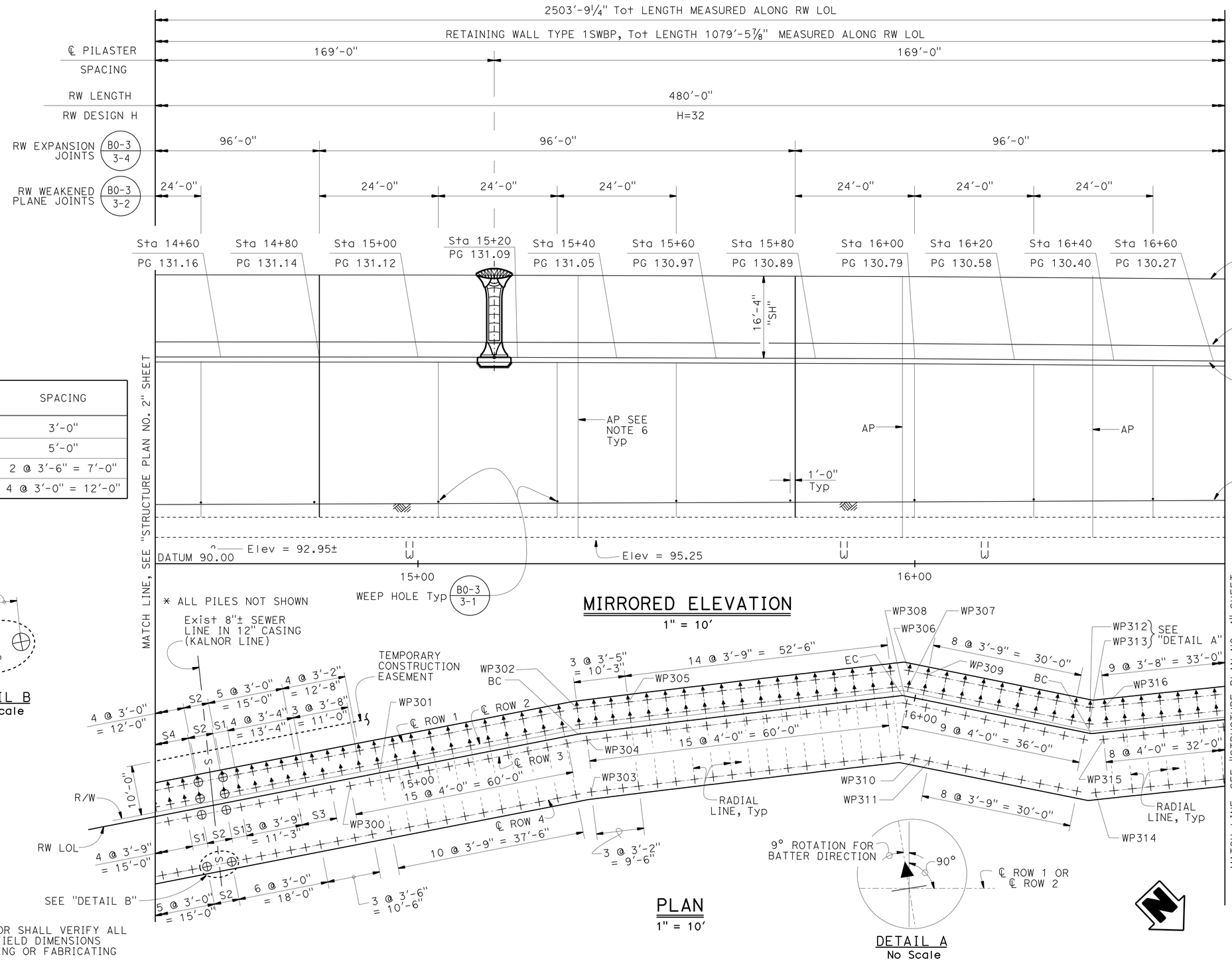

DESIGNATION	SPACING
S1	3'-0"
S2	5'-0"
S3	2 @ 3'-6" = 7'-0"
S4	4 @ 3'-0" = 12'-0"

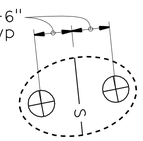

DETAIL B
No Scale

WORKING POINT	RW LOL STATION AND OFFSET
WP300	14+86.00, 1.42' Rt
WP301	14+92.25
WP302	15+32.94, 5.08' Lt
WP303	15+33.67, 11.75' Rt
WP304	15+34.10, 1.42' Rt
WP305	15+43.19, 5.08' Lt
WP306	15+97.79, 5.08' Lt
WP307	15+98.29, 1.83' Lt
WP308	15+98.56, 1.42' Rt
WP309	16+01.54, 5.08' Lt
WP310	16+02.29, 11.75' Rt
WP311	16+05.29', 11.75' Rt
WP312	16+34.54', 5.08' Lt
WP313	16+35.04', 1.83' Lt
WP314	16+35.40', 11.75' Rt
WP315	16+38.12, 1.42' Rt
WP316	16+39.10, 5.08' Lt

NOTES:

1. For Sound Wall and Barrier Details, see "SOUNDWALL - MASONRY BLOCK WITH BARRIER ON RETAINING WALL DETAILS NO. 1" and "SOUNDWALL - MASONRY BLOCK WITH BARRIER ON RETAINING WALL DETAILS NO. 2" sheets.
2. For retaining wall details, see "RETAINING WALL TYPE 1SBWP - DETAILS NO. 1" and "RETAINING WALL TYPE 1SBWP - DETAILS NO. 2" sheets.
3. For Expansion Joint details in the Masonry Block Soundwall, see "SOUNDWALL - MASONRY BLOCK WITH BARRIER ON RETAINING WALL DETAILS NO. 1" and "SOUNDWALL - MASONRY BLOCK WITH BARRIER ON RETAINING WALL DETAILS NO. 2" sheets.
4. See "GENERAL PLAN" for RW LOL alignment information.
5. See "INDEX TO PLANS" sheet for Pile Data Table.
6. See "STRUCTURE PLAN NO. 12" sheet for wall and footing corner details.

\+ Denotes Vertical Pile

⊕ and ⊕ Predrilled holes required

AP = Angle Point

NOTE:
THE CONTRACTOR SHALL VERIFY ALL CONTROLLING FIELD DIMENSIONS BEFORE ORDERING OR FABRICATING ANY MATERIAL.

	BY	CHECKED
DESIGN	V. Wami	F. Wei
DETAILS	M. Kingra	F. Wei
QUANTITIES	L. Sanchez-Manzo	S. Yeh

STATE OF CALIFORNIA
DEPARTMENT OF TRANSPORTATION

DIVISION OF ENGINEERING SERVICES
STRUCTURE DESIGN
DESIGN BRANCH 21

BRIDGE NO. 53E0188
POST MILE 4.46

SOUND WALL NO. 251
STRUCTURE PLAN NO. 3

STRUCTURES DESIGN DETAIL SHEET (ENGLISH) (REV. 09-01-10)

ORIGINAL SCALE IN INCHES FOR REDUCED PLANS 0 1 2 3

UNIT: 3623
PROJECT NUMBER & PHASE: 0700001834 & 1 CONTRACT NO.: 07-215941

DISREGARD PRINTS BEARING EARLIER REVISION DATES

REVISION DATES: 09/30/11 11/25/11 12/20/11 03/22/12

SHEET 5 OF 50

FILE => 53-E0188-c-sp03.dgn

USERNAME => s128843 DATE PLOTTED => 14-APR-2012 TIME PLOTTED => 11:11:2

DIST	COUNTY	ROUTE	POST MILES TOTAL PROJECT	SHEET No.	TOTAL SHEETS
07	LA	5	4.0/5.9	1336	1597

REGISTERED CIVIL ENGINEER 12/12/11 DATE

4-9-12
PLANS APPROVAL DATE

REGISTERED PROFESSIONAL ENGINEER FRANK HSIAOSHIH WEI No. C 52918 Exp. 12-31-12 CIVIL STATE OF CALIFORNIA

The State of California or its officers or agents shall not be responsible for the accuracy or completeness of electronic copies of this plan sheet.

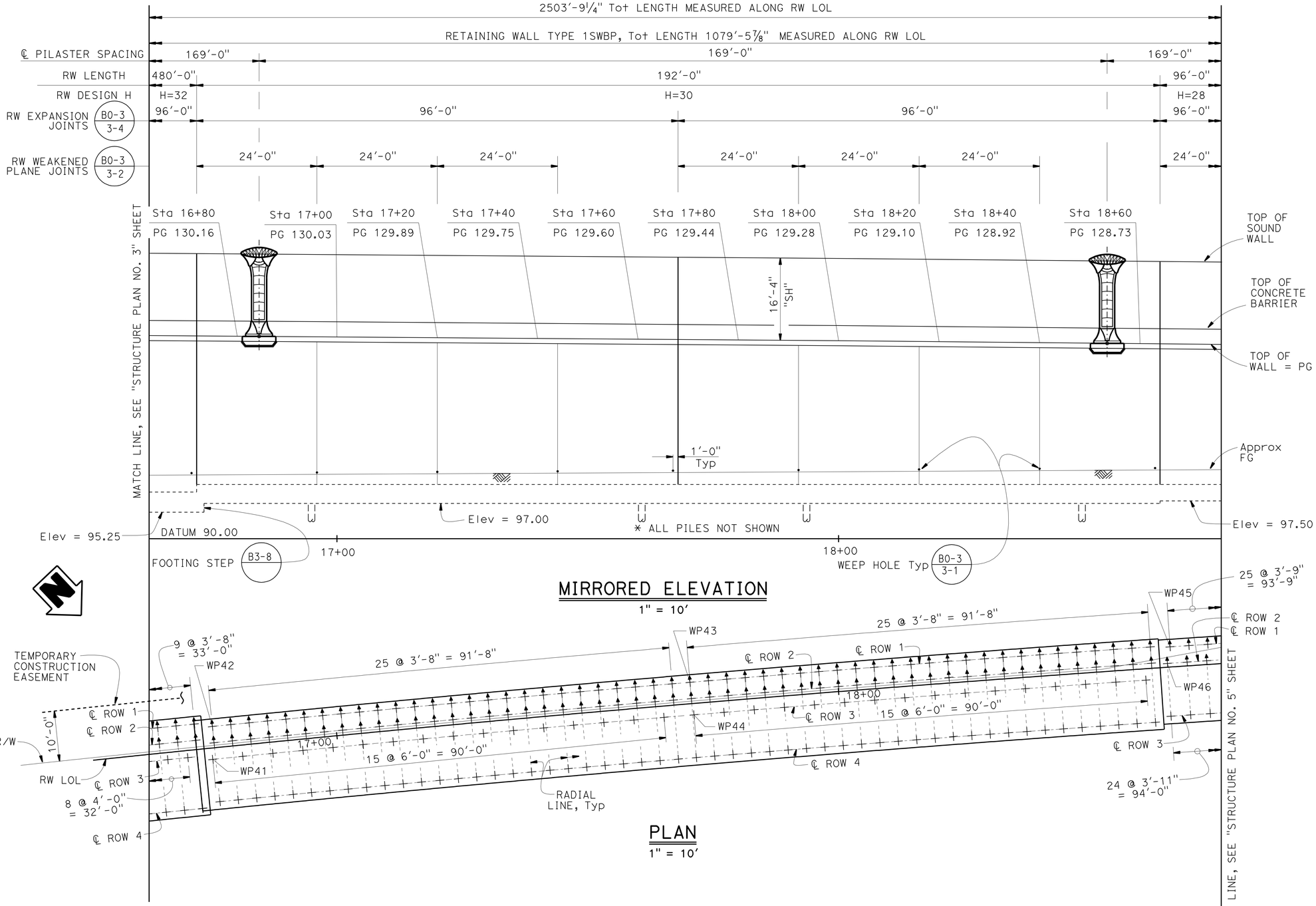

WORKING POINT	RW LOL STATION AND OFFSET
WP41	16+75.01, 2.25' Rt
WP42	16+75.58, 4.25' Lt
WP43	17+70.75, 4.25' Lt
WP44	17+71.00, 2.25' Rt
WP45	18+66.25, 4.00' Lt
WP46	18+65.50, 0.75' Lt

NOTES:

1. For Sound Wall and Barrier Details, see "SOUNDWALL - MASONRY BLOCK WITH BARRIER ON RETAINING WALL DETAILS NO. 1" and "SOUNDWALL - MASONRY BLOCK WITH BARRIER ON RETAINING WALL DETAILS NO. 2" sheets.
2. For retaining wall details, see "RETAINING WALL TYPE 1SBWP - DETAILS NO. 1" and "RETAINING WALL TYPE 1SBWP - DETAILS NO. 2" sheets.
3. For Expansion Joint details in the Masonry Block Soundwall, see "SOUNDWALL - MASONRY BLOCK WITH BARRIER ON RETAINING WALL DETAILS NO. 1" and "SOUNDWALL - MASONRY BLOCK WITH BARRIER ON RETAINING WALL DETAILS NO. 2" sheets.
4. See "GENERAL PLAN" for RW LOL alignment information.
5. See "INDEX TO PLANS" sheet for Pile Data Table.

\+ Denotes Vertical Pile

⊥ Denotes 1:3 Battered Pile

NOTE:
THE CONTRACTOR SHALL VERIFY ALL CONTROLLING FIELD DIMENSIONS BEFORE ORDERING OR FABRICATING ANY MATERIAL.

	BY	CHECKED
DESIGN	V. Wami	F. Wei
DETAILS	M. Kingra	F. Wei
QUANTITIES	L. Sanchez-Manzo	S. Yeh

STATE OF CALIFORNIA
DEPARTMENT OF TRANSPORTATION

DIVISION OF ENGINEERING SERVICES
STRUCTURE DESIGN
DESIGN BRANCH 21

BRIDGE NO. 53E0188
POST MILE 4.46

SOUND WALL NO. 251
STRUCTURE PLAN NO. 4

STRUCTURES DESIGN DETAIL SHEET (ENGLISH) (REV. 09-01-10)

ORIGINAL SCALE IN INCHES FOR REDUCED PLANS 0 1 2 3

UNIT: 3623
PROJECT NUMBER & PHASE: 0700001834 & 1 CONTRACT NO.: 07-215941

DISREGARD PRINTS BEARING EARLIER REVISION DATES

REVISION DATES: 09/30/11 11/25/11 12/07/11 03/22/12

SHEET 6 OF 50

FILE => 53-E0188-c-sp04.dgn

USERNAME => s128843 DATE PLOTTED => 14-APR-2012 TIME PLOTTED => 11:42

DIST	COUNTY	ROUTE	POST MILES TOTAL PROJECT	SHEET No.	TOTAL SHEETS
07	LA	5	4.0/5.9	1337	1597

REGISTERED CIVIL ENGINEER 2/12/11 DATE

4-9-12
PLANS APPROVAL DATE

REGISTERED PROFESSIONAL ENGINEER FRANK HSIAOSHIH WEI No. C 52918 Exp. 12-31-12 CIVIL STATE OF CALIFORNIA

The State of California or its officers or agents shall not be responsible for the accuracy or completeness of electronic copies of this plan sheet.

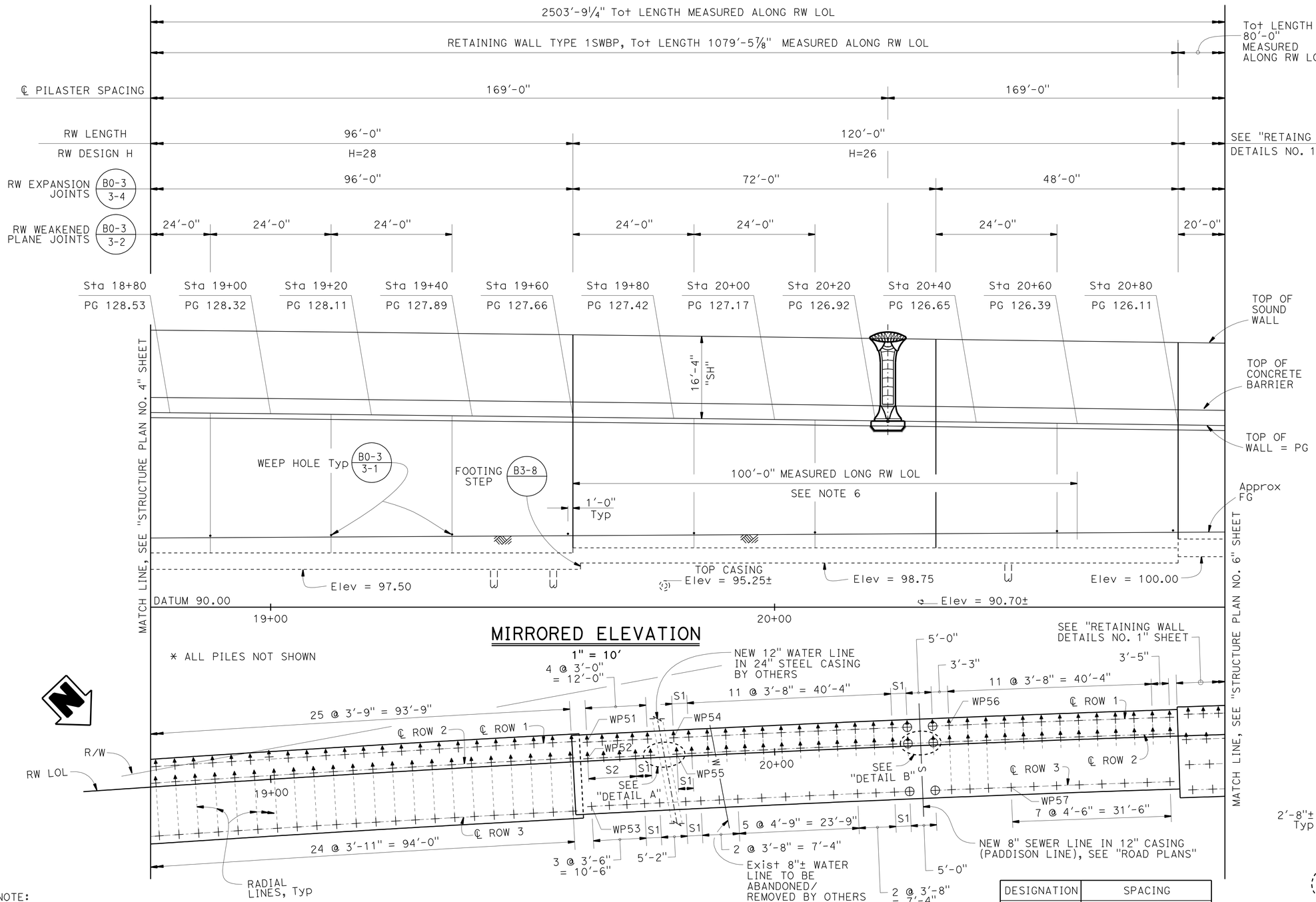

WORKING POINT	RW LOL STATION AND OFFSET
WP51	19+63.00, 3.75' Lt
WP52	19+62.94, 0.50' Lt
WP53	19+63.23, 9.00' Rt
WP54	19+80.16, 3.75' Lt
WP55	19+80.61, 0.50 Lt
WP56	20+34.73, 3.75' Lt
WP57	20+46.57, 9.00' Rt

NOTES:

1. For Sound Wall and Barrier Details, see "SOUNDWALL - MASONRY BLOCK WITH BARRIER ON RETAINING WALL DETAILS NO. 1" and "SOUNDWALL - MASONRY BLOCK WITH BARRIER ON RETAINING WALL DETAILS NO. 2" sheets.
2. For retaining wall details, see "RETAINING WALL TYPE 1SBWP - DETAILS NO. 1" and "RETAINING WALL TYPE 1SBWP - DETAILS NO. 2" sheets.
3. For Expansion Joint details in the Masonry Block Soundwall, see "SOUNDWALL - MASONRY BLOCK WITH BARRIER ON RETAINING WALL DETAILS NO. 1" and "SOUNDWALL - MASONRY BLOCK WITH BARRIER ON RETAINING WALL DETAILS NO. 2" sheets.
4. See "GENERAL PLAN" for RW LOL alignment information.
5. See "INDEX TO PLANS" sheet for Pile Data Table.
6. See Pile Footing Section Over Sewer - Paddison Line detail on "RETAINING WALL TYPE 1SWBP-DETAIL NO. 2" sheet.

+ Denotes Vertical Pile

+ Denotes 1:3 Battered Pile

⊕ and ⊕ Predrilled holes required

DESIGNATION	SPACING
S1	3'-0"
S2	3 @ 3'-2" = 9'-6"

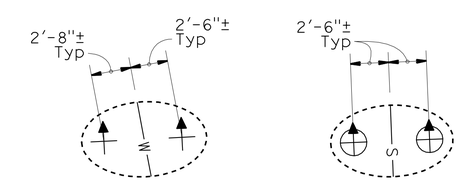

DETAIL A
No Scale

DETAIL B
No Scale

NOTE:
THE CONTRACTOR SHALL VERIFY ALL CONTROLLING FIELD DIMENSIONS BEFORE ORDERING OR FABRICATING ANY MATERIAL.

	BY	CHECKED
DESIGN	V. Wami	F. Wei
DETAILS	M. Kingra	F. Wei
QUANTITIES	L. Sanchez-Manzo	S. Yeh

STATE OF CALIFORNIA
DEPARTMENT OF TRANSPORTATION

DIVISION OF ENGINEERING SERVICES
STRUCTURE DESIGN
DESIGN BRANCH 21

BRIDGE NO. 53E0188
POST MILE 4.46

SOUND WALL NO. 251
STRUCTURE PLAN NO. 5

STRUCTURES DESIGN DETAIL SHEET (ENGLISH) (REV. 09-01-10)

ORIGINAL SCALE IN INCHES FOR REDUCED PLANS 0 1 2 3

UNIT: 3623
PROJECT NUMBER & PHASE: 0700001834 & 1 CONTRACT NO.: 07-215941

DISREGARD PRINTS BEARING EARLIER REVISION DATES

REVISION DATES 09/30/11 11/25/11 12/07/11 03/22/12

SHEET 7 OF 50

FILE => 53-E0188-c-sp05.dgn

USERNAME => s128843 DATE PLOTTED => 14-APR-2012 TIME PLOTTED => 11:42

DIST	COUNTY	ROUTE	POST MILES TOTAL PROJECT	SHEET No.	TOTAL SHEETS
07	LA	5	4.0/5.9	1338	1597

REGISTERED CIVIL ENGINEER 12/12/11 DATE

4-9-12
PLANS APPROVAL DATE

REGISTERED PROFESSIONAL ENGINEER FRANK HSIAOSHIH WEI No. C 52918 Exp. 12-31-12 CIVIL STATE OF CALIFORNIA

The State of California or its officers or agents shall not be responsible for the accuracy or completeness of electronic copies of this plan sheet.

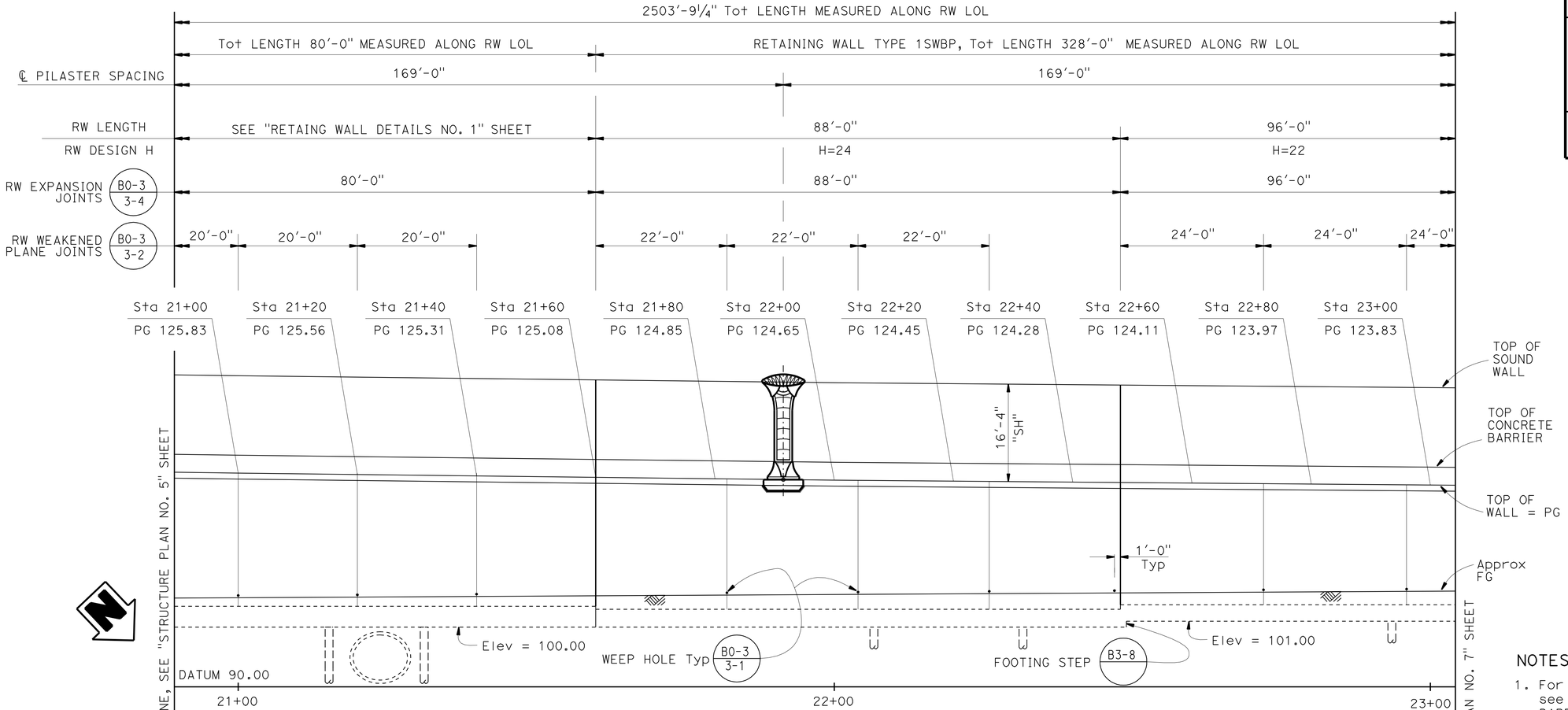

MIRRORED ELEVATION

1" = 10'

WORKING POINT	RW LOL STATION AND OFFSET
WP61	21+61.25, 3.25' Lt
WP62	21+62.00
WP63	21+61.50, 8.00' Rt
WP64	22+50.66, 2.75' Lt
WP65	22+51.50, 0.50' Rt
WP66	22+51.50, 7.00' Rt

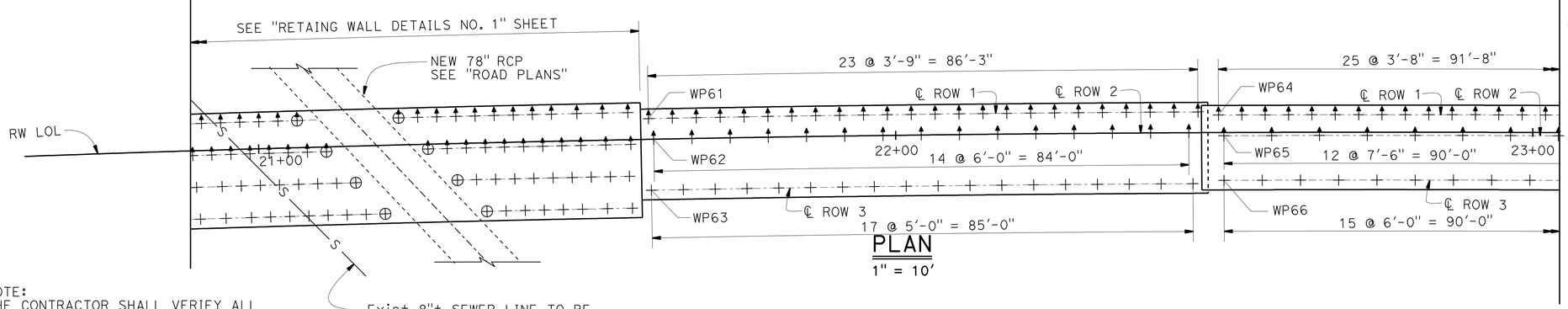

PLAN

1" = 10'

NOTES:

1. For Sound Wall and Barrier Details, see "SOUNDWALL - MASONRY BLOCK WITH BARRIER ON RETAINING WALL DETAILS NO. 1" and "SOUNDWALL - MASONRY BLOCK WITH BARRIER ON RETAINING WALL DETAILS NO. 2" sheets.
2. For retaining wall details, see "RETAINING WALL TYPE 1SBWP - DETAILS NO. 1" and "RETAINING WALL TYPE 1SBWP - DETAILS NO. 2" sheets.
3. For Expansion Joint details in the Masonry Block Soundwall, see "SOUNDWALL - MASONRY BLOCK WITH BARRIER ON RETAINING WALL DETAILS NO. 1" and "SOUNDWALL - MASONRY BLOCK WITH BARRIER ON RETAINING WALL DETAILS NO. 2" sheets.
4. See "GENERAL PLAN" for RW LOL alignment information.
5. See "INDEX TO PLANS" sheet for Pile Data Table.

+ Denotes Vertical Pile

Denotes 1:3 Battered Pile

⊕ and ⊕ Predrilled holes required

NOTE:
THE CONTRACTOR SHALL VERIFY ALL CONTROLLING FIELD DIMENSIONS BEFORE ORDERING OR FABRICATING ANY MATERIAL.

	BY	CHECKED
DESIGN	V. Wami	F. Wei
DETAILS	M. Kingra	F. Wei
QUANTITIES	L. Sanchez-Manzo	S. Yeh

STATE OF CALIFORNIA
DEPARTMENT OF TRANSPORTATION

DIVISION OF ENGINEERING SERVICES
STRUCTURE DESIGN
DESIGN BRANCH 21

BRIDGE NO. 53E0188
POST MILE 4.46

SOUND WALL NO. 251
STRUCTURE PLAN NO. 6

STRUCTURES DESIGN DETAIL SHEET (ENGLISH) (REV. 09-01-10)

ORIGINAL SCALE IN INCHES FOR REDUCED PLANS 0 1 2 3

UNIT: 3623
PROJECT NUMBER & PHASE: 0700001834 & 1 CONTRACT NO.: 07-215941

DISREGARD PRINTS BEARING EARLIER REVISION DATES → 09/30/11 11/29/11 12/07/11 03/22/12

SHEET 8 OF 50

FILE => 53-E0188-c-sp06.dgn

USERNAME => s128843 DATE PLOTTED => 14-APR-2012 TIME PLOTTED => 11:42

DIST	COUNTY	ROUTE	POST MILES TOTAL PROJECT	SHEET No.	TOTAL SHEETS
07	LA	5	4.0/5.9	1339	1597

REGISTERED CIVIL ENGINEER — DATE 12/12/11

4-9-12
PLANS APPROVAL DATE

REGISTERED PROFESSIONAL ENGINEER FRANK HSIAOSHIH WEI No. C 52918 Exp. 12-31-12 CIVIL STATE OF CALIFORNIA

The State of California or its officers or agents shall not be responsible for the accuracy or completeness of electronic copies of this plan sheet.

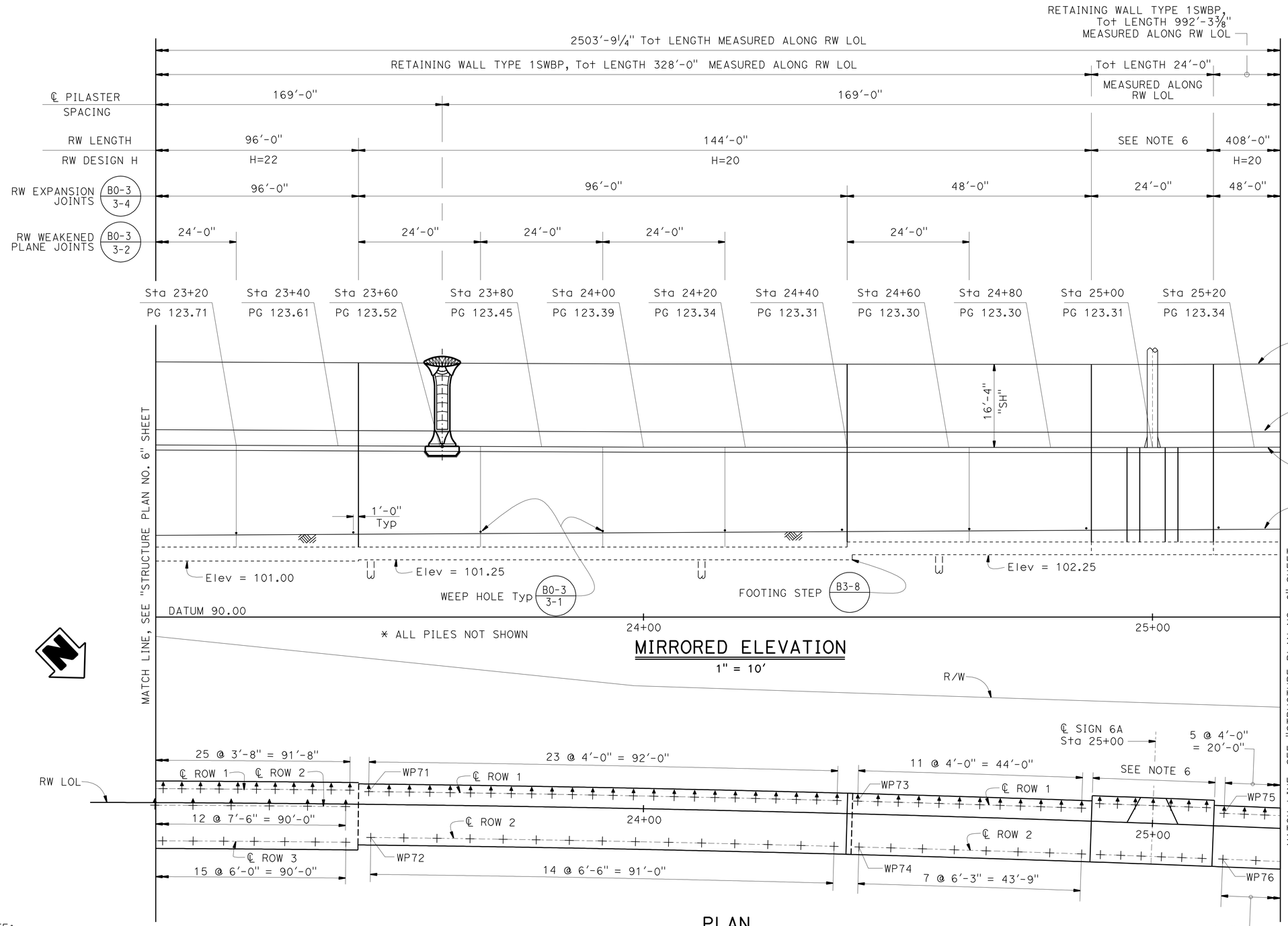

WORKING POINT	RW LOL STATION AND OFFSET
WP71	23+46.00, 2.5' Lt
WP72	23+46.50, 6.5' Rt
WP73	24+42.00, 2.5' Lt
WP74	24+42.50, 6.5' Rt
WP75	25+13.97, 2.5' Lt
WP76	25+14.08, 6.5' Rt

NOTES:

1. For Sound Wall and Barrier Details, see "SOUNDWALL - MASONRY BLOCK WITH BARRIER ON RETAINING WALL DETAILS NO. 1" and "SOUNDWALL - MASONRY BLOCK WITH BARRIER ON RETAINING WALL DETAILS NO. 2" sheets.
2. For retaining wall details, see "RETAINING WALL TYPE 1SBWP - DETAILS NO. 1" and "RETAINING WALL TYPE 1SBWP - DETAILS NO. 2" sheets.
3. For Expansion Joint details in the Masonry Block Soundwall, see "SOUNDWALL - MASONRY BLOCK WITH BARRIER ON RETAINING WALL DETAILS NO. 1" and "SOUNDWALL - MASONRY BLOCK WITH BARRIER ON RETAINING WALL DETAILS NO. 2" sheets.
4. See "GENERAL PLAN" for RW LOL alignment information.
5. See "INDEX TO PLANS" sheet for Pile Data Table.
6. See "RETAINING WALL DETAILS AT SIGN 6A" sheet.

\+ Denotes Vertical Pile

⸸ Denotes 1:3 Battered Pile

NOTE:
THE CONTRACTOR SHALL VERIFY ALL CONTROLLING FIELD DIMENSIONS BEFORE ORDERING OR FABRICATING ANY MATERIAL.

	BY	CHECKED
DESIGN	V. Wami	F. Wei
DETAILS	M. Kingra	F. Wei
QUANTITIES	L. Sanchez-Manzo	S. Yeh

STATE OF CALIFORNIA
DEPARTMENT OF TRANSPORTATION

DIVISION OF ENGINEERING SERVICES
STRUCTURE DESIGN
DESIGN BRANCH 21

BRIDGE NO. 53E0188
POST MILE 4.46

SOUND WALL NO. 251
STRUCTURE PLAN NO. 7

STRUCTURES DESIGN DETAIL SHEET (ENGLISH) (REV. 09-01-10)

ORIGINAL SCALE IN INCHES FOR REDUCED PLANS 0 1 2 3

UNIT: 3623
PROJECT NUMBER & PHASE: 0700001834 & 1 CONTRACT NO.: 07-215941

DISREGARD PRINTS BEARING EARLIER REVISION DATES

REVISION DATES: 09/30/11 11/25/11 12/12/11 03/22/12

SHEET 9 OF 50

FILE => 53-E0188-c-sp07.dgn

USERNAME => s128843 DATE PLOTTED => 14-APR-2012 TIME PLOTTED => 11:42

DIST	COUNTY	ROUTE	POST MILES TOTAL PROJECT	SHEET No.	TOTAL SHEETS
07	LA	5	4.0/5.9	1340	1597

REGISTERED CIVIL ENGINEER 12/12/11 DATE

4-9-12
PLANS APPROVAL DATE

REGISTERED PROFESSIONAL ENGINEER FRANK HSIAOSHIH WEI No. C 52918 Exp. 12-31-12 CIVIL STATE OF CALIFORNIA

The State of California or its officers or agents shall not be responsible for the accuracy or completeness of electronic copies of this plan sheet.

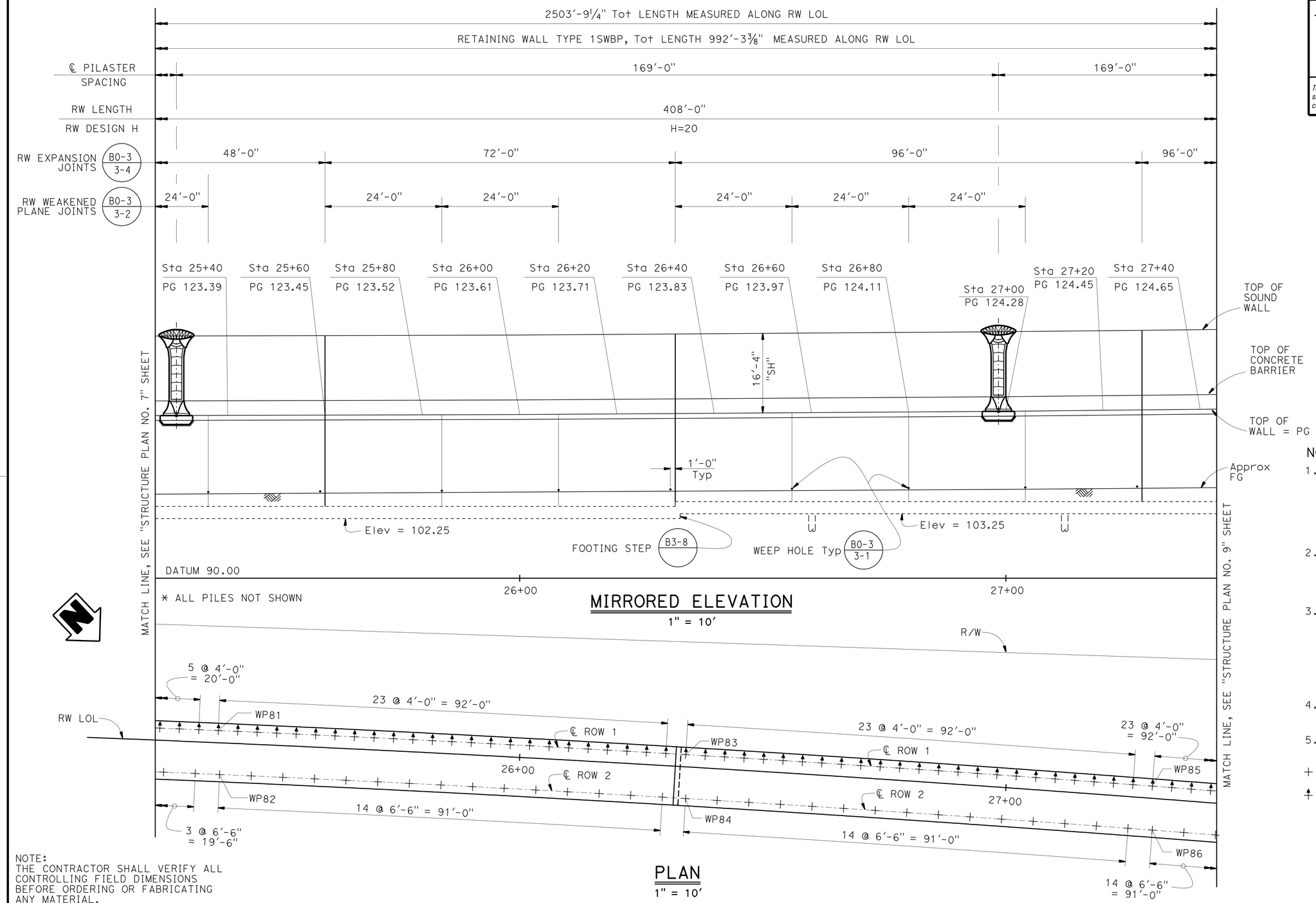

WORKING POINT	RW LOL STATION AND OFFSET
WP81	25+37.96, 2.50' Lt
WP82	25+38.61, 6.50' Rt
WP83	26+34.00, 2.50' Lt
WP84	26+34.50, 6.50' Rt
WP85	27+29.96, 2.50' Lt
WP86	27+30.61, 6.50' Rt

NOTES:

1. For Sound Wall and Barrier Details, see "SOUNDWALL - MASONRY BLOCK WITH BARRIER ON RETAINING WALL DETAILS NO. 1" and "SOUNDWALL - MASONRY BLOCK WITH BARRIER ON RETAINING WALL DETAILS NO. 2" sheets.
2. For retaining wall details, see "RETAINING WALL TYPE 1SBWP - DETAILS NO. 1" and "RETAINING WALL TYPE 1SBWP - DETAILS NO. 2" sheets.
3. For Expansion Joint details in the Masonry Block Soundwall, see "SOUNDWALL - MASONRY BLOCK WITH BARRIER ON RETAINING WALL DETAILS NO. 1" and "SOUNDWALL - MASONRY BLOCK WITH BARRIER ON RETAINING WALL DETAILS NO. 2" sheets.
4. See "GENERAL PLAN" for RW LOL alignment information.
5. See "INDEX TO PLANS" sheet for Pile Data Table.

+ Denotes Vertical Pile

+ Denotes 1:3 Battered Pile

NOTE:
THE CONTRACTOR SHALL VERIFY ALL CONTROLLING FIELD DIMENSIONS BEFORE ORDERING OR FABRICATING ANY MATERIAL.

	BY	CHECKED
DESIGN	V. Wami	F. Wei
DETAILS	M. Kingra	F. Wei
QUANTITIES	L. Sanchez-Manzo	S. Yeh

STATE OF CALIFORNIA
DEPARTMENT OF TRANSPORTATION

DIVISION OF ENGINEERING SERVICES
STRUCTURE DESIGN
DESIGN BRANCH 21

BRIDGE NO. 53E0188
POST MILE 4.46

SOUND WALL NO. 251
STRUCTURE PLAN NO. 8

STRUCTURES DESIGN DETAIL SHEET (ENGLISH) (REV. 09-01-10)

ORIGINAL SCALE IN INCHES FOR REDUCED PLANS 0 1 2 3

UNIT: 3623
PROJECT NUMBER & PHASE: 0700001834 & 1 CONTRACT NO.: 07-215941

DISREGARD PRINTS BEARING EARLIER REVISION DATES

REVISION DATES: 09/30/11 11/25/11 12/07/11 03/22/12

SHEET 10 OF 50

FILE => 53-E0188-c-sp08.dgn

USERNAME => s128843 DATE PLOTTED => 14-APR-2012 TIME PLOTTED => 11:42

DIST	COUNTY	ROUTE	POST MILES TOTAL PROJECT	SHEET No.	TOTAL SHEETS
07	LA	5	4.0/5.9	1341	1597

REGISTERED CIVIL ENGINEER 12/12/11 DATE

4-9-12
PLANS APPROVAL DATE

REGISTERED PROFESSIONAL ENGINEER FRANK HSIAOSHIH WEI No. C 52918 Exp. 12-31-12 CIVIL STATE OF CALIFORNIA

The State of California or its officers or agents shall not be responsible for the accuracy or completeness of electronic copies of this plan sheet.

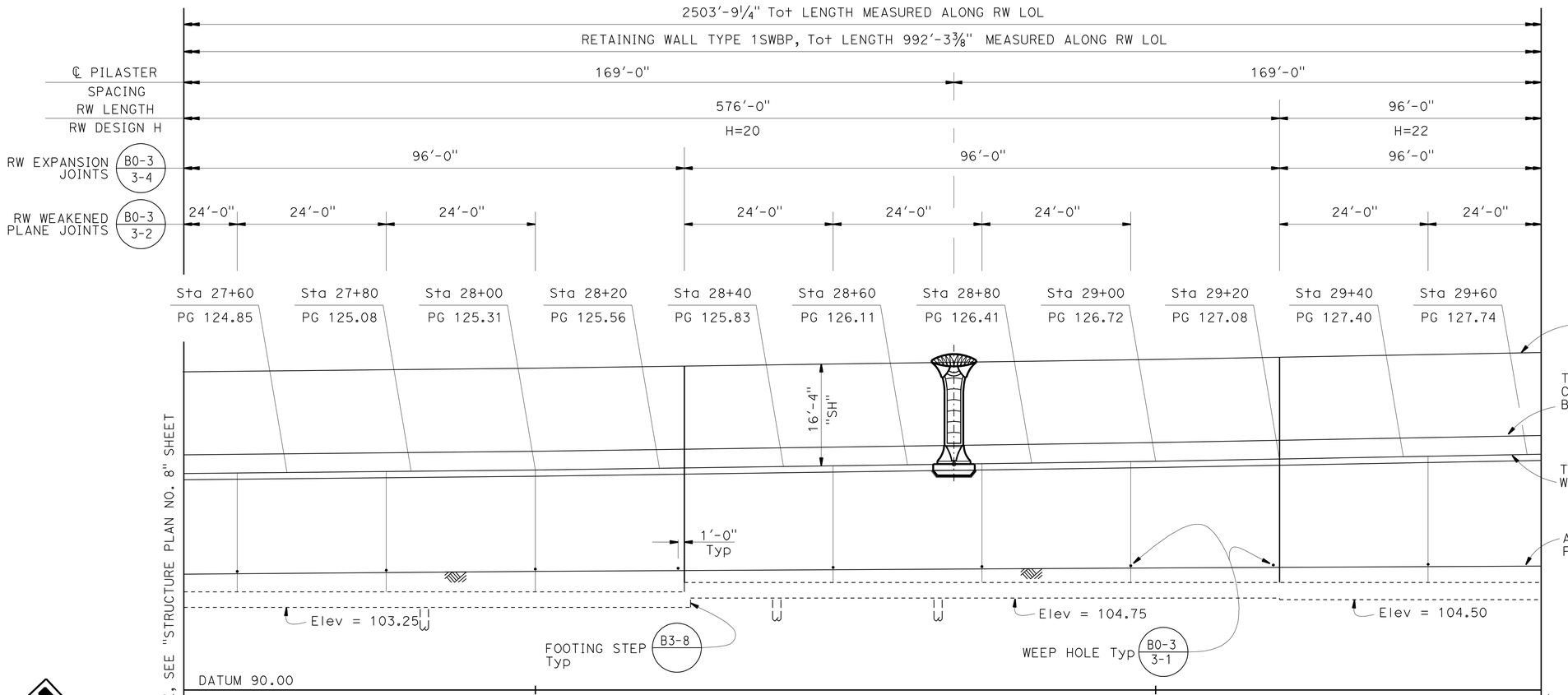

WORKING POINT	RW LOL STATION AND OFFSET
WP91	28+26.00, 2.50' Lt
WP92	28+26.50, 6.50' Rt
WP93	29+21.00, 2.75' Lt
WP94	29+23.00, 0.50' Rt
WP95	29+23.00, 7.50' Rt

NOTES:

1. For Sound Wall and Barrier Details, see "SOUNDWALL - MASONRY BLOCK WITH BARRIER ON RETAINING WALL DETAILS NO. 1" and "SOUNDWALL - MASONRY BLOCK WITH BARRIER ON RETAINING WALL DETAILS NO. 2" sheets.
2. For retaining wall details, see "RETAINING WALL TYPE 1SBWP - DETAILS NO. 1" and "RETAINING WALL TYPE 1SBWP - DETAILS NO. 2" sheets.
3. For Expansion Joint details in the Masonry Block Soundwall, see "SOUNDWALL - MASONRY BLOCK WITH BARRIER ON RETAINING WALL DETAILS NO. 1" and "SOUNDWALL - MASONRY BLOCK WITH BARRIER ON RETAINING WALL DETAILS NO. 2" sheets.
4. See "GENERAL PLAN" for RW LOL alignment information.
5. See "INDEX TO PLANS" sheet for Pile Data Table.

+ Denotes Vertical Pile

+ Denotes 1:3 Battered Pile

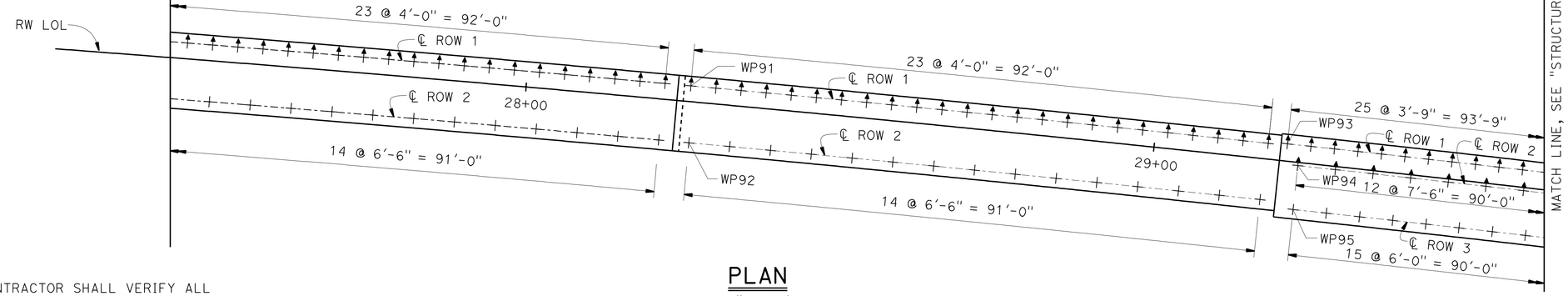

PLAN
1" = 10'

NOTE:
THE CONTRACTOR SHALL VERIFY ALL CONTROLLING FIELD DIMENSIONS BEFORE ORDERING OR FABRICATING ANY MATERIAL.

	BY	CHECKED
DESIGN	V. Wami	F. Wei
DETAILS	M. Kingra	F. Wei
QUANTITIES	L. Sanchez-Manzo	S. Yeh

STATE OF CALIFORNIA
DEPARTMENT OF TRANSPORTATION

DIVISION OF ENGINEERING SERVICES
STRUCTURE DESIGN
DESIGN BRANCH 21

BRIDGE NO. 53E0188
POST MILE 4.46

SOUND WALL NO. 251
STRUCTURE PLAN NO. 9

STRUCTURES DESIGN DETAIL SHEET (ENGLISH) (REV. 09-01-10)

ORIGINAL SCALE IN INCHES FOR REDUCED PLANS 0 1 2 3

UNIT: 3623
PROJECT NUMBER & PHASE: 0700001834 & 1 CONTRACT NO.: 07-215941

DISREGARD PRINTS BEARING EARLIER REVISION DATES

REVISION DATES 03/30/11 11/25/11 12/12/11 03/22/12

SHEET 11 OF 50

FILE => 53-E0188-c-sp09.dgn

USERNAME => s128843 DATE PLOTTED => 14-APR-2012 TIME PLOTTED => 11:43

DIST	COUNTY	ROUTE	POST MILES TOTAL PROJECT	SHEET No.	TOTAL SHEETS
07	LA	5	4.0/5.9	1342	1597

REGISTERED CIVIL ENGINEER — DATE 2/12/11

4-9-12
PLANS APPROVAL DATE

The State of California or its officers or agents shall not be responsible for the accuracy or completeness of electronic copies of this plan sheet.

REGISTERED PROFESSIONAL ENGINEER — FRANK HSIAOSHIH WEI — No. C 52918 — Exp. 12-31-12 — CIVIL — STATE OF CALIFORNIA

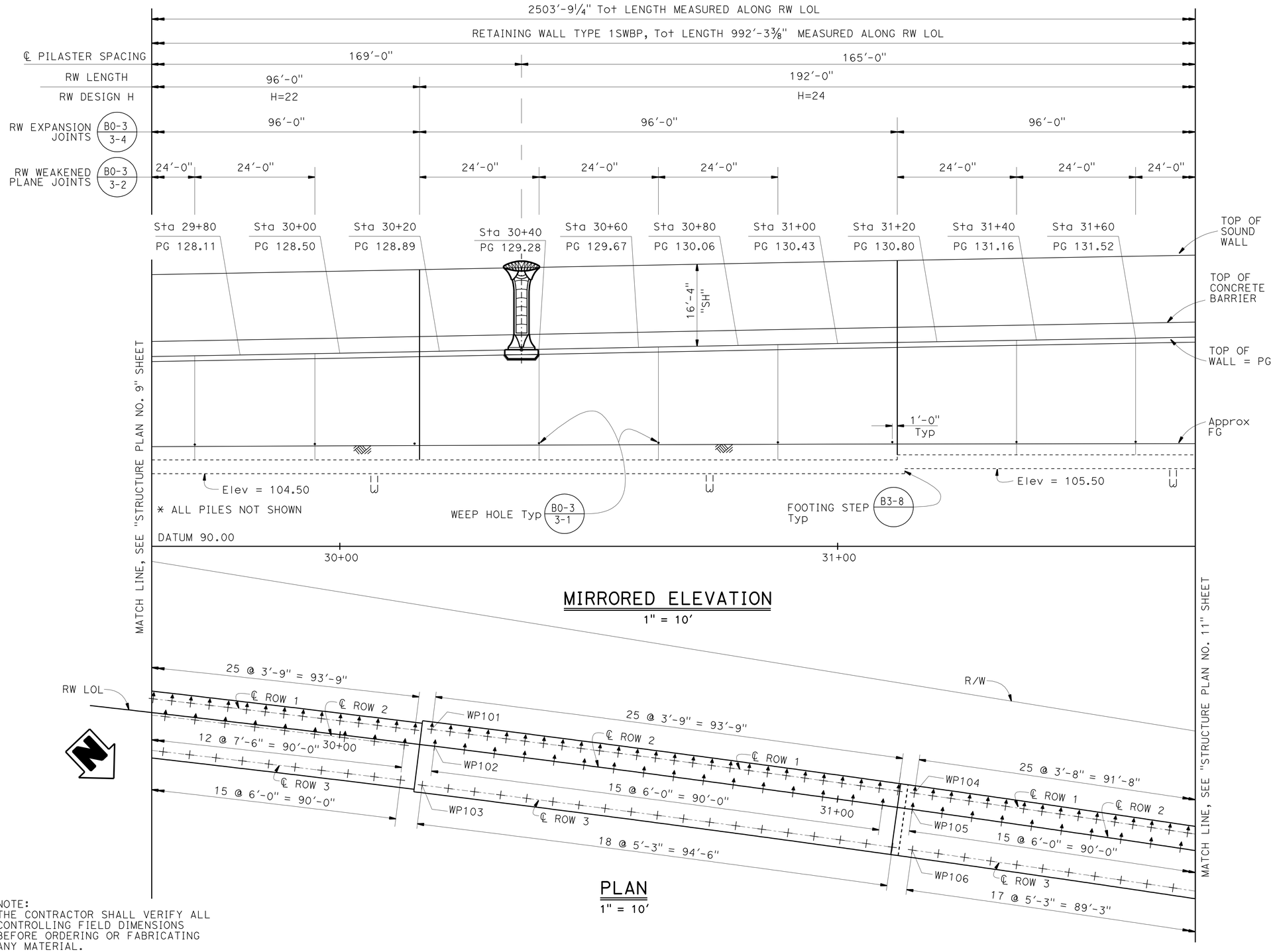

WORKING POINT	RW LOL STATION AND OFFSET
WP101	30+18.00, 3.25' Lt
WP102	30+19.00
WP103	30+17.50, 8.00' Rt
WP104	31+15.00, 3.25' Lt
WP105	31+15.00
WP106	31+16.13, 8.00' Rt

NOTES:

1. For Sound Wall and Barrier Details, see "SOUNDWALL - MASONRY BLOCK WITH BARRIER ON RETAINING WALL DETAILS NO. 1" and "SOUNDWALL - MASONRY BLOCK WITH BARRIER ON RETAINING WALL DETAILS NO. 2" sheets.
2. For retaining wall details, see "RETAINING WALL TYPE 1SBWP - DETAILS NO. 1" and "RETAINING WALL TYPE 1SBWP - DETAILS NO. 2" sheets.
3. For Expansion Joint details in the Masonry Block Soundwall, see "SOUNDWALL - MASONRY BLOCK WITH BARRIER ON RETAINING WALL DETAILS NO. 1" and "SOUNDWALL - MASONRY BLOCK WITH BARRIER ON RETAINING WALL DETAILS NO. 2" sheets.
4. See "GENERAL PLAN" for RW LOL alignment information.
5. See "INDEX TO PLANS" sheet for Pile Data Table.

\+ Denotes Vertical Pile

‡ Denotes 1:3 Battered Pile

NOTE:
THE CONTRACTOR SHALL VERIFY ALL CONTROLLING FIELD DIMENSIONS BEFORE ORDERING OR FABRICATING ANY MATERIAL.

	BY	CHECKED
DESIGN	V. Wami	F. Wei
DETAILS	M. Kingra	F. Wei
QUANTITIES	L. Sanchez-Manzo	S. Yeh

STATE OF CALIFORNIA
DEPARTMENT OF TRANSPORTATION

DIVISION OF ENGINEERING SERVICES
STRUCTURE DESIGN
DESIGN BRANCH 21

BRIDGE NO. 53E0188
POST MILE 4.46

SOUND WALL NO. 251
STRUCTURE PLAN NO. 10

STRUCTURES DESIGN DETAIL SHEET (ENGLISH) (REV. 09-01-10)

ORIGINAL SCALE IN INCHES FOR REDUCED PLANS 0 1 2 3

UNIT: 3623
PROJECT NUMBER & PHASE: 0700001834 & 1 CONTRACT NO.: 07-215941

DISREGARD PRINTS BEARING EARLIER REVISION DATES

REVISION DATES: 09/20/11 11/25/11 12/07/11 03/22/12

SHEET 12 OF 50

FILE => 53-E0188-c-sp10.dgn

USERNAME => s128843 DATE PLOTTED => 14-APR-2012 TIME PLOTTED => 11:43

DIST	COUNTY	ROUTE	POST MILES TOTAL PROJECT	SHEET No.	TOTAL SHEETS
07	LA	5	4.0/5.9	1343	1597

REGISTERED CIVIL ENGINEER 12/12/11 DATE

4-9-12
PLANS APPROVAL DATE

REGISTERED PROFESSIONAL ENGINEER FRANK HSIAOSHIH WEI No. C 52918 Exp. 12-31-12 CIVIL STATE OF CALIFORNIA

The State of California or its officers or agents shall not be responsible for the accuracy or completeness of electronic copies of this plan sheet.

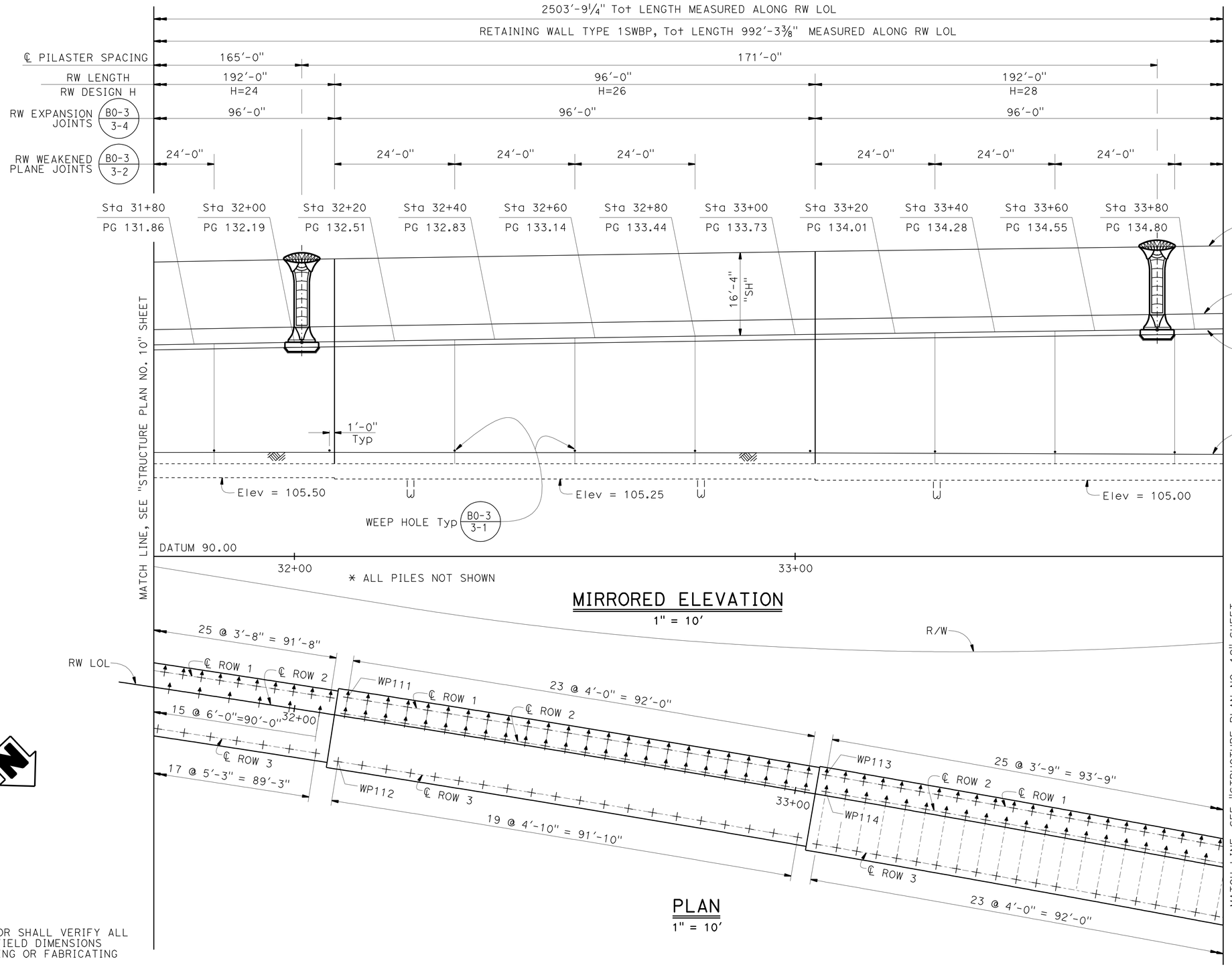

WORKING POINT	RW LOL STATION AND OFFSET
WP111	32+10.00, 3.75' Lt
WP112	32+10.83, 9.00' Rt
WP113	33+05.50, 4.00' Lt
WP114	33+06.00, 0.75' Lt

NOTES:

1. For Sound Wall and Barrier Details, see "SOUNDWALL - MASONRY BLOCK WITH BARRIER ON RETAINING WALL DETAILS NO. 1" and "SOUNDWALL - MASONRY BLOCK WITH BARRIER ON RETAINING WALL DETAILS NO. 2" sheets.
2. For retaining wall details, see "RETAINING WALL TYPE 1SBWP - DETAILS NO. 1" and "RETAINING WALL TYPE 1SBWP - DETAILS NO. 2" sheets.
3. For Expansion Joint details in the Masonry Block Soundwall, see "SOUNDWALL - MASONRY BLOCK WITH BARRIER ON RETAINING WALL DETAILS NO. 1" and "SOUNDWALL - MASONRY BLOCK WITH BARRIER ON RETAINING WALL DETAILS NO. 2" sheets.
4. See "GENERAL PLAN" for RW LOL alignment information.
5. See "INDEX TO PLANS" sheet for Pile Data Table.

\+ Denotes Vertical Pile

⊥ Denotes 1:3 Battered Pile

NOTE:
THE CONTRACTOR SHALL VERIFY ALL CONTROLLING FIELD DIMENSIONS BEFORE ORDERING OR FABRICATING ANY MATERIAL.

	BY	CHECKED
DESIGN	V. Wami	F. Wei
DETAILS	M. Kingra	F. Wei
QUANTITIES	L. Sanchez-Manzo	S. Yeh

STATE OF CALIFORNIA
DEPARTMENT OF TRANSPORTATION

DIVISION OF ENGINEERING SERVICES
STRUCTURE DESIGN
DESIGN BRANCH 21

BRIDGE NO. 53E0188
POST MILE 4.46

SOUND WALL NO. 251
STRUCTURE PLAN NO. 11

STRUCTURES DESIGN DETAIL SHEET (ENGLISH) (REV. 09-01-10)

ORIGINAL SCALE IN INCHES FOR REDUCED PLANS 0 1 2 3

UNIT: 3623
PROJECT NUMBER & PHASE: 0700001834 & 1 CONTRACT NO.: 07-215941

DISREGARD PRINTS BEARING EARLIER REVISION DATES

REVISION DATES 09/30/11 11/25/11 12/12/11 03/22/12

SHEET 13 OF 50

FILE => 53-E0188-c-sp11.dgn

USERNAME => s128843 DATE PLOTTED => 14-APR-2012 TIME PLOTTED => 11:43

DIST	COUNTY	ROUTE	POST MILES TOTAL PROJECT	SHEET No.	TOTAL SHEETS
07	LA	5	4.0/5.9	1344	1597

REGISTERED CIVIL ENGINEER 12/12/11 DATE

4-9-12
PLANS APPROVAL DATE

REGISTERED PROFESSIONAL ENGINEER FRANK HSIAOSHIH WEI No. C 52918 Exp. 12-31-12 CIVIL STATE OF CALIFORNIA

The State of California or its officers or agents shall not be responsible for the accuracy or completeness of electronic copies of this plan sheet.

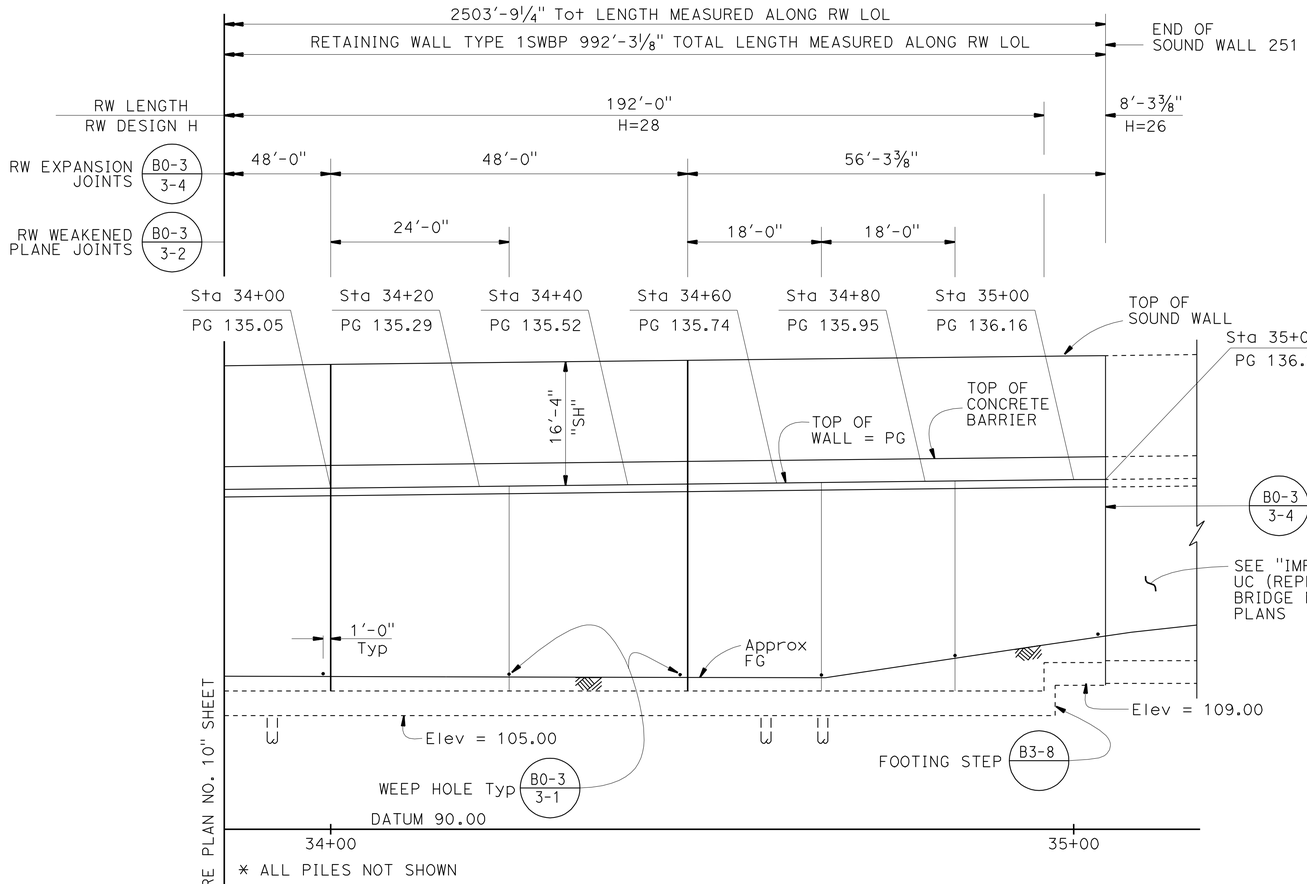

* ALL PILES NOT SHOWN

MIRRORED ELEVATION

1" = 10'

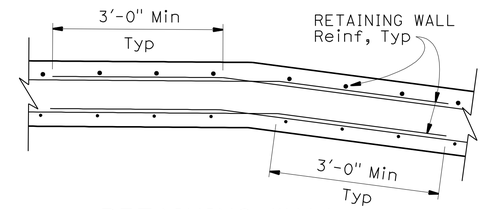

RETAINING WALL CORNER DETAIL

No Scale

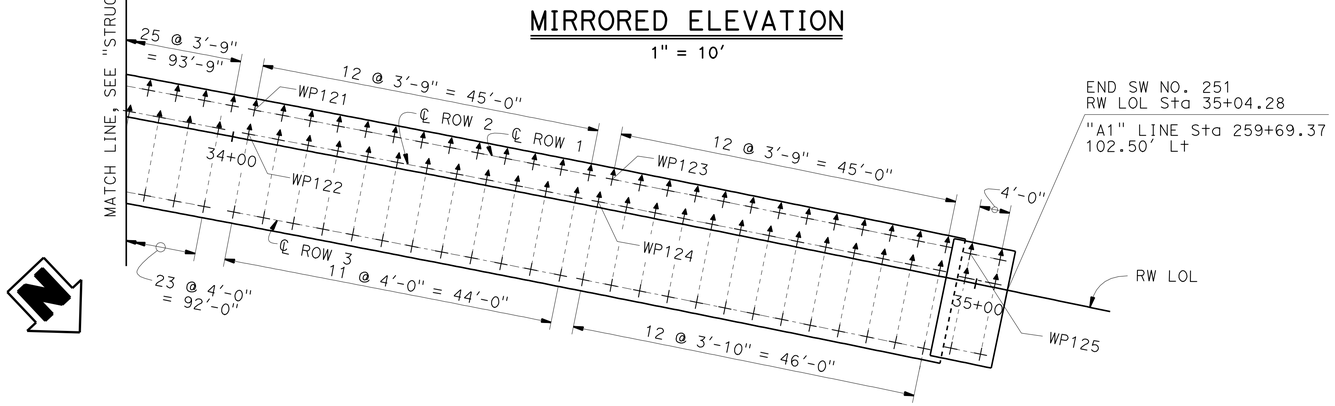

PLAN

1" = 10'

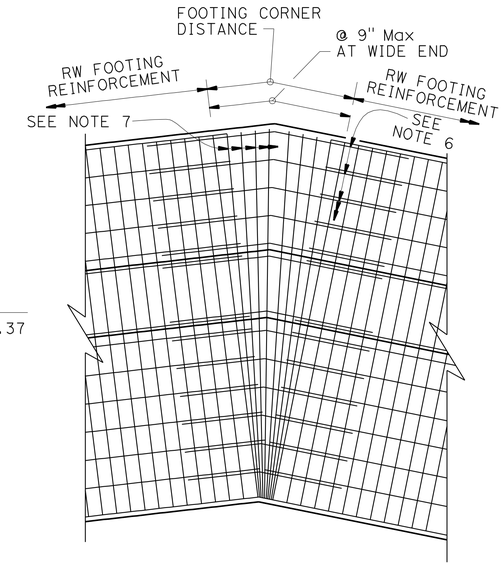

RETAINING WALL FOOTING CORNER DETAIL

No Scale

NOTES:

1. For Sound Wall and Barrier Details, see "SOUNDWALL - MASONRY BLOCK WITH BARRIER ON RETAINING WALL DETAILS NO. 1" and "SOUNDWALL - MASONRY BLOCK WITH BARRIER ON RETAINING WALL DETAILS NO. 2" sheets.
2. For retaining wall details, see "RETAINING WALL TYPE 1SBWP - DETAILS NO. 1" and "RETAINING WALL TYPE 1SBWP - DETAILS NO. 2" sheets.
3. For Expansion Joint details in the Masonry Block Soundwall, see "SOUNDWALL - MASONRY BLOCK WITH BARRIER ON RETAINING WALL DETAILS NO. 1" and "SOUNDWALL - MASONRY BLOCK WITH BARRIER ON RETAINING WALL DETAILS NO. 2" sheets.
4. See "GENERAL PLAN" for RW LOL alignment information.
5. See "INDEX TO PLANS" sheet for Pile Data Table.
6. The rebar size will match the size of top mat and bottom mat reinforcement respectively. The length of the rebar shall provide minimum lap splice length to the footing reinforcment.
7. Provide additional top mat and bottom mat corner reinforcement. The number of rebars needed will depend upon the footing corner distance. The size of the rebar will match top mat and bottom mat footing reinforcement respectively.

+ Denotes Vertical Pile

⊥ Denotes 1:3 Battered Pile

WORKING POINT	RW LOL STATION AND OFFSET
WP121	34+02.18, 4.00' Lt
WP122	34+01.98, 0.75' Lt
WP123	34+50.25, 4.00' Lt
WP124	34+49.00, 0.75' Lt
WP125	34+98.50, 3.75' Lt

NOTE:
THE CONTRACTOR SHALL VERIFY ALL CONTROLLING FIELD DIMENSIONS BEFORE ORDERING OR FABRICATING ANY MATERIAL.

	BY	CHECKED
DESIGN	V. Wami	F. Wei
DETAILS	M. Kingra	F. Wei
QUANTITIES	L. Sanchez-Manzo	S. Yeh

STATE OF CALIFORNIA
DEPARTMENT OF TRANSPORTATION

DIVISION OF ENGINEERING SERVICES
STRUCTURE DESIGN
DESIGN BRANCH 21

BRIDGE NO. 53E0188
POST MILE 4.46

SOUND WALL NO. 251
STRUCTURE PLAN NO. 12

STRUCTURES DESIGN DETAIL SHEET (ENGLISH) (REV. 09-01-10)

ORIGINAL SCALE IN INCHES FOR REDUCED PLANS 0 1 2 3

UNIT: 3623
PROJECT NUMBER & PHASE: 0700001834 & 1 CONTRACT NO.: 07-215941

DISREGARD PRINTS BEARING EARLIER REVISION DATES

REVISION DATES: 09/30/11 11/25/11 12/07/11 03/22/12

SHEET 14 OF 50

FILE => 53-E0188-c-sp12.dgn

USERNAME => s128843 DATE PLOTTED => 14-APR-2012 TIME PLOTTED => 11:43

No.	R	Δ	T	L
3	5905.51′	25°29′58.2"	1336.25′	2628.25′

NOTES:

1. ☐ Indicates Bottom of footing elevation.
2. Existing contours shown, for final countours, see "ROAD PLANS".
3. For footing dimensions and pile layout, see "Structure Plan" sheets.
4. Underground utilities as shown are approximate. See "ROAD PLANS" for details.

DIST	COUNTY	ROUTE	POST MILES TOTAL PROJECT	SHEET No.	TOTAL SHEETS
07	LA	5	4.0/5.9	1345	1597

Frank H. Wei 2/12/11
REGISTERED CIVIL ENGINEER DATE

4-9-12
PLANS APPROVAL DATE

REGISTERED PROFESSIONAL ENGINEER FRANK HSIAOSHIH WEI No. C 52918 Exp. 12-31-12 CIVIL STATE OF CALIFORNIA

The State of California or its officers or agents shall not be responsible for the accuracy or completeness of electronic copies of this plan sheet.

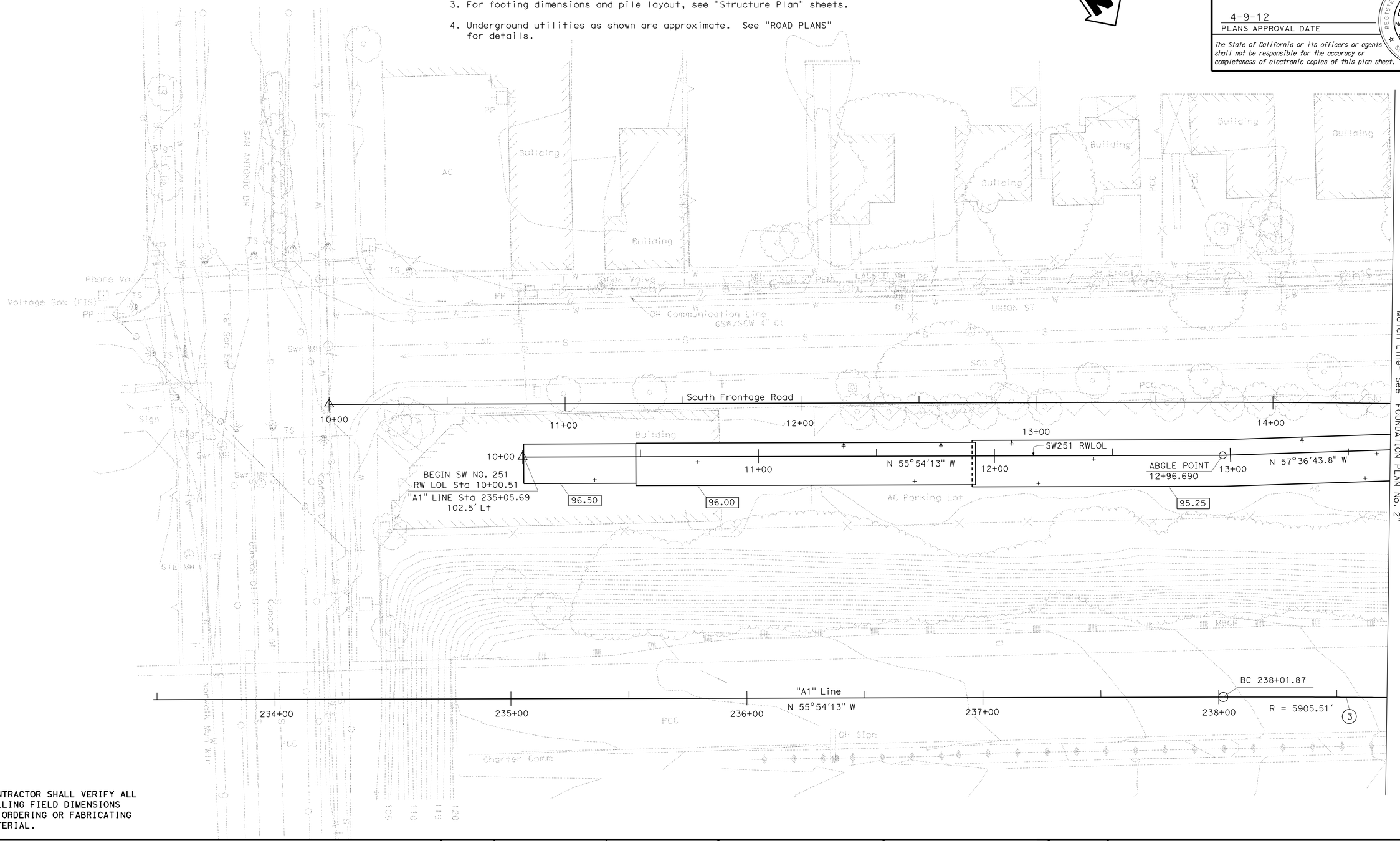

NOTE:
THE CONTRACTOR SHALL VERIFY ALL CONTROLLING FIELD DIMENSIONS BEFORE ORDERING OR FABRICATING ANY MATERIAL.

PRELIMINARY INVESTIGATION SECTION

SCALE 1"=20′	VERT.DATUM NAVD88	PHOTOGRAMMETRY AS OF: X			
	HORZ.DATUM NAD83	SURVEYED	BY D7	CHECKED	BY X
ALIGNMENT TIES Dist. Traverse Sheet		DRAFTED	BY C. Pham	CHECKED	BY E. Vigjar

DESIGN	BY V. Wami	CHECKED F. Wei	
DETAILS	BY M.Kingra	CHECKED F. Wei	
QUANTITIES	BY L. Sanchez-Manzo	CHECKED S. Yeh	

STATE OF CALIFORNIA
DEPARTMENT OF TRANSPORTATION

DIVISION OF ENGINEERING SERVICES
STRUCTURE DESIGN
DESIGN BRANCH 21

BRIDGE NO. 53E0188
POST MILE 4.46

SOUND WALL NO. 251
FOUNDATION PLAN NO. 1

STRUCTURES FOUNDATION PLAN SHEET (ENGLISH) (REV. 09-01-10)

ORIGINAL SCALE IN INCHES FOR REDUCED PLANS 0 1 2 3

UNIT: 3623
PROJECT NUMBER & PHASE: 0700001834 & 1 CONTRACT NO.: 07-215941

DISREGARD PRINTS BEARING EARLIER REVISION DATES

REVISION DATES: 09/30/11 11/25/11 12/07/11 03/22/12

SHEET 15 OF 50

FILE => 53-E0188-e-fdpl01.dgn

USERNAME => s128843 DATE PLOTTED => 14-APR-2012 TIME PLOTTED => 11:43

No.	R	Δ	T	L
2	6019.66′	0°37′7.1"	32.50′	65.00′
3	5905.51′	25°29′58.2"	1336.25′	2628.25′
4	6008.01′	18°18′10.1"	967.86′	1919.22′

NOTES:

1. ▭ Indicates Bottom of footing elevation.
2. Existing contours shown, for final countours, see "ROAD PLANS".
3. For footing dimensions and pile layout, see "Structure Plan" sheets.
4. Underground utilities as shown are approximate. See "ROAD PLANS" for details.

NOTE:
THE CONTRACTOR SHALL VERIFY ALL CONTROLLING FIELD DIMENSIONS BEFORE ORDERING OR FABRICATING ANY MATERIAL.

DIST	COUNTY	ROUTE	POST MILES TOTAL PROJECT	SHEET No.	TOTAL SHEETS
07	LA	5	4.0/5.9	1346	1597

REGISTERED CIVIL ENGINEER — DATE 12/12/11

4-9-12
PLANS APPROVAL DATE

REGISTERED PROFESSIONAL ENGINEER — FRANK HSIAOSHIH WEI — No. C 52918 — Exp. 12-31-12 — CIVIL — STATE OF CALIFORNIA

The State of California or its officers or agents shall not be responsible for the accuracy or completeness of electronic copies of this plan sheet.

PRELIMINARY INVESTIGATION SECTION

SCALE	VERT.DATUM NAVD88	PHOTOGRAMMETRY AS OF: X			
1"=20′	HORZ.DATUM NAD83	SURVEYED	BY D7	CHECKED	BY X
ALIGNMENT TIES Dist. Traverse Sheet		DRAFTED	BY C. Pham	CHECKED	BY E. Vigjar

DESIGN	BY V. Wami	CHECKED F. Wei
DETAILS	BY M. Kingra	CHECKED F. Wei
QUANTITIES	BY L. Sanchez-Manzo	CHECKED S. Yeh

STATE OF CALIFORNIA
DEPARTMENT OF TRANSPORTATION

DIVISION OF ENGINEERING SERVICES
STRUCTURE DESIGN
DESIGN BRANCH 21

BRIDGE NO. 53E0188
POST MILE 4.46

SOUND WALL NO. 251
FOUNDATION PLAN No. 2

STRUCTURES FOUNDATION PLAN SHEET (ENGLISH) (REV. 09-01-10)

ORIGINAL SCALE IN INCHES FOR REDUCED PLANS 0 1 2 3

UNIT: 3623
PROJECT NUMBER & PHASE: 0700001834 & 1 CONTRACT NO.: 07-215941

DISREGARD PRINTS BEARING EARLIER REVISION DATES →

REVISION DATES: 09/30/11 11/29/11 12/07/11 03/22/12

SHEET 16 OF 50

FILE => 53-E0188-e-fdpl02.dgn

USERNAME => s128843 DATE PLOTTED => 14-APR-2012 TIME PLOTTED => 11:43

DIST	COUNTY	ROUTE	POST MILES TOTAL PROJECT	SHEET No.	TOTAL SHEETS
07	LA	5	4.0/5.9	1347	1597

REGISTERED CIVIL ENGINEER 12/12/11 DATE

4-9-12
PLANS APPROVAL DATE

REGISTERED PROFESSIONAL ENGINEER FRANK HSIAOSHIH WEI No. C 52918 Exp. 12-31-12 CIVIL STATE OF CALIFORNIA

The State of California or its officers or agents shall not be responsible for the accuracy or completeness of electronic copies of this plan sheet.

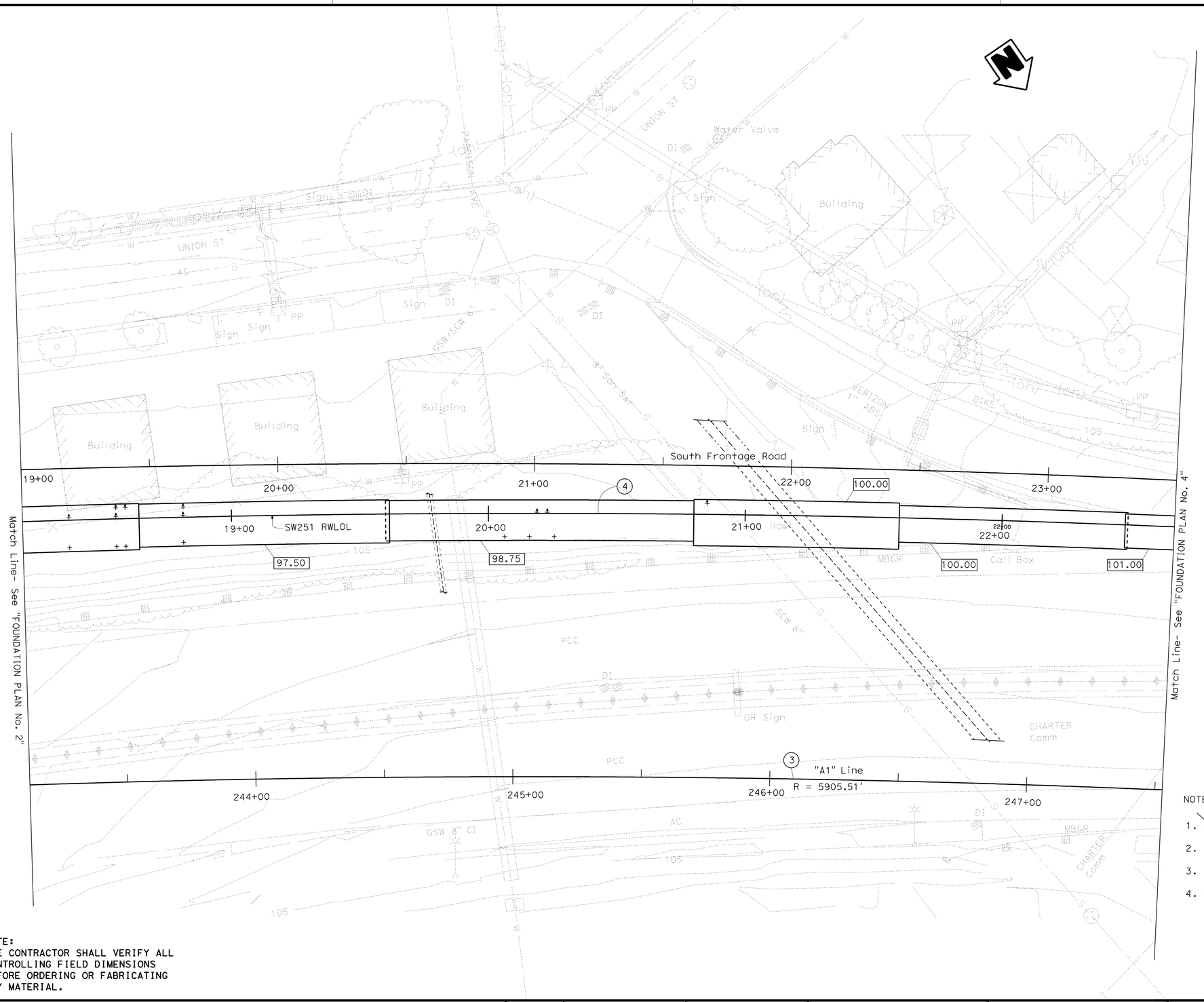

No.	R	Δ	T	L
3	5905.51′	25°29′58.2″	1336.25′	2628.25′
4	6008.01′	18°18′10.1″	967.86′	1919.22′

NOTES:

1. ▭ Indicates Bottom of footing elevation.
2. Existing contours shown, for final countours, see "ROAD PLANS".
3. For footing dimensions and pile layout, see "Structure Plan" sheets.
4. Underground utilities as shown are approximate. See "ROAD PLANS" for details.

NOTE:
THE CONTRACTOR SHALL VERIFY ALL CONTROLLING FIELD DIMENSIONS BEFORE ORDERING OR FABRICATING ANY MATERIAL.

PRELIMINARY INVESTIGATION SECTION

SCALE 1"=20′	VERT.DATUM NAVD88	PHOTOGRAMMETRY AS OF: X		
	HORZ.DATUM NAD83	SURVEYED	BY D7	CHECKED BY X
ALIGNMENT TIES Dist. Traverse Sheet		DRAFTED	BY C. Pham	CHECKED BY E. Vigjar

DESIGN	BY V. Wami	CHECKED F. Wei
DETAILS	BY M. Kingra	CHECKED F. Wei
QUANTITIES	BY L. Sanchez-Manzo	CHECKED S. Yeh

STATE OF CALIFORNIA
DEPARTMENT OF TRANSPORTATION

DIVISION OF ENGINEERING SERVICES
STRUCTURE DESIGN
DESIGN BRANCH 21

BRIDGE NO. 53E0188
POST MILE 4.46

SOUND WALL NO. 251
FOUNDATION PLAN No. 3

STRUCTURES FOUNDATION PLAN SHEET (ENGLISH) (REV. 09-01-10)

ORIGINAL SCALE IN INCHES FOR REDUCED PLANS 0 1 2 3

UNIT: 3623
PROJECT NUMBER & PHASE: 0700001834 & 1 CONTRACT NO.: 07-215941

DISREGARD PRINTS BEARING EARLIER REVISION DATES

REVISION DATES 09/30/11 11/25/11 12/12/11 03/22/12

SHEET 17 OF 50

FILE => 53-E0188-e-fdpl03.dgn

USERNAME => s128843 DATE PLOTTED => 14-APR-2012 TIME PLOTTED => 11:44

No.	R	Δ	T	L
3	5905.51′	25°29′58.2"	1336.25′	2628.25′
4	6008.01′	18°18′10.1"	967.86′	1919.22′

DIST	COUNTY	ROUTE	POST MILES TOTAL PROJECT	SHEET No.	TOTAL SHEETS
07	LA	5	4.0/5.9	1348	1597

REGISTERED CIVIL ENGINEER — DATE 12/12/11

4-9-12
PLANS APPROVAL DATE

REGISTERED PROFESSIONAL ENGINEER — FRANK HSIAOSHIH WEI — No. C 52918 — Exp. 12-31-12 — CIVIL — STATE OF CALIFORNIA

The State of California or its officers or agents shall not be responsible for the accuracy or completeness of electronic copies of this plan sheet.

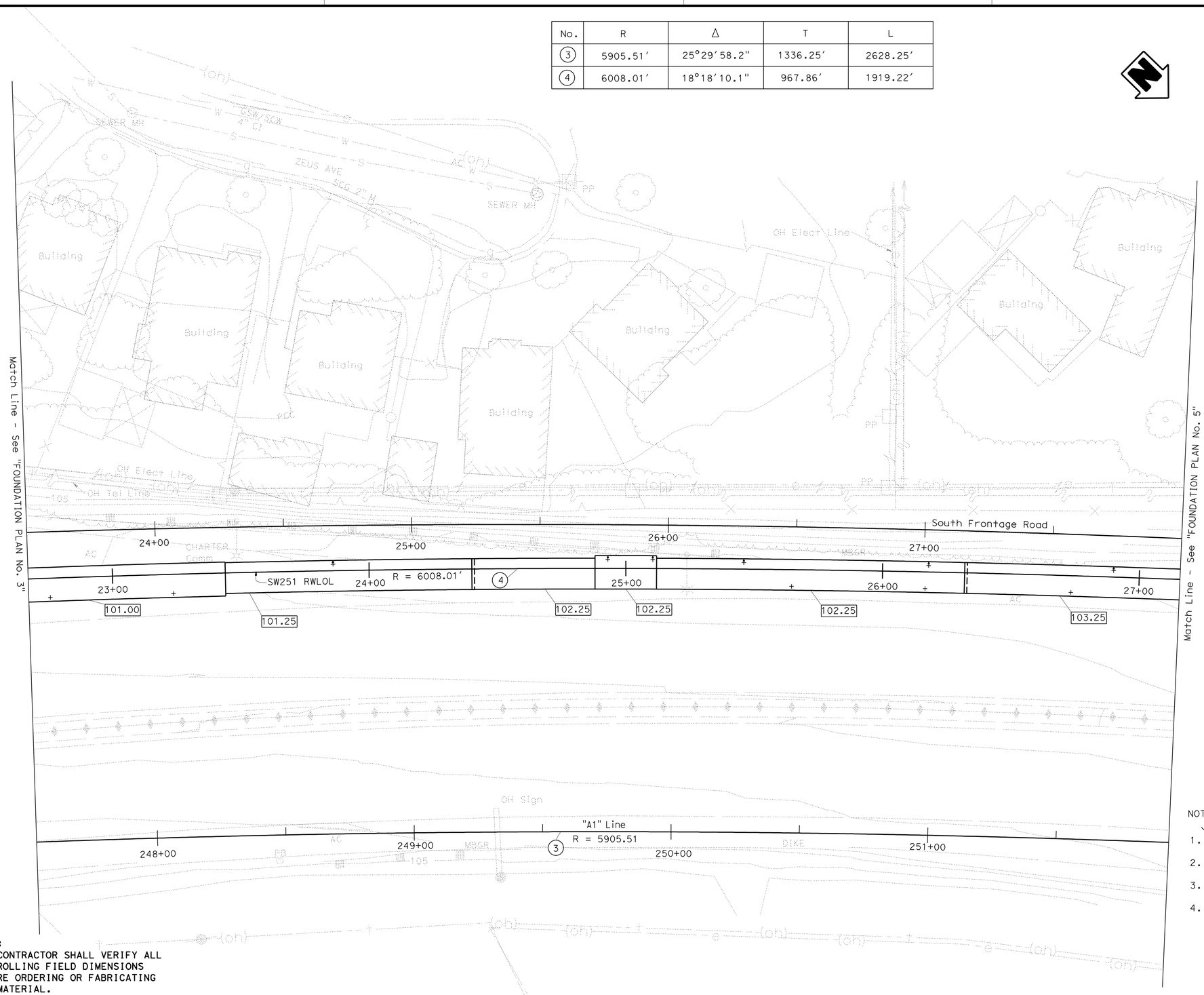

NOTES:

1. ▭ Indicates Bottom of footing elevation.
2. Existing contours shown, for final countours, see "ROAD PLANS".
3. For footing dimensions and pile layout, see "Structure Plan" sheets.
4. Underground utilities as shown are approximate. See "ROAD PLANS" for details.

NOTE:
THE CONTRACTOR SHALL VERIFY ALL CONTROLLING FIELD DIMENSIONS BEFORE ORDERING OR FABRICATING ANY MATERIAL.

PRELIMINARY INVESTIGATION SECTION

SCALE 1"=20′	VERT.DATUM NAVD88	PHOTOGRAMMETRY AS OF: X		
	HORZ.DATUM NAD83	SURVEYED	BY D7	CHECKED BY X
	ALIGNMENT TIES Dist. Traverse Sheet	DRAFTED	BY C. Pham	CHECKED BY E. Vigjar

DESIGN	BY V. Wami	CHECKED F. Wei
DETAILS	BY M. Kingra	CHECKED F. Wei
QUANTITIES	BY L. Sanchez-Manzo	CHECKED S. Yeh

STATE OF CALIFORNIA
DEPARTMENT OF TRANSPORTATION

DIVISION OF ENGINEERING SERVICES
STRUCTURE DESIGN
DESIGN BRANCH 21

BRIDGE NO. 53E0188
POST MILE 4.46

SOUND WALL NO. 251
FOUNDATION PLAN NO. 4

STRUCTURES FOUNDATION PLAN SHEET (ENGLISH) (REV. 09-01-10)

ORIGINAL SCALE IN INCHES FOR REDUCED PLANS 0 1 2 3

UNIT: 3623
PROJECT NUMBER & PHASE: 0700001834 & 1 CONTRACT NO.: 07-215941

DISREGARD PRINTS BEARING EARLIER REVISION DATES → REVISION DATES 09/30/11 11/25/11 12/12/11 03/22/12

SHEET 18 OF 50

FILE => 53-E0188-e-fdp104.dgn

USERNAME => s128843 DATE PLOTTED => 14-APR-2012 TIME PLOTTED => 11:44

No.	R	Δ	T	L
3	5905.51′	25°29′58.2"	1336.25′	2628.25′
4	6008.01′	18°18′10.1"	967.86′	1919.22′

NOTES:

1. Indicates Bottom of footing elevation.
2. Existing contours shown, for final countours, see "ROAD PLANS".
3. For footing dimensions and pile layout, see "Structure Plan" sheets.
4. Underground utilities as shown are approximate. See "ROAD PLANS" for details.

DIST	COUNTY	ROUTE	POST MILES TOTAL PROJECT	SHEET No.	TOTAL SHEETS
07	LA	5	4.0/5.9	1349	1597

Frank H. Wei 12/12/11
REGISTERED CIVIL ENGINEER DATE

4-9-12
PLANS APPROVAL DATE

REGISTERED PROFESSIONAL ENGINEER FRANK HSIAOSHIH WEI No. C 52918 Exp. 12-31-12 CIVIL STATE OF CALIFORNIA

The State of California or its officers or agents shall not be responsible for the accuracy or completeness of electronic copies of this plan sheet.

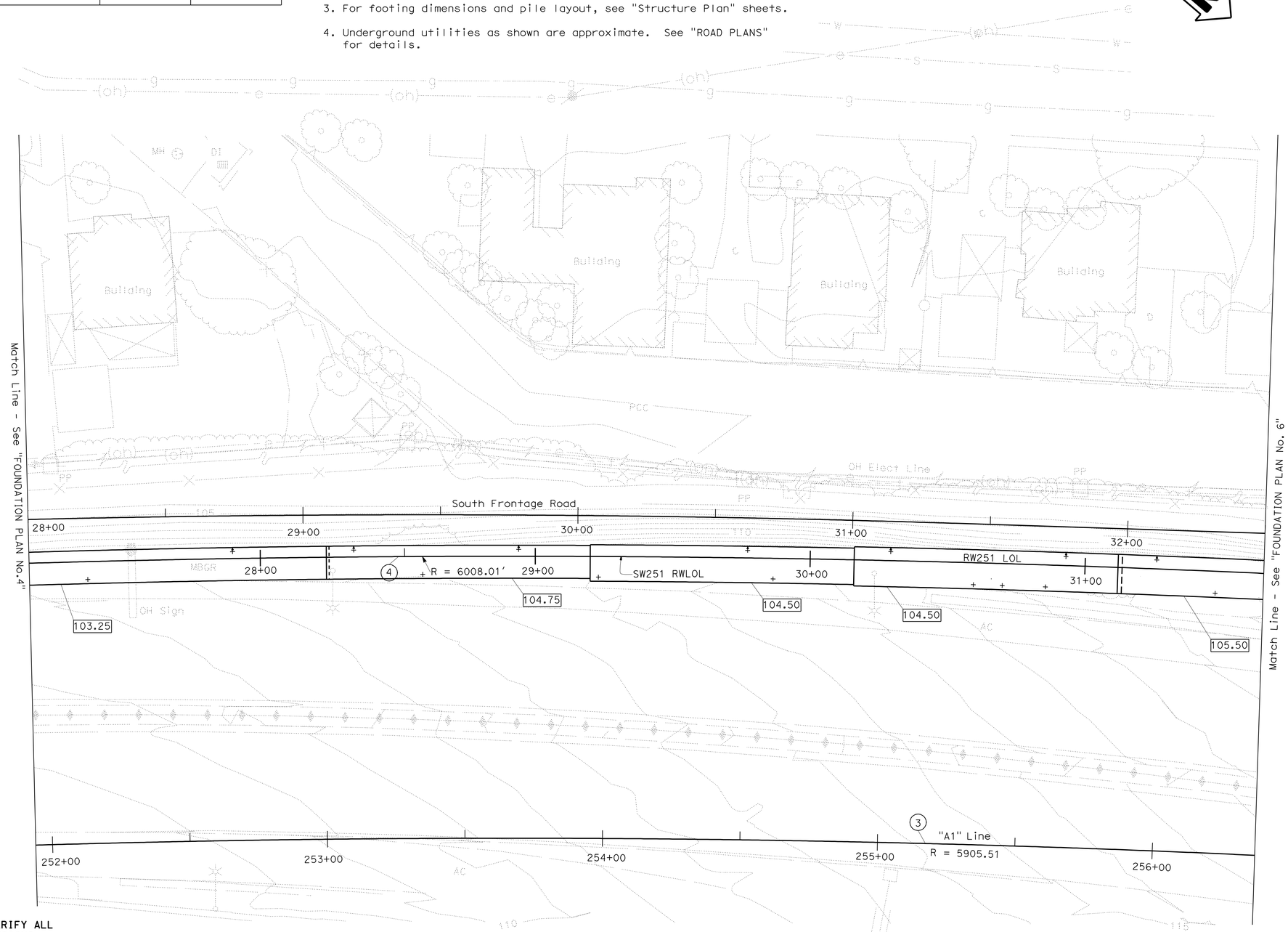

NOTE:
THE CONTRACTOR SHALL VERIFY ALL CONTROLLING FIELD DIMENSIONS BEFORE ORDERING OR FABRICATING ANY MATERIAL.

PRELIMINARY INVESTIGATION SECTION

SCALE 1"=20′	VERT.DATUM NAVD88	PHOTOGRAMMETRY AS OF: X		
	HORZ.DATUM NAD83	SURVEYED	BY D7	CHECKED BY X
	ALIGNMENT TIES Dist. Traverse Sheet	DRAFTED	BY C. Pham	CHECKED BY E. Vigjar

DESIGN	BY V. Wami	CHECKED F. Wei
DETAILS	BY M. Kingra	CHECKED F. Wei
QUANTITIES	BY L. Sanchez-Manzo	CHECKED S. Yeh

STATE OF CALIFORNIA
DEPARTMENT OF TRANSPORTATION

DIVISION OF ENGINEERING SERVICES
STRUCTURE DESIGN
DESIGN BRANCH 21

BRIDGE NO. 53E0188
POST MILE 4.46

SOUND WALL NO. 251
FOUNDATION PLAN No. 5

STRUCTURES FOUNDATION PLAN SHEET (ENGLISH) (REV. 09-01-10)

ORIGINAL SCALE IN INCHES FOR REDUCED PLANS 0 1 2 3

UNIT: 3623
PROJECT NUMBER & PHASE: 0700001834 & 1 CONTRACT NO.: 07-215941

DISREGARD PRINTS BEARING EARLIER REVISION DATES

REVISION DATES 09/30/11 11/25/11 12/12/11 03/22/12

SHEET 19 OF 50

FILE => 53-E0188-e-fdpl05.dgn

USERNAME => s128843 DATE PLOTTED => 14-APR-2012 TIME PLOTTED => 11:44

No.	R	Δ	T	L
3	5905.51′	25°29′58.2"	1336.25′	2628.25′
4	6008.012	18°18′10.1"	967.86′	1919.22′

NOTES:

1. ▭ Indicates Bottom of footing elevation.
2. Existing contours shown, for final countours, see "ROAD PLANS".
3. For footing dimensions and pile layout, see "Structure Plan" sheets.
4. Underground utilities as shown are approximate. See "ROAD PLANS" for details.

DIST	COUNTY	ROUTE	POST MILES TOTAL PROJECT	SHEET No.	TOTAL SHEETS
07	LA	5	4.0/5.9	1350	1597

Frank H. Wei 12/12/11
REGISTERED CIVIL ENGINEER DATE

4-9-12
PLANS APPROVAL DATE

REGISTERED PROFESSIONAL ENGINEER FRANK HSIAOSHIH WEI No. C 52918 Exp. 12-31-12 CIVIL STATE OF CALIFORNIA

The State of California or its officers or agents shall not be responsible for the accuracy or completeness of electronic copies of this plan sheet.

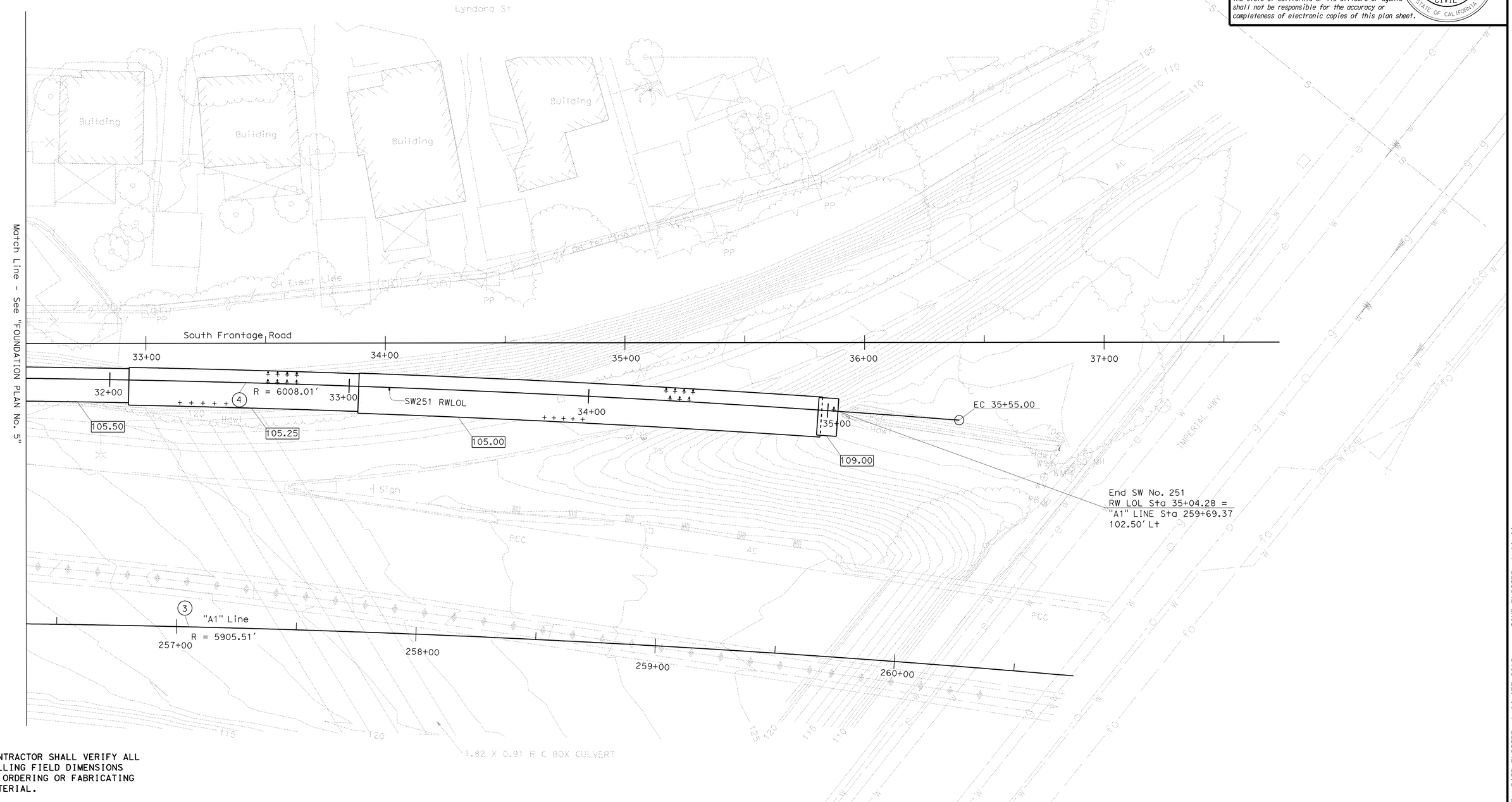

NOTE:
THE CONTRACTOR SHALL VERIFY ALL CONTROLLING FIELD DIMENSIONS BEFORE ORDERING OR FABRICATING ANY MATERIAL.

PRELIMINARY INVESTIGATION SECTION

SCALE 1"=20′	VERT.DATUM NAVD88	PHOTOGRAMMETRY AS OF: X		
	HORZ.DATUM NAD83	SURVEYED	BY D7	CHECKED BY X
ALIGNMENT TIES Dist. Traverse Sheet		DRAFTED	BY C> Pham	CHECKED BY E. Vigjar

DESIGN	BY V. Wami	CHECKED F. Wei
DETAILS	BY M. Kingra	CHECKED F. Wei
QUANTITIES	BY L. Sanchez-Manzo	CHECKED S. Yeh

STATE OF CALIFORNIA
DEPARTMENT OF TRANSPORTATION

DIVISION OF ENGINEERING SERVICES
STRUCTURE DESIGN
DESIGN BRANCH 21

BRIDGE NO. 53E0188
POST MILE 4.46

SOUND WALL NO. 251
FOUNDATION PLAN NO. 6

STRUCTURES FOUNDATION PLAN SHEET (ENGLISH) (REV. 09-01-10)

ORIGINAL SCALE IN INCHES FOR REDUCED PLANS 0 1 2 3

UNIT: 3623
PROJECT NUMBER & PHASE: 0700001834 & 1 CONTRACT NO.: 07-215941

DISREGARD PRINTS BEARING EARLIER REVISION DATES → 09/30/11 11/25/11 12/28/11 03/22/12

SHEET 20 OF 50

FILE => 53-E0188-e-fdp106.dgn

USERNAME => s128843 DATE PLOTTED => 14-APR-2012 TIME PLOTTED => 11:44

DIST	COUNTY	ROUTE	POST MILES TOTAL PROJECT	SHEET No.	TOTAL SHEETS
07	LA	5	4.0/5.9	1351	1597

REGISTERED CIVIL ENGINEER 2/12/11 DATE

4-9-12
PLANS APPROVAL DATE

REGISTERED PROFESSIONAL ENGINEER FRANK HSIAOSHIH WEI No. C 52918 Exp. 12-31-12 CIVIL STATE OF CALIFORNIA

The State of California or its officers or agents shall not be responsible for the accuracy or completeness of electronic copies of this plan sheet.

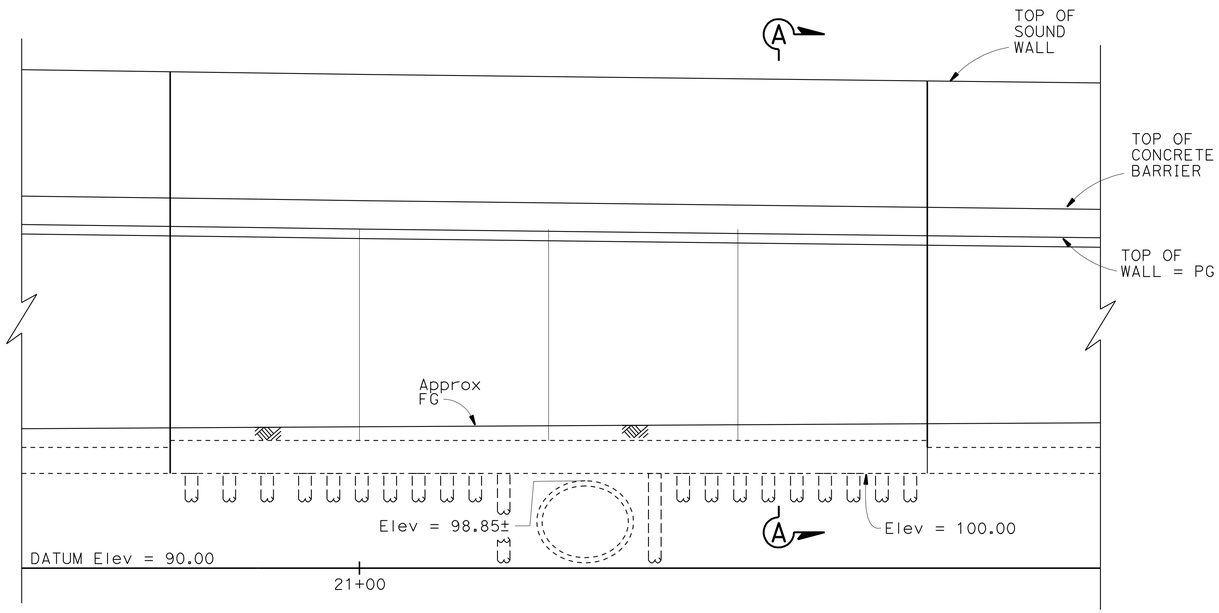

* ALL PILES NOT SHOWN

MIRRORED ELEVATION

1/8" =1'-0"

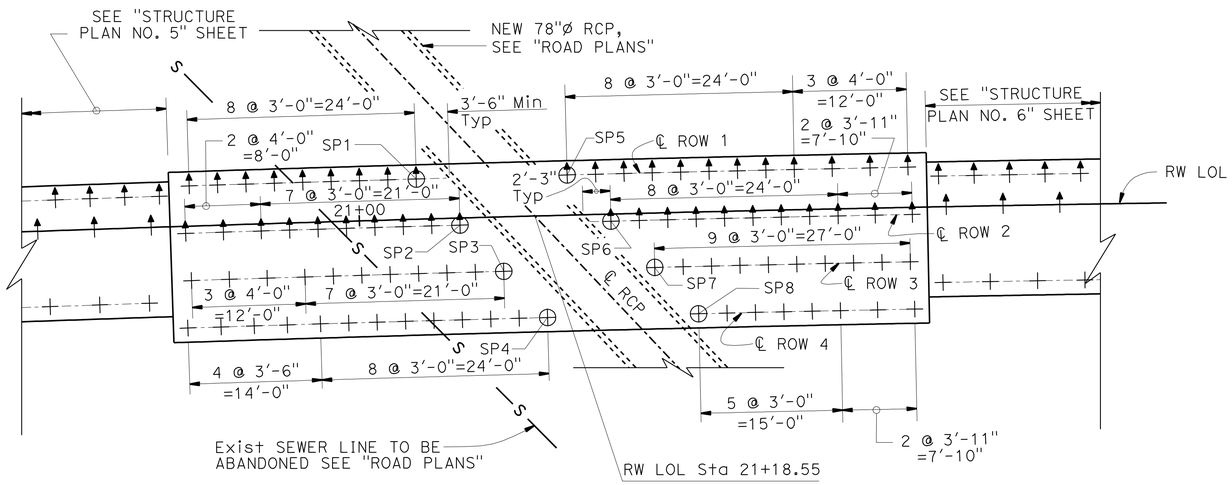

PLAN

1/8"=1'-0"

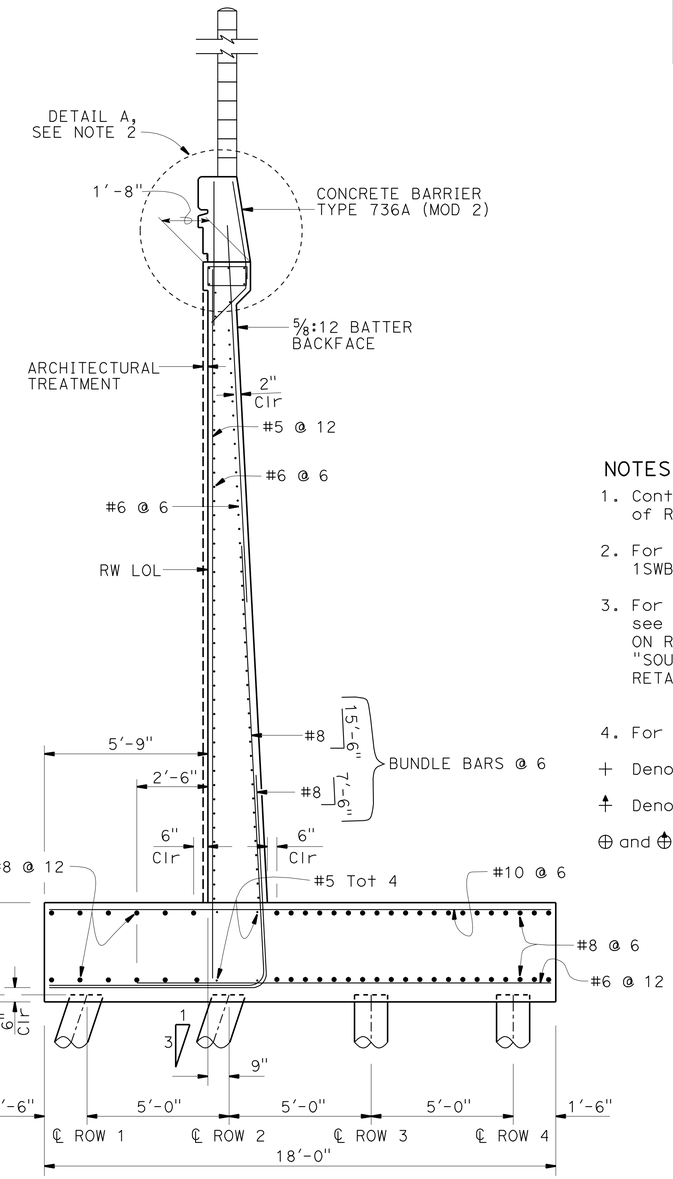

SECTION A-A

3/8" = 1'-0"

WORKING POINT	RW LOL STATION AND OFFSET
SP1	21+06.13, 4.25' L+
SP2	21+10.61, 0.75' R+
SP3	21+15.10, 5.75' R+
SP4	21+19.60, 10.75' R+
SP5	21+22.06, 4.25' L+
SP6	21+26.56, 0.75' R+
SP7	21+31.07, 5.75' R+
SP8	21+35.59, 10.75' R+

NOTES:

1. Contractor shall field verify the location of RCP prior to pile installation.
2. For Detail A, see "RETAINING WALL TYPE 1SWBP - DETAILS NO. 1" sheet.
3. For sound wall and and barrier reinforcement, see "SOUNDWALL - MASONRY BLOCK WITH BARRIER ON RETAINING WALL DETAILS NO. 1" and "SOUNDWALL - MASONRY BLOCK WITH BARRIER ON RETAINING WALL DETAILS NO. 2" sheets.
4. For drainage notes and details, see B3-8

\+ Denotes Vertical Pile

Denotes 1:3 Battered Pile

⊕ and ⊕ Predrilled holes required

NOTE:
THE CONTRACTOR SHALL VERIFY ALL CONTROLLING FIELD DIMENSIONS BEFORE ORDERING OR FABRICATING ANY MATERIAL.

	BY	CHECKED
DESIGN	C. Villalobos	F. Wei
DETAILS	M. Kingra	F. Wei
QUANTITIES	L. Sanchez-Manzo	S. Yeh

STATE OF CALIFORNIA
DEPARTMENT OF TRANSPORTATION

DIVISION OF ENGINEERING SERVICES
STRUCTURE DESIGN
DESIGN BRANCH 21

BRIDGE NO. 53E0188
POST MILE 4.46

SOUND WALL NO. 251
RETAINING WALL DETAILS

STRUCTURES DESIGN DETAIL SHEET (ENGLISH) (REV. 09-01-10)

ORIGINAL SCALE IN INCHES FOR REDUCED PLANS 0 1 2 3

UNIT: 3623
PROJECT NUMBER & PHASE: 0700001834 & 1 CONTRACT NO.: 07-215941

DISREGARD PRINTS BEARING EARLIER REVISION DATES 09/30/11 11/25/11 12/09/11 03/22/12

SHEET 21 OF 50

FILE => 53-E0188-g-rw_dt.dgn

USERNAME => s128843 DATE PLOTTED => 14-APR-2012 TIME PLOTTED => 12:19

DIST	COUNTY	ROUTE	POST MILES TOTAL PROJECT	SHEET No.	TOTAL SHEETS
07	LA	5	4.0/5.9	1352	1597

REGISTERED CIVIL ENGINEER 2/7/2012 DATE

4-9-12
PLANS APPROVAL DATE

REGISTERED PROFESSIONAL ENGINEER Mostafa Kattaa No. 58044 Exp. 6/30/12 CIVIL STATE OF CALIFORNIA

The State of California or its officers or agents shall not be responsible for the accuracy or completeness of electronic copies of this plan sheet.

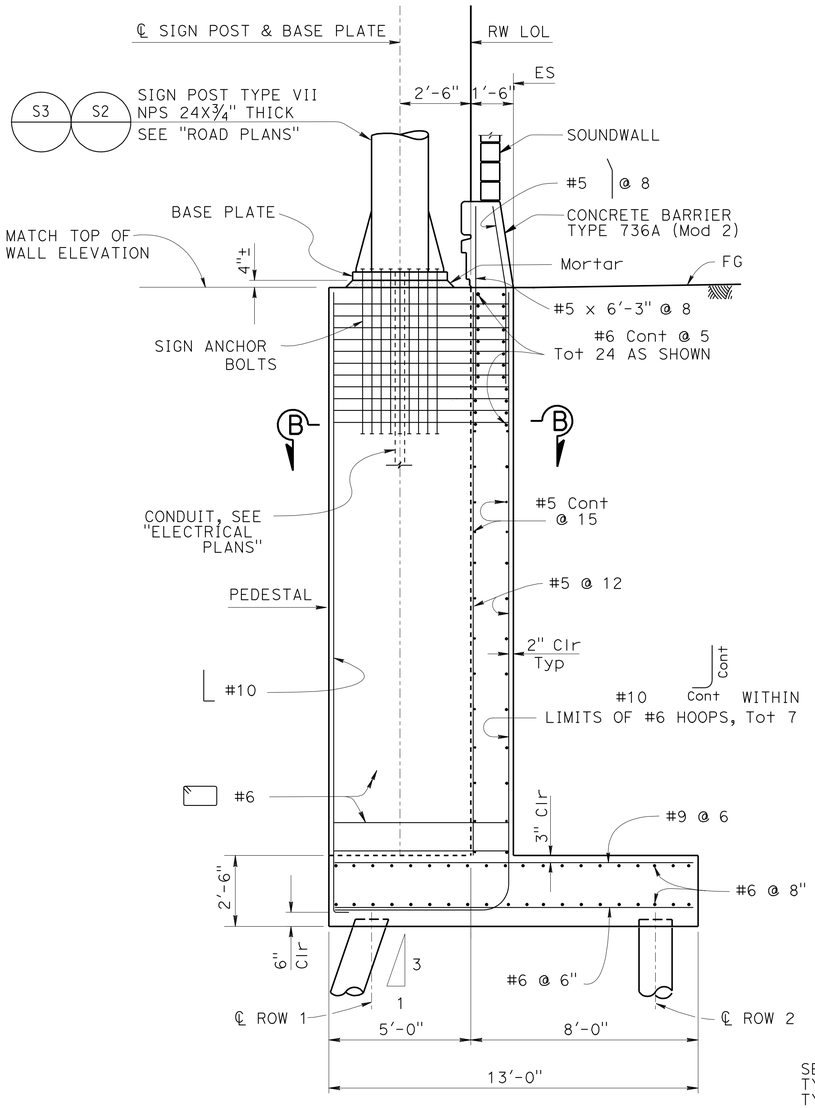

SECTION A-A

⅜" = 1'-0"

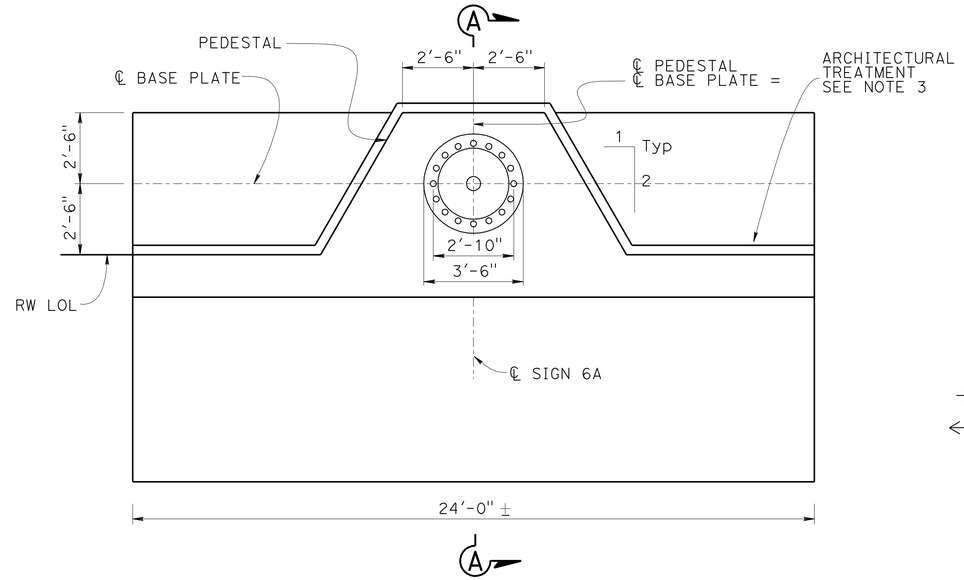

Note: Piles not shown.

PEDESTAL LAYOUT - PLAN

⅜" = 1'-0"

NOTES

1. For soundwall and barrier details not shown, see "SOUNDWALL - MASONRY BLOCK WITH BARRIER ON RETAINING WALL" sheets.
2. For sign details not shown, see "Road Plans."
3. For architechtural Treatment on sign pedestal, see "ARCHITECHTURAL TREATMENT ELEVATION" sheet

+ Denotes Vertical Piles

<+ Denotes 1:3 Battered Piles

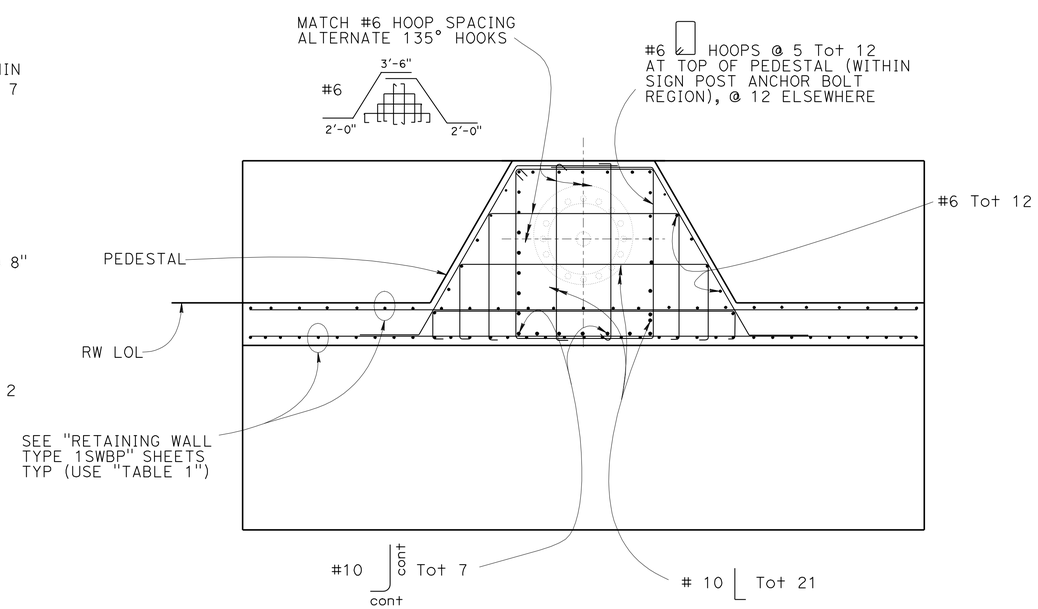

SECTION B-B

⅜" = 1'-0"

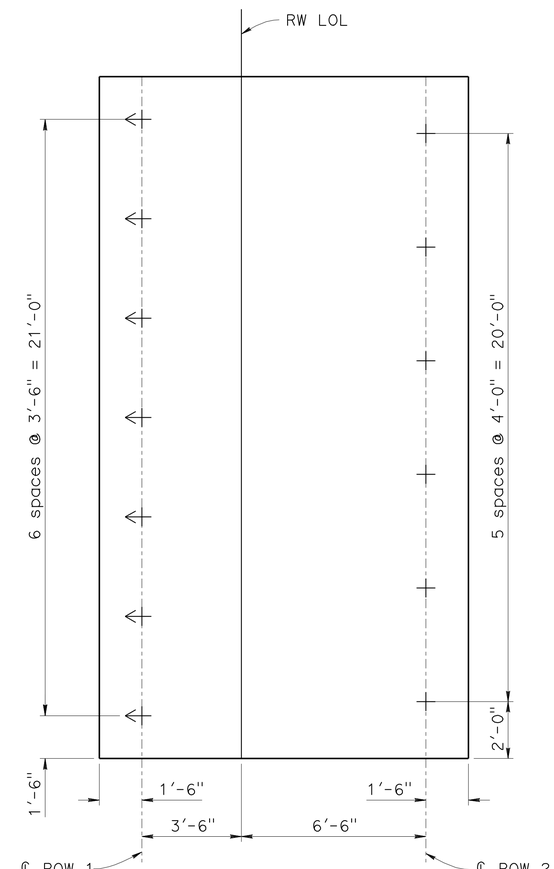

PILES LAYOUT

⅜" = 1'-0"

DESIGN	BY M. Kattaa	CHECKED F. Tannous	
DETAILS	BY L. Goldthwait	CHECKED M. Kattaa/F. Wei	
QUANTITIES	BY M. Kattaa	CHECKED F. Tannous	

STATE OF CALIFORNIA
DEPARTMENT OF TRANSPORTATION

DIVISION OF ENGINEERING SERVICES
STRUCTURE DESIGN
DESIGN BRANCH 12

BRIDGE NO. 53E0188
POST MILE 4.46

SOUND WALL NO. 251
RETAINING WALL DETAILS AT SIGN 6A

STRUCTURES DESIGN DETAIL SHEET (ENGLISH) (REV. 09-01-10)

ORIGINAL SCALE IN INCHES FOR REDUCED PLANS 0 1 2 3

UNIT: 3606
PROJECT NUMBER & PHASE: 0700001834 & 1 CONTRACT NO.: 07-215941

DISREGARD PRINTS BEARING EARLIER REVISION DATES

REVISION DATES 12-8-11 1-31-12 03-22-12

SHEET 22 OF 50

FILE => 53-E0188-g-rw_dt_sign.dgn

USERNAME => s128843 DATE PLOTTED => 14-APR-2012 TIME PLOTTED => 12:19

DIST	COUNTY	ROUTE	POST MILES TOTAL PROJECT	SHEET No.	TOTAL SHEETS
07	LA	5	4.0/5.9	1353	1597

Mostafa Kattaa 2/7/2012
REGISTERED CIVIL ENGINEER DATE

4-9-12
PLANS APPROVAL DATE

REGISTERED PROFESSIONAL ENGINEER
Mostafa Kattaa
No. 58044
Exp. 6/30/12
CIVIL
STATE OF CALIFORNIA

The State of California or its officers or agents shall not be responsible for the accuracy or completeness of electronic copies of this plan sheet.

DESIGN DATA FOR RETAINING WALL AT SIGN STRUCTURE

DESIGN: LOAD FACTOR DESIGN (LFD)
CONCRETE: REINFORCED CONCRETE, f'c = 3,600 psi
fy = 60,000 psi

LOADING CASE:

LEVEL GROUND WITH 240 psf LIVE LOAD SURCHARGE
AND 16'- 4" SOUNDWALL & BARRIER.
SEISMIC LOAD DEAD LOAD = 0.5 DEAD LOAD
WIND LOAD = 30 psf
DEAD LOAD OF SOUNDWALL = 1437 lb/lf

SEISMIC LOAD: SOIL
Kh = 0.5g
Kv = 0.0
Kae : MONONOBE-OKABE METHOD
SOIL: $\emptyset = 34^\circ$ $\gamma = 120$ pcf

EXTERNAL STABILITY:

GROUP A : D + E + SC
GROUP B : D + E + SC + W
GROUP C : D + EQD/1.4 + E

WALL DESIGN

LOAD COMBINATIONS:

GROUP A : βD+1.7 E+1.7 SC
GROUP B : βD+1.7 E+1.3 W
GROUP C : βD+1.3 E+1.0 EQE
GROUP D : βD+1.3 E+1.0 EQD
GROUP E : βD+1.1 E+0.85(EQE+EQD)

WHERE : β = 0.9 OR 1.2 WHICHEVER CONTROLS DESIGN
D = DEAD LOAD
E = LATERAL EARTH PRESSURE
SC = LIVE LOAD SURCHARGE
W = WIND LOAD
EQD = SEISMIC DEAD LOAD
EQE = SEISMIC LATERAL EARTH PRESSURE

GENERAL NOTES:

1. REDUCTION FACTORS:
   GROUPS A & B : $\emptyset = 0.75$
   GROUP C, D & E: $\emptyset = 1.0$
   LATERAL RESISTANCE OF EACH PILE:
   SERVICE = 13 kip
   FACTORED = 30 kip
   SEISMIC/EXTREME = 40 kip
2. LIMIT OF NO SPLICING FOR REBARS = 3 TIMES OF THE BOTTOM THICKNESS OF THE STEM.

STATE OF CALIFORNIA
DEPARTMENT OF TRANSPORTATION

DIVISION OF ENGINEERING SERVICES

BRIDGE NO. 53E0188
POST MILE 4.46

SOUND WALL NO. 251
GENERAL NOTES AT SIGN STRUCTURE 6A

ORIGINAL SCALE IN INCHES FOR REDUCED PLANS 0 1 2 3

UNIT: 3606
PROJECT NUMBER & PHASE: 0700001834 & 1 CONTRACT NO.: 07-215941

DISREGARD PRINTS BEARING EARLIER REVISION DATES

REVISION DATES 01-27-12 03-22-12

SHEET 23 OF 50

FILE => 53-E0188-g-rw_gen_notes_sign.dgn

USERNAME => s128843 DATE PLOTTED => 14-APR-2012 TIME PLOTTED => 12:19

DIST	COUNTY	ROUTE	POST MILES TOTAL PROJECT	SHEET No.	TOTAL SHEETS
07	LA	5	4.0/5.9	1354	1597

REGISTERED CIVIL ENGINEER 12/12/11 DATE

4-9-12
PLANS APPROVAL DATE

REGISTERED PROFESSIONAL ENGINEER FRANK HSIAOSHIH WEI No. C 52918 Exp. 12-31-12 CIVIL STATE OF CALIFORNIA

The State of California or its officers or agents shall not be responsible for the accuracy or completeness of electronic copies of this plan sheet.

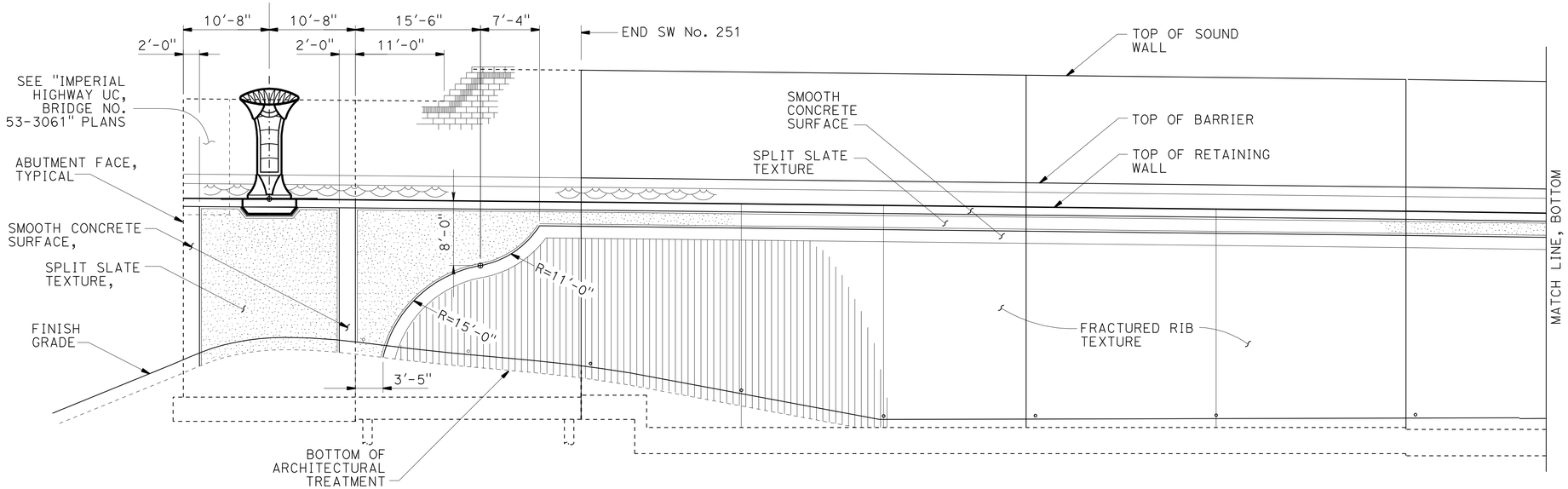

ELEVATION
NO SCALE

NOTE:

1. For pilaster spacing see Structure Plan sheets.

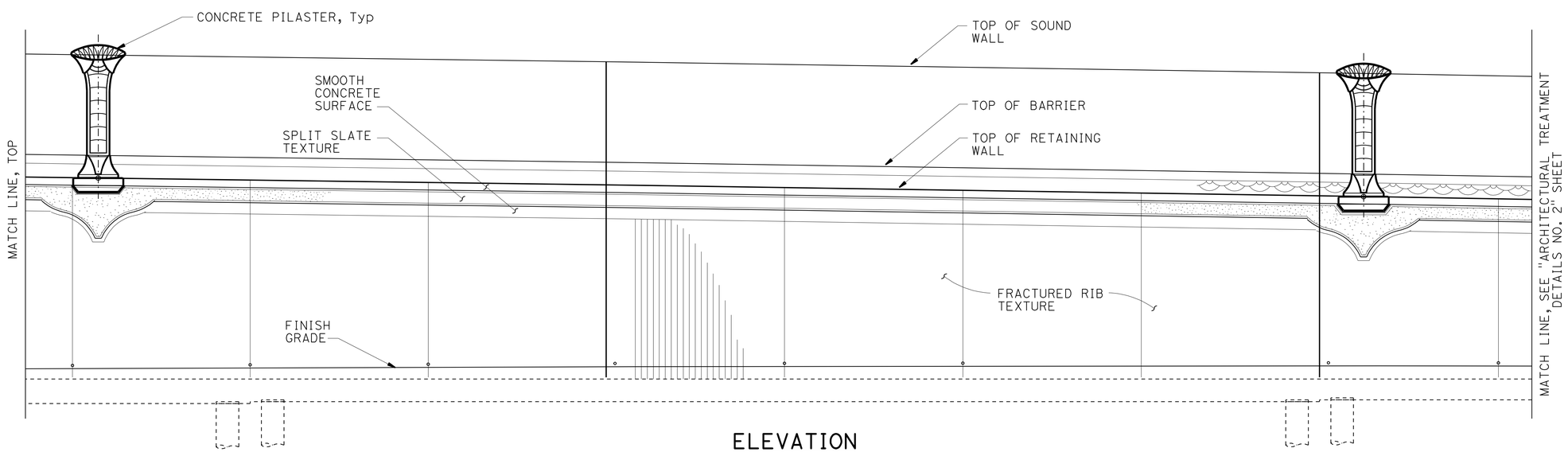

ELEVATION
NO SCALE

NOTE:
THE CONTRACTOR SHALL VERIFY ALL CONTROLLING FIELD DIMENSIONS BEFORE ORDERING OR FABRICATING ANY MATERIAL.

	BY	CHECKED
DESIGN	I. Tasabia	F. Wei
DETAILS	M. Kingra	F. Wei
QUANTITIES	L. Sanchez-Manzo	S. Yeh

STATE OF CALIFORNIA
DEPARTMENT OF TRANSPORTATION

DIVISION OF ENGINEERING SERVICES
STRUCTURE DESIGN
DESIGN BRANCH 21

BRIDGE NO. 53E0188
POST MILE 4.46

SOUND WALL NO. 251
ARCHITECTURAL TREATMENT ELEVATION NO. 1

STRUCTURES DESIGN DETAIL SHEET (ENGLISH) (REV. 09-01-10)

ORIGINAL SCALE IN INCHES FOR REDUCED PLANS 0 1 2 3

UNIT: 3623
PROJECT NUMBER & PHASE: 0700001834 & 1 CONTRACT NO.: 07-215941

DISREGARD PRINTS BEARING EARLIER REVISION DATES

REVISION DATES 11/10/11 11/25/11 12/12/11 03/22/12

SHEET 24 OF 50

FILE => 53-E0188-I-arch_el01.dgn

USERNAME => s128843 DATE PLOTTED => 14-APR-2012 TIME PLOTTED => 12:19

DIST	COUNTY	ROUTE	POST MILES TOTAL PROJECT	SHEET No.	TOTAL SHEETS
07	LA	5	4.0/5.9	1355	1597

REGISTERED CIVIL ENGINEER 12/12/11 DATE

4-9-12
PLANS APPROVAL DATE

REGISTERED PROFESSIONAL ENGINEER FRANK HSIAOSHIH WEI No. C 52918 Exp. 12-31-12 CIVIL STATE OF CALIFORNIA

The State of California or its officers or agents shall not be responsible for the accuracy or completeness of electronic copies of this plan sheet.

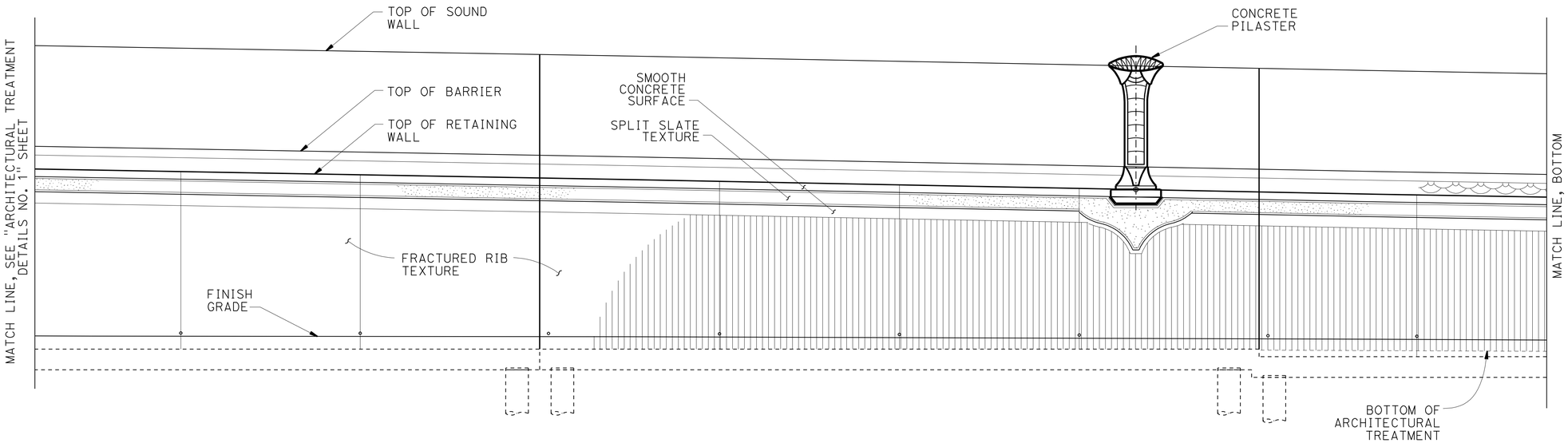

ELEVATION
NO SCALE

NOTE:
1. For pilaster spacing see Structure Plan sheets.

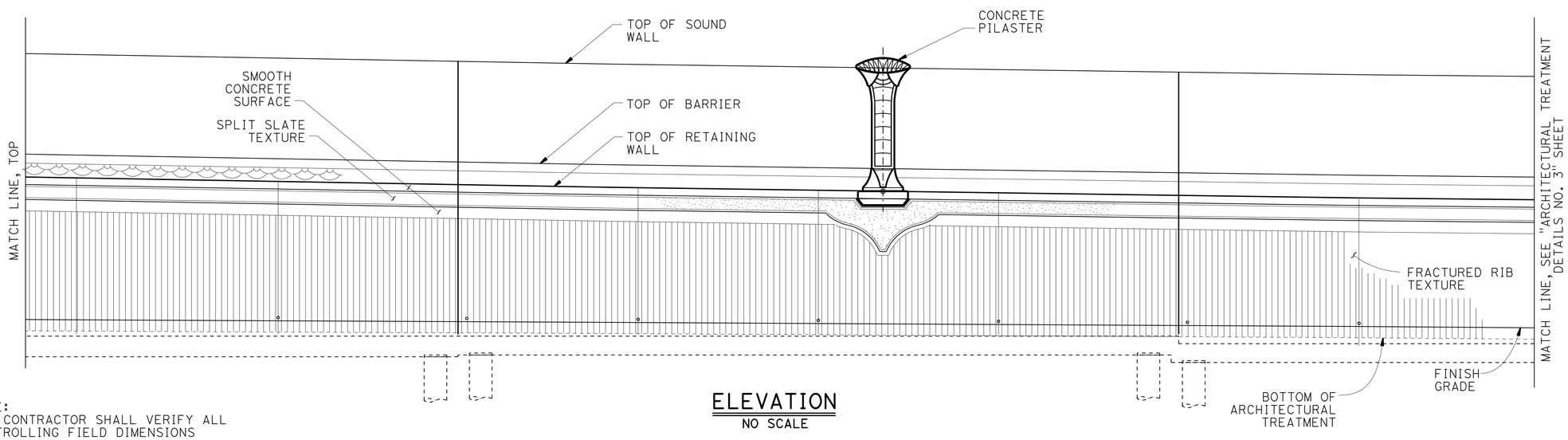

ELEVATION
NO SCALE

NOTE:
THE CONTRACTOR SHALL VERIFY ALL CONTROLLING FIELD DIMENSIONS BEFORE ORDERING OR FABRICATING ANY MATERIAL.

	BY	CHECKED
DESIGN	I. Tasabia	F. Wei
DETAILS	M. Kingra	F. Wei
QUANTITIES	L. Sanchez-Manzo	S. Yeh

STATE OF CALIFORNIA
DEPARTMENT OF TRANSPORTATION

DIVISION OF ENGINEERING SERVICES
STRUCTURE DESIGN
DESIGN BRANCH 21

BRIDGE NO. 53E0188
POST MILE 4.46

SOUND WALL NO. 251
ARCHITECTURAL TREATMENT ELEVATION NO. 2

STRUCTURES DESIGN DETAIL SHEET (ENGLISH) (REV. 09-01-10)

ORIGINAL SCALE IN INCHES FOR REDUCED PLANS 0 1 2 3

UNIT: 3623
PROJECT NUMBER & PHASE: 0700001834 & 1 CONTRACT NO.: 07-215941

DISREGARD PRINTS BEARING EARLIER REVISION DATES

REVISION DATES: 11/30/11 11/30/11 12/30/11 03/22/12

SHEET 25 OF 50

FILE => 53-E0188-I-arch_el02.dgn

USERNAME => s128843 DATE PLOTTED => 14-APR-2012 TIME PLOTTED => 12:19

DIST	COUNTY	ROUTE	POST MILES TOTAL PROJECT	SHEET No.	TOTAL SHEETS
07	LA	5	4.0/5.9	1356	1597

REGISTERED CIVIL ENGINEER 12/12/11 DATE

4-9-12
PLANS APPROVAL DATE

REGISTERED PROFESSIONAL ENGINEER FRANK HSIAOSHIH WEI No. C 52918 Exp. 12-31-12 CIVIL STATE OF CALIFORNIA

The State of California or its officers or agents shall not be responsible for the accuracy or completeness of electronic copies of this plan sheet.

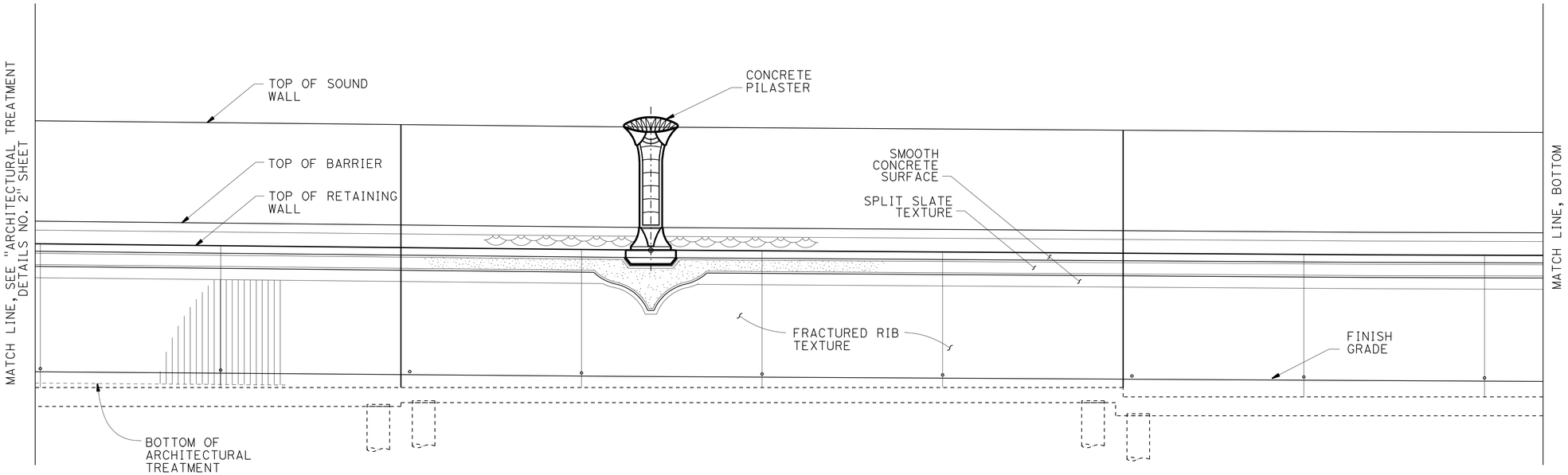

ELEVATION
NO SCALE

NOTE:
1. For pilaster spacing see Structure Plan sheets.

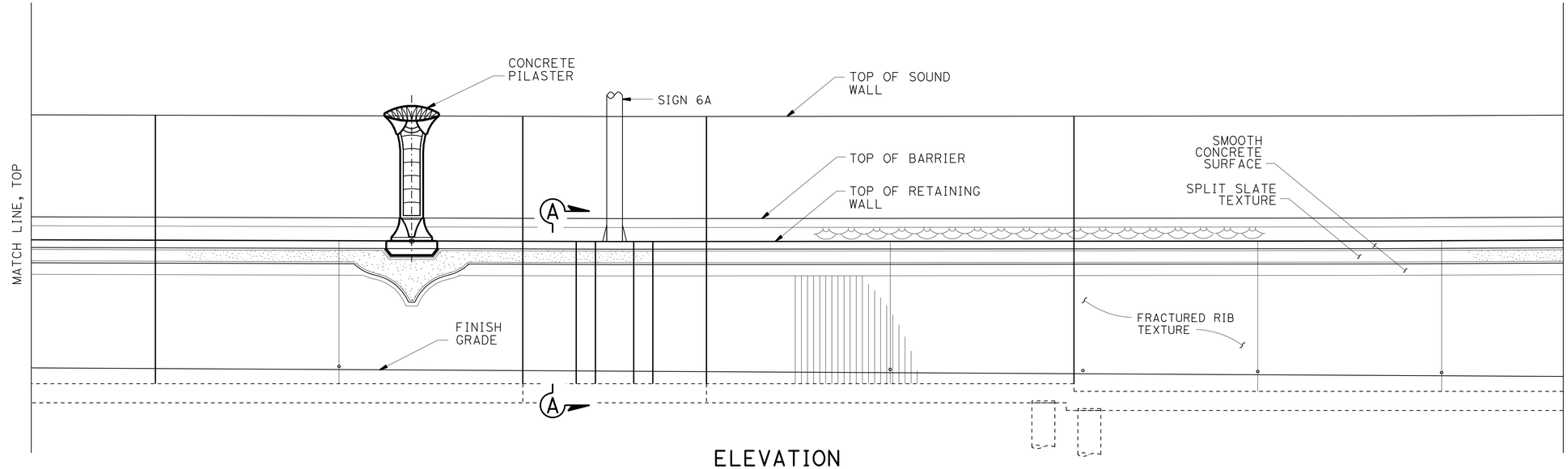

ELEVATION
NO SCALE

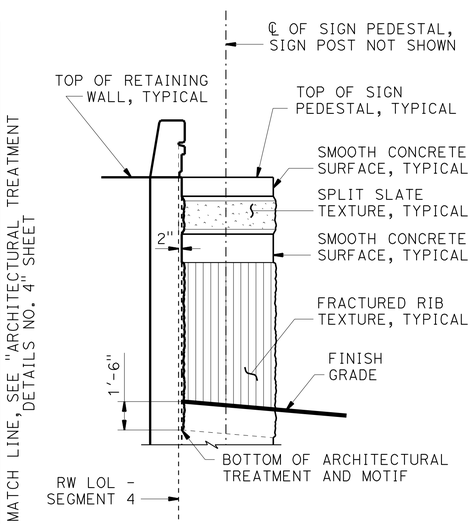

VIEW A-A
No Scale

NOTE:
THE CONTRACTOR SHALL VERIFY ALL CONTROLLING FIELD DIMENSIONS BEFORE ORDERING OR FABRICATING ANY MATERIAL.

	BY	CHECKED
DESIGN	I. Tasabia	F. Wei
DETAILS	M. Kingra	F. Wei
QUANTITIES	L. Sanchez-Manzo	S. Yeh

STATE OF CALIFORNIA
DEPARTMENT OF TRANSPORTATION

DIVISION OF ENGINEERING SERVICES
STRUCTURE DESIGN
DESIGN BRANCH 21

BRIDGE NO. 53E0188
POST MILE 4.46

SOUND WALL NO. 251
ARCHITECTURAL TREATMENT ELEVATION NO. 3

STRUCTURES DESIGN DETAIL SHEET (ENGLISH) (REV. 09-01-10)

ORIGINAL SCALE IN INCHES FOR REDUCED PLANS 0 1 2 3

UNIT: 3623
PROJECT NUMBER & PHASE: 0700001834 & 1 CONTRACT NO.: 07-215941

DISREGARD PRINTS BEARING EARLIER REVISION DATES

REVISION DATES 11/10/11 11/25/11 12/12/11 03/22/12

SHEET 26 OF 50

FILE => 53-E0188-1-arch_el03.dgn

USERNAME => s128843 DATE PLOTTED => 14-APR-2012 TIME PLOTTED => 12:19

DIST	COUNTY	ROUTE	POST MILES TOTAL PROJECT	SHEET No.	TOTAL SHEETS
07	LA	5	4.0/5.9	1357	1597

REGISTERED CIVIL ENGINEER 12/12/11 DATE

4-9-12
PLANS APPROVAL DATE

The State of California or its officers or agents shall not be responsible for the accuracy or completeness of electronic copies of this plan sheet.

REGISTERED PROFESSIONAL ENGINEER FRANK HSIAOSHIH WEI No. C 52918 Exp. 12-31-12 CIVIL STATE OF CALIFORNIA

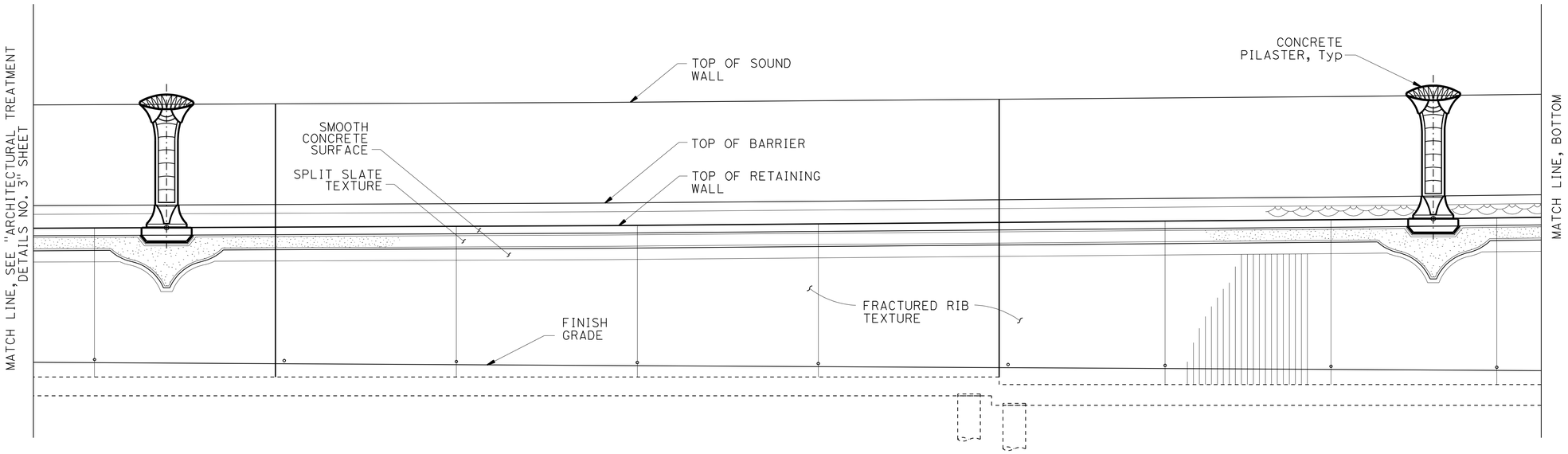

ELEVATION
NO SCALE

NOTE:
1. For pilaster spacing see Structure Plan sheets.

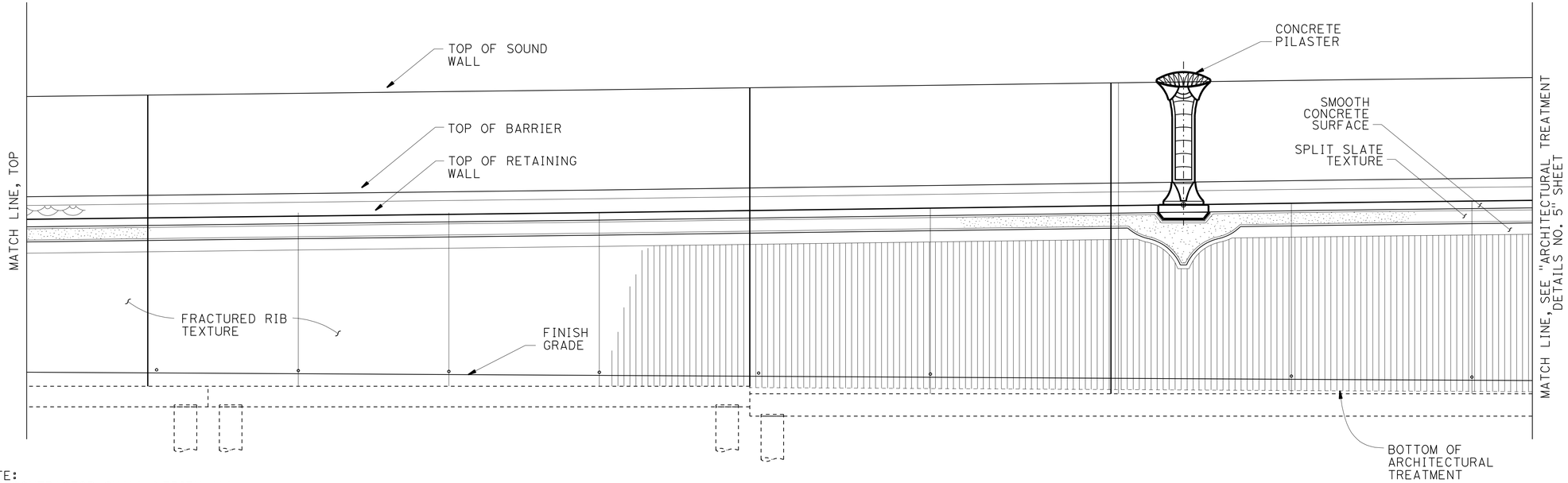

NOTE:
THE CONTRACTOR SHALL VERIFY ALL CONTROLLING FIELD DIMENSIONS BEFORE ORDERING OR FABRICATING ANY MATERIAL.

ELEVATION
NO SCALE

	BY	CHECKED
DESIGN	I. Tasabia	F. Wei
DETAILS	M. Kingra	F. Wei
QUANTITIES	L. Sanchez-Manzo	S. Yeh

STATE OF CALIFORNIA
DEPARTMENT OF TRANSPORTATION

DIVISION OF ENGINEERING SERVICES
STRUCTURE DESIGN
DESIGN BRANCH 21

BRIDGE NO. 53E0188
POST MILE 4.46

SOUND WALL NO. 251
ARCHITECTURAL TREATMENT ELEVATION NO. 4

STRUCTURES DESIGN DETAIL SHEET (ENGLISH) (REV. 09-01-10)

ORIGINAL SCALE IN INCHES FOR REDUCED PLANS 0 1 2 3

UNIT: 3623
PROJECT NUMBER & PHASE: 0700001834 & 1 CONTRACT NO.: 07-215941

DISREGARD PRINTS BEARING EARLIER REVISION DATES

REVISION DATES 11/10/11 11/28/11 12/12/11 03/22/12

SHEET 27 OF 50

FILE => 53-E0188-I-arch_e104.dgn

USERNAME => s128843 DATE PLOTTED => 14-APR-2012 TIME PLOTTED => 12:20

DIST	COUNTY	ROUTE	POST MILES TOTAL PROJECT	SHEET No.	TOTAL SHEETS
07	LA	5	4.0/5.9	1358	1597

REGISTERED CIVIL ENGINEER 2/12/11 DATE

4-9-12
PLANS APPROVAL DATE

REGISTERED PROFESSIONAL ENGINEER FRANK HSIAOSHIH WEI No. C 52918 Exp. 12-31-12 CIVIL STATE OF CALIFORNIA

The State of California or its officers or agents shall not be responsible for the accuracy or completeness of electronic copies of this plan sheet.

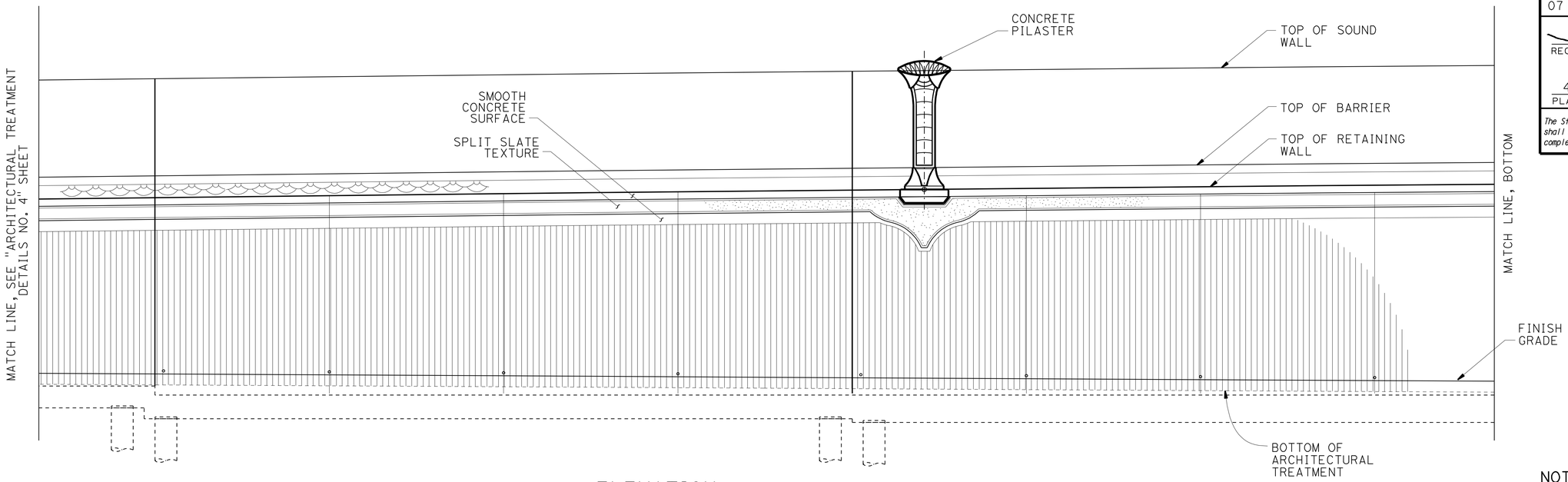

ELEVATION
NO SCALE

NOTE:
1. For pilaster spacing see Structure Plan sheets.

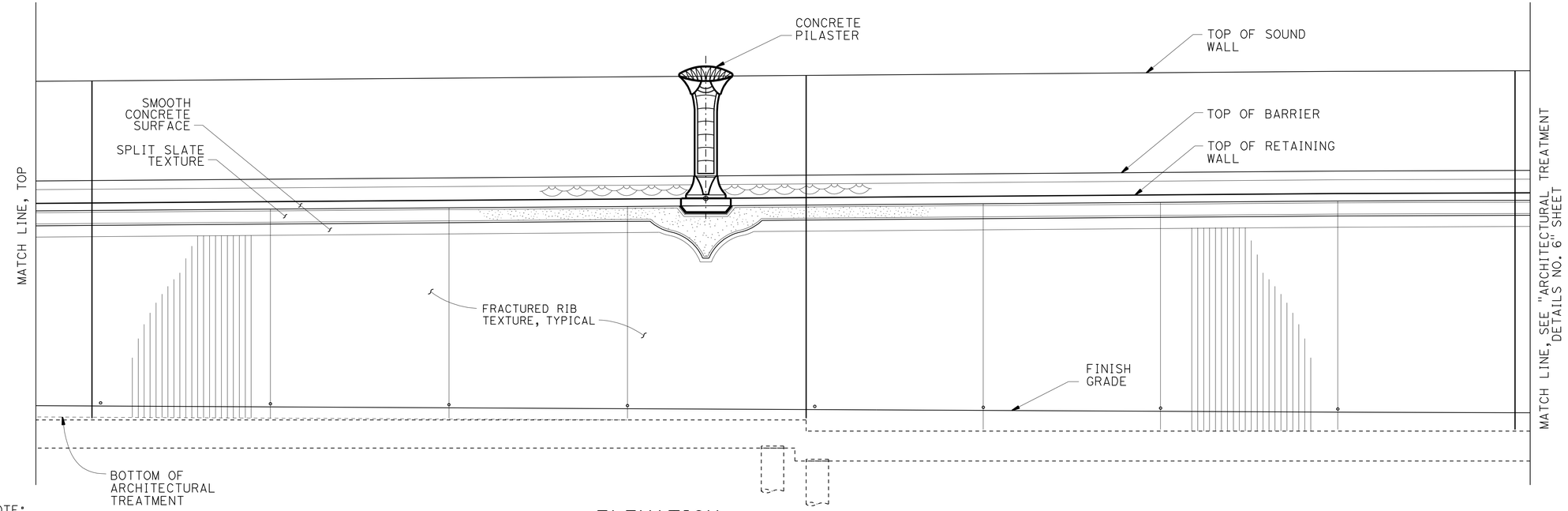

ELEVATION
NO SCALE

NOTE:
THE CONTRACTOR SHALL VERIFY ALL CONTROLLING FIELD DIMENSIONS BEFORE ORDERING OR FABRICATING ANY MATERIAL.

	BY	CHECKED
DESIGN	I. Tasabia	F. Wei
DETAILS	M. Kingra	F. Wei
QUANTITIES	L. Sanchez-Manzo	S. Yeh

STATE OF CALIFORNIA
DEPARTMENT OF TRANSPORTATION

DIVISION OF ENGINEERING SERVICES
STRUCTURE DESIGN
DESIGN BRANCH 21

BRIDGE NO. 53E0188
POST MILE 4.46

SOUND WALL NO. 251
ARCHITECTURAL TREATMENT ELEVATION NO. 5

STRUCTURES DESIGN DETAIL SHEET (ENGLISH) (REV. 09-01-10)

ORIGINAL SCALE IN INCHES FOR REDUCED PLANS 0 1 2 3

UNIT: 3623
PROJECT NUMBER & PHASE: 0700001834 & 1 CONTRACT NO.: 07-215941

DISREGARD PRINTS BEARING EARLIER REVISION DATES

REVISION DATES: 11/10/11 11/23/11 12/12/11 03/22/12

SHEET 28 OF 50

FILE => 53-E0188-1-arch_el05.dgn

USERNAME => s128843 DATE PLOTTED => 14-APR-2012 TIME PLOTTED => 12:20

DIST	COUNTY	ROUTE	POST MILES TOTAL PROJECT	SHEET No.	TOTAL SHEETS
07	LA	5	4.0/5.9	1359	1597

REGISTERED CIVIL ENGINEER 12/12/11 DATE

4-9-12
PLANS APPROVAL DATE

REGISTERED PROFESSIONAL ENGINEER FRANK HSIAOSHIH WEI No. C 52918 Exp. 12-31-12 CIVIL STATE OF CALIFORNIA

The State of California or its officers or agents shall not be responsible for the accuracy or completeness of electronic copies of this plan sheet.

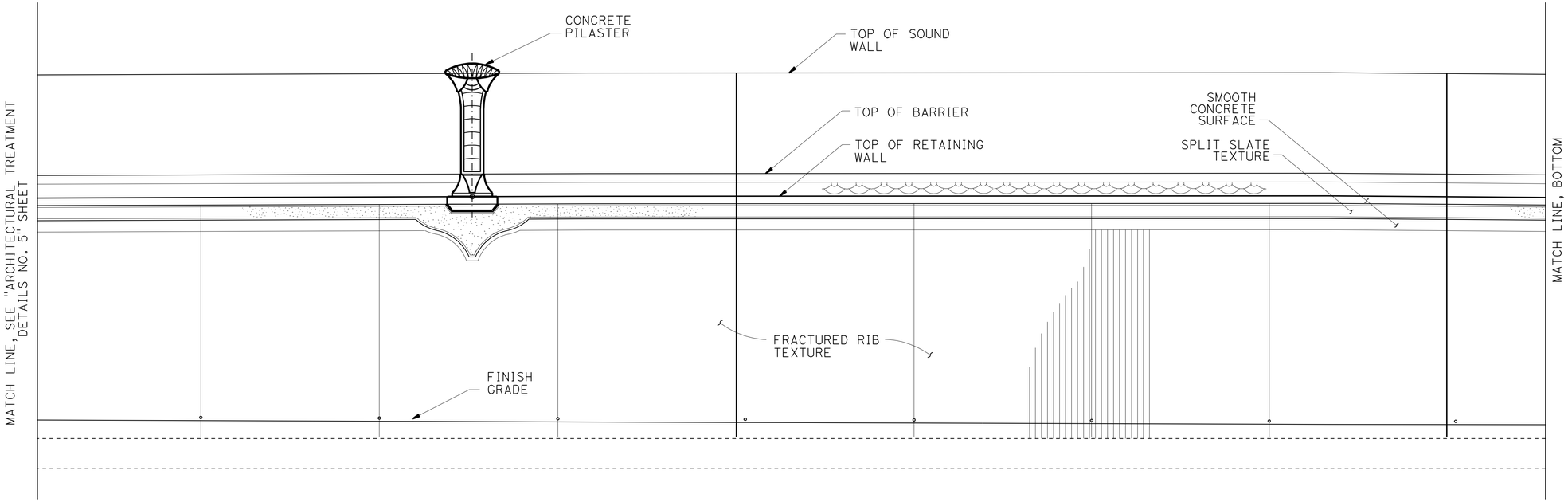

ELEVATION
NO SCALE

NOTE:
1. For pilaster spacing see Structure Plan sheets.

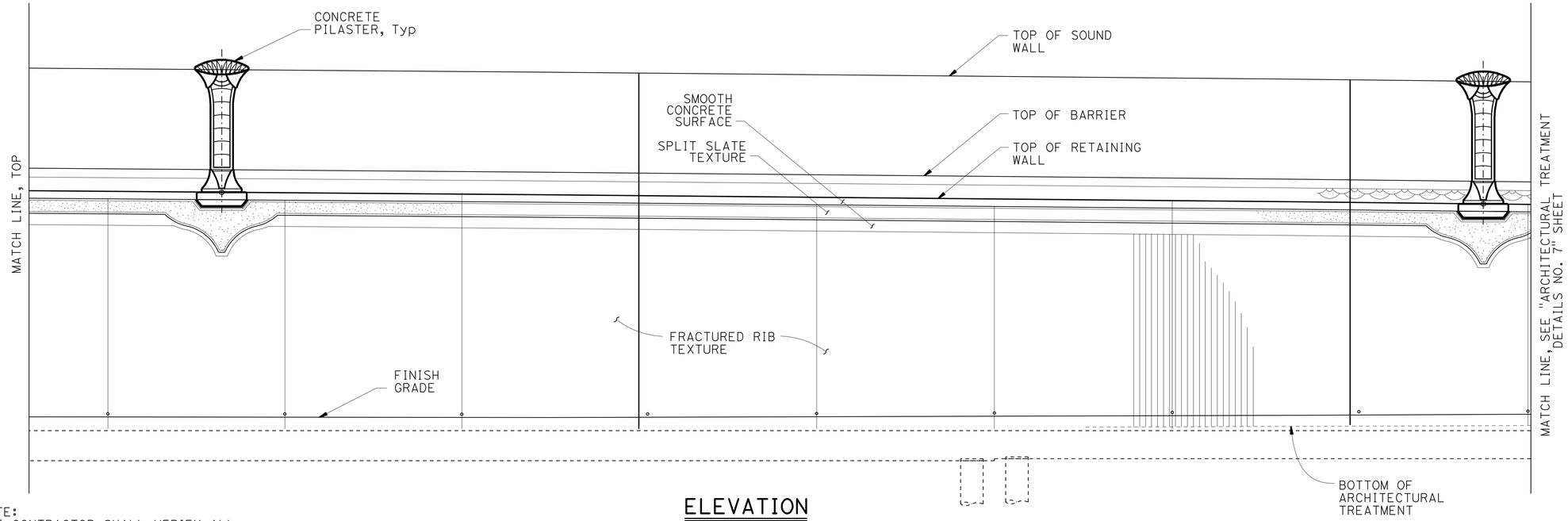

ELEVATION
NO SCALE

NOTE:
THE CONTRACTOR SHALL VERIFY ALL CONTROLLING FIELD DIMENSIONS BEFORE ORDERING OR FABRICATING ANY MATERIAL.

	BY	CHECKED
DESIGN	I. Tasabia	F. Wei
DETAILS	M. Kingra	F. Wei
QUANTITIES	L. Sanchez-Manzo	S. Yeh

STATE OF CALIFORNIA
DEPARTMENT OF TRANSPORTATION

DIVISION OF ENGINEERING SERVICES
STRUCTURE DESIGN
DESIGN BRANCH 21

BRIDGE NO. 53E0188
POST MILE 4.46

SOUND WALL NO. 251
ARCHITECTURAL TREATMENT ELEVATION NO. 6

STRUCTURES DESIGN DETAIL SHEET (ENGLISH) (REV. 09-01-10)

ORIGINAL SCALE IN INCHES FOR REDUCED PLANS 0 1 2 3

UNIT: 3623
PROJECT NUMBER & PHASE: 0700001834 & 1 CONTRACT NO.: 07-215941

DISREGARD PRINTS BEARING EARLIER REVISION DATES → 11/10/11 11/23/11 12/07/11 03/22/12

SHEET 29 OF 50

FILE => 53-E0188-1-arch_e106.dgn

USERNAME => s128843 DATE PLOTTED => 14-APR-2012 TIME PLOTTED => 12:20

DIST	COUNTY	ROUTE	POST MILES TOTAL PROJECT	SHEET No.	TOTAL SHEETS
07	LA	5	4.0/5.9	1360	1597

REGISTERED CIVIL ENGINEER 12/12/11 DATE

4-9-12
PLANS APPROVAL DATE

REGISTERED PROFESSIONAL ENGINEER FRANK HSIAOSHIH WEI No. C 52918 Exp. 12-31-12 CIVIL STATE OF CALIFORNIA

The State of California or its officers or agents shall not be responsible for the accuracy or completeness of electronic copies of this plan sheet.

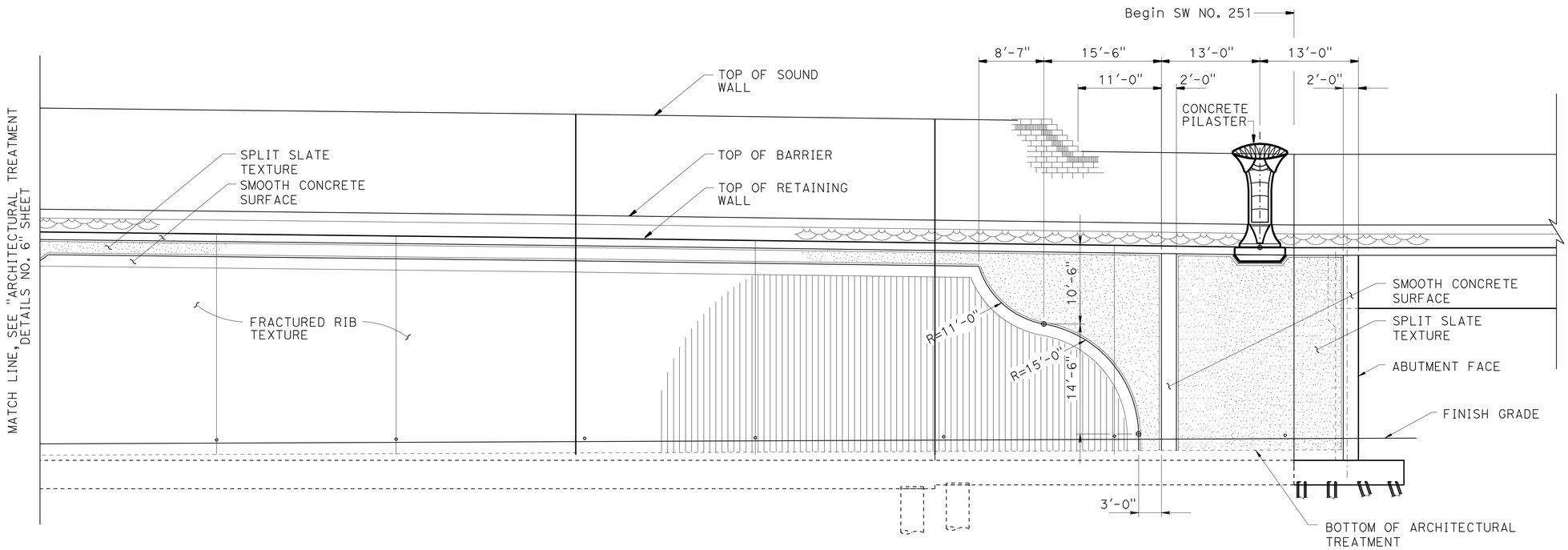

ELEVATION
NO SCALE

NOTE:

1. For pilaster spacing see Structure Plan sheets.

NOTE:
THE CONTRACTOR SHALL VERIFY ALL CONTROLLING FIELD DIMENSIONS BEFORE ORDERING OR FABRICATING ANY MATERIAL.

	BY	CHECKED
DESIGN	I. Tasabia	F. Wei
DETAILS	M. Kingra	F. Wei
QUANTITIES	L. Sanchez-Manzo	S. Yeh

STATE OF CALIFORNIA
DEPARTMENT OF TRANSPORTATION

DIVISION OF ENGINEERING SERVICES
STRUCTURE DESIGN
DESIGN BRANCH 21

BRIDGE NO. 53E0188
POST MILE 4.46

SOUND WALL NO. 251
ARCHITECTURAL TREATMENT ELEVATION NO. 7

STRUCTURES DESIGN DETAIL SHEET (ENGLISH) (REV. 09-01-10)

ORIGINAL SCALE IN INCHES FOR REDUCED PLANS 0 1 2 3

UNIT: 3623
PROJECT NUMBER & PHASE: 0700001834 & 1 CONTRACT NO.: 07-215941

DISREGARD PRINTS BEARING EARLIER REVISION DATES

REVISION DATES 11/10/11 11/29/11 12/07/11 03/22/12

SHEET 30 OF 50

FILE => 53-E0188-1-arch_el07.dgn

USERNAME => s128843 DATE PLOTTED => 14-APR-2012 TIME PLOTTED => 12:20

DIST	COUNTY	ROUTE	POST MILES TOTAL PROJECT	SHEET No.	TOTAL SHEETS
07	LA	5	4.0/5.9	1361	1597

REGISTERED CIVIL ENGINEER 2/12/11 DATE

4-9-12
PLANS APPROVAL DATE

REGISTERED PROFESSIONAL ENGINEER FRANK HSIAOSHIH WEI No. C 52918 Exp. 12-31-12 CIVIL STATE OF CALIFORNIA

The State of California or its officers or agents shall not be responsible for the accuracy or completeness of electronic copies of this plan sheet.

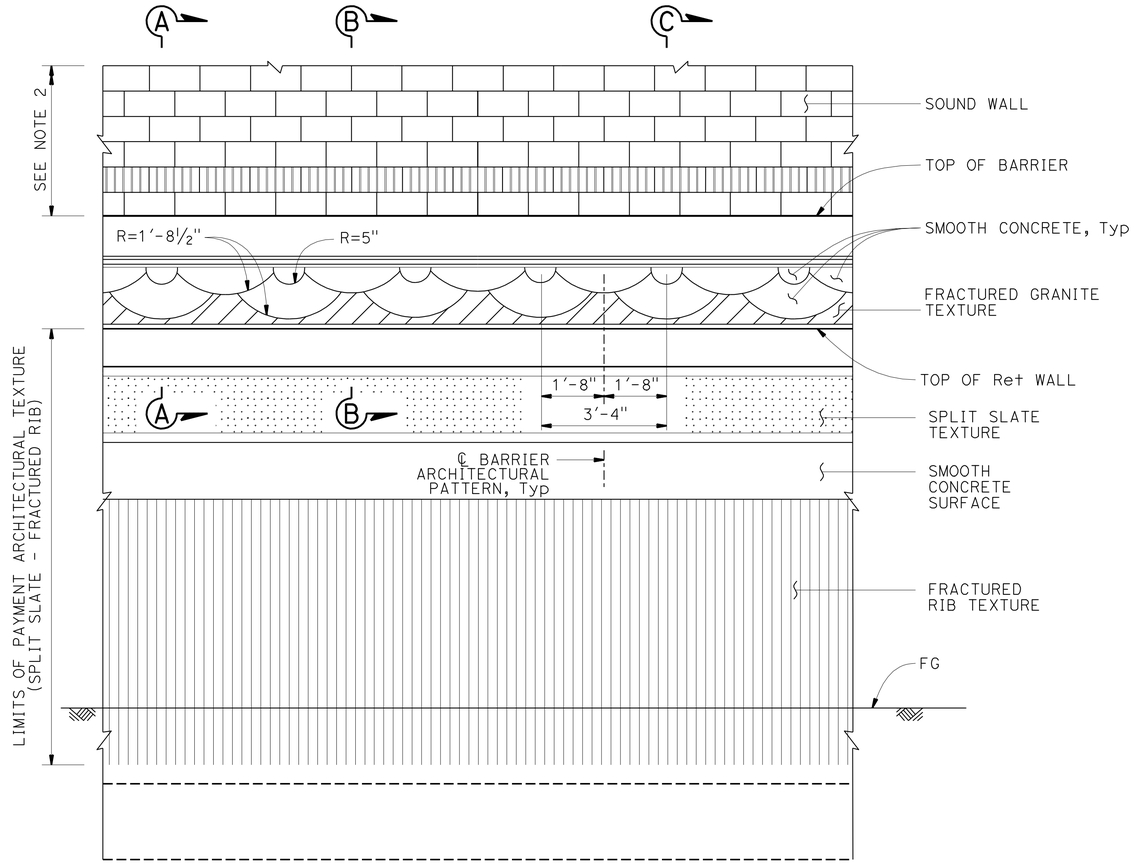

PART ELEVATION

½" = 1'-0"

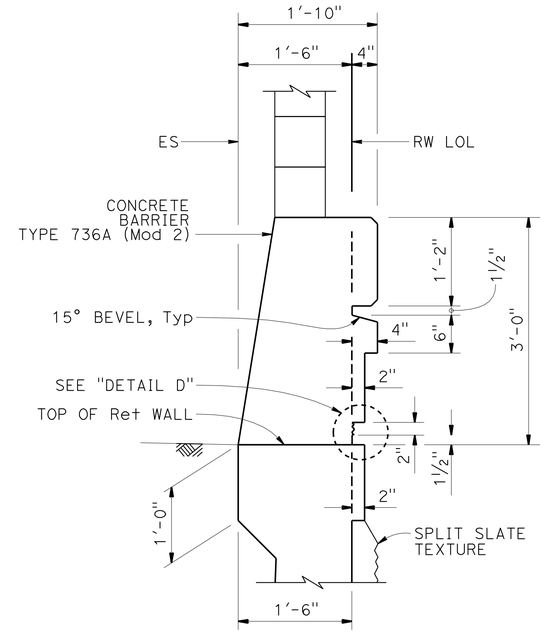

SECTION A-A

1" = 1'-0"

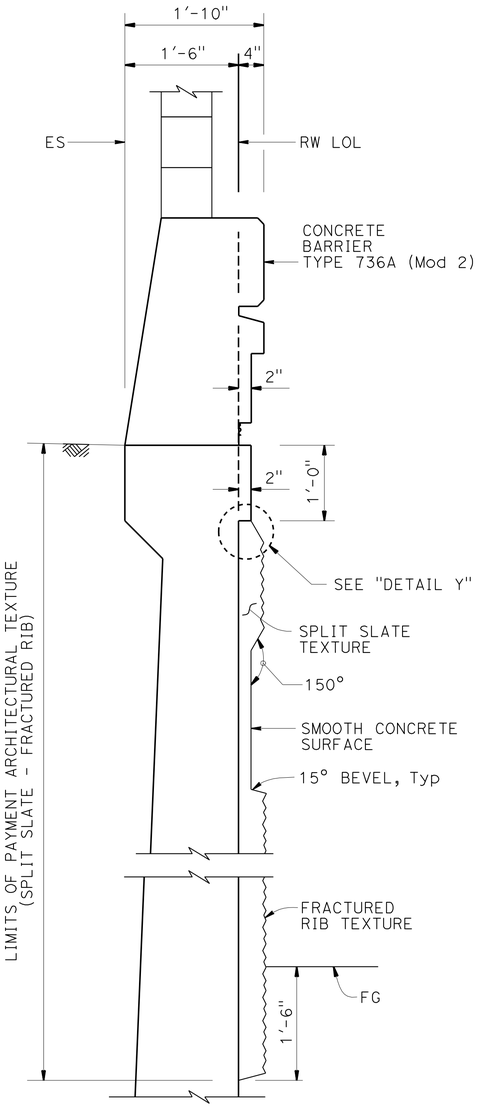

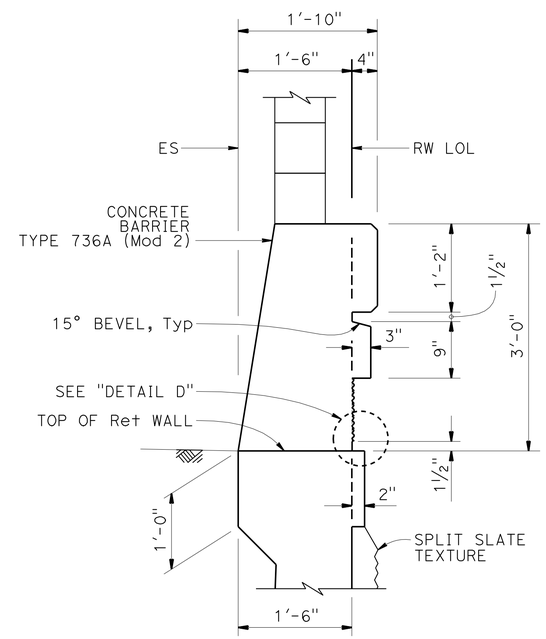

SECTION B-B

1" = 1'-0"

SECTION C-C

1" = 1'-0"

NOTES:

1. For Barrier Reinforcement, see "SOUND WALL - MASONRY BLOCK WITH BARRIER ON RETAINING WALL" sheet.
2. For sound wall architectural treatment, see "SOUND WALL ARCHITECTURAL DETAILS" sheet.

NOTE:
THE CONTRACTOR SHALL VERIFY ALL CONTROLLING FIELD DIMENSIONS BEFORE ORDERING OR FABRICATING ANY MATERIAL.

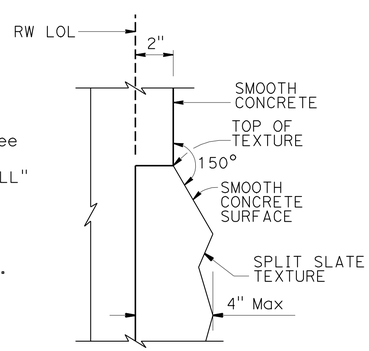

DETAIL Y

NO SCALE

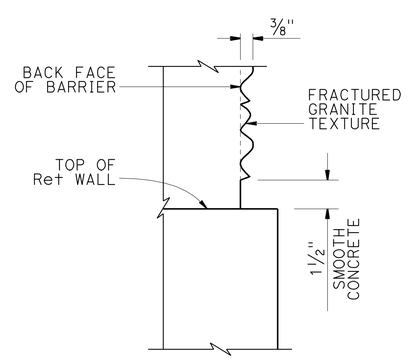

DETAIL D

NO SCALE

DESIGN	BY V. Wami	CHECKED F. Wei	
DETAILS	BY P. Perez	CHECKED F. Wei	
QUANTITIES	BY L. Sanchez-Manzo	CHECKED S. Yeh	

STATE OF CALIFORNIA
DEPARTMENT OF TRANSPORTATION

DIVISION OF ENGINEERING SERVICES
STRUCTURE DESIGN
DESIGN BRANCH 21

BRIDGE NO. 53E0188
POST MILE 4.46

SOUND WALL NO. 251

RETAINING WALL AND BARRIER ARCHITECTURAL DETAILS

STRUCTURES DESIGN DETAIL SHEET (ENGLISH) (REV. 09-01-10)

ORIGINAL SCALE IN INCHES FOR REDUCED PLANS 0 1 2 3

UNIT: 3623
PROJECT NUMBER & PHASE: 0700001834 & 1 CONTRACT NO.: 07-215941

DISREGARD PRINTS BEARING EARLIER REVISION DATES

REVISION DATES 09/30/11 11/25/11 12/22/11 03/22/12

SHEET 31 OF 50

FILE => 53-E0188-k-rw_bar_arch_dt.dgn

USERNAME => s128843 DATE PLOTTED => 14-APR-2012 TIME PLOTTED => 12:20

DIST	COUNTY	ROUTE	POST MILES TOTAL PROJECT	SHEET No.	TOTAL SHEETS
07	LA	5	4.0/5.9	1362	1597

REGISTERED CIVIL ENGINEER 12/12/11 DATE

4-9-12
PLANS APPROVAL DATE

REGISTERED PROFESSIONAL ENGINEER FRANK HSIAOSHIH WEI No. C 52918 Exp. 12-31-12 CIVIL STATE OF CALIFORNIA

The State of California or its officers or agents shall not be responsible for the accuracy or completeness of electronic copies of this plan sheet.

NOTE:
1. See "RETAINING WALL AND BARRIER ARCHITECTURAL DETAILS" sheet.

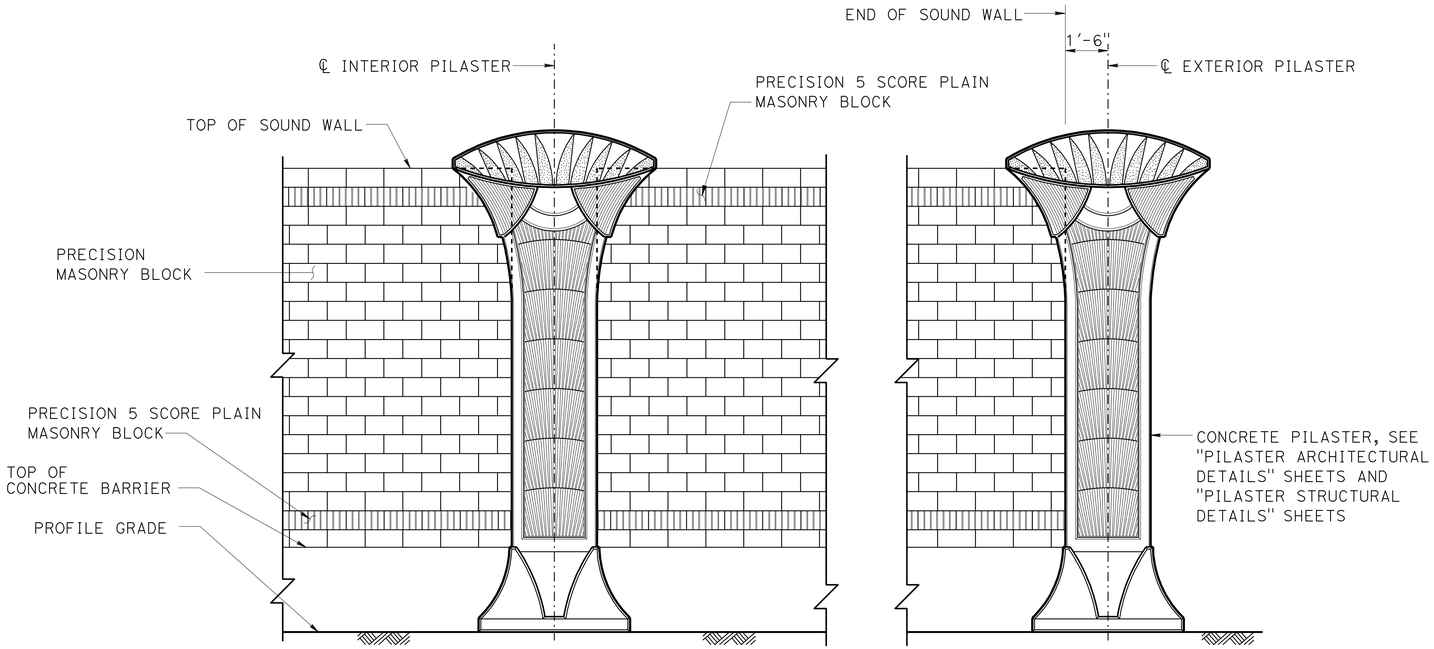

PART SOUND WALL ELEVATION - FREEWAY SIDE

NO SCALE

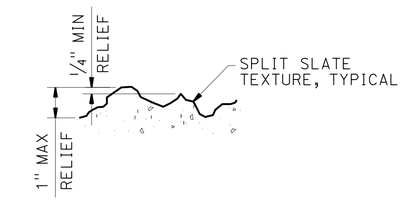

SPLIT SLATE TEXTURE DETAIL

NO SCALE

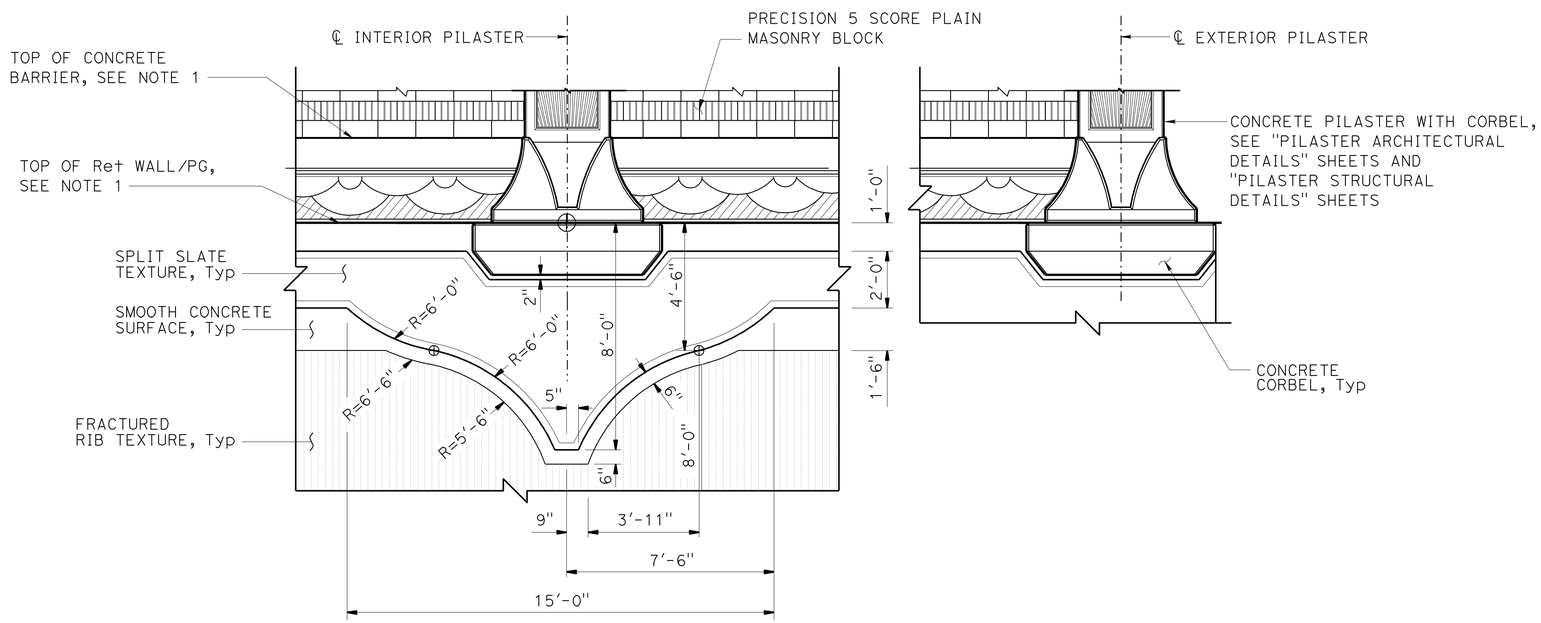

PART SOUND WALL ELEVATION - BACK SIDE

NO SCALE

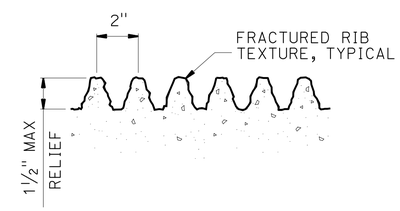

FRACTURED RIB TEXTURE DETAIL

NO SCALE

NOTE:
THE CONTRACTOR SHALL VERIFY ALL CONTROLLING FIELD DIMENSIONS BEFORE ORDERING OR FABRICATING ANY MATERIAL.

	BY	CHECKED
DESIGN	H. CHAVEZ	I. TASABIA
DETAILS	J. VALENCIA	F. WEI/I. TASABIA
QUANTITIES	L. Sanchez-Manzo	S. Yeh

STATE OF CALIFORNIA
DEPARTMENT OF TRANSPORTATION

DIVISION OF ENGINEERING SERVICES
STRUCTURE DESIGN
DESIGN BRANCH 21

BRIDGE NO. 53E0188
POST MILE 4.46

SOUND WALL NO. 251
SOUND WALL ARCHITECTURAL DETAILS

STRUCTURES DESIGN DETAIL SHEET (ENGLISH) (REV. 09-01-10)

ORIGINAL SCALE IN INCHES FOR REDUCED PLANS 0 1 2 3

UNIT: 3623
PROJECT NUMBER & PHASE: 0700001834 & 1 CONTRACT NO.: 07-215941

DISREGARD PRINTS BEARING EARLIER REVISION DATES → 09/30/11 11/29/11 12/07/11 03/22/12

SHEET 32 OF 50

FILE => 53-E0188-m-sw_arch_dt.dgn

USERNAME => s128843 DATE PLOTTED => 14-APR-2012 TIME PLOTTED => 12:20

DIST	COUNTY	ROUTE	POST MILES TOTAL PROJECT	SHEET No.	TOTAL SHEETS
07	LA	5	4.0/5.9	1363	1597

REGISTERED CIVIL ENGINEER — DATE 2/12/11

4-9-12
PLANS APPROVAL DATE

REGISTERED PROFESSIONAL ENGINEER — FRANK HSIAOSHIH WEI — No. C 52918 — Exp. 12-31-12 — CIVIL — STATE OF CALIFORNIA

The State of California or its officers or agents shall not be responsible for the accuracy or completeness of electronic copies of this plan sheet.

NOTES:

1. All dimensions symetrical about ℄ Pilaster.
2. For location of "DETAIL E", see "PILASTER ARCHITECTURAL DETAILS NO. 2" sheet.
3. Beveled edges are 45° unless otherwise noted
4. All vertical dimensions are measured along the ℄ Pilaster (Pilaster shall be vertical).

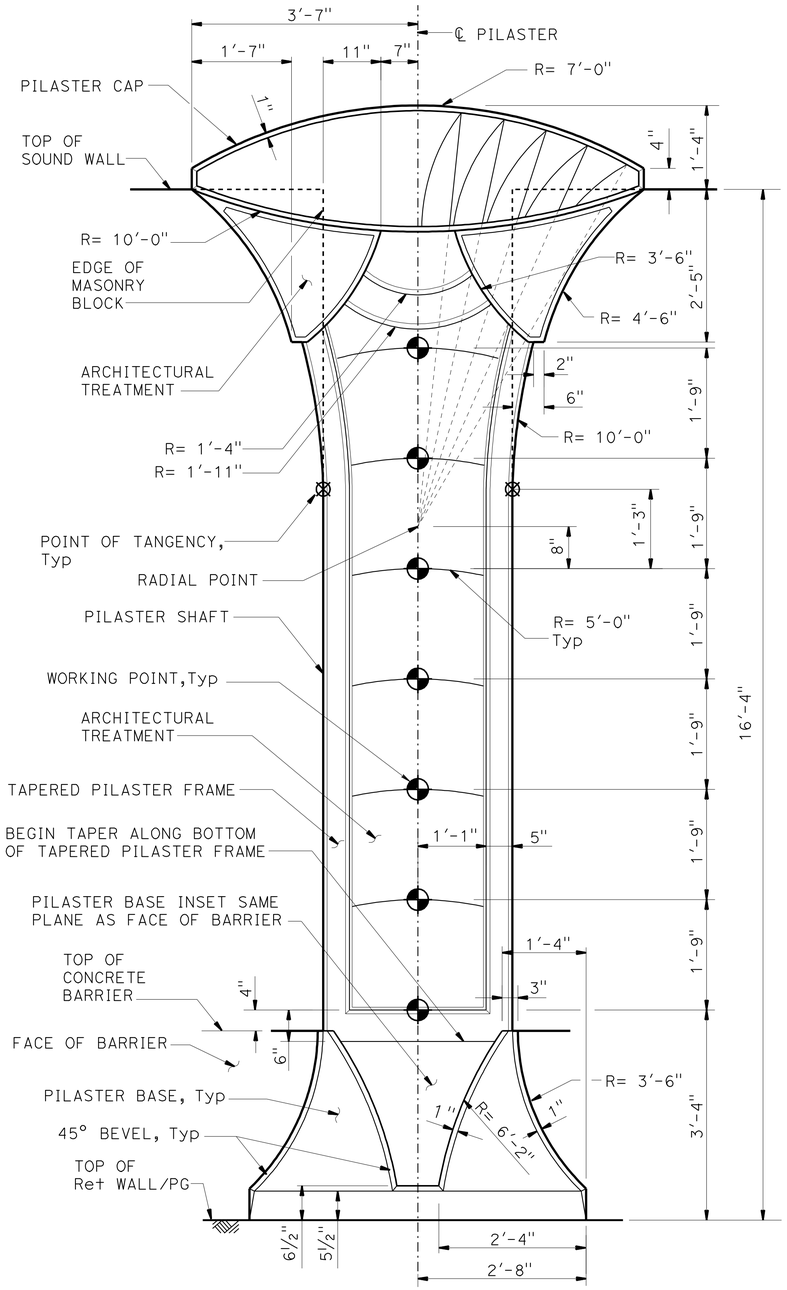

16'-4" SOUND WALL

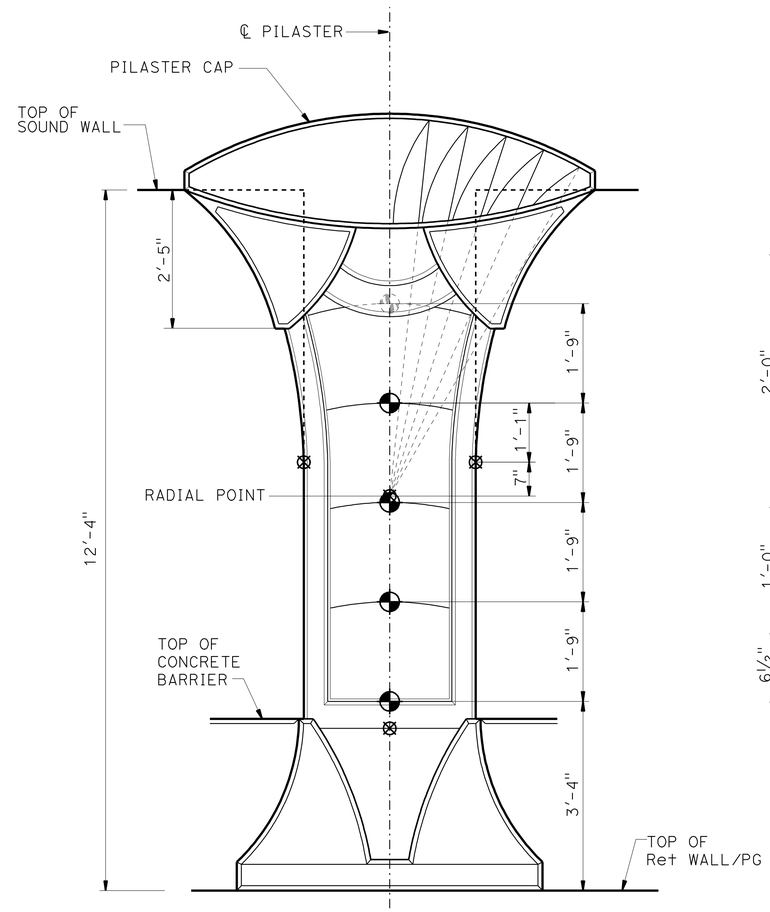

NOTE: For dimensions and details not shown, see"16'-4" SOUND WALL" details

12'-4" SOUND WALL

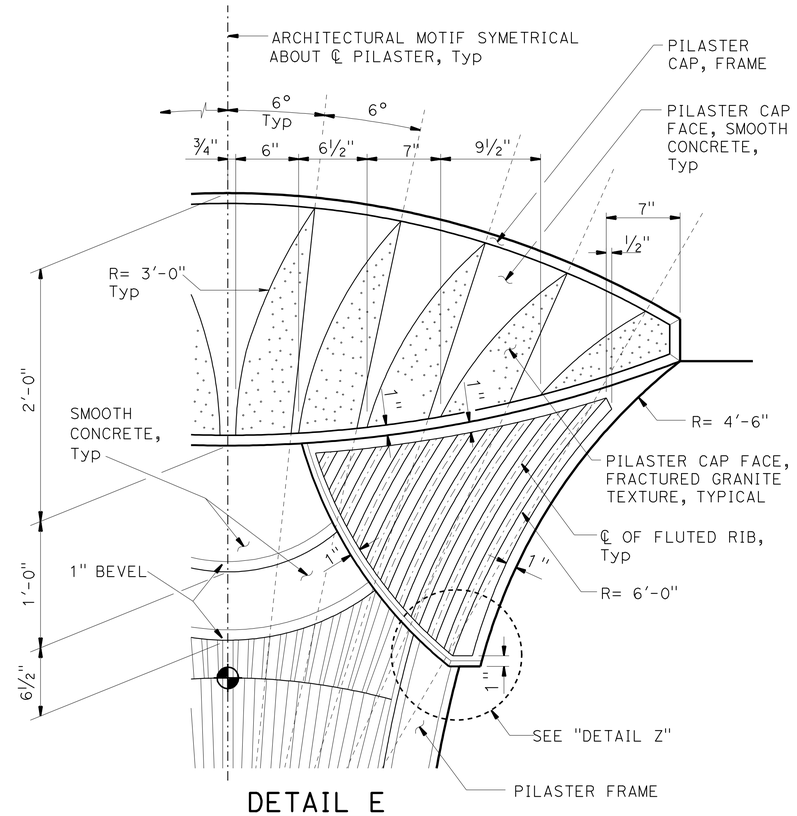

DETAIL E
NO SCALE

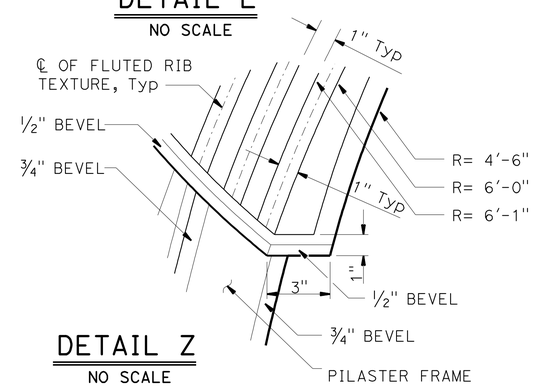

DETAIL Z
NO SCALE

NOTE:
THE CONTRACTOR SHALL VERIFY ALL CONTROLLING FIELD DIMENSIONS BEFORE ORDERING OR FABRICATING ANY MATERIAL.

PILASTER ELEVATION - FREEWAY SIDE

NO SCALE

	BY	CHECKED
DESIGN	H. CHAVEZ	I. TASABIA
DETAILS	J. VALENCIA	F. WEI
QUANTITIES	L. Sanchez-Manzo	S. Yeh

STATE OF CALIFORNIA
DEPARTMENT OF TRANSPORTATION

DIVISION OF ENGINEERING SERVICES
STRUCTURE DESIGN
DESIGN BRANCH 21

BRIDGE NO. 53E0188
POST MILE 4.46

SOUND WALL NO. 251
PILASTER ARCHITECTURAL DETAILS NO. 1

STRUCTURES DESIGN DETAIL SHEET (ENGLISH) (REV. 09-01-10)

ORIGINAL SCALE IN INCHES FOR REDUCED PLANS 0 1 2 3

UNIT: 3623
PROJECT NUMBER & PHASE: 0700001834 & 1 CONTRACT NO.: 07-215941

DISREGARD PRINTS BEARING EARLIER REVISION DATES

REVISION DATES: 09/30/11 11/25/11 12/07/11 03/22/12

SHEET 33 OF 50

FILE => 53-E0188-o-pll_arch_dt01.dgn

USERNAME => s128843 DATE PLOTTED => 14-APR-2012 TIME PLOTTED => 12:20

DIST	COUNTY	ROUTE	POST MILES TOTAL PROJECT	SHEET No.	TOTAL SHEETS
07	LA	5	4.0/5.9	1364	1597

REGISTERED CIVIL ENGINEER — DATE 2/12/11

4-9-12
PLANS APPROVAL DATE

REGISTERED PROFESSIONAL ENGINEER FRANK HSIAOSHIH WEI No. C 52918 Exp. 12-31-12 CIVIL STATE OF CALIFORNIA

The State of California or its officers or agents shall not be responsible for the accuracy or completeness of electronic copies of this plan sheet.

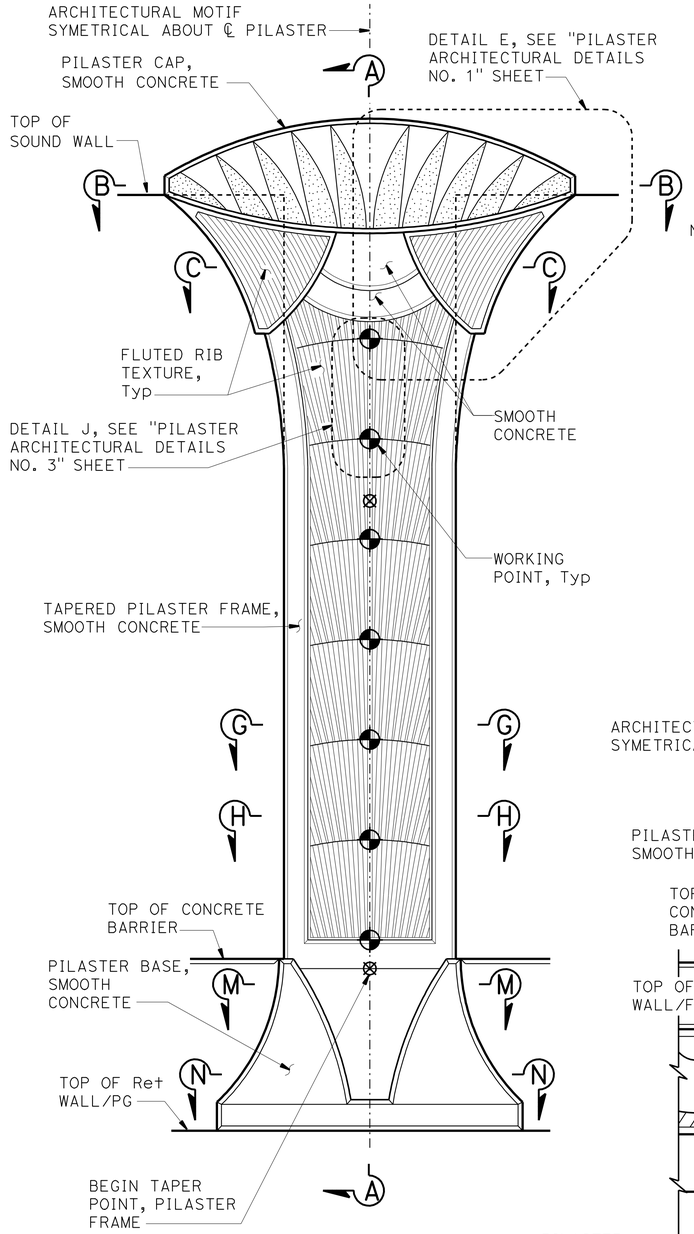

NOTE: For additional details not shown, see "16'-4" SOUND WALL - PILASTER ELEVATION" on "PILASTER ARCHITECTURAL DETAILS NO. 1" sheet.

FREEWAY SIDE

NOTES:

1. For "SECTION B-B", "SECTION C-C", "SECTION G-G","SECTION H-H" and "SECTION L-L", see "PILASTER ARCHITECTURAL DETAILS NO. 3" sheet.
2. For "SECTION M-M" and "SECTION N-N"' see "PILASTER ARCHITECTURAL DETAIL NO. 4" sheet.
3. Pilaster Sections on Retaining Wall shown, for Pilaster on Barrier Type 736SV (Mod), see "PILASTER SECTION ON TYPE 736SV (Mod) BARRIER" on "PILASTER ARCHITECTURAL DETAILS NO. 4" sheet.
4. All dimensions symetrical about ℄ pilaster.
5. Beveled edges are 45° unless otherwise noted
6. All vertical dimensions are measured along the ℄ Pilaster (Pilaster shall be vertical).

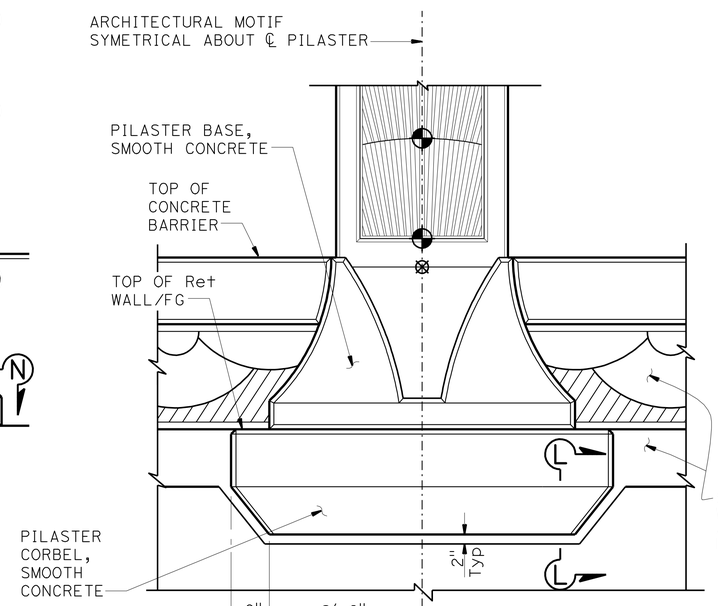

NOTE: For additional details not shown, see "FREEWAY SIDE" details.

BACK SIDE

PILASTER ARCHITECTURAL MOTIF

¾" = 1'-0"

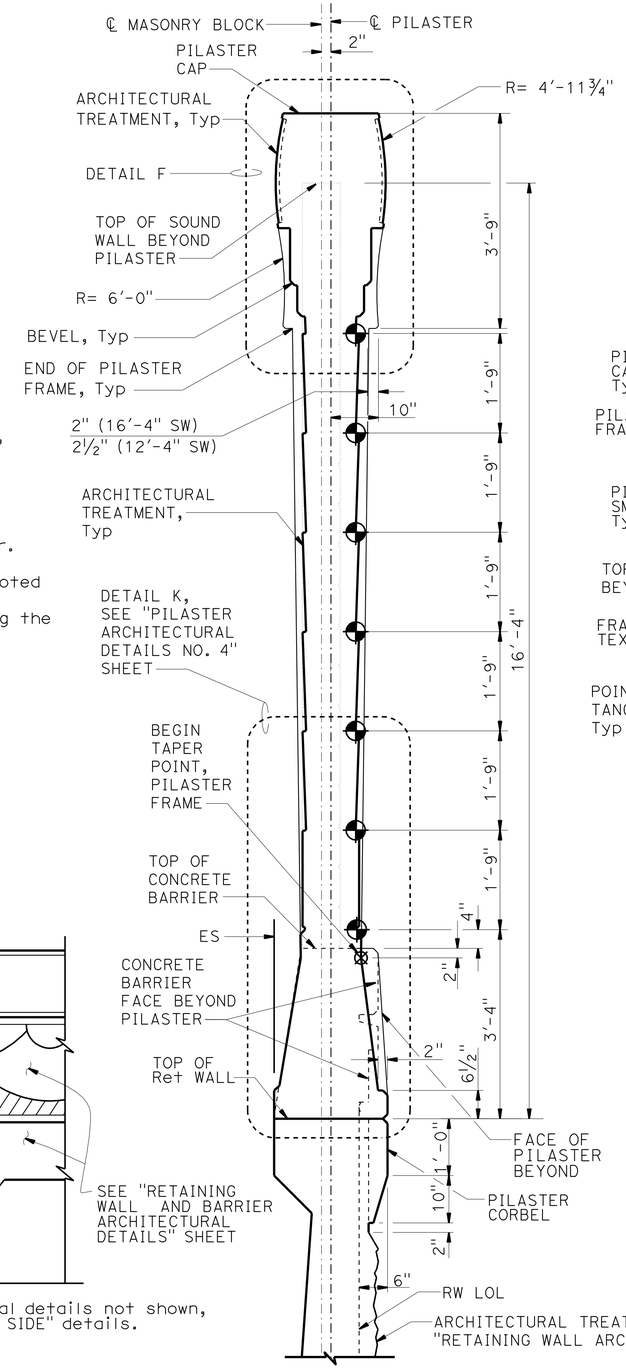

SECTION A-A

¾" = 1'-0"

NOTE: Pilaster for 16'-4" Sound Wall shown, Pilaster at 12'-4" Sound Wall similar.

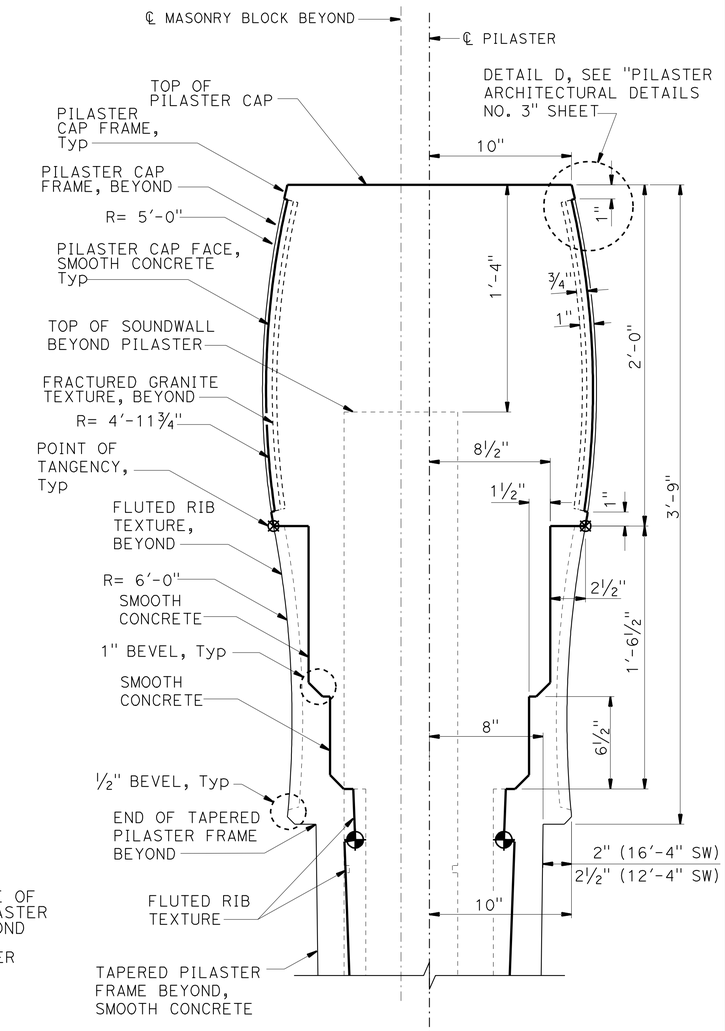

DETAIL F

NO SCALE

NOTE:
THE CONTRACTOR SHALL VERIFY ALL CONTROLLING FIELD DIMENSIONS BEFORE ORDERING OR FABRICATING ANY MATERIAL.

	BY	CHECKED
DESIGN	H. CHAVEZ	I. TASABIA
DETAILS	J. VALENCIA	F. WEI
QUANTITIES	L. Sanchez-Manzo	S. Yeh

STATE OF CALIFORNIA
DEPARTMENT OF TRANSPORTATION

DIVISION OF ENGINEERING SERVICES
STRUCTURE DESIGN
DESIGN BRANCH 21

BRIDGE NO. 53E0188
POST MILE 4.46

SOUND WALL NO. 251

PILASTER ARCHITECTURAL DETAILS NO. 2

STRUCTURES DESIGN DETAIL SHEET (ENGLISH) (REV. 09-01-10)

ORIGINAL SCALE IN INCHES FOR REDUCED PLANS 0 1 2 3

UNIT: 3623
PROJECT NUMBER & PHASE: 0700001834 & 1 CONTRACT NO.: 07-215941

DISREGARD PRINTS BEARING EARLIER REVISION DATES — REVISION DATES 09/30/11 11/25/11 12/12/11 03/22/12 — SHEET 34 OF 50

FILE => 53-E0188-o-pil_arch_dt02.dgn

USERNAME => s128843 DATE PLOTTED => 14-APR-2012 TIME PLOTTED => 12:20

DIST	COUNTY	ROUTE	POST MILES TOTAL PROJECT	SHEET No.	TOTAL SHEETS
07	LA	5	4.0/5.9	1365	1597

REGISTERED CIVIL ENGINEER — DATE 2/12/11

4-9-12
PLANS APPROVAL DATE

REGISTERED PROFESSIONAL ENGINEER FRANK HSIAOSHIH WEI No. C 52918 Exp. 12-31-12 CIVIL STATE OF CALIFORNIA

The State of California or its officers or agents shall not be responsible for the accuracy or completeness of electronic copies of this plan sheet.

NOTES:

1. All notes and dimensions symetrical about ℄ pilaster.
2. Beveled edges are 45° unless otherwise noted.
3. For location of "DETAIL J", "DETAIL D" and "SECTION B-B", "SECTION C-C", "SECTION G-G", "SECTION H-H" and "SECTION L-L", see "PILASTER ARCHITECTURAL DETAILS NO. 2" sheet.
4. For Retaining Wall split slate texture, see "RETAINING WALL AND BARRIER ARCHITECTURAL DETAILS" sheet.

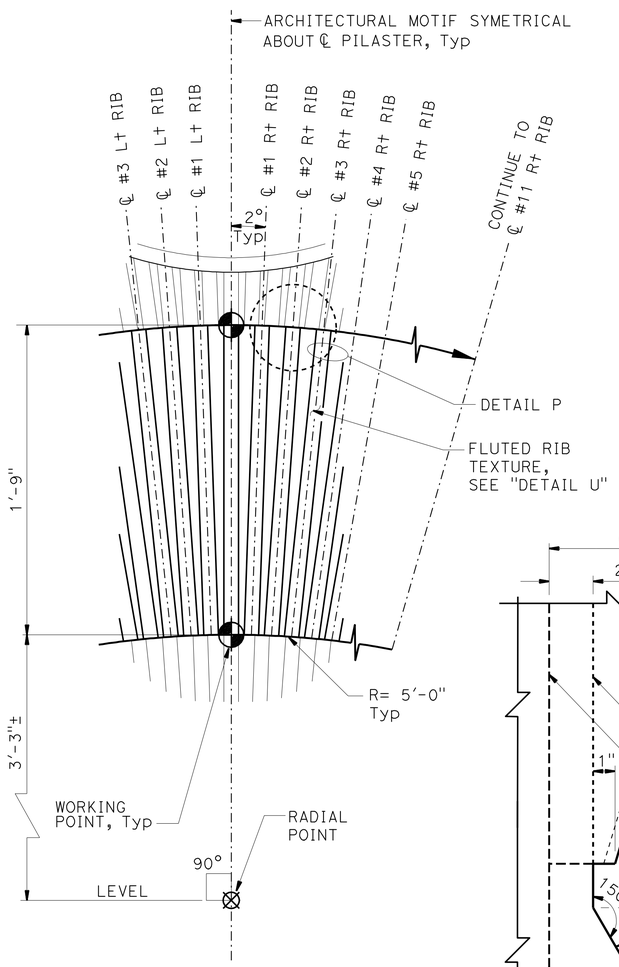

DETAIL J
NO SCALE

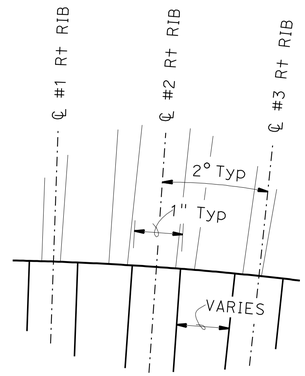

DETAIL P
NO SCALE

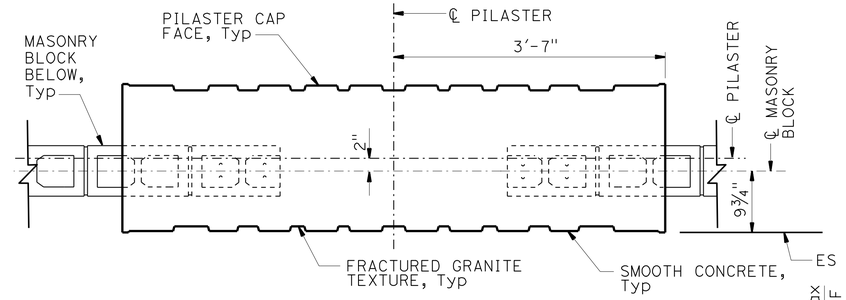

SECTION B-B
1" = 1'-0"

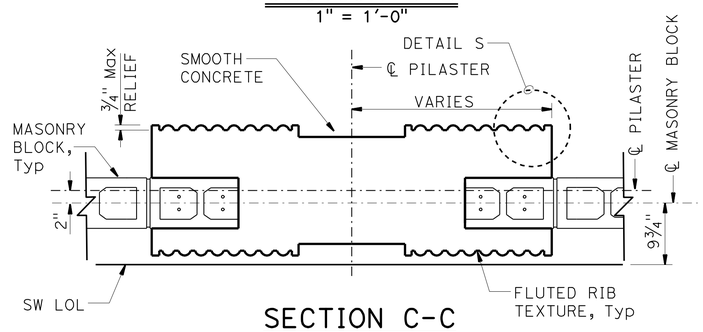

SECTION C-C
1" = 1'-0"

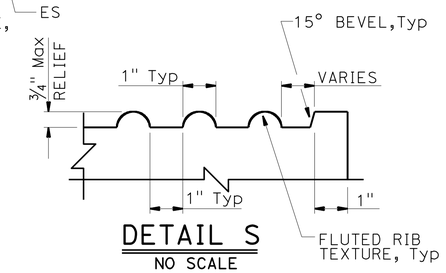

DETAIL S
NO SCALE

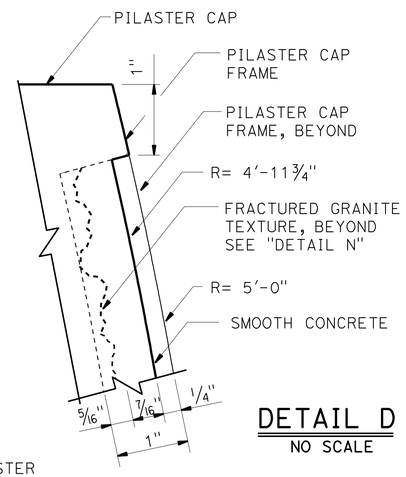

DETAIL D
NO SCALE

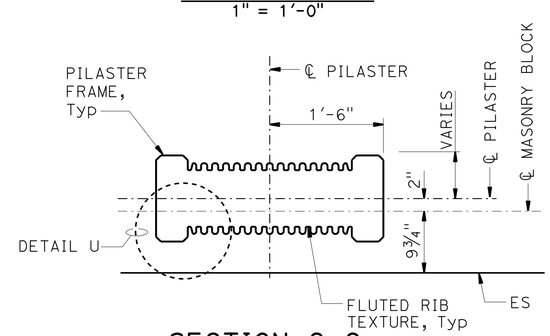

SECTION G-G
1" = 1'-0"

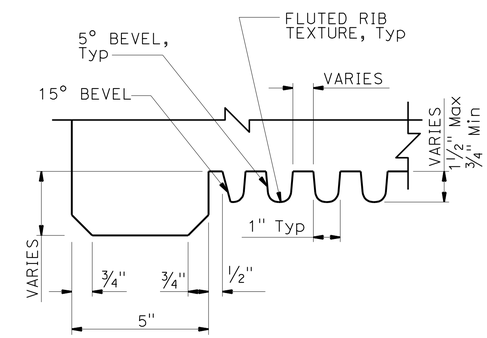

DETAIL U
NO SCALE

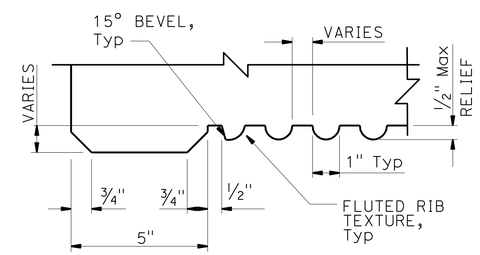

DETAIL W
NO SCALE

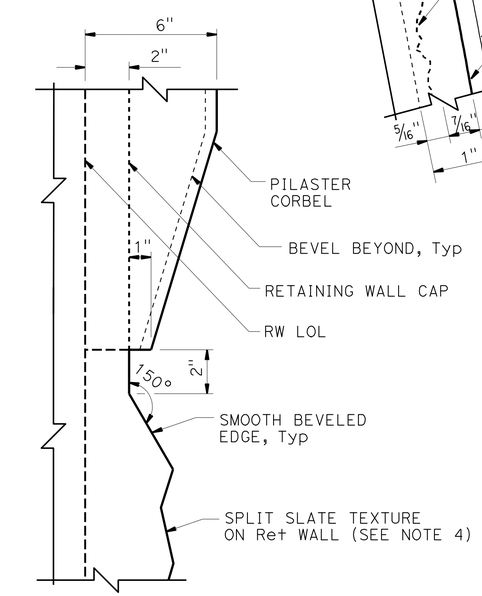

SECTION L-L
NO SCALE

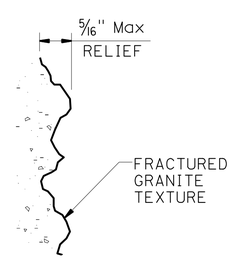

DETAIL N
NO SCALE

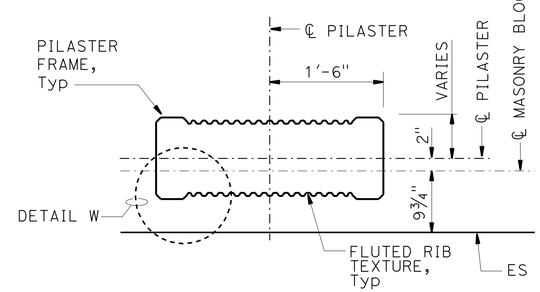

SECTION H-H
1" = 1'-0"

NOTE:
THE CONTRACTOR SHALL VERIFY ALL CONTROLLING FIELD DIMENSIONS BEFORE ORDERING OR FABRICATING ANY MATERIAL.

	BY	CHECKED
DESIGN	H. CHAVEZ	I. TASABIA
DETAILS	J. VALENCIA	F. WEI
QUANTITIES	L. Sanchez-Manzo	S. Yeh

STATE OF CALIFORNIA
DEPARTMENT OF TRANSPORTATION

DIVISION OF ENGINEERING SERVICES
STRUCTURE DESIGN
DESIGN BRANCH 21

BRIDGE NO. 53E0188
POST MILE 4.46

SOUND WALL NO. 251
PILASTER ARCHITECTURAL DETAILS NO. 3

STRUCTURES DESIGN DETAIL SHEET (ENGLISH) (REV. 09-01-10)

ORIGINAL SCALE IN INCHES FOR REDUCED PLANS 0 1 2 3

UNIT: 3623
PROJECT NUMBER & PHASE: 0700001834 & 1 CONTRACT NO.: 07-215941

DISREGARD PRINTS BEARING EARLIER REVISION DATES — REVISION DATES 09/30/11 11/25/11 12/07/11 03/22/12

SHEET 35 OF 50

FILE => 53-E0188-o-p11_arch_dt03.dgn

USERNAME => s128843 DATE PLOTTED => 14-APR-2012 TIME PLOTTED => 12:21

DIST	COUNTY	ROUTE	POST MILES TOTAL PROJECT	SHEET No.	TOTAL SHEETS
07	LA	5	4.0/5.9	1366	1597

REGISTERED CIVIL ENGINEER — DATE 12/12/11

4-9-12
PLANS APPROVAL DATE

REGISTERED PROFESSIONAL ENGINEER — FRANK HSIAOSHIH WEI — No. C 52918 — Exp. 12-31-12 — CIVIL — STATE OF CALIFORNIA

The State of California or its officers or agents shall not be responsible for the accuracy or completeness of electronic copies of this plan sheet.

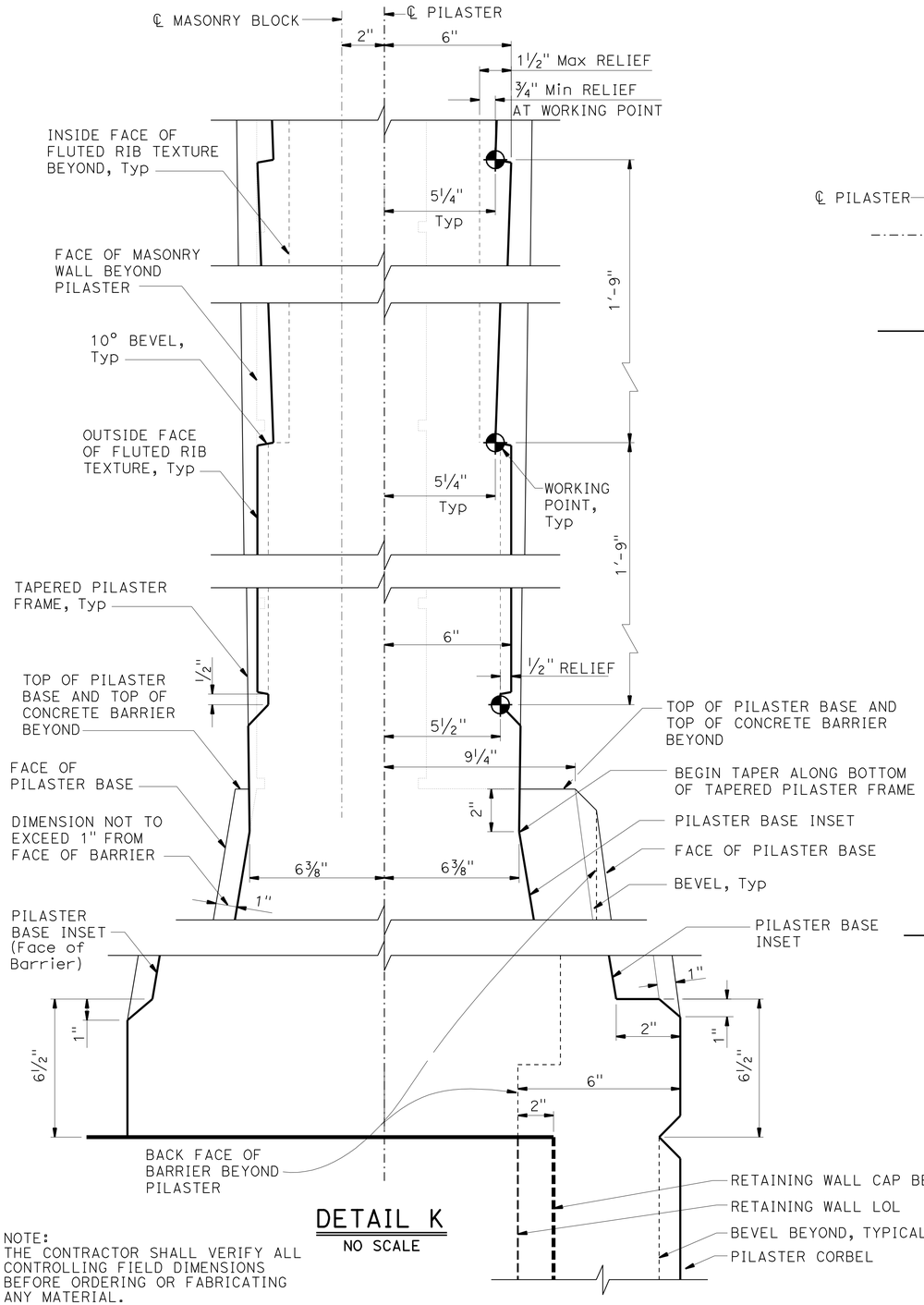

DETAIL K
NO SCALE

NOTE:
THE CONTRACTOR SHALL VERIFY ALL CONTROLLING FIELD DIMENSIONS BEFORE ORDERING OR FABRICATING ANY MATERIAL.

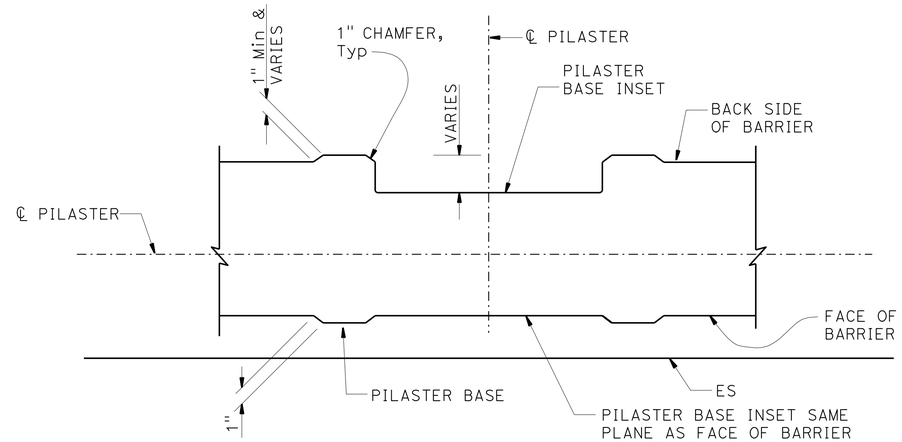

SECTION M-M
1½" = 1'-0"

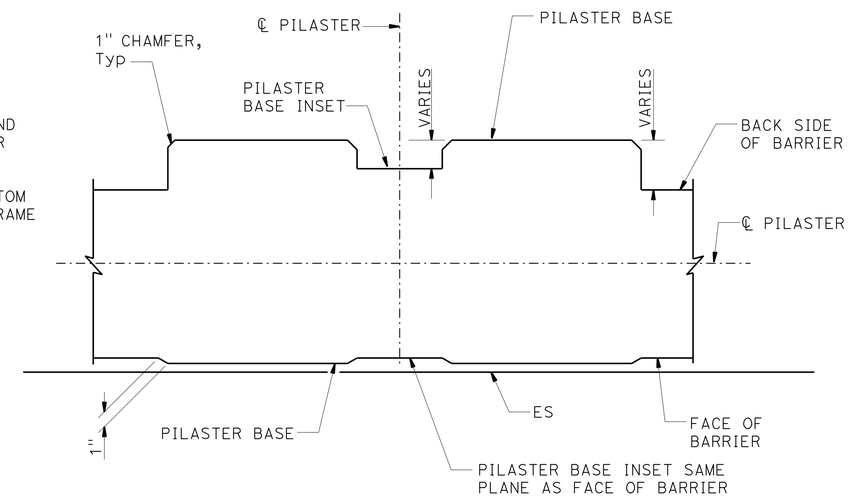

SECTION N-N
1½" = 1'-0"

NOTES:

1. For location of "SECTION M-M", "SECTION N-N" and "DETAIL K", see "PILASTER ARCHITECTURAL DETAILS NO. 2" sheet.
2. All dimensions symetrical about ℄ Pilaster.
3. All vertical dimensions are measured along the ℄ Pilaster (Pilaster shall be vertical).

	BY	CHECKED
DESIGN	H. CHAVEZ	I. TASABIA
DETAILS	J. VALENCIA	F. WEI
QUANTITIES	L. Sanchez-Manzo	S. Yeh

STATE OF CALIFORNIA
DEPARTMENT OF TRANSPORTATION

DIVISION OF ENGINEERING SERVICES
STRUCTURE DESIGN
DESIGN BRANCH 21

BRIDGE NO. 53E0188
POST MILE 4.46

SOUND WALL NO. 251
PILASTER ARCHITECTURAL DETAILS NO. 4

STRUCTURES DESIGN DETAIL SHEET (ENGLISH) (REV. 09-01-10)

ORIGINAL SCALE IN INCHES FOR REDUCED PLANS 0 1 2 3

UNIT: 3623
PROJECT NUMBER & PHASE: 0700001834 & 1 CONTRACT NO.: 07-215941

DISREGARD PRINTS BEARING EARLIER REVISION DATES

REVISION DATES: 09/30/11 11/25/11 12/12/11 03/22/12 — SHEET 36 OF 50

FILE => 53-E0188-a-pil_arch_dt04.dgn

USERNAME => s128843 DATE PLOTTED => 14-APR-2012 TIME PLOTTED => 12:21

DIST	COUNTY	ROUTE	POST MILES TOTAL PROJECT	SHEET No.	TOTAL SHEETS
07	LA	5	4.0/5.9	1367	1597

REGISTERED CIVIL ENGINEER 2/12/11 DATE

4-9-12
PLANS APPROVAL DATE

REGISTERED PROFESSIONAL ENGINEER FRANK HSIAOSHIH WEI No. C 52918 Exp. 12-31-12 CIVIL STATE OF CALIFORNIA

The State of California or its officers or agents shall not be responsible for the accuracy or completeness of electronic copies of this plan sheet.

NOTES:

1. For "SECTION B-B", "SECTION C-C", "SECTION D-D" and "SECTION G-G", see "PILASTER STRUCTURAL DETAILS NO. 2" sheet.
2. 16'-4" height Pilaster shown. 12'-4" and 14'-4" height Pilaster similar.

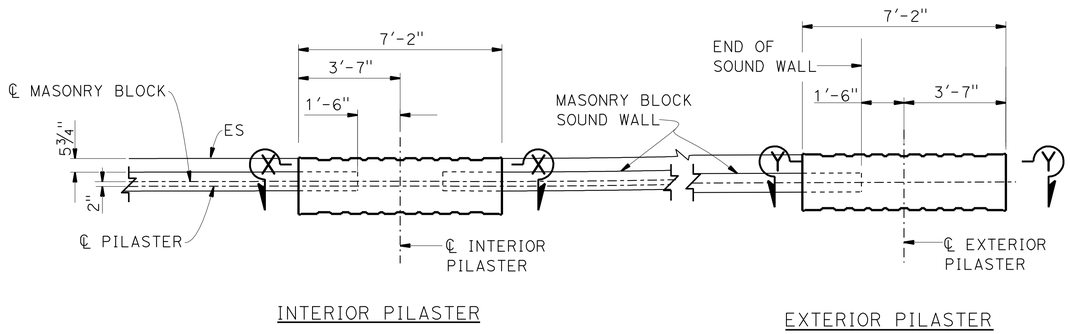

PART SOUND WALL PLAN

⅜" = 1'-0"

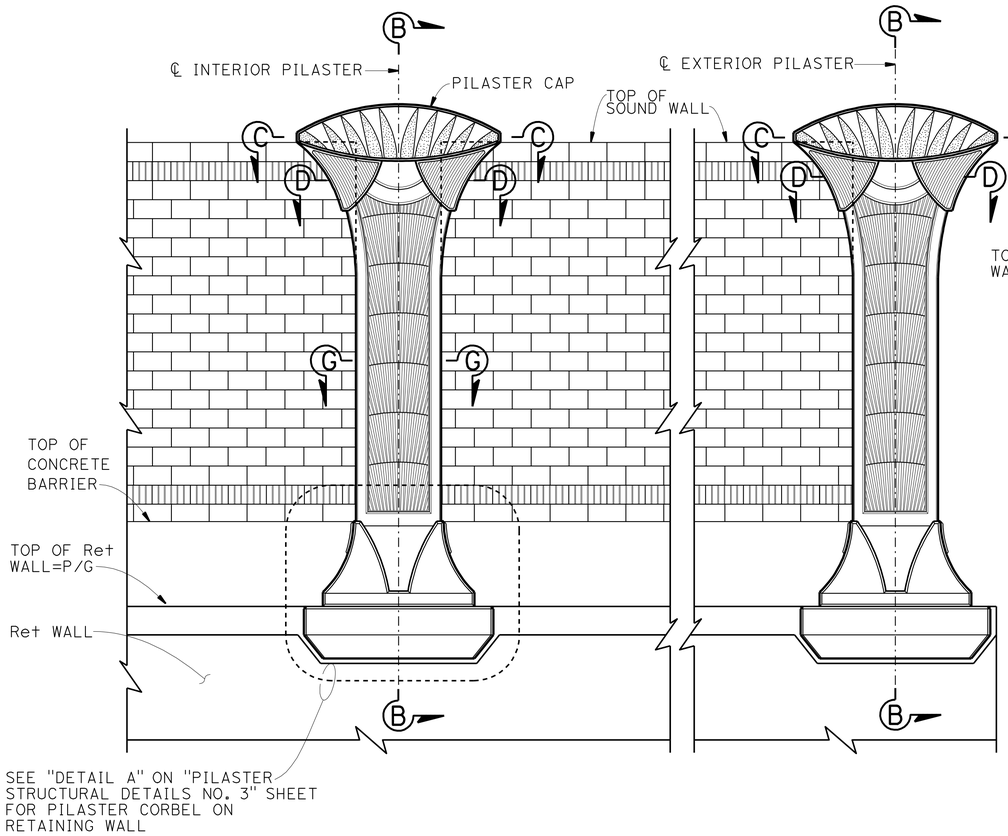

PART SOUND WALL ELEVATION

⅜" = 1'-0"

NOTE:
THE CONTRACTOR SHALL VERIFY ALL CONTROLLING FIELD DIMENSIONS BEFORE ORDERING OR FABRICATING ANY MATERIAL.

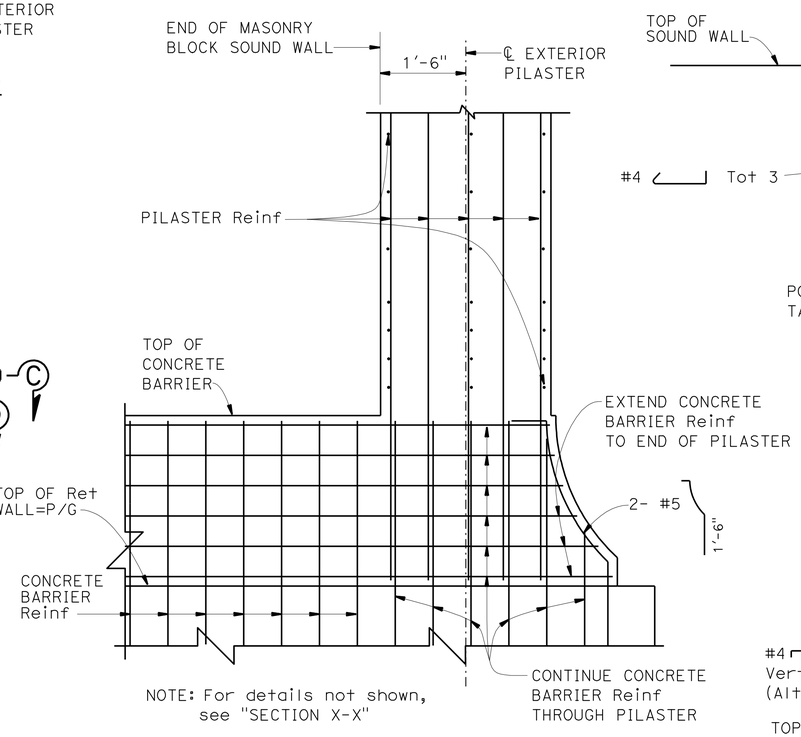

NOTE: For details not shown, see "SECTION X-X"

SECTION Y-Y

¾" = 1'-0"

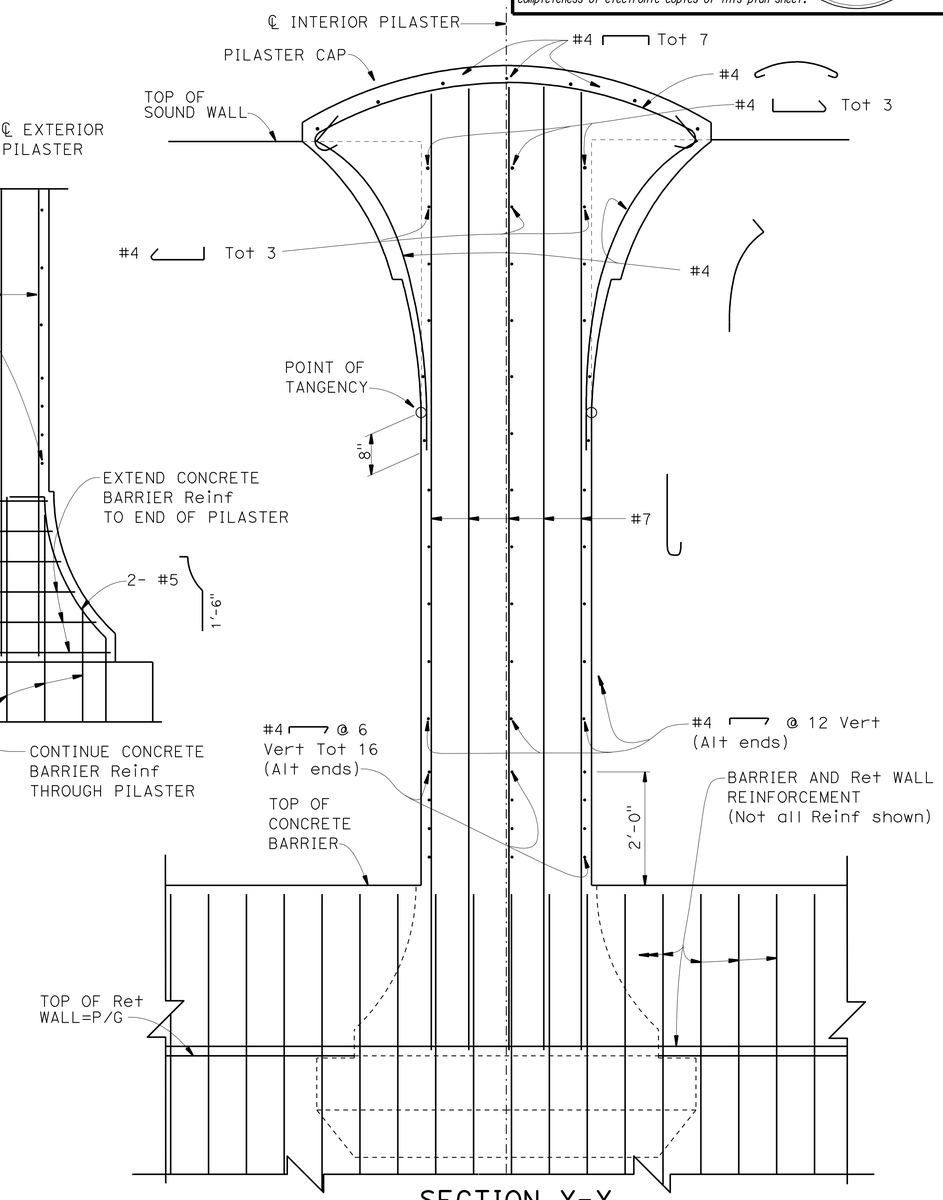

NOTE: Pilaster corbel reinf not shown.

SECTION X-X

¾" = 1'-0"

DESIGN	BY H. CHAVEZ	CHECKED I. TASABIA	
DETAILS	BY J. VALENCIA	CHECKED F. WEI	
QUANTITIES	BY L. Sanchez-Manzo	CHECKED S. Yeh	

STATE OF CALIFORNIA
DEPARTMENT OF TRANSPORTATION

DIVISION OF ENGINEERING SERVICES
STRUCTURE DESIGN
DESIGN BRANCH 21

BRIDGE NO. 53E0188
POST MILE 4.46

SOUND WALL NO. 251
PILASTER STRUCTURAL DETAILS NO. 1

STRUCTURES DESIGN DETAIL SHEET (ENGLISH) (REV. 09-01-10)

ORIGINAL SCALE IN INCHES FOR REDUCED PLANS 0 1 2 3

UNIT: 3623
PROJECT NUMBER & PHASE: 0700001834 & 1 CONTRACT NO.: 07-215941

DISREGARD PRINTS BEARING EARLIER REVISION DATES

REVISION DATES 09/30/11 11/25/11 12/28/11 03/22/12

SHEET 37 OF 50

FILE => 53-E0188-q-pil_str_dt01.dgn

USERNAME => s128843 DATE PLOTTED => 14-APR-2012 TIME PLOTTED => 12:21

DIST	COUNTY	ROUTE	POST MILES TOTAL PROJECT	SHEET No.	TOTAL SHEETS
07	LA	5	4.0/5.9	1368	1597

REGISTERED CIVIL ENGINEER 2/12/11 DATE

4-9-12
PLANS APPROVAL DATE

REGISTERED PROFESSIONAL ENGINEER FRANK HSIAOSHIH WEI No. C 52918 Exp. 12-31-12 CIVIL STATE OF CALIFORNIA

The State of California or its officers or agents shall not be responsible for the accuracy or completeness of electronic copies of this plan sheet.

NOTES:

1. For location of "SECTION B-B", "SECTION C-C", "SECTION D-D" and "SECTION G-G", see "PILASTER STRUCTURAL DETAILS NO. 1" sheet.
2. For Pilaster geometry, dimensions and architectural treatments, see "PILASTER ARCHITECTURAL DETAILS" sheets.
3. 16'-4" height Pilaster shown, 12'-4" and 14'-4" height Pilaster similar.

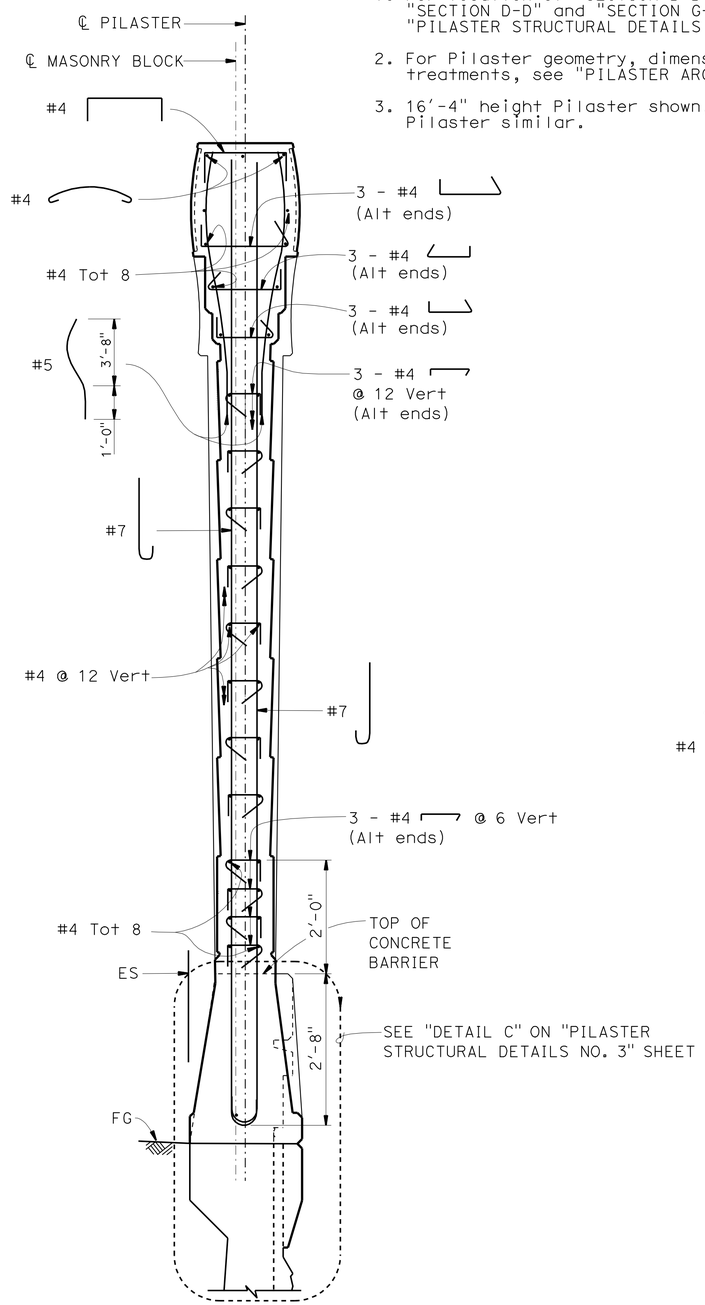

SECTION B-B

¾" = 1'-0"

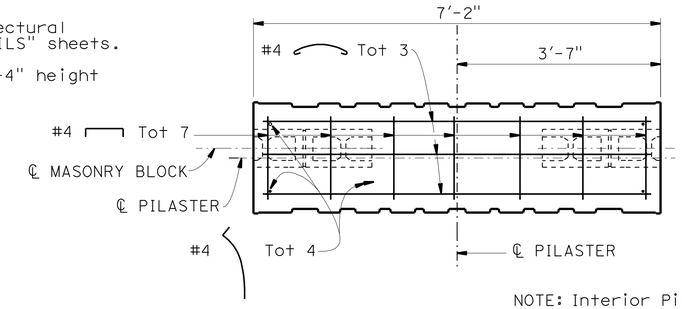

NOTE: Interior Pilaster shown, Exterior Pilaster similar.

SECTION C-C

¾" = 1'-0"

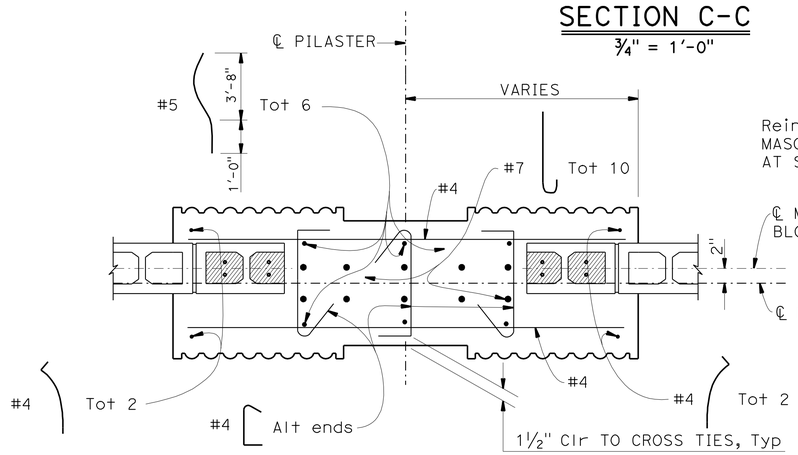

INTERIOR PILASTER

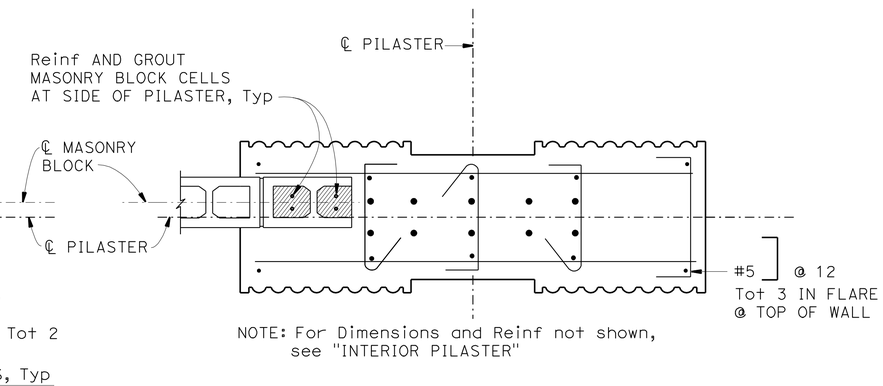

NOTE: For Dimensions and Reinf not shown, see "INTERIOR PILASTER"

EXTERIOR PILASTER

SECTION D-D

1" = 1'-0"

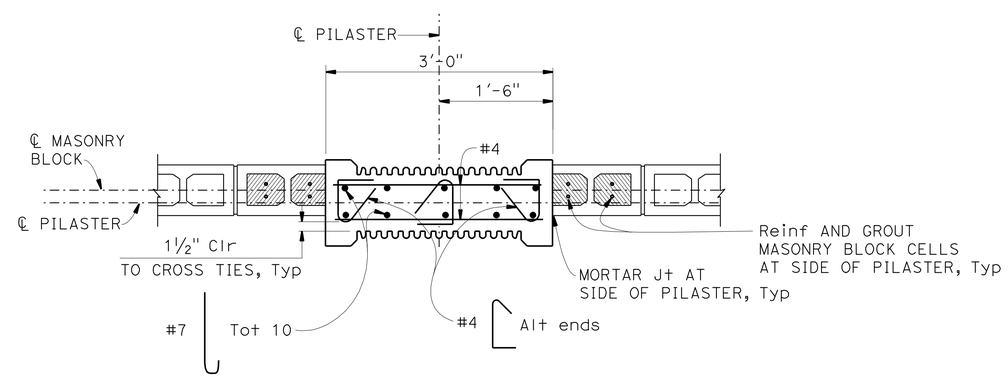

SECTION G-G

1" = 1'-0"

NOTE:
THE CONTRACTOR SHALL VERIFY ALL CONTROLLING FIELD DIMENSIONS BEFORE ORDERING OR FABRICATING ANY MATERIAL.

	BY	CHECKED
DESIGN	H. CHAVEZ	I. TASABIA
DETAILS	J. VALENCIA	F. WEI
QUANTITIES	L. Sanchez-Manzo	S. Yeh

STATE OF CALIFORNIA
DEPARTMENT OF TRANSPORTATION

DIVISION OF ENGINEERING SERVICES
STRUCTURE DESIGN
DESIGN BRANCH 21

BRIDGE NO. 53E0188
POST MILE 4.46

SOUND WALL NO. 251
PILASTER STRUCTURAL DETAILS NO. 2

STRUCTURES DESIGN DETAIL SHEET (ENGLISH) (REV. 09-01-10)

ORIGINAL SCALE IN INCHES FOR REDUCED PLANS 0 1 2 3

UNIT: 3623
PROJECT NUMBER & PHASE: 0700001834 & 1 CONTRACT NO.: 07-215941

DISREGARD PRINTS BEARING EARLIER REVISION DATES

REVISION DATES 09/30/11 11/29/11 12/09/11 03/22/12

SHEET 38 OF 50

FILE => 53-E0188-q-pil_str_dt02.dgn

USERNAME => s128843 DATE PLOTTED => 14-APR-2012 TIME PLOTTED => 12:21

DIST	COUNTY	ROUTE	POST MILES TOTAL PROJECT	SHEET No.	TOTAL SHEETS
07	LA	5	4.0/5.9	1369	1597

REGISTERED CIVIL ENGINEER 2/12/11 DATE

4-9-12
PLANS APPROVAL DATE

REGISTERED PROFESSIONAL ENGINEER FRANK HSIAOSHIH WEI No. C 52918 Exp. 12-31-12 CIVIL STATE OF CALIFORNIA

The State of California or its officers or agents shall not be responsible for the accuracy or completeness of electronic copies of this plan sheet.

NOTES:

1. For location of "DETAIL A", see "PILASTER STRUCTURAL DETAILS NO. 1" sheet.
2. For location of "DETAIL C", see "PILASTER STRUCTURAL DETAILS NO. 2" sheet.
3. See "RETAINING WALL AND BARRIER ARCHITECTURAL DETAILS" sheet.

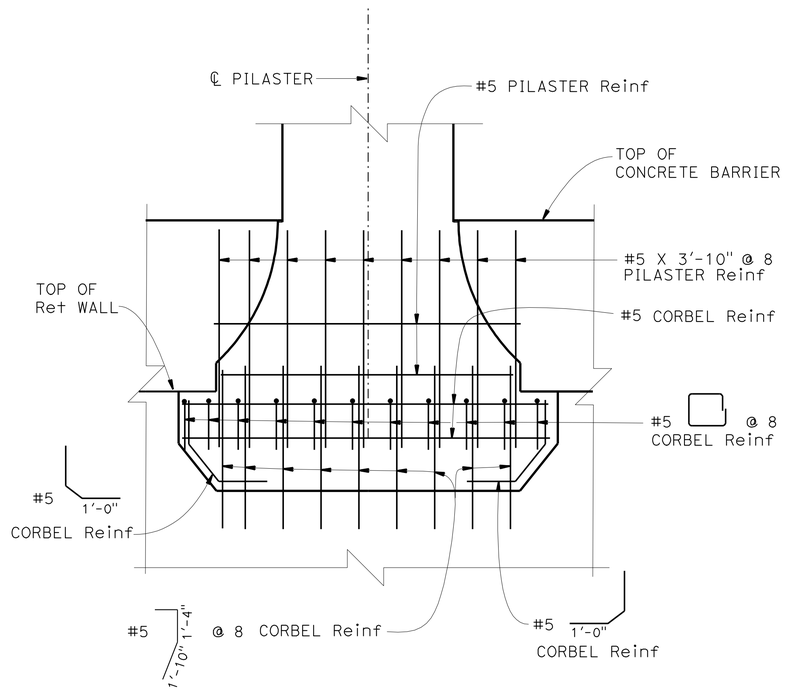

NOTE: Concrete Barrier/Ret Wall reinf not shown.

DETAIL A

¾" = 1'-0"

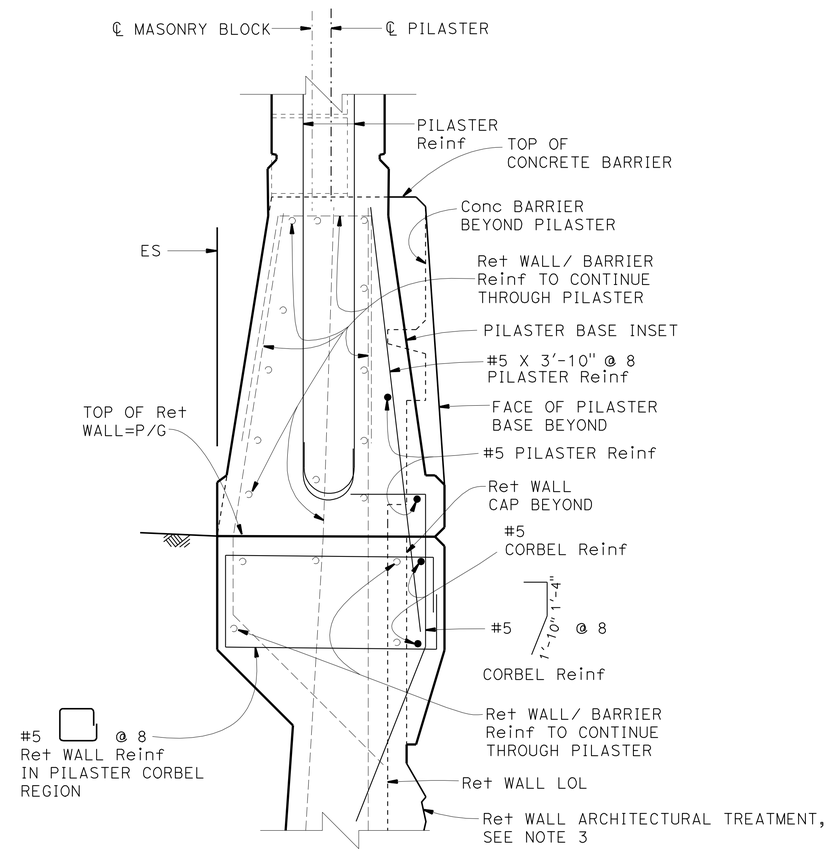

DETAIL C

1½" = 1'-0"

NOTE:
THE CONTRACTOR SHALL VERIFY ALL CONTROLLING FIELD DIMENSIONS BEFORE ORDERING OR FABRICATING ANY MATERIAL.

	BY	CHECKED
DESIGN	H. CHAVEZ	I. TASABIA
DETAILS	J. VALENCIA	F. WEI
QUANTITIES	L. Sanchez-Manzo	S. Yeh

STATE OF CALIFORNIA
DEPARTMENT OF TRANSPORTATION

DIVISION OF ENGINEERING SERVICES
STRUCTURE DESIGN
DESIGN BRANCH 21

BRIDGE NO. 53E0188
POST MILE 4.46

SOUND WALL NO. 251
PILASTER STRUCTURAL DETAILS NO. 3

STRUCTURES DESIGN DETAIL SHEET (ENGLISH) (REV. 09-01-10)

ORIGINAL SCALE IN INCHES FOR REDUCED PLANS 0 1 2 3

UNIT: 3623
PROJECT NUMBER & PHASE: 0700001834 & 1 CONTRACT NO.: 07-215941

DISREGARD PRINTS BEARING EARLIER REVISION DATES

REVISION DATES: 09/30/11 11/25/11 12/07/11 03/22/12

SHEET 39 OF 50

FILE => 53-E0188-q-pll_str_dt03.dgn

USERNAME => DATE PLOTTED => 14-APR-2012 TIME PLOTTED => 12:21

DIST	COUNTY	ROUTE	POST MILES TOTAL PROJECT	SHEET No.	TOTAL SHEETS
07	LA	5	4.0/5.9	1370	1597

REGISTERED CIVIL ENGINEER 2/12/11 DATE

4-9-12
PLANS APPROVAL DATE

REGISTERED PROFESSIONAL ENGINEER FRANK HSIAOSHIH WEI No. C 52918 Exp. 12-31-12 CIVIL STATE OF CALIFORNIA

The State of California or its officers or agents shall not be responsible for the accuracy or completeness of electronic copies of this plan sheet.

Symbol:

Ø : 2 bar bundle

Note: Total ⓔ bars shown are total number of top and bottom bars combined.

TABLE 1: TABLE OF REINFORCING STEEL DIMENSIONS AND DATA ◇1

DESIGN H	6′	8′	10′	12′	14′	16′	18′	20′	22′	24′	26′	28′	30′	32′
W	8′- 3″	8′- 6″	9′- 0″	9′- 6″	10′- 0″	10′- 9″	11′- 3″	12′- 0″	13′- 3″	14′- 3″	15′- 9″	16′- 9″	18′- 0″	19′- 9″
C	2′- 9″	2′- 9″	3′- 0″	3′- 3″	3′- 4″	3′- 6″	3′- 9″	4′- 0″	4′- 3″	4′- 9″	5′- 3″	5′- 6″	5′- 9″	6′- 7″
B	5′- 6″	5′- 9″	6′- 0″	6′- 3″	6′- 8″	7′- 3″	7′- 6″	8′- 0″	9′- 0″	9′- 6″	10′- 6″	11′- 3″	12′- 3″	13′- 2″
F PILE FOOTING	1′- 6″	1′- 6″	1′- 6″	1′- 6″	1′- 9″	2′- 0″	2′- 0″	2′- 6″	2′- 9″	2′- 9″	3′- 0″	3′- 3″	3′- 9″	4′- 0″
M	1′- 3″	1′- 6″	1′- 6″	1′- 9″	1′- 10″	2′- 0″	2′- 3″	2′- 6″	2′- 9″	3′- 3″	3′- 9″	4′- 0″	4′- 3″	5′- 1″
N	4′- 0″	4′- 3″	4′- 6″	4′- 9″	5′- 2″	5′- 9″	6′- 0″	6′- 6″	7′- 6″	8′-0″	9′-0″	9′- 9″	10′- 9″	11′- 9″
~~ROW 1 SPACING~~	~~12′- 3″~~	~~10′- 3″~~	~~8′- 9″~~	~~7′- 6″~~	~~6′- 3″~~	~~5′- 3″~~	~~4′- 9″~~	~~4′- 0″~~	~~3′- 9″~~	~~3′- 9″~~	~~4′-0″~~	~~3′- 9″~~	~~3′- 9″~~	~~3′- 9″~~
~~ROW 2 SPACING~~	~~14′- 0″~~	~~12′- 9″~~	~~11′- 6″~~	~~10′- 3″~~	~~9′- 3″~~	~~8′- 3″~~	~~7′- 9″~~	~~6′- 6″~~	~~7′- 6″~~	~~6′- 0″~~	~~4′- 0″~~	~~4′- 0″~~	~~3′- 9″~~	~~3′-9″~~
~~ROW 3 SPACING~~									~~6′- 0″~~	~~5′- 3″~~	~~5′ 0″~~	~~4′- 0″~~	~~6′- 0″~~	~~4′- 0″~~
~~ROW 4 SPACING~~													~~3′- 9″~~	~~3′-9″~~
STEM WITH HAUNCH, BATTER	0	1/2:12	1/2:12	1/2:12	1/2:12	1/2:12	1/2:12	1/2:12	1/2:12	5/8:12	3/4:12	7/8:12	1:12	1:12
~~STEM WITHOUT HAUNCH, BATTER~~	~~0~~	~~0~~	~~0~~	~~0~~	~~0~~	~~0~~	~~0~~	~~0~~	~~1/4:12~~	~~1/4:12~~	~~1/2:12~~	~~3/4:12~~	~~3/4:12~~	~~3/4:12~~
ⓐ BARS						#7 @ 15	#7 @ 12	#7 @ 12	#8 @ 12	#6 @ 6	#6 @ 6	#6 @ 6	#8 @ 9	#9 @ 9
ⓑ BARS	#8 @ 12	#7 @ 9	#7 @ 6	#7 @ 6	#7 @ 6	#9 @ 7.5	#9 @ 6	#10 @ 6	#10 @ 6	#8 @ 6Ø	#8 @ 6Ø	#8 @ 6Ø	#10 @ 9Ø	#11 @ 9Ø
ha			5′- 0″	6′- 0″	7′- 0″	7′ - 0″	6′- 0″	7′- 0″	7′- 0″	7′- 6″	8′- 6″	9′- 3″	15′- 0″	11′- 3″
hb						11′ - 6″	12′- 0″	13′- 3″	16′- 0″	15′- 6″	17′- 6″	18′- 9″	21′- 0″	20′- 9″
ⓒ BARS	#6 @ 12	#6 @ 9	#6 @ 6	#6 @ 6	#6 @ 6	#8 @ 7.5	#8 @ 6	#9 @ 6	#9 @ 6	#10 @ 6	#10 @ 6	#11 @ 6	#10 @ 9Ø	#10 @ 9Ø
ⓓ BARS	#5 @ 12	#5 @ 9	#5 @ 12	#5 @ 12	#5 @ 12	#6 @ 15	#5 @ 12	#5 @ 12	#6 @ 12	#6 @ 12	#6 @ 12	#7 @ 12	#6 @ 9	#9 @ 9
ⓔ BARS	10-#7 @ 6	8-#7 @ 7	10-#6 @ 6	8-#6 @ 6	6-#6 @ 12	6-#5 @ 12	6-#5 @ 12	6-#5@15	#5 @ 18	#5 @ 18	#5 @ 18	#5 @ 18	#5 @ 18	#5 @ 18
ⓕ BARS	10-#8 @ 7	10-#8 @ 6	10-#7 @ 8	12-#6 @ 7	8-#7 @ 11	7-#6 @ 13	8-#6 @ 12	8-#5@15	#5 @ 18	#5 @ 18	#5 @ 18	#5 @ 18	#5 @ 18	#5 @ 18

◇2 Note:

1. For location of Detail A, see "RETAINING WALL TYPE 1SWBP - DETAILS NO. 2" sheet.

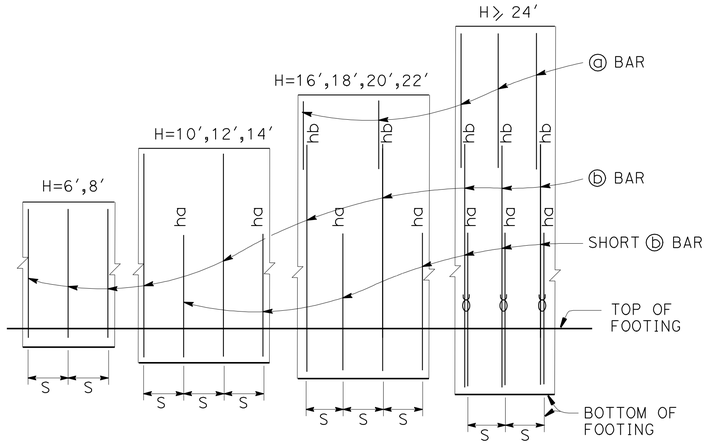

ELEVATION

Note:
"ha" and "hb" above ⓑ bars indicate distance from top of footing to upper end of ⓑ bars, see table.
"s" is ⓑ bar spacing, see table.
Ø :2 bar bundle

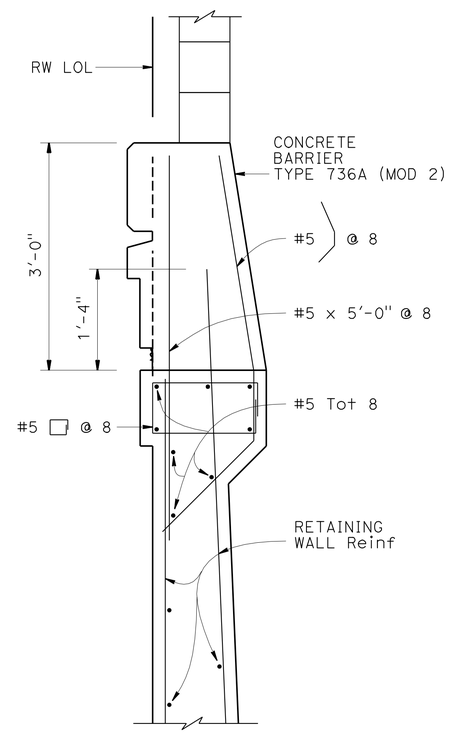

◇3 DETAIL A
1" = 1′-0"

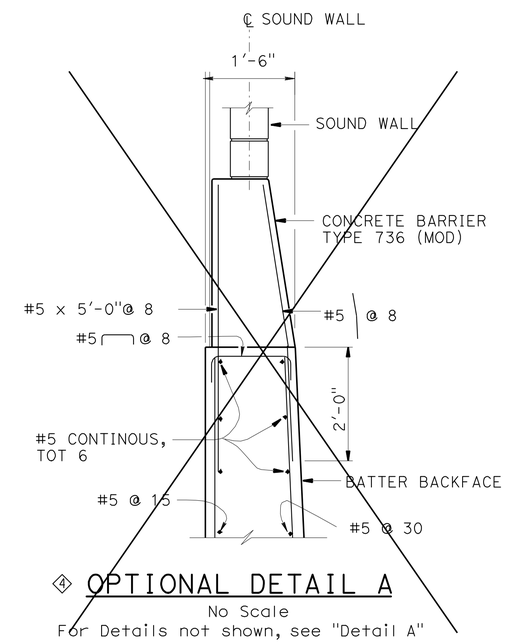

◇4 OPTIONAL DETAIL A
No Scale
For Details not shown, see "Detail A"

DESIGN DATA

Design: AASHTO LRFD Bridge Design Specifications 4th edition with California Amendments

WS: 33 psf on Soundwall and Barrier

LS: Varied surcharge on level ground surface

CT: 54 kip maximum traffic impact loading evenly distributed over 10 feet at top of the barrier and 1:1 distribution down and outward

EQE: Mononobe-Okabe Method
K_h = 0.3
K_v = 0.0

Soil: ϕ = 34°
γ = 120 pcf

Reinforced Concrete: f′c = 3600 psi
fy = 60,000 psi

Load Combinations and Limit States

Service I Q=1.00DC+1.00EV+1.00EH+1.00LS+0.30WS

Service II Q=1.00DC+1.00EV+1.00EH+1.00WS

Strength I Q=aDC+BEV+1.50EH+1.75LS
Q=1.25DC + 1.35EV + 0.90EH +1.75LS
(for piles at heel)

Strength III Q=aDC+BEV+1.50EH+1.40WS

Strength V Q=aDC+BEV+1.50EH+1.35LS+0.40WS

Extreme I Q=1.00DC+1.00EV+1.00EH+1.00EQD+1.00EQE

Extreme II Q=1.00DC+1.00EV+1.00EH+1.00CT

Where:

Q: Force Effects
a: 1.25 or 0.90, Which ever Controls Design
B: 1.35 or 1.00, which ever Controls Design
DC: Dead Load of Structure Components
EV: Vertical Earth Fill Pressure
LS: Live Load Surcharge
EQE: Seismic Earth Pressure
EQD: Soil and Structure Components Inertia. Soil inertia ignored for stem design
WS: Wind Load on Soundwall and Barrier
CT: Vehicular Collision Force

SPECIAL DETAILS

REVISED STANDARD DRAWING
FILE NO. xs14-320-1
APPROVAL DATE July 2011

◇1 Modified Table ◇3 Revised Detail
◇2 Revised Note ◇4 Deleted Detail

STATE OF CALIFORNIA DEPARTMENT OF TRANSPORTATION

DIVISION OF ENGINEERING SERVICES

BRIDGE NO. 53E0188
POST MILE 4.46

SOUND WALL NO. 251
RETAINING WALL TYPE 1SWBP - DETAIL NO. 1

DS OSD 2147A (ENGLISH STANDARD DRAWING "XS" BORDER REV. (02-02-11)

ORIGINAL SCALE IN INCHES FOR REDUCED PLANS 0 1 2 3

UNIT: 3623
PROJECT NUMBER & PHASE: 0700001834 & 1 CONTRACT NO.: 07-215941

DISREGARD PRINTS BEARING EARLIER REVISION DATES

REVISION DATES 09/30/11 11/25/11 12/07/11 03/22/12

SHEET 40 OF 50

FILE => 53-E0188-s-rw_typ1_dt01.dgn

USERNAME => s128843 DATE PLOTTED => 14-APR-2012 TIME PLOTTED => 12:21

DIST	COUNTY	ROUTE	POST MILES TOTAL PROJECT	SHEET No.	TOTAL SHEETS
07	LA	5	4.0/5.9	1371	1597

REGISTERED CIVIL ENGINEER 12/12/11 DATE

4-9-12
PLANS APPROVAL DATE

REGISTERED PROFESSIONAL ENGINEER FRANK HSIAOSHIH WEI No. C 52918 Exp. 12-31-12 CIVIL STATE OF CALIFORNIA

The State of California or its officers or agents shall not be responsible for the accuracy or completeness of electronic copies of this plan sheet.

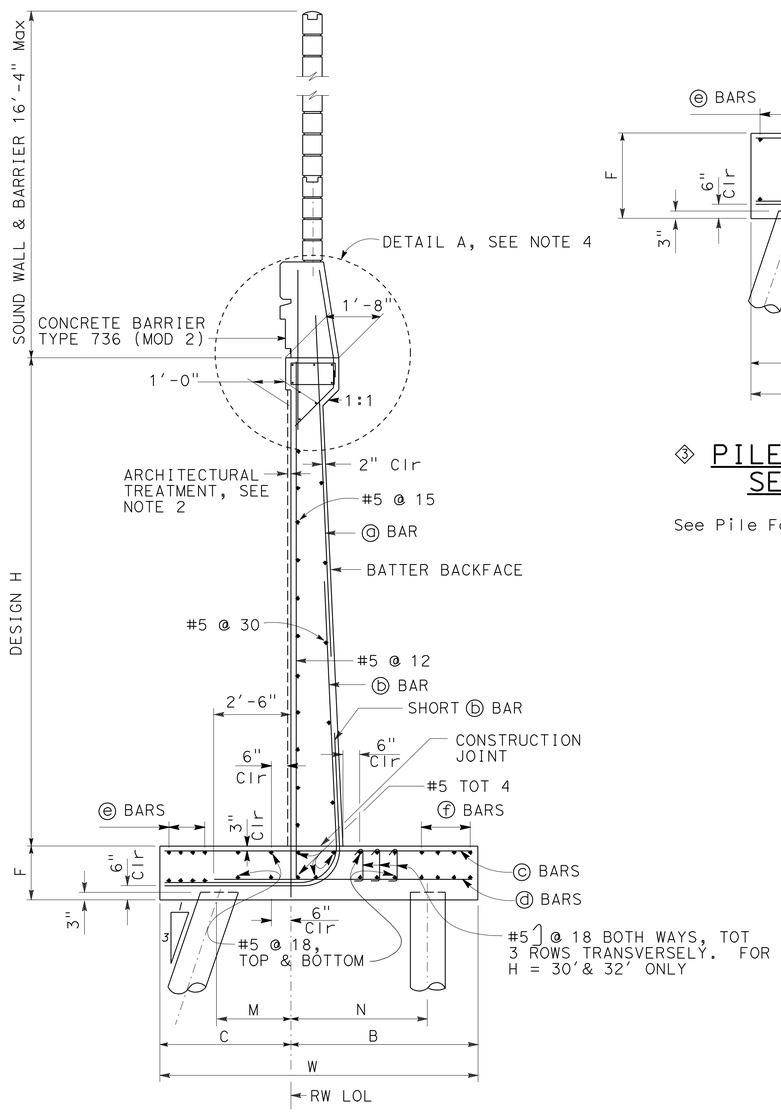

② PILE FOOTING SECTION

NO SCALE
All piles not shown

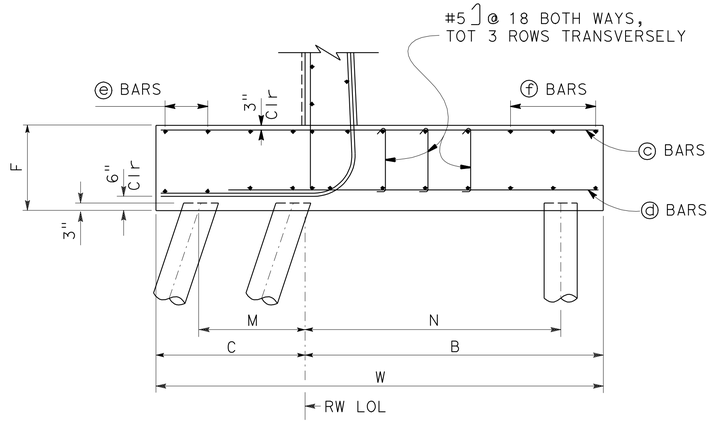

③ PILE FOOTING SECTION OVER SEWER - PADDISON LINE

NO SCALE
See Pile Footing Section for information not shown

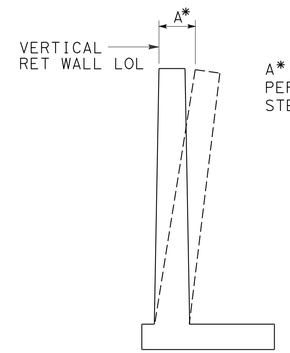

A* OFFSET = ½" PER 10' OF WALL STEM HEIGHT

WALL OFFSET

NO SCALE
Values for offsetting forms to be determined by the engineer

① Notes:

1. For pile spacing, see "STRUCTURE PLAN NO. 1" and "STRUCTURE PLAN NO. 2" sheets.
2. For architectural treatment, see "RETAINING WALL AND BARRIER ARCHITECTURAL DETAILS" sheet.
3. For details not shown and drainage notes, see B3-8
4. For "Detail A", see "RETAINING WALL TYPE 1 SWBP - DETAILS NO. 1" sheet.
5. For sound wall and barrer reinforcement, see "SOUND WALL - MASONRY BLOCK WITH BARRER ON RETAINING WALL DETAILS NO.1" and "SOUND WALL - MASONRY BLOCK WITH BARRER ON RETAINING WALL DETAILS NO.2" sheets.
6. For H=6' through 14', extend ⓑ bars into barrier.
7. For H≥16', extend ⓐ bars into barrier.
8. For table of reinforcing steel dimensions and data, see "RETAINING WALL TYPE 1 SWBP - DETAILS NO. 1" sheet.

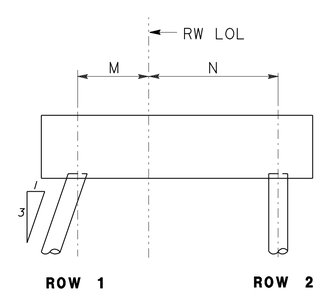

H = 6' through 20'

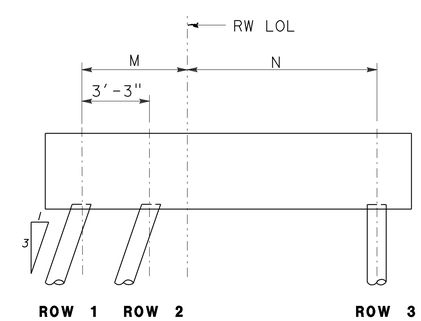

H = 22' through 28'

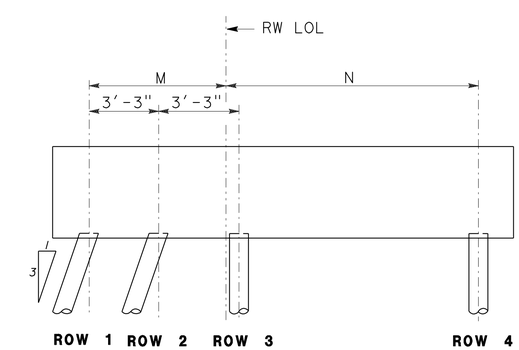

H = 30' and 32'

PILE PATTERN

NO SCALE

SPECIAL DETAILS

REVISED STANDARD DRAWING

FILE NO. xs14-320-2

APPROVAL DATE July 2011

① Added Notes ③ Added Detail
② Modified Detail

STATE OF CALIFORNIA DEPARTMENT OF TRANSPORTATION

DIVISION OF ENGINEERING SERVICES

BRIDGE NO. 53E0188
POST MILE 4.46

SOUND WALL NO. 251
RETAINING WALL TYPE 1SWBP - DETAIL NO. 2

DS OSD 2147A (ENGLISH STANDARD DRAWING "XS" BORDER REV. (02-02-11)

ORIGINAL SCALE IN INCHES FOR REDUCED PLANS 0 1 2 3

UNIT: 3623
PROJECT NUMBER & PHASE: 0700001834 & 1 CONTRACT NO.: 07-215941

DISREGARD PRINTS BEARING EARLIER REVISION DATES → REVISION DATES 09/30/11 11/25/11 12/07/11 03/22/12

SHEET 41 OF 50

FILE => 53-E0188-s-rw_typ1_dt02.dgn

USERNAME => s128843 DATE PLOTTED => 14-APR-2012 TIME PLOTTED => 12:21

DIST	COUNTY	ROUTE	POST MILES TOTAL PROJECT	SHEET No.	TOTAL SHEETS
07	LA	5	4.0/5.9	1372	1597

REGISTERED CIVIL ENGINEER 12/12/11 DATE

4-9-12
PLANS APPROVAL DATE

REGISTERED PROFESSIONAL ENGINEER FRANK HSIAOSHIH WEI No. C 52918 Exp. 12-31-12 CIVIL STATE OF CALIFORNIA

The State of California or its officers or agents shall not be responsible for the accuracy or completeness of electronic copies of this plan sheet.

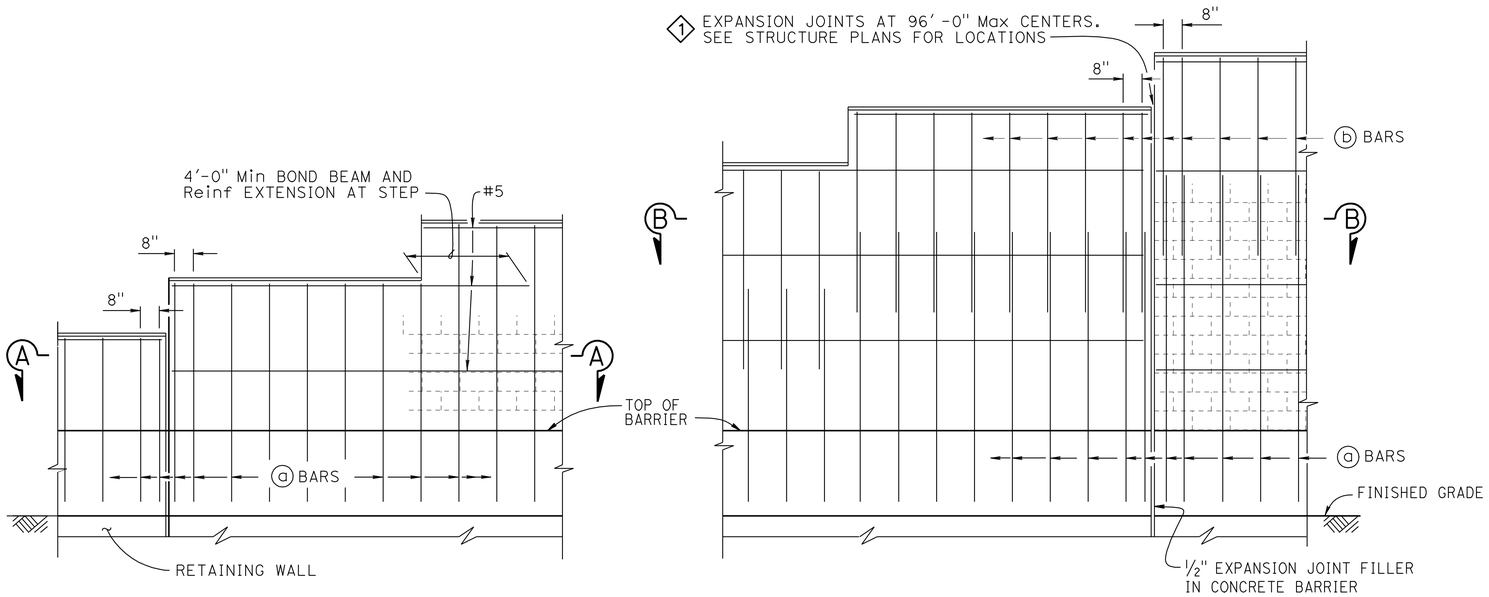

H=6'-4" THRU H=10'-4"

H=12'-4" THRU H=16'-4"

PART ELEVATION

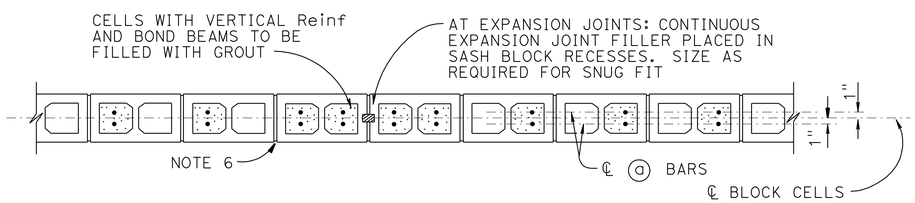

SECTION A-A

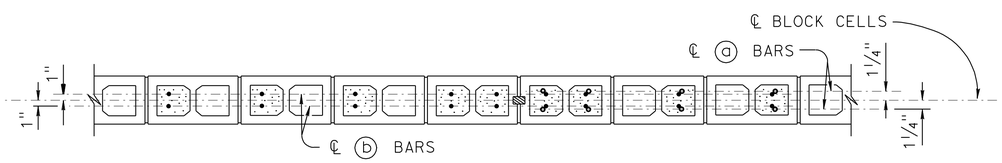

SECTION B-B

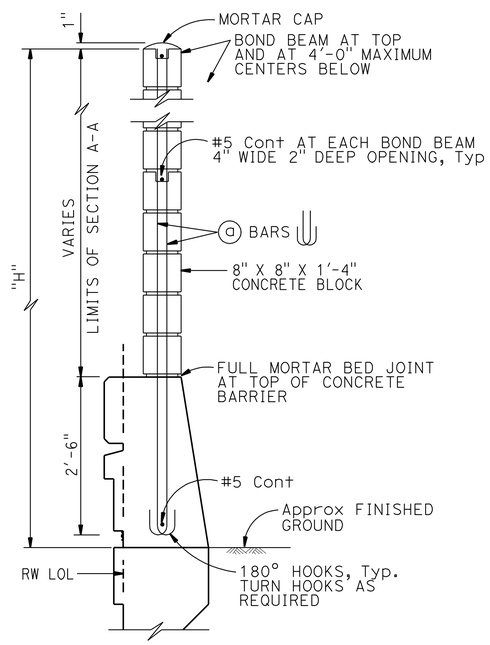

H=6'-4" THRU H=10'-4"

For details not shown, see H=12'-4" thru H=16'-4"

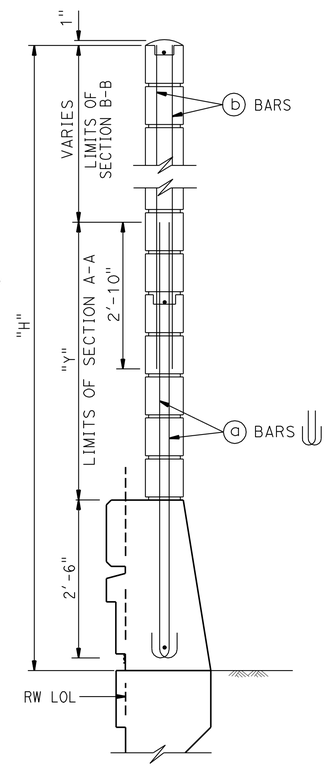

H=12'-4" THRU H=16'-4"

For details not shown, see H=6'-4" thru H=10'-4"

2 TYPICAL SECTION

SOUND WALL REINFORCEMENT TABLE

MAXIMUM "H"	ⓐ BARS @ 1'-4" Max	ⓑ BARS @ 1'-4" Max	"Y"	f'm (psi)	COMPRESSIVE STRENGTH OF CMU (psi)	MAXIMUM "H"
6'-4"	#4	———	———	1500	1900	6'-4"
8'-4"	#4	———	———	1500	1900	8'-4"
10'-4"	#4	———	———	1500	1900	10'-4"
12'-4"	#5	#4	5'-0"	1500	1900	12'-4"
14'-4"	#6	#4	7'-0"	1500	1900	14'-4"
16'-4"	#6	#4	9'-0"	2500	3700	16'-4"

NOTES:

1. For details not shown, see "SOUND WALL - MASONRY BLOCK WITH BARRIER ON RETAINING WALL - DETAILS NO. 2" sheet
2. Slope ground at traffic side of barrier to drain. Maximum slope ±10%
3. See STANDARD PLANS B15-9 for other details
4. For type of block and joint finish, see other sheets
5. When blocks are laid in stacked bond, ladder type, galvanized joint reinforcement shall be provided. A minimum of 2-9 gauge wire continuous at 4'-0" maximum to be used. Locate reinforcement in joints that are at the approximate midpoint between bond beams
6. Horizontal joints shall be tooled concave or may be weathered. Vertical joints shall be tooled concave or may be raked
7. For intermediate wall heights that are between the "H's" given, use the tabular information for the next higher "H"
8. Masonry strengths are listed in "SOUND WALL REINFORCEMENT TABLE"
9. Concrete to be used for the barrier shall contain not less than 590 pounds of cementitious material per cubic yard

SPECIAL DETAILS

NO SCALE

REVISED STANDARD DRAWING

FILE NO. xs15-130-1e

APPROVAL DATE 10-22-09

1 Revised Call Out

2 Modified Detail

STATE OF CALIFORNIA DEPARTMENT OF TRANSPORTATION

DIVISION OF ENGINEERING SERVICES

BRIDGE NO. 53E0188

POST MILE 4.46

SOUND WALL NO. 251

SOUNDWALL - MASONRY BLOCK WITH BARRIER ON RETAINING WALL DETAILS NO. 1

DS OSD 2147A (ENGLISH STANDARD DRAWING "XS" BORDER REV. (02-02-11)

ORIGINAL SCALE IN INCHES FOR REDUCED PLANS 0 1 2 3

UNIT: 3623
PROJECT NUMBER & PHASE: 0700001834 & 1 CONTRACT NO.: 07-215941

DISREGARD PRINTS BEARING EARLIER REVISION DATES

REVISION DATES: 09/30/11 11/25/11 12/12/11 03/22/13

SHEET 42 OF 50

FILE => 53-E0188-u-sw_mas_blk_dt01.dgn

USERNAME => s128643 DATE PLOTTED => 14-APR-2012 TIME PLOTTED => 12:22

DIST	COUNTY	ROUTE	POST MILES TOTAL PROJECT	SHEET No.	TOTAL SHEETS
07	LA	5	4.0/5.9	1373	1597

REGISTERED CIVIL ENGINEER 12/12/11 DATE

4-9-12
PLANS APPROVAL DATE

REGISTERED PROFESSIONAL ENGINEER FRANK HSIAOSHIH WEI No. C 52918 Exp. 12-31-12 CIVIL STATE OF CALIFORNIA

The State of California or its officers or agents shall not be responsible for the accuracy or completeness of electronic copies of this plan sheet.

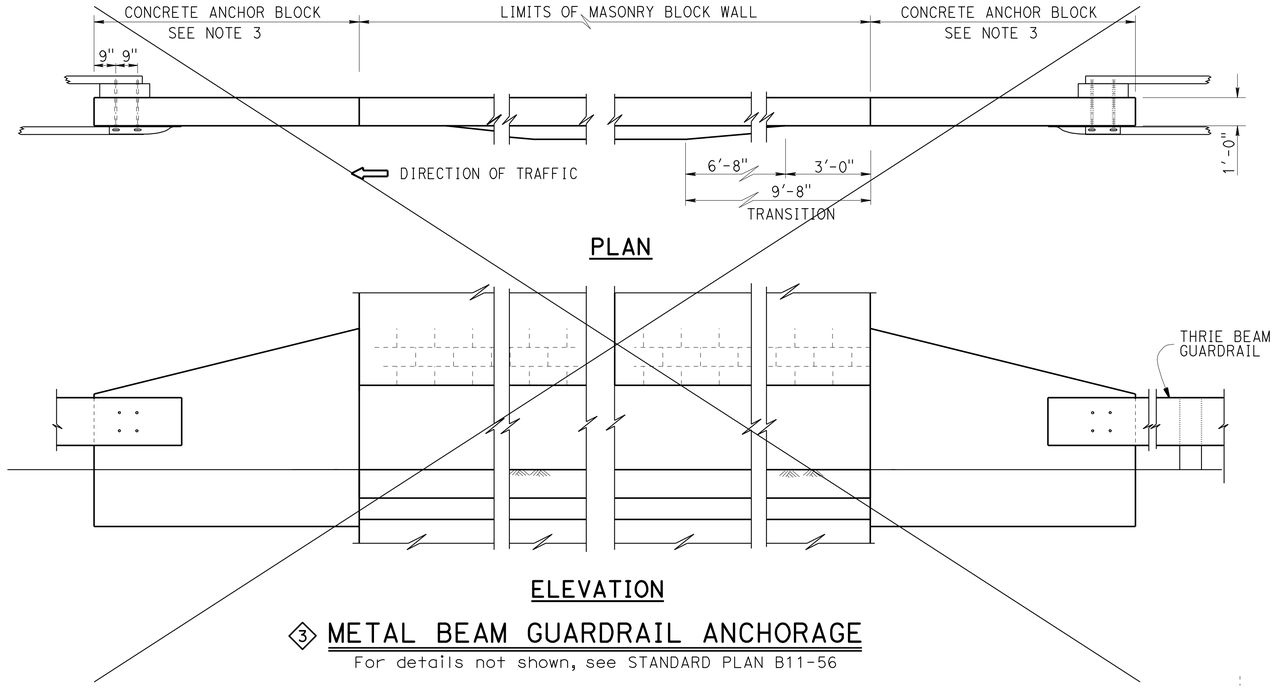

3 METAL BEAM GUARDRAIL ANCHORAGE

For details not shown, see STANDARD PLAN B11-56

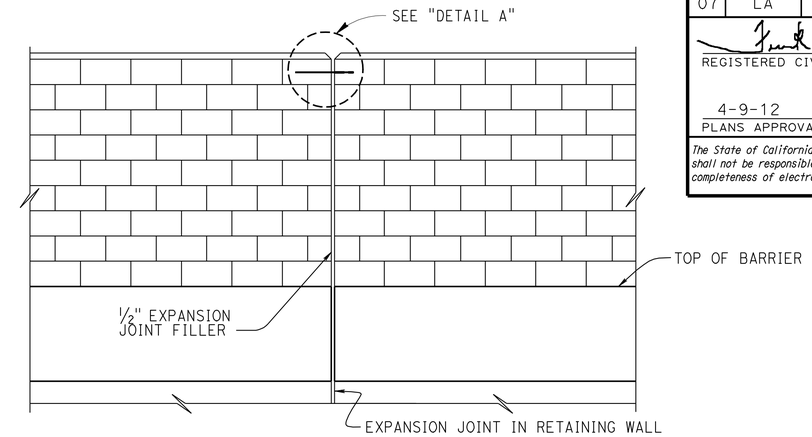

ALIGNMENT KEY DETAIL

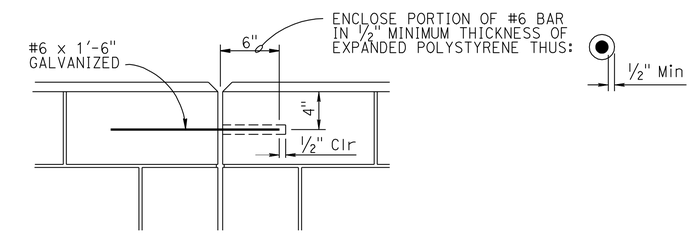

DETAIL A

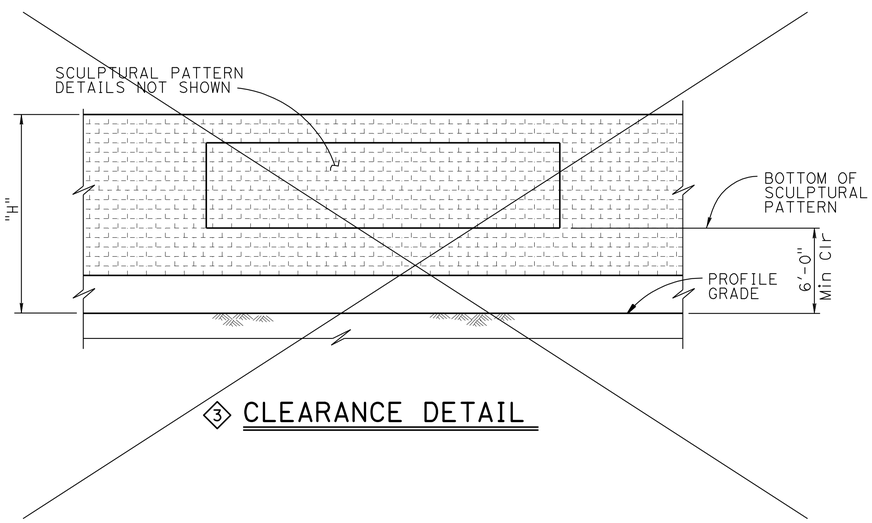

3 CLEARANCE DETAIL

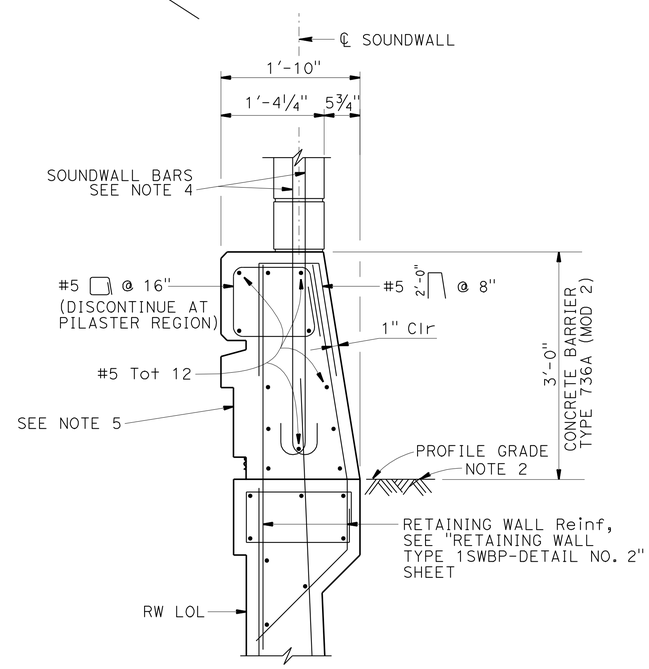

1 BARRIER SECTION

DESIGN NOTES

DESIGN
Uniform Building Code, 1997 Edition and the Bridge Design Specifications

DESIGN WIND LOAD
33 psf

DESIGN SEISMIC LOAD
0.57 Dead load

CONCRETE MASONRY

REINFORCED CONCRETE	REGULAR STRENGTH	HIGH STRENGTH	
f'c = 3600 psi	f'm = 1500 psi	f'm = 2000 psi	f'm = 2500 psi
fy = 60 ksi	fb = 495 psi	fb = 660 psi	fb = 830 psi
	fs = 24,000 psi	fs = 24,000 psi	fs = 24,000 psi
	n = 25.8	n = 19.3	n = 15.5

2 NOTES:

1. For details not shown, see REVISED STANDARD PLAN B15-6.
2. Slope ground at traffic side of barrier to drain. Maximum slope ±10% See STANDARD PLAN B11-56, Note D.
3. ~~For Concrete Anchor Block and connection details, see "CONNNECTION DETAIL DD" on STANDARD PLAN A77J3~~
4. See "TYPICAL SECTIONS" on "SOUNDWALL - MASONRY BLOCK WITH BARRIER ON RETAINING WALL DETAILS NO. 1" sheet.
5. For barrier architectural details, see "RETAINING WALL AND BARRIER ARCHITECTURAL DETAILS" sheet.

SPECIAL DETAILS

NO SCALE

REVISED STANDARD DRAWING

FILE NO. xs15-130-2e

APPROVAL DATE 10-22-09

1 Modified Detail
2 Revised Notes
3 Deleted Detail

STATE OF CALIFORNIA
DEPARTMENT OF TRANSPORTATION

DIVISION OF ENGINEERING SERVICES

BRIDGE NO. 53E0188
POST MILE 4.46

SOUND WALL NO. 251

SOUNDWALL - MASONRY BLOCK WITH BARRIER ON RETAINING WALL DETAILS NO. 2

DS OSD 2147A (ENGLISH STANDARD DRAWING "XS" BORDER REV. (02-02-11)

ORIGINAL SCALE IN INCHES FOR REDUCED PLANS 0 1 2 3

UNIT: 3623
PROJECT NUMBER & PHASE: 0700001834 & 1 CONTRACT NO.: 07-215941

DISREGARD PRINTS BEARING EARLIER REVISION DATES

REVISION DATES 09/30/11 11/25/11 12/12/11 03/22/12

SHEET 43 OF 50

FILE => 53-E0188-u-sw_mas_blk_dt02.dgn

USERNAME => s128643 DATE PLOTTED => 14-APR-2012 TIME PLOTTED => 12:22

DIST	COUNTY	ROUTE	POST MILES TOTAL PROJECT	SHEET No.	TOTAL SHEETS
07	LA	5	4.0/5.9	1374	1597

REGISTERED CIVIL ENGINEER DATE

4-9-12
PLANS APPROVAL DATE

REGISTERED PROFESSIONAL ENGINEER
Amare Tsegie
No. C67529
Exp. 6-30-13
CIVIL
STATE OF CALIFORNIA

The State of California or its officers or agents shall not be responsible for the accuracy or completeness of electronic copies of this plan sheet.

This LOTB sheet was prepared in accordance with the Caltrans Soil & Rock Logging, Classification, & Presentation Manual (2010 Edition).

BENCH MARK

ELEVATION 105.78 FT
LA 5 PM 4.8, 1995
FOUND 2-1/2 INCH CADT DISK IN CONCRETE CURB, FLUSH, STAMPED "LA5 4.8 1995"
THE MARK IS LOCATED ON THE EASTERLY CURB OF THE OFFRAMP GORE FROM
THE SOUTH BOUND 5 (SANTA ANA FWY) TO NORWALK BLVD. AND SAN ANTONIO ST.
NORTHING 1791107.943
EASTING 6538243.925
VERTICAL NAVD88, 0405-CALIFORNIA 5 US FEET.

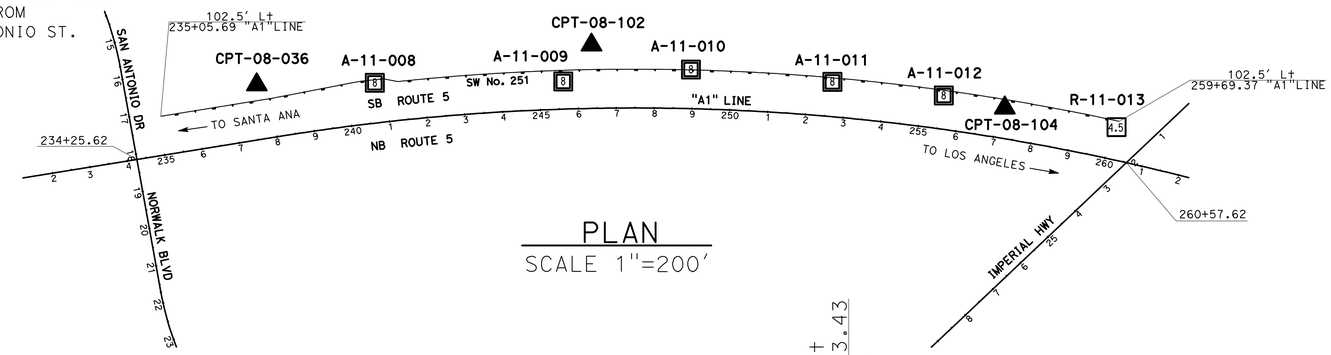

PLAN
SCALE 1"=200'

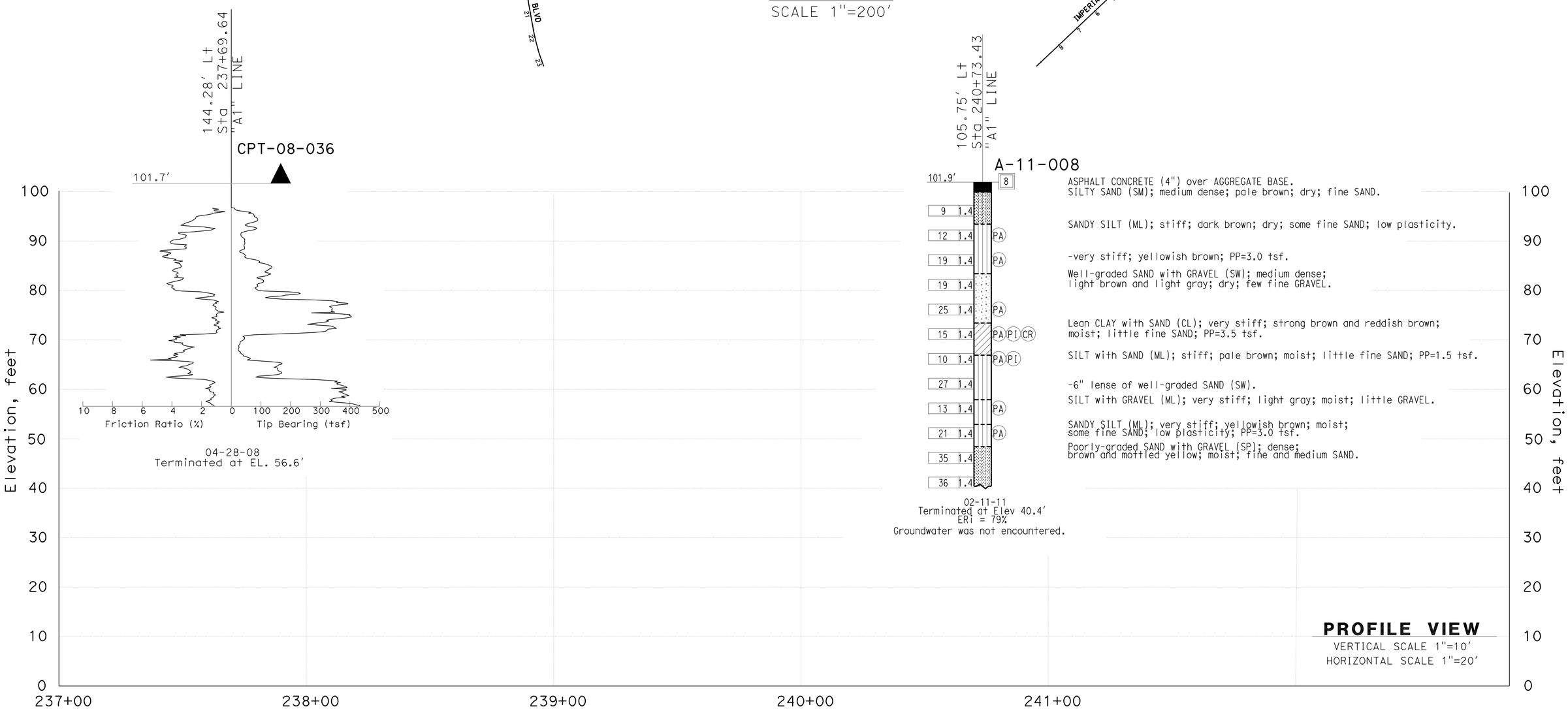

PROFILE VIEW
VERTICAL SCALE 1"=10'
HORIZONTAL SCALE 1"=20'

ENGINEERING SERVICES	MATERIALS AND GEOTECHNICAL SERVICES	STATE OF CALIFORNIA DEPARTMENT OF TRANSPORTATION	DIVISION OF ENGINEERING SERVICES STRUCTURE DESIGN DESIGN BRANCH 21	BRIDGE NO. 53E0188 POST MILE 4.46	SOUND WALL NO. 251
FUNCTIONAL SUPERVISOR NAME: CHI-TSENG LIU	DRAWN BY: P.QUACH / T.Panah (URS CORP) CHECKED BY: F.GERAMI	FIELD INVESTIGATION BY: A.TSEGIE/M.ISLAM/P.MCDONALD			LOG OF TEST BORINGS SHEET 1 OF 7

OGS CIVIL LOG OF TEST BORINGS SHEET
ORIGINAL SCALE IN INCHES FOR REDUCED PLANS 0 1 2 3
UNIT: 3658
PROJECT NUMBER & PHASE: 07 00001834 1 CONTRACT NO.: 07-215941
DISREGARD PRINTS BEARING EARLIER REVISION DATES
REVISION DATES 12/14/11
SHEET 44 OF 50
FILE => 53-E0188-z-lotb_01.dgn
USERNAME => s128843 DATE PLOTTED => 14-APR-2012 TIME PLOTTED => 12:22

DIST	COUNTY	ROUTE	POST MILES TOTAL PROJECT	SHEET No.	TOTAL SHEETS
07	LA	5	4.0/5.9	1375	1597

REGISTERED CIVIL ENGINEER DATE

4-9-12
PLANS APPROVAL DATE

REGISTERED PROFESSIONAL ENGINEER
Amare Tsegie
No. C67529
Exp. 6-30-13
CIVIL
STATE OF CALIFORNIA

The State of California or its officers or agents shall not be responsible for the accuracy or completeness of electronic copies of this plan sheet.

This LOTB sheet was prepared in accordance with the Caltrans Soil & Rock Logging, Classification, & Presentation Manual (2010 Edition).

FOR PLAN VIEW, SEE
"LOG OF TEST BORINGS" 1 OF 7

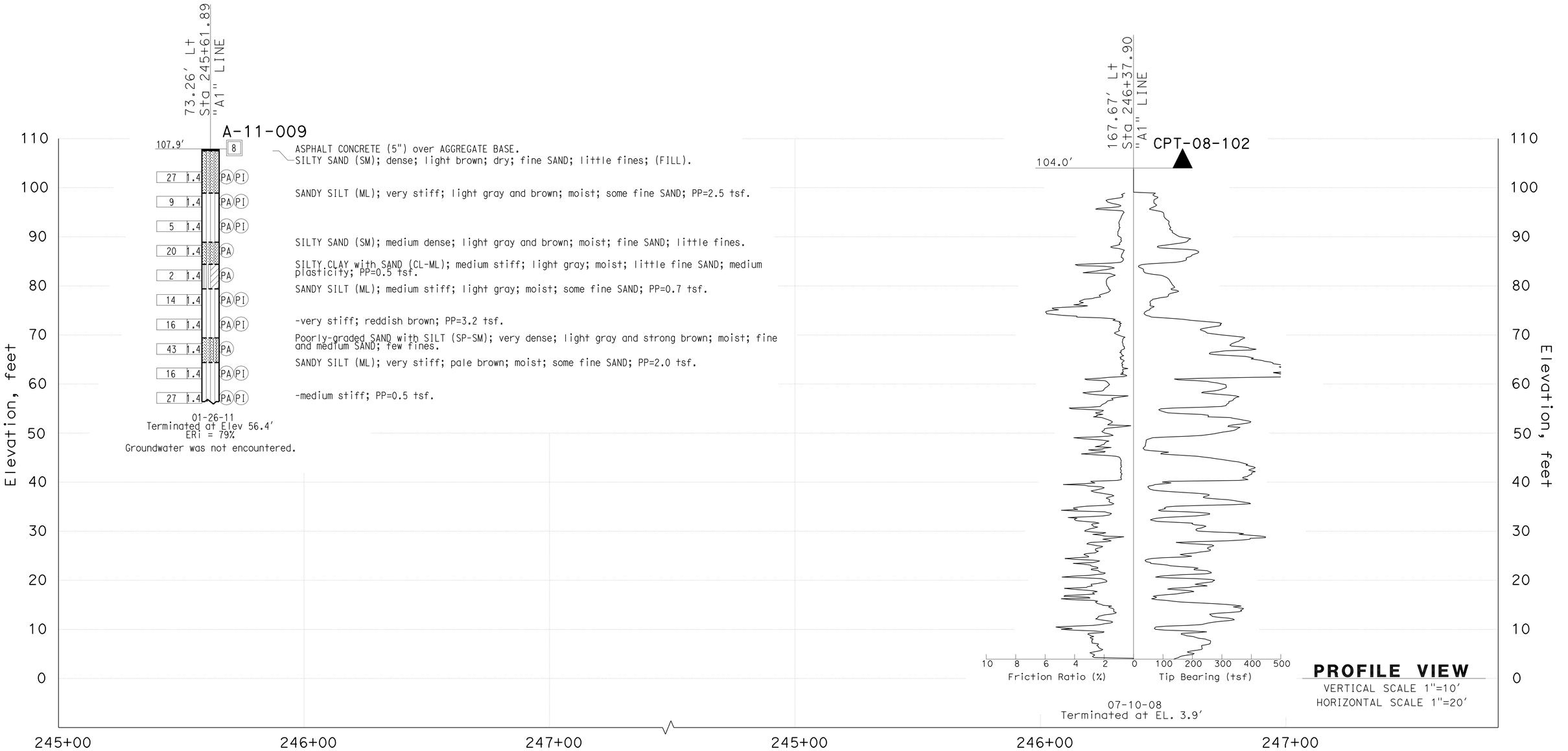

ENGINEERING SERVICES	MATERIALS AND GEOTECHNICAL SERVICES	STATE OF CALIFORNIA DEPARTMENT OF TRANSPORTATION	DIVISION OF ENGINEERING SERVICES STRUCTURE DESIGN DESIGN BRANCH 21	BRIDGE NO. 53E0188 POST MILE 4.46	SOUND WALL NO. 251
FUNCTIONAL SUPERVISOR NAME: CHI-TSENG LIU	DRAWN BY: P.QUACH / T.Panah (URS CORP) CHECKED BY: F.GERAMI	FIELD INVESTIGATION BY: A.TSEGIE/M.ISLAM/P.MCDONALD			LOG OF TEST BORINGS SHEET 2 OF 7

OGS CIVIL LOG OF TEST BORINGS SHEET

ORIGINAL SCALE IN INCHES FOR REDUCED PLANS 0 1 2 3

UNIT: 3658
PROJECT NUMBER & PHASE: 07 00001834 1 CONTRACT NO.: 07-215941

DISREGARD PRINTS BEARING EARLIER REVISION DATES

REVISION DATES 12/14/11

SHEET 45 OF 50

FILE => 53-E0188-z-lotb_02.dgn

USERNAME => s128843 DATE PLOTTED => 14-APR-2012 TIME PLOTTED => 12:22

DIST	COUNTY	ROUTE	POST MILES TOTAL PROJECT	SHEET No.	TOTAL SHEETS
07	LA	5	4.0/5.9	1376	1597

REGISTERED CIVIL ENGINEER DATE

4-9-12
PLANS APPROVAL DATE

REGISTERED PROFESSIONAL ENGINEER
Amare Tsegie
No. C67529
Exp. 6-30-13
CIVIL
STATE OF CALIFORNIA

The State of California or its officers or agents shall not be responsible for the accuracy or completeness of electronic copies of this plan sheet.

This LOTB sheet was prepared in accordance with the Caltrans Soil & Rock Logging, Classification, & Presentation Manual (2010 Edition).

FOR PLAN VIEW, SEE
"LOG OF TEST BORINGS" 1 OF 7

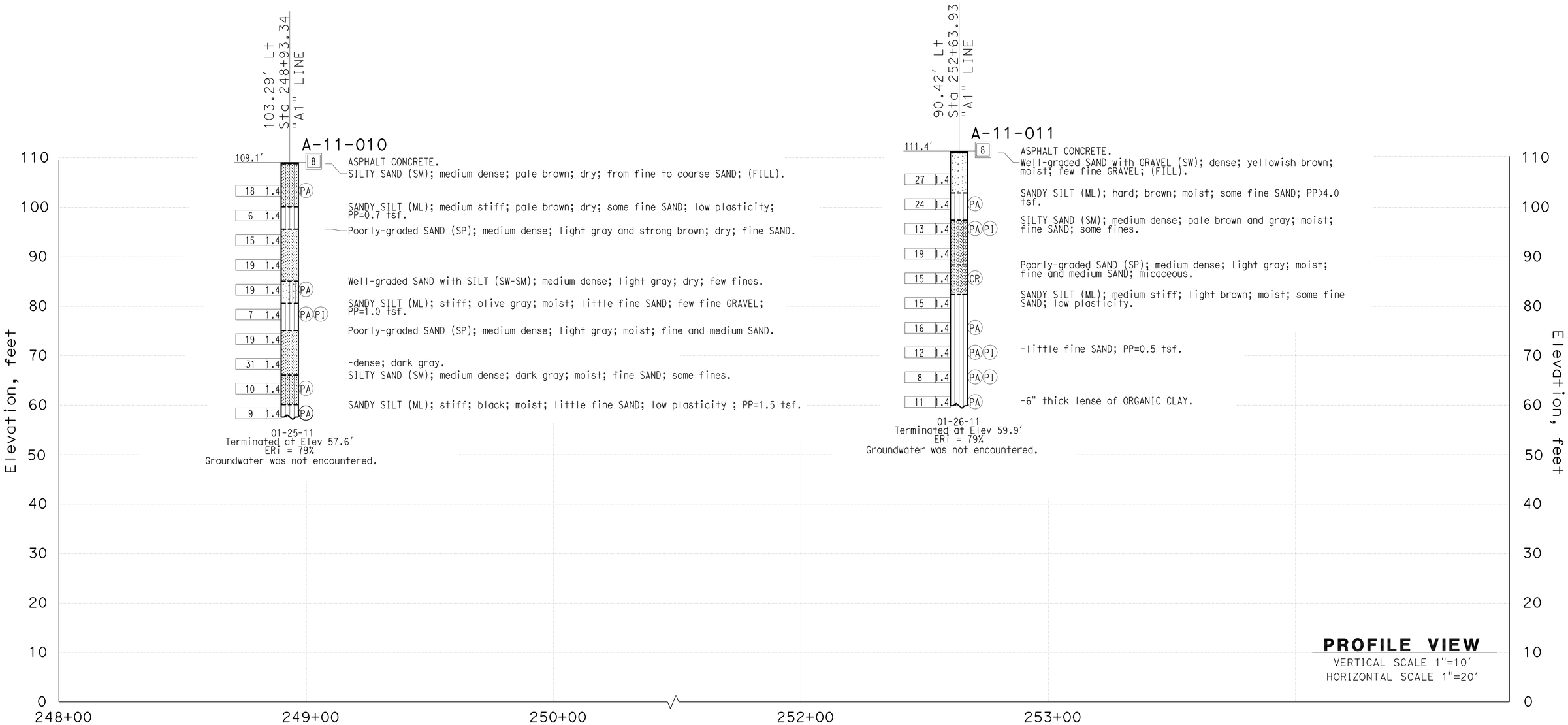

ENGINEERING SERVICES	MATERIALS AND GEOTECHNICAL SERVICES	STATE OF CALIFORNIA DEPARTMENT OF TRANSPORTATION	DIVISION OF ENGINEERING SERVICES STRUCTURE DESIGN DESIGN BRANCH 21	BRIDGE NO. 53E0188 POST MILE 4.46	SOUND WALL NO. 251
FUNCTIONAL SUPERVISOR NAME: CHI-TSENG LIU	DRAWN BY: P.QUACH / T.Panah (URS CORP) CHECKED BY: F.GERAMI	FIELD INVESTIGATION BY: A.TSEGIE/M.ISLAM			LOG OF TEST BORINGS SHEET 3 OF 7

OGS CIVIL LOG OF TEST BORINGS SHEET

ORIGINAL SCALE IN INCHES FOR REDUCED PLANS 0 1 2 3

UNIT: 3658
PROJECT NUMBER & PHASE: 07 00001834 1 CONTRACT NO.: 07-215941

DISREGARD PRINTS BEARING EARLIER REVISION DATES

REVISION DATES 12/14/11

SHEET 46 OF 50

FILE => 53-E0188-z-lotb_03.dgn

USERNAME => s128843 DATE PLOTTED => 14-APR-2012 TIME PLOTTED => 12:47

DIST	COUNTY	ROUTE	POST MILES TOTAL PROJECT	SHEET No.	TOTAL SHEETS
07	LA	5	4.0/5.9	1377	1597

REGISTERED CIVIL ENGINEER DATE

4-9-12
PLANS APPROVAL DATE

REGISTERED PROFESSIONAL ENGINEER
Amare Tsegie
No. C67529
Exp. 6-30-13
CIVIL
STATE OF CALIFORNIA

The State of California or its officers or agents shall not be responsible for the accuracy or completeness of electronic copies of this plan sheet.

This LOTB sheet was prepared in accordance with the Caltrans Soil & Rock Logging, Classification, & Presentation Manual (2010 Edition).

FOR PLAN VIEW, SEE
"LOG OF TEST BORINGS" 1 OF 7

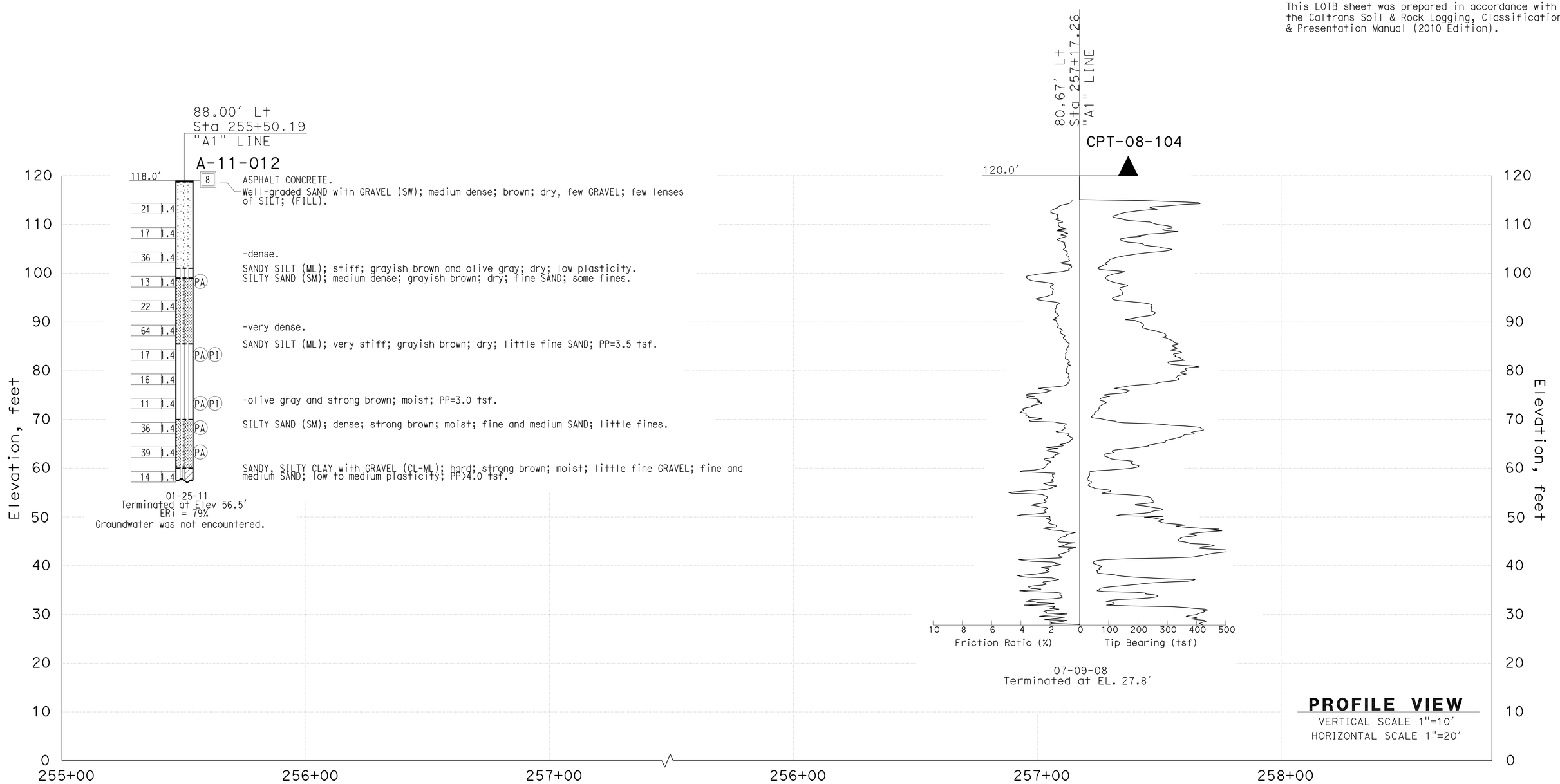

ENGINEERING SERVICES	MATERIALS AND GEOTECHNICAL SERVICES	STATE OF CALIFORNIA DEPARTMENT OF TRANSPORTATION	DIVISION OF ENGINEERING SERVICES STRUCTURE DESIGN DESIGN BRANCH 21	BRIDGE NO. 53E0188 POST MILE 4.46	SOUND WALL NO. 251
FUNCTIONAL SUPERVISOR NAME: CHI-TSENG LIU	DRAWN BY: P.QUACH / T.Panah (URS CORP) CHECKED BY: F.GERAMI	FIELD INVESTIGATION BY: A.TSEGIE/M.ISLAM/P.MCDONALD			LOG OF TEST BORINGS SHEET 4 OF 7

OGS CIVIL LOG OF TEST BORINGS SHEET

ORIGINAL SCALE IN INCHES FOR REDUCED PLANS 0 1 2 3

UNIT: 3658
PROJECT NUMBER & PHASE: 07 00001834 1 CONTRACT NO.: 07-215941

DISREGARD PRINTS BEARING EARLIER REVISION DATES

REVISION DATES 12/14/11

SHEET 47 OF 50

FILE => 53-E0188-z-lotb_04.dgn

USERNAME => s128843 DATE PLOTTED => 14-APR-2012 TIME PLOTTED => 12:47

DIST	COUNTY	ROUTE	POST MILES TOTAL PROJECT	SHEET No.	TOTAL SHEETS
07	LA	5	4.0/5.9	1378	1597

REGISTERED CIVIL ENGINEER DATE

4-9-12
PLANS APPROVAL DATE

REGISTERED PROFESSIONAL ENGINEER
Amare Tsegie
No. C67529
Exp. 6-30-13
CIVIL
STATE OF CALIFORNIA

The State of California or its officers or agents shall not be responsible for the accuracy or completeness of electronic copies of this plan sheet.

This LOTB sheet was prepared in accordance with the Caltrans Soil & Rock Logging, Classification, & Presentation Manual (2010 Edition).

FOR PLAN VIEW, SEE
"LOG OF TEST BORINGS" 1 OF 7

ENGINEERING SERVICES	MATERIALS AND GEOTECHNICAL SERVICES	STATE OF CALIFORNIA DEPARTMENT OF TRANSPORTATION	DIVISION OF ENGINEERING SERVICES STRUCTURE DESIGN DESIGN BRANCH 21	BRIDGE NO. 53E0188 POST MILE 4.46	SOUND WALL NO. 251
FUNCTIONAL SUPERVISOR NAME: CHI-TSENG LIU	DRAWN BY: P.QUACH / T.Panah (URS CORP) CHECKED BY: F.GERAMI	FIELD INVESTIGATION BY: A.TSEGIE/M.ISLAM			LOG OF TEST BORINGS SHEET 5 OF 7

OGS CIVIL LOG OF TEST BORINGS SHEET

ORIGINAL SCALE IN INCHES FOR REDUCED PLANS 0 1 2 3

UNIT: 3658
PROJECT NUMBER & PHASE: 07 00001834 1 CONTRACT NO.: 07-215941

DISREGARD PRINTS BEARING EARLIER REVISION DATES → 12/14/11

REVISION DATES | SHEET 48 | OF 50

FILE => 53-E0188-z-lotb_05.dgn

USERNAME => s128843 DATE PLOTTED => 14-APR-2012 TIME PLOTTED => 12:47

REFERENCE: CALTRANS SOIL & ROCK LOGGING, CLASSIFICATION, AND PRESENTATION MANUAL (2010)

DIST	COUNTY	ROUTE	POST MILES TOTAL PROJECT	SHEET No.	TOTAL SHEETS
07	LA	5	4.0/5.9	1379	1597

REGISTERED CIVIL ENGINEER DATE

4-9-12
PLANS APPROVAL DATE

REGISTERED PROFESSIONAL ENGINEER
Amare Tsegie
No. C67529
Exp. 6-30-13
CIVIL
STATE OF CALIFORNIA

The State of California or its officers or agents shall not be responsible for the accuracy or completeness of electronic copies of this plan sheet.

This LOTB sheet was prepared in accordance with the Caltrans Soil & Rock Logging, Classification, & Presentation Manual (2010 Edition).

CEMENTATION

Description	Criteria
Weak	Crumbles or breaks with handling or little finger pressure.
Moderate	Crumbles or breaks with considerable finger pressure.
Strong	Will not crumble or break with finger pressure.

BOREHOLE IDENTIFICATION

Symbol	Hole Type	Description
Size	A	Auger Boring (hollow or solid stem bucket)
Size	R RW RC P	Rotary drilled boring (conventional) Rotary drilled with self-casing wire-line Rotary core with continuously-sampled, self-casing wire-line Rotary percussion boring (air)
Size	R	Rotary drilled diamond core
Size	HD HA	Hand driven (1-inch soil tube) Hand Auger
●	D	Dynamic Cone Penetration Boring
▲	CPT	Cone Penetration Test (ASTM D 5778)
⬚	O	Other (note on LOTB)

Note: Size in inches.

CONSISTENCY OF COHESIVE SOILS

Description	Shear Strength (tsf)	Pocket Penetrometer Measurement, PP, (tsf)	Torvane Measurement, TV, (tsf)	Vane Shear Measurement, VS, (tsf)
Very Soft	Less than 0.12	Less than 0.25	Less than 0.12	Less than 0.12
Soft	0.12 - 0.25	0.25 - 0.5	0.12 - 0.25	0.12 - 0.25
Medium Stiff	0.25 - 0.5	0.5 - 1	0.25 - 0.5	0.25 - 0.5
Stiff	0.5 - 1	1 - 2	0.5 - 1	0.5 - 1
Very Stiff	1 - 2	2 - 4	1 - 2	1 - 2
Hard	Greater than 2	Greater than 4	Greater than 2	Greater than 2

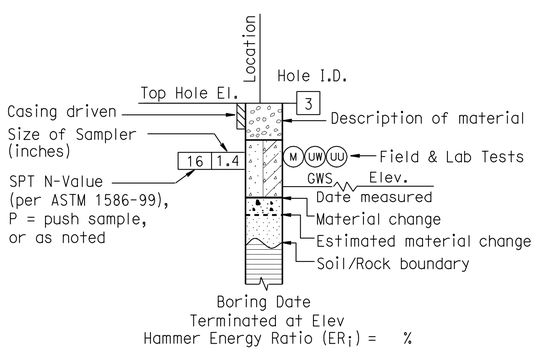

ROTARY BORING

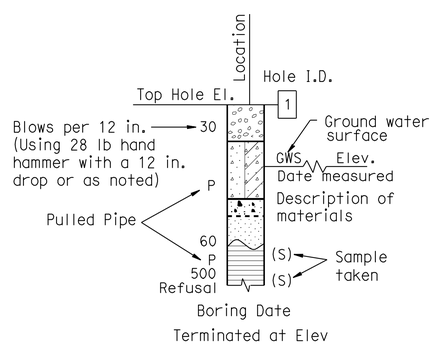

HAND BORING

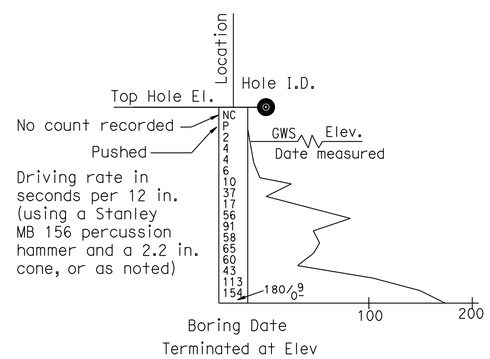

DYNAMIC CONE PENETRATION BORING

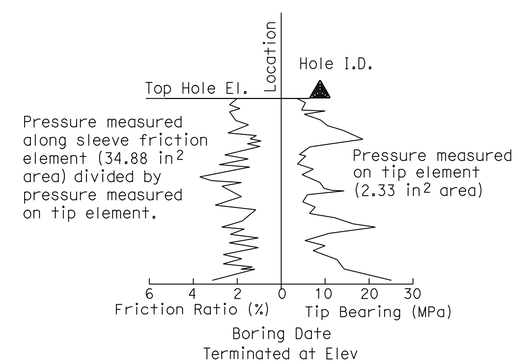

CONE PENETRATION TEST (CPT) BORING

ENGINEERING SERVICES	MATERIALS AND GEOTECHNICAL SERVICES	STATE OF CALIFORNIA DEPARTMENT OF TRANSPORTATION	DIVISION OF ENGINEERING SERVICES STRUCTURE DESIGN DESIGN BRANCH 21	BRIDGE NO. 53E0188 POST MILE 4.46	SOUND WALL NO. 251
FUNCTIONAL SUPERVISOR NAME: CHI-TSENG LIU	DRAWN BY: P.QUACH / T.Panah (URS CORP) CHECKED BY: F.GERAMI	FIELD INVESTIGATION BY: A.TSEGIE/M.ISLAM/P.MCDONALD			LOG OF TEST BORINGS SHEET 6 OF 7

OGS CIVIL LOG OF TEST BORINGS SHEET

ORIGINAL SCALE IN INCHES FOR REDUCED PLANS 0 1 2 3

UNIT: 3658
PROJECT NUMBER & PHASE: 07 00001834 1 CONTRACT NO.: 07-215941

DISREGARD PRINTS BEARING EARLIER REVISION DATES → 12/14/11

REVISION DATES | SHEET 49 OF 50

FILE => 53-E0188-z-lotb_06.dgn

USERNAME => s128843 DATE PLOTTED => 14-APR-2012 TIME PLOTTED => 12:47

REFERENCE: CALTRANS SOIL & ROCK LOGGING, CLASSIFICATION, AND PRESENTATION MANUAL (2010)

GROUP SYMBOLS AND NAMES

Graphic/Symbol	Group Names	Graphic/Symbol	Group Names
GW	Well-graded GRAVEL Well-graded GRAVEL with SAND	CL	Lean CLAY Lean CLAY with SAND Lean CLAY with GRAVEL SANDY lean CLAY SANDY lean CLAY with GRAVEL GRAVELLY lean CLAY GRAVELLY lean CLAY with SAND
GP	Poorly-graded GRAVEL Poorly-graded GRAVEL with SAND		
GW-GM	Well-graded GRAVEL with SILT Well-graded GRAVEL with SILT and SAND	CL-ML	SILTY CLAY SILTY CLAY with SAND SILTY CLAY with GRAVEL SANDY SILTY CLAY SANDY SILTY CLAY with GRAVEL GRAVELLY SILTY CLAY GRAVELLY SILTY CLAY with SAND
GW-GC	Well-graded GRAVEL with CLAY (or SILTY CLAY) Well-graded GRAVEL with CLAY and SAND (or SILTY CLAY and SAND)		
GP-GM	Poorly-graded GRAVEL with SILT Poorly-graded GRAVEL with SILT and SAND	ML	SILT SILT with SAND SILT with GRAVEL SANDY SILT SANDY SILT with GRAVEL GRAVELLY SILT GRAVELLY SILT with SAND
GP-GC	Poorly-graded GRAVEL with CLAY (or SILTY CLAY) Poorly-graded GRAVEL with CLAY and SAND (or SILTY CLAY and SAND)		
GM	SILTY GRAVEL SILTY GRAVEL with SAND	OL	ORGANIC lean CLAY ORGANIC lean CLAY with SAND ORGANIC lean CLAY with GRAVEL SANDY ORGANIC lean CLAY SANDY ORGANIC lean CLAY with GRAVEL GRAVELLY ORGANIC lean CLAY GRAVELLY ORGANIC lean CLAY with SAND
GC	CLAYEY GRAVEL CLAYEY GRAVEL with SAND		
GC-GM	SILTY, CLAYEY GRAVEL SILTY, CLAYEY GRAVEL with SAND	OL	ORGANIC SILT ORGANIC SILT with SAND ORGANIC SILT with GRAVEL SANDY ORGANIC SILT SANDY ORGANIC SILT with GRAVEL GRAVELLY ORGANIC SILT GRAVELLY ORGANIC SILT with SAND
SW	Well-graded SAND Well-graded SAND with GRAVEL		
SP	Poorly-graded SAND Poorly-graded SAND with GRAVEL	CH	Fat CLAY Fat CLAY with SAND Fat CLAY with GRAVEL SANDY fat CLAY SANDY fat CLAY with GRAVEL GRAVELLY fat CLAY GRAVELLY fat CLAY with SAND
SW-SM	Well-graded SAND with SILT Well-graded SAND with SILT and GRAVEL		
SW-SC	Well-graded SAND with CLAY (or SILTY CLAY) Well-graded SAND with CLAY and GRAVEL (or SILTY CLAY and GRAVEL)	MH	Elastic SILT Elastic SILT with SAND Elastic SILT with GRAVEL SANDY elastic SILT SANDY elastic SILT with GRAVEL GRAVELLY elastic SILT GRAVELLY elastic SILT with SAND
SP-SM	Poorly-graded SAND with SILT Poorly-graded SAND with SILT and GRAVEL		
SP-SC	Poorly-graded SAND with CLAY (or SILTY CLAY) Poorly-graded SAND with CLAY and GRAVEL (or SILTY CLAY and GRAVEL)	OH	ORGANIC fat CLAY ORGANIC fat CLAY with SAND ORGANIC fat CLAY with GRAVEL SANDY ORGANIC fat CLAY SANDY ORGANIC fat CLAY with GRAVEL GRAVELLY ORGANIC fat CLAY GRAVELLY ORGANIC fat CLAY with SAND
SM	SILTY SAND SILTY SAND with GRAVEL		
SC	CLAYEY SAND CLAYEY SAND with GRAVEL	OH	ORGANIC elastic SILT ORGANIC elastic SILT with SAND ORGANIC elastic SILT with GRAVEL SANDY ORGANIC elastic SILT SANDY ORGANIC elastic SILT with GRAVEL GRAVELLY ORGANIC elastic SILT GRAVELLY ORGANIC elastic SILT with SAND
SC-SM	SILTY, CLAYEY SAND SILTY, CLAYEY SAND with GRAVEL		
PT	PEAT	OL/OH	ORGANIC SOIL ORGANIC SOIL with SAND ORGANIC SOIL with GRAVEL SANDY ORGANIC SOIL SANDY ORGANIC SOIL with GRAVEL GRAVELLY ORGANIC SOIL GRAVELLY ORGANIC SOIL with SAND
	COBBLES COBBLES and BOULDERS BOULDERS		

FIELD AND LABORATORY TESTING

- (C) Consolidation (ASTM D 2435)
- (CL) Collapse Potential (ASTM D 5333)
- (CP) Compaction Curve (CTM 216)
- (CR) Corrosivity Testing (CTM 643, CTM 422, CTM 417)
- (CU) Consolidated Undrained Triaxial (ASTM D 4767)
- (DS) Direct Shear (ASTM D 3080)
- (EI) Expansion Index (ASTM D 4829)
- (M) Moisture Content (ASTM D 2216)
- (OC) Organic Content-% (ASTM D 2974)
- (P) Permeability (CTM 220)
- (PA) Particle Size Analysis (ASTM D 422)
- (PI) Plasticity Index (AASHTO T 90) Liquid Limit (AASHTO T 89)
- (PL) Point Load Index (ASTM D 5731)
- (PM) Pressure Meter
- (R) R-Value (CTM 301)
- (SE) Sand Equivalent (CTM 217)
- (SG) Specific Gravity (AASHTO T 100)
- (SL) Shrinkage Limit (ASTM D 427)
- (SW) Swell Potential (ASTM D 4546)
- (UC) Unconfined Compression-Soil (ASTM D 2166) Unconfined Compression-Rock (ASTM D 2938)
- (UU) Unconsolidated Undrained Triaxial (ASTM D 2850)
- (UW) Unit Weight (ASTM D 4767)

DIST	COUNTY	ROUTE	POST MILES TOTAL PROJECT	SHEET No.	TOTAL SHEETS
07	LA	5	4.0/5.9	1380	1597

REGISTERED CIVIL ENGINEER DATE

4-9-12
PLANS APPROVAL DATE

REGISTERED PROFESSIONAL ENGINEER Amare Tsegie No. C67529 Exp. 6-30-13 CIVIL STATE OF CALIFORNIA

The State of California or its officers or agents shall not be responsible for the accuracy or completeness of electronic copies of this plan sheet.

This LOTB sheet was prepared in accordance with the Caltrans Soil & Rock Logging, Classification, & Presentation Manual (2010 Edition).

APPARENT DENSITY OF COHESIONLESS SOILS

Description	SPT N_{60} (Blows / 12 in.)
Very Loose	0 - 5
Loose	5 - 10
Medium Dense	10 - 30
Dense	30 - 50
Very Dense	Greater than 50

MOISTURE

Description	Criteria
Dry	No discernable moisture
Moist	Moisture present, but no free water
Wet	Visible free water

PERCENT OR PROPORTION OF SOILS

Description	Criteria
Trace	Particles are present but estimated to be less than 5%
Few	5% - 10%
Little	15% - 25%
Some	30% - 45%
Mostly	50% - 100%

PARTICLE SIZE

Description		Size (in.)
Boulder		Greater than 12
Cobble		3 - 12
Gravel	Coarse	3/4 - 3
	Fine	1/5 - 3/4
Sand	Coarse	1/16 - 1/5
	Medium	1/64 - 1/16
	Fine	1/300 - 1/64
Silt and Clay		Less than 1/300

ENGINEERING SERVICES | MATERIALS AND GEOTECHNICAL SERVICES

FUNCTIONAL SUPERVISOR
NAME: CHI-TSENG LIU

DRAWN BY: P.QUACH / T.Panah (URS CORP)
CHECKED BY: F.GERAMI

FIELD INVESTIGATION BY:
A.TSEGIE/M.ISLAM/P.MCDONALD

STATE OF CALIFORNIA
DEPARTMENT OF TRANSPORTATION

DIVISION OF ENGINEERING SERVICES
STRUCTURE DESIGN
DESIGN BRANCH 21

BRIDGE NO. 53E0188
POST MILE 4.46

SOUND WALL NO. 251

LOG OF TEST BORINGS SHEET 7 OF 7

OGS CIVIL LOG OF TEST BORINGS SHEET

ORIGINAL SCALE IN INCHES FOR REDUCED PLANS 0 1 2 3

UNIT: 3658
PROJECT NUMBER & PHASE: 07 00001834 1 CONTRACT NO.: 07-215941

DISREGARD PRINTS BEARING EARLIER REVISION DATES

REVISION DATES 12/14/11 | SHEET 50 | OF 50

FILE => 53-E0188-z-lotb_07.dgn

USERNAME => s128843 DATE PLOTTED => 14-APR-2012 TIME PLOTTED => 12:47

DIST	COUNTY	ROUTE	POST MILES TOTAL PROJECT	SHEET No.	TOTAL SHEETS
07	LA	5	4.0/5.9	1381	1597

REGISTERED CIVIL ENGINEER 12/12/11 DATE

4-9-12
PLANS APPROVAL DATE

REGISTERED PROFESSIONAL ENGINEER FRANK HSIAOSHIH WEI No. C 52918 Exp. 12-31-12 CIVIL STATE OF CALIFORNIA

The State of California or its officers or agents shall not be responsible for the accuracy or completeness of electronic copies of this plan sheet.

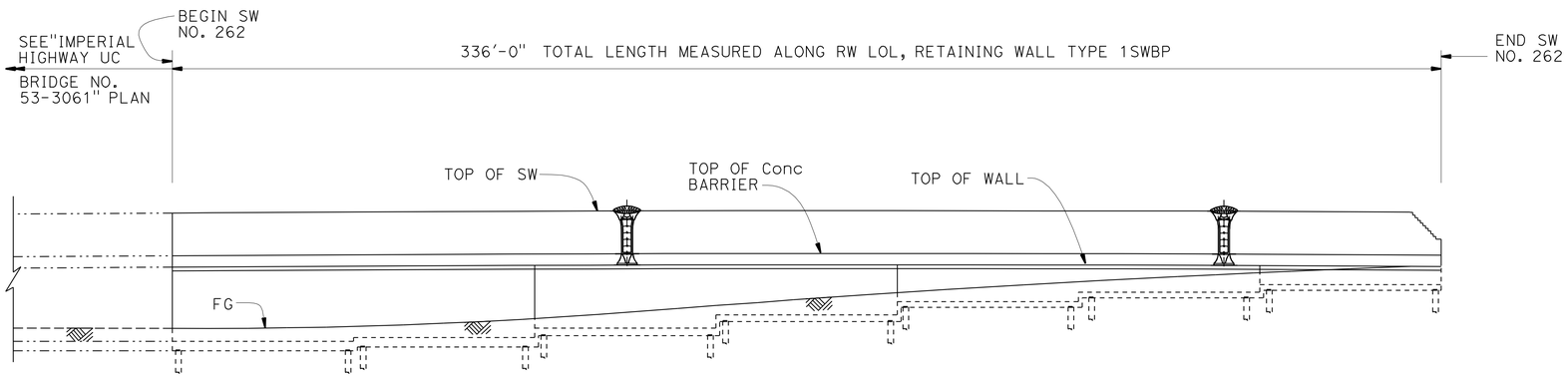

ELEVATION
1" = 20'

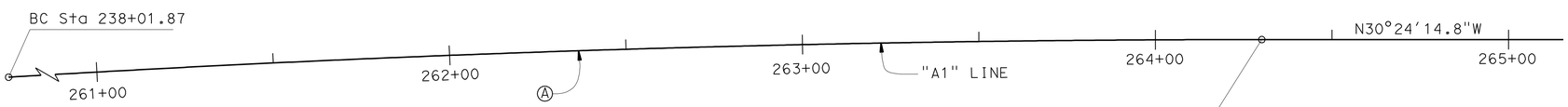

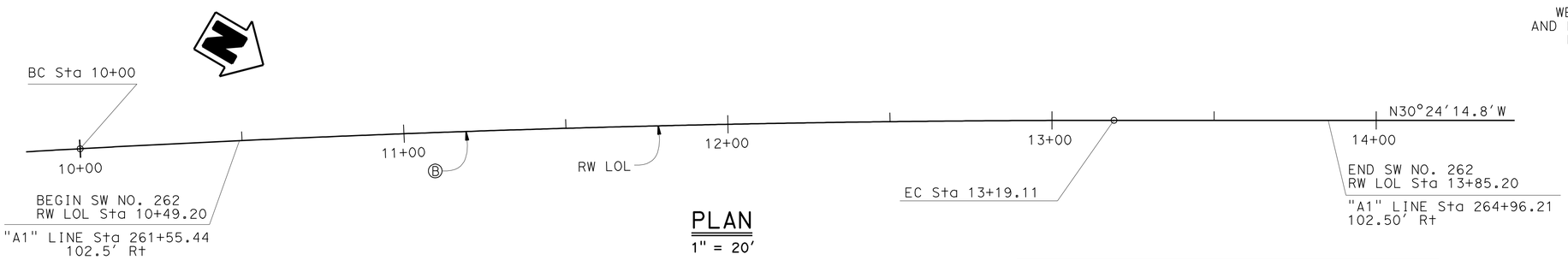

PLAN
1" = 20'

NOTE:
THE CONTRACTOR SHALL VERIFY ALL CONTROLLING FIELD DIMENSIONS BEFORE ORDERING OR FABRICATING ANY MATERIAL.

CURVE DATA				
NO.	R	Δ	T	L
Ⓐ	5905.51'	25°29'58.2"	1336.25'	2628.25'
Ⓑ	5803.01'	03°09'02.5"	159.59'	319.11'

NOTES:

1. For retaining wall pile layout, see "STRUCTURE PLAN" sheets.
2. For Design Notes, see "RETAINING WALL TYPE 1SWBP - DETAILS NO. 1" sheet and "SOUND WALL - MASONRY BLOCK WITH BARRIER ON RETAINING WALL DETAILS NO. 2" sheet.
3. Architectural Treatment on concrete barrier face and retaining wall face not shown in Elevation for clarity. Not all piles shown in Elevation.
4. For Pile Data Table and Quantities, see "INDEX TO PLANS" sheet.

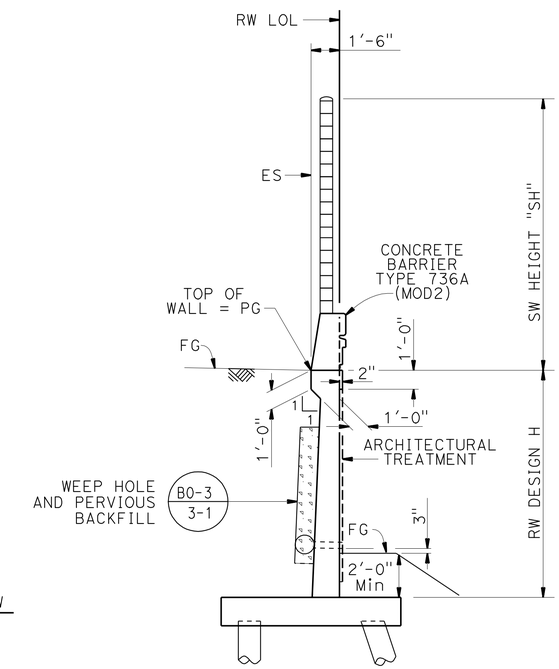

RETAINING WALL TYPE 1SWBP TYPICAL SECTION
¼" = 1'-0"

CHUNG-YUAN WEN DESIGN ENGINEER	DESIGN	BY V. WAMI	CHECKED F. WEI	LOAD & RESISTANCE FACTOR DESIGN	LIVE LOADING: HL93 W/"LOW-BOY"; PERMIT DESIGN VEHICLE	
	DETAILS	BY M. KINGRA	CHECKED F. WEI	LAYOUT	BY V. WAMI	CHECKED M. KINGRA
	QUANTITIES	BY V. WAMI	CHECKED H. WIN	SPECIFICATIONS	BY J. JIANG	PLANS AND SPECS COMPARED J. JIANG

ORIGINAL SCALE IN INCHES FOR REDUCED PLANS 0 1 2 3

STATE OF CALIFORNIA
DEPARTMENT OF TRANSPORTATION

DIVISION OF ENGINEERING SERVICES
STRUCTURE DESIGN
DESIGN BRANCH 21

BRIDGE NO. 53E0189
POST MILE 4.96

SOUND WALL NO. 262
GENERAL PLAN

UNIT: 3623
PROJECT NUMBER & PHASE: 0700001834 & 1 CONTRACT NO.: 07-215941

DISREGARD PRINTS BEARING EARLIER REVISION DATES

REVISION DATES 09/30/11 11/25/11 12/12/11

SHEET 1 OF 22

USERNAME => s128843 DATE PLOTTED => 14-APR-2012 TIME PLOTTED => 12:47

STRUCTURES DESIGN GENERAL PLAN SHEET (ENGLISH) (REV.09-01-10)

FILE => 53-E0189-a-gp01.dgn

DIST	COUNTY	ROUTE	POST MILES TOTAL PROJECT	SHEET No.	TOTAL SHEETS
07	LA	5	4.0/5.9	1382	1597

REGISTERED CIVIL ENGINEER 12/12/11 DATE

4-9-12
PLANS APPROVAL DATE

REGISTERED PROFESSIONAL ENGINEER FRANK HSIAOSHIH WEI No. C 52918 Exp. 12-31-12 CIVIL STATE OF CALIFORNIA

The State of California or its officers or agents shall not be responsible for the accuracy or completeness of electronic copies of this plan sheet.

INDEX TO PLANS

Sheet No.	Title
1.	GENERAL PLAN
2.	INDEX TO PLANS
3.	STRUCTURE PLAN NO. 1
4.	STRUCTURE PLAN NO. 2
5.	FOUNDATION PLAN
6.	ARCHITECTURAL TREATMENT ELEVATION
7.	RETAINING WALL AND BARRIER ARCHITECTURAL DETAILS
8.	SOUND WALL ARCHITECTURAL DETAILS
9.	PILASTER ARCHITECTURAL DETAILS NO. 1
10.	PILASTER ARCHITECTURAL DETAILS NO. 2
11.	PILASTER ARCHITECTURAL DETAILS NO. 3
12.	PILASTER ARCHITECTURAL DETAILS NO. 4
13.	PILASTER STRUCTURAL DETAILS NO. 1
14.	PILASTER STRUCTURAL DETAILS NO. 2
15.	PILASTER STRUCTURAL DETAILS NO. 3
16.	RETAINING WALL TYPE 1SWBP - DETAIL NO. 1
17.	RETAINING WALL TYPE 1SWBP - DETAIL NO. 2
18.	SOUND WALL - MASONRY BLOCK WITH BARRIER ON RETAINING WALL DETAILS NO. 1
19.	SOUND WALL - MASONRY BLOCK WITH BARRIER ON RETAINING WALL DETAILS NO. 2
20.	LOG OF TEST BORINGS 1 OF 3
21.	LOG OF TEST BORINGS 2 OF 3
22.	LOG OF TEST BORINGS 3 OF 3

STANDARD PLANS DATED MAY 2006

	A10A	ACRONYMS AND ABBREVIATIONS (SHEET 1 OF 2)
	A10B	ACRONYMS AND ABBREVIATIONS (SHEET 2 OF 2)
	A62B	LIMITS OF PAYMENT FOR EXCAVATION AND BACKFILL BRIDGE SURCHARGE AND WALL
	BO-1	BRIDGE DETAILS
	BO-3	BRIDGE DETAILS
	B2-5	PILE DETAILS CLASS 90 AND CLASS 140
	B3-8	RETAINING WALL DETAILS NO. 1
	B11-56	CONCRETE BARRIER TYPE 736
RSP	B15-6	SOUND WALL MASONRY BLOCK ON TYPE 736S/SV BARRIER DETAILS (1)
	B15-9	SOUND WALL MASONRY BLOCK MISCELLANEOUS DETAILS

STANDARD PLAN SHEET NO.

DETAIL NO.

QUANTITIES

STRUCTURE EXCAVATION (RETAINING WALL)	140	CY
STRUCTURE EXCAVATION (TYPE Y-2) (AERIALLY DEPOSITED LEAD)	360	CY
STRUCTURE BACKFILL (RETAINING WALL)	1,150	CY
PERVIOUS BACKFILL MATERIAL (RETAINING WALL)	85	CY
FURNISH PILING (CLASS 90)(ALTERNATIVE X)	3,527	LF
DRIVE PILE (CLASS 90)(ALTERNATIVE X)	104	EA
STRUCTURAL CONCRETE, RETAINING WALL	470	CY
PILASTER, SOUND WALL	5	CY
ARCHITECTURAL TEXTURE (SPLIT SLATE - FRACTURED RIB)	3,500	SQFT
SOUND WALL (MASONRY BLOCK)	3,740	SQFT
BAR REINFORCING STEEL (RETAINING WALL)	88,000	LB
CONCRETE BARRIER (TYPE 736A MODIFIED 2)	330	LF

NOTE:
THE CONTRACTOR SHALL VERIFY ALL CONTROLLING FIELD DIMENSIONS BEFORE ORDERING OR FABRICATING ANY MATERIAL.

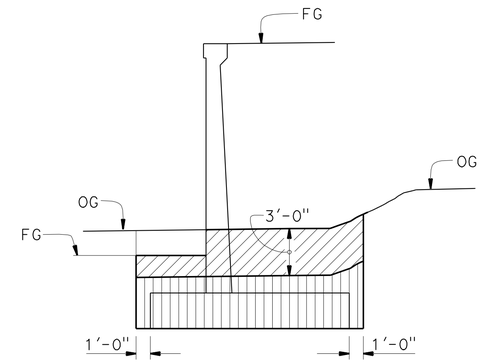

LIMITS OF EXCAVATION

NO SCALE

LEGEND:

STRUCTURE EXCAVATION (TYPE Y-2, AERIALLY DEPOSITED LEAD)

STRUCTURE EXCAVATION (RETAINING WALL)

PILE DATA TABLE

RW DESIGN HEIGHT	PILE* TYPE	BOTTOM OF FOOTING ELEVATION (FT)	DESIGN LOADING (Kips)	NOMINAL RESISTANCE (Kips)		SPECIFIED TIP ELEVATION (ft)
				COMPRESSION	TENSION	
H=20	CLASS 90, ALT. "X", T=14"	111.50	90	180	90	79
H=20	CLASS 90, ALT. "X", T=14"	112.50	90	180	90	79
H=18	CLASS 90, ALT. "X", T=14"	115.50	90	180	90	83
H=14	CLASS 90, ALT. "X", T=14"	119.25	90	180	90	87
H=10	CLASS 90, ALT. "X", T=14"	123.00	90	180	90	91
H=8	CLASS 90, ALT. "X", T=14"	125.50	90	180	90	93
H=6	CLASS 90, ALT. "X", T=14"	127.50	90	180	90	95

* For Class 90 pile, "T" value in Standard Plan B2-5 is modified to 1'-2". P_f value also needs to be modified in accordance with Standard Plan B2-5 Design Notes. T=14" is required to provide the needed pile lateral capacity. No substitution for other Standard Pile types is allowed.

	BY	CHECKED
DESIGN	V. WAMI	F. WEI
DETAILS	M. KINGRA	F. WEI
QUANTITIES	V. WAMI	H. WIN

STATE OF CALIFORNIA
DEPARTMENT OF TRANSPORTATION

DIVISION OF ENGINEERING SERVICES
STRUCTURE DESIGN
DESIGN BRANCH 21

BRIDGE NO. 53E0189
POST MILE 4.96

SOUND WALL NO. 262
INDEX TO PLANS

STRUCTURES DESIGN DETAIL SHEET (ENGLISH) (REV. 09-01-10)

ORIGINAL SCALE IN INCHES FOR REDUCED PLANS 0 1 2 3

UNIT: 3623
PROJECT NUMBER & PHASE: 0700001834 & 1 CONTRACT NO.: 07-215941

DISREGARD PRINTS BEARING EARLIER REVISION DATES

REVISION DATES 09/30/11 11/25/11 12/12/11

SHEET 2 OF 22

FILE => 53-E0189-b-itp.dgn

USERNAME => s128843 DATE PLOTTED => 14-APR-2012 TIME PLOTTED => 12:48

DIST	COUNTY	ROUTE	POST MILES TOTAL PROJECT	SHEET No.	TOTAL SHEETS
07	LA	5	4.0/5.9	1383	1597

REGISTERED CIVIL ENGINEER 12/12/11 DATE

4-9-12
PLANS APPROVAL DATE

REGISTERED PROFESSIONAL ENGINEER FRANK HSIAOSHIH WEI No. C 52918 Exp. 12-31-12 CIVIL STATE OF CALIFORNIA

The State of California or its officers or agents shall not be responsible for the accuracy or completeness of electronic copies of this plan sheet.

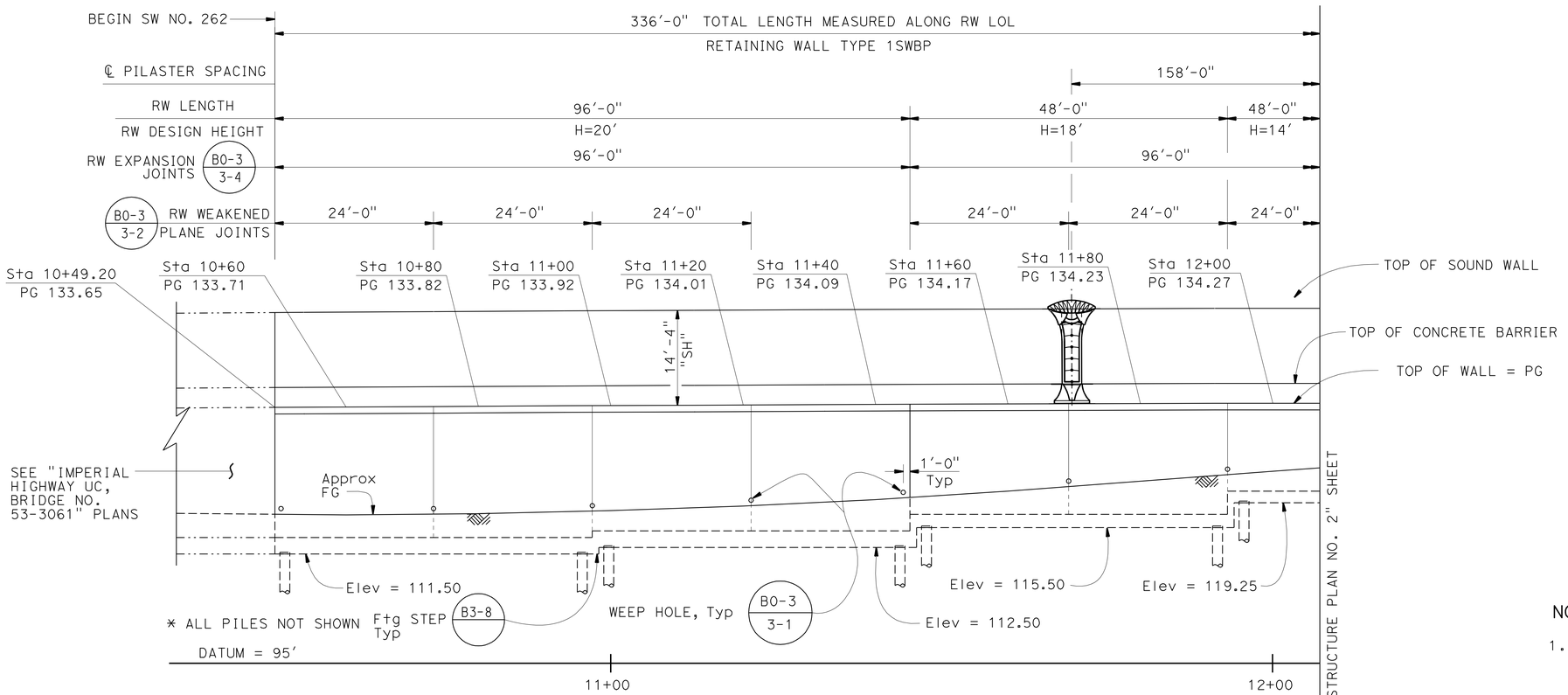

ELEVATION

1" = 10'

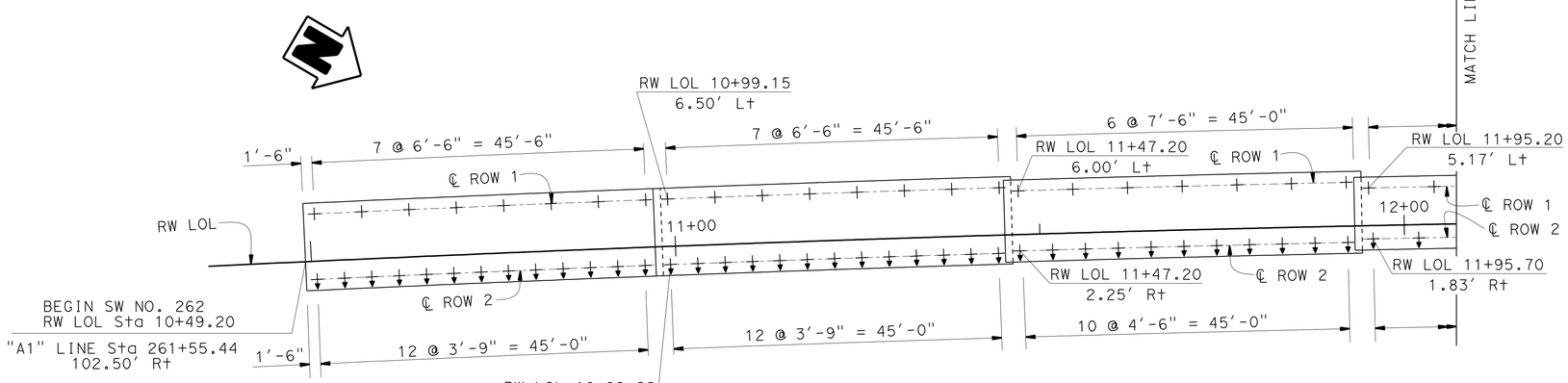

PLAN

1" = 10'

NOTE:
THE CONTRACTOR SHALL VERIFY ALL CONTROLLING FIELD DIMENSIONS BEFORE ORDERING OR FABRICATING ANY MATERIAL.

NOTES:

1. For Sound Wall and Barrier details, see "SOUND WALL - MASONRY BLOCK WITH BARRIER ON RETAINING WALL DETAILS NO. 1" and "SOUND WALL- MASONRY BLOCK WITH BARRIER ON RETAINING WALL DETAILS NO. 2" sheets.
2. For Retaining Wall details, see "RETAINING WALL TYPE 1SWBP - DETAIL NO. 1" and "RETAINING WALL TYPE 1SWBP - DETAIL NO. 2" sheets.
3. For Expansion Joint details in the Masonry Block Sound Wall, see "SOUND WALL - MASONRY BLOCK WITH BARRIER ON RETAINING WALL DETAILS NO. 1" and "SOUND WALL - MASONRY BLOCK WITH BARRIER ON RETAINING WALL DETAILS NO. 2" sheets.
4. See "GENERAL PLAN" for RW LOL alignment information.
5. See "INDEX TO PLANS" sheet for Pile Data Table.

\+ Denotes Vertical Pile.

⸸ Denotes 1:3 Battered Piles.

	BY	CHECKED
DESIGN	V. WAMI	F. WEI
DETAILS	M. KINGRA	F. WEI
QUANTITIES	V. WAMI	H. WIN

STATE OF CALIFORNIA
DEPARTMENT OF TRANSPORTATION

DIVISION OF ENGINEERING SERVICES
STRUCTURE DESIGN
DESIGN BRANCH 21

BRIDGE NO. 53E0189
POST MILE 4.96

SOUND WALL NO. 262
STRUCTURE PLAN NO. 1

STRUCTURES DESIGN DETAIL SHEET (ENGLISH) (REV. 09-01-10)

ORIGINAL SCALE IN INCHES FOR REDUCED PLANS 0 1 2 3

UNIT: 3623
PROJECT NUMBER & PHASE: 0700001834 & 1 CONTRACT NO.: 07-215941

DISREGARD PRINTS BEARING EARLIER REVISION DATES

REVISION DATES 09/30/11 11/25/11 12/12/11

SHEET 3 OF 22

FILE => 53-E0189-c-sp01.dgn

USERNAME => s128843 DATE PLOTTED => 14-APR-2012 TIME PLOTTED => 12:48

DIST	COUNTY	ROUTE	POST MILES TOTAL PROJECT	SHEET No.	TOTAL SHEETS
07	LA	5	4.0/5.9	1384	1597

REGISTERED CIVIL ENGINEER 12/12/11 DATE

4-9-12
PLANS APPROVAL DATE

REGISTERED PROFESSIONAL ENGINEER FRANK HSIAOSHIH WEI No. C 52918 Exp. 12-31-12 CIVIL STATE OF CALIFORNIA

The State of California or its officers or agents shall not be responsible for the accuracy or completeness of electronic copies of this plan sheet.

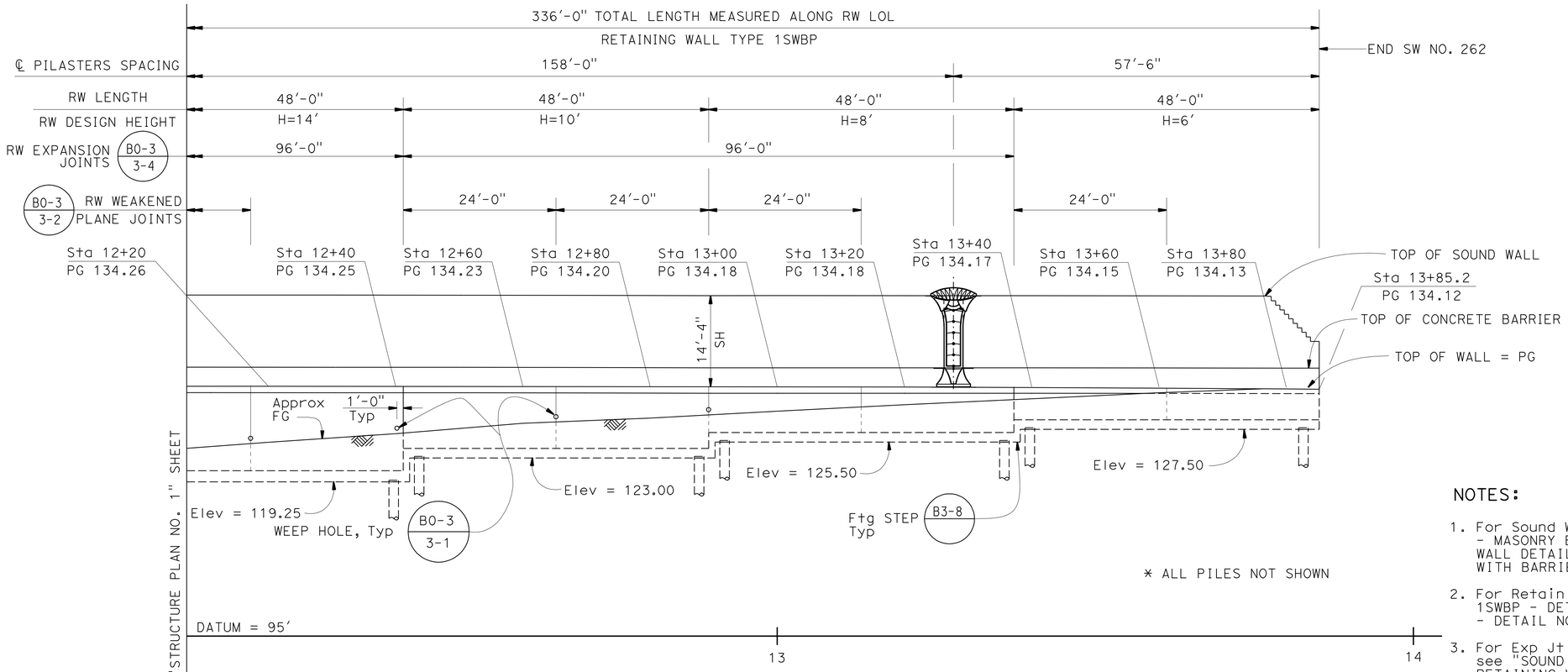

ELEVATION
1" = 10'

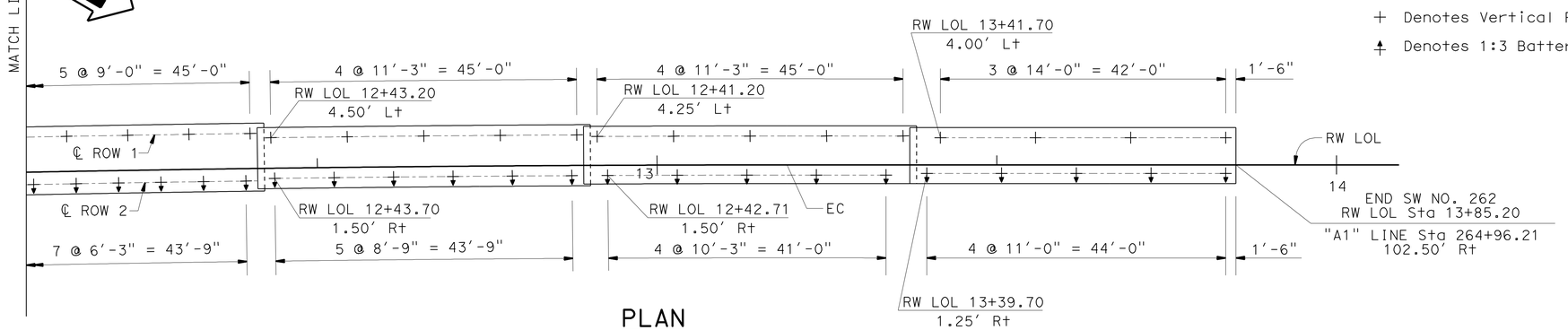

PLAN
1" = 10'

NOTES:

1. For Sound Wall and Barrier details, see "SOUND WALL - MASONRY BLOCK WITH BARRIER ON RETAINING WALL DETAILS NO. 1" and "SOUND WALL- MASONRY BLOCK WITH BARRIER ON RETAINING WALL DETAILS NO. 2" sheets.
2. For Retaining Wall details, see "RETAINING WALL TYPE 1SWBP - DETAIL NO. 1" and "RETAINING WALL TYPE 1SWBP - DETAIL NO. 2" sheets.
3. For Exp Jt details in the Masonry Block Sound Wall, see "SOUND WALL - MASONRY BLOCK WITH BARRIER ON RETAINING WALL DETAILS NO. 1" and "SOUND WALL - MASONRY BLOCK WITH BARRIER ON RETAINING WALL DETAILS NO. 2" sheets.
4. See "GENERAL PLAN" for RW LOL alignment information.
5. See "INDEX TO PLANS" sheet for Pile Data Table.

+ Denotes Vertical Pile

‡ Denotes 1:3 Battered Piles

NOTE:
THE CONTRACTOR SHALL VERIFY ALL CONTROLLING FIELD DIMENSIONS BEFORE ORDERING OR FABRICATING ANY MATERIAL.

	BY	CHECKED
DESIGN	V. WAMI	F. WEI
DETAILS	M. KINGRA	F. WEI
QUANTITIES	V. WAMI	H. WIN

STATE OF CALIFORNIA
DEPARTMENT OF TRANSPORTATION

DIVISION OF ENGINEERING SERVICES
STRUCTURE DESIGN
DESIGN BRANCH 21

BRIDGE NO. 53E0189
POST MILE 4.96

SOUND WALL NO. 262
STRUCTURE PLAN NO. 2

STRUCTURES DESIGN DETAIL SHEET (ENGLISH) (REV. 09-01-10)

ORIGINAL SCALE IN INCHES FOR REDUCED PLANS 0 1 2 3

UNIT: 3623
PROJECT NUMBER & PHASE: 0700001834 & 1 CONTRACT NO.: 07-215941

DISREGARD PRINTS BEARING EARLIER REVISION DATES

REVISION DATES: 09/30/11 11/25/11 12/12/11

SHEET 4 OF 22

FILE => 53-E0189-c-sp02.dgn

USERNAME => s128843 DATE PLOTTED => 14-APR-2012 TIME PLOTTED => 12:48

DIST	COUNTY	ROUTE	POST MILES TOTAL PROJECT	SHEET No.	TOTAL SHEETS
07	LA	5	4.0/5.9	1385	1597

REGISTERED CIVIL ENGINEER 12/12/11 DATE

4-9-12
PLANS APPROVAL DATE

REGISTERED PROFESSIONAL ENGINEER FRANK HSIAOSHIH WEI No. C 52918 Exp. 12-31-12 CIVIL STATE OF CALIFORNIA

The State of California or its officers or agents shall not be responsible for the accuracy or completeness of electronic copies of this plan sheet.

NOTES:

1. ▭ Indicates Bottom of footing elevation.
2. Existing contours shown, for final countours, see "ROAD PLANS".
3. For footing dimensions and pile layout, see "Structure Plan" sheets.
4. Underground utilities as shown are approximate. See "ROAD PLANS" for details.

CURVE DATA				
No.	R	Δ	T	L
1	5803.01′	03°09′02.5"	159.59′	319.11′
2	5905.51′	25°29′58.2"	1336.25′	2628.25′

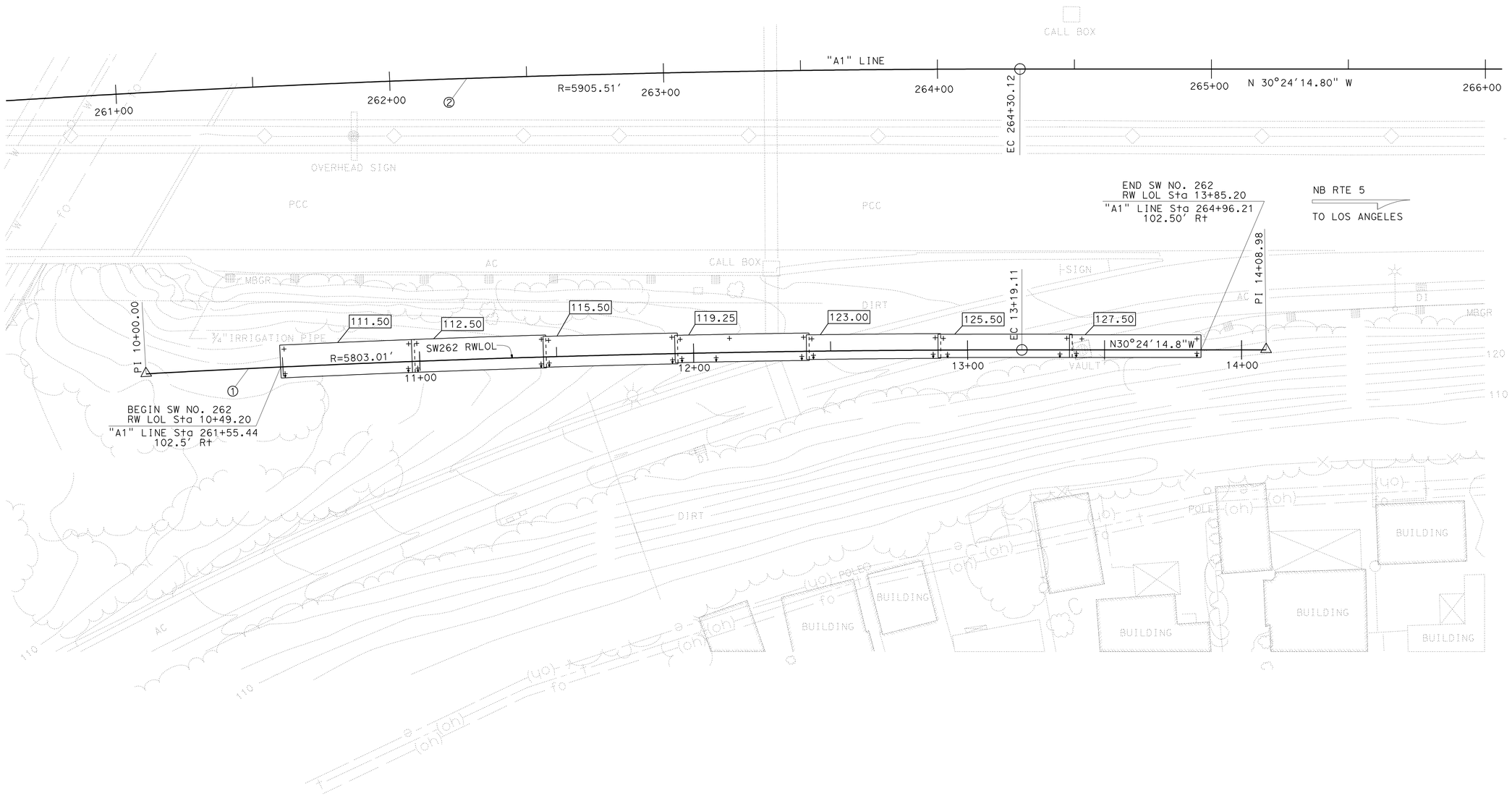

NOTE:
THE CONTRACTOR SHALL VERIFY ALL CONTROLLING FIELD DIMENSIONS BEFORE ORDERING OR FABRICATING ANY MATERIAL.

PRELIMINARY INVESTIGATION SECTION							
SCALE 1"=20′	VERT.DATUM NAVD 88	PHOTOGRAMMETRY AS OF: X					
	HORZ.DATUM NAD 83 (1991.35)	SURVEYED	BY C.STEWART / T.PHUNG	CHECKED	BY C. STEWART 7/2011		
ALIGNMENT TIES Dist. Traverse Sheet		DRAFTED	BY S. ABASSY 7/2011	CHECKED	BY S. ALIVIO 7/2011		

DESIGN	BY V. WAMI	CHECKED F. WEI
DETAILS	BY J. VALENCIA	CHECKED F. WEI
QUANTITIES	BY V. WAMI	CHECKED H. WIN

STATE OF CALIFORNIA
DEPARTMENT OF TRANSPORTATION

DIVISION OF ENGINEERING SERVICES
STRUCTURE DESIGN
DESIGN BRANCH 21

BRIDGE NO. 53E0189
POST MILE 4.96

SOUND WALL NO. 262
FOUNDATION PLAN

STRUCTURES FOUNDATION PLAN SHEET (ENGLISH) (REV. 09-01-10)

ORIGINAL SCALE IN INCHES FOR REDUCED PLANS 0 1 2 3

UNIT: 3647
PROJECT NUMBER & PHASE: 0700001834 & 1 CONTRACT NO.: 07-215941

DISREGARD PRINTS BEARING EARLIER REVISION DATES → REVISION DATES 09/30/11 11/25/11 12/12/11

SHEET 5 OF 22

FILE => 53-E0189-e-fp01.dgn

USERNAME => s128843 DATE PLOTTED => 14-APR-2012 TIME PLOTTED => 12:48

DIST	COUNTY	ROUTE	POST MILES TOTAL PROJECT	SHEET No.	TOTAL SHEETS
07	LA	5	4.0/5.9	1386	1597

REGISTERED CIVIL ENGINEER 12/12/11 DATE

4-9-12
PLANS APPROVAL DATE

REGISTERED PROFESSIONAL ENGINEER FRANK HSIAOSHIH WEI No. C 52918 Exp. 12-31-12 CIVIL STATE OF CALIFORNIA

The State of California or its officers or agents shall not be responsible for the accuracy or completeness of electronic copies of this plan sheet.

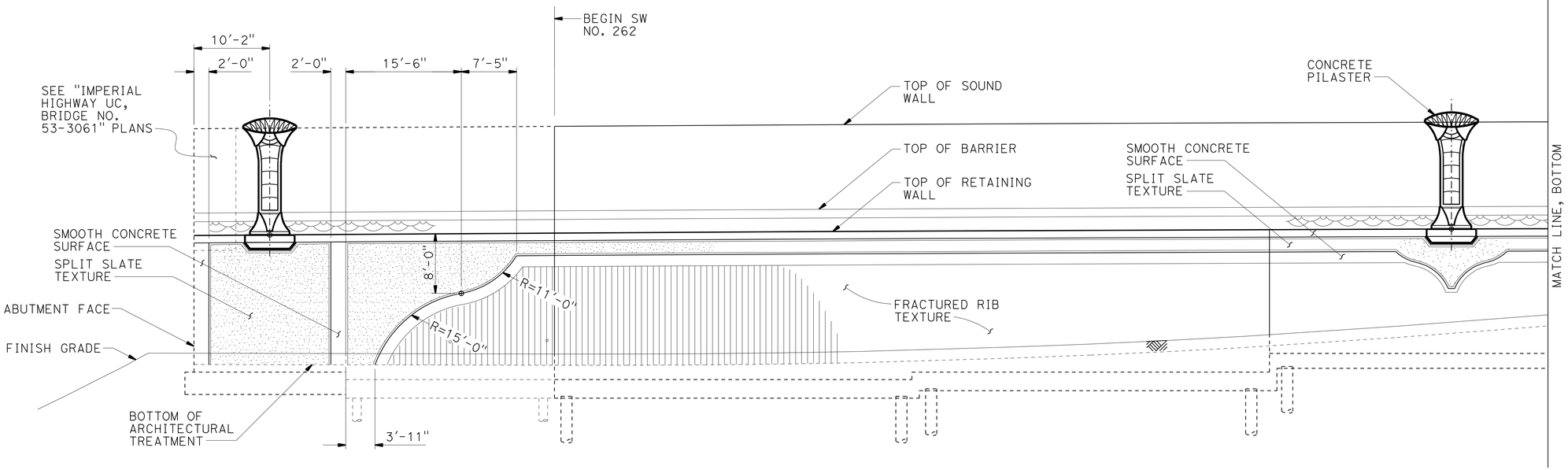

NOTE:

1. For Pilaster spacing, see "STRUCTURE PLAN" sheets.

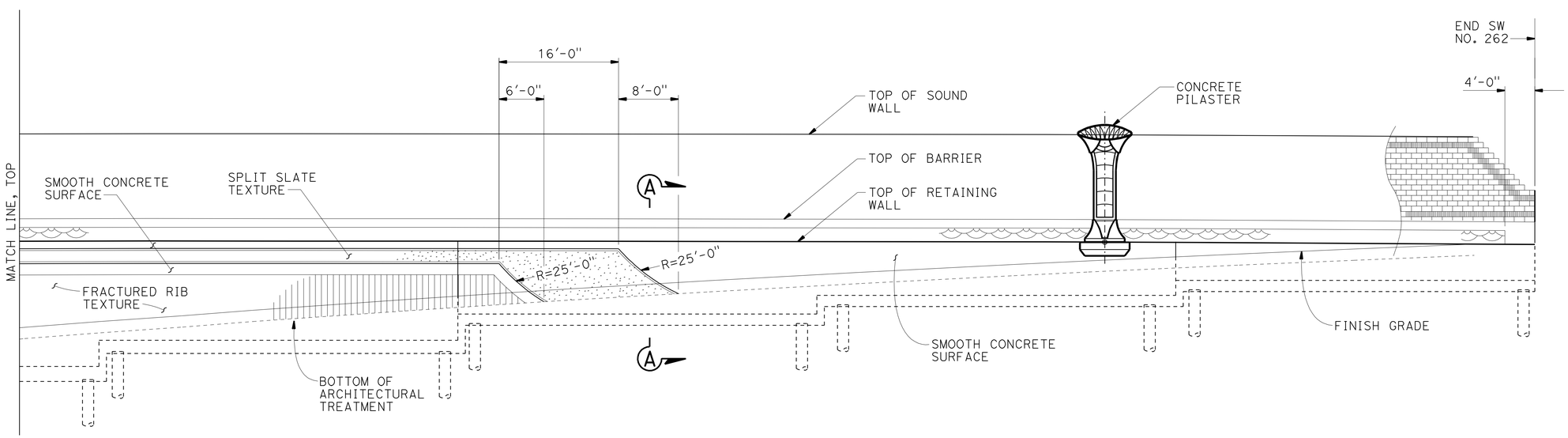

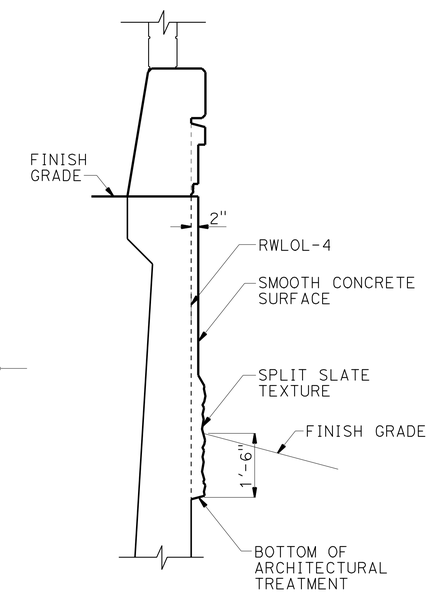

SECTION A-A

NO SCALE

DESIGN	BY I. TASABIA	CHECKED F. WEI	
DETAILS	BY J. VALENCIA	CHECKED F. WEI	
QUANTITIES	BY V. WAMI	CHECKED H. WIN	

STATE OF CALIFORNIA
DEPARTMENT OF TRANSPORTATION

DIVISION OF ENGINEERING SERVICES
STRUCTURE DESIGN
DESIGN BRANCH 21

BRIDGE NO. 53E0189
POST MILE 4.96

SOUND WALL NO. 262
ARCHITECTURAL TREATMENT ELEVATION

STRUCTURES DESIGN DETAIL SHEET (ENGLISH) (REV. 09-01-10)

ORIGINAL SCALE IN INCHES FOR REDUCED PLANS 0 1 2 3

UNIT: 3623
PROJECT NUMBER & PHASE: 0700001834 & 1 CONTRACT NO.: 07-215941

DISREGARD PRINTS BEARING EARLIER REVISION DATES

REVISION DATES: 11/08/11 11/25/11 12/12/11

SHEET 6 OF 22

FILE => 53-E0189-f-arch01.dgn

USERNAME => s128843 DATE PLOTTED => 14-APR-2012 TIME PLOTTED => 12:48

DIST	COUNTY	ROUTE	POST MILES TOTAL PROJECT	SHEET No.	TOTAL SHEETS
07	LA	5	4.0/5.9	1387	1597

REGISTERED CIVIL ENGINEER 12/12/11 DATE

4-9-12
PLANS APPROVAL DATE

REGISTERED PROFESSIONAL ENGINEER FRANK HSIAOSHIH WEI No. C 52918 Exp. 12-31-12 CIVIL STATE OF CALIFORNIA

The State of California or its officers or agents shall not be responsible for the accuracy or completeness of electronic copies of this plan sheet.

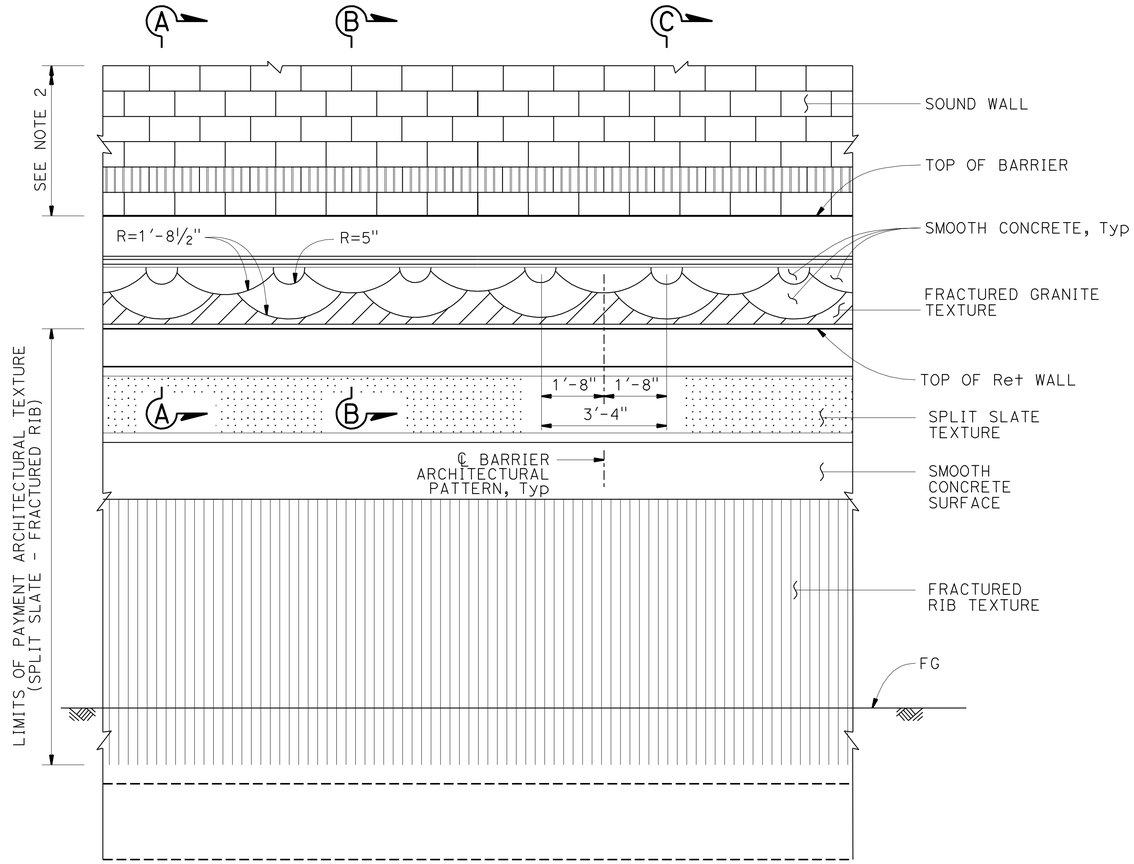

PART ELEVATION

½" = 1'-0"

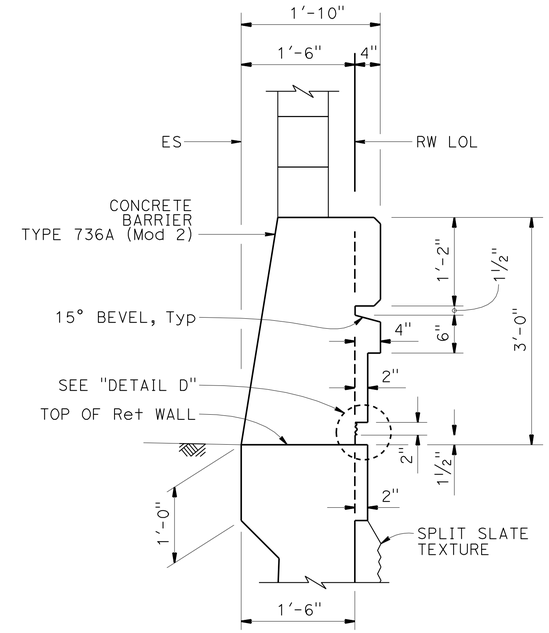

SECTION A-A

1" = 1'-0"

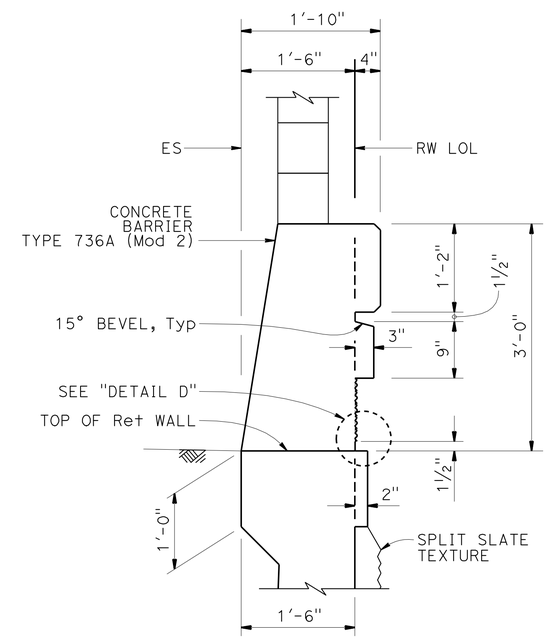

SECTION B-B

1" = 1'-0"

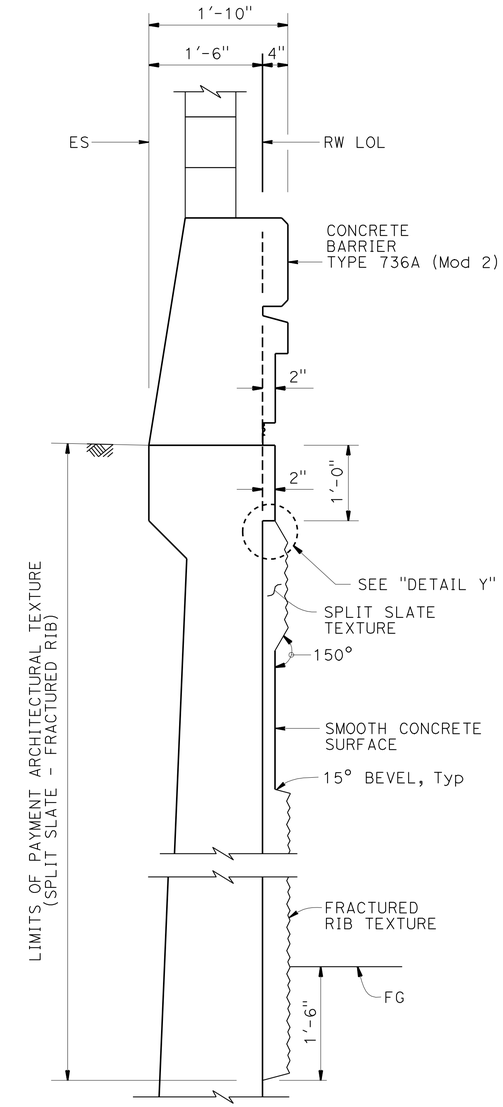

SECTION C-C

1" = 1'-0"

NOTES:

1. For Barrier Reinforcement, see "SOUND WALL - MASONRY BLOCK WITH BARRIER ON RETAINING WALL" sheet.
2. For sound wall architectural treatment, see "SOUND WALL ARCHITECTURAL DETAILS" sheet.

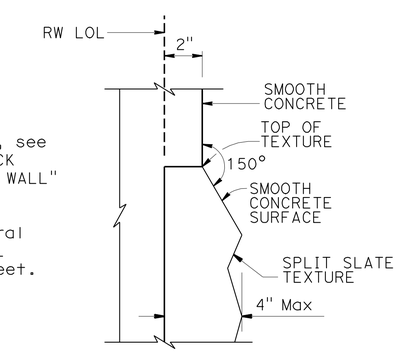

DETAIL Y

NO SCALE

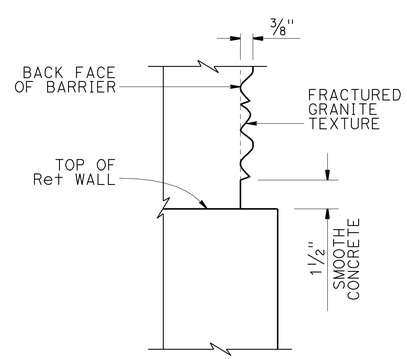

DETAIL D

NO SCALE

NOTE:
THE CONTRACTOR SHALL VERIFY ALL CONTROLLING FIELD DIMENSIONS BEFORE ORDERING OR FABRICATING ANY MATERIAL.

	BY	CHECKED
DESIGN	V. WAMI	F. WEI
DETAILS	J. VALENCIA	F. WEI
QUANTITIES	V. WAMI	H. WIN

STATE OF CALIFORNIA
DEPARTMENT OF TRANSPORTATION

DIVISION OF ENGINEERING SERVICES
STRUCTURE DESIGN
DESIGN BRANCH 21

BRIDGE NO. 53E0189
POST MILE 4.96

SOUND WALL NO. 262

RETAINING WALL AND BARRIER ARCHITECTURAL DETAILS

STRUCTURES DESIGN DETAIL SHEET (ENGLISH) (REV. 09-01-10)

ORIGINAL SCALE IN INCHES FOR REDUCED PLANS 0 1 2 3

UNIT: 3623
PROJECT NUMBER & PHASE: 0700001834 & 1 CONTRACT NO.: 07-215941

DISREGARD PRINTS BEARING EARLIER REVISION DATES

REVISION DATES 09/30/11 11/25/11 12/12/11

SHEET 7 OF 22

FILE => 53-E0189-f-rw_bar_arch_dt.dgn

USERNAME => s128843 DATE PLOTTED => 14-APR-2012 TIME PLOTTED => 12:48

DIST	COUNTY	ROUTE	POST MILES TOTAL PROJECT	SHEET No.	TOTAL SHEETS
07	LA	5	4.0/5.9	1388	1597

REGISTERED CIVIL ENGINEER 12/12/11 DATE

4-9-12
PLANS APPROVAL DATE

REGISTERED PROFESSIONAL ENGINEER FRANK HSIAOSHIH WEI No. C 52918 Exp. 12-31-12 CIVIL STATE OF CALIFORNIA

The State of California or its officers or agents shall not be responsible for the accuracy or completeness of electronic copies of this plan sheet.

NOTE:
1. See "RETAINING WALL AND BARRIER ARCHITECTURAL DETAILS" sheet.

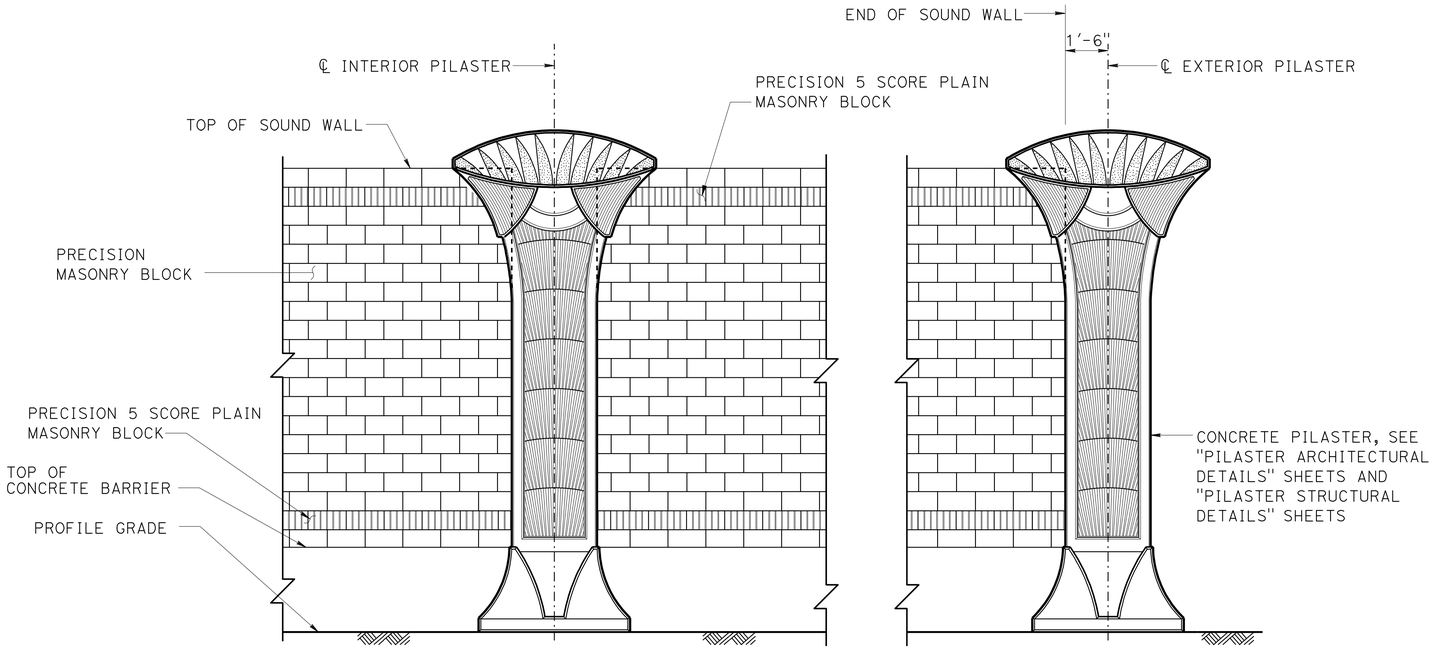

PART SOUND WALL ELEVATION - FREEWAY SIDE

NO SCALE

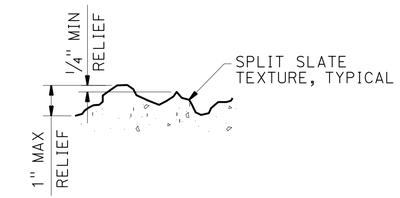

SPLIT SLATE TEXTURE DETAIL

NO SCALE

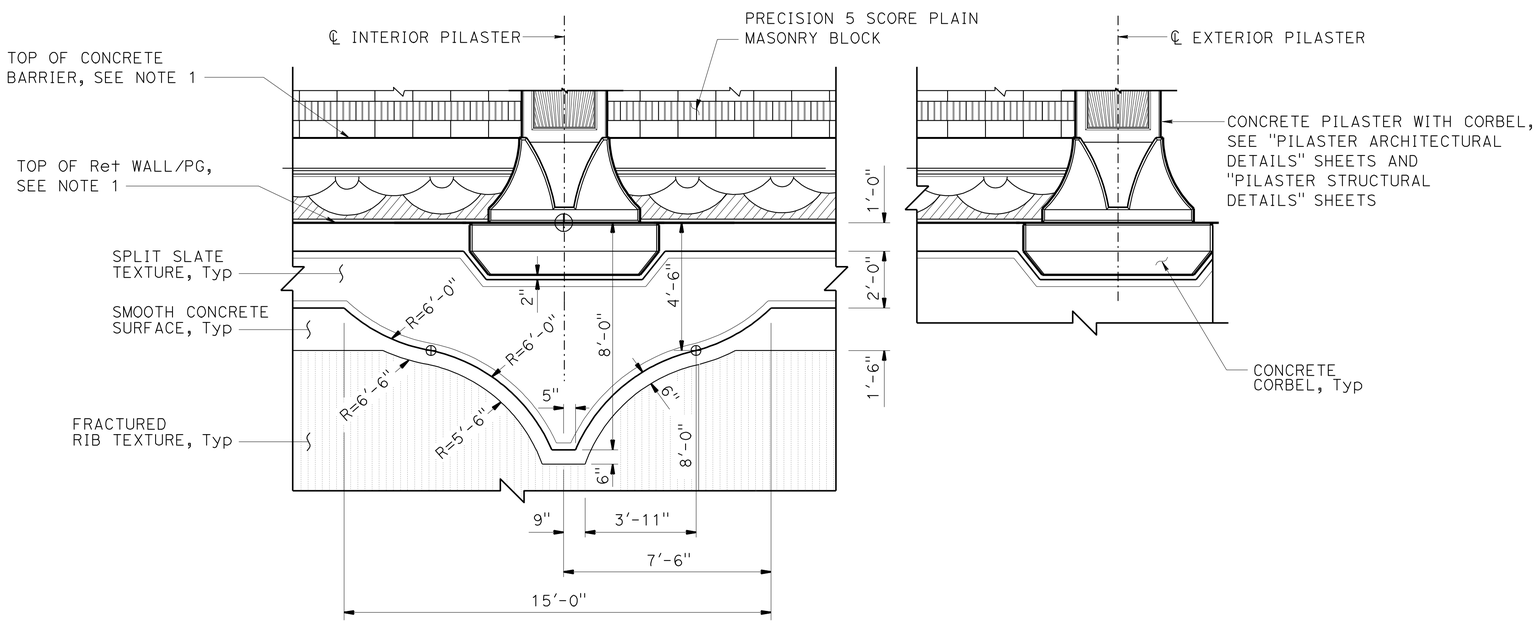

PART SOUND WALL ELEVATION - BACK SIDE

NO SCALE

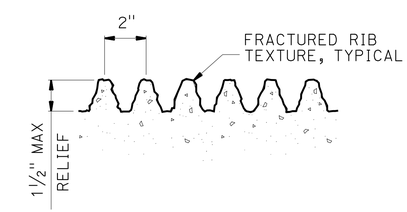

FRACTURED RIB TEXTURE DETAIL

NO SCALE

NOTE:
THE CONTRACTOR SHALL VERIFY ALL CONTROLLING FIELD DIMENSIONS BEFORE ORDERING OR FABRICATING ANY MATERIAL.

	BY	CHECKED
DESIGN	H. CHAVEZ	I. TASABIA
DETAILS	J. VALENCIA	F. WEI
QUANTITIES	V. WAMI	H. WIN

STATE OF CALIFORNIA
DEPARTMENT OF TRANSPORTATION

DIVISION OF ENGINEERING SERVICES
STRUCTURE DESIGN
DESIGN BRANCH 21

BRIDGE NO. 53E0189
POST MILE 4.96

SOUND WALL NO. 262
SOUND WALL ARCHITECTURAL DETAILS

STRUCTURES DESIGN DETAIL SHEET (ENGLISH) (REV. 09-01-10)

ORIGINAL SCALE IN INCHES FOR REDUCED PLANS 0 1 2 3

UNIT: 3623
PROJECT NUMBER & PHASE: 0700001834 & 1 CONTRACT NO.: 07-215941

DISREGARD PRINTS BEARING EARLIER REVISION DATES

REVISION DATES: 09/30/11 11/29/11 12/07/11 03/22/12

SHEET 8 OF 22

FILE => 53-E0189-f-sw_arch_dt.dgn

USERNAME => s128843 DATE PLOTTED => 14-APR-2012 TIME PLOTTED => 12:48

DIST	COUNTY	ROUTE	POST MILES TOTAL PROJECT	SHEET No.	TOTAL SHEETS
07	LA	5	4.0/5.9	1389	1597

REGISTERED CIVIL ENGINEER 12/12/11 DATE

4-9-12
PLANS APPROVAL DATE

REGISTERED PROFESSIONAL ENGINEER FRANK HSIAOSHIH WEI No. C 52918 Exp. 12-31-12 CIVIL STATE OF CALIFORNIA

The State of California or its officers or agents shall not be responsible for the accuracy or completeness of electronic copies of this plan sheet.

NOTES:

1. All dimensions symetrical about ℄ Pilaster.
2. For location of "DETAIL E", see "PILASTER ARCHITECTURAL DETAILS NO. 2" sheet.
3. Beveled edges are 45° unless otherwise noted
4. All vertical dimensions are measured along the ℄ Pilaster (Pilaster shall be vertical).

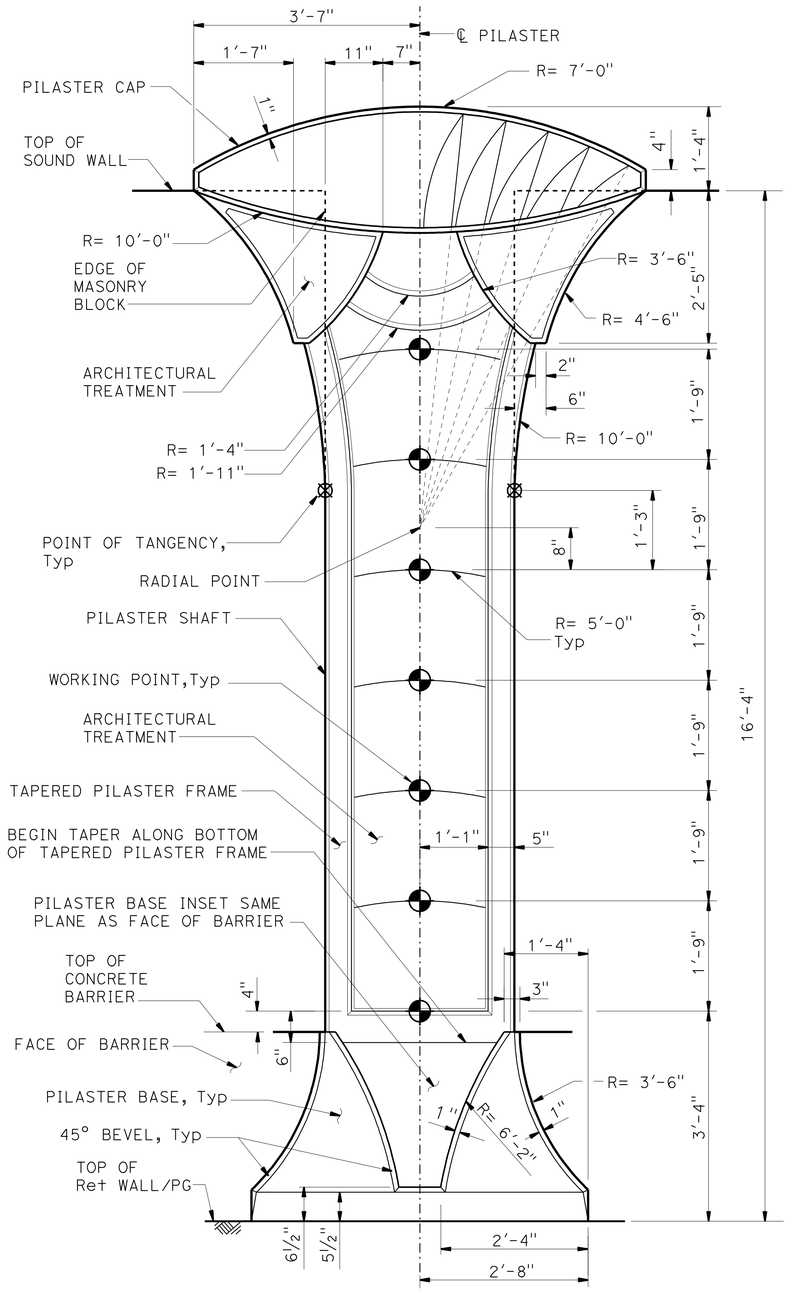

16'-4" SOUND WALL

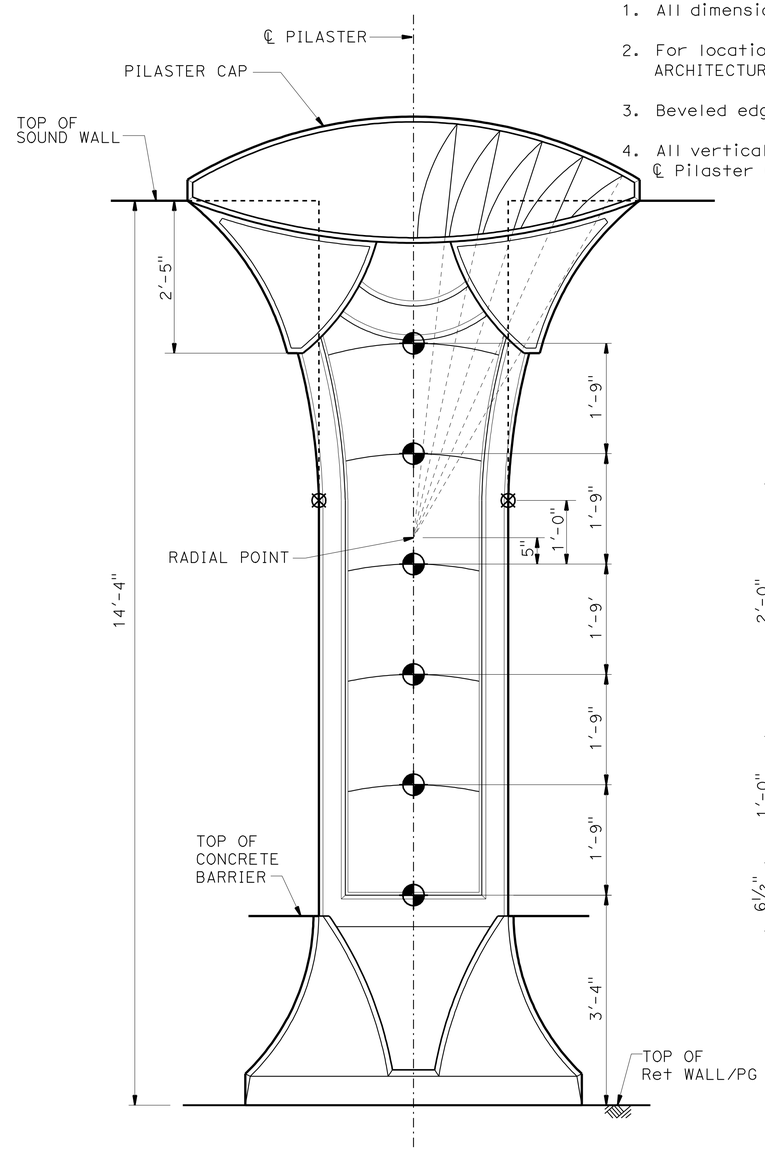

NOTE: For dimensions and details not shown, see "16'-4" SOUND WALL" details

14'-4" SOUND WALL

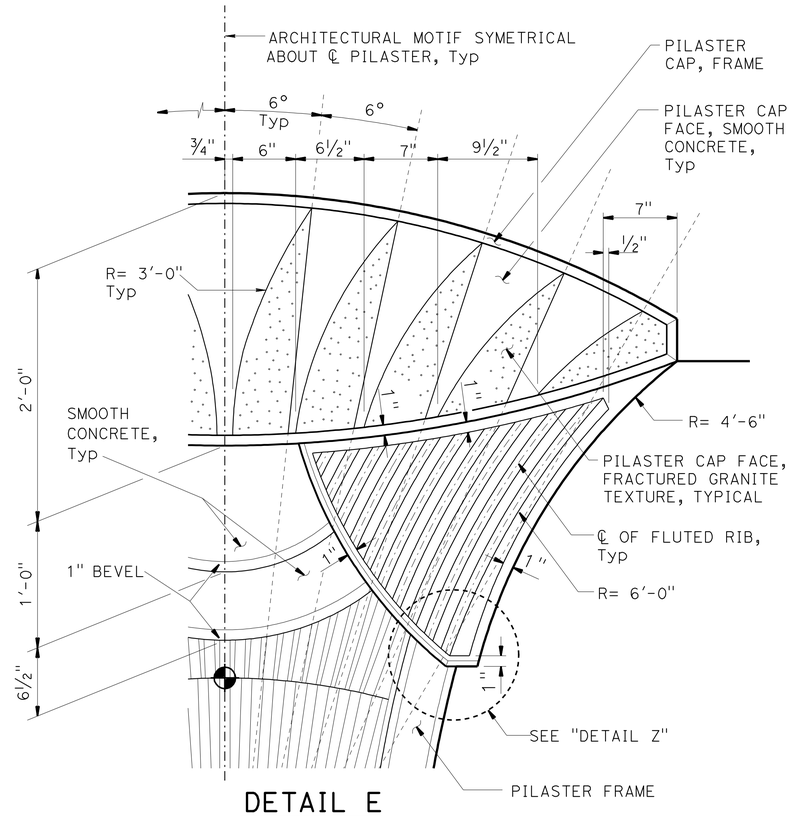

DETAIL E
NO SCALE

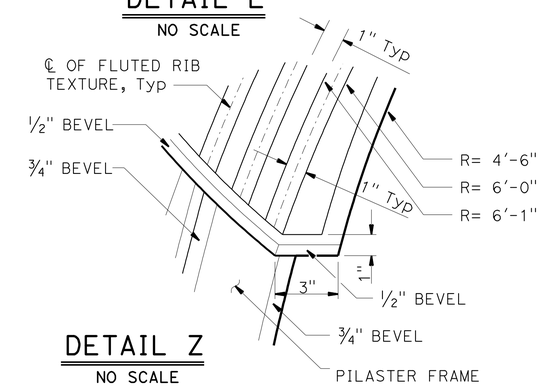

DETAIL Z
NO SCALE

NOTE:
THE CONTRACTOR SHALL VERIFY ALL CONTROLLING FIELD DIMENSIONS BEFORE ORDERING OR FABRICATING ANY MATERIAL.

PILASTER ELEVATION - FREEWAY SIDE
NO SCALE

	BY	CHECKED
DESIGN	H. CHAVEZ	I. TASABIA
DETAILS	J. VALENCIA	F. WEI
QUANTITIES	V. WAMI	H. WIN

STATE OF CALIFORNIA
DEPARTMENT OF TRANSPORTATION

DIVISION OF ENGINEERING SERVICES
STRUCTURE DESIGN
DESIGN BRANCH 21

BRIDGE NO. 53E0189
POST MILE 4.96

SOUND WALL NO. 262
PILASTER ARCHITECTURAL DETAILS NO. 1

STRUCTURES DESIGN DETAIL SHEET (ENGLISH) (REV. 09-01-10)

ORIGINAL SCALE IN INCHES FOR REDUCED PLANS 0 1 2 3

UNIT: 3623
PROJECT NUMBER & PHASE: 0700001834 & 1 CONTRACT NO.: 07-215941

DISREGARD PRINTS BEARING EARLIER REVISION DATES

REVISION DATES 09/30/11 11/25/11 12/12/11

SHEET 9 OF 22

FILE => 53-E0189-g-pilaster_arch01.dgn

USERNAME => s128843 DATE PLOTTED => 14-APR-2012 TIME PLOTTED => 12:49

DIST	COUNTY	ROUTE	POST MILES TOTAL PROJECT	SHEET No.	TOTAL SHEETS
07	LA	5	4.0/5.9	1390	1597

REGISTERED CIVIL ENGINEER 12/12/11 DATE

4-9-12
PLANS APPROVAL DATE

REGISTERED PROFESSIONAL ENGINEER FRANK HSIAOSHIH WEI No. C 52918 Exp. 12-31-12 CIVIL STATE OF CALIFORNIA

The State of California or its officers or agents shall not be responsible for the accuracy or completeness of electronic copies of this plan sheet.

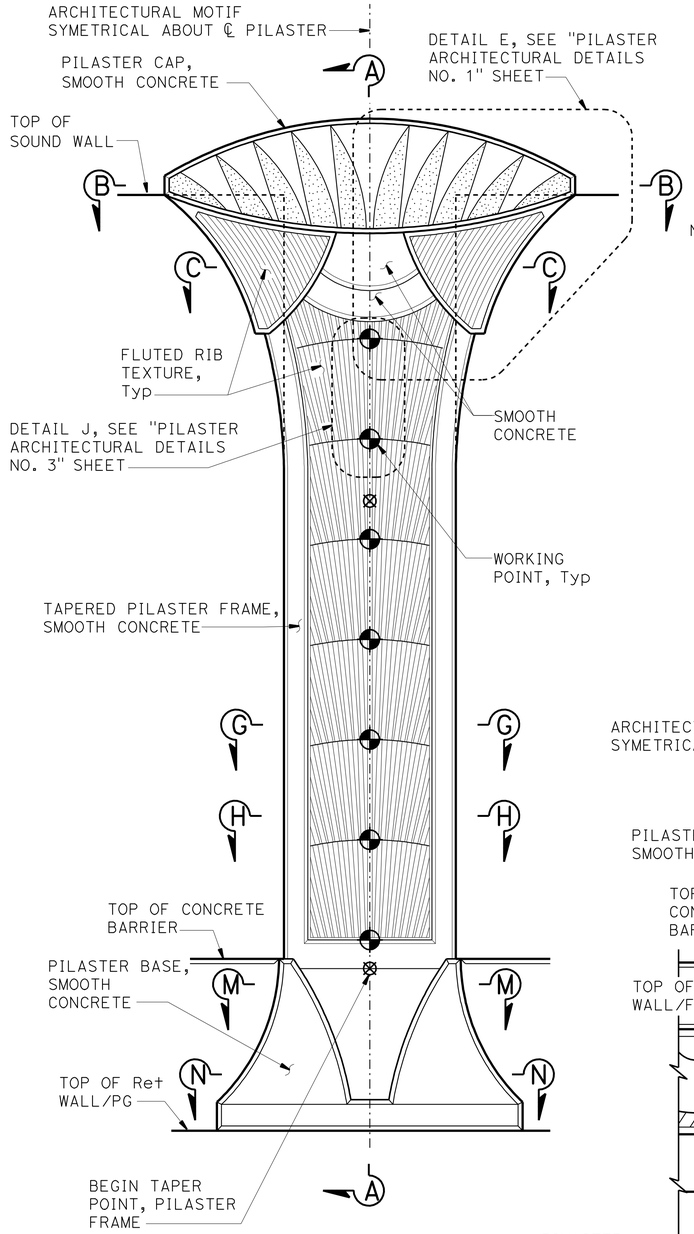

NOTE: For additional details not shown, see "16'-4" SOUND WALL - PILASTER ELEVATION" on "PILASTER ARCHITECTURAL DETAILS NO. 1" sheet.

FREEWAY SIDE

NOTES:

1. For "SECTION B-B", "SECTION C-C", "SECTION G-G","SECTION H-H" and "SECTION L-L", see "PILASTER ARCHITECTURAL DETAILS NO. 3" sheet.
2. For "SECTION M-M" and "SECTION N-N"' see "PILASTER ARCHITECTURAL DETAIL NO. 4" sheet.
3. Pilaster Sections on Retaining Wall shown, for Pilaster on Barrier Type 736SV (Mod), see "PILASTER SECTION ON TYPE 736SV (Mod) BARRIER" on "PILASTER ARCHITECTURAL DETAILS NO. 4" sheet.
4. All dimensions symetrical about ℄ pilaster.
5. Beveled edges are 45° unless otherwise noted
6. All vertical dimensions are measured along the ℄ Pilaster (Pilaster shall be vertical).

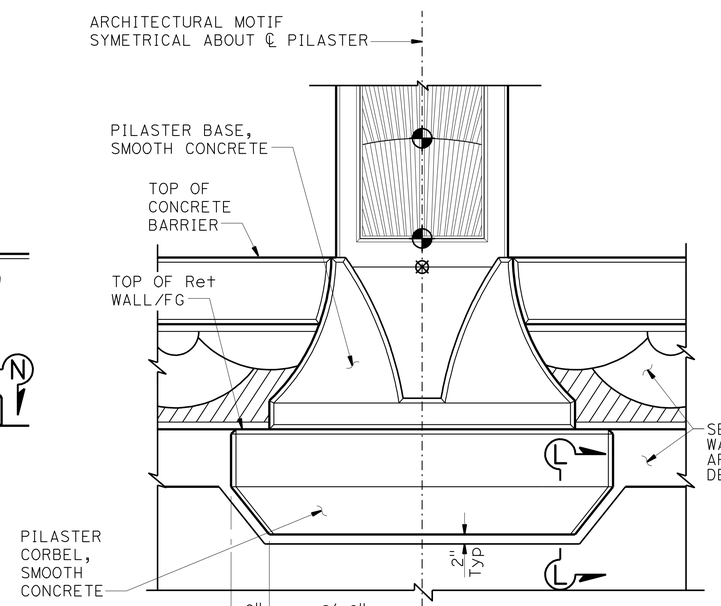

NOTE: For additional details not shown, see "FREEWAY SIDE" details.

BACK SIDE

NOTE:
THE CONTRACTOR SHALL VERIFY ALL CONTROLLING FIELD DIMENSIONS BEFORE ORDERING OR FABRICATING ANY MATERIAL.

PILASTER ARCHITECTURAL MOTIF

3/4" = 1'-0"

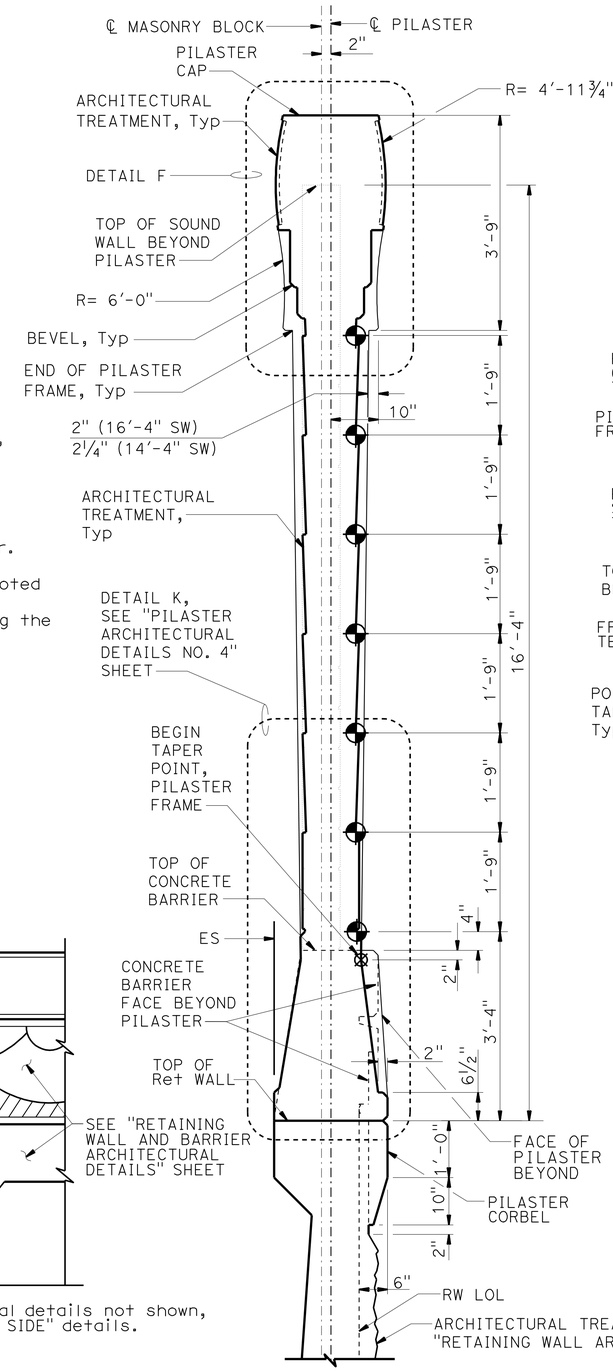

SECTION A-A

3/4" = 1'-0"

NOTE: Pilaster for 16'-4" Sound Wall shown, Pilaster at 14'-4" Sound Wall similar.

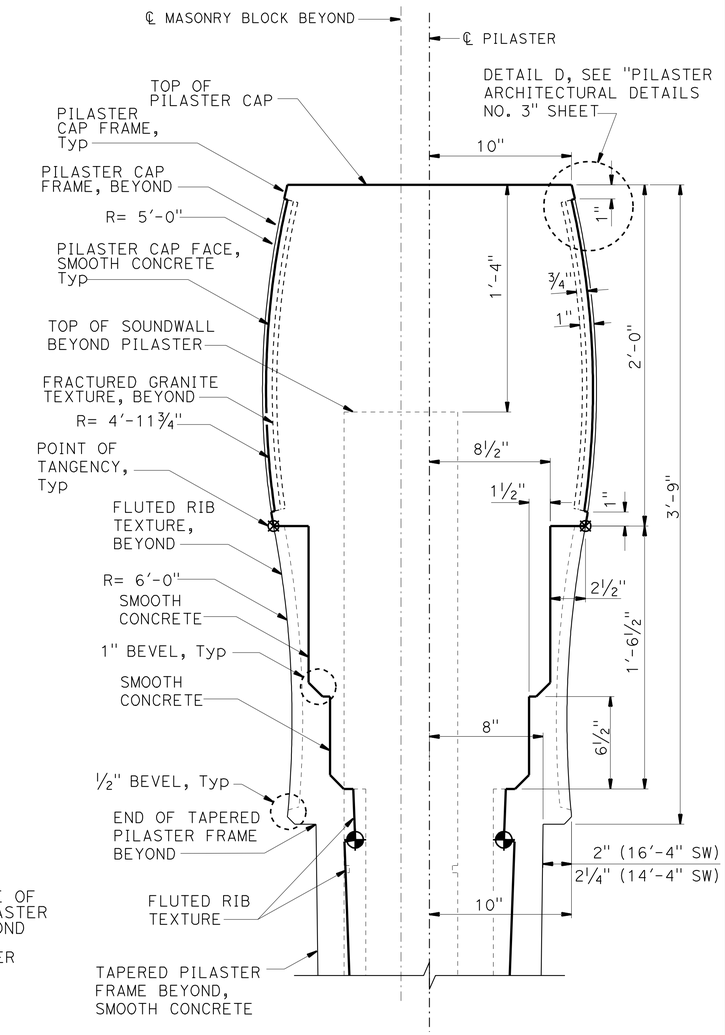

DETAIL F

NO SCALE

DESIGN	BY H. CHAVEZ	CHECKED I. TASABIA	
DETAILS	BY J. VALENCIA	CHECKED F. WEI	
QUANTITIES	BY V. WAMI	CHECKED H. WIN	

STATE OF CALIFORNIA
DEPARTMENT OF TRANSPORTATION

DIVISION OF ENGINEERING SERVICES
STRUCTURE DESIGN
DESIGN BRANCH 21

BRIDGE NO. 53E0189
POST MILE 4.96

SOUND WALL NO. 262

PILASTER ARCHITECTURAL DETAILS NO. 2

STRUCTURES DESIGN DETAIL SHEET (ENGLISH) (REV. 09-01-10)

ORIGINAL SCALE IN INCHES FOR REDUCED PLANS 0 1 2 3

UNIT: 3623
PROJECT NUMBER & PHASE: 0700001834 & 1 CONTRACT NO.: 07-215941

DISREGARD PRINTS BEARING EARLIER REVISION DATES

REVISION DATES 09/30/11 11/25/11 12/12/11

SHEET 10 OF 22

FILE => 53-E0189-g-pilaster_arch02.dgn

USERNAME => s128843 DATE PLOTTED => 14-APR-2012 TIME PLOTTED => 12:49

DIST	COUNTY	ROUTE	POST MILES TOTAL PROJECT	SHEET No.	TOTAL SHEETS
07	LA	5	4.0/5.9	1391	1597

REGISTERED CIVIL ENGINEER 12/12/11 DATE

4-9-12
PLANS APPROVAL DATE

REGISTERED PROFESSIONAL ENGINEER FRANK HSIAOSHIH WEI No. C 52918 Exp. 12-31-12 CIVIL STATE OF CALIFORNIA

The State of California or its officers or agents shall not be responsible for the accuracy or completeness of electronic copies of this plan sheet.

NOTES:

1. All notes and dimensions symetrical about ℄ pilaster.
2. Beveled edges are 45° unless otherwise noted.
3. For location of "DETAIL J", "DETAIL D" and "SECTION B-B", "SECTION C-C", "SECTION G-G", "SECTION H-H" and "SECTION L-L", see "PILASTER ARCHITECTURAL DETAILS NO. 2" sheet.
4. For Retaining Wall split slate texture, see "RETAINING WALL AND BARRIER ARCHITECTURAL DETAILS" sheet.

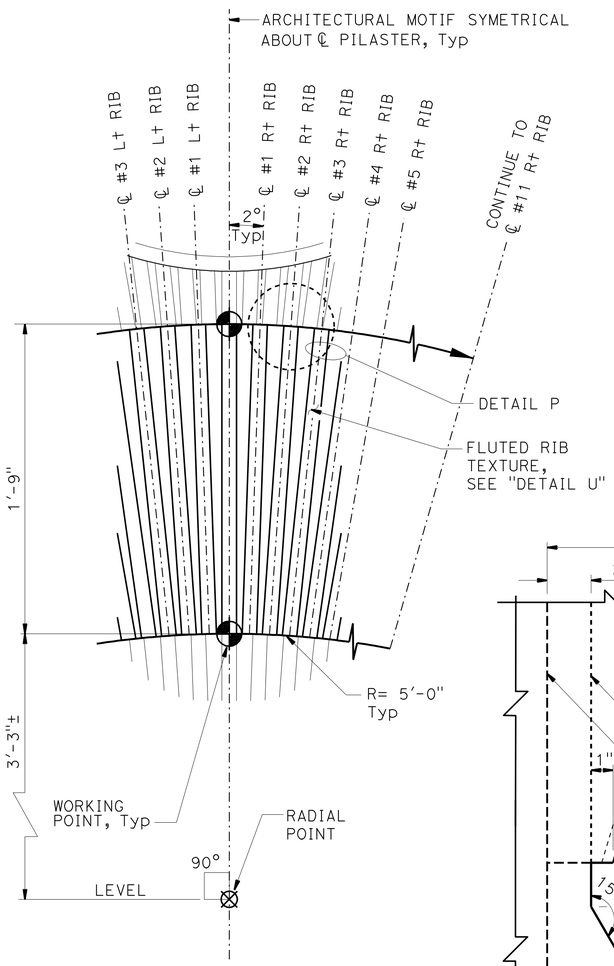

DETAIL J
NO SCALE

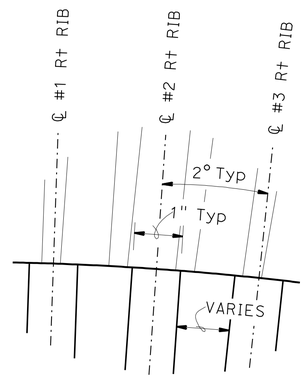

DETAIL P
NO SCALE

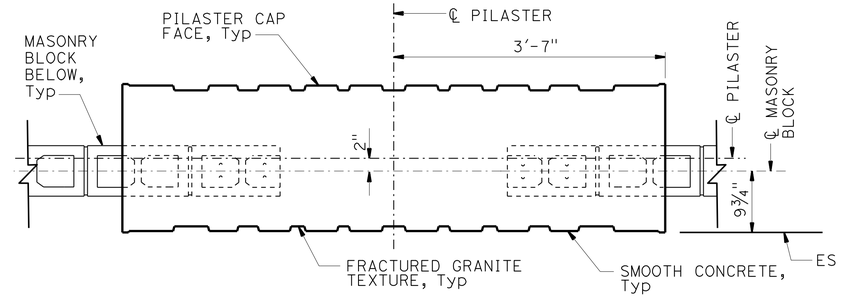

SECTION B-B
1" = 1'-0"

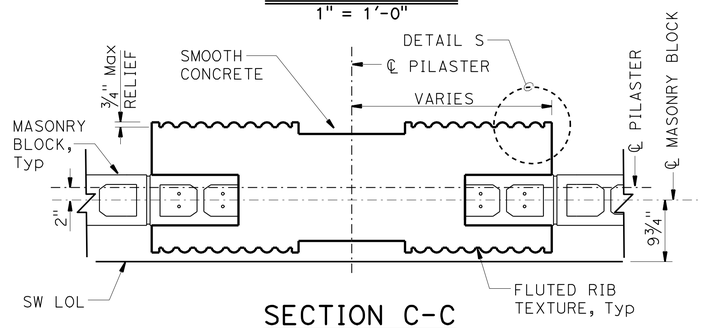

SECTION C-C
1" = 1'-0"

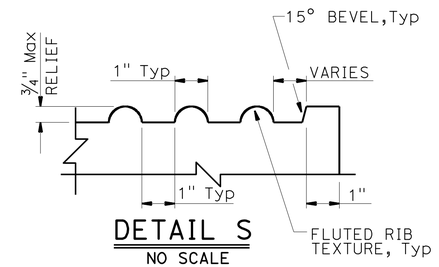

DETAIL S
NO SCALE

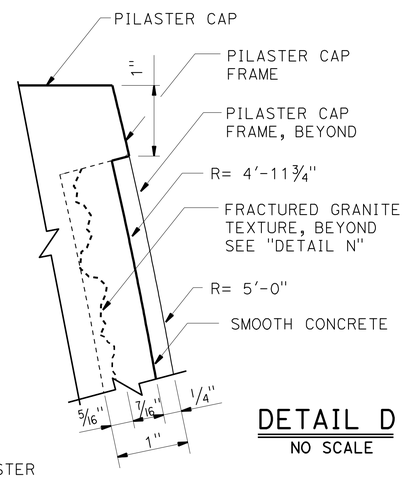

DETAIL D
NO SCALE

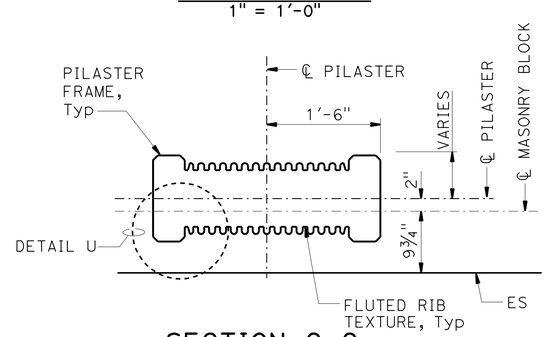

SECTION G-G
1" = 1'-0"

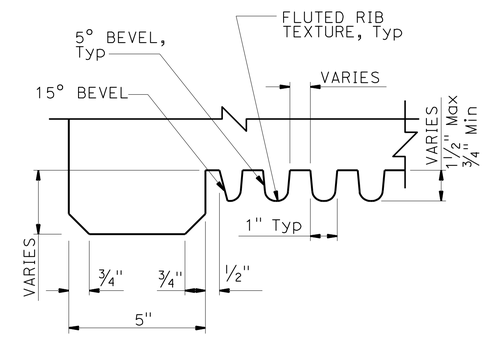

DETAIL U
NO SCALE

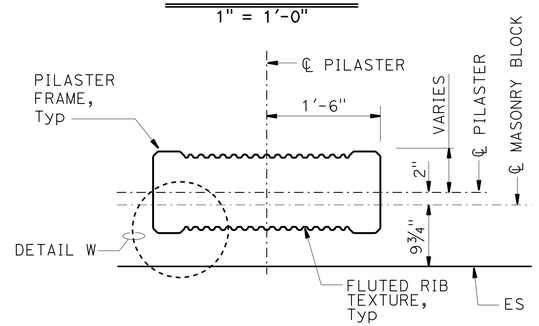

SECTION H-H
1" = 1'-0"

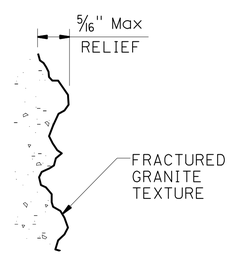

DETAIL N
NO SCALE

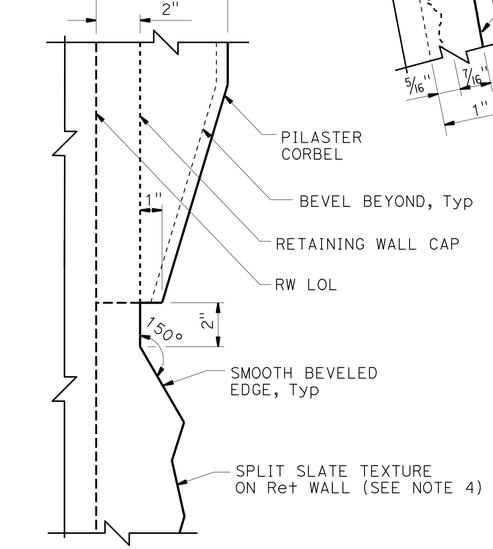

SECTION L-L
NO SCALE

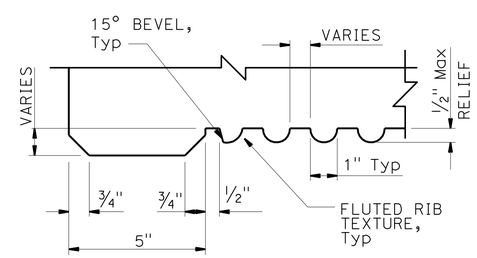

DETAIL W
NO SCALE

NOTE:
THE CONTRACTOR SHALL VERIFY ALL CONTROLLING FIELD DIMENSIONS BEFORE ORDERING OR FABRICATING ANY MATERIAL.

	BY	CHECKED
DESIGN	H. CHAVEZ	I. TASABIA
DETAILS	J. VALENCIA	F. WEI
QUANTITIES	V. WAMI	H. WIN

STATE OF CALIFORNIA
DEPARTMENT OF TRANSPORTATION

DIVISION OF ENGINEERING SERVICES
STRUCTURE DESIGN
DESIGN BRANCH 21

BRIDGE NO. 53E0189
POST MILE 4.96

SOUND WALL NO. 262
PILASTER ARCHITECTURAL DETAILS NO. 3

STRUCTURES DESIGN DETAIL SHEET (ENGLISH) (REV. 09-01-10)

ORIGINAL SCALE IN INCHES FOR REDUCED PLANS 0 1 2 3

UNIT: 3623
PROJECT NUMBER & PHASE: 0700001834 & 1 CONTRACT NO.: 07-215941

DISREGARD PRINTS BEARING EARLIER REVISION DATES

REVISION DATES 09/30/11 11/25/11 12/12/11

SHEET 11 OF 22

FILE => 53-E0189-g-pilaster_arch03.dgn

USERNAME => s128843 DATE PLOTTED => 14-APR-2012 TIME PLOTTED => 12:49

DIST	COUNTY	ROUTE	POST MILES TOTAL PROJECT	SHEET No.	TOTAL SHEETS
07	LA	5	4.0/5.9	1392	1597

REGISTERED CIVIL ENGINEER 12/12/11 DATE

4-9-12
PLANS APPROVAL DATE

REGISTERED PROFESSIONAL ENGINEER FRANK HSIAOSHIH WEI No. C 52918 Exp. 12-31-12 CIVIL STATE OF CALIFORNIA

The State of California or its officers or agents shall not be responsible for the accuracy or completeness of electronic copies of this plan sheet.

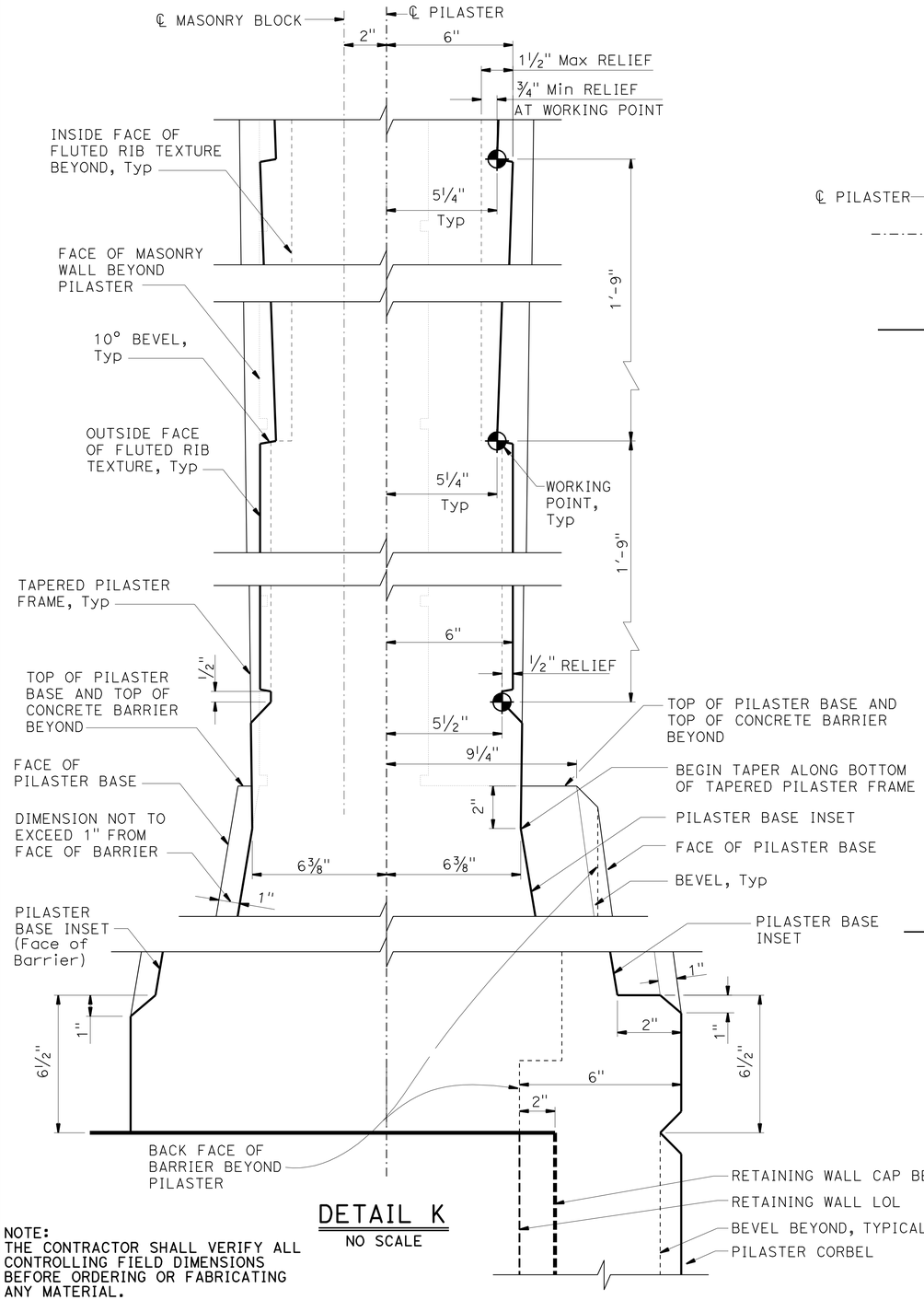

DETAIL K
NO SCALE

NOTE:
THE CONTRACTOR SHALL VERIFY ALL CONTROLLING FIELD DIMENSIONS BEFORE ORDERING OR FABRICATING ANY MATERIAL.

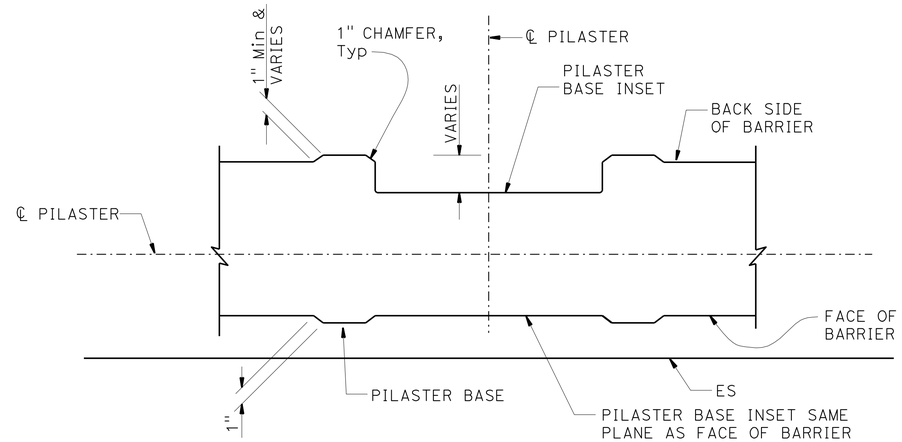

SECTION M-M
1½" = 1'-0"

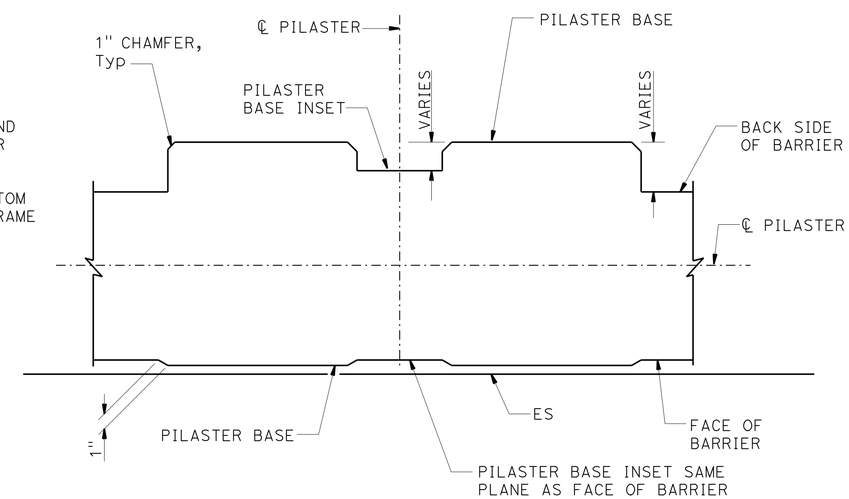

SECTION N-N
1½" = 1'-0"

NOTES:

1. For location of "SECTION M-M", "SECTION N-N" and "DETAIL K", see "PILASTER ARCHITECTURAL DETAILS NO. 2" sheet.
2. All dimensions symetrical about ℄ Pilaster.
3. All vertical dimensions are measured along the ℄ Pilaster (Pilaster shall be vertical).

	BY	CHECKED
DESIGN	H. CHAVEZ	I. TASABIA
DETAILS	J. VALENCIA	F. WEI
QUANTITIES	V. WAMI	H. WIN

STATE OF CALIFORNIA
DEPARTMENT OF TRANSPORTATION

DIVISION OF ENGINEERING SERVICES
STRUCTURE DESIGN
DESIGN BRANCH 21

BRIDGE NO. 53E0189
POST MILE 4.96

SOUND WALL NO. 262
PILASTER ARCHITECTURAL DETAILS NO. 4

STRUCTURES DESIGN DETAIL SHEET (ENGLISH) (REV. 09-01-10)

ORIGINAL SCALE IN INCHES FOR REDUCED PLANS 0 1 2 3

UNIT: 3623
PROJECT NUMBER & PHASE: 0700001834 & 1 CONTRACT NO.: 07-215941

DISREGARD PRINTS BEARING EARLIER REVISION DATES

REVISION DATES: 09/30/11 11/25/11 12/12/11

SHEET 12 OF 22

FILE => 53-E0189-g-pilaster_arch04.dgn

USERNAME => s128843 DATE PLOTTED => 14-APR-2012 TIME PLOTTED => 12:49

DIST	COUNTY	ROUTE	POST MILES TOTAL PROJECT	SHEET No.	TOTAL SHEETS
07	LA	5	4.0/5.9	1393	1597

REGISTERED CIVIL ENGINEER 12/12/11 DATE

4-9-12
PLANS APPROVAL DATE

REGISTERED PROFESSIONAL ENGINEER FRANK HSIAOSHIH WEI No. C 52918 Exp. 12-31-12 CIVIL STATE OF CALIFORNIA

The State of California or its officers or agents shall not be responsible for the accuracy or completeness of electronic copies of this plan sheet.

NOTES:

1. For "SECTION B-B", "SECTION C-C", "SECTION D-D" and "SECTION G-G", see "PILASTER STRUCTURAL DETAILS NO. 2" sheet.

2. 16'-4" height pilaster shown. 12'-4" and 14'-4" height pilaster similar.

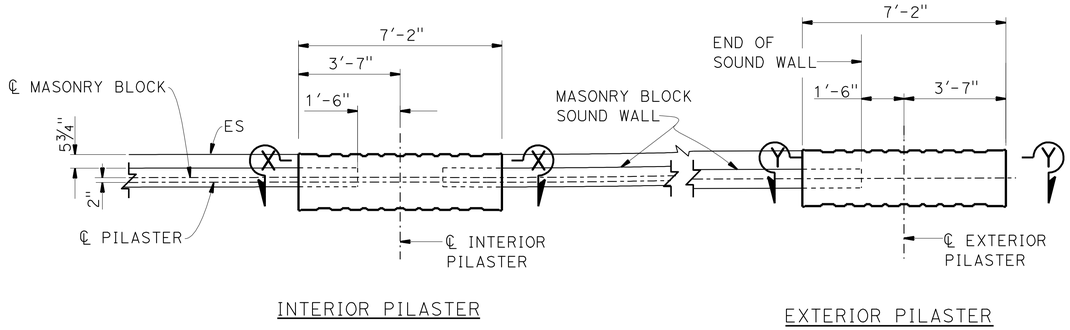

INTERIOR PILASTER

EXTERIOR PILASTER

PART SOUND WALL PLAN

⅜" = 1'-0"

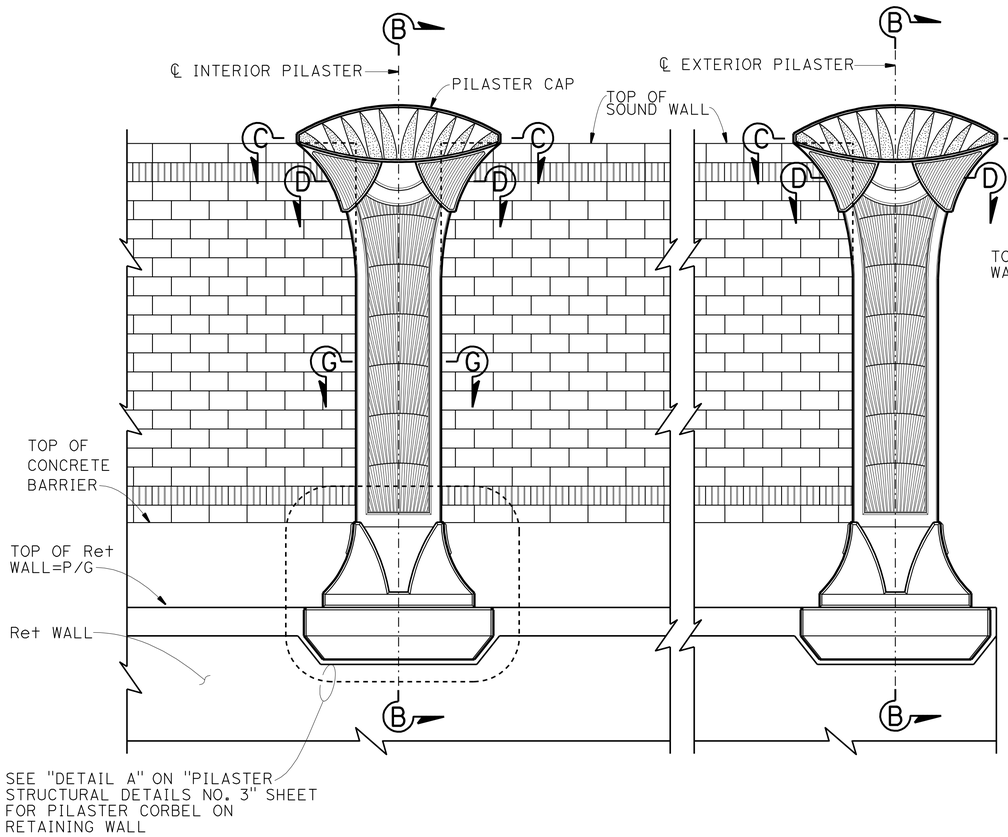

PART SOUND WALL ELEVATION

⅜" = 1'-0"

NOTE:
THE CONTRACTOR SHALL VERIFY ALL CONTROLLING FIELD DIMENSIONS BEFORE ORDERING OR FABRICATING ANY MATERIAL.

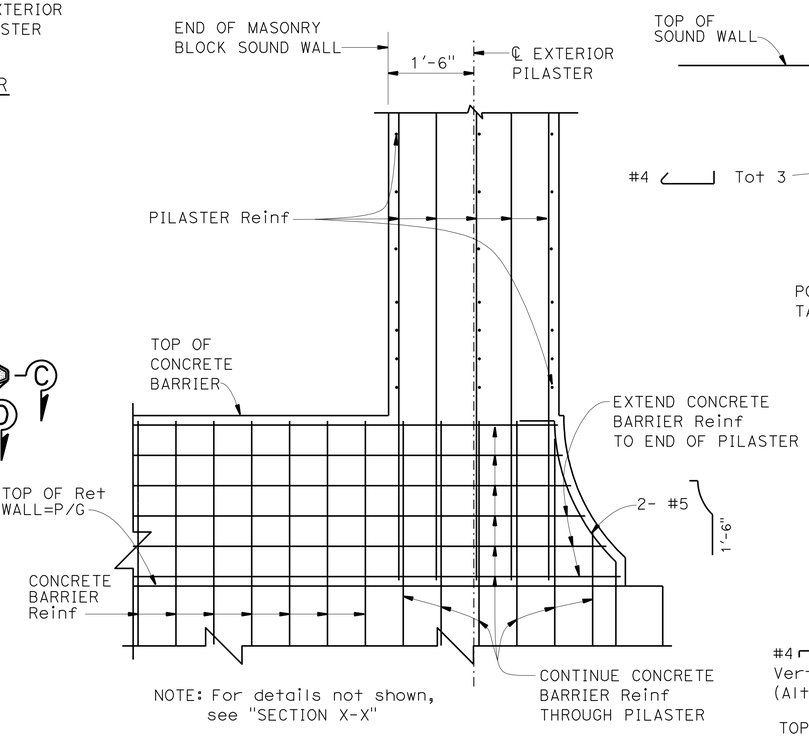

NOTE: For details not shown, see "SECTION X-X"

SECTION Y-Y

¾" = 1'-0"

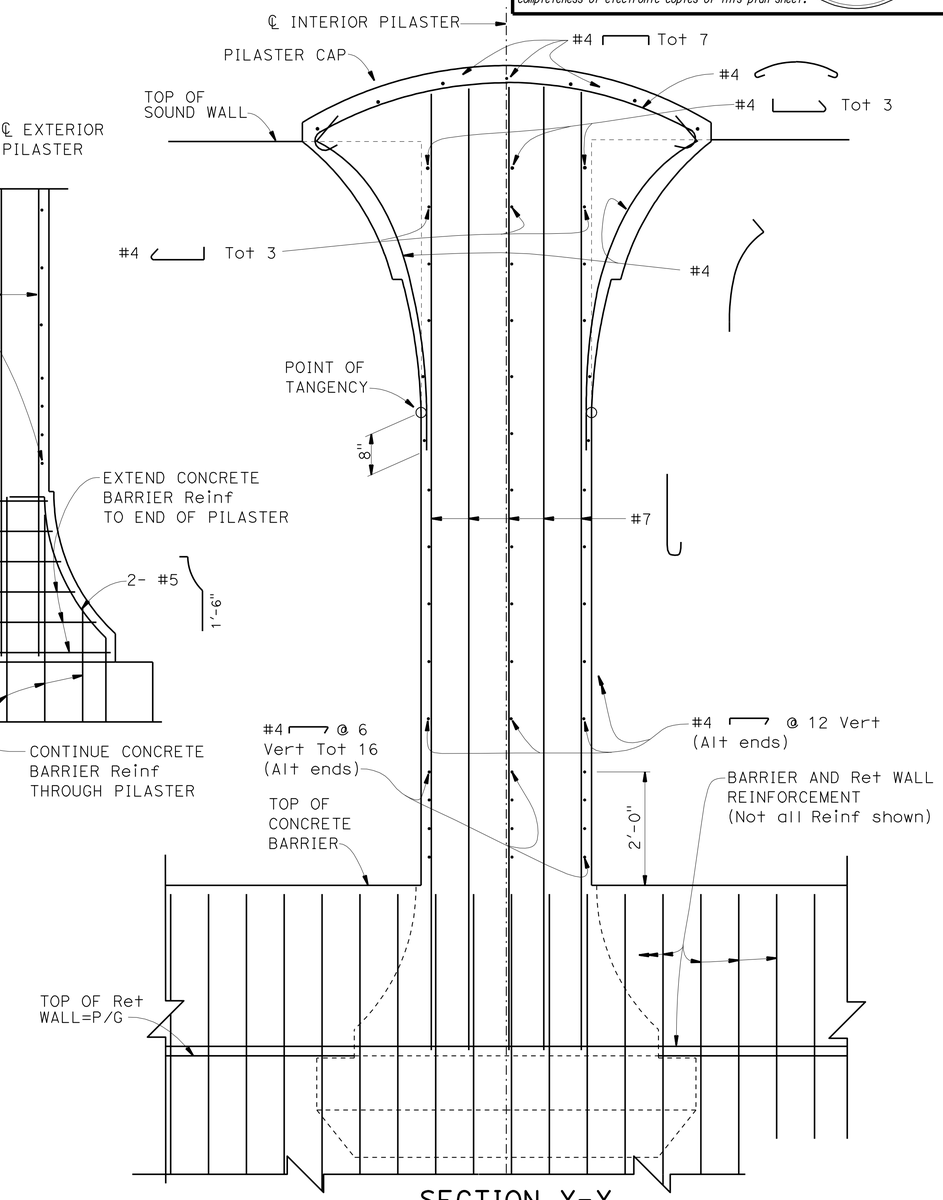

NOTE: Pilaster corbel reinf not shown.

SECTION X-X

¾" = 1'-0"

DESIGN	BY H. CHAVEZ	CHECKED I. TASABIA	
DETAILS	BY J. VALENCIA	CHECKED F. WEI	
QUANTITIES	BY V. WAMI	CHECKED H. WIN	

STATE OF CALIFORNIA
DEPARTMENT OF TRANSPORTATION

DIVISION OF ENGINEERING SERVICES
STRUCTURE DESIGN
DESIGN BRANCH 21

BRIDGE NO. 53E0189
POST MILE 4.96

SOUND WALL NO. 262

PILASTER STRUCTURAL DETAILS NO. 1

STRUCTURES DESIGN DETAIL SHEET (ENGLISH) (REV. 09-01-10)

ORIGINAL SCALE IN INCHES FOR REDUCED PLANS 0 1 2 3

UNIT: 3623
PROJECT NUMBER & PHASE: 0700001834 & 1 CONTRACT NO.: 07-215941

DISREGARD PRINTS BEARING EARLIER REVISION DATES

REVISION DATES 09/30/11 11/25/11 12/12/11

SHEET 13 OF 22

FILE => 53-E0189-h-pilaster_str01.dgn

USERNAME => s128843 DATE PLOTTED => 14-APR-2012 TIME PLOTTED => 12:49

DIST	COUNTY	ROUTE	POST MILES TOTAL PROJECT	SHEET No.	TOTAL SHEETS
07	LA	5	4.0/5.9	1394	1597

REGISTERED CIVIL ENGINEER 12/12/11 DATE

4-9-12
PLANS APPROVAL DATE

REGISTERED PROFESSIONAL ENGINEER FRANK HSIAOSHIH WEI No. C 52918 Exp. 12-31-12 CIVIL STATE OF CALIFORNIA

The State of California or its officers or agents shall not be responsible for the accuracy or completeness of electronic copies of this plan sheet.

NOTES:

1. For location of "SECTION B-B", "SECTION C-C", "SECTION D-D" and "SECTION G-G", see "PILASTER STRUCTURAL DETAILS NO. 1" sheet.
2. For Pilaster geometry, dimensions and architectural treatments, see "PILASTER ARCHITECTURAL DETAILS" sheets.
3. 16'-4" height pilaster shown. 12'-4" and 14'-4" height pilaster similar.

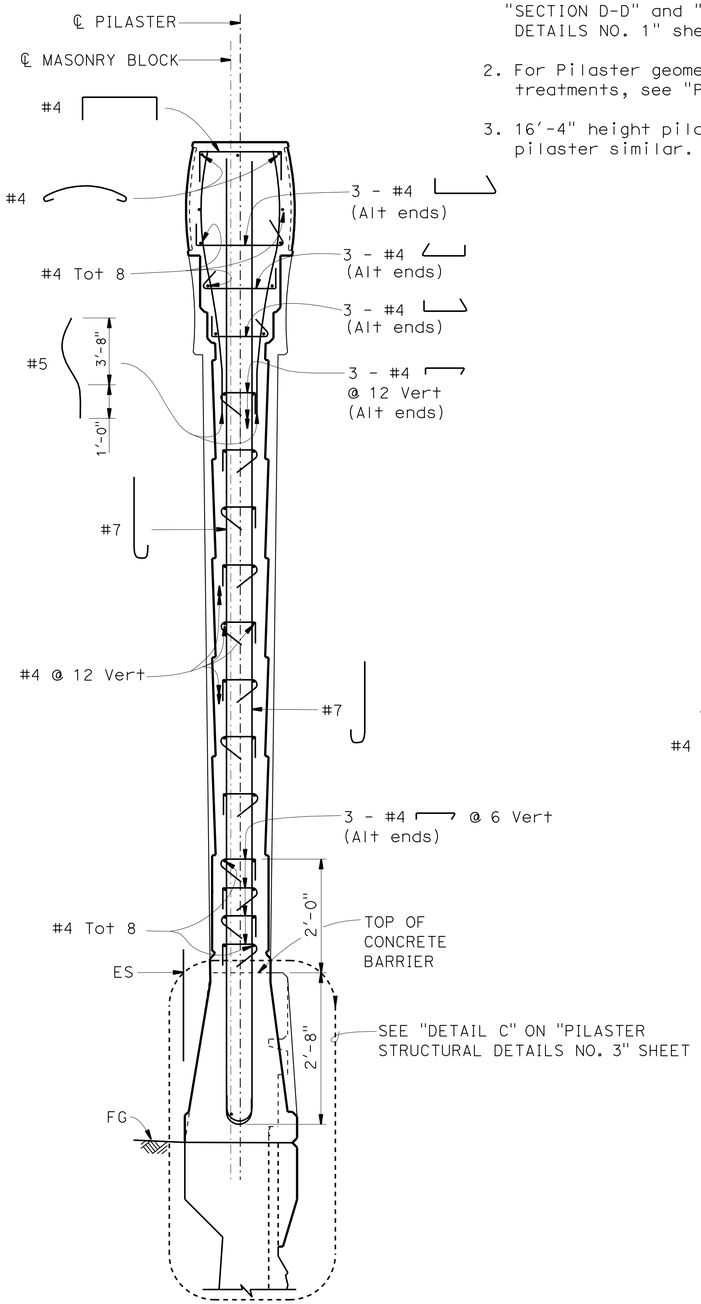

SECTION B-B

¾" = 1'-0"

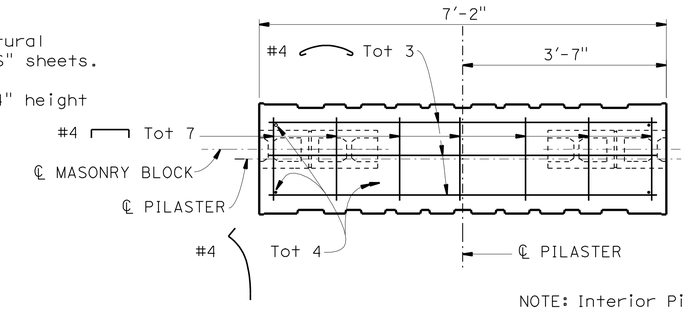

NOTE: Interior Pilaster shown, Exterior Pilaster similar.

SECTION C-C

¾" = 1'-0"

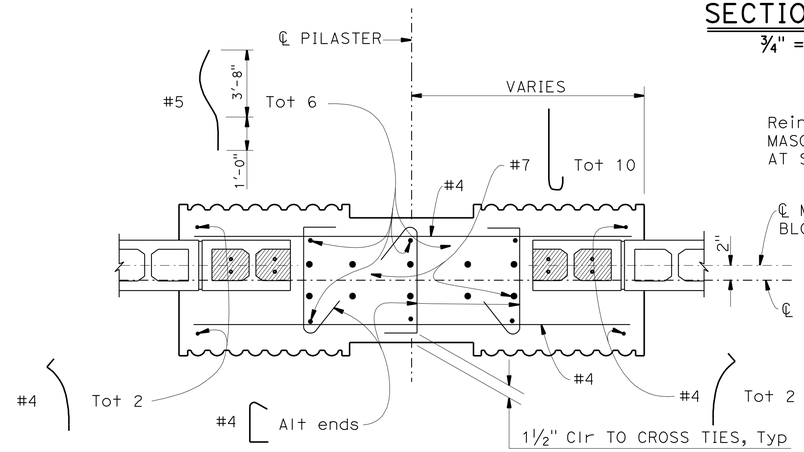

INTERIOR PILASTER

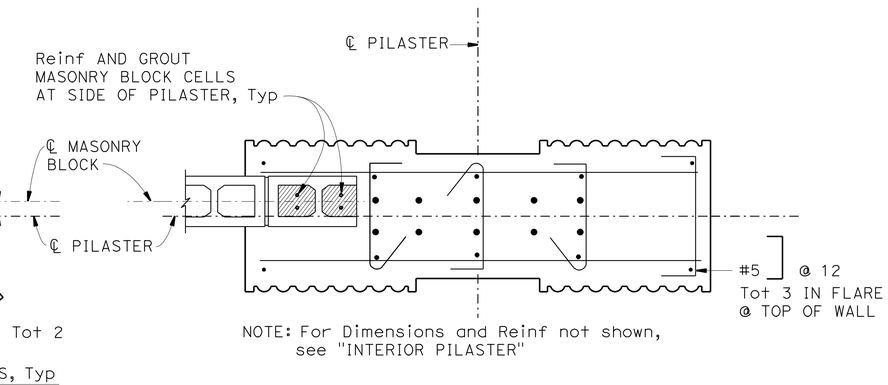

NOTE: For Dimensions and Reinf not shown, see "INTERIOR PILASTER"

EXTERIOR PILASTER

SECTION D-D

1" = 1'-0"

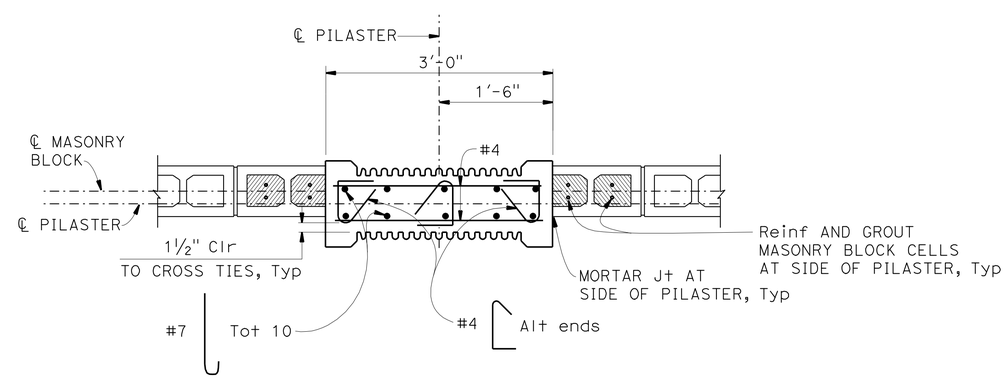

SECTION G-G

1" = 1'-0"

NOTE:
THE CONTRACTOR SHALL VERIFY ALL CONTROLLING FIELD DIMENSIONS BEFORE ORDERING OR FABRICATING ANY MATERIAL.

	BY	CHECKED
DESIGN	H. CHAVEZ	I. TASABIA
DETAILS	J. VALENCIA	F. WEI
QUANTITIES	V. WAMI	H. WIN

STATE OF CALIFORNIA DEPARTMENT OF TRANSPORTATION

DIVISION OF ENGINEERING SERVICES STRUCTURE DESIGN DESIGN BRANCH 21

BRIDGE NO. 53E0189
POST MILE 4.96

SOUND WALL NO. 262
PILASTER STRUCTURAL DETAILS NO. 2

STRUCTURES DESIGN DETAIL SHEET (ENGLISH) (REV. 09-01-10)

ORIGINAL SCALE IN INCHES FOR REDUCED PLANS 0 1 2 3

UNIT: 3623
PROJECT NUMBER & PHASE: 0700001834 & 1 CONTRACT NO.: 07-215941

DISREGARD PRINTS BEARING EARLIER REVISION DATES

REVISION DATES 09/30/11 11/25/11 12/12/11

SHEET 14 OF 22

FILE => 53-E0189-h-pilaster_str02.dgn

USERNAME => s128843 DATE PLOTTED => 14-APR-2012 TIME PLOTTED => 12:49

DIST	COUNTY	ROUTE	POST MILES TOTAL PROJECT	SHEET No.	TOTAL SHEETS
07	LA	5	4.0/5.9	1395	1597

REGISTERED CIVIL ENGINEER 12/12/11 DATE

4-9-12
PLANS APPROVAL DATE

REGISTERED PROFESSIONAL ENGINEER FRANK HSIAOSHIH WEI No. C 52918 Exp. 12-31-12 CIVIL STATE OF CALIFORNIA

The State of California or its officers or agents shall not be responsible for the accuracy or completeness of electronic copies of this plan sheet.

NOTES:

1. For location of "DETAIL A", see "PILASTER STRUCTURAL DETAILS NO. 1" sheet.
2. For location of "DETAIL C", see "PILASTER STRUCTURAL DETAILS NO. 2" sheet.
3. See "RETAINING WALL AND BARRIER ARCHITECTURAL DETAILS" sheet.

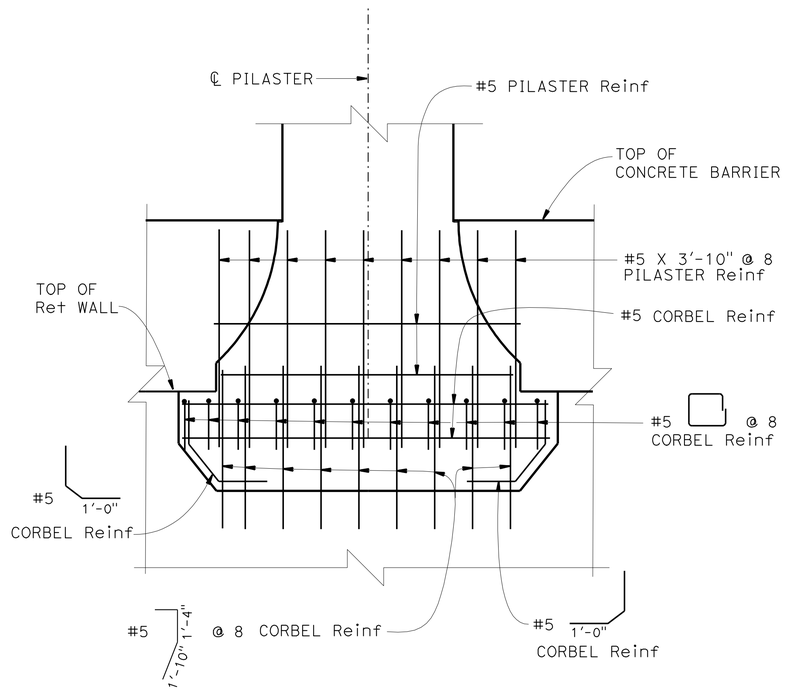

NOTE: Concrete Barrier/Ret Wall reinf not shown.

DETAIL A

¾" = 1'-0"

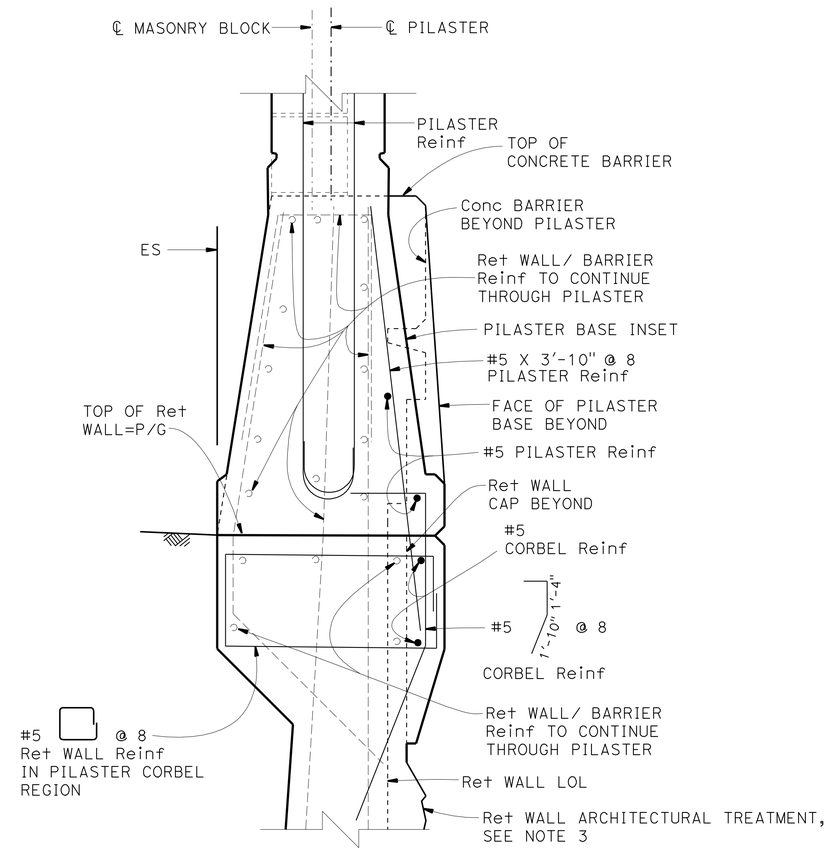

DETAIL C

1½" = 1'-0"

NOTE:
THE CONTRACTOR SHALL VERIFY ALL CONTROLLING FIELD DIMENSIONS BEFORE ORDERING OR FABRICATING ANY MATERIAL.

	BY	CHECKED
DESIGN	H. CHAVEZ	I. TASABIA
DETAILS	J. VALENCIA	F. WEI
QUANTITIES	V. WAMI	H. WIN

STATE OF CALIFORNIA
DEPARTMENT OF TRANSPORTATION

DIVISION OF ENGINEERING SERVICES
STRUCTURE DESIGN
DESIGN BRANCH 21

BRIDGE NO. 53E0189
POST MILE 4.96

SOUND WALL NO. 262
PILASTER STRUCTURAL DETAILS NO. 3

STRUCTURES DESIGN DETAIL SHEET (ENGLISH) (REV. 09-01-10)

ORIGINAL SCALE IN INCHES FOR REDUCED PLANS 0 1 2 3

UNIT: 3623
PROJECT NUMBER & PHASE: 0700001834 & 1 CONTRACT NO.: 07-215941

DISREGARD PRINTS BEARING EARLIER REVISION DATES

REVISION DATES 09/30/11 11/25/11 12/12/11

SHEET 15 OF 22

FILE => 53-E0189-h-pilaster_str03.dgn

USERNAME => s128843 DATE PLOTTED => 14-APR-2012 TIME PLOTTED => 12:49

DIST	COUNTY	ROUTE	POST MILES TOTAL PROJECT	SHEET No.	TOTAL SHEETS
07	LA	5	4.0/5.9	1396	1597

REGISTERED CIVIL ENGINEER 12/12/11 DATE

4-9-12
PLANS APPROVAL DATE

The State of California or its officers or agents shall not be responsible for the accuracy or completeness of electronic copies of this plan sheet.

REGISTERED PROFESSIONAL ENGINEER FRANK HSIAOSHIH WEI No. C 52918 Exp. 12-31-12 CIVIL STATE OF CALIFORNIA

TABLE 1: TABLE OF REINFORCING STEEL DIMENSIONS AND DATA ◇1

DESIGN H	6′	8′	10′	12′	14′	16′	18′	20′	22′	24′	26′	28′	30′	32′
W	8′- 3″	8′- 6″	9′- 0″	9′- 6″	10′- 0″	10′- 9″	11′- 3″	12′- 0″	13′- 3″	14′- 3″	15′- 9″	16′- 9″	18′- 0″	19′- 9″
C	2′- 9″	2′- 9″	3′- 0″	3′- 3″	3′- 4″	3′- 6″	3′- 9″	4′- 0″	4′- 3″	4′- 9″	5′- 3″	5′- 6″	5′- 9″	6′- 7″
B	5′- 6″	5′- 9″	6′- 0″	6′- 3″	6′- 8″	7′- 3″	7′- 6″	8′- 0″	9′- 0″	9′- 6″	10′- 6″	11′- 3″	12′- 3″	13′- 2″
F PILE FOOTING	1′- 6″	1′- 6″	1′- 6″	1′- 6″	1′- 9″	2′- 0″	2′- 0″	2′- 6″	2′- 9″	2′- 9″	3′- 0″	3′- 3″	3′- 9″	4′- 0″
M	1′- 3″	1′- 6″	1′- 6″	1′- 9″	1′- 10″	2′- 0″	2′- 3″	2′- 6″	2′- 9″	3′- 3″	3′- 9″	4′- 0″	4′- 3″	5′- 1″
N	4′- 0″	4′- 3″	4′- 6″	4′- 9″	5′- 2″	5′- 9″	6′- 0″	6′- 6″	7′- 6″	8′-0″	9′-0″	9′- 9″	10′- 9″	11′- 9″
~~ROW 1 SPACING~~	~~12′- 3″~~	~~10′- 3″~~	~~8′- 9″~~	~~7′- 6″~~	~~6′- 3″~~	~~5′- 3″~~	~~4′- 9″~~	~~4′- 0″~~	~~3′- 9″~~	~~3′- 9″~~	~~4′-0″~~	~~3′- 9″~~	~~3′- 9″~~	~~3′- 9″~~
~~ROW 2 SPACING~~	~~14′- 0″~~	~~12′- 9″~~	~~11′- 6″~~	~~10′- 3″~~	~~9′- 3″~~	~~8′- 3″~~	~~7′- 9″~~	~~6′- 6″~~	~~7′- 6″~~	~~6′- 0″~~	~~4′- 0″~~	~~4′- 0″~~	~~3′- 9″~~	~~3′-9″~~
~~ROW 3 SPACING~~									~~6′- 0″~~	~~5′- 3″~~	~~5′ 0″~~	~~4′- 0″~~	~~6′- 0″~~	~~4′- 0″~~
~~ROW 4 SPACING~~													~~3′- 9″~~	~~3′-9″~~
STEM WITH HAUNCH, BATTER	0	1/2:12	1/2:12	1/2:12	1/2:12	1/2:12	1/2:12	1/2:12	1/2:12	5/8:12	3/4:12	7/8:12	1:12	1:12
~~STEM WITHOUT HAUNCH, BATTER~~	~~0~~	~~0~~	~~0~~	~~0~~	~~0~~	~~0~~	~~0~~	~~0~~	~~1/4:12~~	~~1/4:12~~	~~1/2:12~~	~~3/4:12~~	~~3/4:12~~	~~3/4:12~~
ⓐ BARS						#7 @ 15	#7 @ 12	#7 @ 12	#8 @ 12	#6 @ 6	#6 @ 6	#6 @ 6	#8 @ 9	#9 @ 9
ⓑ BARS	#8 @ 12	#7 @ 9	#7 @ 6	#7 @ 6	#7 @ 6	#9 @ 7.5	#9 @ 6	#10 @ 6	#10 @ 6	#8 @ 6 ϒ	#8 @ 6 ϒ	#8 @ 6 ϒ	#10 @ 9 ϒ	#11 @ 9 ϒ
ha			5′- 0″	6′- 0″	7′- 0″	7′ - 0″	6′- 0″	7′- 0″	7′- 0″	7′- 6″	8′- 6″	9′- 3″	15′- 0″	11′- 3″
hb						11′ - 6″	12′- 0″	13′- 3″	16′- 0″	15′- 6″	17′- 6″	18′- 9″	21′- 0″	20′- 9″
ⓒ BARS	#6 @ 12	#6 @ 9	#6 @ 6	#6 @ 6	#6 @ 6	#8 @ 7.5	#8 @ 6	#9 @ 6	#9 @ 6	#10 @ 6	#10 @ 6	#11 @ 6	#10 @ 9 ϒ	#10 @ 9 ϒ
ⓓ BARS	#5 @ 12	#5 @ 9	#5 @ 12	#5 @ 12	#5 @ 12	#6 @ 15	#5 @ 12	#5 @ 12	#6 @ 12	#6 @ 12	#6 @ 12	#7 @ 12	#6 @ 9	#9 @ 9
ⓔ BARS	10-#7 @ 6	8-#7 @ 7	10-#6 @ 6	8-#6 @ 6	6-#6 @ 12	6-#5 @ 12	6-#5 @ 12	6-#5 @ 15	#5 @ 18	#5 @ 18	#5 @ 18	#5 @ 18	#5 @ 18	#5 @ 18
ⓕ BARS	10-#8 @ 7	10-#8 @ 6	10-#7 @ 8	12-#6 @ 7	8-#7 @ 11	7-#6 @ 13	8-#6 @ 12	8-#5 @ 15	#5 @ 18	#5 @ 18	#5 @ 18	#5 @ 18	#5 @ 18	#5 @ 18

Symbol:

ϒ : 2 bar bundle

Note: Total ⓔ bars shown are total number of top and bottom bars combined.

◇2 Note:

1. For location of Detail A, see "RETAINING WALL TYPE 1SWBP - DETAILS NO. 2" sheet.

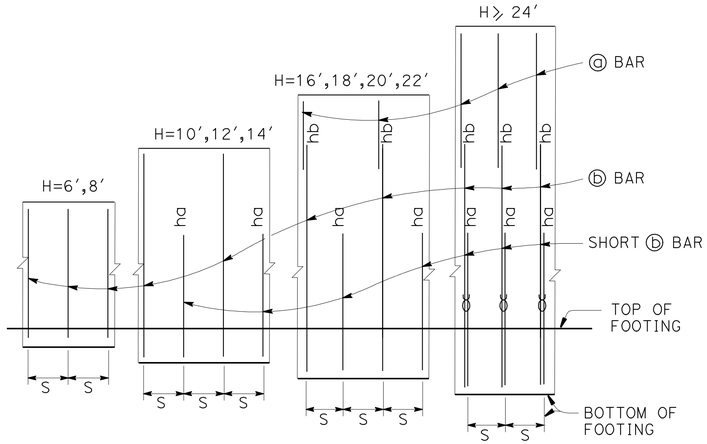

ELEVATION

Note:
"ha" and "hb" above ⓑ bars indicate distance from top of footing to upper end of ⓑ bars, see table.
"s" is ⓑ bar spacing, see table.
ϒ : 2 bar bundle

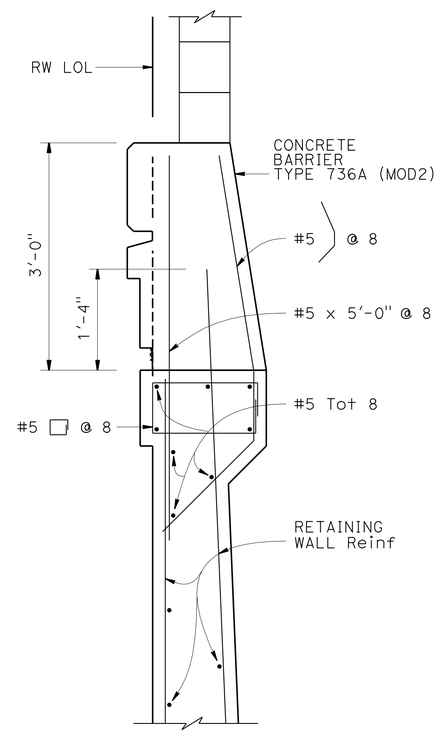

◇3 DETAIL A
1" = 1′-0"

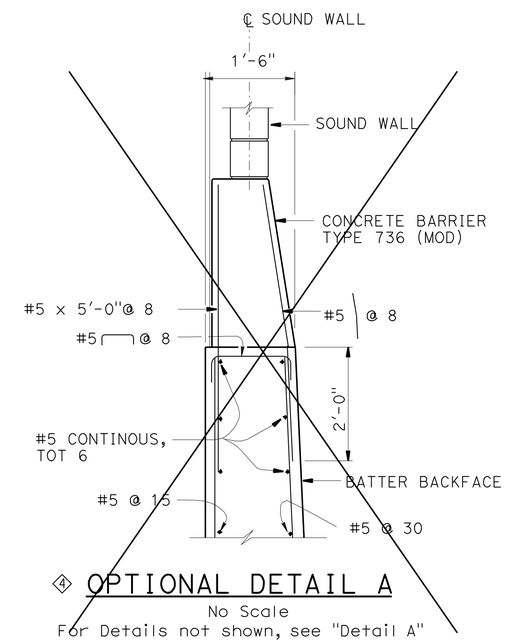

◇4 OPTIONAL DETAIL A
No Scale
For Details not shown, see "Detail A"

DESIGN DATA

Design: AASHTO LRFD Bridge Design Specifications 4th edition with California Amendments

WS: 33 psf on Soundwall and Barrier

LS: Varied surcharge on level ground surface

CT: 54 kip maximum traffic impact loading evenly distributed over 10 feet at top of the barrier and 1:1 distribution down and outward

EQE: Mononobe-Okabe Method
K_h = 0.3
K_v = 0.0

Soil: ϕ = 34°
γ = 120 pcf

Reinforced Concrete: f′c = 3600 psi
fy = 60,000 psi

Load Combinations and Limit States

Service I Q=1.00DC+1.00EV+1.00EH+1.00LS+0.30WS

Service II Q=1.00DC+1.00EV+1.00EH+1.00WS

Strength I Q=aDC+BEV+1.50EH+1.75LS
Q=1.25DC + 1.35EV + 0.90EH +1.75LS
(for piles at heel)

Strength III Q=aDC+BEV+1.50EH+1.40WS

Strength V Q=aDC+BEV+1.50EH+1.35LS+0.40WS

Extreme I Q=1.00DC+1.00EV+1.00EH+1.00EQD+1.00EQE

Extreme II Q=1.00DC+1.00EV+1.00EH+1.00CT

Where:

Q: Force Effects
a: 1.25 or 0.90, Which ever Controls Design
B: 1.35 or 1.00, which ever Controls Design
DC: Dead Load of Structure Components
EV: Vertical Earth Fill Pressure
LS: Live Load Surcharge
EQE: Seismic Earth Pressure
EQD: Soil and Structure Components Inertia. Soil inertia ignored for stem design
WS: Wind Load on Soundwall and Barrier
CT: Vehicular Collision Force

SPECIAL DETAILS

REVISED STANDARD DRAWING

FILE NO. **xs14-320-1**

APPROVAL DATE July 2011

◇1 Modified Table ◇3 Revised Detail
◇2 Revised Note ◇4 Deleted Detail

STATE OF CALIFORNIA DEPARTMENT OF TRANSPORTATION

DIVISION OF ENGINEERING SERVICES

BRIDGE NO. 53E0189
POST MILE 4.96

SOUND WALL NO. 262

RETAINING WALL TYPE 1SWBP - DETAIL NO. 1

DS OSD 2147A (ENGLISH STANDARD DRAWING "XS" BORDER REV. (02-02-11)

ORIGINAL SCALE IN INCHES FOR REDUCED PLANS 0 1 2 3

UNIT: 3623
PROJECT NUMBER & PHASE: 0700001834 & 1 CONTRACT NO.: 07-215941

DISREGARD PRINTS BEARING EARLIER REVISION DATES

REVISION DATES 09/30/11 11/25/11 12/12/11

SHEET 16 OF 22

FILE => 53-E0189-i-rw_typ1_dt01.dgn

USERNAME => s128843 DATE PLOTTED => 14-APR-2012 TIME PLOTTED => 12:50

DIST	COUNTY	ROUTE	POST MILES TOTAL PROJECT	SHEET No.	TOTAL SHEETS
07	LA	5	4.0/5.9	1397	1597

REGISTERED CIVIL ENGINEER 12/12/11 DATE

4-9-12
PLANS APPROVAL DATE

The State of California or its officers or agents shall not be responsible for the accuracy or completeness of electronic copies of this plan sheet.

REGISTERED PROFESSIONAL ENGINEER FRANK HSIAOSHIH WEI No. C 52918 Exp. 12-31-12 CIVIL STATE OF CALIFORNIA

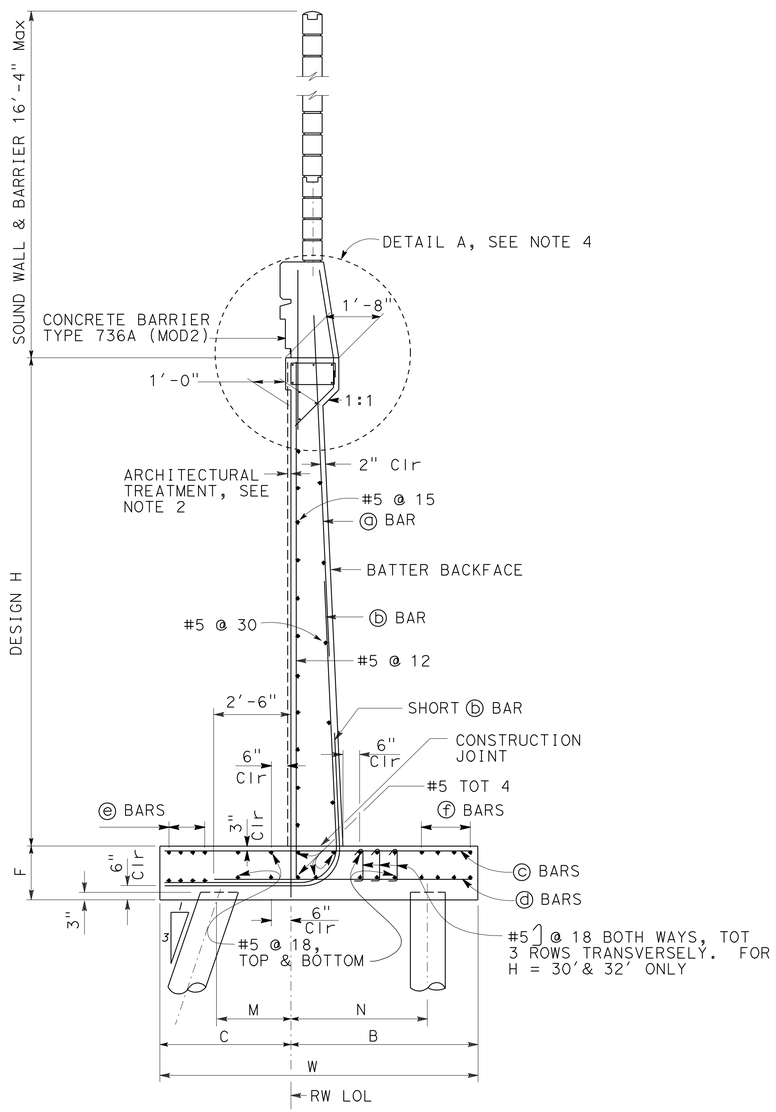

② PILE FOOTING SECTION

NO SCALE
All piles not shown

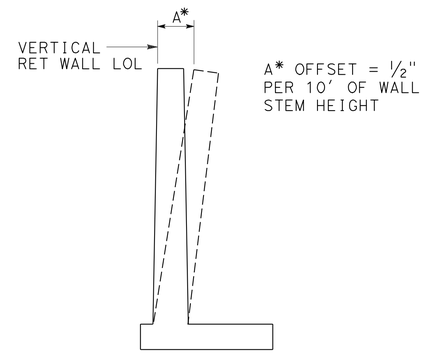

WALL OFFSET

NO SCALE
Values for offsetting forms to be determined by the engineer

① Notes:

1. For pile spacing, see "STRUCTURE PLAN NO. 1" and "STRUCTURE PLAN NO. 2" sheets.
2. For architectural treatment, see "RETAINING WALL AND BARRIER ARCHITECTURAL DETAILS" sheet.
3. For details not shown and drainage notes, see B3-8
4. For "Detail A", see "RETAINING WALL TYPE 1 SWBP - DETAILS NO. 1" sheet.
5. For sound wall and barrer reinforcement, see "SOUND WALL - MASONRY BLOCK WITH BARRER ON RETAINING WALL DETAILS NO.1" and "SOUND WALL - MASONRY BLOCK WITH BARRER ON RETAINING WALL DETAILS NO.2" sheets.
6. For H=6' through 14', extend ⓑ bars into barrier.
7. For H≥16', extend ⓐ bars into barrier.
8. For table of reinforcing steel dimensions and data, see "RETAINING WALL TYPE 1 SWBP - DETAILS NO. 1" sheet.

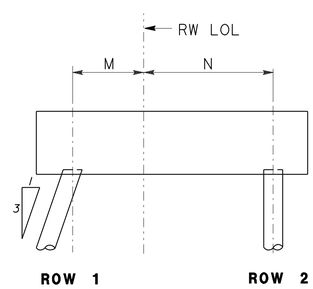

H = 6' through 20'

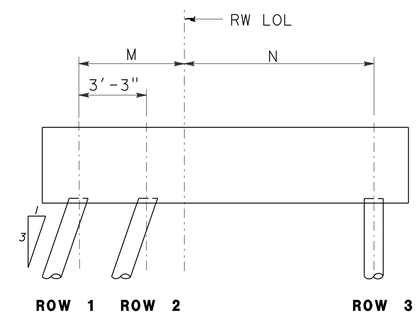

H = 22' through 28'

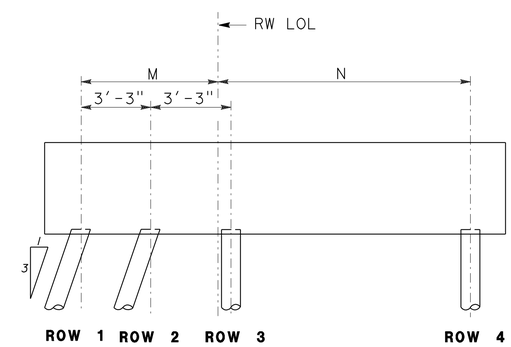

H = 30' and 32'

PILE PATTERN

NO SCALE

SPECIAL DETAILS

REVISED STANDARD DRAWING			STATE OF CALIFORNIA DEPARTMENT OF TRANSPORTATION	DIVISION OF ENGINEERING SERVICES	BRIDGE NO. 53E0189	SOUND WALL NO. 262
FILE NO. xs14-320-2	APPROVAL DATE July 2011	① Added Notes ② Modified Detail			POST MILE 4.96	RETAINING WALL TYPE 1SWBP - DETAIL NO. 2

DS OSD 2147A (ENGLISH STANDARD DRAWING "XS" BORDER REV. (02-02-11)

ORIGINAL SCALE IN INCHES FOR REDUCED PLANS 0 1 2 3

UNIT: 3623
PROJECT NUMBER & PHASE: 0700001834 & 1 CONTRACT NO.: 07-215941

DISREGARD PRINTS BEARING EARLIER REVISION DATES → REVISION DATES 09/30/11 11/25/11 12/12/11

SHEET 17 OF 22

FILE => 53-E0189-i-rw_typ1_dt02.dgn

USERNAME => s128843 DATE PLOTTED => 14-APR-2012 TIME PLOTTED => 12:50

DIST	COUNTY	ROUTE	POST MILES TOTAL PROJECT	SHEET No.	TOTAL SHEETS
07	LA	5	4.0/5.9	1398	1597

REGISTERED CIVIL ENGINEER 12/12/11 DATE

4-9-12
PLANS APPROVAL DATE

The State of California or its officers or agents shall not be responsible for the accuracy or completeness of electronic copies of this plan sheet.

REGISTERED PROFESSIONAL ENGINEER FRANK HSIAOSHIH WEI No. C 52918 Exp. 12-31-12 CIVIL STATE OF CALIFORNIA

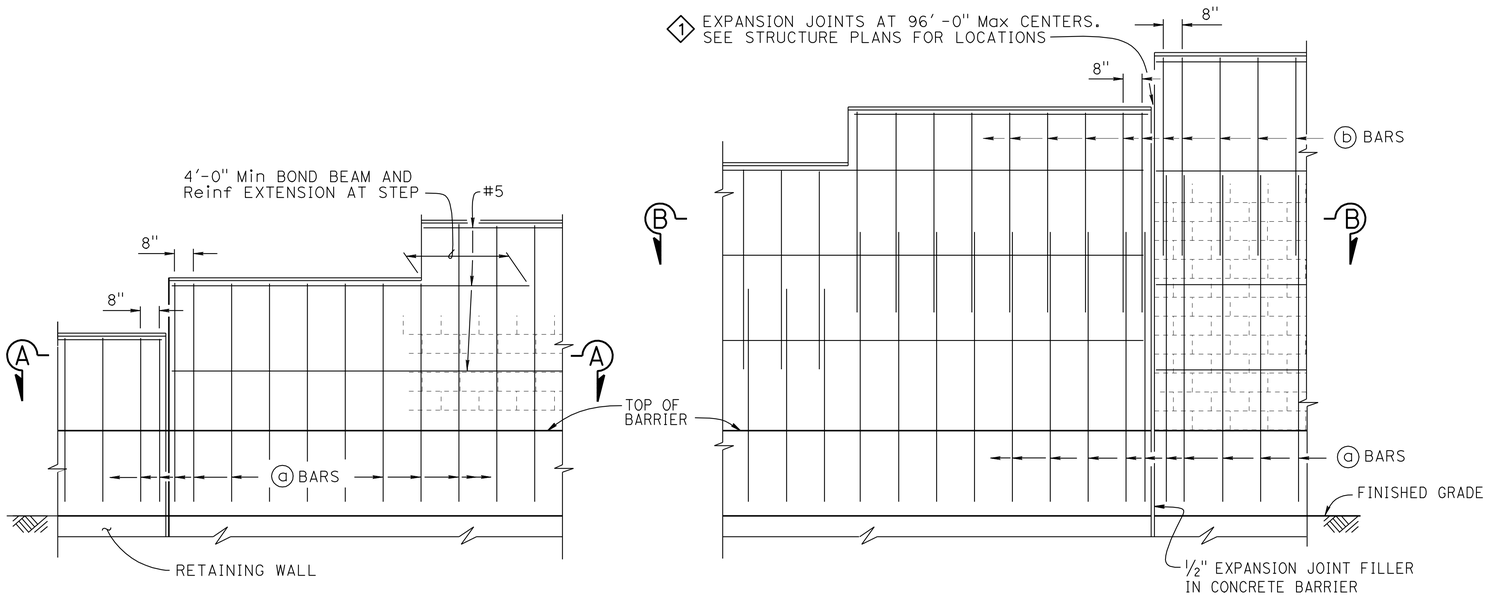

H=6'-4" THRU H=10'-4"

H=12'-4" THRU H=16'-4"

PART ELEVATION

SOUND WALL REINFORCEMENT TABLE

MAXIMUM "H"	ⓐ BARS @ 1'-4" Max	ⓑ BARS @ 1'-4" Max	"Y"	f'm (psi)	COMPRESSIVE STRENGTH OF CMU (psi)	MAXIMUM "H"
6'-4"	#4	———	———	1500	1900	6'-4"
8'-4"	#4	———	———	1500	1900	8'-4"
10'-4"	#4	———	———	1500	1900	10'-4"
12'-4"	#5	#4	5'-0"	1500	1900	12'-4"
14'-4"	#6	#4	7'-0"	1500	1900	14'-4"
16'-4"	#6	#4	9'-0"	2500	3700	16'-4"

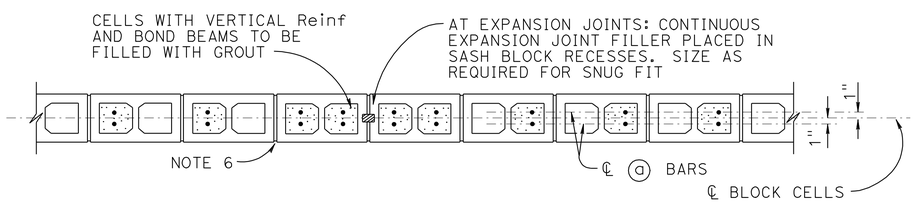

SECTION A-A

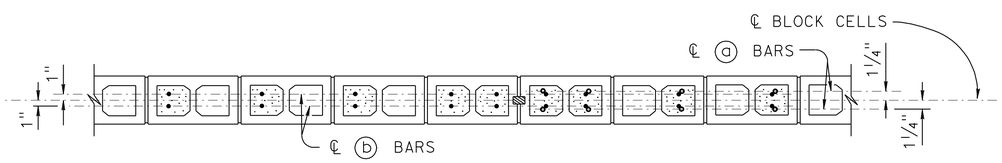

SECTION B-B

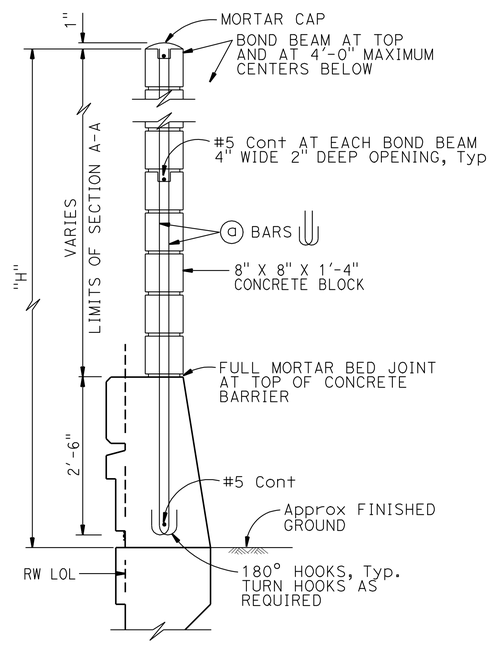

H=6'-4" THRU H=10'-4"

For details not shown, see H=12'-4" thru H=16'-4"

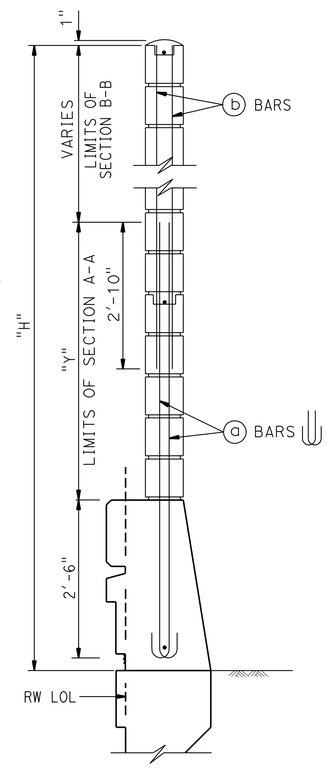

H=12'-4" THRU H=16'-4"

For details not shown, see H=6'-4" thru H=10'-4"

2 TYPICAL SECTION

NOTES:

1. For details not shown, see "SOUND WALL - MASONRY BLOCK WITH BARRIER ON RETAINING WALL - DETAILS NO. 2" sheet
2. Slope ground at traffic side of barrier to drain. Maximum slope ±10%
3. See STANDARD PLANS B15-9 for other details
4. For type of block and joint finish, see other sheets
5. When blocks are laid in stacked bond, ladder type, galvanized joint reinforcement shall be provided. A minimum of 2-9 gauge wire continuous at 4'-0" maximum to be used. Locate reinforcement in joints that are at the approximate midpoint between bond beams
6. Horizontal joints shall be tooled concave or may be weathered. Vertical joints shall be tooled concave or may be raked
7. For intermediate wall heights that are between the "H's" given, use the tabular information for the next higher "H"
8. Masonry strengths are listed in "SOUND WALL REINFORCEMENT TABLE"
9. Concrete to be used for the barrier shall contain not less than 590 pounds of cementitious material per cubic yard

SPECIAL DETAILS

NO SCALE

REVISED STANDARD DRAWING

FILE NO. xs15-130-1

APPROVAL DATE July 2011

1 REVISED CALLOUT

2 MODIFIED DETAIL

STATE OF CALIFORNIA DEPARTMENT OF TRANSPORTATION

DIVISION OF ENGINEERING SERVICES

BRIDGE NO. 53E0189

POST MILE 4.96

SOUND WALL NO. 262

SOUNDWALL - MASONRY BLOCK WITH BARRIER ON RETAINING WALL DETAILS NO. 1

DS OSD 2147A (ENGLISH STANDARD DRAWING "XS" BORDER REV. (02-02-11)

ORIGINAL SCALE IN INCHES FOR REDUCED PLANS 0 1 2 3

UNIT: 3623
PROJECT NUMBER & PHASE: 0700001834 & 1 CONTRACT NO.: 07-215941

DISREGARD PRINTS BEARING EARLIER REVISION DATES

REVISION DATES 09/30/11 11/25/11 12/12/11

SHEET 18 OF 22

FILE => 53-E0189-j-sw_mas_blk_dt01.dgn

USERNAME => s128643 DATE PLOTTED => 14-APR-2012 TIME PLOTTED => 12:50

DIST	COUNTY	ROUTE	POST MILES TOTAL PROJECT	SHEET No.	TOTAL SHEETS
07	LA	5	4.0/5.9	1399	1597

REGISTERED CIVIL ENGINEER 12/12/11 DATE

4-9-12
PLANS APPROVAL DATE

The State of California or its officers or agents shall not be responsible for the accuracy or completeness of electronic copies of this plan sheet.

REGISTERED PROFESSIONAL ENGINEER FRANK HSIAOSHIH WEI No. C 52918 Exp. 12-31-12 CIVIL STATE OF CALIFORNIA

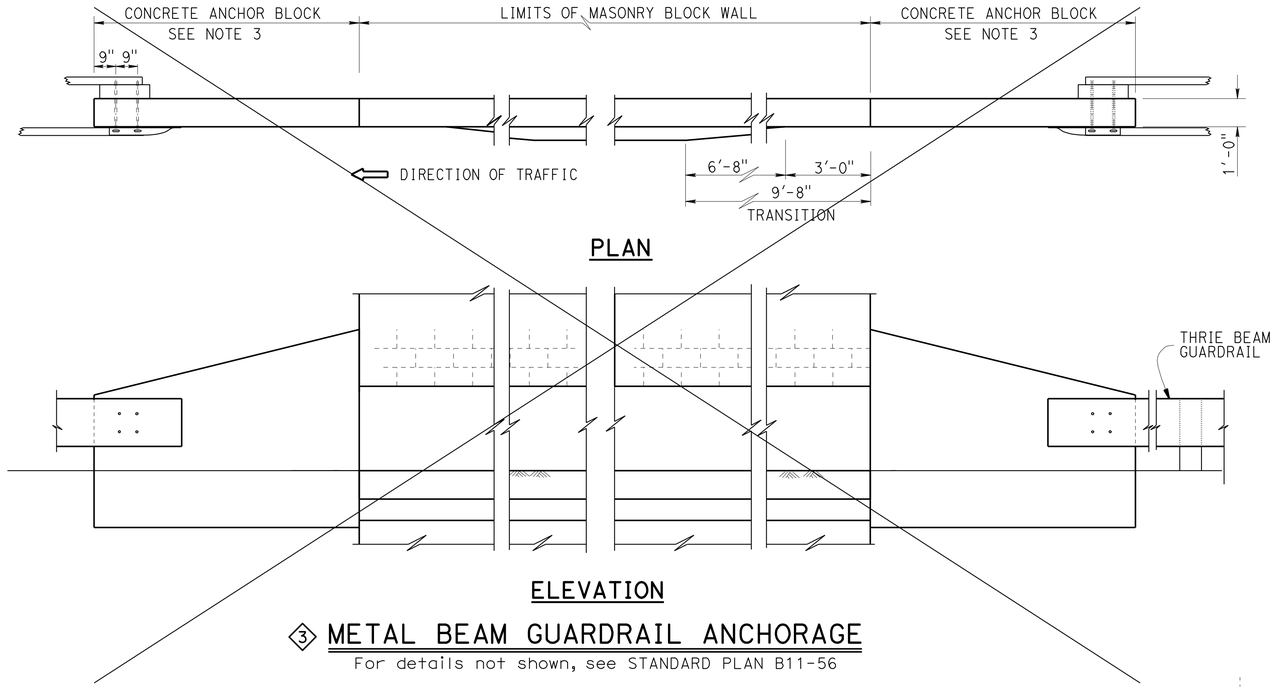

③ METAL BEAM GUARDRAIL ANCHORAGE

For details not shown, see STANDARD PLAN B11-56

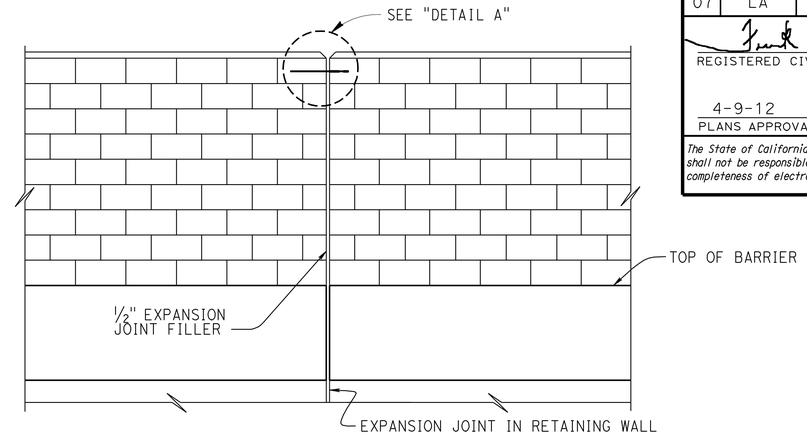

ALIGNMENT KEY DETAIL

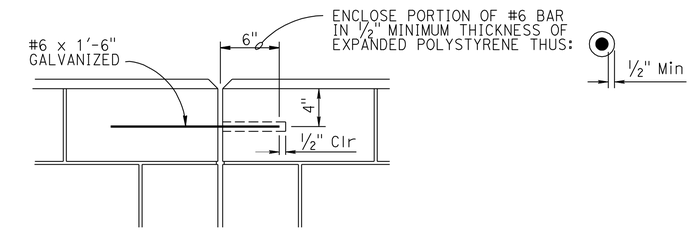

DETAIL A

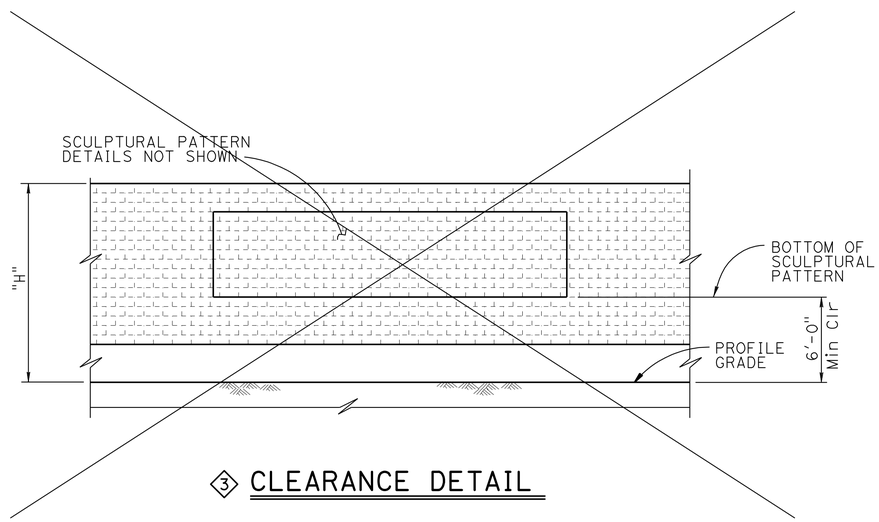

③ CLEARANCE DETAIL

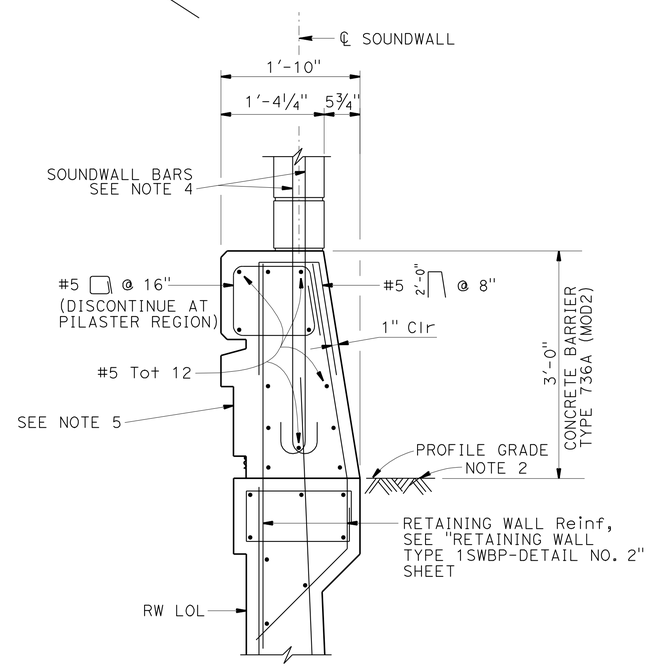

① BARRIER SECTION

DESIGN NOTES

DESIGN
Uniform Building Code, 1997 Edition and the Bridge Design Specifications

DESIGN WIND LOAD
33 psf

DESIGN SEISMIC LOAD
0.57 Dead load

REINFORCED CONCRETE
f'c = 3600 psi
fy = 60 ksi

CONCRETE MASONRY

REGULAR STRENGTH	HIGH STRENGTH	
f'm = 1500 psi	f'm = 2000 psi	f'm = 2500 psi
fb = 495 psi	fb = 660 psi	fb = 830 psi
fs = 24,000 psi	fs = 24,000 psi	fs = 24,000 psi
n = 25.8	n = 19.3	n = 15.5

② NOTES:

1. For details not shown, see REVISED STANDARD PLAN B15-6.
2. Slope ground at traffic side of barrier to drain. Maximum slope ±10% See STANDARD PLAN B11-56, Note D.
3. ~~For Concrete Anchor Block and connection details, see "CONNECTION DETAIL DD" on STANDARD PLAN A77J3~~
4. See "TYPICAL SECTIONS" on "SOUNDWALL - MASONRY BLOCK WITH BARRIER ON RETAINING WALL DETAILS NO. 1" sheet.
5. For barrier architectural details, see "RETAINING WALL AND BARRIER ARCHITECTURAL DETAILS" sheet.

SPECIAL DETAILS
NO SCALE

REVISED STANDARD DRAWING
FILE NO. xs15-130-2
APPROVAL DATE July 2011

① MODIFIED DETAIL ③ DELETED DETAIL
② REVISED NOTES

STATE OF CALIFORNIA
DEPARTMENT OF TRANSPORTATION

DIVISION OF ENGINEERING SERVICES

BRIDGE NO. 53E0189
POST MILE 4.96

SOUND WALL NO. 262
SOUNDWALL - MASONRY BLOCK WITH BARRIER ON RETAINING WALL DETAILS NO. 2

DS OSD 2147A (ENGLISH STANDARD DRAWING "XS" BORDER REV. (02-02-11)

ORIGINAL SCALE IN INCHES FOR REDUCED PLANS 0 1 2 3

UNIT: 3623
PROJECT NUMBER & PHASE: 0700001834 & 1 CONTRACT NO.: 07-215941

DISREGARD PRINTS BEARING EARLIER REVISION DATES
REVISION DATES: 09/30/11 11/25/11 12/12/11
SHEET 19 OF 22

FILE => 53-E0189-j-sw_mas_blk_dt02.dgn

USERNAME => s128843 DATE PLOTTED => 14-APR-2012 TIME PLOTTED => 12:50

DIST	COUNTY	ROUTE	POST MILES TOTAL PROJECT	SHEET No.	TOTAL SHEETS
07	LA	5	4.0/5.9	1400	1597

REGISTERED CIVIL ENGINEER DATE

4-9-12
PLANS APPROVAL DATE

REGISTERED PROFESSIONAL ENGINEER Amare Tsegie No. C67529 Exp. 6-30-13 CIVIL STATE OF CALIFORNIA

The State of California or its officers or agents shall not be responsible for the accuracy or completeness of electronic copies of this plan sheet.

This LOTB sheet was prepared in accordance with the Caltrans Soil & Rock Logging, Classification, & Presentation Manual (2010 Edition).

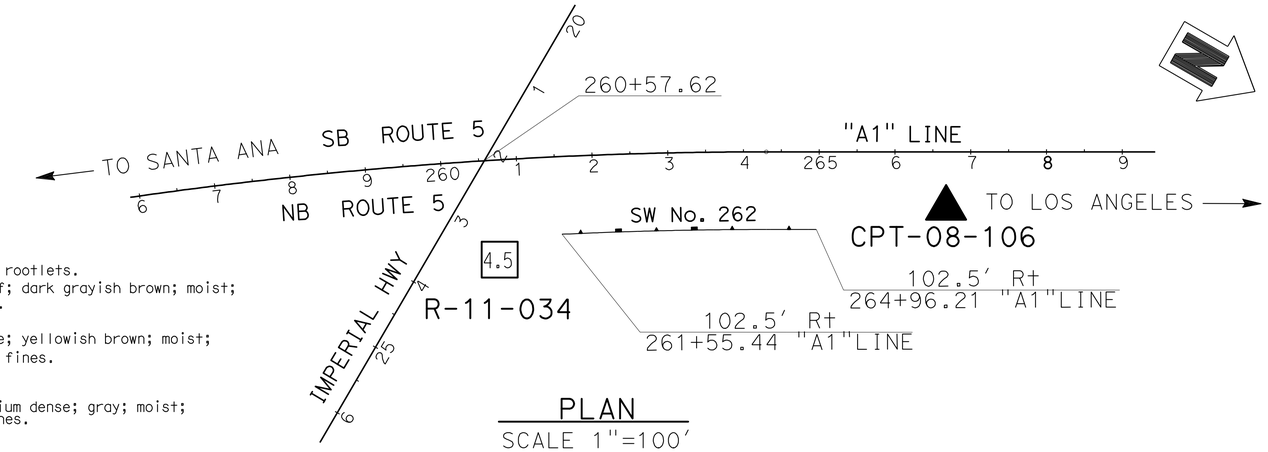

PLAN
SCALE 1"=100'

BENCH MARK

ELEVATION 105.78 FT
LA 5 PM 4.8, 1995
FOUND 2-1/2 INCH CADT DISK IN CONCRETE CURB, FLUSH, STAMPED "LA5 4.8 1995"
THE MARK IS LOCATED ON THE EASTERLY CURB OF THE OFFRAMP GORE FROM THE SOUTH BOUND 5 (SANTA ANA FWY) TO NORWALK BLVD. AND SAN ANTONIO ST.
NORTHING 1791107.943
EASTING 6538243.925
VERTICAL NAVD88,
0405-CALIFORNIA 5 US FEET.

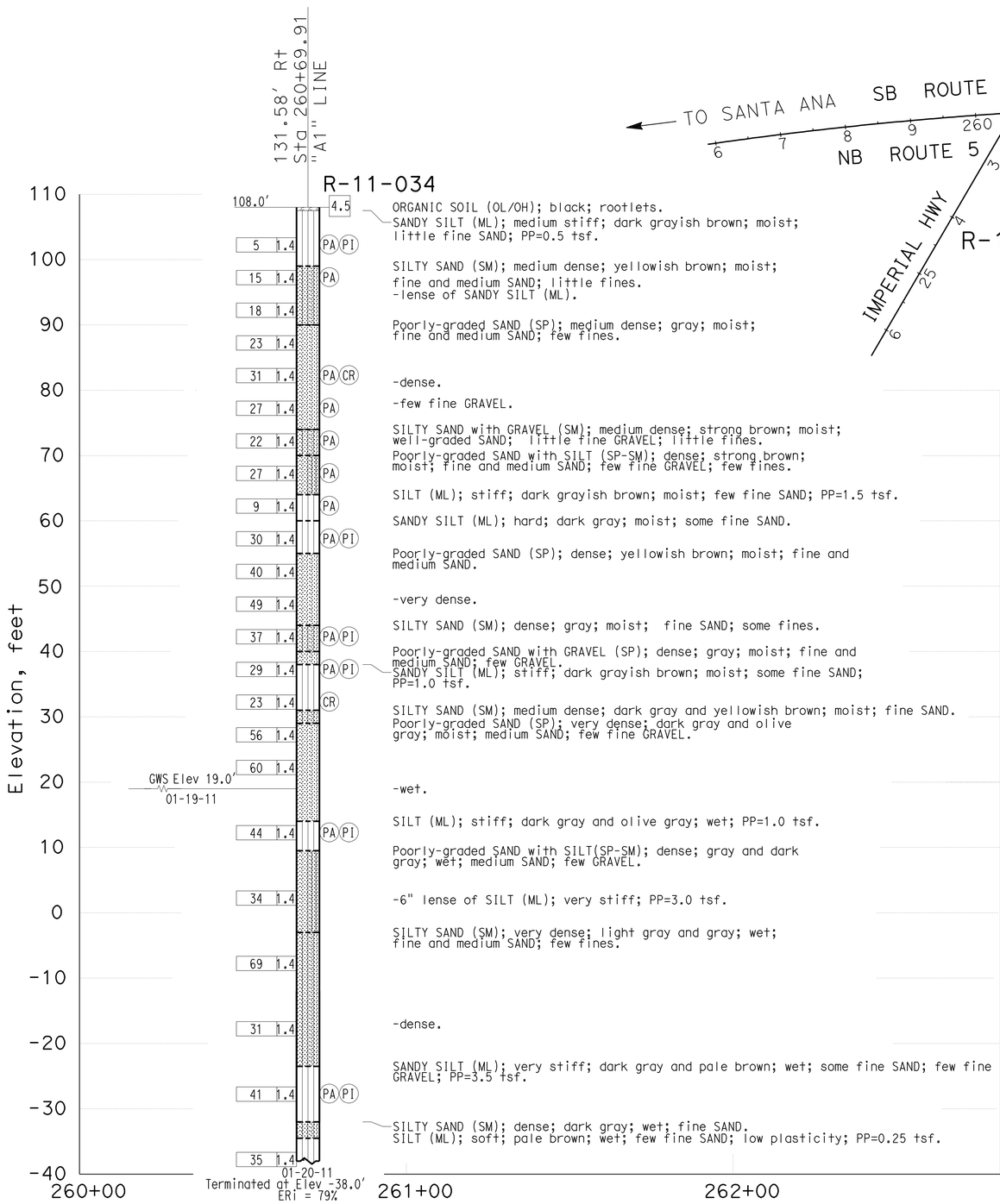

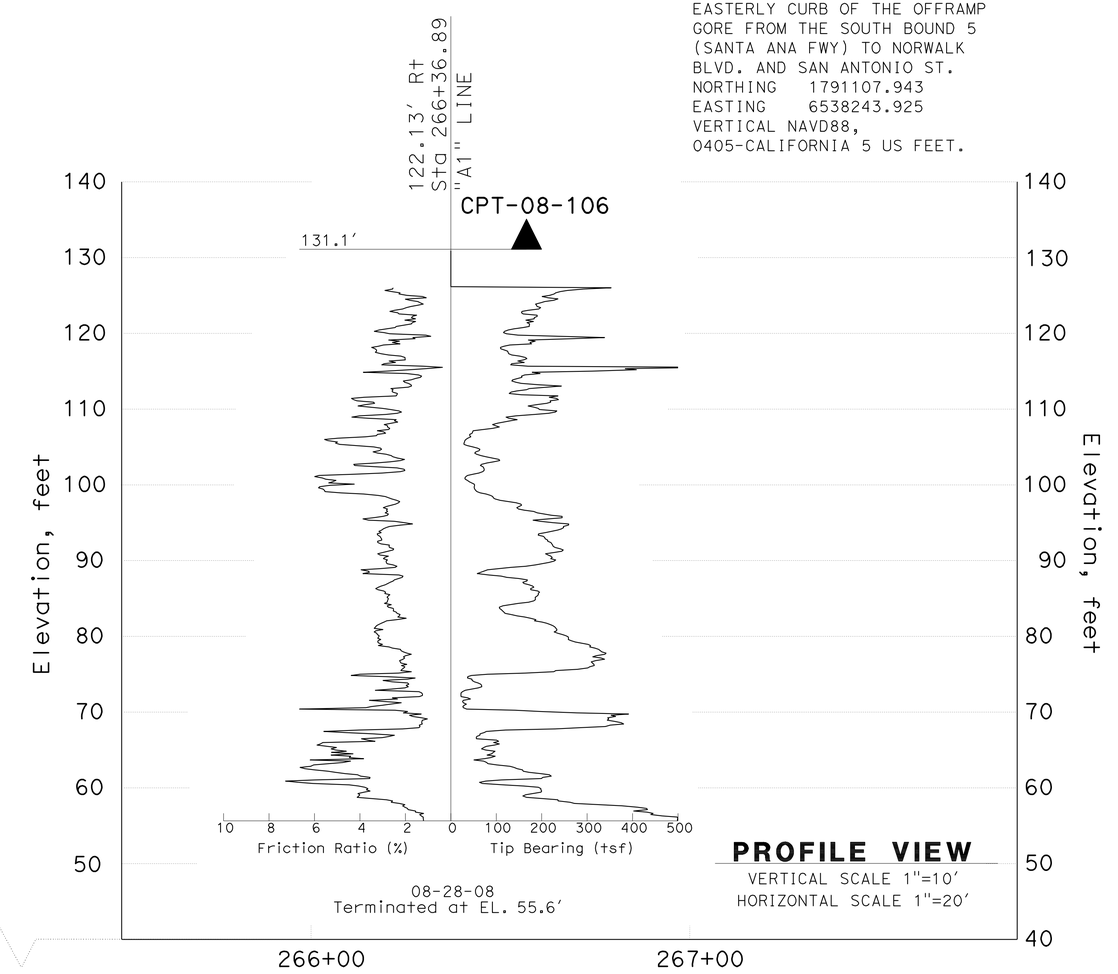

PROFILE VIEW
VERTICAL SCALE 1"=10'
HORIZONTAL SCALE 1"=20'

ENGINEERING SERVICES	MATERIALS AND GEOTECHNICAL SERVICES	STATE OF CALIFORNIA DEPARTMENT OF TRANSPORTATION	DIVISION OF ENGINEERING SERVICES STRUCTURE DESIGN DESIGN BRANCH 21	BRIDGE NO. 53E0189 POST MILE 4.96	SOUND WALL NO. 262
FUNCTIONAL SUPERVISOR NAME: CHI-TSENG LIU	DRAWN BY: P.QUACH / T.Panah (URS CORP) CHECKED BY: F.GERAMI	FIELD INVESTIGATION BY: A.TSEGIE/M.ISLAM/P.MCDONALD			LOG OF TEST BORINGS SHEET 1 OF 3

OGS CIVIL LOG OF TEST BORINGS SHEET

ORIGINAL SCALE IN INCHES FOR REDUCED PLANS 0 1 2 3

UNIT: 3658
PROJECT NUMBER & PHASE: 07 00001834 1 CONTRACT NO.: 07-215941

DISREGARD PRINTS BEARING EARLIER REVISION DATES

REVISION DATES 12/14/11

SHEET 20 OF 22

FILE => 53-E0189-z-lotb_01.dgn

USERNAME => s128843 DATE PLOTTED => 14-APR-2012 TIME PLOTTED => 09:13