DIST	COUNTY	ROUTE	POST MILES TOTAL PROJECT	SHEET No.	TOTAL SHEETS
07	LA	5	4.0/5.9	1101	1597

Anthony T. Logus 12-12-11
REGISTERED CIVIL ENGINEER DATE

4-9-12
PLANS APPROVAL DATE

REGISTERED PROFESSIONAL ENGINEER
Anthony T. Logus
No. C68189
Exp. 09-30-13
CIVIL
STATE OF CALIFORNIA

The State of California or its officers or agents shall not be responsible for the accuracy or completeness of electronic copies of this plan sheet.

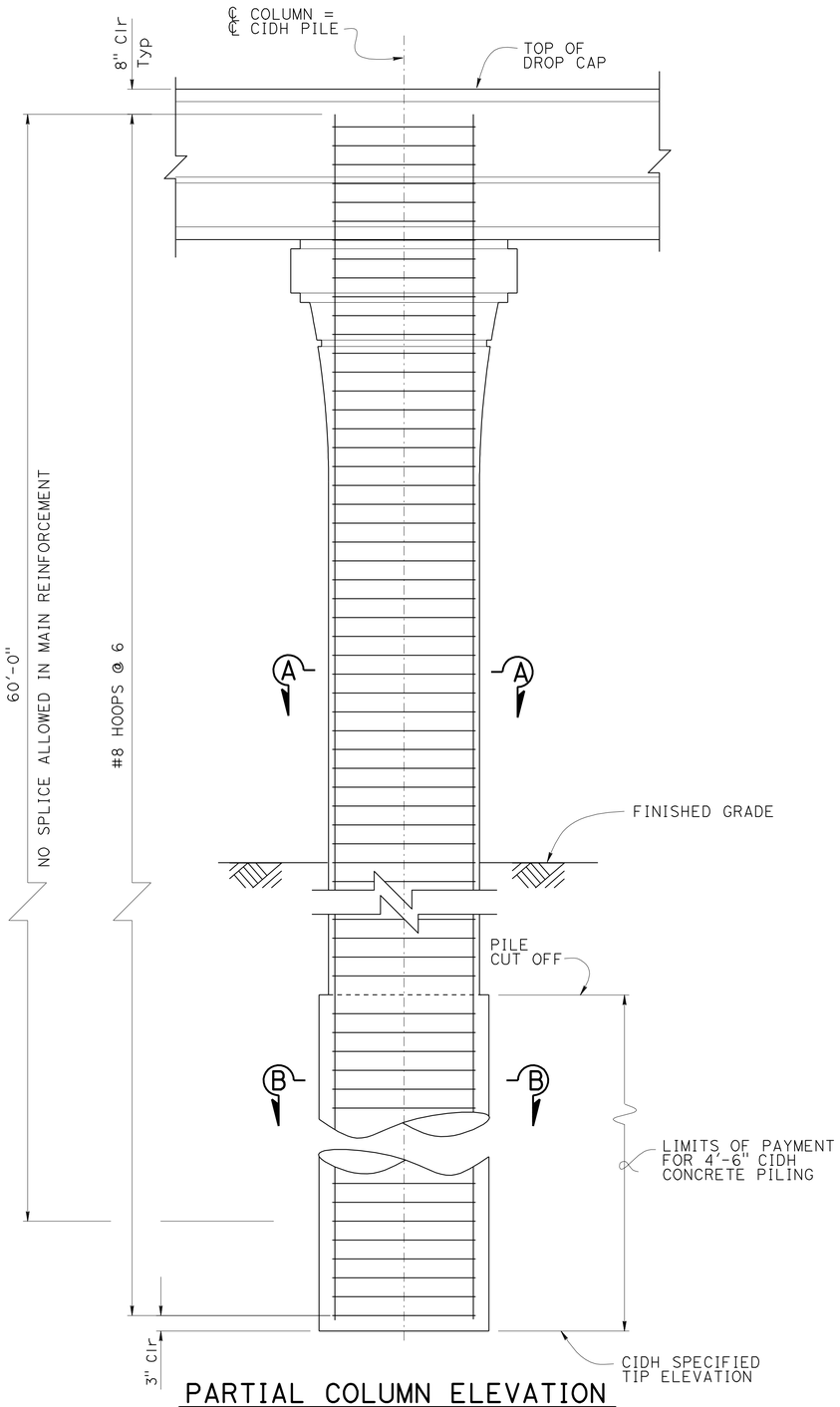

PARTIAL COLUMN ELEVATION
½" = 1'-0"

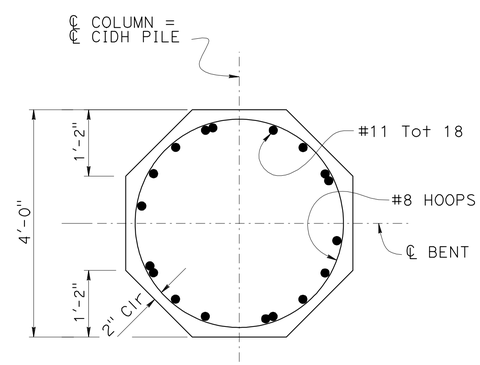

SECTION A-A
¾" = 1'-0"

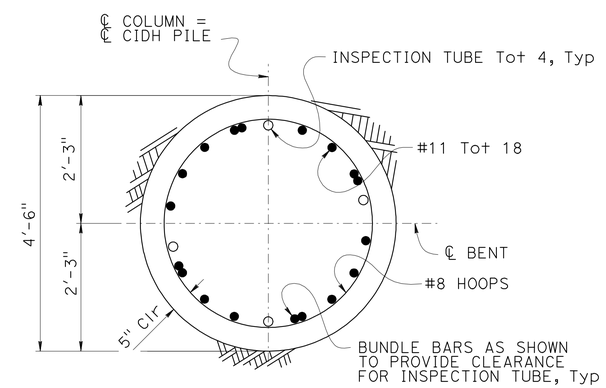

SECTION B-B
¾" = 1'-0"

NOTES:

1. Column and pile hoops to be made continuous with ultimate splice (stagger splices).
2. Splices in column and pile reinforcement shall conform to Ultimate Splice Specification.

	BY	CHECKED
DESIGN	ANTHONY LOGUS	RUSLAN NOVIK
DETAILS	BRUNO JENKO	RUSLAN NOVIK
QUANTITIES	SARA YIP	RUSLAN NOVIK

STATE OF CALIFORNIA
DEPARTMENT OF TRANSPORTATION

DIVISION OF ENGINEERING SERVICES
STRUCTURE DESIGN
DESIGN BRANCH 15

BRIDGE NO. 53-3062
POST MILE 5.12

PIONEER Blvd UC (REPLACE)
COLUMN DETAILS No. 1

STRUCTURES DESIGN DETAIL SHEET (ENGLISH) (REV. 09-01-10)

ORIGINAL SCALE IN INCHES FOR REDUCED PLANS 0 1 2 3

UNIT: 3604
PROJECT NUMBER & PHASE: 0700001834 1
CONTRACT NO.: 07-215941

DISREGARD PRINTS BEARING EARLIER REVISION DATES

REVISION DATES 8-29-11 11-30-11 12-9-11 3-16-12

SHEET 21 OF 72

FILE => 53-3062-J-cddt01.dgn

USERNAME => s113571 DATE PLOTTED => 14-APR-2012 TIME PLOTTED => 11:23

DIST	COUNTY	ROUTE	POST MILES TOTAL PROJECT	SHEET No.	TOTAL SHEETS
07	LA	5	4.0/5.9	1102	1597

Anthony T. Logus 12-12-11
REGISTERED CIVIL ENGINEER DATE

4-9-12
PLANS APPROVAL DATE

REGISTERED PROFESSIONAL ENGINEER
Anthony T. Logus
No. C68189
Exp. 09-30-13
CIVIL
STATE OF CALIFORNIA

The State of California or its officers or agents shall not be responsible for the accuracy or completeness of electronic copies of this plan sheet.

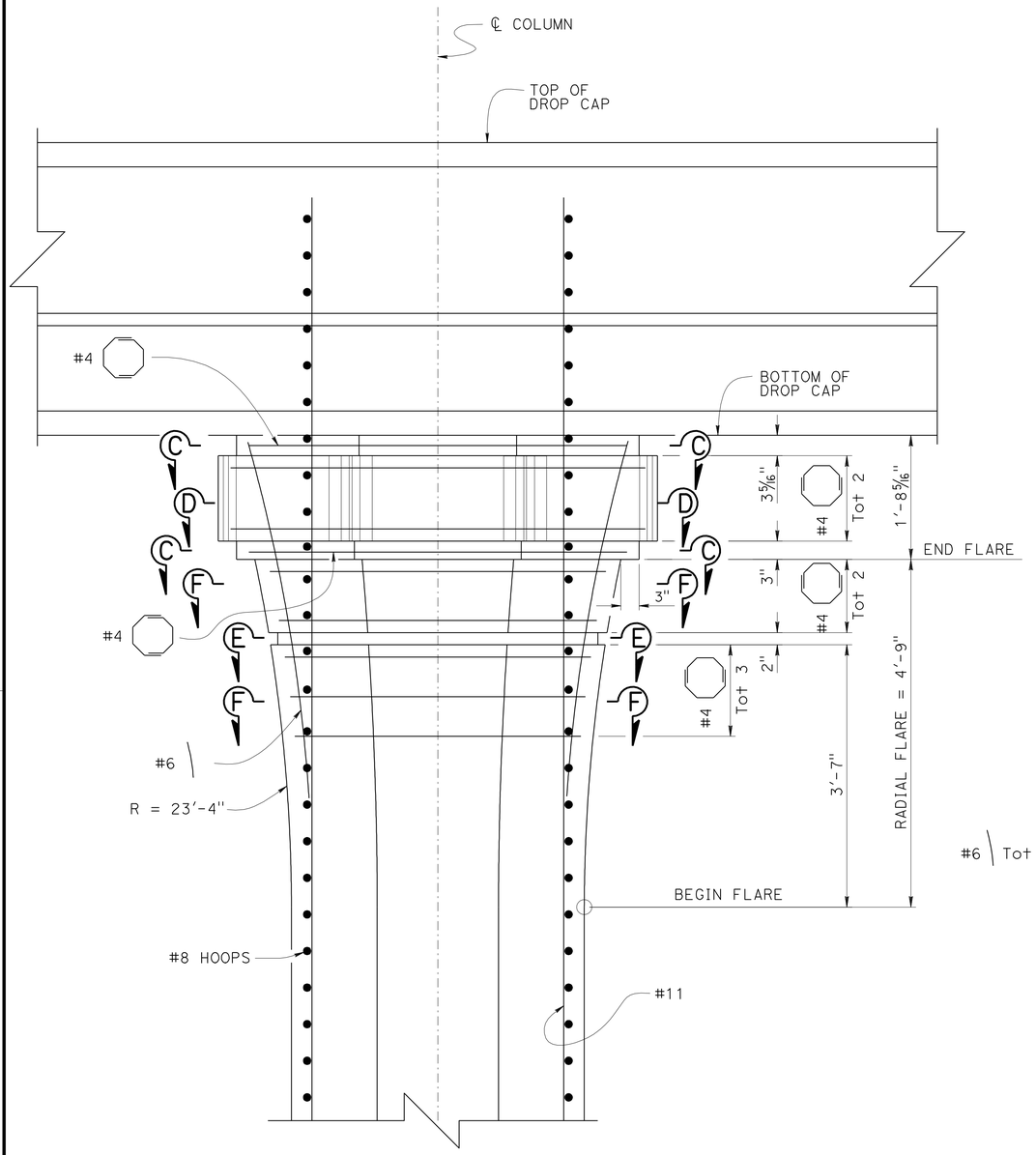

ELEVATION
1" = 1'-0"

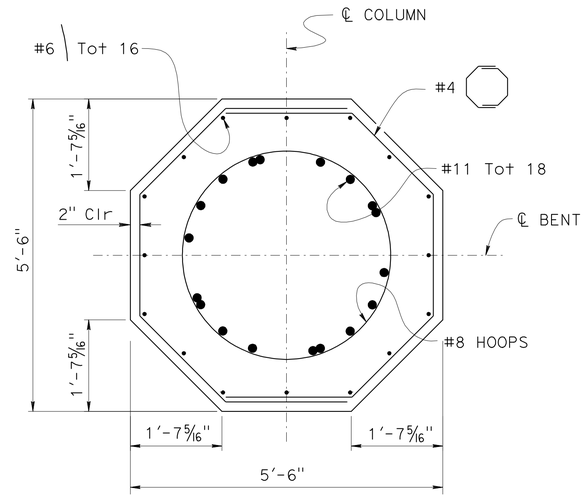

SECTION C-C
3/4" = 1'-0"

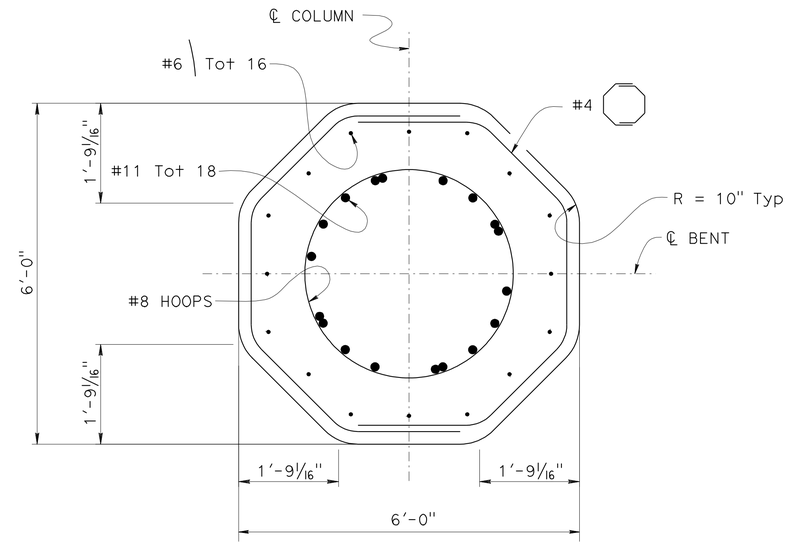

SECTION D-D
3/4" = 1'-0"

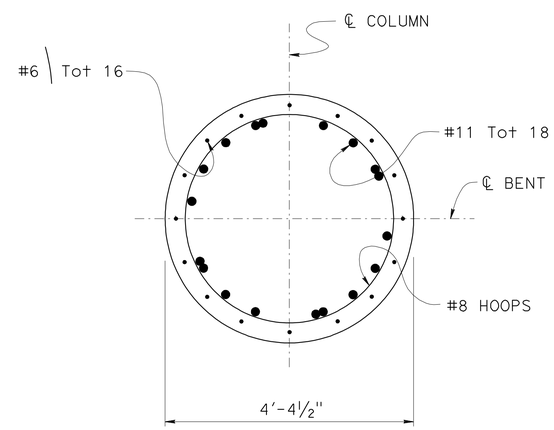

SECTION E-E
3/4" = 1'-0"

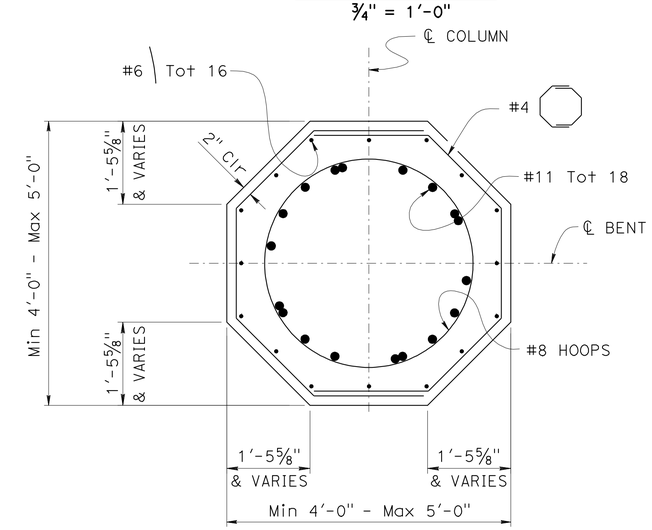

SECTION F-F
3/4" = 1'-0"

DESIGN	BY ANTHONY LOGUS	CHECKED RUSLAN NOVIK	
DETAILS	BY HERMAN MAUROSCHADT	CHECKED RUSLAN NOVIK	
QUANTITIES	BY SARA YIP	CHECKED RUSLAN NOVIK	

STATE OF CALIFORNIA
DEPARTMENT OF TRANSPORTATION

DIVISION OF ENGINEERING SERVICES
STRUCTURE DESIGN
DESIGN BRANCH 15

BRIDGE NO. 53-3062
POST MILE 5.12

PIONEER Blvd UC (REPLACE)
COLUMN DETAILS No. 2

STRUCTURES DESIGN DETAIL SHEET (ENGLISH) (REV. 09-01-10)

ORIGINAL SCALE IN INCHES FOR REDUCED PLANS 0 1 2 3

UNIT: 3604
PROJECT NUMBER & PHASE: 0700001834 1
CONTRACT NO.: 07-215941

DISREGARD PRINTS BEARING EARLIER REVISION DATES

REVISION DATES: 11-16-11 12-9-11 3-16-12

SHEET 22 OF 72

FILE => 53-3062-J-cdd+02.dgn

USERNAME => s119571 DATE PLOTTED => 14-APR-2012 TIME PLOTTED => 11:23

DIST	COUNTY	ROUTE	POST MILES TOTAL PROJECT	SHEET No.	TOTAL SHEETS
07	LA	5	4.0/5.9	1103	1597

Anthony T. Logus 12-12-11
REGISTERED CIVIL ENGINEER DATE

4-9-12
PLANS APPROVAL DATE

REGISTERED PROFESSIONAL ENGINEER
Anthony T. Logus
No. C68189
Exp. 09-30-13
CIVIL
STATE OF CALIFORNIA

The State of California or its officers or agents shall not be responsible for the accuracy or completeness of electronic copies of this plan sheet.

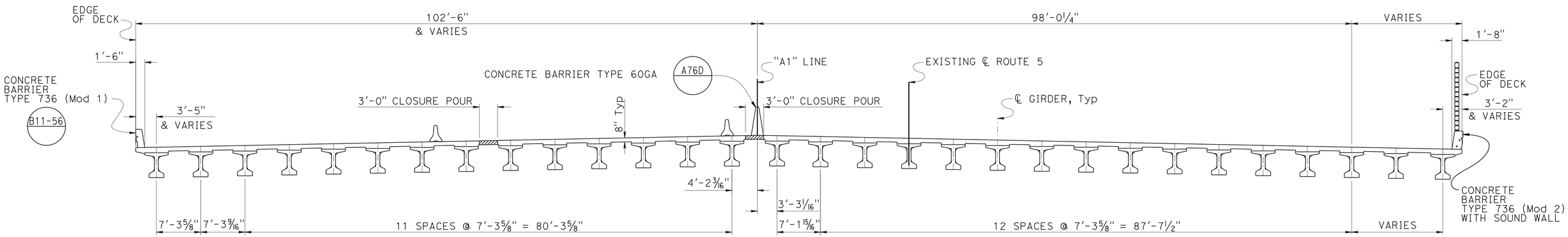

TYPICAL SECTION

1/8" = 1'-0"

Notes:

1. For Barrier reinforcement see "SOUNDWALL - MASONRY BLOCK ON BRIDGE" sheet.
2. Extend #5 Bar to center of Bay.
3. At left overhang No. 5 bundled bar only required from centerline of bent to end of bridge.
4. Closure pour shall not be placed until 15 days after adjacent deck pours are completed.

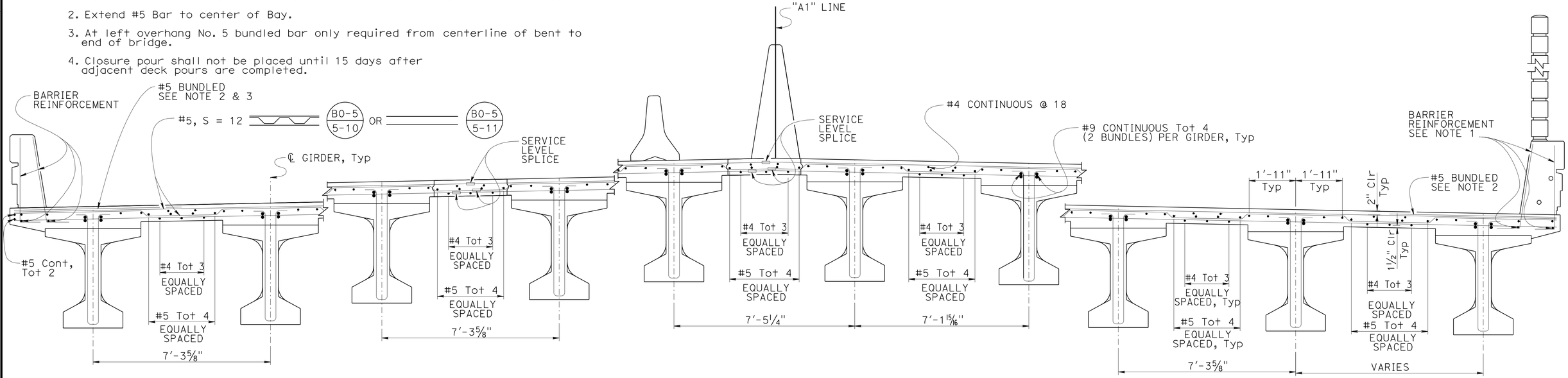

PART TYPICAL SECTION

1/2" = 1'-0"

DESIGN	BY ANTHONY LOGUS	CHECKED RUSLAN NOVIK	
DETAILS	BY HERMAN MAUROSCHADT	CHECKED RUSLAN NOVIK	
QUANTITIES	BY SARA YIP	CHECKED RUSLAN NOVIK	

STATE OF CALIFORNIA
DEPARTMENT OF TRANSPORTATION

DIVISION OF ENGINEERING SERVICES
STRUCTURE DESIGN
DESIGN BRANCH 15

BRIDGE NO. 53-3062
POST MILE 5.12

PIONEER Blvd UC (REPLACE)
TYPICAL SECTION

STRUCTURES DESIGN DETAIL SHEET (ENGLISH) (REV. 09-01-10)

ORIGINAL SCALE IN INCHES FOR REDUCED PLANS 0 1 2 3

UNIT: 3604
PROJECT NUMBER & PHASE: 0700001834 1
CONTRACT NO.: 07-215941

DISREGARD PRINTS BEARING EARLIER REVISION DATES

REVISION DATES 8-1-11 12-1-11 3-16-12

SHEET 23 OF 72

FILE => 53-3062-m-ts-01.dgn

USERNAME => s119571 DATE PLOTTED => 14-APR-2012 TIME PLOTTED => 11:23

DIST	COUNTY	ROUTE	POST MILES TOTAL PROJECT	SHEET No.	TOTAL SHEETS
07	LA	5	4.0/5.9	1104	1597

Anthony T. Logus 12-12-11
REGISTERED CIVIL ENGINEER DATE

4-9-12
PLANS APPROVAL DATE

REGISTERED PROFESSIONAL ENGINEER
Anthony T. Logus
No. C68189
Exp. 09-30-13
CIVIL
STATE OF CALIFORNIA

The State of California or its officers or agents shall not be responsible for the accuracy or completeness of electronic copies of this plan sheet.

Notes:

1. For Girder Details see "PC/PS BULB-TEE GIRDER (HARPED STRANDS)" and "PC/PS BULB-TEE GIRDER (MISCELLANEOUS DETAILS)" sheets.
2. For Deck Drain - Type D-2 (Mod 1) details see "DECK DRAIN - TYPE D-2 (Mod 1)" sheet.
3. For Deck Drain - Type D-2 (Mod 2) details see "DECK DRAIN - TYPE D-2 (Mod 2)" sheet.
4. For "SECTION V-V", "SECTION W-W" and "SECTION X-X" see "DECK DRAIN DETAILS" sheet.

Legend:

(A) Indicates Girder Designation

⊞ Indicates Deck Drain -Type D-2 (Mod 1)

▦ Indicates Deck Drain -Type D-2 (Mod 2)

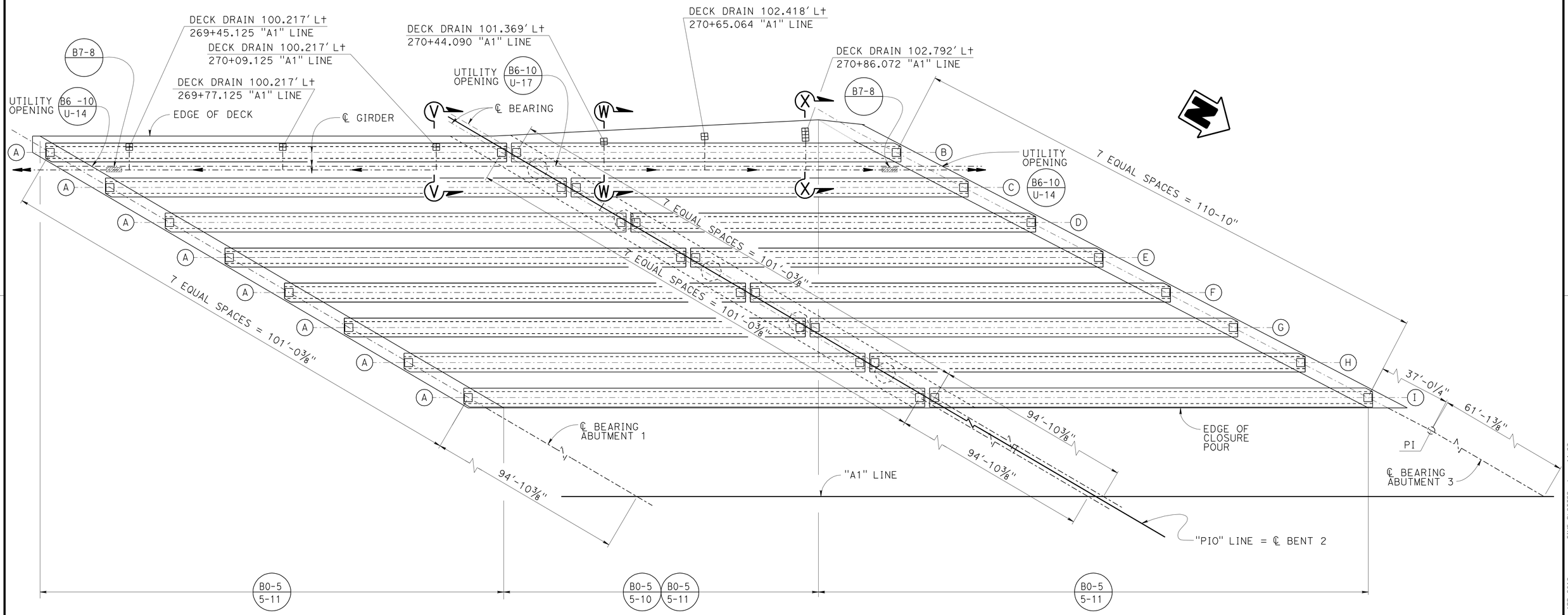

PLAN (STAGE 1)

1" = 10'-0"

DESIGN	BY ANTHONY LOGUS	CHECKED RUSLAN NOVIK
DETAILS	BY HERMAN MAUROSCHADT	CHECKED RUSLAN NOVIK
QUANTITIES	BY SARA YIP	CHECKED RUSLAN NOVIK

STATE OF CALIFORNIA
DEPARTMENT OF TRANSPORTATION

DIVISION OF ENGINEERING SERVICES
STRUCTURE DESIGN
DESIGN BRANCH 15

BRIDGE NO. 53-3062
POST MILE 5.12

PIONEER Blvd UC (REPLACE)
GIRDER LAYOUT No. 1

STRUCTURES DESIGN DETAIL SHEET (ENGLISH) (REV. 09-01-10)

ORIGINAL SCALE IN INCHES FOR REDUCED PLANS 0 1 2 3

UNIT: 3604
PROJECT NUMBER & PHASE: 0700001834 1
CONTRACT NO.: 07-215941

DISREGARD PRINTS BEARING EARLIER REVISION DATES

REVISION DATES 8-2-11 11-17-11 12-9-11 3-16-12

SHEET 24 OF 72

FILE => 53-3062-o-g-l001.dgn

USERNAME => s119571 DATE PLOTTED => 14-APR-2012 TIME PLOTTED => 11:23

DIST	COUNTY	ROUTE	POST MILES TOTAL PROJECT	SHEET No.	TOTAL SHEETS
07	LA	5	4.0/5.9	1105	1597

Anthony T. Logus 12-12-11
REGISTERED CIVIL ENGINEER DATE

4-9-12
PLANS APPROVAL DATE

REGISTERED PROFESSIONAL ENGINEER
Anthony T. Logus
No. C68189
Exp. 09-30-13
CIVIL
STATE OF CALIFORNIA

The State of California or its officers or agents shall not be responsible for the accuracy or completeness of electronic copies of this plan sheet.

Note:

For Girder Details see "PC/PS BULB-TEE GIRDER (HARPED STRANDS)" and "PC/PS BULB-TEE GIRDER (MISCELLANEOUS DETAILS)" sheets.

Legend:

(A) Indicates Girder Designation

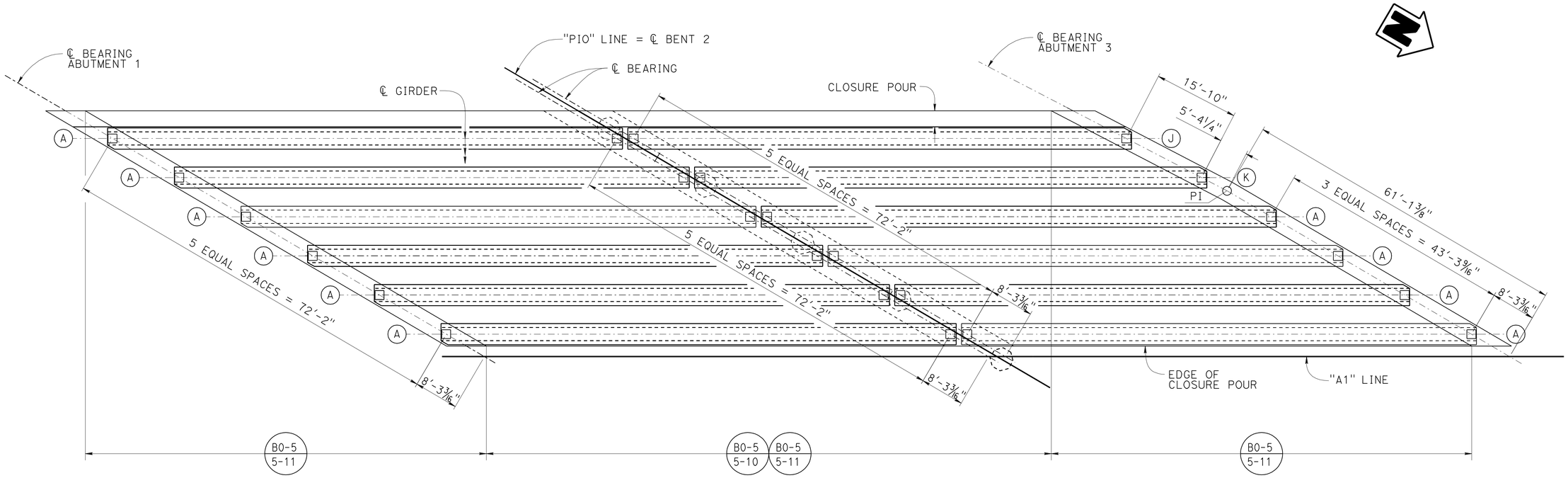

PLAN (STAGE 2)

1" = 10'-0"

DESIGN	BY ANTHONY LOGUS	CHECKED RUSLAN NOVIK	
DETAILS	BY HERMAN MAUROSCHADT	CHECKED RUSLAN NOVIK	
QUANTITIES	BY SARA YIP	CHECKED RUSLAN NOVIK	

STATE OF CALIFORNIA
DEPARTMENT OF TRANSPORTATION

DIVISION OF ENGINEERING SERVICES
STRUCTURE DESIGN
DESIGN BRANCH 15

BRIDGE NO. 53-3062
POST MILE 5.12

PIONEER Blvd UC (REPLACE)
GIRDER LAYOUT No. 2

STRUCTURES DESIGN DETAIL SHEET (ENGLISH) (REV. 09-01-10)

ORIGINAL SCALE IN INCHES FOR REDUCED PLANS 0 1 2 3

UNIT: 3604
PROJECT NUMBER & PHASE: 0700001834 1
CONTRACT NO.: 07-215941

DISREGARD PRINTS BEARING EARLIER REVISION DATES

REVISION DATES: 8-2-11 12-12-11 12-15-11 3-16-12

SHEET 25 OF 72

FILE => 53-3062-o-g-1002.dgn

USERNAME => s119571 DATE PLOTTED => 14-APR-2012 TIME PLOTTED => 11:23

DIST	COUNTY	ROUTE	POST MILES TOTAL PROJECT	SHEET No.	TOTAL SHEETS
07	LA	5	4.0/5.9	1106	1597

Anthony D. Logus 12-12-11
REGISTERED CIVIL ENGINEER DATE

4-9-12
PLANS APPROVAL DATE

REGISTERED PROFESSIONAL ENGINEER
Anthony T. Logus
No. C68189
Exp. 09-30-13
CIVIL
STATE OF CALIFORNIA

The State of California or its officers or agents shall not be responsible for the accuracy or completeness of electronic copies of this plan sheet.

Notes:

1. For Girder Details see "PC/PS BULB-TEE GIRDER (HARPED STRANDS)" and "PC/PS BULB-TEE GIRDER (MISCELLANEOUS DETAILS)" sheets.
2. For Deck Drain - Type D-2 (Mod 1) see "DECK DRAIN - TYPE D-2 (Mod 1)" sheet.
3. For "SECTION Y-Y" and "SECTION Z-Z" see "DECK DRAIN DETAILS" sheet.

Legend:

(A) Indicates Girder Designation

⊞ Indicates Type D-2 Drain

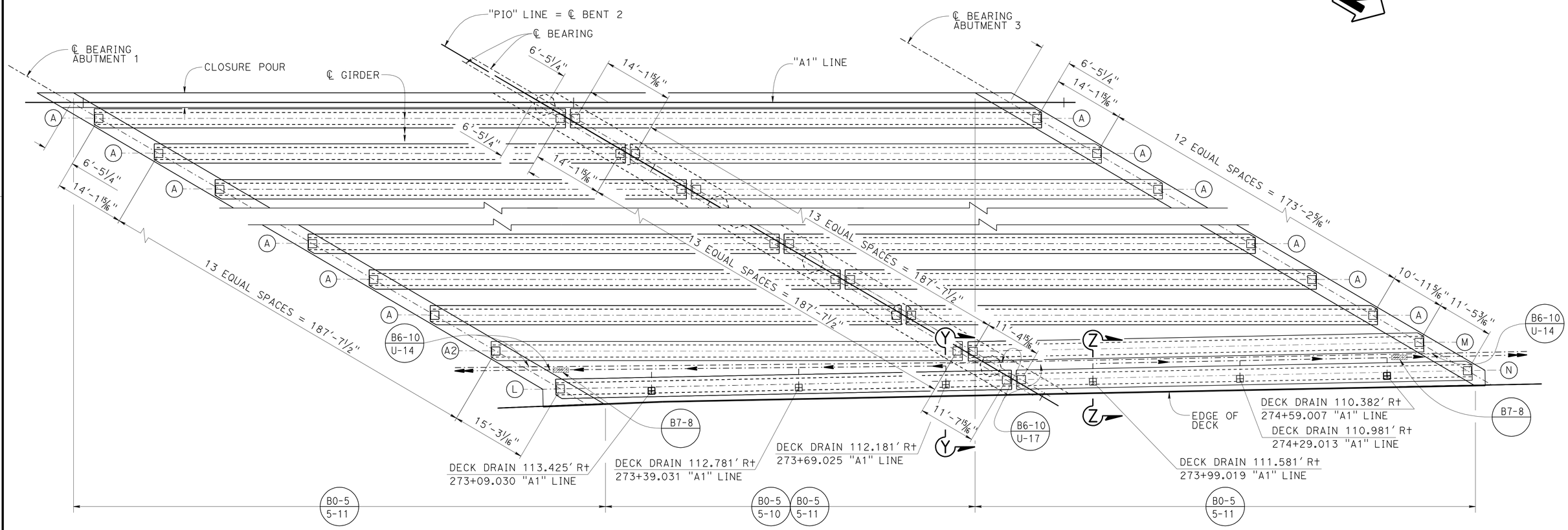

PLAN (STAGE 3)

1" = 10'-0"

DESIGN	BY ANTHONY LOGUS	CHECKED RUSLAN NOVIK	
DETAILS	BY HERMAN MAUROSCHADT	CHECKED RUSLAN NOVIK	
QUANTITIES	BY SARA YIP	CHECKED RUSLAN NOVIK	

STATE OF CALIFORNIA
DEPARTMENT OF TRANSPORTATION

DIVISION OF ENGINEERING SERVICES
STRUCTURE DESIGN
DESIGN BRANCH 15

BRIDGE NO. 53-3062
POST MILE 5.12

PIONEER Blvd UC (REPLACE)
GIRDER LAYOUT No. 3

STRUCTURES DESIGN DETAIL SHEET (ENGLISH) (REV. 09-01-10)

ORIGINAL SCALE IN INCHES FOR REDUCED PLANS 0 1 2 3

UNIT: 3604
PROJECT NUMBER & PHASE: 0700001834 1
CONTRACT NO.: 07-215941

DISREGARD PRINTS BEARING EARLIER REVISION DATES

REVISION DATES: 8-2-11 11-7-11 12-9-11 3-16-12

SHEET 26 OF 72

FILE => 53-3062-o-g-lo03.dgn

USERNAME => s119571 DATE PLOTTED => 14-APR-2012 TIME PLOTTED => 11:23

DIST	COUNTY	ROUTE	POST MILES TOTAL PROJECT	SHEET No.	TOTAL SHEETS
07	LA	5	4.0/5.9	1107	1597

Anthony T. Logus 12-12-11
REGISTERED CIVIL ENGINEER DATE

4-9-12
PLANS APPROVAL DATE

REGISTERED PROFESSIONAL ENGINEER
Anthony T. Logus
No. C68189
Exp. 09-30-13
CIVIL
STATE OF CALIFORNIA

The State of California or its officers or agents shall not be responsible for the accuracy or completeness of electronic copies of this plan sheet.

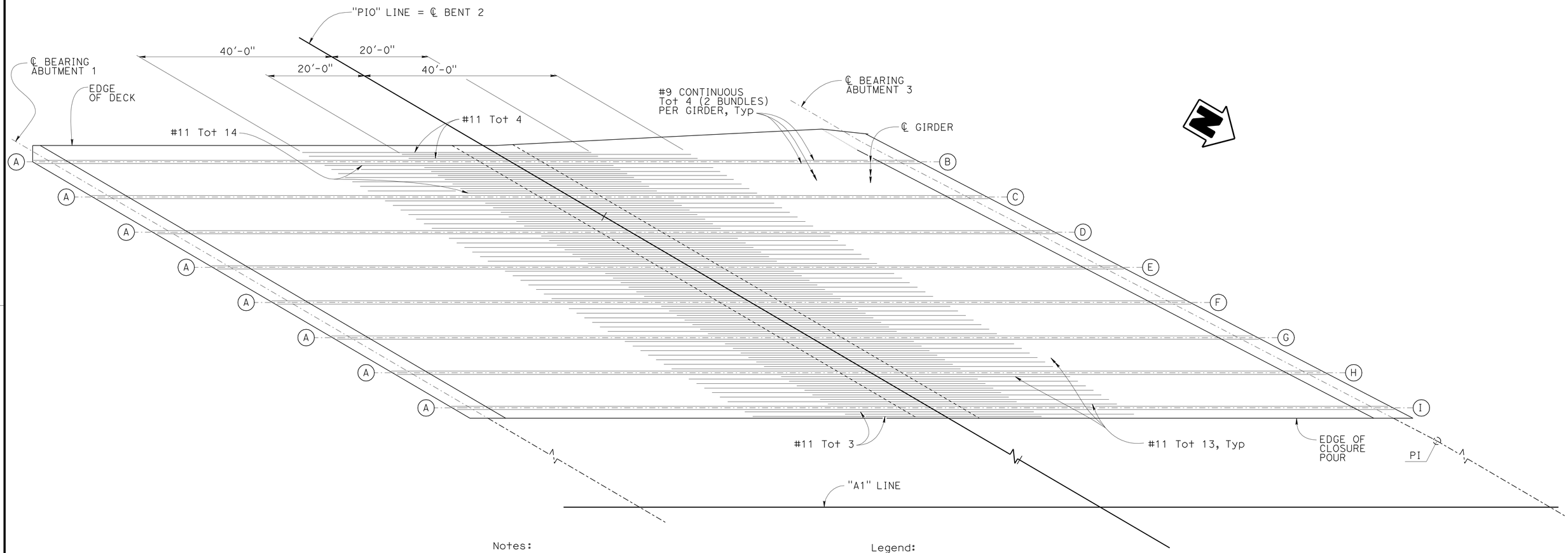

Notes:

1. Reinforcement shown is in addition to reinforcement shown on "TYPICAL SECTION" sheet.
2. Only service splices allowed on continuous additional deck reinforcement.
3. No splices allowed on non-continuous additional deck reinforcement.
4. For Stage 2 Additional Mild Reinforcement see "ADDITIONAL MILD REINFORCEMENT LAYOUT No. 2" sheet.
5. For Stage 3 Additional Mild Reinforcement see "ADDITIONAL MILD REINFORCEMENT LAYOUT No. 3" sheet.

Legend:

(A) Indicates Girder Designation

PLAN (STAGE 1)
ADDITIONAL MILD REINFORCEMENT

1" = 10'-0"

	BY	CHECKED
DESIGN	ANTHONY LOGUS	RUSLAN NOVIK
DETAILS	HERMAN MAUROSCHADT	RUSLAN NOVIK
QUANTITIES	SARA YIP	RUSLAN NOVIK

STATE OF CALIFORNIA
DEPARTMENT OF TRANSPORTATION

DIVISION OF ENGINEERING SERVICES
STRUCTURE DESIGN
DESIGN BRANCH 15

BRIDGE NO. 53-3062
POST MILE 5.12

PIONEER Blvd UC (REPLACE)
ADDITIONAL MILD REINFORCEMENT LAYOUT No. 1

STRUCTURES DESIGN DETAIL SHEET (ENGLISH) (REV. 09-01-10)

ORIGINAL SCALE IN INCHES FOR REDUCED PLANS 0 1 2 3

UNIT: 3604
PROJECT NUMBER & PHASE: 0700001834 1
CONTRACT NO.: 07-215941

DISREGARD PRINTS BEARING EARLIER REVISION DATES

REVISION DATES 8-1-11 12-12-11 5-16-12

SHEET 27 OF 72

FILE => 53-3062-p-mrlo01.dgn

USERNAME => s119571 DATE PLOTTED => 14-APR-2012 TIME PLOTTED => 11:23

DIST	COUNTY	ROUTE	POST MILES TOTAL PROJECT	SHEET No.	TOTAL SHEETS
07	LA	5	4.0/5.9	1108	1597

Anthony T. Logus 12-12-11
REGISTERED CIVIL ENGINEER DATE

4-9-12
PLANS APPROVAL DATE

REGISTERED PROFESSIONAL ENGINEER
Anthony T. Logus
No. C68189
Exp. 09-30-13
CIVIL
STATE OF CALIFORNIA

The State of California or its officers or agents shall not be responsible for the accuracy or completeness of electronic copies of this plan sheet.

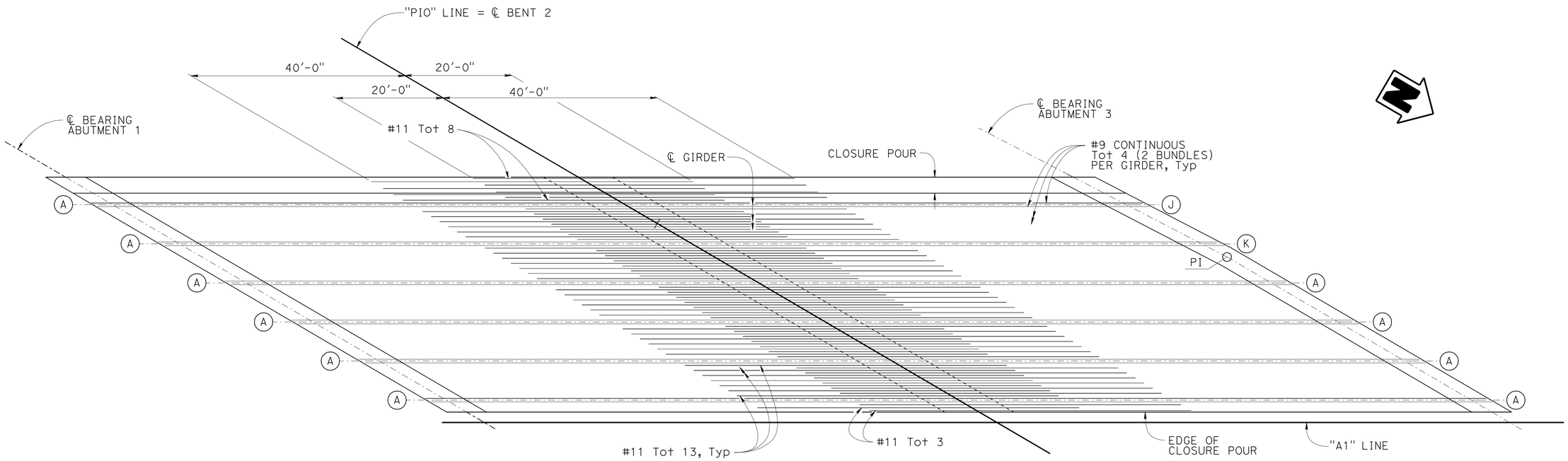

Notes:

1. Reinforcement shown is in addition to reinforcement shown on "TYPICAL SECTION" sheet.
2. Only service splices allowed on continuous additional deck reinforcement.
3. No splices allowed on non-continuous additional deck reinforcement.
4. For Stage 1 Additional Mild Reinforcement see "ADDITIONAL MILD REINFORCEMENT LAYOUT No. 1" sheet.
5. For Stage 3 Additional Mild Reinforcement see "ADDITIONAL MILD REINFORCEMENT LAYOUT No. 3" sheet.

Legend:

(A) Indicates Girder Designation

PLAN (STAGE 2)
ADDITIONAL MILD REINFORCEMENT

1" = 10'-0"

	BY	CHECKED
DESIGN	ANTHONY LOGUS	RUSLAN NOVIK
DETAILS	HERMAN MAUROSCHADT	RUSLAN NOVIK
QUANTITIES	SARA YIP	RUSLAN NOVIK

STATE OF CALIFORNIA
DEPARTMENT OF TRANSPORTATION

DIVISION OF ENGINEERING SERVICES
STRUCTURE DESIGN
DESIGN BRANCH 15

BRIDGE NO. 53-3062
POST MILE 5.12

PIONEER Blvd UC (REPLACE)
ADDITIONAL MILD REINFORCEMENT LAYOUT No. 2

STRUCTURES DESIGN DETAIL SHEET (ENGLISH) (REV. 09-01-10)

ORIGINAL SCALE IN INCHES FOR REDUCED PLANS 0 1 2 3

UNIT: 3604
PROJECT NUMBER & PHASE: 0700001834 1
CONTRACT NO.: 07-215941

DISREGARD PRINTS BEARING EARLIER REVISION DATES

REVISION DATES: 8-5-11 12-2-11 12-12-11 3-16-12

SHEET 28 OF 72

FILE => 53-3062-p-mrlo02.dgn

USERNAME => s119571 DATE PLOTTED => 14-APR-2012 TIME PLOTTED => 11:23

DIST	COUNTY	ROUTE	POST MILES TOTAL PROJECT	SHEET No.	TOTAL SHEETS
07	LA	5	4.0/5.9	1109	1597

Anthony T. Logus 12-12-11
REGISTERED CIVIL ENGINEER DATE

4-9-12
PLANS APPROVAL DATE

REGISTERED PROFESSIONAL ENGINEER
Anthony T. Logus
No. C68189
Exp. 09-30-13
CIVIL
STATE OF CALIFORNIA

The State of California or its officers or agents shall not be responsible for the accuracy or completeness of electronic copies of this plan sheet.

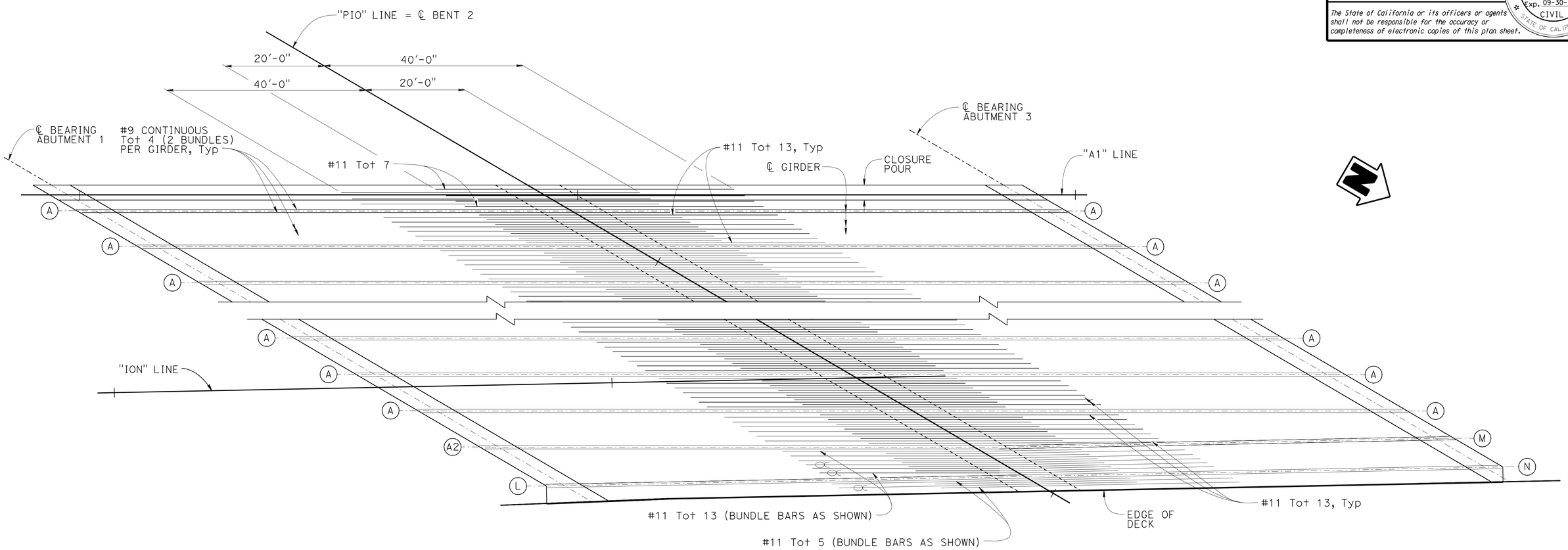

Notes:

1. Reinforcement shown is in addition to reinforcement shown on "TYPICAL SECTION" sheet.
2. Only service splices allowed on continuous additional deck reinforcement.
3. No splices allowed on non-continuous additional deck reinforcement.
4. For Stage 1 Additional Mild Reinforcement see "ADDITIONAL MILD REINFORCEMENT LAYOUT No. 1" sheet.
5. For Stage 2 Additional Mild Reinforcement see "ADDITIONAL MILD REINFORCEMENT LAYOUT No. 2" sheet.

Legend:

(A) Indicates Girder Designation

∝ Indicates Bundled 2 Bars

PLAN (STAGE 3)
ADDITIONAL MILD REINFORCEMENT

1" = 10'-0"

	BY	CHECKED
DESIGN	ANTHONY LOGUS	RUSLAN NOVIK
DETAILS	HERMAN MAUROSCHADT	RUSLAN NOVIK
QUANTITIES	SARA YIP	RUSLAN NOVIK

STATE OF CALIFORNIA
DEPARTMENT OF TRANSPORTATION

DIVISION OF ENGINEERING SERVICES
STRUCTURE DESIGN
DESIGN BRANCH 15

BRIDGE NO. 53-3062
POST MILE 5.12

PIONEER Blvd UC (REPLACE)
ADDITIONAL MILD REINFORCEMENT LAYOUT No. 3

STRUCTURES DESIGN DETAIL SHEET (ENGLISH) (REV. 09-01-10)

ORIGINAL SCALE IN INCHES FOR REDUCED PLANS 0 1 2 3

UNIT: 3604
PROJECT NUMBER & PHASE: 0700001834 1
CONTRACT NO.: 07-215941

DISREGARD PRINTS BEARING EARLIER REVISION DATES

REVISION DATES: 8-2-11 12-2-11 12-12-11 3-16-12

SHEET 29 OF 72

FILE => 53-3062-p-mr1o03.dgn

USERNAME => s119571 DATE PLOTTED => 14-APR-2012 TIME PLOTTED => 11:24

DIST	COUNTY	ROUTE	POST MILES TOTAL PROJECT	SHEET No.	TOTAL SHEETS
07	LA	5	4.0/5.9	1110	1597

Anthony T. Logus 12-12-11
REGISTERED CIVIL ENGINEER DATE

4-9-12
PLANS APPROVAL DATE

REGISTERED PROFESSIONAL ENGINEER
Anthony T. Logus
No. C68189
Exp. 09-30-13
CIVIL
STATE OF CALIFORNIA

The State of California or its officers or agents shall not be responsible for the accuracy or completeness of electronic copies of this plan sheet.

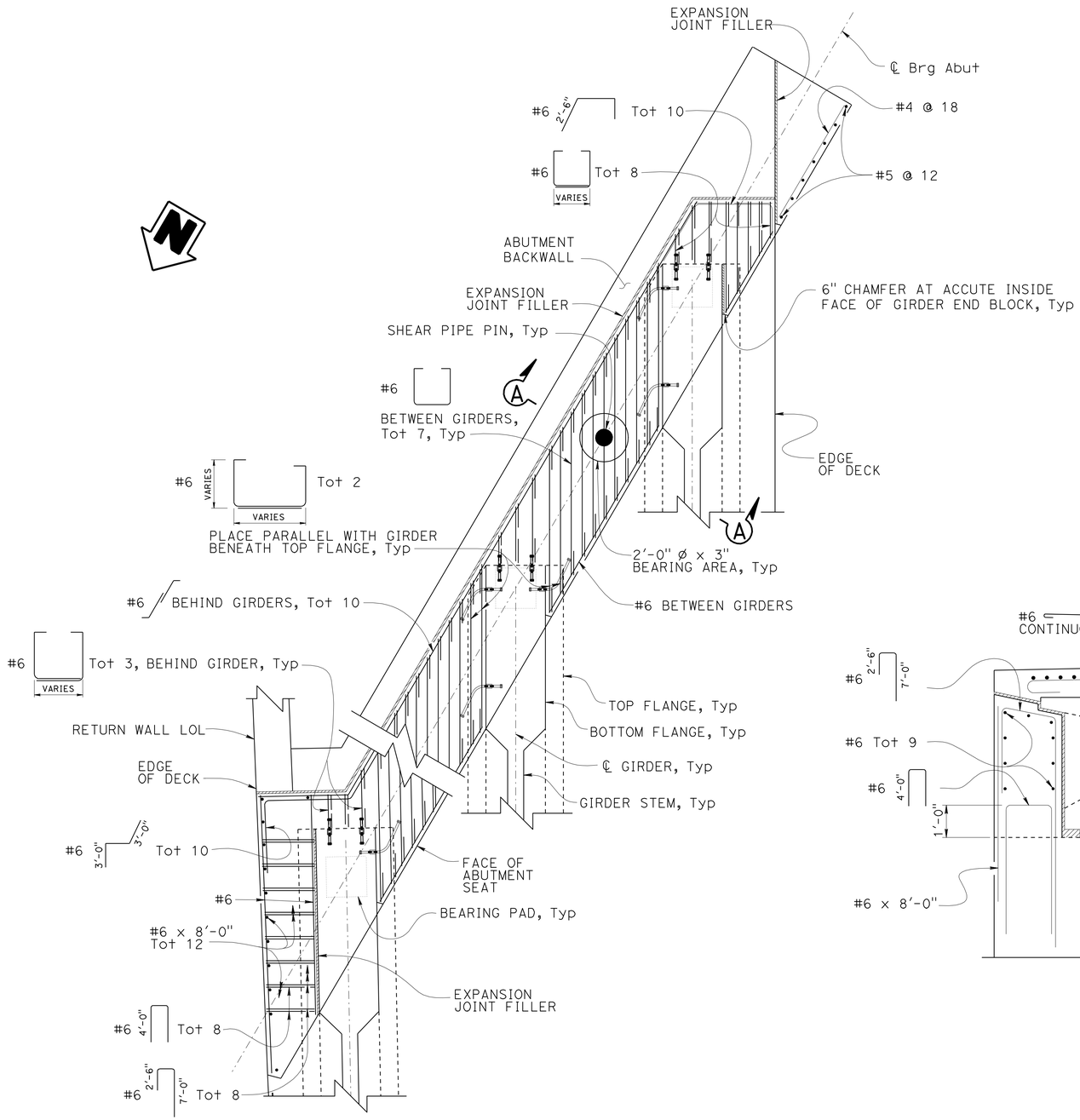

PART PLAN

3/8" = 1'-0"

Notes:

1. For details not shown see "PC/PS BULB-TEE GIRDER (HARPED STRANDS) and "PC/PS BULB-TEE GIRDER (MISCELLANEOUS DETAILS)" sheets.
2. For "SECTION A-A" see "END DIAPHRAGM DETAILS No. 3" sheet.
3. For Shear Pipe Pin details see "SHEAR PIPE PIN DETAIL" on "END DIAPHRAGM DETAILS No. 3" sheet.

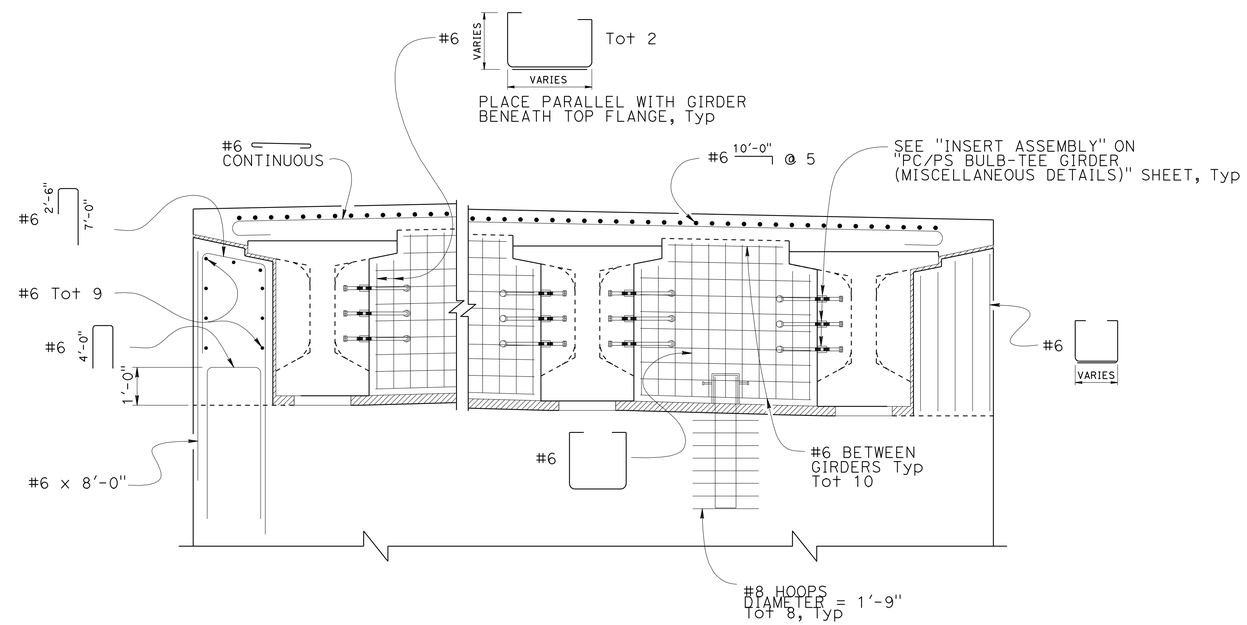

PART ELEVATION

1/2" = 1'-0"

ABUTMENT 1 END DIAPHRAGM

DESIGN	BY ANTHONY LOGUS	CHECKED RUSLAN NOVIK
DETAILS	BY HERMAN MAUROSCHADT	CHECKED RUSLAN NOVIK
QUANTITIES	BY SARA YIP	CHECKED RUSLAN NOVIK

STATE OF CALIFORNIA
DEPARTMENT OF TRANSPORTATION

DIVISION OF ENGINEERING SERVICES
STRUCTURE DESIGN
DESIGN BRANCH 15

BRIDGE NO. 53-3062
POST MILE 5.12

PIONEER Blvd UC (REPLACE)
END DIAPHRAGM DETAILS No. 1

STRUCTURES DESIGN DETAIL SHEET (ENGLISH) (REV. 09-01-10)

ORIGINAL SCALE IN INCHES FOR REDUCED PLANS 0 1 2 3

UNIT: 3604
PROJECT NUMBER & PHASE: 0700001834 1
CONTRACT NO.: 07-215941

DISREGARD PRINTS BEARING EARLIER REVISION DATES

REVISION DATES: 2-21-12 10-4-11 12-9-11 12-12-11

SHEET 30 OF 72

FILE => 53-3062-v-eddt1.dgn

USERNAME => s119571 DATE PLOTTED => 14-APR-2012 TIME PLOTTED => 11:24

DIST	COUNTY	ROUTE	POST MILES TOTAL PROJECT	SHEET No.	TOTAL SHEETS
07	LA	5	4.0/5.9	1111	1597

Anthony T. Logus 12-12-11
REGISTERED CIVIL ENGINEER DATE

4-9-12
PLANS APPROVAL DATE

REGISTERED PROFESSIONAL ENGINEER
Anthony T. Logus
No. C68189
Exp. 09-30-13
CIVIL
STATE OF CALIFORNIA

The State of California or its officers or agents shall not be responsible for the accuracy or completeness of electronic copies of this plan sheet.

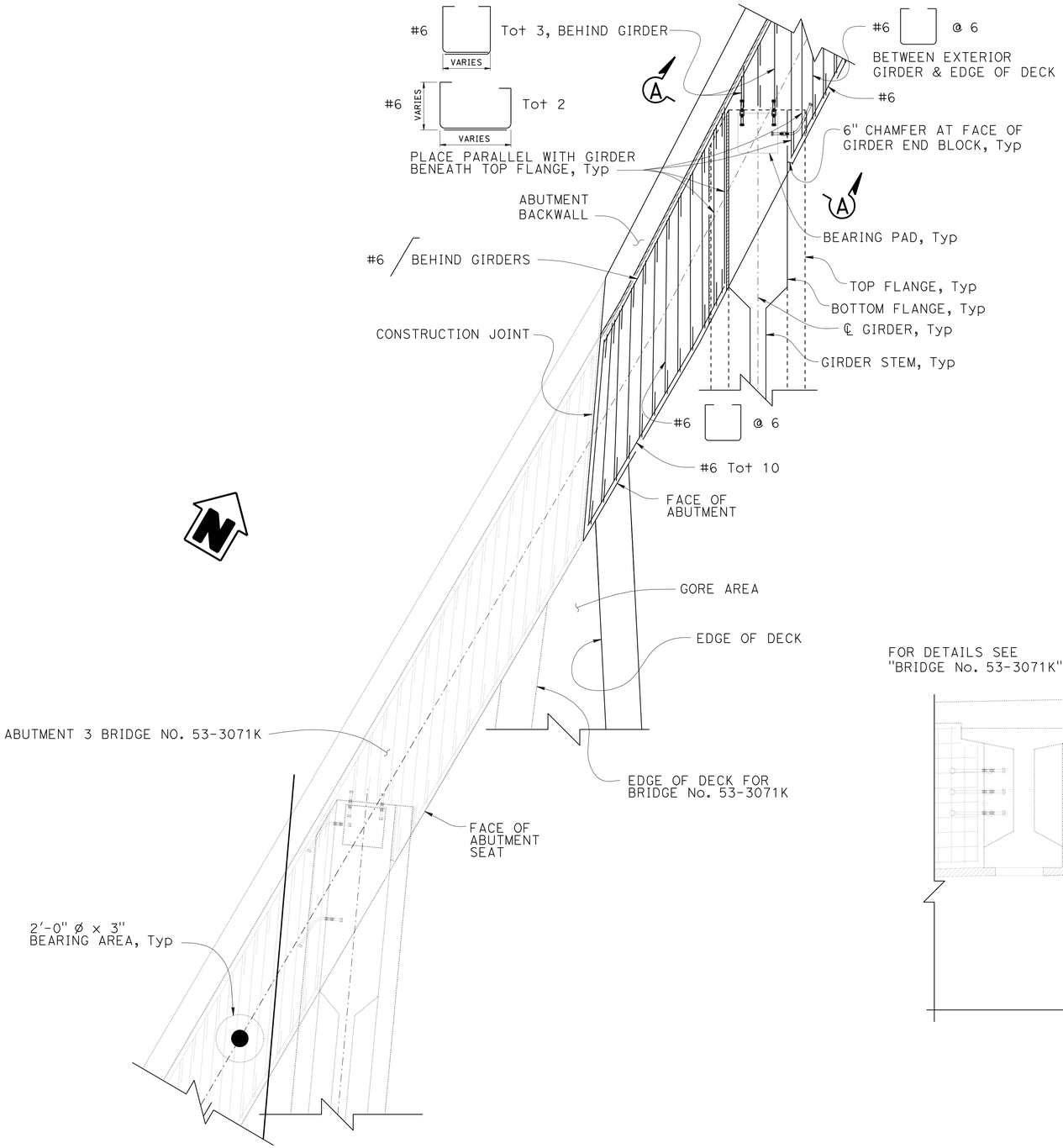

PART PLAN
3/8" = 1'-0"

Notes:

1. For details not shown see "PC/PS BULB-TEE GIRDER (HARPED STRANDS) and "PC/PS BULB-TEE GIRDER (MISCELLANEOUS DETAILS)" sheets.
2. For "SECTION A-A" see "END DIAPHRAGM DETAILS No. 3" sheet.

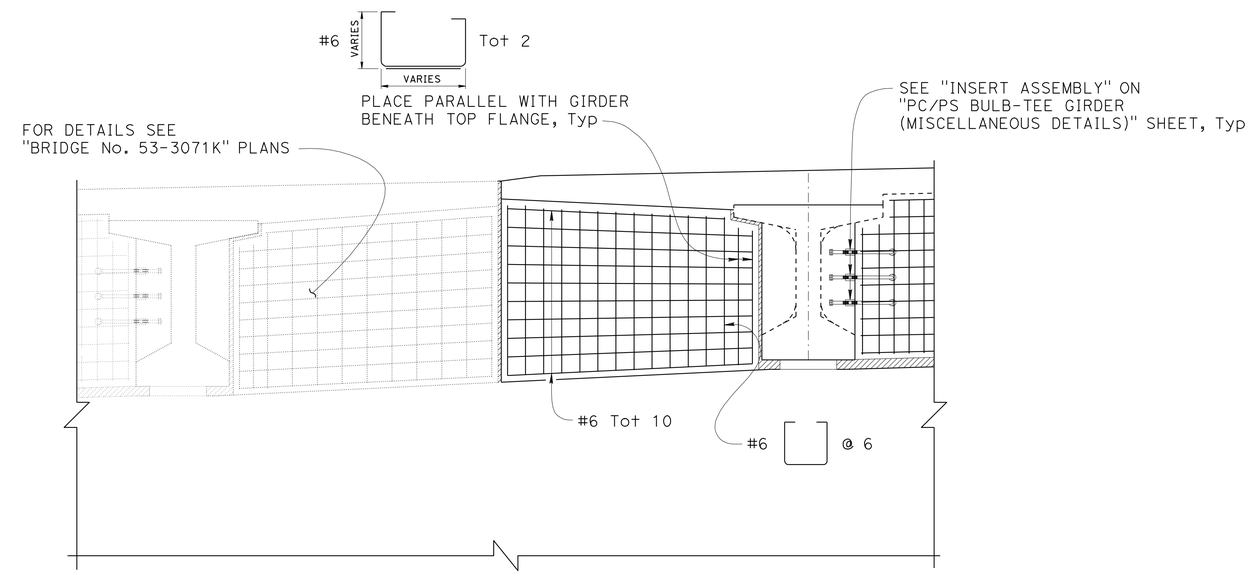

PART ELEVATION
1/2" = 1'-0"

ABUTMENT 3 END DIAPHRAGM

DESIGN	BY ANTHONY LOGUS	CHECKED RUSLAN NOVIK
DETAILS	BY HERMAN MAUROSCHADT	CHECKED RUSLAN NOVIK
QUANTITIES	BY SARA YIP	CHECKED RUSLAN NOVIK

STATE OF CALIFORNIA
DEPARTMENT OF TRANSPORTATION

DIVISION OF ENGINEERING SERVICES
STRUCTURE DESIGN
DESIGN BRANCH 15

BRIDGE NO. 53-3062
POST MILE 5.12

PIONEER Blvd UC (REPLACE)
END DIAPHRAGM DETAILS No. 2

STRUCTURES DESIGN DETAIL SHEET (ENGLISH) (REV. 09-01-10)

ORIGINAL SCALE IN INCHES FOR REDUCED PLANS 0 1 2 3

UNIT: 3604
PROJECT NUMBER & PHASE: 0700001834 1
CONTRACT NO.: 07-215941

DISREGARD PRINTS BEARING EARLIER REVISION DATES

REVISION DATES: 10-6-11 12-9-11 12-30-11 2-22-12

SHEET 31 OF 72

FILE => 53-3062-v-eddt2.dgn

USERNAME => s119571 DATE PLOTTED => 14-APR-2012 TIME PLOTTED => 11:24

DIST	COUNTY	ROUTE	POST MILES TOTAL PROJECT	SHEET No.	TOTAL SHEETS
07	LA	5	4.0/5.9	1112	1597

Anthony T. Logus 12-12-11
REGISTERED CIVIL ENGINEER DATE

4-9-12
PLANS APPROVAL DATE

REGISTERED PROFESSIONAL ENGINEER Anthony T. Logus No. C68189 Exp. 09-30-13 CIVIL STATE OF CALIFORNIA

The State of California or its officers or agents shall not be responsible for the accuracy or completeness of electronic copies of this plan sheet.

Note:

1. For details not shown see "PC/PS BULB-TEE GIRDER (HARPED STRANDS)" and "PC/PS BULB-TEE GIRDER (MISCELLANEOUS DETAILS)" sheets.

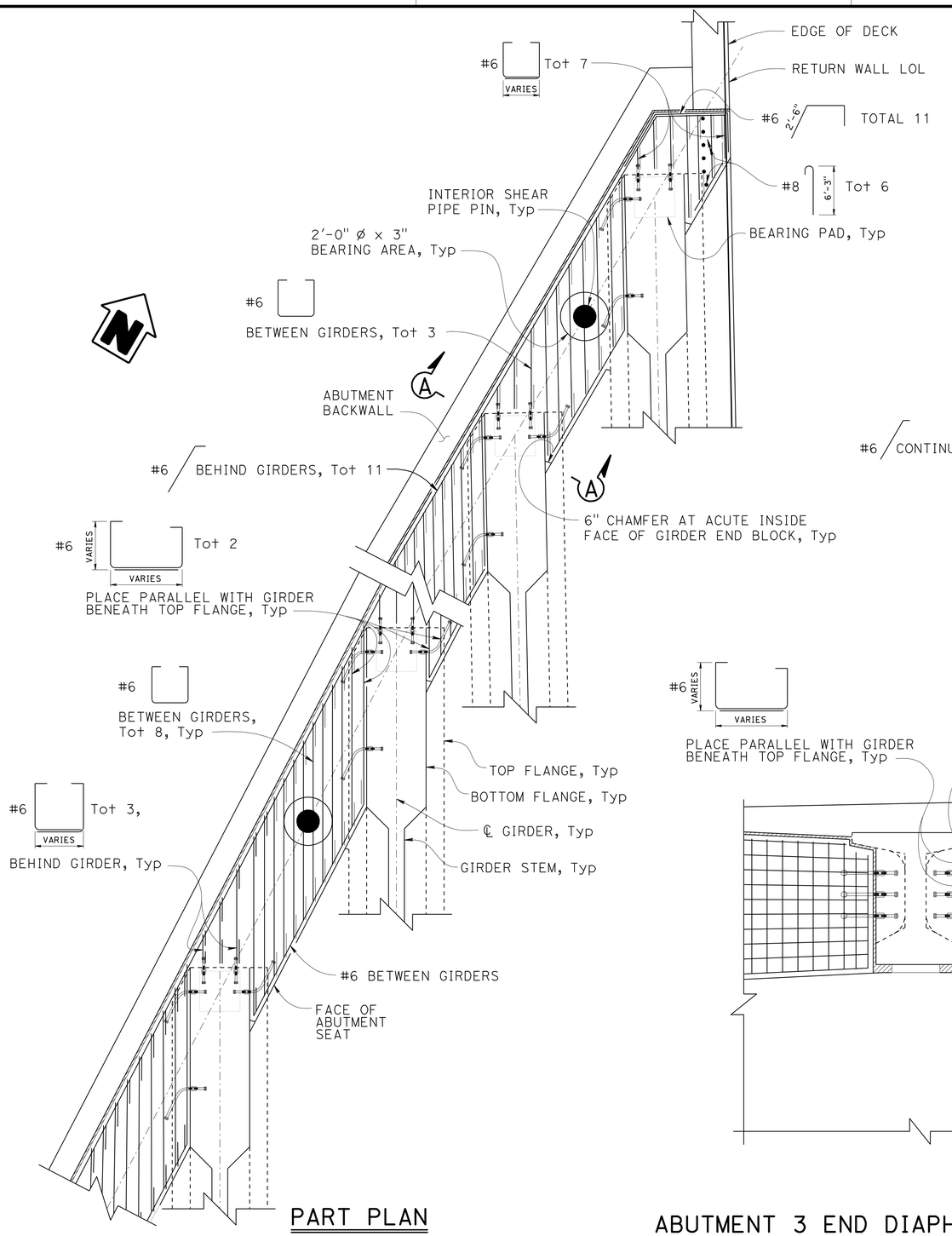

PART PLAN
3/8" = 1'-0"

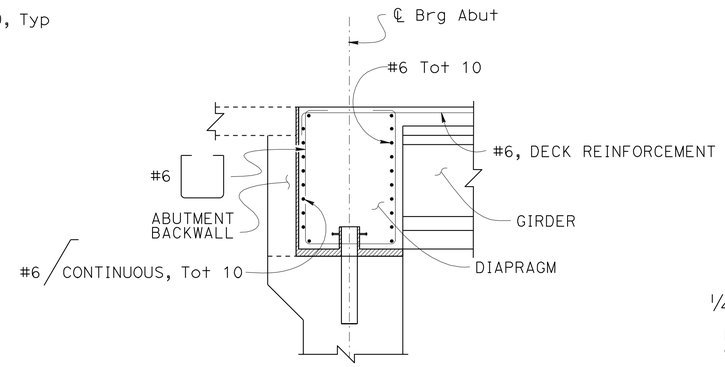

SECTION A-A
3/8" = 1'-0"

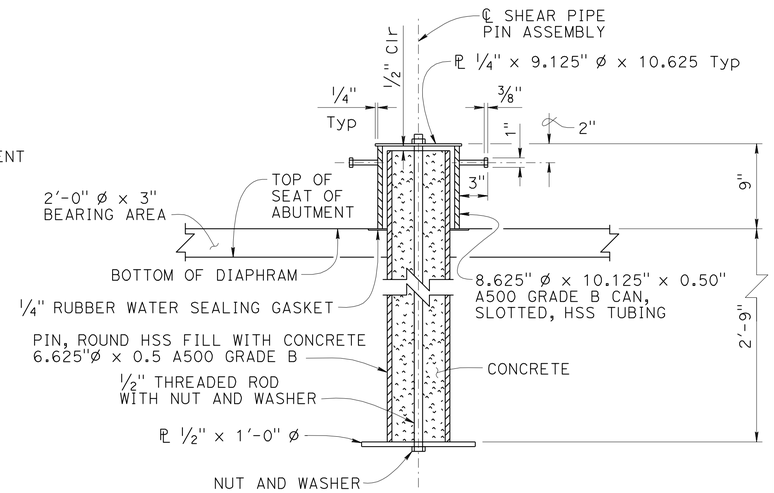

ELEVATION

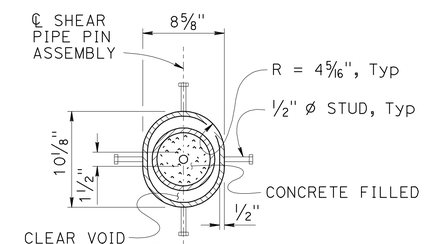

PLAN

Note:

Orientate ℄ Shear Pipe Pin Assembly to be parallel with ℄ Girder.

SHEAR PIPE PIN DETAIL
NO SCALE

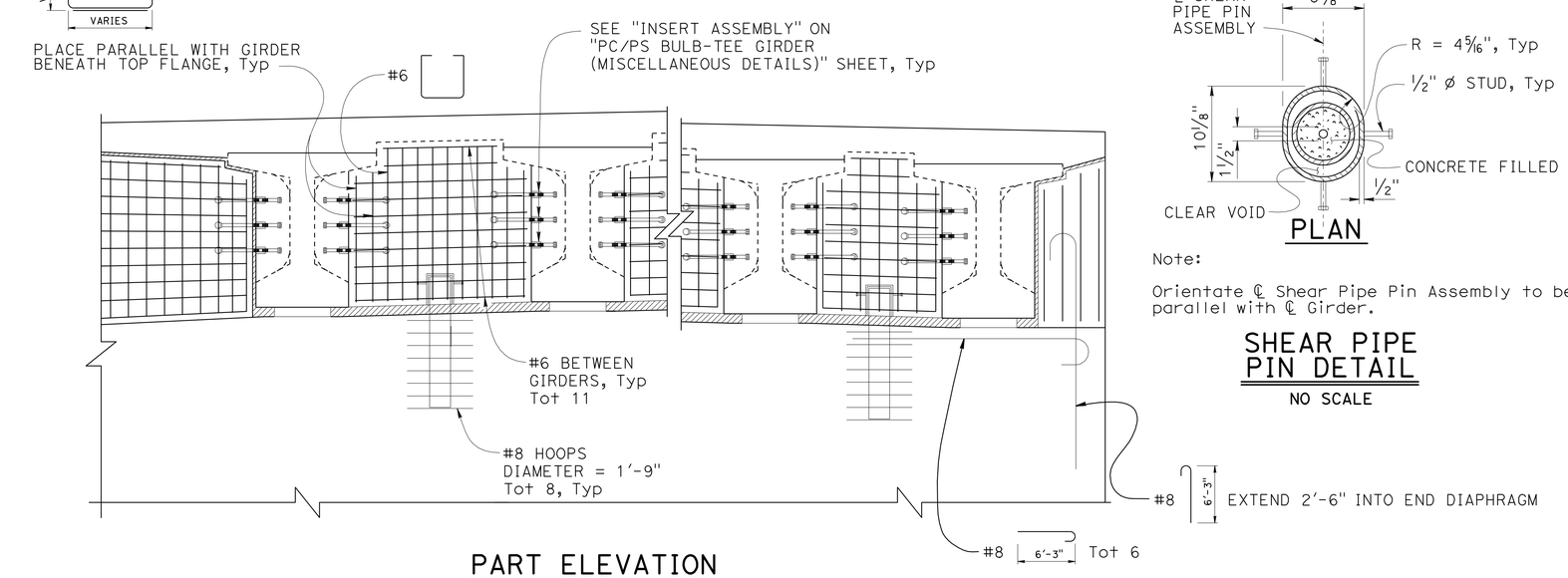

PART ELEVATION
1/2" = 1'-0"

ABUTMENT 3 END DIAPHRAGM

	BY	CHECKED
DESIGN	ANTHONY LOGUS	RUSLAN NOVIK
DETAILS	HERMAN MAUROSCHADT	RUSLAN NOVIK
QUANTITIES	SARA YIP	RUSLAN NOVIK

STATE OF CALIFORNIA
DEPARTMENT OF TRANSPORTATION

DIVISION OF ENGINEERING SERVICES
STRUCTURE DESIGN
DESIGN BRANCH 15

BRIDGE NO. 53-3062
POST MILE 5.12

PIONEER Blvd UC (REPLACE)
END DIAPHRAGM DETAILS No. 3

STRUCTURES DESIGN DETAIL SHEET (ENGLISH) (REV. 09-01-10)

ORIGINAL SCALE IN INCHES FOR REDUCED PLANS 0 1 2 3

UNIT: 3604
PROJECT NUMBER & PHASE: 0700001834 1
CONTRACT NO.: 07-215941

DISREGARD PRINTS BEARING EARLIER REVISION DATES

REVISION DATES: 2-23-12 10-6-11 12-9-11 12-30-11

SHEET 32 OF 72

FILE => 53-3062-v-eddt3.dgn

USERNAME => s119571 DATE PLOTTED => 14-APR-2012 TIME PLOTTED => 11:24

DIST	COUNTY	ROUTE	POST MILES TOTAL PROJECT	SHEET No.	TOTAL SHEETS
07	LA	5	4.0/5.9	1113	1597

Anthony T. Logus 12-12-11
REGISTERED CIVIL ENGINEER DATE

4-9-12
PLANS APPROVAL DATE

REGISTERED PROFESSIONAL ENGINEER Anthony T. Logus No. C68189 Exp. 09-30-13 CIVIL STATE OF CALIFORNIA

The State of California or its officers or agents shall not be responsible for the accuracy or completeness of electronic copies of this plan sheet.

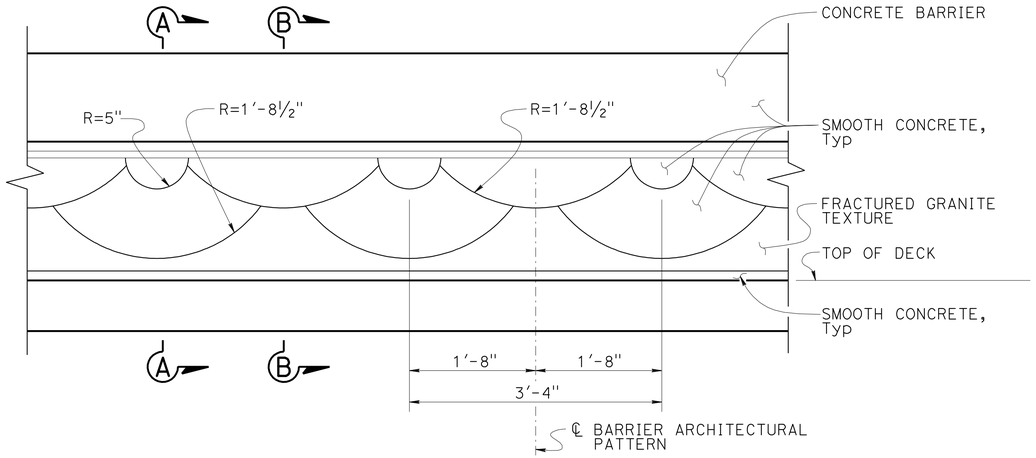

CONCRETE BARRIER TYPE 736 (MOD 1)
1" = 1'-0"

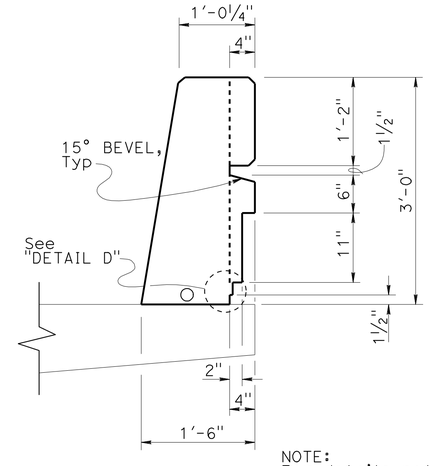

SECTION A-A
1" = 1'-0"

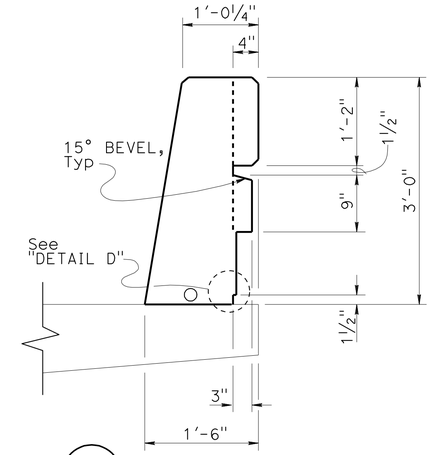

SECTION B-B
1" = 1'-0"

NOTE:
For details not shown see B11-56

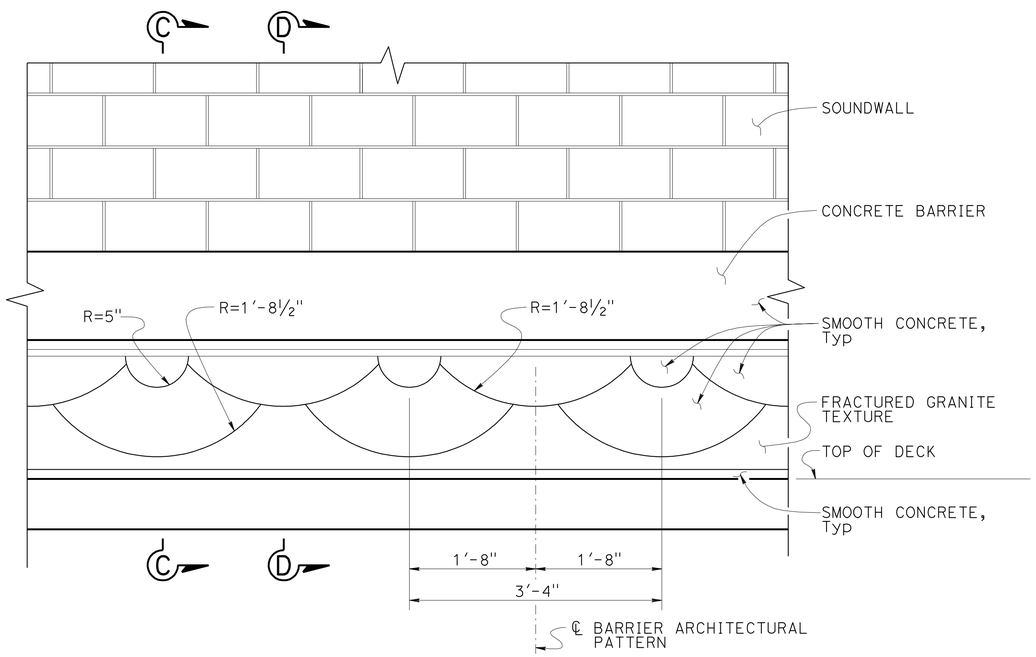

CONCRETE BARRIER TYPE 736 (MOD 2)
1" = 1'-0"

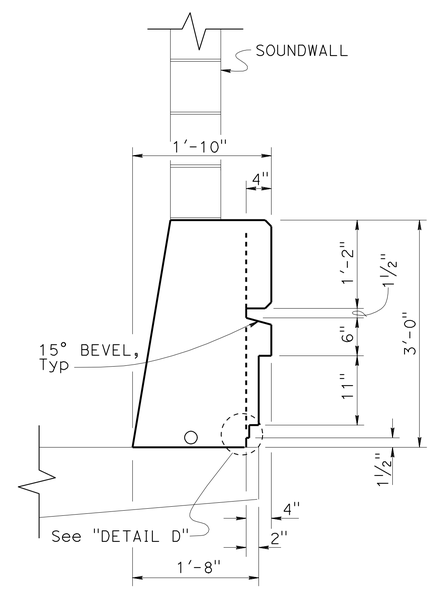

SECTION C-C
1" = 1'-0"

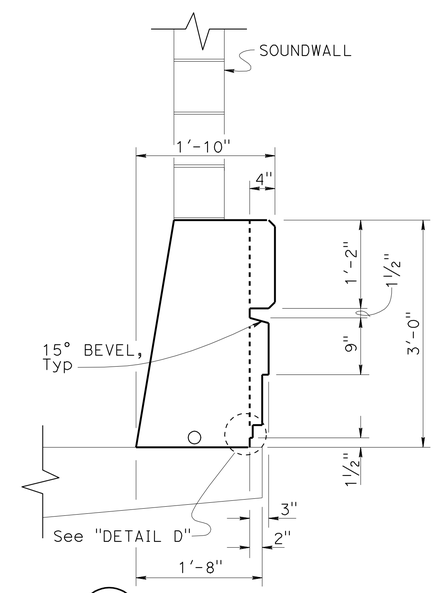

SECTION D-D
1" = 1'-0"

NOTE:
For details not shown see B11-56
and "SOUNDWALL MASONRY BLOCK ON BRIDGE" sheet.

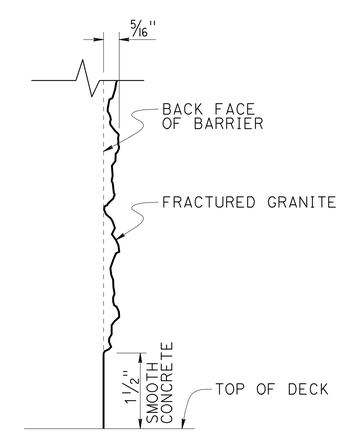

DETAIL D
NO SCALE

DESIGN	BY ANTHONY LOGUS	CHECKED RUSLAN NOVIK	
DETAILS	BY HERMAN MAUROSCHADT	CHECKED RUSLAN NOVIK	
QUANTITIES	BY SARA YIP	CHECKED RUSLAN NOVIK	

STATE OF CALIFORNIA
DEPARTMENT OF TRANSPORTATION

DIVISION OF ENGINEERING SERVICES
STRUCTURE DESIGN
DESIGN BRANCH 15

BRIDGE NO. 53-3062
POST MILE 5.12

PIONEER Blvd UC (REPLACE)
BARRIER ARCHITECTURAL DETAILS No. 1

STRUCTURES DESIGN DETAIL SHEET (ENGLISH) (REV. 09-01-10)

ORIGINAL SCALE IN INCHES FOR REDUCED PLANS 0 1 2 3

UNIT: 3604
PROJECT NUMBER & PHASE: 0700001834 1
CONTRACT NO.: 07-215941

DISREGARD PRINTS BEARING EARLIER REVISION DATES

REVISION DATES 12-9-11 12-12-11 3-16-12

SHEET 33 OF 72

FILE => 53-3062-w-bw-archdet1.dgn

USERNAME => s119571 DATE PLOTTED => 14-APR-2012 TIME PLOTTED => 11:24

DIST	COUNTY	ROUTE	POST MILES TOTAL PROJECT	SHEET No.	TOTAL SHEETS
07	LA	5	4.0/5.9	1114	1597

LICENSED ARCHITECT 12-12-11 DATE

4-9-12
PLANS APPROVAL DATE

LICENSED ARCHITECT H. Javier Chavez 14073 03-31-13 Renewal Date STATE OF CALIFORNIA

The State of California or its officers or agents shall not be responsible for the accuracy or completeness of electronic copies of this plan sheet.

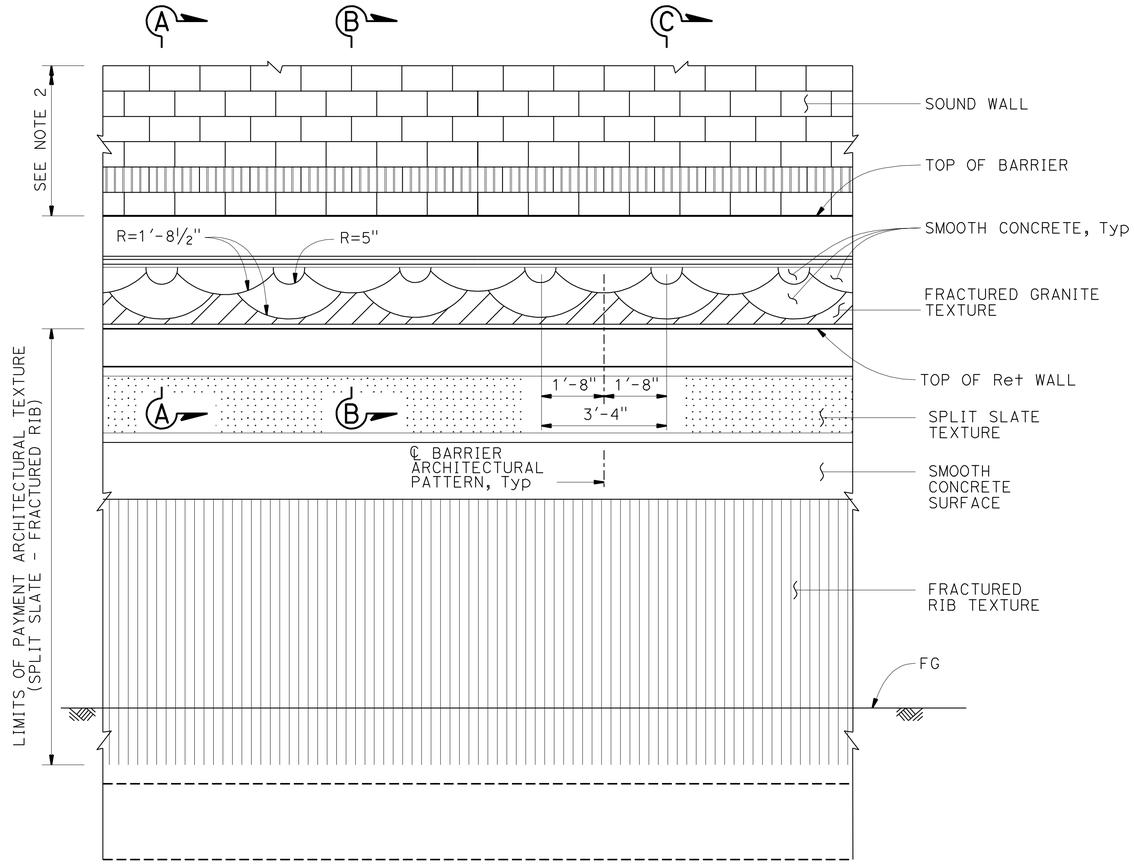

PART ELEVATION

½" = 1'-0"

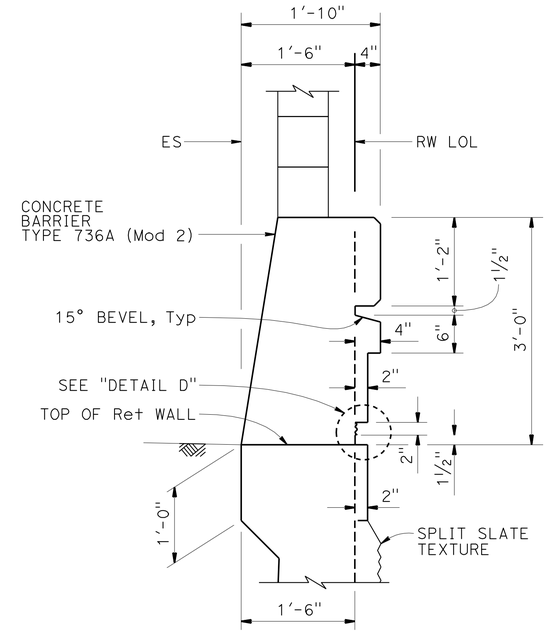

SECTION A-A

1" = 1'-0"

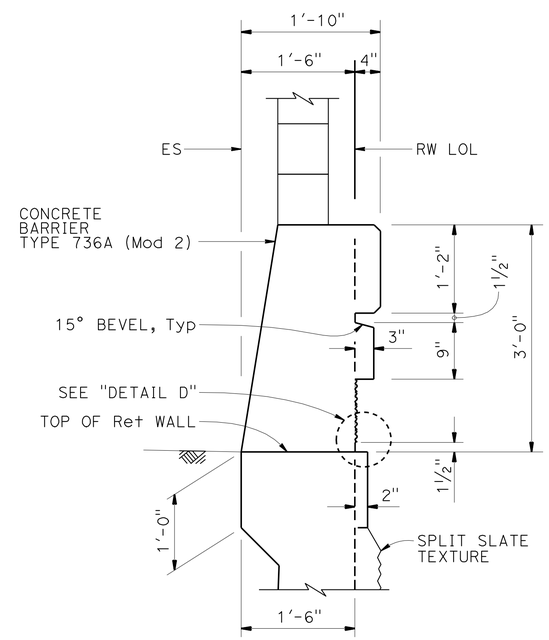

SECTION B-B

1" = 1'-0"

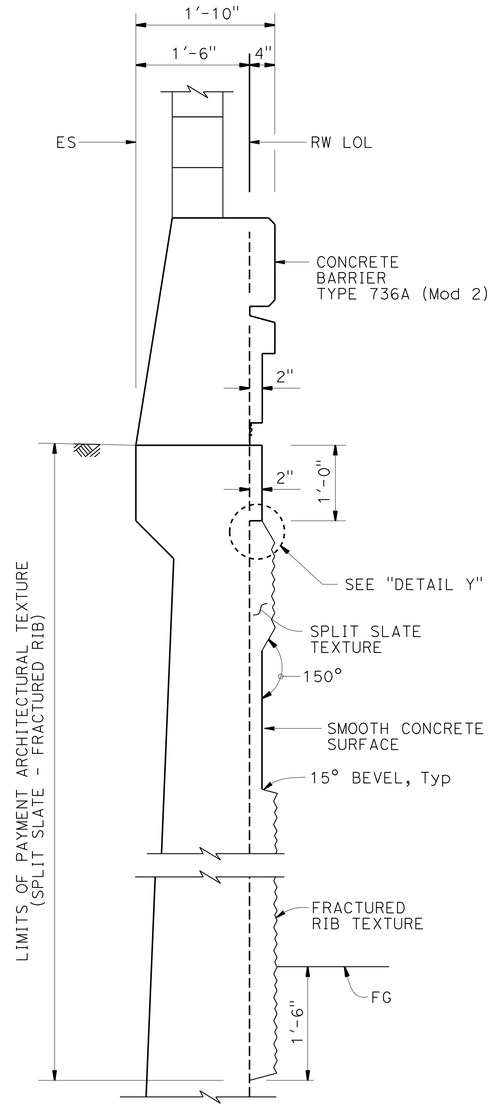

SECTION C-C

1" = 1'-0"

NOTES:

1. For Barrier Reinforcement, see "SOUND WALL - MASONRY BLOCK WITH BARRIER ON RETAINING WALL" sheet.
2. For sound wall architectural treatment, see "ARCHITECTURAL DETAILS No.2" sheet.

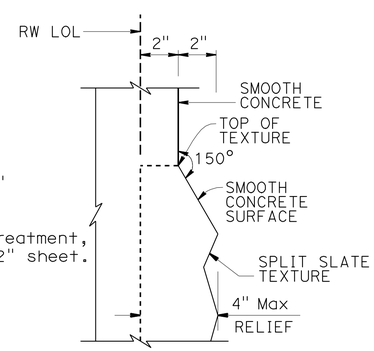

DETAIL Y

NO SCALE

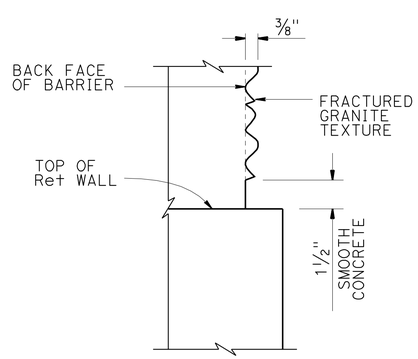

DETAIL D

NO SCALE

DESIGN	BY H. CHAVEZ	CHECKED I. TASABIA	
DETAILS	BY K. LI	CHECKED H. CHAVEZ	
QUANTITIES	BY S. YIP	CHECKED R. NOVIK	

STATE OF CALIFORNIA DEPARTMENT OF TRANSPORTATION

DIVISION OF ENGINEERING SERVICES STRUCTURE DESIGN DESIGN BRANCH 15

BRIDGE NO. 53-3062
POST MILE 5.12

PIONEER Blvd UC (REPLACE)
BARRIER ARCHITECTURAL DETAILS No. 2

STRUCTURES DESIGN DETAIL SHEET (ENGLISH) (REV. 09-01-10)

ORIGINAL SCALE IN INCHES FOR REDUCED PLANS 0 1 2 3

UNIT: 3604
PROJECT NUMBER & PHASE: 0700001834 1
CONTRACT NO.: 07-215941

DISREGARD PRINTS BEARING EARLIER REVISION DATES

REVISION DATES 11-17-11 12-9-11 12-12-11 3-16-12

SHEET 34 OF 72

FILE => 53-3062-w-bw-archdet2.dgn

USERNAME => s113571 DATE PLOTTED => 14-APR-2012 TIME PLOTTED => 11:24

Dist	COUNTY	ROUTE	POST MILES TOTAL PROJECT	SHEET No.	TOTAL SHEETS
07	LA	5	4.0/5.9	1115	1597

George Olguin
LICENSED LANDSCAPE ARCHITECT

4-9-12
PLANS APPROVAL DATE

LICENSED LANDSCAPE ARCHITECT
GEORGE OLGUIN
NO. 4333
George Olguin
Signature
08-31-12
Renewal Date
10-10-10
Date
STATE OF CALIFORNIA

THE STATE OF CALIFORNIA OR ITS OFFICERS OR AGENTS SHALL NOT BE RESPONSIBLE FOR THE ACCURACY OR COMPLETENESS OF SCANNED COPIES OF THIS PLAN SHEET.

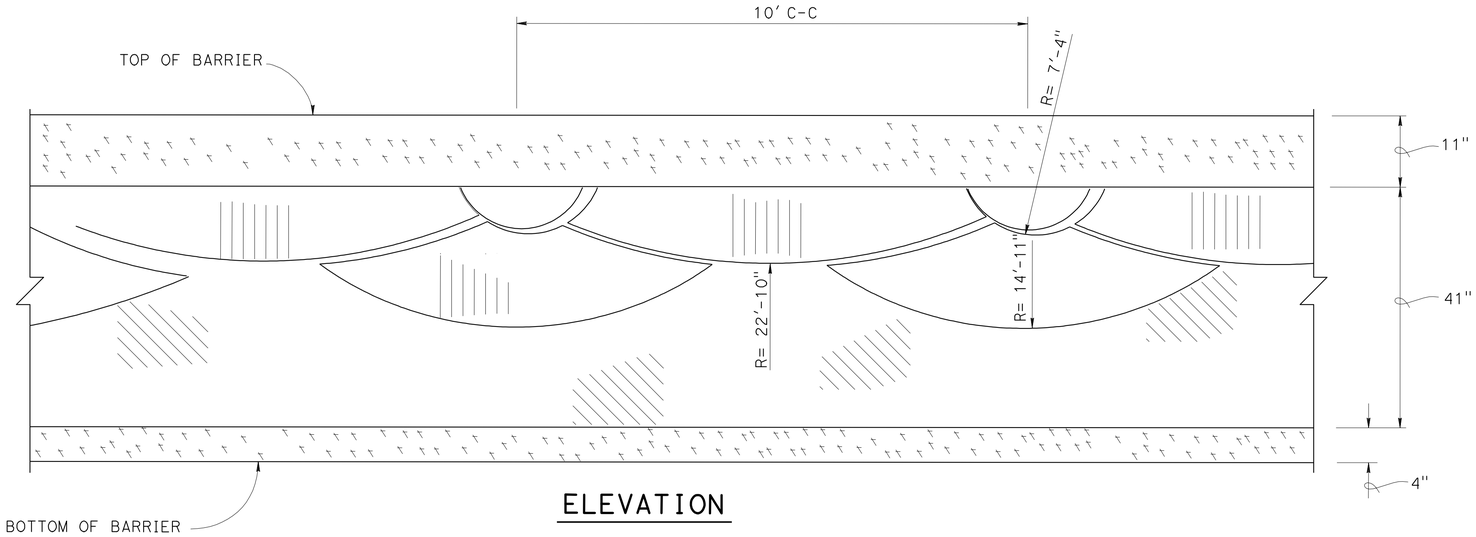

ELEVATION

CONCRETE BARRIER TYPE 60GA (MOD) ARCHITECTURAL SURFACE TREATMENT (SCALLOP WALL PATTERN)

No Scale

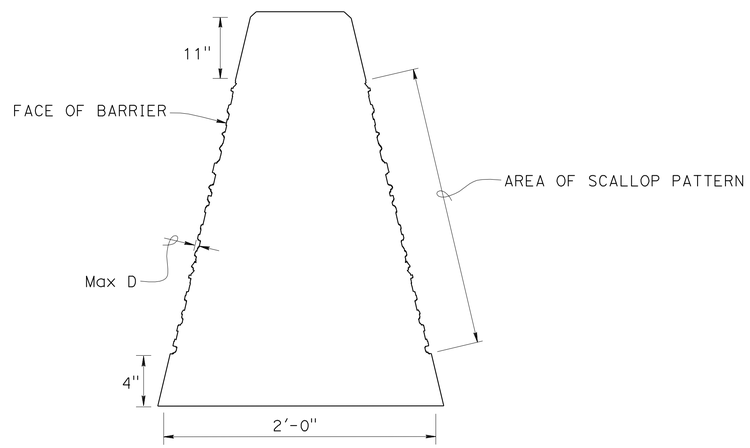

Legend:

- Smooth Finish
- Light Fractured Granite Finish Max D 1/4"-1/2"
- Heavy Fractured Granite Finish Max D 3/4"-1"

Note:

For details not shown see and "ROAD PLANS" A76D

TYPICAL SECTION

CONCRETE BARRIER TYPE 60GA (MOD) (SCALLOP PATTERN DIFFERENTIAL)

No Scale

	BY	CHECKED
DESIGN	GEORGE OLGUIN	JENNIFER TAIRA
DETAILS	GEORGE OLGUIN	JENNIFER TAIRA
QUANTITIES	SARA YIP	RUSLAN NOVIK

STATE OF CALIFORNIA
DEPARTMENT OF TRANSPORTATION

DIVISION OF ENGINEERING SERVICES
STRUCTURE DESIGN
DESIGN BRANCH 15

BRIDGE NO. 53-3062
POST MILE 5.12

PIONEER Blvd UC (REPLACE)
BARRIER ARCHITECTURAL DETAILS No. 3

STRUCTURES DESIGN DETAIL SHEET (ENGLISH) (REV. 09-01-10)

ORIGINAL SCALE IN INCHES FOR REDUCED PLANS 0 1 2 3

UNIT: 3604
PROJECT NUMBER & PHASE: 0700001834 1
CONTRACT NO.: 07-215941

DISREGARD PRINTS BEARING EARLIER REVISION DATES

REVISION DATES 2/11/12

SHEET 35 OF 72

FILE => 53-3062-w-bw-archdet3.dgn

USERNAME => s119571 DATE PLOTTED => 14-APR-2012 TIME PLOTTED => 11:24

ARCHITECTURAL ABBREVIATIONS

&	AND
∟	ANGLE
℄	CENTER LINE
∅	DIAMETER OR ROUND
□	SQUARE
d	PENNY
°	DEGREE
AB	ANCHOR BOLT
ABUT	ABUTMENT
ABV	ABOVE
AC	ASPHALT CONCRETE
ACOUS	ACOUSTICAL
ADJ	ADJUSTABLE
ALT	ALTERNATE
ALUM	ALUMINUM
APA	AMERICAN PLYWOOD ASSOCIATION
ARCH	ARCHITECTURAL, ARCHITECT
ASPH	ASPHALT
BD	BOARD
BIT	BITUMINOUS
BLDG	BUILDING
BLK	BLOCK
BLKG	BLOCKING
BM	BEAM
BN	BOUNDARY NAILING
BOT	BOTTOM
BR	BRIDGE
BTM	BOTTOM
BTWN	BETWEEN
BUR	BUILT-UP-ROOFING
CJ	CONTROL JOINT
CL	CHAIN LINK
CAB	CABINET
CB	CATCH BASIN
CEM	CEMENT
CER	CERAMIC
CH	CLOTHES HOOK
CIDH	CAST IN DRILLED HOLE
CIP	CAST IN PLACE
CKBD	CHALKBOARD
CLG	CEILING
CMU	CONCRETE MASONRY UNIT
CLO	CLOSET
CLR	CLEAR
COL	COLUMN
CONC	CONCRETE
CONN	CONNECTION
CONST	CONSTRUCTION
CONT	CONTINUOUS
CORR	CORRIDOR
CPT	CARPET
CT	CERAMIC TILE
CTR	CENTER
CTSK	COUNTERSUNK
CY	CUBIC YARD
DBL	DOUBLE
DEPT	DEPARTMENT
DET	DETAIL
DF	DOUGLAS FIR
DIA	DIAMETER
DIM	DIMENSION
DN	DOWN
DP	DEEP
DR	DOOR
DS	DOWNSPOUT
DWG	DRAWING
DWR	DRAWER
(E)	EXISTING
E	EAST
EA	EACH
EF	EXHAUST FAN
EHD	ELECTRIC HAND DRYER
EJ	EXPANSION JOINT
EL	ELEVATION (HEIGHT)
ELEC	ELECTRICAL
ELEV	ELEVATION (VIEW)
ELVR	ELEVATOR
EMER	EMERGENCY
ENCL	ENCLOSURE
EP	EDGE OF PAVEMENT
EQ	EQUAL
EPB	ELECTRICAL PANELBOARD
EQUIP	EQUIPMENT
ESCL	ESCALATOR
ETW	EDGE OF TRAVEL WAY
EWC	ELECTRIC WATER COOLER
EXP	EXPANSION
EXPO	EXPOSED, EXPOSURE
EXT	EXTERIOR
FD	FLOOR DRAIN
FDN	FOUNDATION
FE	FIRE EXTINGUISHER
FEC	FIRE EXTINGUISHER CABINET
FF	FINISH FLOOR
FG	FINISH GRADE
FH	FIRE HYDRANT
FHC	FIRE HOSE CABINET
FHMS	FLATHEAD METAL SCREW
FHWS	FLATHEAD WOOD SCREW
FIN	FINISH
FJ	FLOOR JOIST
FLASH	FLASHING
FLR	FLOOR
FLUOR	FLUORESCENT
FOC	FACE OF CONCRETE
FOF	FACE OF FINISH
FOM	FACE OF MASONRY
FOS	FACE OF STUD
FRMG	FRAMING
FRPP	FIBERGLASS REINFORCED PLASTIC PANEL
FT	FEET, FOOT
FTG	FOOTING
FURR	FURRING
FWY	FREEWAY
GA	GAUGE
GAL	GALLON
GALV	GALVANIZED
GB	GRAB BAR
GI	GALVANIZED IRON
GL	GLASS
GLM	GLUE LAMINATED MEMBER
GLZ	GLAZING
GR	GRADE
GSM	GALVANIZED SHEET METAL
GYP	GYPSUM
GYP SHTG	GYPSUM SHEATHING
HB	HOSE BIB
HC	HOLLOW CORE
HD	HEAD, HOLD DOWN
HDR	HEADER
HDWD	HARDWOOD
HDWR	HARDWARE
HEX	HEXAGONAL
HF	HEMLOCK-FIR
HGR	HANGER
HM	HOLLOW METAL
HORIZ	HORIZONTAL
HP	HIGH POINT
HR	HOUR
HSB	HIGH STRENGTH BOLT
HT	HEIGHT
HVAC	HEATING, VENTILATING, AIR CONDITIONING
HWY	HIGHWAY
ID	INSIDE DIAMETER
IN	INCH
INFO	INFORMATION
INSUL	INSULATION
INT	INTERIOR
JAN	JANITOR
JB	JUNCTION BOX
JH	JOIST HANGER
JST	JOIST
JT	JOINT
KIT	KITCHEN
LAB	LABORATORY
LAV	LAVATORY
LBS	POUNDS
LF	LINEAR FEET
LKR	LOCKER
LLV	LONG LEG VERTICAL
LOL	LAYOUT LINE
LPG	LIQUIFIED PETROLEUM GAS
LS	LAG SCREW
M	METER
MAT	MATERIAL
MAX	MAXIMUM
MB	MACHINE BOLT
MBR	MEMBER
MECH	MECHANICAL
MEMB	MEMBRANE
MET	METAL
MFR	MANUFACTURER
MH	MAN HOLE
MIN	MINIMUM
MIR	MIRROR
MISC	MISCELLANEOUS
mm	MILLIMETER
MO	MASONRY OPENING
MOD	MODIFIED
MTD	MOUNTED
MUL	MULLION
N	NORTH
ND	NAPKIN DISPOSAL
NIC	NOT IN CONTRACT
NO	NUMBER
NOM	NOMINAL
NTS	NOT TO SCALE
OBSC	OBSCURE
OC	OVERCROSSING
OD	OUTSIDE DIAMETER
OFF	OFFICE
OFD	OVERFLOW DRAIN
OG	ORIGINAL GROUND
OH	OVERHEAD
OHWS	OVALHEAD WOOD SCREW
OP	OPERATIONS
OPNG	OPENING
OPP	OPPOSITE
OPT	OPTION, OPTIONAL
P	PITCH
PB	POST BASE
PC	POST CAP
PCC	PORTLAND CEMENT CONCRETE
PDF	POWDER DRIVEN FASTENERS
PH	PHILLIPS HEAD
PL	PLATE
PLAM	PLASTIC LAMINATE
PLAS	PLASTER
PLYWD	PLYWOOD
PMF	PRESSED METAL FRAME
PR	PAIR
PRTN	PARTITION
PT	POINT
PTD	PAPER TOWEL DISPENSER
PTD/R	PAPER TOWEL DISPENSER /RECEPTACLE
PVC	POLYVINYL CHLORIDE
PWB	PREFABRICATED WOOD I BEAM
QT	QUARRY TILE
(R)	RELOCATED
R	RADIUS, RISER
R/W	RIGHT OF WAY
RD	ROOF DRAIN
RDWD	REDWOOD
REF	REFERENCE
REFG	REFRIGERATOR
REINF	REINFORCED(ING)
REQ	REQUIRED
RFG	ROOFING
RFSWN	ROUGHSAWN
RH	ROUND HEAD
RHWS	ROUND HEAD WOOD SCREWS
RJ	ROOF JOIST
RM	ROOM
RO	ROUGH OPENING
RSWN	RESAWN
RTE	ROUTE
RW	RETAINING WALL
S	SOUTH
SC	SOLID CORE
SCHED	SCHEDULE
SD	SOAP DISPENSER
SDST	SELF DRILLING SELF TAPPING
SF	SQUARE FEET
SH	SHELF
SHWR	SHOWER
SHT	SHEET
SHTG	SHEATHING
SIM	SIMILAR
SL	SCORE LINE
SMS	SHEET METAL SCREW
SOHD	SECTIONAL OVERHEAD DOOR
SPEC	SPECIFICATION
SPS	STRUCTURAL PLYWOOD SHEATHING
SQ	SQUARE
SRRA	SAFETY ROADSIDE REST AREA
SS	SERVICE SINK
SST	STAINLESS STEEL
STA	STATION
STAG	STAGGER
STD	STANDARD
STL	STEEL
STOR	STORAGE
STRUC	STRUCTURAL
SUSP	SUSPENDED
T	TREAD
T&G	TONGUE & GROOVE
TB	TOLL BOOTH
TEL	TELEPHONE
TEMP	TEMPERED
TER	TERRAZZO
THK	THICK
THLD	THRESHOLD
TJ	TOOLED JOINT
TKBD	TACKBOARD
TN	TOE NAIL
TNVM	TAMPON/NAPKIN VENDING MACHINE
TOC	TOP OF CURB OR CONCRETE
TOP	TOP OF PAVEMENT
TOS	TOE OF SLOPE
TOT	TOTAL
TOW	TOP OF WALL
TS	TUBE STEEL
TSCD	TOILET SEAT COVER DISPENSER
TTD	TOILET TISSUE DISPENSER
TTY	TELETYPEWRITER
TYP	TYPICAL
UNF	UNFINISHED
UON	UNLESS OTHERWISE NOTED
UR	URINAL
VAR	VARIES
VCT	VINYL COMPOSITION TILE
VERT	VERTICAL
VEST	VESTIBULE
VR	VENT RISER
VTR	VENT THRU ROOF
W	WEST
W/	WITH
W/O	WITHOUT
WC	WATER CLOSET
WD	WOOD
WDW	WINDOW
WH	WATER HEATER
WP	WORKING POINT
WR	WATER RESISTANT
WSCT	WAINSCOT
WT	WEIGHT
WTPR	WATERPROOFING
WWF	WELDED WIRE FABRIC
YD	YARD

ARCHITECTURAL GENERAL NOTES

1. THE CONTRACTOR SHALL VERIFY ALL CONTROLLING DIMENSIONS AND FIELD CONDITIONS PRIOR TO ORDERING OR FABRICATING ANY MATERIALS OR ASSEMBLIES FOR CONSTRUCTION
2. THE CONTRACTOR SHALL NOTIFY THE ENGINEER IN WRITING OF ANY DISCREPANCIES BETWEEN THESE PLANS AND ACTUAL MEASUREMENTS OR FIELD CONDITIONS PRIOR TO ORDERING OR FABRICATING ANY MATERIALS OR ASSEMBLIES FOR CONSTRUCTION.

DIST	COUNTY	ROUTE	POST MILES TOTAL PROJECT	SHEET No	TOTAL SHEETS
07	LA	5	4.0/5.9	1116	1597

LICENSED ARCHITECT — DATE 12-12-11

PLANS APPROVAL DATE 4-9-12

LICENSED ARCHITECT H. Javier Chavez 14073 03-31-13 Renewal Date STATE OF CALIFORNIA

The State of California or its officers or agents shall not be responsible for the accuracy or completeness of electronic copies of this plan sheet.

SYMBOLS FOR ARCHITECTURAL SHEETS

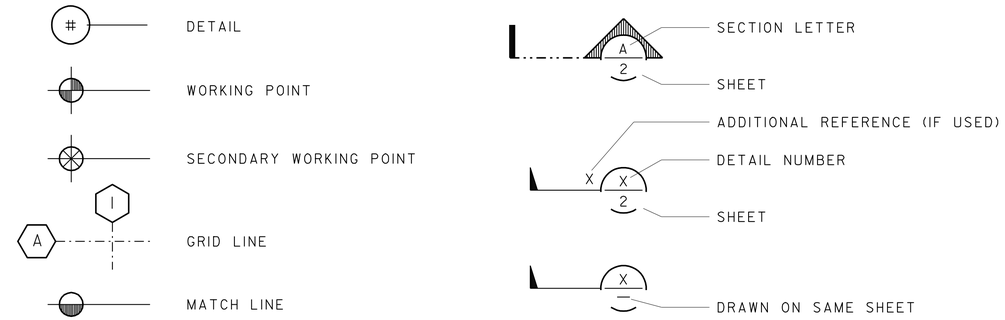

INDEX FOR ARCHITECTURAL SHEETS

A0 ARCHITECTURAL ABBREVIATIONS, SYMBOLS & INDEX
A1 ELEVATION AND ARCHITECTURAL MOTIF AT ABUTMENT 1
A2 ELEVATION AND ARCHITECTURAL MOTIF AT ABUTMENT 1
A3 ELEVATION AND ARCHITECTURAL MOTIF AT ABUTMENT 3
A4 ELEVATION AND ARCHITECTURAL MOTIF AT ABUTMENT 3
A5 SECTIONS AT ABUTMENTS 1 AND 3
A6 ARCHITECTURAL MOTIF DETAILS AT ABUTMENT 1 & 3
A7 ARCHITECTURAL TILE MOTIF DETAILS
A8 ELEVATION AND ARCHITECTURAL MOTIF AT ABUTMENT 1
A9 ELEVATION AND ARCHITECTURAL MOTIF AT ABUTMENT 1
A10 ELEVATION AND ARCHITECTURAL MOTIF AT ABUTMENT 3
A11 ELEVATION AND ARCHITECTURAL MOTIF AT ABUTMENT 3
A12 ARCHITECTURAL TILE FINISH SCHEDULE AT ABUTMENT 1
A13 ARCHITECTURAL TILE FINISH SCHEDULE AT ABUTMENT 3

	BY	CHECKED
DESIGN	H. CHAVEZ	S. HEATH
DETAILS	S. HEATH	H. CHAVEZ
QUANTITIES	S. YIP	R. NOVIK

STATE OF CALIFORNIA
DEPARTMENT OF TRANSPORTATION

DIVISION OF ENGINEERING SERVICES
BRIDGE ARCHITECTURE AND AESTHETICS

BRIDGE NO. 53-3062
POST MILE 5.12

PIONEER Blvd UC (REPLACE)
ARCHITECTURAL ABBREVIATIONS, SYMBOLS & INDEX

SHEET A0

STRUCTURES DESIGN DETAIL SHEET (ENGLISH) (REV. 09-01-10)

ORIGINAL SCALE IN INCHES FOR REDUCED PLANS 0 1 2 3

UNIT: 3604
PROJECT NUMBER & PHASE: 0700001834 1
CONTRACT NO.: 07-215941

DISREGARD PRINTS BEARING EARLIER REVISION DATES 3-9-12

REVISION DATES | SHEET 36 | OF 72

FILE => 53-3062-w-c-archdeta0.dgn

USERNAME => s119371 DATE PLOTTED => 14-APR-2012 TIME PLOTTED => 11:24

DIST	COUNTY	ROUTE	POST MILES TOTAL PROJECT	SHEET No	TOTAL SHEETS
07	LA	5	4.0/5.9	1117	1597

LICENSED ARCHITECT — DATE 12-12-11

PLANS APPROVAL DATE 4-9-12

LICENSED ARCHITECT H. Javier Chavez 14073 03-31-13 Renewal Date STATE OF CALIFORNIA

The State of California or its officers or agents shall not be responsible for the accuracy or completeness of electronic copies of this plan sheet.

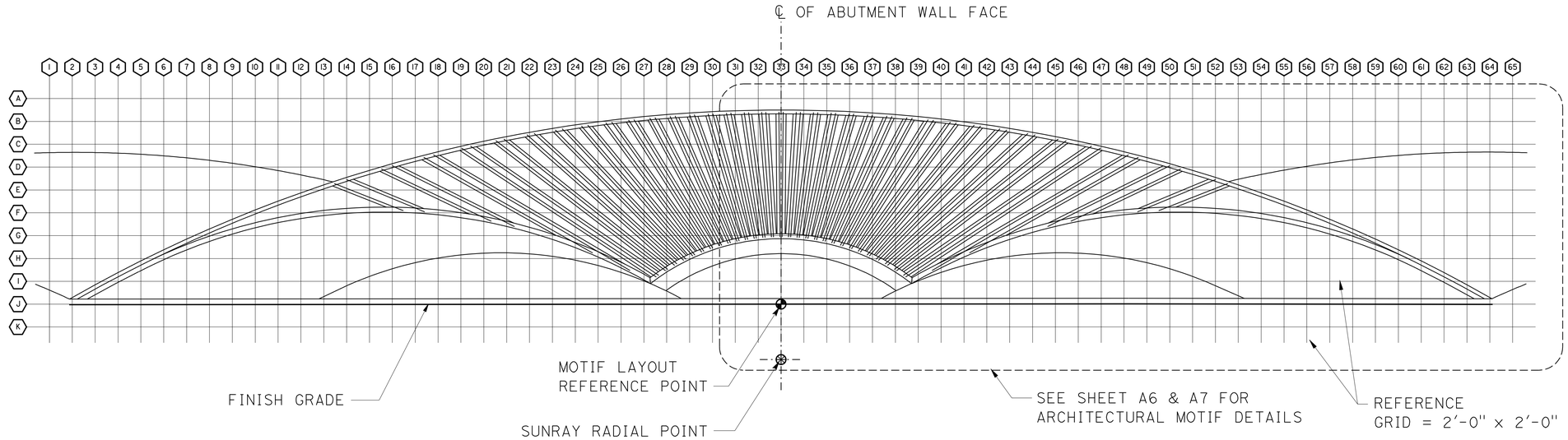

PARTIAL ARCHITECTURAL MOTIF AT ABUTMENT 1

NO SCALE

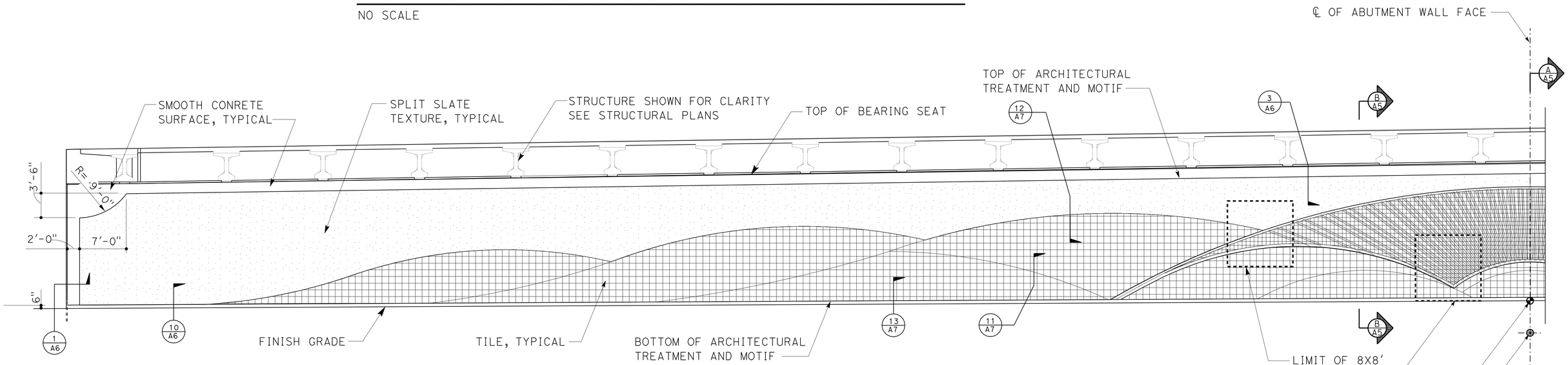

PARTIAL ELEVATION AT ABUTMENT 1

NO SCALE

LEGEND:

- TILE-SEE SHT A12 FOR PATTERN LAYOUT
- TEXTURED CONCRETE SURFACE = SPLIT SLATE TEXTURE. SEE DETAIL 1/A5
- SMOOTH CONCRETE SURFACE

	BY	CHECKED
DESIGN	H. CHAVEZ	S. HEATH
DETAILS	S. HEATH	H. CHAVEZ
QUANTITIES	S. YIP	R. NOVIK

STATE OF CALIFORNIA DEPARTMENT OF TRANSPORTATION

DIVISION OF ENGINEERING SERVICES BRIDGE ARCHITECTURE AND AESTHETICS

BRIDGE NO. 53-3062 POST MILE 5.12

PIONEER Blvd UC (REPLACE)

ELEVATION AND ARCHITECTURAL MOTIF ABUTMENT 1

SHEET A1

STRUCTURES DESIGN DETAIL SHEET (ENGLISH) (REV. 09-01-10)

ORIGINAL SCALE IN INCHES FOR REDUCED PLANS 0 1 2 3

UNIT: 3604
PROJECT NUMBER & PHASE: 0700001834 1 CONTRACT NO.: 07-215941

DISREGARD PRINTS BEARING EARLIER REVISION DATES 3-9-12

REVISION DATES

SHEET 37 OF 72

FILE => 53-3062-w-c-archdeta1.dgn

USERNAME => s119571 DATE PLOTTED => 14-APR-2012 TIME PLOTTED => 11:25

DIST	COUNTY	ROUTE	POST MILES TOTAL PROJECT	SHEET No	TOTAL SHEETS
07	LA	5	4.0/5.9	1118	1597

LICENSED ARCHITECT — DATE 12-12-11

4-9-12
PLANS APPROVAL DATE

LICENSED ARCHITECT H. Javier Chavez 14073 03-31-13 Renewal Date STATE OF CALIFORNIA

The State of California or its officers or agents shall not be responsible for the accuracy or completeness of electronic copies of this plan sheet.

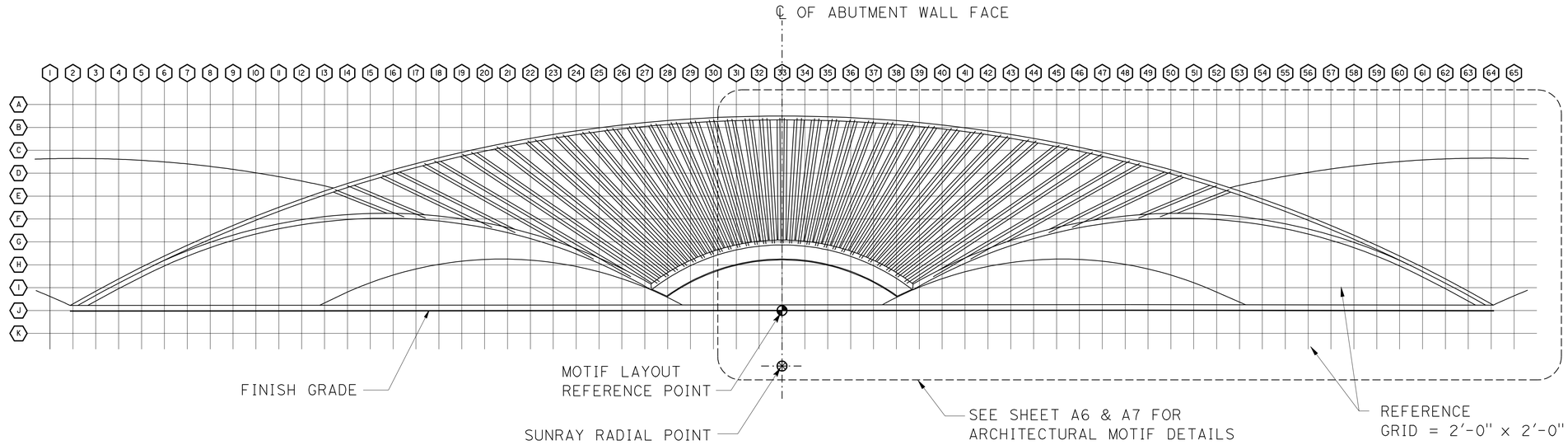

PARTIAL ARCHITECTURAL MOTIF AT ABUTMENT 1

NO SCALE

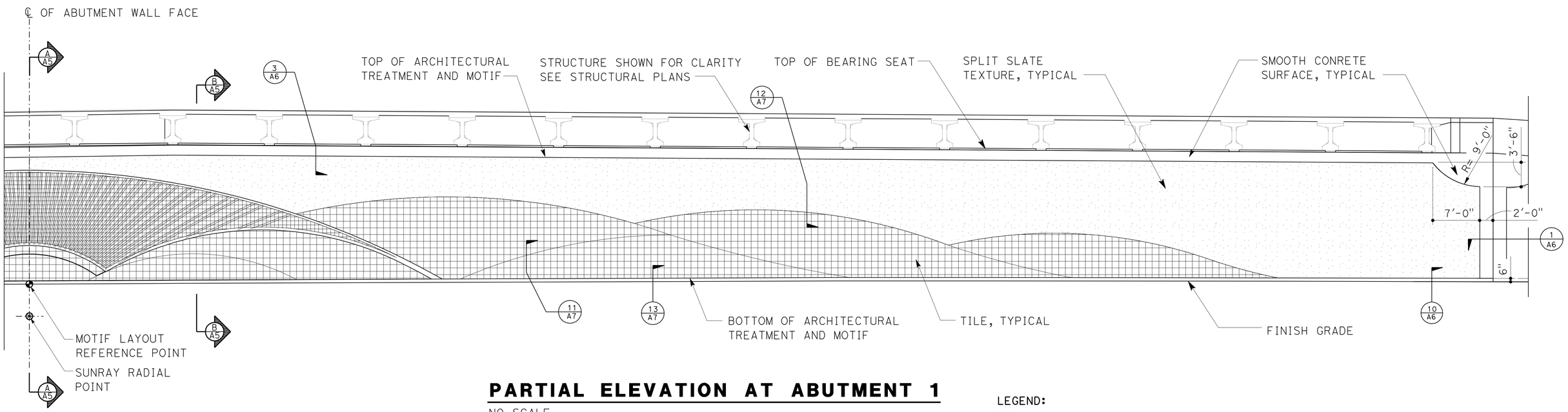

PARTIAL ELEVATION AT ABUTMENT 1

NO SCALE

LEGEND:

- TILE-SEE SHT A12 FOR PATTERN LAYOUT
- TEXTURED CONCRETE SURFACE = SPLIT SLATE TEXTURE. SEE DETAIL 1/A5
- SMOOTH CONCRETE SURFACE

	BY	CHECKED
DESIGN	H. CHAVEZ	S. HEATH
DETAILS	S. HEATH	H. CHAVEZ
QUANTITIES	S. YIP	R. NOVIK

STATE OF CALIFORNIA DEPARTMENT OF TRANSPORTATION

DIVISION OF ENGINEERING SERVICES BRIDGE ARCHITECTURE AND AESTHETICS

BRIDGE NO. 53-3062 POST MILE 5.12

PIONEER Blvd UC (REPLACE)

ELEVATION AND ARCHITECTURAL MOTIF ABUTMENT 1

SHEET A2

STRUCTURES DESIGN DETAIL SHEET (ENGLISH) (REV. 09-01-10)

ORIGINAL SCALE IN INCHES FOR REDUCED PLANS 0 1 2 3

UNIT: 3604
PROJECT NUMBER & PHASE: 0700001834 1 CONTRACT NO.: 07-215941

DISREGARD PRINTS BEARING EARLIER REVISION DATES 3-9-12

SHEET 38 OF 72

FILE => 53-3062-w-c-archdeta2.dgn

USERNAME => s119571 DATE PLOTTED => 14-APR-2012 TIME PLOTTED => 11:25

DIST	COUNTY	ROUTE	POST MILES TOTAL PROJECT	SHEET No	TOTAL SHEETS
07	LA	5	4.0/5.9	1119	1597

LICENSED ARCHITECT — DATE 12-12-11

PLANS APPROVAL DATE 4-9-12

LICENSED ARCHITECT H. Javier Chavez 14073 03-31-13 Renewal Date STATE OF CALIFORNIA

The State of California or its officers or agents shall not be responsible for the accuracy or completeness of electronic copies of this plan sheet.

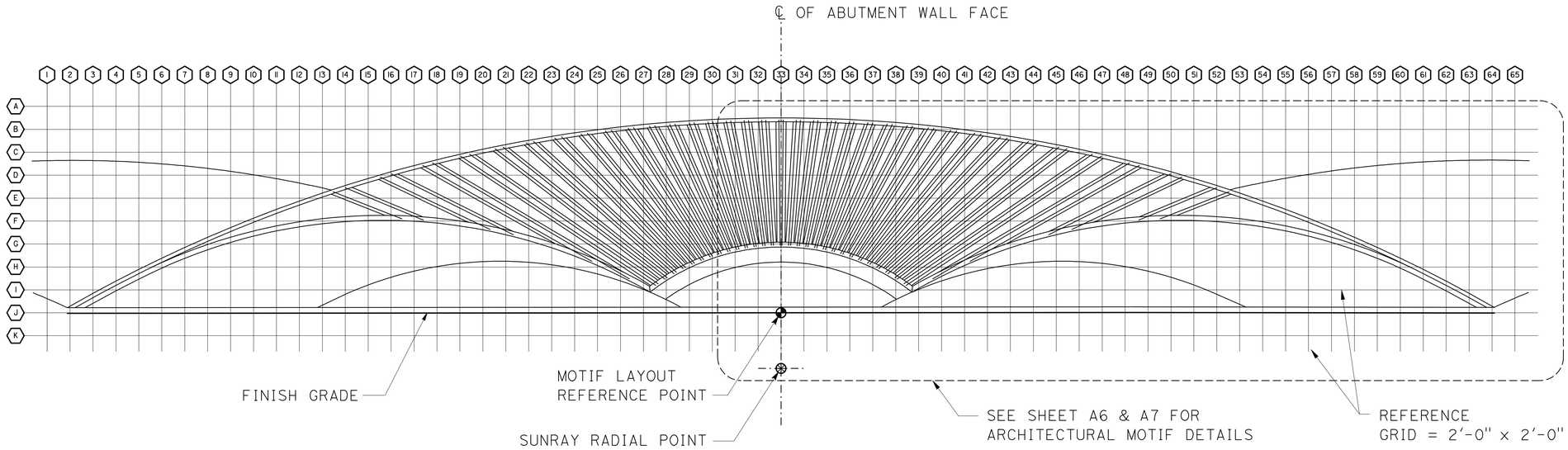

PARTIAL ARCHITECTURAL MOTIF AT ABUTMENT 3

NO SCALE

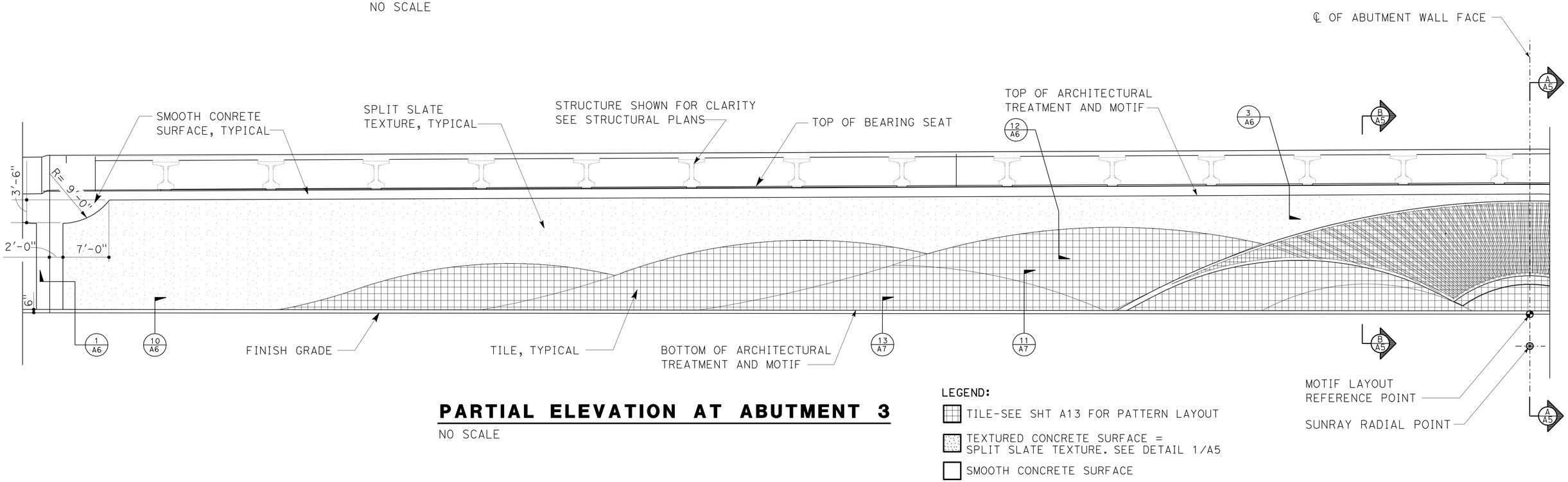

PARTIAL ELEVATION AT ABUTMENT 3

NO SCALE

LEGEND:

- TILE-SEE SHT A13 FOR PATTERN LAYOUT
- TEXTURED CONCRETE SURFACE = SPLIT SLATE TEXTURE. SEE DETAIL 1/A5
- SMOOTH CONCRETE SURFACE

	BY	CHECKED
DESIGN	H. CHAVEZ	S. HEATH
DETAILS	S. HEATH	H. CHAVEZ
QUANTITIES	S. YIP	R. NOVIK

STATE OF CALIFORNIA DEPARTMENT OF TRANSPORTATION

DIVISION OF ENGINEERING SERVICES BRIDGE ARCHITECTURE AND AESTHETICS

BRIDGE NO. 53-3062 POST MILE 5.12

PIONEER Blvd UC (REPLACE)

ELEVATION AND ARCHITECTURAL MOTIF ABUTMENT 3

SHEET A3

STRUCTURES DESIGN DETAIL SHEET (ENGLISH) (REV. 09-01-10)

ORIGINAL SCALE IN INCHES FOR REDUCED PLANS 0 1 2 3

UNIT: 3604
PROJECT NUMBER & PHASE: 0700001834 1 CONTRACT NO.: 07-215941

DISREGARD PRINTS BEARING EARLIER REVISION DATES 3-9-12

REVISION DATES

SHEET 39 OF 72

FILE => 53-3062-w-c-archdeta3.dgn

USERNAME => s119571 DATE PLOTTED => 14-APR-2012 TIME PLOTTED => 11:25

DIST	COUNTY	ROUTE	POST MILES TOTAL PROJECT	SHEET No	TOTAL SHEETS
07	LA	5	4.0/5.9	1120	1597

LICENSED ARCHITECT — DATE 12-12-11

PLANS APPROVAL DATE 4-9-12

LICENSED ARCHITECT H. Javier Chavez 14073 03-31-13 Renewal Date STATE OF CALIFORNIA

The State of California or its officers or agents shall not be responsible for the accuracy or completeness of electronic copies of this plan sheet.

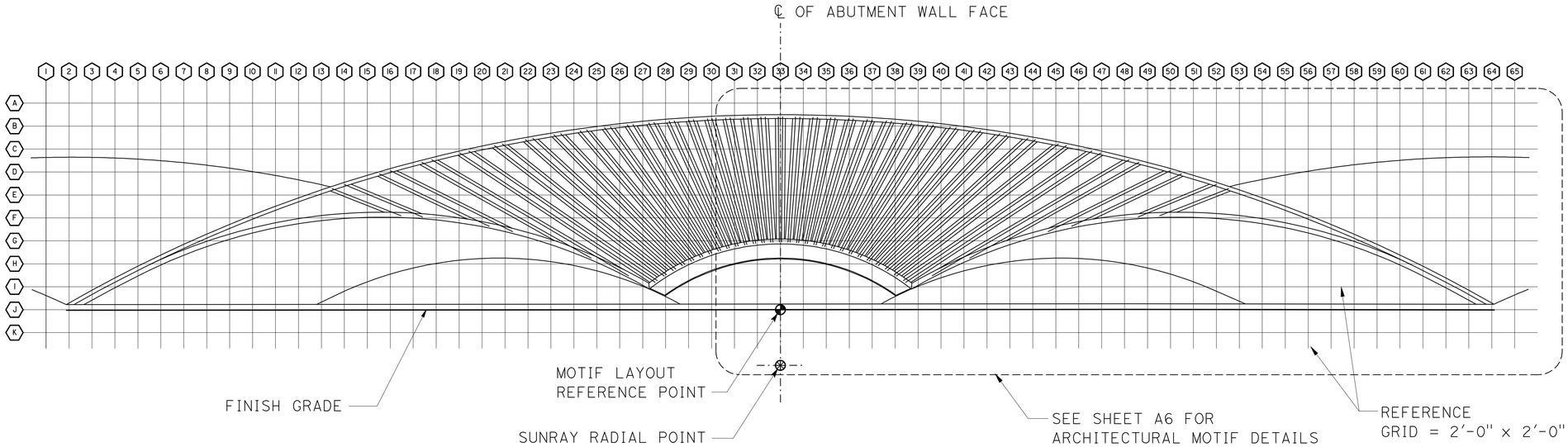

PARTIAL ARCHITECTURAL MOTIF AT ABUTMENT 3

NO SCALE

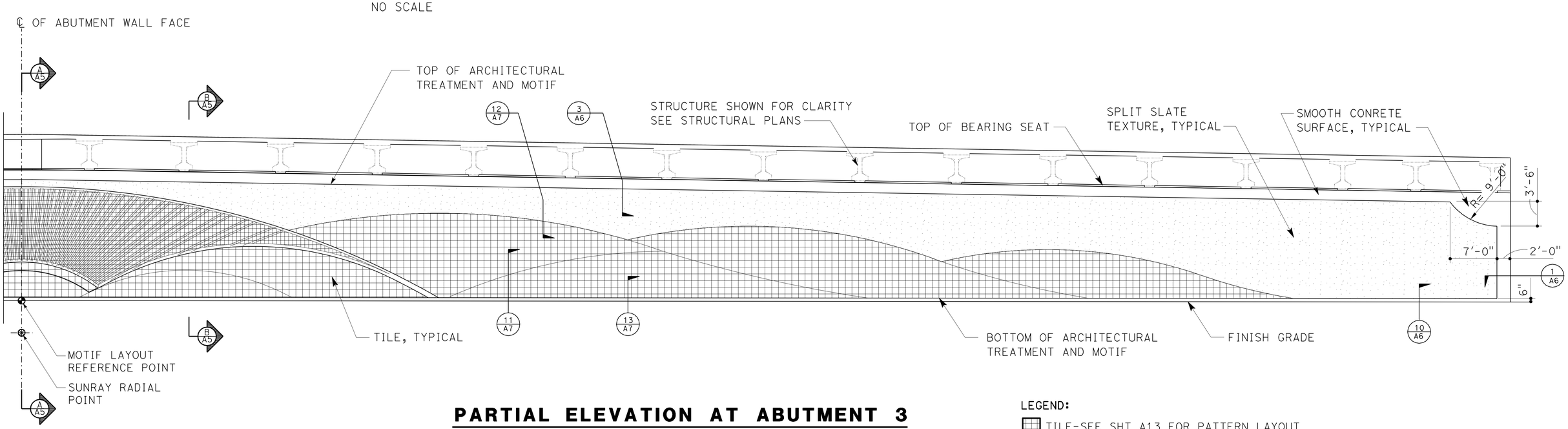

PARTIAL ELEVATION AT ABUTMENT 3

NO SCALE

LEGEND:

- TILE-SEE SHT A13 FOR PATTERN LAYOUT
- TEXTURED CONCRETE SURFACE = SPLIT SLATE TEXTURE. SEE DETAIL 1/A5
- SMOOTH CONCRETE SURFACE

	BY	CHECKED
DESIGN	H. CHAVEZ	S. HEATH
DETAILS	S. HEATH	H. CHAVEZ
QUANTITIES	S. YIP	R. NOVIK

STATE OF CALIFORNIA DEPARTMENT OF TRANSPORTATION

DIVISION OF ENGINEERING SERVICES BRIDGE ARCHITECTURE AND AESTHETICS

BRIDGE NO. 53-3062 POST MILE 5.12

PIONEER Blvd UC (REPLACE)

ELEVATION AND ARCHITECTURAL MOTIF ABUTMENT 3

SHEET A4

STRUCTURES DESIGN DETAIL SHEET (ENGLISH) (REV. 09-01-10)

ORIGINAL SCALE IN INCHES FOR REDUCED PLANS 0 1 2 3

UNIT: 3604
PROJECT NUMBER & PHASE: 0700001834 1 CONTRACT NO.: 07-215941

DISREGARD PRINTS BEARING EARLIER REVISION DATES 3-9-12

REVISION DATES

SHEET 40 OF 72

FILE => 53-3062-w-c-archdeta4.dgn

USERNAME => s119571 DATE PLOTTED => 14-APR-2012 TIME PLOTTED => 11:25

NOTE: ALL REFERENCE TO SURFACE DIMENSIONS OF WALL AND TILE DETAILS ARE FROM DATUM 0 = FACE OF ABUTMENT WALL, TYPICAL

DIST	COUNTY	ROUTE	POST MILES TOTAL PROJECT	SHEET No	TOTAL SHEETS
07	LA	5	4.0/5.9	1121	1597

LICENSED ARCHITECT — DATE 12-12-11

PLANS APPROVAL DATE 4-9-12

LICENSED ARCHITECT H. Javier Chavez 14073 03-31-13 Renewal Date STATE OF CALIFORNIA

The State of California or its officers or agents shall not be responsible for the accuracy or completeness of electronic copies of this plan sheet.

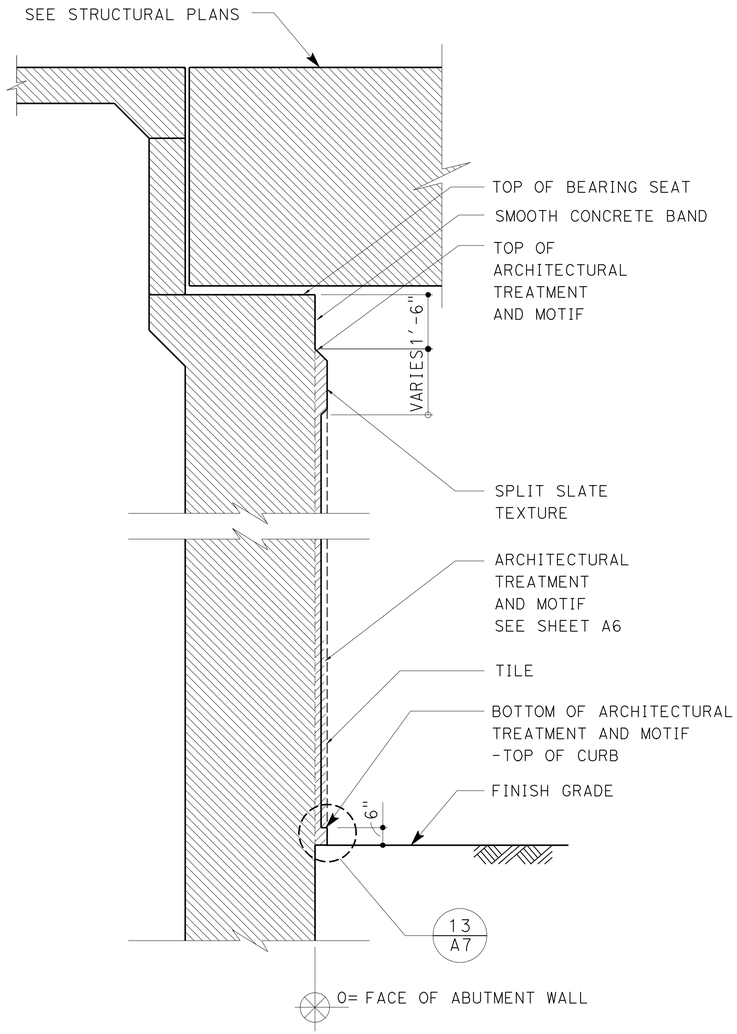

SECTION A-A

NO SCALE

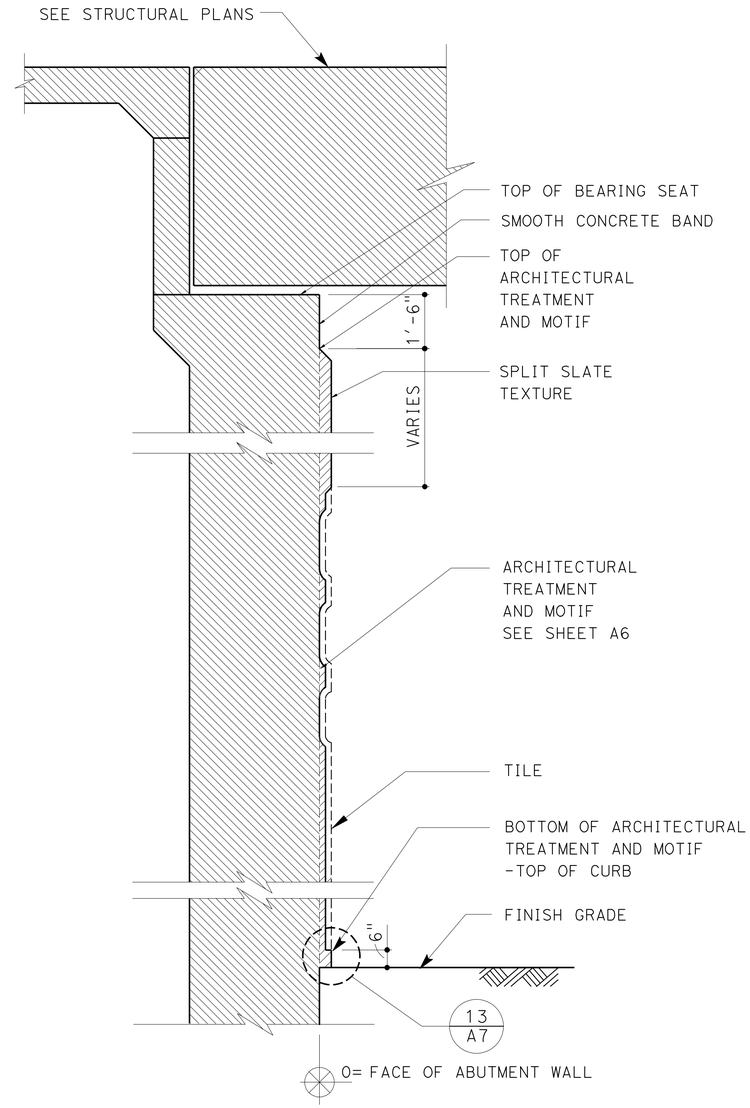

SECTION B-B

NO SCALE

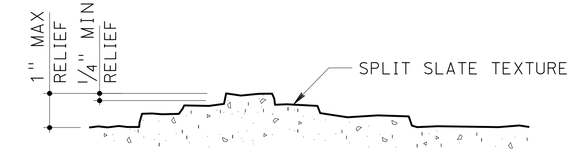

C DETAIL
NO SCALE

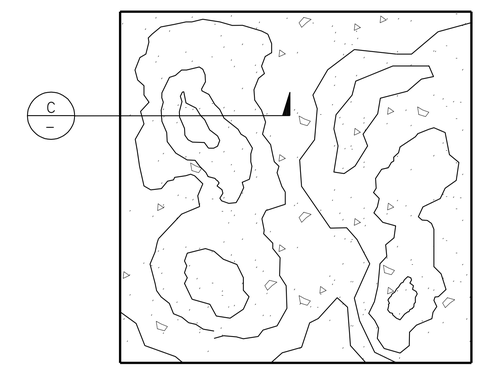

1 **SPLIT SLATE TEXTURE**

NO SCALE

DESIGN	BY H. CHAVEZ	CHECKED S. HEATH	
DETAILS	BY S. HEATH	CHECKED H. CHAVEZ	
QUANTITIES	BY S. YIP	CHECKED R. NOVIK	

STATE OF CALIFORNIA DEPARTMENT OF TRANSPORTATION

DIVISION OF ENGINEERING SERVICES BRIDGE ARCHITECTURE AND AESTHETICS

BRIDGE NO. 53-3062 POST MILE 5.12

PIONEER Blvd UC (REPLACE)
SECTIONS AT ABUTMENTS 1 AND 3

SHEET A5

STRUCTURES DESIGN DETAIL SHEET (ENGLISH) (REV. 09-01-10)

ORIGINAL SCALE IN INCHES FOR REDUCED PLANS 0 1 2 3

UNIT: 3604
PROJECT NUMBER & PHASE: 0700001834 1 CONTRACT NO.: 07-215941

DISREGARD PRINTS BEARING EARLIER REVISION DATES

REVISION DATES 3-9-12

SHEET 41 OF 72

FILE => 53-3062-w-c-archdeta5.dgn

USERNAME => s113571 DATE PLOTTED => 14-APR-2012 TIME PLOTTED => 11:25

DIST	COUNTY	ROUTE	POST MILES TOTAL PROJECT	SHEET No	TOTAL SHEETS
07	LA	5	4.0/5.9	1122	1597

LICENSED ARCHITECT — DATE 12-12-11

4-9-12
PLANS APPROVAL DATE

LICENSED ARCHITECT H. Javier Chavez 14073 03-31-13 Renewal Date STATE OF CALIFORNIA

The State of California or its officers or agents shall not be responsible for the accuracy or completeness of electronic copies of this plan sheet.

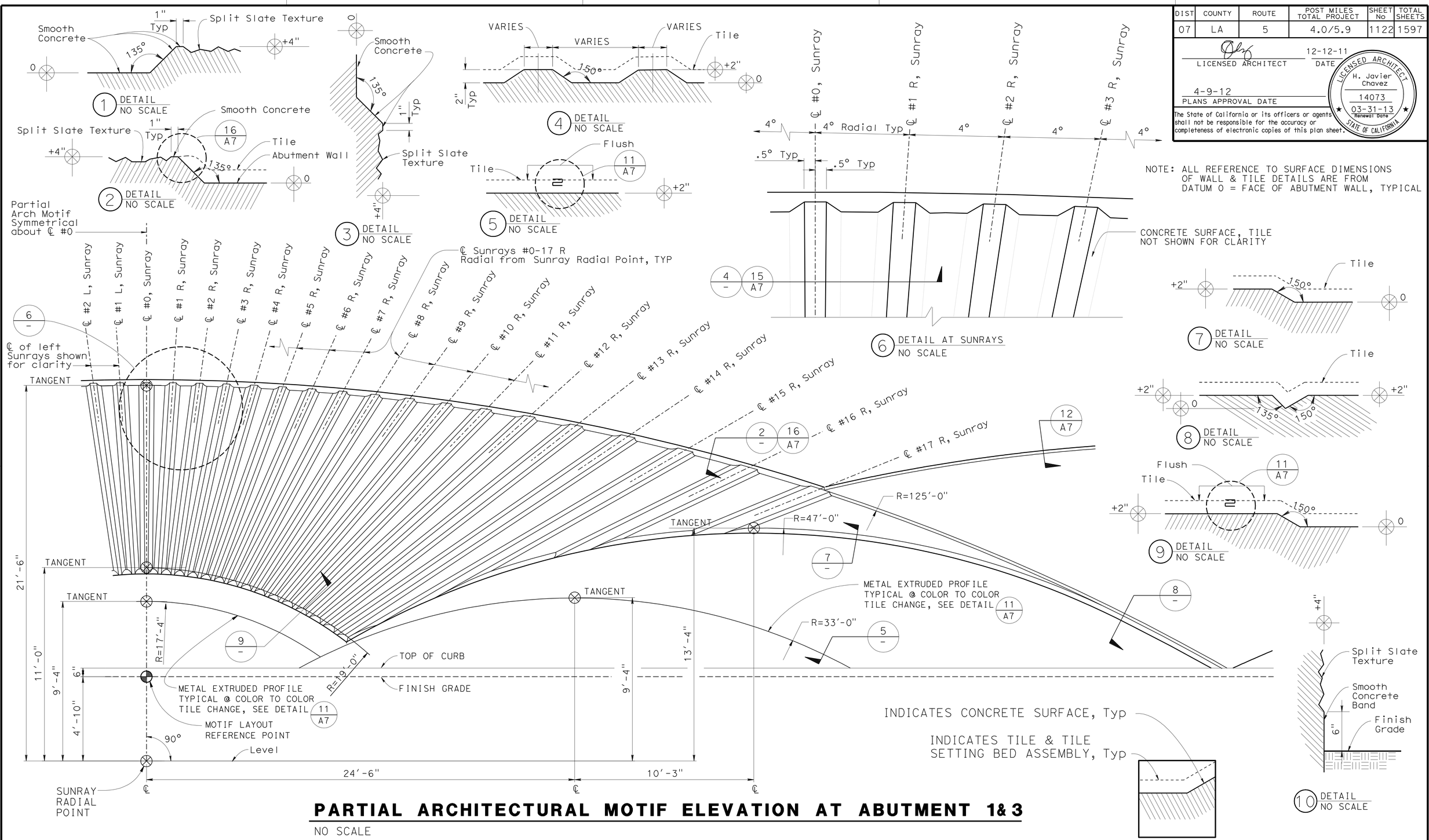

PARTIAL ARCHITECTURAL MOTIF ELEVATION AT ABUTMENT 1&3

NO SCALE

DESIGN	BY H. CHAVEZ	CHECKED S. HEATH	
DETAILS	BY S. HEATH	CHECKED H. CHAVEZ	
QUANTITIES	BY S. YIP	CHECKED R. NOVIK	

STATE OF CALIFORNIA DEPARTMENT OF TRANSPORTATION

DIVISION OF ENGINEERING SERVICES BRIDGE ARCHITECTURE AND AESTHETICS

BRIDGE NO. 53-3062 POST MILE 5.12

PIONEER Blvd UC (REPLACE)

ARCHITECTURAL MOTIF DETAILS AT ABUTMENTS 1&3

SHEET A6

STRUCTURES DESIGN DETAIL SHEET (ENGLISH) (REV. 09-01-10)

ORIGINAL SCALE IN INCHES FOR REDUCED PLANS 0 1 2 3

UNIT: 3604
PROJECT NUMBER & PHASE: 0700001834 1
CONTRACT NO.: 07-215941

DISREGARD PRINTS BEARING EARLIER REVISION DATES 3-9-12

REVISION DATES

SHEET 42 OF 72

FILE => 53-3062-w-c-archdeta6.dgn

USERNAME => s119571 DATE PLOTTED => 14-APR-2012 TIME PLOTTED => 11:25

DIST	COUNTY	ROUTE	POST MILES TOTAL PROJECT	SHEET No	TOTAL SHEETS
07	LA	5	4.0/5.9	1123	1597

LICENSED ARCHITECT — DATE 12-12-11

4-9-12
PLANS APPROVAL DATE

LICENSED ARCHITECT H. Javier Chavez 14073 03-31-13 Renewal Date STATE OF CALIFORNIA

The State of California or its officers or agents shall not be responsible for the accuracy or completeness of electronic copies of this plan sheet.

NOTE: ALL REFERENCE TO SURFACE DIMENSIONS OF WALL DETAILS ARE FROM DATUM 0 = FACE OF ABUTMENT TYPICAL

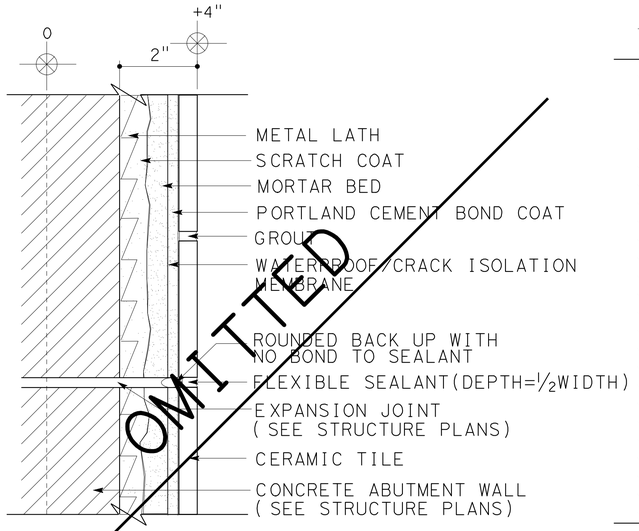

10 EXPANSION JOINT DETAIL
NO SCALE

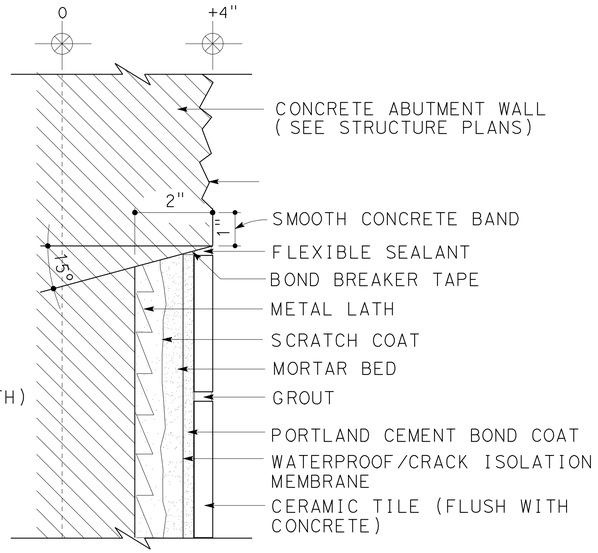

12 TEXTURE/TILE DETAIL
NO SCALE

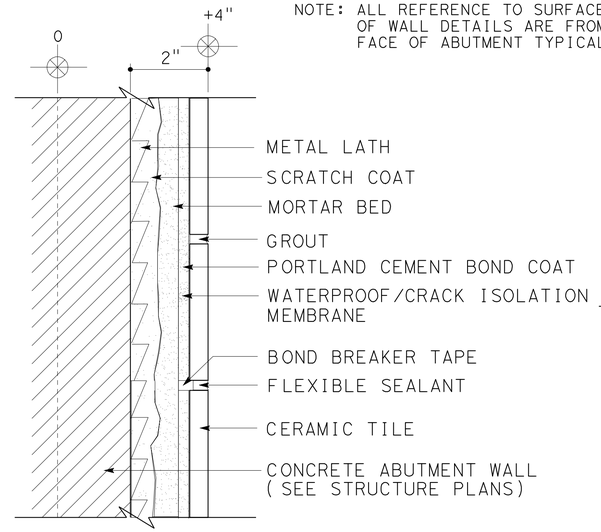

14 MOVEMENT JOINT DETAIL
NO SCALE

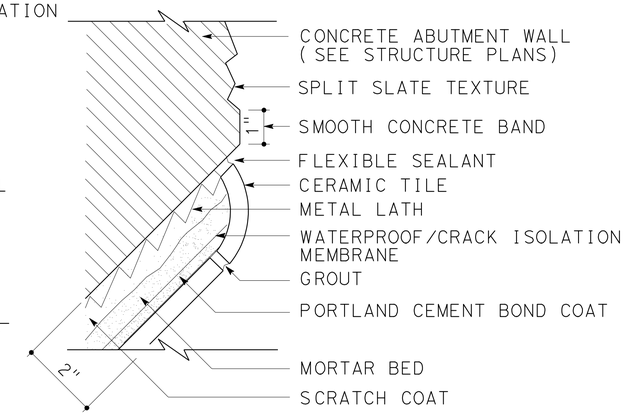

16 TEXTURE/TILE DETAIL
NO SCALE

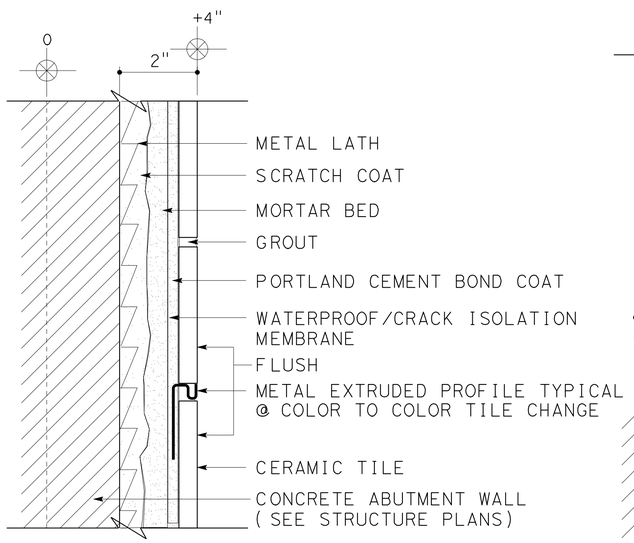

11 COLOR TO COLOR TILE TRIM DETAIL
NO SCALE

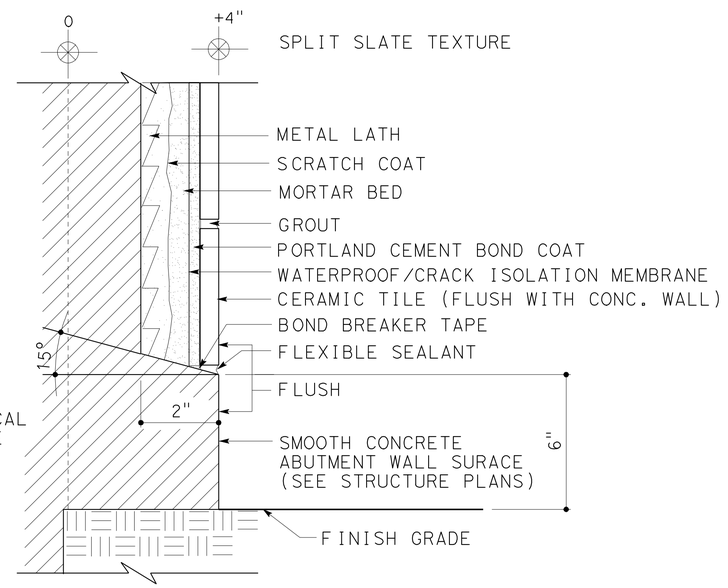

13 SMOOTH CONCRETE/TILE DETAIL
NO SCALE

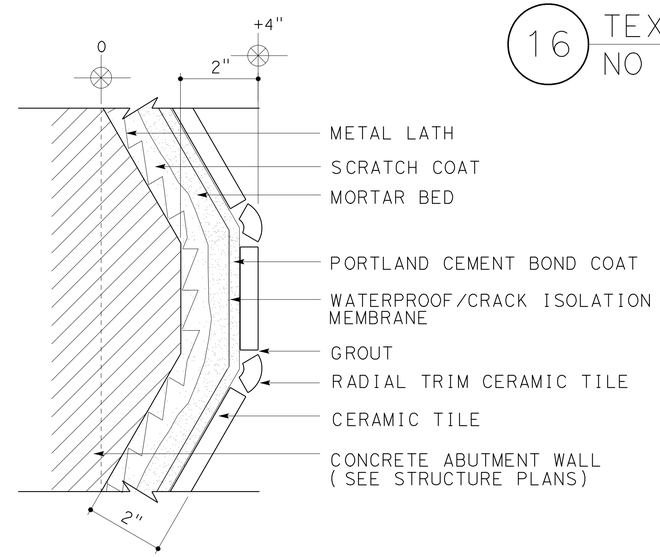

15 TILE DETAIL
NO SCALE

DESIGN	BY H. CHAVEZ	CHECKED S. HEATH	
DETAILS	BY S. HEATH	CHECKED H. CHAVEZ	
QUANTITIES	BY S. YIP	CHECKED R. NOVIK	

STATE OF CALIFORNIA
DEPARTMENT OF TRANSPORTATION

DIVISION OF ENGINEERING SERVICES
BRIDGE ARCHITECTURE AND AESTHETICS

BRIDGE NO. 53-3062
POST MILE 5.12

PIONEER Blvd UC (REPLACE)
ARCHITECTURAL TILE MOTIF DETAILS

SHEET A7

STRUCTURES DESIGN DETAIL SHEET (ENGLISH) (REV. 09-01-10)

ORIGINAL SCALE IN INCHES FOR REDUCED PLANS 0 1 2 3

UNIT: 3604
PROJECT NUMBER & PHASE: 0700001834 1
CONTRACT NO.: 07-215941

DISREGARD PRINTS BEARING EARLIER REVISION DATES 3-9-12

REVISION DATES

SHEET 43 OF 72

FILE => 53-3062-w-c-archdeta7.dgn

USERNAME => s119571 DATE PLOTTED => 14-APR-2012 TIME PLOTTED => 11:25

DIST	COUNTY	ROUTE	POST MILES TOTAL PROJECT	SHEET No	TOTAL SHEETS
07	LA	5	4.0/5.9	1124	1597

LICENSED ARCHITECT — DATE 12-12-11

4-9-12
PLANS APPROVAL DATE

LICENSED ARCHITECT H. Javier Chavez 14073 03-31-13 Renewal Date STATE OF CALIFORNIA

The State of California or its officers or agents shall not be responsible for the accuracy or completeness of electronic copies of this plan sheet.

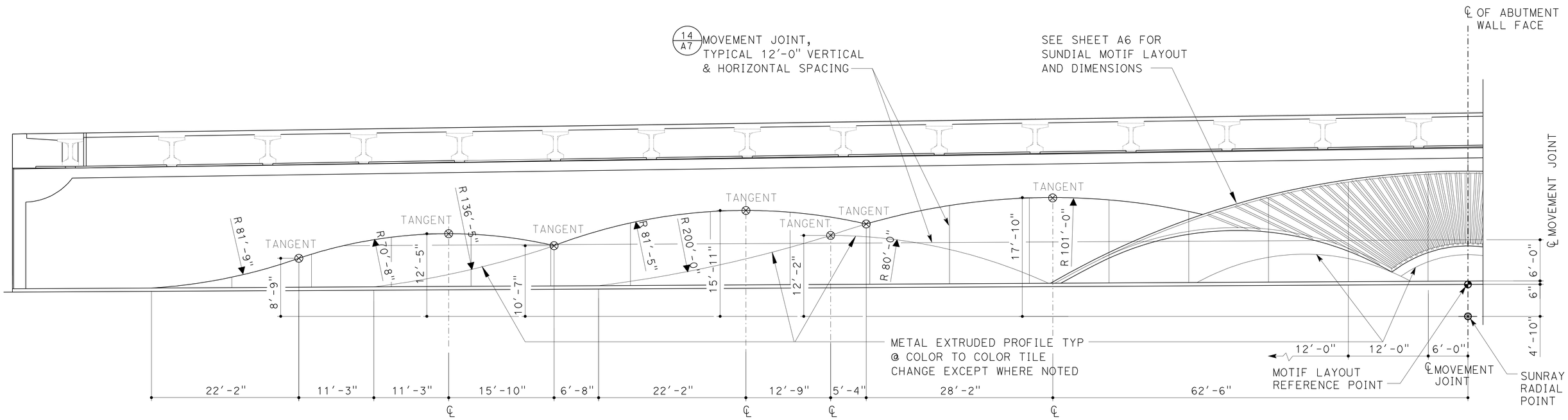

PARTIAL ELEVATION AT ABUTMENT 1

NO SCALE

	BY	CHECKED
DESIGN	H. CHAVEZ	S. HEATH
DETAILS	S. HEATH	H. CHAVEZ
QUANTITIES	S. YIP	R. NOVIK

STATE OF CALIFORNIA
DEPARTMENT OF TRANSPORTATION

DIVISION OF ENGINEERING SERVICES
BRIDGE ARCHITECTURE AND AESTHETICS

BRIDGE NO. 53-3062
POST MILE 5.12

PIONEER Blvd UC (REPLACE)

ELEVATION AND ARCHITECTURAL MOTIF ABUTMENT 1

SHEET A8

STRUCTURES DESIGN DETAIL SHEET (ENGLISH) (REV. 09-01-10)

ORIGINAL SCALE IN INCHES FOR REDUCED PLANS 0 1 2 3

UNIT: 3604
PROJECT NUMBER & PHASE: 0700001834 1
CONTRACT NO.: 07-215941

DISREGARD PRINTS BEARING EARLIER REVISION DATES 3-9-12

REVISION DATES

SHEET 44 OF 72

FILE => 53-3062-w-c-archdeta8.dgn

USERNAME => s119571 DATE PLOTTED => 14-APR-2012 TIME PLOTTED => 11:26

DIST	COUNTY	ROUTE	POST MILES TOTAL PROJECT	SHEET No	TOTAL SHEETS
07	LA	5	4.0/5.9	1125	1597

LICENSED ARCHITECT — DATE 12-12-11

4-9-12
PLANS APPROVAL DATE

LICENSED ARCHITECT H. Javier Chavez 14073 03-31-13 Renewal Date STATE OF CALIFORNIA

The State of California or its officers or agents shall not be responsible for the accuracy or completeness of electronic copies of this plan sheet.

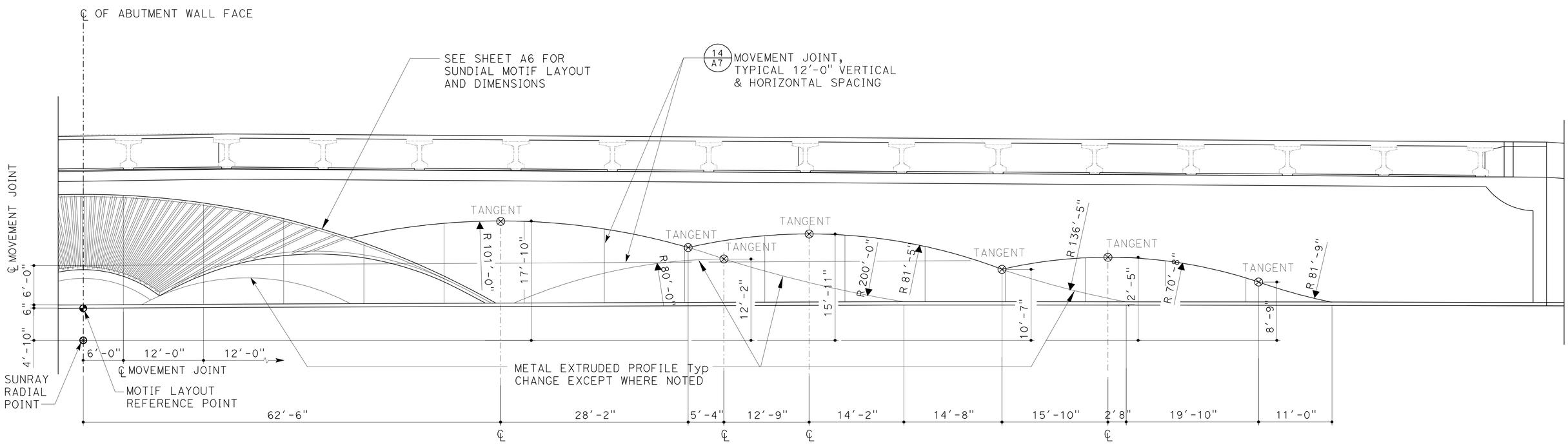

PARTIAL ELEVATION AT ABUTMENT 1

NO SCALE

DESIGN	BY H. CHAVEZ	CHECKED S. HEATH	
DETAILS	BY S. HEATH	CHECKED H. CHAVEZ	
QUANTITIES	BY S. YIP	CHECKED R. NOVIK	

STATE OF CALIFORNIA
DEPARTMENT OF TRANSPORTATION

DIVISION OF ENGINEERING SERVICES
BRIDGE ARCHITECTURE AND AESTHETICS

BRIDGE NO. 53-3062
POST MILE 5.12

PIONEER Blvd UC (REPLACE)

ELEVATION AND ARCHITECTURAL MOTIF ABUTMENT 1

SHEET A9

STRUCTURES DESIGN DETAIL SHEET (ENGLISH) (REV. 09-01-10)

ORIGINAL SCALE IN INCHES FOR REDUCED PLANS 0 1 2 3

UNIT: 3604
PROJECT NUMBER & PHASE: 0700001834 1
CONTRACT NO.: 07-215941

DISREGARD PRINTS BEARING EARLIER REVISION DATES

REVISION DATES: 3-9-12

SHEET 45 OF 72

FILE => 53-3062-w-c-archdeta9.dgn

USERNAME => s119571 DATE PLOTTED => 14-APR-2012 TIME PLOTTED => 11:26

DIST	COUNTY	ROUTE	POST MILES TOTAL PROJECT	SHEET No	TOTAL SHEETS
07	LA	5	4.0/5.9	1126	1597

LICENSED ARCHITECT — DATE 12-12-11

PLANS APPROVAL DATE 4-9-12

LICENSED ARCHITECT H. Javier Chavez 14073 03-31-13 Renewal Date STATE OF CALIFORNIA

The State of California or its officers or agents shall not be responsible for the accuracy or completeness of electronic copies of this plan sheet.

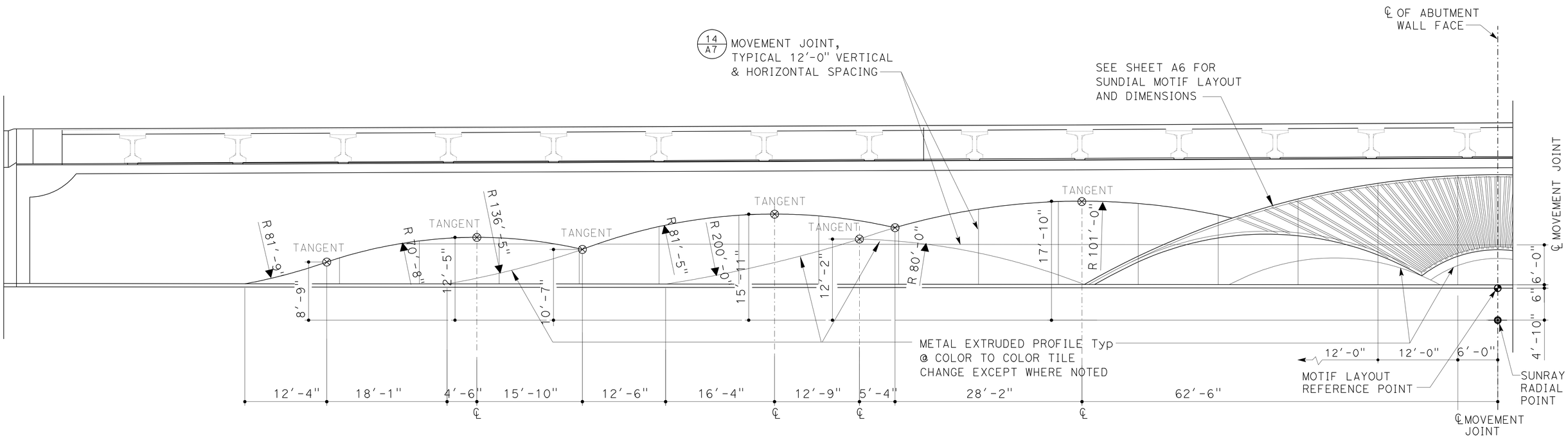

PARTIAL ELEVATION AT ABUTMENT 3

NO SCALE

DESIGN	BY H. CHAVEZ	CHECKED S. HEATH	
DETAILS	BY S. HEATH	CHECKED H. CHAVEZ	
QUANTITIES	BY S. YIP	CHECKED R. NOVIK	

STATE OF CALIFORNIA DEPARTMENT OF TRANSPORTATION

DIVISION OF ENGINEERING SERVICES BRIDGE ARCHITECTURE AND AESTHETICS

BRIDGE NO. 53-3062 POST MILE 5.12

PIONEER Blvd UC (REPLACE)

ELEVATION AND ARCHITECTURAL MOTIF ABUTMENT 3

SHEET A10

STRUCTURES DESIGN DETAIL SHEET (ENGLISH) (REV. 09-01-10)

ORIGINAL SCALE IN INCHES FOR REDUCED PLANS 0 1 2 3

UNIT: 3604
PROJECT NUMBER & PHASE: 0700001834 1 CONTRACT NO.: 07-215941

DISREGARD PRINTS BEARING EARLIER REVISION DATES

REVISION DATES 3-9-12

SHEET 46 OF 72

FILE => 53-3062-w-d-archdeta10.dgn

USERNAME => s119571 DATE PLOTTED => 14-APR-2012 TIME PLOTTED => 11:26

DIST	COUNTY	ROUTE	POST MILES TOTAL PROJECT	SHEET No	TOTAL SHEETS
07	LA	5	4.0/5.9	1127	1597

LICENSED ARCHITECT — DATE 12-12-11

PLANS APPROVAL DATE 4-9-12

LICENSED ARCHITECT H. Javier Chavez 14073 03-31-13 Renewal Date STATE OF CALIFORNIA

The State of California or its officers or agents shall not be responsible for the accuracy or completeness of electronic copies of this plan sheet.

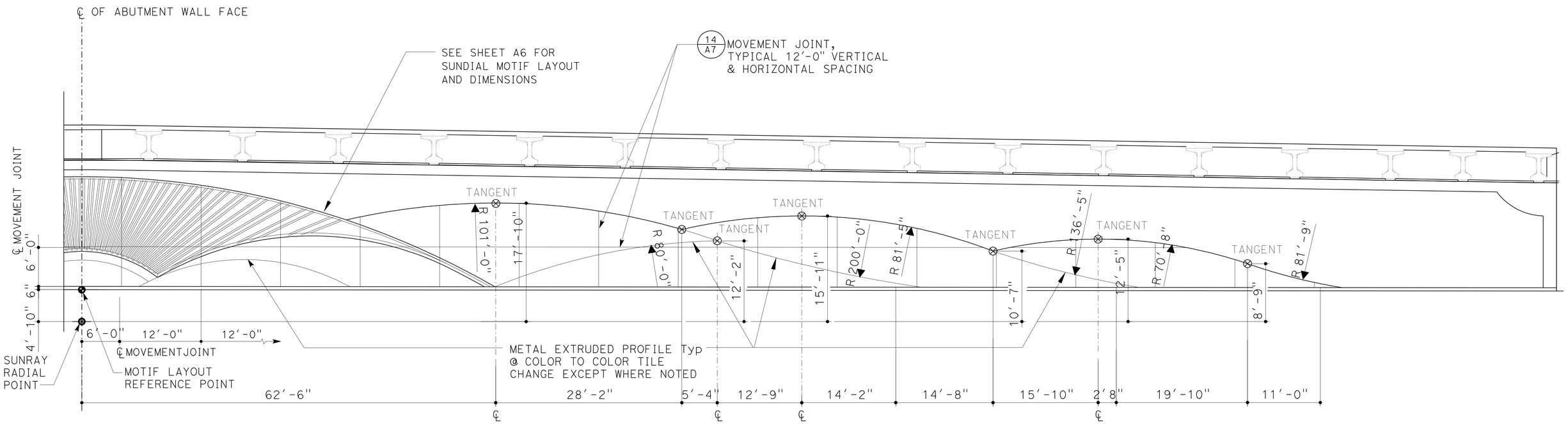

PARTIAL ELEVATION AT ABUTMENT 3

NO SCALE

DESIGN	BY H. CHAVEZ	CHECKED S. HEATH	
DETAILS	BY S. HEATH	CHECKED H. CHAVEZ	
QUANTITIES	BY S. YIP	CHECKED R. NOVIK	

STATE OF CALIFORNIA DEPARTMENT OF TRANSPORTATION

DIVISION OF ENGINEERING SERVICES BRIDGE ARCHITECTURE AND AESTHETICS

BRIDGE NO. 53-3062 POST MILE 5.12

PIONEER Blvd UC (REPLACE)

ELEVATION AND ARCHITECTURAL MOTIF ABUTMENT 3

SHEET A11

STRUCTURES DESIGN DETAIL SHEET (ENGLISH) (REV. 09-01-10)

ORIGINAL SCALE IN INCHES FOR REDUCED PLANS 0 1 2 3

UNIT: 3604
PROJECT NUMBER & PHASE: 0700001834 1 CONTRACT NO.: 07-215941

DISREGARD PRINTS BEARING EARLIER REVISION DATES → 3-9-12

SHEET 47 OF 72

FILE => 53-3062-w-d-archdeta11.dgn

USERNAME => s119571 DATE PLOTTED => 14-APR-2012 TIME PLOTTED => 11:26

DIST	COUNTY	ROUTE	POST MILES TOTAL PROJECT	SHEET No	TOTAL SHEETS
07	LA	5	4.0/5.9	1128	1597

LICENSED ARCHITECT — DATE 12-12-11

4-9-12
PLANS APPROVAL DATE

LICENSED ARCHITECT H. Javier Chavez 14073 03-31-13 Renewal Date STATE OF CALIFORNIA

The State of California or its officers or agents shall not be responsible for the accuracy or completeness of electronic copies of this plan sheet.

COLOR SCHEDULE

ITEM	FINISH	MANUFACTURER	COLOR	SIZE	NOTES
1	MFR	MARAZZI SISTEM A TILE	BLU	12"x12"	MATTE FINISH
2	MFR	MARAZZI SISTEM A TILE	ROSSO	12"x12"	MATTE FINISH
3	MFR	MARAZZI SISTEM A TILE	ARANCIO	12"x12"	MATTE FINISH
4	MFR	MARAZZI SISTEM A TILE	VERDE	12"x12"	MATTE FINISH
5	MFR	MARAZZI SISTEM A TILE	BLU	12"x12"	MATTE FINISH
6	MFR	MARAZZI SISTEM A TILE	ROSSO	12"x12"	MATTE FINISH
7	MFR	MARAZZI SISTEM A TILE	GIALLO	12"x12"	MATTE FINISH
8	MFR	MARAZZI SISTEM A TILE	ARANCIO	12"x12"	MATTE FINISH
9	MFR	AGROB BUCHTAL - CHROMA II TILE	5505-YELLOW 5	12"X24"	SILKY MATT FINISH
10	MFR	AGROB BUCHTAL - CHROMA II TILE	5505-YELLOW 5	30x1.6 cm	RADIAL CORNER #37111 - SEE DETAIL 16/A7
11	MFR	AGROB BUCHTAL - CHROMA II TILE	5533-BLUE 3	12"X24"	SILKY MATT FINISH
12	MFR	AGROB BUCHTAL - CHROMA II TILE	5533-BLUE 3	30x1.6 cm	RADIAL CORNER #37111 - SEE DETAIL 15/A7
A	MFR	SCHLUTER - METAL EXTRUDED PROFILE	EB 80D		SATIN ANODIZED ALUMINUM

COLOR SCHEDULE NOTES

1. THE CONTRACTOR SHALL VERIFY ALL CONTROLLING DIMENSIONS AND FIELD CONDITIONS PRIOR TO ORDERING OR FABRICATING ANY MATERIALS OR ASSEMBLIES FOR CONSTRUCTION
2. MANUFACTURER'S PRODUCTS LISTED HAVE BEEN INCLUDED AS EXAMPLES OF COLOR AND FINISH ONLY. MATCHING PRODUCTS BY OTHER MANUFACTURER'S MAY BE SUBMITTED FOR APPROVAL.
3. SEE THE SPECIAL PROVISIONS FOR THE APPROPRIATE COATING SYSTEM FOR EACH MATERIAL TO BE COATED.
4. ALL MATERIALS SHALL RECEIVE A JOB FINISH, UNLESS NOTED "NJF" = NO JOB FINISH.
5. ITEMS 1-8 ARE COLOR BODY PORCELAIN TILES (THROUGH - BODY COLOR TILE OPTIONAL)
6. THE COLOR AND FINISH OF ANY MATERIAL NOT LISTED WILL BE SELECTED BY THE ENGINEER.
7. TILE JOINTS 1/16" IN TILE AREAS 1 THROUGH 8
8. TILE JOINTS 1/8" IN TILE AREAS 9 THROUGH 12

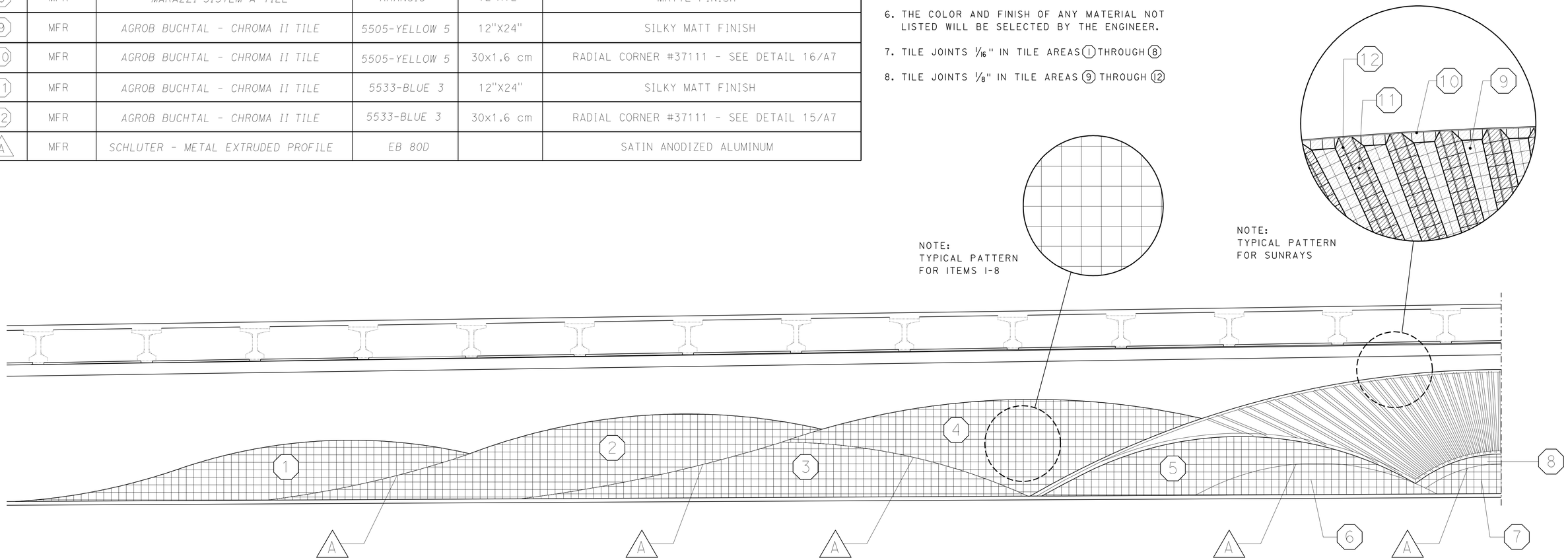

PARTIAL ELEVATION AT ABUTMENT 1

NO SCALE

NOTE:
COLORS AND FINISHES TYPICAL FOR MOTIF
SYMETRICAL ABOUT ℄ OF ABUTMENT WALL FACE

	BY	CHECKED
DESIGN	H. CHAVEZ	S. HEATH
DETAILS	S. HEATH	H. CHAVEZ
QUANTITIES	S. YIP	R. NOVIK

STATE OF CALIFORNIA
DEPARTMENT OF TRANSPORTATION

DIVISION OF ENGINEERING SERVICES
BRIDGE ARCHITECTURE AND AESTHETICS

BRIDGE NO. 53-3062
POST MILE 5.12

PIONEER Blvd UC (REPLACE)

ARCHITECTURAL TILE FINISH SCHEDULE @ ABUTMENT 1

SHEET A12

STRUCTURES DESIGN DETAIL SHEET (ENGLISH) (REV. 09-01-10)

ORIGINAL SCALE IN INCHES FOR REDUCED PLANS 0 1 2 3

UNIT: 3604
PROJECT NUMBER & PHASE: 0700001834 1
CONTRACT NO.: 07-215941

DISREGARD PRINTS BEARING EARLIER REVISION DATES → 3-9-12

REVISION DATES

SHEET 48 OF 72

FILE => 53-3062-w-d-archdeta12.dgn

USERNAME => s119571 DATE PLOTTED => 14-APR-2012 TIME PLOTTED => 11:26

DIST	COUNTY	ROUTE	POST MILES TOTAL PROJECT	SHEET No	TOTAL SHEETS
07	LA	5	4.0/5.9	1129	1597

LICENSED ARCHITECT — DATE 12-12-11

4-9-12
PLANS APPROVAL DATE

LICENSED ARCHITECT H. Javier Chavez 14073 03-31-13 Renewal Date STATE OF CALIFORNIA

The State of California or its officers or agents shall not be responsible for the accuracy or completeness of electronic copies of this plan sheet.

COLOR SCHEDULE

ITEM	FINISH	MANUFACTURER	COLOR	SIZE	NOTES
1	MFR	MARAZZI SISTEM A TILE	BLU	12"x12"	MATTE FINISH
2	MFR	MARAZZI SISTEM A TILE	ROSSO	12"x12"	MATTE FINISH
3	MFR	MARAZZI SISTEM A TILE	ARANCIO	12"x12"	MATTE FINISH
4	MFR	MARAZZI SISTEM A TILE	VERDE	12"x12"	MATTE FINISH
5	MFR	MARAZZI SISTEM A TILE	BLU	12"x12"	MATTE FINISH
6	MFR	MARAZZI SISTEM A TILE	ROSSO	12"x12"	MATTE FINISH
7	MFR	MARAZZI SISTEM A TILE	GIALLO	12"x12"	MATTE FINISH
8	MFR	MARAZZI SISTEM A TILE	ARANCIO	12"x12"	MATTE FINISH
9	MFR	AGROB BUCHTAL - CHROMA II TILE	5505-YELLOW 5	12"X24"	SILKY MATT FINISH
10	MFR	AGROB BUCHTAL - CHROMA II TILE	5505-YELLOW 5	30x1.6 cm	RADIAL CORNER #37111 - SEE DETAIL 16/A7
11	MFR	AGROB BUCHTAL - CHROMA II TILE	5533-BLUE 3	12"X24"	SILKY MATT FINISH
12	MFR	AGROB BUCHTAL - CHROMA II TILE	5533-BLUE 3	30x1.6 cm	RADIAL CORNER #37111 - SEE DETAIL 15/A7
A	MFR	SCHLUTER - METAL EXTRUDED PROFILE	EB 80D		SATIN ANODIZED ALUMINUM

COLOR SCHEDULE NOTES

1. THE CONTRACTOR SHALL VERIFY ALL CONTROLLING DIMENSIONS AND FIELD CONDITIONS PRIOR TO ORDERING OR FABRICATING ANY MATERIALS OR ASSEMBLIES FOR CONSTRUCTION
2. MANUFACTURER'S PRODUCTS LISTED HAVE BEEN INCLUDED AS EXAMPLES OF COLOR AND FINISH ONLY. MATCHING PRODUCTS BY OTHER MANUFACTURER'S MAY BE SUBMITTED FOR APPROVAL.
3. SEE THE SPECIAL PROVISIONS FOR THE APPROPRIATE COATING SYSTEM FOR EACH MATERIAL TO BE COATED.
4. ALL MATERIALS SHALL RECEIVE A JOB FINISH, UNLESS NOTED "NJF" = NO JOB FINISH.
5. ITEMS 1-8 ARE COLOR BODY PORCELAIN TILES (THROUGH - BODY COLOR TILE OPTIONAL)
6. THE COLOR AND FINISH OF ANY MATERIAL NOT LISTED WILL BE SELECTED BY THE ENGINEER.
7. TILE JOINTS 1/16" IN TILE AREAS 1 THROUGH 8
8. TILE JOINTS 1/8" IN TILE AREAS 9 THROUGH 12

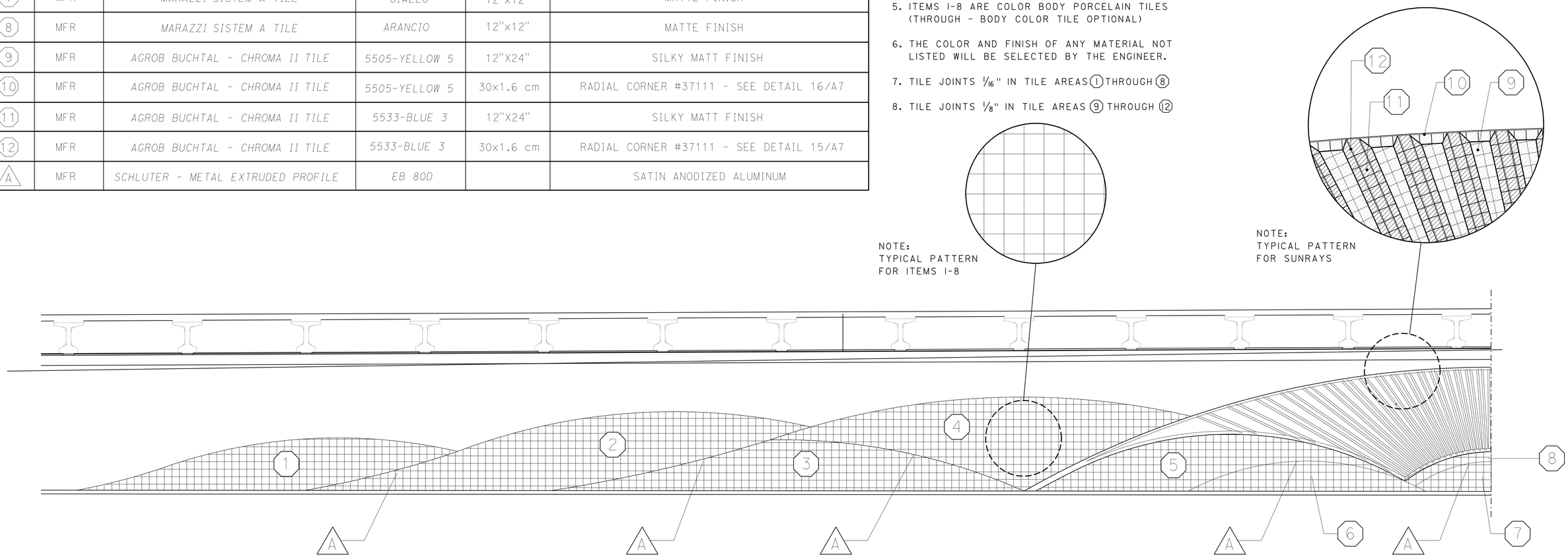

PARTIAL ELEVATION AT ABUTMENT 3

NO SCALE

NOTE:
COLORS AND FINISHES TYPICAL FOR MOTIF SYMETRICAL ABOUT ℄ OF ABUTMENT WALL FACE

	BY	CHECKED
DESIGN	H. CHAVEZ	S. HEATH
DETAILS	S. HEATH	H. CHAVEZ
QUANTITIES	S. YIP	R. NOVIK

STATE OF CALIFORNIA
DEPARTMENT OF TRANSPORTATION

DIVISION OF ENGINEERING SERVICES
BRIDGE ARCHITECTURE AND AESTHETICS

BRIDGE NO. 53-3062
POST MILE 5.12

PIONEER Blvd UC (REPLACE)

ARCHITECTURAL TILE FINISH SCHEDULE @ ABUTMENT 3

SHEET A13

STRUCTURES DESIGN DETAIL SHEET (ENGLISH) (REV. 09-01-10)

ORIGINAL SCALE IN INCHES FOR REDUCED PLANS 0 1 2 3

UNIT: 3604
PROJECT NUMBER & PHASE: 0700001834 1
CONTRACT NO.: 07-215941

DISREGARD PRINTS BEARING EARLIER REVISION DATES

REVISION DATES: 3-9-12

SHEET 49 OF 72

FILE => 53-3062-w-d-archdeta13.dgn

USERNAME => s119571 DATE PLOTTED => 14-APR-2012 TIME PLOTTED => 11:26

DIST	COUNTY	ROUTE	POST MILES TOTAL PROJECT	SHEET No.	TOTAL SHEETS
07	LA	5	4.0/5.9	1130	1597

Anthony T. Logus 12-12-11
REGISTERED CIVIL ENGINEER DATE

4-9-12
PLANS APPROVAL DATE

REGISTERED PROFESSIONAL ENGINEER Anthony T. Logus No. C68189 Exp. 09-30-13 CIVIL STATE OF CALIFORNIA

The State of California or its officers or agents shall not be responsible for the accuracy or completeness of electronic copies of this plan sheet.

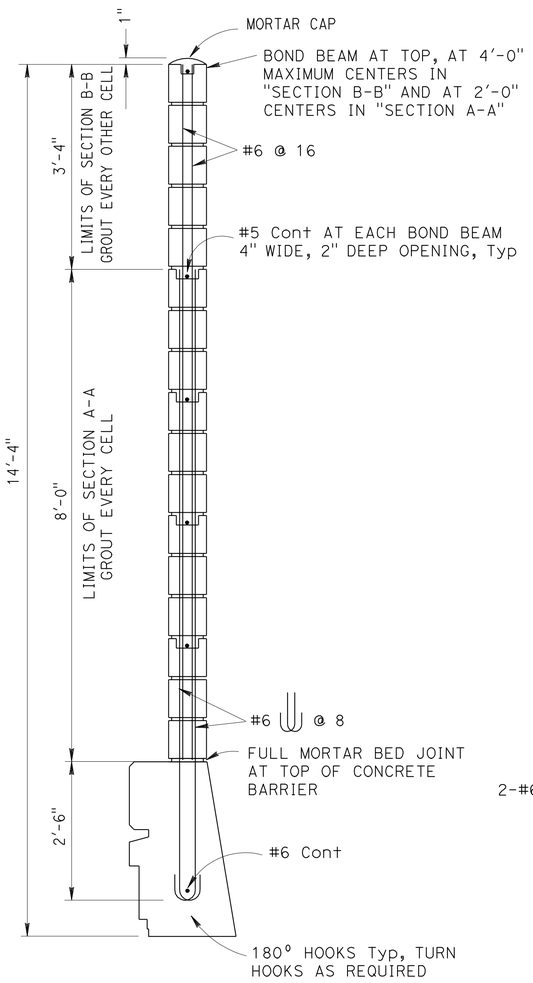

SOUND WALL SECTION

NO SCALE

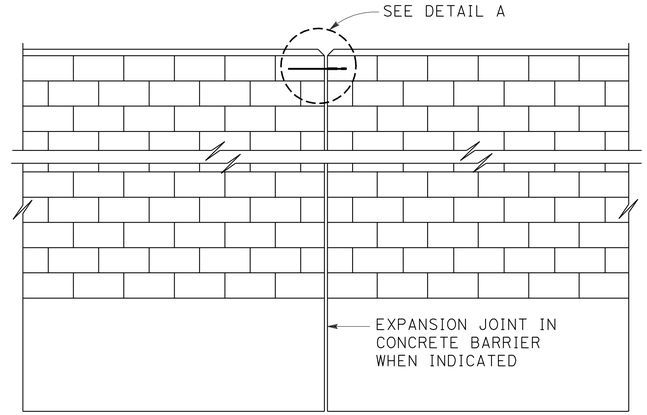

ALIGNMENT KEY DETAIL

NO SCALE

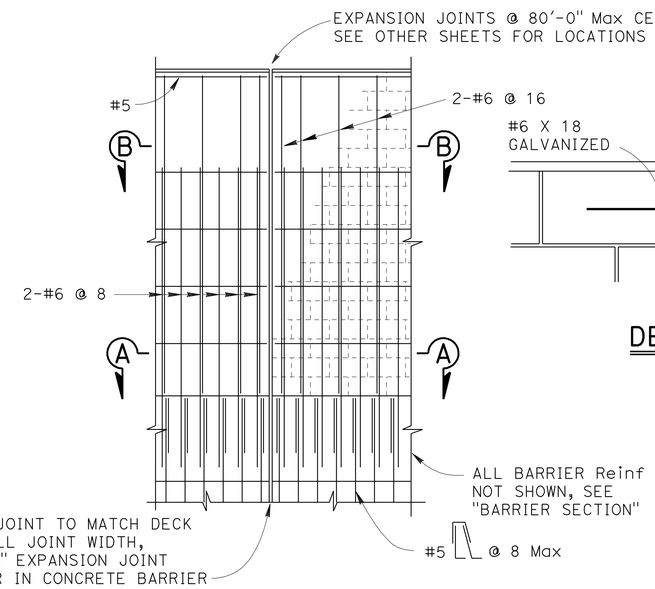

DECK AND WALL JOINT ELEVATION

NO SCALE

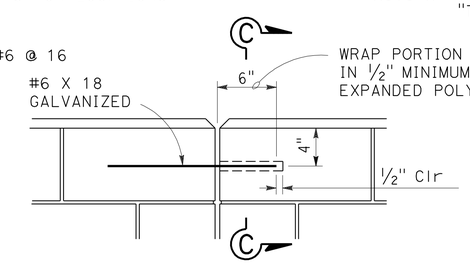

DETAIL A

NO SCALE

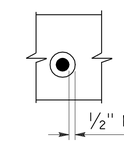

SECTION C-C

NO SCALE

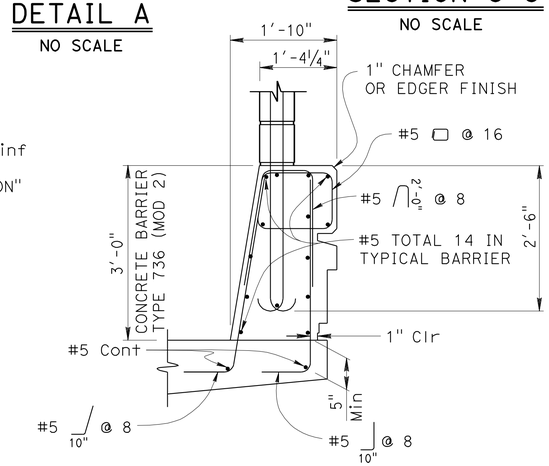

BARRIER SECTION

NO SCALE

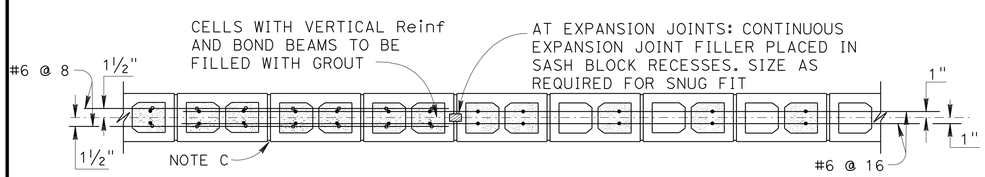

SECTION A-A

NO SCALE

SECTION B-B

NO SCALE

GENERAL NOTES

Note A: For type of block, type of block bond and joint finish, see "Road Plans".

Note B: When blocks are laid in stacked bond, ladder type, galvanized joint reinforcement shall be provided. A minimum of 2 - 12 gauge wires continuous at 4'-0" maximum to be used. Locate reinforcement in joints that are at the approximate midpoint between bond beams.

Note C: Horizontal joints shall be tooled concave or may be weathered. Vertical joints shall be tooled concave or may be raked.

Note D: All masonry to be high strength unless otherwise noted.

Note E: Concrete to be used for barrier shall contain not less than 590 pounds of cemetitious material per cubic yard.

Note F: Expansion joints in concrete barrier and masonry block to match deck joints and at ends of wing walls.

Note G: Expansion joints in Sound Wall (Masonry Block) shall be at each support, center of span, and at ends of each wingwall.

Note H: For dimensions and reinforcement not shown see "Typical Section" sheet.

Note:

For dimensions and reinforcement not shown, see Std. Plan B11-56 and "Barrier Architectural Details" sheets.

DESIGN NOTES

DESIGN

Uniform Building Code,1997 Edition and the Bridge Design Specifications.

DESIGN WIND LOAD

37 psf

DESIGN SEISMIC LOAD

2.0 Dead load

REINFORCED CONCRETE

f'c = 3.6 ksi
fy = 60 ksi

CONCRETE MASONRY HIGH STRENGTH

f'm = 2500 psi
fy = 60 ksi

LOAD FACTORS AND LOAD COMBINATIONS

Load Factor Design (LFD)

Group A: βD +1.7 E + 1.7 SC
Group B: βD +1.7 E + 1.3 W
Group C: βD +1.3 E + 1.0 EQE
Group D: βD +1.3 E + 1.0 EQD
Group E: βD +1.1 E + 0.85 (EQE + EQD)

Where : β = 0.9 or 1.2, whichever controls in design
D = Dead load
E = Lateral earth pressure
SC = Live load surcharge
W = Wind load
EQD = Seismic dead load
EQE = Seismic earth load

STRENGTH REDUCTION FACTORS, Ø

Reinforced Concrete :

For flexure ..... Ø = 0.90
For shear ..... Ø = 0.85

Concrete masonry:

For flexure ..... Ø = 0.80
For shear ..... Ø = 0.60

Note:

Barrier, Deck and Concrete Masonry are designed by the Strength Design Method.

DESIGN	BY ANTHONY LOGUS	CHECKED RUSLAN NOVIK	
DETAILS	BY HERMAN MAUROSCHADT	CHECKED RUSLAN NOVIK	
QUANTITIES	BY SARA YIP	CHECKED RUSLAN NOVIK	

STATE OF CALIFORNIA
DEPARTMENT OF TRANSPORTATION

DIVISION OF ENGINEERING SERVICES
STRUCTURE DESIGN
DESIGN BRANCH 15

BRIDGE NO. 53-3062
POST MILE 5.12

PIONEER Blvd UC (REPLACE)
SOUNDWALL-MASONRY BLOCK ON BRIDGE

STRUCTURES DESIGN DETAIL SHEET (ENGLISH) (REV. 09-01-10)

ORIGINAL SCALE IN INCHES FOR REDUCED PLANS 0 1 2 3

UNIT: 3604
PROJECT NUMBER & PHASE: 0700001834 1
CONTRACT NO.: 07-215941

DISREGARD PRINTS BEARING EARLIER REVISION DATES

REVISION DATES: 11-15-11 12-9-11 12-30-11 3-16-12

SHEET 50 OF 72

FILE => 53-3062-w-swdet.dgn

USERNAME => s119571 DATE PLOTTED => 14-APR-2012 TIME PLOTTED => 11:26

DIST	COUNTY	ROUTE	POST MILES TOTAL PROJECT	SHEET No.	TOTAL SHEETS
07	LA	5	4.0/5.9	1131	1597

LICENSED ARCHITECT 12-12-11 DATE

4-9-12
PLANS APPROVAL DATE

LICENSED ARCHITECT H. Javier Chavez 14073 03-31-13 Renewal Date STATE OF CALIFORNIA

The State of California or its officers or agents shall not be responsible for the accuracy or completeness of electronic copies of this plan sheet.

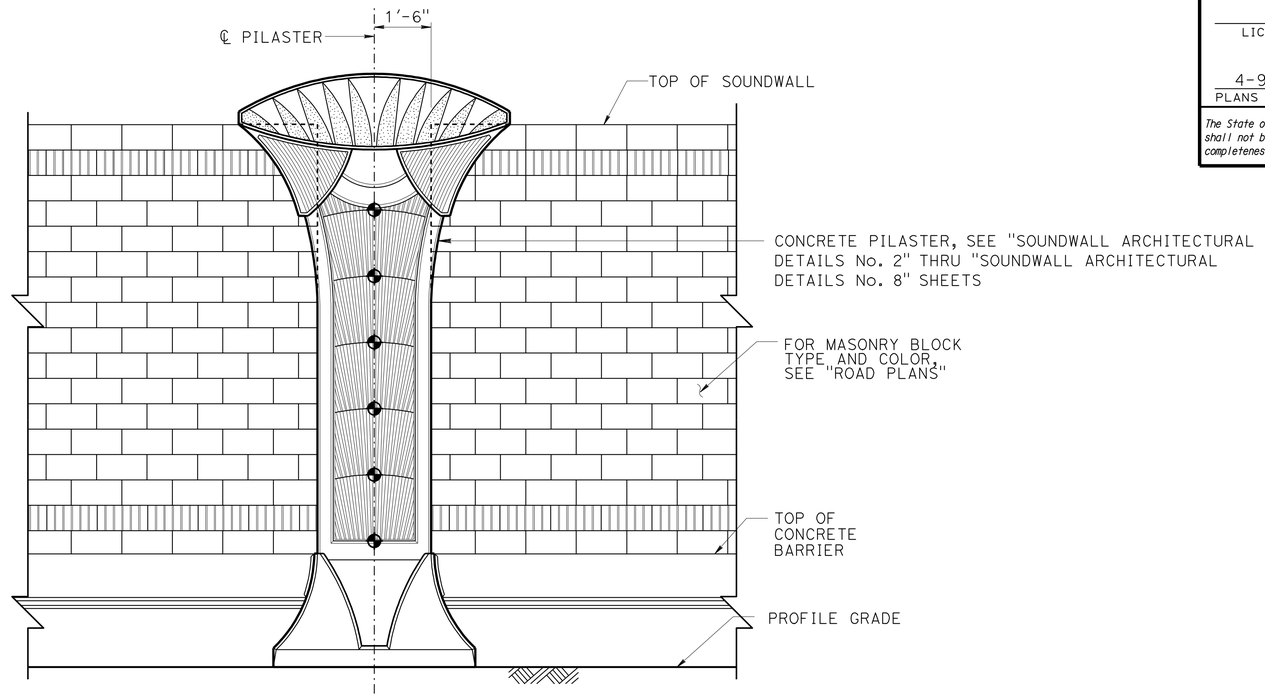

PART SOUNDWALL ELEVATION - FREEWAY SIDE

½" = 1'-0"

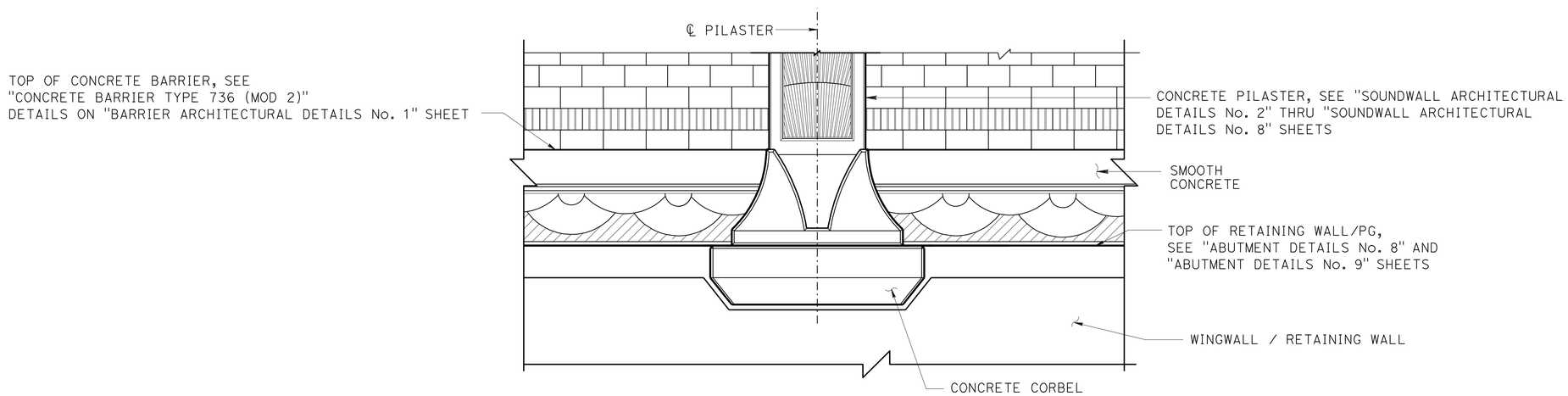

PART SOUNDWALL ELEVATION - BACK SIDE

½" = 1'-0"

	BY	CHECKED
DESIGN	H. CHAVEZ	I. TASABIA
DETAILS	K. LI	H. CHAVEZ
QUANTITIES	S. YIP	S. MORADI

STATE OF CALIFORNIA
DEPARTMENT OF TRANSPORTATION

DIVISION OF ENGINEERING SERVICES
BRIDGE ARCHITECTURE AND AESTHETICS

BRIDGE NO. 53-3062
POST MILE 5.12

PIONEER Blvd UC (REPLACE)
SOUNDWALL ARCHITECTURAL DETAILS No. 1

STRUCTURES DESIGN DETAIL SHEET (ENGLISH) (REV. 09-01-10)

ORIGINAL SCALE IN INCHES FOR REDUCED PLANS 0 1 2 3

UNIT: 3604
PROJECT NUMBER & PHASE: 0700001834 1
CONTRACT NO.: 07-215941

DISREGARD PRINTS BEARING EARLIER REVISION DATES

REVISION DATES: 3-7-12

SHEET 51 OF 72

FILE => 53-3062-x-swde01.dgn

USERNAME => s113571 DATE PLOTTED => 14-APR-2012 TIME PLOTTED => 11:26

DIST	COUNTY	ROUTE	POST MILES TOTAL PROJECT	SHEET No.	TOTAL SHEETS
07	LA	5	4.0/5.9	1132	1597

LICENSED ARCHITECT 12-12-11 DATE

4-9-12
PLANS APPROVAL DATE

LICENSED ARCHITECT H. Javier Chavez 14073 03-31-13 Renewal Date STATE OF CALIFORNIA

The State of California or its officers or agents shall not be responsible for the accuracy or completeness of electronic copies of this plan sheet.

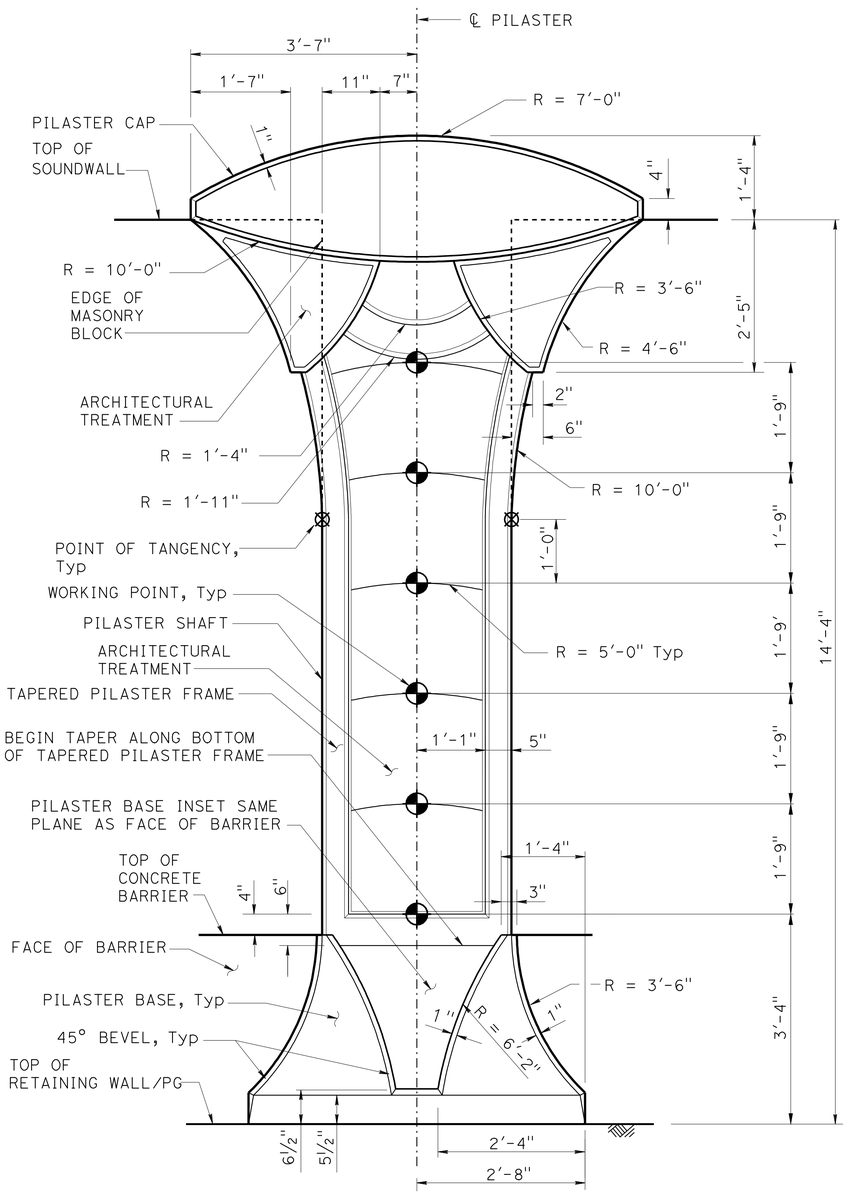

PILASTER ELEVATION - FREEWAY SIDE

NO SCALE

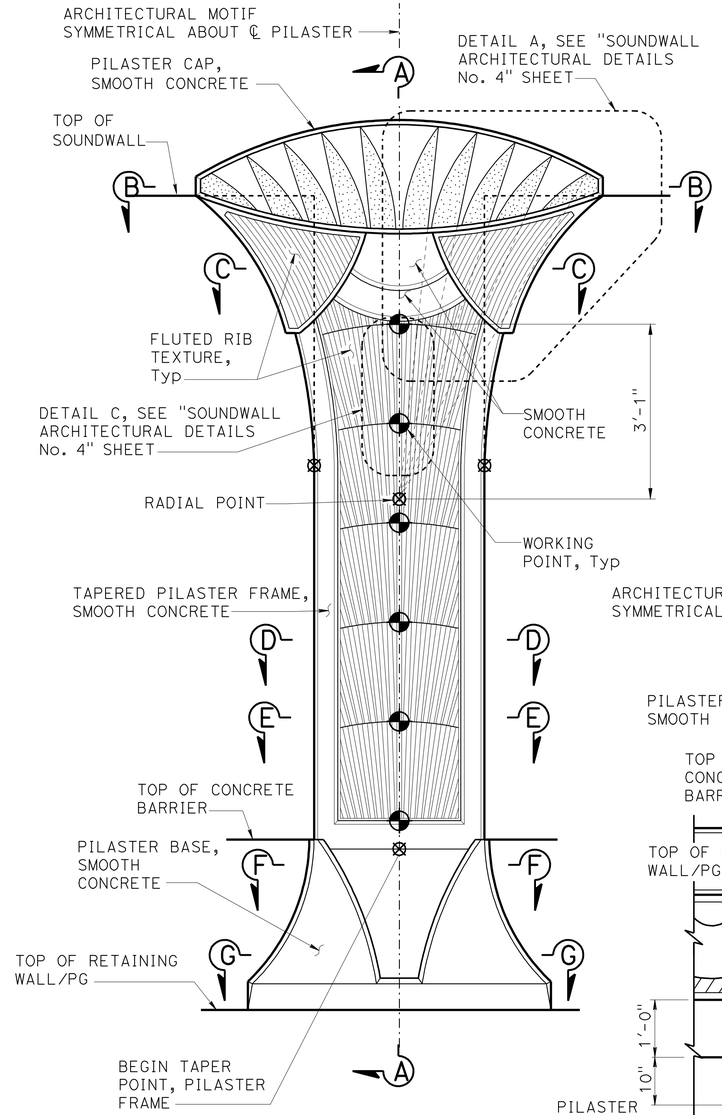

Note: For additional details not shown, see "PILASTER ELEVATION - FREEWAY SIDE"

FREEWAY SIDE

NOTES:

1. For SECTION A-A", "SECTION B-B", "SECTION C-C", "SECTION D-D", "SECTION E-E", "SECTION F-F", SECTION G-G" and "SECTION H-H" see "SOUNDWALL ARCHITECTURAL DETAILS No. 3" sheet.
2. All dimensions symmetrical about ℄ Pilaster.
3. Beveled edges are 45° unless otherwise noted.
4. All vertical dimension are measured along the ℄ Pilaster (Pilaster shall be vertical).

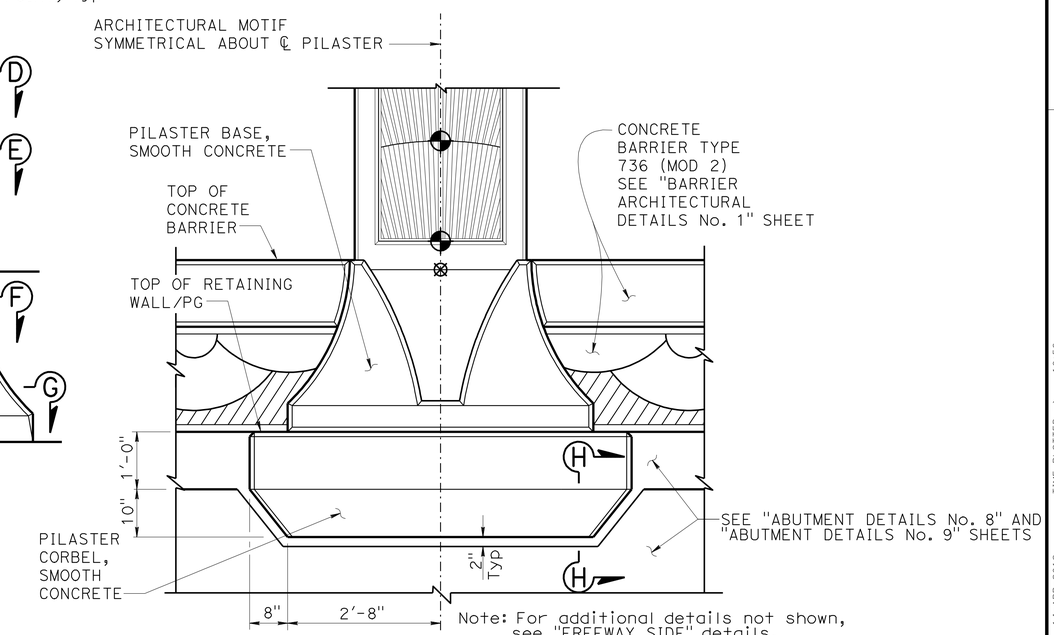

Note: For additional details not shown, see "FREEWAY SIDE" details.

BACK SIDE

PILASTER ARCHITECTURAL MOTIF

¾" = 1'-0"

DESIGN	BY H. CHAVEZ	CHECKED I. TASABIA	
DETAILS	BY K. LI	CHECKED H. CHAVEZ	
QUANTITIES	BY S. YIP	CHECKED S. MORADI	

STATE OF CALIFORNIA DEPARTMENT OF TRANSPORTATION

DIVISION OF ENGINEERING SERVICES BRIDGE ARCHITECTURE AND AESTHETICS

BRIDGE NO. 53-3062 POST MILE 5.12

PIONEER Blvd UC (REPLACE)

SOUNDWALL ARCHITECTURAL DETAILS No. 2

STRUCTURES DESIGN DETAIL SHEET (ENGLISH) (REV. 09-01-10)

ORIGINAL SCALE IN INCHES FOR REDUCED PLANS 0 1 2 3

UNIT: 3604
PROJECT NUMBER & PHASE: 0700001834 1 CONTRACT NO.: 07-215941

DISREGARD PRINTS BEARING EARLIER REVISION DATES

REVISION DATES 3-7-12

SHEET 52 OF 72

FILE => 53-3062-x-swdet02.dgn

USERNAME => s114926 DATE PLOTTED => 14-APR-2012 TIME PLOTTED => 10:56

DIST	COUNTY	ROUTE	POST MILES TOTAL PROJECT	SHEET No.	TOTAL SHEETS
07	LA	5	4.0/5.9	1133	1597

LICENSED ARCHITECT — DATE 12-12-11

PLANS APPROVAL DATE 4-9-12

LICENSED ARCHITECT H. Javier Chavez 14073 Renewal Date 03-31-13 STATE OF CALIFORNIA

The State of California or its officers or agents shall not be responsible for the accuracy or completeness of electronic copies of this plan sheet.

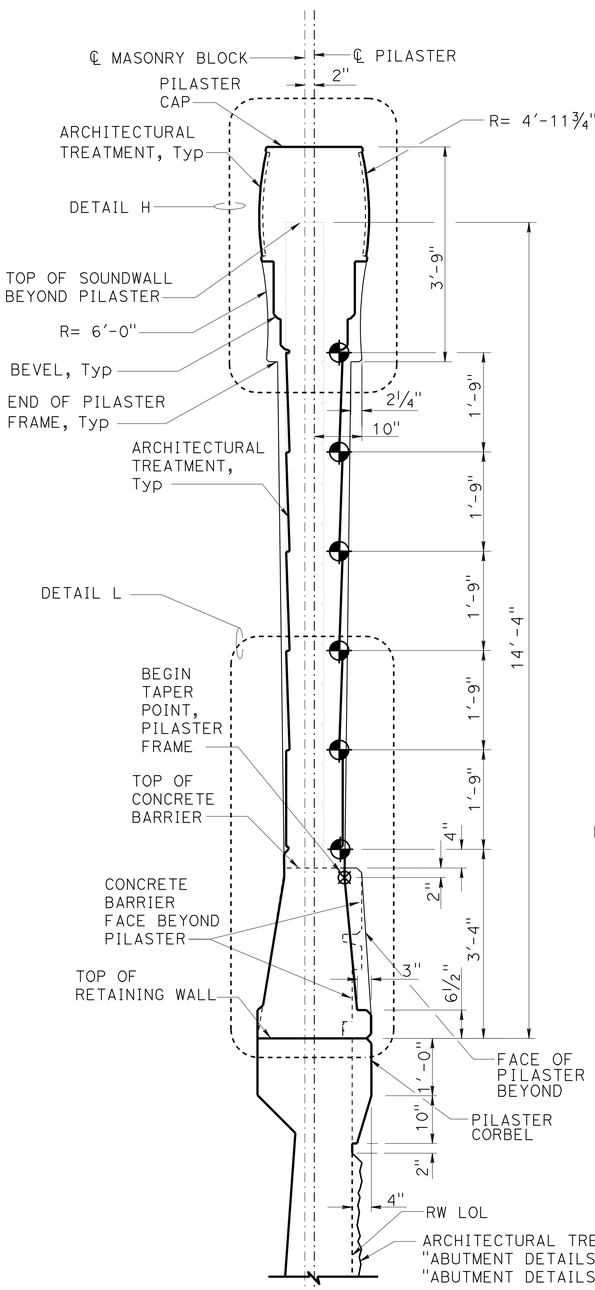

SECTION A-A
¾" = 1'-0"

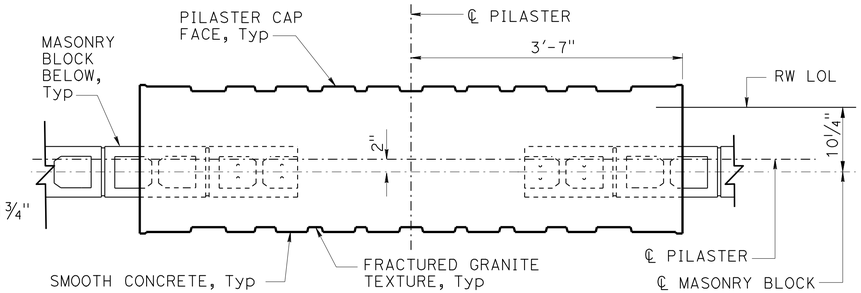

SECTION B-B
1" = 1'-0"

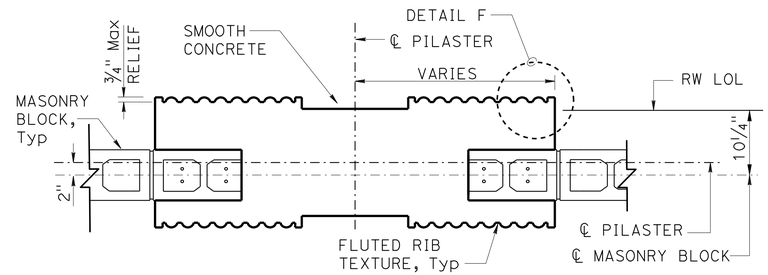

SECTION C-C
1" = 1'-0"

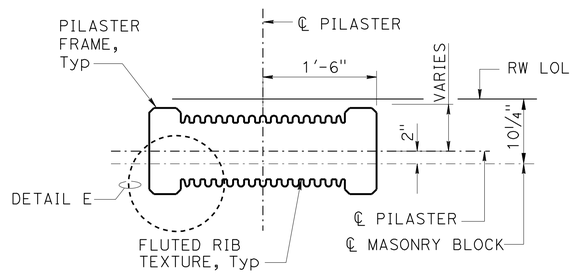

SECTION D-D
1" = 1'-0"

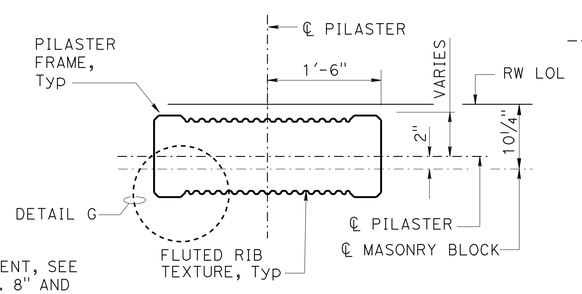

SECTION E-E
1" = 1'-0"

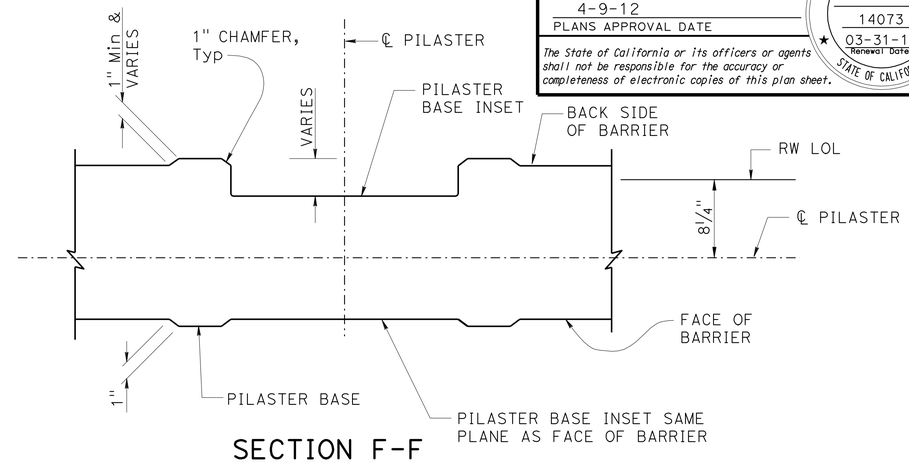

SECTION F-F
1½" = 1'-0"

NOTES:

1. All dimensions symmetrical about ℄ Pilaster.
2. All vertical dimension are measured along the ℄ Pilaster (Pilaster shall be vertical).
3. For "DETAIL E", "DETAIL F" and "DETAIL G" see "SOUNDWALL ARCHITECTURAL DETAILS No. 4" sheet.
4. For "DETAIL H" and "DETAIL L" see "SOUNDWALL ARCHITECTURAL DETAILS No. 5" sheet.

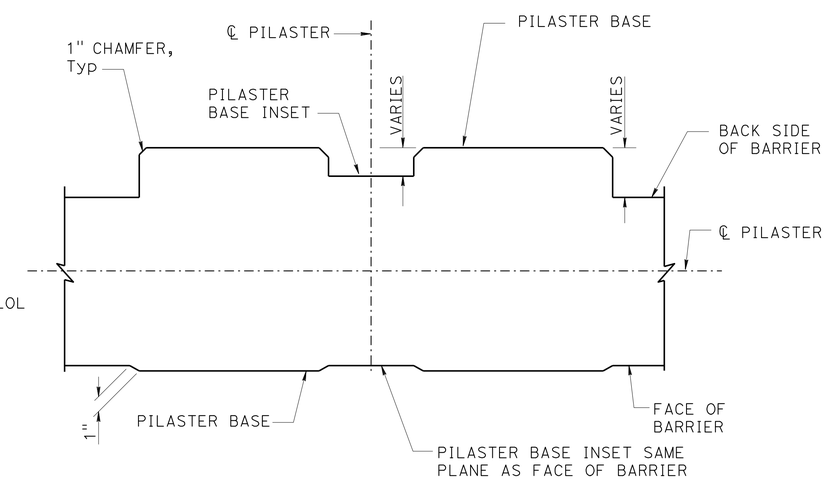

SECTION G-G
1½" = 1'-0"

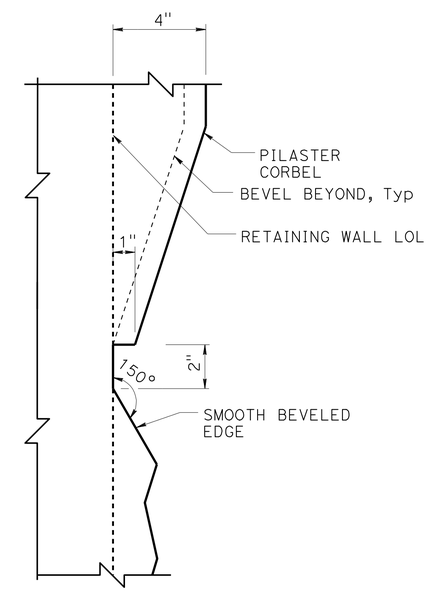

SECTION H-H
NO SCALE

	BY	CHECKED
DESIGN	H. CHAVEZ	I. TASABIA
DETAILS	K. LI	H. CHAVEZ
QUANTITIES	S. YIP	S. MORADI

STATE OF CALIFORNIA DEPARTMENT OF TRANSPORTATION

DIVISION OF ENGINEERING SERVICES BRIDGE ARCHITECTURE AND AESTHETICS

BRIDGE NO. 53-3062 POST MILE 5.12

PIONEER Blvd UC (REPLACE)

SOUNDWALL ARCHITECTURAL DETAILS No. 3

STRUCTURES DESIGN DETAIL SHEET (ENGLISH) (REV. 09-01-10)

ORIGINAL SCALE IN INCHES FOR REDUCED PLANS 0 1 2 3

UNIT: 3604
PROJECT NUMBER & PHASE: 0700001834 1 CONTRACT NO.: 07-215941

DISREGARD PRINTS BEARING EARLIER REVISION DATES 3-7-12

REVISION DATES | SHEET 53 | OF 72

FILE => 53-3062-x-swde03.dgn

USERNAME => s114926 DATE PLOTTED => 14-APR-2012 TIME PLOTTED => 10:56

DIST	COUNTY	ROUTE	POST MILES TOTAL PROJECT	SHEET No.	TOTAL SHEETS
07	LA	5	4.0/5.9	1134	1597

LICENSED ARCHITECT 12-12-11 DATE

4-9-12
PLANS APPROVAL DATE

LICENSED ARCHITECT H. Javier Chavez 14073 03-31-13 Renewal Date STATE OF CALIFORNIA

The State of California or its officers or agents shall not be responsible for the accuracy or completeness of electronic copies of this plan sheet.

NOTES:

1. All notes and dimensions symmetrical about ℄ Pilaster.
2. Beveled edges are 45° unless otherwise noted.

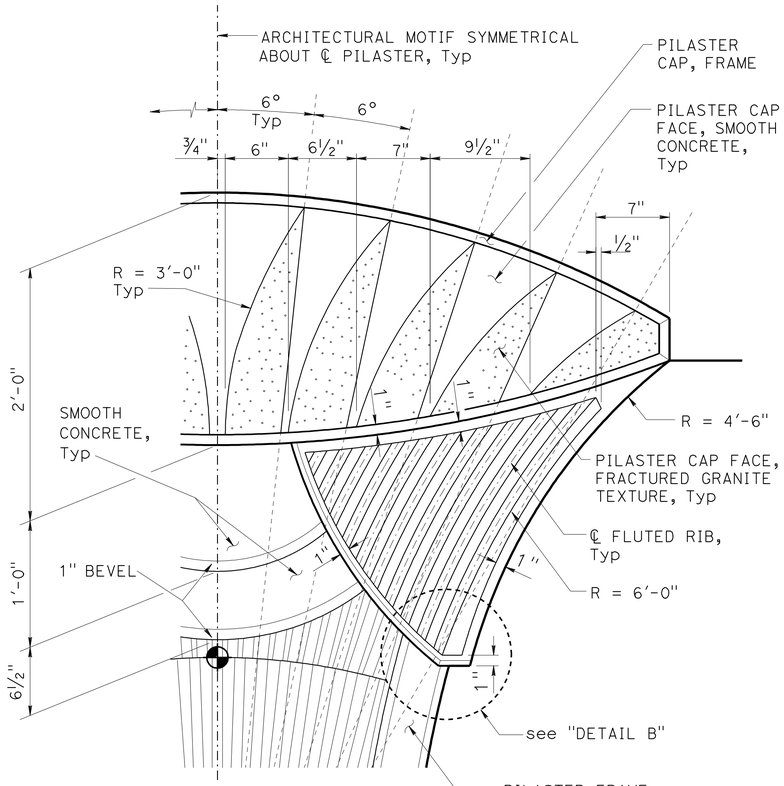

DETAIL A
NO SCALE

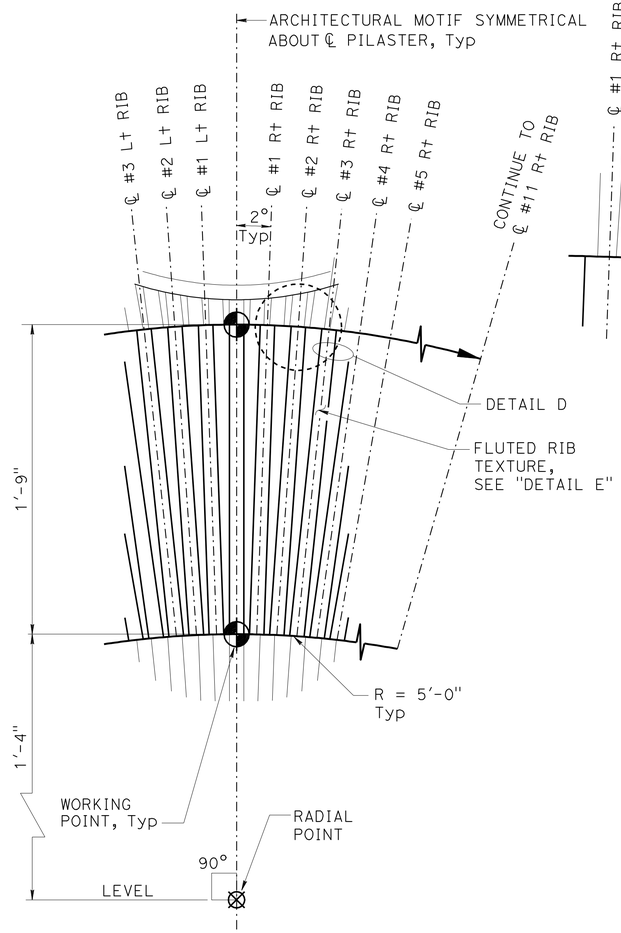

DETAIL C
NO SCALE

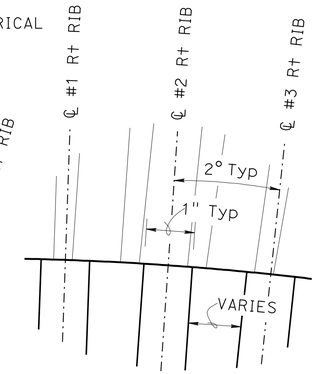

DETAIL D
NO SCALE

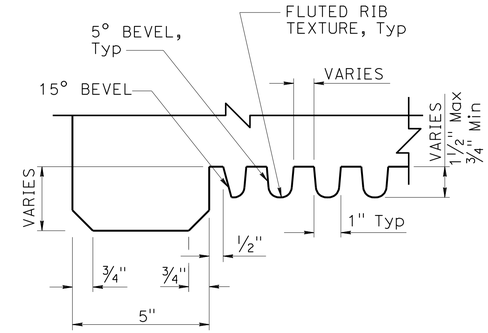

DETAIL E
NO SCALE

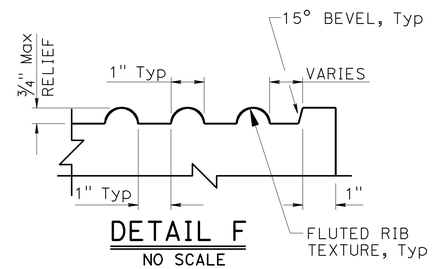

DETAIL F
NO SCALE

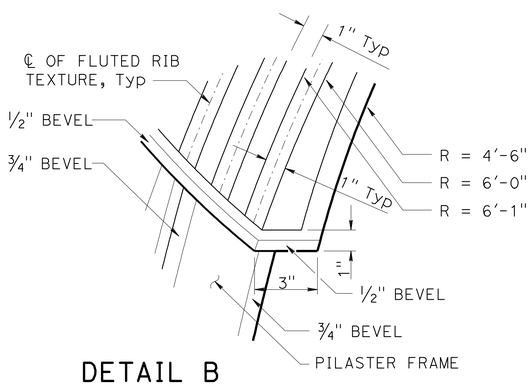

DETAIL B
NO SCALE

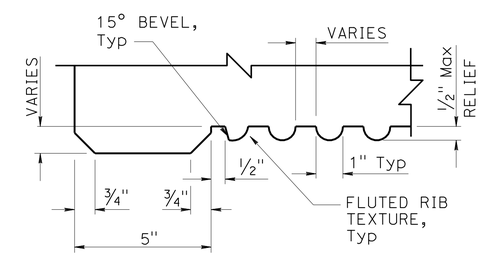

DETAIL G
NO SCALE

DESIGN	BY H. CHAVEZ	CHECKED I. TASABIA	
DETAILS	BY K. LI	CHECKED H. CHAVEZ	
QUANTITIES	BY S. YIP	CHECKED S. MORADI	

STATE OF CALIFORNIA
DEPARTMENT OF TRANSPORTATION

DIVISION OF ENGINEERING SERVICES
BRIDGE ARCHITECTURE AND AESTHETICS

BRIDGE NO. 53-3062
POST MILE 5.12

PIONEER Blvd UC (REPLACE)
SOUNDWALL ARCHITECTURAL DETAILS No. 4

STRUCTURES DESIGN DETAIL SHEET (ENGLISH) (REV. 09-01-10)

ORIGINAL SCALE IN INCHES FOR REDUCED PLANS 0 1 2 3

UNIT: 3604
PROJECT NUMBER & PHASE: 0700001834 1
CONTRACT NO.: 07-215941

DISREGARD PRINTS BEARING EARLIER REVISION DATES → 3-7-12

REVISION DATES | SHEET 54 | OF 72

FILE => 53-3062-x-swde104.dgn

USERNAME => s114926 DATE PLOTTED => 14-APR-2012 TIME PLOTTED => 10:57

DIST	COUNTY	ROUTE	POST MILES TOTAL PROJECT	SHEET No.	TOTAL SHEETS
07	LA	5	4.0/5.9	1135	1597

LICENSED ARCHITECT 12-12-11 DATE

4-9-12
PLANS APPROVAL DATE

LICENSED ARCHITECT H. Javier Chavez 14073 03-31-13 Renewal Date STATE OF CALIFORNIA

The State of California or its officers or agents shall not be responsible for the accuracy or completeness of electronic copies of this plan sheet.

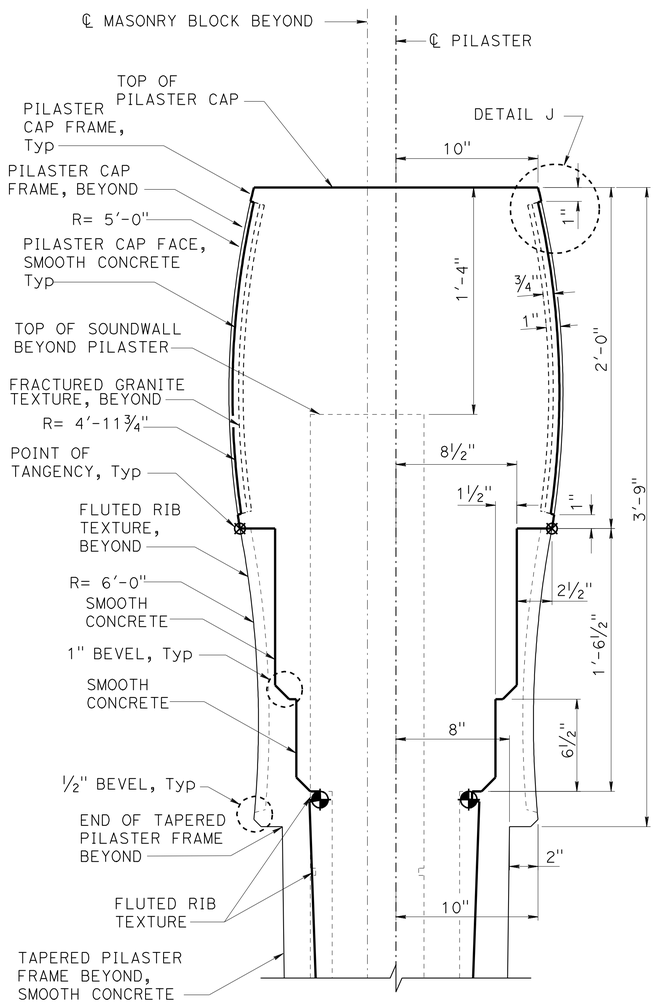

DETAIL H
NO SCALE

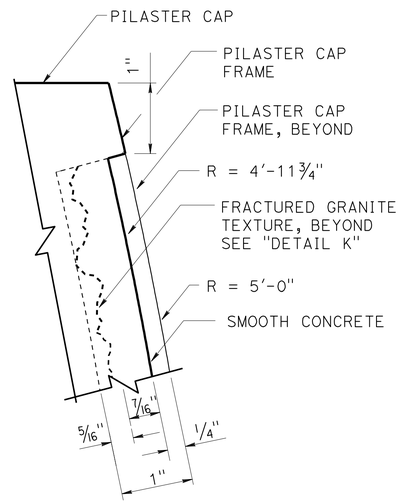

DETAIL J
NO SCALE

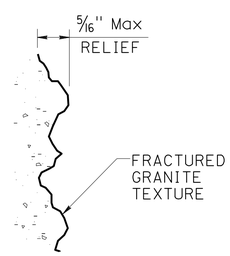

DETAIL K
NO SCALE

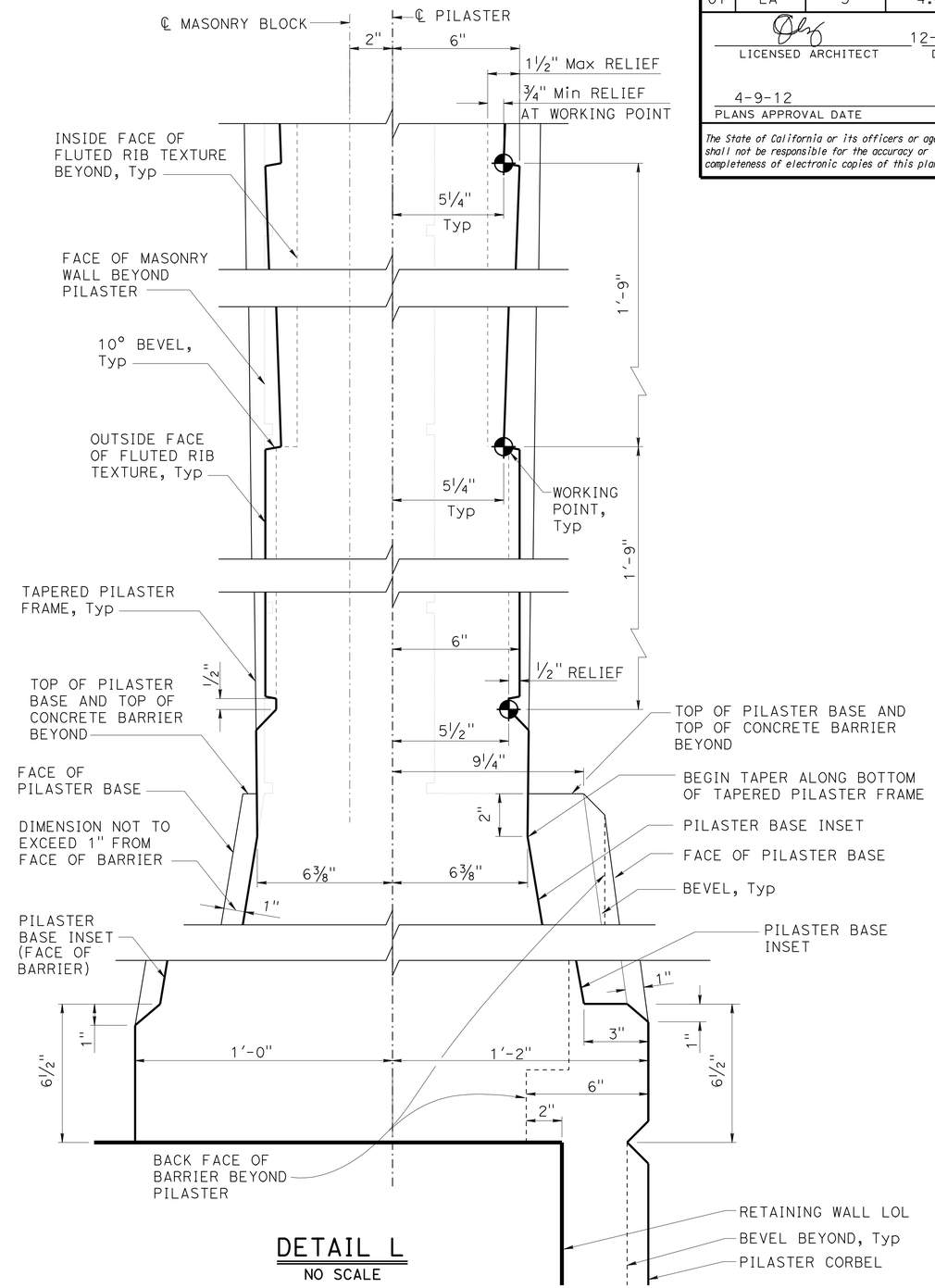

DETAIL L
NO SCALE

	BY	CHECKED
DESIGN	H. CHAVEZ	I. TASABIA
DETAILS	K. LI	H. CHAVEZ
QUANTITIES	S. YIP	S. MORADI

STATE OF CALIFORNIA
DEPARTMENT OF TRANSPORTATION

DIVISION OF ENGINEERING SERVICES
BRIDGE ARCHITECTURE AND AESTHETICS

BRIDGE NO. 53-3062
POST MILE 5.12

PIONEER Blvd UC (REPLACE)
SOUNDWALL ARCHITECTURAL DETAILS No. 5

STRUCTURES DESIGN DETAIL SHEET (ENGLISH) (REV. 09-01-10)

ORIGINAL SCALE IN INCHES FOR REDUCED PLANS 0 1 2 3

UNIT: 3604
PROJECT NUMBER & PHASE: 0700001834 1
CONTRACT NO.: 07-215941

DISREGARD PRINTS BEARING EARLIER REVISION DATES

REVISION DATES 3-7-12

SHEET 55 OF 72

FILE => 53-3062-x-swde+05.dgn

USERNAME => s114926 DATE PLOTTED => 14-APR-2012 TIME PLOTTED => 10:57

DIST	COUNTY	ROUTE	POST MILES TOTAL PROJECT	SHEET No.	TOTAL SHEETS
07	LA	5	4.0/5.9	1136	1597

Anthony T. Logus 12-12-11
REGISTERED CIVIL ENGINEER DATE

4-9-12
PLANS APPROVAL DATE

REGISTERED PROFESSIONAL ENGINEER Anthony T. Logus No. C68189 Exp. 09-30-13 CIVIL STATE OF CALIFORNIA

The State of California or its officers or agents shall not be responsible for the accuracy or completeness of electronic copies of this plan sheet.

NOTE:
For "SECTION K-K", "SECTION L-L", "SECTION M-M" and "SECTION N-N", see "SOUNDWALL ARCHITECTURAL DETAILS No. 7" sheet.

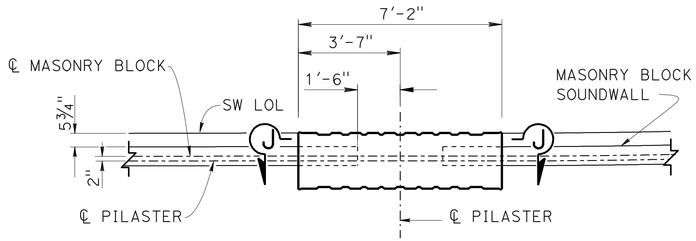

PART SOUND WALL PLAN

3/8" = 1'-0"

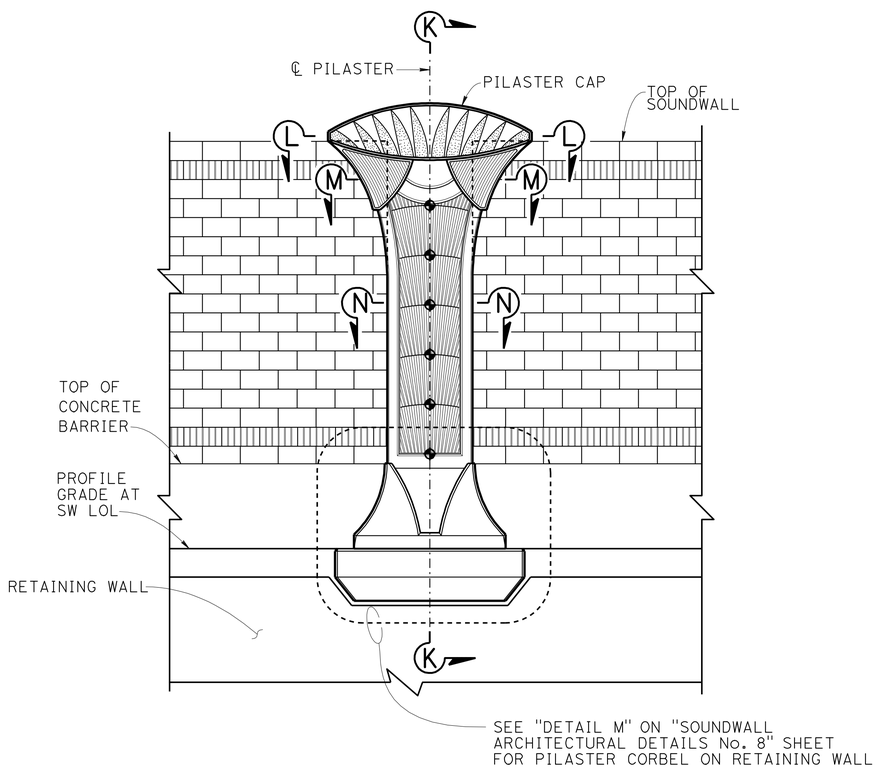

PART SOUNDWALL ELEVATION

3/8" = 1'-0"

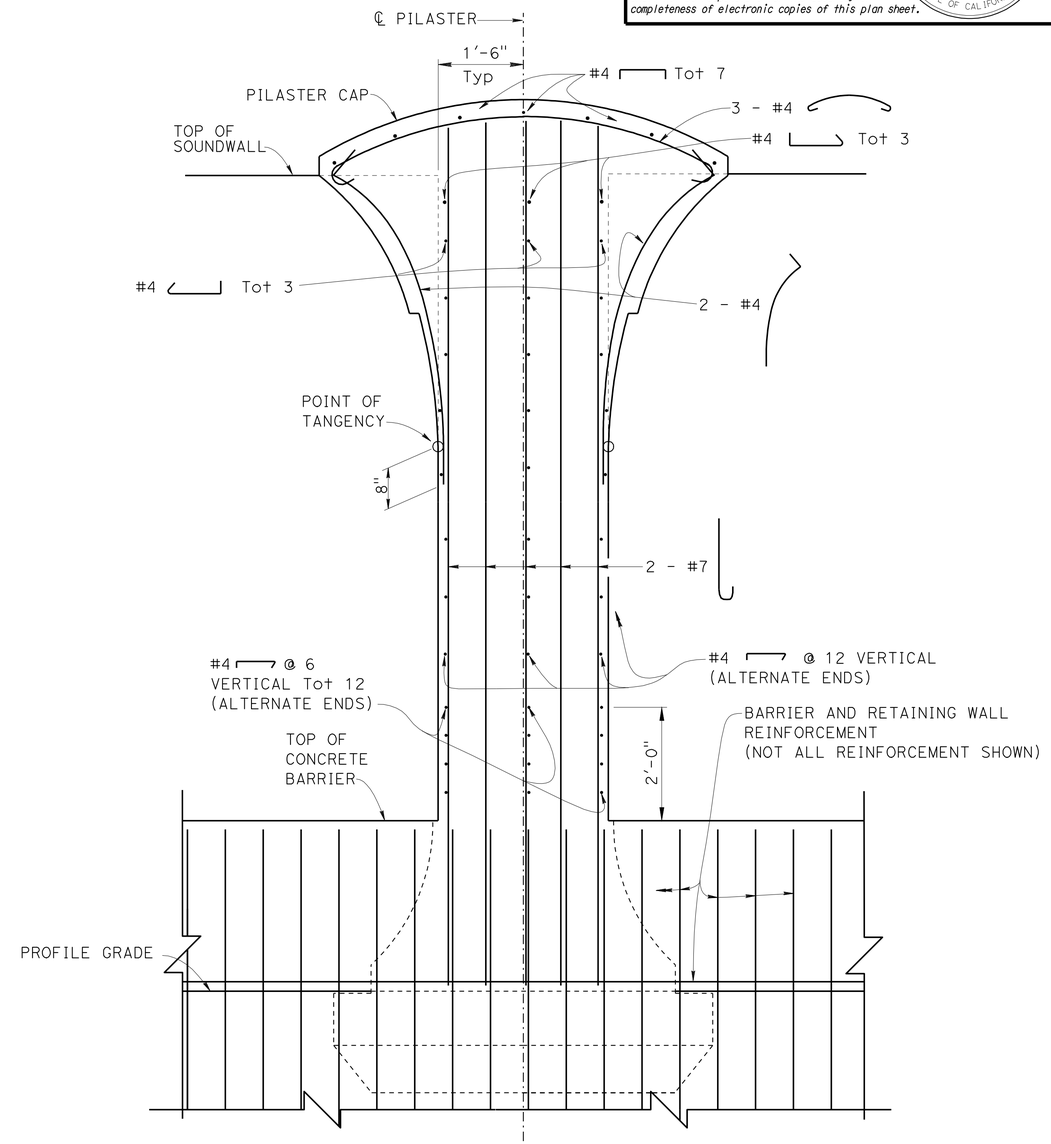

Note: Pilaster Corbel Reinf not shown.

SECTION J-J

3/4" = 1'-0"

DESIGN	BY H. CHAVEZ	CHECKED I. TASABIA	
DETAILS	BY K. LI	CHECKED H. CHAVEZ	
QUANTITIES	BY S. YIP	CHECKED S. MORADI	

STATE OF CALIFORNIA
DEPARTMENT OF TRANSPORTATION

DIVISION OF ENGINEERING SERVICES
BRIDGE ARCHITECTURE AND AESTHETICS

BRIDGE NO. 53-3062
POST MILE 5.12

PIONEER Blvd UC (REPLACE)

SOUNDWALL ARCHITECTURAL DETAILS No. 6

STRUCTURES DESIGN DETAIL SHEET (ENGLISH) (REV. 09-01-10)

ORIGINAL SCALE IN INCHES FOR REDUCED PLANS 0 1 2 3

UNIT: 3604
PROJECT NUMBER & PHASE: 0700001834 1
CONTRACT NO.: 07-215941

DISREGARD PRINTS BEARING EARLIER REVISION DATES

REVISION DATES 3-7-12

SHEET 56 OF 72

FILE => 53-3062-x-swdet06.dgn

USERNAME => s114926 DATE PLOTTED => 14-APR-2012 TIME PLOTTED => 10:57

DIST	COUNTY	ROUTE	POST MILES TOTAL PROJECT	SHEET No.	TOTAL SHEETS
07	LA	5	4.0/5.9	1137	1597

Anthony T. Logus 12-12-11
REGISTERED CIVIL ENGINEER DATE

4-9-12
PLANS APPROVAL DATE

REGISTERED PROFESSIONAL ENGINEER Anthony T. Logus No. C68189 Exp. 09-30-13 CIVIL STATE OF CALIFORNIA

The State of California or its officers or agents shall not be responsible for the accuracy or completeness of electronic copies of this plan sheet.

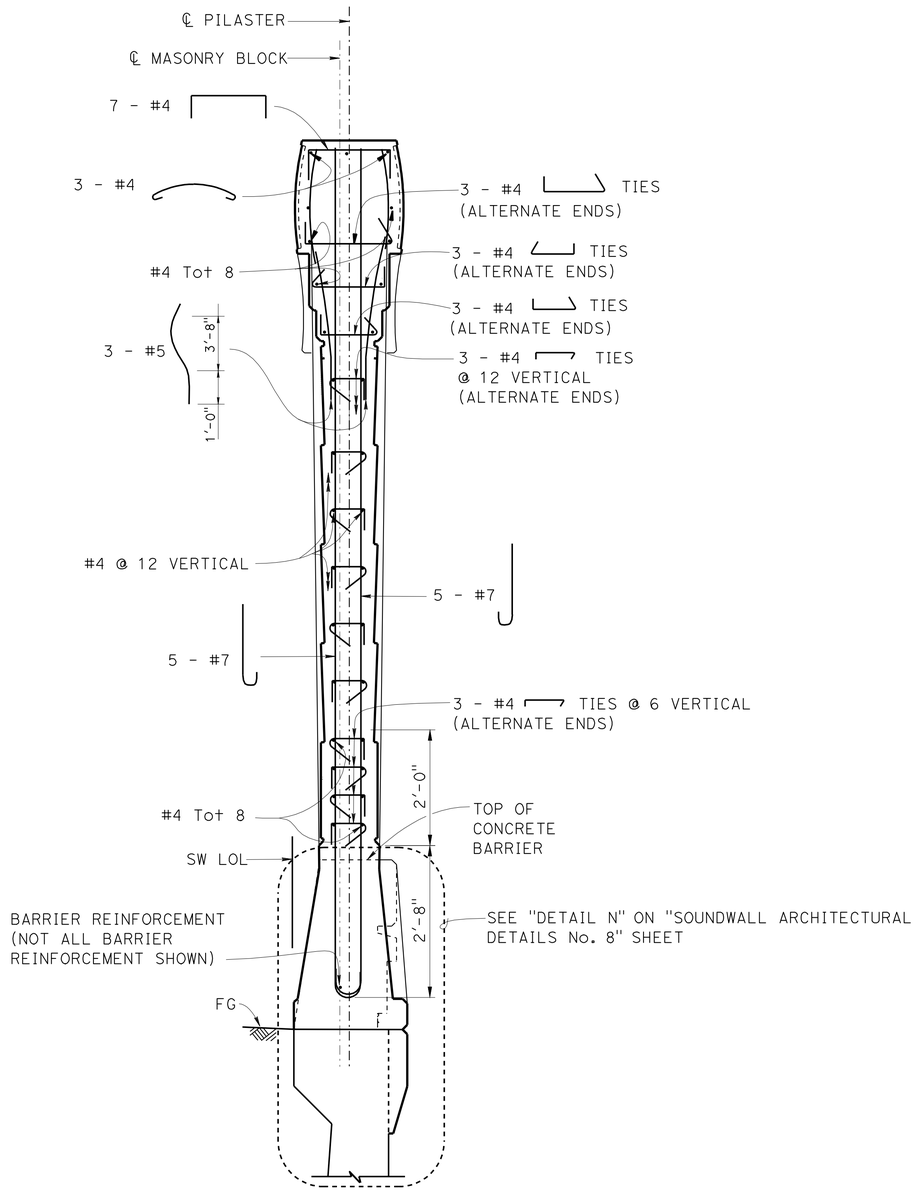

SECTION K-K
¾" = 1'-0"

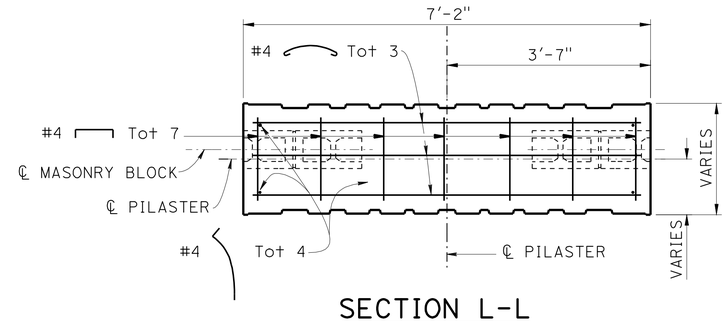

SECTION L-L
¾" = 1'-0"

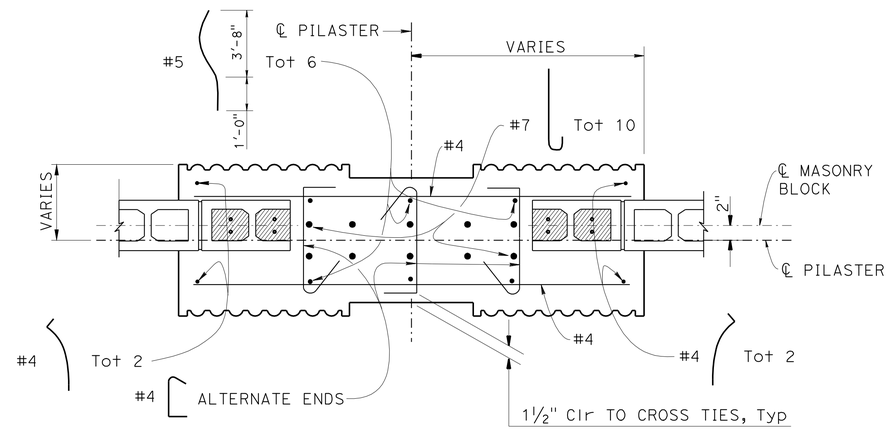

SECTION M-M
1" = 1'-0"

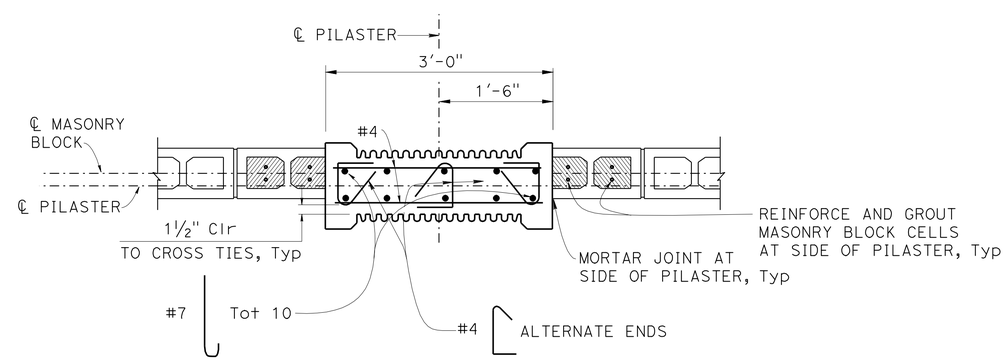

SECTION N-N
1" = 1'-0"

	BY	CHECKED
DESIGN	H. CHAVEZ	I. TASABIA
DETAILS	K. LI	H. CHAVEZ
QUANTITIES	S. YIP	S. MORADI

STATE OF CALIFORNIA
DEPARTMENT OF TRANSPORTATION

DIVISION OF ENGINEERING SERVICES
BRIDGE ARCHITECTURE AND AESTHETICS

BRIDGE NO. 53-3062
POST MILE 5.12

PIONEER Blvd UC (REPLACE)
SOUNDWALL ARCHITECTURAL DETAILS No. 7

STRUCTURES DESIGN DETAIL SHEET (ENGLISH) (REV. 09-01-10)

ORIGINAL SCALE IN INCHES FOR REDUCED PLANS 0 1 2 3

UNIT: 3604
PROJECT NUMBER & PHASE: 0700001834 1
CONTRACT NO.: 07-215941

DISREGARD PRINTS BEARING EARLIER REVISION DATES

REVISION DATES 3-7-12

SHEET 57 OF 72

FILE => 53-3062-x-swdet07.dgn

USERNAME => s114926 DATE PLOTTED => 14-APR-2012 TIME PLOTTED => 10:57

DIST	COUNTY	ROUTE	POST MILES TOTAL PROJECT	SHEET No.	TOTAL SHEETS
07	LA	5	4.0/5.9	1138	1597

Anthony T. Logus 12-12-11
REGISTERED CIVIL ENGINEER DATE

4-9-12
PLANS APPROVAL DATE

REGISTERED PROFESSIONAL ENGINEER
Anthony T. Logus
No. C68189
Exp. 09-30-13
CIVIL
STATE OF CALIFORNIA

The State of California or its officers or agents shall not be responsible for the accuracy or completeness of electronic copies of this plan sheet.

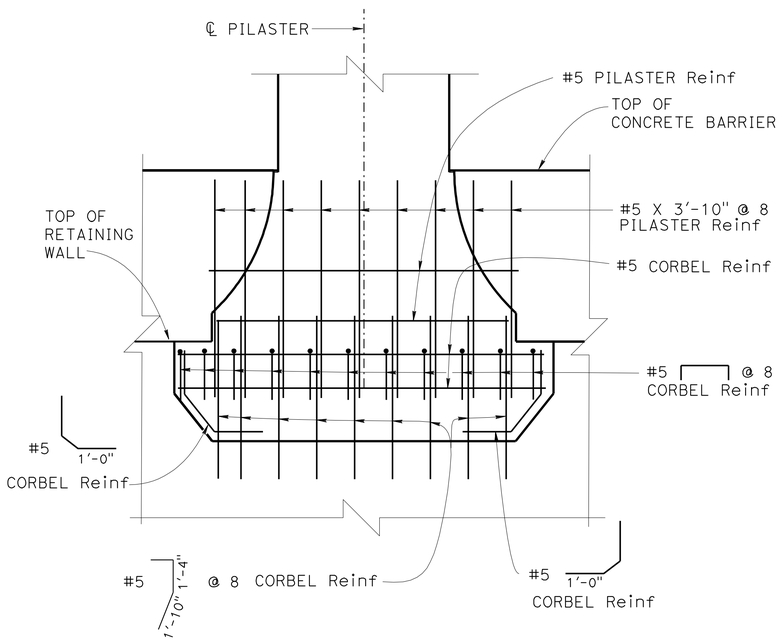

NOTE: Concrete Barrier/Retaining Wall reinf not shown.

DETAIL M
¾" = 1'-0"

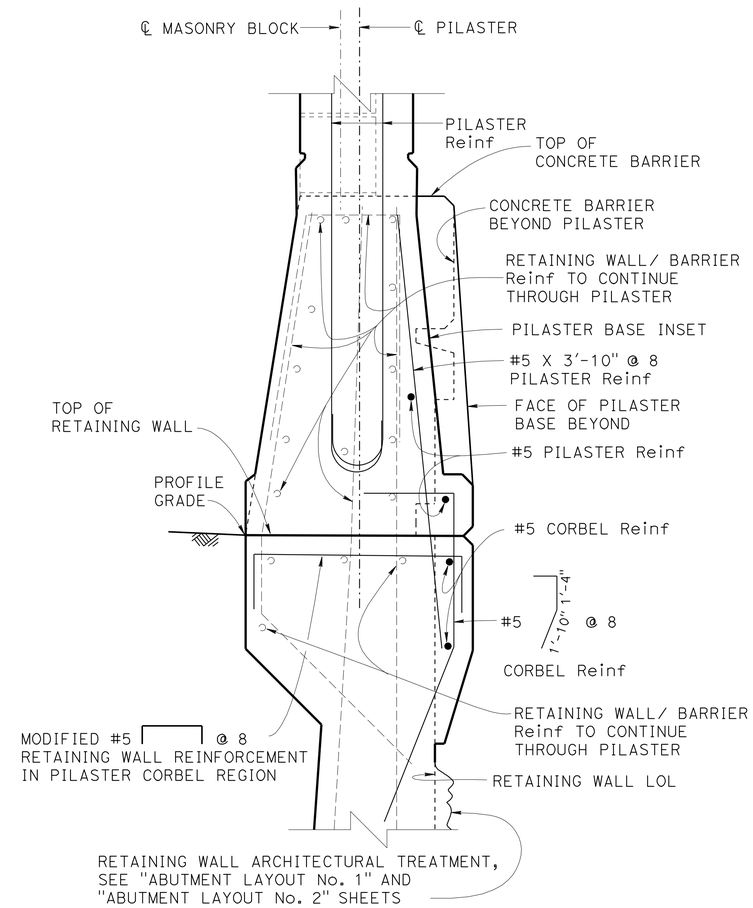

PILASTER CORBEL
ON RETAINING WALL

DETAIL N
1½" = 1'-0"

DESIGN	BY H. CHAVEZ	CHECKED I. TASABIA	
DETAILS	BY K. LI	CHECKED H. CHAVEZ	
QUANTITIES	BY S. YIP	CHECKED S. MORADI	

STATE OF CALIFORNIA
DEPARTMENT OF TRANSPORTATION

DIVISION OF ENGINEERING SERVICES
BRIDGE ARCHITECTURE AND AESTHETICS

BRIDGE NO. 53-3062
POST MILE 5.12

PIONEER Blvd UC (REPLACE)
SOUNDWALL ARCHITECTURAL DETAILS No. 8

STRUCTURES DESIGN DETAIL SHEET (ENGLISH) (REV. 09-01-10)

ORIGINAL SCALE IN INCHES FOR REDUCED PLANS 0 1 2 3

UNIT: 3604
PROJECT NUMBER & PHASE: 0700001834 1
CONTRACT NO.: 07-215941

DISREGARD PRINTS BEARING EARLIER REVISION DATES

REVISION DATES: 3-7-12

SHEET 58 OF 72

FILE => 53-3062-x-swdet08.dgn

USERNAME => s114926 DATE PLOTTED => 14-APR-2012 TIME PLOTTED => 10:57

DIST	COUNTY	ROUTE	POST MILES TOTAL PROJECT	SHEET No.	TOTAL SHEETS
07	LA	5	4.0/5.9	1139	1597

Anthony T. Logus 12-12-11
REGISTERED CIVIL ENGINEER DATE

4-9-12
PLANS APPROVAL DATE

REGISTERED PROFESSIONAL ENGINEER
Anthony T. Logus
No. C68189
Exp. 09-30-13
CIVIL
STATE OF CALIFORNIA

The State of California or its officers or agents shall not be responsible for the accuracy or completeness of electronic copies of this plan sheet.

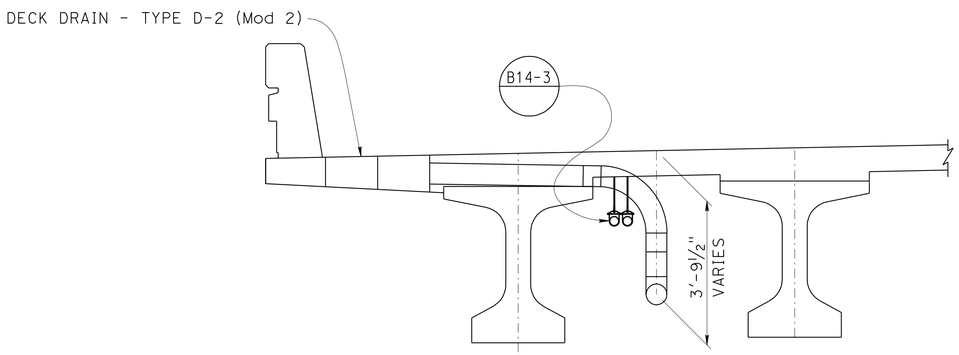

SECTION X-X

½" = 1'-0"

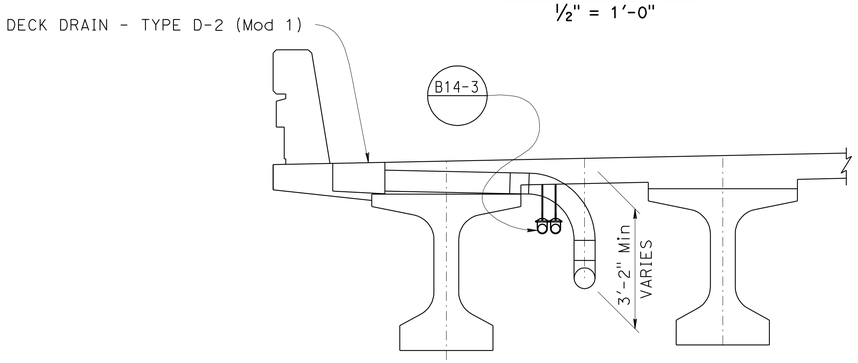

SECTION W-W

½" = 1'-0"

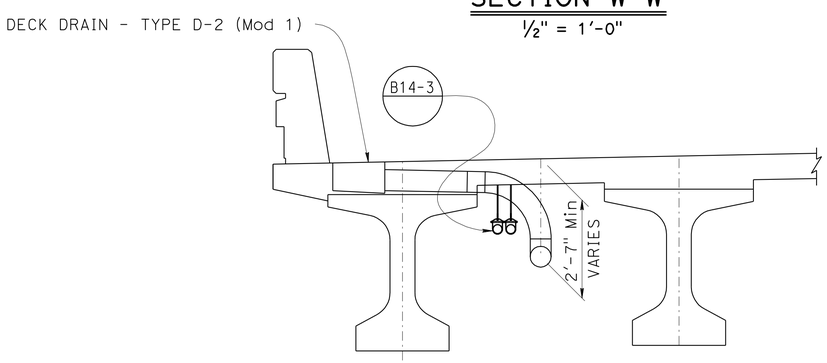

SECTION V-V

½" = 1'-0"

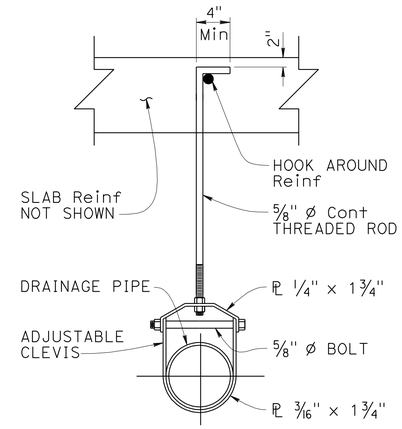

DRAIN PIPE SUPPORT

NO SCALE

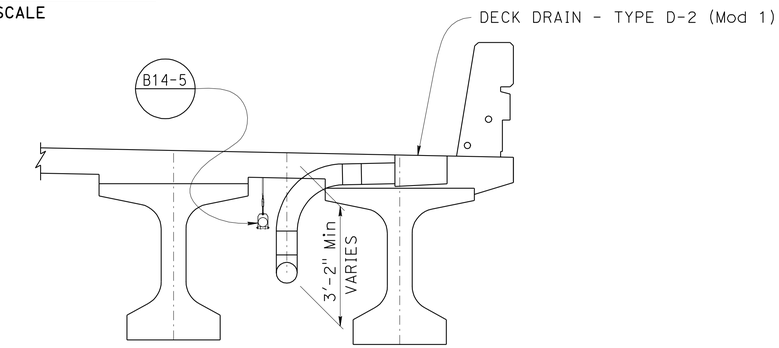

SECTION Z-Z

½" = 1'-0"

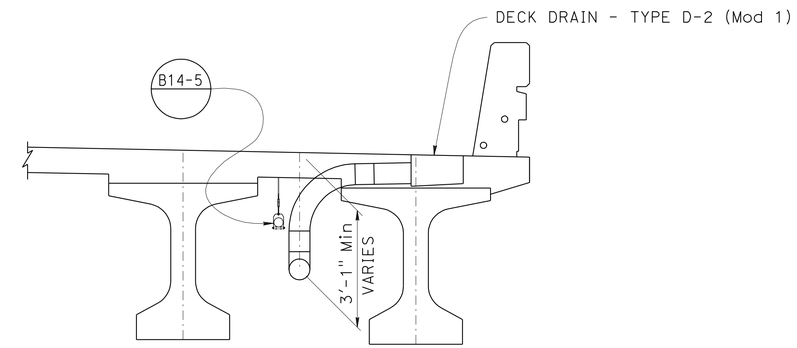

SECTION Y-Y

½" = 1'-0"

NOTE:
1. For Deck Drain - Type D-2 (Mod 1) details see "DECK DRAIN - TYPE D-2 (Mod 1)" sheet.
2. For Deck Drain - Type D-2 (Mod 2) details see "DECK DRAIN - TYPE D-2 (Mod 2)" sheet.

	BY	CHECKED
DESIGN	ANTHONY LOGUS	RUSLAN NOVIK
DETAILS	HERMAN MAUROSCHADT	RUSLAN NOVIK
QUANTITIES	SARA YIP	RUSLAN NOVIK

STATE OF CALIFORNIA
DEPARTMENT OF TRANSPORTATION

DIVISION OF ENGINEERING SERVICES
STRUCTURE DESIGN
DESIGN BRANCH 15

BRIDGE NO. 53-3062
POST MILE 5.12

PIONEER Blvd UC (REPLACE)
DECK DRAIN DETAILS

STRUCTURES DESIGN DETAIL SHEET (ENGLISH) (REV. 09-01-10)

ORIGINAL SCALE IN INCHES FOR REDUCED PLANS 0 1 2 3

UNIT: 3604
PROJECT NUMBER & PHASE: 0700001834 1
CONTRACT NO.: 07-215941

DISREGARD PRINTS BEARING EARLIER REVISION DATES

REVISION DATES 1-17-12

SHEET 59 OF 72

FILE => 53-3062-y-a-ddet.dgn

USERNAME => s114926 DATE PLOTTED => 14-APR-2012 TIME PLOTTED => 10:57

DIST	COUNTY	ROUTE	POST MILES TOTAL PROJECT	SHEET No.	TOTAL SHEETS
07	LA	5	4.0/5.9	1140	1597

Anthony T. Logus 12-12-11
REGISTERED CIVIL ENGINEER DATE

4-9-12
PLANS APPROVAL DATE

REGISTERED PROFESSIONAL ENGINEER Anthony T. Logus No. C68189 Exp. 09-30-13 CIVIL STATE OF CALIFORNIA

The State of California or its officers or agents shall not be responsible for the accuracy or completeness of electronic copies of this plan sheet.

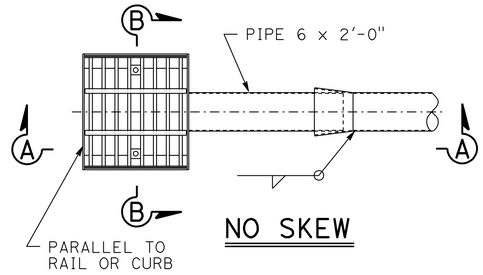

NO SKEW

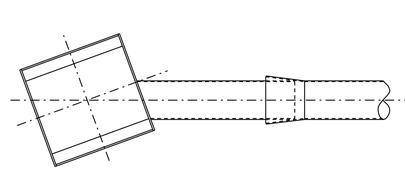

SKEW TO 20°

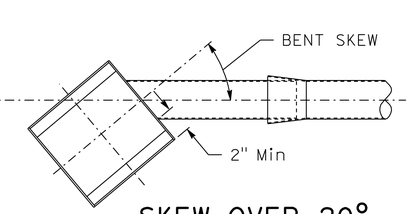

SKEW OVER 20°

PLAN-DECK DRAIN ASSEMBLY

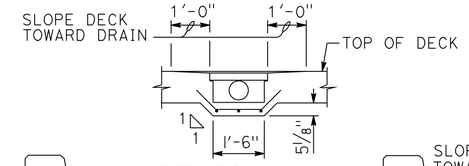

SECTION C-C

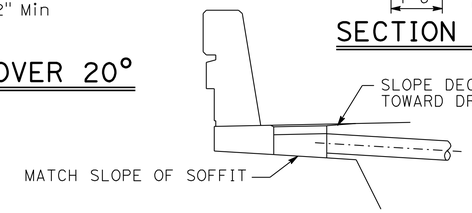

DRAIN FLUSH W/OVERHANG

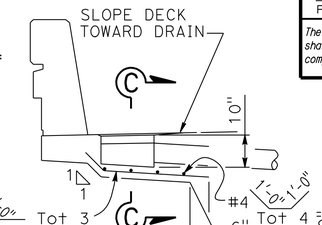

DRAIN W/HAUNCH OVERHANG

2

ELEVATION-DECK DRAIN LOCATIONS

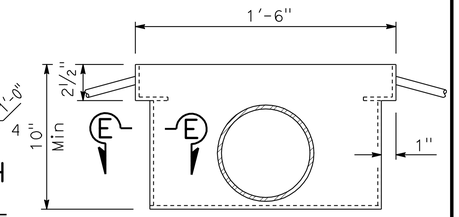

VIEW D-D

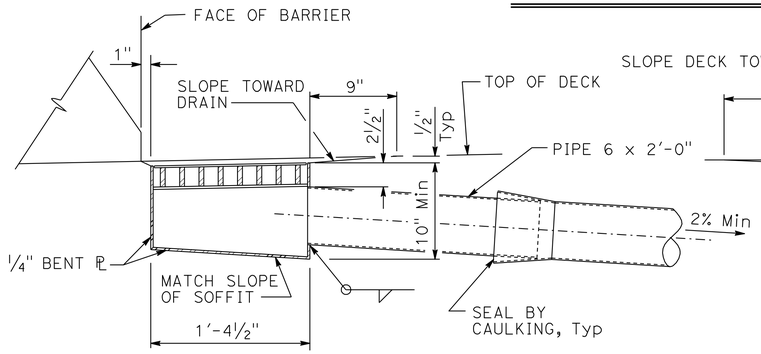

SECTION A-A

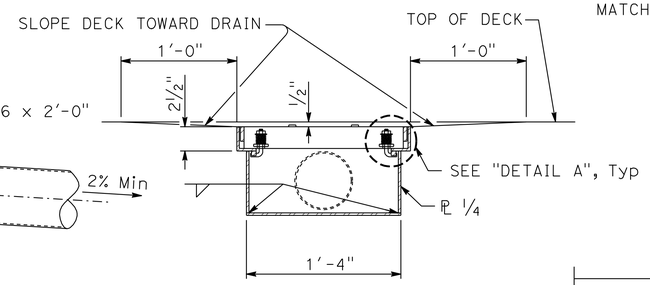

SECTION B-B

DECK DRAIN ASSEMBLY DETAIL

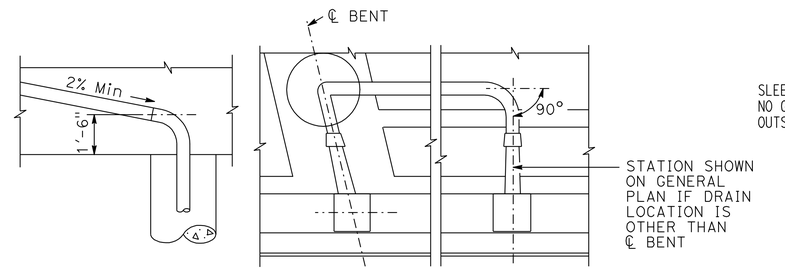

VERTICAL HORIZONTAL

DRAIN PIPE ALIGNMENT

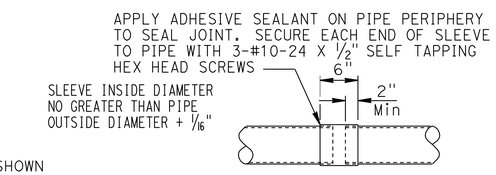

SLEEVE CONNECTION

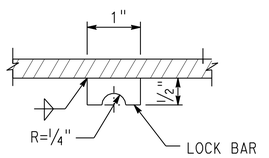

LOCK BAR

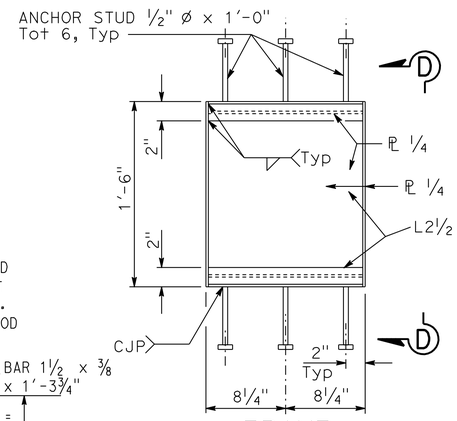

FRAME

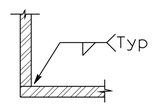

SECTION E-E

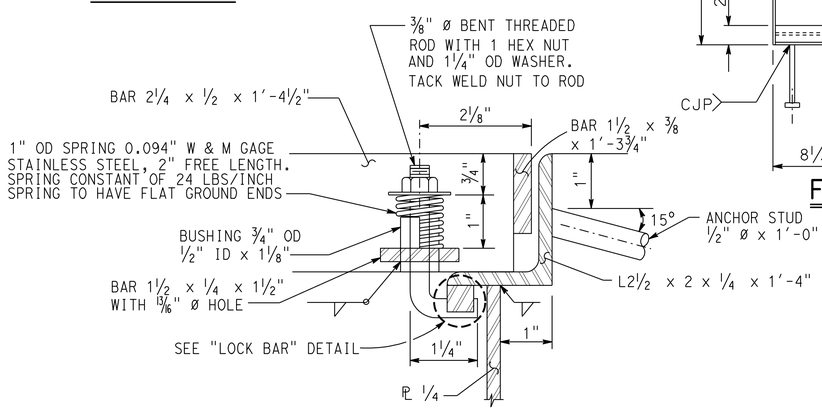

DETAIL A

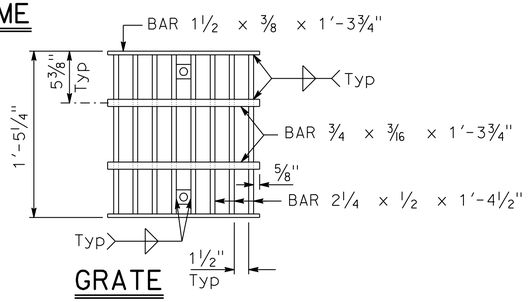

GRATE

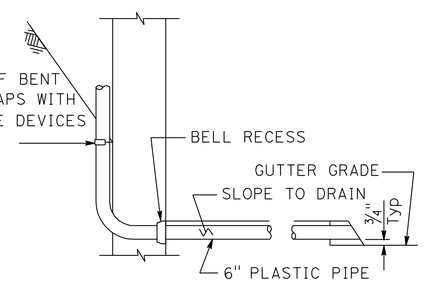

AT WALL TYPE BENT

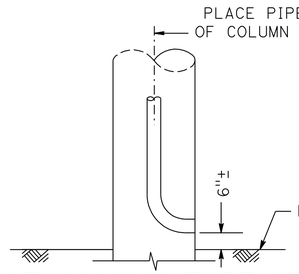

AT COLUMN TYPE BENT ABOVE GROUND

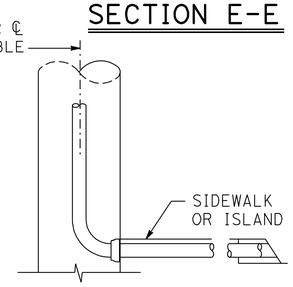

AT COLUMN TYPE BENT UNDER CURB

DRAIN OUTLET

NOTE:

All pipe to be NPS 6 x 0.135" welded steel pipe except as noted and galvanized if not encased in concrete. Fittings and bends shall have a minimum wall thickness of 1/8". All joints or connections to be butt welded or connected by a steel pipe sleeve and to be smooth throughout inside of pipe except as noted. All bends to be on 1'-6" minimum radius measured along ℄ pipe. All bends to be supported by suitable galvanized hangers @ 10'-0" maximum spacing throughout. Galvanize deck drain assembly after fabrication

NO SCALE

1 SPECIAL DETAILS

REVISED STANDARD DRAWING

FILE NO. xs10-020

APPROVAL DATE July 2011

1 MODIFIED TITLE
2 MODIFIED DETAIL

STATE OF CALIFORNIA DEPARTMENT OF TRANSPORTATION

DIVISION OF ENGINEERING SERVICES

BRIDGE NO. 53-3062
POST MILE 5.12

PIONEER Blvd UC (REPLACE)
DECK DRAIN - TYPE D-2 (Mod 1)

DS OSD 2147A (ENGLISH STANDARD DRAWING "XS" BORDER REV. (02-02-11)

ORIGINAL SCALE IN INCHES FOR REDUCED PLANS 0 1 2 3

UNIT: 3604
PROJECT NUMBER & PHASE: 0700001834 1
CONTRACT NO.: 215941

DISREGARD PRINTS BEARING EARLIER REVISION DATES

REVISION DATES 11-22-11 12-9-11 3-16-12

SHEET 60 OF 72

FILE => 53-3062-y-xs10-020.dgn

USERNAME => s114926 DATE PLOTTED => 14-APR-2012 TIME PLOTTED => 10:57

DIST	COUNTY	ROUTE	POST MILES TOTAL PROJECT	SHEET No.	TOTAL SHEETS
07	LA	5	4.0/5.9	1141	1597

Anthony T. Logus 12-12-11
REGISTERED CIVIL ENGINEER DATE

4-9-12
PLANS APPROVAL DATE

REGISTERED PROFESSIONAL ENGINEER Anthony T. Logus No. C68189 Exp. 09-30-13 CIVIL STATE OF CALIFORNIA

The State of California or its officers or agents shall not be responsible for the accuracy or completeness of electronic copies of this plan sheet.

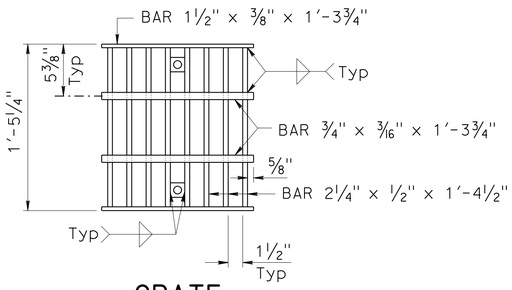

GRATE

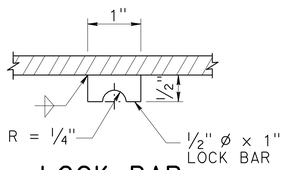

LOCK BAR

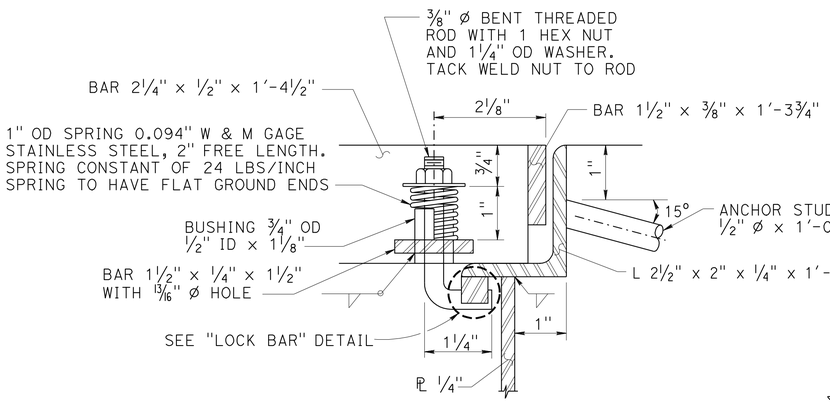

DETAIL A

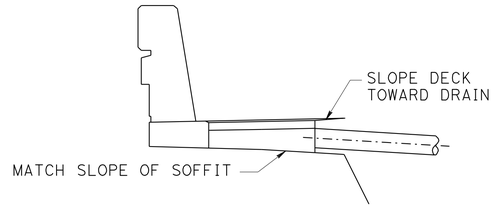

DRAIN FLUSH W/OVERHANG

ELEVATION-DECK DRAIN LOCATIONS

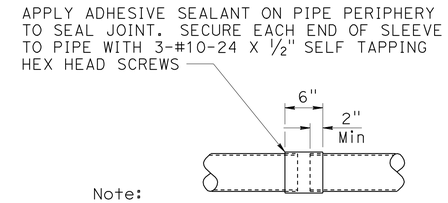

Note:

Sleeve inside diameter shall be no greater than pipe outside diameter + 1/16"

SLEEVE CONNECTION

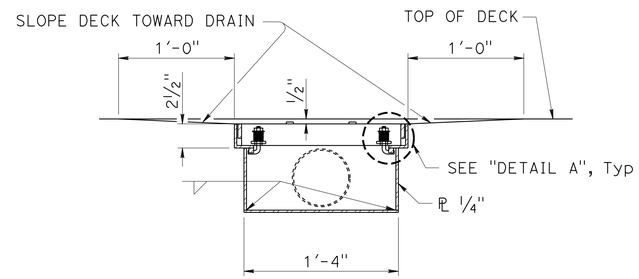

SECTION B-B

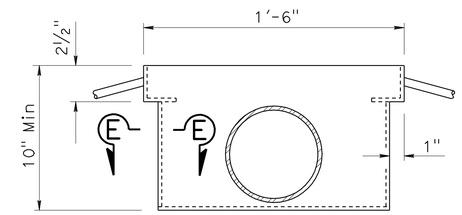

VIEW D-D

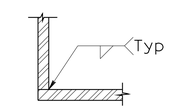

SECTION E-E

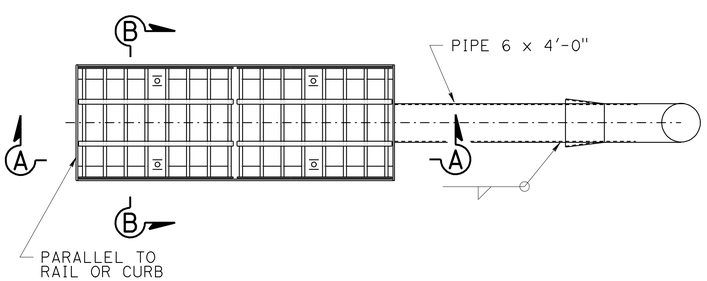

PLAN

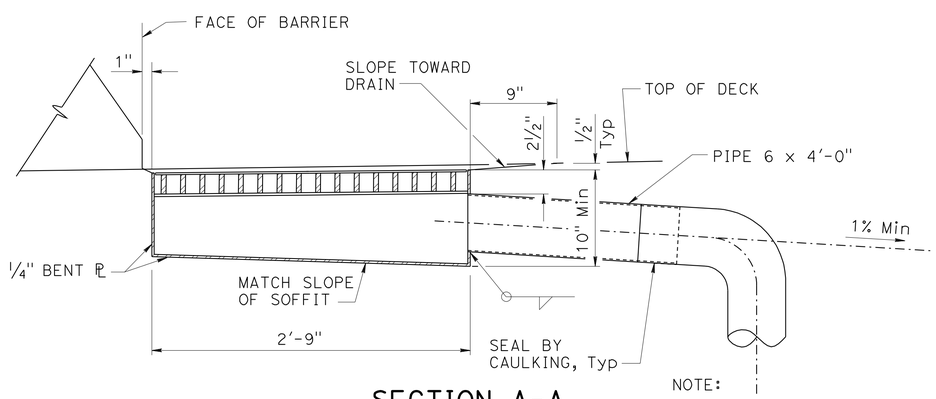

SECTION A-A

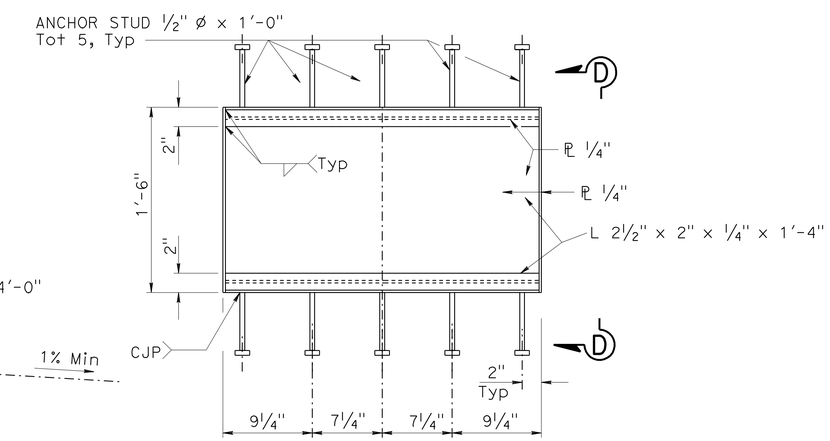

FRAME

NOTE:

All pipe to be NPS 6 x 0.135" welded steel pipe except as noted and galvanized if not encased in concrete. Fittings and bends shall have a minimum wall thickness of 1/8". All joints or connections to be butt welded or connected by a steel pipe sleeve and to be smooth throughout inside of pipe except as noted. All bends to be on 1'-6" minimum radius measured along ℄ pipe. All bends to be supported by suitable galvanized hangers @ 10'-0" maximum spacing throughout. Galvanize deck drain assembly after fabrication

NO SCALE

DECK DRAIN ASSEMBLY DETAIL

	BY	CHECKED
DESIGN	ANTHONY LOGUS	RUSLAN NOVIK
DETAILS	HERMAN MAUROSCHADT	RUSLAN NOVIK
QUANTITIES	SARA YIP	RUSLAN NOVIK

STATE OF CALIFORNIA
DEPARTMENT OF TRANSPORTATION

DIVISION OF ENGINEERING SERVICES
STRUCTURE DESIGN
DESIGN BRANCH 15

BRIDGE NO. 53-3062
POST MILE 5.12

PIONEER Blvd UC (REPLACE)
DECK DRAIN - TYPE D-2 (Mod 2)

STRUCTURES DESIGN DETAIL SHEET (ENGLISH) (REV. 09-01-10)

ORIGINAL SCALE IN INCHES FOR REDUCED PLANS 0 1 2 3

UNIT: 3604
PROJECT NUMBER & PHASE: 0700001834 1
CONTRACT NO.: 07-215941

DISREGARD PRINTS BEARING EARLIER REVISION DATES

REVISION DATES 1-17-12

SHEET 61 OF 72

FILE => 53-3062-y-xs10-021.dgn

USERNAME => s114926 DATE PLOTTED => 14-APR-2012 TIME PLOTTED => 10:57

DIST	COUNTY	ROUTE	POST MILES TOTAL PROJECT	SHEET No.	TOTAL SHEETS
07	LA	5	4.0/5.9	1142	1597

Anthony T. Logus 12-12-11
REGISTERED CIVIL ENGINEER DATE

4-9-12
PLANS APPROVAL DATE

REGISTERED PROFESSIONAL ENGINEER Anthony T. Logus No. C68189 Exp. 09-30-13 CIVIL STATE OF CALIFORNIA

The State of California or its officers or agents shall not be responsible for the accuracy or completeness of electronic copies of this plan sheet.

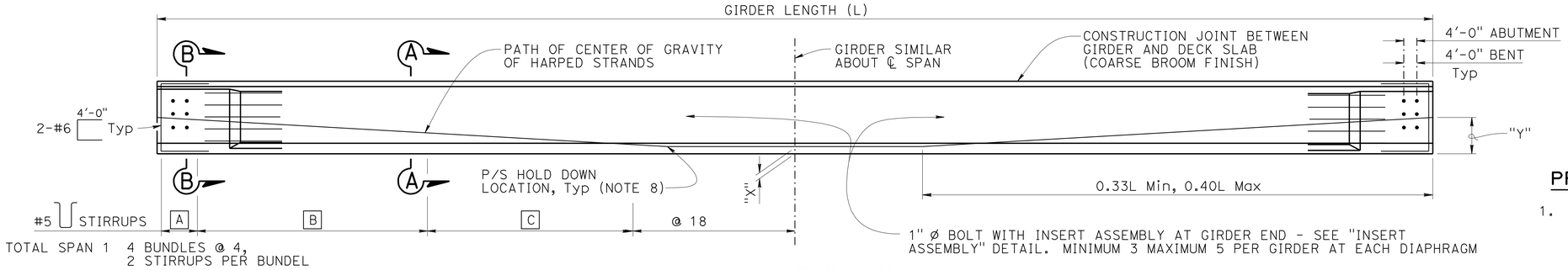

TOTAL SPAN 1 4 BUNDLES @ 4, 2 STIRRUPS PER BUNDEL

TOTAL SPAN 2 4 BUNDLES @ 4, 2 STIRRUPS PER BUNDEL

GIRDER ELEVATION

NOTES:
1. Girder ends to be cast such that a level surface is provided at bearing pads
2. For "SECTION A-A" and "SECTION B-B" see "PC/PS BULB-TEE GIRDER (MISCELLANEOUS DETAILS)" sheet.
3. For "WELDED WIRE REINFORCEMENT (WWR) ALTERNATIVE", see "PC/PS BULB-TEE GIRDER (MISCELLANEOUS DETAILS)" sheet

STIRRUP SPACING TABLE

STAGE 1

LOCATION	A	B	C
GIRDER A	4 @ 4	30 @ 6	20 @ 9
GIRDER B	4 @ 4	30 @ 6	20 @ 9
GIRDER C	4 @ 4	30 @ 6	20 @ 9
GIRDER D	4 @ 4	30 @ 6	20 @ 9
GIRDER E	4 @ 4	30 @ 6	20 @ 9
GIRDER F	4 @ 4	30 @ 6	20 @ 9
GIRDER G	4 @ 4	30 @ 6	20 @ 9
GIRDER H	4 @ 4	30 @ 6	20 @ 9
GIRDER I	4 @ 4	30 @ 6	20 @ 9

STAGE 2

LOCATION	A	B	C
GIRDER A	4 @ 4	30 @ 6	20 @ 9
GIRDER J	4 @ 4	30 @ 6	20 @ 9
GIRDER K	4 @ 4	30 @ 6	20 @ 9

STAGE 3

LOCATION	A	B	C
GIRDER A	4 @ 4	30 @ 6	20 @ 9
GIRDER A-2	4 @ 4	30 @ 6	20 @ 9
GIRDER L	4 @ 4	30 @ 6	20 @ 9
GIRDER M	4 @ 4	30 @ 6	20 @ 9
GIRDER N	4 @ 4	30 @ 6	20 @ 9

GIRDER TABLE

STAGE 1

LOCATION	GIRDER LENGTH (L)	GIRDER DEPTH (D)	"X" (in)	JACKING FORCE (P) (kips)	As, Min (in^2)	"Y" (in)	CONCRETE STRENGTH (ksi)		MIDSPAN DEAD LOAD DEFLECTION (in)		
							f'ci	f'c	DECK	RAIL	SW/FWS
GIRDER A	96.10	49.52	4	1100	5.432	8	5	8	0.95	0.03	0.07
GIRDER B	81.20	49.52	4	790	3.91	8	5	8	0.47	0.01	0.03
GIRDER C	82.80	49.52	4	790	3.91	8	5	8	0.56	0.01	0.03
GIRDER D	84.40	49.52	4	790	3.91	8	5	8	0.62	0.01	0.03
GIRDER E	86.00	49.52	4	800	3.95	8	5	8	0.67	0.01	0.04
GIRDER F	87.60	49.52	4	820	4.05	8	5	8	0.74	0.02	0.04
GIRDER G	89.20	49.52	4	860	4.25	8	5	8	0.79	0.02	0.05
GIRDER H	90.80	49.52	4	880	4.34	8	5	8	0.84	0.02	0.05
GIRDER I	92.40	49.52	4	930	4.60	8	5	8	0.93	0.02	0.06

STAGE 2

LOCATION	GIRDER LENGTH (L)	GIRDER DEPTH (D)	"X" (in)	JACKING FORCE (P) (kips)	As, Min (in^2)	"Y" (in)	CONCRETE STRENGTH (ksi)		MIDSPAN DEAD LOAD DEFLECTION (in)		
							f'ci	f'c	DECK	RAIL	SW/FWS
GIRDER A	96.10	49.52	4	1100	6.432	8	5	8	0.95	0.03	0.07
GIRDER J	94.00	49.52	4	970	4.78	8	5	8	0.47	0.01	0.03
GIRDER K	95.60	49.52	4	970	4.78	8	5	8	0.56	0.01	0.03

STAGE 3

LOCATION	GIRDER LENGTH (L)	GIRDER DEPTH (D)	"X" (in)	JACKING FORCE (P) (kips)	As, Min (in^2)	"Y" (in)	CONCRETE STRENGTH (ksi)		MIDSPAN DEAD LOAD DEFLECTION (in)		
							f'ci	f'c	DECK	RAIL	SW/FWS
GIRDER A	96.10	49.52	4	970	4.78	8	5	8	0.95	0.03	0.07
GIRDER A-2	96.10	49.52	4	1000	4.93	8	5	8	0.95	0.03	0.07
GIRDER L	93.95	49.52	4	1100	5.432	8	5	8	0.47	0.01	0.03
GIRDER M	92.95	49.52	4	1000	4.93	8	5	8	0.56	0.01	0.03
GIRDER N	93.95	49.52	4	1100	5.432	8	5	8	0.56	0.01	0.03

PRESTRESSING NOTES

1. The Jacking Force (P) is the jacking force required at the point of control along the span. The jacking force does not include any fabrication specific losses
2. The maximum tensile stress in the prestressing steel upon release shall not exceed 75% of thespecified minimum ultimate tensile strength of the prestressing steel
3. The maximum temporary tensile stress (jacking stress) in the prestressing steel shall not exceed 80% of the specified minimum ultimate tensile strength of the prestressing steel
4. Concrete strength:
   f'ci is at time of initial stressing
   f'c is at 28 days
5. Deflection components are informational and will be used to set screed line elevations
6. Screed line elevations for deck concrete will be determined by the Engineer
7. Contractor may interpolate "P" and "X" values between the limits shown, as approved by the Engineer
8. There shall be a minimum of two hold downs per girder for the prestressing
9. Prestressing strand shall be 270 ksi low relaxation
10. As, Min is the minimum area required of prestressing steel

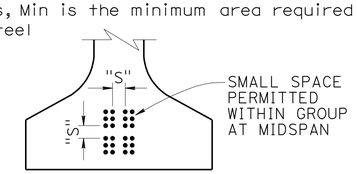

CLEARANCES FOR PRETENSIONED STRANDS

NOTES:
1. Strands may be bundled in groups consisting of 3 vertically, 2 horizontally, and separated at the ends
2. The minimum distance "S" between groups or individual strands is 1¾" for 0.5" Ø strand and 2" for 0.6" Ø strand
3. "S" is measured between centers of adjacent strands
4. Approval by Engineer is required for deviation
5. End Bolts at Abutment Ends only

	BY	CHECKED
DESIGN	ANTHONY LOGUS	RUSLAN NOVIK
DETAILS	HERMAN MAUROSCHADT	RUSLAN NOVIK
QUANTITIES	SARA YIP	RUSLAN NOVIK

STATE OF CALIFORNIA
DEPARTMENT OF TRANSPORTATION

DIVISION OF ENGINEERING SERVICES
STRUCTURE DESIGN
DESIGN BRANCH 15

BRIDGE NO. 53-3062
POST MILE 5.12

PIONEER Blvd UC (REPLACE)
PC/PS BULB-TEE GIRDER (HARPED STRANDS)

STRUCTURES DESIGN DETAIL SHEET (ENGLISH) (REV. 09-01-10)

ORIGINAL SCALE IN INCHES FOR REDUCED PLANS 0 1 2 3

UNIT: 3604
PROJECT NUMBER & PHASE: 0700001834 1
CONTRACT NO.: 07-215941

DISREGARD PRINTS BEARING EARLIER REVISION DATES

REVISION DATES 11-17-11 12-7-11 12-13-11 2-17-12

SHEET 62 OF 72

FILE => 53-3062-y-xs1-122-1.dgn

USERNAME => s114936 DATE PLOTTED => 14-APR-2012 TIME PLOTTED => 10:58

DIST	COUNTY	ROUTE	POST MILES TOTAL PROJECT	SHEET No.	TOTAL SHEETS
07	LA	5	4.0/5.9	1143	1597

Anthony T. Logus 12-12-11
REGISTERED CIVIL ENGINEER DATE

4-9-12
PLANS APPROVAL DATE

REGISTERED PROFESSIONAL ENGINEER Anthony T. Logus No. C68189 Exp. 09-30-13 CIVIL STATE OF CALIFORNIA

The State of California or its officers or agents shall not be responsible for the accuracy or completeness of electronic copies of this plan sheet.

END BLOCK - TABLE

STAGE 1

LOCATION	ABUTMENT 1	BENT 2	ABUTMENT 3
GIRDER A	8'-0"	9'-3"	
GIRDER B		9'-3"	8'-0"
GIRDER C		9'-3"	8'-0"
GIRDER D		9'-3"	8'-0"
GIRDER E		9'-3"	8'-0"
GIRDER F		9'-3"	8'-0"
GIRDER G		9'-3"	8'-0"
GIRDER H		9'-3"	8'-0"
GIRDER I		9'-3"	8'-0"

STAGE 2

LOCATION	ABUTMENT 1	BENT 2	ABUTMENT 3
GIRDER A	8'-0"	9'-3"	
GIRDER J		9'-3"	8'-0"
GIRDER K		9'-3"	8'-0"

STAGE 3

LOCATION	ABUTMENT 1	BENT 2	ABUTMENT 3
GIRDER A	8'-0"	9'-3"	8'-0"
GIRDER A-2	8'-0"	9'-3"	
GIRDER L	8'-0"	9'-3"	
GIRDER M		9'-3"	8'-0"
GIRDER N		9'-3"	8'-0"

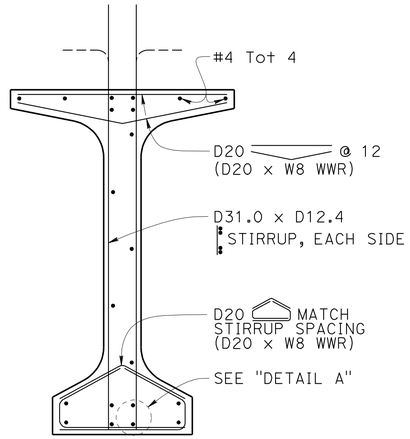

NOTES:

1. For details shown but not noted, see "TYPICAL GIRDER SECTION" detail
2. W8 WWR not shown

WELDED WIRE REINFORCEMENT (WWR) ALTERNATIVE

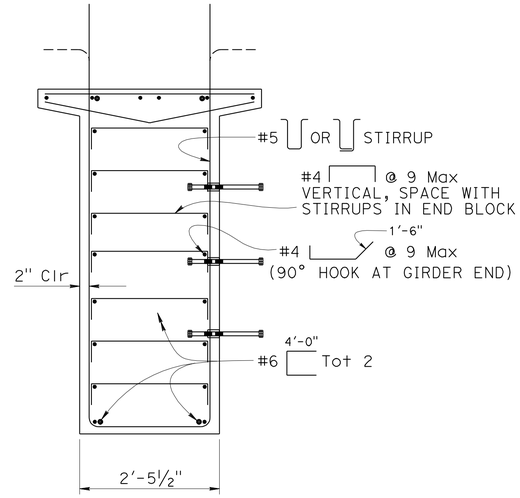

NOTE:

For details not shown, see "INTERIOR GIRDER" detail

EXTERIOR GIRDER

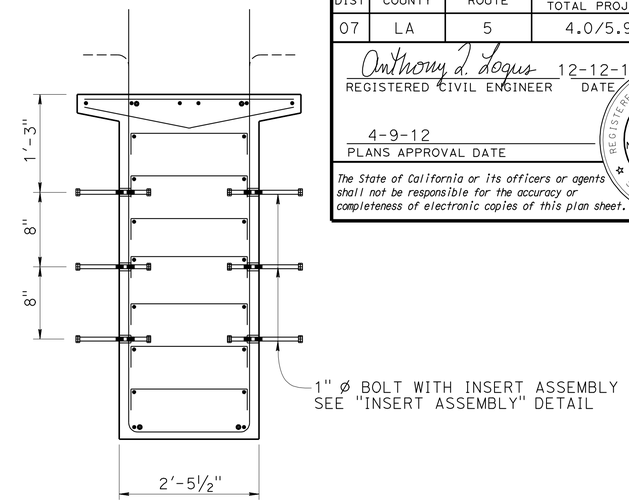

NOTE:

For details not shown, see "EXTERIOR GIRDER" detail

INTERIOR GIRDER

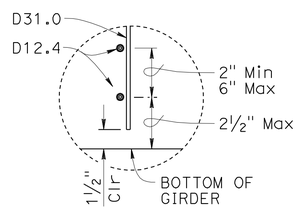

NOTES:

1. Bottom of stirrup WWR detail shown, top similar.
2. Longitudinal wire area shall be 40% or greater of vertical deformed wire's area

DETAIL A

SECTION B-B

No Scale

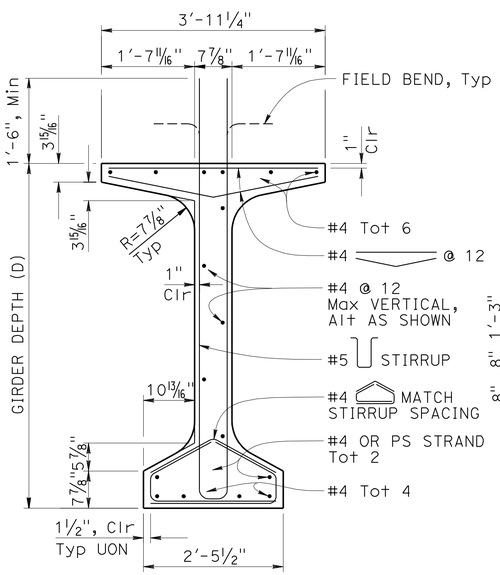

SECTION A-A

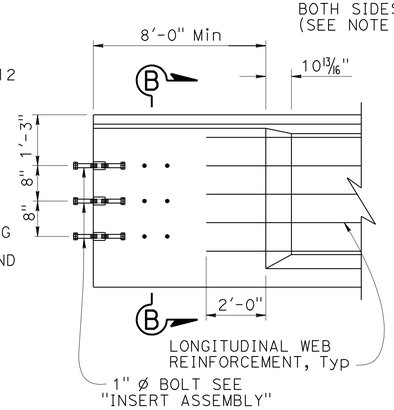

END BLOCK - ELEVATION

No Scale

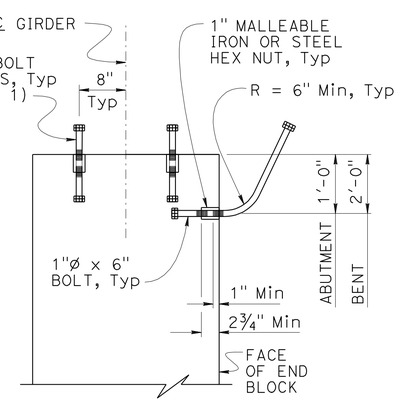

OBTUSE CORNER

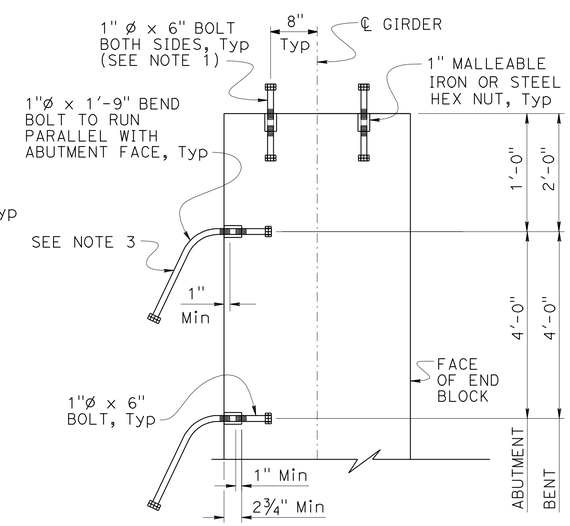

ACUTE CORNER

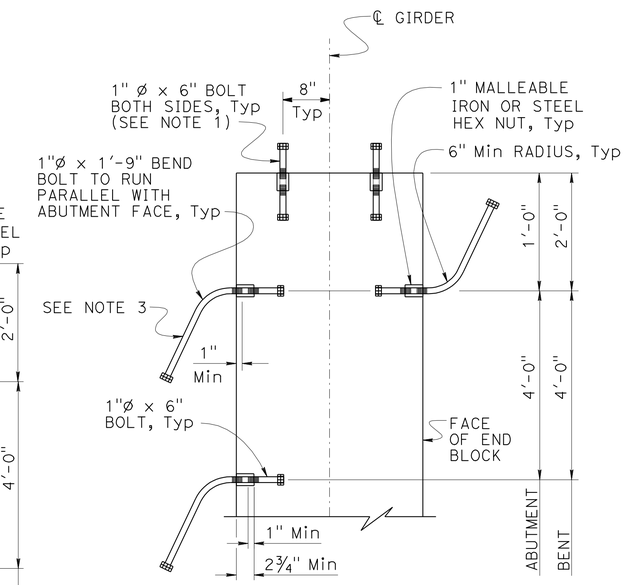

INSERT ASSEMBLY - INTERIOR GIRDER

NOTES:

1. End Bolts at Abutment Ends only.
2. For "GIRDER ELEVATION" see "PC/PS BULB-TEE GIRDER (HARPED STRANDS)" sheet.
3. To avoid interference with Backwall place Bolt, Abutment side, before placing Girder.

INSERT ASSEMBLY

No Scale

	BY	CHECKED
DESIGN	ANTHONY LOGUS	RUSLAN NOVIK
DETAILS	HERMAN MAUROSCHADT	RUSLAN NOVIK
QUANTITIES	SARA YIP	RUSLAN NOVIK

STATE OF CALIFORNIA
DEPARTMENT OF TRANSPORTATION

DIVISION OF ENGINEERING SERVICES
STRUCTURE DESIGN
DESIGN BRANCH 15

BRIDGE NO. 53-3062
POST MILE 5.12

PIONEER Blvd UC (REPLACE)
PC/PS BULB-TEE GIRDER (MISCELLANEOUS DETAILS)

STRUCTURES DESIGN DETAIL SHEET (ENGLISH) (REV. 09-01-10)

ORIGINAL SCALE IN INCHES FOR REDUCED PLANS 0 1 2 3

UNIT: 3604
PROJECT NUMBER & PHASE: 0700001834 1
CONTRACT NO.: 07-215941

DISREGARD PRINTS BEARING EARLIER REVISION DATES

REVISION DATES: 2-17-12

SHEET 63 OF 72

FILE => 53-3062-y-xs1-123.dgn

USERNAME => s114926 DATE PLOTTED => 14-APR-2012 TIME PLOTTED => 10:58

DIST	COUNTY	ROUTE	POST MILES TOTAL PROJECT	SHEET No.	TOTAL SHEETS
07	LA	5	4.0/5.9	1144	1597

Anthony T. Logus 12-12-11
REGISTERED CIVIL ENGINEER DATE

4-9-12
PLANS APPROVAL DATE

REGISTERED PROFESSIONAL ENGINEER Anthony T. Logus No. C68189 Exp. 09-30-13 CIVIL STATE OF CALIFORNIA

The State of California or its officers or agents shall not be responsible for the accuracy or completeness of electronic copies of this plan sheet.

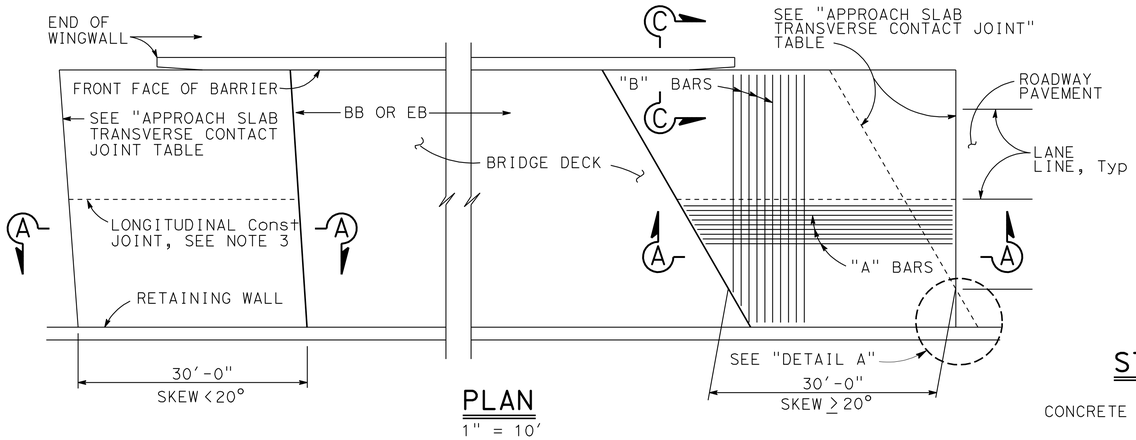

PLAN
1" = 10'

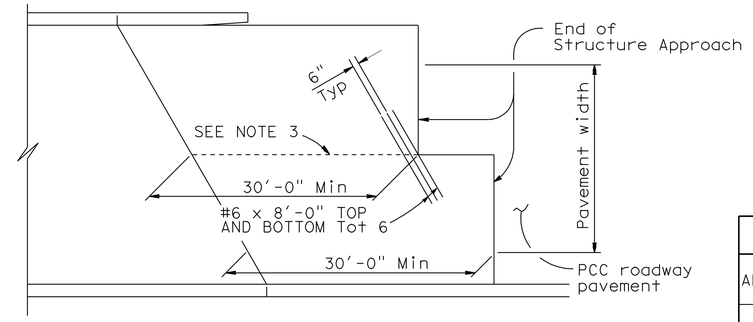

STRUCTURE APPROACH - END STAGGER DETAIL
No Scale

APPROACH SLAB TRANSVERSE CONTACT JOINT		
APPROACH SKEW	WITH AC ROADWAY PAVEMENT	WITH PCC ROADWAY PAVEMENT
< 20°	PARALLEL TO FACE OF PN	PARALLEL TO FACE OF PN
20° - 45°	PARALLEL TO FACE OF PN USE "DETAIL A"	STAGGER LINES 24' TO 36' APART
> 45°	PARALLEL TO FACE OF PN USE "DETAIL A"	STAGGER AT EACH LANE LINE

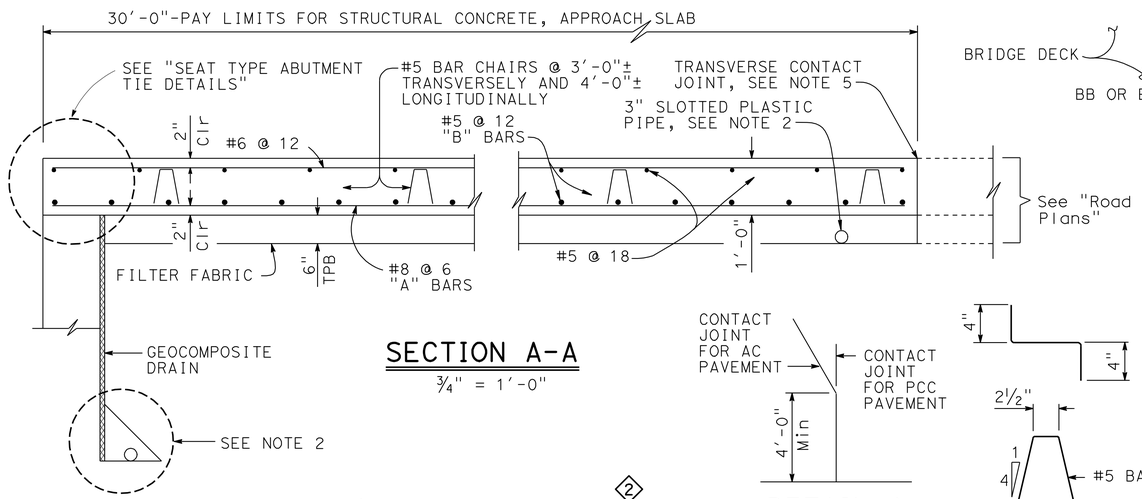

SECTION A-A
¾" = 1'-0"

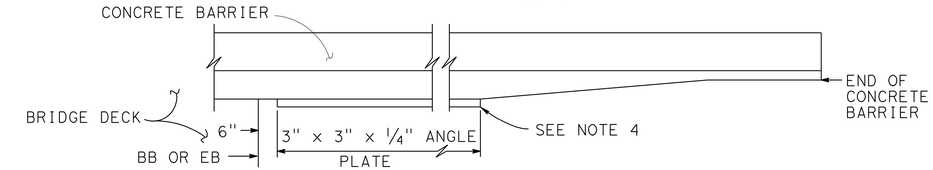

EDGE ANGLE DETAIL
½" = 1'-0"

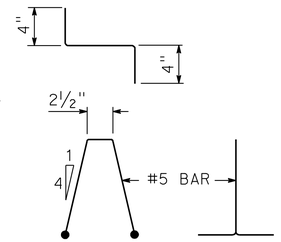

DETAIL A
No Scale

BAR CHAIR DETAIL
1½" = 1'-0"

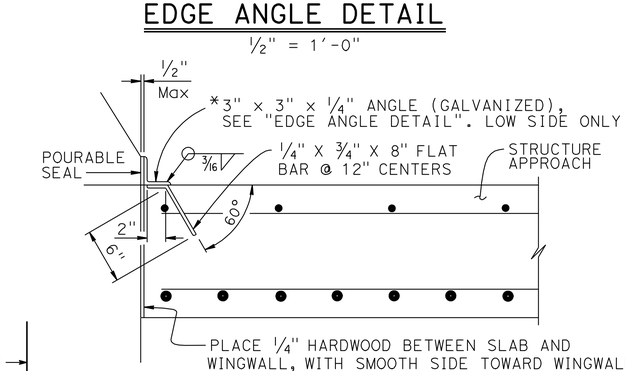

*(TO BE USED WITH CONCRETE BARRIER WITH VERTICAL FACE)

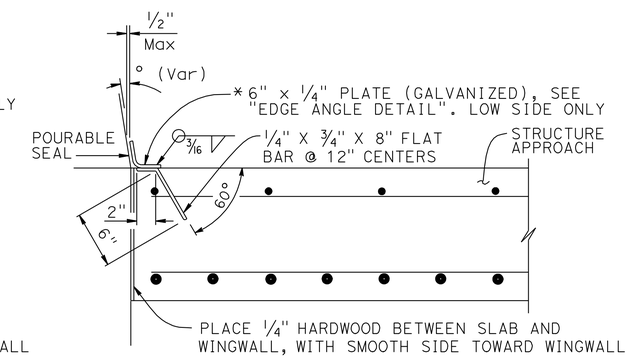

*(TO BE USED WITH CONCRETE BARRIER WITH SLOPING FACE)

DETAIL B
1½" = 1'-0"

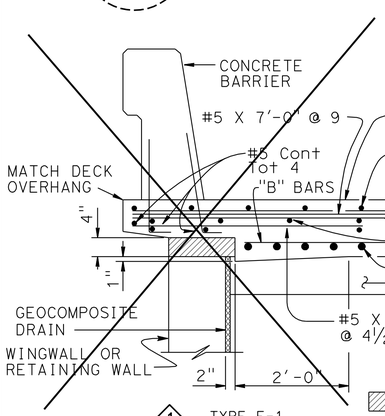

1 TYPE E-1

Remove all polystyrene

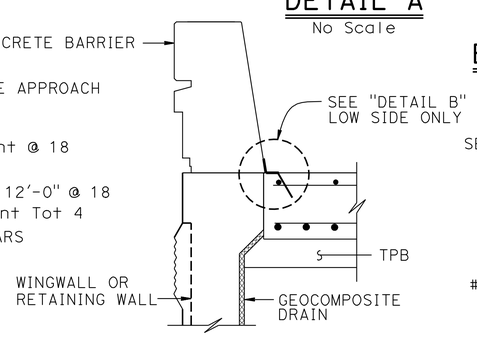

TYPE E-2

SECTION C-C
¾" = 1'-0"

(Type E-1 to be used, unless otherwise shown on plans)

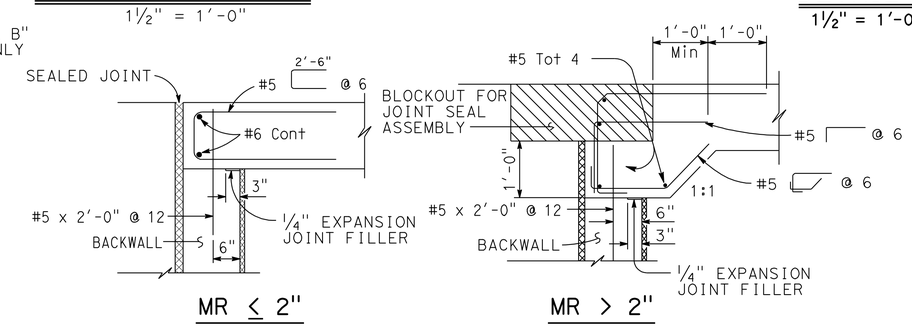

MR ≤ 2" MR > 2"

SEAT TYPE ABUTMENT TIE DETAILS (SEE NOTE 1)
¾" = 1'-0"

NOTES:

1. For details not shown, see Structure Plans. For MR ≤ 2", adjust bar reinforcement to clear a sawcut for sealed joint, when required
2. For drainage details, see "STRUCTURE APPROACH DRAINAGE DETAILS" sheet
3. Longitudinal construction joints, when permitted by the Engineer, shall be located on lane lines
4. End angle or plate at beginning of barrier transition, end of wingwall or end of structure approach as applicable
5. For transverse contact joint with new PCC paving, refer to Standard Plan RPS P10 ◇3
6. At the Contractor's option, approach slab transverse reinforcement may be placed parallel to paving notch. Spacing of transverse reinforcement is measured along ℄ roadway

SPECIAL DETAILS

REVISED STANDARD DRAWING

FILE NO. xs3-120

APPROVAL DATE July 2011

◇1 DELETED DETAIL
◇2 MODIFIED DETAIL
◇3 REVISED NOTES

STATE OF CALIFORNIA
DEPARTMENT OF TRANSPORTATION

DIVISION OF ENGINEERING SERVICES

BRIDGE NO. 53-3062
POST MILE 5.12

PIONEER Blvd UC (REPLACE)
STRUCTURE APPROACH TYPE N(30S)

DS OSD 2147A (ENGLISH STANDARD DRAWING "XS" BORDER REV. (02-02-11)

ORIGINAL SCALE IN INCHES FOR REDUCED PLANS 0 1 2 3

UNIT: 3604
PROJECT NUMBER & PHASE: 0700001834 1
CONTRACT NO.: 07-215941

DISREGARD PRINTS BEARING EARLIER REVISION DATES

REVISION DATES 7-29-11 12-9-11 12-30-11 2-21-12

SHEET 64 OF 72

FILE => 53-3062-y-xs3-120.dgn

USERNAME => s114926 DATE PLOTTED => 14-APR-2012 TIME PLOTTED => 10:58

DIST	COUNTY	ROUTE	POST MILES TOTAL PROJECT	SHEET No.	TOTAL SHEETS
07	LA	5	4.0/5.9	1145	1597

Anthony T. Logus 12-12-11
REGISTERED CIVIL ENGINEER DATE

4-9-12
PLANS APPROVAL DATE

REGISTERED PROFESSIONAL ENGINEER Anthony T. Logus No. C68189 Exp. 09-30-13 CIVIL STATE OF CALIFORNIA

The State of California or its officers or agents shall not be responsible for the accuracy or completeness of electronic copies of this plan sheet.

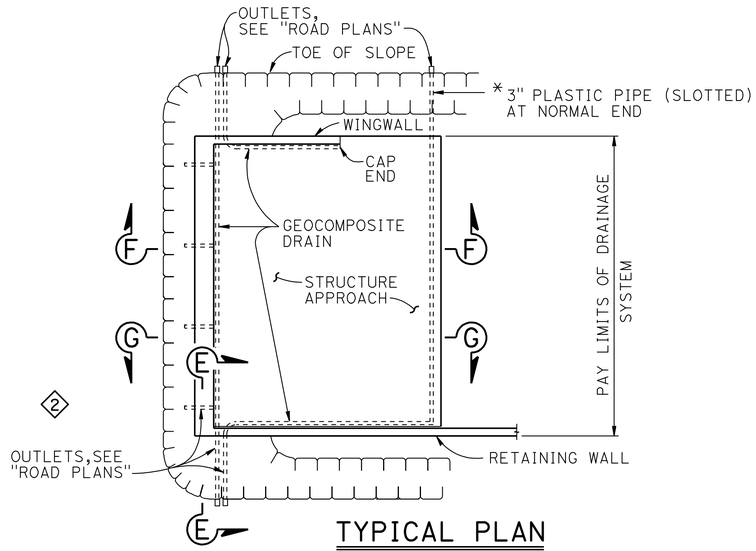

TYPICAL PLAN
1" = 10'

* FOR PIPE LAYOUT AT STAGGERED END, SEE "DETAIL B"

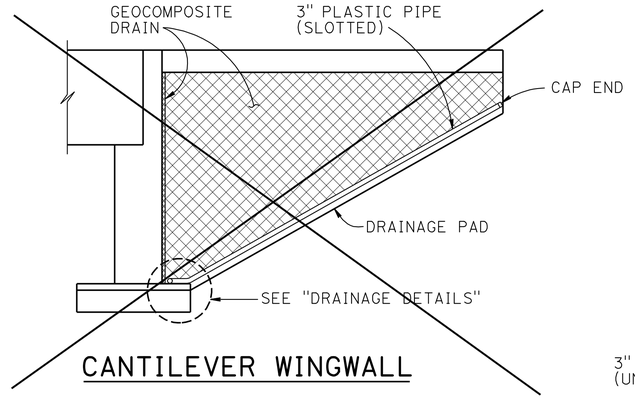

1 SECTION F-F
1/4" = 1'-0"

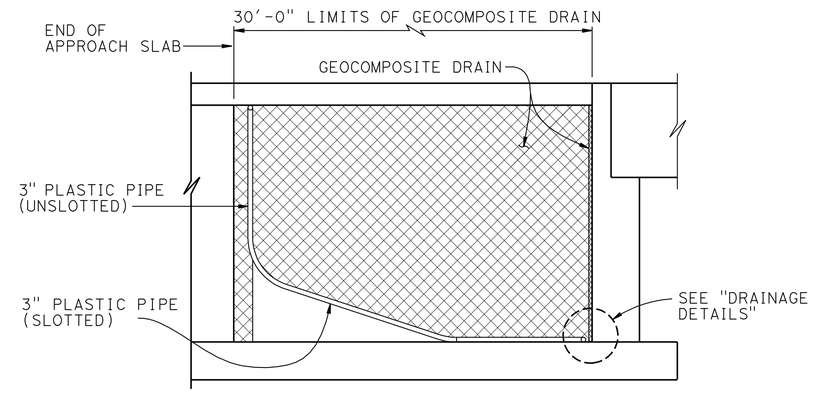

RETAINING WALL WINGWALL DRAINAGE DETAILS

2 SECTION G-G
1/4" = 1'-0"

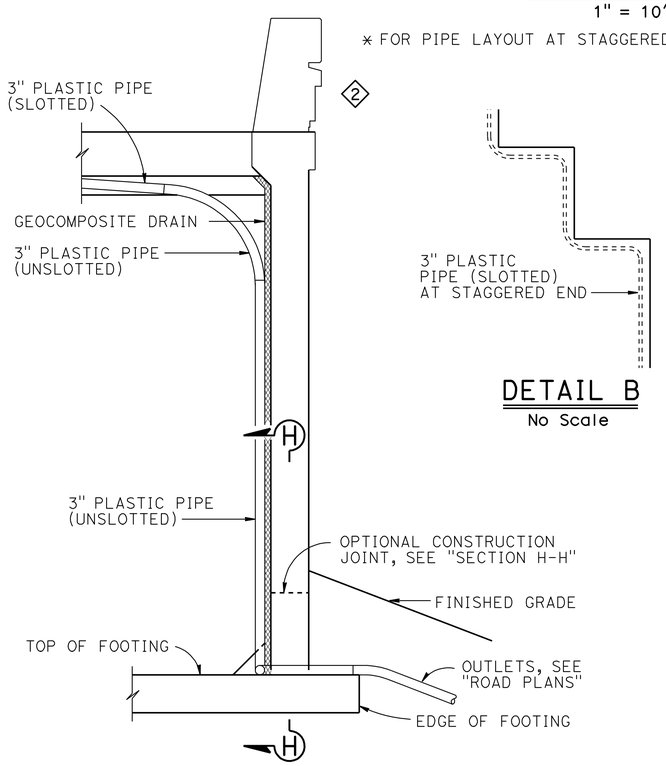

DETAIL B
No Scale

SECTION E-E
1/2" = 1'-0"

NOTE: Bends and junctions in 3" plastic pipe are 30" radius Min

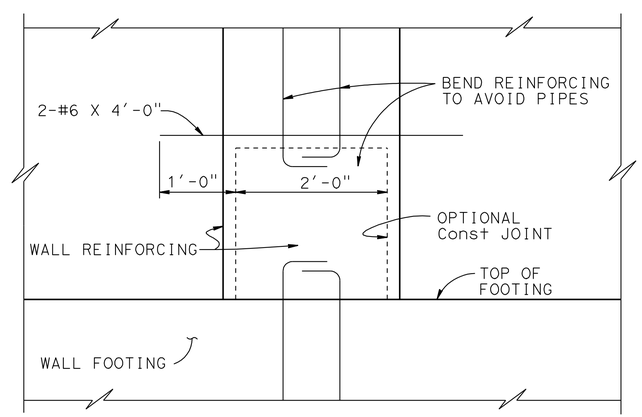

SECTION H-H
1" = 1'-0"

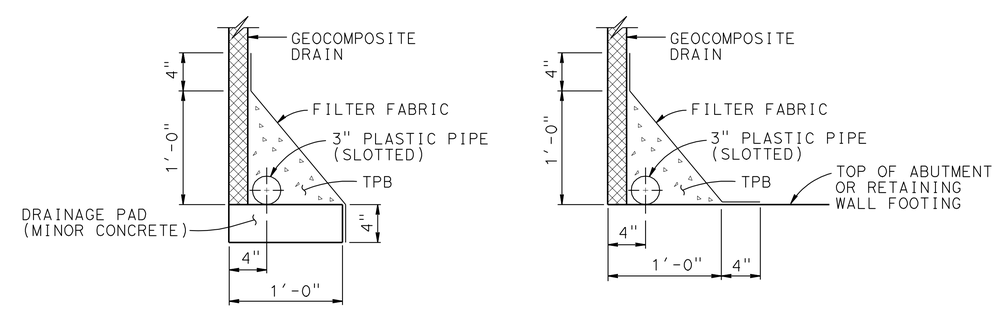

DRAINAGE DETAILS
1 1/2" = 1'-0"

SPECIAL DETAILS

REVISED STANDARD DRAWING		
FILE NO. xs3-110	APPROVAL DATE July 2011	1 DELETED DETAIL 2 MODIFIED DETAIL

STATE OF CALIFORNIA DEPARTMENT OF TRANSPORTATION

DIVISION OF ENGINEERING SERVICES

BRIDGE NO. 53-3062
POST MILE 5.12

PIONEER Blvd UC (REPLACE)
STRUCTURE APPROACH DRAINAGE DETAILS

DS OSD 2147A (ENGLISH STANDARD DRAWING "XS" BORDER REV. (02-02-11)

ORIGINAL SCALE IN INCHES FOR REDUCED PLANS 0 1 2 3

UNIT: 3604
PROJECT NUMBER & PHASE: 0700001834 1
CONTRACT NO.: 07-215941

DISREGARD PRINTS BEARING EARLIER REVISION DATES

REVISION DATES 8-11 12-11 12-30-11

SHEET 65 OF 72

FILE => 53-3062-y-xs3-x-110.dgn

USERNAME => s114926 DATE PLOTTED => 14-APR-2012 TIME PLOTTED => 10:58

DIST	COUNTY	ROUTE	POST MILES TOTAL PROJECT	SHEET No.	TOTAL SHEETS
07	LA	5	4.0/5.9	1146	1597

REGISTERED CIVIL ENGINEER 12-12-11 DATE

4-9-12
PLANS APPROVAL DATE

REGISTERED PROFESSIONAL ENGINEER Amare Tsegie No. C67529 Exp. 6-30-13 CIVIL STATE OF CALIFORNIA

The State of California or its officers or agents shall not be responsible for the accuracy or completeness of electronic copies of this plan sheet.

This LOTB sheet was prepared in accordance with the Caltrans Soil & Rock Logging, Classification, & Presentation Manual (2010 Edition).

PLAN
SCALE 1"=100'

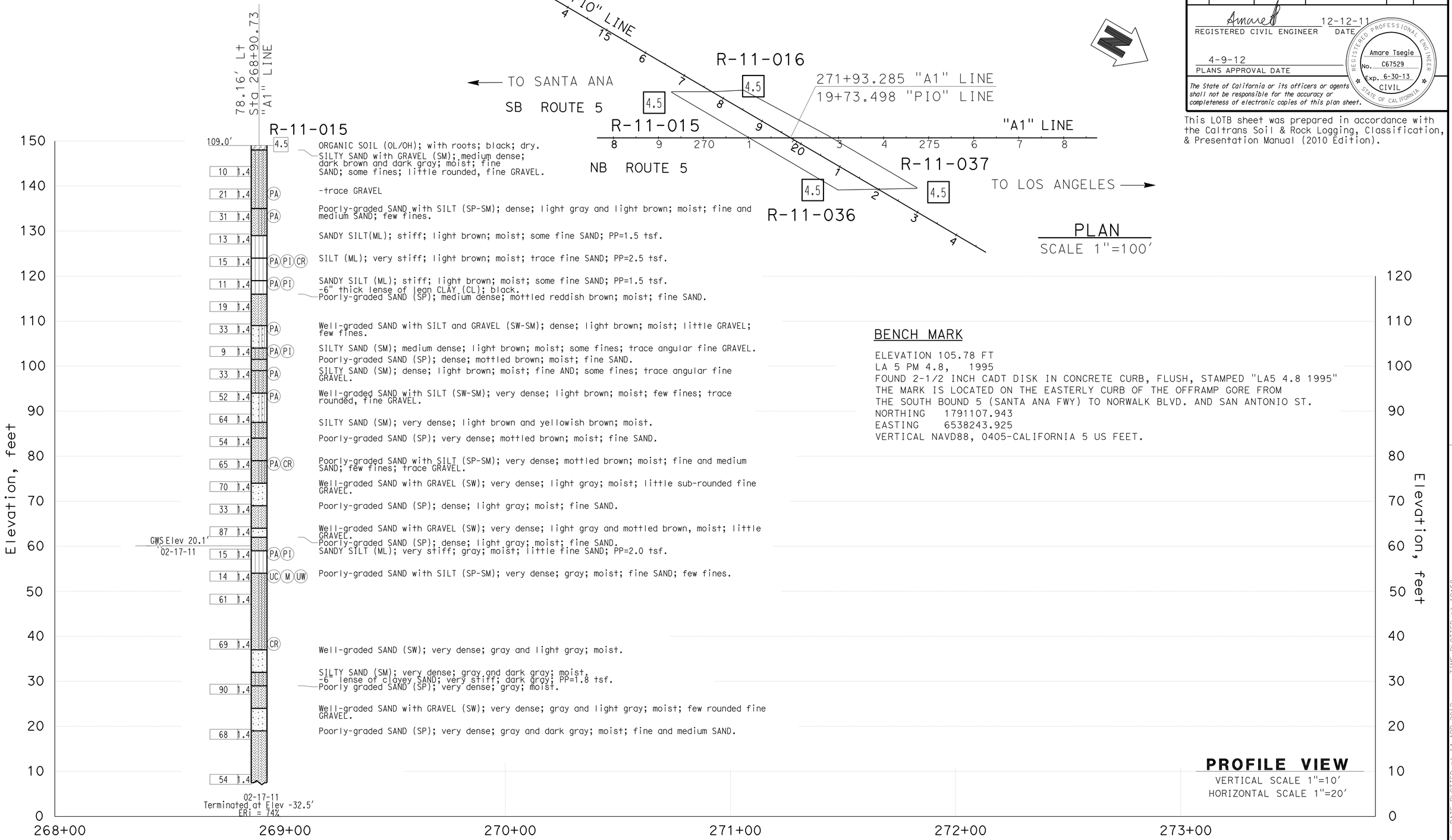

BENCH MARK

ELEVATION 105.78 FT
LA 5 PM 4.8, 1995
FOUND 2-1/2 INCH CADT DISK IN CONCRETE CURB, FLUSH, STAMPED "LA5 4.8 1995"
THE MARK IS LOCATED ON THE EASTERLY CURB OF THE OFFRAMP GORE FROM
THE SOUTH BOUND 5 (SANTA ANA FWY) TO NORWALK BLVD. AND SAN ANTONIO ST.
NORTHING 1791107.943
EASTING 6538243.925
VERTICAL NAVD88, 0405-CALIFORNIA 5 US FEET.

PROFILE VIEW
VERTICAL SCALE 1"=10'
HORIZONTAL SCALE 1"=20'

ENGINEERING SERVICES	MATERIALS AND GEOTECHNICAL SERVICES	STATE OF CALIFORNIA DEPARTMENT OF TRANSPORTATION	DIVISION OF ENGINEERING SERVICES STRUCTURE DESIGN DESIGN BRANCH 15	BRIDGE NO. 53-3062 POST MILE 5.12	PIONEER Blvd UC (REPLACE) LOG OF TEST BORINGS SHEET 1 OF 7
FUNCTIONAL SUPERVISOR NAME: CHI-TSENG LIU	DRAWN BY: P.QUACH / T.Panah (URS CORP) CHECKED BY: F.GERAMI	FIELD INVESTIGATION BY: A.TSEGIE/M.ISLAM			

OGS CIVIL LOG OF TEST BORINGS SHEET

ORIGINAL SCALE IN INCHES FOR REDUCED PLANS 0 1 2 3

UNIT: 3604
PROJECT NUMBER & PHASE: 0700001834 1 CONTRACT NO.: 07-215941

DISREGARD PRINTS BEARING EARLIER REVISION DATES

REVISION DATES 12-9-11 12-12-11 3-16-12

SHEET 66 OF 72

FILE => 53-3062-z-lotb01.dgn

USERNAME => s114926 DATE PLOTTED => 14-APR-2012 TIME PLOTTED => 10:58

DIST	COUNTY	ROUTE	POST MILES TOTAL PROJECT	SHEET No.	TOTAL SHEETS
07	LA	5	4.0/5.9	1147	1597

REGISTERED CIVIL ENGINEER — DATE 12-12-11

4-9-12
PLANS APPROVAL DATE

REGISTERED PROFESSIONAL ENGINEER — Amare Tsegie — No. C67529 — Exp. 6-30-13 — CIVIL — STATE OF CALIFORNIA

The State of California or its officers or agents shall not be responsible for the accuracy or completeness of electronic copies of this plan sheet.

This LOTB sheet was prepared in accordance with the Caltrans Soil & Rock Logging, Classification, & Presentation Manual (2010 Edition).

FOR PLAN VIEW, SEE
"LOG OF TEST BORINGS" 1 OF 7

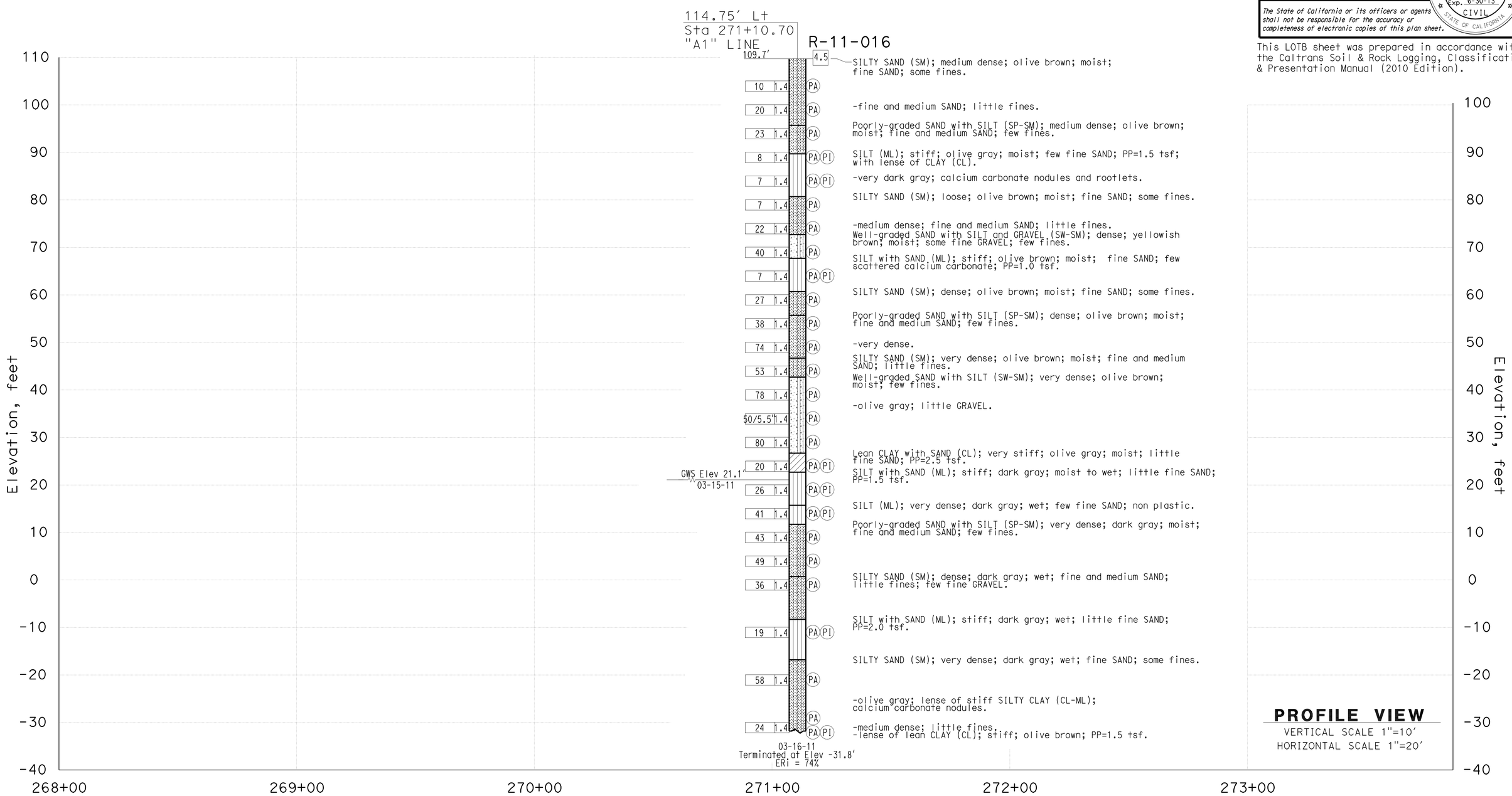

ENGINEERING SERVICES	MATERIALS AND GEOTECHNICAL SERVICES	STATE OF CALIFORNIA DEPARTMENT OF TRANSPORTATION	DIVISION OF ENGINEERING SERVICES STRUCTURE DESIGN DESIGN BRANCH 15	BRIDGE NO. 53-3062 POST MILE 5.12	PIONEER Blvd UC (REPLACE) LOG OF TEST BORINGS SHEET 2 OF 7
FUNCTIONAL SUPERVISOR NAME: CHI-TSENG LIU	DRAWN BY: P.QUACH / T.Panah (URS CORP) CHECKED BY: F.GERAMI	FIELD INVESTIGATION BY: A.TSEGIE/M.ISLAM			

OGS CIVIL LOG OF TEST BORINGS SHEET

ORIGINAL SCALE IN INCHES FOR REDUCED PLANS 0 1 2 3

UNIT: 3658
PROJECT NUMBER & PHASE: 0700001834 1 CONTRACT NO.: 07-215941

DISREGARD PRINTS BEARING EARLIER REVISION DATES

REVISION DATES: 12-9-11 12-30-11 3-16-12

SHEET 67 OF 72

FILE => 53-3062-z-lotb02.dgn

USERNAME => s114926 DATE PLOTTED => 14-APR-2012 TIME PLOTTED => 10:59

DIST	COUNTY	ROUTE	POST MILES TOTAL PROJECT	SHEET No.	TOTAL SHEETS
07	LA	5	4.0/5.9	1148	1597

REGISTERED CIVIL ENGINEER — DATE 12-12-11

4-9-12
PLANS APPROVAL DATE

REGISTERED PROFESSIONAL ENGINEER — Amare Tsegie — No. C67529 — Exp. 6-30-13 — CIVIL — STATE OF CALIFORNIA

The State of California or its officers or agents shall not be responsible for the accuracy or completeness of electronic copies of this plan sheet.

This LOTB sheet was prepared in accordance with the Caltrans Soil & Rock Logging, Classification, & Presentation Manual (2010 Edition).

FOR PLAN VIEW, SEE
"LOG OF TEST BORINGS" 1 OF 7

ENGINEERING SERVICES	MATERIALS AND GEOTECHNICAL SERVICES	STATE OF CALIFORNIA DEPARTMENT OF TRANSPORTATION	DIVISION OF ENGINEERING SERVICES STRUCTURE DESIGN DESIGN BRANCH 15	BRIDGE NO. 53-3062 POST MILE 5.12	PIONEER Blvd UC (REPLACE) LOG OF TEST BORINGS SHEET 3 OF 7
FUNCTIONAL SUPERVISOR NAME: CHI-TSENG LIU	DRAWN BY: P.QUACH / T.Panah (URS CORP) CHECKED BY: F.GERAMI	FIELD INVESTIGATION BY: A.TSEGIE/M.ISLAM			

OGS CIVIL LOG OF TEST BORINGS SHEET

ORIGINAL SCALE IN INCHES FOR REDUCED PLANS 0 1 2 3

UNIT: 3604
PROJECT NUMBER & PHASE: 0700001834 1 CONTRACT NO.: 07-215941

DISREGARD PRINTS BEARING EARLIER REVISION DATES

REVISION DATES: 12-9-11 12-30-11 3-16-12

SHEET 68 OF 72

FILE => 53-3062-z-lotb03.dgn

USERNAME => s114926 DATE PLOTTED => 14-APR-2012 TIME PLOTTED => 10:59

REFERENCE: CALTRANS SOIL & ROCK LOGGING, CLASSIFICATION, AND PRESENTATION MANUAL (2010)

DIST	COUNTY	ROUTE	POST MILES TOTAL PROJECT	SHEET No.	TOTAL SHEETS
07	LA	5	4.0/5.9	1149	1597

Amare 12-12-11
REGISTERED CIVIL ENGINEER

4-9-12
PLANS APPROVAL DATE

REGISTERED PROFESSIONAL ENGINEER
Amare Tsegie
No. C67529
Exp. 6-30-13
CIVIL
STATE OF CALIFORNIA

The State of California or its officers or agents shall not be responsible for the accuracy or completeness of electronic copies of this plan sheet.

This LOTB sheet was prepared in accordance with the Caltrans Soil & Rock Logging, Classification, & Presentation Manual (2010 Edition).

CEMENTATION

Description	Criteria
Weak	Crumbles or breaks with handling or little finger pressure.
Moderate	Crumbles or breaks with considerable finger pressure.
Strong	Will not crumble or break with finger pressure.

BOREHOLE IDENTIFICATION

Symbol	Hole Type	Description
Size	A	Auger Boring (hollow or solid stem bucket)
Size	R RW RC P	Rotary drilled boring (conventional) Rotary drilled with self-casing wire-line Rotary core with continuously-sampled, self-casing wire-line Rotary percussion boring (air)
Size	R	Rotary drilled diamond core
Size	HD HA	Hand driven (1-inch soil tube) Hand Auger
●	D	Dynamic Cone Penetration Boring
▲	CPT	Cone Penetration Test (ASTM D 5778)
⬚	O	Other (note on LOTB)

Note: Size in inches.

CONSISTENCY OF COHESIVE SOILS

Description	Shear Strength (tsf)	Pocket Penetrometer Measurement, PP, (tsf)	Torvane Measurement, TV, (tsf)	Vane Shear Measurement, VS, (tsf)
Very Soft	Less than 0.12	Less than 0.25	Less than 0.12	Less than 0.12
Soft	0.12 - 0.25	0.25 - 0.5	0.12 - 0.25	0.12 - 0.25
Medium Stiff	0.25 - 0.5	0.5 - 1	0.25 - 0.5	0.25 - 0.5
Stiff	0.5 - 1	1 - 2	0.5 - 1	0.5 - 1
Very Stiff	1 - 2	2 - 4	1 - 2	1 - 2
Hard	Greater than 2	Greater than 4	Greater than 2	Greater than 2

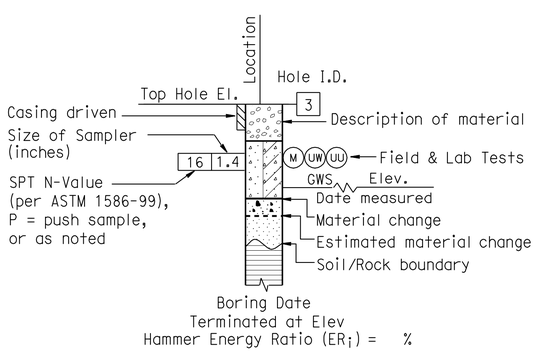

ROTARY BORING

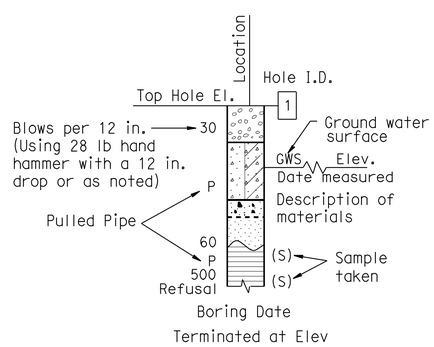

HAND BORING

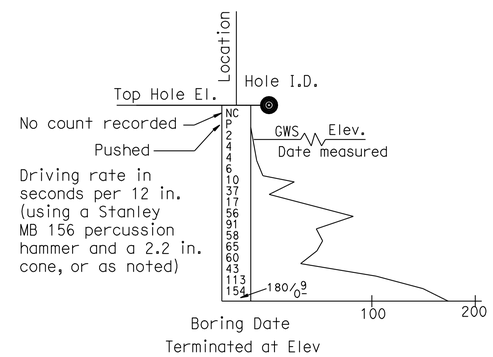

DYNAMIC CONE PENETRATION BORING

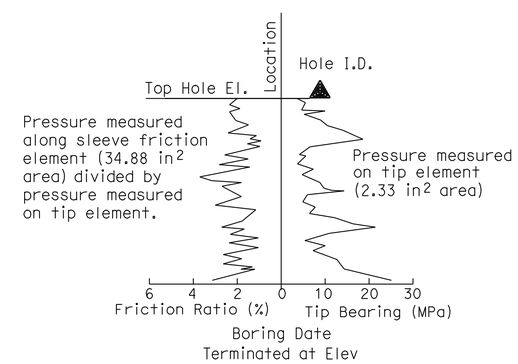

CONE PENETRATION TEST (CPT) BORING

ENGINEERING SERVICES	MATERIALS AND GEOTECHNICAL SERVICES	STATE OF CALIFORNIA DEPARTMENT OF TRANSPORTATION	DIVISION OF ENGINEERING SERVICES STRUCTURE DESIGN DESIGN BRANCH 15	BRIDGE NO. 53-3062 POST MILE 5.12	PIONEER Blvd UC (REPLACE) LOG OF TEST BORINGS SHEET 4 OF 7
FUNCTIONAL SUPERVISOR	DRAWN BY: P.QUACH / T.Panah (URS CORP)	FIELD INVESTIGATION BY:			
NAME: CHI-TSENG LIU	CHECKED BY: F.GERAMI	A.TSEGIE/M.ISLAM			

OGS CIVIL LOG OF TEST BORINGS SHEET

ORIGINAL SCALE IN INCHES FOR REDUCED PLANS 0 1 2 3

UNIT: 3604
PROJECT NUMBER & PHASE: 0700001834 1 CONTRACT NO.: 07-215941

DISREGARD PRINTS BEARING EARLIER REVISION DATES → 12-9-11 12-30-11 3-16-12

SHEET 69 OF 72

FILE => 53-3062-z-lotb04.dgn

USERNAME => s114326 DATE PLOTTED => 14-APR-2012 TIME PLOTTED => 10:59

REFERENCE: CALTRANS SOIL & ROCK LOGGING, CLASSIFICATION, AND PRESENTATION MANUAL (2010)

GROUP SYMBOLS AND NAMES

Graphic/Symbol	Group Names
GW	Well-graded GRAVEL Well-graded GRAVEL with SAND
GP	Poorly-graded GRAVEL Poorly-graded GRAVEL with SAND
GW-GM	Well-graded GRAVEL with SILT Well-graded GRAVEL with SILT and SAND
GW-GC	Well-graded GRAVEL with CLAY (or SILTY CLAY) Well-graded GRAVEL with CLAY and SAND (or SILTY CLAY and SAND)
GP-GM	Poorly-graded GRAVEL with SILT Poorly-graded GRAVEL with SILT and SAND
GP-GC	Poorly-graded GRAVEL with CLAY (or SILTY CLAY) Poorly-graded GRAVEL with CLAY and SAND (or SILTY CLAY and SAND)
GM	SILTY GRAVEL SILTY GRAVEL with SAND
GC	CLAYEY GRAVEL CLAYEY GRAVEL with SAND
GC-GM	SILTY, CLAYEY GRAVEL SILTY, CLAYEY GRAVEL with SAND
SW	Well-graded SAND Well-graded SAND with GRAVEL
SP	Poorly-graded SAND Poorly-graded SAND with GRAVEL
SW-SM	Well-graded SAND with SILT Well-graded SAND with SILT and GRAVEL
SW-SC	Well-graded SAND with CLAY (or SILTY CLAY) Well-graded SAND with CLAY and GRAVEL (or SILTY CLAY and GRAVEL)
SP-SM	Poorly-graded SAND with SILT Poorly-graded SAND with SILT and GRAVEL
SP-SC	Poorly-graded SAND with CLAY (or SILTY CLAY) Poorly-graded SAND with CLAY and GRAVEL (or SILTY CLAY and GRAVEL)
SM	SILTY SAND SILTY SAND with GRAVEL
SC	CLAYEY SAND CLAYEY SAND with GRAVEL
SC-SM	SILTY, CLAYEY SAND SILTY, CLAYEY SAND with GRAVEL
PT	PEAT
	COBBLES COBBLES and BOULDERS BOULDERS

Graphic/Symbol	Group Names
CL	Lean CLAY Lean CLAY with SAND Lean CLAY with GRAVEL SANDY lean CLAY SANDY lean CLAY with GRAVEL GRAVELLY lean CLAY GRAVELLY lean CLAY with SAND
CL-ML	SILTY CLAY SILTY CLAY with SAND SILTY CLAY with GRAVEL SANDY SILTY CLAY SANDY SILTY CLAY with GRAVEL GRAVELLY SILTY CLAY GRAVELLY SILTY CLAY with SAND
ML	SILT SILT with SAND SILT with GRAVEL SANDY SILT SANDY SILT with GRAVEL GRAVELLY SILT GRAVELLY SILT with SAND
OL	ORGANIC lean CLAY ORGANIC lean CLAY with SAND ORGANIC lean CLAY with GRAVEL SANDY ORGANIC lean CLAY SANDY ORGANIC lean CLAY with GRAVEL GRAVELLY ORGANIC lean CLAY GRAVELLY ORGANIC lean CLAY with SAND
OL	ORGANIC SILT ORGANIC SILT with SAND ORGANIC SILT with GRAVEL SANDY ORGANIC SILT SANDY ORGANIC SILT with GRAVEL GRAVELLY ORGANIC SILT GRAVELLY ORGANIC SILT with SAND
CH	Fat CLAY Fat CLAY with SAND Fat CLAY with GRAVEL SANDY fat CLAY SANDY fat CLAY with GRAVEL GRAVELLY fat CLAY GRAVELLY fat CLAY with SAND
MH	Elastic SILT Elastic SILT with SAND Elastic SILT with GRAVEL SANDY elastic SILT SANDY elastic SILT with GRAVEL GRAVELLY elastic SILT GRAVELLY elastic SILT with SAND
OH	ORGANIC fat CLAY ORGANIC fat CLAY with SAND ORGANIC fat CLAY with GRAVEL SANDY ORGANIC fat CLAY SANDY ORGANIC fat CLAY with GRAVEL GRAVELLY ORGANIC fat CLAY GRAVELLY ORGANIC fat CLAY with SAND
OH	ORGANIC elastic SILT ORGANIC elastic SILT with SAND ORGANIC elastic SILT with GRAVEL SANDY ORGANIC elastic SILT SANDY ORGANIC elastic SILT with GRAVEL GRAVELLY ORGANIC elastic SILT GRAVELLY ORGANIC elastic SILT with SAND
OL/OH	ORGANIC SOIL ORGANIC SOIL with SAND ORGANIC SOIL with GRAVEL SANDY ORGANIC SOIL SANDY ORGANIC SOIL with GRAVEL GRAVELLY ORGANIC SOIL GRAVELLY ORGANIC SOIL with SAND

FIELD AND LABORATORY TESTING

- (C) Consolidation (ASTM D 2435)
- (CL) Collapse Potential (ASTM D 5333)
- (CP) Compaction Curve (CTM 216)
- (CR) Corrosivity Testing (CTM 643, CTM 422, CTM 417)
- (CU) Consolidated Undrained Triaxial (ASTM D 4767)
- (DS) Direct Shear (ASTM D 3080)
- (EI) Expansion Index (ASTM D 4829)
- (M) Moisture Content (ASTM D 2216)
- (OC) Organic Content-% (ASTM D 2974)
- (P) Permeability (CTM 220)
- (PA) Particle Size Analysis (ASTM D 422)
- (PI) Plasticity Index (AASHTO T 90) Liquid Limit (AASHTO T 89)
- (PL) Point Load Index (ASTM D 5731)
- (PM) Pressure Meter
- (R) R-Value (CTM 301)
- (SE) Sand Equivalent (CTM 217)
- (SG) Specific Gravity (AASHTO T 100)
- (SL) Shrinkage Limit (ASTM D 427)
- (SW) Swell Potential (ASTM D 4546)
- (UC) Unconfined Compression-Soil (ASTM D 2166) Unconfined Compression-Rock (ASTM D 2938)
- (UU) Unconsolidated Undrained Triaxial (ASTM D 2850)
- (UW) Unit Weight (ASTM D 4767)

DIST	COUNTY	ROUTE	POST MILES TOTAL PROJECT	SHEET No.	TOTAL SHEETS
07	LA	5	4.0/5.9	1150	1597

REGISTERED CIVIL ENGINEER — DATE 12-12-11

4-9-12
PLANS APPROVAL DATE

REGISTERED PROFESSIONAL ENGINEER — Amare Tsegie No. C67529 Exp. 6-30-13 CIVIL — STATE OF CALIFORNIA

The State of California or its officers or agents shall not be responsible for the accuracy or completeness of electronic copies of this plan sheet.

This LOTB sheet was prepared in accordance with the Caltrans Soil & Rock Logging, Classification, & Presentation Manual (2010 Edition).

APPARENT DENSITY OF COHESIONLESS SOILS

Description	SPT N_{60} (Blows / 12 in.)
Very Loose	0 - 5
Loose	5 - 10
Medium Dense	10 - 30
Dense	30 - 50
Very Dense	Greater than 50

MOISTURE

Description	Criteria
Dry	No discernable moisture
Moist	Moisture present, but no free water
Wet	Visible free water

PERCENT OR PROPORTION OF SOILS

Description	Criteria
Trace	Particles are present but estimated to be less than 5%
Few	5% - 10%
Little	15% - 25%
Some	30% - 45%
Mostly	50% - 100%

PARTICLE SIZE

Description		Size (in.)
Boulder		Greater than 12
Cobble		3 - 12
Gravel	Coarse	3/4 - 3
	Fine	1/5 - 3/4
Sand	Coarse	1/16 - 1/5
	Medium	1/64 - 1/16
	Fine	1/300 - 1/64
Silt and Clay		Less than 1/300

ENGINEERING SERVICES — MATERIALS AND GEOTECHNICAL SERVICES

FUNCTIONAL SUPERVISOR
NAME: CHI-TSENG LIU

DRAWN BY: P.QUACH / T.Panah (URS CORP)
CHECKED BY: F.GERAMI

FIELD INVESTIGATION BY:
A.TSEGIE/M.ISLAM

STATE OF CALIFORNIA
DEPARTMENT OF TRANSPORTATION

DIVISION OF ENGINEERING SERVICES
STRUCTURE DESIGN
DESIGN BRANCH 15

BRIDGE NO. 53-3062
POST MILE 5.12

PIONEER Blvd UC (REPLACE)
LOG OF TEST BORINGS SHEET 5 OF 7

OGS CIVIL LOG OF TEST BORINGS SHEET

ORIGINAL SCALE IN INCHES FOR REDUCED PLANS 0 1 2 3

UNIT: 3604
PROJECT NUMBER & PHASE: 0700001834 1
CONTRACT NO.: 07-215941

DISREGARD PRINTS BEARING EARLIER REVISION DATES

REVISION DATES: 12-9-11 12-30-11 3-16-12

SHEET 70 OF 72

FILE => 53-3062-z-lotb05.dgn

USERNAME => s121614 DATE PLOTTED => 14-APR-2012 TIME PLOTTED => 11:35

DIST. NO.	STATE	FED. AID NO.	FEDERAL	TOTAL SHEETS	TOTAL SHEETS
2	CAL.			61	125

FI-405(8)

Shaft	County	Route	Station	Sheet No.	Total Sheets
VII	LA	405		43	

Notes

1. As-Built Vertical Datum = NGVD29
2. Datum Conversion
   NAVD88 = NGVD29+2.408 ft

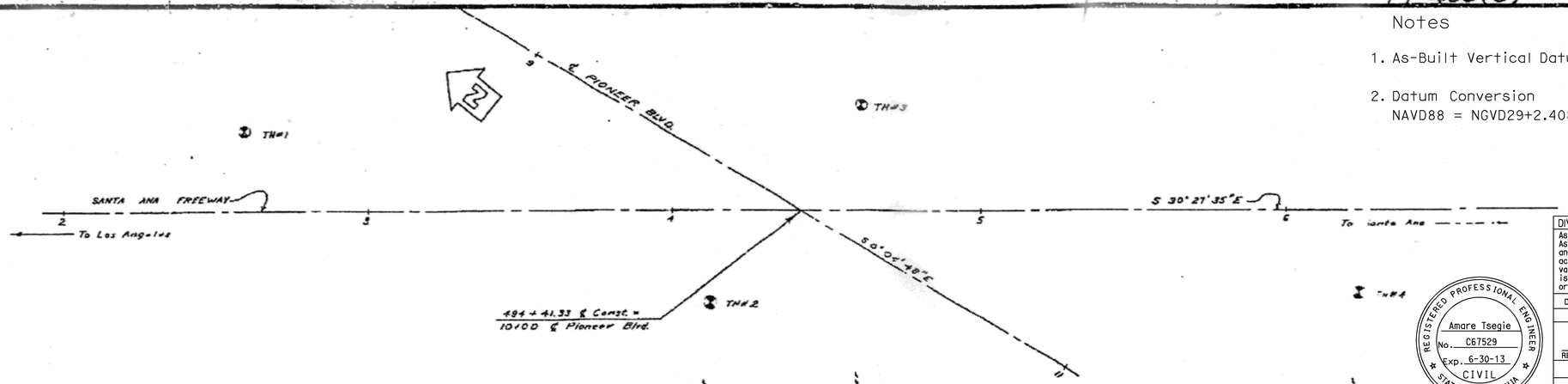

DIVISION OF ENGINEERING SERVICES - MATERIALS AND GEOTECHNICAL SERVICES

As-Built Log of Test Borings sheet is considered an informational document only. As such, the State of California registration seal with signature, license number and registration certificate expiration date confirm that this is a true and accurate copy of the original document. It does not attest to the accuracy or validity of the information contained in the original document. This drawing is available and presented only for the convenience of any bidder, contractor or other interested party.

DIST.	COUNTY	ROUTE	POST MILE-TOTAL PROJECT	Sheet No.	Total Sheets
07	LA	5	4.0/5.9	1151	1597

REGISTERED PROFESSIONAL ENGINEER — Amare Tsegie, No. C67529, Exp. 6-30-13, CIVIL, STATE OF CALIFORNIA

Amare — 12-12-11

REGISTERED CIVIL ENGINEER — DATE

PIONEER BLVD UC (REPLACE)

LOG OF TEST BORINGS 6 OF 7

UNIT: ENGLISH	CONTRACT No.	BRIDGE No.
PROJECT NUMBER & PHASE: EA 215941	CU 59A0590	53-3062

NOTE: A COPY OF THIS LOG OF TEST BORINGS IS AVAILABLE AT OFFICE OF STRUCTURE MAINTENANCE AND INVESTIGATIONS, SACRAMENTO, CALIFORNIA — Sheet 71 of 72

To accompany plans dated 4-9-12

Test Boring - y Bridge Dept.
11-21-50

Note: Blows per foot are those required to drive a cut open test pipe one foot with a 32# hand drop hammer falling free one foot.

As built the water table is 1' Sid Sanders

BM #47
Lead & Nail in SW Cor of 3'x3' Conc. irrigation box 31' E of ℄ Pioneer Blvd. 176 Lt Sta 432+00 Tiny
Elev. 111.028'

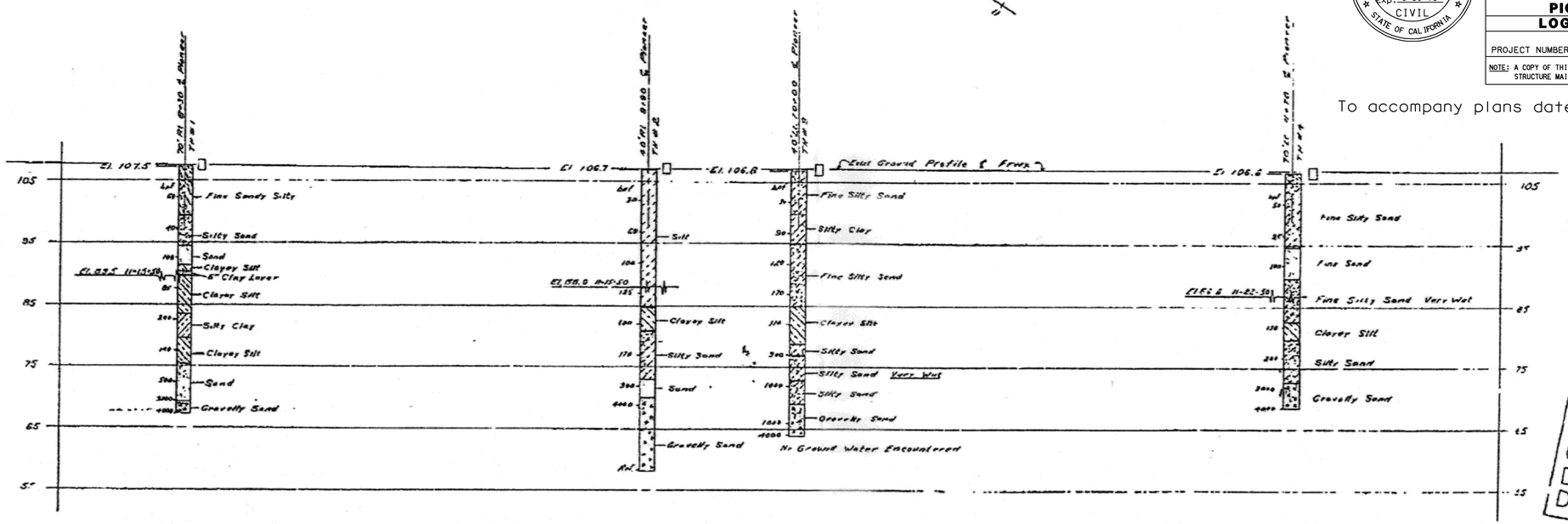

AS BUILT PLANS
Contract No 53-7VC38
Date Completed
Document No 7000 2015

Classification of Material, Based on Standard Grade Size Limits

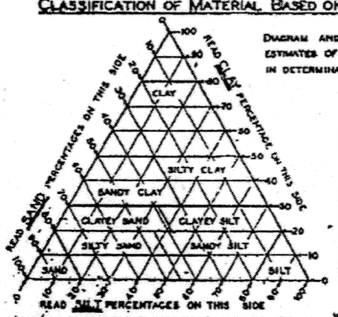

Diagram and table showing the basis for estimates of grade size distribution used in determination of class names.

Grouping Used in Triangular Classification			
Class Name	Percentage of Sizes Present		
	Sand	Silt	Clay
SAND	80-100	0-20	0-20
SILTY SAND	45-80	0-55	0-20
SANDY SILT	0-45	35-80	0-20
SILT	0-20	80-100	0-20
CLAYEY SAND	35-80	0-45	20-35
CLAYEY SILT	0-35	35-80	20-50
SANDY CLAY	50-70	0-40	30-50
SILTY CLAY	0-30	20-70	30-50
CLAY	0-50	0-50	50-100

If gravel is present in appreciable amounts the term "Gravelly" may be added to the class name, viz. "Gravelly Sand." The terms "Coarse," "Medium" and "Fine" when used to describe Gravel, Sand and Silt refer to Standard Grade Size Limits.

Legend of Boring Operations

- Plan of any boring
- 1" Sampler boring
- Rotary wash boring
- 1" Closed sampler driven
- Core boring
- 2½" Penetrometer driven
- 2" Sampler boring
- 2" to 5" Auger boring
- 6" to 20" Auger boring
- Casing driven
- Jet boring
- (S) Sample taken

The appropriate boring symbols designating the method of operation are shown, at the upper right-hand corner of the respective boring. Where tool changes were made during the boring operation symbols are shown at the point of change.

Legend of Earth Materials

- Gravel — G
- Sand — S
- Silt — Si
- Clay — C
- Silty Sand — Si S
- Clayey Sand — C S
- Sandy Silt — S Si
- Clayey Silt — C Si
- Sandy Clay — SC
- Silty Clay — Si C
- Peat ™ Organic Clay — O
- Sandstone — SS
- Shale — Sh
- Broken Rock (Fragments) — Br
- Rock — R

Abbreviations

EL 69.4	Elevation of ground at test hole
bpf	Blows per foot — (see note above)
P	Pulled pipe
M	Moisture as % dry weight
EL 69.3 6-12-48	Elevation of ground water and date

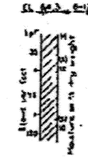

Notes

The contractor's attention is directed to Section 2, Article (c) of the Standard Specifications and to the Special Provisions accompanying this set of plans.

Classification of earth material as shown on this sheet is based upon field inspection and is not to be construed to be a mechanical analysis.

AS BUILT
Corrections By
Date

~~Pioneer Boulevard Undercrossing~~
~~LOG OF TEST BORINGS~~

Scale	Vert: 1"=10' Horiz: 1"=20'	File No.	C-3
Bridge No.	53-844	Drawing No.	P-2586-13

PRL DRAWING NO. P-2586 | 54

FED. ROAD DIST. NO.	STATE	PROJ. NO.	FISCAL YEAR	SHEET NO.	TOTAL SHEETS
7	CAL.	I-405(9)		30	43

DIST.	COUNTY	ROUTE	SECTION	PROJ. NO.	TOTAL SHEETS
VII	LA				

MARCH 1 1957

Notes

1. As-Built Vertical Datum = NGVD29
2. Datum Conversion
   NAVD88 = NGVD29+2.408 ft

AS BUILT PLANS
Contract No. 58-7VC13
Date Completed
Document No 7000 2016

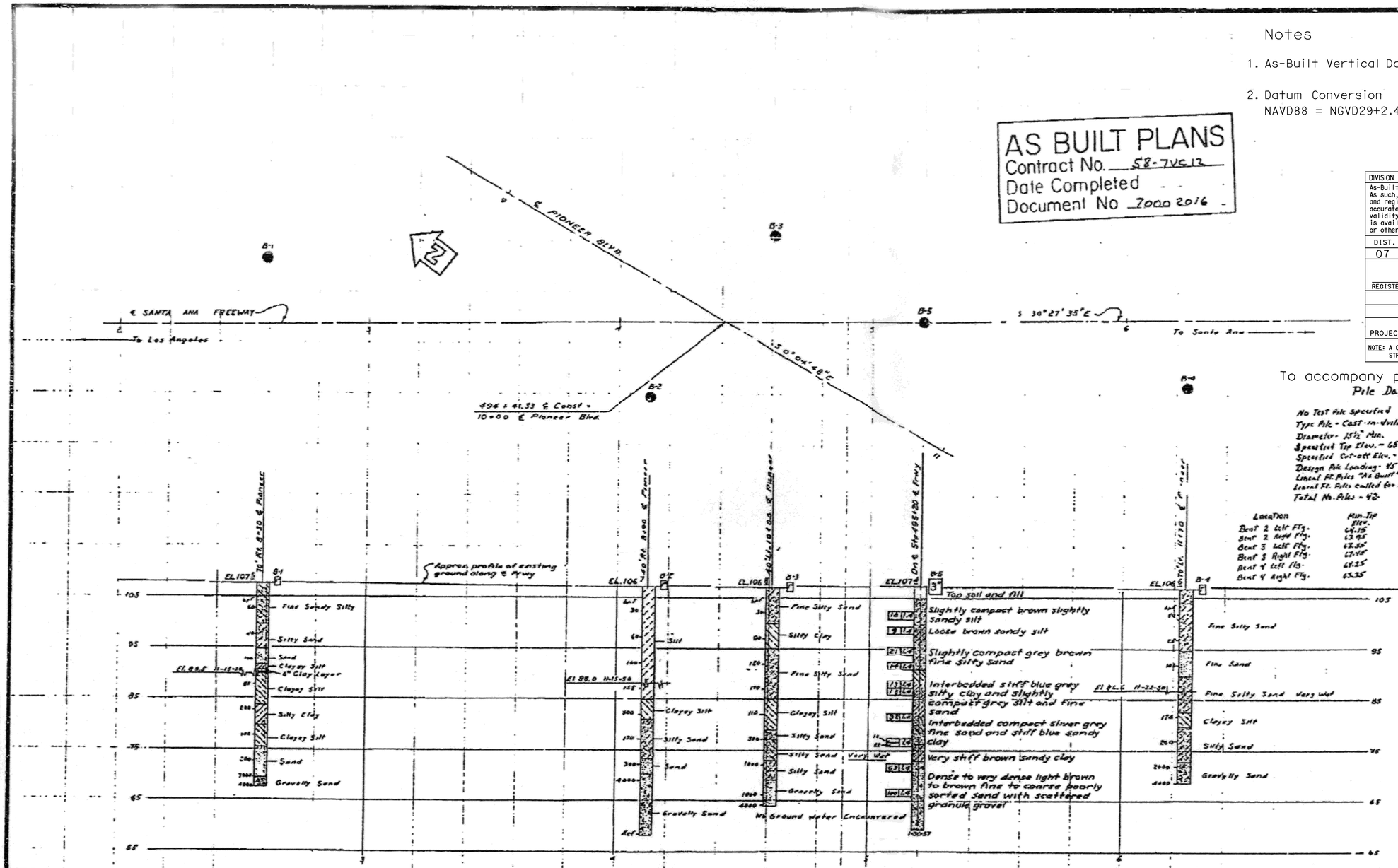

To accompany plans dated 4-9-12

Pile Data

No Test Pile Specified
Type Pile - Cast-in-drilled-hole Alternative "4"
Diameter - 15½" Min.
Specified Tip Elev. - 65±
Specified Cut-off Elev. - 102.25
Design Pile Loading - 45 Tons
Lineal Ft. Piles "As Built" - 1,773.5'
Lineal Ft. Piles called for on Plans 1,790.0'
Total No. Piles - 42

Location	Min. Tip Elev.	Max. Tip Elev.	Aver. Tip Elev.
Bent 2 Left Ftg.	64.75	69.25	66.81
Bent 2 Right Ftg.	63.95	66.85	65.85
Bent 3 Left Ftg.	63.50	66.45	65.71
Bent 3 Right Ftg.	63.45	66.75	65.69
Bent 4 Left Ftg.	64.25	66.35	65.40
Bent 4 Right Ftg.	63.35	68.25	66.34

BM #47
Lead & Nail in S.W. Cor. of 3'x3' Conc. irrigation box 21' E. of ℄ Pioneer Blvd 176'±' Sta. 492+00 Fwy
Elev. 111.028'

B.M.
Nail @ base of PW Fence post located 10' from ℄ PT
El. 107.8±

AS BUILT
CONTRACT NO. 58-7VC12-FF
RESIDENT ENGR. A. R. Wilson
DATE 2-7-58

DIVISION OF ENGINEERING SERVICES - MATERIALS AND GEOTECHNICAL SERVICES

As-Built Log of Test Borings sheet is considered an informational document only. As such, the State of California registration seal with signature, license number and registration certificate expiration date confirm that this is a true and accurate copy of the original document. It does not attest to the accuracy or validity of the information contained in the original document. This drawing is available and presented only for the convenience of any bidder, contractor or other interested party.

DIST.	COUNTY	ROUTE	POST MILE-TOTAL PROJECT	Sheet No.	Total Sheets
07	LA	5	4.0/5.9	1152	1597

Amare Tsegie 12-12-11
REGISTERED CIVIL ENGINEER DATE

PIONEER BLVD UC (REPLACE)
LOG OF TEST BORINGS 7 OF 7

UNIT: ENGLISH	CONTRACT No.	BRIDGE No.
PROJECT NUMBER & PHASE: EA 215941	CU 59A0590	53-3062

NOTE: A COPY OF THIS LOG OF TEST BORINGS IS AVAILABLE AT OFFICE OF STRUCTURE MAINTENANCE AND INVESTIGATIONS, SACRAMENTO, CALIFORNIA

Sheet	of
72	72

REGISTERED PROFESSIONAL ENGINEER
Amare Tsegie
No. C67529
Exp. 6-30-13
CIVIL
STATE OF CALIFORNIA

ORIGINAL
BRIDGE DEPARTMENT

FIELD STUDY
DRAWN
CHECKED

CLASSIFICATION OF MATERIAL BASED ON STANDARD GRADE SIZE LIMITS

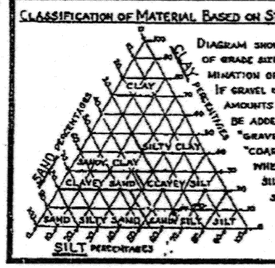

DIAGRAM SHOWING THE BASIS FOR ESTIMATES OF GRADE SIZE DISTRIBUTION USED IN DETERMINATION OF CLASS NAMES.

IF GRAVEL IS PRESENT IN APPRECIABLE AMOUNTS THE TERM "GRAVELLY" MAY BE ADDED TO THE CLASS NAME, VIZ. "GRAVELLY SAND." THE TERMS "COARSE", "MEDIUM" AND "FINE" WHEN USED TO DESCRIBE SAND, SILT AND GRAVEL REFER TO STANDARD GRADE SIZE LIMITS.

LEGEND OF EARTH MATERIALS

- GRAVEL
- SAND
- SILT
- CLAY
- SANDY CLAY OR CLAYEY SAND
- SANDY SILT OR SILTY SAND
- SILTY CLAY OR CLAYEY SILT
- PEAT AND/OR ORGANIC MATTER
- FILL MATERIAL
- IGNEOUS ROCK
- SEDIMENTARY ROCK
- METAMORPHIC ROCK

LEGEND OF BORING OPERATIONS

- PLAN OF ANY BORING
- PENETROMETER
- 2¼" CONE PENETROMETER
- SAMPLER BORING (DRY)
- ROTARY BORING (WET)
- AUGER BORING (DRY)
- JET BORING
- CORE BORING
- TEST PIT

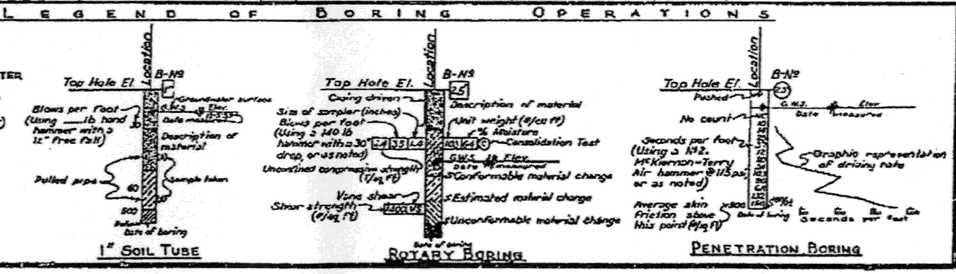

NOTES

The contractor's attention is directed to Section 2, Article (c) of the Standard Specifications and to the Special Provisions accompanying this set of plans.

Classification of earth material as shown on this sheet is based upon field inspection and is not to be construed to imply mechanical analysis.

STATE OF CALIFORNIA
DEPARTMENT OF PUBLIC WORKS
DIVISION OF HIGHWAYS

PIONEER BOULEVARD UNDERCROSSING

LOG OF TEST BORINGS

SCALE Vert. 1"=10' Horiz. 1"=20' | BRIDGE 53-844 | FILE E-53 | DRAWING C-2586-27

2-9-21
1106

DIST	COUNTY	ROUTE	POST MILES TOTAL PROJECT	SHEET No.	TOTAL SHEETS
07	LA	5	4.0/5.9	1153	1597

Anthony T. Logus 12-12-11
REGISTERED CIVIL ENGINEER DATE

4-9-12
PLANS APPROVAL DATE

REGISTERED PROFESSIONAL ENGINEER Anthony T. Logus No. C68189 Exp. 09-30-13 CIVIL STATE OF CALIFORNIA

The State of California or its officers or agents shall not be responsible for the accuracy or completeness of electronic copies of this plan sheet.

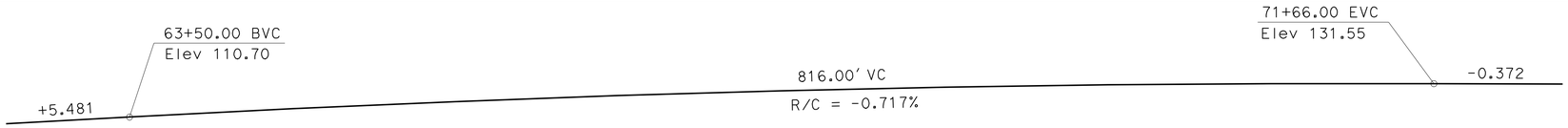

PROFILE GRADE

NO SCALE

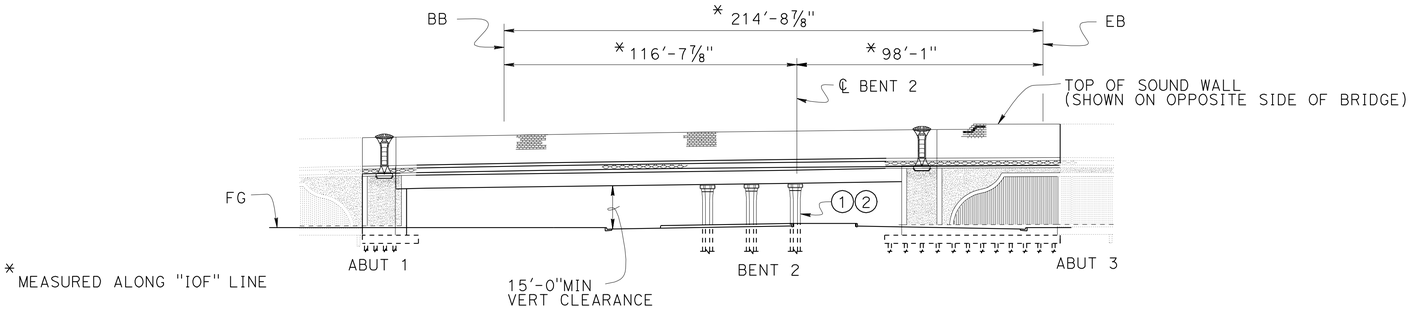

MIRRORED ELEVATION

1" = 30'

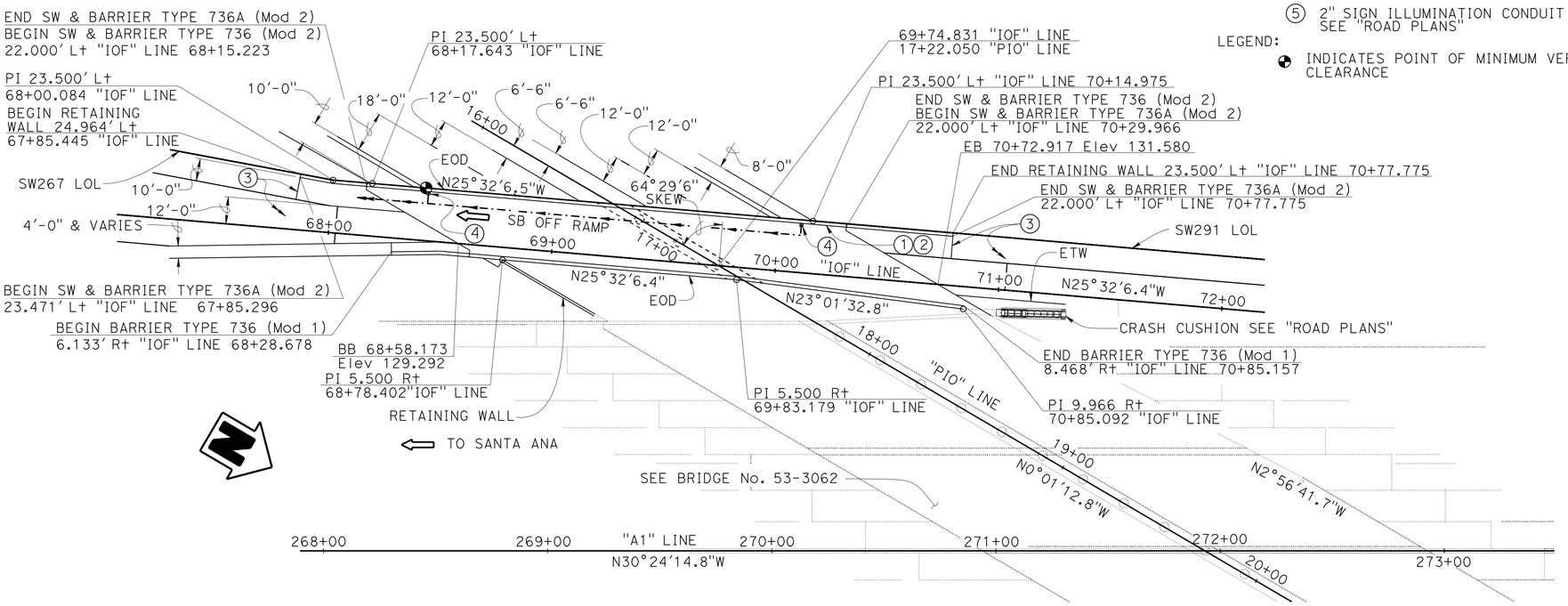

PLAN

1" = 30'

NOTES:

1. PAINT "BR. No. 53-3071K"
2. PAINT "IMPERIAL HIGHWAY SB OFF-RAMP"
3. STRUCTURE APPROACH TYPE N(30S)
4. TYPE D-2 MODIFIED DRAIN
5. 2" SIGN ILLUMINATION CONDUIT SEE "ROAD PLANS"

LEGEND:

◐ INDICATES POINT OF MINIMUM VERTICAL CLEARANCE

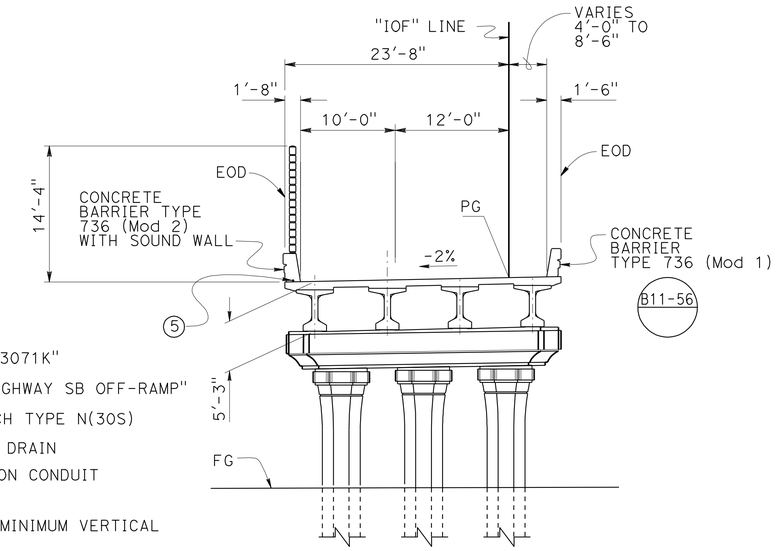

TYPICAL SECTION

1/8" = 1'-0"

QUANTITIES

STRUCTURE EXCAVATION (BRIDGE)	1,280	CY
STRUCTURE EXCAVATION (RETAINING WALL)	190	CY
STRUCTURE EXCAVATION (TYPE Y-1) (AERIALLY DEPOSITED LEAD)	95	CY
STRUCTURE BACKFILL (BRIDGE)	2,200	CY
STRUCTURE BACKFILL (RETAINING WALL)	650	CY
FURNISH STEEL PILING (HP 14 X 89)	9,369	LF
DRIVE STEEL PILE (HP 14 X 89)	145	EA
54" CAST-IN-DRILLED-HOLE CONCRETE PILING	240	LF
STRUCTURAL CONCRETE, BRIDGE FOOTING	390	CY
STRUCTURAL CONCRETE, BRIDGE	990	CY
STRUCTURAL CONCRETE, RETAINING WALL	205	CY
STRUCTURAL CONCRETE, APPROACH SLAB (TYPE N)	82	CY
PILASTER, SOUND WALL	5	CY
ARCHITECTURAL TEXTURE (SPLIT SLATE - FRACTURED RIB)	1,030	SQFT
ARCHITECTURAL TEXTURE (SPLIT SLATE)	3,900	SQFT
FURNISH PRECAST PRESTRESSED CONCRETE BULB-TEE GIRDER (90'-100')	4	EA
FURNISH PRECAST PRESTRESSED CONCRETE BULB-TEE GIRDER (110'-120')	4	EA
ERECT PRECAST PRESTRESSED CONCRETE GIRDER	8	EA
SOUND WALL (MASONRY BLOCK)	3,300	SQFT
JOINT SEAL (MR 1")	134	LF
BAR REINFORCING STEEL (BRIDGE)	314,000	LB
BAR REINFORCING STEEL (RETAINING WALL)	20,500	LB
MISCELLANEOUS METAL (BRIDGE)	1,860	LB
BRIDGE DECK DRAINAGE SYSTEM	2,270	LB
CABLE RAILING	47	LF
CONCRETE BARRIER (TYPE 736 MODIFIED 1)	260	LF
CONCRETE BARRIER (TYPE 736 MODIFIED 2)	215	LF
CONCRETE BARRIER (TYPE 736A MODIFIED 2)	78	LF

TRACI MENARD
DESIGN ENGINEER

	BY	CHECKED
DESIGN	ANTHONY LOGUS	RUSLAN NOVIK
DETAILS	HERMAN MAUROSCHADT	RUSLAN NOVIK
QUANTITIES	SARA YIP	CLARENCE HENSEL

LOAD & RESISTANCE FACTOR DESIGN — LIVE LOADING: HL93 W/"LOW-BOY"; PERMIT DESIGN VEHICLE

	BY	CHECKED
LAYOUT	ANTHONY LOGUS	RUSLAN NOVIK
SPECIFICATIONS	JOHN JIANG	PLANS AND SPECS COMPARED V. RENGANATHAN

ORIGINAL SCALE IN INCHES FOR REDUCED PLANS 0 1 2 3

STATE OF CALIFORNIA
DEPARTMENT OF TRANSPORTATION

DIVISION OF ENGINEERING SERVICES
STRUCTURE DESIGN
DESIGN BRANCH 15

BRIDGE NO. 53-3071K
POST MILE 5.12

IMPERIAL Hwy OFF-RAMP
GENERAL PLAN

UNIT: 3604
PROJECT NUMBER & PHASE: 0700001834 1
CONTRACT NO.: 07-215941

DISREGARD PRINTS BEARING EARLIER REVISION DATES

REVISION DATES: 6-13-11 12-29-11 02-15-12

SHEET 1 OF 45

USERNAME => s121614 DATE PLOTTED => 14-APR-2012 TIME PLOTTED => 11:35

STRUCTURES DESIGN GENERAL PLAN SHEET (ENGLISH) (REV.09-01-10)

FILE => 53-3071k-b-gp.dgn

DIST	COUNTY	ROUTE	POST MILES TOTAL PROJECT	SHEET No.	TOTAL SHEETS
07	LA	5	4.0/5.9	1154	1597

Anthony T. Logus 12-12-11
REGISTERED CIVIL ENGINEER DATE

4-9-12
PLANS APPROVAL DATE

REGISTERED PROFESSIONAL ENGINEER Anthony T. Logus No. C68189 Exp. 09-30-13 CIVIL STATE OF CALIFORNIA

The State of California or its officers or agents shall not be responsible for the accuracy or completeness of electronic copies of this plan sheet.

INDEX TO PLANS

SHEET NO.	TITLE
1	GENERAL PLAN
2	INDEX TO PLANS
3	DECK CONTOURS
4	FOUNDATION PLAN
5	ABUTMENT LAYOUT No. 1
6	ABUTMENT LAYOUT No. 2
7	ABUTMENT DETAILS No. 1
8	ABUTMENT DETAILS No. 2
9	ABUTMENT DETAILS No. 3
10	RETAINING WALL DETAILS No. 1
11	RETAINING WALL DETAILS No. 2
12	BENT LAYOUT
13	BENT DETAILS No. 1
14	BENT DETAILS No. 2
15	COLUMN DETAILS No. 1
16	COLUMN DETAILS No. 2
17	TYPICAL SECTION
18	GIRDER LAYOUT
19	ADDITIONAL MILD REINFORCEMENT LAYOUT
20	END DIAPHRAGM DETAILS No. 1
21	END DIAPHRAGM DETAILS No. 2
22	END DIAPHRAGM DETAILS No. 3
23	ARCHITECTURAL SHEET A0
24	ARCHITECTURAL SHEET A1
25	ARCHITECTURAL SHEET A2
26	BARRIER ARCHITECTURAL DETAILS No. 1
27	BARRIER ARCHITECTURAL DETAILS No. 2
28	SOUNDWALL - MASONRY BLOCK ON BRIDGE
29	SOUNDWALL ARCHITECTURAL DETAILS No. 1
30	SOUNDWALL ARCHITECTURAL DETAILS No. 2
31	SOUNDWALL ARCHITECTURAL DETAILS No. 3
32	SOUNDWALL ARCHITECTURAL DETAILS No. 4
33	SOUNDWALL ARCHITECTURAL DETAILS No. 5
34	SOUNDWALL ARCHITECTURAL DETAILS No. 6
35	SOUNDWALL ARCHITECTURAL DETAILS No. 7
36	SOUNDWALL ARCHITECTURAL DETAILS No. 8
37	PC/PS BULB-TEE GIRDER (HARPED STRANDS)
38	PC/PS BULB-TEE GIRDER (MISCELLANEOUS DETAILS)
39	DECK DRAIN - TYPE D-2 MODIFIED
40	STRUCTURE APPROACH TYPE N(30S)
41	STRUCTURE APPROACH DRAINAGE DETAILS
42	LOG OF TEST BORINGS SHEET 1 OF 4
43	LOG OF TEST BORINGS SHEET 2 OF 4
44	LOG OF TEST BORINGS SHEET 3 OF 4
45	LOG OF TEST BORINGS SHEET 4 OF 4

GENERAL NOTES
LOAD AND RESISTANCE FACTOR DESIGN

DESIGN:

AASHTO LRFD Bridge Design Specifications, 4th edition and the Caltrans Amendments, preface dated September 2010, except that bridge barrier and approach slabs are designed using Bridge Design Specifications ('96 AASHTO w/Revision by Caltrans).

SEISMIC DESIGN:

Caltrans Seismic Design Criteria (SDC), Version 1.5 dated September 2009

DEAD LOAD:

Includes 35 psf for future wearing surface.
Includes 10% of additional deck dead load between girders for stay-in-place deck forms.

LIVE LOADING:

HL93 and permit design load.

SEISMIC LOADING:

Soil Profile: Average Shear Wave Velocity for upper 100', $V_{S_{30}}$ = 949 ft/sec, 289 m/sec
Moment Magnitude: M =7.3
Peak Ground Acceleration: 0.7 g

CONCRETE:

fy = 60 ksi
f'c = 3.6 ksi, unless otherwise shown
n = 8

PRESTRESSED CONCRETE

See "Prestressing Notes" on "PC/PS BULB-TEE GIRDER (HARPED STRANDS)" sheet

SOUNDWALL DEAD LOAD:

The Soundwall dead load is distributed on the left side, looking up station of the bridge, with 75% of the moment and 75% of the shear forces to the exterior Girder, and 25% of the moment and 25% of the shear to the first interior Girder.

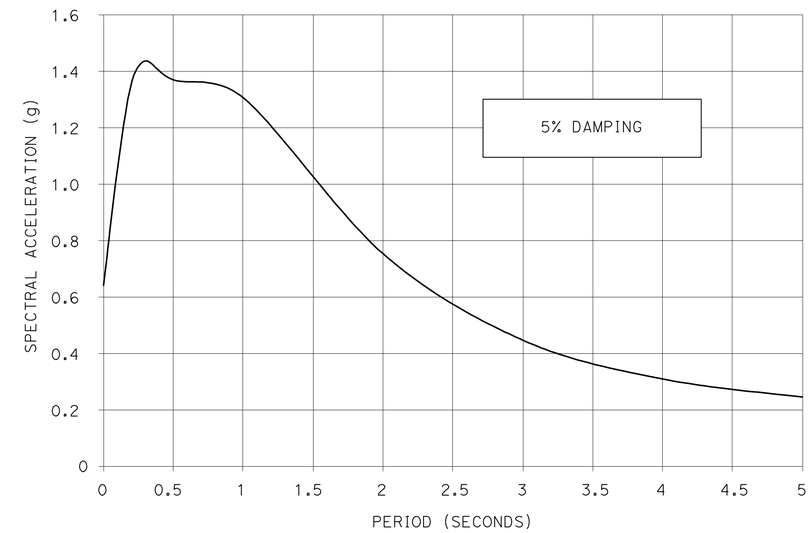

SITE SPECIFIC ACCELERATION RESPONSE SPECTRA

STANDARD PLANS DATED MAY 2006

A10A	ACRONYMS AND ABBREVIATIONS (SHEET 1 OF 2)
A10B	ACRONYMS AND ABBREVIATIONS (SHEET 2 OF 2)
B0-3	BRIDGE DETAILS
B0-5	BRIDGE DETAILS
B0-13	BRIDGE DETAILS
B6-1	T-BEAM DETAILS
B6-10	UTILITY OPENINGS T-BEAM
RSP B6-21	JOINT SEALS (MAXIMUM MOVEMENT RATING = 2")
B7-8	DECK DRAINAGE DETAILS
RSP B11-47	CABLE RAILING
B11-56	CONCRETE BARRIER TYPE 736
B14-5	WATER SUPPLY LINE (DETAILS) (PIPE SIZES LESS THAN 4")
B15-9	SOUND WALL MASONRY BLOCK MISCELLANEOUS DETAILS
RSP P10	CONCRETE PAVEMENT-DOWEL BAR DETAILS

STANDARD PLAN SHEET NO.

DETAIL NO.

PILE DATA TABLE

LOCATION	PILE TYPE	CUT-OFF ELEVATION (ft)	NOMINAL RESISTANCE COMPRESSION (kip)	NOMINAL RESISTANCE TENSION (kip)	DESIGN TIP ELEVATION (ft)	SPECIFIED TIP ELEVATION (ft)	NOMINAL DRIVING RESISTANCE (ft)
ABUTMENT 1	HP 14 X 89	N/A	400	0	(a) 33 (c) 55	33	400
ABUTMENT 1 RETAINING WALL	HP 14 X 89	N/A	330	0	(a) 40 (c) 62	40	330
BENT 2	54" CIDH	102	1720	850	(a) 22 (b) 48 (c) 56 (d) 40	22	N/A
ABUTMENT 3	HP 14 X 89	N/A	400	0	(a) 40 (c) 62	40	400

Notes:

1. Design tip elevations for Abutments are controlled by: (a) Compression, (c) Settlement
2. Design tip elevations for Bents are controlled by: (a) Compression, (b) Tension, (c) Settlement, (d) Lateral Load, respectively.
3. The specified tip elevation shall not be raised above the design tip elevations for tension load, lateral load, and tolerable settlement

	BY	CHECKED
DESIGN	ANTHONY LOGUS	RUSLAN NOVIK
DETAILS	HERMAN MAUROSCHADT	RUSLAN NOVIK
QUANTITIES	SARA YIP	CLARENCE HENSEL

STATE OF CALIFORNIA
DEPARTMENT OF TRANSPORTATION

DIVISION OF ENGINEERING SERVICES
STRUCTURE DESIGN
DESIGN BRANCH 15

BRIDGE NO. 53-3071K
POST MILE 5.12

IMPERIAL Hwy OFF-RAMP
INDEX TO PLANS

STRUCTURES DESIGN DETAIL SHEET (ENGLISH) (REV. 09-01-10)

ORIGINAL SCALE IN INCHES FOR REDUCED PLANS 0 1 2 3

UNIT: 3604
PROJECT NUMBER & PHASE: 0700001834 1
CONTRACT NO.: 07-215941

DISREGARD PRINTS BEARING EARLIER REVISION DATES

REVISION DATES 7-29-11 12-12-11 2-15-12

SHEET 2 OF 45

FILE => 53-3071k-c-itp.dgn

USERNAME => s121614 DATE PLOTTED => 14-APR-2012 TIME PLOTTED => 11:35

DIST	COUNTY	ROUTE	POST MILES TOTAL PROJECT	SHEET No.	TOTAL SHEETS
07	LA	5	4.0/5.9	1155	1597

Anthony T. Logus 12-12-11
REGISTERED CIVIL ENGINEER DATE

4-9-12
PLANS APPROVAL DATE

REGISTERED PROFESSIONAL ENGINEER
Anthony T. Logus
No. C68189
Exp. 09-30-13
CIVIL
STATE OF CALIFORNIA

The State of California or its officers or agents shall not be responsible for the accuracy or completeness of electronic copies of this plan sheet.

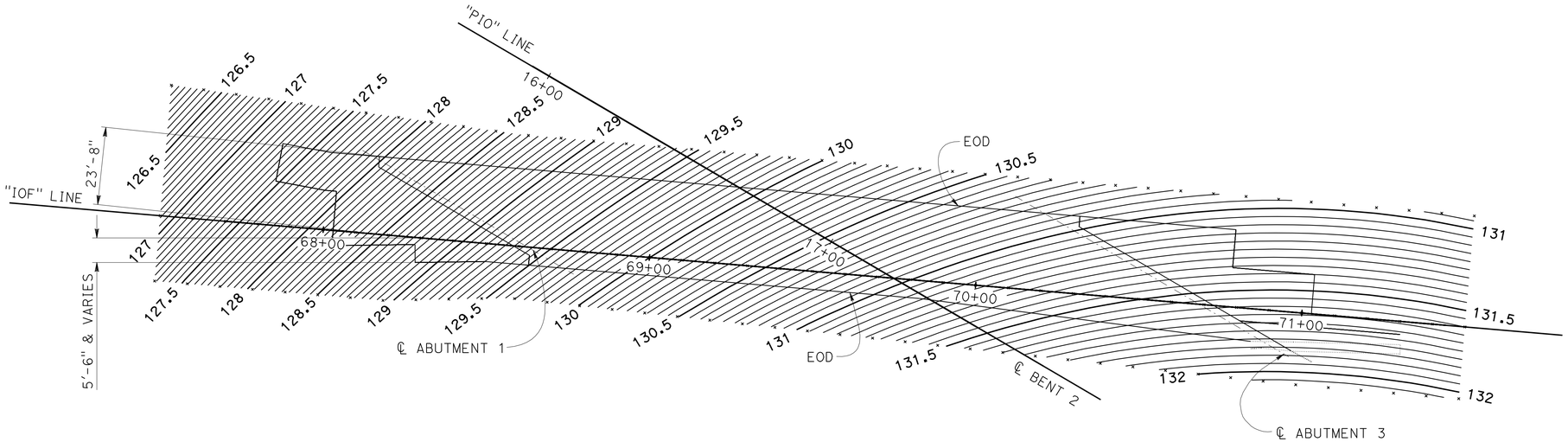

PLAN
1" = 20'

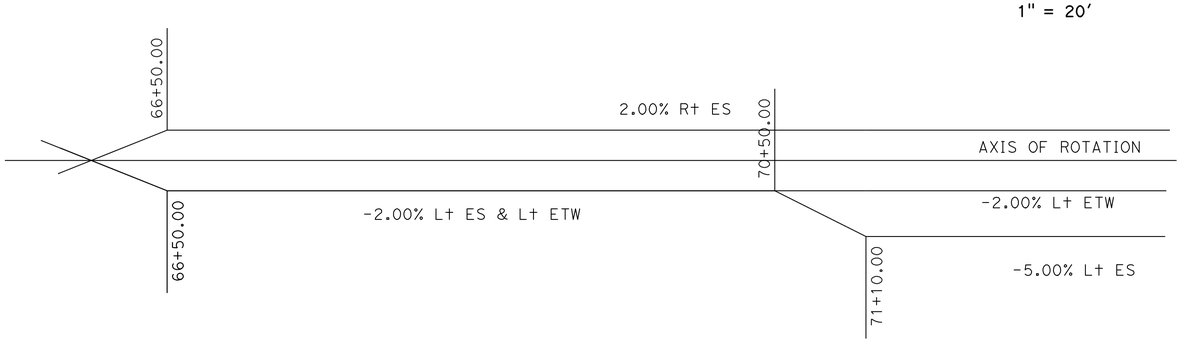

SUPERELEVATION DIAGRAM
NO SCALE

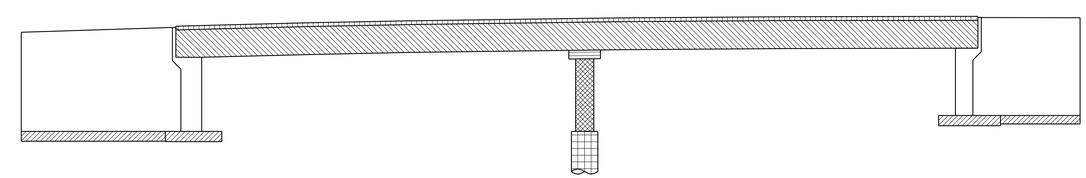

Legend:

- Structural Concrete, Bridge
- Structural Concrete, Bridge Footing
- Structural Concrete Deck (f'c 4000 psi @ 28 days)
- Precast Prestressed Wide Flange Girder see ("PC/PS BULB-TEE GIRDER (HARPED STRANDS))" sheet
- Structural Concrete Column (f'c 4000 psi @ 28 days)
- Structural Concrete CIDH Pile Shaft (f'c 4000 psi @ 28 days)
- Structural Concrete Bent Cap (f'c 4000 psi @ 28 days)

CONCRETE STRENGTH AND TYPE LIMITS
No Scale

	BY	CHECKED
DESIGN	ANTHONY LOGUS	RUSLAN NOVIK
DETAILS	HERMAN MAUROSCHADT	RUSLAN NOVIK
QUANTITIES	SARA YIP	CLARENCE HENSEL

STATE OF CALIFORNIA
DEPARTMENT OF TRANSPORTATION

DIVISION OF ENGINEERING SERVICES
STRUCTURE DESIGN
DESIGN BRANCH 15

BRIDGE NO. 53-3071K
POST MILE 5.12

IMPERIAL Hwy OFF-RAMP
DECK CONTOURS

STRUCTURES DESIGN DETAIL SHEET (ENGLISH) (REV. 09-01-10)

ORIGINAL SCALE IN INCHES FOR REDUCED PLANS 0 1 2 3

UNIT: 3604
PROJECT NUMBER & PHASE: 0700001834 1
CONTRACT NO.: 07-215941

DISREGARD PRINTS BEARING EARLIER REVISION DATES
REVISION DATES: 9-15-11 12-28-11 2-2-12

SHEET 3 OF 45

FILE => 53-3071k-d-dc01.dgn

USERNAME => s121614 DATE PLOTTED => 14-APR-2012 TIME PLOTTED => 11:36

DIST	COUNTY	ROUTE	POST MILES TOTAL PROJECT	SHEET No	TOTAL SHEETS
07	LA	5	4.0/5.9	1156	1597

Anthony T. Logus 12-12-11
REGISTERED CIVIL ENGINEER DATE

4-9-12
PLANS APPROVAL DATE

REGISTERED PROFESSIONAL ENGINEER
Anthony T. Logus
No. C68189
Exp. 09-30-13
CIVIL
STATE OF CALIFORNIA

The State of California or its officers or agents shall not be responsible for the accuracy or completeness of electronic copies of this plan sheet.

(AA) Sta 17+22.05 ℄ Pioneer Blvd=
Sta 69+74.83 IMPERIAL Hwy OFF-RAMP LOL
(BB) Sta 271+93.28 ℄ Route 5 =
Sta 19+73.50 ℄ Pioneer Blvd

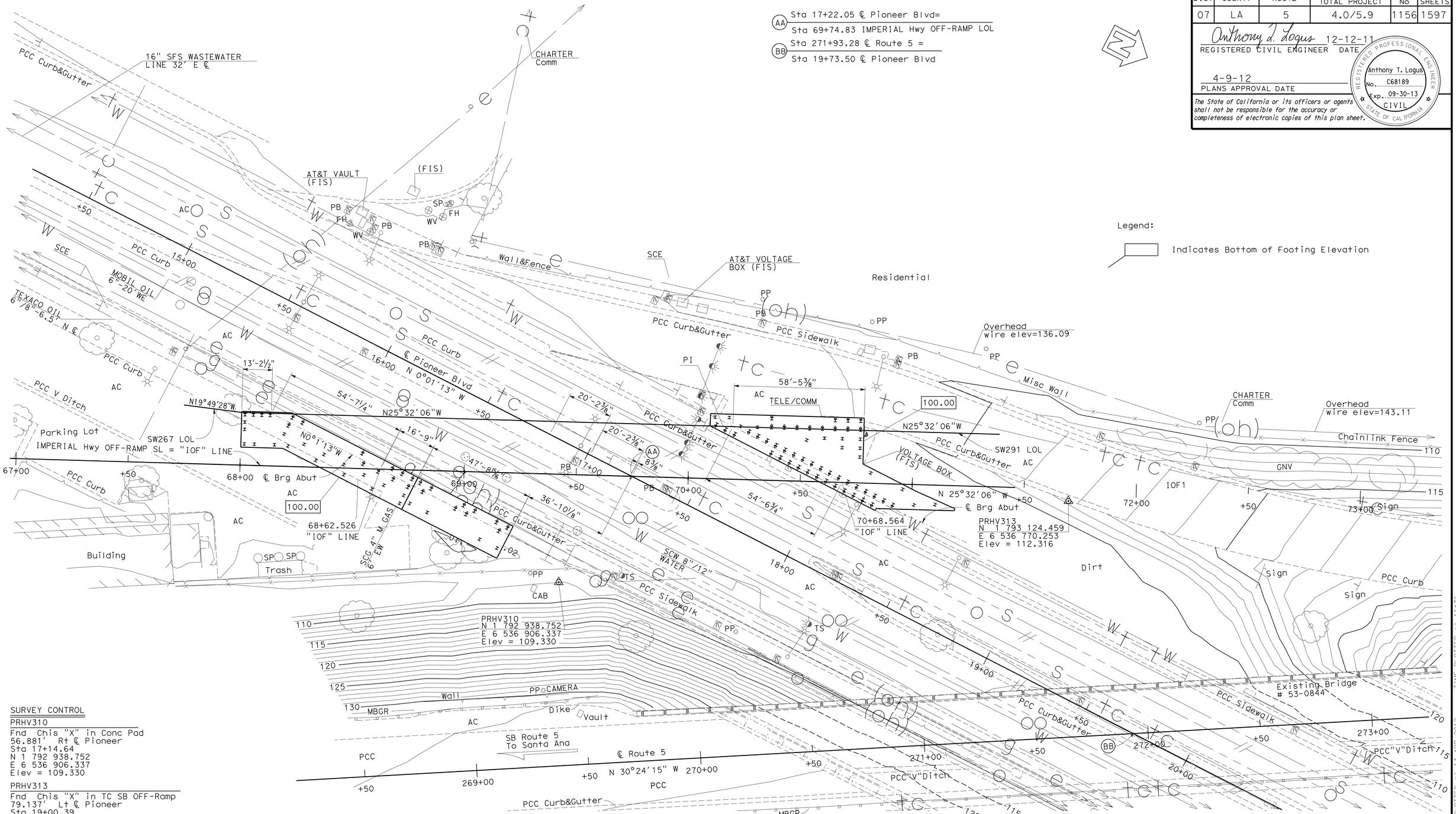

SURVEY CONTROL

PRHV310
Fnd Chis "X" in Conc Pad
56.881' Rt ℄ Pioneer
Sta 17+14.64
N 1 792 938.752
E 6 536 906.337
Elev = 109.330

PRHV313
Fnd Chis "X" in TC SB OFF-Ramp
79.137' Lt ℄ Pioneer
Sta 19+00.39
N 1 793 124.459
E 6 536 770.253
Elev = 112.316

NOTES:

UNDERGROUND UTILITIES AS SHOWN ARE APPROXIMATE, SEE UTILITY PLANS FOR MORE INFORMATION

PRELIMINARY INVESTIGATION SECTION

SCALE	VERT.DATUM NAVD 88	PHOTOGRAMMETRY AS OF: X			
1"=20'	HORZ.DATUM NAD 83	SURVEYED	BY T. Phung 11-10	CHECKED	BY E. Viajar 4-11
ALIGNMENT TIES Dist Trav Sheets		DRAFTED	BY M. Sadaghiani 4-11	CHECKED	BY E. Viajar 4-11

	BY	CHECKED
DESIGN	ANTHONY LOGUS	RUSLAN NOVIK
DETAILS	HERMAN MAUROSCHADT	RUSLAN NOVIK
QUANTITIES	SARA YIP	CLARENCE HENSEL

STATE OF CALIFORNIA
DEPARTMENT OF TRANSPORTATION

DIVISION OF ENGINEERING SERVICES
STRUCTURE DESIGN
DESIGN BRANCH 15

BRIDGE NO. 53-3071K
POST MILE 5.12

IMPERIAL Hwy OFF-RAMP FOUNDATION PLAN

STRUCTURES FOUNDATION PLAN SHEET (ENGLISH) (REV. 10/25/05)

ORIGINAL SCALE IN INCHES FOR REDUCED PLANS 0 1 2 3

CU 07226
E-FIS 0700001834 1

DISREGARD PRINTS BEARING EARLIER REVISION DATES

REVISION DATES: 4/30/11 12-8-11 12-28-11 2-2-12 4-9-12

SHEET 4 OF 45

FILE => 53-3071k-e-fp.dgn

USERNAME => s121614 DATE PLOTTED => 14-APR-2012 TIME PLOTTED => 11:36

Notes:
1. For "SECTION A-A" and "SECTION C-C" see "ABUTMENT DETAILS No. 2" sheet.
2. For Architectural Treatment Details see "ARCHITECTURAL" sheets.
3. For Shear Pipe Pin details see "SHEAR PIPE PIN DETAIL" on "END DIAPHRAGM DETAILS" No. 3" sheet.

Legend:
- Indicates Vertical Pile
- Indicates 3:1 Battered Pile
- Indicates Expanded Polystyrene

DIST	COUNTY	ROUTE	POST MILES TOTAL PROJECT	SHEET No.	TOTAL SHEETS
07	LA	5	4.0/5.9	1157	1597

Anthony D. Logus 12-12-11
REGISTERED CIVIL ENGINEER DATE

4-9-12
PLANS APPROVAL DATE

REGISTERED PROFESSIONAL ENGINEER Anthony T. Logus No. C68189 Exp. 09-30-13 CIVIL STATE OF CALIFORNIA

The State of California or its officers or agents shall not be responsible for the accuracy or completeness of electronic copies of this plan sheet.

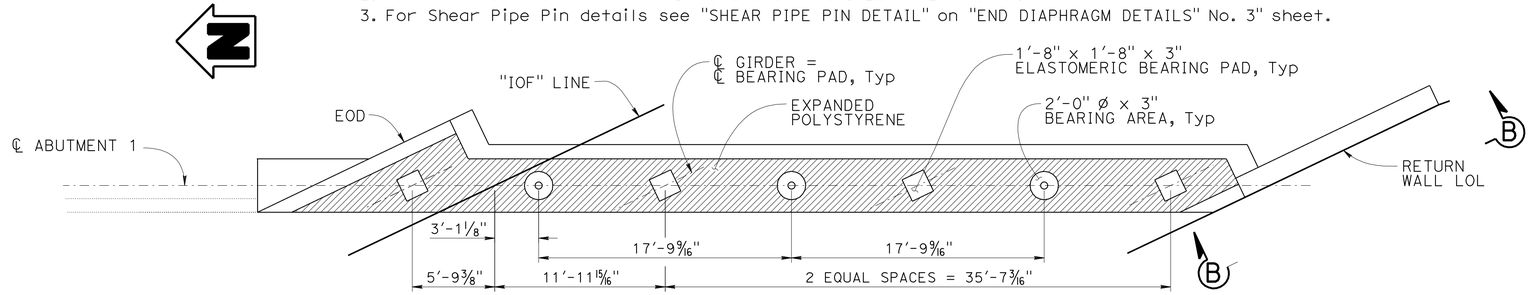

PLAN
3/16" = 1'-0"

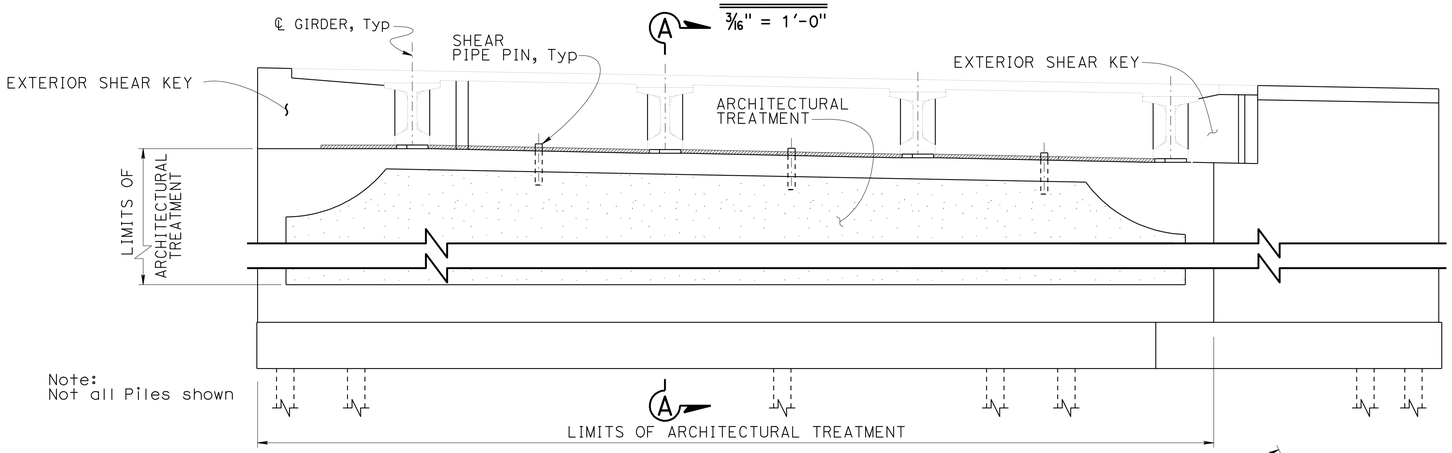

ELEVATION
3/16" = 1'-0"

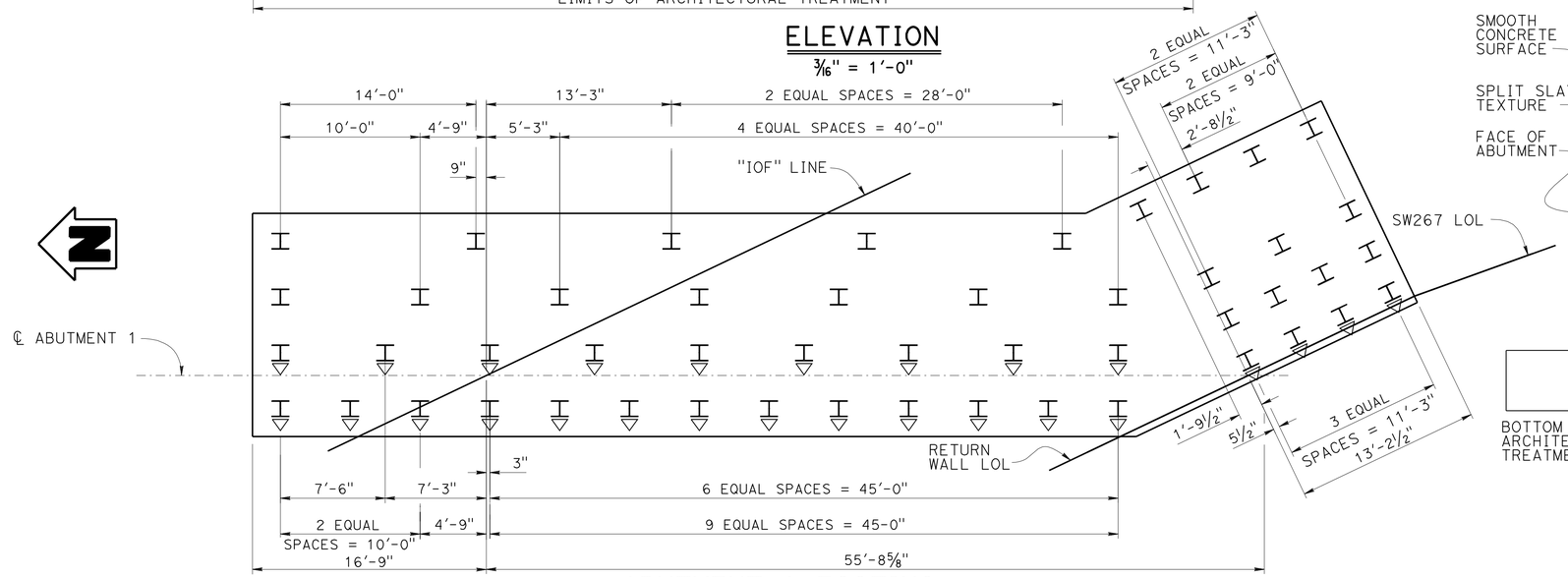

ABUTMENT 1 FOOTING
3/16" = 1'-0"

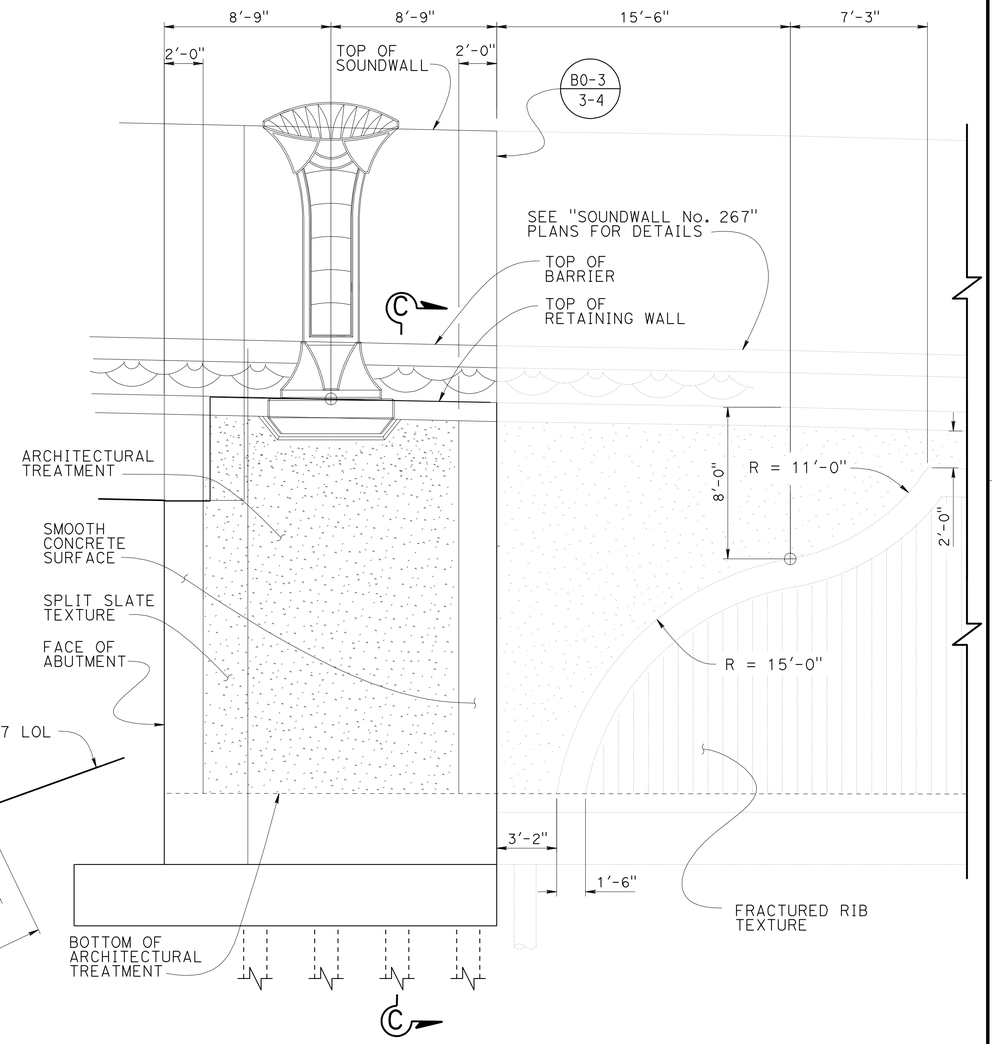

VIEW B-B
1/4" = 1'-0"

	BY	CHECKED
DESIGN	A. LOGUS / I. TASABIA	RUSLAN NOVIK
DETAILS	H. MAUROSCHADT / I. TASABIA	RUSLAN NOVIK
QUANTITIES	SARA YIP	CLARENCE HENSEL

STATE OF CALIFORNIA
DEPARTMENT OF TRANSPORTATION

DIVISION OF ENGINEERING SERVICES
STRUCTURE DESIGN
DESIGN BRANCH 15

BRIDGE NO. 53-3071K
POST MILE 5.12

IMPERIAL Hwy OFF-RAMP
ABUTMENT LAYOUT No. 1

STRUCTURES DESIGN DETAIL SHEET (ENGLISH) (REV. 09-01-10)

ORIGINAL SCALE IN INCHES FOR REDUCED PLANS 0 1 2 3

UNIT: 3604
PROJECT NUMBER & PHASE: 0700001834 1
CONTRACT NO.: 07-215941

DISREGARD PRINTS BEARING EARLIER REVISION DATES

REVISION DATES: 2-16-12 2-13-12 12-8-11 12-9-11

SHEET 5 OF 45

FILE => 53-3071k-f-a-la01.dgn

USERNAME => s121614 DATE PLOTTED => 14-APR-2012 TIME PLOTTED => 11:36

DIST	COUNTY	ROUTE	POST MILES TOTAL PROJECT	SHEET No.	TOTAL SHEETS
07	LA	5	4.0/5.9	1158	1597

Anthony T. Logus 12-12-11
REGISTERED CIVIL ENGINEER DATE

4-9-12
PLANS APPROVAL DATE

REGISTERED PROFESSIONAL ENGINEER Anthony T. Logus No. C68189 Exp. 09-30-13 CIVIL STATE OF CALIFORNIA

The State of California or its officers or agents shall not be responsible for the accuracy or completeness of electronic copies of this plan sheet.

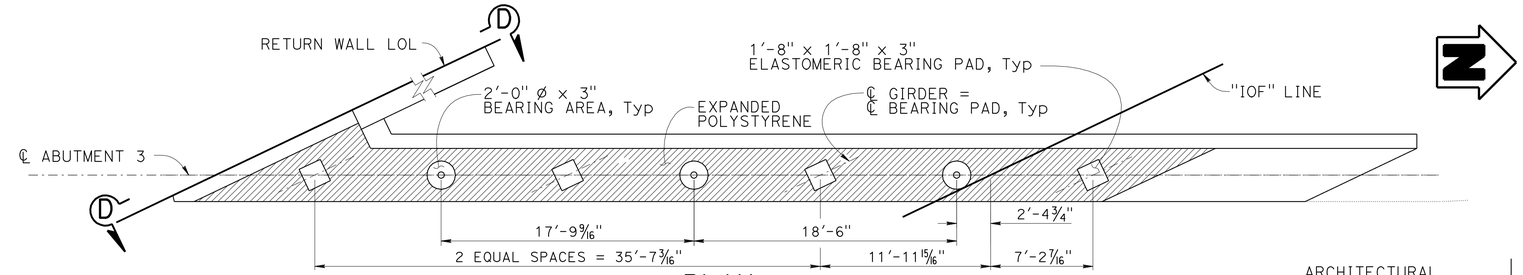

PLAN
3/16" = 1'-0"

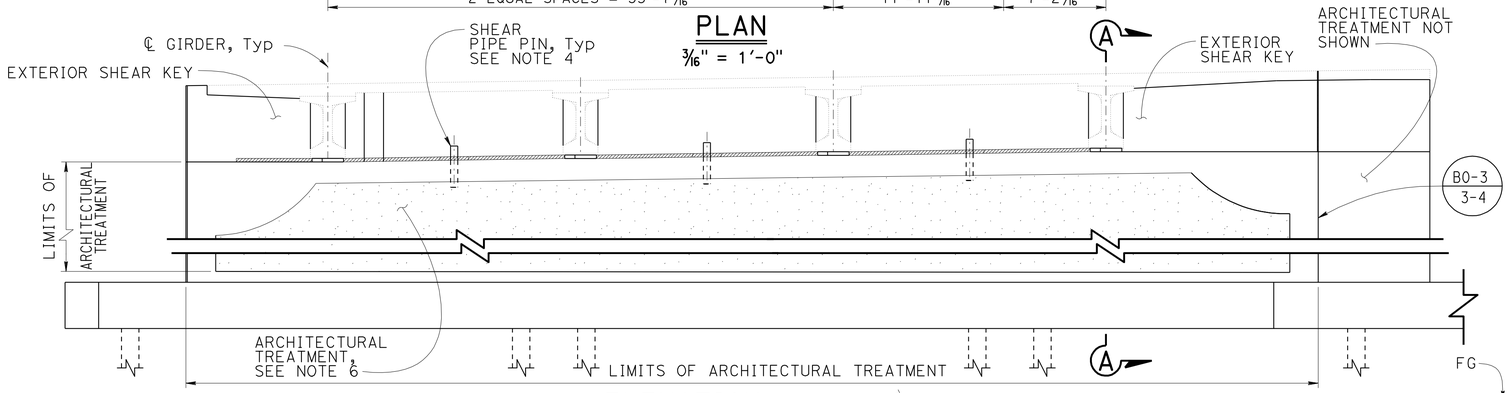

Note:
Not all Piles shown

ELEVATION
3/16" = 1'-0"

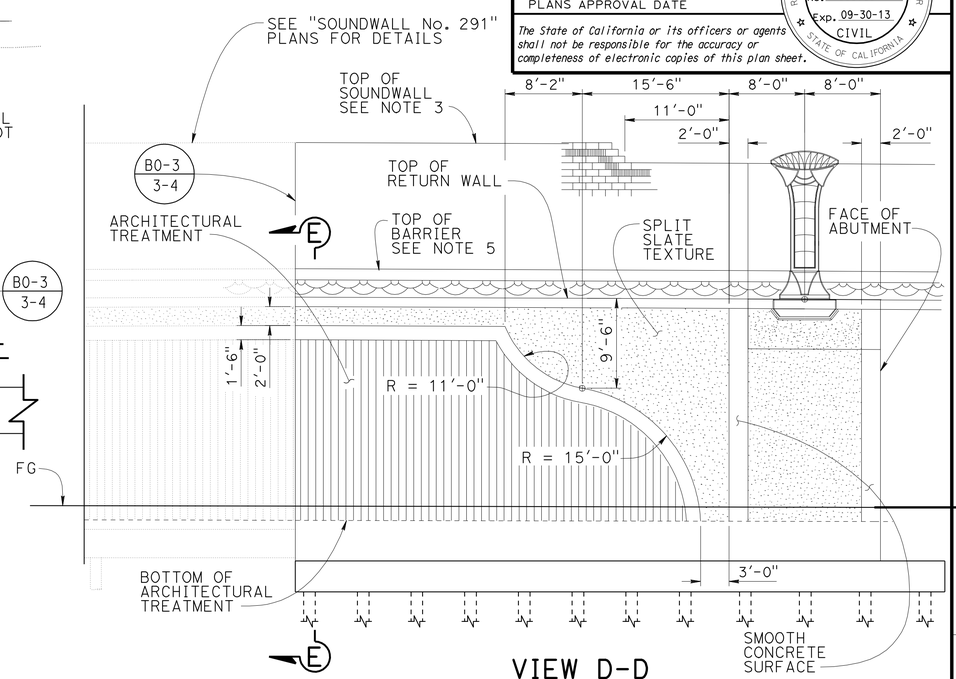

VIEW D-D
1/8" = 1'-0"

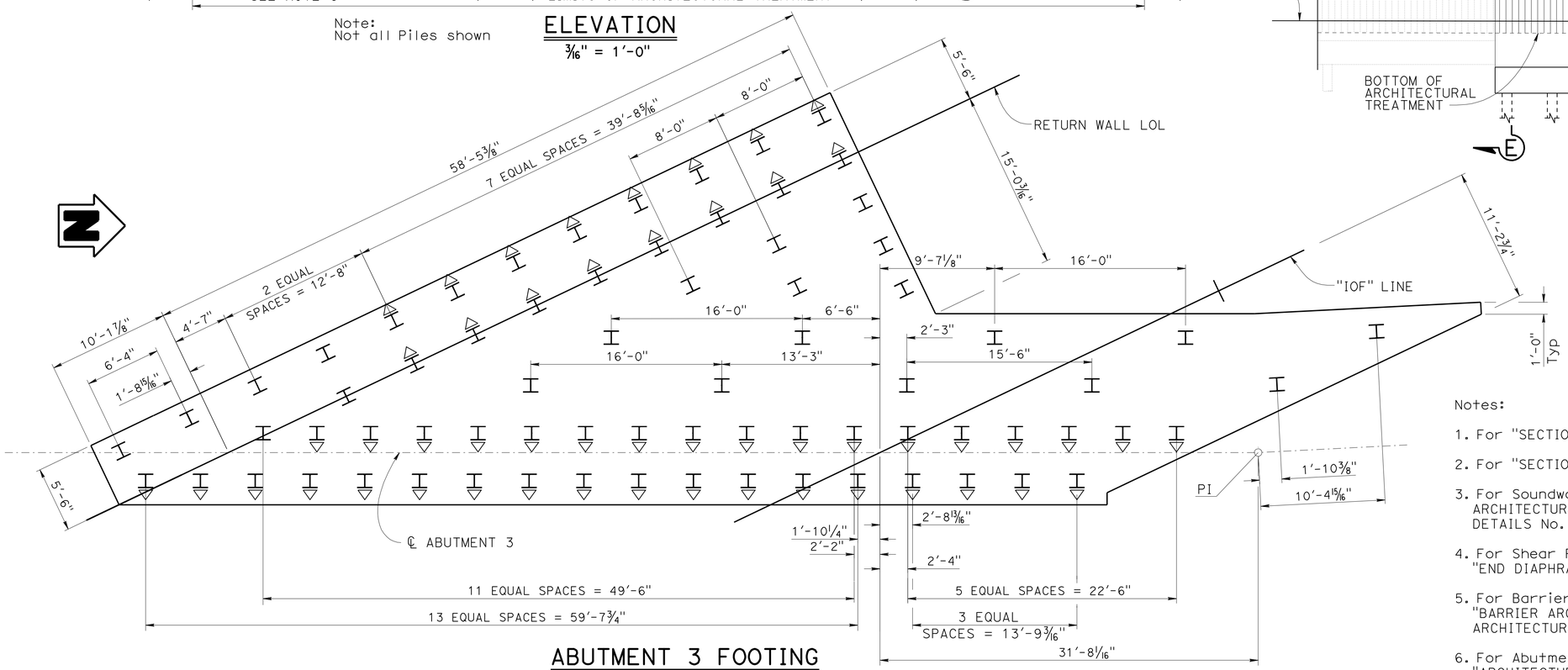

ABUTMENT 3 FOOTING
3/16" = 1'-0"

Legend:

- Indicates Vertical Pile
- Indicates 3:1 Battered Pile
- Indicates Expanded Polystyrene

Notes:

1. For "SECTION A-A" see "ABUTMENT DETAILS NO. 2" sheet.
2. For "SECTION E-E" see "ABUTMENT DETAILS NO. 3" sheet.
3. For Soundwall Architectural Treatment details see "SOUNDWALL ARCHITECTURAL DETAILS No. 1" thru "SOUNDWALL ARCHITECTURAL DETAILS No. 8" sheets.
4. For Shear Pipe Pin details see "SHEAR PIPE PIN DETAIL" on "END DIAPHRAGM DETAILS No. 3" sheet.
5. For Barrier Architectural Treatment details see "BARRIER ARCHITECTURAL DETAILS No. 1" and "BARRIER ARCHITECTURAL DETAILS No. 2" sheets.
6. For Abutment Architectural Treatment details see "ARCHITECTURAL" sheets.

	BY	CHECKED
DESIGN	A. LOGUS / I. TASABIA	RUSLAN NOVIK
DETAILS	H. MAUROSCHADT / I. TASABIA	RUSLAN NOVIK
QUANTITIES	SARA YIP	CLARENCE HENSEL

STATE OF CALIFORNIA
DEPARTMENT OF TRANSPORTATION

DIVISION OF ENGINEERING SERVICES
STRUCTURE DESIGN
DESIGN BRANCH 15

BRIDGE NO. 53-3071K
POST MILE 5.12

IMPERIAL Hwy OFF-RAMP
ABUTMENT LAYOUT No. 2

STRUCTURES DESIGN DETAIL SHEET (ENGLISH) (REV. 09-01-10)

ORIGINAL SCALE IN INCHES FOR REDUCED PLANS 0 1 2 3

UNIT: 3604
PROJECT NUMBER & PHASE: 0700001834 1
CONTRACT NO.: 07-215941

DISREGARD PRINTS BEARING EARLIER REVISION DATES

REVISION DATES 1-18-12 2-17-12 1-28-11 12-29-11

SHEET 6 OF 45

FILE => 53-3071k-f-a-1a02.dgn

USERNAME => s121614 DATE PLOTTED => 14-APR-2012 TIME PLOTTED => 11:36

DIST	COUNTY	ROUTE	POST MILES TOTAL PROJECT	SHEET No.	TOTAL SHEETS
07	LA	5	4.0/5.9	1159	1597

Anthony T. Logus 12-12-11
REGISTERED CIVIL ENGINEER DATE

4-9-12
PLANS APPROVAL DATE

REGISTERED PROFESSIONAL ENGINEER
Anthony T. Logus
No. C68189
Exp. 09-30-13
CIVIL
STATE OF CALIFORNIA

The State of California or its officers or agents shall not be responsible for the accuracy or completeness of electronic copies of this plan sheet.

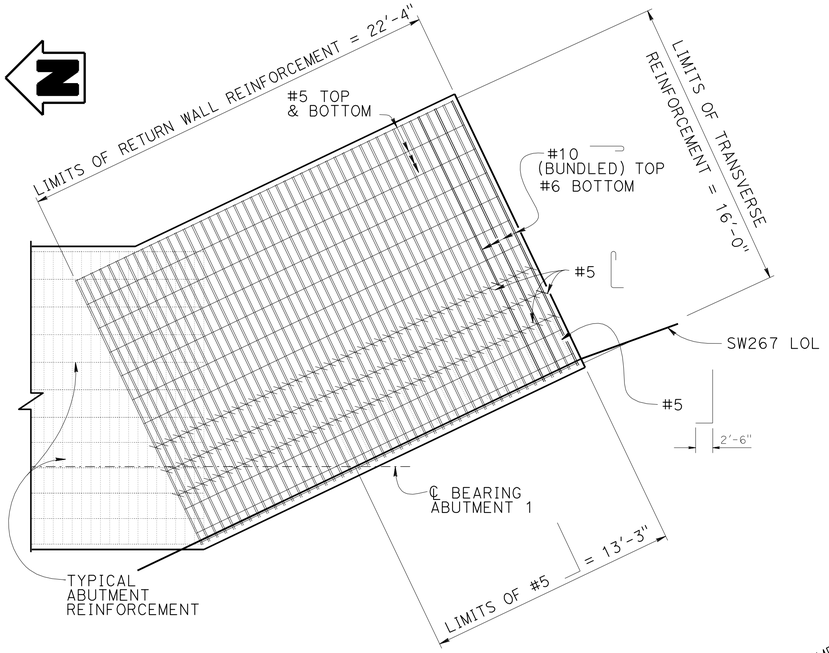

FOOTING CORNER DETAIL
ABUTMENT 1 FOOTING
1/4" = 1'-0"

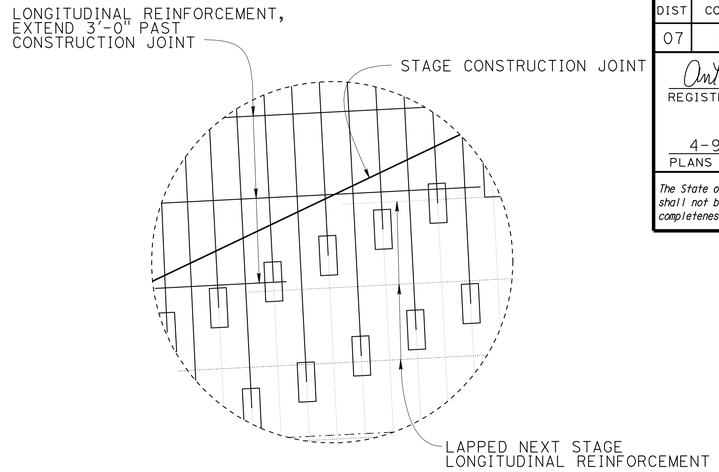

DETAIL A
3/4" = 1'-0"

Notes:

1. Not all Reinforcing shown.
2. Minimum clearance between bars shall be 5" in location where Abutment changes Bearing

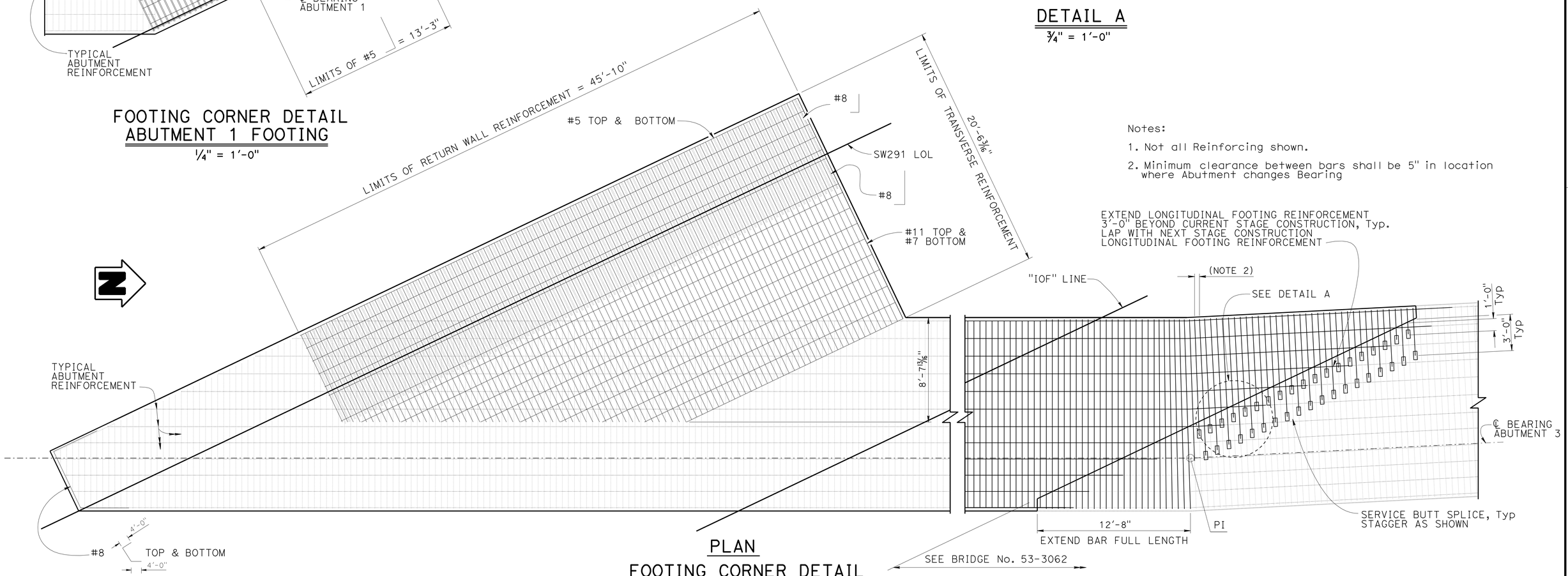

PLAN
FOOTING CORNER DETAIL
ABUTMENT 3 FOOTING
1/4" = 1'-0"

	BY	CHECKED
DESIGN	ANTHONY LOGUS	RUSLAN NOVIK
DETAILS	HERMAN MAUROSCHADT	RUSLAN NOVIK
QUANTITIES	SARA YIP	CLARENCE HENSEL

STATE OF CALIFORNIA
DEPARTMENT OF TRANSPORTATION

DIVISION OF ENGINEERING SERVICES
STRUCTURE DESIGN
DESIGN BRANCH 15

BRIDGE NO. 53-3071K
POST MILE 5.12

IMPERIAL Hwy OFF-RAMP
ABUTMENT DETAILS No. 1

STRUCTURES DESIGN DETAIL SHEET (ENGLISH) (REV. 09-01-10)

ORIGINAL SCALE IN INCHES FOR REDUCED PLANS 0 1 2 3

UNIT: 3604
PROJECT NUMBER & PHASE: 0700001834 1
CONTRACT NO.: 07-215941

DISREGARD PRINTS BEARING EARLIER REVISION DATES

REVISION DATES 2-1-11 12-1-11 12-12-11 12-29-11

SHEET 7 OF 45

FILE => 53-3071k-g-ad01.dgn

USERNAME => s121614 DATE PLOTTED => 14-APR-2012 TIME PLOTTED => 11:37

DIST	COUNTY	ROUTE	POST MILES TOTAL PROJECT	SHEET No.	TOTAL SHEETS
07	LA	5	4.0/5.9	1160	1597

Anthony T. Logus 12-12-11
REGISTERED CIVIL ENGINEER DATE

4-9-12
PLANS APPROVAL DATE

REGISTERED PROFESSIONAL ENGINEER
Anthony T. Logus
No. C68189
Exp. 09-30-13
CIVIL
STATE OF CALIFORNIA

The State of California or its officers or agents shall not be responsible for the accuracy or completeness of electronic copies of this plan sheet.

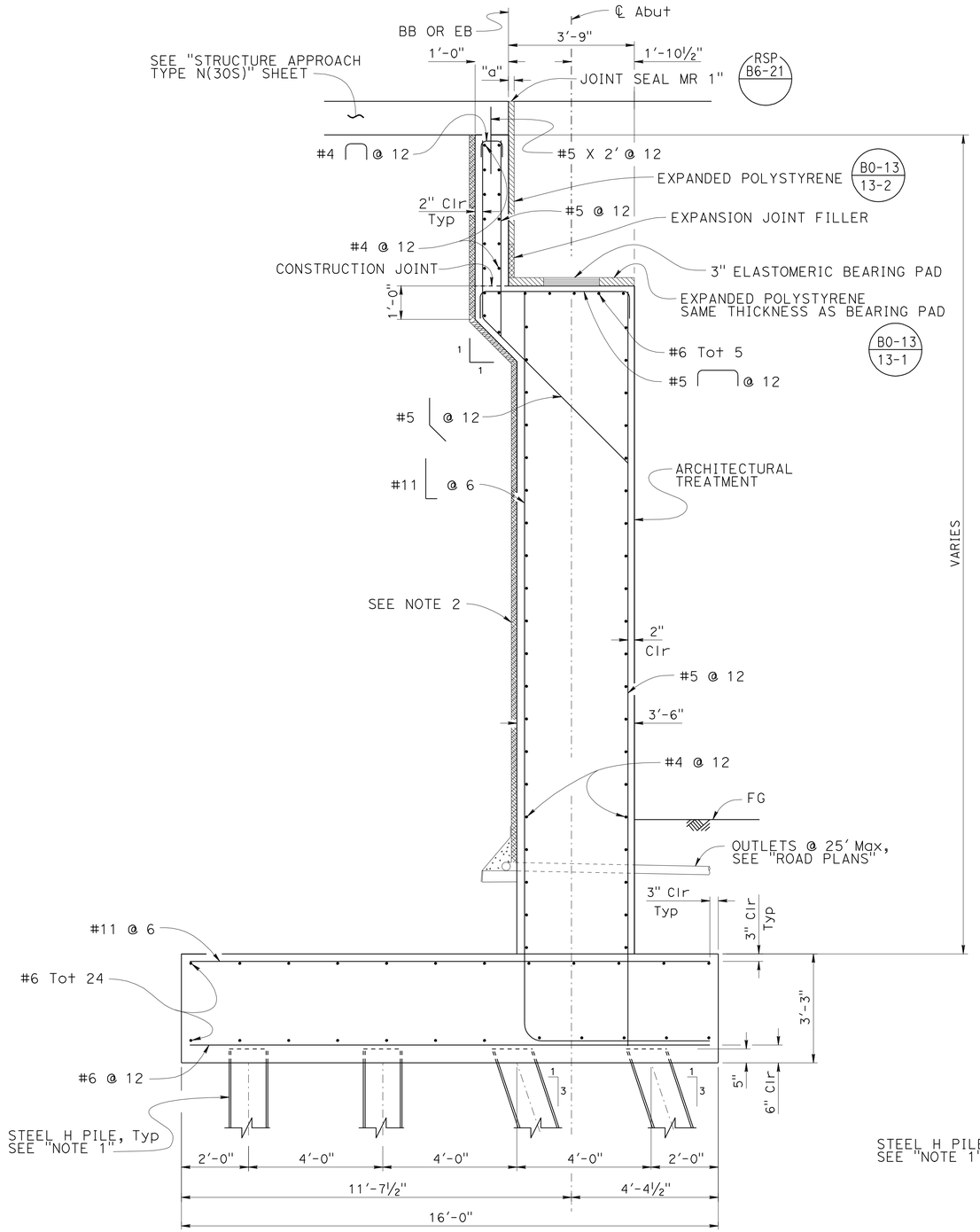

SECTION A-A

½" = 1'-0"

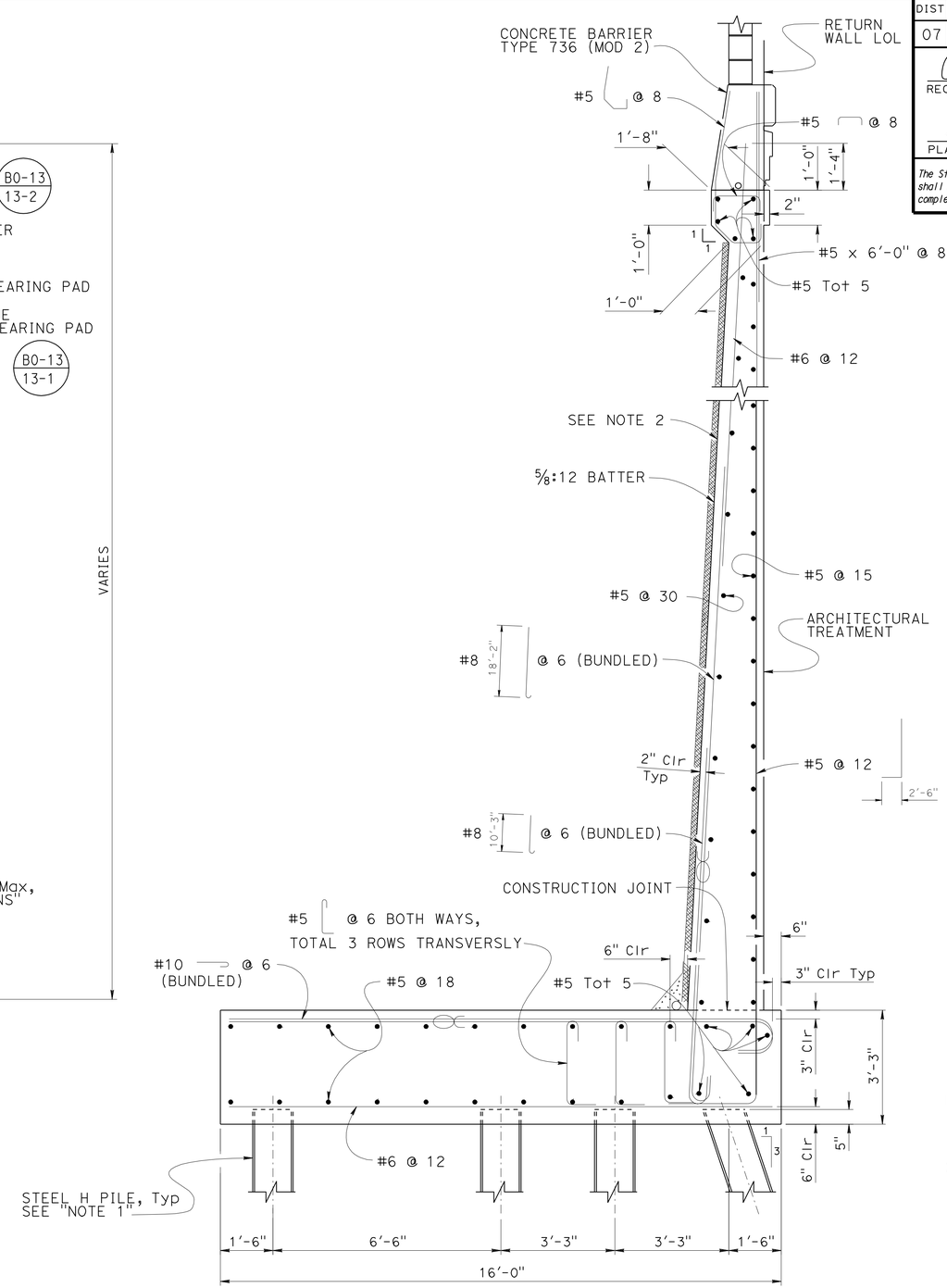

SECTION C-C

½" = 1'-0"

Notes:

1. For "STEEL PILE ANCHOR" detail see "ABUTMENT DETAILS No. 3" sheet.
2. See "STRUCTURE APPROACH DRAINAGE DETAILS" sheet.

Legend:

Indicates 2 Bundled bars

	BY	CHECKED
DESIGN	ANTHONY LOGUS	RUSLAN NOVIK
DETAILS	HERMAN MAUROSCHADT	RUSLAN NOVIK
QUANTITIES	SARA YIP	CLARENCE HENSEL

STATE OF CALIFORNIA
DEPARTMENT OF TRANSPORTATION

DIVISION OF ENGINEERING SERVICES
STRUCTURE DESIGN
DESIGN BRANCH 15

BRIDGE NO. 53-3071K
POST MILE 5.12

IMPERIAL Hwy OFF-RAMP
ABUTMENT DETAILS No. 2

STRUCTURES DESIGN DETAIL SHEET (ENGLISH) (REV. 09-01-10)

ORIGINAL SCALE IN INCHES FOR REDUCED PLANS 0 1 2 3

UNIT: 3604
PROJECT NUMBER & PHASE: 0700001834 1
CONTRACT NO.: 07-215941

DISREGARD PRINTS BEARING EARLIER REVISION DATES

REVISION DATES: 7-13-11 12-12-11 12-13-11 12-29-11

SHEET 8 OF 45

FILE => 53-3071k-g-ad02.dgn

USERNAME => s121614 DATE PLOTTED => 14-APR-2012 TIME PLOTTED => 11:37

DIST	COUNTY	ROUTE	POST MILES TOTAL PROJECT	SHEET No.	TOTAL SHEETS
07	LA	5	4.0/5.9	1161	1597

Anthony T. Logus 12-12-11
REGISTERED CIVIL ENGINEER DATE

4-9-12
PLANS APPROVAL DATE

REGISTERED PROFESSIONAL ENGINEER
Anthony T. Logus
No. C68189
Exp. 09-30-13
CIVIL
STATE OF CALIFORNIA

The State of California or its officers or agents shall not be responsible for the accuracy or completeness of electronic copies of this plan sheet.

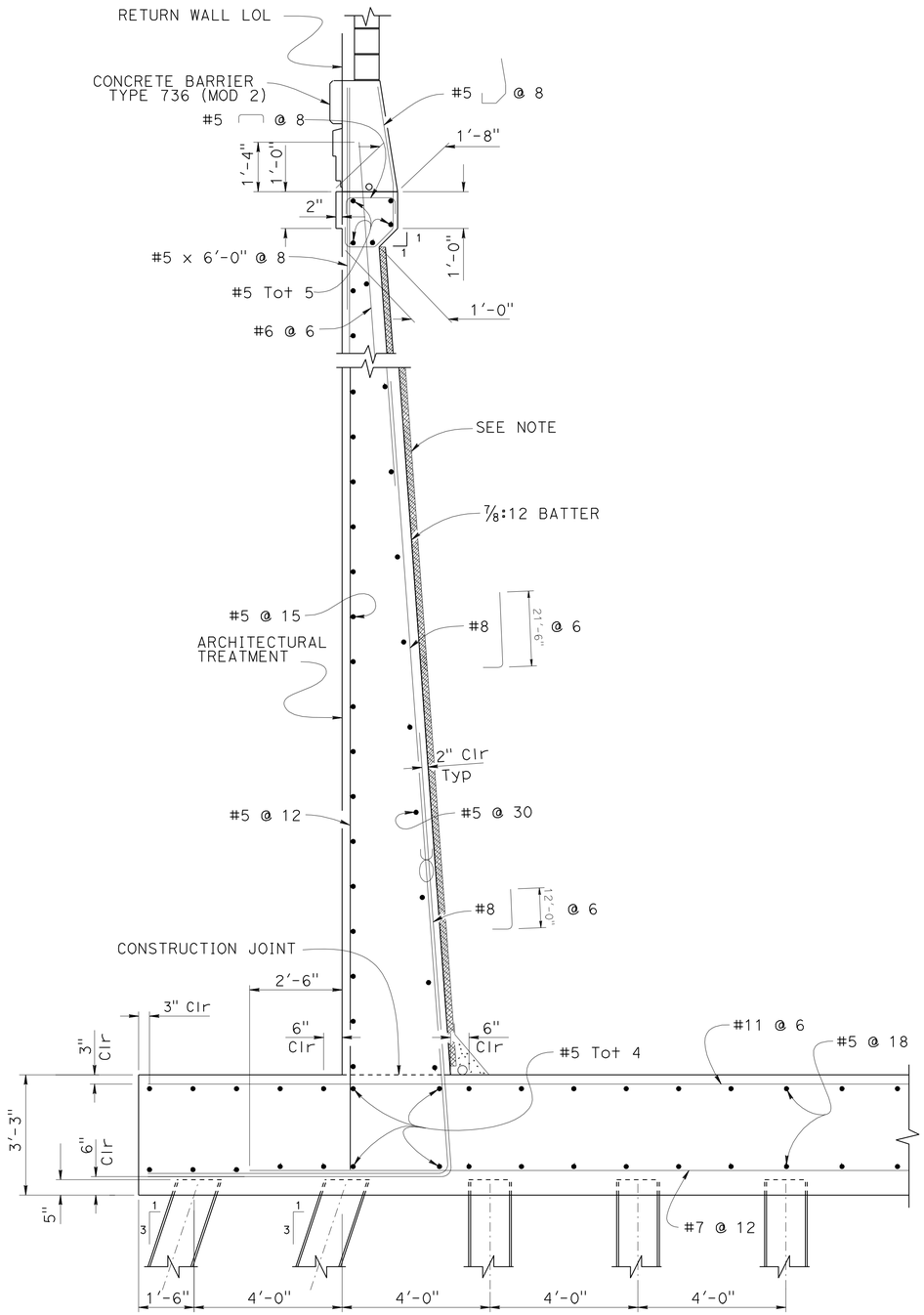

SECTION E-E

½" = 1'-0"

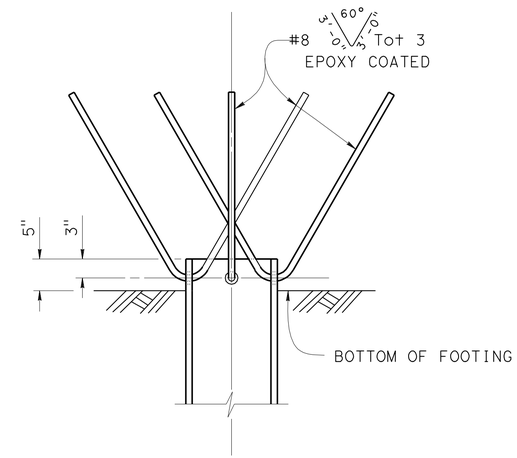

ELEVATION

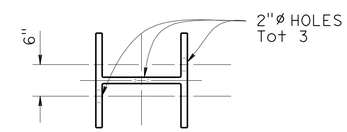

PLAN

STEEL PILE ANCHOR

Note:
See "STRUCTURE APPROACH DRAINAGE DETAILS" sheet.

Legend:

Indicates 2 Bundled bars

DESIGN	BY ANTHONY LOGUS	CHECKED RRUSLAN NOVIK	
DETAILS	BY HERMAN MAUROSCHADT	CHECKED RUSLAN NOVIK	
QUANTITIES	BY SARA YIP	CHECKED CLARENCE HENSEL	

STATE OF CALIFORNIA
DEPARTMENT OF TRANSPORTATION

DIVISION OF ENGINEERING SERVICES
STRUCTURE DESIGN
DESIGN BRANCH 15

BRIDGE NO. 53-3071K
POST MILE 5.12

IMPERIAL Hwy OFF-RAMP
ABUTMENT DETAILS No. 3

STRUCTURES DESIGN DETAIL SHEET (ENGLISH) (REV. 09-01-10)

ORIGINAL SCALE IN INCHES FOR REDUCED PLANS 0 1 2 3

UNIT: 3604
PROJECT NUMBER & PHASE: 0700001834 1
CONTRACT NO.: 07-215941

DISREGARD PRINTS BEARING EARLIER REVISION DATES

REVISION DATES 7-26-11 12-9-11 12-29-11

SHEET 9 OF 45

FILE => 53-3071k-g-ad03.dgn

USERNAME => s121614 DATE PLOTTED => 14-APR-2012 TIME PLOTTED => 11:37

DIST	COUNTY	ROUTE	POST MILES TOTAL PROJECT	SHEET No.	TOTAL SHEETS
07	LA	5	4.0/5.9	1162	1597

Anthony T. Logus 12-12-11
REGISTERED CIVIL ENGINEER DATE

4-9-12
PLANS APPROVAL DATE

REGISTERED PROFESSIONAL ENGINEER
Anthony T. Logus
No. C68189
Exp. 09-30-13
CIVIL
STATE OF CALIFORNIA

The State of California or its officers or agents shall not be responsible for the accuracy or completeness of electronic copies of this plan sheet.

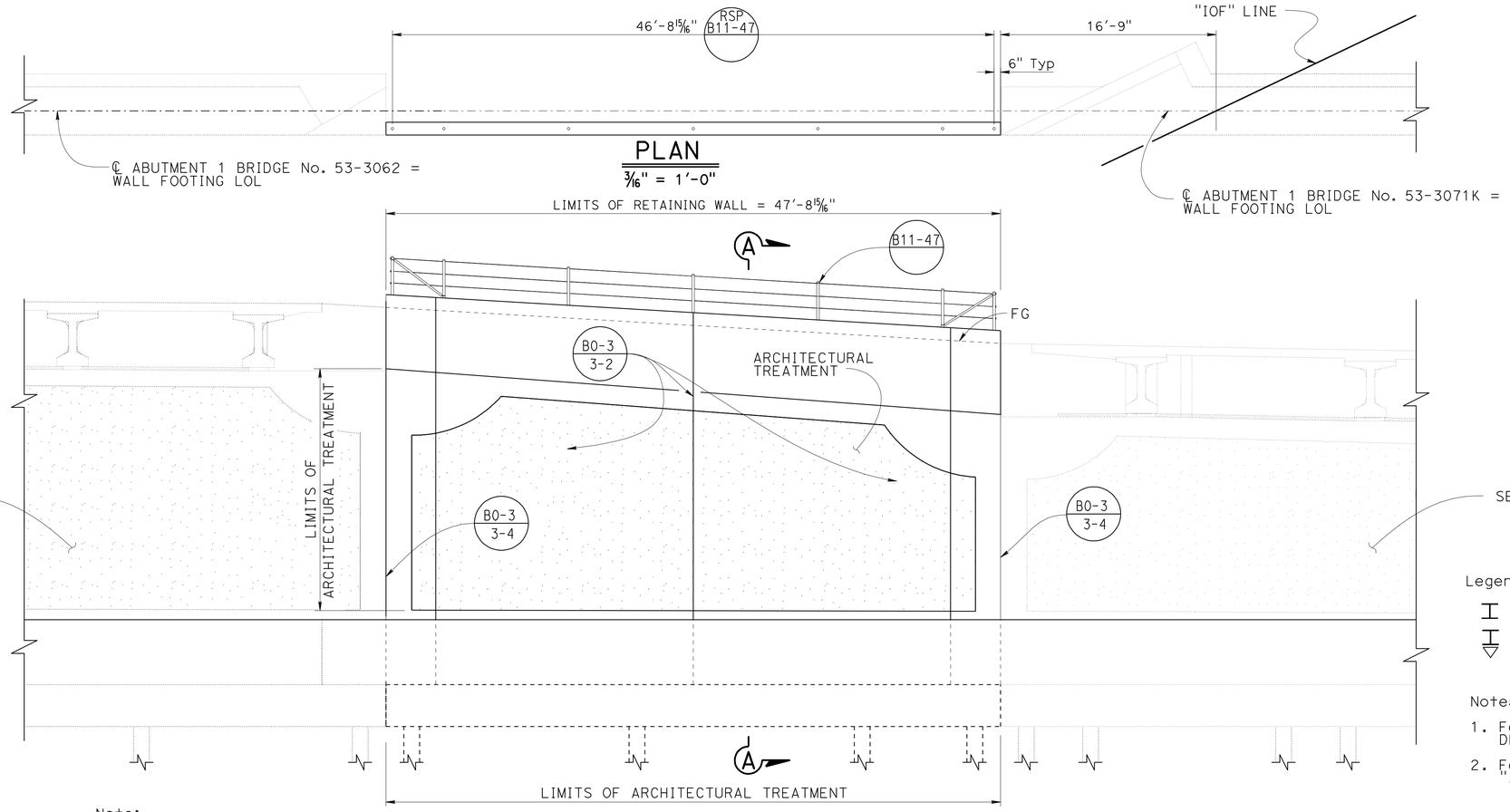

PLAN

3/16" = 1'-0"

Note:
Not all Piles shown

ELEVATION

3/16" = 1'-0"

Legend:

Indicates Vertical Pile

Indicates 3:1 Battered Pile

Notes:

1. For "SECTION A-A" see "RETAINING WALL DETAILS No. 2" sheet.
2. For Architectural Treatment details see "ARCHITECTURAL" sheets.

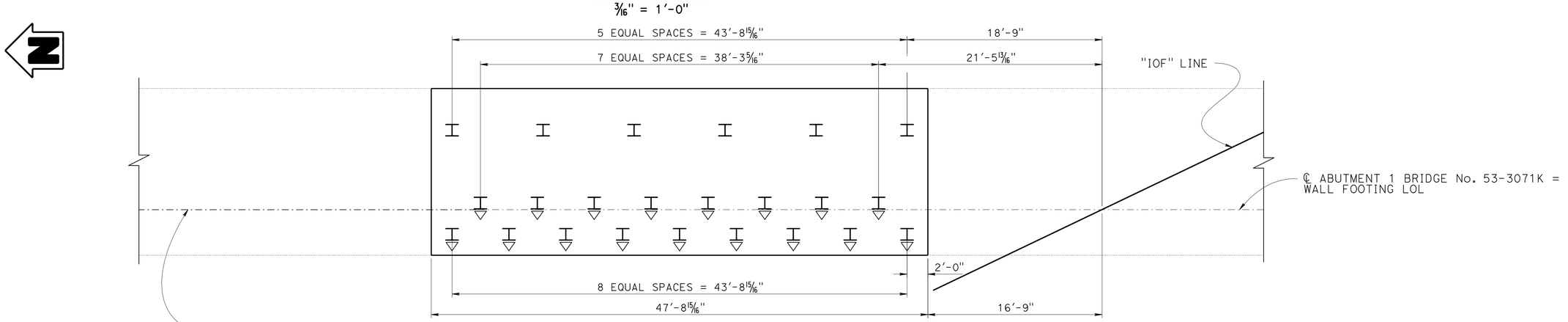

FOOTING PLAN

RUSLAN NOVIK

DESIGN	BY GABRIEL GALO	CHECKED ANTHONY LOGUS	
DETAILS	BY HERMAN MAUROSCHADT	CHECKED ANTHONY LOGUS	
QUANTITIES	BY SARA YIP	CHECKED CLARENCE HENSEL	

STATE OF CALIFORNIA
DEPARTMENT OF TRANSPORTATION

DIVISION OF ENGINEERING SERVICES
STRUCTURE DESIGN
DESIGN BRANCH 15

BRIDGE NO. 53-3071K
POST MILE 5.12

IMPERIAL Hwy OFF-RAMP
RETAINING WALL DETAILS No. 1

STRUCTURES DESIGN DETAIL SHEET (ENGLISH) (REV. 09-01-10)

ORIGINAL SCALE IN INCHES FOR REDUCED PLANS 0 1 2 3

UNIT: 3604
PROJECT NUMBER & PHASE: 0700001834 1
CONTRACT NO.: 07-215941

DISREGARD PRINTS BEARING EARLIER REVISION DATES

REVISION DATES: 9-16-11 12-8-11 12-28-11 2-22-12

SHEET 10 OF 45

FILE => 53-3071k-h-rw01.dgn

USERNAME => s121614 DATE PLOTTED => 14-APR-2012 TIME PLOTTED => 11:37

DIST	COUNTY	ROUTE	POST MILES TOTAL PROJECT	SHEET No.	TOTAL SHEETS
07	LA	5	4.0/5.9	1163	1597

Anthony T. Logus 12-12-11
REGISTERED CIVIL ENGINEER DATE

4-9-12
PLANS APPROVAL DATE

REGISTERED PROFESSIONAL ENGINEER
Anthony T. Logus
No. C68189
Exp. 09-30-13
CIVIL
STATE OF CALIFORNIA

The State of California or its officers or agents shall not be responsible for the accuracy or completeness of electronic copies of this plan sheet.

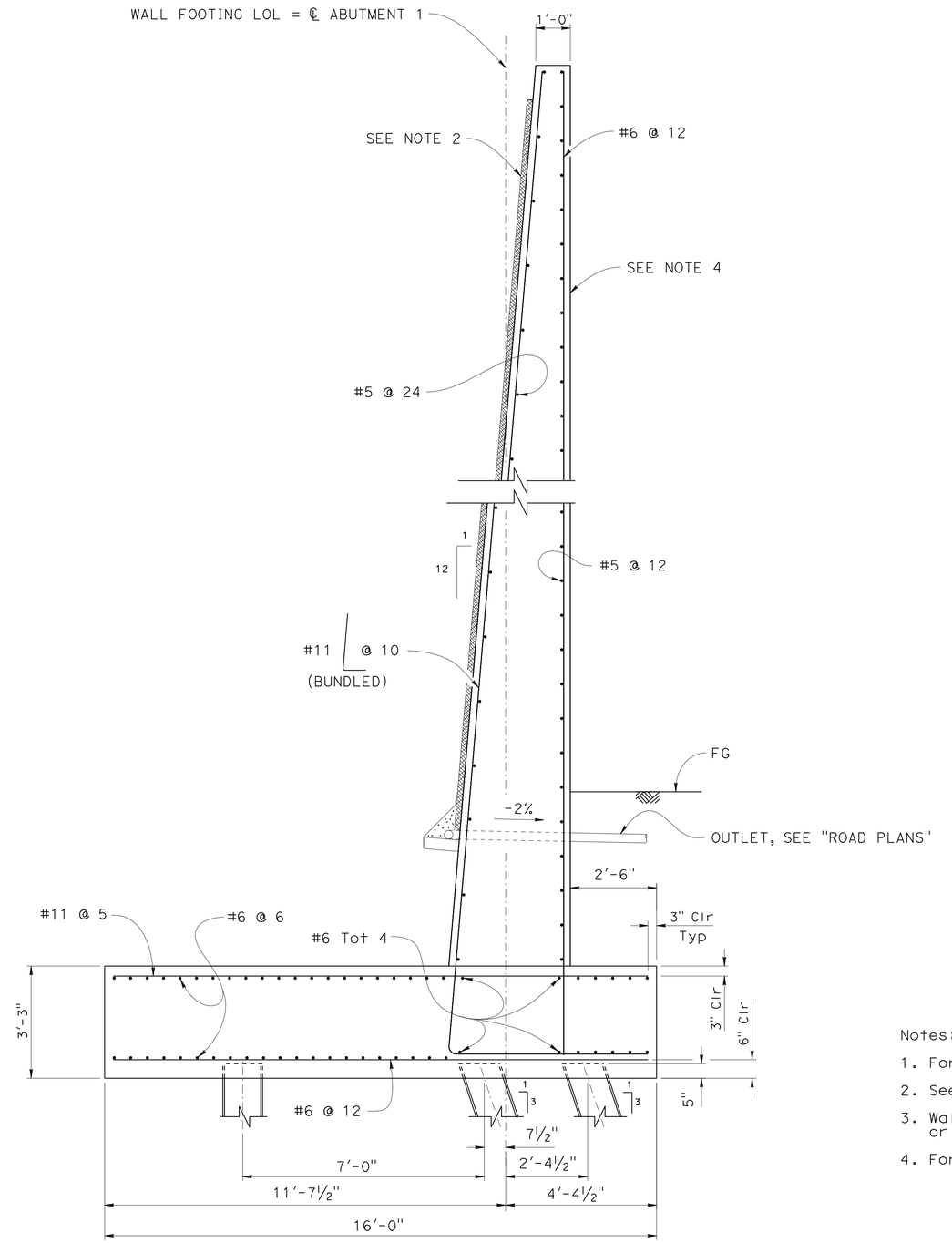

SECTION A-A

½" = 1'-0"

Notes:

1. For "STEEL PILE ANCHOR" detail see "ABUTMENT DETAILS No. 3" sheet.
2. See "STRUCTURE APPROACH DRAINAGE DETAILS" sheet.
3. Wall Stem offset prior to backfill to be 2½" or as directed by the Engineer.
4. For Architectural details see "ARCHITECTURAL" sheets.

	BY	CHECKED
DESIGN	GABRIEL GALO	ANTHONY LOGUS
DETAILS	HERMAN MAUROSCHADT	ANTHONY LOGUS
QUANTITIES	SARA YIP	CLARENCE HENSEL

STATE OF CALIFORNIA
DEPARTMENT OF TRANSPORTATION

DIVISION OF ENGINEERING SERVICES
STRUCTURE DESIGN
DESIGN BRANCH 15

BRIDGE NO. 53-3071K
POST MILE 5.12

IMPERIAL Hwy OFF-RAMP
RETAINING WALL DETAILS No. 2

STRUCTURES DESIGN DETAIL SHEET (ENGLISH) (REV. 09-01-10)

ORIGINAL SCALE IN INCHES FOR REDUCED PLANS 0 1 2 3

UNIT: 3604
PROJECT NUMBER & PHASE: 0700001834 1
CONTRACT NO.: 07-215941

DISREGARD PRINTS BEARING EARLIER REVISION DATES

REVISION DATES 8-17-11 12-12-11 2-15-12

SHEET 11 OF 45

FILE => 53-3071k-h-rw02.dgn

USERNAME => s121614 DATE PLOTTED => 14-APR-2012 TIME PLOTTED => 11:37

DIST	COUNTY	ROUTE	POST MILES TOTAL PROJECT	SHEET No.	TOTAL SHEETS
07	LA	5	4.0/5.9	1164	1597

Anthony T. Logus 12-12-11
REGISTERED CIVIL ENGINEER DATE

4-9-12
PLANS APPROVAL DATE

REGISTERED PROFESSIONAL ENGINEER Anthony T. Logus No. C68189 Exp. 09-30-13 CIVIL STATE OF CALIFORNIA

The State of California or its officers or agents shall not be responsible for the accuracy or completeness of electronic copies of this plan sheet.

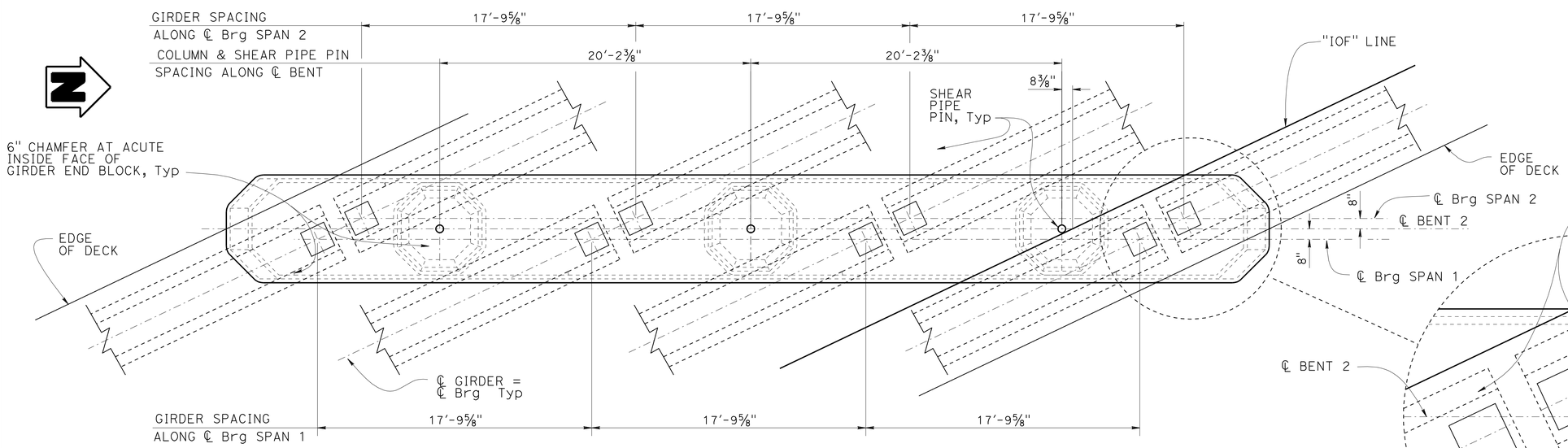

PLAN
¼" = 1'-0"

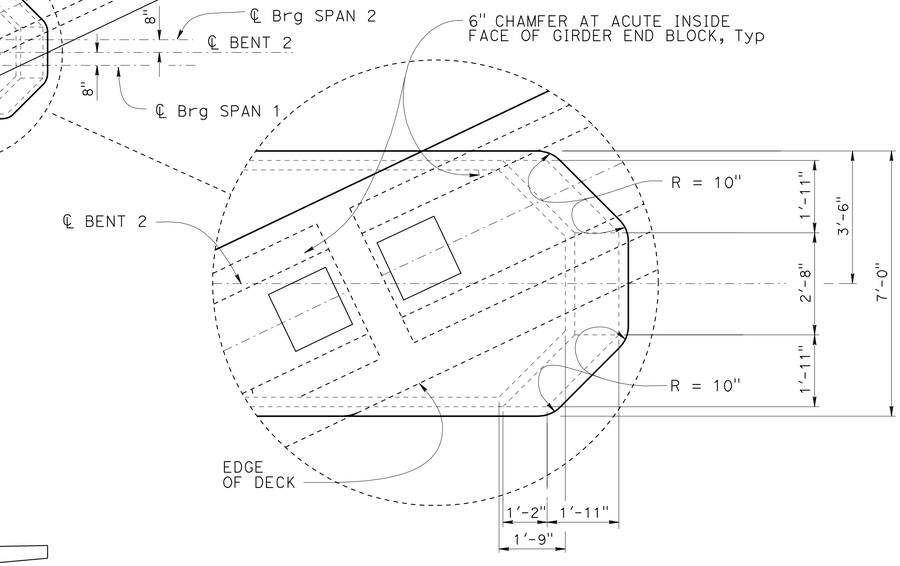

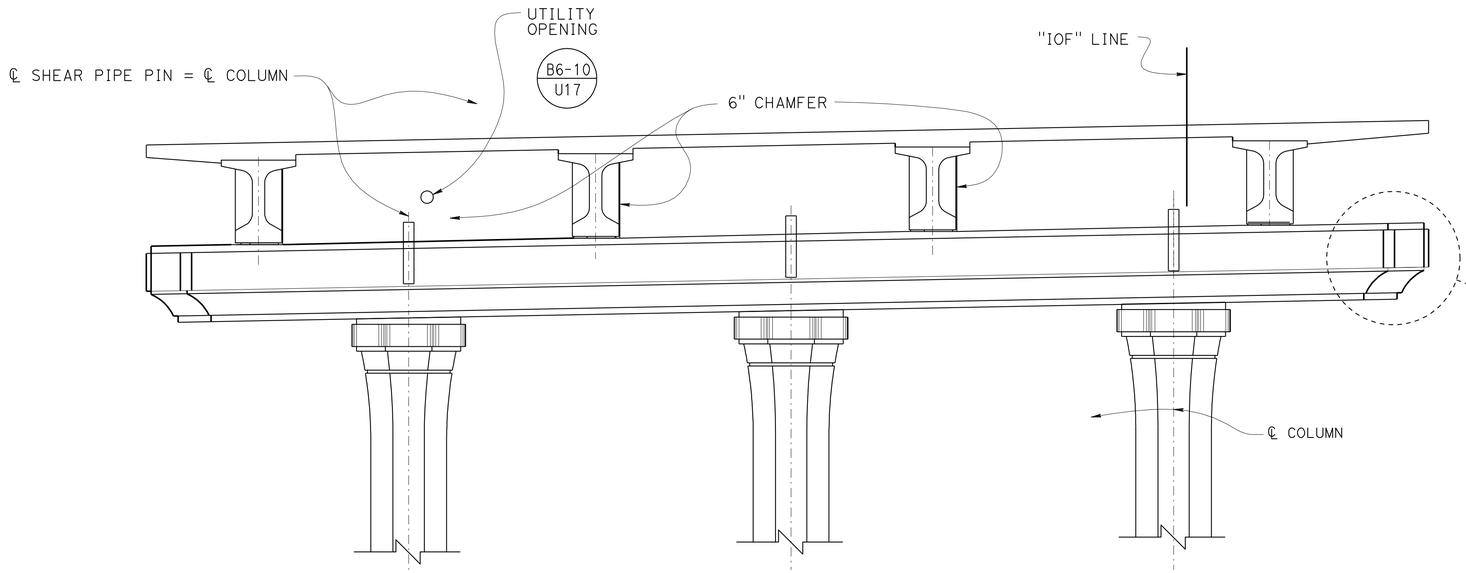

ELEVATION
¼" = 1'-0"

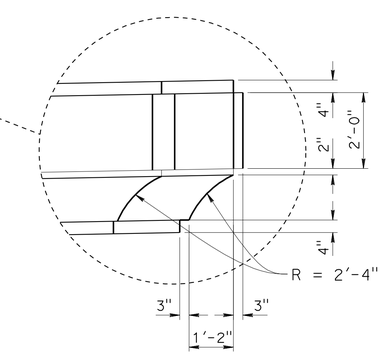

Note:

1. For Shear Pipe Pin details see "SHEAR PIPE PIN DETAIL" on "BENT DETAILS No. 2" sheet.

DESIGN	BY ANTHONY LOGUS	CHECKED RUSLAN NOVIK	
DETAILS	BY BRUNO JENKO	CHECKED RUSLAN NOVIK	
QUANTITIES	BY SARA YIP	CHECKED CLARENCE HENSEL	

STATE OF CALIFORNIA
DEPARTMENT OF TRANSPORTATION

DIVISION OF ENGINEERING SERVICES
STRUCTURE DESIGN
DESIGN BRANCH 15

BRIDGE NO. 53-3071K
POST MILE 5.12

IMPERIAL Hwy OFF-RAMP
BENT LAYOUT

STRUCTURES DESIGN DETAIL SHEET (ENGLISH) (REV. 09-01-10)

ORIGINAL SCALE IN INCHES FOR REDUCED PLANS 0 1 2 3

UNIT: 3604
PROJECT NUMBER & PHASE: 0700001834 1
CONTRACT NO.: 07-215941

DISREGARD PRINTS BEARING EARLIER REVISION DATES

REVISION DATES: 2-15-12 | 8-26-11 | 12-29-11

SHEET 12 OF 45

FILE => 53-3071K-1-b01_lo01.dgn

USERNAME => s121614 DATE PLOTTED => 14-APR-2012 TIME PLOTTED => 11:37

DIST	COUNTY	ROUTE	POST MILES TOTAL PROJECT	SHEET No.	TOTAL SHEETS
07	LA	5	4.0/5.9	1165	1597

Anthony T. Logus 12-12-11
REGISTERED CIVIL ENGINEER DATE

4-9-12
PLANS APPROVAL DATE

REGISTERED PROFESSIONAL ENGINEER
Anthony T. Logus
No. C68189
Exp. 09-30-13
CIVIL
STATE OF CALIFORNIA

The State of California or its officers or agents shall not be responsible for the accuracy or completeness of electronic copies of this plan sheet.

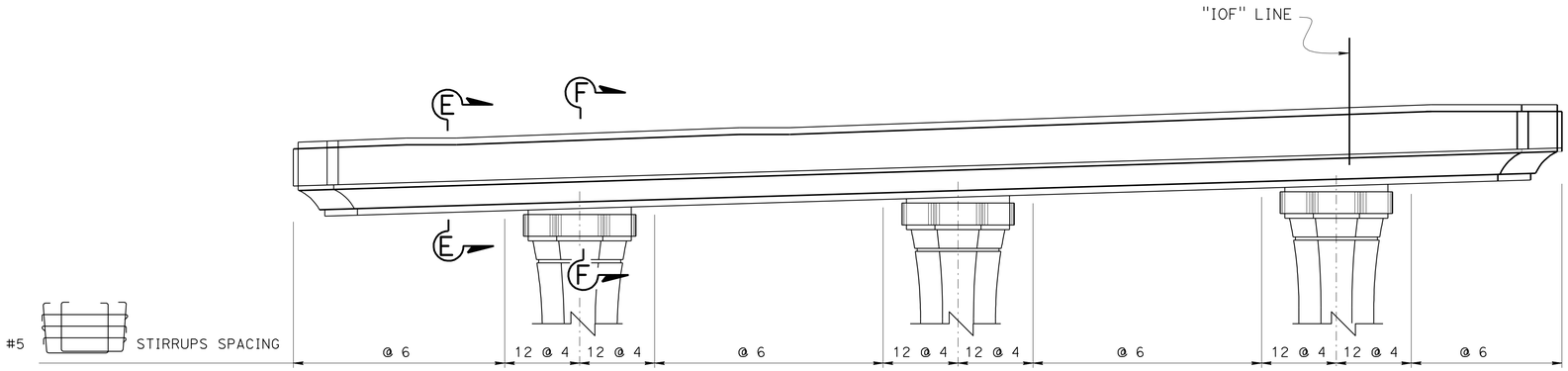

BENT CAP STIRRUP LAYOUT

NO SCALE

Note:

1. For Shear Pipe Pin details see "SHEAR PIPE PIN DETAIL" on "BENT DETAILS No. 2" sheet.

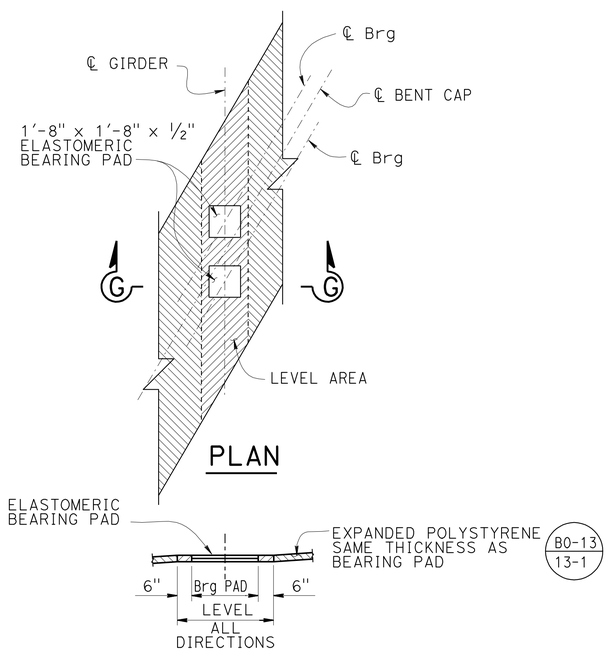

SECTION G-G

BENT CAP BEARING PAD DETAIL

No Scale

Details typical at all bearing pads

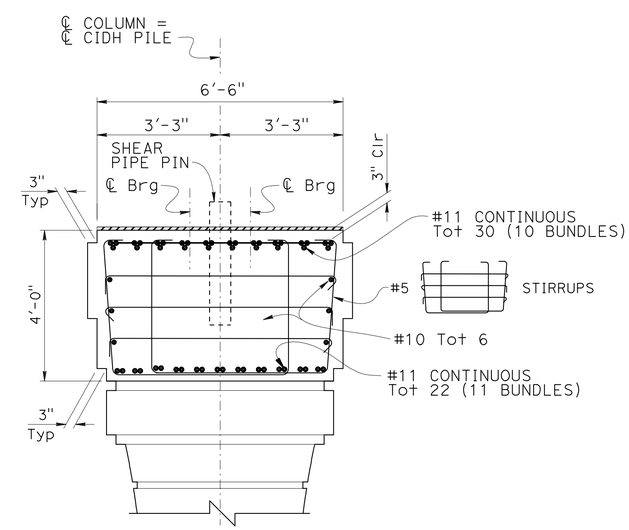

BENT CAP SECTION E-E

½" = 1'-0"

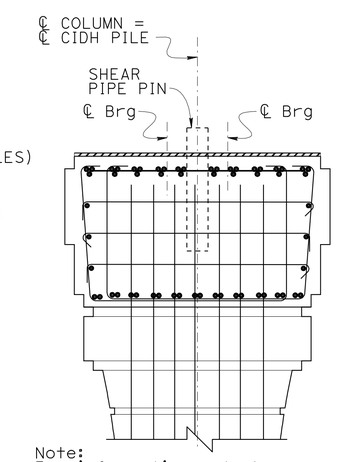

Note:
For information not shown, see "BENT CAP SECTION E-E"

BENT CAP SECTION F-F

½" = 1'-0"

DESIGN	BY ANTHONY LOGUS	CHECKED RUSLAN NOVIK	
DETAILS	BY BRUNO JENKO	CHECKED RUSLAN NOVIK	
QUANTITIES	BY SARA YIP	CHECKED CLARENCE HENSEL	

STATE OF CALIFORNIA
DEPARTMENT OF TRANSPORTATION

DIVISION OF ENGINEERING SERVICES
STRUCTURE DESIGN
DESIGN BRANCH 15

BRIDGE NO. 53-3071K
POST MILE 5.12

IMPERIAL Hwy OFF-RAMP
BENT DETAILS No. 1

STRUCTURES DESIGN DETAIL SHEET (ENGLISH) (REV. 09-01-10)

ORIGINAL SCALE IN INCHES FOR REDUCED PLANS 0 1 2 3

UNIT: 3604
PROJECT NUMBER & PHASE: 0700001834 1
CONTRACT NO.: 07-215941

DISREGARD PRINTS BEARING EARLIER REVISION DATES

REVISION DATES 8-26-11 11-29-11 12-8-11 12-29-11

SHEET 13 OF 45

FILE => 53-3071k-1-b01dt01.dgn

USERNAME => s121614 DATE PLOTTED => 14-APR-2012 TIME PLOTTED => 11:38

DIST	COUNTY	ROUTE	POST MILES TOTAL PROJECT	SHEET No.	TOTAL SHEETS
07	LA	5	4.0/5.9	1166	1597

Anthony T. Logus 12-12-11
REGISTERED CIVIL ENGINEER DATE

4-9-12
PLANS APPROVAL DATE

REGISTERED PROFESSIONAL ENGINEER Anthony T. Logus No. C68189 Exp. 09-30-13 CIVIL STATE OF CALIFORNIA

The State of California or its officers or agents shall not be responsible for the accuracy or completeness of electronic copies of this plan sheet.

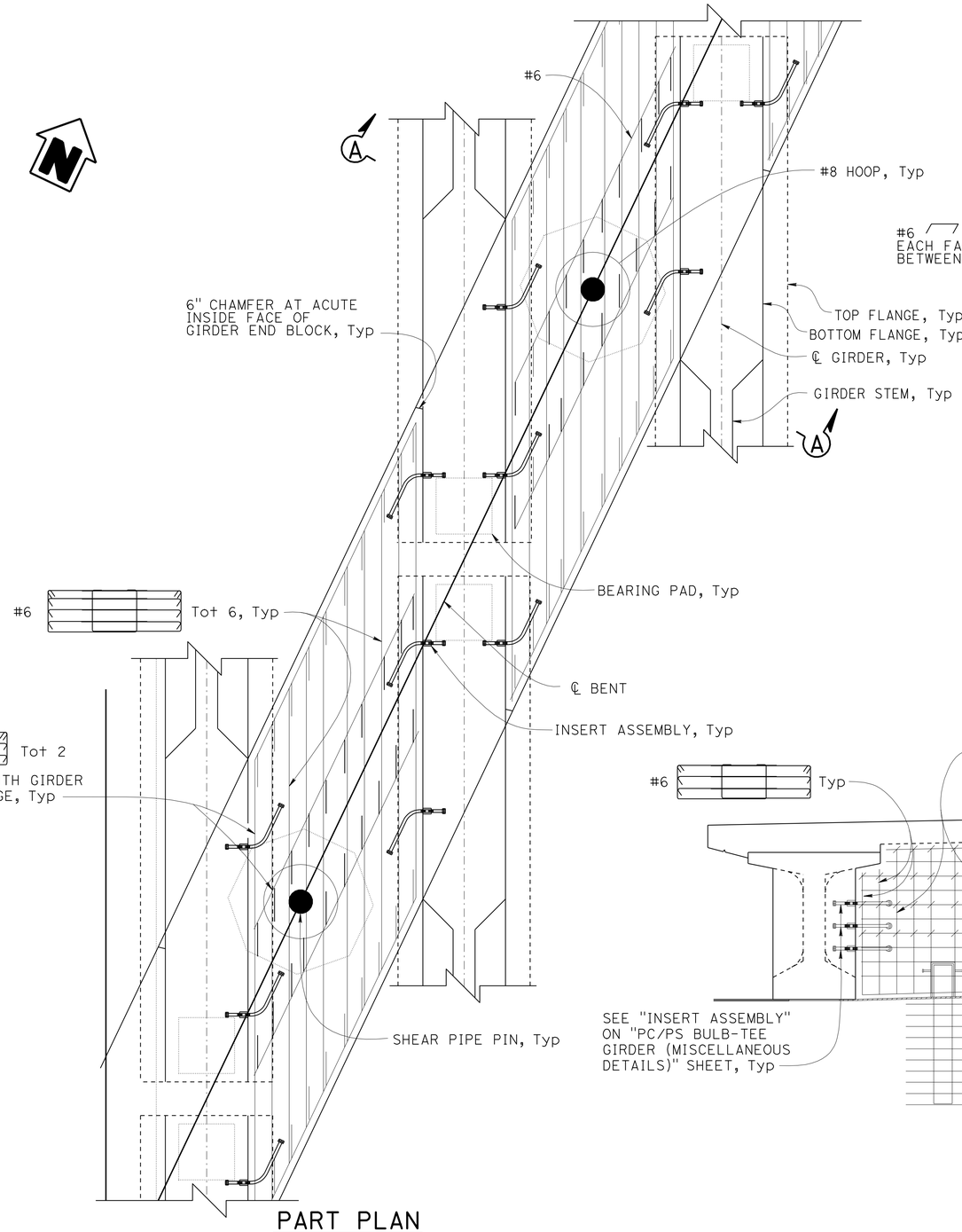

PART PLAN
½" = 1'-0"

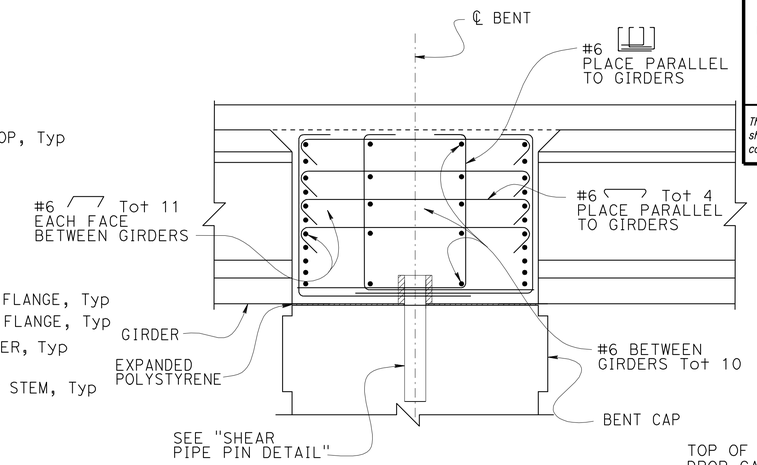

SECTION A-A
½" = 1'-0"

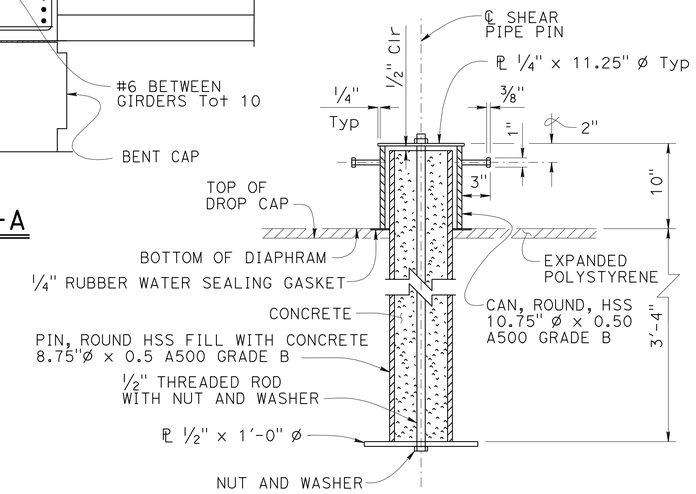

ELEVATION

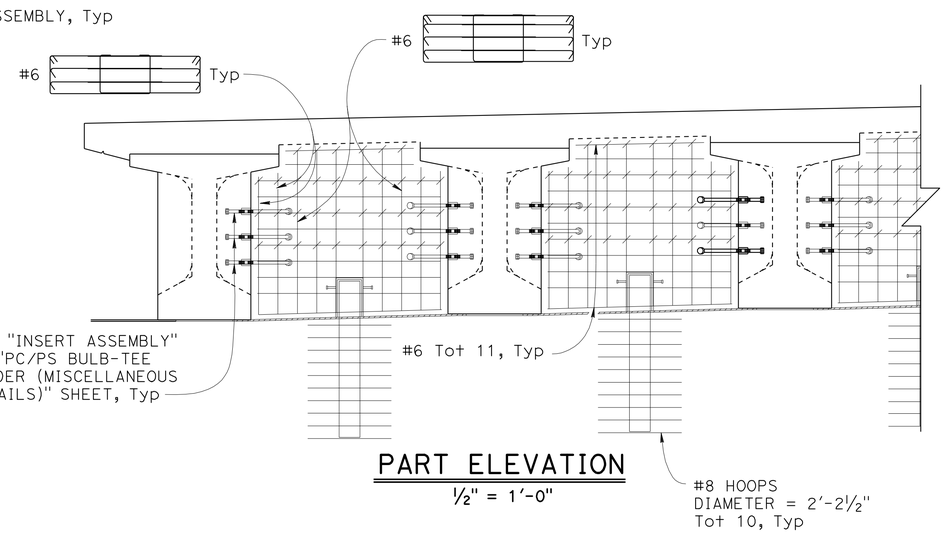

PART ELEVATION
½" = 1'-0"

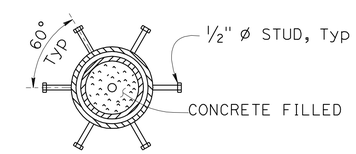

PLAN

SHEAR PIPE PIN DETAIL
NO SCALE

DESIGN	BY ANTHONY LOGUS	CHECKED RUSLAN NOVIK	
DETAILS	BY HERMAN MAUROSCHADT	CHECKED RUSLAN NOVIK	
QUANTITIES	BY SARA YIP	CHECKED CLARENCE HENSEL	

STATE OF CALIFORNIA
DEPARTMENT OF TRANSPORTATION

DIVISION OF ENGINEERING SERVICES
STRUCTURE DESIGN
DESIGN BRANCH 15

BRIDGE NO. 53-3071K
POST MILE 5.12

IMPERIAL Hwy OFF-RAMP
BENT DETAILS No. 2

STRUCTURES DESIGN DETAIL SHEET (ENGLISH) (REV. 09-01-10)

ORIGINAL SCALE IN INCHES FOR REDUCED PLANS 0 1 2 3

UNIT: 3604
PROJECT NUMBER & PHASE: 0700001834 1
CONTRACT NO.: 07-215941

DISREGARD PRINTS BEARING EARLIER REVISION DATES

REVISION DATES: 2-23-12 10-5-11 12-8-11 12-9-11

SHEET 14 OF 45

FILE => 53-3071k-1-b01dt02.dgn

USERNAME => s121614 DATE PLOTTED => 14-APR-2012 TIME PLOTTED => 11:38

DIST	COUNTY	ROUTE	POST MILES TOTAL PROJECT	SHEET No.	TOTAL SHEETS
07	LA	5	4.0/5.9	1167	1597

Anthony T. Logus 12-12-11
REGISTERED CIVIL ENGINEER DATE

4-9-12
PLANS APPROVAL DATE

REGISTERED PROFESSIONAL ENGINEER
Anthony T. Logus
No. C68189
Exp. 09-30-13
CIVIL
STATE OF CALIFORNIA

The State of California or its officers or agents shall not be responsible for the accuracy or completeness of electronic copies of this plan sheet.

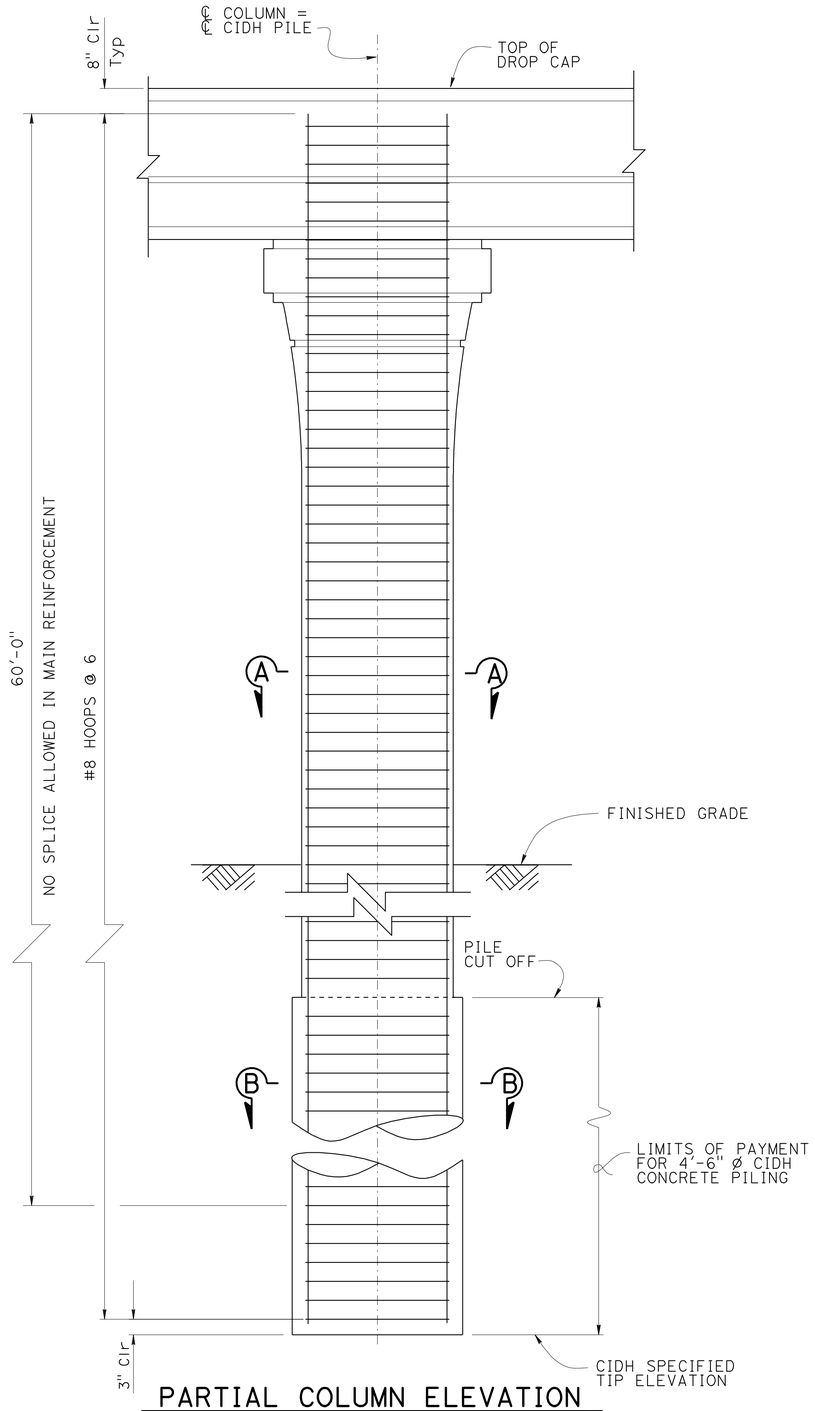

PARTIAL COLUMN ELEVATION
½" = 1'-0"

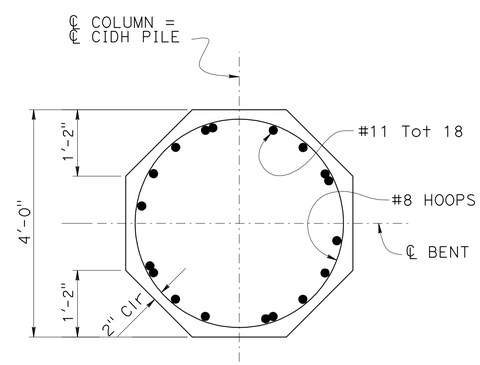

SECTION A-A
¾" = 1'-0"

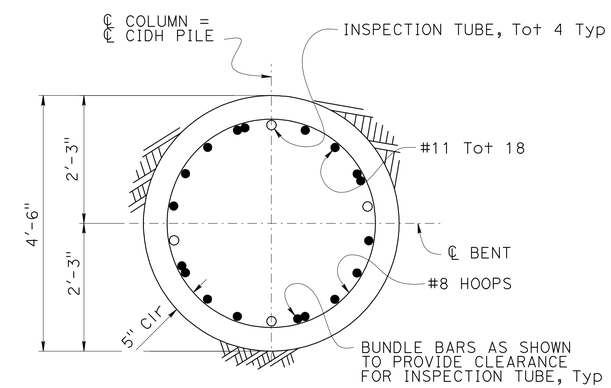

SECTION B-B
¾" = 1'-0"

Notes:

1. Column and pile hoops to be made continuous with ultimate splice (stagger splices).
2. Splices in column and pile reinforcement shall conform to ultimate splice specifications.

	BY	CHECKED
DESIGN	ANTHONY LOGUS	RUSLAN NOVIK
DETAILS	BRUNO JENKO	RUSLAN NOVIK
QUANTITIES	SARA YIP	CLARENCE HENSEL

STATE OF CALIFORNIA
DEPARTMENT OF TRANSPORTATION

DIVISION OF ENGINEERING SERVICES
STRUCTURE DESIGN
DESIGN BRANCH 15

BRIDGE NO. 53-3071K
POST MILE 5.12

IMPERIAL Hwy OFF-RAMP
COLUMN DETAILS No. 1

STRUCTURES DESIGN DETAIL SHEET (ENGLISH) (REV. 09-01-10)

ORIGINAL SCALE IN INCHES FOR REDUCED PLANS 0 1 2 3

UNIT: 3604
PROJECT NUMBER & PHASE: 0700001834 1
CONTRACT NO.: 07-215941

DISREGARD PRINTS BEARING EARLIER REVISION DATES

REVISION DATES: 12-2-11 12-9-11 12-12-11 2-22-12

SHEET 15 OF 45

FILE => 53-3071k-j-cdet01.dgn

USERNAME => 8121614 DATE PLOTTED => 14-APR-2012 TIME PLOTTED => 11:38

DIST	COUNTY	ROUTE	POST MILES TOTAL PROJECT	SHEET No.	TOTAL SHEETS
07	LA	5	4.0/5.9	1168	1597

Anthony T. Logus 12-12-11
REGISTERED CIVIL ENGINEER DATE

4-9-12
PLANS APPROVAL DATE

REGISTERED PROFESSIONAL ENGINEER
Anthony T. Logus
No. C68189
Exp. 09-30-13
CIVIL
STATE OF CALIFORNIA

The State of California or its officers or agents shall not be responsible for the accuracy or completeness of electronic copies of this plan sheet.

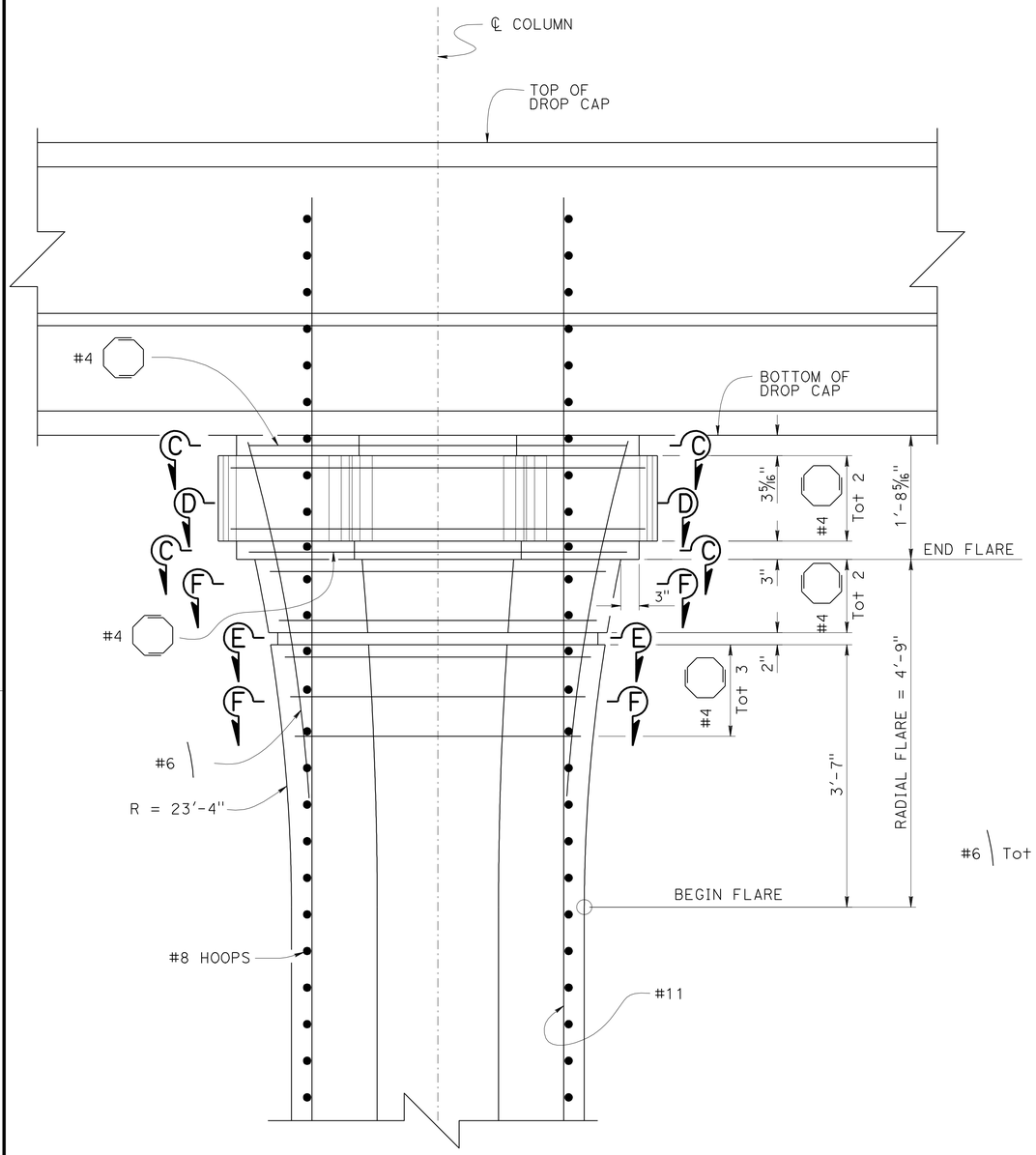

ELEVATION
1" = 1'-0"

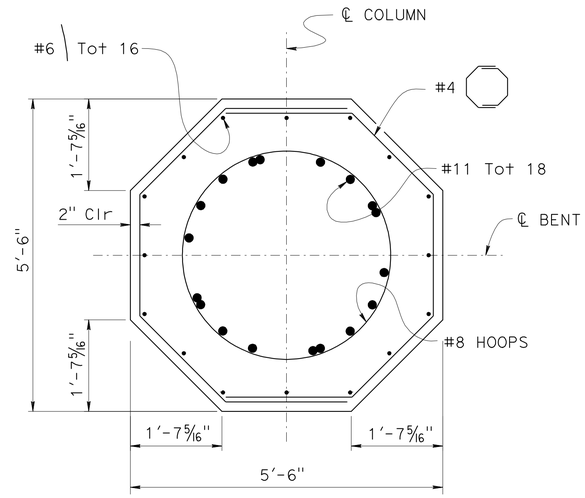

SECTION C-C
¾" = 1'-0"

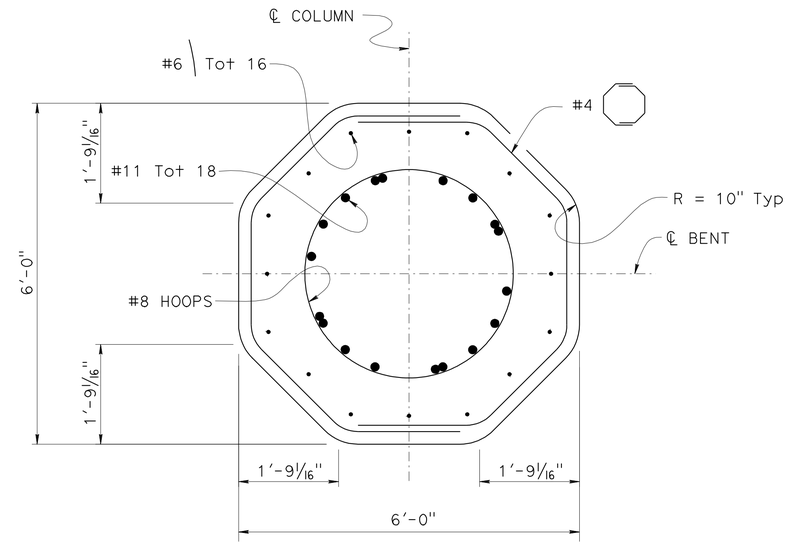

SECTION D-D
¾" = 1'-0"

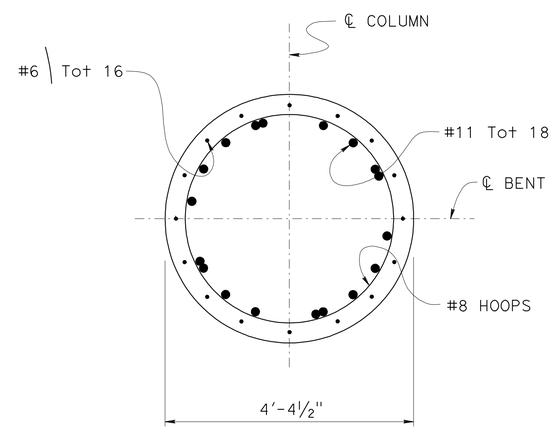

SECTION E-E
¾" = 1'-0"

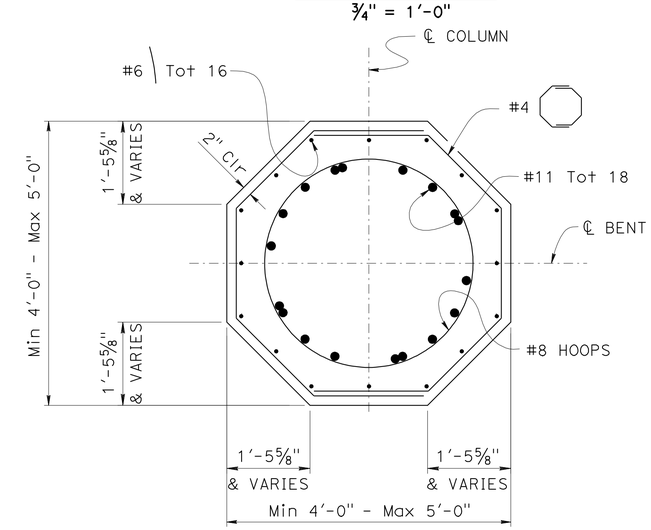

SECTION F-F
¾" = 1'-0"

DESIGN	BY ANTHONY LOGUS	CHECKED RUSLAN NOVIK	
DETAILS	BY BRUNO JENKO	CHECKED RUSLAN NOVIK	
QUANTITIES	BY SARA YIP	CHECKED CLARENCE HENSEL	

STATE OF CALIFORNIA
DEPARTMENT OF TRANSPORTATION

DIVISION OF ENGINEERING SERVICES
STRUCTURE DESIGN
DESIGN BRANCH 15

BRIDGE NO. 53-3071K
POST MILE 5.12

IMPERIAL Hwy OFF-RAMP
COLUMN DETAILS No. 2

STRUCTURES DESIGN DETAIL SHEET (ENGLISH) (REV. 09-01-10)

ORIGINAL SCALE IN INCHES FOR REDUCED PLANS 0 1 2 3

UNIT: 3604
PROJECT NUMBER & PHASE: 0700001834 1
CONTRACT NO.: 07-215941

DISREGARD PRINTS BEARING EARLIER REVISION DATES

REVISION DATES 12-2-11 12-6-11 12-29-11

SHEET 16 OF 45

FILE => 53-3071k-j-cdet02.dgn

USERNAME => s121614 DATE PLOTTED => 14-APR-2012 TIME PLOTTED => 11:38

DIST	COUNTY	ROUTE	POST MILES TOTAL PROJECT	SHEET No.	TOTAL SHEETS
07	LA	5	4.0/5.9	1169	1597

Anthony T. Logus 12-12-11
REGISTERED CIVIL ENGINEER DATE

4-9-12
PLANS APPROVAL DATE

REGISTERED PROFESSIONAL ENGINEER
Anthony T. Logus
No. C68189
Exp. 09-30-13
CIVIL
STATE OF CALIFORNIA

The State of California or its officers or agents shall not be responsible for the accuracy or completeness of electronic copies of this plan sheet.

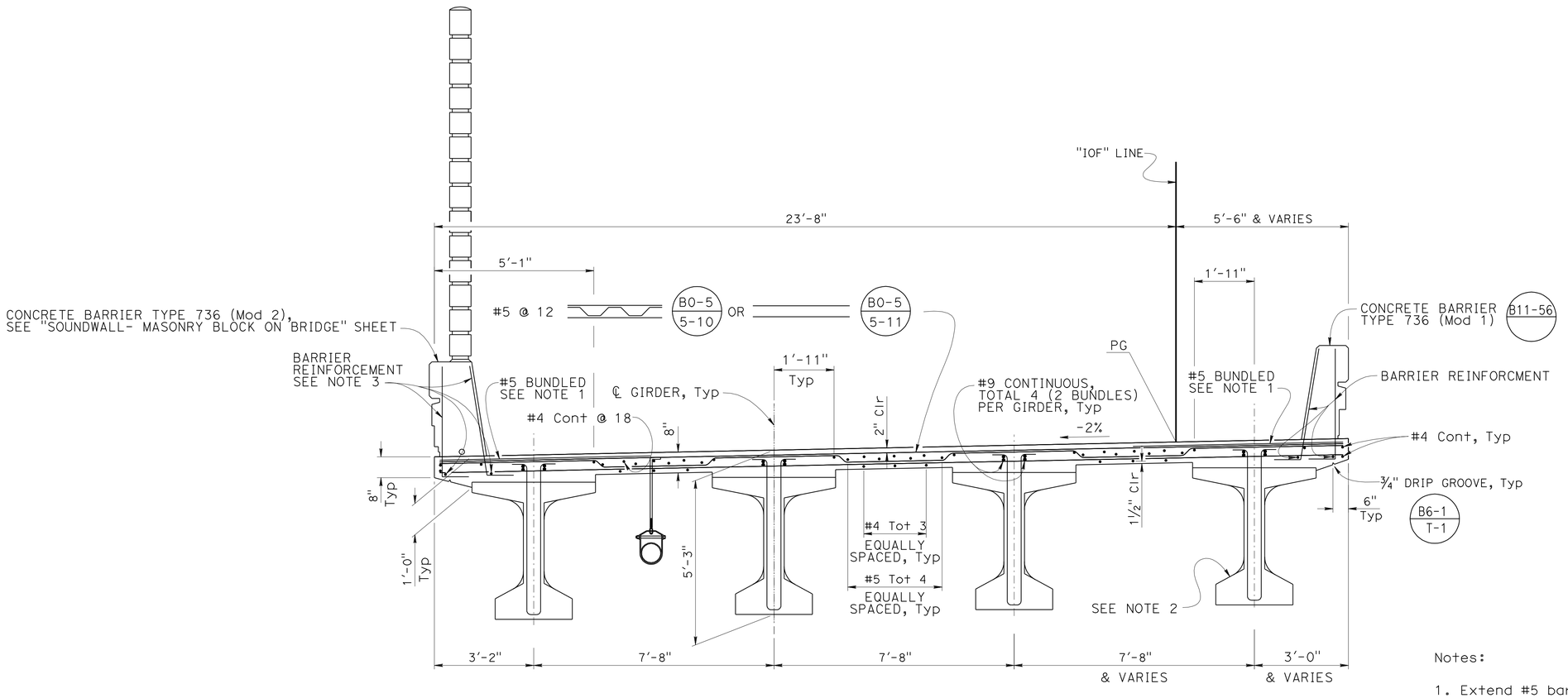

TYPICAL SECTION

1/2" = 1'-0"

Notes:

1. Extend #5 bar to center of Bay from BB to EB Type 736 (Mod 2) side and from Station 69+94.90 to EB Type 736 (Mod 1) side.
2. For Girder reinforcement see "PC/PS BULB-TEE GIRDER (HARPED STRANDS)" sheet.
3. For Barrier reinforcement see "SOUNDWALL - MASONRY BLOCK ON BRIDGE" sheet.

	BY	CHECKED
DESIGN	ANTHONY LOGUS	RUSLAN NOVIK
DETAILS	HERMAN MAUROSCHADT	RUSLAN NOVIK
QUANTITIES	SARA YIP	CLARENCE HENSEL

STATE OF CALIFORNIA
DEPARTMENT OF TRANSPORTATION

DIVISION OF ENGINEERING SERVICES
STRUCTURE DESIGN
DESIGN BRANCH 15

BRIDGE NO. 53-3071K
POST MILE 5.12

IMPERIAL Hwy OFF-RAMP
TYPICAL SECTION

STRUCTURES DESIGN DETAIL SHEET (ENGLISH) (REV. 09-01-10)

ORIGINAL SCALE IN INCHES FOR REDUCED PLANS 0 1 2 3

UNIT: 3604
PROJECT NUMBER & PHASE: 0700001834 1
CONTRACT NO.: 07-215941

DISREGARD PRINTS BEARING EARLIER REVISION DATES

REVISION DATES 7-1-11 12-29-11 12-29-11

SHEET 17 OF 45

FILE => 53-3071k-m-ts1.dgn

USERNAME => s121614 DATE PLOTTED => 14-APR-2012 TIME PLOTTED => 11:38

DIST	COUNTY	ROUTE	POST MILES TOTAL PROJECT	SHEET No.	TOTAL SHEETS
07	LA	5	4.0/5.9	1170	1597

Anthony T. Logus 12-12-11
REGISTERED CIVIL ENGINEER DATE

4-9-12
PLANS APPROVAL DATE

REGISTERED PROFESSIONAL ENGINEER
Anthony T. Logus
No. C68189
Exp. 09-30-13
CIVIL
STATE OF CALIFORNIA

The State of California or its officers or agents shall not be responsible for the accuracy or completeness of electronic copies of this plan sheet.

Notes:

1. For Deck Drain - Type D-2 (Modified) details see "DECK DRAIN - TYPE D-2 (MODIFIED)" sheet.
2. For Girder Details see "PC/PS BULB-TEE GIRDER(HARPED STRANDS)" and "PC/PS BULB-TEE GIRDER (MISCELLANEOUS DETAILS)" sheets.

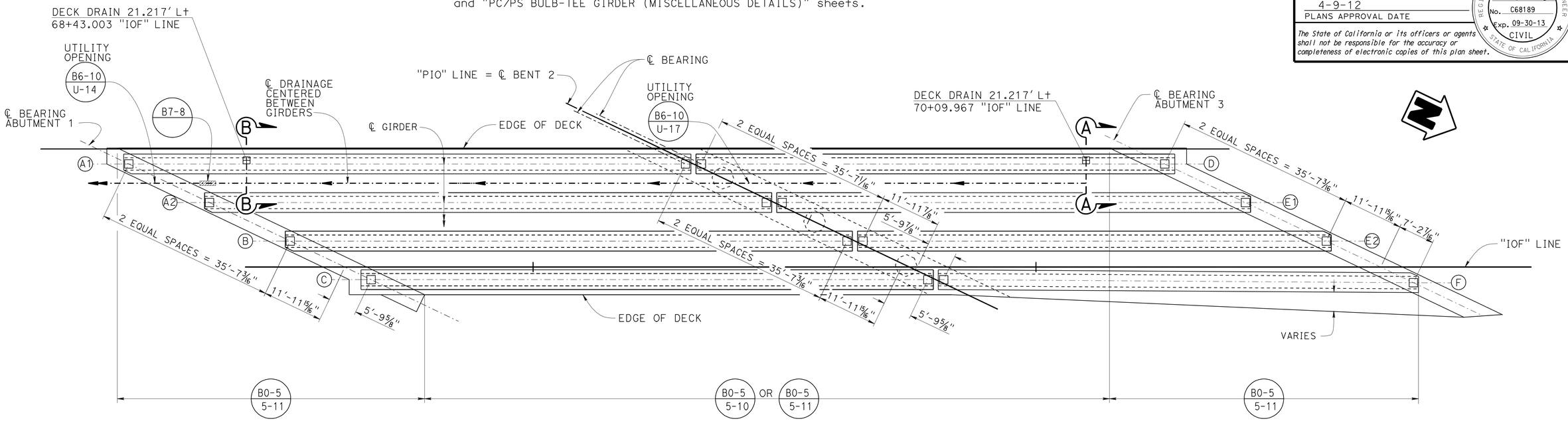

GIRDER LAYOUT

1" = 10'-0"

Legend:

Ⓐ Indicates Girder Designation

⊞ Indicates Type D-2 Drain

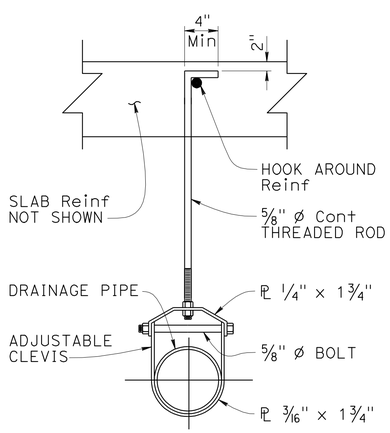

DRAIN PIPE SUPPORT

NO SCALE

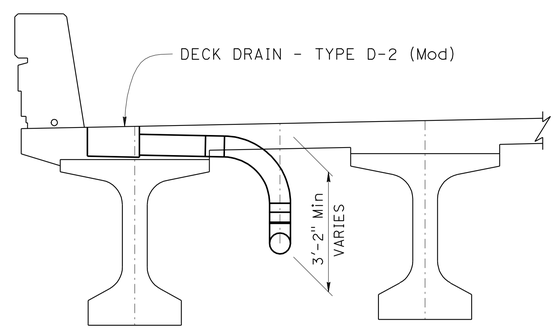

SECTION A-A

1/2" = 1'-0"

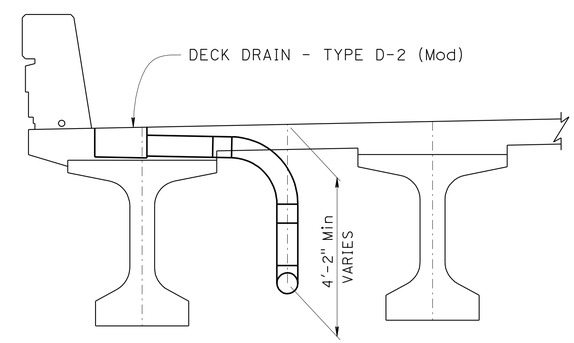

SECTION B-B

1/2" = 1'-0"

DESIGN	BY ANTHONY LOGUS	CHECKED RUSLAN NOVIK	STATE OF CALIFORNIA DEPARTMENT OF TRANSPORTATION
DETAILS	BY HERMAN MAUROSCHADT	CHECKED RUSLAN NOVIK	
QUANTITIES	BY SARA YIP	CHECKED CLARENCE HENSEL	

DIVISION OF ENGINEERING SERVICES STRUCTURE DESIGN
DESIGN BRANCH 15

BRIDGE NO. 53-3071K
POST MILE 5.12

IMPERIAL Hwy OFF-RAMP
GIRDER LAYOUT

STRUCTURES DESIGN DETAIL SHEET (ENGLISH) (REV. 09-01-10)

ORIGINAL SCALE IN INCHES FOR REDUCED PLANS 0 1 2 3

UNIT: 3604
PROJECT NUMBER & PHASE: 0700001834 1
CONTRACT NO.: 07-215941

DISREGARD PRINTS BEARING EARLIER REVISION DATES

REVISION DATES 8-31-11 12-29-11 11-13-11 12-5-11

SHEET 18 OF 45

FILE => 53-3071k-n-g-la1.dgn

USERNAME => s121614 DATE PLOTTED => 14-APR-2012 TIME PLOTTED => 11:38

DIST	COUNTY	ROUTE	POST MILES TOTAL PROJECT	SHEET No.	TOTAL SHEETS
07	LA	5	4.0/5.9	1171	1597

Anthony T. Logus 12-12-11
REGISTERED CIVIL ENGINEER DATE

4-9-12
PLANS APPROVAL DATE

REGISTERED PROFESSIONAL ENGINEER
Anthony T. Logus
No. C68189
Exp. 09-30-13
CIVIL
STATE OF CALIFORNIA

The State of California or its officers or agents shall not be responsible for the accuracy or completeness of electronic copies of this plan sheet.

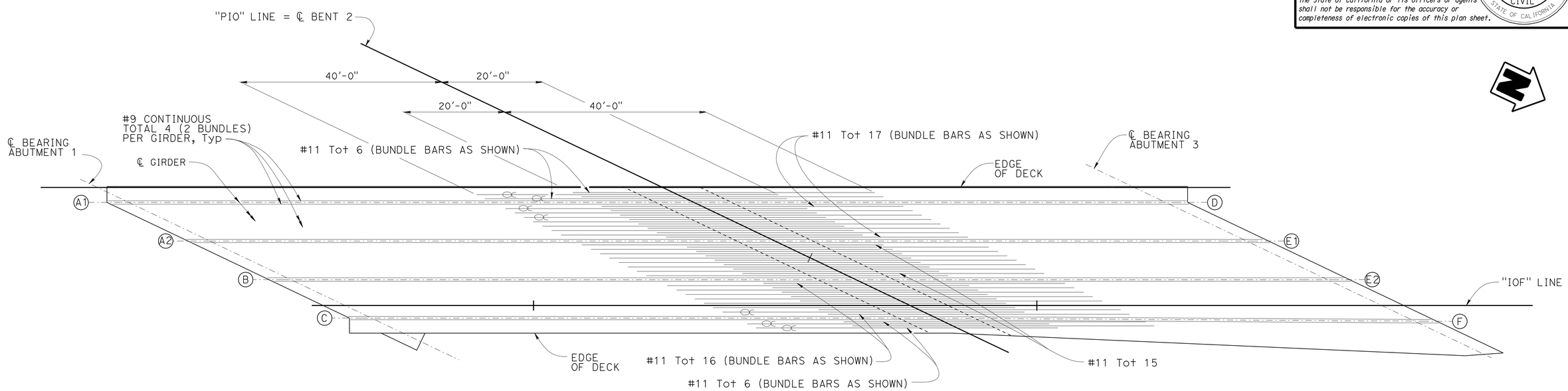

Notes:

1. Reinforcement shown is in addition to reinforcement shown on "TYPICAL SECTION" sheet.
2. Only service splices allowed on continuous additional deck reinforcement outside of non-continuous bars shown.
3. No splices allowed on non-continuous additional deck reinforcement.

Legend:

Ⓐ Indicates Girder Designation

Indicates Bundled 2 Bars

PLAN
ADDITIONAL MILD REINFORCEMENT

1" = 10'-0"

	BY	CHECKED
DESIGN	ANTHONY LOGUS	RUSLAN NOVIK
DETAILS	HERMAN MAUROSCHADT	RUSLAN NOVIK
QUANTITIES	SARA YIP	CLARENCE HENSEL

STATE OF CALIFORNIA
DEPARTMENT OF TRANSPORTATION

DIVISION OF ENGINEERING SERVICES
STRUCTURE DESIGN
DESIGN BRANCH 15

BRIDGE NO. 53-3071K
POST MILE 5.12

IMPERIAL Hwy OFF-RAMP
ADDITIONAL MILD REINFORCEMENT LAYOUT

STRUCTURES DESIGN DETAIL SHEET (ENGLISH) (REV. 09-01-10)

ORIGINAL SCALE IN INCHES FOR REDUCED PLANS 0 1 2 3

UNIT: 3604
PROJECT NUMBER & PHASE: 0700001834 1
CONTRACT NO.: 07-215941

DISREGARD PRINTS BEARING EARLIER REVISION DATES

REVISION DATES 2-15-11 8-5-11 11-8-11 12-29-11

SHEET 19 OF 45

USERNAME => s121614 DATE PLOTTED => 14-APR-2012 TIME PLOTTED => 11:38

FILE => 53-3071k-v1-mrlo.dgn

DIST	COUNTY	ROUTE	POST MILES TOTAL PROJECT	SHEET No.	TOTAL SHEETS
07	LA	5	4.0/5.9	1172	1597

Anthony T. Logus 12-12-11
REGISTERED CIVIL ENGINEER DATE

4-9-12
PLANS APPROVAL DATE

REGISTERED PROFESSIONAL ENGINEER
Anthony T. Logus
No. C68189
Exp. 09-30-13
CIVIL
STATE OF CALIFORNIA

The State of California or its officers or agents shall not be responsible for the accuracy or completeness of electronic copies of this plan sheet.

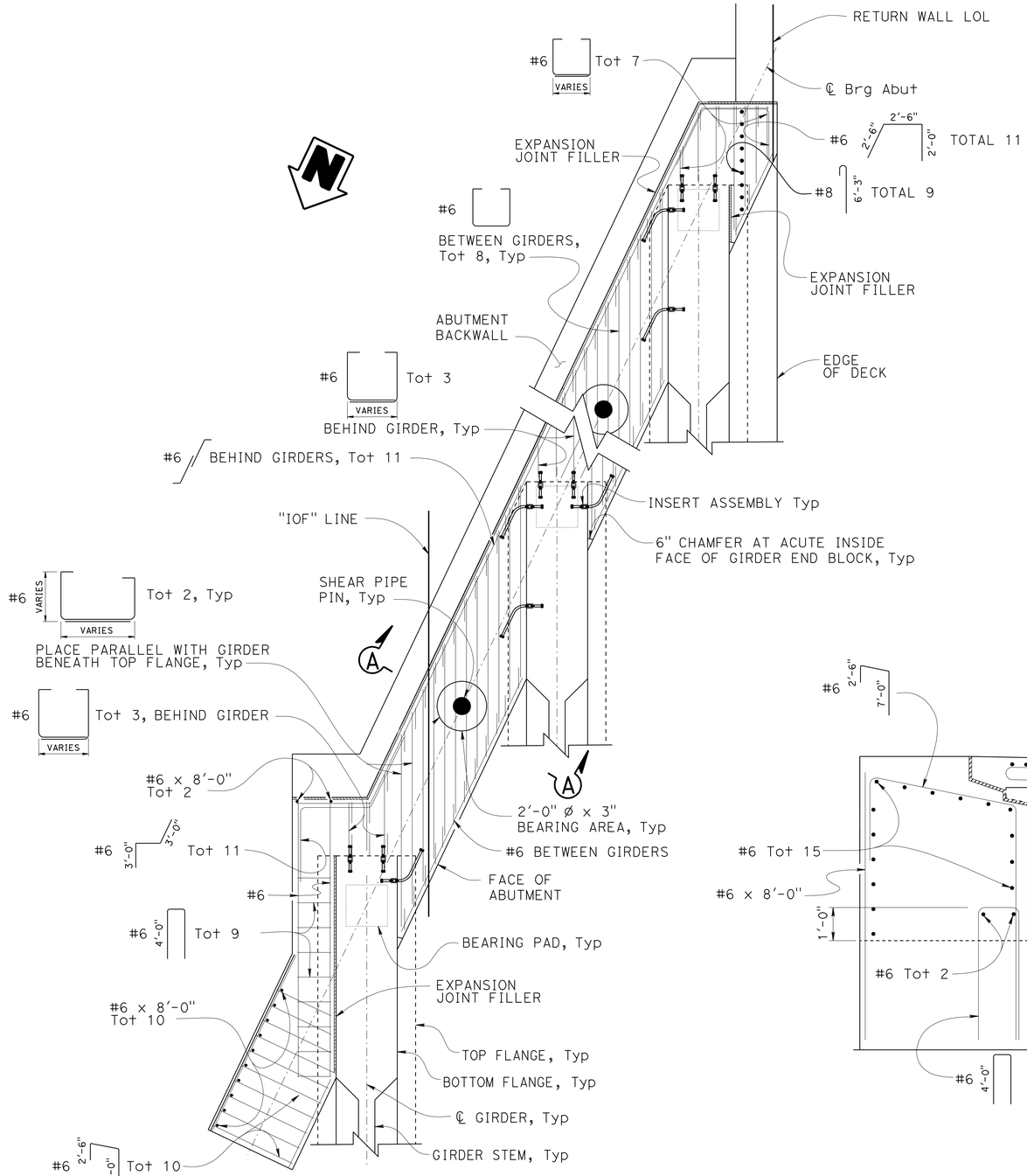

PART PLAN

3/8"=1'-0"

Notes:

1. For details not shown see "PC/PS BULB-TEE GIRDER (HARPED STRANDS) and "PC/PS BULB-TEE GIRDER (MISCELLANEOUS DETAILS)" sheets.
2. For "SECTION A-A" see "END DIAPHRAGM DETAILS No. 3" sheet.
3. For Shear Pipe Pin details see "SHEAR PIPE PIN DETAIL" on "END DIAPHRAGM DETAILS No. 3" sheet.

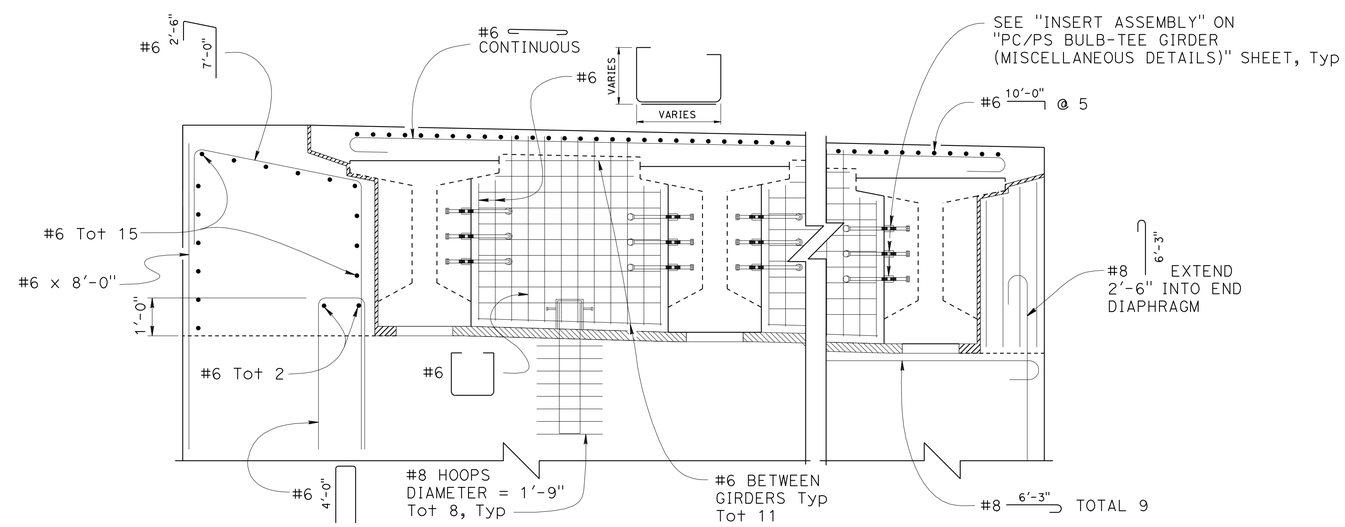

PART ELEVATION

1/2" = 1'-0"

ABUTMENT 1 END DIAPHRAGM

	BY	CHECKED
DESIGN	ANTHONY LOGUS	RUSLAN NOVIK
DETAILS	HERMAN MAUROSCHADT	RUSLAN NOVIK
QUANTITIES	SARA YIP	CLARENCE HENSEL

STATE OF CALIFORNIA
DEPARTMENT OF TRANSPORTATION

DIVISION OF ENGINEERING SERVICES
STRUCTURE DESIGN
DESIGN BRANCH 15

BRIDGE NO. 53-3071K
POST MILE 5.12

IMPERIAL Hwy OFF-RAMP
END DIAPHRAGM DETAILS No. 1

STRUCTURES DESIGN DETAIL SHEET (ENGLISH) (REV. 09-01-10)

ORIGINAL SCALE IN INCHES FOR REDUCED PLANS 0 1 2 3

UNIT: 3604
PROJECT NUMBER & PHASE: 0700001834 1
CONTRACT NO.: 07-215941

DISREGARD PRINTS BEARING EARLIER REVISION DATES

REVISION DATES: 2-16-12 8-27-11 12-5-11 12-28-11

SHEET 20 OF 45

FILE => 53-3071K-v-edd101.dgn

USERNAME => s121614 DATE PLOTTED => 14-APR-2012 TIME PLOTTED => 11:38

DIST	COUNTY	ROUTE	POST MILES TOTAL PROJECT	SHEET No.	TOTAL SHEETS
07	LA	5	4.0/5.9	1173	1597

Anthony T. Logus 12-12-11
REGISTERED CIVIL ENGINEER DATE

4-9-12
PLANS APPROVAL DATE

REGISTERED PROFESSIONAL ENGINEER
Anthony T. Logus
No. C68189
Exp. 09-30-13
CIVIL
STATE OF CALIFORNIA

The State of California or its officers or agents shall not be responsible for the accuracy or completeness of electronic copies of this plan sheet.

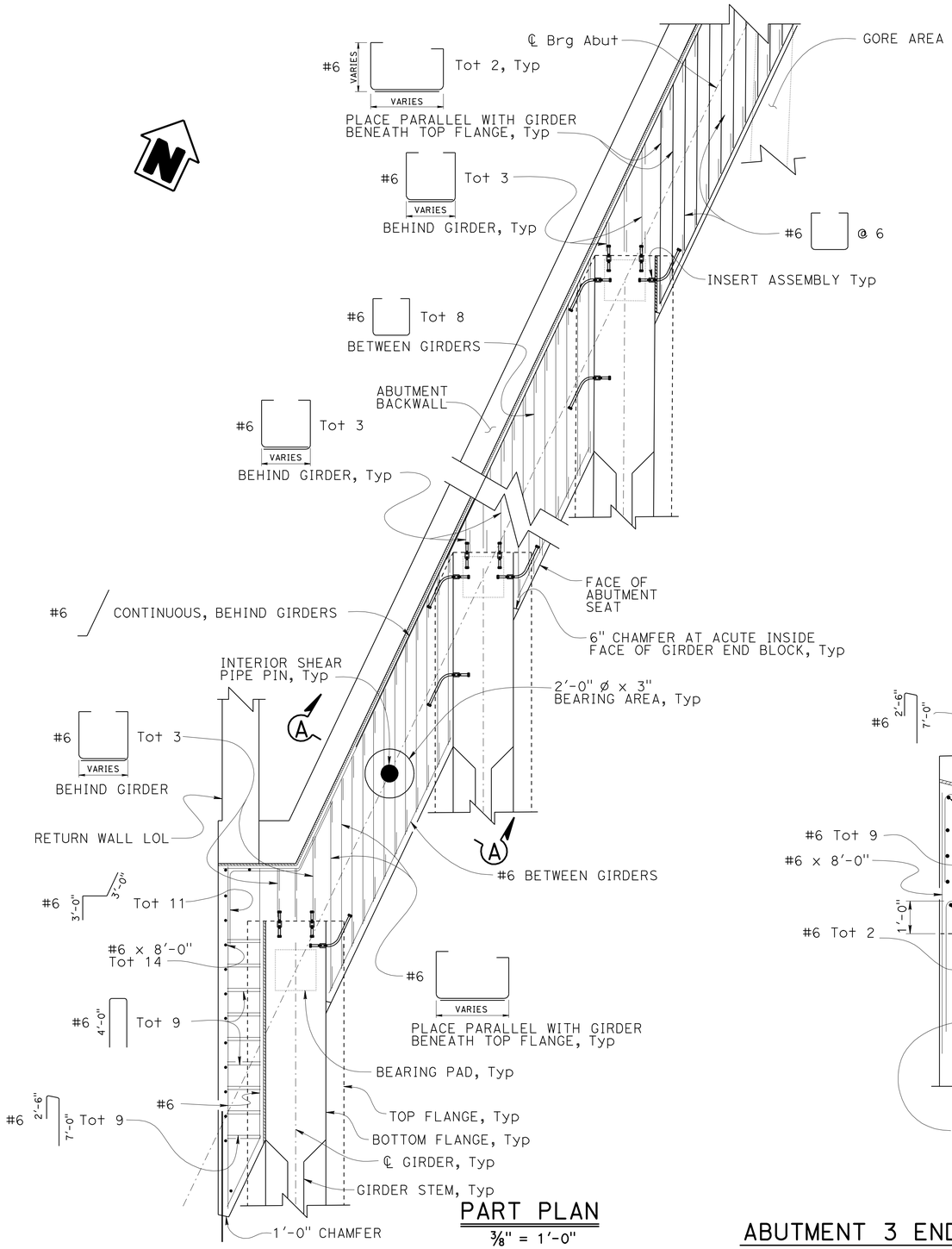

PART PLAN
3/8" = 1'-0"

Note:

1. For details not shown see "PC/PS BULB-TEE GIRDER (HARPED STRANDS) and "PC/PS BULB-TEE GIRDER (MISCELLANEOUS DETAILS)" sheets.
2. For "SECTION A-A" see "END DIAPHRAGM DETAILS No. 3" sheet.
3. For Shear Pipe Pin details see "SHEAR PIPE PIN DETAIL" on "END DIAPHRAGM DETAILS No. 3" sheet.

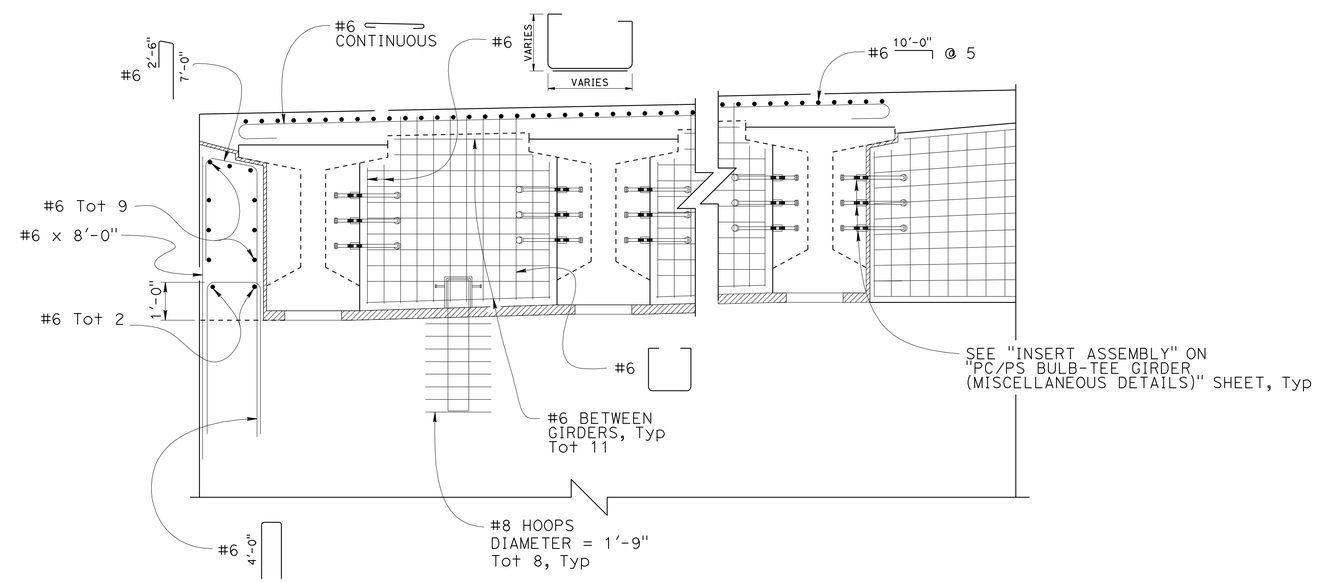

PART ELEVATION
1/2" = 1'-0"

ABUTMENT 3 END DIAPHRAGM

DESIGN	BY ANTHONY LOGUS	CHECKED RUSLAN NOVIK	
DETAILS	BY HERMAN MAUROSCHADT	CHECKED RUSLAN NOVIK	
QUANTITIES	BY SARA YIP	CHECKED CLARENCE HENSEL	

STATE OF CALIFORNIA
DEPARTMENT OF TRANSPORTATION

DIVISION OF ENGINEERING SERVICES
STRUCTURE DESIGN
DESIGN BRANCH 15

BRIDGE NO. 53-3071K
POST MILE 5.12

IMPERIAL Hwy OFF-RAMP
END DIAPHRAGM DETAILS No. 2

STRUCTURES DESIGN DETAIL SHEET (ENGLISH) (REV. 09-01-10)

ORIGINAL SCALE IN INCHES FOR REDUCED PLANS 0 1 2 3

UNIT: 3604
PROJECT NUMBER & PHASE: 0700001834 1
CONTRACT NO.: 07-215941

DISREGARD PRINTS BEARING EARLIER REVISION DATES

REVISION DATES 2-16-12 8-27-12 12-6-12 12-13-12

SHEET 21 OF 45

FILE => 53-3071k-v-edd02.dgn

USERNAME => s121614 DATE PLOTTED => 14-APR-2012 TIME PLOTTED => 11:39

DIST	COUNTY	ROUTE	POST MILES TOTAL PROJECT	SHEET No.	TOTAL SHEETS
07	LA	5	4.0/5.9	1174	1597

Anthony T. Logus 12-12-11
REGISTERED CIVIL ENGINEER DATE

4-9-12
PLANS APPROVAL DATE

REGISTERED PROFESSIONAL ENGINEER Anthony T. Logus No. C68189 Exp. 09-30-13 CIVIL STATE OF CALIFORNIA

The State of California or its officers or agents shall not be responsible for the accuracy or completeness of electronic copies of this plan sheet.

Note:

For details not shown see "PC/PS BULB-TEE GIRDER (HARPED STRANDS) and "PC/PS BULB-TEE GIRDER (MISCELLANEOUS DETAILS)" sheets.

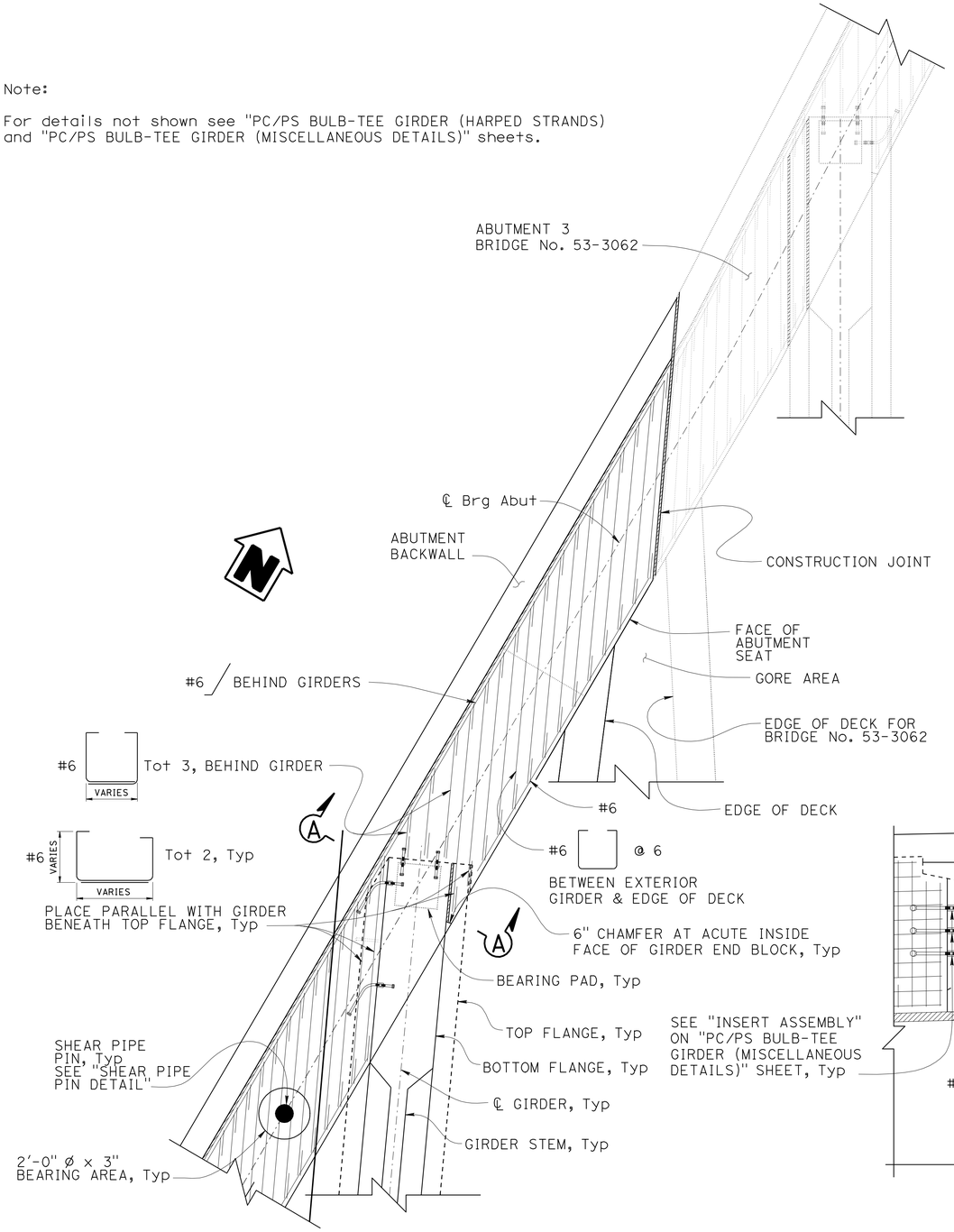

PART PLAN
3/8" = 1'-0"

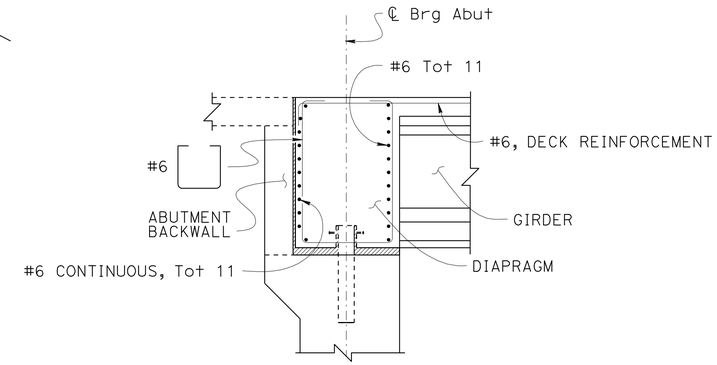

SECTION A-A
3/8" = 1'-0"

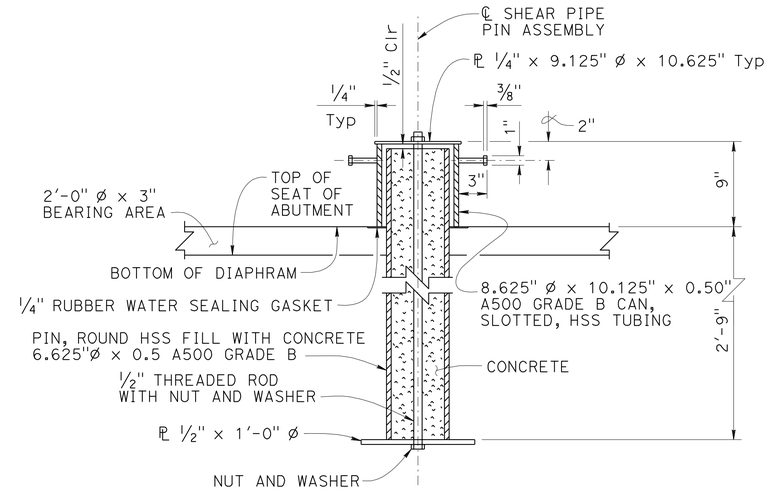

ELEVATION

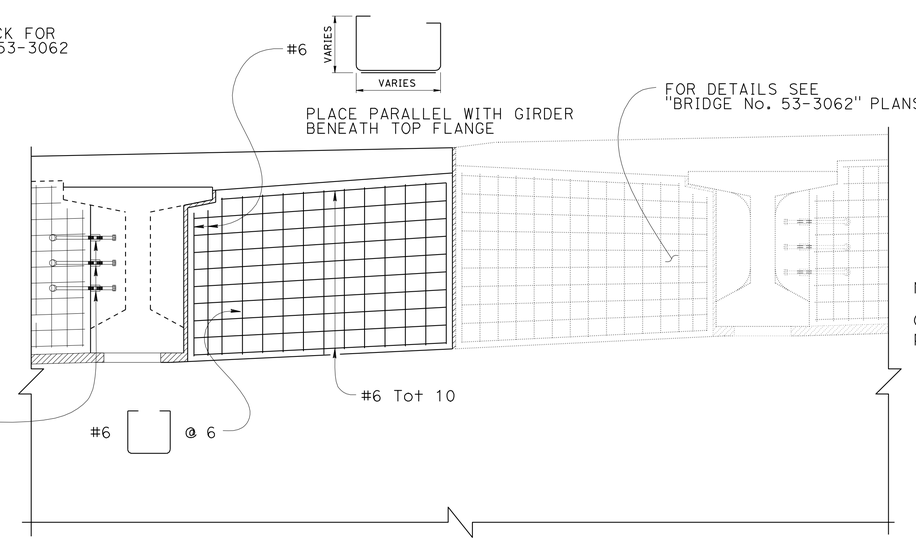

PART ELEVATION
1/2" = 1'-0"

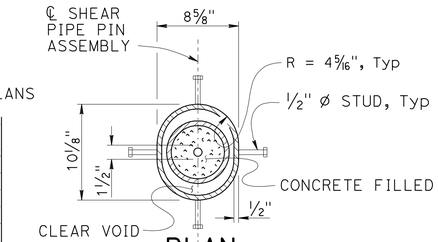

PLAN

Note:

Orientate ℄ Shear Pipe Pin Assembly to be parallel with ℄ Girder.

SHEAR PIPE PIN DETAIL
NO SCALE

ABUTMENT 3 END DIAPHRAGM

	BY	CHECKED
DESIGN	ANTHONY LOGUS	RUSLAN NOVIK
DETAILS	HERMAN MAUROSCHADT	RUSLAN NOVIK
QUANTITIES	SARA YIP	CLARENCE HENSEL

STATE OF CALIFORNIA
DEPARTMENT OF TRANSPORTATION

DIVISION OF ENGINEERING SERVICES
STRUCTURE DESIGN
DESIGN BRANCH 15

BRIDGE NO. 53-3071K
POST MILE 5.12

IMPERIAL Hwy OFF-RAMP
END DIAPHRAGM DETAILS No. 3

STRUCTURES DESIGN DETAIL SHEET (ENGLISH) (REV. 09-01-10)

ORIGINAL SCALE IN INCHES FOR REDUCED PLANS 0 1 2 3

UNIT: 3604
PROJECT NUMBER & PHASE: 0700001834 1
CONTRACT NO.: 07-215941

DISREGARD PRINTS BEARING EARLIER REVISION DATES

REVISION DATES 2-16-12 10-6-11 12-9-11 12-14-11

SHEET 22 OF 45

FILE => 53-3071k-v-edd+3.dgn

USERNAME => s121614 DATE PLOTTED => 14-APR-2012 TIME PLOTTED => 11:39

ARCHITECTURAL ABBREVIATIONS

&	AND
∟	ANGLE
℄	CENTER LINE
∅	DIAMETER OR ROUND
□	SQUARE
d	PENNY
°	DEGREE
AB	ANCHOR BOLT
ABUT	ABUTMENT
ABV	ABOVE
AC	ASPHALT CONCRETE
ACOUS	ACOUSTICAL
ADJ	ADJUSTABLE
ALT	ALTERNATE
ALUM	ALUMINUM
APA	AMERICAN PLYWOOD ASSOCIATION
ARCH	ARCHITECTURAL, ARCHITECT
ASPH	ASPHALT
BD	BOARD
BIT	BITUMINOUS
BLDG	BUILDING
BLK	BLOCK
BLKG	BLOCKING
BM	BEAM
BN	BOUNDARY NAILING
BOT	BOTTOM
BR	BRIDGE
BTM	BOTTOM
BTWN	BETWEEN
BUR	BUILT-UP-ROOFING
CJ	CONTROL JOINT
CL	CHAIN LINK
CAB	CABINET
CB	CATCH BASIN
CEM	CEMENT
CER	CERAMIC
CH	CLOTHES HOOK
CIDH	CAST IN DRILLED HOLE
CIP	CAST IN PLACE
CKBD	CHALKBOARD
CLG	CEILING
CMU	CONCRETE MASONRY UNIT
CLO	CLOSET
CLR	CLEAR
COL	COLUMN
CONC	CONCRETE
CONN	CONNECTION
CONST	CONSTRUCTION
CONT	CONTINUOUS
CORR	CORRIDOR
CPT	CARPET
CT	CERAMIC TILE
CTR	CENTER
CTSK	COUNTERSUNK
CY	CUBIC YARD
DBL	DOUBLE
DEPT	DEPARTMENT
DET	DETAIL
DF	DOUGLAS FIR
DIA	DIAMETER
DIM	DIMENSION
DN	DOWN
DP	DEEP
DR	DOOR
DS	DOWNSPOUT
DWG	DRAWING
DWR	DRAWER
(E)	EXISTING
E	EAST
EA	EACH
EF	EXHAUST FAN
EHD	ELECTRIC HAND DRYER
EJ	EXPANSION JOINT
EL	ELEVATION (HEIGHT)
ELEC	ELECTRICAL
ELEV	ELEVATION (VIEW)
ELVR	ELEVATOR
EMER	EMERGENCY
ENCL	ENCLOSURE
EP	EDGE OF PAVEMENT
EQ	EQUAL
EPB	ELECTRICAL PANELBOARD
EQUIP	EQUIPMENT
ESCL	ESCALATOR
ETW	EDGE OF TRAVEL WAY
EWC	ELECTRIC WATER COOLER
EXP	EXPANSION
EXPO	EXPOSED, EXPOSURE
EXT	EXTERIOR
FD	FLOOR DRAIN
FDN	FOUNDATION
FE	FIRE EXTINGUISHER
FEC	FIRE EXTINGUISHER CABINET
FF	FINISH FLOOR
FG	FINISH GRADE
FH	FIRE HYDRANT
FHC	FIRE HOSE CABINET
FHMS	FLATHEAD METAL SCREW
FHWS	FLATHEAD WOOD SCREW
FIN	FINISH
FJ	FLOOR JOIST
FLASH	FLASHING
FLR	FLOOR
FLUOR	FLUORESCENT
FOC	FACE OF CONCRETE
FOF	FACE OF FINISH
FOM	FACE OF MASONRY
FOS	FACE OF STUD
FRMG	FRAMING
FRPP	FIBERGLASS REINFORCED PLASTIC PANEL
FT	FEET, FOOT
FTG	FOOTING
FURR	FURRING
FWY	FREEWAY
GA	GAUGE
GAL	GALLON
GALV	GALVANIZED
GB	GRAB BAR
GI	GALVANIZED IRON
GL	GLASS
GLM	GLUE LAMINATED MEMBER
GLZ	GLAZING
GR	GRADE
GSM	GALVANIZED SHEET METAL
GYP	GYPSUM
GYP SHTG	GYPSUM SHEATHING
HB	HOSE BIB
HC	HOLLOW CORE
HD	HEAD, HOLD DOWN
HDR	HEADER
HDWD	HARDWOOD
HDWR	HARDWARE
HEX	HEXAGONAL
HF	HEMLOCK-FIR
HGR	HANGER
HM	HOLLOW METAL
HORIZ	HORIZONTAL
HP	HIGH POINT
HR	HOUR
HSB	HIGH STRENGTH BOLT
HT	HEIGHT
HVAC	HEATING, VENTILATING, AIR CONDITIONING
HWY	HIGHWAY
ID	INSIDE DIAMETER
IN	INCH
INFO	INFORMATION
INSUL	INSULATION
INT	INTERIOR
JAN	JANITOR
JB	JUNCTION BOX
JH	JOIST HANGER
JST	JOIST
JT	JOINT
KIT	KITCHEN
LAB	LABORATORY
LAV	LAVATORY
LBS	POUNDS
LF	LINEAR FEET
LKR	LOCKER
LLV	LONG LEG VERTICAL
LOL	LAYOUT LINE
LPG	LIQUIFIED PETROLEUM GAS
LS	LAG SCREW
M	METER
MAT	MATERIAL
MAX	MAXIMUM
MB	MACHINE BOLT
MBR	MEMBER
MECH	MECHANICAL
MEMB	MEMBRANE
MET	METAL
MFR	MANUFACTURER
MH	MAN HOLE
MIN	MINIMUM
MIR	MIRROR
MISC	MISCELLANEOUS
mm	MILLIMETER
MO	MASONRY OPENING
MOD	MODIFIED
MTD	MOUNTED
MUL	MULLION
N	NORTH
ND	NAPKIN DISPOSAL
NIC	NOT IN CONTRACT
NO	NUMBER
NOM	NOMINAL
NTS	NOT TO SCALE
OBSC	OBSCURE
OC	OVERCROSSING
OD	OUTSIDE DIAMETER
OFF	OFFICE
OFD	OVERFLOW DRAIN
OG	ORIGINAL GROUND
OH	OVERHEAD
OHWS	OVALHEAD WOOD SCREW
OP	OPERATIONS
OPNG	OPENING
OPP	OPPOSITE
OPT	OPTION, OPTIONAL
P	PITCH
PB	POST BASE
PC	POST CAP
PCC	PORTLAND CEMENT CONCRETE
PDF	POWDER DRIVEN FASTENERS
PH	PHILLIPS HEAD
PL	PLATE
PLAM	PLASTIC LAMINATE
PLAS	PLASTER
PLYWD	PLYWOOD
PMF	PRESSED METAL FRAME
PR	PAIR
PRTN	PARTITION
PT	POINT
PTD	PAPER TOWEL DISPENSER
PTD/R	PAPER TOWEL DISPENSER /RECEPTACLE
PVC	POLYVINYL CHLORIDE
PWB	PREFABRICATED WOOD I BEAM
QT	QUARRY TILE
(R)	RELOCATED
R	RADIUS, RISER
R/W	RIGHT OF WAY
RD	ROOF DRAIN
RDWD	REDWOOD
REF	REFERENCE
REFG	REFRIGERATOR
REINF	REINFORCED(ING)
REQ	REQUIRED
RFG	ROOFING
RFSWN	ROUGHSAWN
RH	ROUND HEAD
RHWS	ROUND HEAD WOOD SCREWS
RJ	ROOF JOIST
RM	ROOM
RO	ROUGH OPENING
RSWN	RESAWN
RTE	ROUTE
RW	RETAINING WALL
S	SOUTH
SC	SOLID CORE
SCHED	SCHEDULE
SD	SOAP DISPENSER
SDST	SELF DRILLING SELF TAPPING
SF	SQUARE FEET
SH	SHELF
SHWR	SHOWER
SHT	SHEET
SHTG	SHEATHING
SIM	SIMILAR
SL	SCORE LINE
SMS	SHEET METAL SCREW
SOHD	SECTIONAL OVERHEAD DOOR
SPEC	SPECIFICATION
SPS	STRUCTURAL PLYWOOD SHEATHING
SQ	SQUARE
SRRA	SAFETY ROADSIDE REST AREA
SS	SERVICE SINK
SST	STAINLESS STEEL
STA	STATION
STAG	STAGGER
STD	STANDARD
STL	STEEL
STOR	STORAGE
STRUC	STRUCTURAL
SUSP	SUSPENDED
T	TREAD
T&G	TONGUE & GROOVE
TB	TOLL BOOTH
TEL	TELEPHONE
TEMP	TEMPERED
TER	TERRAZZO
THK	THICK
THLD	THRESHOLD
TJ	TOOLED JOINT
TKBD	TACKBOARD
TN	TOE NAIL
TNVM	TAMPON/NAPKIN VENDING MACHINE
TOC	TOP OF CURB OR CONCRETE
TOP	TOP OF PAVEMENT
TOS	TOE OF SLOPE
TOT	TOTAL
TOW	TOP OF WALL
TS	TUBE STEEL
TSCD	TOILET SEAT COVER DISPENSER
TTD	TOILET TISSUE DISPENSER
TTY	TELETYPEWRITER
TYP	TYPICAL
UNF	UNFINISHED
UON	UNLESS OTHERWISE NOTED
UR	URINAL
VAR	VARIES
VCT	VINYL COMPOSITION TILE
VERT	VERTICAL
VEST	VESTIBULE
VR	VENT RISER
VTR	VENT THRU ROOF
W	WEST
W/	WITH
W/O	WITHOUT
WC	WATER CLOSET
WD	WOOD
WDW	WINDOW
WH	WATER HEATER
WP	WORKING POINT
WR	WATER RESISTANT
WSCT	WAINSCOT
WT	WEIGHT
WTPR	WATERPROOFING
WWF	WELDED WIRE FABRIC
YD	YARD

ARCHITECTURAL GENERAL NOTES

1. THE CONTRACTOR SHALL VERIFY ALL CONTROLLING DIMENSIONS AND FIELD CONDITIONS PRIOR TO ORDERING OR FABRICATING ANY MATERIALS OR ASSEMBLIES FOR CONSTRUCTION
2. THE CONTRACTOR SHALL NOTIFY THE ENGINEER IN WRITING OF ANY DISCREPANCIES BETWEEN THESE PLANS AND ACTUAL MEASUREMENTS OR FIELD CONDITIONS PRIOR TO ORDERING OR FABRICATING ANY MATERIALS OR ASSEMBLIES FOR CONSTRUCTION.

DIST	COUNTY	ROUTE	POST MILES TOTAL PROJECT	SHEET No	TOTAL SHEETS
07	LA	5	4.0/5.9	1175	1597

LICENSED ARCHITECT — DATE 12-12-11

PLANS APPROVAL DATE 4-9-12

LICENSED ARCHITECT H. Javier Chavez 14073 03-31-13 Renewal Date STATE OF CALIFORNIA

The State of California or its officers or agents shall not be responsible for the accuracy or completeness of electronic copies of this plan sheet.

SYMBOLS FOR ARCHITECTURAL SHEETS

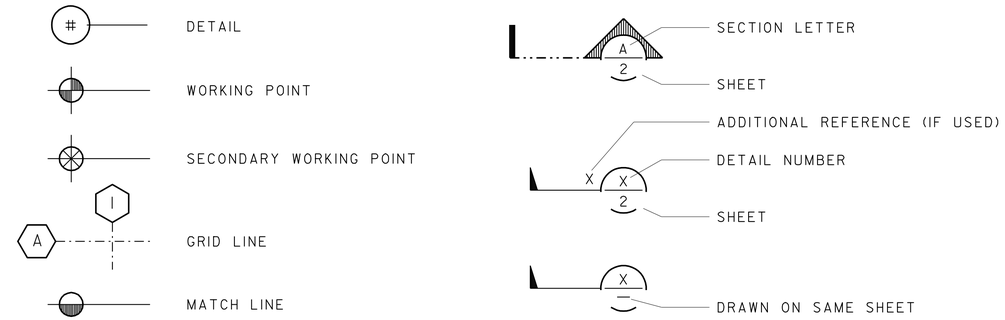

INDEX FOR ARCHITECTURAL SHEETS

A0 ARCHITECTURAL ABBREVIATIONS, SYMBOLS & INDEX
A1 ARCHITECTURAL TREATMENT
A2 ARCHITECTURAL DETAILS

	BY	CHECKED
DESIGN	H. CHAVEZ	S. HEATH
DETAILS	S. HEATH	H. CHAVEZ
QUANTITIES	S. YIP	C. HENSEL

STATE OF CALIFORNIA DEPARTMENT OF TRANSPORTATION

DIVISION OF ENGINEERING SERVICES BRIDGE ARCHITECTURE AND AESTHETICS

BRIDGE NO. 53-3071K POST MILE 5.12

IMPERIAL Hwy OFF-RAMP

ARCHITECTURAL ABBREVIATIONS, SYMBOLS & INDEX

SHEET A0

STRUCTURES DESIGN DETAIL SHEET (ENGLISH) (REV. 09-01-10)

ORIGINAL SCALE IN INCHES FOR REDUCED PLANS 0 1 2 3

UNIT: 3604

PROJECT NUMBER & PHASE: 0700001834 1 CONTRACT NO.: 07-215941

DISREGARD PRINTS BEARING EARLIER REVISION DATES 3-9-12

REVISION DATES

SHEET 23 OF 45

FILE => 53-3071k-w-abutarchdet-a0.dgn

USERNAME => s121614 DATE PLOTTED => 14-APR-2012 TIME PLOTTED => 11:39

DIST	COUNTY	ROUTE	POST MILES TOTAL PROJECT	SHEET No	TOTAL SHEETS
07	LA	5	4.0/5.9	1176	1597

LICENSED ARCHITECT — DATE 12-12-11

4-9-12
PLANS APPROVAL DATE

LICENSED ARCHITECT H. Javier Chavez 14073 03-31-13 Renewal Date STATE OF CALIFORNIA

The State of California or its officers or agents shall not be responsible for the accuracy or completeness of electronic copies of this plan sheet.

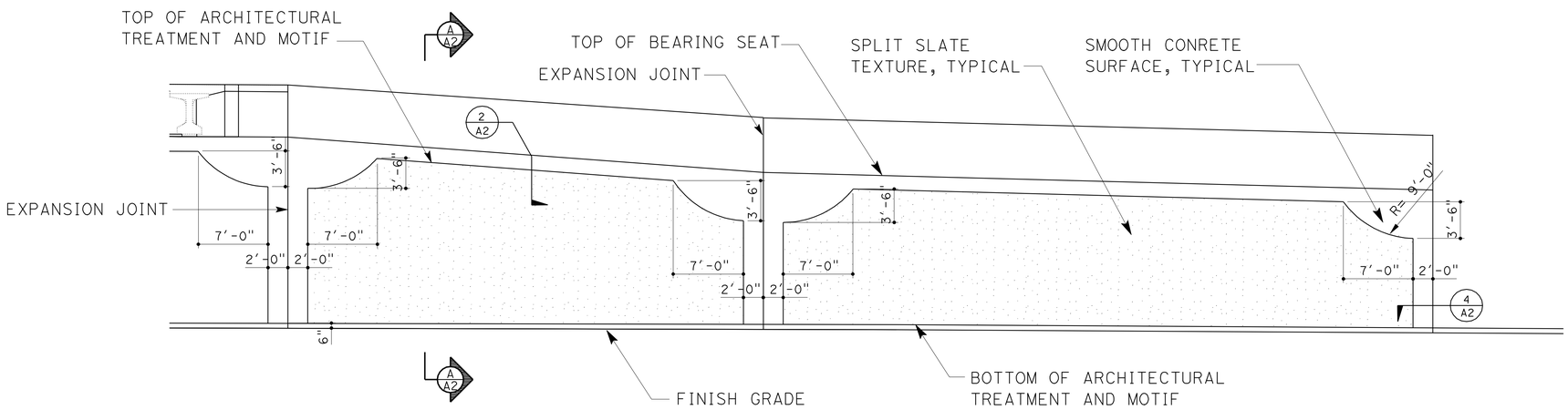

PARTIAL ELEVATION AT EAST ABUTMENT 1

NO SCALE

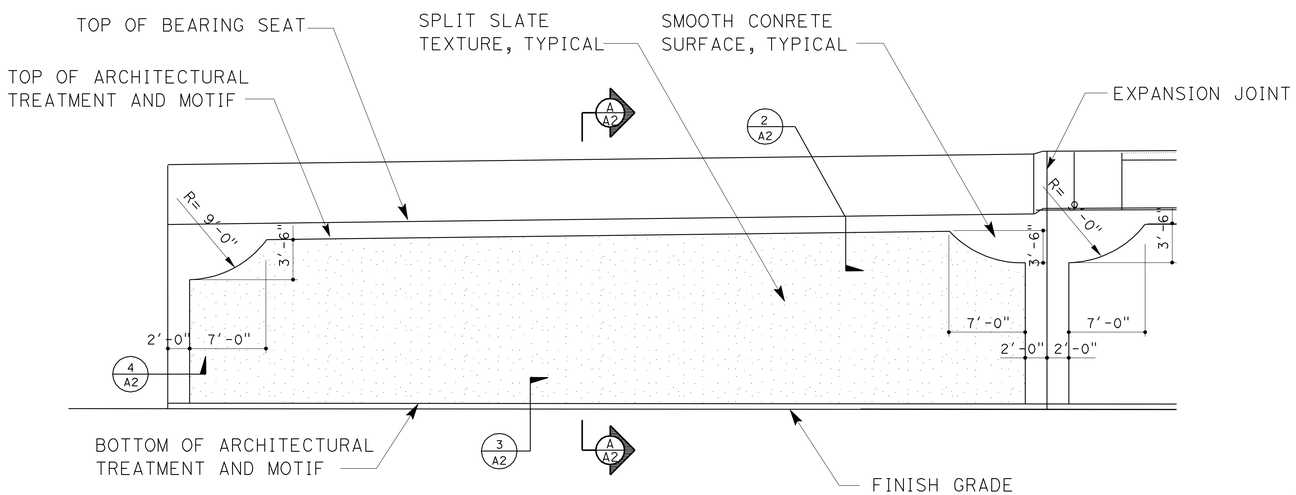

PARTIAL ELEVATION AT EAST ABUTMENT 3

NO SCALE

LEGEND:

- TEXTURED CONCRETE SURFACE = SPLIT SLATE TEXTURE. SEE DETAIL 1/A2
- SMOOTH CONCRETE SURFACE

	BY	CHECKED
DESIGN	H. CHAVEZ	S. HEATH
DETAILS	S. HEATH	H. CHAVEZ
QUANTITIES	S. YIP	C. HENSEL

STATE OF CALIFORNIA DEPARTMENT OF TRANSPORTATION

DIVISION OF ENGINEERING SERVICES BRIDGE ARCHITECTURE AND AESTHETICS

BRIDGE NO. 53-3071K
POST MILE 5.12

IMPERIAL Hwy OFF-RAMP ARCHITECTURAL TREATMENT

SHEET A1

STRUCTURES DESIGN DETAIL SHEET (ENGLISH) (REV. 09-01-10)

ORIGINAL SCALE IN INCHES FOR REDUCED PLANS 0 1 2 3

UNIT: 3604
PROJECT NUMBER & PHASE: 0700001834 1
CONTRACT NO.: 07-215941

DISREGARD PRINTS BEARING EARLIER REVISION DATES 3-9-12

REVISION DATES

SHEET 24 OF 45

FILE => 53-3071k-w-abutarchdet-a1.dgn

USERNAME => s121614 DATE PLOTTED => 14-APR-2012 TIME PLOTTED => 11:39

DIST	COUNTY	ROUTE	POST MILES TOTAL PROJECT	SHEET No	TOTAL SHEETS
07	LA	5	4.0/5.9	1177	1597

LICENSED ARCHITECT 12-12-11 DATE

4-9-12
PLANS APPROVAL DATE

LICENSED ARCHITECT H. Javier Chavez 14073 03-31-13 Renewal Date STATE OF CALIFORNIA

The State of California or its officers or agents shall not be responsible for the accuracy or completeness of electronic copies of this plan sheet.

Note: All reference to surface dimensions of wall and tile details are from datum 0 = Face of Abutment Wall, typical

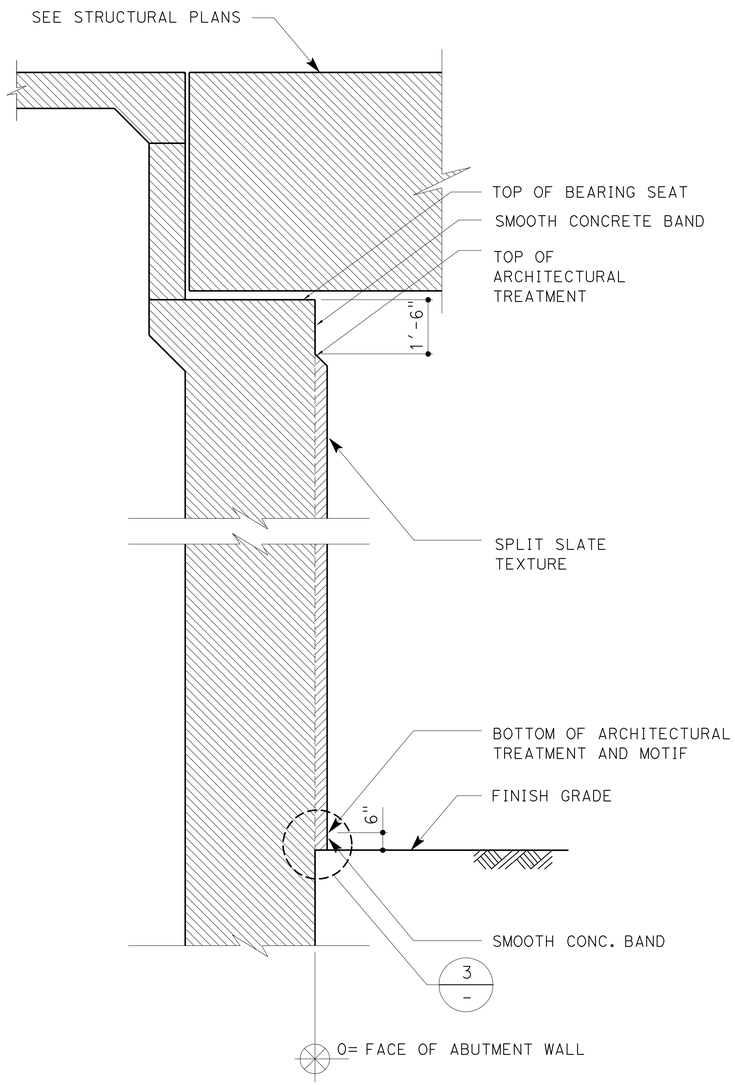

SECTION A-A
NO SCALE

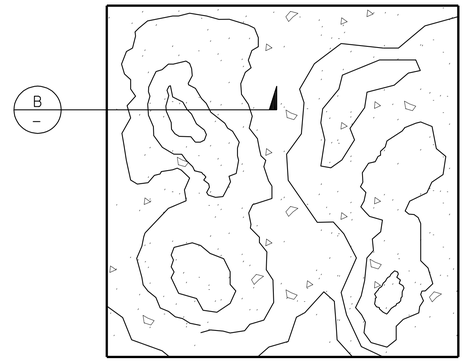

1 SPLIT SLATE TEXTURE
NO SCALE

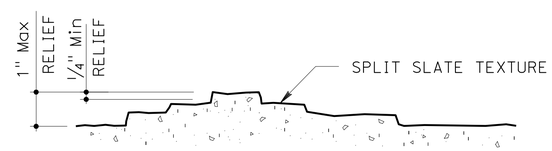

B DETAIL
NO SCALE

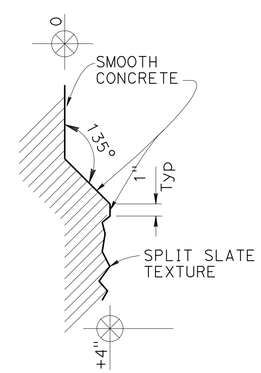

2 DETAIL
NO SCALE

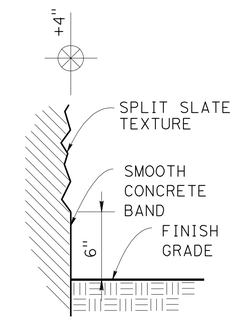

3 DETAIL
NO SCALE

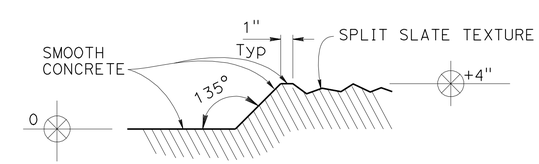

4 DETAIL
NO SCALE

DESIGN	BY H. CHAVEZ	CHECKED S. HEATH	
DETAILS	BY S. HEATH	CHECKED H. CHAVEZ	
QUANTITIES	BY S. YIP	CHECKED C. HENSEL	

STATE OF CALIFORNIA DEPARTMENT OF TRANSPORTATION

DIVISION OF ENGINEERING SERVICES BRIDGE ARCHITECTURE AND AESTHETICS

BRIDGE NO. 53-3071K
POST MILE 5.12

IMPERIAL Hwy OFF-RAMP ARCHITECTURAL DETAILS

SHEET A2

STRUCTURES DESIGN DETAIL SHEET (ENGLISH) (REV. 09-01-10)

ORIGINAL SCALE IN INCHES FOR REDUCED PLANS 0 1 2 3

UNIT: 3604
PROJECT NUMBER & PHASE: 0700001834 1
CONTRACT NO.: 07-215941

DISREGARD PRINTS BEARING EARLIER REVISION DATES 3-9-12

REVISION DATES

SHEET 25 OF 45

FILE => 53-3071k-w-abutarchdet-a2.dgn

USERNAME => s121614 DATE PLOTTED => 14-APR-2012 TIME PLOTTED => 11:39

DIST	COUNTY	ROUTE	POST MILES TOTAL PROJECT	SHEET No.	TOTAL SHEETS
07	LA	5	4.0/5.9	1178	1597

Anthony T. Logus 12-12-11
REGISTERED CIVIL ENGINEER DATE

4-9-12
PLANS APPROVAL DATE

REGISTERED PROFESSIONAL ENGINEER Anthony T. Logus No. C68189 Exp. 09-30-13 CIVIL STATE OF CALIFORNIA

The State of California or its officers or agents shall not be responsible for the accuracy or completeness of electronic copies of this plan sheet.

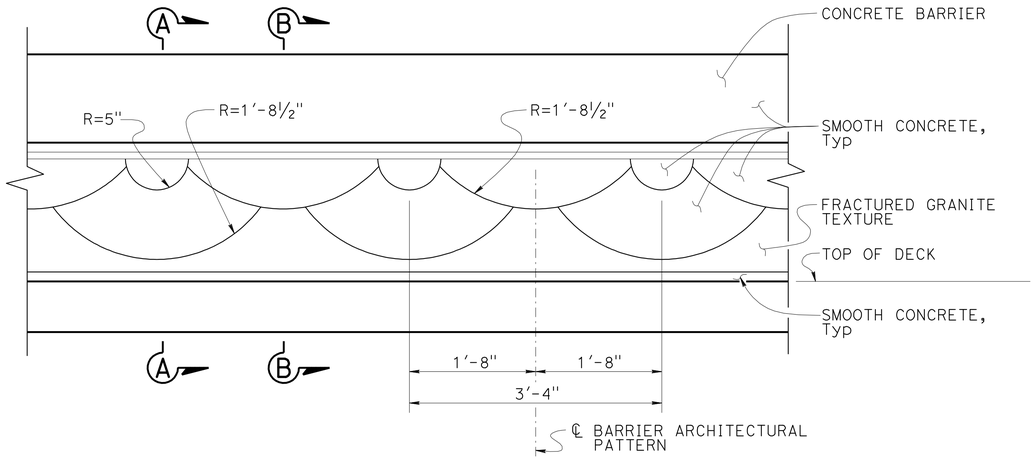

CONCRETE BARRIER TYPE 736 (MOD 1)
1" = 1'-0"

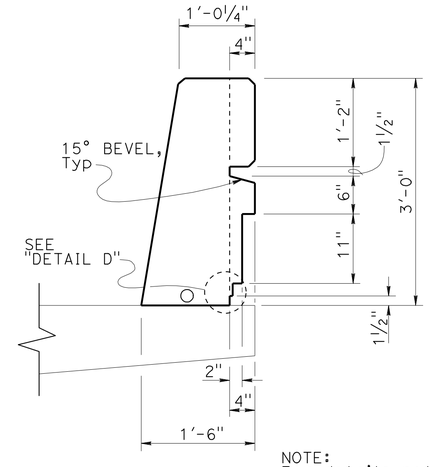

SECTION A-A
1" = 1'-0"

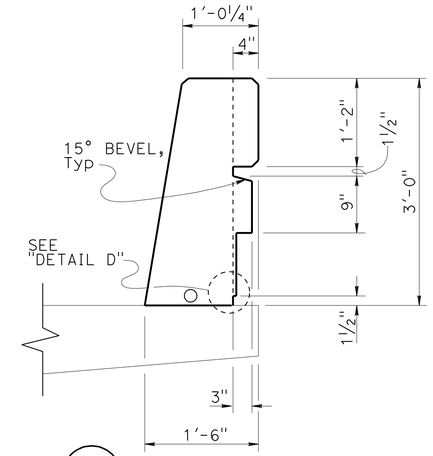

SECTION B-B
1" = 1'-0"

NOTE:
For details not shown see B11-56

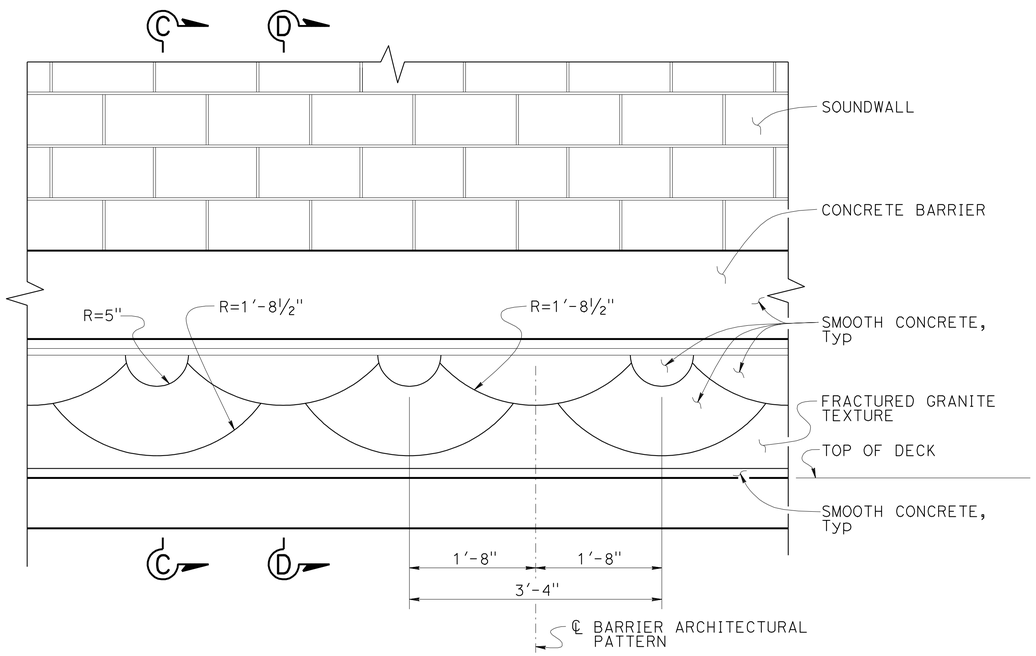

CONCRETE BARRIER TYPE 736 (MOD 2)
1" = 1'-0"

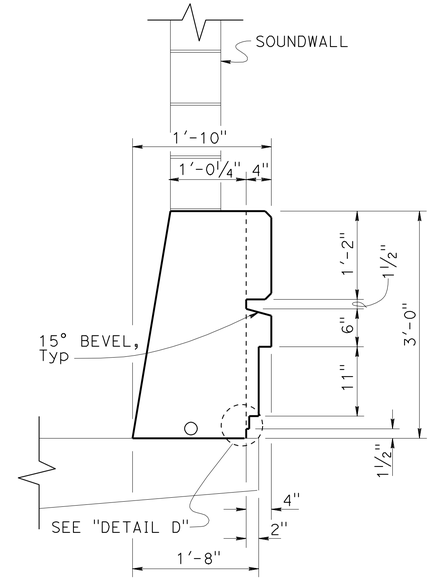

SECTION C-C
1" = 1'-0"

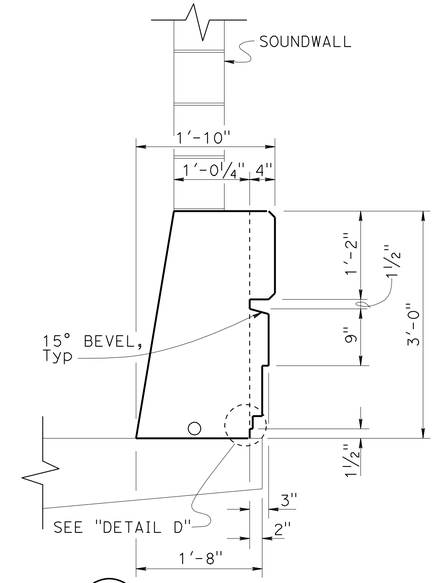

SECTION D-D
1" = 1'-0"

NOTE:
For details not shown see B11-56
and "SOUNDWALL MASONRY BLOCK ON BRIDGE" sheet.

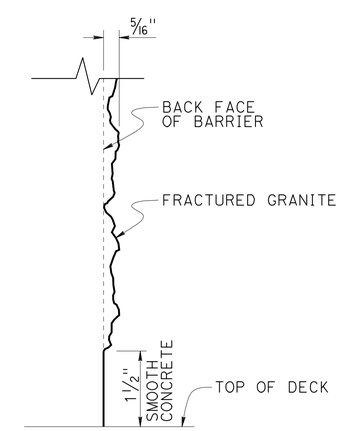

DETAIL D
NO SCALE

DESIGN	BY ANTHONY LOGUS	CHECKED RUSLAN NOVIK	
DETAILS	BY HERMAN MAUROSCHADT	CHECKED RUSLAN NOVIK	
QUANTITIES	BY SARA YIP	CHECKED CLARENCE HENSEL	

STATE OF CALIFORNIA
DEPARTMENT OF TRANSPORTATION

DIVISION OF ENGINEERING SERVICES
STRUCTURE DESIGN
DESIGN BRANCH 15

BRIDGE NO. 53-3071K
POST MILE 5.12

IMPERIAL Hwy OFF-RAMP
BARRIER ARCHITECTURAL DETAILS No. 1

STRUCTURES DESIGN DETAIL SHEET (ENGLISH) (REV. 09-01-10)

ORIGINAL SCALE IN INCHES FOR REDUCED PLANS 0 1 2 3

UNIT: 3604
PROJECT NUMBER & PHASE: 0700001834 1
CONTRACT NO.: 07-215941

DISREGARD PRINTS BEARING EARLIER REVISION DATES

REVISION DATES 12-8-11 12-29-11

SHEET 26 OF 45

FILE => 53-3071k-w-bararchdet1.dgn

USERNAME => s121614 DATE PLOTTED => 14-APR-2012 TIME PLOTTED => 11:39

DIST	COUNTY	ROUTE	POST MILES TOTAL PROJECT	SHEET No.	TOTAL SHEETS
07	LA	5	4.0/5.9	1179	1597

LICENSED ARCHITECT 12-12-11 DATE

4-9-12
PLANS APPROVAL DATE

LICENSED ARCHITECT H. Javier Chavez 14073 03-31-13 Renewal Date STATE OF CALIFORNIA

The State of California or its officers or agents shall not be responsible for the accuracy or completeness of electronic copies of this plan sheet.

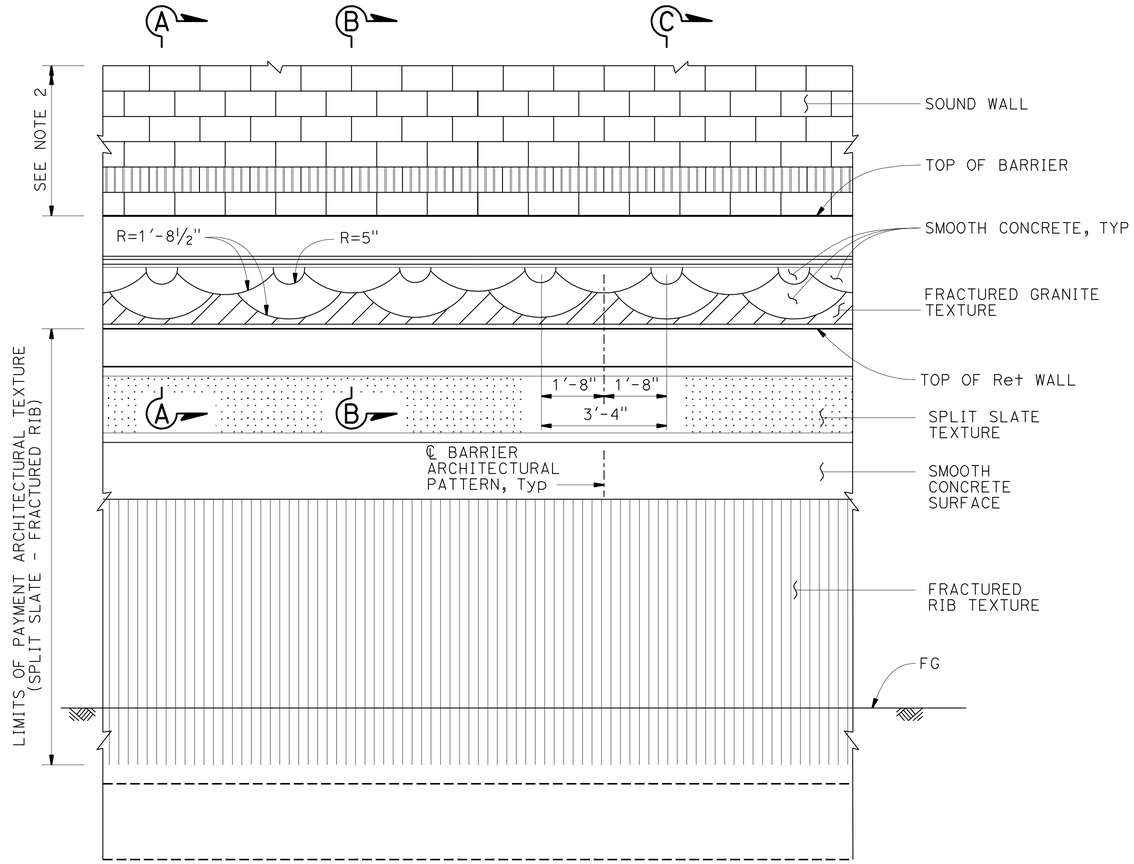

PART ELEVATION

½" = 1'-0"

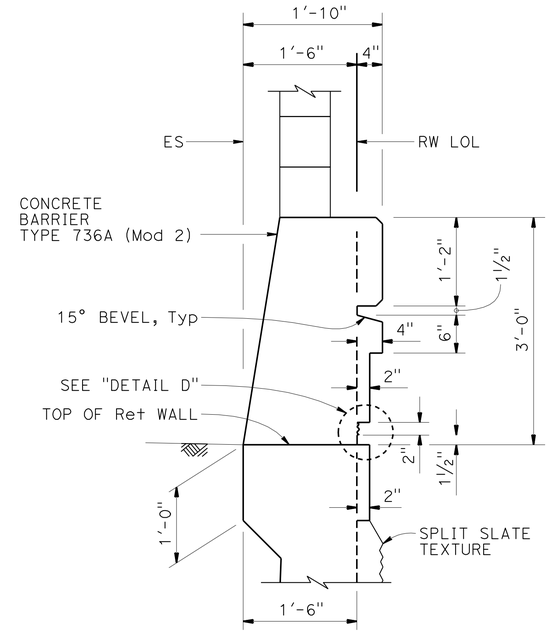

SECTION A-A

1" = 1'-0"

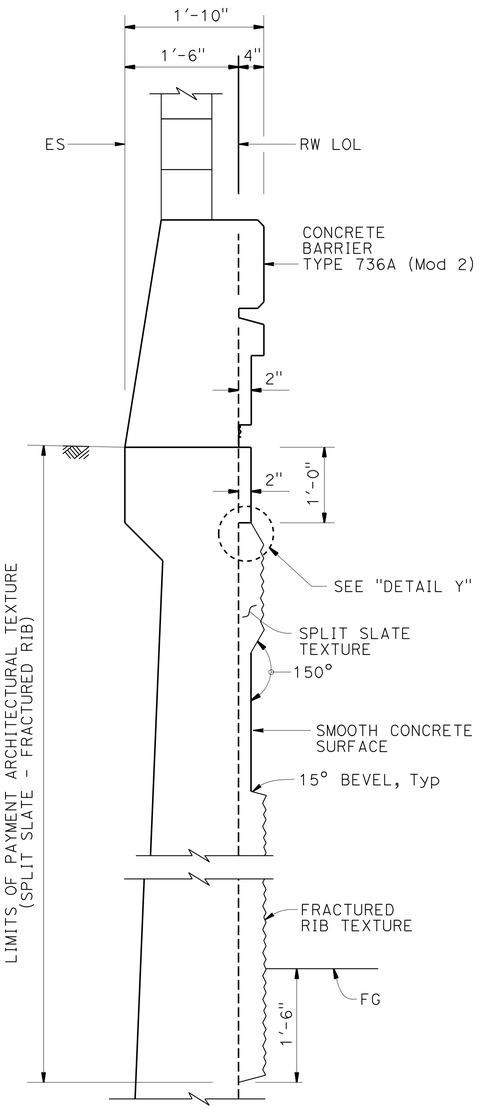

SECTION C-C

1" = 1'-0"

NOTES:

1. For Barrier Reinforcement, see "SOUND WALL - MASONRY BLOCK WITH BARRIER ON RETAINING WALL" sheet.
2. For Soundwall Architectural Treatment, see "SOUNDWALL ARCHITECTURAL DETAILS No. 2" thru "SOUNDWALL ARCHITECTURAL DETAILS No. 8" sheets.

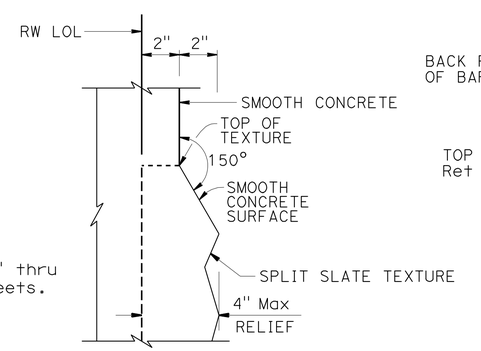

DETAIL Y

NO SCALE

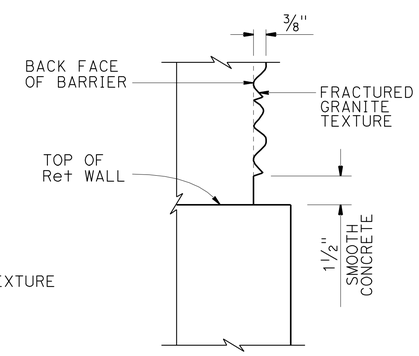

DETAIL D

NO SCALE

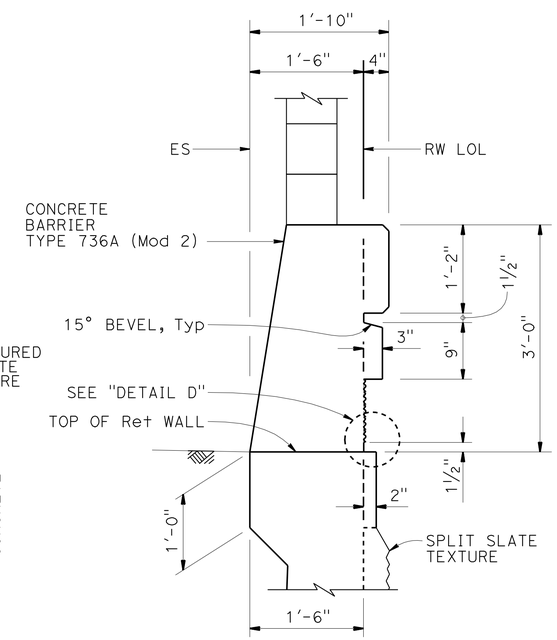

SECTION B-B

1" = 1'-0"

DESIGN	BY H. CHAVEZ	CHECKED I. TASABIA	
DETAILS	BY K. LI	CHECKED H. CHAVEZ	
QUANTITIES	BY S. YIP	CHECKED C. HENSEL	

STATE OF CALIFORNIA DEPARTMENT OF TRANSPORTATION

DIVISION OF ENGINEERING SERVICES STRUCTURE DESIGN DESIGN BRANCH 15

BRIDGE NO. 53-3071K
POST MILE 5.12

IMPERIAL Hwy OFF-RAMP

BARRIER ARCHITECTURAL DETAILS No. 2

STRUCTURES DESIGN DETAIL SHEET (ENGLISH) (REV. 09-01-10)

ORIGINAL SCALE IN INCHES FOR REDUCED PLANS 0 1 2 3

UNIT: 3604
PROJECT NUMBER & PHASE: 0700001834 1
CONTRACT NO.: 07-215941

DISREGARD PRINTS BEARING EARLIER REVISION DATES

REVISION DATES 11-07-11 12-9-11 12-29-11

SHEET 27 OF 45

FILE => 53-3071k-w-bararchdet2.dgn

USERNAME => s121614 DATE PLOTTED => 14-APR-2012 TIME PLOTTED => 11:40

DIST	COUNTY	ROUTE	POST MILES TOTAL PROJECT	SHEET No.	TOTAL SHEETS
07	LA	5	4.0/5.9	1180	1597

Anthony T. Logus 12-12-11
REGISTERED CIVIL ENGINEER DATE

4-9-12
PLANS APPROVAL DATE

REGISTERED PROFESSIONAL ENGINEER Anthony T. Logus No. C68189 Exp. 09-30-13 CIVIL STATE OF CALIFORNIA

The State of California or its officers or agents shall not be responsible for the accuracy or completeness of electronic copies of this plan sheet.

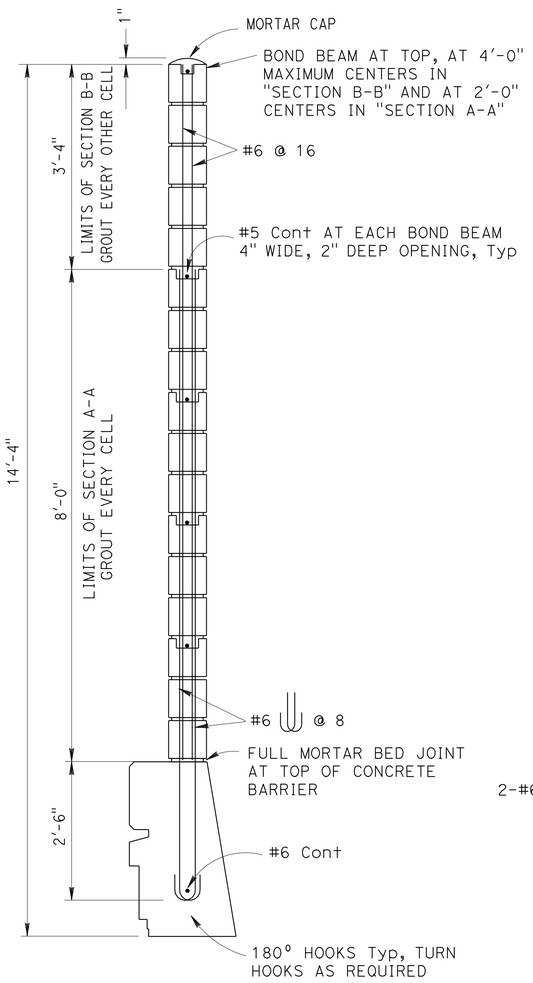

SOUND WALL SECTION

NO SCALE

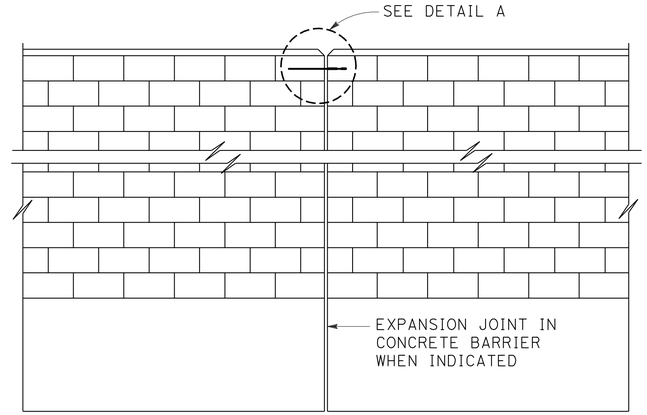

ALIGNMENT KEY DETAIL

NO SCALE

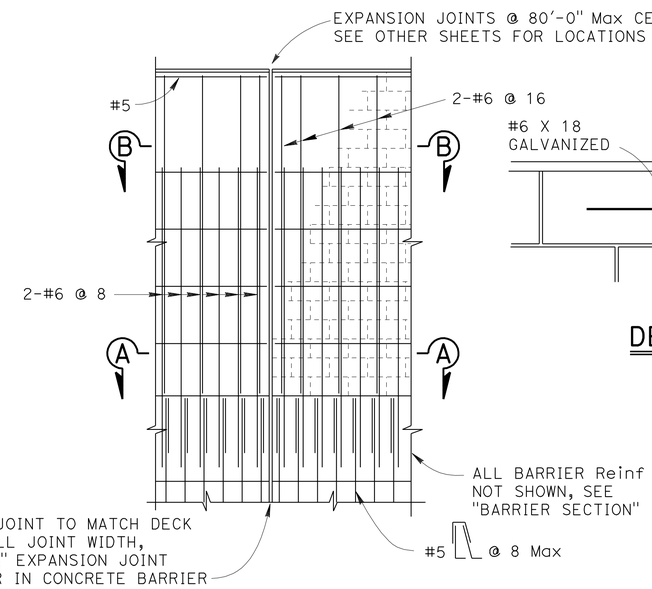

DECK AND WALL JOINT ELEVATION

NO SCALE

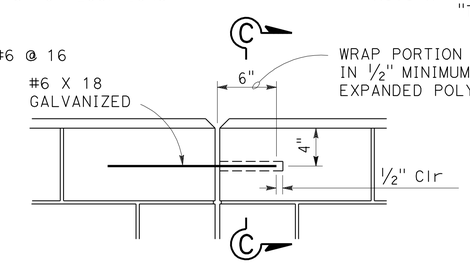

DETAIL A

NO SCALE

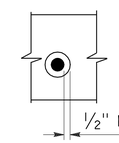

SECTION C-C

NO SCALE

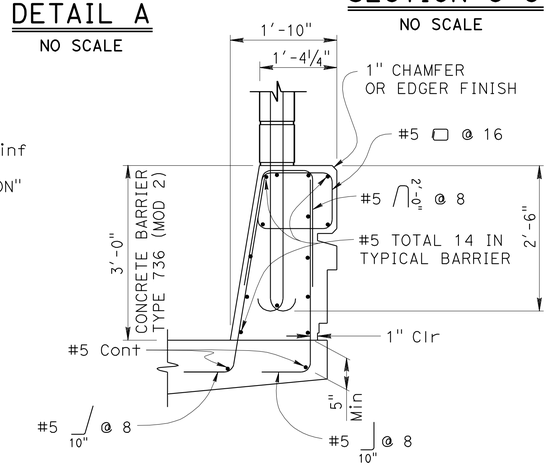

BARRIER SECTION

NO SCALE

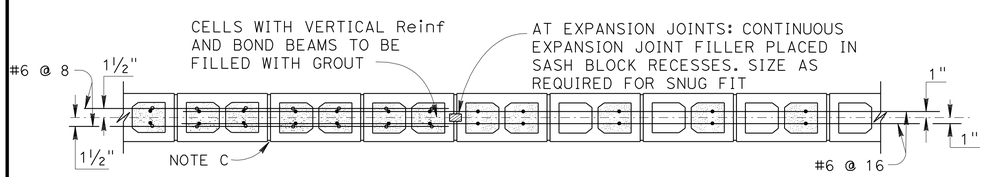

SECTION A-A

NO SCALE

SECTION B-B

NO SCALE

GENERAL NOTES

Note A: For type of block, type of block bond and joint finish, see "Road Plans".

Note B: When blocks are laid in stacked bond, ladder type, galvanized joint reinforcement shall be provided. A minimum of 2 - 12 gauge wires continuous at 4'-0" maximum to be used. Locate reinforcement in joints that are at the approximate midpoint between bond beams.

Note C: Horizontal joints shall be tooled concave or may be weathered. Vertical joints shall be tooled concave or may be raked.

Note D: All masonry to be high strength unless otherwise noted.

Note E: Concrete to be used for barrier shall contain not less than 590 pounds of cemetitious material per cubic yard.

Note F: Expansion joints in concrete barrier and masonry block to match deck joints and at ends of wing walls.

Note G: Expansion joints in Sound Wall (Masonry Block) shall be at each support, center of span, and at ends of each wingwall.

Note H: For dimensions and reinforcement not shown see "Typical Section" sheet.

Note:

For dimensions and reinforcement not shown, see Std. Plan B11-56 and "Barrier Architectural Details" sheets.

DESIGN NOTES

DESIGN

Uniform Building Code,1997 Edition and the Bridge Design Specifications.

DESIGN WIND LOAD

37 psf

DESIGN SEISMIC LOAD

2.0 Dead load

REINFORCED CONCRETE

f'c = 3.6 ksi
fy = 60 ksi

CONCRETE MASONRY HIGH STRENGTH

f'm = 2500 psi
fy = 60 ksi

LOAD FACTORS AND LOAD COMBINATIONS

Load Factor Design (LFD)

Group A: βD +1.7 E + 1.7 SC
Group B: βD +1.7 E + 1.3 W
Group C: βD +1.3 E + 1.0 EQE
Group D: βD +1.3 E + 1.0 EQD
Group E: βD +1.1 E + 0.85 (EQE + EQD)

Where : β = 0.9 or 1.2, whichever controls in design
D = Dead load
E = Lateral earth pressure
SC = Live load surcharge
W = Wind load
EQD = Seismic dead load
EQE = Seismic earth load

STRENGTH REDUCTION FACTORS, Ø

Reinforced Concrete :

For flexure ..... Ø = 0.90
For shear ..... Ø = 0.85

Concrete masonry:

For flexure ..... Ø = 0.80
For shear ..... Ø = 0.60

Note:

Barrier, Deck and Concrete Masonry are designed by the Strength Design Method.

DESIGN	BY ANTHONY LOGUS	CHECKED RUSLAN NOVIK	
DETAILS	BY HERMAN MAUROSCHADT	CHECKED RUSLAN NOVIK	
QUANTITIES	BY SARA YIP	CHECKED CLARENCE HENSEL	

STATE OF CALIFORNIA
DEPARTMENT OF TRANSPORTATION

DIVISION OF ENGINEERING SERVICES
STRUCTURE DESIGN
DESIGN BRANCH 15

BRIDGE NO. 53-3071K
POST MILE 5.12

IMPERIAL Hwy OFF-RAMP
SOUNDWALL-MASONRY BLOCK ON BRIDGE

STRUCTURES DESIGN DETAIL SHEET (ENGLISH) (REV. 09-01-10)

ORIGINAL SCALE IN INCHES FOR REDUCED PLANS 0 1 2 3

UNIT: 3604
PROJECT NUMBER & PHASE: 0700001834 1
CONTRACT NO.: 07-215941

DISREGARD PRINTS BEARING EARLIER REVISION DATES

REVISION DATES 11-15-11 12-6-11 12-28-11

SHEET 28 OF 45

FILE => 53-3071k-w-swadet.dgn

USERNAME => s121614 DATE PLOTTED => 14-APR-2012 TIME PLOTTED => 11:40

DIST	COUNTY	ROUTE	POST MILES TOTAL PROJECT	SHEET No.	TOTAL SHEETS
07	LA	5	4.0/5.9	1181	1597

LICENSED ARCHITECT 12-12-11 DATE

4-9-12
PLANS APPROVAL DATE

LICENSED ARCHITECT H. Javier Chavez 14073 03-31-13 Renewal Date STATE OF CALIFORNIA

The State of California or its officers or agents shall not be responsible for the accuracy or completeness of electronic copies of this plan sheet.

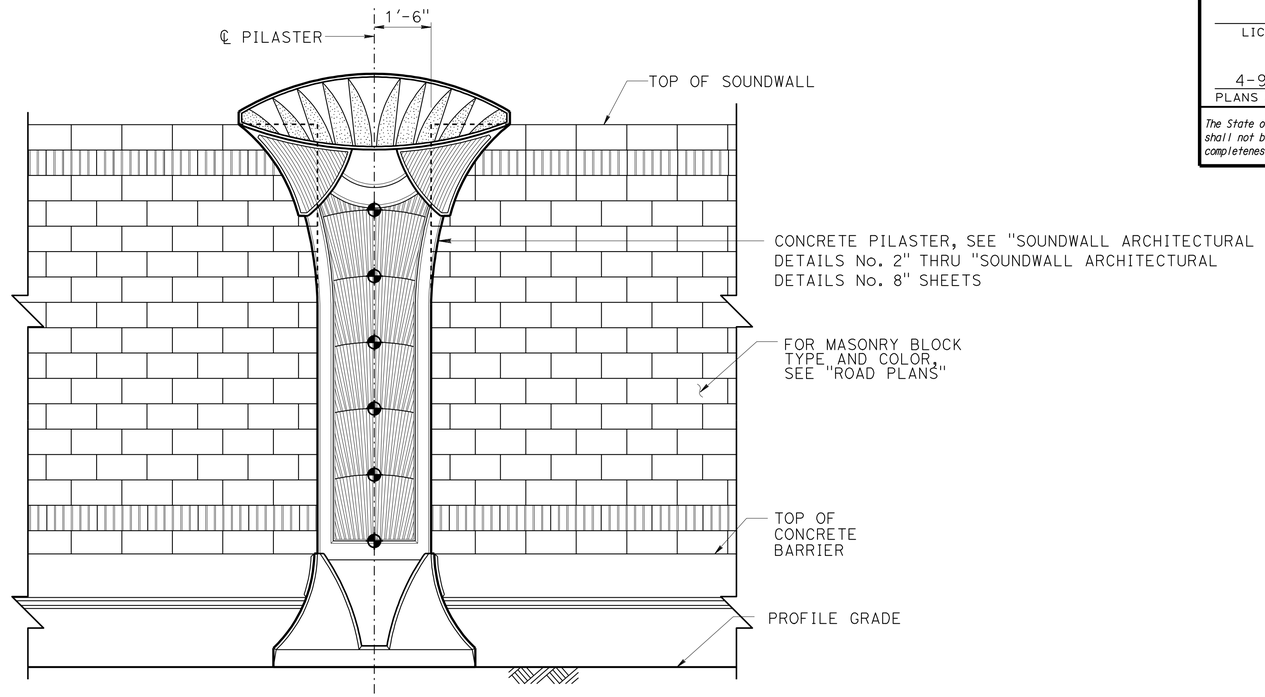

PART SOUNDWALL ELEVATION - FREEWAY SIDE

½" = 1'-0"

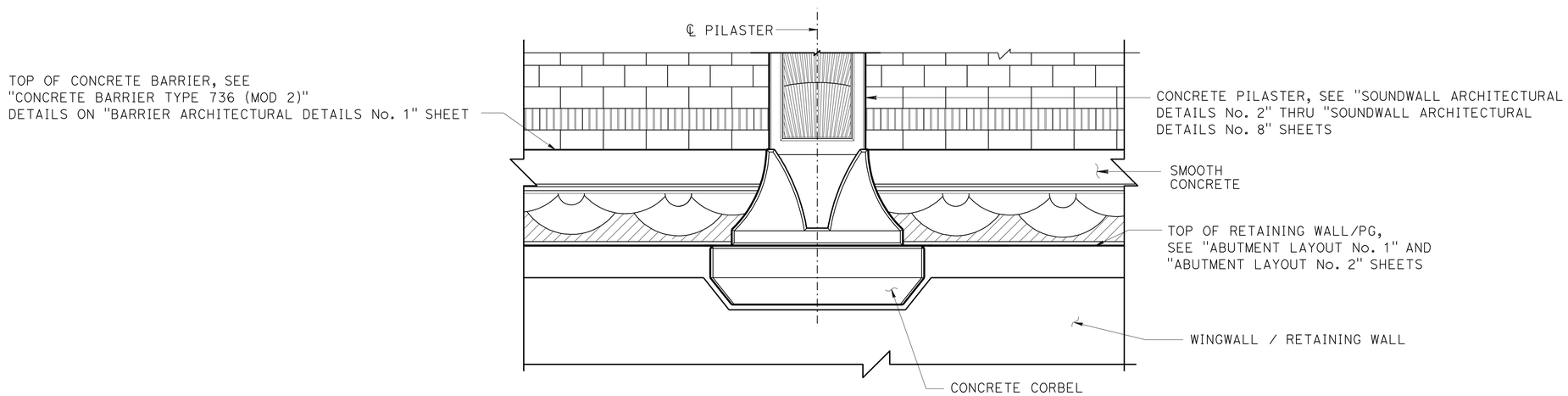

PART SOUNDWALL ELEVATION - BACK SIDE

½" = 1'-0"

	BY	CHECKED
DESIGN	H. CHAVEZ	I. TASABIA
DETAILS	K. LI	H. CHAVEZ
QUANTITIES	S. YIP	C. HENSEL

STATE OF CALIFORNIA
DEPARTMENT OF TRANSPORTATION

DIVISION OF ENGINEERING SERVICES
BRIDGE ARCHITECTURE AND AESTHETICS

BRIDGE NO. 53-3071K
POST MILE 5.12

IMPERIAL Hwy OFF-RAMP
SOUNDWALL ARCHITECTURAL DETAILS No. 1

STRUCTURES DESIGN DETAIL SHEET (ENGLISH) (REV. 09-01-10)

ORIGINAL SCALE IN INCHES FOR REDUCED PLANS 0 1 2 3

UNIT: 3604
PROJECT NUMBER & PHASE: 0700001834 1
CONTRACT NO.: 07-215941

DISREGARD PRINTS BEARING EARLIER REVISION DATES

REVISION DATES 11-1-11 12-1-11 12-29-11

SHEET 29 OF 45

FILE => 53-3071k-w-swdet01.dgn

USERNAME => s121614 DATE PLOTTED => 14-APR-2012 TIME PLOTTED => 11:40

DIST	COUNTY	ROUTE	POST MILES TOTAL PROJECT	SHEET No.	TOTAL SHEETS
07	LA	5	4.0/5.9	1182	1597

LICENSED ARCHITECT 12-12-11 DATE

4-9-12
PLANS APPROVAL DATE

LICENSED ARCHITECT H. Javier Chavez 14073 03-31-13 Renewal Date STATE OF CALIFORNIA

The State of California or its officers or agents shall not be responsible for the accuracy or completeness of electronic copies of this plan sheet.

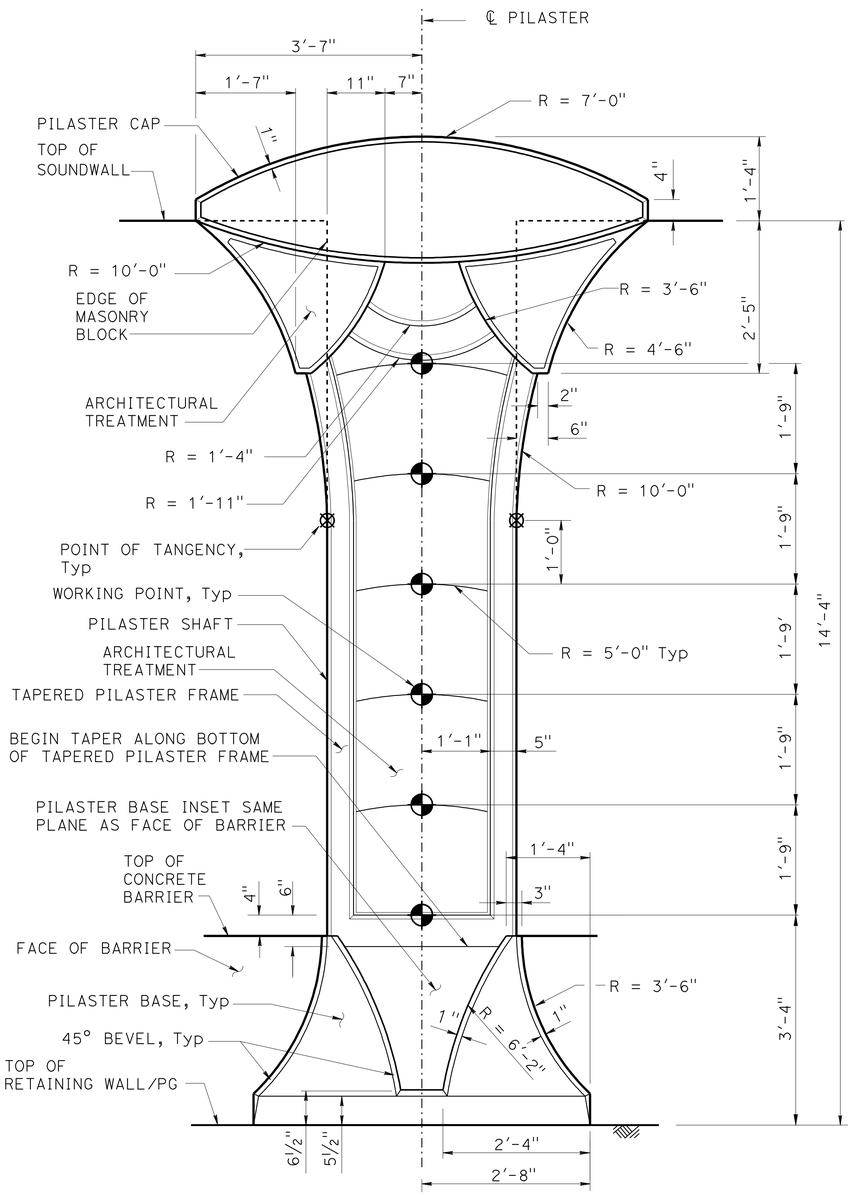

PILASTER ELEVATION - FREEWAY SIDE

NO SCALE

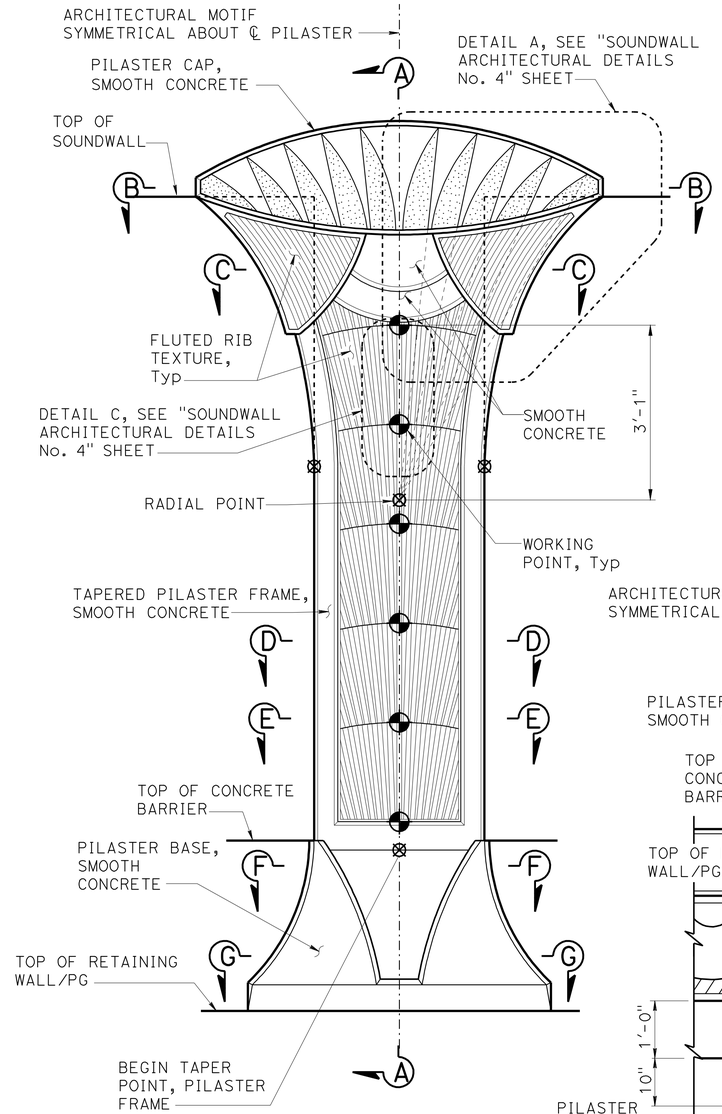

Note: For additional details not shown, see "PILASTER ELEVATION - FREEWAY SIDE"

FREEWAY SIDE

Notes:

1. For SECTION A-A", "SECTION B-B", "SECTION C-C", "SECTION D-D", "SECTION E-E", "SECTION F-F", SECTION G-G" and "SECTION H-H" see "SOUNDWALL ARCHITECTURAL DETAILS No. 3" sheet.
2. All dimensions symmetrical about ℄ Pilaster.
3. Beveled edges are 45° unless otherwise noted.
4. All vertical dimension are measured along the ℄ Pilaster (Pilaster shall be vertical).

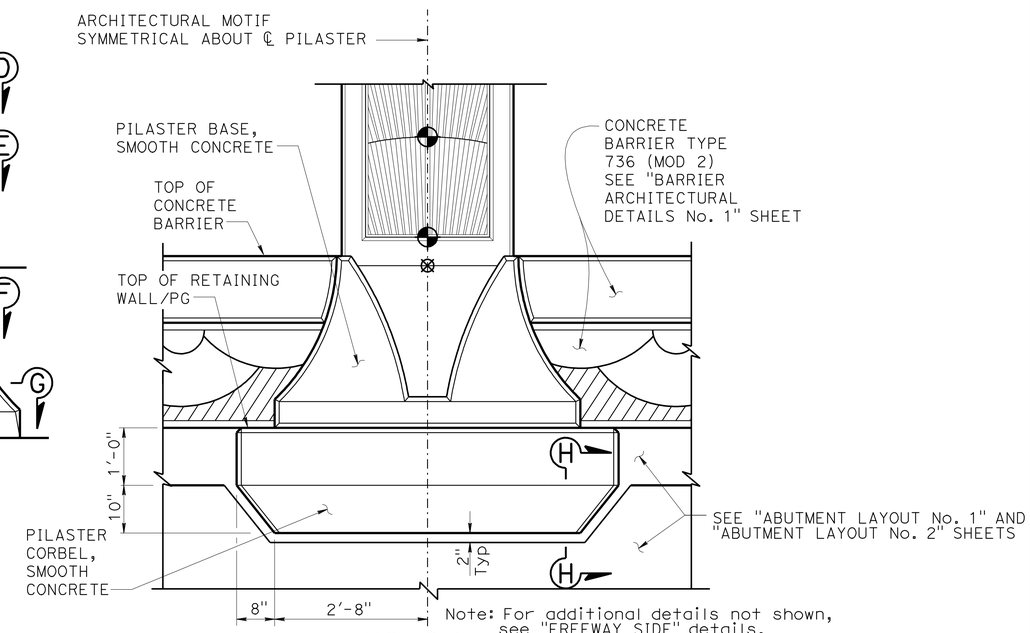

Note: For additional details not shown, see "FREEWAY SIDE" details.

BACK SIDE

PILASTER ARCHITECTURAL MOTIF

3/4" = 1'-0"

DESIGN	BY H. CHAVEZ	CHECKED I. TASABIA	
DETAILS	BY K. LI	CHECKED H. CHAVEZ	
QUANTITIES	BY S. YIP	CHECKED C. HENSEL	

STATE OF CALIFORNIA DEPARTMENT OF TRANSPORTATION

DIVISION OF ENGINEERING SERVICES BRIDGE ARCHITECTURE AND AESTHETICS

BRIDGE NO. 53-3071K
POST MILE 5.12

IMPERIAL Hwy OFF-RAMP

SOUNDWALL ARCHITECTURAL DETAILS No. 2

STRUCTURES DESIGN DETAIL SHEET (ENGLISH) (REV. 09-01-10)

ORIGINAL SCALE IN INCHES FOR REDUCED PLANS 0 1 2 3

UNIT: 3604
PROJECT NUMBER & PHASE: 0700001834 1
CONTRACT NO.: 07-215941

DISREGARD PRINTS BEARING EARLIER REVISION DATES

REVISION DATES 11-17-11 12-12-11 12-29-11

SHEET 30 OF 45

FILE => 53-3071k-w-swdet02.dgn

USERNAME => s121614 DATE PLOTTED => 14-APR-2012 TIME PLOTTED => 11:40

DIST	COUNTY	ROUTE	POST MILES TOTAL PROJECT	SHEET No.	TOTAL SHEETS
07	LA	5	4.0/5.9	1183	1597

LICENSED ARCHITECT — DATE 12-12-11

PLANS APPROVAL DATE 4-9-12

LICENSED ARCHITECT H. Javier Chavez 14073 03-31-13 Renewal Date STATE OF CALIFORNIA

The State of California or its officers or agents shall not be responsible for the accuracy or completeness of electronic copies of this plan sheet.

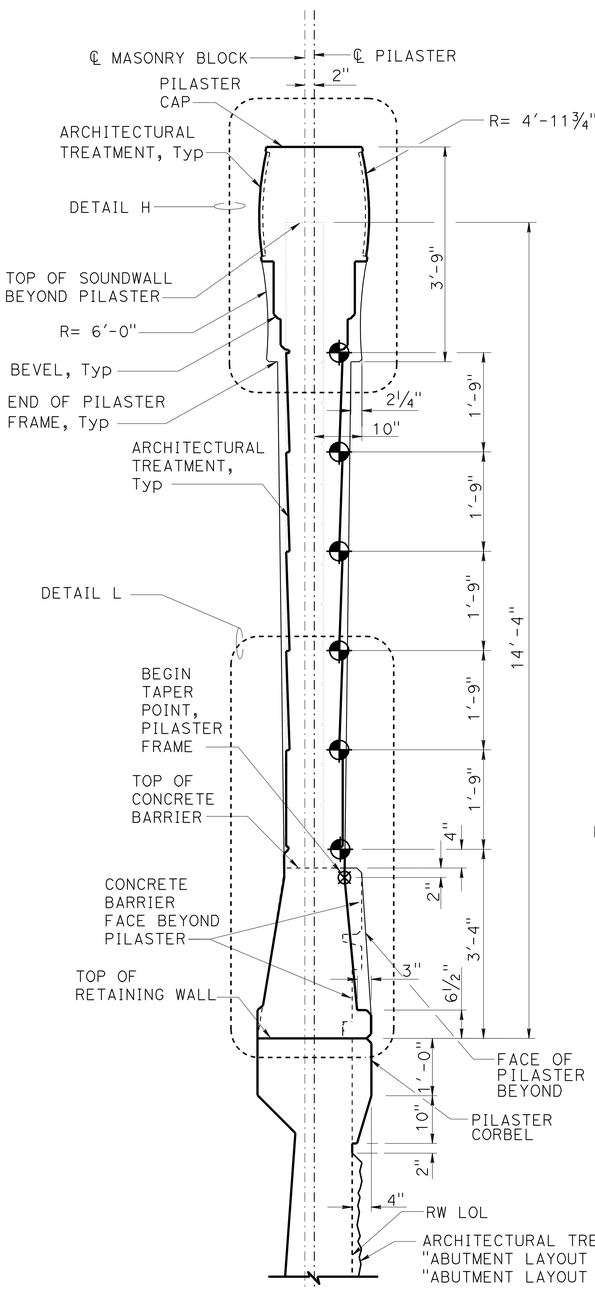

SECTION A-A
¾" = 1'-0"

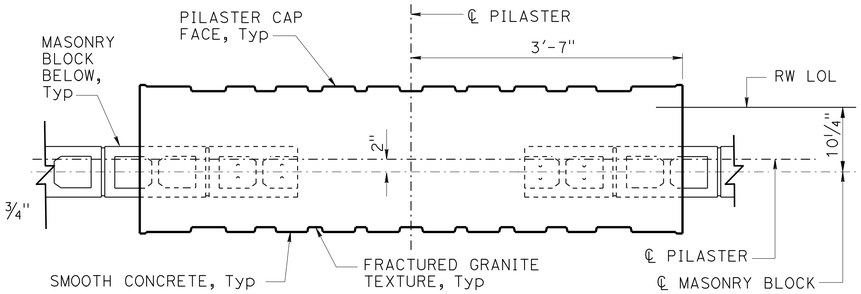

SECTION B-B
1" = 1'-0"

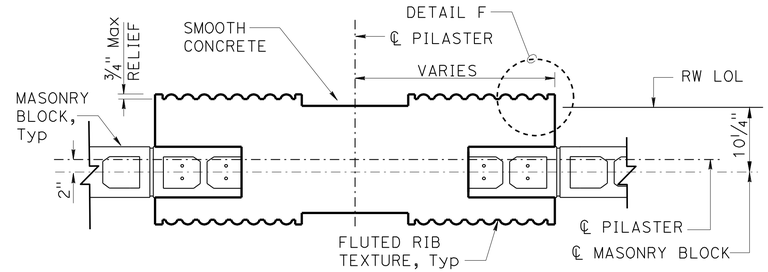

SECTION C-C
1" = 1'-0"

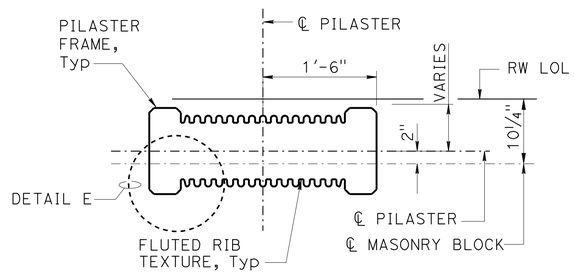

SECTION D-D
1" = 1'-0"

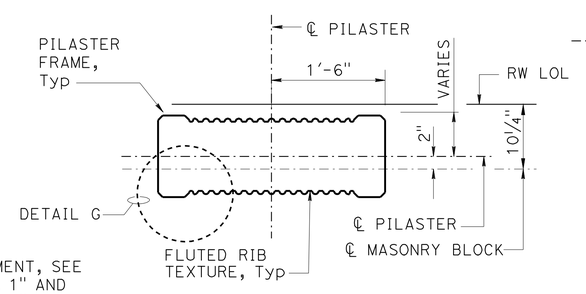

SECTION E-E
1" = 1'-0"

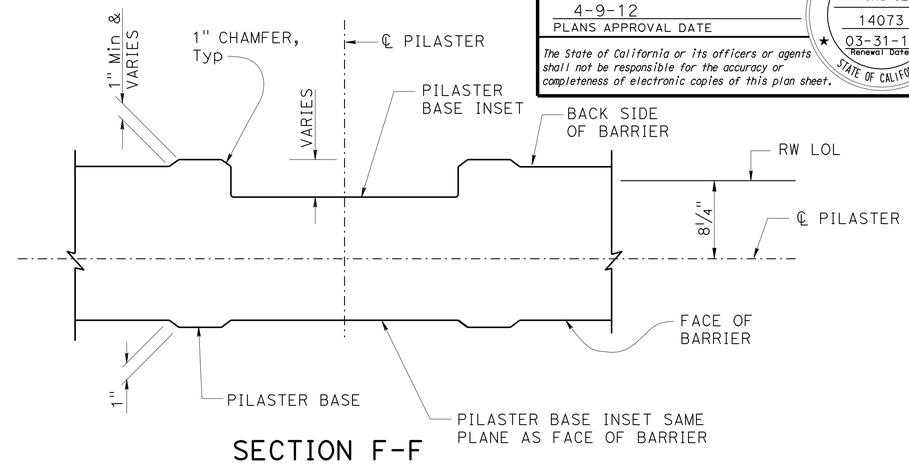

SECTION F-F
1½" = 1'-0"

Notes:

1. All dimensions symmetrical about ℄ Pilaster.
2. All vertical dimension are measured along the ℄ Pilaster (Pilaster shall be vertical).
3. For "DETAIL E", "DETAIL F" and "DETAIL G" see "SOUNDWALL ARCHITECTURAL DETAILS No. 4" sheet.
4. For "DETAIL H" and "DETAIL L" see "SOUNDWALL ARCHITECTURAL DETAILS No. 5" sheet.

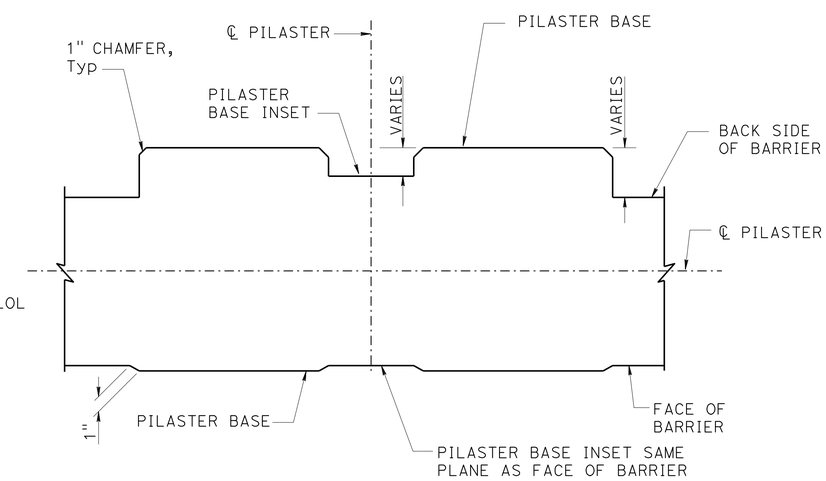

SECTION G-G
1½" = 1'-0"

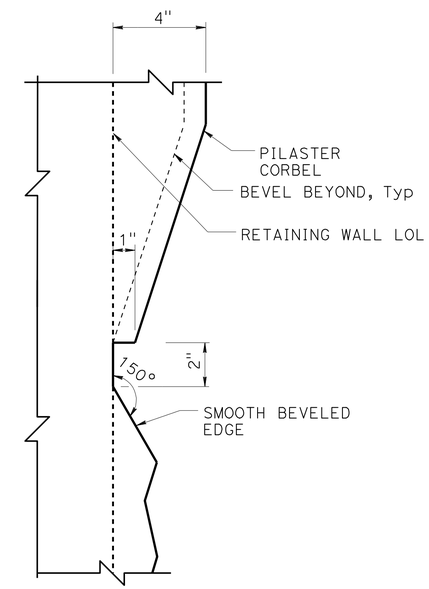

SECTION H-H
NO SCALE

	BY	CHECKED
DESIGN	H. CHAVEZ	I. TASABIA
DETAILS	K. LI	H. CHAVEZ
QUANTITIES	S. YIP	C. HENSEL

STATE OF CALIFORNIA
DEPARTMENT OF TRANSPORTATION

DIVISION OF ENGINEERING SERVICES
BRIDGE ARCHITECTURE AND AESTHETICS

BRIDGE NO. 53-3071K
POST MILE 5.12

IMPERIAL Hwy OFF-RAMP
SOUNDWALL ARCHITECTURAL DETAILS No. 3

STRUCTURES DESIGN DETAIL SHEET (ENGLISH) (REV. 09-01-10)

ORIGINAL SCALE IN INCHES FOR REDUCED PLANS 0 1 2 3

UNIT: 3604
PROJECT NUMBER & PHASE: 0700001834 1
CONTRACT NO.: 07-215941

DISREGARD PRINTS BEARING EARLIER REVISION DATES

REVISION DATES 11-1-11 12-1-11 12-29-11

SHEET 31 OF 45

FILE => 53-3071k-w-swdet03.dgn

USERNAME => s121614 DATE PLOTTED => 14-APR-2012 TIME PLOTTED => 11:40

DIST	COUNTY	ROUTE	POST MILES TOTAL PROJECT	SHEET No.	TOTAL SHEETS
07	LA	5	4.0/5.9	1184	1597

LICENSED ARCHITECT — DATE 12-12-11

PLANS APPROVAL DATE 4-9-12

LICENSED ARCHITECT H. Javier Chavez 14073 03-31-13 Renewal Date STATE OF CALIFORNIA

The State of California or its officers or agents shall not be responsible for the accuracy or completeness of electronic copies of this plan sheet.

Notes:

1. All notes and dimensions symmetrical about ℄ Pilaster.
2. Beveled edges are 45° unless otherwise noted.

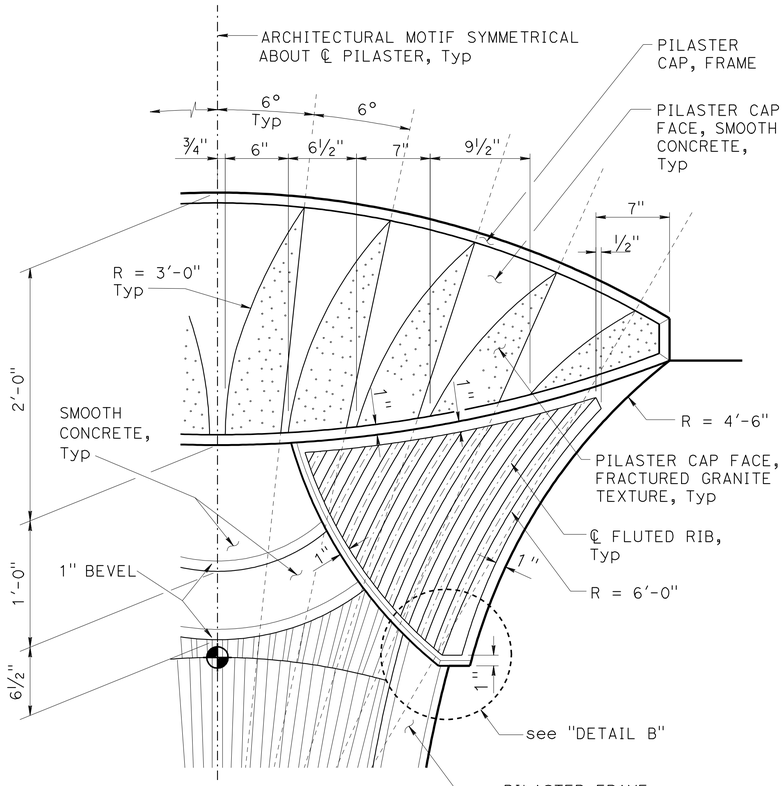

DETAIL A
NO SCALE

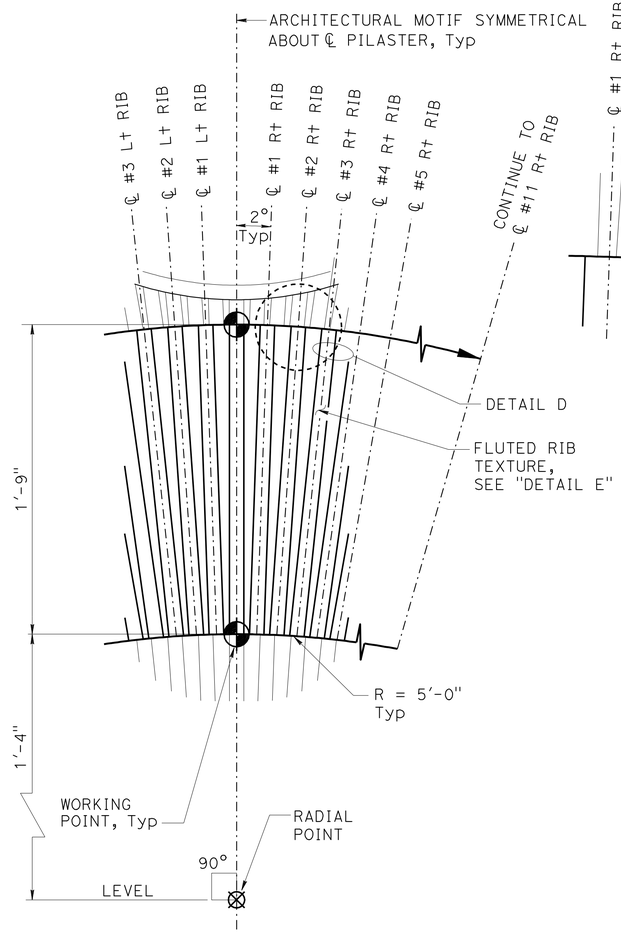

DETAIL C
NO SCALE

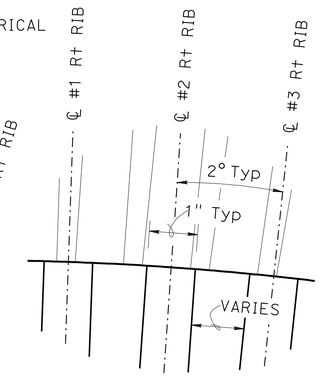

DETAIL D
NO SCALE

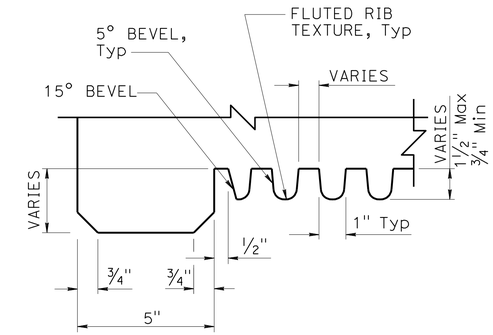

DETAIL E
NO SCALE

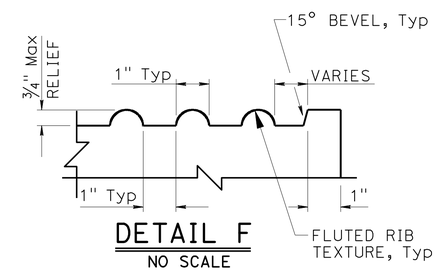

DETAIL F
NO SCALE

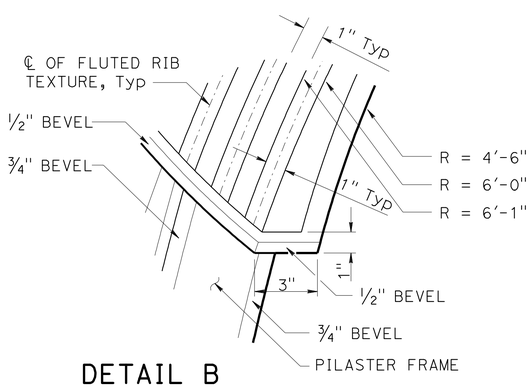

DETAIL B
NO SCALE

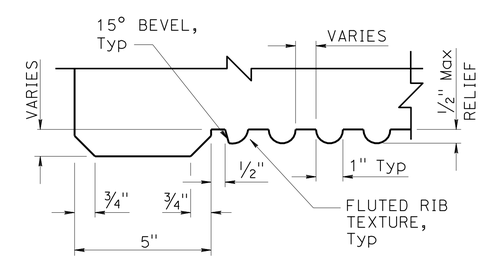

DETAIL G
NO SCALE

DESIGN	BY H. CHAVEZ	CHECKED I. TASABIA	
DETAILS	BY K. LI	CHECKED H. CHAVEZ	
QUANTITIES	BY S. YIP	CHECKED C. HENSEL	

STATE OF CALIFORNIA
DEPARTMENT OF TRANSPORTATION

DIVISION OF ENGINEERING SERVICES
BRIDGE ARCHITECTURE AND AESTHETICS

BRIDGE NO. 53-3071K
POST MILE 5.12

IMPERIAL Hwy OFF-RAMP
SOUNDWALL ARCHITECTURAL DETAILS No. 4

STRUCTURES DESIGN DETAIL SHEET (ENGLISH) (REV. 09-01-10)

ORIGINAL SCALE IN INCHES FOR REDUCED PLANS 0 1 2 3

UNIT: 3604
PROJECT NUMBER & PHASE: 0700001834 1
CONTRACT NO.: 07-215941

DISREGARD PRINTS BEARING EARLIER REVISION DATES

REVISION DATES 11-1-11 12-1-11 12-29-11

SHEET 32 OF 45

FILE => 53-3071k-w-swdet04.dgn

USERNAME => s121614 DATE PLOTTED => 14-APR-2012 TIME PLOTTED => 11:40

DIST	COUNTY	ROUTE	POST MILES TOTAL PROJECT	SHEET No.	TOTAL SHEETS
07	LA	5	4.0/5.9	1185	1597

LICENSED ARCHITECT 12-12-11 DATE

4-9-12
PLANS APPROVAL DATE

LICENSED ARCHITECT H. Javier Chavez 14073 03-31-13 Renewal Date STATE OF CALIFORNIA

The State of California or its officers or agents shall not be responsible for the accuracy or completeness of electronic copies of this plan sheet.

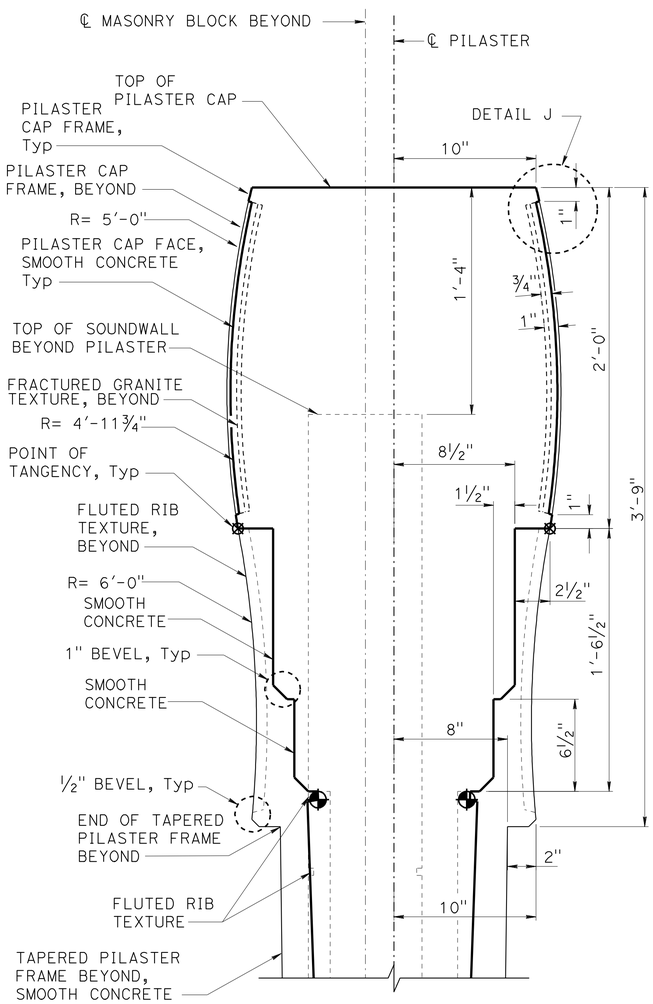

DETAIL H
NO SCALE

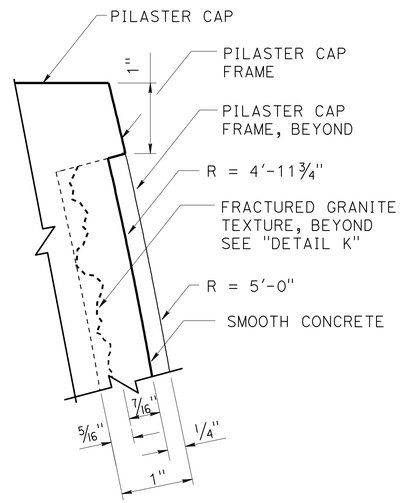

DETAIL J
NO SCALE

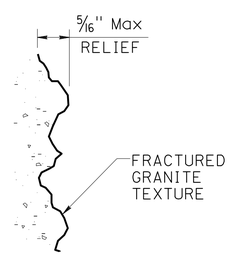

DETAIL K
NO SCALE

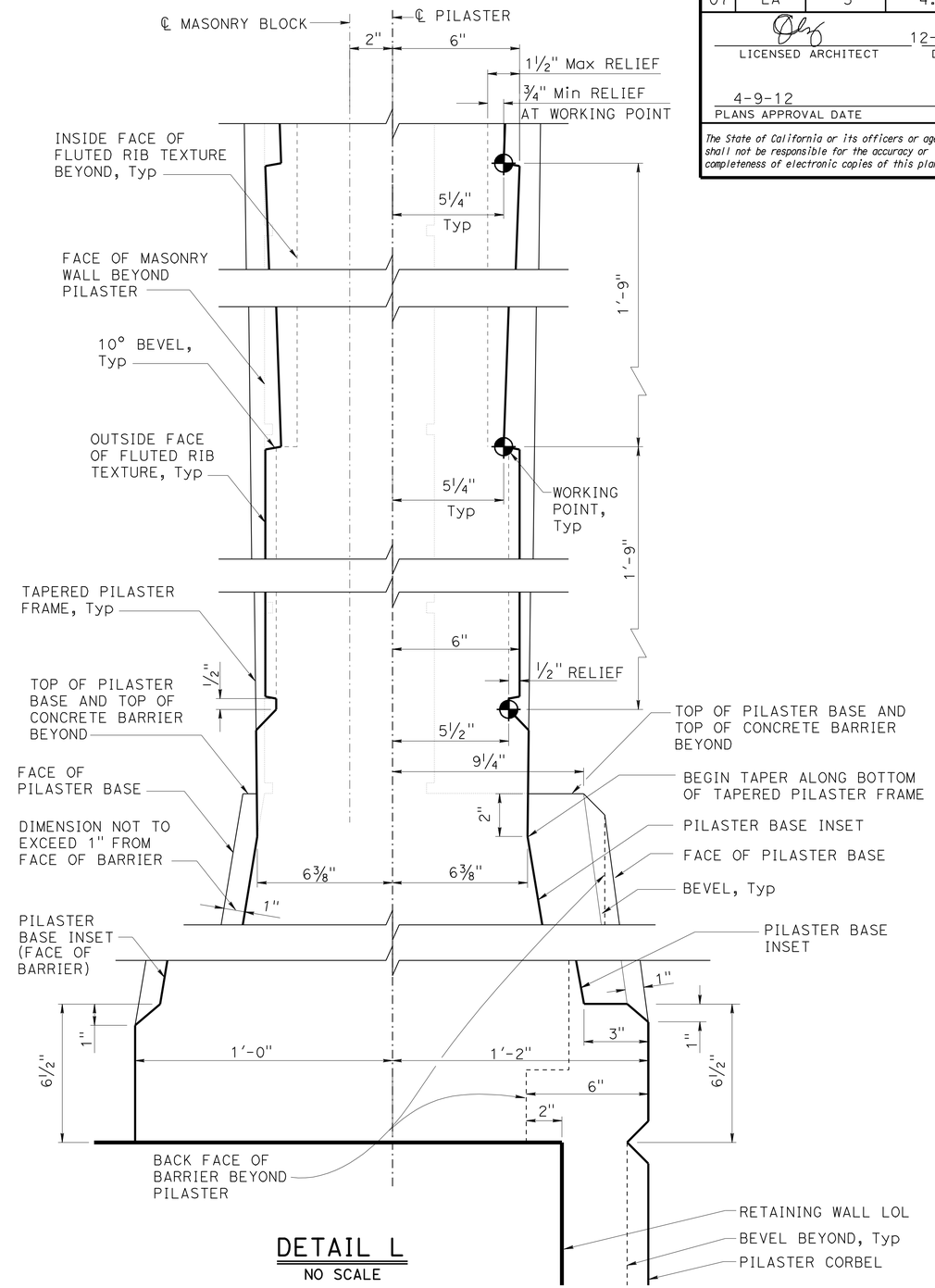

DETAIL L
NO SCALE

	BY	CHECKED
DESIGN	H. CHAVEZ	I. TASABIA
DETAILS	K. LI	H. CHAVEZ
QUANTITIES	S. YIP	C. HENSEL

STATE OF CALIFORNIA
DEPARTMENT OF TRANSPORTATION

DIVISION OF ENGINEERING SERVICES
BRIDGE ARCHITECTURE AND AESTHETICS

BRIDGE NO. 53-3071K
POST MILE 5.12

IMPERIAL Hwy OFF-RAMP
SOUNDWALL ARCHITECTURAL DETAILS No. 5

STRUCTURES DESIGN DETAIL SHEET (ENGLISH) (REV. 09-01-10)

ORIGINAL SCALE IN INCHES FOR REDUCED PLANS 0 1 2 3

UNIT: 3604
PROJECT NUMBER & PHASE: 0700001834 1
CONTRACT NO.: 07-215941

DISREGARD PRINTS BEARING EARLIER REVISION DATES

REVISION DATES 11-17-11 12-12-11 12-29-11

SHEET 33 OF 45

FILE => 53-3071k-w-swdet05.dgn

USERNAME => s121614 DATE PLOTTED => 14-APR-2012 TIME PLOTTED => 11:40

DIST	COUNTY	ROUTE	POST MILES TOTAL PROJECT	SHEET No.	TOTAL SHEETS
07	LA	5	4.0/5.9	1186	1597

Anthony T. Logus 12-12-11
REGISTERED CIVIL ENGINEER DATE

4-9-12
PLANS APPROVAL DATE

REGISTERED PROFESSIONAL ENGINEER Anthony T. Logus No. C68189 Exp. 09-30-13 CIVIL STATE OF CALIFORNIA

The State of California or its officers or agents shall not be responsible for the accuracy or completeness of electronic copies of this plan sheet.

Note:
For "SECTION K-K", "SECTION L-L", "SECTION M-M" and "SECTION N-N", see "SOUNDWALL ARCHITECTURAL DETAILS No. 7" sheet.

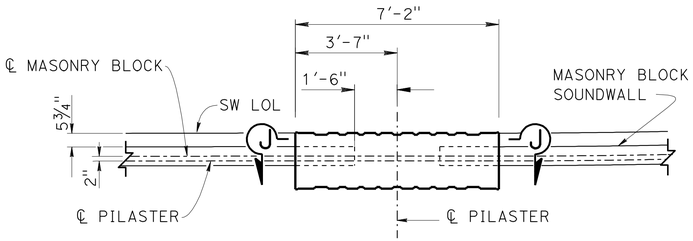

PART SOUND WALL PLAN

3/8" = 1'-0"

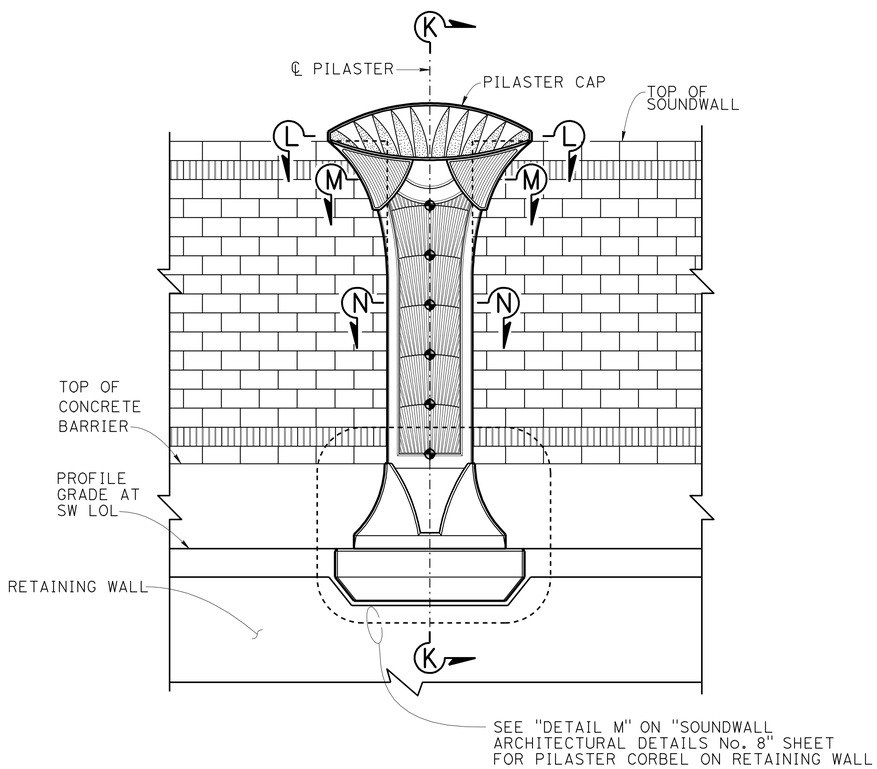

PART SOUNDWALL ELEVATION

3/8" = 1'-0"

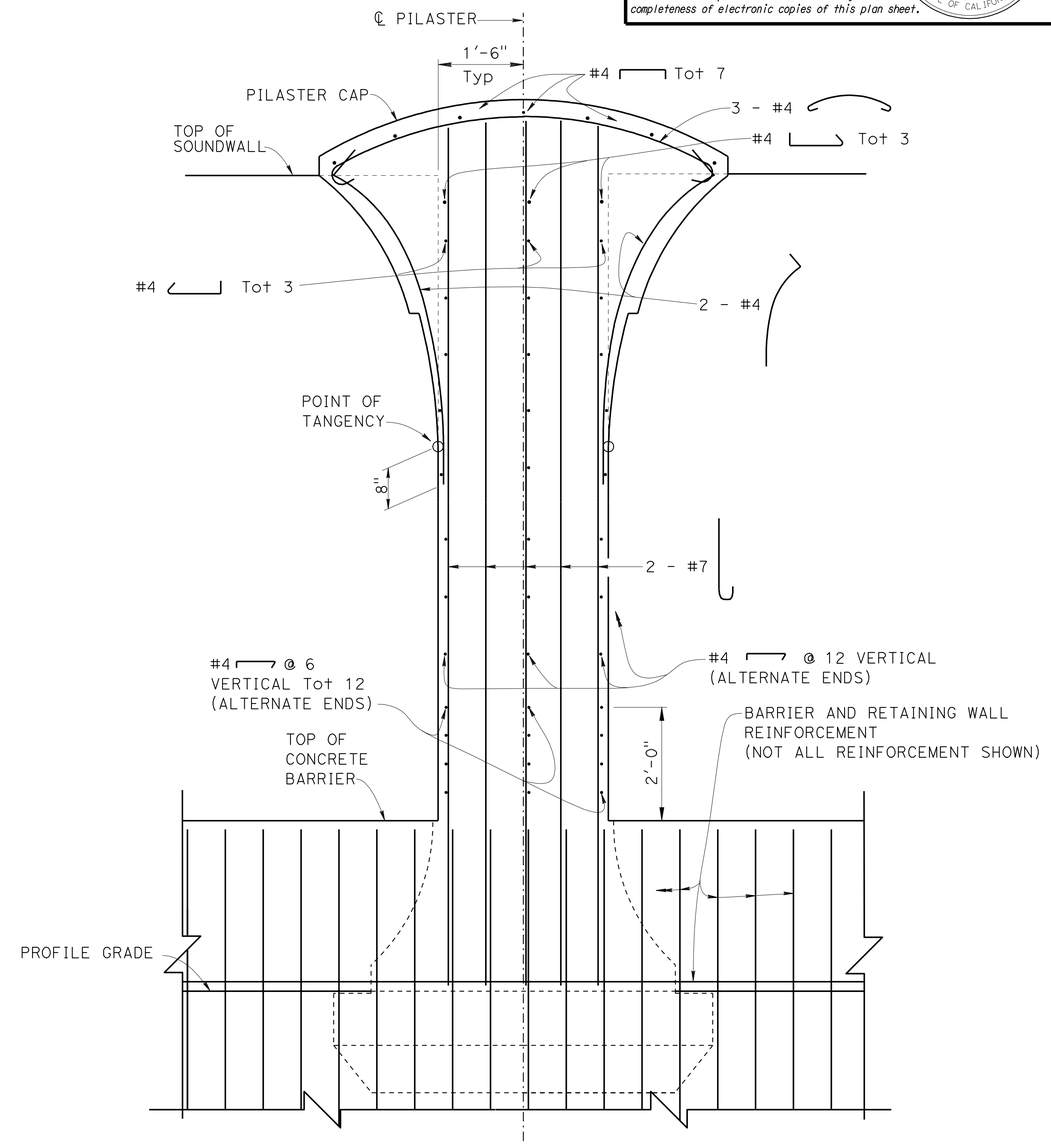

Note: Pilaster Corbel Reinf not shown.

SECTION J-J

3/4" = 1'-0"

DESIGN	BY H. CHAVEZ	CHECKED I. TASABIA	
DETAILS	BY K. LI	CHECKED H. CHAVEZ	
QUANTITIES	BY S. YIP	CHECKED C. HENSEL	

STATE OF CALIFORNIA
DEPARTMENT OF TRANSPORTATION

DIVISION OF ENGINEERING SERVICES
STRUCTURE DESIGN
DESIGN BRANCH 15

BRIDGE NO. 53-3071K
POST MILE 5.12

IMPERIAL Hwy OFF-RAMP
SOUNDWALL ARCHITECTURAL DETAILS No. 6

STRUCTURES DESIGN DETAIL SHEET (ENGLISH) (REV. 09-01-10)

ORIGINAL SCALE IN INCHES FOR REDUCED PLANS 0 1 2 3

UNIT: 3604
PROJECT NUMBER & PHASE: 0700001834 1
CONTRACT NO.: 07-215941

DISREGARD PRINTS BEARING EARLIER REVISION DATES

REVISION DATES 11-11-11 12-1-11 12-29-11

SHEET 34 OF 45

FILE => 53-3071k-w-swdet06.dgn

USERNAME => s127614 DATE PLOTTED => 14-APR-2012 TIME PLOTTED => 11:41

DIST	COUNTY	ROUTE	POST MILES TOTAL PROJECT	SHEET No.	TOTAL SHEETS
07	LA	5	4.0/5.9	1187	1597

Anthony T. Logus 12-12-11
REGISTERED CIVIL ENGINEER DATE

4-9-12
PLANS APPROVAL DATE

REGISTERED PROFESSIONAL ENGINEER Anthony T. Logus No. C68189 Exp. 09-30-13 CIVIL STATE OF CALIFORNIA

The State of California or its officers or agents shall not be responsible for the accuracy or completeness of electronic copies of this plan sheet.

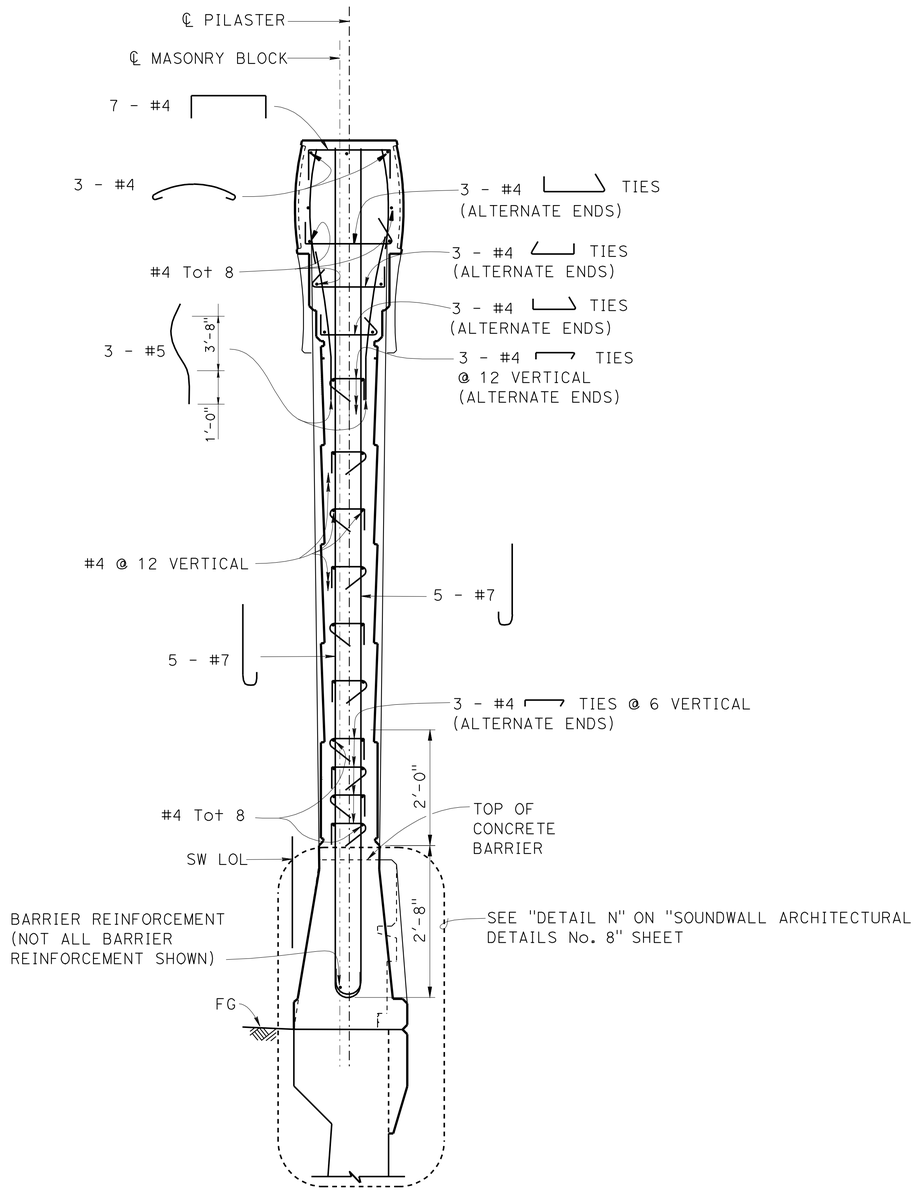

SECTION K-K
¾" = 1'-0"

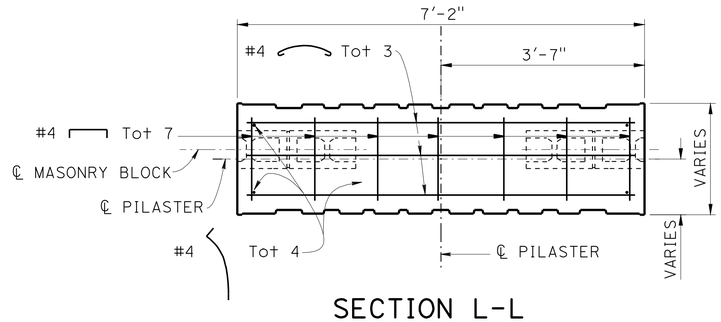

SECTION L-L
¾" = 1'-0"

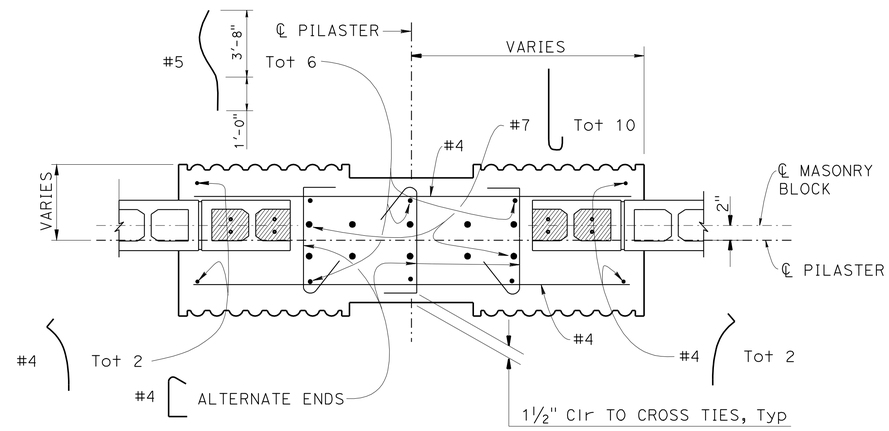

SECTION M-M
1" = 1'-0"

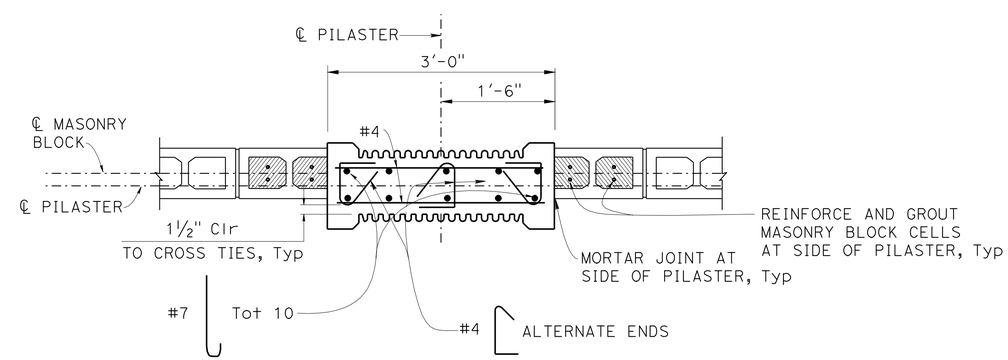

SECTION N-N
1" = 1'-0"

	BY	CHECKED
DESIGN	H. CHAVEZ	I. TASABIA
DETAILS	K. LI	H. CHAVEZ
QUANTITIES	S. YIP	C. HENSEL

STATE OF CALIFORNIA
DEPARTMENT OF TRANSPORTATION

DIVISION OF ENGINEERING SERVICES
STRUCTURE DESIGN
DESIGN BRANCH 15

BRIDGE NO. 53-3071K
POST MILE 5.12

IMPERIAL Hwy OFF-RAMP
SOUNDWALL ARCHITECTURAL DETAILS No. 7

STRUCTURES DESIGN DETAIL SHEET (ENGLISH) (REV. 09-01-10)

ORIGINAL SCALE IN INCHES FOR REDUCED PLANS 0 1 2 3

UNIT: 3604
PROJECT NUMBER & PHASE: 0700001834 1
CONTRACT NO.: 07-215941

DISREGARD PRINTS BEARING EARLIER REVISION DATES

REVISION DATES 11-1-11 12-1-11 12-29-11

SHEET 35 OF 45

FILE => 53-3071k-w-swdet07.dgn

USERNAME => DATE PLOTTED => 14-APR-2012 TIME PLOTTED => 11:41

DIST	COUNTY	ROUTE	POST MILES TOTAL PROJECT	SHEET No.	TOTAL SHEETS
07	LA	5	4.0/5.9	1188	1597

Anthony T. Logus 12-12-11
REGISTERED CIVIL ENGINEER DATE

4-9-12
PLANS APPROVAL DATE

REGISTERED PROFESSIONAL ENGINEER
Anthony T. Logus
No. C68189
Exp. 09-30-13
CIVIL
STATE OF CALIFORNIA

The State of California or its officers or agents shall not be responsible for the accuracy or completeness of electronic copies of this plan sheet.

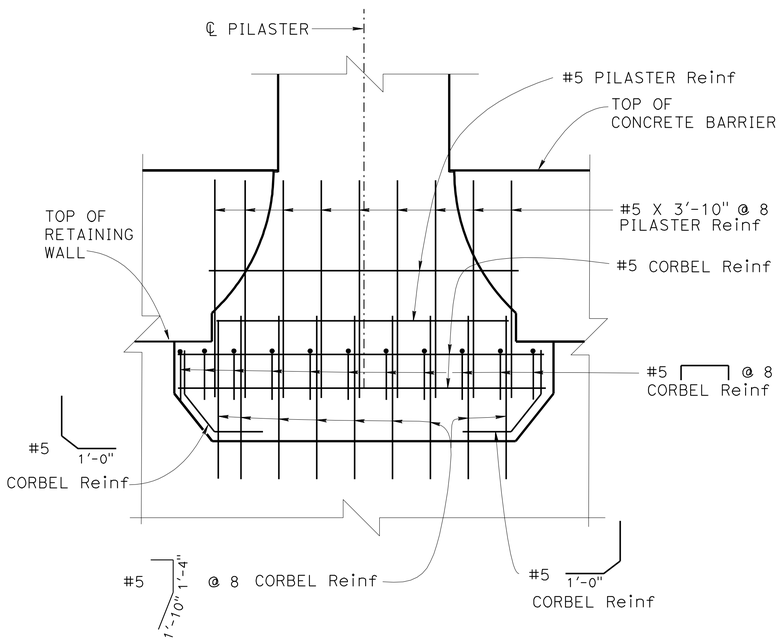

Note: Concrete Barrier/Retaining Wall reinf not shown.

DETAIL M
¾" = 1'-0"

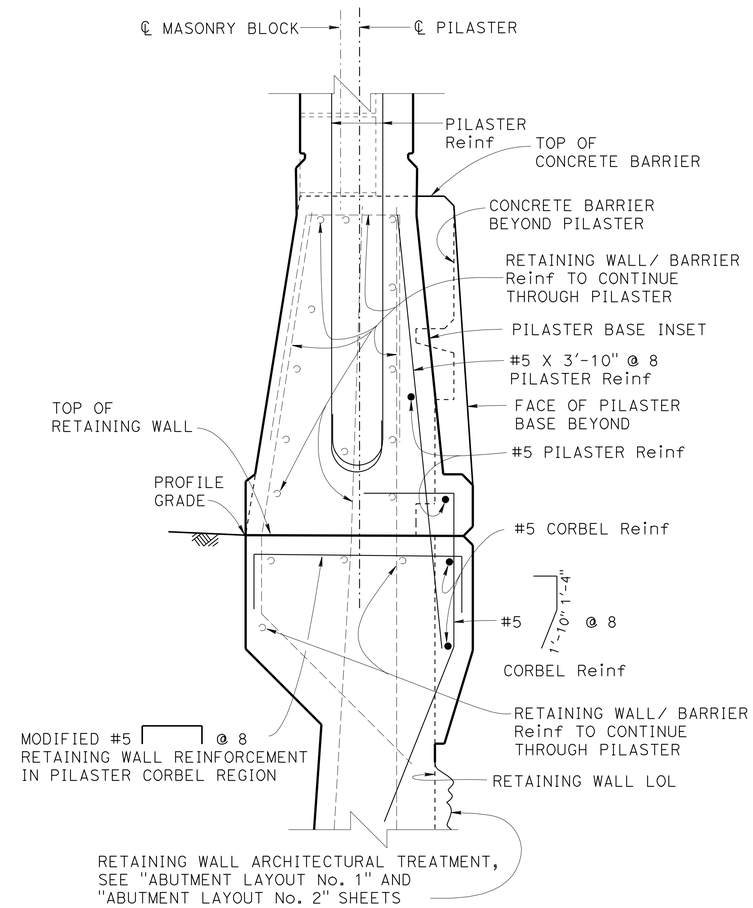

PILASTER CORBEL
ON RETAINING WALL

DETAIL N
1½" = 1'-0"

DESIGN	BY H. CHAVEZ	CHECKED I. TASABIA	
DETAILS	BY K. LI	CHECKED H. CHAVEZ	
QUANTITIES	BY S. YIP	CHECKED C. HENSEL	

STATE OF CALIFORNIA
DEPARTMENT OF TRANSPORTATION

DIVISION OF ENGINEERING SERVICES
STRUCTURE DESIGN
DESIGN BRANCH 15

BRIDGE NO. 53-3071K
POST MILE 5.12

IMPERIAL Hwy OFF-RAMP
SOUNDWALL ARCHITECTURAL DETAILS No. 8

STRUCTURES DESIGN DETAIL SHEET (ENGLISH) (REV. 09-01-10)

ORIGINAL SCALE IN INCHES FOR REDUCED PLANS 0 1 2 3

UNIT: 3604
PROJECT NUMBER & PHASE: 0700001834 1
CONTRACT NO.: 07-215941

DISREGARD PRINTS BEARING EARLIER REVISION DATES

REVISION DATES 11-17-11 12-7-11 12-29-11

SHEET 36 OF 45

FILE => 53-3071k-w-swdet08.dgn

USERNAME => s121614 DATE PLOTTED => 14-APR-2012 TIME PLOTTED => 11:41

DIST	COUNTY	ROUTE	POST MILES TOTAL PROJECT	SHEET No.	TOTAL SHEETS
07	LA	5	4.0/5.9	1189	1597

Anthony T. Logus 12-12-11
REGISTERED CIVIL ENGINEER DATE

4-9-12
PLANS APPROVAL DATE

REGISTERED PROFESSIONAL ENGINEER Anthony T. Logus No. C68189 Exp. 09-30-13 CIVIL STATE OF CALIFORNIA

The State of California or its officers or agents shall not be responsible for the accuracy or completeness of electronic copies of this plan sheet.

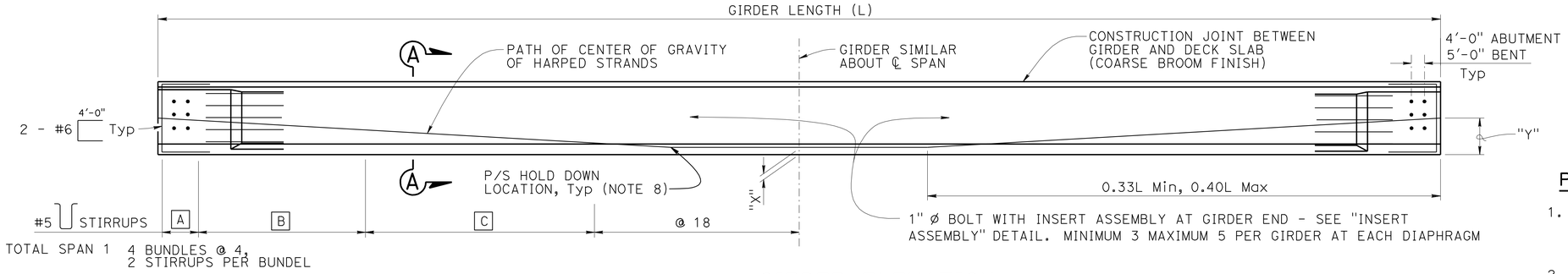

TOTAL SPAN 1 4 BUNDLES @ 4, 2 STIRRUPS PER BUNDEL

TOTAL SPAN 2 4 BUNDLES @ 4, 2 STIRRUPS PER BUNDEL

GIRDER ELEVATION

No Scale

LOCATION	A	B	C
GIRDER A-1	4 @ 4	20 @ 6	30 @ 9
GIRDER A-2	4 @ 4	20 @ 6	30 @ 9
GIRDER B	4 @ 4	20 @ 6	30 @ 9
GIRDER C	4 @ 4	20 @ 6	30 @ 9
GIRDER D	4 @ 4	20 @ 6	30 @ 9
GIRDER E-1	4 @ 4	20 @ 6	30 @ 9
GIRDER E-2	4 @ 4	20 @ 6	30 @ 9
GIRDER F	4 @ 4	20 @ 6	30 @ 9

Note:

Girder ends to be cast such that a level surface is provided at bearing pads

LOCATION	GIRDER LENGTH (L)	GIRDER DEPTH (D)	"X" (in)	JACKING FORCE (P) (kips)	As, Min (in^2)	"Y" (in)	CONCRETE STRENGTH (ksi)		MIDSPAN DEAD LOAD DEFLECTION (in)		
							f'ci	f'c	DECK	RAIL	SW/FWS
GIRDER A1	112.81	52.524	5.5	1675	8.27	16	5.5	8	1.87	0.26	0.52
GIRDER A2	112.81	52.524	5.5	1600	7.90	16	5.5	8	2.06	0.17	0.40
GIRDER B	112.81	52.524	5.5	1500	7.41	16	5.5	8	2.06	0.17	0.15
GIRDER C	113.84	52.524	5.5	1500	7.41	16	5.5	8	1.87	0.17	0.15
GIRDER D	95.25	52.524	5.5	1300	6.42	16	5.5	8	0.97	0.10	0.14
GIRDER E1	94.25	52.524	5.5	1250	6.17	16	5.5	8	0.97	0.07	0.11
GIRDER E2	94.25	52.524	5.5	1250	6.17	16	5.5	8	0.97	0.05	0.04
GIRDER F	95.50	52.524	5.5	1250	6.17	16	5.5	8	0.97	0.05	0.04

PRESTRESSING NOTES

1. The Jacking Force (P) is the jacking force required at the point of control along the span. The jacking force does not include any fabrication specific losses
2. The maximum tensile stress in the prestressing steel upon release shall not exceed 75% of thespecified minimum ultimate tensile strength of the prestressing steel
3. The maximum temporary tensile stress (jacking stress) in the prestressing steel shall not exceed 80% of the specified minimum ultimate tensile strength of the prestressing steel
4. Concrete strength:
   f'ci is at time of initial stressing
   f'c is at 28 days
5. Deflection components are informational and will be used to set screed line elevations
6. Screed line elevations for deck concrete will be determined by the Engineer
7. Contractor may interpolate "P" and "X" values between the limits shown, as approved by the Engineer
8. There shall be a minimum of two hold downs per girder for the prestressing
9. Prestressing strand shall be 270 ksi low relaxation
10. As, Min is the minimum area required of prestressing steel

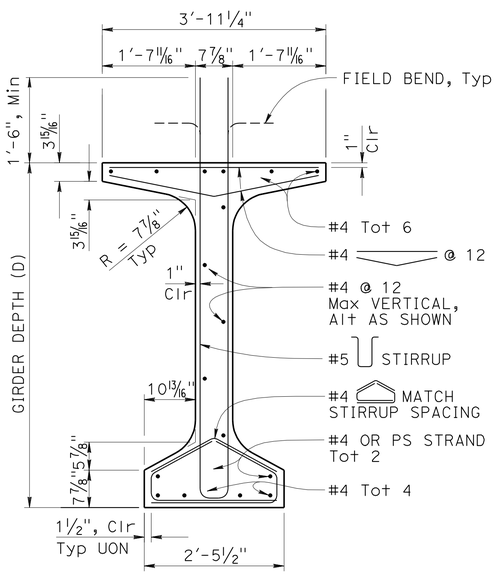

SECTION A-A

No Scale

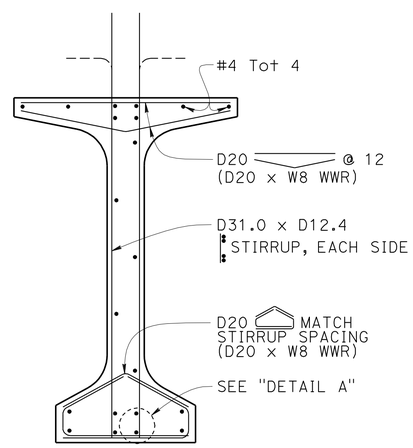

Note:

For details shown but not noted, see "SECTION A-A" detail

WELDED WIRE REINFORCEMENT (WWR) ALTERNATIVE

No Scale

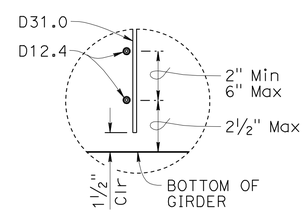

DETAIL A

No Scale

Notes:

1. W8 WWR not shown
2. Bottom of stirrup WWR detail shown, top similar
3. Longitudinal wire area shall be 40% or greater of vertical deformed wire's area

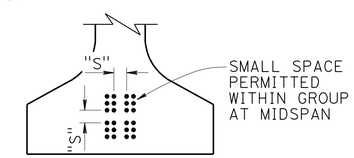

CLEARANCES FOR PRETENSIONED STRANDS

No Scale

Notes:

1. Strands may be bundled in groups consisting of 3 vertically, 2 horizontally, and separated at the ends
2. The minimum distance "S" between groups or individual strands is 1¾" for 0.5" Ø strand and 2" for 0.6" Ø strand
3. "S" is measured between centers of adjacent strands
4. Approval by Engineer is required for deviation

	BY	CHECKED
DESIGN	ANTHONY LOGUS	RUSLAN NOVIK
DETAILS	HERMAN MAUROSCHADT	RUSLAN NOVIK
QUANTITIES	SARA YIP	CLARENCE HENSEL

STATE OF CALIFORNIA
DEPARTMENT OF TRANSPORTATION

DIVISION OF ENGINEERING SERVICES
STRUCTURE DESIGN
DESIGN BRANCH 15

BRIDGE NO. 53-3071K
POST MILE 5.12

IMPERIAL Hwy OFF-RAMP
PC/PS BULB-TEE GIRDER (HARPED STRANDS)

STRUCTURES DESIGN DETAIL SHEET (ENGLISH) (REV. 09-01-10)

ORIGINAL SCALE IN INCHES FOR REDUCED PLANS 0 1 2 3

UNIT: 3604
PROJECT NUMBER & PHASE: 0700001834 1
CONTRACT NO.: 07-215941

DISREGARD PRINTS BEARING EARLIER REVISION DATES

REVISION DATES: 12-29-11 1-27-12

SHEET 37 OF 45

FILE => 53-3071k-xs-btgir01.dgn

USERNAME => s121614 DATE PLOTTED => 14-APR-2012 TIME PLOTTED => 11:41

DIST	COUNTY	ROUTE	POST MILES TOTAL PROJECT	SHEET No.	TOTAL SHEETS
07	LA	5	4.0/5.9	1190	1597

Anthony T. Logus 12-12-11
REGISTERED CIVIL ENGINEER DATE

4-9-12
PLANS APPROVAL DATE

REGISTERED PROFESSIONAL ENGINEER Anthony T. Logus No. C68189 Exp. 09-30-13 CIVIL STATE OF CALIFORNIA

The State of California or its officers or agents shall not be responsible for the accuracy or completeness of electronic copies of this plan sheet.

LOCATION	ABUTMENT 1	BENT 2	ABUTMENT 3
GIRDER A-1	9'-6"	11'-3"	
GIRDER A-2	9'-6"	11'-3"	
GIRDER B	9'-6"	11'-3"	
GIRDER C	10'-6"	11'-3"	
GIRDER D		11'-3"	10'-6"
GIRDER E-1		11'-3"	9'-6"
GIRDER E-2		11'-3"	9'-6"
GIRDER F		11'-3"	9'-6"

END BLOCK - TABLE

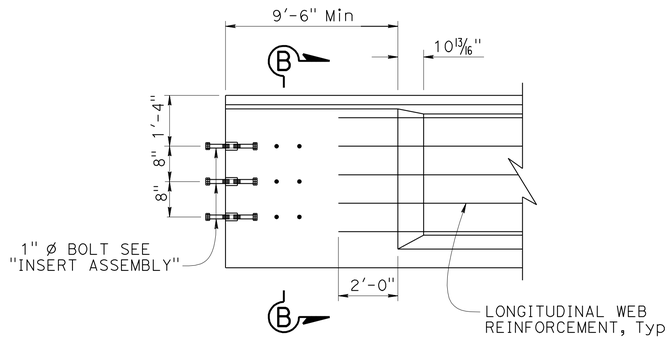

END BLOCK - ELEVATION

No Scale

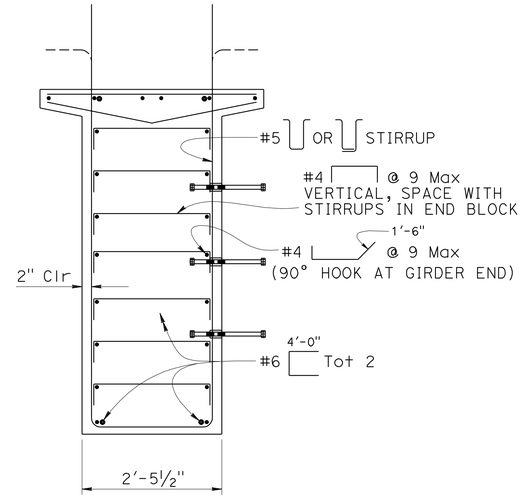

Note:

For details not shown, see "INTERIOR GIRDER" detail

EXTERIOR GIRDER

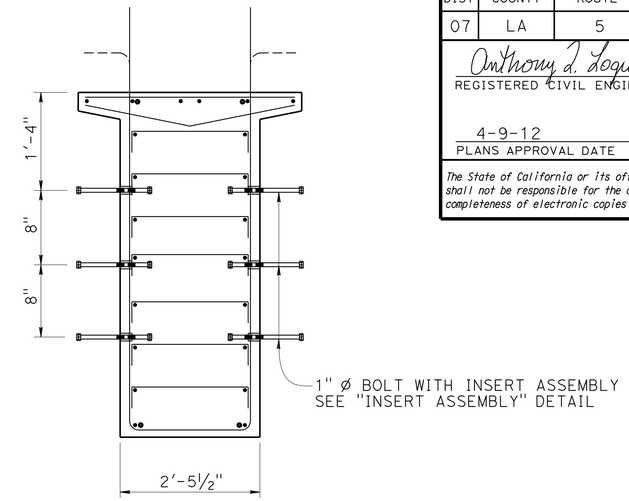

Note:

For details not shown, see "EXTERIOR GIRDER" detail

INTERIOR GIRDER

SECTION B-B

No Scale

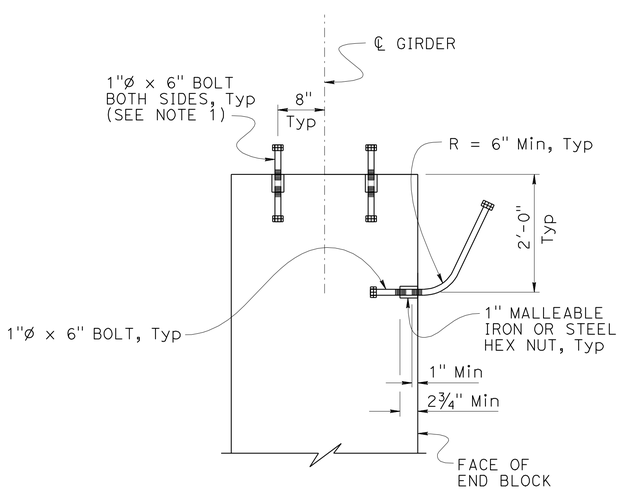

OBTUSE CORNER

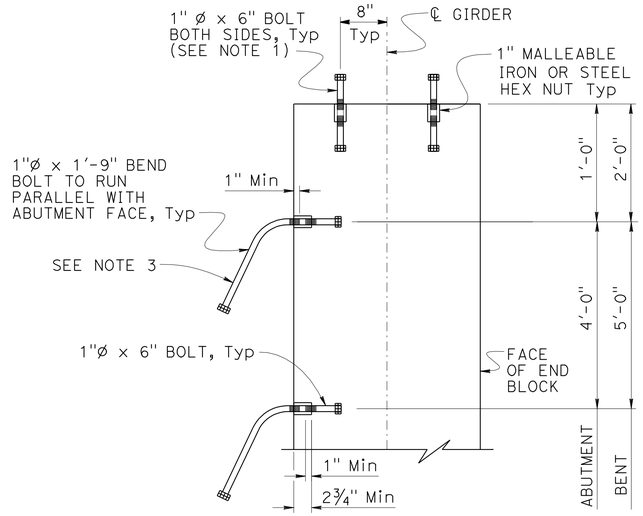

ACUTE CORNER

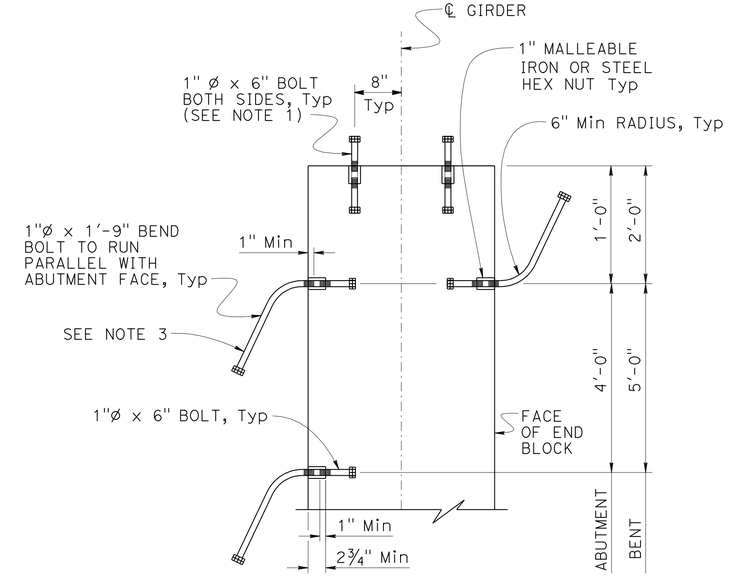

INSERT ASSEMBLY - INTERIOR GIRDER

INSERT ASSEMBLY

No Scale

Notes:

1. End Bolts at Abutment Ends only
2. For "GIRDER ELEVATION" see "PC/PS BULB-TEE GIRDER (HARPED STRANDS)" sheet
3. To avoid interference with Backwall place Bolt, Abutment side, before placing Girder.

	BY	CHECKED
DESIGN	ANTHONY LOGUS	RUSLAN NOVIK
DETAILS	HERMAN MAUROSCHADT	RUSLAN NOVIK
QUANTITIES	SARA YIP	CLARENCE HENSEL

STATE OF CALIFORNIA
DEPARTMENT OF TRANSPORTATION

DIVISION OF ENGINEERING SERVICES
STRUCTURE DESIGN
DESIGN BRANCH 15

BRIDGE NO. 53-3071K
POST MILE 5.12

IMPERIAL Hwy OFF-RAMP

PC/PS BULB-TEE GIRDER (MISCELLANEOUS DETAILS)

STRUCTURES DESIGN DETAIL SHEET (ENGLISH) (REV. 09-01-10)

ORIGINAL SCALE IN INCHES FOR REDUCED PLANS 0 1 2 3

UNIT: 3604
PROJECT NUMBER & PHASE: 0700001834 1
CONTRACT NO.: 07-215941

DISREGARD PRINTS BEARING EARLIER REVISION DATES

REVISION DATES: 12-29-11 1-27-12

SHEET 38 OF 45

FILE => 53-3071k-xs-btgir02.dgn

USERNAME => s121614 DATE PLOTTED => 14-APR-2012 TIME PLOTTED => 11:41

DIST	COUNTY	ROUTE	POST MILES TOTAL PROJECT	SHEET No.	TOTAL SHEETS
07	LA	5	4.0/5.9	1191	1597

Anthony T. Logus 12-12-11
REGISTERED CIVIL ENGINEER DATE

4-9-12
PLANS APPROVAL DATE

REGISTERED PROFESSIONAL ENGINEER Anthony T. Logus No. C68189 Exp. 09-30-13 CIVIL STATE OF CALIFORNIA

The State of California or its officers or agents shall not be responsible for the accuracy or completeness of electronic copies of this plan sheet.

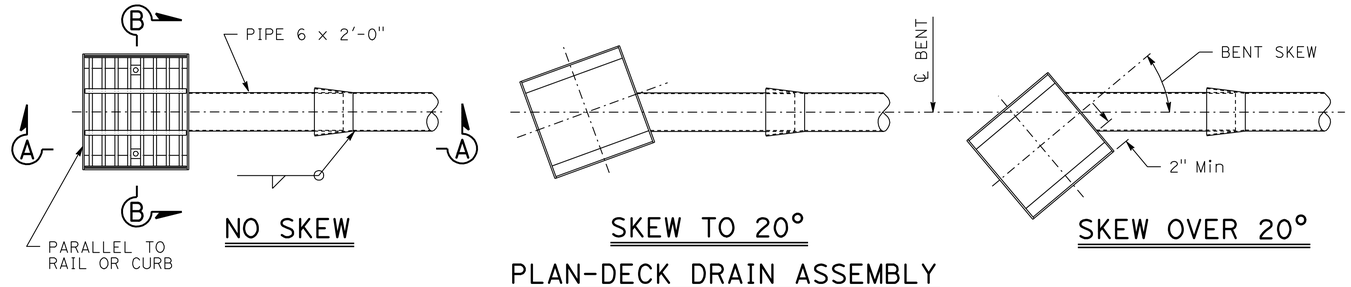

PLAN-DECK DRAIN ASSEMBLY

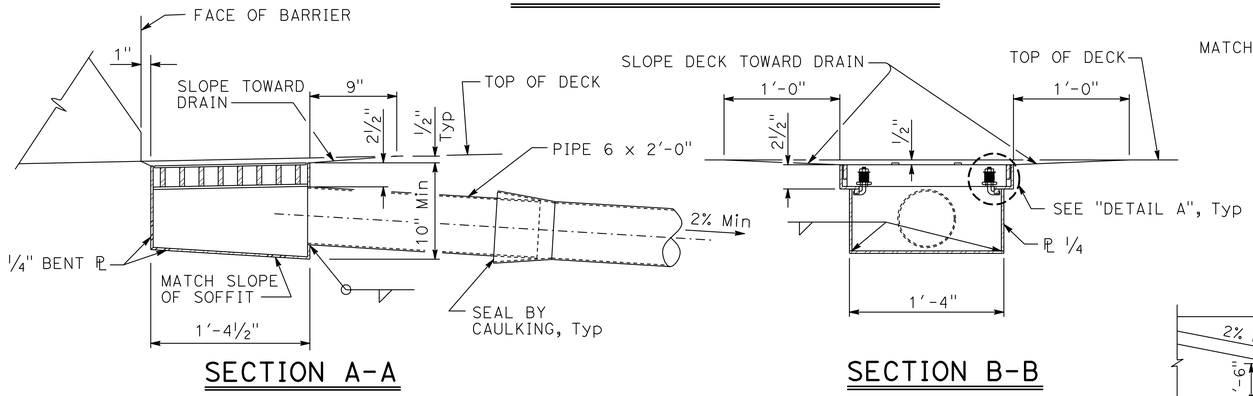

DECK DRAIN ASSEMBLY DETAIL

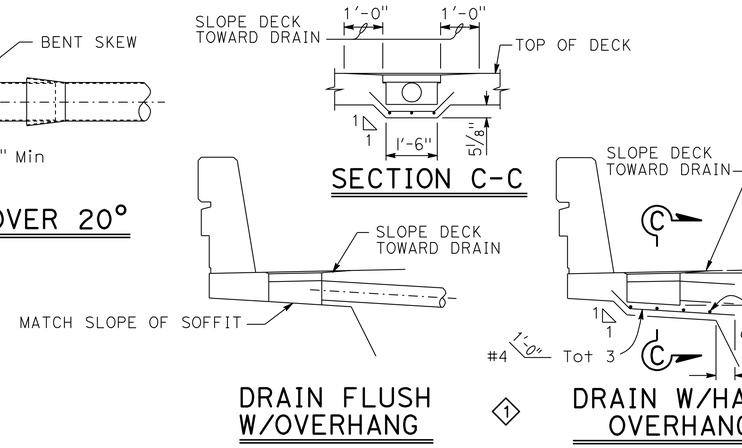

ELEVATION-DECK DRAIN LOCATIONS

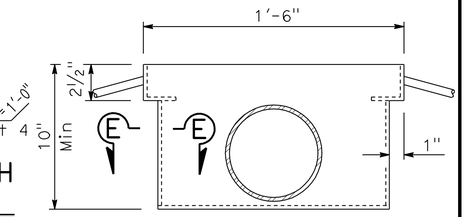

VIEW D-D

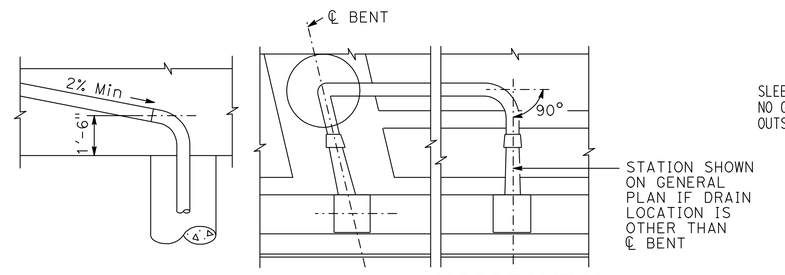

DRAIN PIPE ALIGNMENT

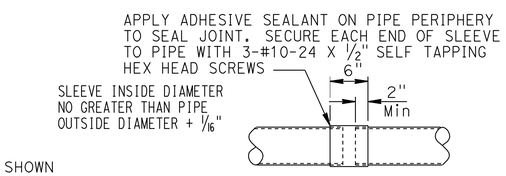

SLEEVE CONNECTION

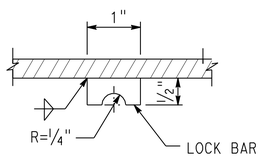

LOCK BAR

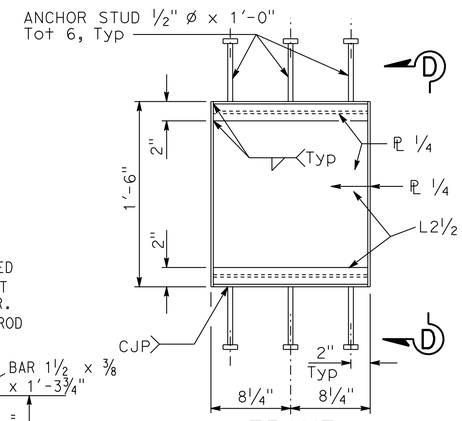

FRAME

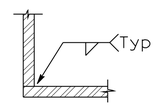

SECTION E-E

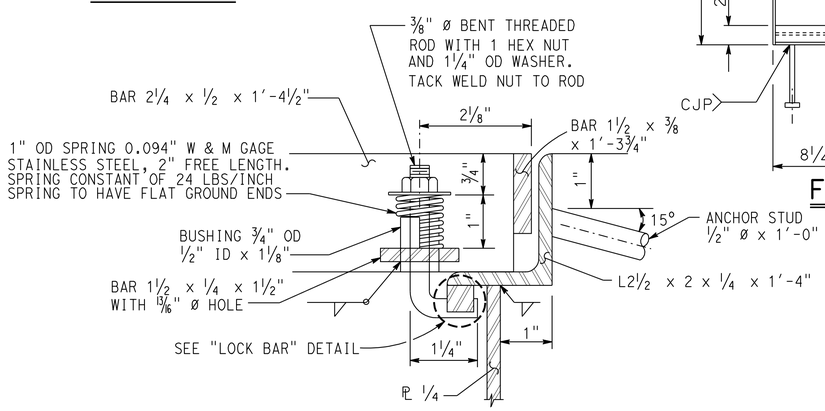

DETAIL A

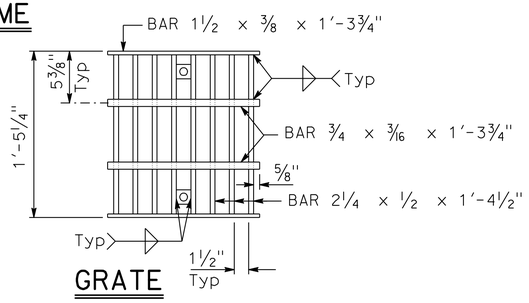

GRATE

ATTACH TO INSIDE FACE OF BENT WALL WITH 1/8" x 1 1/2" STRAPS WITH 2-1/2" CONCRETE ANCHORAGE DEVICES @ 10'-0" MAXIMUM CENTERS

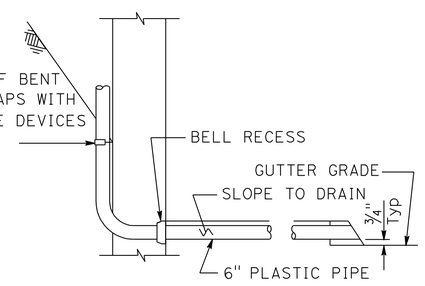

AT WALL TYPE BENT

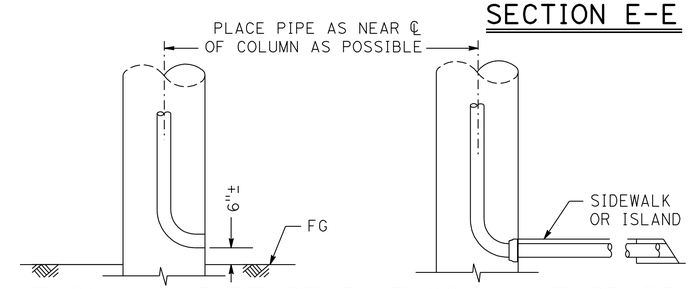

AT COLUMN TYPE BENT ABOVE GROUND

AT COLUMN TYPE BENT UNDER CURB

DRAIN OUTLET

NOTE:

All pipe to be NPS 6 x 0.135" welded steel pipe except as noted and galvanized if not encased in concrete. Fittings and bends shall have a minimum wall thickness of 1/8". All joints or connections to be butt welded or connected by a steel pipe sleeve and to be smooth throughout inside of pipe except as noted. All bends to be on 1'-6" minimum radius measured along ℄ pipe. All bends to be supported by suitable galvanized hangers @ 10'-0" maximum spacing throughout. Galvanize deck drain assembly after fabrication

NO SCALE

SPECIAL DETAILS

REVISED STANDARD DRAWING

FILE NO. xs10-020

APPROVAL DATE July 2011

1 MODIFIED DETAIL

STATE OF CALIFORNIA DEPARTMENT OF TRANSPORTATION

DIVISION OF ENGINEERING SERVICES

BRIDGE NO. 53-3071K

POST MILE 5.12

IMPERIAL Hwy OFF-RAMP

DECK DRAIN - TYPE D-2 MODIFIED

DS OSD 2147A (ENGLISH STANDARD DRAWING "XS" BORDER REV. (02-02-11)

ORIGINAL SCALE IN INCHES FOR REDUCED PLANS 0 1 2 3

UNIT: 3604
PROJECT NUMBER & PHASE: 0700001834 1
CONTRACT NO.: 07-215941

DISREGARD PRINTS BEARING EARLIER REVISION DATES

REVISION DATES 11-22-11 12-8-11 12-29-11

SHEET 39 OF 45

FILE => 53-3071k-xt-10-020.dgn

USERNAME => s12614 DATE PLOTTED => 14-APR-2012 TIME PLOTTED => 11:41

DIST	COUNTY	ROUTE	POST MILES TOTAL PROJECT	SHEET No.	TOTAL SHEETS
07	LA	5	4.0/5.9	1192	1597

Anthony T. Logus 12-12-11
REGISTERED CIVIL ENGINEER DATE

4-9-12
PLANS APPROVAL DATE

REGISTERED PROFESSIONAL ENGINEER Anthony T. Logus No. C68189 Exp. 09-30-13 CIVIL STATE OF CALIFORNIA

The State of California or its officers or agents shall not be responsible for the accuracy or completeness of electronic copies of this plan sheet.

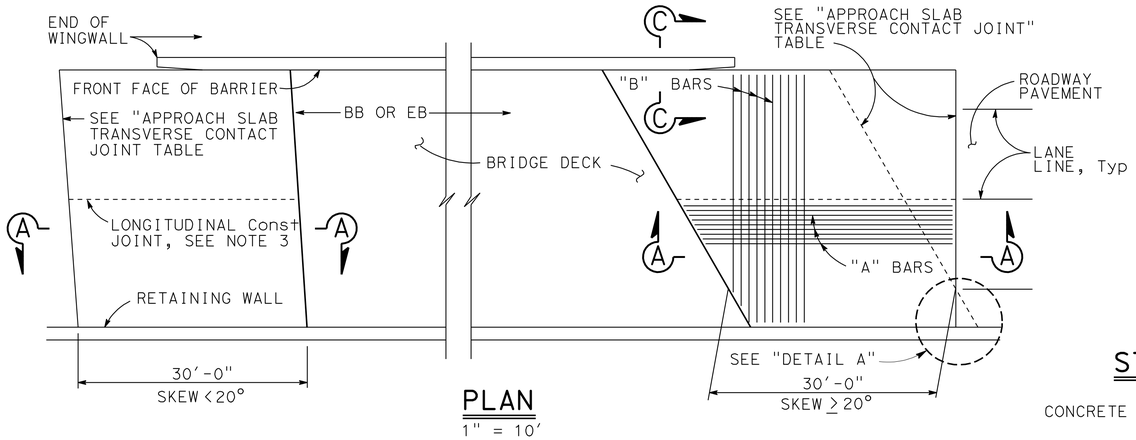

PLAN
1" = 10'

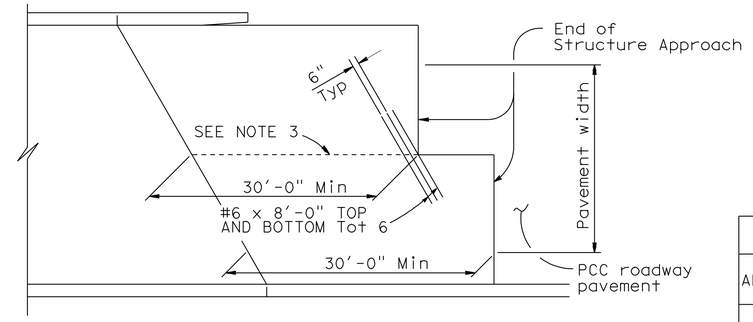

STRUCTURE APPROACH - END STAGGER DETAIL
No Scale

APPROACH SLAB TRANSVERSE CONTACT JOINT		
APPROACH SKEW	WITH AC ROADWAY PAVEMENT	WITH PCC ROADWAY PAVEMENT
< 20°	PARALLEL TO FACE OF PN	PARALLEL TO FACE OF PN
20° - 45°	PARALLEL TO FACE OF PN USE "DETAIL A"	STAGGER LINES 24' TO 36' APART
> 45°	PARALLEL TO FACE OF PN USE "DETAIL A"	STAGGER AT EACH LANE LINE

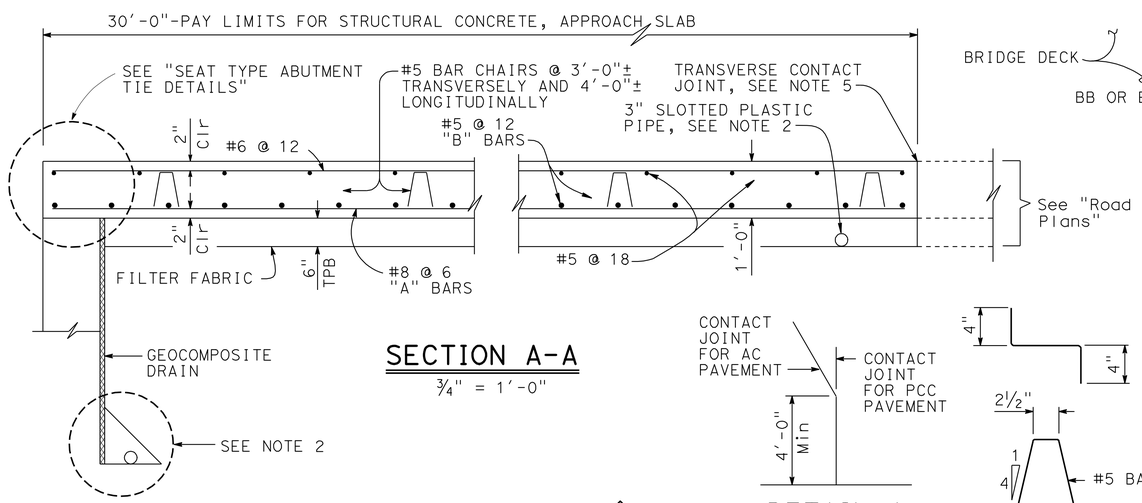

SECTION A-A
¾" = 1'-0"

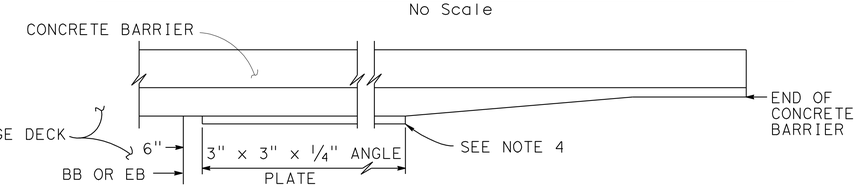

EDGE ANGLE DETAIL
½" = 1'-0"

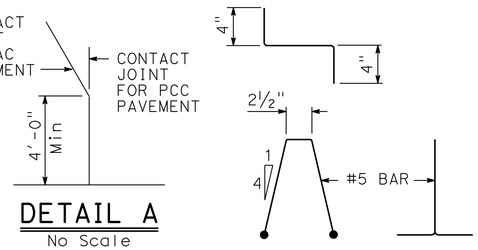

DETAIL A
No Scale

BAR CHAIR DETAIL
1½"=1'-0"

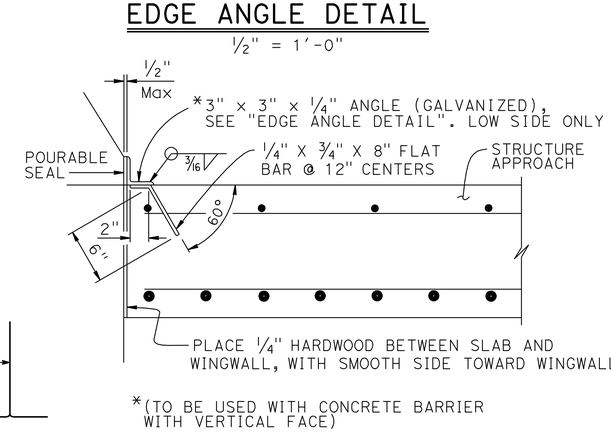

*(TO BE USED WITH CONCRETE BARRIER WITH VERTICAL FACE)

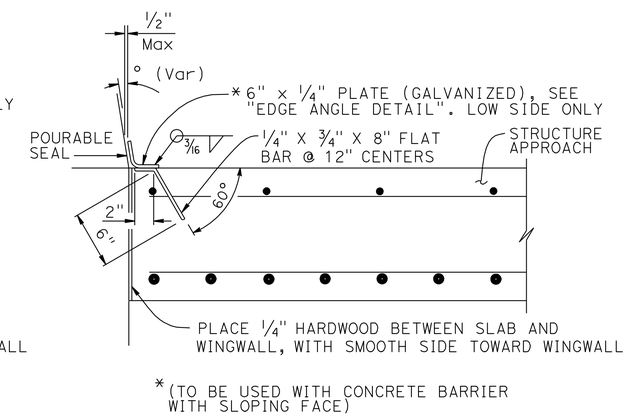

*(TO BE USED WITH CONCRETE BARRIER WITH SLOPING FACE)

DETAIL B
1½" = 1'-0"

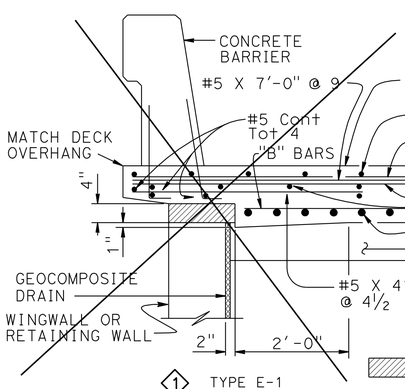

1 TYPE E-1

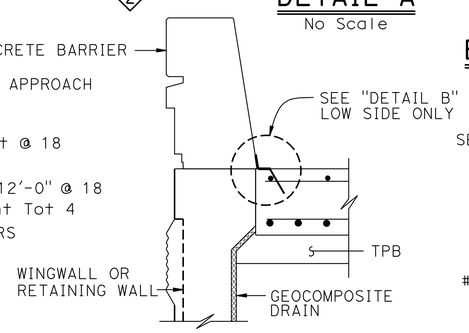

TYPE E-2

Remove all polystyrene

SECTION C-C
¾" = 1'-0"

(Type E-1 to be used, unless otherwise shown on plans)

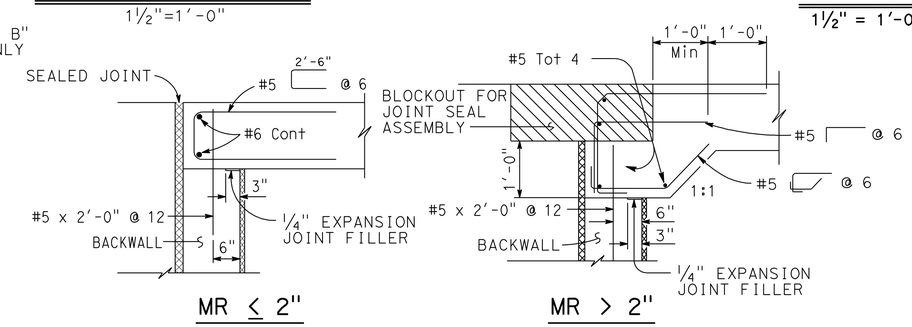

MR ≤ 2" MR > 2"

SEAT TYPE ABUTMENT TIE DETAILS (SEE NOTE 1)
¾" = 1'-0"

NOTES:
1. For details not shown, see Structure Plans. For MR ≤ 2", adjust bar reinforcement to clear a sawcut for sealed joint, when required
2. For drainage details, see "STRUCTURE APPROACH DRAINAGE DETAILS" sheet
3. Longitudinal construction joints, when permitted by the Engineer, shall be located on lane lines
4. End angle or plate at beginning of barrier transition, end of wingwall or end of structure approach as applicable
5. For transverse contact joint with new PCC paving, refer to Standard Plan RSP P10 3
6. At the Contractor's option, approach slab transverse reinforcement may be placed parallel to paving notch. Spacing of transverse reinforcement is measured along ℄ roadway

SPECIAL DETAILS

REVISED STANDARD DRAWING

FILE NO. xs3-120

APPROVAL DATE July 2011

1 REMOVED DETAIL
2 MODIFIED DETAIL
3 REVISED NOTES

STATE OF CALIFORNIA
DEPARTMENT OF TRANSPORTATION

DIVISION OF ENGINEERING SERVICES

BRIDGE NO. 53-3071K
POST MILE 5.12

IMPERIAL Hwy OFF-RAMP
STRUCTURE APPROACH TYPE N(30S)

DS OSD 2147A (ENGLISH STANDARD DRAWING "XS" BORDER REV. (02-02-11)

ORIGINAL SCALE IN INCHES FOR REDUCED PLANS 0 1 2 3

UNIT: 3604
PROJECT NUMBER & PHASE: 0700001834 1
CONTRACT NO.: 07-215941

DISREGARD PRINTS BEARING EARLIER REVISION DATES

REVISION DATES 7-26-11 12-6-11 12-29-11 2-21-12

SHEET 40 OF 45

FILE => 53-3071k-xu-120.dgn

USERNAME => s121614 DATE PLOTTED => 14-APR-2012 TIME PLOTTED => 11:42

DIST	COUNTY	ROUTE	POST MILES TOTAL PROJECT	SHEET No.	TOTAL SHEETS
07	LA	5	4.0/5.9	1193	1597

Anthony T. Logus 12-12-11
REGISTERED CIVIL ENGINEER DATE

4-9-12
PLANS APPROVAL DATE

REGISTERED PROFESSIONAL ENGINEER Anthony T. Logus No. C68189 Exp. 09-30-13 CIVIL STATE OF CALIFORNIA

The State of California or its officers or agents shall not be responsible for the accuracy or completeness of electronic copies of this plan sheet.

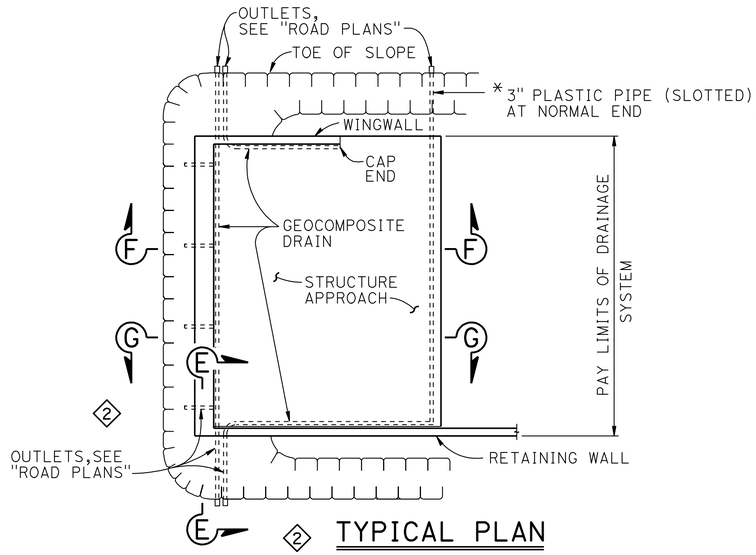

TYPICAL PLAN
1" = 10'

* FOR PIPE LAYOUT AT STAGGERED END, SEE "DETAIL B"

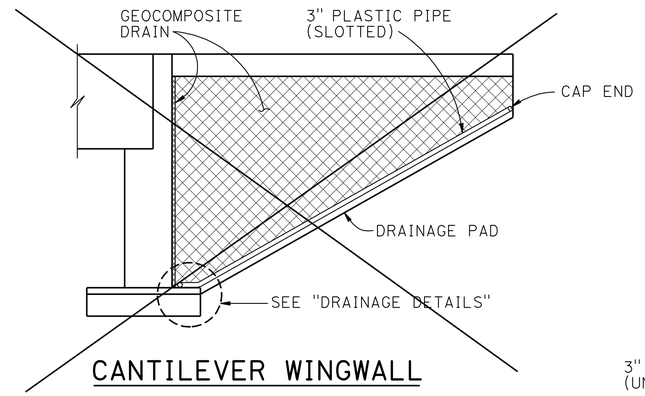

CANTILEVER WINGWALL

SECTION F-F
1/4" = 1'-0"

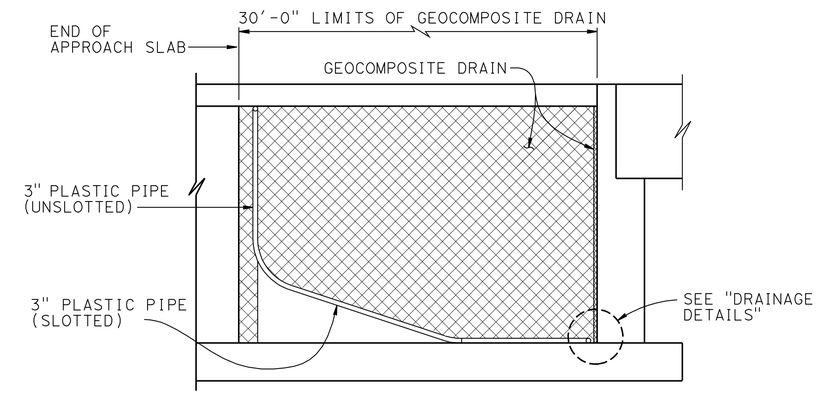

RETAINING WALL WINGWALL DRAINAGE DETAILS

SECTION G-G
1/4" = 1'-0"

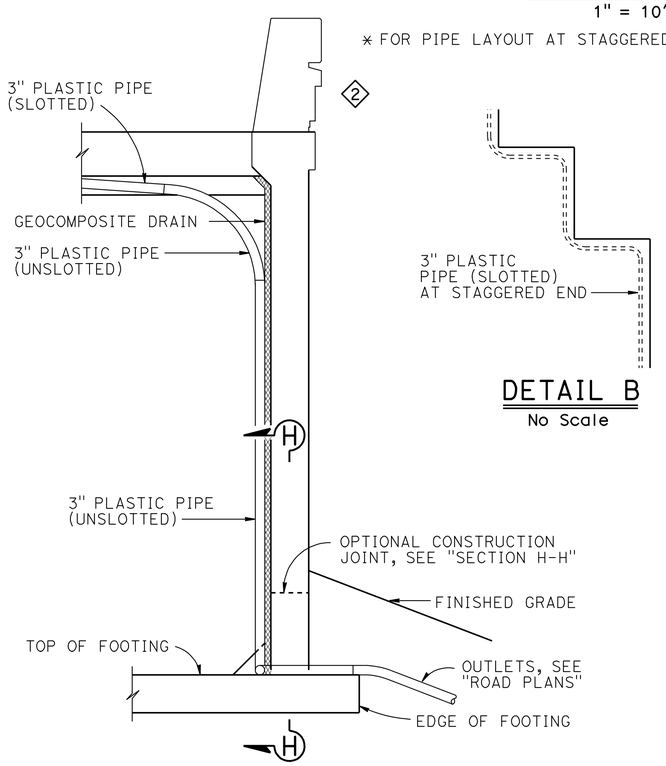

SECTION E-E
1/2" = 1'-0"

DETAIL B
No Scale

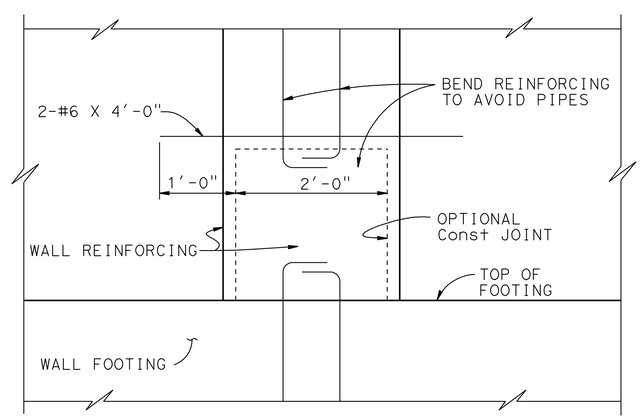

SECTION H-H
1" = 1'-0"

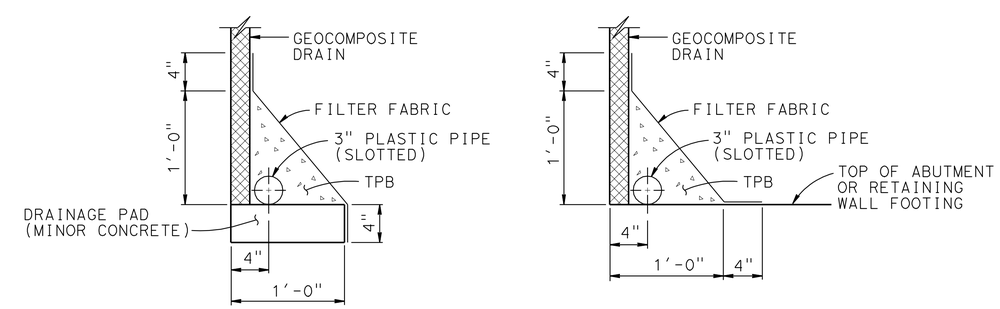

WITHOUT FOOTING

WITH FOOTING

DRAINAGE DETAILS
1 1/2" = 1'-0"

SPECIAL DETAILS

REVISED STANDARD DRAWING

FILE NO. xs3-110

APPROVAL DATE July 2011

1 REMOVED DETAIL
2 MODIFIED DETAIL

STATE OF CALIFORNIA DEPARTMENT OF TRANSPORTATION

DIVISION OF ENGINEERING SERVICES

BRIDGE NO. 53-3071K
POST MILE 5.12

IMPERIAL Hwy OFF-RAMP
STRUCTURE APPROACH DRAINAGE DETAILS

DS OSD 2147A (ENGLISH STANDARD DRAWING "XS" BORDER REV. (02-02-11)

ORIGINAL SCALE IN INCHES FOR REDUCED PLANS 0 1 2 3

UNIT: 3604
PROJECT NUMBER & PHASE: 0700001834 1
CONTRACT NO.: 07-215941

DISREGARD PRINTS BEARING EARLIER REVISION DATES

REVISION DATES 8-1-11 12-6-11 12-29-11

SHEET 41 OF 45

FILE => 53-3071k-xu3-x-110.dgn

USERNAME => s12614 DATE PLOTTED => 14-APR-2012 TIME PLOTTED => 11:42

DIST	COUNTY	ROUTE	POST MILES TOTAL PROJECT	SHEET No.	TOTAL SHEETS
07	LA	5	4.0/5.9	1194	1597

REGISTERED CIVIL ENGINEER 12-12-11 DATE

4-9-12
PLANS APPROVAL DATE

REGISTERED PROFESSIONAL ENGINEER Amare Tsegie No. C67529 Exp. 6-30-13 CIVIL STATE OF CALIFORNIA

The State of California or its officers or agents shall not be responsible for the accuracy or completeness of electronic copies of this plan sheet.

This LOTB sheet was prepared in accordance with the Caltrans Soil & Rock Logging, Classification, & Presentation Manual (2010 Edition).

PLAN
SCALE 1"=100'

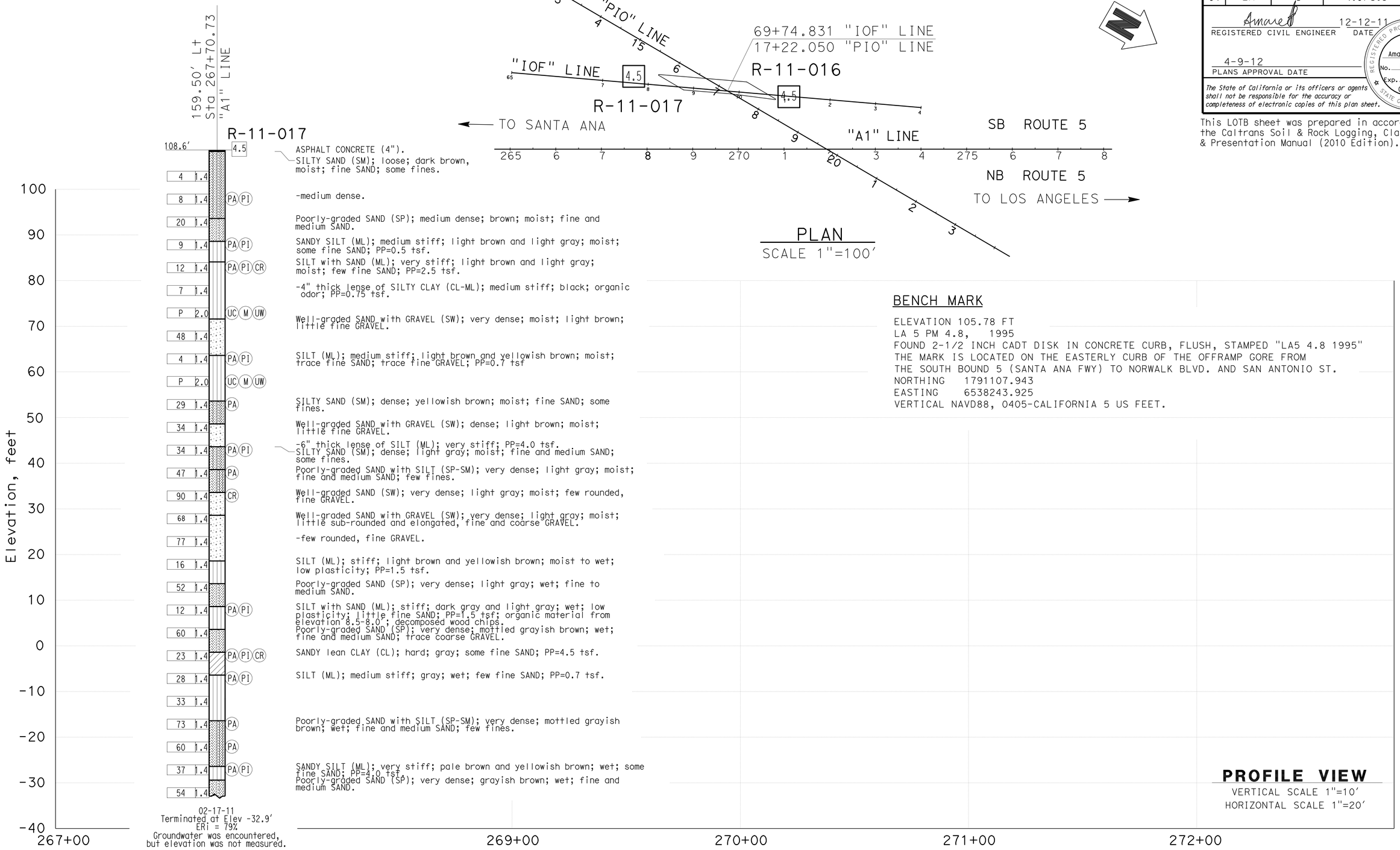

BENCH MARK

ELEVATION 105.78 FT
LA 5 PM 4.8, 1995
FOUND 2-1/2 INCH CADT DISK IN CONCRETE CURB, FLUSH, STAMPED "LA5 4.8 1995"
THE MARK IS LOCATED ON THE EASTERLY CURB OF THE OFFRAMP GORE FROM
THE SOUTH BOUND 5 (SANTA ANA FWY) TO NORWALK BLVD. AND SAN ANTONIO ST.
NORTHING 1791107.943
EASTING 6538243.925
VERTICAL NAVD88, 0405-CALIFORNIA 5 US FEET.

PROFILE VIEW
VERTICAL SCALE 1"=10'
HORIZONTAL SCALE 1"=20'

ENGINEERING SERVICES	MATERIALS AND GEOTECHNICAL SERVICES	STATE OF CALIFORNIA DEPARTMENT OF TRANSPORTATION	DIVISION OF ENGINEERING SERVICES STRUCTURE DESIGN DESIGN BRANCH 15	BRIDGE NO. 53-3071K POST MILE 5.12	IMPERIAL Hwy OFF-RAMP
FUNCTIONAL SUPERVISOR NAME: CHI-TSENG LIU	DRAWN BY: P.QUACH / T.Panah (URS CORP) CHECKED BY: F.GERAMI	FIELD INVESTIGATION BY: A.TSEGIE/M.ISLAM			LOG OF TEST BORINGS SHEET 1 OF 4

OGS CIVIL LOG OF TEST BORINGS SHEET

ORIGINAL SCALE IN INCHES FOR REDUCED PLANS 0 1 2 3

UNIT: 3604
PROJECT NUMBER & PHASE: 0700001834 1 CONTRACT NO.: 07-215941

DISREGARD PRINTS BEARING EARLIER REVISION DATES → REVISION DATES 12-8-11 12-29-11

SHEET 42 OF 45

FILE => 53-3071k-z-lotb01.dgn

USERNAME => s12161d DATE PLOTTED => 14-APR-2012 TIME PLOTTED => 11:42

DIST	COUNTY	ROUTE	POST MILES TOTAL PROJECT	SHEET No.	TOTAL SHEETS
07	LA	5	4.0/5.9	1195	1597

REGISTERED CIVIL ENGINEER — DATE 12-12-11

4-9-12
PLANS APPROVAL DATE

REGISTERED PROFESSIONAL ENGINEER — Amare Tsegie — No. C67529 — Exp. 6-30-13 — CIVIL — STATE OF CALIFORNIA

The State of California or its officers or agents shall not be responsible for the accuracy or completeness of electronic copies of this plan sheet.

This LOTB sheet was prepared in accordance with the Caltrans Soil & Rock Logging, Classification, & Presentation Manual (2010 Edition).

FOR PLAN VIEW, SEE
"LOG OF TEST BORINGS" 1 OF 4

ENGINEERING SERVICES	MATERIALS AND GEOTECHNICAL SERVICES	STATE OF CALIFORNIA DEPARTMENT OF TRANSPORTATION	DIVISION OF ENGINEERING SERVICES STRUCTURE DESIGN DESIGN BRANCH 15	BRIDGE NO. 53-3071K POST MILE 5.12	IMPERIAL Hwy OFF-RAMP LOG OF TEST BORINGS SHEET 2 OF 4
FUNCTIONAL SUPERVISOR NAME: CHI-TSENG LIU	DRAWN BY: P.QUACH / T.Panah (URS CORP) CHECKED BY: F.GERAMI	FIELD INVESTIGATION BY: A.TSEGIE/M.ISLAM			

OGS CIVIL LOG OF TEST BORINGS SHEET

ORIGINAL SCALE IN INCHES FOR REDUCED PLANS 0 1 2 3

UNIT: 3604
PROJECT NUMBER & PHASE: 0700001834 1 CONTRACT NO.: 07-215941

DISREGARD PRINTS BEARING EARLIER REVISION DATES

REVISION DATES: 12-6-11 12-29-11

SHEET 43 OF 45

FILE => 53-3071k-z-lotb02.dgn

USERNAME => s121614 DATE PLOTTED => 14-APR-2012 TIME PLOTTED => 11:42

REFERENCE: CALTRANS SOIL & ROCK LOGGING, CLASSIFICATION, AND PRESENTATION MANUAL (2010)

DIST	COUNTY	ROUTE	POST MILES TOTAL PROJECT	SHEET No.	TOTAL SHEETS
07	LA	5	4.0/5.9	1196	1597

REGISTERED CIVIL ENGINEER 12-12-11 DATE

4-9-12
PLANS APPROVAL DATE

REGISTERED PROFESSIONAL ENGINEER
Amare Tsegie
No. C67529
Exp. 6-30-13
CIVIL
STATE OF CALIFORNIA

The State of California or its officers or agents shall not be responsible for the accuracy or completeness of electronic copies of this plan sheet.

This LOTB sheet was prepared in accordance with the Caltrans Soil & Rock Logging, Classification, & Presentation Manual (2010 Edition).

CEMENTATION

Description	Criteria
Weak	Crumbles or breaks with handling or little finger pressure.
Moderate	Crumbles or breaks with considerable finger pressure.
Strong	Will not crumble or break with finger pressure.

BOREHOLE IDENTIFICATION

Symbol	Hole Type	Description
Size	A	Auger Boring (hollow or solid stem bucket)
Size	R RW RC P	Rotary drilled boring (conventional) Rotary drilled with self-casing wire-line Rotary core with continuously-sampled, self-casing wire-line Rotary percussion boring (air)
Size	R	Rotary drilled diamond core
Size	HD HA	Hand driven (1-inch soil tube) Hand Auger
●	D	Dynamic Cone Penetration Boring
▲	CPT	Cone Penetration Test (ASTM D 5778)
⬚	O	Other (note on LOTB)

Note: Size in inches.

CONSISTENCY OF COHESIVE SOILS

Description	Shear Strength (tsf)	Pocket Penetrometer Measurement, PP, (tsf)	Torvane Measurement, TV, (tsf)	Vane Shear Measurement, VS, (tsf)
Very Soft	Less than 0.12	Less than 0.25	Less than 0.12	Less than 0.12
Soft	0.12 - 0.25	0.25 - 0.5	0.12 - 0.25	0.12 - 0.25
Medium Stiff	0.25 - 0.5	0.5 - 1	0.25 - 0.5	0.25 - 0.5
Stiff	0.5 - 1	1 - 2	0.5 - 1	0.5 - 1
Very Stiff	1 - 2	2 - 4	1 - 2	1 - 2
Hard	Greater than 2	Greater than 4	Greater than 2	Greater than 2

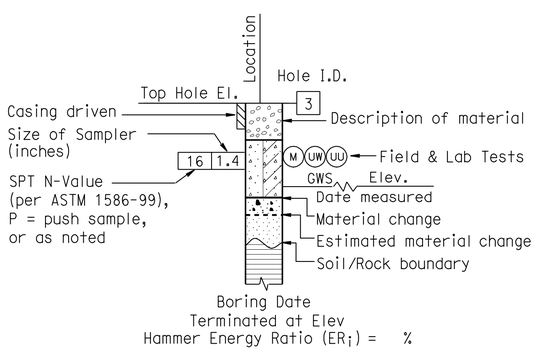

ROTARY BORING

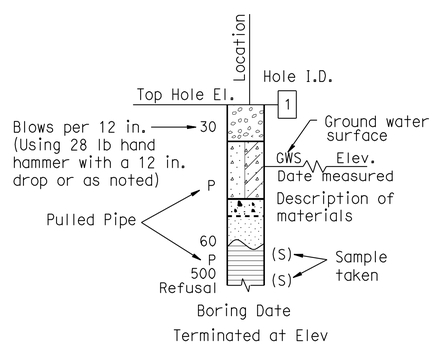

HAND BORING

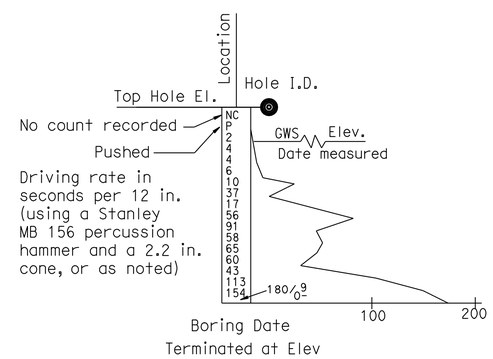

DYNAMIC CONE PENETRATION BORING

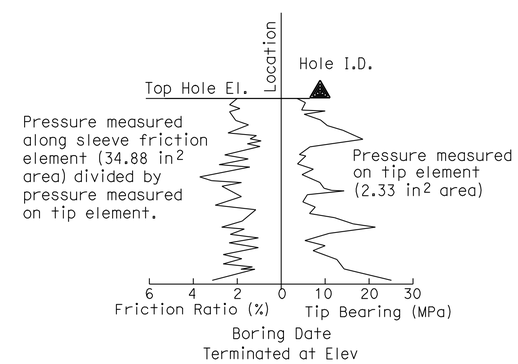

CONE PENETRATION TEST (CPT) BORING

ENGINEERING SERVICES	MATERIALS AND GEOTECHNICAL SERVICES	STATE OF CALIFORNIA DEPARTMENT OF TRANSPORTATION	DIVISION OF ENGINEERING SERVICES STRUCTURE DESIGN DESIGN BRANCH 15	BRIDGE NO. 53-3071K POST MILE 5.12	IMPERIAL Hwy OFF-RAMP
FUNCTIONAL SUPERVISOR	DRAWN BY: P.QUACH / T.Panah (URS CORP)	FIELD INVESTIGATION BY:			LOG OF TEST BORINGS SHEET 3 OF 4
NAME: CHI-TSENG LIU	CHECKED BY: F.GERAMI	A.TSEGIE/M.ISLAM			

OGS CIVIL LOG OF TEST BORINGS SHEET

ORIGINAL SCALE IN INCHES FOR REDUCED PLANS 0 1 2 3

UNIT: 3604
PROJECT NUMBER & PHASE: 0700001834 1 CONTRACT NO.: 07-215941

DISREGARD PRINTS BEARING EARLIER REVISION DATES → 12-8-11 12-29-11

SHEET 44 OF 45

FILE => 53-3071k-z-lotb03.dgn

USERNAME => s121614 DATE PLOTTED => 14-APR-2012 TIME PLOTTED => 11:42

REFERENCE: CALTRANS SOIL & ROCK LOGGING, CLASSIFICATION, AND PRESENTATION MANUAL (2010)

DIST	COUNTY	ROUTE	POST MILES TOTAL PROJECT	SHEET No.	TOTAL SHEETS
07	LA	5	4.0/5.9	1197	1597

REGISTERED CIVIL ENGINEER — DATE 12-12-11

4-9-12
PLANS APPROVAL DATE

REGISTERED PROFESSIONAL ENGINEER — Amare Tsegie — No. C67529 — Exp. 6-30-13 — CIVIL — STATE OF CALIFORNIA

The State of California or its officers or agents shall not be responsible for the accuracy or completeness of electronic copies of this plan sheet.

This LOTB sheet was prepared in accordance with the Caltrans Soil & Rock Logging, Classification, & Presentation Manual (2010 Edition).

GROUP SYMBOLS AND NAMES

Graphic/Symbol	Group Names	Graphic/Symbol	Group Names
GW	Well-graded GRAVEL Well-graded GRAVEL with SAND	CL	Lean CLAY Lean CLAY with SAND Lean CLAY with GRAVEL SANDY lean CLAY SANDY lean CLAY with GRAVEL GRAVELLY lean CLAY GRAVELLY lean CLAY with SAND
GP	Poorly-graded GRAVEL Poorly-graded GRAVEL with SAND		
GW-GM	Well-graded GRAVEL with SILT Well-graded GRAVEL with SILT and SAND	CL-ML	SILTY CLAY SILTY CLAY with SAND SILTY CLAY with GRAVEL SANDY SILTY CLAY SANDY SILTY CLAY with GRAVEL GRAVELLY SILTY CLAY GRAVELLY SILTY CLAY with SAND
GW-GC	Well-graded GRAVEL with CLAY (or SILTY CLAY) Well-graded GRAVEL with CLAY and SAND (or SILTY CLAY and SAND)		
GP-GM	Poorly-graded GRAVEL with SILT Poorly-graded GRAVEL with SILT and SAND	ML	SILT SILT with SAND SILT with GRAVEL SANDY SILT SANDY SILT with GRAVEL GRAVELLY SILT GRAVELLY SILT with SAND
GP-GC	Poorly-graded GRAVEL with CLAY (or SILTY CLAY) Poorly-graded GRAVEL with CLAY and SAND (or SILTY CLAY and SAND)		
GM	SILTY GRAVEL SILTY GRAVEL with SAND	OL	ORGANIC lean CLAY ORGANIC lean CLAY with SAND ORGANIC lean CLAY with GRAVEL SANDY ORGANIC lean CLAY SANDY ORGANIC lean CLAY with GRAVEL GRAVELLY ORGANIC lean CLAY GRAVELLY ORGANIC lean CLAY with SAND
GC	CLAYEY GRAVEL CLAYEY GRAVEL with SAND		
GC-GM	SILTY, CLAYEY GRAVEL SILTY, CLAYEY GRAVEL with SAND	OL	ORGANIC SILT ORGANIC SILT with SAND ORGANIC SILT with GRAVEL SANDY ORGANIC SILT SANDY ORGANIC SILT with GRAVEL GRAVELLY ORGANIC SILT GRAVELLY ORGANIC SILT with SAND
SW	Well-graded SAND Well-graded SAND with GRAVEL		
SP	Poorly-graded SAND Poorly-graded SAND with GRAVEL	CH	Fat CLAY Fat CLAY with SAND Fat CLAY with GRAVEL SANDY fat CLAY SANDY fat CLAY with GRAVEL GRAVELLY fat CLAY GRAVELLY fat CLAY with SAND
SW-SM	Well-graded SAND with SILT Well-graded SAND with SILT and GRAVEL		
SW-SC	Well-graded SAND with CLAY (or SILTY CLAY) Well-graded SAND with CLAY and GRAVEL (or SILTY CLAY and GRAVEL)	MH	Elastic SILT Elastic SILT with SAND Elastic SILT with GRAVEL SANDY elastic SILT SANDY elastic SILT with GRAVEL GRAVELLY elastic SILT GRAVELLY elastic SILT with SAND
SP-SM	Poorly-graded SAND with SILT Poorly-graded SAND with SILT and GRAVEL		
SP-SC	Poorly-graded SAND with CLAY (or SILTY CLAY) Poorly-graded SAND with CLAY and GRAVEL (or SILTY CLAY and GRAVEL)	OH	ORGANIC fat CLAY ORGANIC fat CLAY with SAND ORGANIC fat CLAY with GRAVEL SANDY ORGANIC fat CLAY SANDY ORGANIC fat CLAY with GRAVEL GRAVELLY ORGANIC fat CLAY GRAVELLY ORGANIC fat CLAY with SAND
SM	SILTY SAND SILTY SAND with GRAVEL		
SC	CLAYEY SAND CLAYEY SAND with GRAVEL	OH	ORGANIC elastic SILT ORGANIC elastic SILT with SAND ORGANIC elastic SILT with GRAVEL SANDY ORGANIC elastic SILT SANDY ORGANIC elastic SILT with GRAVEL GRAVELLY ORGANIC elastic SILT GRAVELLY ORGANIC elastic SILT with SAND
SC-SM	SILTY, CLAYEY SAND SILTY, CLAYEY SAND with GRAVEL		
PT	PEAT	OL/OH	ORGANIC SOIL ORGANIC SOIL with SAND ORGANIC SOIL with GRAVEL SANDY ORGANIC SOIL SANDY ORGANIC SOIL with GRAVEL GRAVELLY ORGANIC SOIL GRAVELLY ORGANIC SOIL with SAND
	COBBLES COBBLES and BOULDERS BOULDERS		

FIELD AND LABORATORY TESTING

- (C) Consolidation (ASTM D 2435)
- (CL) Collapse Potential (ASTM D 5333)
- (CP) Compaction Curve (CTM 216)
- (CR) Corrosivity Testing (CTM 643, CTM 422, CTM 417)
- (CU) Consolidated Undrained Triaxial (ASTM D 4767)
- (DS) Direct Shear (ASTM D 3080)
- (EI) Expansion Index (ASTM D 4829)
- (M) Moisture Content (ASTM D 2216)
- (OC) Organic Content-% (ASTM D 2974)
- (P) Permeability (CTM 220)
- (PA) Particle Size Analysis (ASTM D 422)
- (PI) Plasticity Index (AASHTO T 90) Liquid Limit (AASHTO T 89)
- (PL) Point Load Index (ASTM D 5731)
- (PM) Pressure Meter
- (R) R-Value (CTM 301)
- (SE) Sand Equivalent (CTM 217)
- (SG) Specific Gravity (AASHTO T 100)
- (SL) Shrinkage Limit (ASTM D 427)
- (SW) Swell Potential (ASTM D 4546)
- (UC) Unconfined Compression-Soil (ASTM D 2166) Unconfined Compression-Rock (ASTM D 2938)
- (UU) Unconsolidated Undrained Triaxial (ASTM D 2850)
- (UW) Unit Weight (ASTM D 4767)

APPARENT DENSITY OF COHESIONLESS SOILS

Description	SPT N_{60} (Blows / 12 in.)
Very Loose	0 - 5
Loose	5 - 10
Medium Dense	10 - 30
Dense	30 - 50
Very Dense	Greater than 50

MOISTURE

Description	Criteria
Dry	No discernable moisture
Moist	Moisture present, but no free water
Wet	Visible free water

PERCENT OR PROPORTION OF SOILS

Description	Criteria
Trace	Particles are present but estimated to be less than 5%
Few	5% - 10%
Little	15% - 25%
Some	30% - 45%
Mostly	50% - 100%

PARTICLE SIZE

Description		Size (in.)
Boulder		Greater than 12
Cobble		3 - 12
Gravel	Coarse	3/4 - 3
	Fine	1/5 - 3/4
Sand	Coarse	1/16 - 1/5
	Medium	1/64 - 1/16
	Fine	1/300 - 1/64
Silt and Clay		Less than 1/300

ENGINEERING SERVICES — MATERIALS AND GEOTECHNICAL SERVICES

FUNCTIONAL SUPERVISOR
NAME: CHI-TSENG LIU

DRAWN BY: P.QUACH / T.Panah (URS CORP)
CHECKED BY: F.GERAMI

FIELD INVESTIGATION BY:
A.TSEGIE/M.ISLAM

STATE OF CALIFORNIA
DEPARTMENT OF TRANSPORTATION

DIVISION OF ENGINEERING SERVICES
STRUCTURE DESIGN
DESIGN BRANCH 15

BRIDGE NO. 53-3071K
POST MILE 5.12

IMPERIAL Hwy OFF-RAMP
LOG OF TEST BORINGS SHEET 4 OF 4

OGS CIVIL LOG OF TEST BORINGS SHEET

ORIGINAL SCALE IS 3 INCHES FOR REDUCED PLANS — 0 1 2 3

UNIT: 3604
PROJECT NUMBER & PHASE: 0700001834

CONTRACT NO.: 07-215941

DISREGARD PRINTS BEARING EARLIER REVISION DATES — REVISION DATES 12-29-11 12-29-11

SHEET 45 OF 45

FILE => 53-3071k-z-lotb04.dgn

USERNAME => s121614 DATE PLOTTED => 14-APR-2012 TIME PLOTTED => 11:43

DIST	COUNTY	ROUTE	POST MILES TOTAL PROJECT	SHEET No.	TOTAL SHEETS
07	LA	5	4.0/5.9	1198	1597

REGISTERED CIVIL ENGINEER — DATE 2/12/11

4-9-12
PLANS APPROVAL DATE

The State of California or its officers or agents shall not be responsible for the accuracy or completeness of electronic copies of this plan sheet.

REGISTERED PROFESSIONAL ENGINEER — FRANK HSIAOSHIH WEI — No. C 52918 — Exp. 12-31-12 — CIVIL — STATE OF CALIFORNIA

NOTES:

1. For retaining wall pile layout, see Structure Plan sheets.
2. For Design Notes, see "RETAINING WALL TYPE 5SWBP WITH CIDH - DETAILS NO. 1", and "RETAINING WALL TYPE 5SWBP WITH CIDH - DETAILS NO. 2" and "SOUNDWALL - MASONRY BLOCK WITH BARRIER ON RETAINING WALL DETAILS NO. 2" sheets.
3. Architectual Treament on concrete barrier face and retaining wall face not shown in Elevation for clarity. Not all piles shown in Elevation.
4. For Pile Data Table and Quantities, see "INDEX TO PLANS" sheet.
5. For Retaining Wall Type 5SWBP WITH CIDH Typical Section, see "INDEX TO PLANS" sheet.

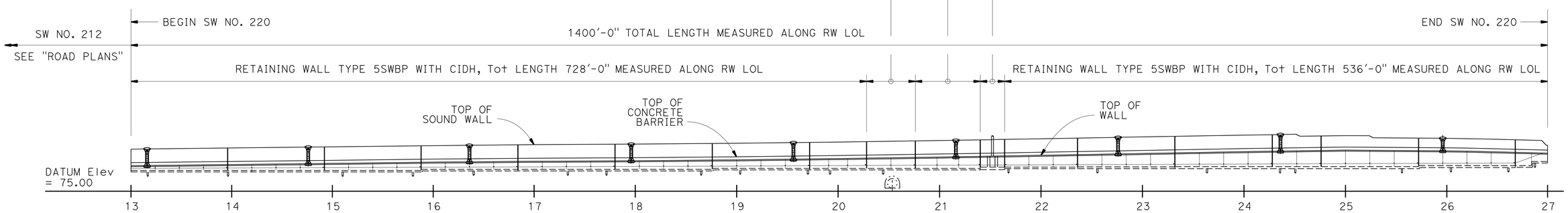

ELEVATION

1' = 50'

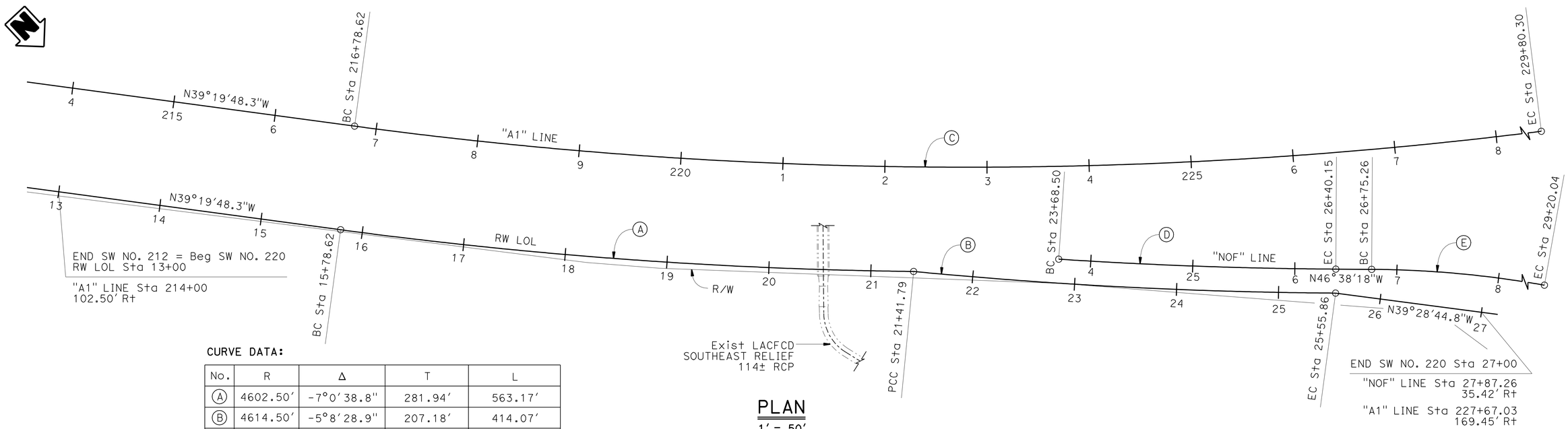

PLAN

1' = 50'

CURVE DATA:

No.	R	Δ	T	L
A	4602.50'	-7°0'38.8"	281.94'	563.17'
B	4614.50'	-5°8'28.9"	207.18'	414.07'
C	4500.00'	-16°34'24.7"	655.42'	1301.68'
D	4591.00'	-3°23'24.8"	135.87'	271.65'
E	1000.00'	14°01'30.4"	123.00'	244.78'

NOTE:
THE CONTRACTOR SHALL VERIFY ALL CONTROLLING FIELD DIMENSIONS BEFORE ORDERING OR FABRICATING ANY MATERIAL.

CHUNG-YUAN WEN
DESIGN ENGINEER

	BY	CHECKED
DESIGN	F. Wei	L. Sanchez-Manzo
DETAILS	P. Perez	F. Wei
QUANTITIES	S. Yeh	H. Win

LOAD & RESISTANCE FACTOR DESIGN — LIVE LOADING: HL93 W/"LOW-BOY": PERMIT DESIGN VEHICLE

	BY	CHECKED
LAYOUT	P. Perez	F. Wei
SPECIFICATIONS	J. Jiang	PLANS AND SPECS COMPARED: J. Jiang

ORIGINAL SCALE IN INCHES FOR REDUCED PLANS 0 1 2 3

STATE OF CALIFORNIA
DEPARTMENT OF TRANSPORTATION

DIVISION OF ENGINEERING SERVICES
STRUCTURE DESIGN
DESIGN BRANCH 21

BRIDGE NO. 53E0184
POST MILE 4.0

SOUND WALL NO. 220
GENERAL PLAN

UNIT: 3623
PROJECT NUMBER & PHASE: 07 00001834 1
CONTRACT NO.: 07-215941

DISREGARD PRINTS BEARING EARLIER REVISION DATES
REVISION DATES: 09/30/11 11/25/11 12/20/11 03/22/12

SHEET 1 OF 36

STRUCTURES DESIGN GENERAL PLAN SHEET (ENGLISH) (REV.09-01-10)

FILE => 53-E0184-a-gp.dgn

USERNAME => s121614 DATE PLOTTED => 14-APR-2012 TIME PLOTTED => 11:43

DIST	COUNTY	ROUTE	POST MILES TOTAL PROJECT	SHEET No.	TOTAL SHEETS
07	LA	5	4.0/5.9	1199	1597

REGISTERED CIVIL ENGINEER 2/12/11 DATE

4-9-12
PLANS APPROVAL DATE

REGISTERED PROFESSIONAL ENGINEER FRANK HSIAOSHIH WEI No. C 52918 Exp. 12-31-12 CIVIL STATE OF CALIFORNIA

The State of California or its officers or agents shall not be responsible for the accuracy or completeness of electronic copies of this plan sheet.

INDEX TO PLANS

Sheet No.	Title
1.	GENERAL PLAN
2.	INDEX TO PLANS
3.	STRUCTURE PLAN NO. 1
4.	STRUCTURE PLAN NO. 2
5.	STRUCTURE PLAN NO. 3
6.	STRUCTURE PLAN NO. 4
7.	STRUCTURE PLAN NO. 5
8.	STRUCTURE PLAN NO. 6
9.	FOUNDATION PLAN NO. 1
10.	FOUNDATION PLAN NO. 2
11.	FOUNDATION PLAN NO. 3
12.	FOUNDATION PLAN NO. 4
13.	RETAINING WALL DETAILS
14.	RETAINING WALL DETAILS NO. 1 AT SIGN 2B
15.	RETAINING WALL DETAILS NO. 2 AT SIGN 2B
16.	ARCHITECTURAL TREATMENT ELEVATION NO. 1
17.	ARCHITECTURAL TREATMENT ELEVATION NO. 2
18.	ARCHITECTURAL TREATMENT ELEVATION NO. 3
19.	ARCHITECTURAL TREATMENT ELEVATION NO. 4
20.	RETAINING WALL AND BARRIER ARCHITECTURAL DETAILS
21.	SOUND WALL ARCHITECTURAL DETAILS
22.	PILASTER ARCHITECTURAL DETAILS NO. 1
23.	PILASTER ARCHITECTURAL DETAILS NO. 2
24.	PILASTER ARCHITECTURAL DETAILS NO. 3
25.	PILASTER ARCHITECTURAL DETAILS NO. 4
26.	PILASTER STRUCTURAL DETAILS NO. 1
27.	PILASTER STRUCTURAL DETAILS NO. 2
28.	PILASTER STRUCTURAL DETAILS NO. 3
29.	RETAINING WALL TYPE 5SWBP WITH CIDH - DETAIL NO. 1
30.	RETAINING WALL TYPE 5SWBP WITH CIDH - DETAIL NO. 2
31.	SOUND WALL - MASONRY BLOCK WITH BARRIER ON RETAINING WALL DETAILS NO. 1
32.	SOUND WALL - MASONRY BLOCK WITH BARRIER ON RETAINING WALL DETAILS NO. 2
33.	LOG OF TEST BORINGS SHEET 1 OF 4
34.	LOG OF TEST BORINGS SHEET 2 OF 4
35.	LOG OF TEST BORINGS SHEET 3 OF 4
36.	LOG OF TEST BORINGS SHEET 4 OF 4

STANDARD PLANS DATED MAY 2006

A10A	ACRONYMS AND ABBREVIATIONS (SHEET 1 OF 2)
A10B	ACRONYMS AND ABBREVIATIONS (SHEET 2 OF 2)
A62B	LIMITS OF PAYMENT FOR EXCAVATION AND BACKFILL BRIDGE SURCHARGE AND WALL
BO-1	BRIDGE DETAILS
BO-3	BRIDGE DETAILS
B2-3	16" AND 24" CAST-IN-DRILLED-HOLE CONCRETE PILE
B3-8	RETAINING WALL DETAILS NO. 1
B11-56	CONCRETE BARRIER TYPE 736
RSP B15-6	SOUND WALL MASONRY BLOCK ON TYPE 736S/SV BARRIER DETAILS (1)
B15-9	SOUND WALL MASONRY BLOCK MISCELLANEOUS DETAILS

STANDARD PLAN SHEET NO.

DETAIL NO.

NOTE:
THE CONTRACTOR SHALL VERIFY ALL CONTROLLING FIELD DIMENSIONS BEFORE ORDERING OR FABRICATING ANY MATERIAL.

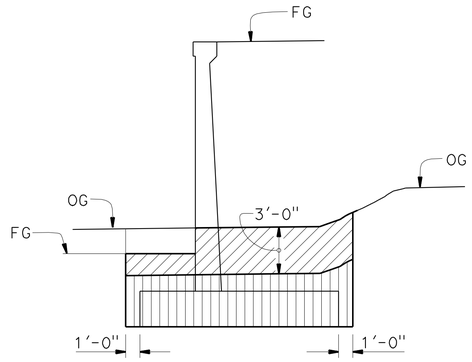

LIMITS OF EXCAVATION

NO SCALE

LEGEND:

STRUCTURE EXCAVATION (TYPE Y-2, AERIALLY DEPOSITED LEAD)

STRUCTURE EXCAVATION (RETAINING WALL)

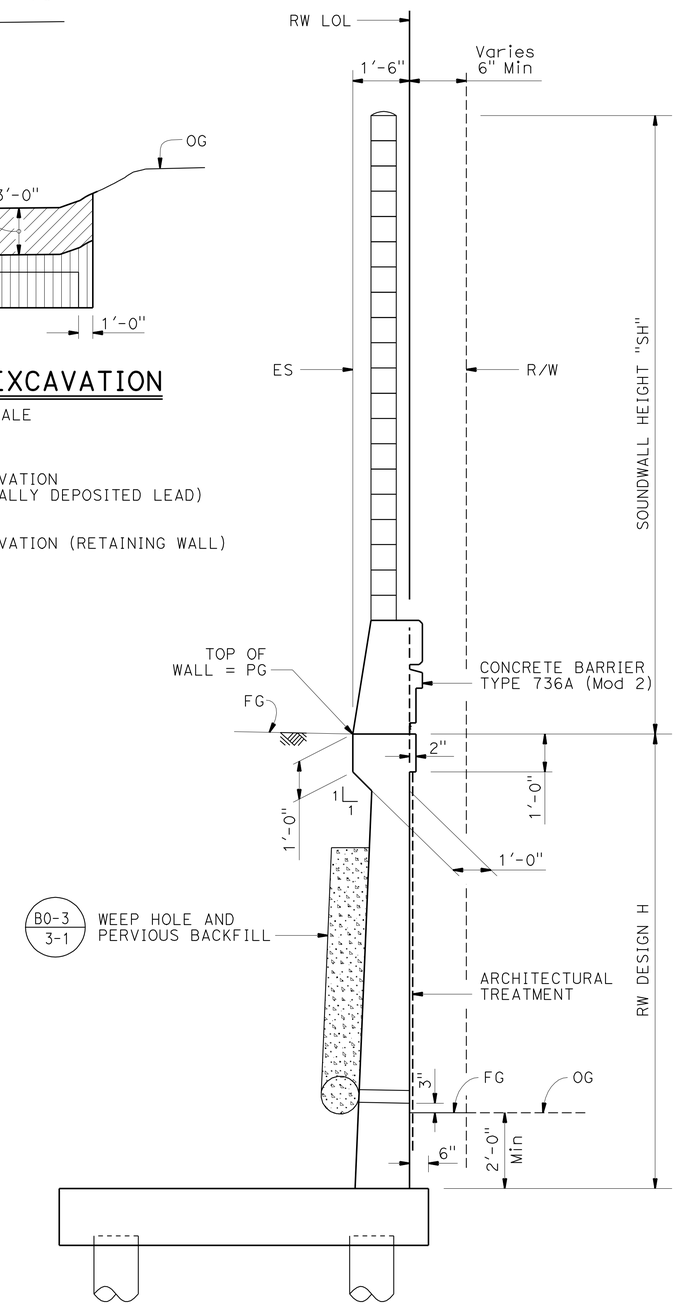

RETAINING WALL TYPE 5SWBP WITH CIDH TYPICAL SECTION

½" = 1'-0"

PILE DATA TABLE

RW DESIGN HEIGHT/ LOCATION	PILE TYPE	BOTTOM OF FOOTING ELEVATION (FT)	DESIGN LOADING (Kips)	NOMINAL RESISTANCE (Kips)		SPECIFIED TIP ELEVATION (ft)
				COMPRESSION	TENSION	
H=6, 8	16" CIDH	94.00	90	180	90	64
H=8, 10	16" CIDH	95.00	90	180	90	65
H=10, 12	16" CIDH	96.00	90	180	90	66
OVER LACFCD RCP	16" CIDH	96.00	90	180	90	58
H=12, 14, 16	16" CIDH	97.25	90	180	90	67
H=16	16" CIDH	98.25	90	180	90	68
H=14	16" CIDH	98.50	90	180	90	68
H=10	16" CIDH	102.75	90	180	90	72
H=6	16" CIDH	106.75	90	180	90	76
AT SIGN 2B	16" CIDH	96.25	90	180	N/A	66

QUANTITIES

STRUCTURE EXCAVATION (RETAINING WALL)	710	CY
STRUCTURE EXCAVATION (TYPE Y-2) (AERIALLY DEPOSITED LEAD)	1,820	CY
STRUCTURE BACKFILL (RETAINING WALL)	3,950	CY
PERVIOUS BACKFILL MATERIAL (RETAINING WALL)	245	CY
16" CAST-IN-DRILLED-HOLE CONCRETE PILING	18,186	LF
STRUCTURAL CONCRETE, RETAINING WALL	1,560	CY
PILASTER, SOUND WALL	22	CY
ARCHITECTURAL TEXTURE (SPLIT SLATE - FRACTURED RIB)	12,900	SQFT
SOUND WALL (MASONRY BLOCK)	17,800	SQFT
BAR REINFORCING STEEL (RETAINING WALL)	279,500	LB
CONCRETE BARRIER (TYPE 736A MODIFIED 2)	1,373	LF

DESIGN	BY F. Wei	CHECKED L. Sanchez-Manzo	
DETAILS	BY P. Perez	CHECKED F. Wei	
QUANTITIES	BY S. Yeh	CHECKED H. Win	

STATE OF CALIFORNIA
DEPARTMENT OF TRANSPORTATION

DIVISION OF ENGINEERING SERVICES
STRUCTURE DESIGN
DESIGN BRANCH 21

BRIDGE NO. 53E0184
POST MILE 4.0

SOUND WALL NO. 220
INDEX TO PLANS

STRUCTURES DESIGN DETAIL SHEET (ENGLISH) (REV. 09-01-10)

ORIGINAL SCALE IN INCHES FOR REDUCED PLANS 0 1 2 3

UNIT: 3623
PROJECT NUMBER & PHASE: 07 00001834 1 CONTRACT NO.: 07-215941

DISREGARD PRINTS BEARING EARLIER REVISION DATES

REVISION DATES 09/30/11 11/25/11 12/12/11 03/22/12

SHEET 2 OF 36

FILE => 53-E0184-b-itp.dgn

USERNAME => s121614 DATE PLOTTED => 14-APR-2012 TIME PLOTTED => 11:43

DIST	COUNTY	ROUTE	POST MILES TOTAL PROJECT	SHEET No.	TOTAL SHEETS
07	LA	5	4.0/5.9	1200	1597

REGISTERED CIVIL ENGINEER 12/12/11 DATE

4-9-12
PLANS APPROVAL DATE

REGISTERED PROFESSIONAL ENGINEER FRANK HSIAOSHIH WEI No. C 52918 Exp. 12-31-12 CIVIL STATE OF CALIFORNIA

The State of California or its officers or agents shall not be responsible for the accuracy or completeness of electronic copies of this plan sheet.

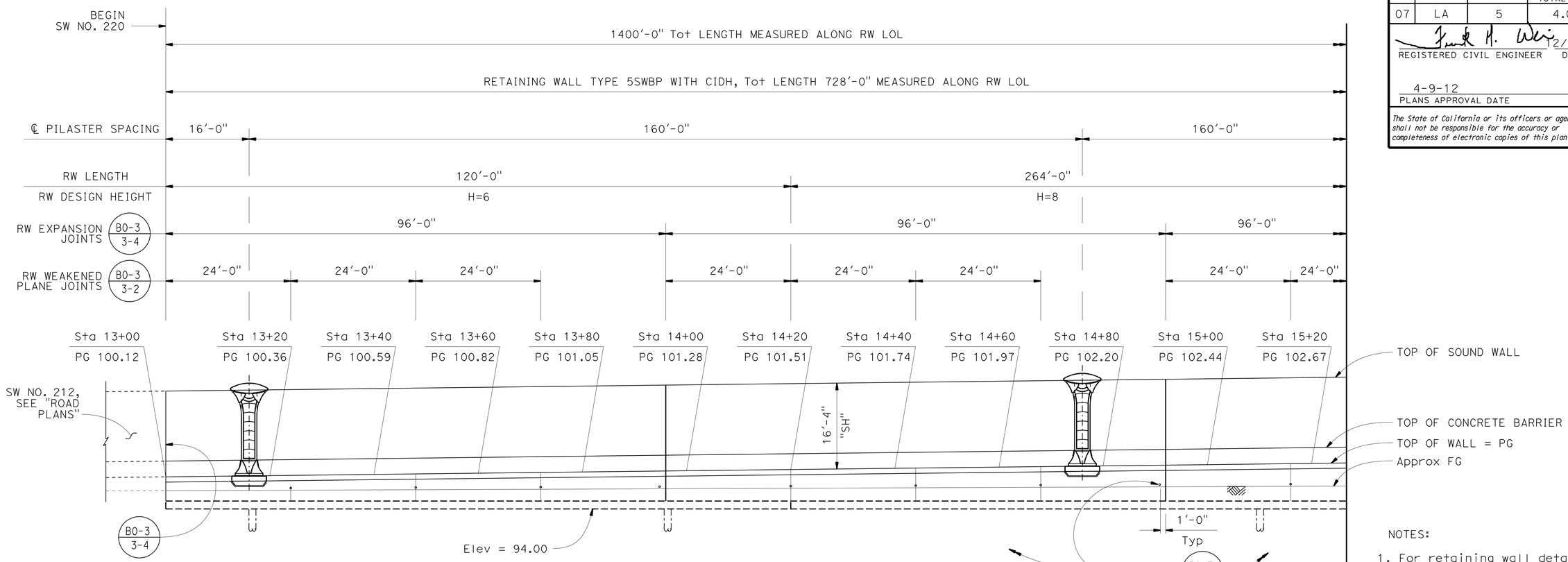

ELEVATION
1" = 10'

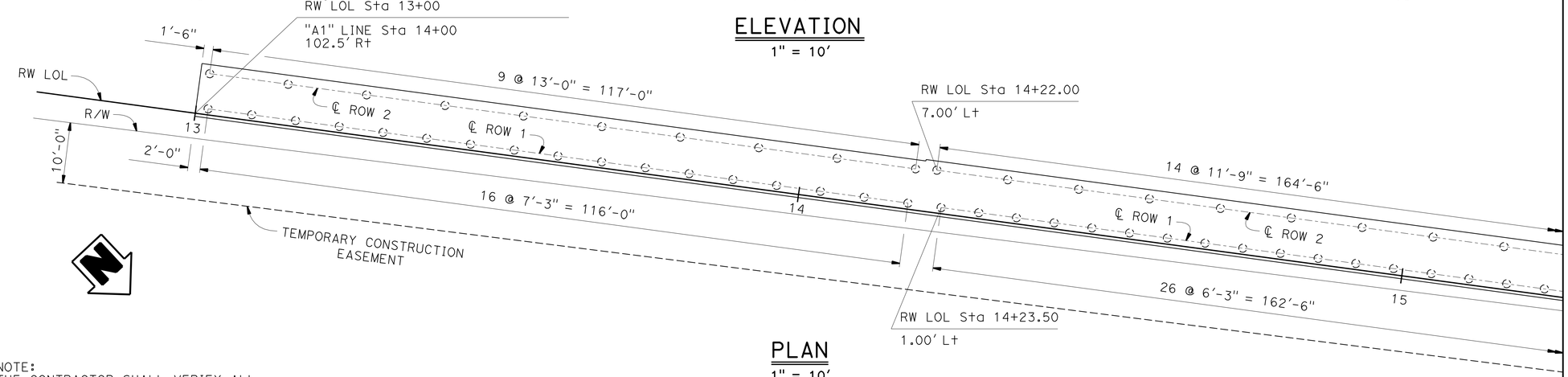

PLAN
1" = 10'

MATCH LINE, SEE "STRUCTURE PLAN NO.2" SHEET

NOTES:

1. For retaining wall details, see "RETAINING WALL TYPE 5SBWP WITH CIDH - DETAILS NO. 1" and "RETAINING WALL TYPE 5SBWP WITH CIDH - DETAILS NO. 2" sheets.
2. See "GENERAL PLAN" for RW LOL alignment information.
3. See "INDEX TO PLANS" sheet for Pile Data table.
4. For Sound Wall and Barrier Detail, see "SOUNDWALL - MASONRY BLOCK WITH BARRIER ON RETAINING WALL DETAILS NO. 1" and "SOUNDWALL - MASONRY BLOCK WITH BARRIER ON RETAINING WALL DETAILS NO. 2" sheets.
5. For Expansion Joint details in the Masonry Block Soundwall, see "SOUNDWALL - MASONRY BLOCK WITH BARRIER ON RETAINING WALL DETAILS NO. 1" and "SOUNDWALL - MASONRY BLOCK WITH BARRIER ON RETAINING WALL DETAILS NO. 2" sheets.

○ Denotes 16" CIDH

NOTE:
THE CONTRACTOR SHALL VERIFY ALL CONTROLLING FIELD DIMENSIONS BEFORE ORDERING OR FABRICATING ANY MATERIAL.

	BY	CHECKED
DESIGN	F. Wei	L. Sanchez-Manzo
DETAILS	P. Perez	F. Wei
QUANTITIES	S. Yeh	H. Win

STATE OF CALIFORNIA
DEPARTMENT OF TRANSPORTATION

DIVISION OF ENGINEERING SERVICES
STRUCTURE DESIGN
DESIGN BRANCH 21

BRIDGE NO. 53E0184
POST MILE 4.0

SOUND WALL NO. 220
STRUCTURE PLAN NO. 1

STRUCTURES DESIGN DETAIL SHEET (ENGLISH) (REV. 09-01-10)

ORIGINAL SCALE IN INCHES FOR REDUCED PLANS 0 1 2 3

UNIT: 3623
PROJECT NUMBER & PHASE: 07 00001834 1 CONTRACT NO.: 07-215941

DISREGARD PRINTS BEARING EARLIER REVISION DATES

REVISION DATES: 09/30/11 11/25/11 12/12/11 03/22/12

SHEET 3 OF 36

FILE => 53-E0184-c-sp01.dgn

USERNAME => s121614 DATE PLOTTED => 14-APR-2012 TIME PLOTTED => 11:43