DIST	COUNTY	ROUTE	POST MILES TOTAL PROJECT	SHEET NO.	TOTAL SHEETS
07	LA	5	4.0/5.9	901	1597

Randell D. Hiatt
REGISTERED CIVIL ENGINEER

October 20, 2006
PLANS APPROVAL DATE

REGISTERED PROFESSIONAL ENGINEER
Randell D. Hiatt
No. C50200
Exp. 6-30-07
CIVIL
STATE OF CALIFORNIA

The State of California or its officers or agents shall not be responsible for the accuracy or completeness of electronic copies of this plan sheet.

To accompany plans dated 4-9-12

NOTES:

1. See New Standard Plan NSP A77C5 for additional vegetation control details.
2. Where the distance between back of post and hinge point is less than 24", vegetation control to be constructed flush with the back edge of the post.
3. Where dike is constructed under railing, construct vegetation control to back edge of dike. Where paved shoulder is constructed within 24" in front of the post, construct vegetation control to the edge of paved shoulder.
4. Direction of adjacent traffic indicated by ←.

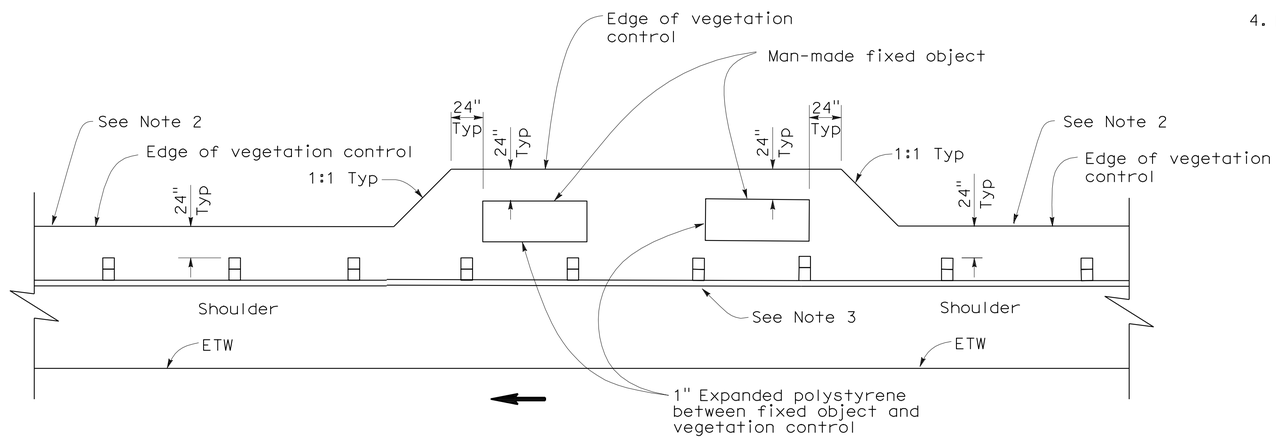

PLAN

FIXED OBJECT(S) ON SHOULDER

STATE OF CALIFORNIA
DEPARTMENT OF TRANSPORTATION

METAL BEAM GUARD RAILING TYPICAL VEGETATION CONTROL AT FIXED OBJECT

NO SCALE

NSP A77C8 DATED OCTOBER 20, 2006 SUPPLEMENTS THE STANDARD PLANS BOOK DATED MAY 2006.

NEW STANDARD PLAN NSP A77C8

2006 NEW STANDARD PLAN NSP A77C8

7-17-06

DIST	COUNTY	ROUTE	POST MILES TOTAL PROJECT	SHEET NO.	TOTAL SHEETS
07	LA	5	4.0/5.9	902	1597

Randell D. Hiatt
REGISTERED CIVIL ENGINEER

October 20, 2006
PLANS APPROVAL DATE

REGISTERED PROFESSIONAL ENGINEER
Randell D. Hiatt
No. C50200
Exp. 6-30-07
CIVIL
STATE OF CALIFORNIA

The State of California or its officers or agents shall not be responsible for the accuracy or completeness of electronic copies of this plan sheet.

To accompany plans dated 4-9-12

NOTES:

1. See New Standard Plan NSP A77C5 for additional vegetation control details.
2. Where dike is constructed under railing, construct vegetation control to back edge of dike. Where paved shoulder is constructed within 24" in front of the post, construct vegetation control to the edge of paved shoulder.
3. Direction of adjacent traffic indicated by ← .

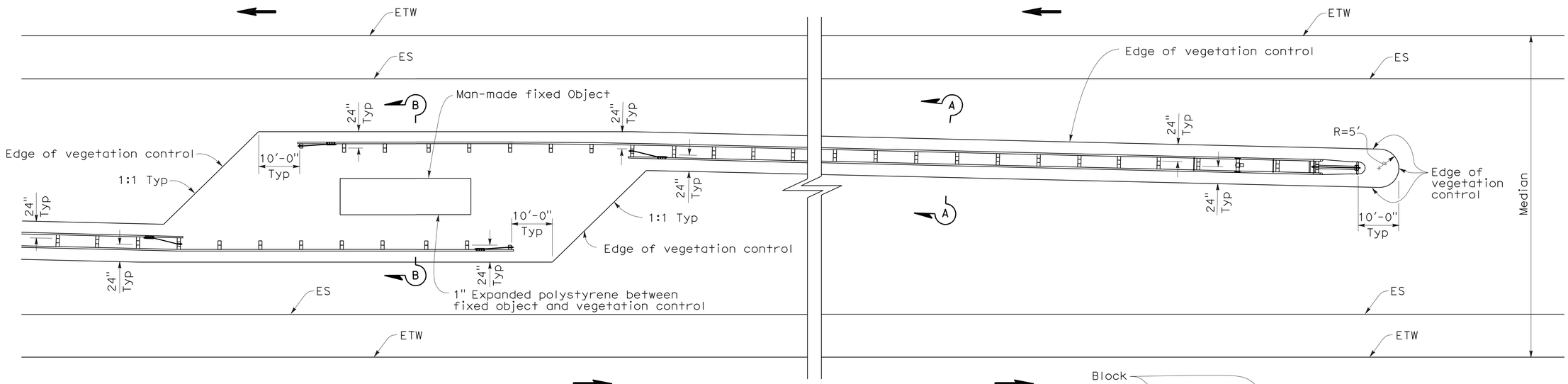

PLAN

FIXED OBJECT(S) IN MEDIAN

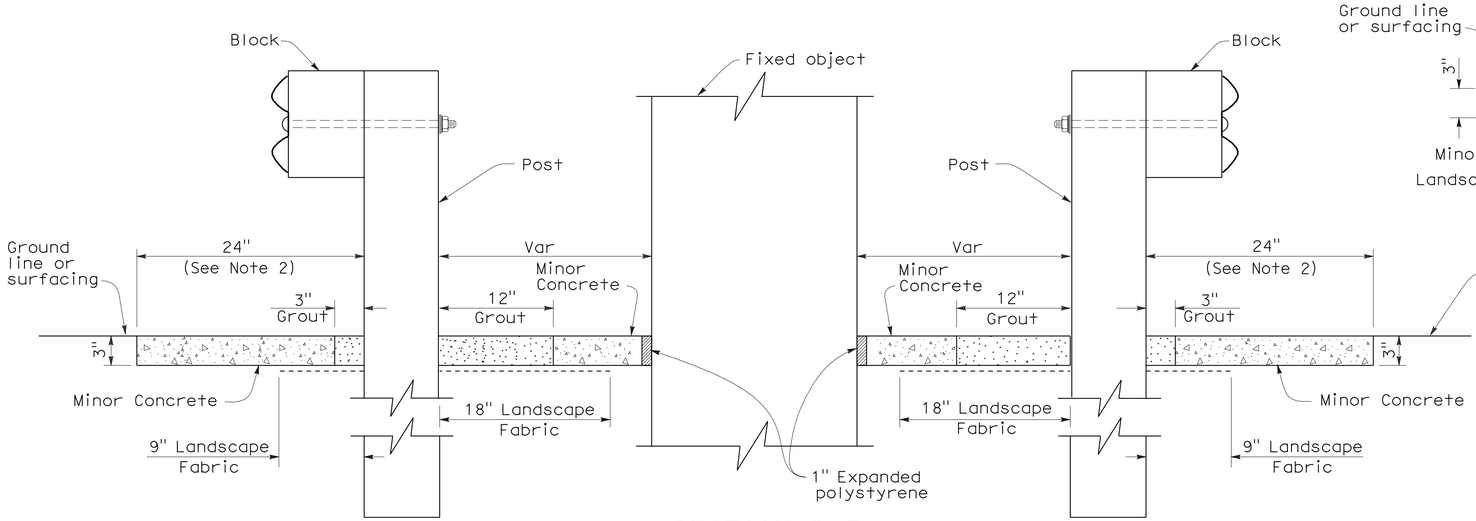

SECTION B-B

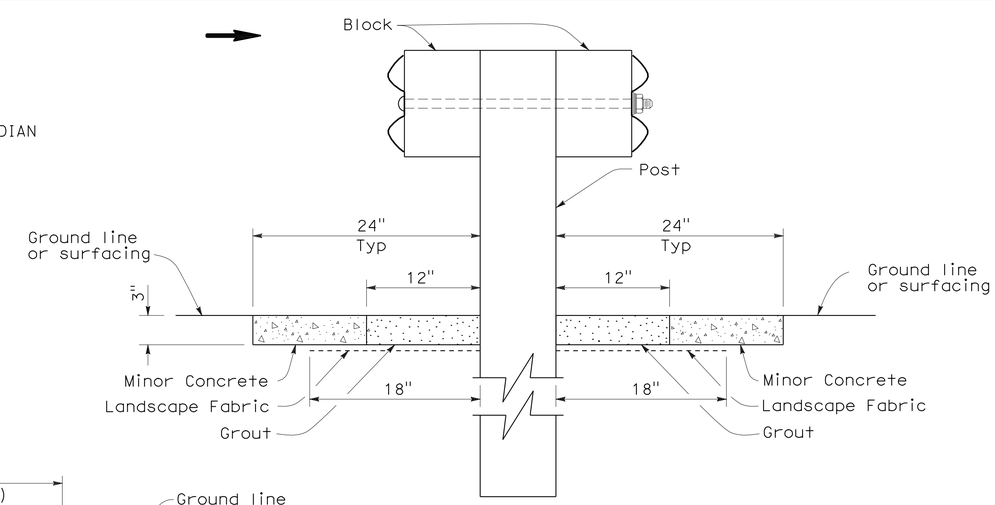

SECTION A-A

STATE OF CALIFORNIA
DEPARTMENT OF TRANSPORTATION

METAL BEAM GUARD RAILING TYPICAL VEGETATION CONTROL AT FIXED OBJECT

NO SCALE

NSP A77C9 DATED OCTOBER 20, 2006 SUPPLEMENTS THE STANDARD PLANS BOOK DATED MAY 2006.

NEW STANDARD PLAN NSP A77C9

2006 NEW STANDARD PLAN NSP A77C9

7-17-06

DIST	COUNTY	ROUTE	POST MILES TOTAL PROJECT	SHEET NO.	TOTAL SHEETS
07	LA	5	4.0/5.9	903	1597

Randell D. Hiatt
REGISTERED CIVIL ENGINEER

October 20, 2006
PLANS APPROVAL DATE

REGISTERED PROFESSIONAL ENGINEER
Randell D. Hiatt
No. C50200
Exp. 6-30-07
CIVIL
STATE OF CALIFORNIA

The State of California or its officers or agents shall not be responsible for the accuracy or completeness of electronic copies of this plan sheet.

To accompany plans dated 4-9-12

NOTES:

1. See New Standard Plan NSP A77C5 for additional vegetation control details.
2. Where dike is constructed under railing, construct vegetation control to back edge of dike. Where paved shoulder is constructed within 24" in front of the post, construct vegetation control to the edge of paved shoulder.
3. Direction of adjacent traffic indicated by ←.

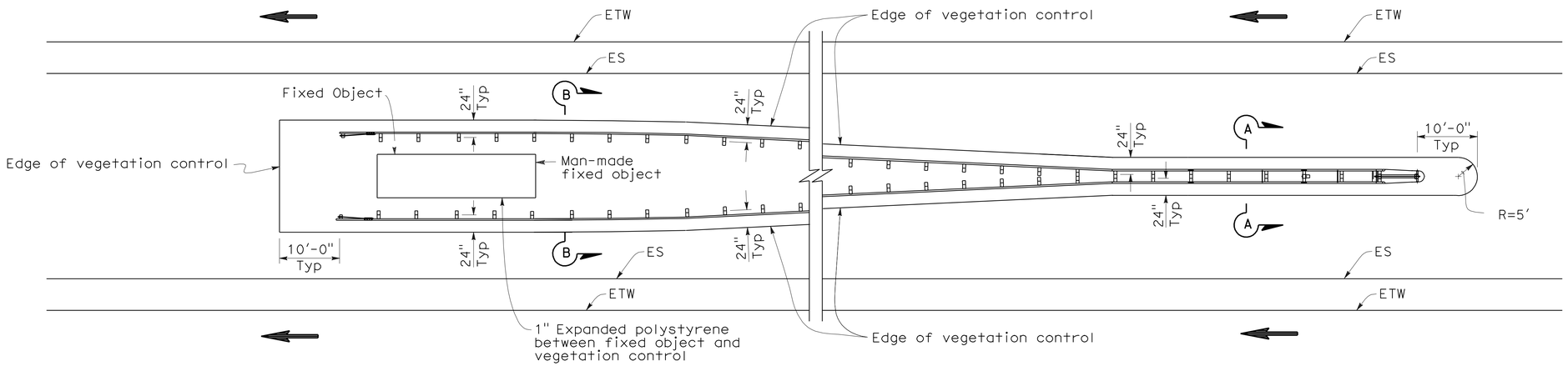

PLAN

FIXED OBJECT(S) BETWEEN SEPARATE ROADBEDS
(ONE-WAY TRAFFIC)

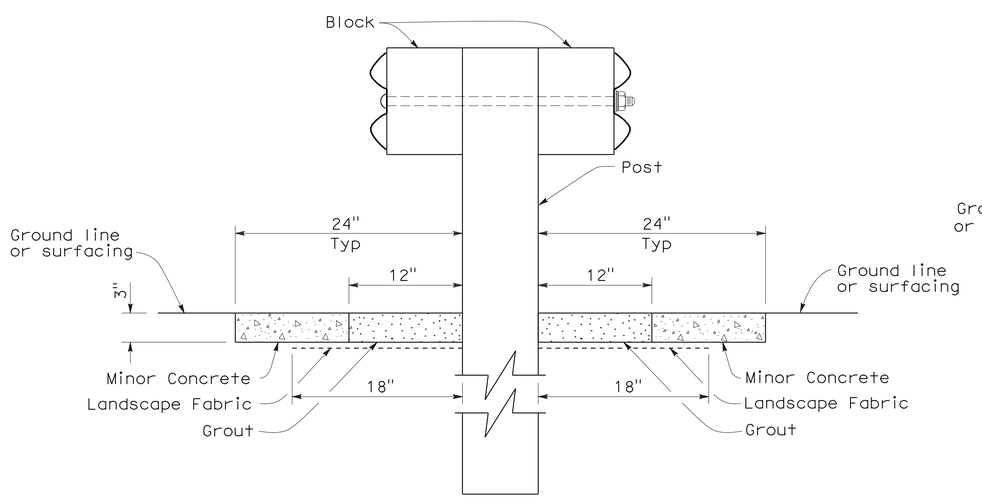

SECTION A-A

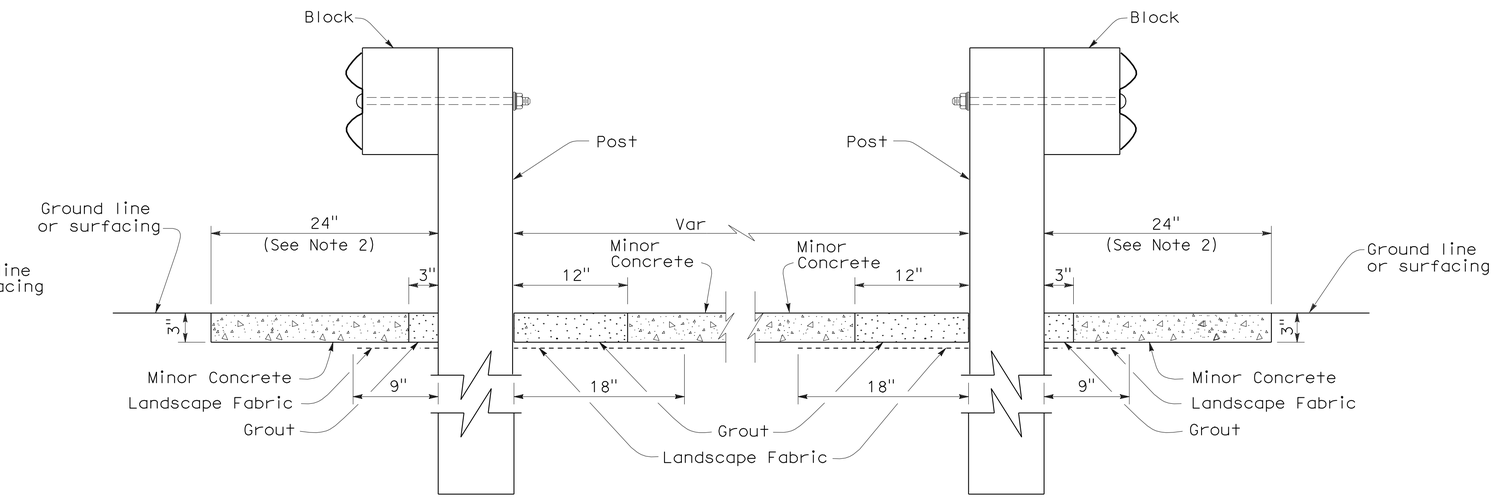

SECTION B-B

STATE OF CALIFORNIA
DEPARTMENT OF TRANSPORTATION

METAL BEAM GUARD RAILING TYPICAL VEGETATION CONTROL AT FIXED OBJECT

NO SCALE

NSP A77C10 DATED OCTOBER 20, 2006 SUPPLEMENTS THE STANDARD PLANS BOOK DATED MAY 2006.

NEW STANDARD PLAN NSP A77C10

2006 NEW STANDARD PLAN NSP A77C10

7-17-06

Dist	COUNTY	ROUTE	POST MILES TOTAL PROJECT	SHEET No.	TOTAL SHEETS
07	LA	5	4.0/5.9	904	1597

Randell D. Hiatt
REGISTERED CIVIL ENGINEER

May 20, 2011
PLANS APPROVAL DATE

REGISTERED PROFESSIONAL ENGINEER
Randell D. Hiatt
No. C50200
Exp. 6-30-11
CIVIL
STATE OF CALIFORNIA

The State of California or its officers or agents shall not be responsible for the accuracy or completeness of electronic copies of this plan sheet.

To accompany plans dated 4-9-12

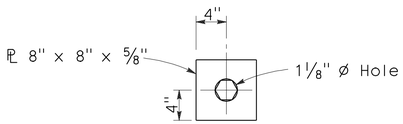

DETAIL A
CABLE CONNECTION
END PLATE

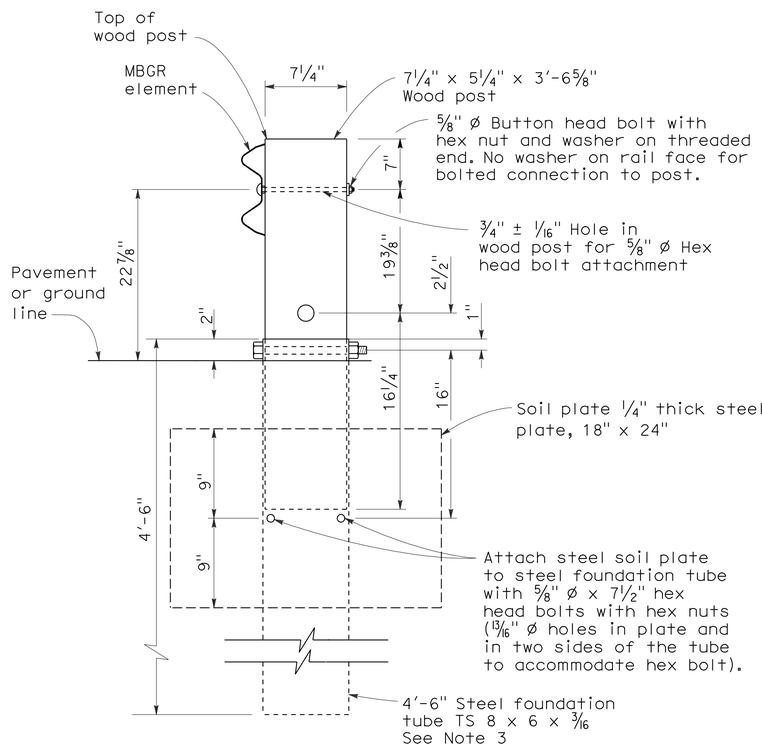

SECTION A-A

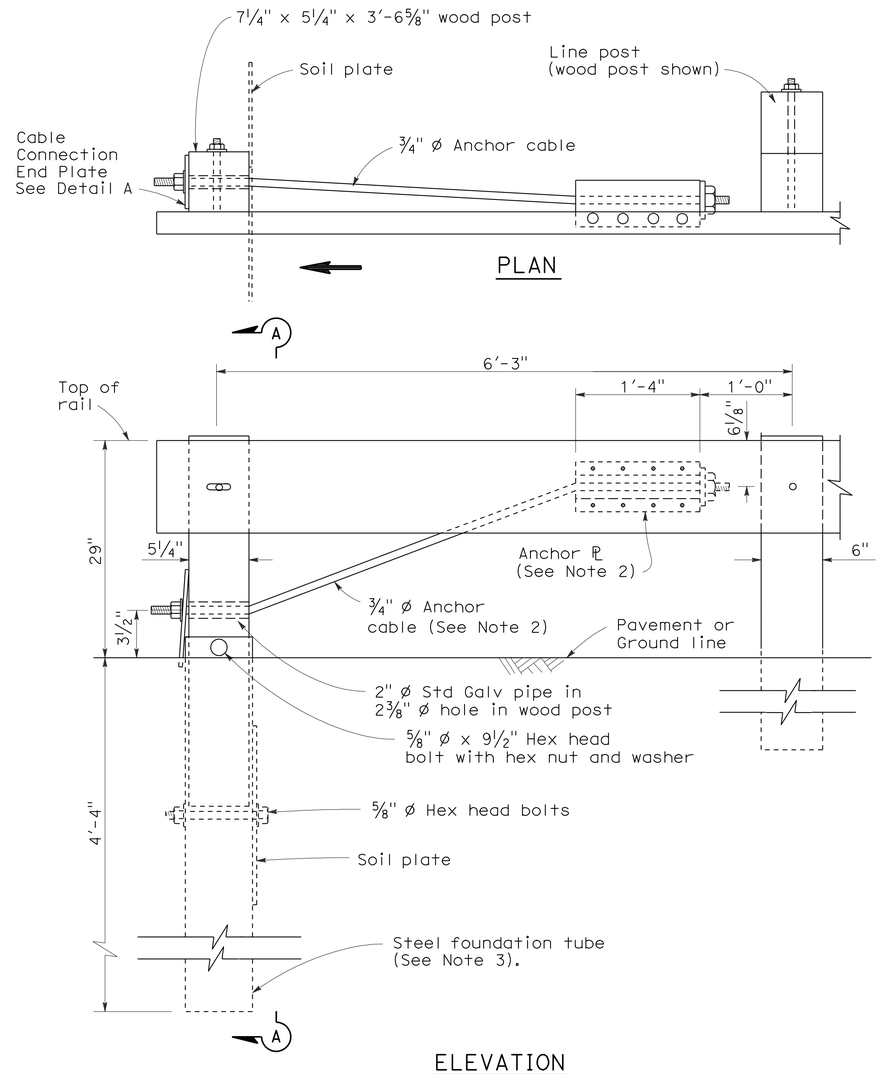

ELEVATION
END ANCHOR
ASSEMBLY (TYPE SFT)
See Note 1

NOTES:

1. See the A77E, A77F and A77G series of Standard Plans for typical use of End Anchor Assembly (Type SFT).
2. For details of the anchor plate and 3/4" cable, see Standard Plan A77H3.
3. A 6'-0" length steel foundation tube, TS 8 x 6 x 3/16, without a soil plate, may be furnished and installed in place of the 4'-6" length steel foundation tube and soil plate shown. Minimum embedment of the 6'-0" length tube shall be 5'-9". A 5/8" Ø hex head bolt and nut shall be installed in the hole in the 6'-0" length tube to keep the wood post from dropping into the tube.
4. Direction of traffic indicated by ⟹.
5. Install line post, steel foundation tube and soil plate in soil.

STATE OF CALIFORNIA
DEPARTMENT OF TRANSPORTATION

METAL RAILING END ANCHOR ASSEMBLY (TYPE SFT)

NO SCALE

RSP A77H1 DATED MAY 20, 2011 SUPERSEDES STANDARD PLAN A77H1
DATED MAY 1, 2006 - PAGE 67 OF THE STANDARD PLANS BOOK DATED MAY 2006.

REVISED STANDARD PLAN RSP A77H1

2006 REVISED STANDARD PLAN RSP A77H1

2-10-07

Dist	COUNTY	ROUTE	POST MILES TOTAL PROJECT	SHEET No.	TOTAL SHEETS
07	LA	5	4.0/5.9	905	1597

Randell D. Hiatt
REGISTERED CIVIL ENGINEER

May 20, 2011
PLANS APPROVAL DATE

REGISTERED PROFESSIONAL ENGINEER Randell D. Hiatt No. C50200 Exp. 6-30-11 CIVIL STATE OF CALIFORNIA

To accompany plans dated 4-9-12

The State of California or its officers or agents shall not be responsible for the accuracy or completeness of electronic copies of this plan sheet.

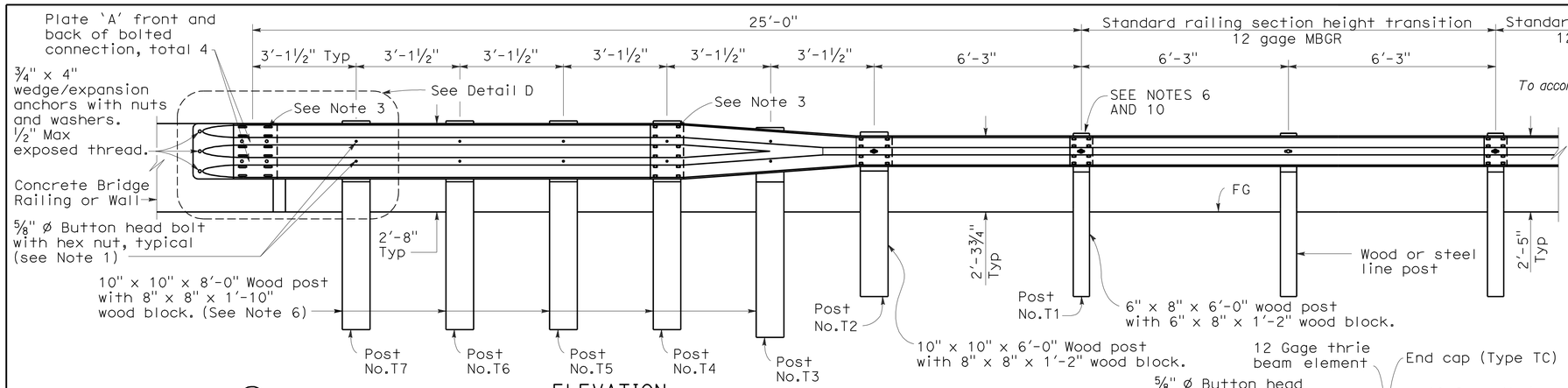

ELEVATION

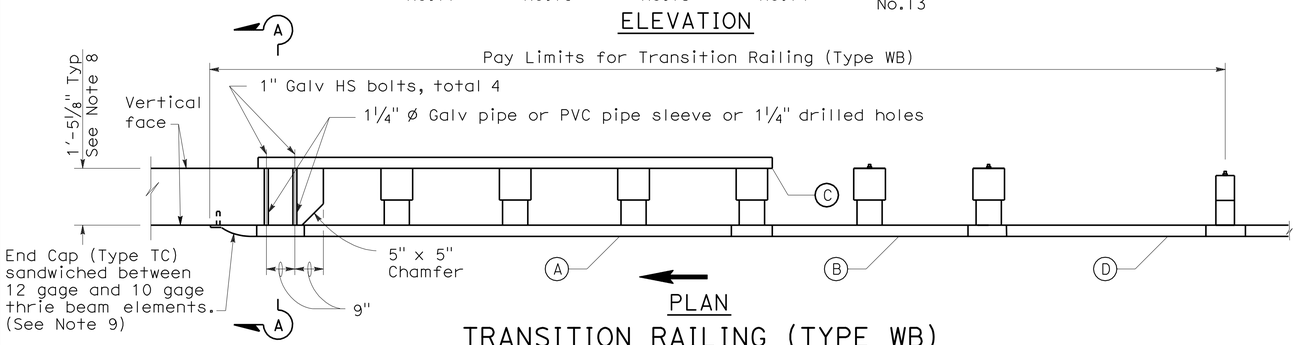

PLAN

TRANSITION RAILING (TYPE WB)

(No Blockout Attachment)

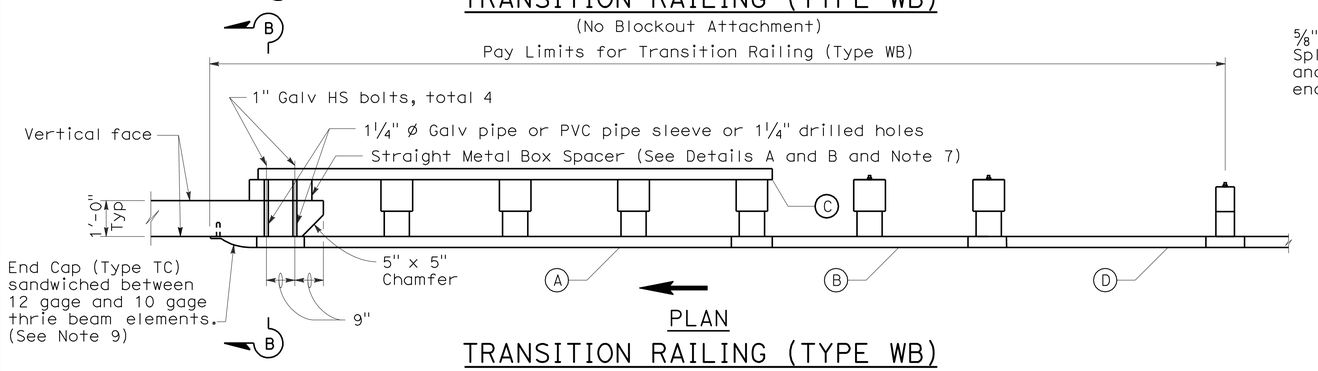

PLAN

TRANSITION RAILING (TYPE WB)

(Blockout Attachment)

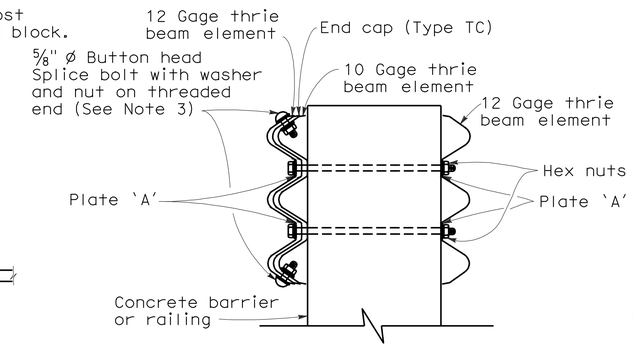

SECTION A-A

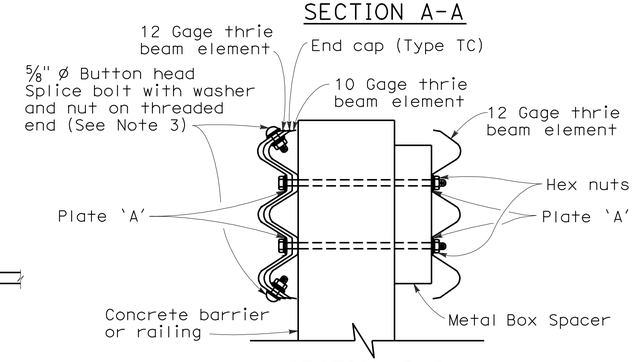

SECTION B-B

NOTES:

1. Use ⅝" ø Button head bolts and hex nuts for connections to posts. No washer on rail face for bolted connections to post.
2. The nested rail elements, end cap, and 'W' beam to thrie beam element may be spliced together prior to bolting the elements to the wood post and concrete barrier or railing.
3. Exterior splice bolt holes for rail element splices at Post No. T4 and the connection to the concrete barrier or railing shall be the standard 29/32" x 1⅛" slot size. Interior splice bolt holes at these locations may be increased up to 1¼" ø. Only the top 2 and the bottom 2 splice bolts with washers and nuts are required for rail splices at Post No. T4 and the connection to the concrete barrier or railing.
4. Direction of adjacent traffic indicated by →.
5. The top elevation of Posts No. T2 through No. T7 shall not project more than 1" above the top elevation of the rail element.
6. Typically, the railing connected to Transition Railing (Type WB) will be either standard railing section of metal beam guard railing with height transition ratio of 120:1 or an approved Caltrans end treatment attached to Post No. T1.
7. The depth of the metal box spacer varies from the 5⅛" to 1½" and is dependent on the width of the concrete railing or wall. The combined dimension for the depth of the metal box spacer plus the width of railing or wall is typically 17⅛". Where the space between the backside of the concrete railing or wall and the rear thrie beam element is less than 1½", metal plates similar to Plate 'A' are to be used as spacers.
8. Where the width of the concrete railing or wall is greater than 17⅛", wood blocks are to be used to fill the space created between the backside of Posts No. T4 through No. T7 and the rear thrie beam element. These wood blocks shall be 8" in width and 1'-2" in length. The dimension between the front thrie beam element and the rear thrie beam element is to match the width of the concrete railing or wall.
9. End cap may be installed over 12 gage and 10 gage thrie beam elements where transition railing is installed on the departure end of bridge railing.
10. Conform standard railing section height to 2'-3¾" at Post No. T1 using height transition ratio of 120:1.

LEGEND

(A) Nested thrie beam elements (one 12 gage element nested over one 10 gage element).

(B) One 10 gage "W" beam to thrie beam element.

(C) One 12 gage thrie beam element.

(D) One 10 gage "W" beam rail element (7'-3½" length)

10 gage = 0.135" thick

12 gage = 0.108" thick

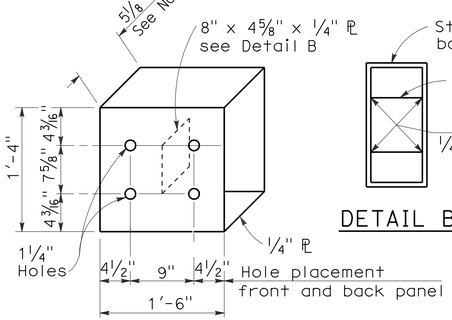

DETAIL A

STRAIGHT METAL BOX SPACER

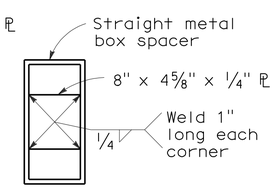

DETAIL B

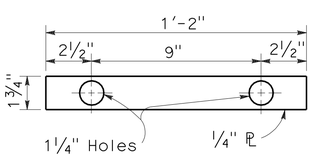

DETAIL C

PLATE 'A'

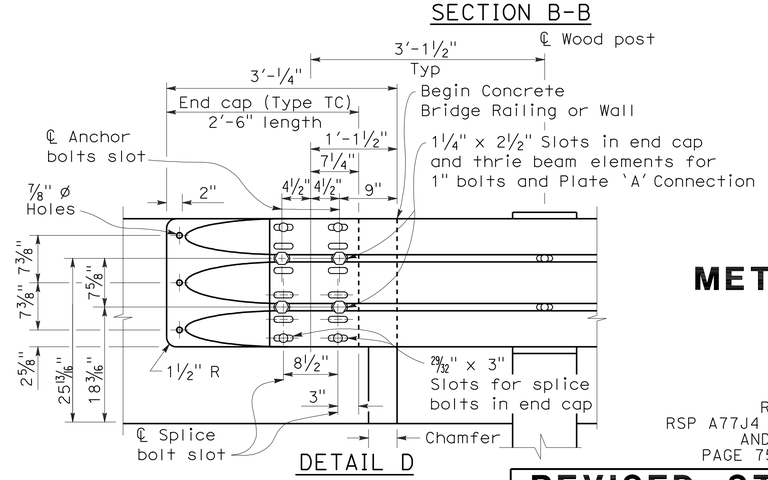

DETAIL D

STATE OF CALIFORNIA
DEPARTMENT OF TRANSPORTATION

METAL BEAM GUARD RAILING TRANSITION RAILING (TYPE WB)

NO SCALE

RSP A77J4 DATED MAY 20, 2011 SUPERSEDES
RSP A77J4 DATED JUNE 5, 2009, RSP A77J4 DATED JUNE 6, 2008
AND STANDARD PLAN A77J4 DATED MAY 1, 2006 -
PAGE 75 OF THE STANDARD PLANS BOOK DATED MAY 2006.

REVISED STANDARD PLAN RSP A77J4

2006 REVISED STANDARD PLAN RSP A77J4

5-14-09

DIST	COUNTY	ROUTE	POST MILES TOTAL PROJECT	SHEET NO.	TOTAL SHEETS
07	LA	5	4.0/5.9	906	1597

Randell D. Hiatt
REGISTERED CIVIL ENGINEER

June 6, 2008
PLANS APPROVAL DATE

REGISTERED PROFESSIONAL ENGINEER
Randell D. Hiatt
No. C50200
Exp. 6-30-09
CIVIL
STATE OF CALIFORNIA

The State of California or its officers or agents shall not be responsible for the accuracy or completeness of electronic copies of this plan sheet.

To accompany plans dated 4-9-12

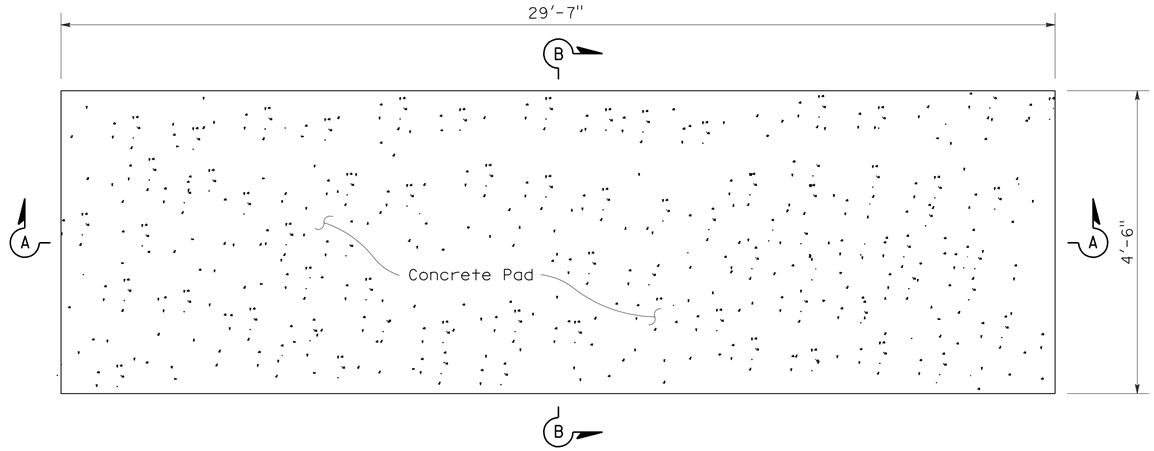

PLAN VIEW

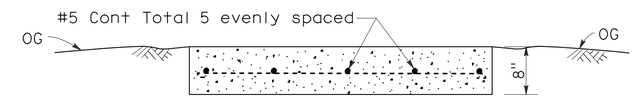

SECTION B-B

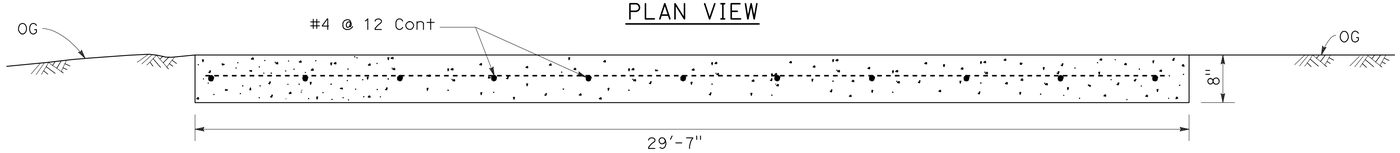

SECTION A-A

CONCRETE ANCHOR SLAB

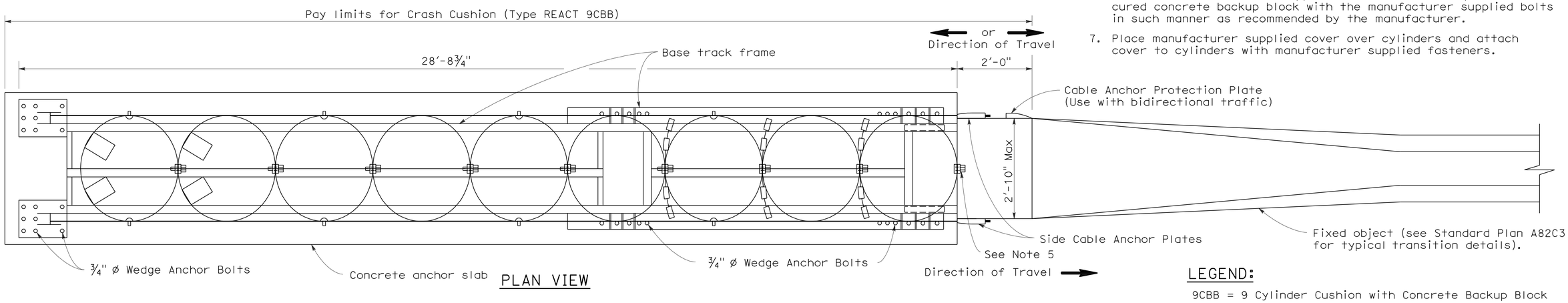

PLAN VIEW

NOTES:

1. For additional details of this crash cushion, refer to manufacturer's installation instructions.
2. For details of the REACT Crash Cushion with self contained backup support (no concrete backup block), see Standard Plan A82D1.
3. The base track frame with cylinders attached comes from the manufacturer as a completely pre-assembled unit.
4. Place the crash cushion unit on the cured concrete anchor slab and use the base track frame of the crash cushion as a template for drilling anchor bolt holes. Drill holes in slab and attach crash cushion with wedge anchor bolts supplied by the manufacturer.
5. Attach last cylinder to concrete backup block with manufacturer supplied fastener in such manner as recommended by the manufacturer.
6. Attach the manufacturer supplied side cable anchor plates to the cured concrete backup block with the manufacturer supplied bolts in such manner as recommended by the manufacturer.
7. Place manufacturer supplied cover over cylinders and attach cover to cylinders with manufacturer supplied fasteners.

LEGEND:

9CBB = 9 Cylinder Cushion with Concrete Backup Block

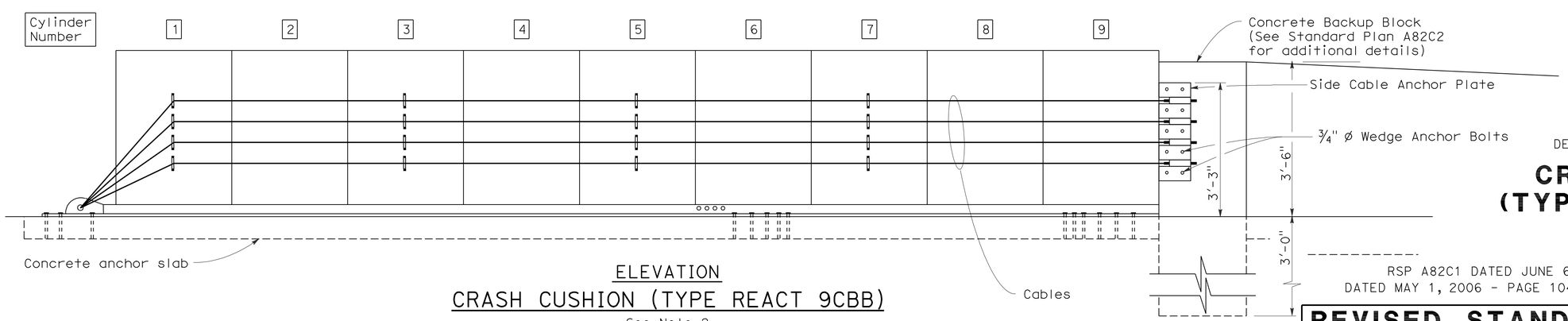

ELEVATION

CRASH CUSHION (TYPE REACT 9CBB)

See Note 2

STATE OF CALIFORNIA
DEPARTMENT OF TRANSPORTATION

CRASH CUSHION (TYPE REACT 9CBB)

NO SCALE

RSP A82C1 DATED JUNE 6, 2008 SUPERSEDES STANDARD PLAN A82C1
DATED MAY 1, 2006 - PAGE 104 OF THE STANDARD PLANS BOOK DATED MAY 2006.

REVISED STANDARD PLAN RSP A82C1

2006 REVISED STANDARD PLAN RSP A82C1

4-21-08

DIST	COUNTY	ROUTE	POST MILES TOTAL PROJECT	SHEET NO.	TOTAL SHEETS
07	LA	5	4.0/5.9	907	1597

REGISTERED CIVIL ENGINEER

June 5, 2009
PLANS APPROVAL DATE

REGISTERED PROFESSIONAL ENGINEER Glenn DeCou No. C34547 Exp. 9-30-09 CIVIL STATE OF CALIFORNIA

The State of California or its officers or agents shall not be responsible for the accuracy or completeness of electronic copies of this plan sheet.

To accompany plans dated 4-9-12

2006 REVISED STANDARD PLAN RSP A85

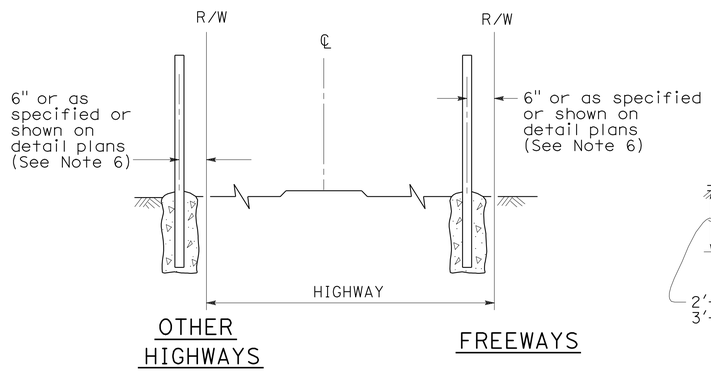

FENCE LOCATION

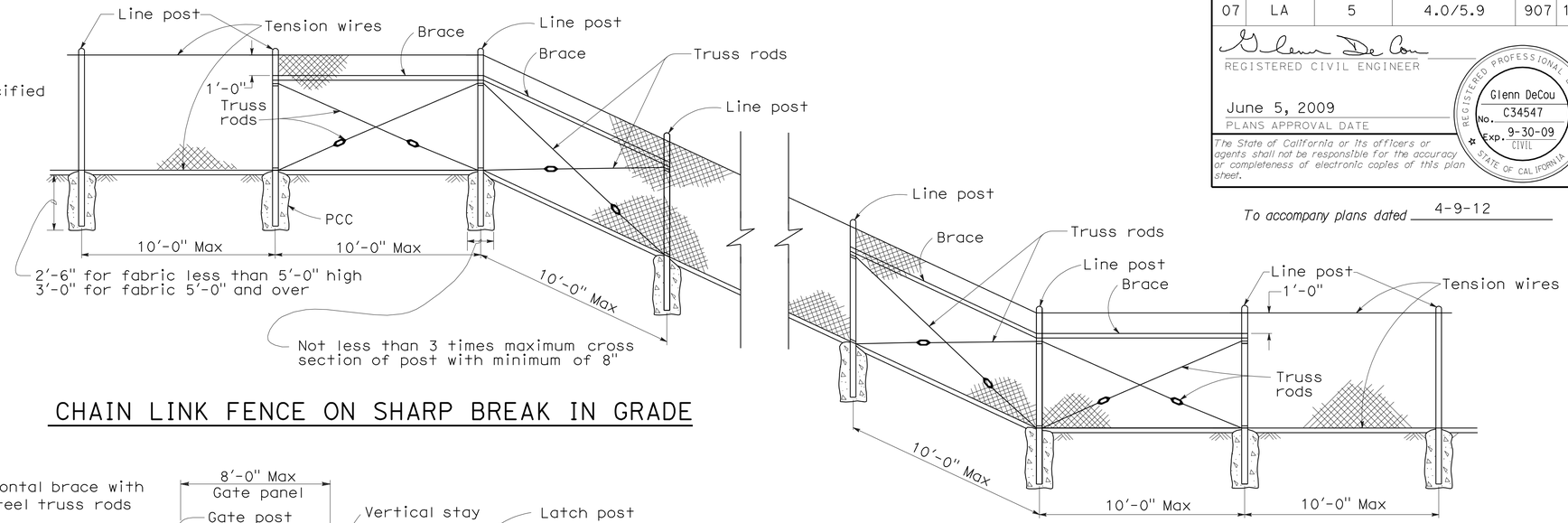

CHAIN LINK FENCE ON SHARP BREAK IN GRADE

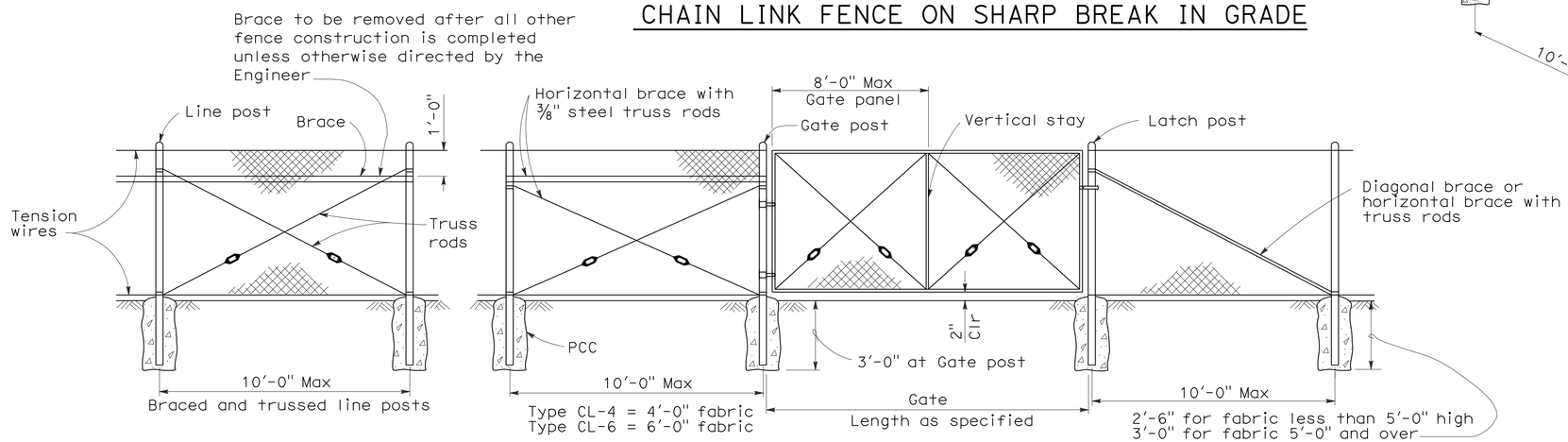

CHAIN LINK GATE INSTALLATION

GATE POST			
FENCE HEIGHT	GATE WIDTHS	NOMINAL ID	WEIGHT PER FOOT
6'-0" and Less	Up thru 6'-0"	2½"	4.95 LB
	Over 6'-0" thru 12'-0"	4"	10.79 LB
	Over 12'-0" thru 18'-0"	5"	14.62 LB
	Over 18'-0" to 24'-0" Max	6"	18.97 LB
Over 6'-0"	Up thru 6'-0"	3"	7.58 LB
	Over 6'-0" thru 12'-0"	5"	14.62 LB
	Over 12'-0" thru 18'-0"	6"	18.97 LB
	Over 18'-0" to 24'-0" Max	8"	28.55 LB

Above post dimensions and weights are minimums. Larger sizes may be used on approval of the Engineer.

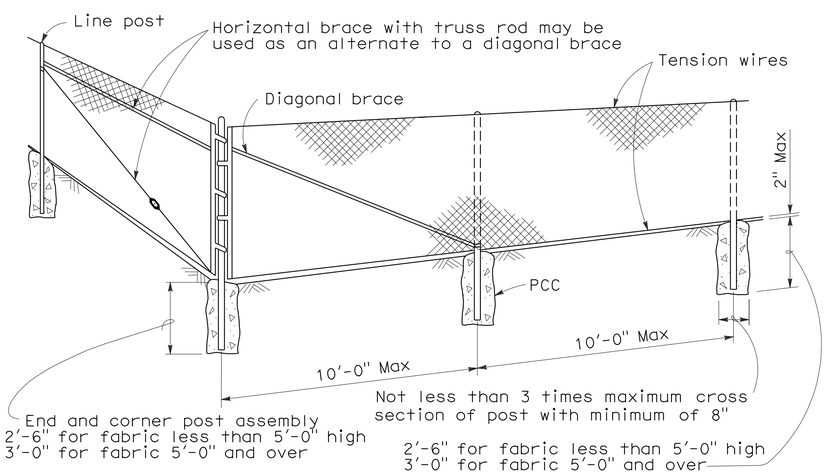

CORNER POST

NOTES:

1. The below table shows examples of post and brace sections which may comply with the Specifications.
2. Sections shown in the tables must also comply with the strength requirements and other provisions of the Specifications.
3. Other sections which comply with the strength requirements and other provisions of the Specifications may be used on approval of the Engineer.
4. Options exercised shall be uniform on any one project.
5. Dimensions shown are nominal.
6. Offset to be 2'-0" at monument locations, measured at right angles to R/W lines. Taper to achieve offset to be at least 20'-0" long.

TYPICAL MEMBER DIMENSIONS (See Notes)											
FENCE HEIGHT	LINE POSTS			END, LATCH & CORNER POSTS				BRACES			
	ROUND ID	H	ROLL FORMED	ROUND ID	ROLL FORMED			ROUND ID	H	ROLL FORMED	
6' & less	1½"	1⅞" × 1⅝"	1⅞" × 1⅝"	2"	3½" × 3½"	2" × 1¾"		1¼"	1½" × 1 5/16"	1⅝" × 1¼"	1¾" × 1¼"
Over 6'	2"	2¼" × 2"	2" × 1¾"	2½"	3½" × 3½"	2½" × 2½"		1¼"	1½" × 1 5/16"	1⅝" × 1¼"	1¾" × 1¼"

STATE OF CALIFORNIA
DEPARTMENT OF TRANSPORTATION

CHAIN LINK FENCE

NO SCALE

RSP A85 DATED JUNE 5, 2009 SUPERSEDES STANDARD PLAN A85
DATED MAY 1, 2006 - PAGE 111 OF THE STANDARD PLANS BOOK DATED MAY 2006.

REVISED STANDARD PLAN RSP A85

5-7-09

DIST	COUNTY	ROUTE	POST MILES TOTAL PROJECT	SHEET NO.	TOTAL SHEETS
07	LA	5	4.0/5.9	908	1597

REGISTERED CIVIL ENGINEER

June 5, 2009
PLANS APPROVAL DATE

REGISTERED PROFESSIONAL ENGINEER Glenn DeCou No. C34547 Exp. 9-30-09 CIVIL STATE OF CALIFORNIA

The State of California or its officers or agents shall not be responsible for the accuracy or completeness of electronic copies of this plan sheet.

To accompany plans dated 4-9-12

NOTES:

1. H is 2'-6" for fabric less than 5'-0" high. H is 3'-0" for fabric 5'-0" and over.
2. T is not less than 3 times maximum cross section of post with minimum of 8".
3. Arms with barbed wire to be used where shown on plans.
4. See Revised Standard Plan RSP A85 for Chain Link Fencing dimensions.
5. Reinforcing must comply with ASTM A 706.
6. See Detail A on New Standard Plan NSP A86B for connection at headwall.

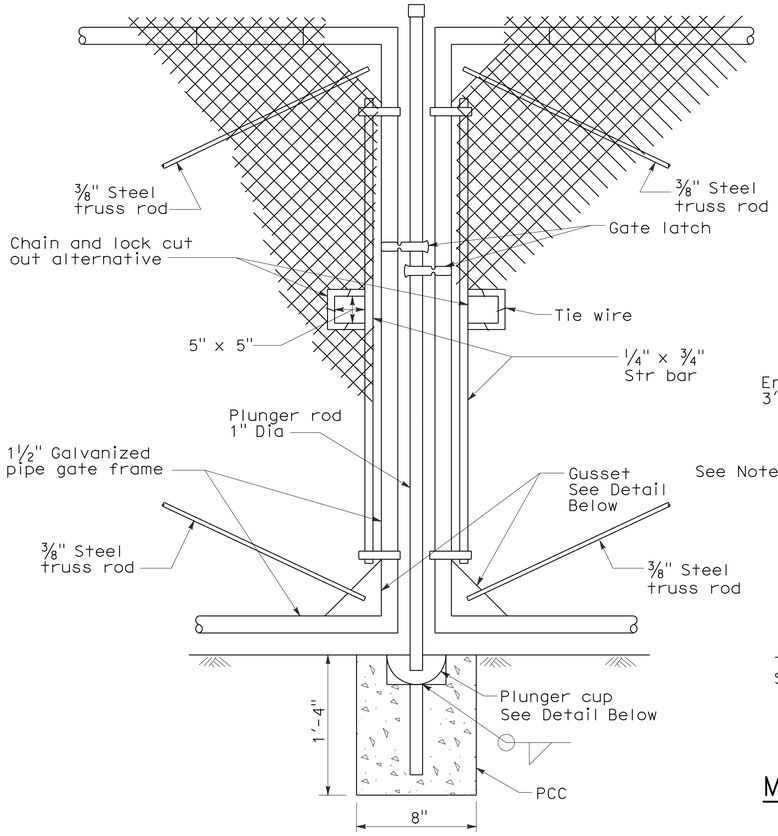

TYPICAL DOUBLE GATE REMOVABLE CENTER POST

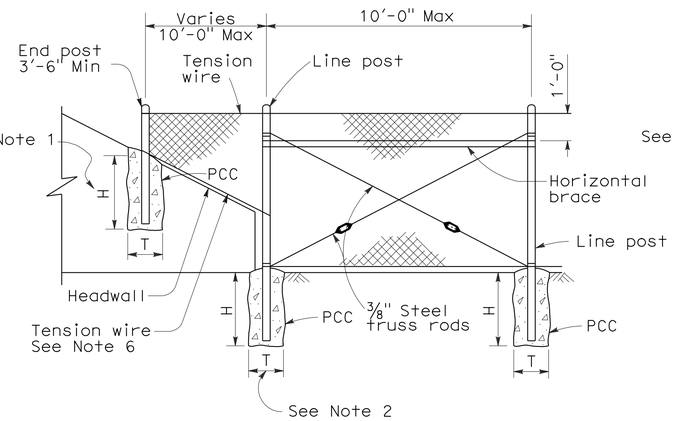

METHOD OF TYING FENCE TO HEADWALL

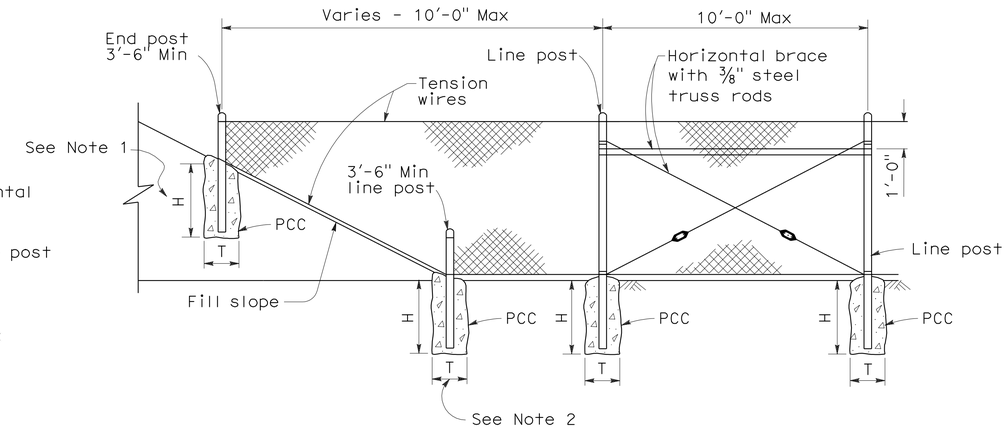

METHOD OF ERECTING FENCE FOR FILL SLOPE

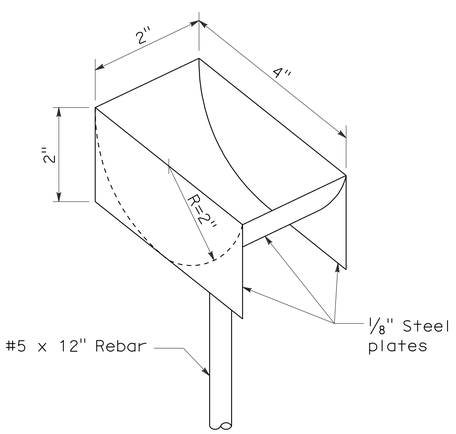

PLUNGER CUP DETAIL

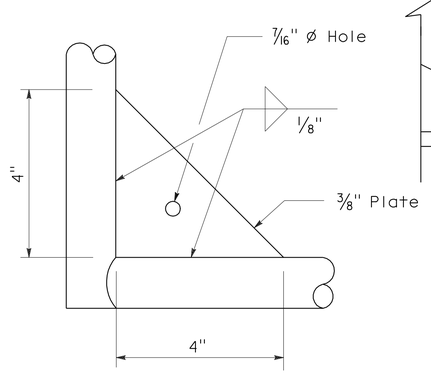

GUSSET DETAIL

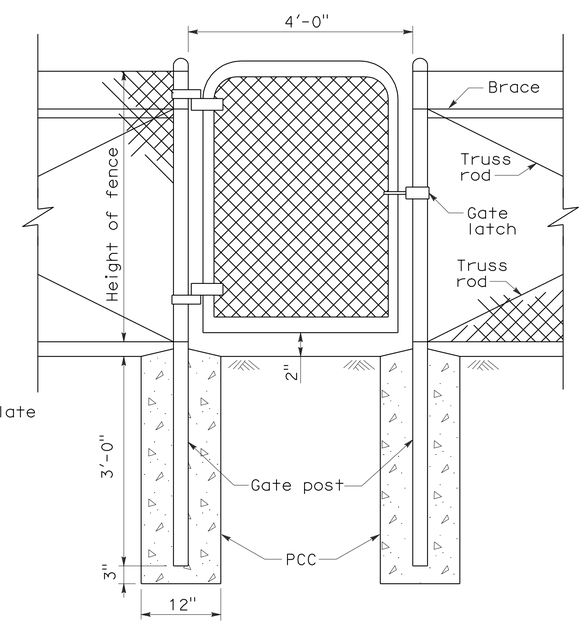

WALK GATE

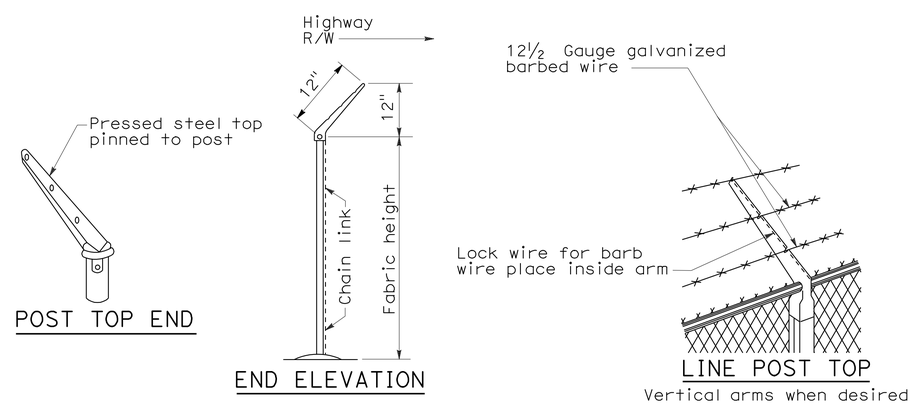

POST TOP END

END ELEVATION

LINE POST TOP
Vertical arms when desired

BARBED WIRE POST TOP
See Note 3

STATE OF CALIFORNIA
DEPARTMENT OF TRANSPORTATION

CHAIN LINK FENCE DETAILS

NO SCALE

NSP A85A DATED JUNE 5, 2009 SUPPLEMENTS THE STANDARD PLANS BOOK DATED MAY 2006.

NEW STANDARD PLAN NSP A85A

2006 NEW STANDARD PLAN NSP A85A

5-7-09

DIST	COUNTY	ROUTE	POST MILES TOTAL PROJECT	SHEET NO.	TOTAL SHEETS
07	LA	5	4.0/5.9	909	1597

REGISTERED CIVIL ENGINEER

June 5, 2009
PLANS APPROVAL DATE

REGISTERED PROFESSIONAL ENGINEER Glenn DeCou No. C34547 Exp. 9-30-09 CIVIL STATE OF CALIFORNIA

The State of California or its officers or agents shall not be responsible for the accuracy or completeness of electronic copies of this plan sheet.

To accompany plans dated 4-9-12

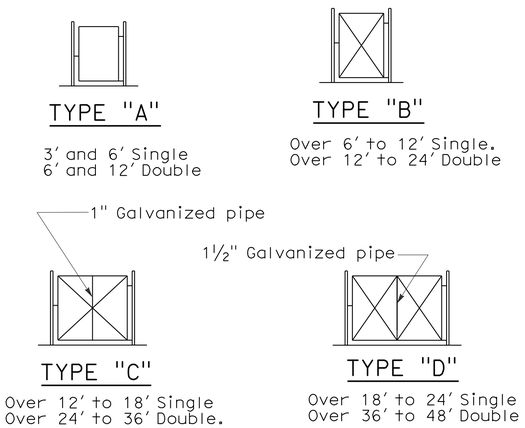

TYPICAL FRAMEWORK SHOWING NUMBER OF BAYS IN GATE

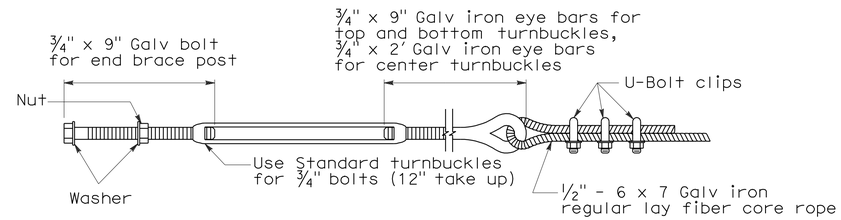

TURNBUCKLE A

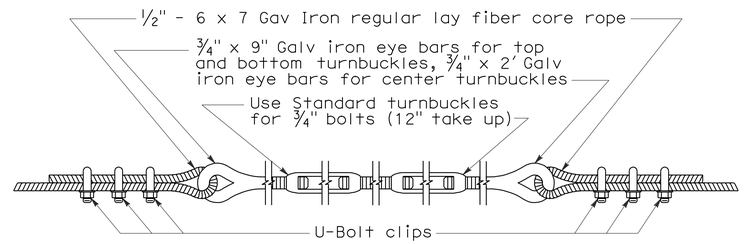

TURNBUCKLE B

NOTES:

1. All material for abutment connection to be galvanized.
2. The chain link fabric shall be replaced by barbed wire strands at 12" maximum centers between the double posts.
3. When the width of the culvert makes it necessary to anchor a post to the top of the culvert, a cast iron shoe or other device approved by the Engineer shall be used.
4. Fencing over stream and around headwall may also use Barbed Wire or Wire Mesh fencing with either wood post or steel post installation.
5. See Revised Standard Plan RSP A85 for Chain Link fence dimensions. See Standard Plan A86 for Barbed Wire and Wire Mesh fence dimensions and for wood post and steel post installation.

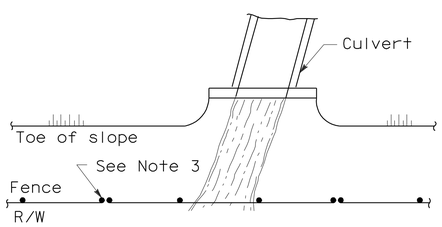

PLAN

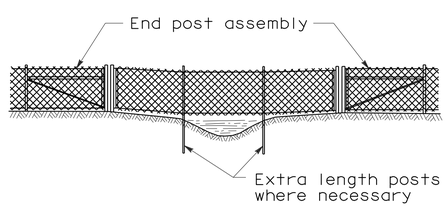

ELEVATION

INSTALLATION OVER STREAM

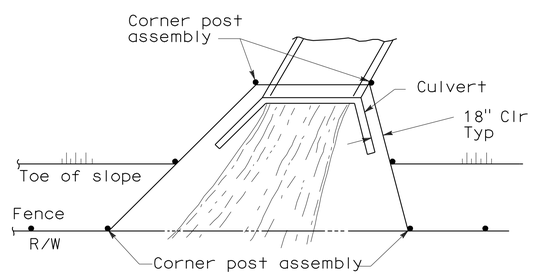

PLAN

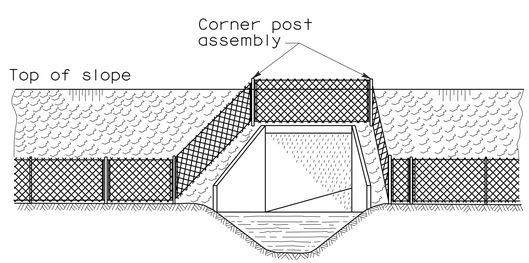

ELEVATION

INSTALLATION AROUND HEADWALL

See Note 4

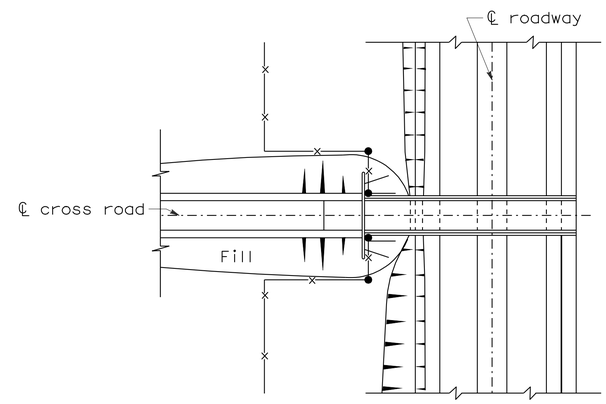

PLAN OF ROADWAY - UNDERPASS

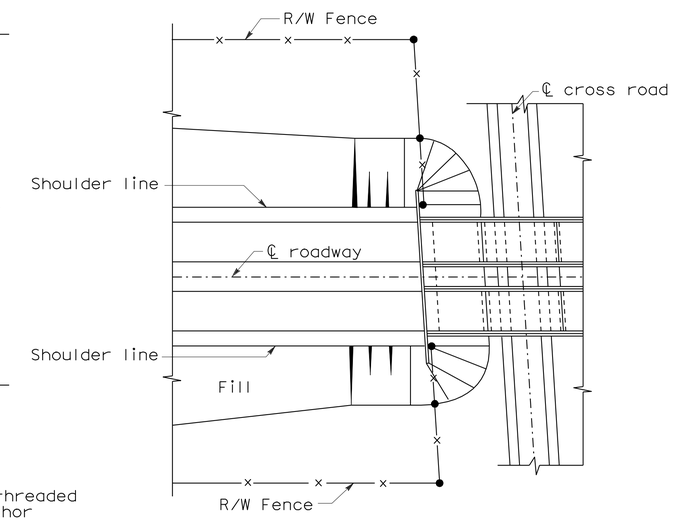

PLAN OF ROADWAY - OVERPASS

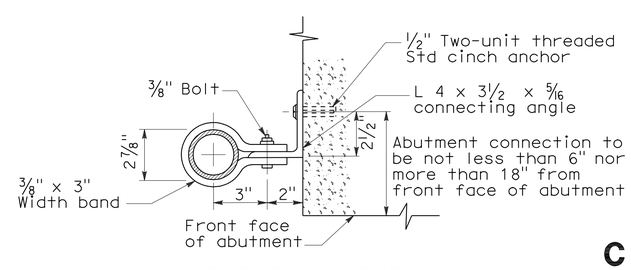

ABUTMENT CONNECTION

TYPICAL INSTALLATION AT BRIDGES

STATE OF CALIFORNIA
DEPARTMENT OF TRANSPORTATION

CHAIN LINK FENCE DETAILS

NO SCALE

NSP A85B DATED JUNE 5, 2009 SUPPLEMENTS THE STANDARD PLANS BOOK DATED MAY 2006.

NEW STANDARD PLAN NSP A85B

2006 NEW STANDARD PLAN NSP A85B

5-12-09

DIST	COUNTY	ROUTE	POST MILES TOTAL PROJECT	SHEET NO.	TOTAL SHEETS
07	LA	5	4.0/5.9	910	1597

William K. Farnbach
REGISTERED CIVIL ENGINEER

May 15, 2009
PLANS APPROVAL DATE

REGISTERED PROFESSIONAL ENGINEER
William K. Farnbach
No. C49042
Exp. 9-30-10
CIVIL
STATE OF CALIFORNIA

The State of California or its officers or agents shall not be responsible for the accuracy or completeness of electronic copies of this plan sheet.

To accompany plans dated 4-9-12

2006 REVISED STANDARD PLAN RSP P1

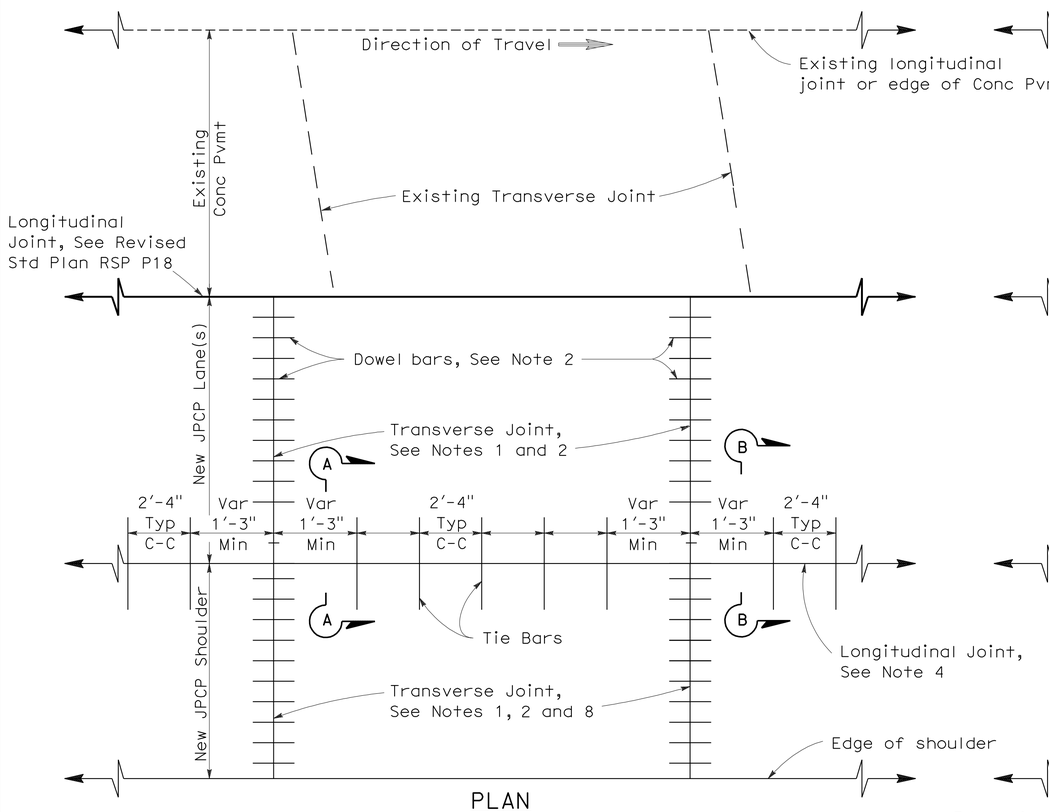

PLAN

LANE/SHOULDER ADDITION OR RECONSTRUCTION

See Notes 6 and 7

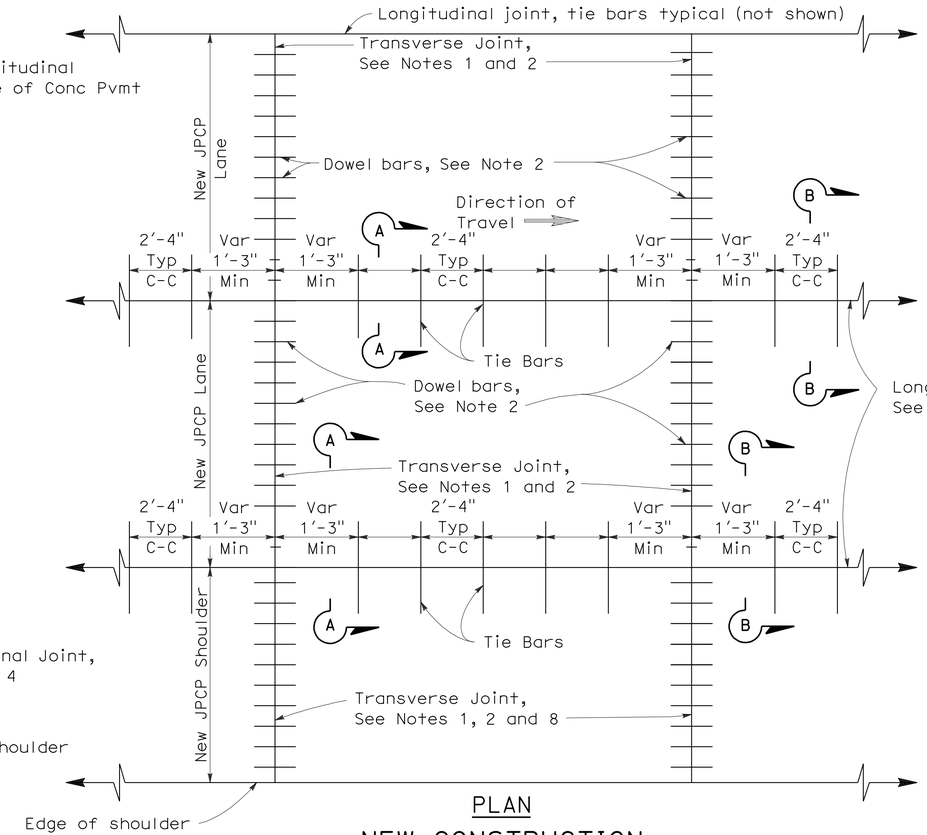

PLAN

NEW CONSTRUCTION

See Notes 6 and 7

NOTES:

1. Transverse joints shall be constructed at right angles to the longitudinal pavement joints in new jointed plain concrete pavement and spaced at successive repeated intervals of 12', 15', 13' and 14'.
2. For transverse joint and dowel bar details not shown, See Revised Standard Plan RSP P10.
3. Construct longitudinal contraction joints as shown in Section A-A when more than one lane or shoulder widths are placed at one time. If constructing one lane at a time, use longitudinal construction joint, as shown in Section B-B.
4. For additional longitudinal joint details, see Revised Standard Plan RSP P18.
5. If fresh concrete is placed adjacent to existing concrete, the top corner of the new hardened concrete does not need to be rounded to the 1/4" radius as shown.
6. Joint spacing patterns do not apply to intersections.
7. Details can also apply to inside widening.
8. Dowel bars may be omitted from shoulders when the shoulder cross slope is not the same as the adjacent traffic lane.

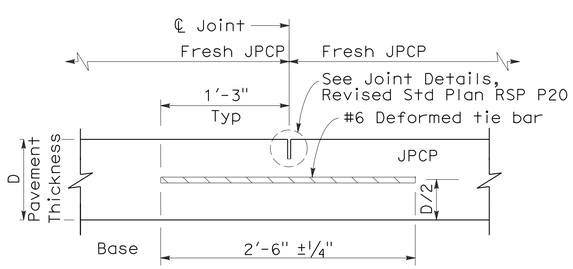

SECTION A-A

LONGITUDINAL CONTRACTION JOINT

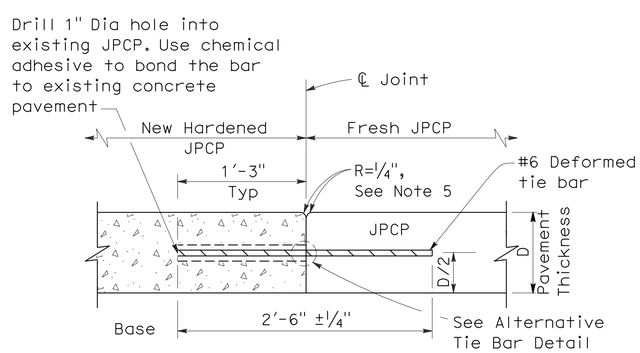

SECTION B-B

LONGITUDINAL CONSTRUCTION JOINT

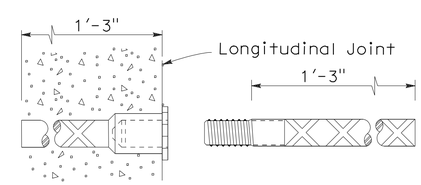

ALTERNATIVE TIE BAR SPLICE DETAIL

(Splice Coupler)

TIE BAR DETAILS

STATE OF CALIFORNIA
DEPARTMENT OF TRANSPORTATION

JOINTED PLAIN CONCRETE PAVEMENT

NO SCALE

RSP P1 DATED MAY 15, 2009 SUPERSEDES STANDARD PLAN P1
DATED MAY 1, 2006 - PAGE 119 OF THE STANDARD PLANS BOOK DATED MAY 2006.

REVISED STANDARD PLAN RSP P1

5-8-09

DIST	COUNTY	ROUTE	POST MILES TOTAL PROJECT	SHEET NO.	TOTAL SHEETS
07	LA	5	4.0/5.9	911	1597

REGISTERED CIVIL ENGINEER

May 15, 2009
PLANS APPROVAL DATE

The State of California or its officers or agents shall not be responsible for the accuracy or completeness of electronic copies of this plan sheet.

REGISTERED PROFESSIONAL ENGINEER — William K. Farnbach — No. C49042 — Exp. 9-30-10 — CIVIL — STATE OF CALIFORNIA

To accompany plans dated 4-9-12

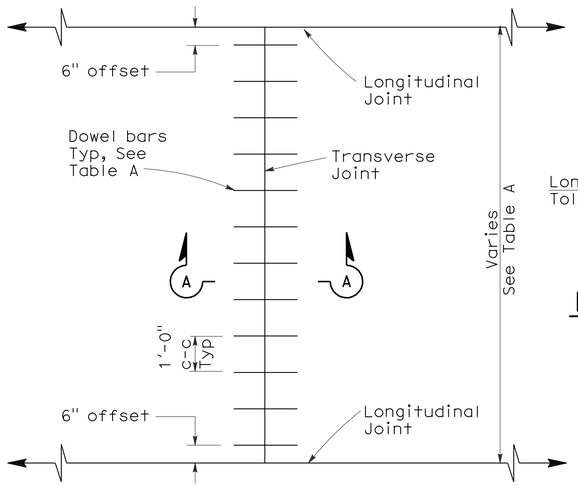

TRANSVERSE JOINT DOWEL BAR LAYOUT

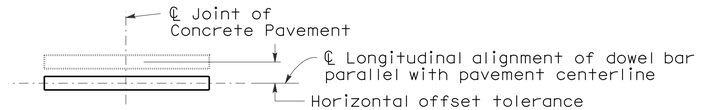

PLAN

HORIZONTAL OFFSET TOLERANCE

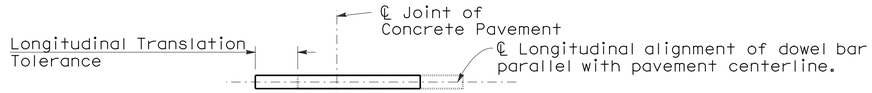

PLAN

LONGITUDINAL TRANSLATION TOLERANCE

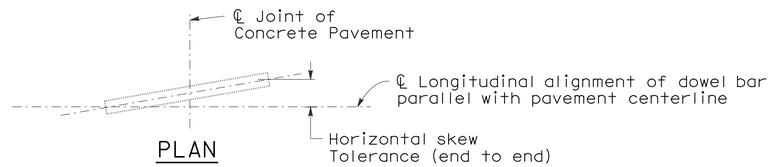

PLAN

HORIZONTAL SKEW TOLERANCE

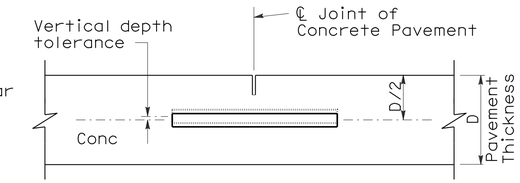

ELEVATION

VERTICAL DEPTH TOLERANCE

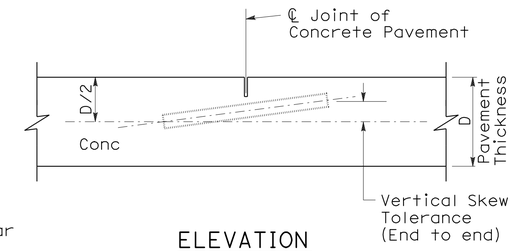

ELEVATION

VERTICAL SKEW TOLERANCE

NOTES:

1. See Revised Standard Plan RSP P1 for typical dowel bar placement and locations.
2. 1½" Dia smooth dowel bars are to be used with a pavement thickness, D, equal to or greater than 0.70 feet. For pavement thickness, D, less than 0.70 feet, use 1¼" Dia smooth dowel bars.
3. For widths not shown, see Project Plans.
4. If fresh concrete pavement is placed adjacent to existing concrete pavement, the top corner of the existing concrete pavement does not need to be rounded to the ¼" radius, as shown.

TABLE A (See Note 3)

Dowel Bar Transverse Spacing Table	
Width between Longitudinal Joints	Number of Dowels between Longitudinal Joints
14'-0"	14
13'-0"	13
12'-0"	12
11'-0"	11
10'-0"	10
8'-0"	8
5'-0"	5
4'-0"	4

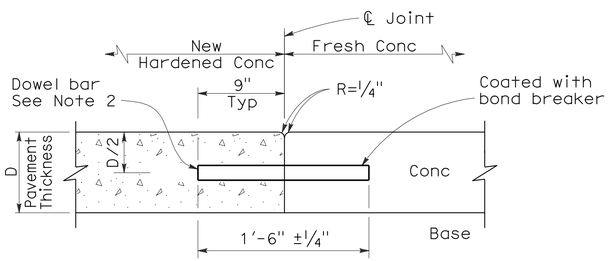

SECTION A-A

TRANSVERSE CONSTRUCTION JOINT DETAIL

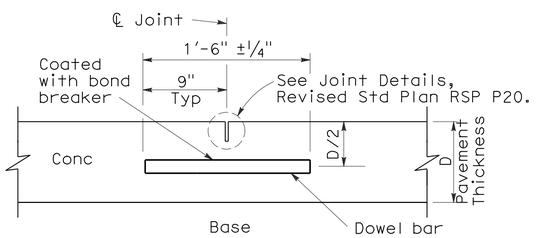

TRANSVERSE CONTRACTION JOINT

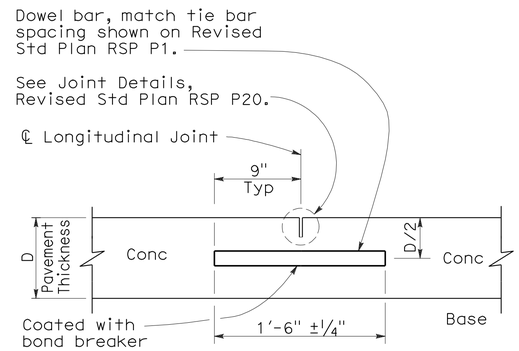

LONGITUDINAL CONTRACTION JOINT WITH DOWEL BARS

(See Revised Std Plan RSP P18)

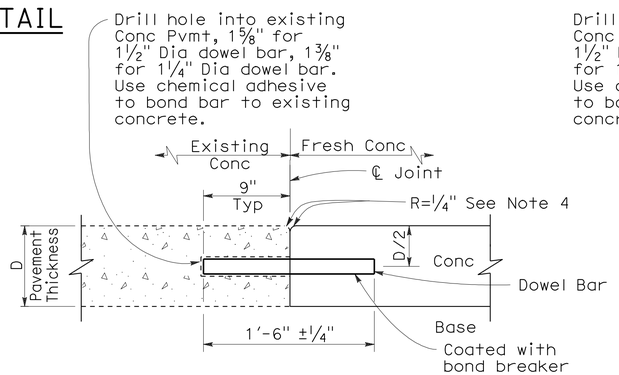

TRANSVERSE CONSTRUCTION JOINT FOR EXISTING CONCRETE PAVEMENT

(Drill and bond locations)

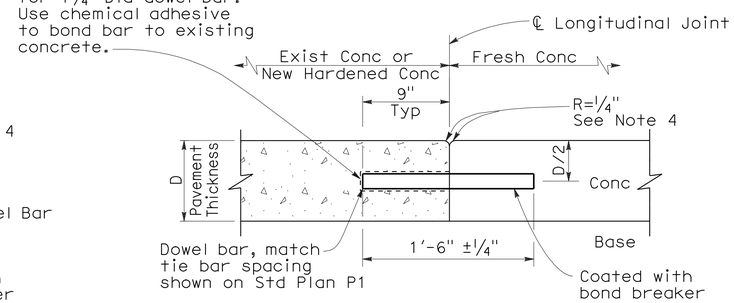

LONGITUDINAL CONSTRUCTION JOINT WITH DOWEL BARS

(See Revised Std Plan RSP P18)

STATE OF CALIFORNIA
DEPARTMENT OF TRANSPORTATION

CONCRETE PAVEMENT-DOWEL BAR DETAILS

NO SCALE

RSP P10 DATED MAY 15, 2009 SUPERSEDES STANDARD PLAN P10 DATED MAY 1, 2006 - PAGE 124 OF THE STANDARD PLANS BOOK DATED MAY 2006.

REVISED STANDARD PLAN RSP P10

2006 REVISED STANDARD PLAN RSP P10

5-8-09

DIST	COUNTY	ROUTE	POST MILES TOTAL PROJECT	SHEET NO.	TOTAL SHEETS
07	LA	5	4.0/5.9	912	1597

William K. Farnbach
REGISTERED CIVIL ENGINEER

May 15, 2009
PLANS APPROVAL DATE

REGISTERED PROFESSIONAL ENGINEER
William K. Farnbach
No. C49042
Exp. 9-30-10
CIVIL
STATE OF CALIFORNIA

The State of California or its officers or agents shall not be responsible for the accuracy or completeness of electronic copies of this plan sheet.

To accompany plans dated 4-9-12

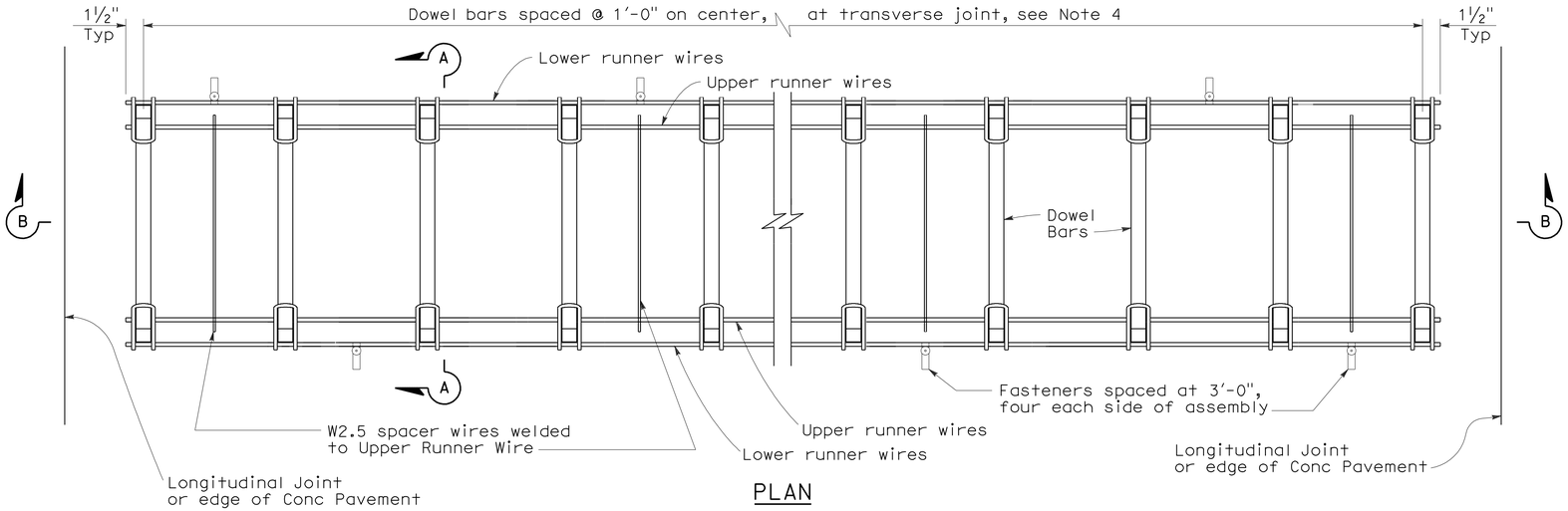

PLAN

DOWEL BAR BASKET (TRANSVERSE JOINT)

See Note 1

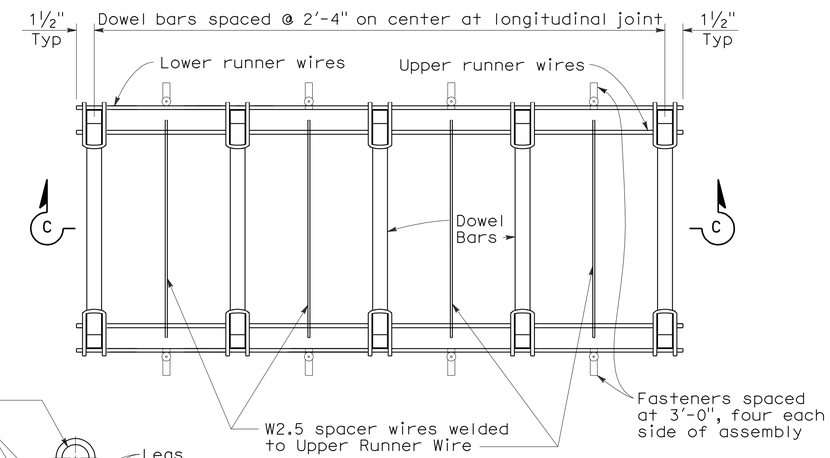

PLAN

DOWEL BAR BASKET (LONGITUDINAL JOINT)

See Note 1

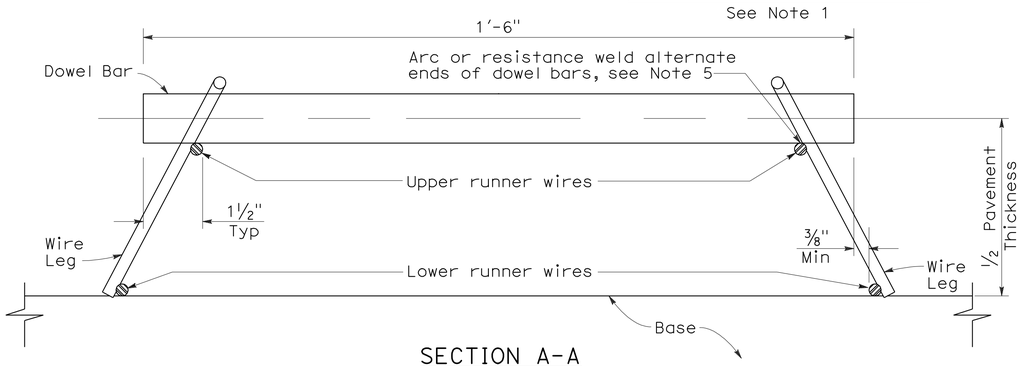

SECTION A-A

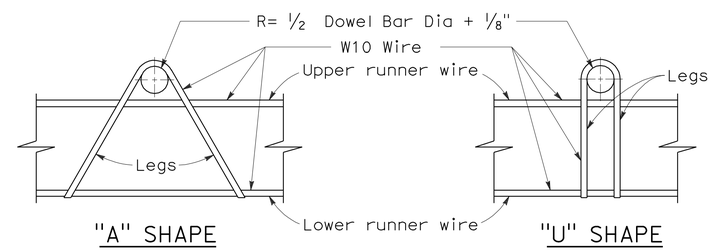

ASSEMBLY FRAME DETAILS

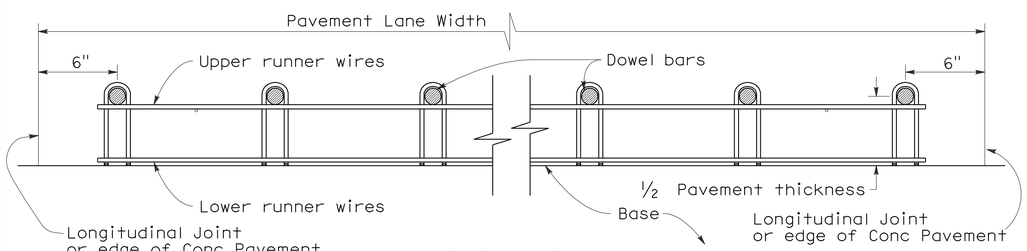

SECTION B-B

See Note 1

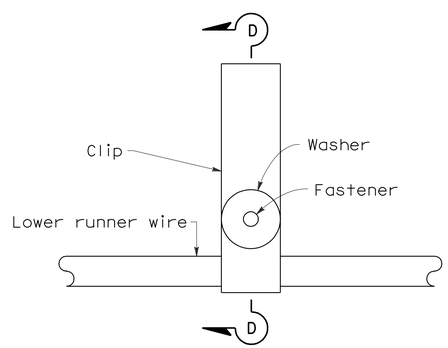

PLAN

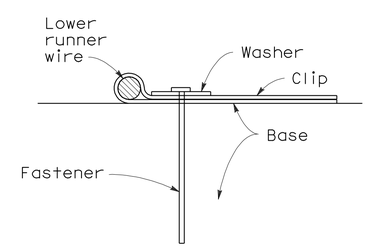

SECTION D-D

FASTENER DETAIL

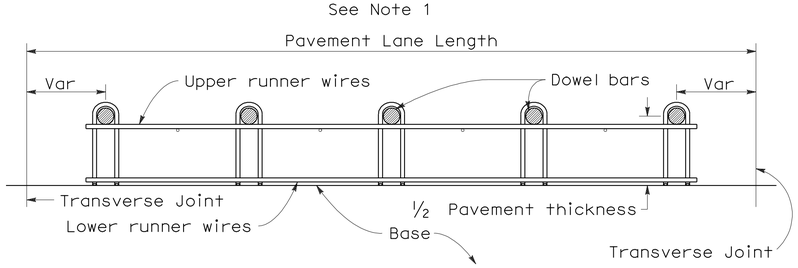

SECTION C-C

See Notes 1 and 4

NOTES:

1. "U" frame shape assembly shown. "U" frame shape or "A" frame shape are acceptable.
2. Wire sizes shown are minimum required.
3. All wire intersections are to be resistance welded.
4. Use tie bar spacing for longitudinal dowel bar locations. See Revised Std Plans RSPs P1, P2, and P3 for tie bar requirements.
5. Weld may be at top or bottom of dowel bar.

STATE OF CALIFORNIA
DEPARTMENT OF TRANSPORTATION

CONCRETE PAVEMENT-DOWEL BAR BASKET DETAILS

NO SCALE

RSP P12 DATED MAY 15, 2009 SUPERSEDES RSP P12 DATED NOVEMBER 17, 2006 AND STANDARD PLAN P12 DATED MAY 1, 2006 - PAGE 125 OF THE STANDARD PLANS BOOK DATED MAY 2006.

REVISED STANDARD PLAN RSP P12

2006 REVISED STANDARD PLAN RSP P12

5-8-09

DIST	COUNTY	ROUTE	POST MILES TOTAL PROJECT	SHEET NO.	TOTAL SHEETS
07	LA	5	4.0/5.9	913	1597

William K. Farnbach
REGISTERED CIVIL ENGINEER

May 15, 2009
PLANS APPROVAL DATE

REGISTERED PROFESSIONAL ENGINEER
William K. Farnbach
No. C49042
Exp. 9-30-10
CIVIL
STATE OF CALIFORNIA

The State of California or its officers or agents shall not be responsible for the accuracy or completeness of electronic copies of this plan sheet.

To accompany plans dated 4-9-12

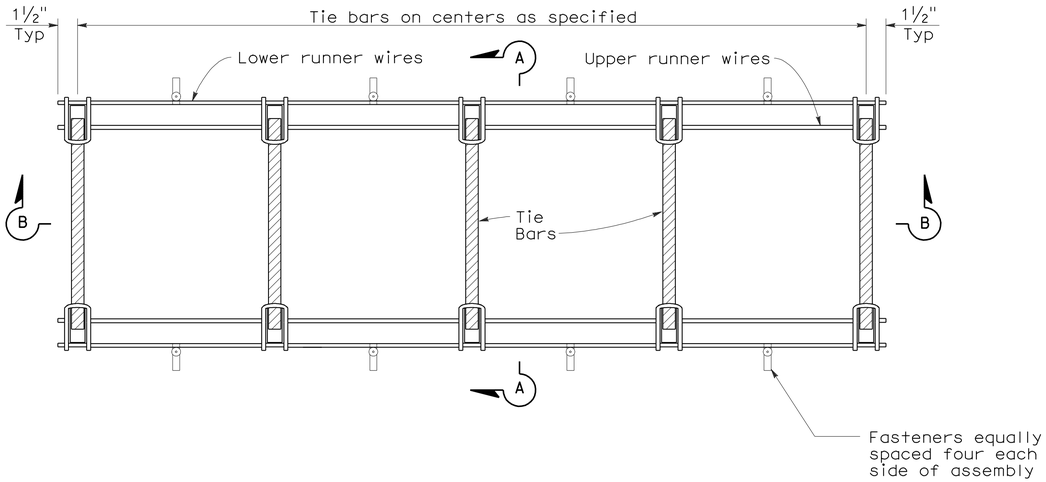

PLAN

TIE BAR BASKET

(TIE BARS AT LONGITUDINAL JOINT)
See Note 1

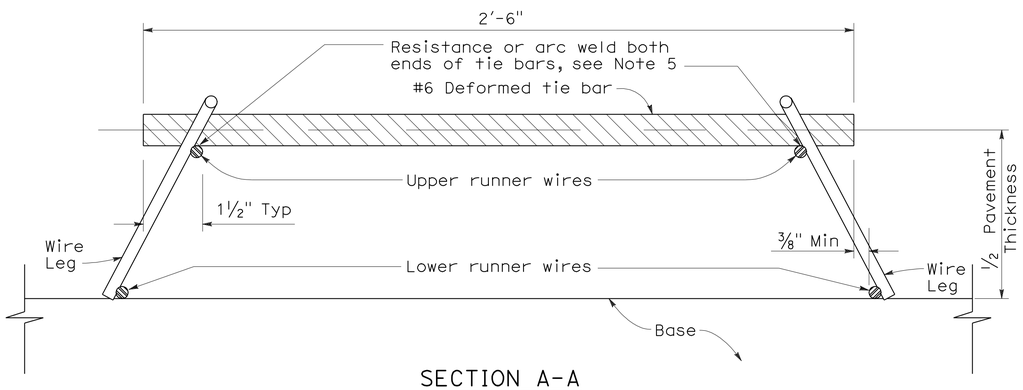

SECTION A-A

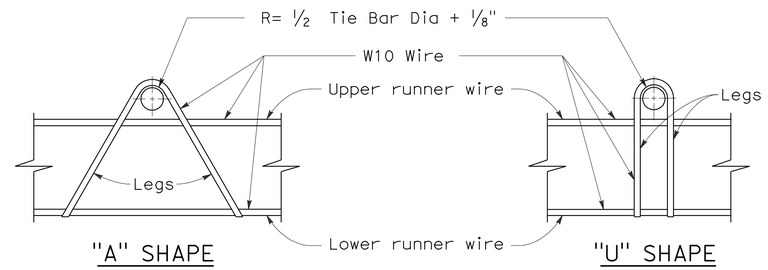

ASSEMBLY FRAME DETAILS

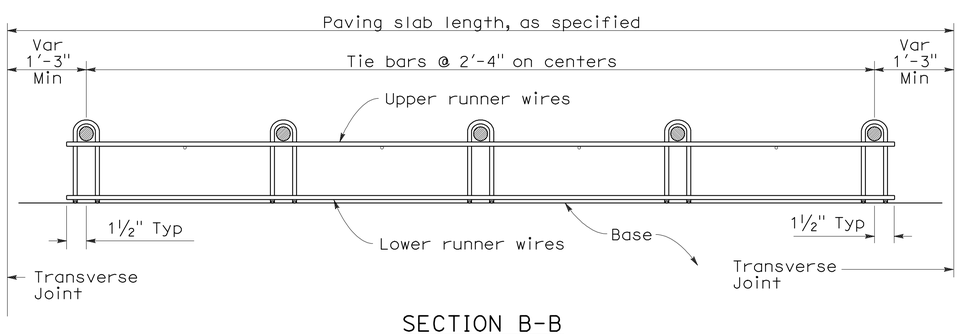

SECTION B-B
See Note 1

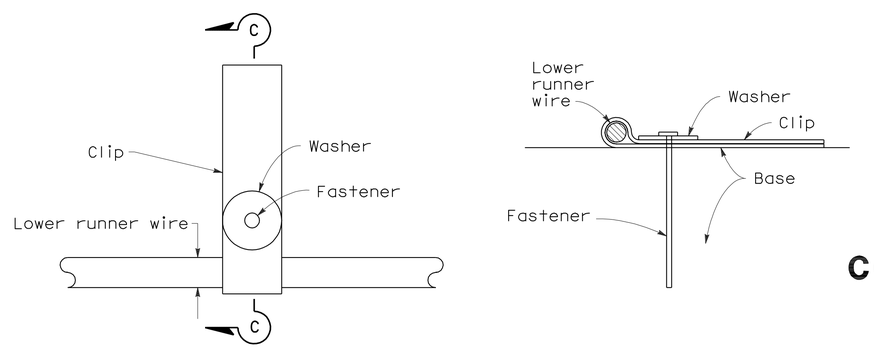

PLAN

SECTION C-C

FASTENER DETAIL

NOTES:

1. "U" frame shape assembly shown. "U" frame shape or "A" frame shape are acceptable.
2. Wire sizes shown are minimum required.
3. All wire intersections are to be resistance welded.
4. Not for use on nondoweled skewed jointed plain concrete pavement.
5. Weld may be at top or bottom of tie bar.

STATE OF CALIFORNIA
DEPARTMENT OF TRANSPORTATION

CONCRETE PAVEMENT-TIE BAR BASKET DETAILS

NO SCALE

RSP P17 DATED MAY 15, 2009 SUPERSEDES RSP P17 DATED NOVEMBER 17, 2006 AND STANDARD PLAN P17 DATED MAY 1, 2006 - PAGE 126 OF THE STANDARD PLANS BOOK DATED MAY 2006.

REVISED STANDARD PLAN RSP P17

2006 REVISED STANDARD PLAN RSP P17

5-8-09

DIST	COUNTY	ROUTE	POST MILES TOTAL PROJECT	SHEET NO.	TOTAL SHEETS
07	LA	5	4.0/5.9	914	1597

REGISTERED CIVIL ENGINEER

June 5, 2009
PLANS APPROVAL DATE

REGISTERED PROFESSIONAL ENGINEER — William K. Farnbach — No. C49042 — Exp. 9-30-10 — CIVIL — STATE OF CALIFORNIA

The State of California or its officers or agents shall not be responsible for the accuracy or completeness of electronic copies of this plan sheet.

To accompany plans dated 4-9-12

2006 REVISED STANDARD PLAN RSP P18

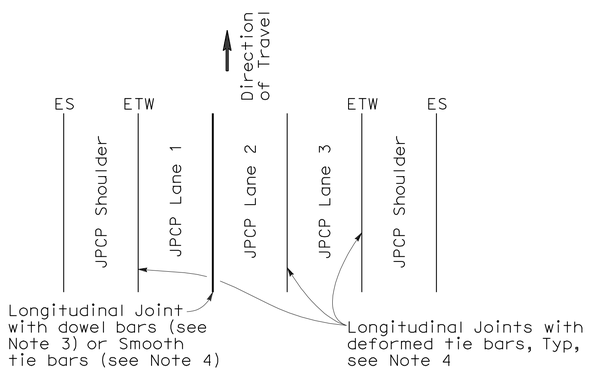

3 LANES WITH TIED CONCRETE SHOULDERS
PLAN

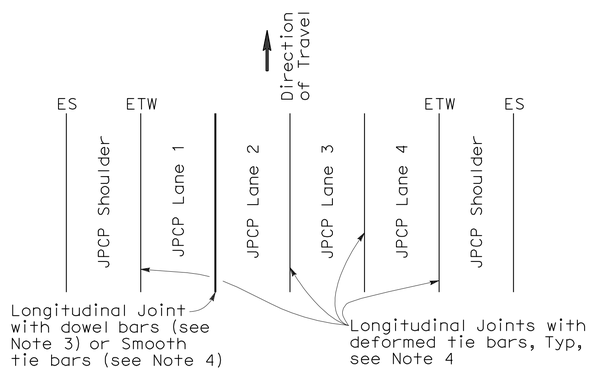

4 LANES WITH TIED CONCRETE SHOULDERS
PLAN

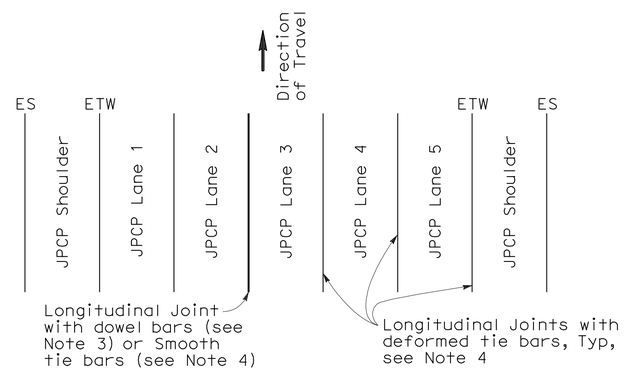

5 LANES WITH TIED CONCRETE SHOULDERS
PLAN

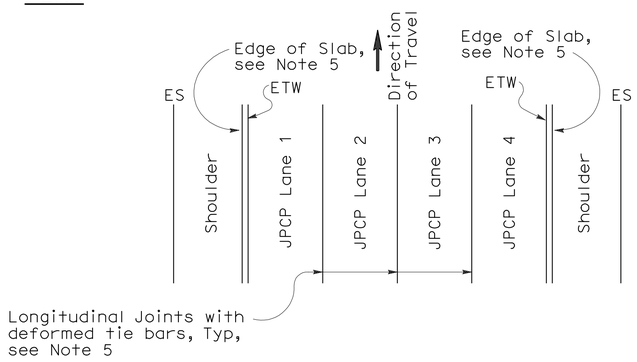

4 LANES OR LESS WITH WIDENED SLAB
PLAN

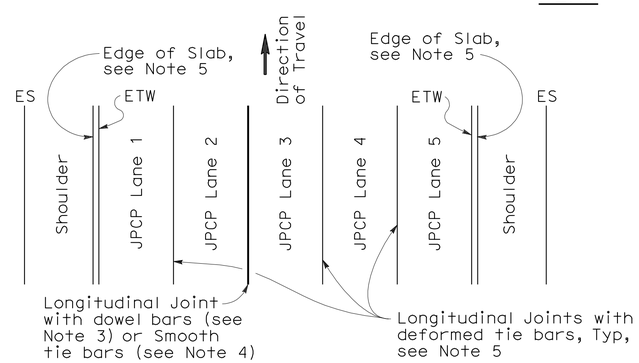

5 LANES WITH WIDENED SLAB
PLAN

NEW CONSTRUCTION
Location of Longitudinal Joints
(For JPCP)

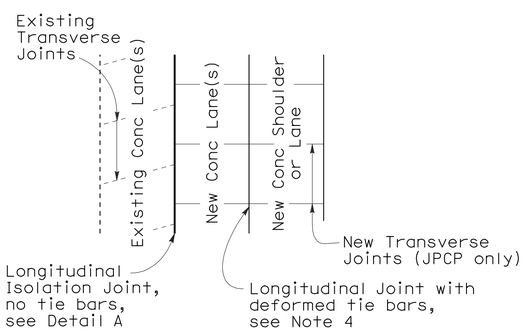

CASE 1
PLAN

Transverse Joints do not align between new and existing

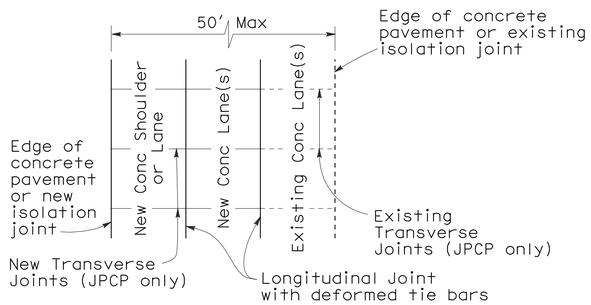

CASE 2
PLAN

Transverse Joints align between new and existing

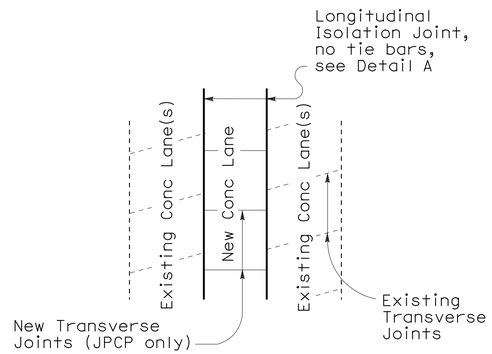

CASE 3 (INTERIOR LANE REPLACEMENT)
PLAN

Transverse Joints do not align between new and existing

LANE/SHOULDER ADDITION OR RECONSTRUCTION
(For JPCP and CRCP)

NOTES:

1. Where Lean Concrete Base is not used as base material, the joint filler material used for the longitudinal isolation joint shall only extend to the bottom of the new concrete slab. See Detail A.
2. Use 5/8" ±1/16" dimension for silicone sealant.
3. See Revised Standard Plan RSP P10 for longitudinal joint with dowel bars.
4. See Revised Standard Plan RSP P1.
5. See Revised Standard Plan RSP P2.

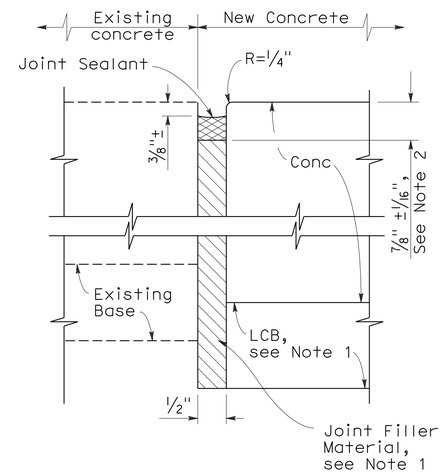

DETAIL A
ISOLATION JOINT

STATE OF CALIFORNIA
DEPARTMENT OF TRANSPORTATION

CONCRETE PAVEMENT-LANE SCHEMATICS AND ISOLATION JOINT DETAIL

NO SCALE

RSP P18 DATED JUNE 5, 2009 SUPERSEDES RSP P18 DATED MAY 15, 2009, RSP P18 DATED NOVEMBER 17, 2006 AND STANDARD PLAN P18 DATED MAY 1, 2006 - PAGE 127 OF THE STANDARD PLANS BOOK DATED MAY 2006.

REVISED STANDARD PLAN RSP P18

5-14-09

NOTE:

1. Tie bars, dowel bars, and reinforcement are not shown in joint seal details, see Revised Standard Plans RSP P1, RSP P3, RSP P10, RSP P35, RSP P45, or RSP P46 as applicable.

DIST	COUNTY	ROUTE	POST MILES TOTAL PROJECT	SHEET NO.	TOTAL SHEETS
07	LA	5	4.0/5.9	915	1597

REGISTERED CIVIL ENGINEER

May 15, 2009
PLANS APPROVAL DATE

REGISTERED PROFESSIONAL ENGINEER William K. Farnbach No. C49042 Exp. 9-30-10 CIVIL STATE OF CALIFORNIA

The State of California or its officers or agents shall not be responsible for the accuracy or completeness of electronic copies of this plan sheet.

To accompany plans dated 4-9-12

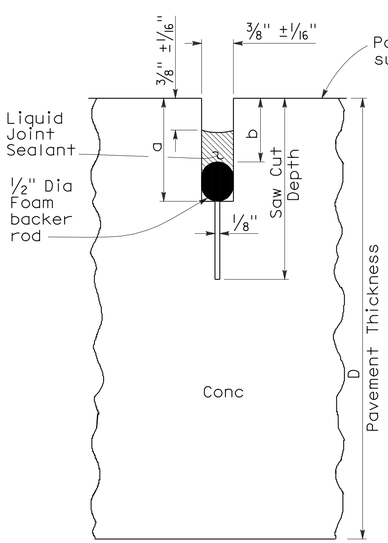

LIQUID SEALANT

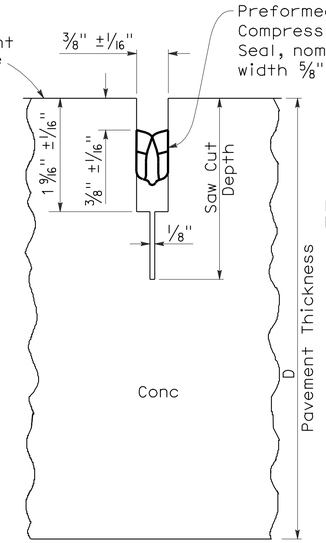

COMPRESSION SEAL

TYPE A1

Transverse Contraction Joints

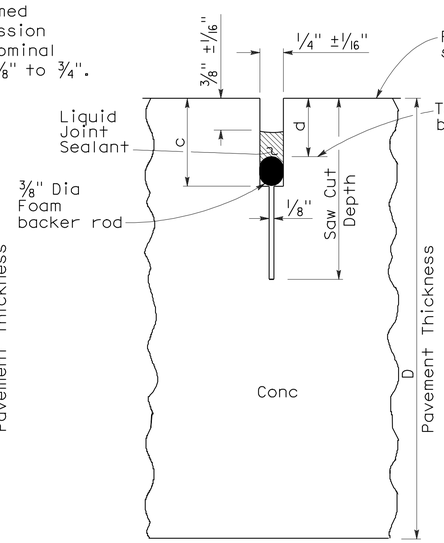

LIQUID SEALANT

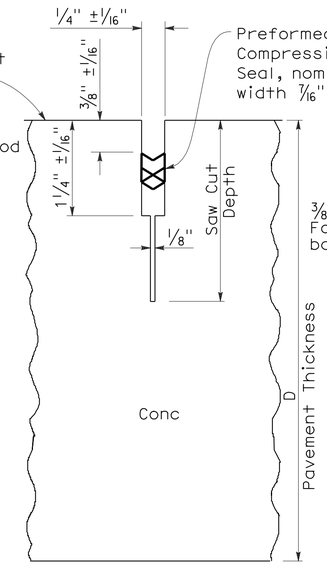

COMPRESSION SEAL

TYPE A2

Longitudinal Contraction Joints

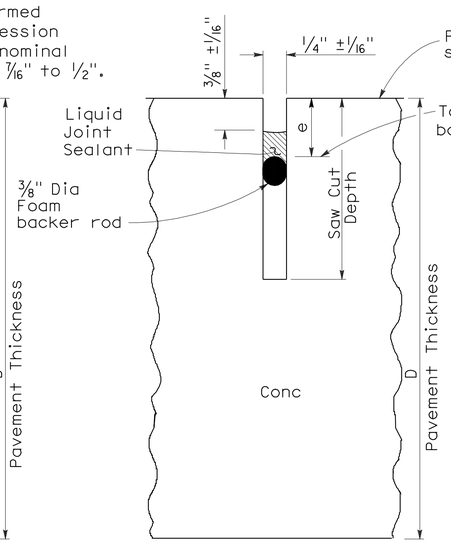

LIQUID SEALANT

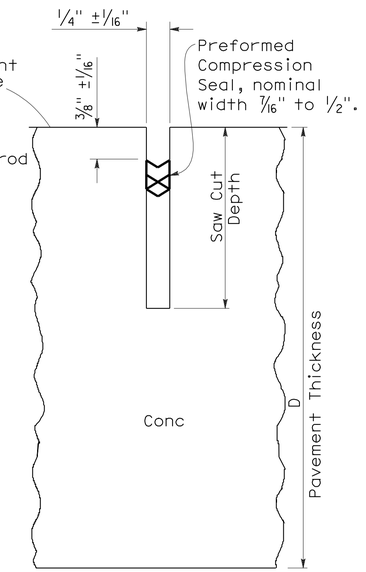

COMPRESSION SEAL

TYPE B

Longitudinal or Transverse Contraction Joint

LIQUID SEALANT RESERVOIR DEPTH

LIQUID SEALANT MATERIAL	3/8" Joint Width Type A1		1/4" Joint Width Type A2		1/4" Joint Width Type B
	DIMENSION		DIMENSION		DIMENSION
	a	b	c	d	e
SILCONE	1" ±1/16"	5/8" ±1/16"	15/16" ±1/16"	9/16" ±1/16"	9/16" ±1/16"
ASPHALT RUBBER	1 3/16" ±1/16"	3/4" ±1/16"	1 1/16" ±1/16"	11/16" ±1/16"	11/16" ±1/16"

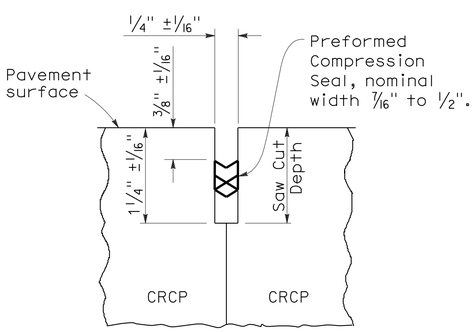

COMPRESSION SEAL

TYPE C

Transverse and Longitudinal Construction Joints (For CRCP)

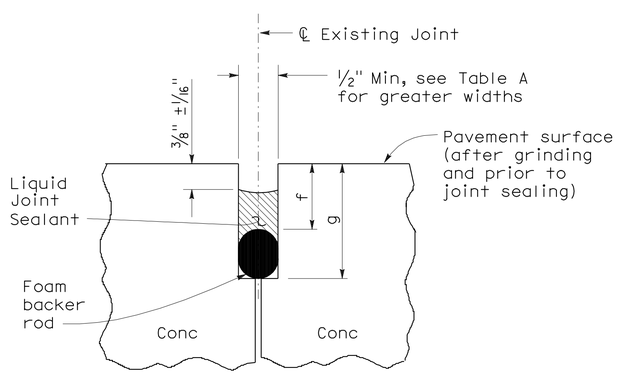

LIQUID SEALANT

TYPE R

Retrofit Transverse and Longitudinal Joints

TABLE A (TYPE R JOINT)

Sawn Joint Width	Backer Rod Diameter ± 1/16"	DIMENSION "f"	DIMENSION "g"
1"	1 5/16"	7/8"	2 1/4"
7/8"	1 3/16"	13/16"	2"
3/4"	1"	3/4"	1 3/4"
5/8"	7/8"	11/16"	1 1/2"
1/2"	11/16"	5/8"	1 1/4"

STATE OF CALIFORNIA
DEPARTMENT OF TRANSPORTATION

CONCRETE PAVEMENT-JOINT DETAILS

NO SCALE

RSP P20 DATED MAY 15, 2009 SUPERSEDES STANDARD PLAN P20
DATED MAY 1, 2006 - PAGE 128 OF THE STANDARD PLANS BOOK DATED MAY 2006.

REVISED STANDARD PLAN RSP P20

2006 REVISED STANDARD PLAN RSP P20

5-8-09

DIST	COUNTY	ROUTE	POST MILES TOTAL PROJECT	SHEET NO.	TOTAL SHEETS
07	LA	5	4.0/5.9	916	1597

REGISTERED CIVIL ENGINEER

May 15, 2009
PLANS APPROVAL DATE

The State of California or its officers or agents shall not be responsible for the accuracy or completeness of electronic copies of this plan sheet.

REGISTERED PROFESSIONAL ENGINEER — William K. Farnbach — No. C49042 — Exp. 9-30-10 — CIVIL — STATE OF CALIFORNIA

To accompany plans dated 4-9-12

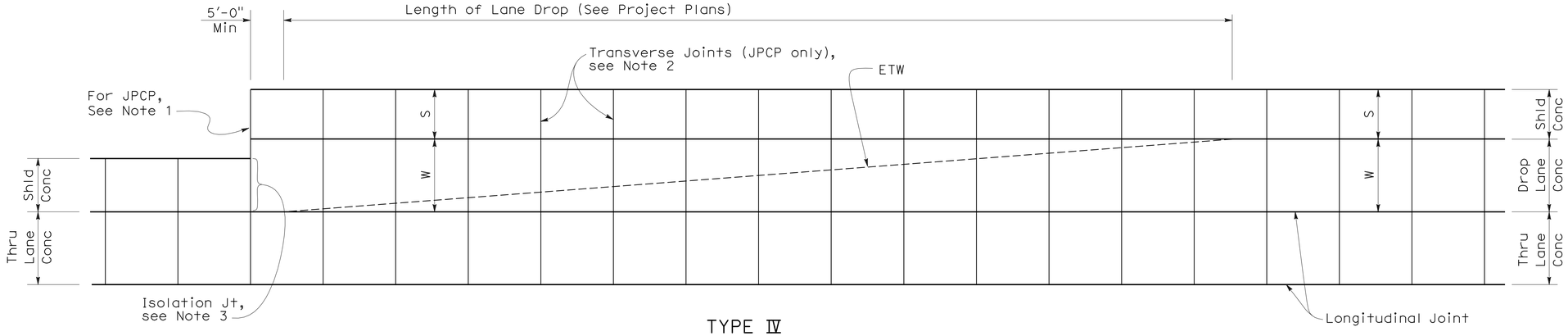

TYPE Ⅳ

JOINTED PLAIN AND CONTINUOUSLY REINFORCED CONCRETE PAVEMENT

(See Revised Std Plans RSP P1, RSP P2, or New Std Plan NSP P4 for details not shown)

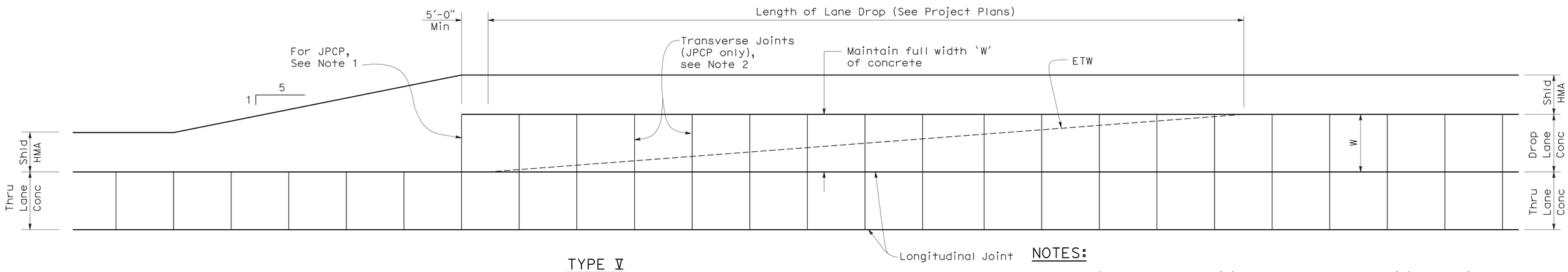

TYPE Ⅴ

JOINTED PLAIN AND CONTINUOUSLY REINFORCED CONCRETE PAVEMENT

(See Revised Std Plans RSP P1, RSP P2, or New Std Plan NSP P4 for details not shown)

NOTES:

1. Location of transverse joint to match transverse joint of adjacent lane.
2. Place transverse joint of lane and shoulder perpendicular to longitudinal joint of through lane.
3. Isolation joint detail shown on Revised Standard Plan RSP P18.

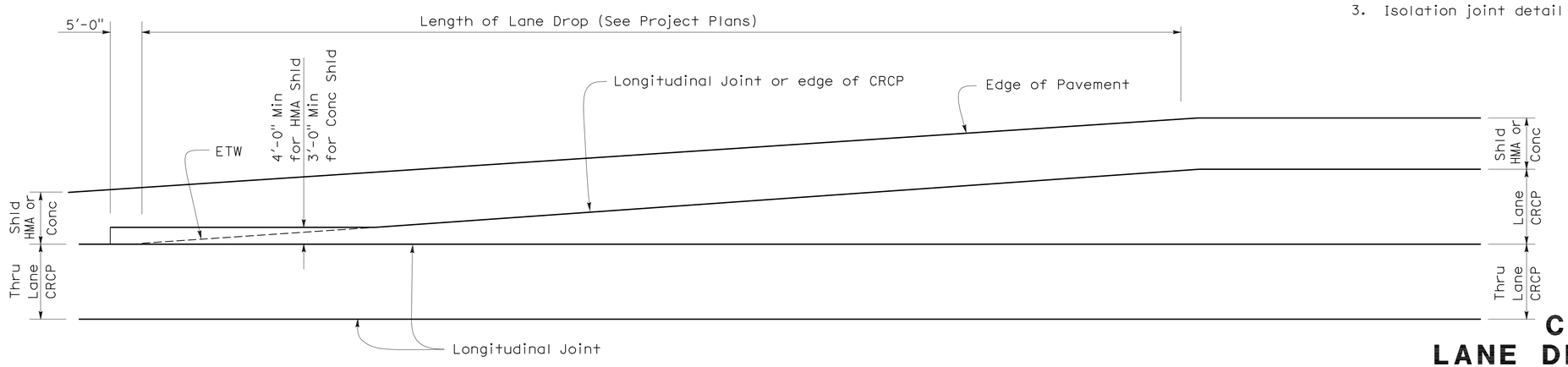

TYPE Ⅵ

CONTINUOUSLY REINFORCED CONCRETE PAVEMENT

(See New Std Plan NSP P4 for details not shown)

LEGEND

S - Shoulder width
W - Lane width

STATE OF CALIFORNIA
DEPARTMENT OF TRANSPORTATION

CONCRETE PAVEMENT-
LANE DROP PAVING DETAILS No. 2

NO SCALE

NSP P34 DATED MAY 15, 2009 SUPPLEMENTS THE STANDARD PLANS BOOK DATED MAY 2006.

NEW STANDARD PLAN NSP P34

2006 NEW STANDARD PLAN NSP P34

5-8-09

DIST	COUNTY	ROUTE	POST MILES TOTAL PROJECT	SHEET NO.	TOTAL SHEETS
07	LA	5	4.0/5.9	917	1597

William K. Farnbach
REGISTERED CIVIL ENGINEER

May 15, 2009
PLANS APPROVAL DATE

REGISTERED PROFESSIONAL ENGINEER
William K. Farnbach
No. C49042
Exp. 9-30-10
CIVIL
STATE OF CALIFORNIA

The State of California or its officers or agents shall not be responsible for the accuracy or completeness of electronic copies of this plan sheet.

To accompany plans dated 4-9-12

2006 REVISED STANDARD PLAN RSP P35

NOTES:

1. Details for gore area paving are applicable to both exit and entrance ramps.
2. Transverse Joint Layouts are not shown. Refer to Revised Standard Plan RSP P1 or Project Plans for details regarding joint layouts, tie bars, and dowel bars not shown.
3. WWF 4 x 4 - W4.0 x W4.0 can be used in place of steel reinforcement for gore area paving only.
4. Omit longitudinal joint when concrete on ramp shoulder is less than 3'-0".
5. Place joint perpendicular to ramp longitudinal joints. Match location of joint with ramp transverse joints.
6. Place joint perpendicular to ramp longitudinal joints. Match location of joint with mainline transverse joints.
7. Isolation joint detail shown on Revised Standard Plan RSP P18.
8. For jointed plain concrete pavement, transverse joints to be spaced from fixed transverse joint and shall follow spacing pattern on Revised Standard Plan RSP P1. Minimum spacing shall be 6 feet.

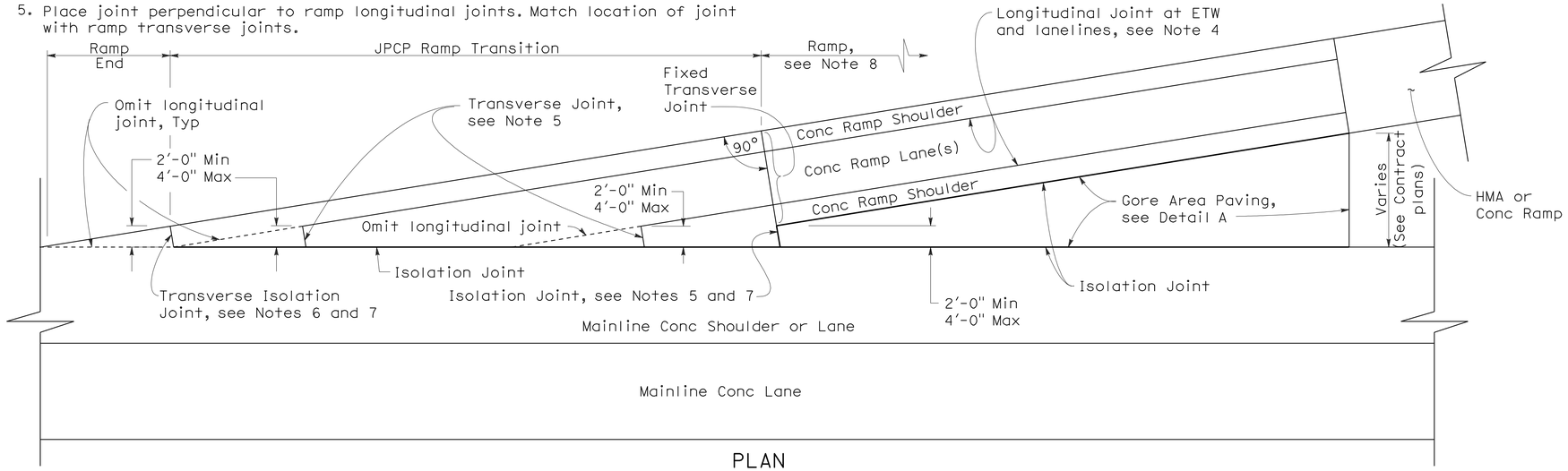

PLAN

RAMP TRANSITION DETAIL

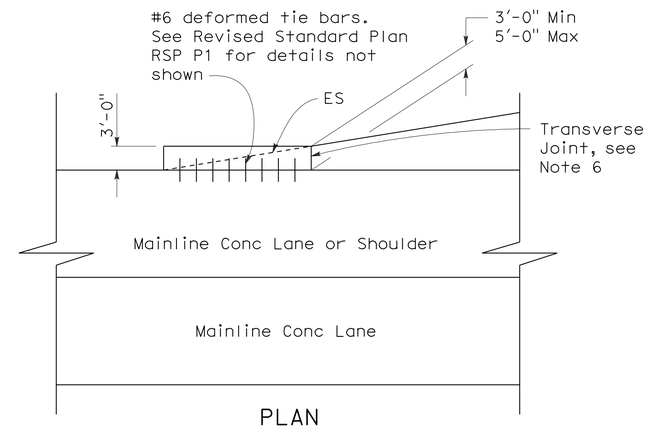

PLAN

ALTERNATE RAMP END DETAIL

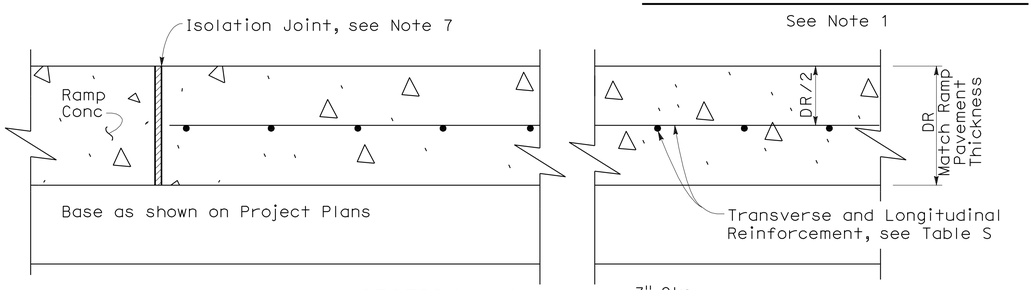

SECTION A-A

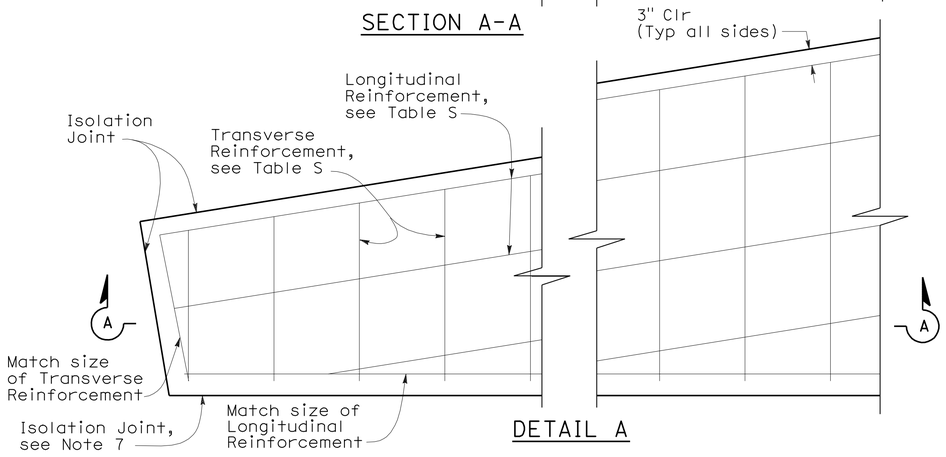

DETAIL A

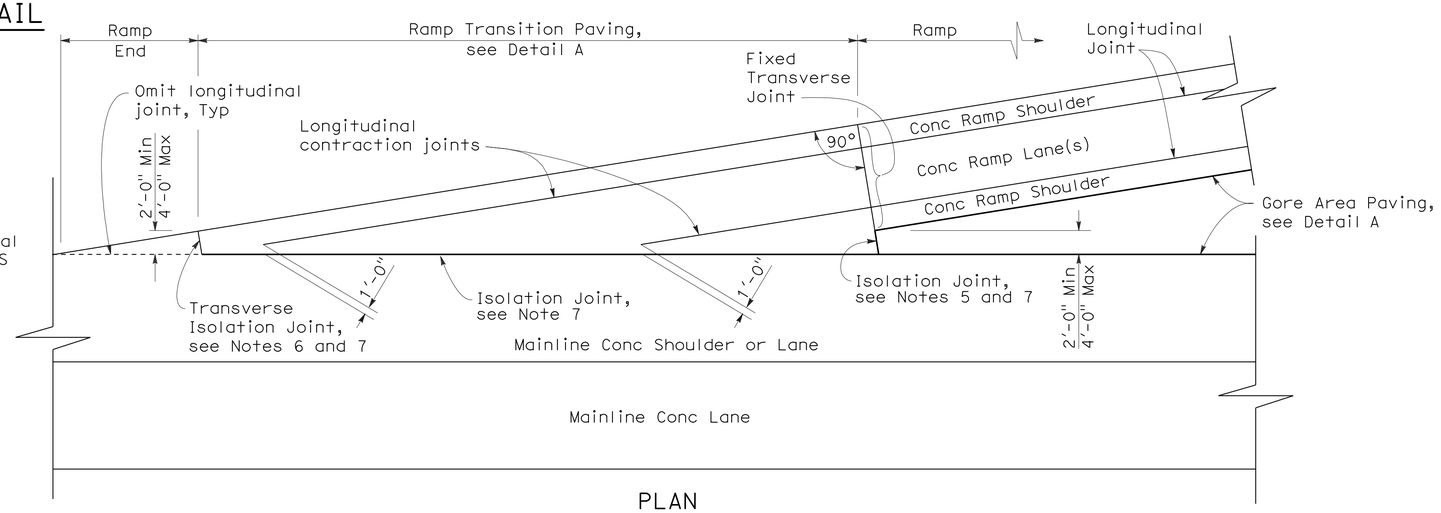

PLAN

ALTERNATE RAMP TRANSITION DETAIL

(For JPCP and CRCP)

TABLE S

Location	Transverse Reinf	Longitudinal Reinf
Gore Area Paving	#4 @ 1'-0" *	#4 @ 1'-0" *
Ramp Transition (JPCP)	#6 @ 1'-6"	#6 @ 9"
Ramp Transition (CRCP)	See NSP P4, Table No. 2	See NSP P4, Table No. 1

* See Note 3

STATE OF CALIFORNIA
DEPARTMENT OF TRANSPORTATION

CONCRETE PAVEMENT-RAMP TRANSITION PAVING DETAILS

NO SCALE

RSP P35 DATED MAY 15, 2009 SUPERSEDES STANDARD PLAN P35 DATED MAY 1, 2006 - PAGE 131 OF THE STANDARD PLANS BOOK DATED MAY 2006.

REVISED STANDARD PLAN RSP P35

5-8-09

DIST	COUNTY	ROUTE	POST MILES TOTAL PROJECT	SHEET NO.	TOTAL SHEETS
07	LA	5	4.0/5.9	918	1597

REGISTERED CIVIL ENGINEER

May 15, 2009
PLANS APPROVAL DATE

The State of California or its officers or agents shall not be responsible for the accuracy or completeness of electronic copies of this plan sheet.

REGISTERED PROFESSIONAL ENGINEER — William K. Farnbach — No. C49042 — Exp. 9-30-10 — CIVIL — STATE OF CALIFORNIA

To accompany plans dated 4-9-12

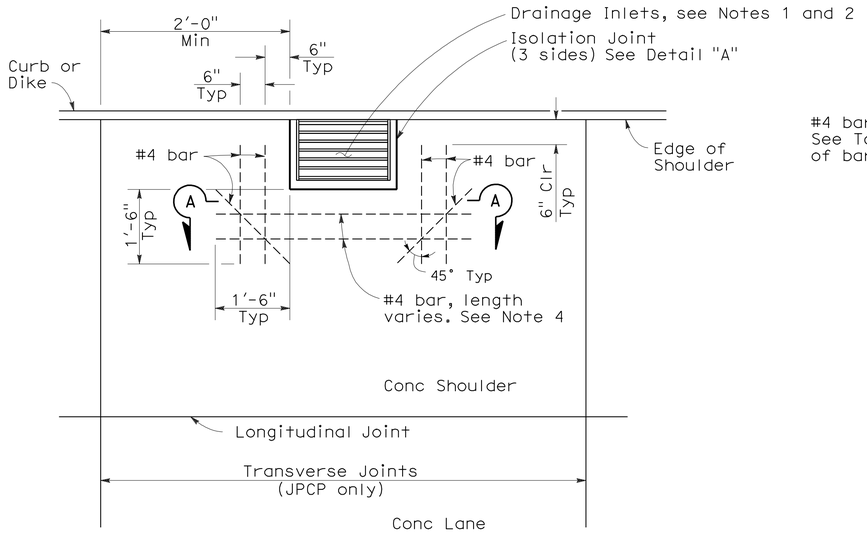

CASE 1

Transverse joint more than 2'-0" clear of drainage inlet wall or no transverse joint

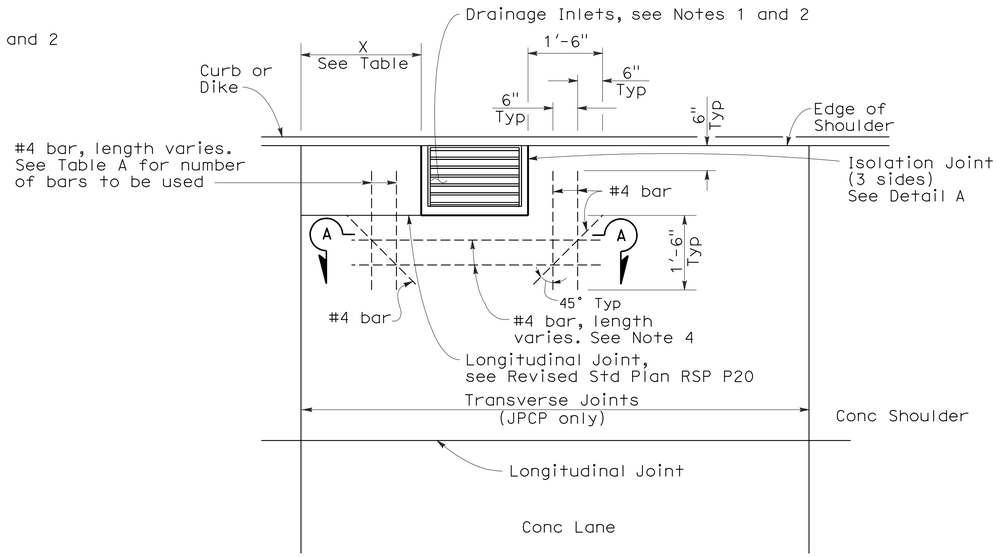

CASE 3

Transverse joint within 2'-0" of drainage inlet wall, or matches drainage inlet wall.

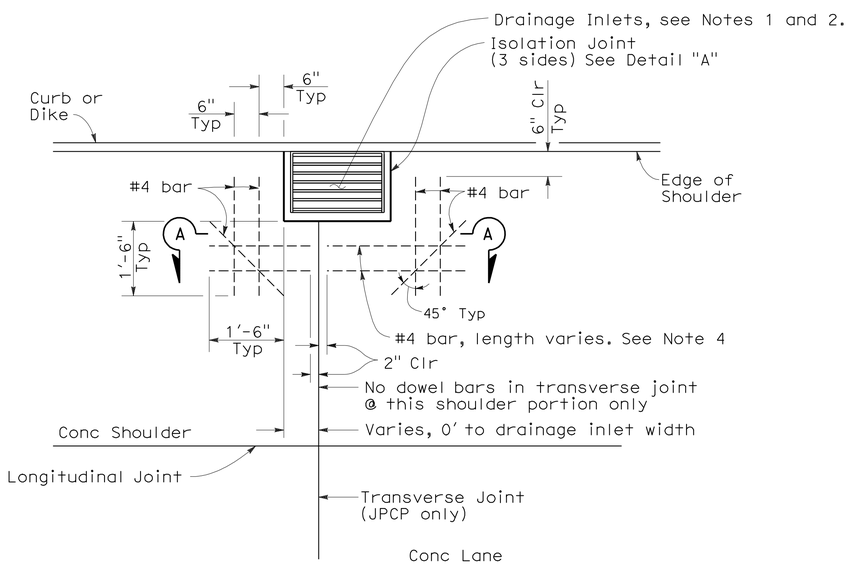

CASE 2

Transverse joint intersects drainage inlet, or matches drainage inlet wall.

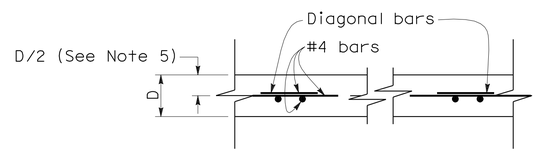

SECTION A-A

D = Pavement Thickness

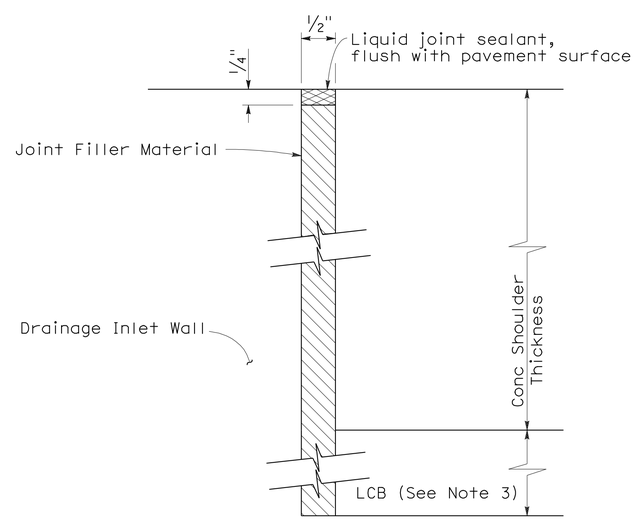

DETAIL "A"

ISOLATION JOINT AROUND DRAINAGE INLET

NOTES:

1. Refer to Project Plans for location and Type of drainage inlets.
2. Top of inlet shall be flush with shoulder surface.
3. Extend joint filler material to bottom of Lean Concrete Base. Where Lean Concrete Base is not used as base material, the joint filler material shall only extend to the bottom of the new concrete pavement.
4. For Jointed Plain Concrete Pavement only. For Continuously Reinforced Concrete Pavement, terminate pavement steel reinforcement 2" clear from all outside edges of isolation joint.
5. For Jointed Plain Concrete Pavement only. For Continuously Reinforced Concrete Pavement, see New Standard Plan NSP P4.
6. Dowel and tie bars not shown, see Revised Standard Plan RSP P1.

TABLE A

DISTANCE X	BARS REQUIRED
2'-0" to 1'-6"	2
1'-6" to 9"	1 @ X/2
9" or less	None

STATE OF CALIFORNIA
DEPARTMENT OF TRANSPORTATION

CONCRETE PAVEMENT-DRAINAGE INLET DETAILS No. 1

NO SCALE

RSP P45 DATED MAY 15, 2009 SUPERSEDES STANDARD PLAN P45
DATED MAY 1, 2006 - PAGE 132 OF THE STANDARD PLANS BOOK DATED MAY 2006.

REVISED STANDARD PLAN RSP P45

2006 REVISED STANDARD PLAN RSP P45

4-2-09

DIST	COUNTY	ROUTE	POST MILES TOTAL PROJECT	SHEET NO.	TOTAL SHEETS
07	LA	5	4.0/5.9	919	1597

William K. Farnbach
REGISTERED CIVIL ENGINEER

May 15, 2009
PLANS APPROVAL DATE

REGISTERED PROFESSIONAL ENGINEER
William K. Farnbach
No. C49042
Exp. 9-30-10
CIVIL
STATE OF CALIFORNIA

The State of California or its officers or agents shall not be responsible for the accuracy or completeness of electronic copies of this plan sheet.

To accompany plans dated 4-9-12

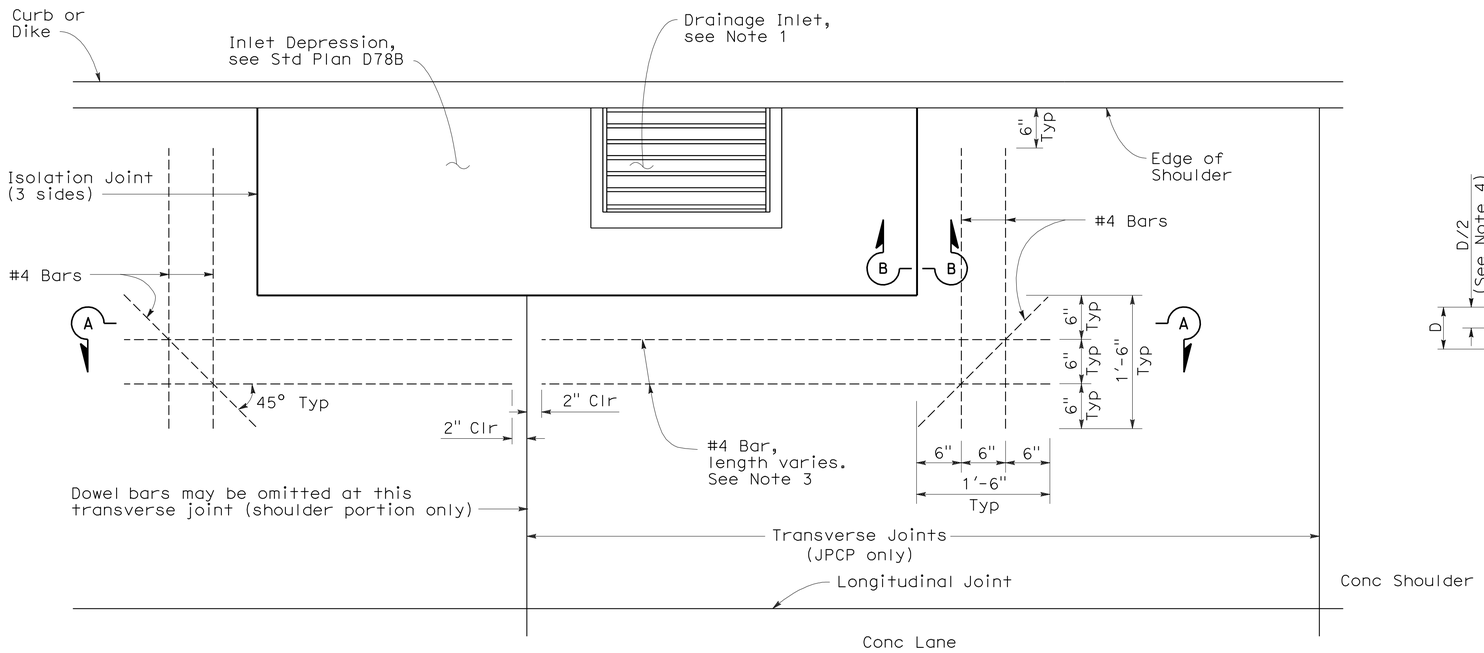

CASE A

Transverse Joint intersects inlet depression or no transverse joints.

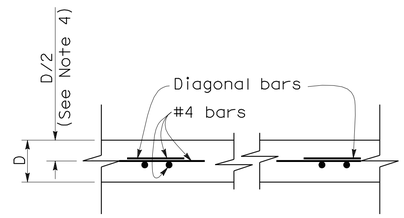

SECTION A-A

D = Pavement Thickness

TABLE A

DISTANCE X	BARS REQUIRED
2'-0" to 1'-6"	2
1'-6" to 1'-0"	1
1'-0" or less	None

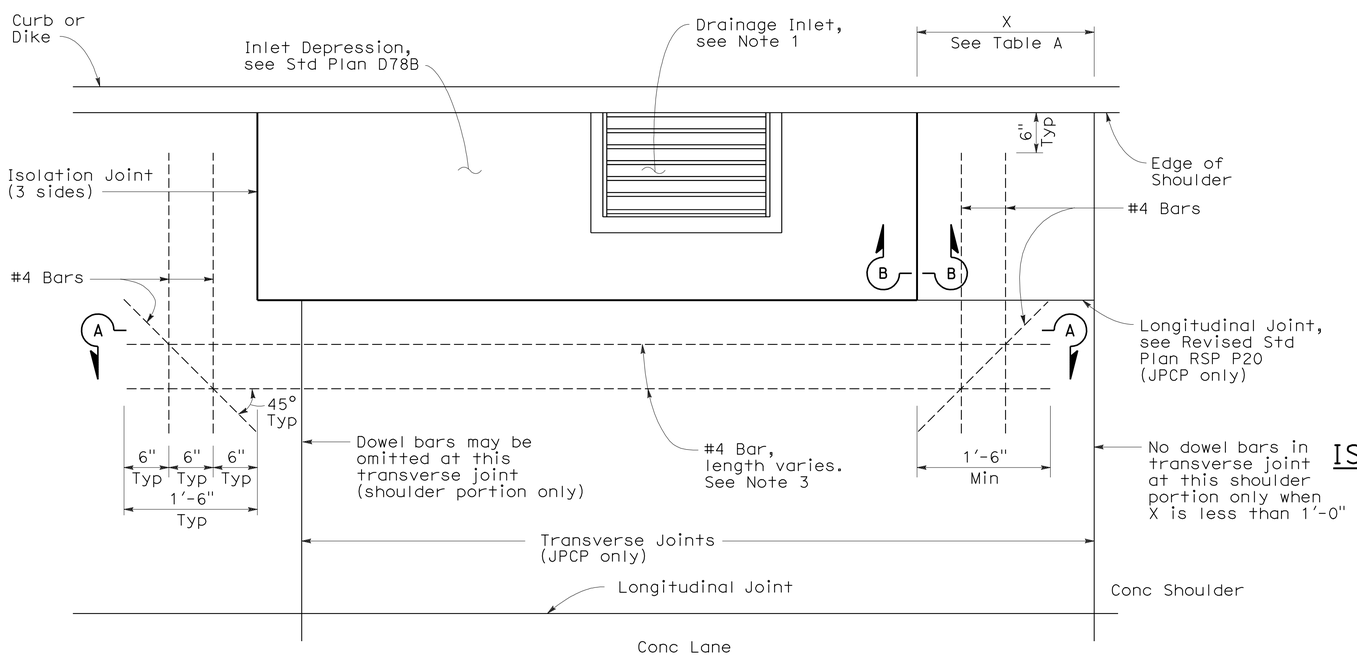

CASE B

Transverse Joint within 2'-0" of edge of inlet depression.

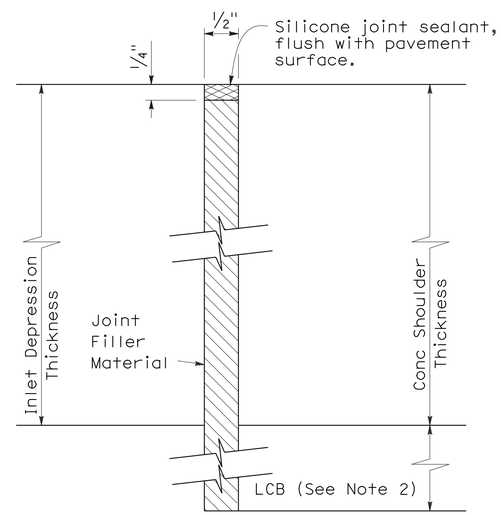

SECTION B-B

ISOLATION JOINT AROUND INLET DEPRESSION

NOTES:

1. Refer to Project Plans for location and type of drainage inlets.
2. Extend joint filler material to bottom of Lean Concrete Base. Where Lean Concrete Base is not used as base material, the joint filler material shall only extend to the bottom of the new concrete pavement.
3. For Jointed Plain Concrete Pavement only. For Continuously Reinforced Concrete Pavement, terminate pavement steel reinforcement 2" clear from all outside edges of isolation joint.
4. For Jointed Plain Concrete Pavement only. For Continuously Reinforced Concrete Pavement, see New Standard Plan NSP P4.

STATE OF CALIFORNIA
DEPARTMENT OF TRANSPORTATION

CONCRETE PAVEMENT-DRAINAGE INLET DETAILS No. 2

NO SCALE

RSP P46 DATED MAY 15, 2009 SUPERSEDES STANDARD PLAN P46
DATED MAY 1, 2006 - PAGE 133 OF THE STANDARD PLANS BOOK DATED MAY 2006.

REVISED STANDARD PLAN RSP P46

2006 REVISED STANDARD PLAN RSP P46

4-2-09

DIST	COUNTY	ROUTE	POST MILES TOTAL PROJECT	SHEET NO.	TOTAL SHEETS
07	LA	5	4.0/5.9	920	1597

Gregory A. Balzer
LICENSED LANDSCAPE ARCHITECT

June 5, 2009
PLANS APPROVAL DATE

LICENSED LANDSCAPE ARCHITECT
Gregory A. Balzer 2576
9-10 (Renewal) Date
2-28-11 (Renewal) Date
5-14-09 Date
STATE OF CALIFORNIA

The State of California or its officers or agents shall not be responsible for the accuracy or completeness of electronic copies of this plan sheet.

To accompany plans dated 4-9-12

A

AB	aggregate base
ABS	acrylonitrile-butadiene-styrene
AC	asphalt concrete
Adj	adjacent/adjustable
AIC	auxiliary irrigation controller
Alt	alternative
AMEND	amendment
ARV	air release valve
AUTO	automatic
AUX	auxiliary
AVB	atmospheric vacuum breaker

B

B&B	balled and burlapped
B/B	brass/bronze
B/B/PL	brass/bronze/plastic
B/PL	brass/plastic
BFM	bonded fiber matrix
Bit Ctd	bituminous coated
BP	booster pump
BPA	backflow preventer assembly
BPAE	backflow preventer assembly in enclosure
BPE	backflow preventer enclosure
BV	ball valve

C

CAP	corrugated aluminum pipe
CARV	combination air release valve
CCA	cam coupler assembly
CEC	controller enclosure cabinet
CHDPE	corrugated high density polyethylene
CL	chain link
CNC	control and neutral conductors
Conc	concrete
Cond	conduit
CSP	corrugated steel pipe
CST	center strip
CV	check valve

D

Dia	diameter
DIP	ductile iron pipe
DN	diameter nominal

E

EA	each
Elect	electric/electrical
Elev	elevation
ENCL	enclosure
EP	edge of pavement
ES	edge of shoulder
EST	end strip
ESTB	establishment
ETW	edge of traveled way

F

F	full circle
F/P	full/part circle
FAU	filter assembly unit
FCV	flow control valve
FERT	fertilizer
FG	finished grade
FIPT	female iron pipe thread
FIS	fertilizer injector system
FL	flow line
FM	flow monitor
FS	flow sensor
Ft	foot/feet
FV	flush valve

G

GAL	Gallon(s)
Galv	galvanized
GARV	garden valve
GPH	gallons per hour
GPM	gallons per minute
GSP	galvanized steel pipe
GV	gate valve

H

H	half circle
HB	hose bib
HDPE	high density polyethylene
HP	horsepower/hinge point
HPL	high pressure line
Hwy	highway

I

IC	irrigation controller
ICC	irrigation controller(s) in controller enclosure cabinet
ID	inside diameter
In	inches
IFS	irrigation filtration system
IPS	iron pipe size
IPT	iron pipe thread
Irr	irrigation

L

L	length
LF	linear foot

M

Max	maximum
MBGR	metal beam guard railing
MCV	manual control valve
MIC	master irrigation controller
Min	minimum
MIPT	male iron pipe thread
Misc	miscellaneous
Mtl	material
MVP	maintenance vehicle pullout

N

NCN	no common name
NL	nozzle line
No.	number
NPT	national pipe thread

O

O/C	on center
OD	outside diameter
Oz	ounce

P

P	part circle
PB	pull box
PCC	portland cement concrete
PE	polyethylene
Pkt	packet
PL	plastic
PLT	plant/planting
PLT ESTB	plant establishment
PM	post mile
PR	pressure rated
PRLV	pressure relief valve
PSFM	polymer stabilized fiber matrix
PSI	pounds per square inch
PRV	pressure reducing valve
PVC	polyvinyl chloride
Pvmt	pavement

Q

Q	quarter circle
QCV	quick coupling valve

R

R	radius
RCP	reinforced concrete pipe
RCV	remote control valve
RCVM	remote control valve (master)
RCVMF	remote control valve (master) w/ flow meter
RCW	recycled/reclaimed water
RECP	rolled erosion control product
REQ	required
R/W	right of way

S

S	slip
SCC	sprinkler control conduit
SCH	schedule
SF	state-furnished
Shld	shoulder
SQFT	square foot/feet
SQYD	square yard(s)
SST	side strip
Sta	station
Std	standard
SW	sidewalk/sound wall

T

T	third circle/thread
TLS	truck loading standpipe
TQ	three quarter circle
TRM	turf reinforcement mat
TRVD	traveled
TT	two third circle
Typ	typical

U

UG	underground

V

VAU	valve assembly unit

W

W	width
W/	with
WM	water meter
WS	wye strainer
WSP	welded steel pipe
WWM	welded wire mesh

NOTE:

FOR ADDITIONAL ABBREVIATIONS, SEE STANDARD PLANS A10A AND A10B.

STATE OF CALIFORNIA
DEPARTMENT OF TRANSPORTATION

PLANTING AND IRRIGATION ABBREVIATIONS

NO SCALE

RSP H1 DATED JUNE 5, 2009 SUPERSEDES STANDARD PLAN H1
DATED MAY 1, 2006 - PAGE 201 OF THE STANDARD PLANS BOOK DATED MAY 2006.

REVISED STANDARD PLAN RSP H1

2006 REVISED STANDARD PLAN RSP H1

DIST	COUNTY	ROUTE	POST MILES TOTAL PROJECT	SHEET NO.	TOTAL SHEETS
07	LA	5	4.0/5.9	921	1597

LICENSED LANDSCAPE ARCHITECT

June 5, 2009
PLANS APPROVAL DATE

The State of California or its officers or agents shall not be responsible for the accuracy or completeness of electronic copies of this plan sheet.

LICENSED LANDSCAPE ARCHITECT — Gregory A. Balzer 2576 — 10 Renewal 2-28-11 Renewal Date 5-14-09 Date — STATE OF CALIFORNIA

To accompany plans dated 4-9-12

EXISTING	PROPOSED	ITEM DESCRIPTION
		WATER METER (WM)
		BACKFLOW PREVENTER ASSEMBLY (BPA)
		BACKFLOW PREVENTER ASSEMBLY IN ENCLOSURE (BPAE)
		BACKFLOW PREVENTER ENCLOSURE (BPE)
		BOOSTER PUMP (BP)
		TRUCK LOADING STANDPIPE (TLS)
FS	FS	FLOW SENSOR (FS)
X	X	MASTER IRRIGATION CONTROLLER (MIC)
		AUXILIARY IRRIGATION CONTROLLER (AIC)
		IRRIGATION CONTROLLER (IC)/ IRRIGATION CONTROLLER (IC) (BATTERY) IRRIGATION CONTROLLER (IC) (SOLAR)
		IRRIGATION CONTROLLER(S) IN CONTROLLER ENCLOSURE CABINET (ICC)
		CONTROL AND NEUTRAL CONDUCTORS (CNC)
SCC	SCC	SPRINKLER CONTROL CONDUIT (SCC)
		IRRIGATION CROSSOVER
		EXTEND IRRIGATION CROSSOVER
		IRRIGATION SLEEVE
dip	DIP	DUCTILE IRON PIPE (SUPPLY LINE) (MAIN) (DIP)
		GALVANIZED STEEL PIPE (SUPPLY LINE) (MAIN) (GSP)
		GALVANIZED STEEL PIPE (SUPPLY LINE) (LATERAL) (GSP)
		PLASTIC PIPE (PR 200) (SUPPLY LINE) (MAIN)
		PLASTIC PIPE (PR 200) (SUPPLY LINE) (LATERAL)
		PLASTIC PIPE (IRRIGATION LINE)
		REMOTE CONTROL VALVE (RCV) REMOTE CONTROL VALVE (MASTER) (RCVM) REMOTE CONTROL VALVE (MASTER) W/FLOW METER (RCVMF)
		MANUAL CONTROL VALVE (MCV)
		VALVE ASSEMBLY UNIT (VAU)
		WYE STRAINER (WS)
		FILTER ASSEMBLY UNIT (FAU)
		GATE VALVE (GV)
		BALL VALVE (BV)

EXISTING	PROPOSED	ITEM DESCRIPTION
		QUICK COUPLING VALVE (QCV)
		CAM COUPLER ASSEMBLY (CCA)
		PRESSURE REDUCING VALVE (PRV)
		PRESSURE RELIEF VALVE (PRLV)
		FLOW CONTROL VALVE (FCV)
		COMBINATION AIR RELEASE VALVE (CARV)
		CHECK VALVE (CV)
		FLUSH VALVE (FV)
		NOZZLE LINE W/TURNING UNION
		IRRIGATION SYSTEM
		IRRIGATION SYSTEM TO BE REMOVED
		CHAIN LINK GATE
		QUICK COUPLING VALVE W/SPRINKLER PROTECTOR
3	3	SPRINKLER W/SPRINKLER PROTECTOR
	C	CONNECT TO EXISTING SYSTEM
		CAP
		CAP EXISTING

VALVE CODE

RCV SIZE
IRRIGATION CONTROLLER
CONTROLLER STATION
VALVE IN PARALLEL (IF APPLICABLE)
GPM
QUANTITY OF SPRINKLERS (WHEN SHOWN)

* 2½"-A-2b-40 -60

MCV SIZE
VALVE NUMBER
GPM
QUANTITY OF TYPE SPRINKLERS (WHEN SHOWN)

* 2"-3-30 -50

* VALVE CODES FOR EXISTING VALVES ARE SHOWN IN A DASHED ENCLOSURE.

STATE OF CALIFORNIA
DEPARTMENT OF TRANSPORTATION

PLANTING AND IRRIGATION SYMBOLS

NO SCALE

RSP H2 DATED JUNE 5, 2009 SUPERSEDES RSP H2 DATED MARCH 7, 2008 AND STANDARD PLAN H2 DATED MAY 1, 2006 - PAGE 202 OF THE STANDARD PLANS BOOK DATED MAY 2006.

REVISED STANDARD PLAN RSP H2

2006 REVISED STANDARD PLAN RSP H2

5-11-09

DIST	COUNTY	ROUTE	POST MILES TOTAL PROJECT	SHEET NO.	TOTAL SHEETS
07	LA	5	4.0/5.9	922	1597

LICENSED LANDSCAPE ARCHITECT

June 5, 2009
PLANS APPROVAL DATE

LICENSED LANDSCAPE ARCHITECT
Gregory A. Balzer 2576
10-31-11
Renewal Date
5-14-09
Date
STATE OF CALIFORNIA

The State of California or its officers or agents shall not be responsible for the accuracy or completeness of electronic copies of this plan sheet.

To accompany plans dated 4-9-12

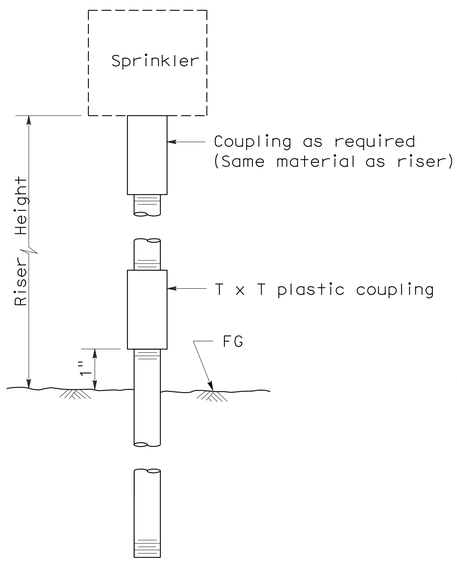

ELEVATION
RISER TYPE I

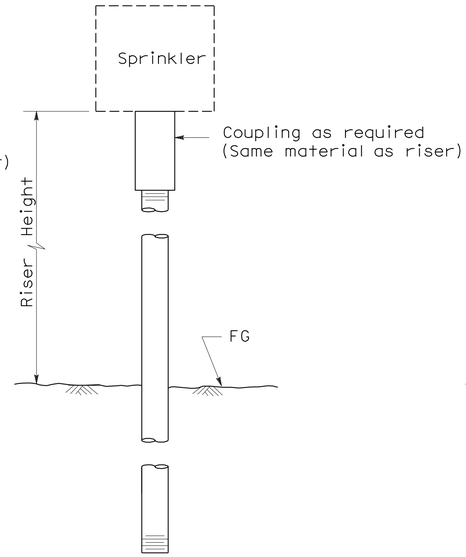

ELEVATION
RISER TYPE II

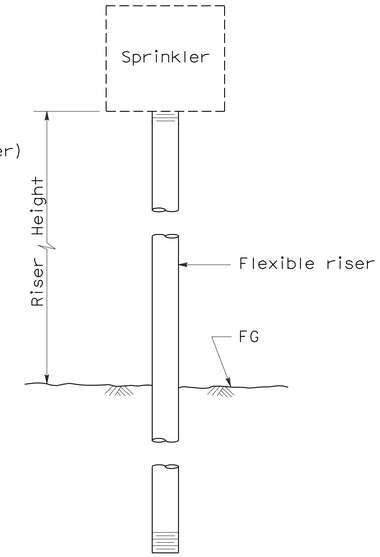

ELEVATION
RISER TYPE III

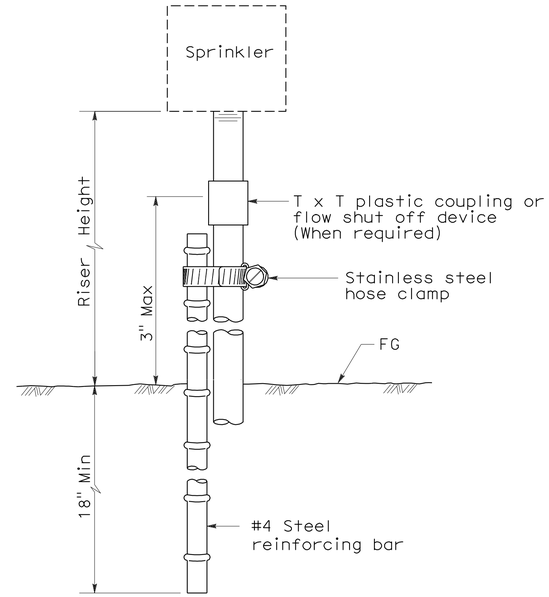

ELEVATION
RISER TYPE IV

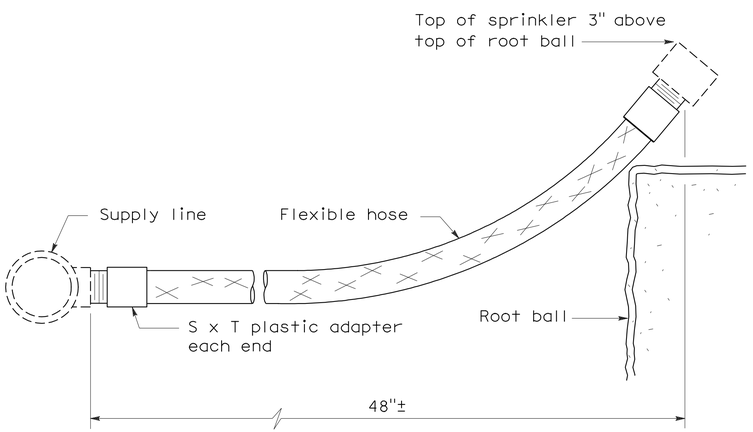

ELEVATION
RISER TYPE V

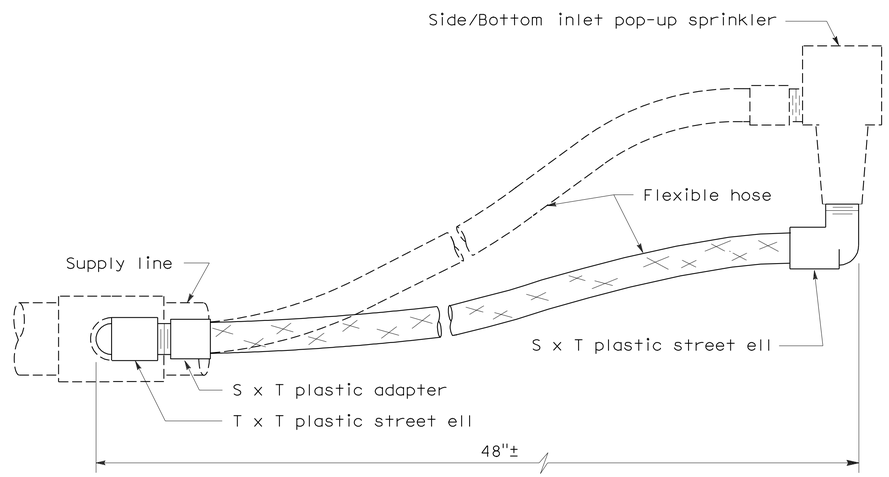

ELEVATION
RISER TYPE VI

STATE OF CALIFORNIA
DEPARTMENT OF TRANSPORTATION

PLANTING AND IRRIGATION DETAILS

NO SCALE

RSP H5 DATED JUNE 5, 2009 SUPERSEDES STANDARD PLAN H5
DATED MAY 1, 2006 - PAGE 205 OF THE STANDARD PLANS BOOK DATED MAY 2006.

REVISED STANDARD PLAN RSP H5

2006 REVISED STANDARD PLAN RSP H5

5-28-09

DIST	COUNTY	ROUTE	POST MILES TOTAL PROJECT	SHEET NO.	TOTAL SHEETS
07	LA	5	4.0/5.9	923	1597

LICENSED LANDSCAPE ARCHITECT

June 5, 2009
PLANS APPROVAL DATE

The State of California or its officers or agents shall not be responsible for the accuracy or completeness of electronic copies of this plan sheet.

LICENSED LANDSCAPE ARCHITECT Gregory A. Balzer 2576 STATE OF CALIFORNIA
Signature 2-28-11 Renewal Date 5-14-09 Date

To accompany plans dated 4-9-12

2006 REVISED STANDARD PLAN RSP H7

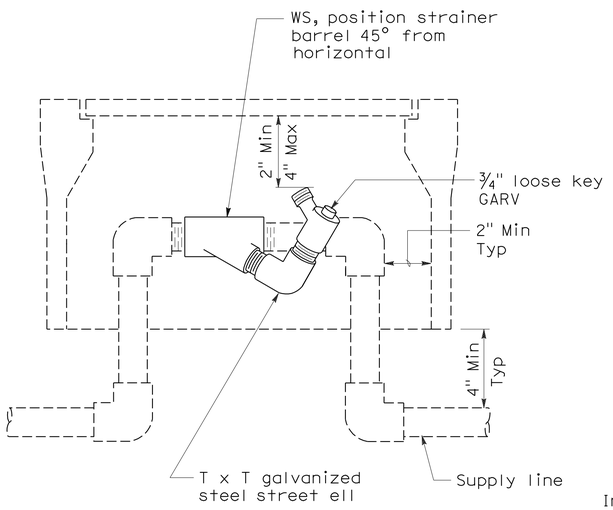

ELEVATION
WYE STRAINER

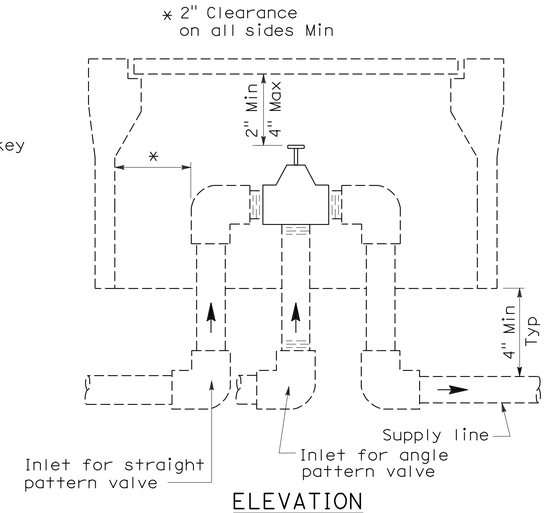

ELEVATION
VALVE

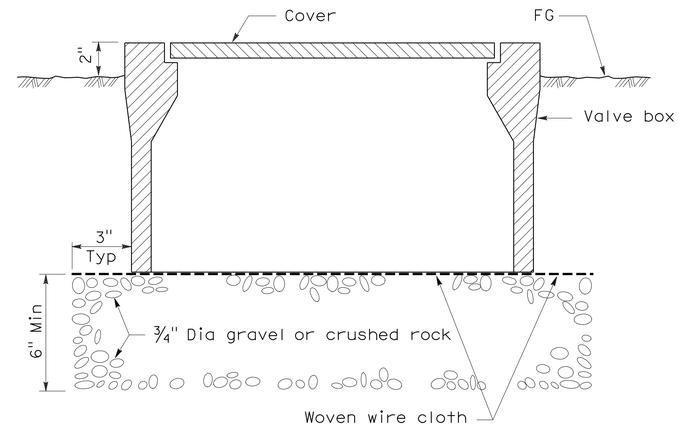

SECTION
VALVE BOX

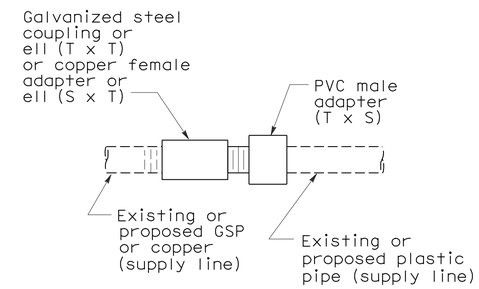

PLAN
GALVANIZED OR COPPER PIPE CONNECTION TO PLASTIC PIPE

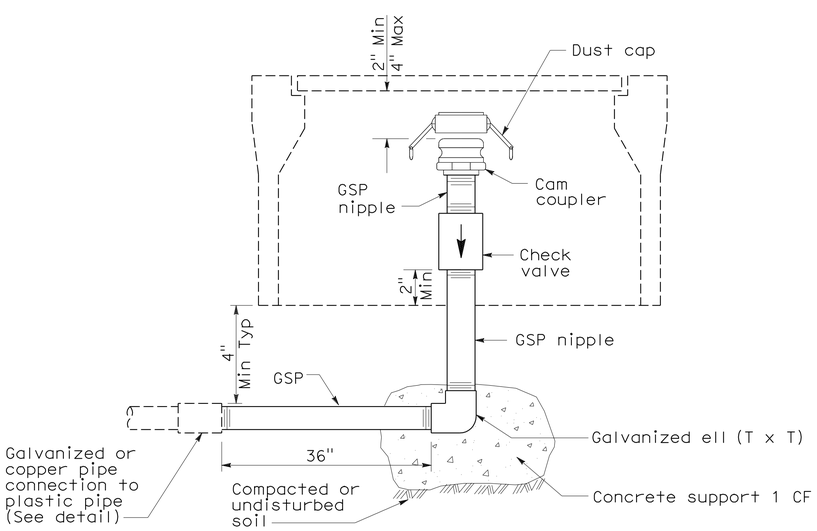

ELEVATION
CAM COUPLER ASSEMBLY

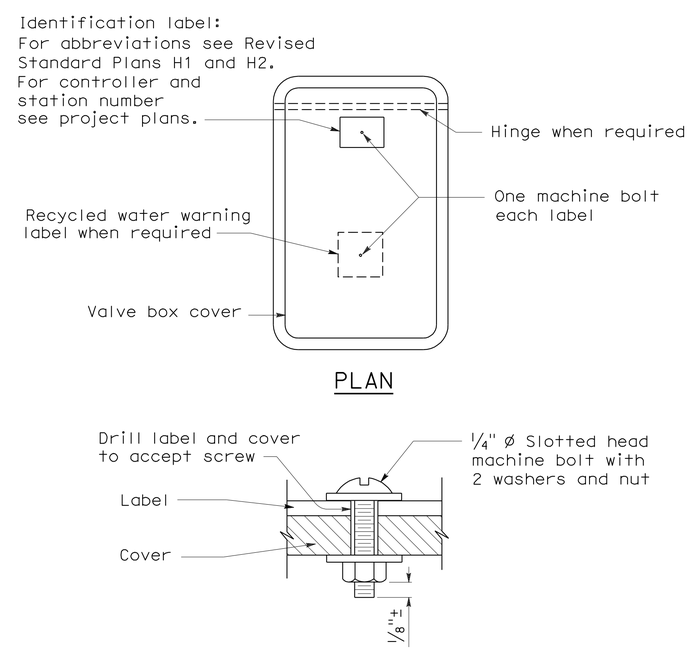

PLAN

SECTION
VALVE BOX IDENTIFICATION

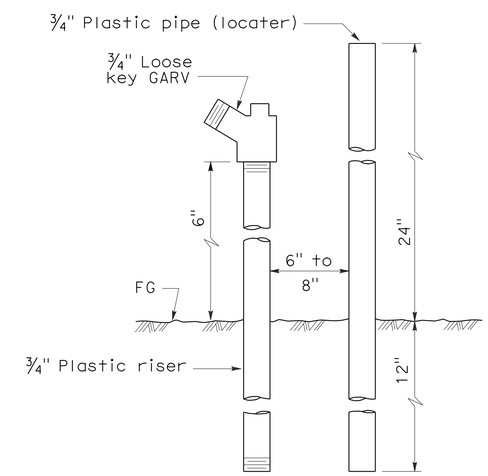

ELEVATION
FLUSH VALVE

STATE OF CALIFORNIA
DEPARTMENT OF TRANSPORTATION

PLANTING AND IRRIGATION DETAILS

NO SCALE

RSP H7 DATED JUNE 5, 2009 SUPERSEDES STANDARD PLAN H7
DATED MAY 1, 2006 - PAGE 207 OF THE STANDARD PLANS BOOK DATED MAY 2006.

REVISED STANDARD PLAN RSP H7

5-28-09

DIST	COUNTY	ROUTE	POST MILES TOTAL PROJECT	SHEET NO.	TOTAL SHEETS
07	LA	5	4.0/5.9	924	1597

Gregory A. Balzer
LICENSED LANDSCAPE ARCHITECT

June 5, 2009
PLANS APPROVAL DATE

LICENSED LANDSCAPE ARCHITECT Gregory A. Balzer 2576 9-10 Expiration Date 2-28-11 (Renewal) Date 5-14-09 Date STATE OF CALIFORNIA

The State of California or its officers or agents shall not be responsible for the accuracy or completeness of electronic copies of this plan sheet.

To accompany plans dated 4-9-12

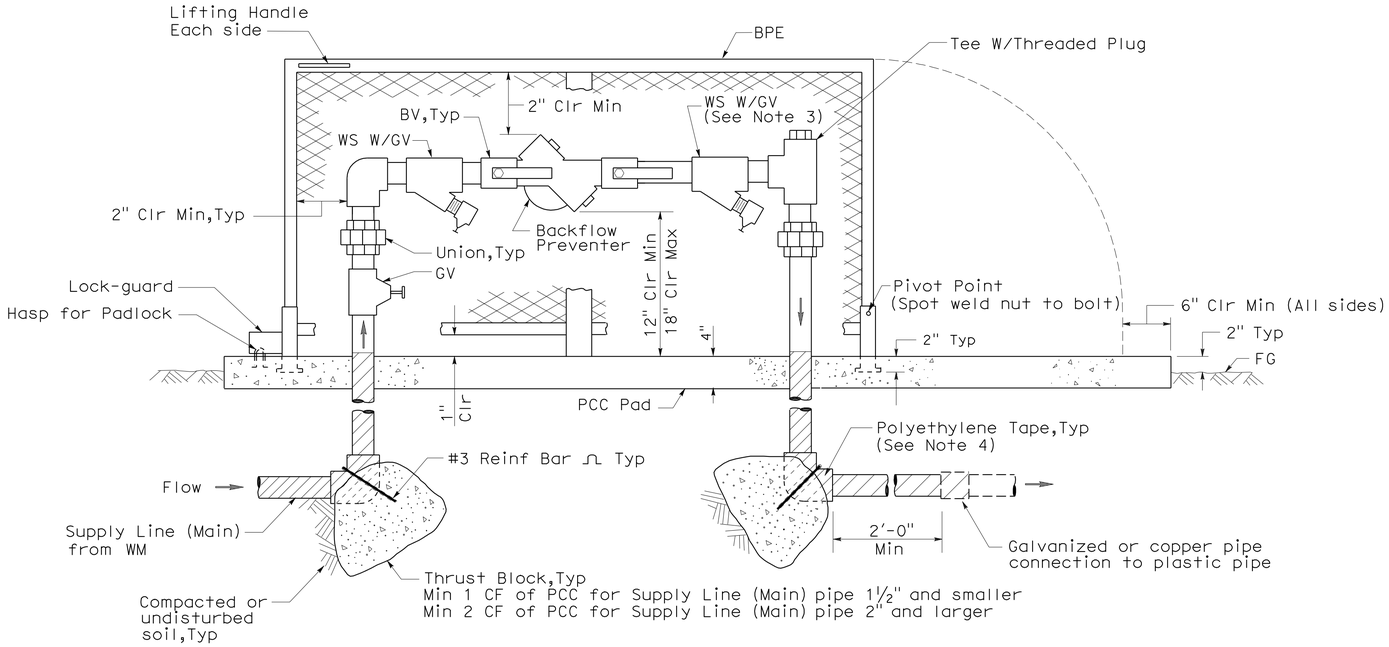

ELEVATION

BACKFLOW PREVENTER ASSEMBLY IN ENCLOSURE (ONE PIECE)

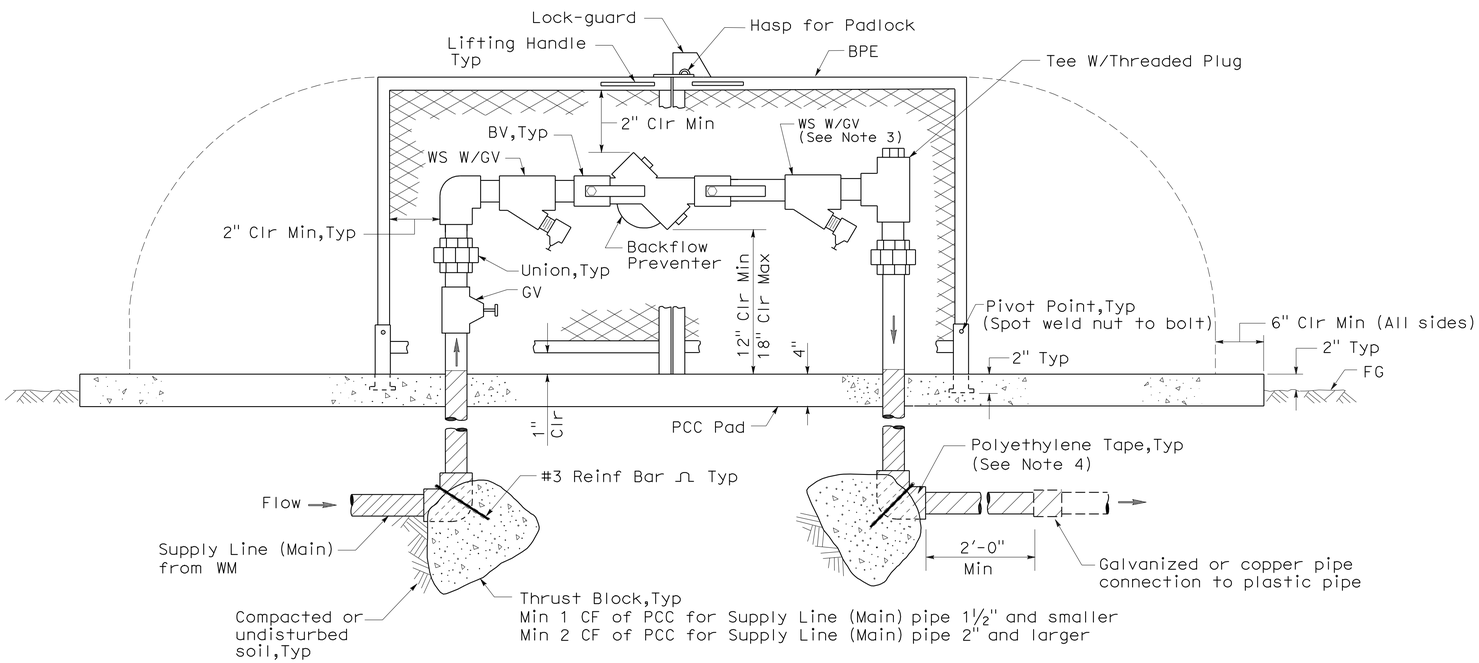

ELEVATION

BACKFLOW PREVENTER ASSEMBLY IN ENCLOSURE (TWO PIECE)

NOTES:

1. Wye strainer and fittings must be the same size as the backflow preventer shown on the plans.
2. Backflow preventer assembly manifold pipe must be the same pipe as the supply line (main) pipe to be installed from the water meter to the backflow preventer assembly.
3. Wye strainer location shown downstream of the backflow preventer is for District 11 projects only.
4. All metal in contact with soil and Portland Cement Concrete must be polyethylene wrapped using 2" wide plastic backed adhesive tape 20 mil thick with ½" overlap.

STATE OF CALIFORNIA
DEPARTMENT OF TRANSPORTATION

PLANTING AND IRRIGATION DETAILS

NO SCALE

RSP H8 DATED JUNE 5, 2009 SUPERSEDES STANDARD PLAN H8
DATED MAY 1, 2006 - PAGE 208 OF THE STANDARD PLANS BOOK DATED MAY 2006.

REVISED STANDARD PLAN RSP H8

2006 REVISED STANDARD PLAN RSP H8

5-28-09

DIST	COUNTY	ROUTE	POST MILES TOTAL PROJECT	SHEET NO.	TOTAL SHEETS
07	LA	5	4.0/5.9	925	1597

Randell D. Hiatt
REGISTERED CIVIL ENGINEER

June 6, 2008
PLANS APPROVAL DATE

REGISTERED PROFESSIONAL ENGINEER
Randell D. Hiatt
No. C50200
Exp. 6-30-09
CIVIL
STATE OF CALIFORNIA

The State of California or its officers or agents shall not be responsible for the accuracy or completeness of electronic copies of this plan sheet.

To accompany plans dated 4-9-12

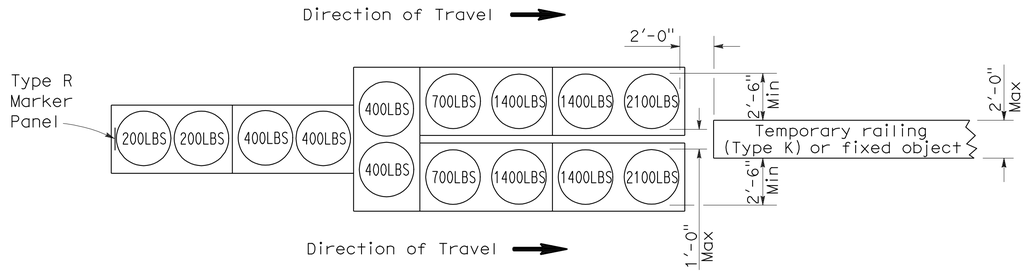

ARRAY 'TU14'

Approach speed 45 mph or more

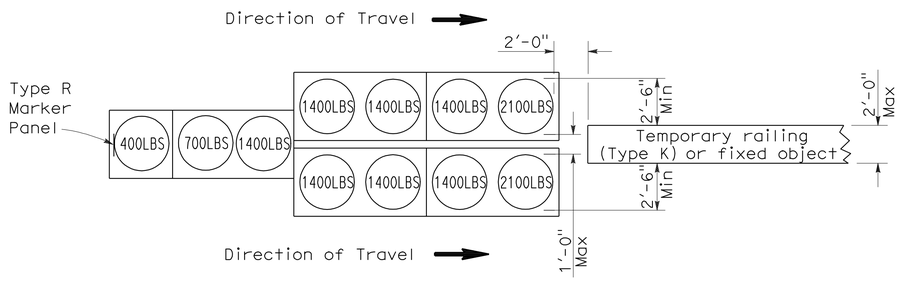

ARRAY 'TU11'

Approach speed less than 45 mph

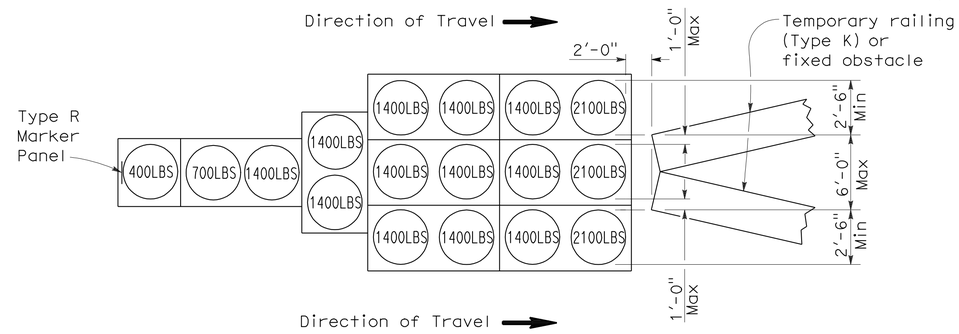

ARRAY 'TU17'

Approach speed less than 45 mph

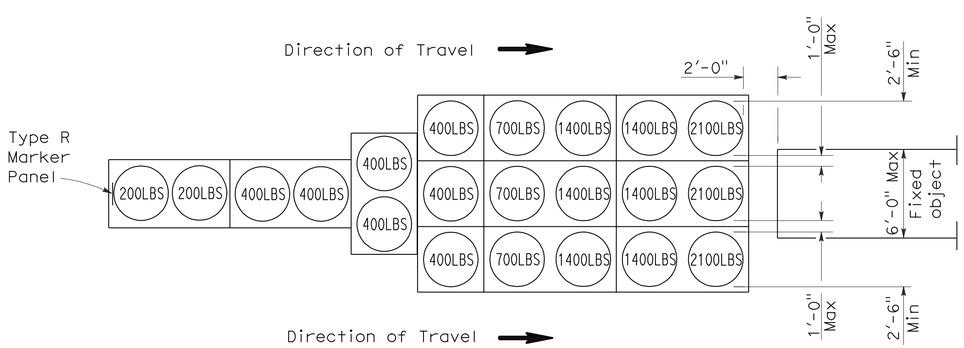

ARRAY 'TU21'

Approach speed 45 mph or more

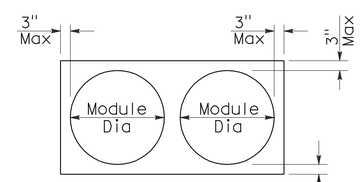

PLAN

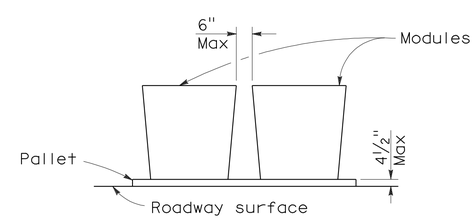

ELEVATION

CRASH CUSHION PALLET DETAIL

See Note 7

NOTES:

1. (XXX) Indicates sand filled module location and weight of sand in pounds for each module. Module spacing is based on the greater diameter of the module.
2. All sand weights are nominal.
3. Temporary crash cushion arrays shall not encroach on the traveled way.
4. Place the top of Type R marker panel 1" below the module lid.
5. Refer to Standard Plan A73B for marker details.
6. Approach speeds indicated conform to NCHRP 350 Report criteria.
7. Use of pallets is optional.

STATE OF CALIFORNIA
DEPARTMENT OF TRANSPORTATION

TEMPORARY CRASH CUSHION, SAND FILLED (UNIDIRECTIONAL)

NO SCALE

RSP T1A DATED JUNE 6, 2008 SUPERSEDES STANDARD PLAN T1A
DATED MAY 1, 2006 - PAGE 211 OF THE STANDARD PLANS BOOK DATED MAY 2006.

REVISED STANDARD PLAN RSP T1A

2006 REVISED STANDARD PLAN RSP T1A

DIST	COUNTY	ROUTE	POST MILES TOTAL PROJECT	SHEET NO.	TOTAL SHEETS
07	LA	5	4.0/5.9	926	1597

Randell D. Hiatt
REGISTERED CIVIL ENGINEER

June 6, 2008
PLANS APPROVAL DATE

REGISTERED PROFESSIONAL ENGINEER
Randell D. Hiatt
No. C50200
Exp. 6-30-09
CIVIL
STATE OF CALIFORNIA

The State of California or its officers or agents shall not be responsible for the accuracy or completeness of electronic copies of this plan sheet.

To accompany plans dated 4-9-12

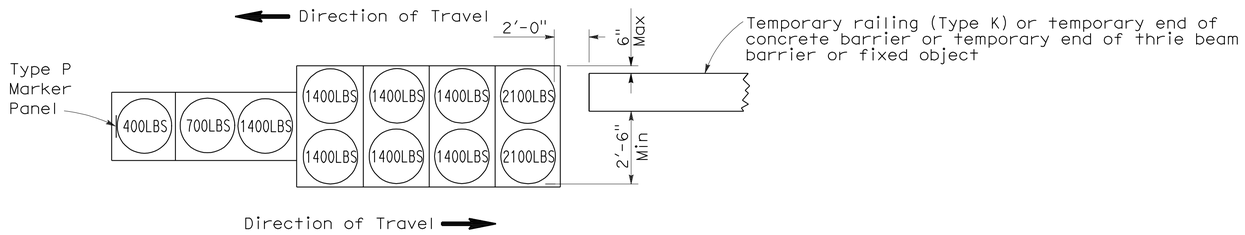

ARRAY 'TB11'

Approach speed less than 45 mph

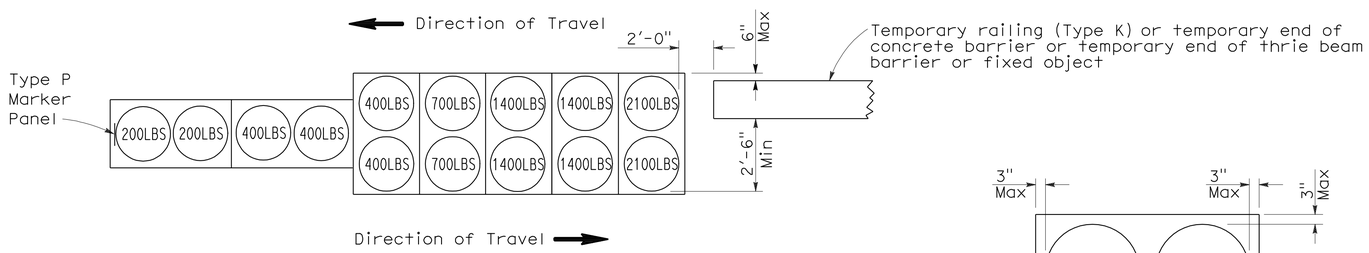

ARRAY 'TB14'

Approach speed 45 mph or more

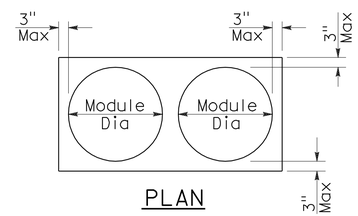

PLAN

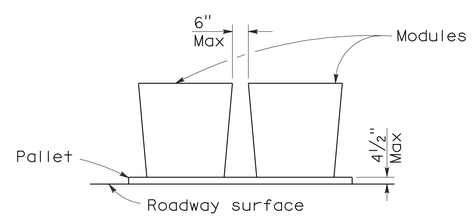

ELEVATION

CRASH CUSHION PALLET DETAIL

See Note 7

NOTES:

1. (XXX) Indicates sand filled module location and weight of sand in pounds for each module. Module spacing is based on the greater diameter of the module.
2. All sand weights are nominal.
3. Temporary crash cushion arrays shall not encroach on the traveled way.
4. Place the Type P marker panel so that the bottom of the panel rests upon the pallet.
5. Refer to Standard Plan A73B for marker details.
6. Approach speeds indicated conform to NCHRP 350 Report criteria.
7. Use of pallets is optional.

STATE OF CALIFORNIA
DEPARTMENT OF TRANSPORTATION

TEMPORARY CRASH CUSHION, SAND FILLED (BIDIRECTIONAL)

NO SCALE

RSP T1B DATED JUNE 6, 2008 SUPERSEDES STANDARD PLAN T1B
DATED MAY 1, 2006 - PAGE 212 OF THE STANDARD PLANS BOOK DATED MAY 2006.

REVISED STANDARD PLAN RSP T1B

2006 REVISED STANDARD PLAN RSP T1B

DIST	COUNTY	ROUTE	POST MILES TOTAL PROJECT	SHEET NO.	TOTAL SHEETS
07	LA	5	4.0/5.9	927	1597

Randell D. Hiatt
REGISTERED CIVIL ENGINEER

June 6, 2008
PLANS APPROVAL DATE

REGISTERED PROFESSIONAL ENGINEER
Randell D. Hiatt
No. C50200
Exp. 6-30-09
CIVIL
STATE OF CALIFORNIA

The State of California or its officers or agents shall not be responsible for the accuracy or completeness of electronic copies of this plan sheet.

To accompany plans dated 4-9-12

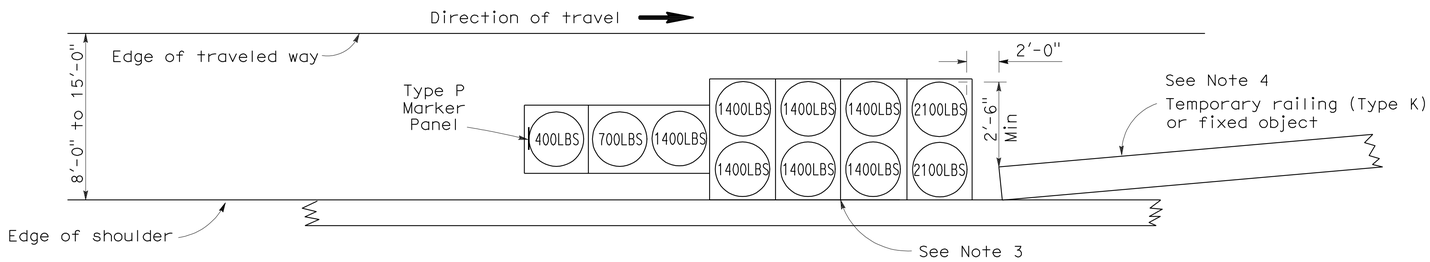

ARRAY 'TS11'

Approach speed less than 45 mph
See Note 9

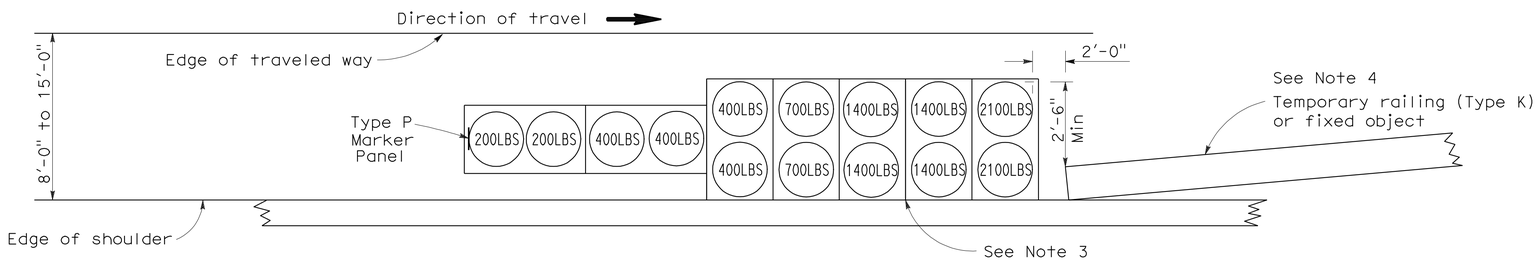

ARRAY 'TS14'

Approach speed 45 mph or more
See Note 9

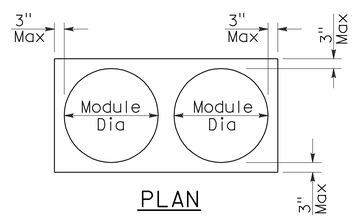

PLAN

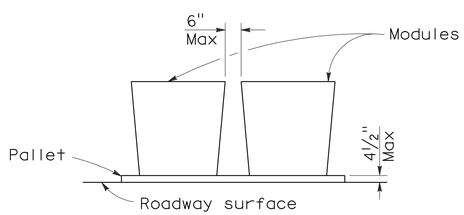

ELEVATION

CRASH CUSHION PALLET DETAIL

See Note 11

NOTES:

1. (XXX) Indicates sand filled module location and weight of sand in pounds for each module. Module spacing is based on the greater diameter of the module.
2. All sand weights are nominal.
3. The temporary crash cushion arrays shown on this plan shall be used only in locations where there will be traffic on one side of the temporary crash cushion array.
4. If the fixed object or approach end of the temporary railing is less than 15'-0" from the edge of traveled way, a temporary crash cushion is required in a construction or work zone.
5. Temporary crash cushion arrays shall not encroach on the traveled way.
6. Arrays for median shoulders shall conform to details shown on this plan for outside shoulders.
7. Place the Type P marker panel so that the bottom of the panel rests upon the pallet and faces traffic.
8. Refer to Standard Plan A73B for marker details.
9. For shoulder widths less than 8'-0", appropriate approved crash cushion protection, other than sand filled modules, shall be provided at fixed objects and at approach ends of temporary railing. The specific type of crash cushion shall be as shown on the project plans or as specified in the Special Provisions, or if not shown on the project plans or specified in the Special Provisions, shall be as approved by the Engineer.
10. Approach speeds indicated conform to NCHRP 350 Report criteria.
11. Use of pallets is optional.

STATE OF CALIFORNIA
DEPARTMENT OF TRANSPORTATION

TEMPORARY CRASH CUSHION, SAND FILLED (SHOULDER INSTALLATIONS)

NO SCALE

RSP T2 DATED JUNE 6, 2008 SUPERSEDES STANDARD PLAN T2
DATED MAY 1, 2006 - PAGE 213 OF THE STANDARD PLANS BOOK DATED MAY 2006.

REVISED STANDARD PLAN RSP T2

2006 REVISED STANDARD PLAN RSP T2

5-15-08

Dist	COUNTY	ROUTE	POST MILES TOTAL PROJECT	SHEET No.	TOTAL SHEETS
07	LA	5	4.0/5.9	928	1597

Randell D. Hiatt
REGISTERED CIVIL ENGINEER

May 20, 2011
PLANS APPROVAL DATE

REGISTERED PROFESSIONAL ENGINEER
Randell D. Hiatt
No. C50200
Exp. 6-30-11
CIVIL
STATE OF CALIFORNIA

The State of California or its officers or agents shall not be responsible for the accuracy or completeness of electronic copies of this plan sheet.

To accompany plans dated 4-9-12

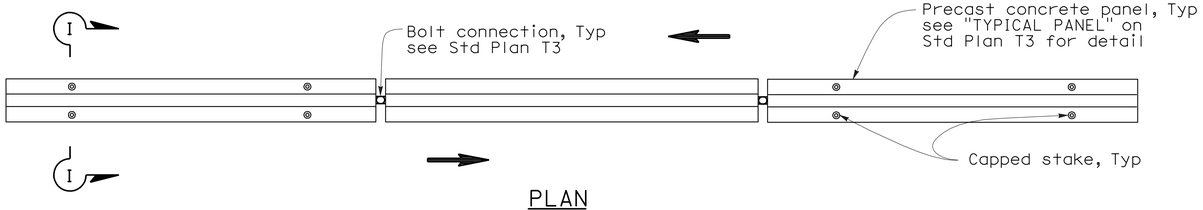

PLAN

RAILING STAKING CONFIGURATION FOR TWO-WAY TRAFFIC

See Note 1

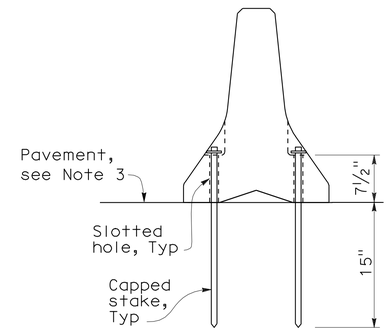

SECTION I-I

NOTES:

1. Where Type K Temporary Railing is placed as a temporary or long term barrier in two-way traffic on highways with less than 24" from the edge of traveled way, use four capped stakes per every other panel with end panels staked.
2. Where Type K Temporary Railing is placed 3" to 24" from the edge of an excavation on highways, use two capped stakes per panel along the traffic side.
3. Staked Type K Temporary Railing must be supported by at least 4" thick concrete, hot mix asphalt or existing asphalt concrete pavement.
4. The minimum yield strength for the washer must be 60,000 psi.
5. Direction of adjacent traffic indicated by ⟹.

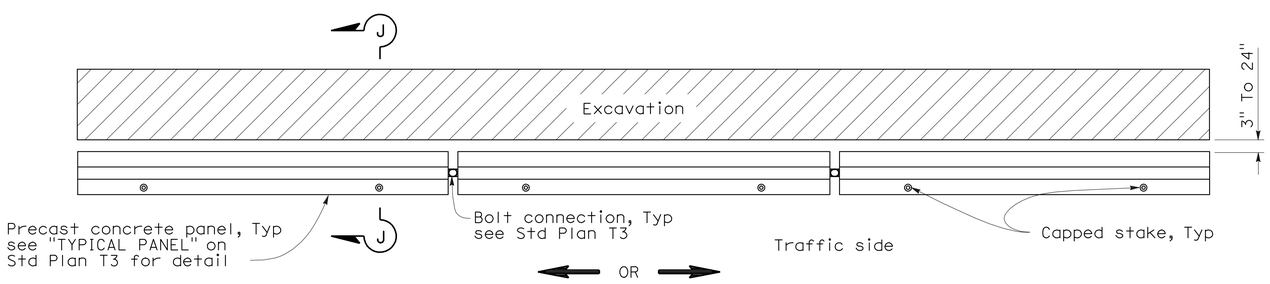

PLAN

RAILING STAKING CONFIGURATION ADJACENT TO AN EXCAVATION

See Note 2

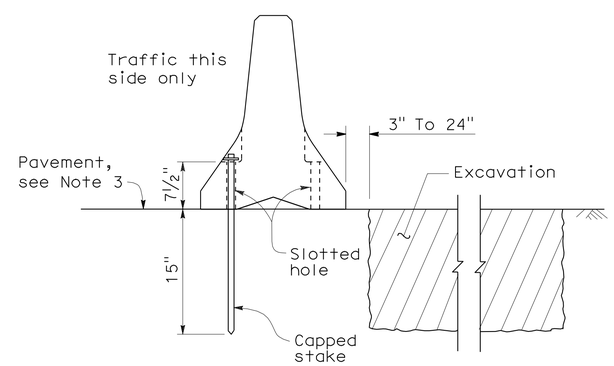

SECTION J-J

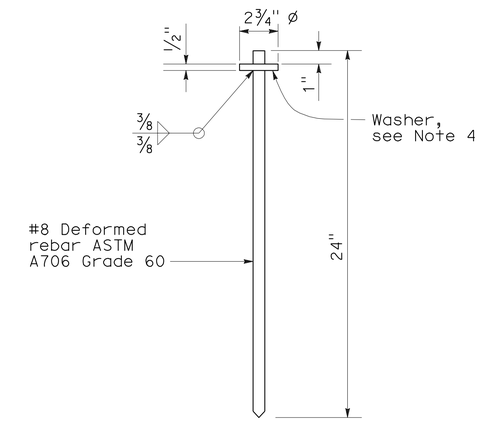

CAPPED STAKE DETAIL

STATE OF CALIFORNIA
DEPARTMENT OF TRANSPORTATION

TEMPORARY RAILING (TYPE K)

NO SCALE

NSP T3A DATED MAY 20, 2011 SUPPLEMENTS THE STANDARD PLANS BOOK DATED MAY 2006.

NEW STANDARD PLAN NSP T3A

2006 NEW STANDARD PLAN NSP T3A

DIST	COUNTY	ROUTE	POST MILES TOTAL PROJECT	SHEET NO.	TOTAL SHEETS
07	LA	5	4.0/5.9	929	1597

Robert B. Schott
LICENSED LANDSCAPE ARCHITECT

April 3, 2009
PLANS APPROVAL DATE

LICENSED LANDSCAPE ARCHITECT
Robert B. Schott 3035
Robert B. Schott
Signature
11-30-10
Renewal Date
2-25-09
Date
STATE OF CALIFORNIA

The State of California or its officers or agents shall not be responsible for the accuracy or completeness of electronic copies of this plan sheet.

To accompany plans dated 4-9-12

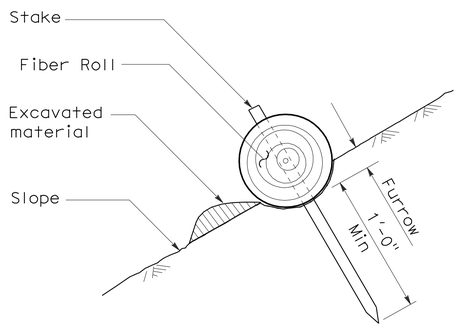

SECTION

TEMPORARY FIBER ROLL (TYPE 1)

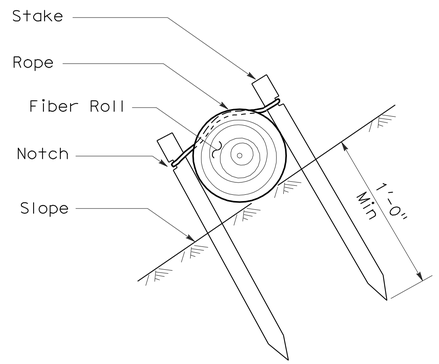

SECTION

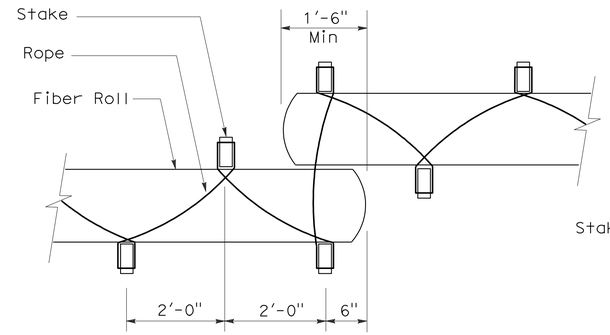

PLAN

TEMPORARY FIBER ROLL (TYPE 2)

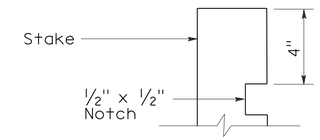

ELEVATION

STAKE NOTCH DETAIL

NOTES:

1. Temporary fiber roll spacing varies depending upon slope inclination.
2. Installations shown in the perspectives are for slope inclination of 10:1 and steeper.

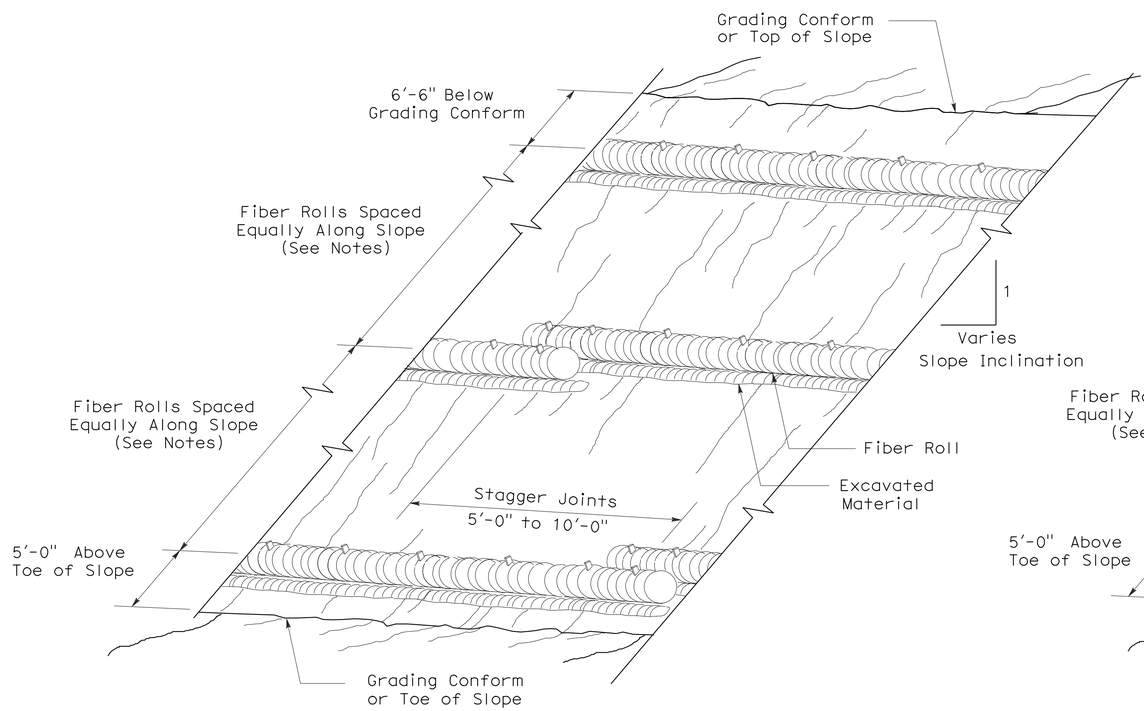

PERSPECTIVE

TEMPORARY FIBER ROLL (TYPE 1)

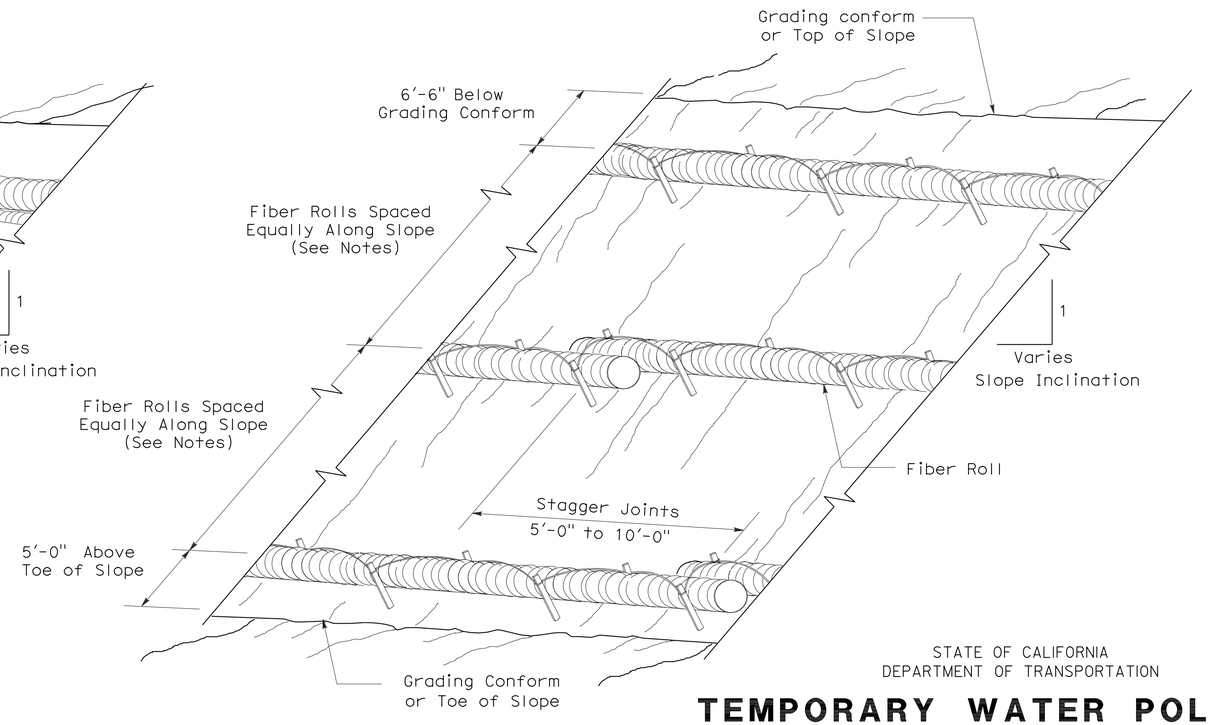

PERSPECTIVE

TEMPORARY FIBER ROLL (TYPE 2)

STATE OF CALIFORNIA
DEPARTMENT OF TRANSPORTATION

TEMPORARY WATER POLLUTION CONTROL DETAILS (TEMPORARY FIBER ROLL)

NO SCALE

RSP T56 DATED APRIL 3, 2009 SUPERSEDES STANDARD PLAN T56
DATED MAY 1, 2006 - PAGE 232 OF THE STANDARD PLANS BOOK DATED MAY 2006.

REVISED STANDARD PLAN RSP T56

2006 REVISED STANDARD PLAN RSP T56

2-23-09

DIST	COUNTY	ROUTE	POST MILES TOTAL PROJECT	SHEET NO.	TOTAL SHEETS
07	LA	5	4.0/5.9	930	1597

LICENSED LANDSCAPE ARCHITECT

August 15, 2008
PLANS Approval DATE

The State of California or its officers or agents shall not be responsible for the accuracy or completeness of electronic copies of this plan sheet.

LICENSED LANDSCAPE ARCHITECT — Robert B. Schott — Signature — 11-04-08 Renewal Date — 08-11-08 Date — STATE OF CALIFORNIA

To accompany plans dated 4-9-12

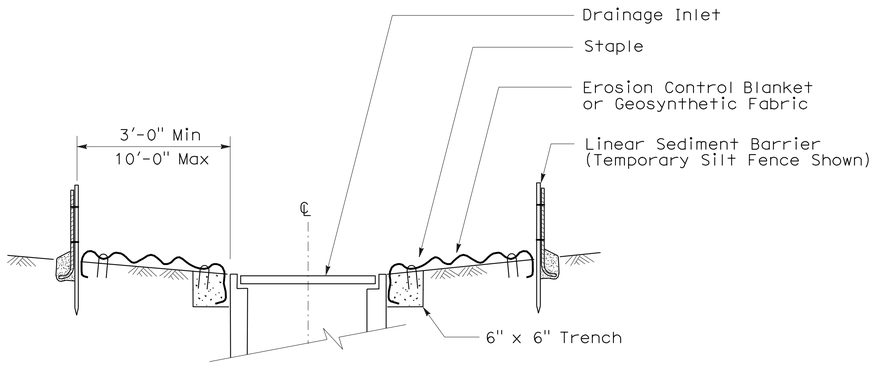

SECTION A-A

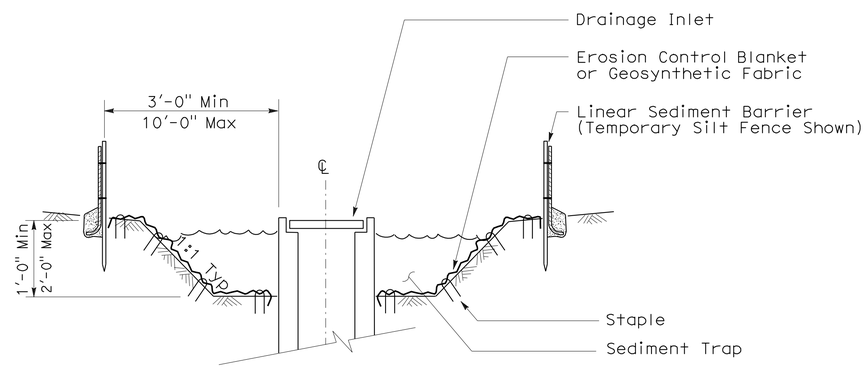

SECTION B-B

NOTES:

1. See Standard Plan T51 for Temporary Silt Fence.
2. Dimensions may vary to fit field conditions.

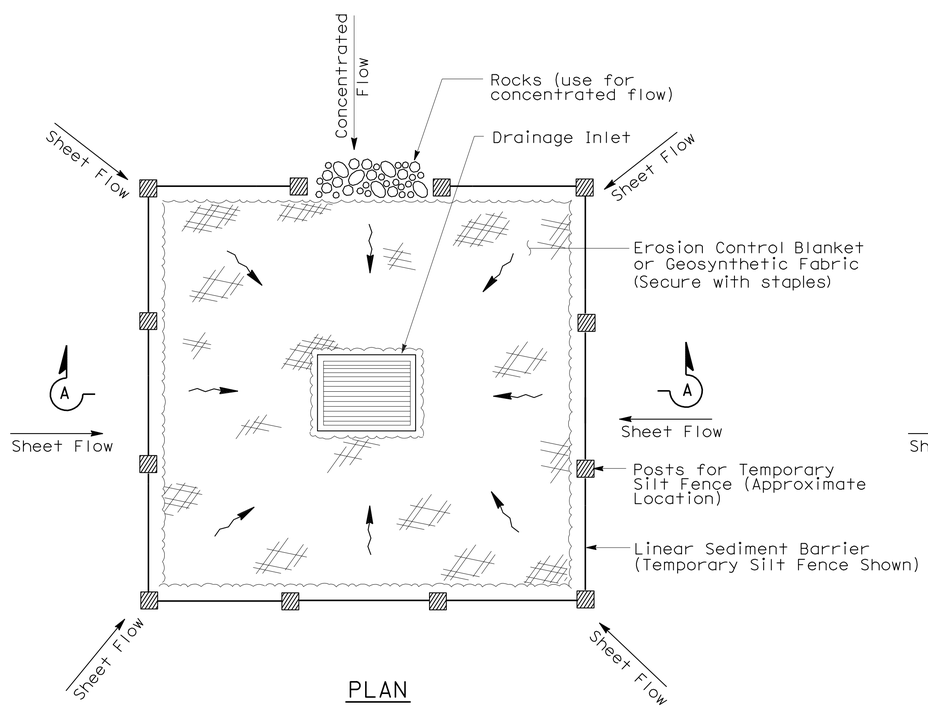

PLAN

TEMPORARY DRAINAGE INLET PROTECTION (TYPE 1)

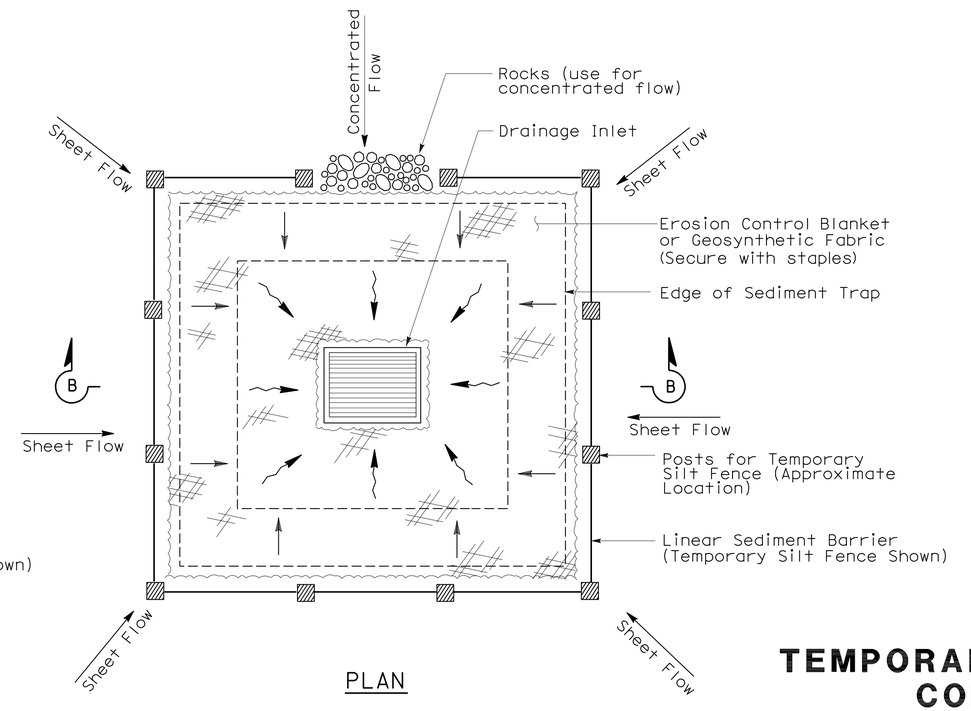

PLAN

TEMPORARY DRAINAGE INLET PROTECTION (TYPE 2) (EXCAVATED SEDIMENT TRAP)

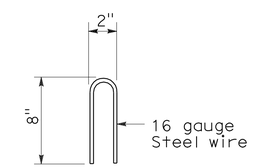

STAPLE DETAIL

STATE OF CALIFORNIA
DEPARTMENT OF TRANSPORTATION

TEMPORARY WATER POLLUTION CONTROL DETAILS (TEMPORARY DRAINAGE INLET PROTECTION)

NO SCALE

NSP T61 DATED AUGUST 15, 2008 SUPPLEMENTS THE STANDARD PLANS BOOK DATED MAY 2006.

NEW STANDARD PLAN NSP T61

2006 NEW STANDARD PLAN NSP T61

7-11-08

DIST	COUNTY	ROUTE	POST MILES TOTAL PROJECT	SHEET NO.	TOTAL SHEETS
07	LA	5	4.0/5.9	931	1597

LICENSED LANDSCAPE ARCHITECT

August 15, 2008
PLANS APPROVAL DATE

The State of California or its officers or agents shall not be responsible for the accuracy or completeness of electronic copies of this plan sheet.

LICENSED LANDSCAPE ARCHITECT — Robert B. Schott — Signature — 11-04-08 Renewal Date — 08-11-08 Date — STATE OF CALIFORNIA

To accompany plans dated 4-9-12

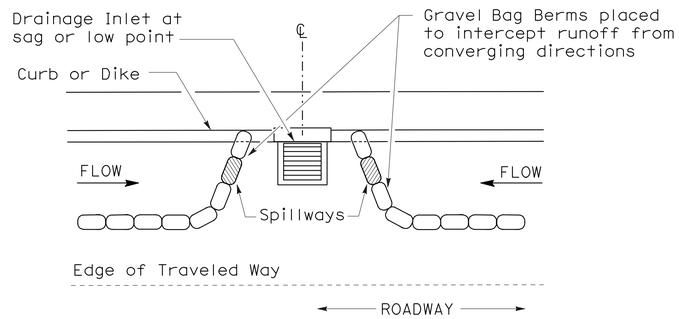

PLAN

CONFIGURATION FOR SAG POINT INLET (GRAVEL BAG BERM)

GRAVEL BAG BERM (TYPE 3A) SPACING TABLE

SLOPE OF ROADWAY (PERCENT)	1 to 3.9	4 to 5.9	6 to 7.9	8 to 10	10+
INTERVAL BETWEEN BERM	100′	75′	50′	25′	12′

For slope of less than 1%, install barriers only if erosion/sediment is prevalent

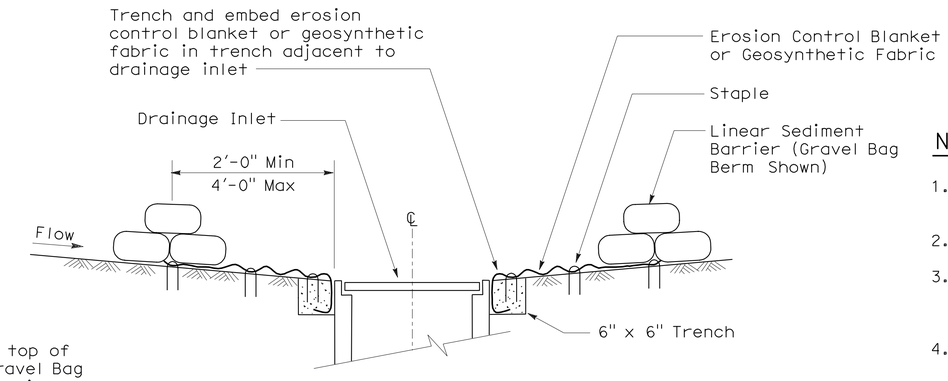

SECTION A-A

NOTES:

1. Place safety cones adjacent to drainage inlet protection.
2. Dimensions may vary to fit field conditions.
3. Install a minimum of 3 gravel bag berms upstream of each drainage inlet to be protected.
4. Position erosion control blanket or geosynthetic fabric at edge of concrete apron and secure in trench.
5. Erosion control blanket or geosynthetic fabric is not required if the area adjacent to the drainage inlet is vegetated or paved.

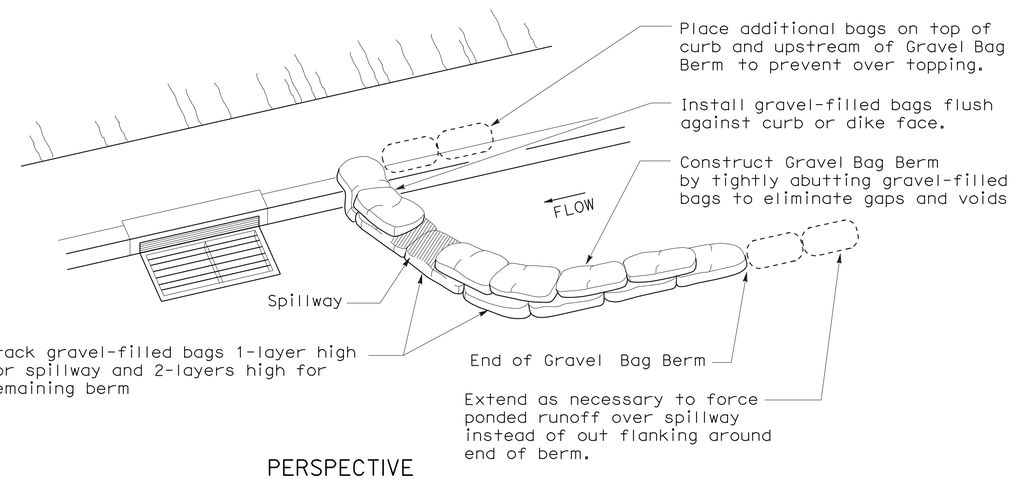

PERSPECTIVE

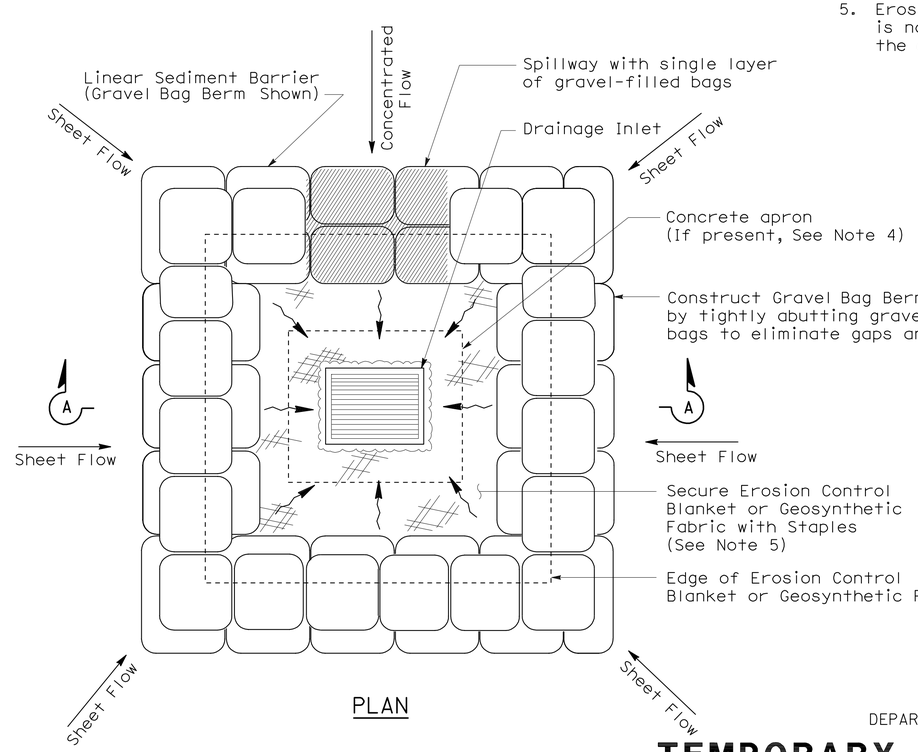

PLAN

TEMPORARY DRAINAGE INLET PROTECTION (TYPE 3B)

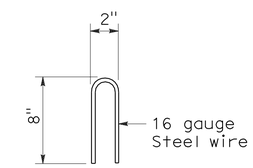

STAPLE DETAIL

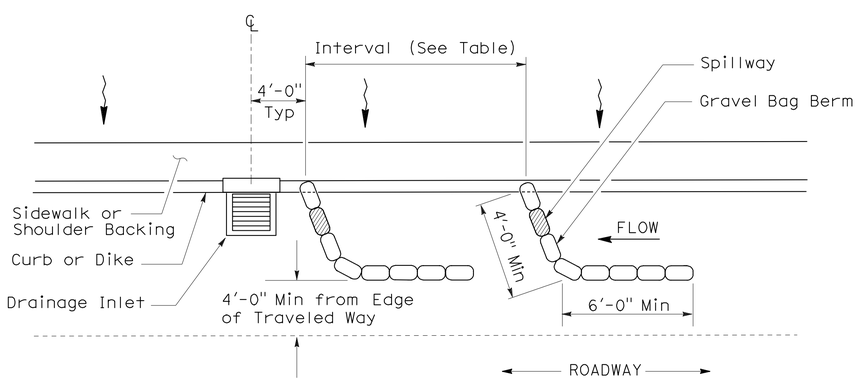

PLAN

TEMPORARY DRAINAGE INLET PROTECTION (TYPE 3A) (GRAVEL BAG BERM)

STATE OF CALIFORNIA
DEPARTMENT OF TRANSPORTATION

TEMPORARY WATER POLLUTION CONTROL DETAILS (TEMPORARY DRAINAGE INLET PROTECTION)

NO SCALE

NSP T62 DATED AUGUST 15, 2008 SUPPLEMENTS THE STANDARD PLANS BOOK DATED MAY 2006.

NEW STANDARD PLAN NSP T62

2006 NEW STANDARD PLAN NSP T62

7-11-08

DIST	COUNTY	ROUTE	POST MILES TOTAL PROJECT	SHEET NO.	TOTAL SHEETS
07	LA	5	4.0/5.9	932	1597

LICENSED LANDSCAPE ARCHITECT

August 15, 2008
PLANS APPROVAL DATE

The State of California or its officers or agents shall not be responsible for the accuracy or completeness of electronic copies of this plan sheet.

LICENSED LANDSCAPE ARCHITECT Robert B. Schott 3025 Signature 11-04-08 Renewal Date 08-11-08 Date STATE OF CALIFORNIA

To accompany plans dated 4-9-12

FLEXIBLE SEDIMENT BARRIER SPACING TABLE

SLOPE OF ROADWAY (PERCENT)	0 to 0.9	1 to 1.9	2 to 2.9	3 to 4	5+
INTERVAL BETWEEN BARRIERS	50′	35′	30′	25′	20′
ANGLE FROM FACE OF CURB	70°	70°	70°	45°	45°
SUGGESTED BARRIER LENGTH	6′	6′	6′	6′	6′

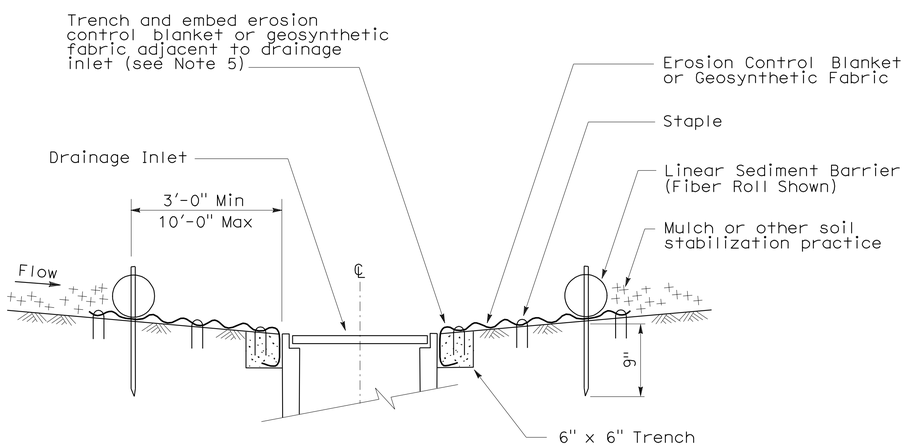

SECTION A-A

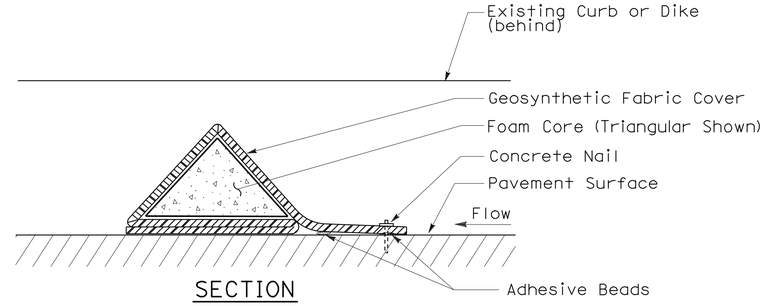

SECTION

FLEXIBLE SEDIMENT BARRIER DETAIL (FOAM BARRIER SHOWN)

NOTES:

1. See Standard Plan T51 for Temporary Silt Fence.
2. Dimensions may vary to fit field conditions.
3. Install a minimum of 3 flexible sediment barriers upstream of each drainage inlet to be protected.
4. Position erosion control blanket or geosynthetic fabric at edge of concrete apron and secure in trench.
5. Erosion control blanket or geosynthetic fabric is not required if the area adjacent to the drainage inlet is vegetated.

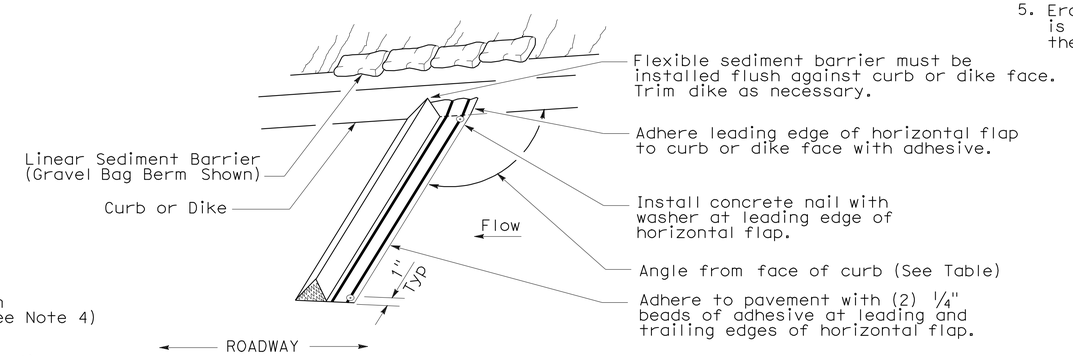

PERSPECTIVE

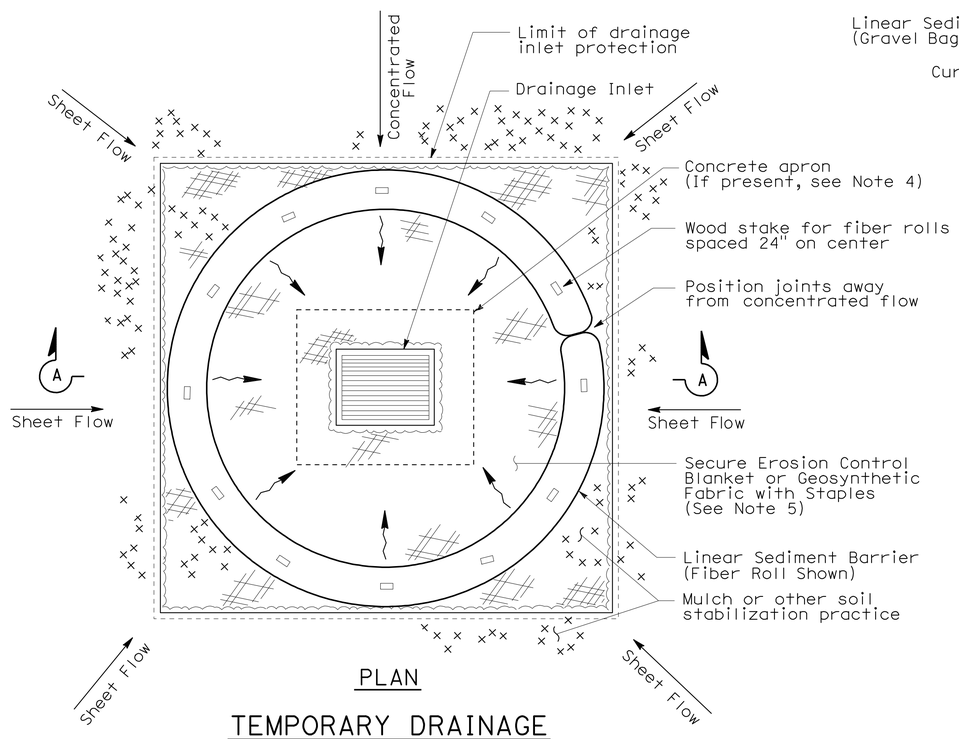

PLAN

TEMPORARY DRAINAGE INLET PROTECTION (TYPE 4A)

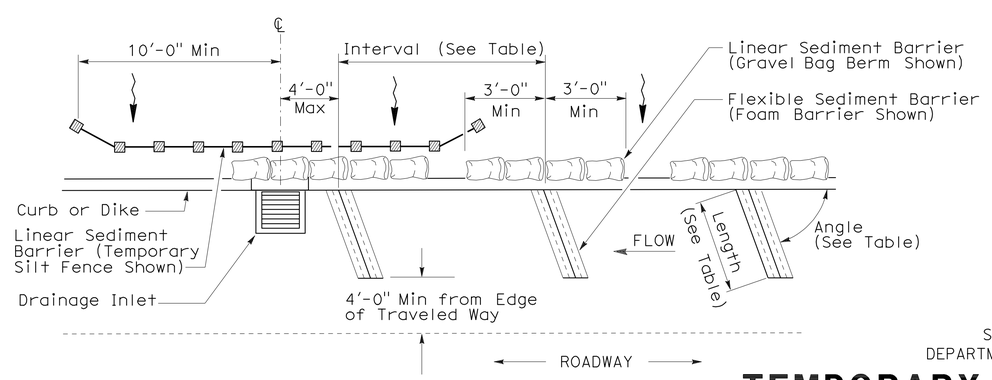

PLAN

TEMPORARY DRAINAGE INLET PROTECTION (TYPE 4B) FLEXIBLE SEDIMENT BARRIER

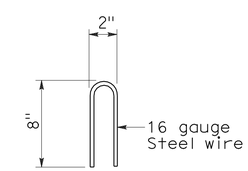

STAPLE DETAIL

STATE OF CALIFORNIA
DEPARTMENT OF TRANSPORTATION

TEMPORARY WATER POLLUTION CONTROL DETAILS (TEMPORARY DRAINAGE INLET PROTECTION)

NO SCALE

NSP T63 DATED AUGUST 15, 2008 SUPPLEMENTS THE STANDARD PLANS BOOK DATED MAY 2006.

NEW STANDARD PLAN NSP T63

2006 NEW STANDARD PLAN NSP T63

7-11-08

DIST	COUNTY	ROUTE	POST MILES TOTAL PROJECT	SHEET NO.	TOTAL SHEETS
07	LA	5	4.0/5.9	933	1597

LICENSED LANDSCAPE ARCHITECT

August 15, 2008
PLANS APPROVAL DATE

LICENSED LANDSCAPE ARCHITECT
Robert B. Schott 3025
Signature 11-04-08
Renewal Date 08-11-08
Date
STATE OF CALIFORNIA

The State of California or its officers or agents shall not be responsible for the accuracy or completeness of electronic copies of this plan sheet.

To accompany plans dated 4-9-12

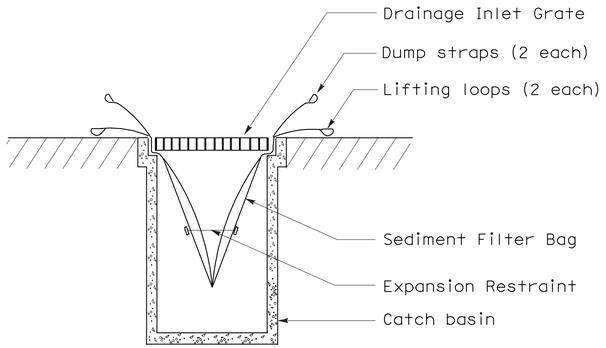

SECTION B-B

SEDIMENT FILTER BAG DETAIL

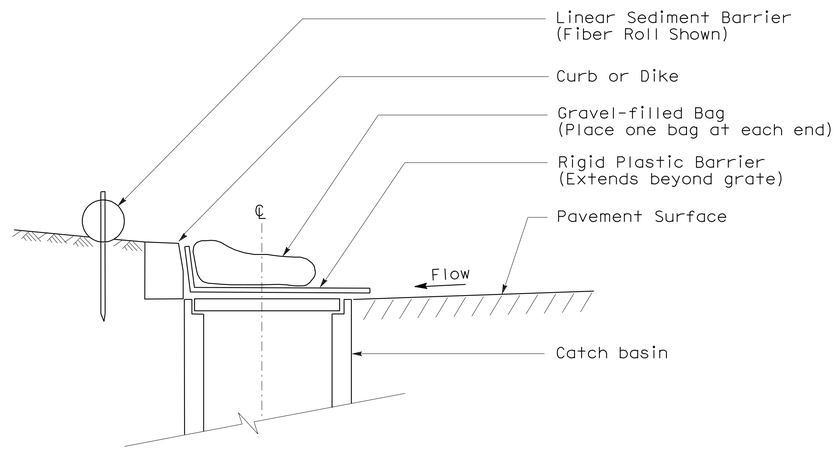

SECTION

TEMPORARY DRAINAGE INLET PROTECTION (TYPE 6A) (CATCH BASIN WITH GRATE)

NOTES:

1. See Standard Plan T51 for Temporary Silt Fence.
2. Dimensions may vary to fit field conditions.

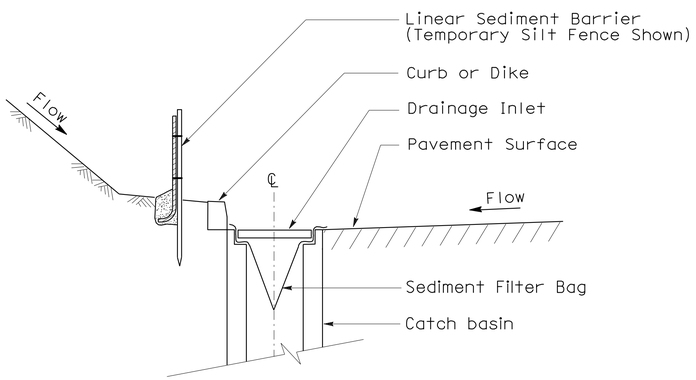

SECTION A-A

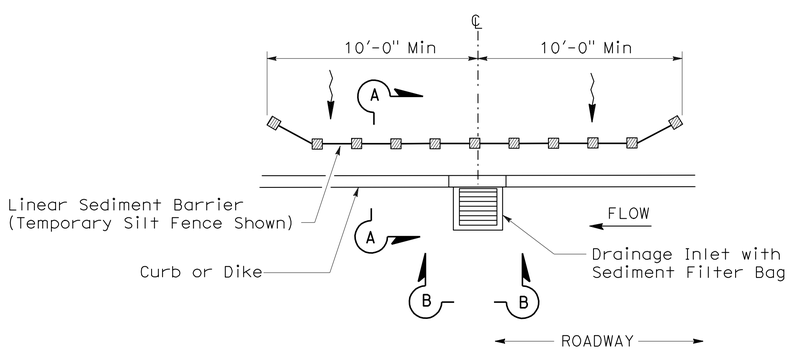

PLAN

TEMPORARY DRAINAGE INLET PROTECTION (TYPE 5) (SEDIMENT FILTER BAG)

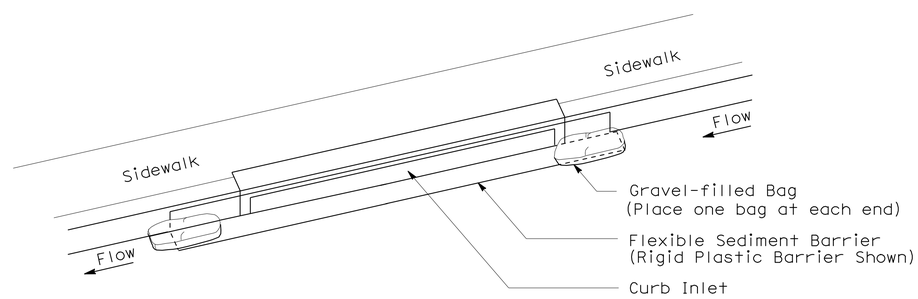

PERSPECTIVE

TEMPORARY DRAINAGE INLET PROTECTION (TYPE 6B) (CURB INLET WITHOUT GRATE)

STATE OF CALIFORNIA
DEPARTMENT OF TRANSPORTATION

TEMPORARY WATER POLLUTION CONTROL DETAILS (TEMPORARY DRAINAGE INLET PROTECTION)

NO SCALE

NSP T64 DATED AUGUST 15, 2008 SUPPLEMENTS
THE STANDARD PLANS BOOK DATED MAY 2006.

NEW STANDARD PLAN NSP T64

2006 NEW STANDARD PLAN NSP T64

7-11-08

DIST	COUNTY	ROUTE	POST MILES TOTAL PROJECT	SHEET NO.	TOTAL SHEETS
07	LA	5	4.0/5.9	934	1597

LICENSED LANDSCAPE ARCHITECT

April 3, 2009
PLANS APPROVAL DATE

The State of California or its officers or agents shall not be responsible for the accuracy or completeness of electronic copies of this plan sheet.

LICENSED LANDSCAPE ARCHITECT — Robert B. Schott — Signature — 11-30-10 Renewal Date — 2-25-09 Date — STATE OF CALIFORNIA

To accompany plans dated 4-9-12

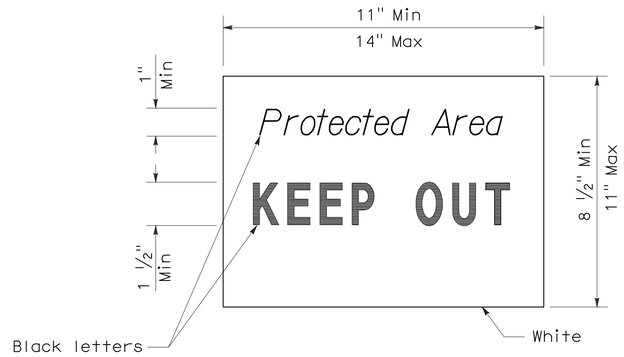

SIGN DETAIL

NOTE:

1. Temporary silt fence and temporary straw bale barrier shown for reference purposes only.

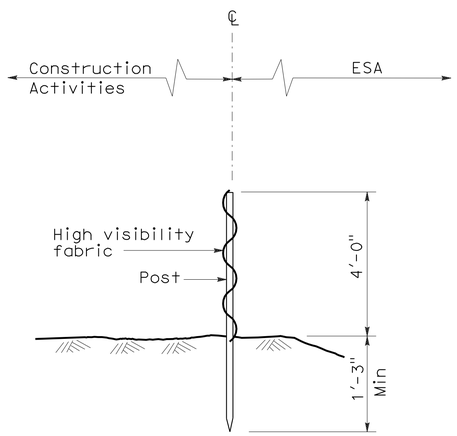

SECTION
TEMPORARY FENCE (TYPE ESA)

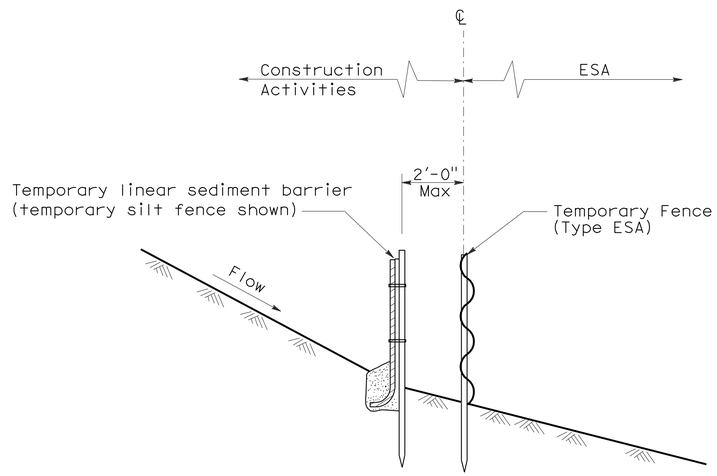

SECTION
PLACEMENT DETAIL
FOR TEMPORARY LINEAR SEDIMENT BARRIER
USED WITH TEMPORARY
FENCE (TYPE ESA)
(See Note 1)

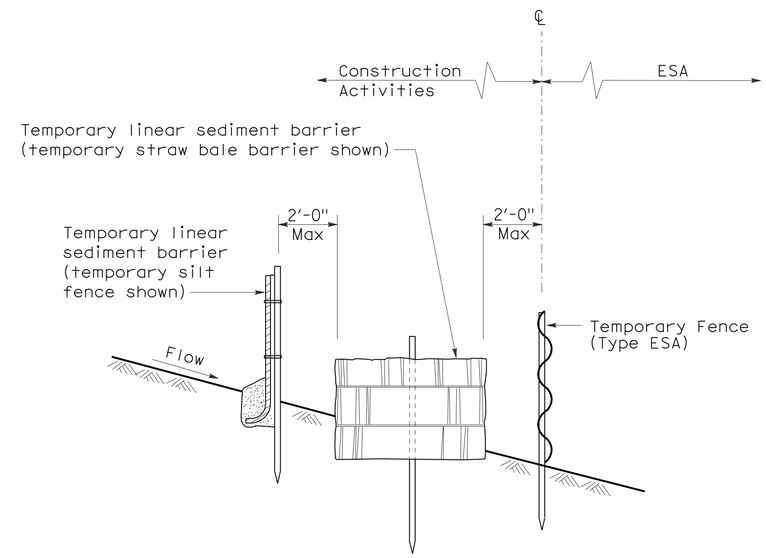

SECTION
PLACEMENT DETAIL
FOR TEMPORARY SILT FENCE
AND TEMPORARY STRAW BALE BARRIER
USED WITH TEMPORARY FENCE (TYPE ESA)
(See Note 1)

STATE OF CALIFORNIA
DEPARTMENT OF TRANSPORTATION

TEMPORARY WATER POLLUTION CONTROL DETAILS [TEMPORARY FENCE (TYPE ESA)]

NO SCALE

NSP T65 DATED APRIL 3, 2009 SUPPLEMENTS
THE STANDARD PLANS BOOK DATED MAY 2006.

NEW STANDARD PLAN NSP T65

2006 NEW STANDARD PLAN NSP T65

DIST	COUNTY	ROUTE	POST MILES TOTAL PROJECT	SHEET NO.	TOTAL SHEETS
07	LA	5	4.0/5.9	935	1597

REGISTERED CIVIL ENGINEER

October 5, 2007
PLANS APPROVAL DATE

REGISTERED PROFESSIONAL ENGINEER Efthymios Delis No. C51434 Exp. 6-30-08 CIVIL STATE OF CALIFORNIA

The State of California or its officers or agents shall not be responsible for the accuracy or completeness of electronic copies of this plan sheet.

To accompany plans dated 4-9-12

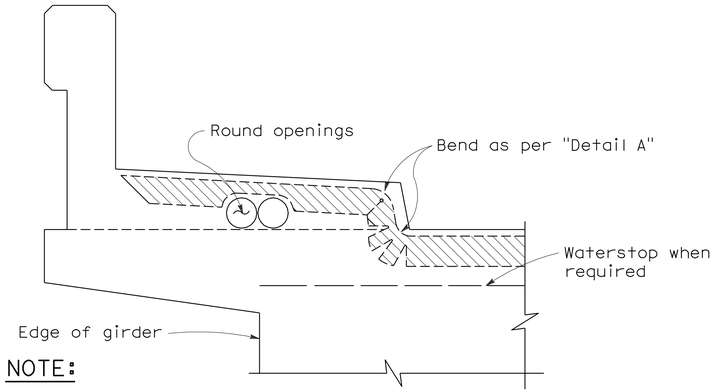

NOTE:

Type "B" seal shown. Type "A" seals to comform to the general path of seal shown, cuts for bending not required. Bend Type "A" seals 3" up into curb or barrier rail on only the low end of the seal.

CONCRETE BARRIER AND SIDEWALK

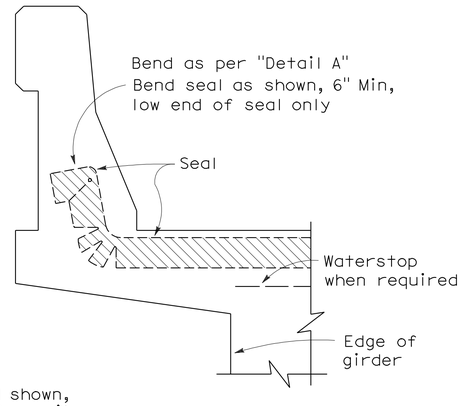

CONCRETE BARRIER

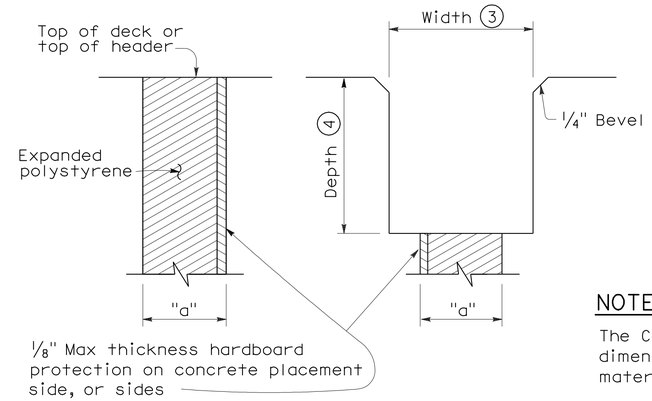

FORMING DETAIL SAWCUT DETAIL

NOTE:

The Contractor shall verify all controlling field dimensions before ordering or fabricatiing any material.

JOINT SEALS DETAILS

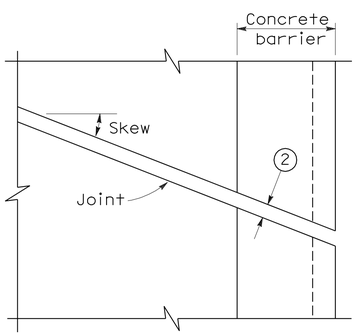

PLAN OF JOINT (SKEW ≤ 20°)

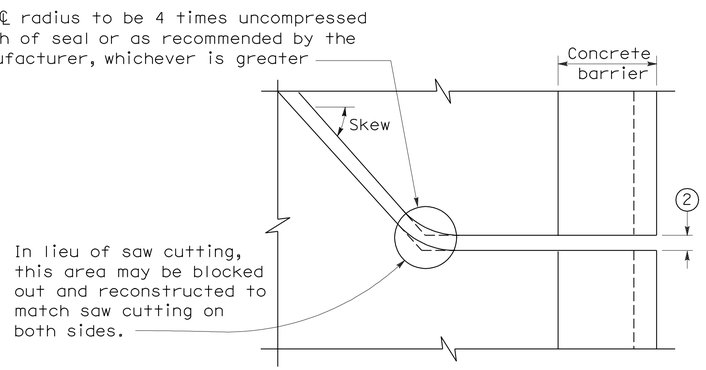

PLAN OF JOINT (SKEW > 20°)

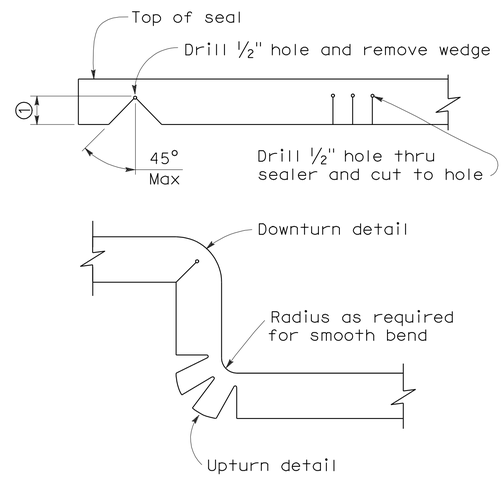

DETAIL A

NOTES:

1. Make smooth cuts from the bottom of seal to 1½" clear of top leaving at least one complete cell between the top of the cut and top of the seal. When necessary cut back of seal to clear conduit and round openings.
2. Opening in barrier to match width of sawn deck joint.
3. Sawcut groove widths shall be as ordered by the Engineer.
4. Depth of sawcut: Type A - Depth to be 2" minimum.
   Type B - Depth to be equal to or greater than the depth of seal measured along the contact surface, when compressed to minimum width position (W_2) plus dimensions shown.
5. MR (movement rating) as shown on other plan sheets.
6. Other depths must be approved by the Engineer.

DIMENSIONS "a" OF JOINT REQUIRED

Movement Rating (MR) (5)	Bridge Type	"a" Dimension Deck Concrete Placed		
		Winter	Fall-Spring	Summer
2"	All except CIP/PS	1½"	1¼"	¾"
	CIP/PS	1¼"	1"	½"
1½"	All except CIP/PS	1¼"	1"	½"
	CIP/PS	1"	¾"	½"
1"	All except CIP/PS	1"	¾"	½"
	CIP/PS	¾"	½"	½"
½"	All except CIP/PS	¾"	¾"	½"
	CIP/PS	½"	½"	½"

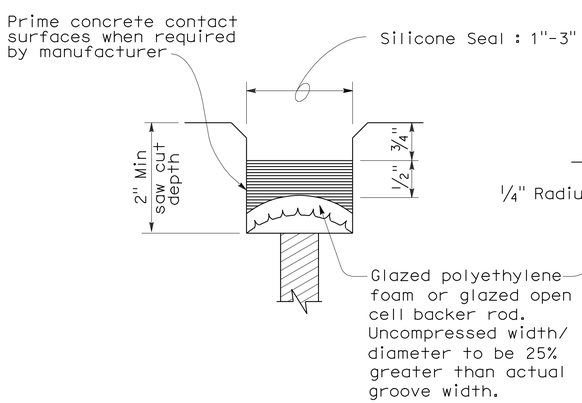

TYPE A SEAL

Movement rating : Silicone = 1" Max

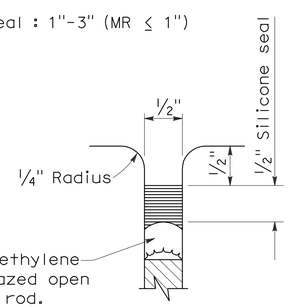

TYPE AL SEAL

Longitudinal joints only

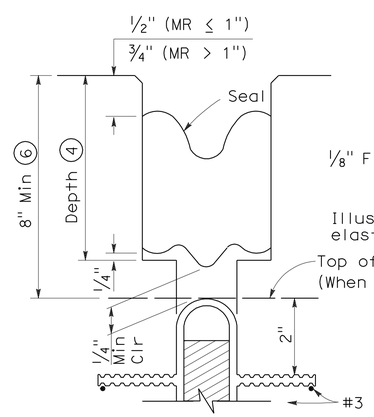

TYPE B JOINT SEAL
IN MINIMUM WIDTH POSITION (W_2)

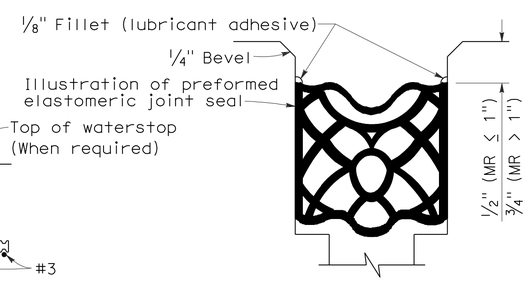

TYPE B SEAL

Movement Rating ≤ 2"

STATE OF CALIFORNIA
DEPARTMENT OF TRANSPORTATION

JOINT SEALS (MAXIMUM MOVEMENT RATING = 2")

NO SCALE

RSP B6-21 DATED OCTOBER 5, 2007 SUPERSEDES STANDARD PLAN B6-21 DATED MAY 1, 2006 - PAGE 258 OF THE STANDARD PLANS BOOK DATED MAY 2006.

REVISED STANDARD PLAN RSP B6-21

2006 REVISED STANDARD PLAN RSP B6-21

5-8-07

DIST	COUNTY	ROUTE	POST MILES TOTAL PROJECT	SHEET NO.	TOTAL SHEETS
07	LA	5	4.0/5.9	936	1597

REGISTERED CIVIL ENGINEER

October 21, 2011
PLANS APPROVAL DATE

REGISTERED PROFESSIONAL ENGINEER
Tillat Satter
No. C42892
Exp. 3-31-12
CIVIL
STATE OF CALIFORNIA

The State of California or its officers or agents shall not be responsible for the accuracy or completeness of electronic copies of this plan sheet.

To accompany plans dated 4-9-12

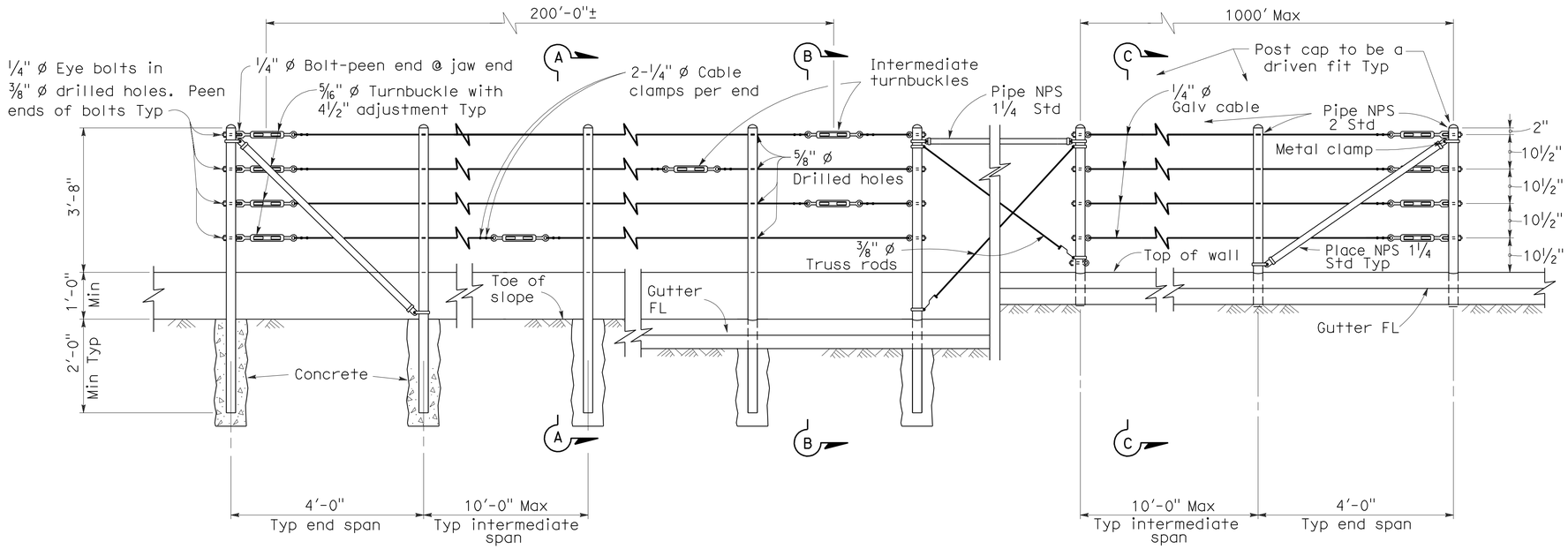

EXISTING WALL (WITHOUT GUTTER)
Existing

RETAINING WALL (WITH GUTTER)
Existing

RETAINING WALL (WITH GUTTER)
New construction

ELEVATION

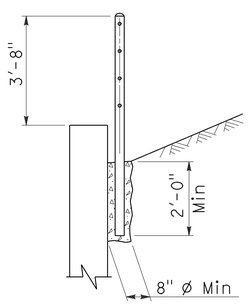

SECTION A-A
Existing

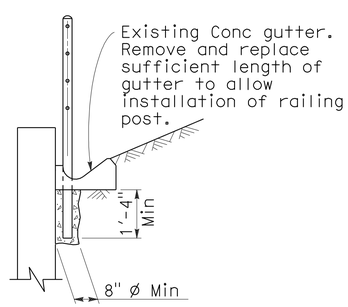

SECTION B-B
Existing

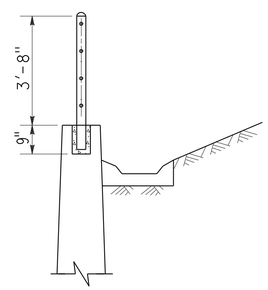

SECTION C-C
New construction

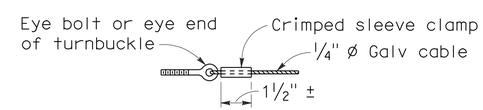

ALTERNATIVE CABLE CONNECTION

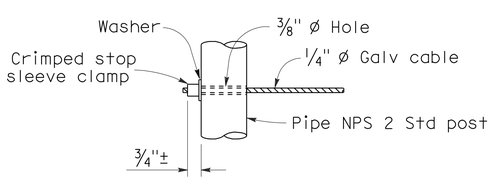

ALTERNATIVE DEAD END ANCHORAGE

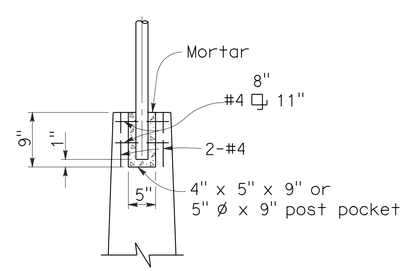

POST POCKET

NOTES:

1. Maximum distance between turnbuckles shall be 200'-0"±.
2. Intermediate turnbuckles to be placed in adjacent spans.
3. Cable shall not be spliced between intermediate turnbuckles and end posts.
4. All posts, cable, and hardware to be galvanized.
5. Posts to be vertical.
6. Alignment of holes in posts may vary to conform to slope of top of retaining wall.
7. The Contractor shall verify all dependent dimensions in the field before ordering or fabricating any material.
8. Alternative details may be submitted by the Contractor for approval by the Engineer.
9. Line posts shall be braced horizontally and trussed diagonally in both directions at intervals not to exceed 1000'.
10. Post pockets to be centered in top of wall.
11. Typical end spans, braced in both directions, shall be constructed at changes in line where the angle of deflection is 15° or more.
12. Provide thimbles at all cable loops.

STATE OF CALIFORNIA
DEPARTMENT OF TRANSPORTATION

CABLE RAILING

NO SCALE

RSP B11-47 DATED OCTOBER 21, 2011 SUPERSEDES STANDARD PLAN B11-47 DATED MAY 1, 2006 - PAGE 268 OF THE STANDARD PLANS BOOK DATED MAY 2006.

REVISED STANDARD PLAN RSP B11-47

2006 REVISED STANDARD PLAN RSP B11-47

9-19-11

DIST	COUNTY	ROUTE	POST MILES TOTAL PROJECT	SHEET NO.	TOTAL SHEETS
07	LA	5	4.0/5.9	937	1597

REGISTERED CIVIL ENGINEER

June 5, 2009
PLANS APPROVAL DATE

REGISTERED PROFESSIONAL ENGINEER
Tillat satter
No. C42892
Exp. 03-31-10
CIVIL
STATE OF CALIFORNIA

The State of California or its officers or agents shall not be responsible for the accuracy or completeness of electronic copies of this plan sheet.

To accompany plans dated 4-9-12

2006 REVISED STANDARD PLAN RSP B15-6

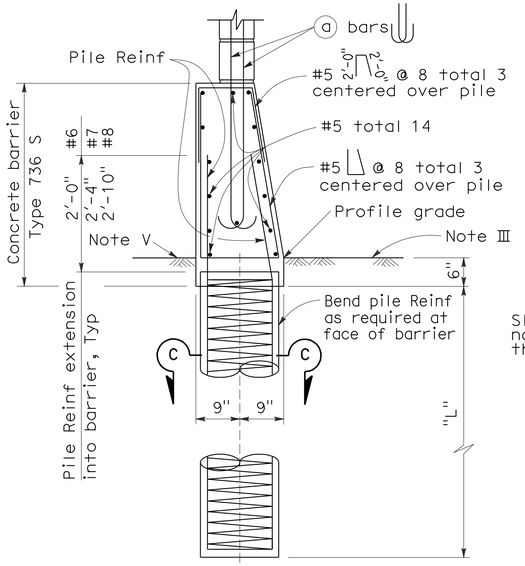

CASE 1

For details not shown, See Case 2.
Level ground ±10% on both sides of barrier.

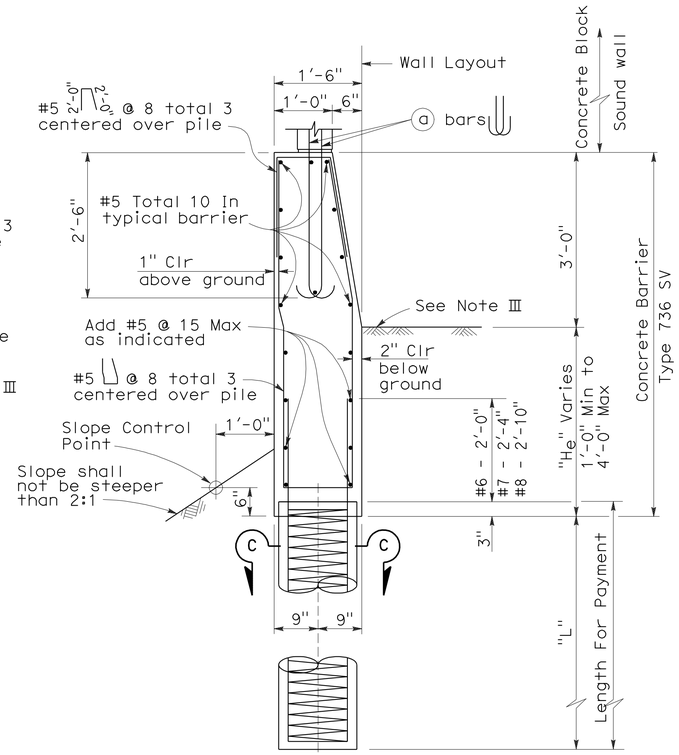

CASE 2

For details not shown, See Case 1.
Level ground ±10% at the traffic side of barrier and sloping ground on the opposite side.

BARRIER SECTIONS

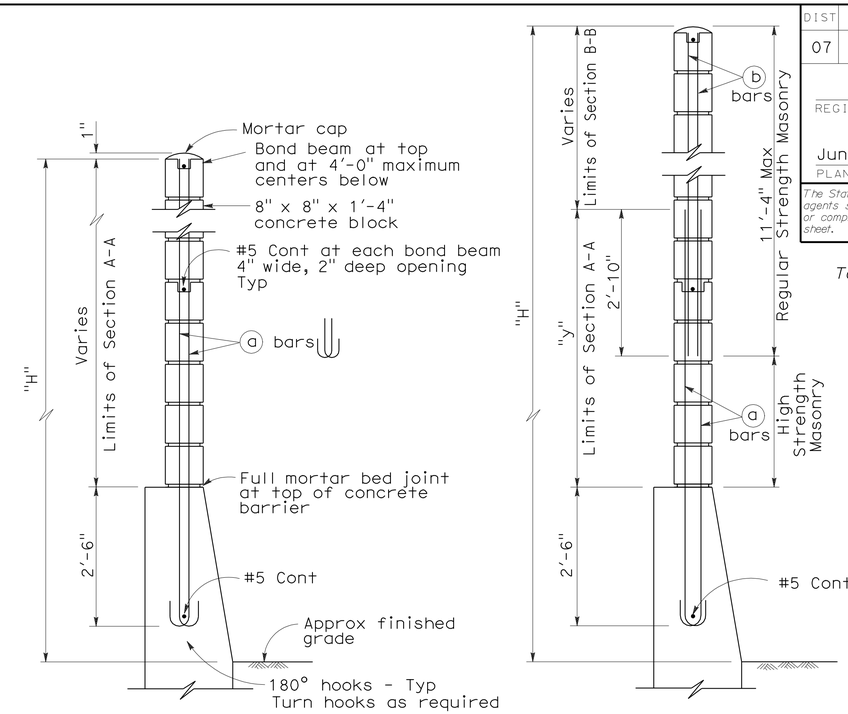

H=6'-4" THRU H=10'-4"

H=12'-4" THRU H=16'-4"

For details not shown, see H=6'-4" thru H=10'-4".

TYPICAL SECTIONS

See Revised Standard Plan RSP B15-8 for pile details.

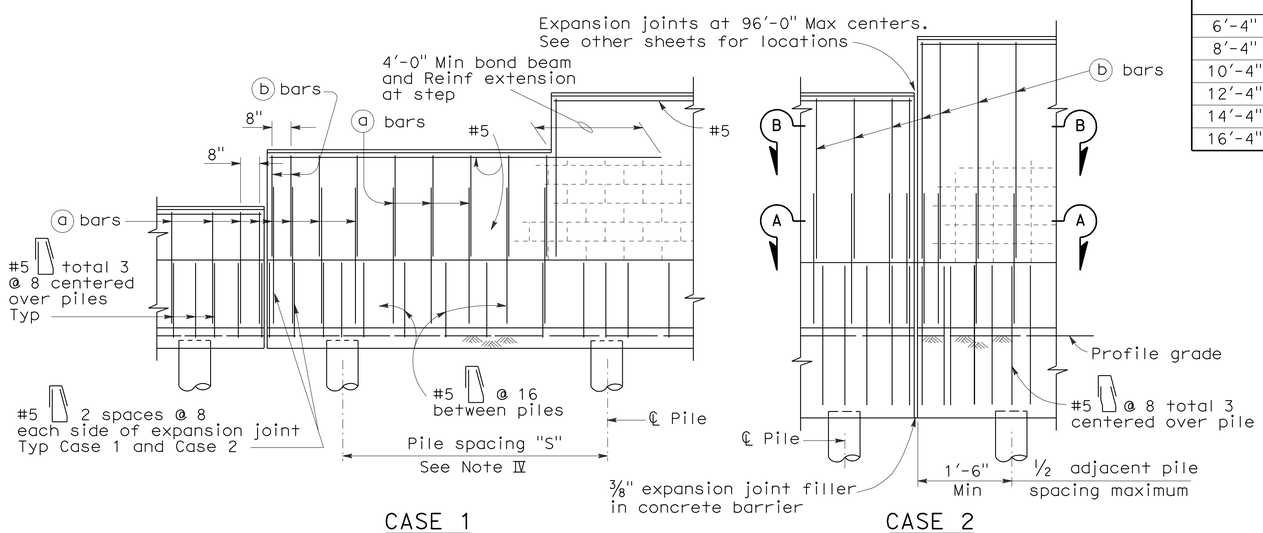

CASE 1

For details not shown, See Case 2.

CASE 2

For details not shown, See Case 1.

PARTIAL ELEVATIONS

SOUND WALL REINFORCEMENT TABLE

Maximum H	ⓐ bars @ 1'-4" Max	ⓑ bars @ 1'-4" Max	"y"	f'm (psi)	Compressive Strength of CMU (psi)	H
6'-4"	#4	---	---	1500	1900	6'-4"
8'-4"	#4	---	---	1500	1900	8'-4"
10'-4"	#4	---	---	1500	1900	10'-4"
12'-4"	#5	#4	5'-0"	1500	1900	12'-4"
14'-4"	#6	#4	7'-0"	1500	1900	14'-4"
16'-4"	#6	#4	9'-0"	2500	3750	16'-4"

NOTES I THROUGH VI:

I. Details shown are primarily to conform design of sound walls to Type 736S and Type 736 SV Concrete Barriers. For sound wall details conforming with barriers see Standard Plan B15-7 and Revised Standard Plan RSP B15-8.

II. For details and sections not shown, see Standard Plan B15-7 and Revised Standard Plan RSP B15-8.

III. Slope ground at traffic side of barrier to drain. Maximum slope ±10%. See Std Plan B11-56, Note D.

IV. Pile spacing may be varied, but shall not exceed the tabular values. See Revised Standard Plan RSP B15-8.

V. For Case 1 - ground line to be at the same elevation on both sides of the barrier. Barrier shall not be used to retain earth.

VI. See Standard Plan B15-9 for other details.

NOTES A THROUGH G:

A. For type of block, type of block bond, and joint finish, see other sheets.

B. When blocks are laid in stacked bond, ladder type, galvanized joint reinforcement shall be provided. A minimum of 2-9 gauge wires continuous at 4'-0" maximum to be used. Locate reinforcement in joints that are at the approximate midpoint between bond beams.

C. Horizontal joints shall be tooled concave or may be weathered. Vertical joints shall be tooled concave or may be raked.

D. For intermediate wall heights (H), or barrier depths (H_e), that are between the values given, use the tabular information for the next higher (H) or (H_e).

E. Concrete to be used for the barrier shall contain not less than 590 pounds of cementitious material per cubic yard.

F. Masonry strengths are listed in the "SOUND WALL REINFORCEMENT TABLE".

STATE OF CALIFORNIA
DEPARTMENT OF TRANSPORTATION

SOUND WALL MASONRY BLOCK ON TYPE 736S/SV BARRIER DETAILS (1)

NO SCALE

RSP B15-6 DATED JUNE 5, 2009 SUPERSEDES
RSP B15-6 DATED OCTOBER 5, 2007 AND STANDARD PLAN B15-6
DATED MAY 1, 2006 - PAGE 296 OF THE STANDARD PLANS BOOK DATED MAY 2006.

REVISED STANDARD PLAN RSP B15-6

4-15-09

DIST	COUNTY	ROUTE	POST MILES TOTAL PROJECT	SHEET NO.	TOTAL SHEETS
07	LA	5	4.0/5.9	938	1597

REGISTERED ELECTRICAL ENGINEER

October 5, 2007
PLANS APPROVAL DATE

REGISTERED PROFESSIONAL ENGINEER Jeffery G. McRae No. E14512 Exp. 6-30-08 ELECTRICAL STATE OF CALIFORNIA

The State of California or its officers or agents shall not be responsible for the accuracy or completeness of electronic copies of this plan sheet.

To accompany plans dated 4-9-12

ELECTROLIERS

STANDARD TYPES
15, 15D
15 STRUCTURE
21, 21D STRUCTURE
30
31
32
35
36-20A

High mast light pole

Double Arm lighting standard

Existing electrolier

Electrolier foundation (Future installation)

NOTES:

1. Luminaires shall be 310 W HPS when installed on Type 21, 21D, 30, 31, 32, 35 and 36-20A Standards, unless otherwise specified. Luminaires shall be 200 W HPS when installed on other type standards or poles, unless otherwise specified.
2. Luminaires shall be the cutoff type, ANSI Type Ⅲ medium cutoff lighting distribution, unless otherwise specified.
3. Variations noted adjacent to symbol on project plans.

Electrolier (see project notes or project plans)

Luminaire on wood pole

STANDARD NOTES:

- AB — Abandon. If applied to conduit, remove conductors.
- BC — Install pull box in existing conduit run.
- BP — Pedestrian barricade, type as indicated on plan.
- CB — Install conduit into existing pull box.
- CC — Connect new and existing conduit. Remove existing conductors and install conductors as indicated.
- CF — Conduit to remain for future use. Remove conductors. Install pull wire or rope.
- DH — Detector handhole.
- FA — Foundation to be abandoned.
- IS — Install sign on signal mast arm.
- NS — No slip base on standard.
- PEC — Photoelectric control.
- PEU — Photoelectric unit.
- RC — Equipment or material to be removed and become the property of the Contractor.
- RE — Remove electrolier, fuses and ballast. Tape ends of conductors.
- RL — Relocate equipment.
- RR — Remove and reuse equipment.
- RS — Remove and salvage equipment.
- SC — Splice new to existing conductors.
- SD — Service disconnect.
- SF — Standard to remain for future use. Remove luminaire, pole conductors, fuses and ballast.
- TSP — Telephone service point.

ABBREVIATIONS AND EQUIPMENT DESIGNATIONS

PROPOSED	EXISTING	
BBS	bbs	Battery backup system
BC	bc	Bolt circle
C	C	Conduit
CCTV	cctv	Closed circuit television
CKT	ckt	Circuit
CMS	cms	Changeable message sign
DLC	dlc	Loop detector lead-in cable
EMS	ems	Extinguishable message sign
EVC	evc	Emergency vehicle cable
EVD	evd	Emergency vehicle detector
FB	fb	Flashing beacon
FBCA	fbca	Flashing beacon control assembly
FBS	fbs	Flashing beacon with slip base
FO	fo	Fiber optic
G	G	Ground (Equipment Grounding Conductor)
GFCI	GFCI	Ground fault circuit interrupt
HAR	har	Highway advisory radio
HEX	hex	Hexagonal
HPS	hps	High pressure sodium
IISNS	iisns	Internally illuminated street name sign
ISL	isl	Induction sign lighting
LED	led	Light emitting diode
LMA	lma	Luminaire mast arm
LPS	lps	Low pressure sodium
LTG	ltg	Lighting
LUM	lum	Luminaire
MAT	mat	Mast arm mounting vehicle signal faces, top attachment
MAS	mas	Mast arm mounting vehicle signal faces, side attachment
MAS-4A	mas-4A	Mast arm mounting vehicle signal faces, side attachment - 4 signal section
MAS-4B	mas-4B	
MAS-4C	mas-4C	
MAS-5A	mas-5A	Mast arm mounting vehicle signal faces, side attachment - 5 signal section
MAS-5B	mas-5B	
MC	mc	Mercury contactor
M/M	m/m	Multiple to multiple transformer
MT	mt	Conduit with pull wire or rope only
MTG	mtg	Mounting
	mv	Mercury vapor lighting fixture
N	N	Neutral (Grounded Conductor)
NC	NC	Normally closed
NO	NO	Normally open
PB	pb	Pull box
PEC	pec	Photoelectric control (Type Ⅰ, Ⅱ, Ⅲ, Ⅳ or Ⅴ as shown)
PED	ped	Pedestrian
PEU	peu	Photoelectric unit
PPB	ppb	Pedestrian push button
RL		Relocated equipment
RM	rm	Ramp metering
SB	sb	Slip base
SIC	sic	Signal interconnect cable
SIG	sig	Signal
SMA	sma	Signal mast arm
SNS	sns	Street name sign
SP	sp	Service point
TDC	tdc	Telephone demarcation cabinet
TMS	tms	Traffic monitoring station
TOS	tos	Traffic Operations System
VEH	veh	Vehicle
XFMR	xfmr	Transformer
COMM	comm	Communication
RWIS	rwis	Roadway weather information system

SOFFIT AND WALL MOUNTED LUMINAIRES

Pendant, 70 W HPS unless otherwise specified.

Flush, 70 W HPS unless otherwise specified.

Wall surface, 70 W HPS unless otherwise specified.

Existing soffit or wall luminaire to remain unmodified.

Existing soffit or wall luminaire to be modified as specified.

NOTE:

Arrow indicates "street side" of luminaire.

STATE OF CALIFORNIA
DEPARTMENT OF TRANSPORTATION

ELECTRICAL SYSTEMS (SYMBOLS AND ABBREVIATIONS)

NO SCALE

RSP ES-1A DATED OCTOBER 5, 2007 SUPERSEDES STANDARD PLAN ES-1A DATED MAY 1, 2006 - PAGE 400 OF THE STANDARD PLANS BOOK DATED MAY 2006.

REVISED STANDARD PLAN RSP ES-1A

2006 REVISED STANDARD PLAN RSP ES-1A

DIST	COUNTY	ROUTE	POST MILES TOTAL PROJECT	SHEET NO.	TOTAL SHEETS
07	LA	5	4.0/5.9	939	1597

REGISTERED ELECTRICAL ENGINEER

October 5, 2007
PLANS APPROVAL DATE

REGISTERED PROFESSIONAL ENGINEER Jeffery G. McRae No. E14512 Exp. 6-30-08 ELECTRICAL STATE OF CALIFORNIA

The State of California or its officers or agents shall not be responsible for the accuracy or completeness of electronic copies of this plan sheet.

To accompany plans dated 4-9-12

CONDUIT

PROPOSED	EXISTING	
		Lighting Conduit, unless otherwise indicated or noted
		Traffic signal conduit
C	c	Communication conduit
T	t	Telephone conduit
F	f	Fire alarm conduit
FO	fo	Fiber optic conduit
		Conduit termination (RSP ES-9A C)
R	r	Conduit riser in/on structure or service pole

SERVICE EQUIPMENT

PROPOSED	EXISTING	
OH	oh	Overhead lines
U	U	Wood pole "U" indicates utility owned
		Pole guy with anchor
		Utility transformer - ground mounted
III		Service equipment enclosure type
		Service equipment enclosure door indicates front of enclosure
T	t	Telephone demarcation cabinet

POLE-MOUNTED SERVICE DESIGNATION

Type of installation

TYPE H SERVICE - 28'-10" ← Pole height above grade

ILLUMINATED OVERHEAD SIGN

PROPOSED	EXISTING	
		Overhead sign - Single post
		Overhead sign - Two post
		Overhead sign - Mounted on structure
		Overhead sign with electrolier

SIGNAL EQUIPMENT

PROPOSED	EXISTING	
		Pedestrian signal face
		Pedestrian push button post
		Pedestrian barricade
		Vehicle signal face (with backplate, 3-Section: red, yellow and green)
		Vehicle signal face with angle visors
PV	PV	Modifications of basic symbols: "L" indicates all non-arrow sections louvered "LG" indicates louvered green section only "PV" indicates 12" programmed visibility sections "8" indicates all 8" sections (only when specified)
		Type 15TS and Vehicle signal face
		Vehicle signal face with red, yellow and green left arrow sections
		Vehicle signal face with red and yellow sections and up green arrow
		Vehicle signal face (5 Section) with red, yellow and green sections and yellow and green right arrows
		Type 1 Standard and attached vehicle signal faces
		Standard with signal mast arm only and attached vehicle signal faces and internally illuminated street name sign
		Type 33 Standard, Left-turn vehicle signal face and sign
		Standard with luminaire and signal mast arms and attached vehicle signal faces
		Cantilever flashing beacon Type 9 Frame, with a sign unless otherwise specified or indicated
		Type 15-FBS Standard with two vehicle signal face sections with lens, backplate and visor with a sign
R	Y	Flashing beacon. One vehicle signal face section with lens, backplate and visor. "R" indicates red indication, "Y" indicates yellow indication
		Controller assembly. Door indicates front of cabinet

SIGNAL EQUIPMENT Cont

PROPOSED	EXISTING	
		Guard post
		Type 1 Standard with "Meter On" sign
		Emergency Vehicle detector

NOTES:

1. All signal sections shall be 12" unless shown otherwise.
2. Signal heads shall be provided with backplates unless shown otherwise.
3. Signal indication shall be LED.

STATE OF CALIFORNIA
DEPARTMENT OF TRANSPORTATION

ELECTRICAL SYSTEMS (SYMBOLS AND ABBREVIATIONS)

NO SCALE

RSP ES-1B DATED OCTOBER 5, 2007 SUPERCEDES STANDARD PLAN ES-1B DATED MAY 1, 2006 - PAGE 401 OF THE STANDARD PLANS BOOK DATED MAY 2006.

REVISED STANDARD PLAN RSP ES-1B

2006 REVISED STANDARD PLAN RSP ES-1B

DIST	COUNTY	ROUTE	POST MILES TOTAL PROJECT	SHEET NO.	TOTAL SHEETS
07	LA	5	4.0/5.9	940	1597

REGISTERED ELECTRICAL ENGINEER

October 5, 2007
PLANS APPROVAL DATE

REGISTERED PROFESSIONAL ENGINEER Jeffery G. McRae No. E14512 Exp. 6-30-08 ELECTRICAL STATE OF CALIFORNIA

The State of California or its officers or agents shall not be responsible for the accuracy or completeness of electronic copies of this plan sheet.

To accompany plans dated 4-9-12

EQUIPMENT IDENTIFICATION

ILLUMINATED SIGN IDENTIFICATION NUMBER:

Sign No. 12345 — Sign number - Place on post or structure

10 ISL SCI 1.0

- 1.0 — Transformer rating (kVA)
- SCI — Lighting control type
- ISL — Number and type of fixtures

Do NOT place on standard or structure

ELECTROLIER OR EQUIPMENT IDENTIFICATION NUMBER:

12345 - 15'-0"

- 15'-0" — Mast arm length, if shown. Do not place on standard or structure.
- 12345 — Equipment number - Place on standard or structure. Existing equipment numbers are shown in parenthesis

CONDUIT AND CONDUCTOR IDENTIFICATION:

1½"C, 2#10, 15#14, 2 DLC

- 2#10, 15#14, 2 DLC — Number and size of conductors and cables
- 1½"C — Size of conduit in inches

Ø1, Ø2, Ø2P, etc.	Traffic phase identification for signal faces, detectors and phase diagrams
1 2 3	Project note numbers
A B C	Equipment description, installation or item numbers
1 2 3	Conduit run numbers

SIGNAL AND LIGHTING STANDARD (TYPICAL DESIGNATION):

19A - 3 - 100

- 100 — Wind velocity = 100 mph
- 3 — Case 3 arm loading
- 19A — Standard type
- Standard Plan sheet number
- Detail number or letter

MISCELLANEOUS EQUIPMENT

PROPOSED	EXISTING	
CMS	cms	Changeable message sign
		Closed circuit television camera
		Highway advisory radio pole and antenna
EMS	ems	Extinguishable message sign
M V	m v	Detection device M = Microwave sensor V = Video image sensor

WIRING DIAGRAM LEGEND

P	Pole
CB	Circuit breaker
A	Ampere
V	Volt
M	Metered
UM	Unmetered
NB	Neutral bus
GB	Ground bus
G	Equipment grounding conductor
N	Grounded conductor (Neutral)

- External conductor
- Conductor or bus
- Tie point
- Contactor coil
- Contactor, Contact NO
- Terminal blocks
- Contactor, Contact NC
- Enclosure bond
- Grounding electrode
- Circuit breaker
- Receptacle

PULL BOXES

PROPOSED	EXISTING	
		Pull box-No. 5 unless otherwise indicated or noted.
3	9A(21)	Pull box-Additional designations or descriptions

3 = No. 3½ pull box
5 = No. 5 pull box
6 = No. 6 pull box
7 = No. 7 (Ceiling pull box)
8 = No. 8 (Pendant soffit pull box)
9 = No. 9 pull box
9A = No. 9A pull box

(C) = Communications pull box
(E) = Pull box with extension
(S) = Sprinkler control pull box
(21) = Anchor bolts and conduit for future installation of Type 21 Standard
(T) = Traffic pull box

VEHICLE DETECTORS

5 J 9 U

- U = Upper
- L = Lower
- Slot number in input file
- Input file (I or J)
- Phase — Vehicle detector designation

PROPOSED	EXISTING	
		Type A detector loop. Outline of sawcut shown.
		Type B detector loop. Outline of sawcut shown.
		Type C detector loop. Outline of sawcut shown.
		Type D detector loop. Outline of sawcut shown.
		Type E detector loop. Outline of sawcut shown.
		Type Q detector loop. Outline of sawcut shown.
		Magnetic detector
DH	dh	Detector handhole
		Microwave or video detection zone

STATE OF CALIFORNIA
DEPARTMENT OF TRANSPORTATION

ELECTRICAL SYSTEMS (SYMBOLS AND ABBREVIATIONS)

NO SCALE

RSP ES-1C DATED OCTOBER 5, 2007 SUPERCEDES STANDARD PLAN ES-1C DATED MAY 1, 2006 - PAGE 402 OF THE STANDARD PLANS BOOK DATED MAY 2006.

REVISED STANDARD PLAN RSP ES-1C

2006 REVISED STANDARD PLAN RSP ES-1C

DIST	COUNTY	ROUTE	POST MILES TOTAL PROJECT	SHEET NO.	TOTAL SHEETS
07	LA	5	4.0/5.9	941	1597

REGISTERED ELECTRICAL ENGINEER

October 5, 2007
PLANS APPROVAL DATE

REGISTERED PROFESSIONAL ENGINEER
Jeffery G. McRae
No. E14512
Exp. 6-30-08
ELECTRICAL
STATE OF CALIFORNIA

The State of California or its officers or agents shall not be responsible for the accuracy or completeness of electronic copies of this plan sheet.

To accompany plans dated 4-9-12

2006 REVISED STANDARD PLAN RSP ES-2C

NOTES-TYPE III SERVICE EQUIPMENT ENCLOSURES:

1. Service equipment enclosure and metering equipment shall meet the requirements of the service utility. The meter area shall have a sealable, lockable, weathertight cover that can be removed without the use of tools.

2. Service equipment enclosures shall be factory wired and conform to NEMA standards.

3. Dimensions of service equipment enclosures shall meet the requirements of the service utility.

4. The dead front panels on Type III service equipment enclosures shall have a continuous stainless steel or aluminum piano hinge. The panel in front of the breakers shall be secured with a latch or captive screws. No live parts shall be mounted on the dead front panel.

5. The exterior door shall have provisions for padlocking. The padlock hole shall be a minimum diameter of 7/16".

6. Enclosures housing transformers of more than one kVA shall have effective screened ventilation louver of not less than 50 square inches. Screen shall be stainless steel No. 304, with a No. 10 size mesh. Framed screen shall be secured with at least four bolts.

7. Fasteners on the exterior of the enclosure shall be vandal-resistant and shall not be removable from the exterior. Exterior screws, nuts, bolts and washers shall be stainless steel.

8. Landing lugs for incoming service conductors shall be compatible with either copper or aluminum conductors sized to suit the conductors shown on the plan. Landing lugs shall be copper or tin-plated aluminum. Neutral bus shall be rated for 125 A and be suitable for copper or aluminum conductors unless otherwise specified. The terminal shall include but not be limited to:

   a) Incoming terminals (landing lugs)
   b) Neutral lugs
   c) Solid neutral terminal strip

9. At least 6 standard single pole circuit breaker spaces, 3/4" nominal, shall be provided for branch circuits. Circuit breaker interiors shall be copper. Interiors of enclosure shall accept plug-in or cable-in/cable-out circuit breakers.

10. Control wiring shall be 600 V, 14 stranded machine tool wire. Where subject to flexing, 19 strand wire shall be used.

11. Main bus shall be rated for 125 A and shall be tin-plated copper.

12. A plastic laminated wiring diagram shall be provided with brass mounting eyelets and attached to the inside of the enclosure and the wiring diagram shall be affixed to the interior with a UL or ETL approved method.

13. An engraved phenolic nameplate on the dead front panel indicating the function of each circuit or device shall be installed with stainless steel rivets or stainless steel screws:

    a) Adjacent to the breaker or device with character size a minimum of 1/8".

    b) At the top of the exterior door panel indicating State system number, voltage level and number of phases with character size a minimum of 3/16".

14. The plan shows the approximate location of devices within the enclosure. Components may be rearranged, however, the "working" clearances within the service equipment enclosure shall be maintained.

15. In unpaved areas a raised portland cement concrete pad 2'-0" x 4" x width of foundation shall be constructed in front of new service equipment enclosure installation. Pad shall be set to elevation of foundation.

16. Foundation shall extend 2" minimum beyond edge of service equipment enclosure.

17. Internal bus, where shown, is typical only. Alternative design of proposed service equipment enclosure shall be submitted to the Engineer for approval.

18. Plug-in circuit breakers may be mounted in the vertical or horizontal position. Cable-in/cable-out circuit breakers shall be mounted in the vertical position.

19. Type III-AF and Type III-BF service equipment enclosures shall have the meter viewing windows located on the front side of the service equipment enclosures.

20. Type III-AR and Type III-BR service equipment enclosures shall be similarly constructed as Type III-AF and Type III-BF respectively, except the meter viewing windows shall be located on the back side of the service equipment enclosures.

21. Minimum clearance shall be required for front and back of service equipment enclosure per National Electrical Code, Article 110.26, "Spaces About Electric Equipment (600 Volts, Nominal, or Less)."

STATE OF CALIFORNIA
DEPARTMENT OF TRANSPORTATION

ELECTRICAL SYSTEMS (SERVICE EQUIPMENT NOTES TYPE III SERIES)

NO SCALE

RSP ES-2C DATED OCTOBER 5, 2007 SUPERCEDES STANDARD PLAN ES-2C DATED MAY 1, 2006 - PAGE 405 OF THE STANDARD PLANS BOOK DATED MAY 2006.

REVISED STANDARD PLAN RSP ES-2C

DIST	COUNTY	ROUTE	POST MILES TOTAL PROJECT	SHEET NO.	TOTAL SHEETS
07	LA	5	4.0/5.9	942	1597

REGISTERED ELECTRICAL ENGINEER

October 5, 2007
PLANS APPROVAL DATE

REGISTERED PROFESSIONAL ENGINEER Jeffery G. McRae No. E14512 Exp. 6-30-08 ELECTRICAL STATE OF CALIFORNIA

The State of California or its officers or agents shall not be responsible for the accuracy or completeness of electronic copies of this plan sheet.

To accompany plans dated 4-9-12

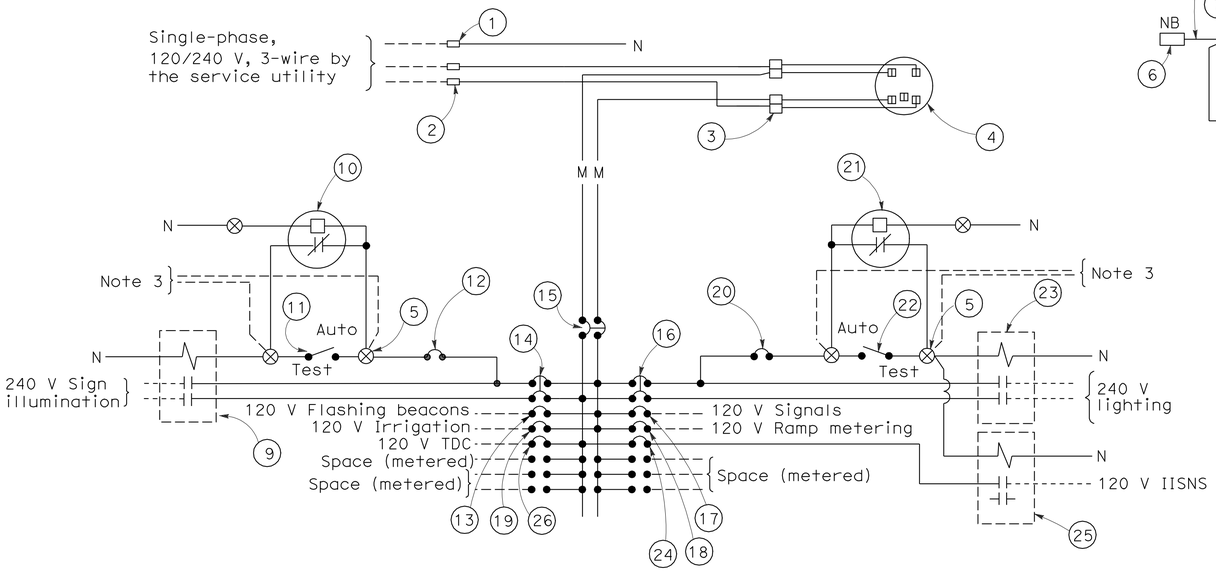

120/240 V SERVICE WIRING DIAGRAM (TYPICAL)

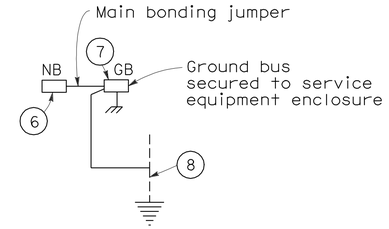

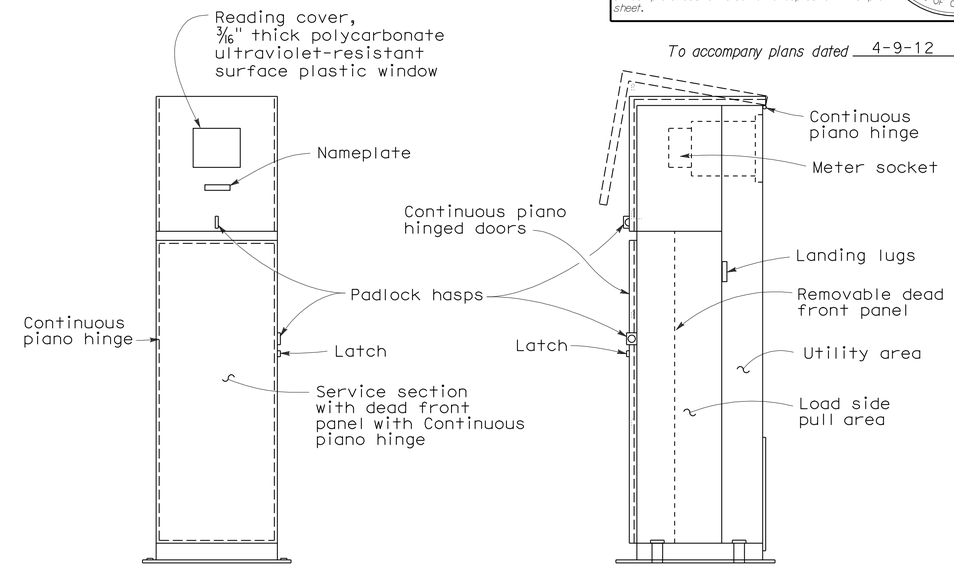

FRONT VIEW

SIDE VIEW

TYPE III-BF SERVICE EQUIPMENT ENCLOSURE WITH PROVISIONS FOR ONE 100 A METER (TYPICAL)

TYPE III-B SERVICE (120/240 V) EQUIPMENT LEGEND		
ITEM No.	COMPONENT	NAME PLATE DESCRIPTION
1	Neutral lug	
2	Landing lug (Note 6)	
3	Test bypass facility	
4	Meter socket and support	
5	Terminal blocks	
6	Neutral bus	
7	Ground bus	
8	Grounding electrode	
9	30 A, 2PNO Contactor	Sign Illumination
10	Photoelectric unit (Note 7)	
11	15 A, 1P, Test switch	Sign Illumination Test Switch
12	15 A, 120 V, 1P, CB	Sign Illumination Control
13	15 A, 120 V, 1P, CB	Flashing Beacon
14	30 A, 240 V, 2P, CB	Sign Illumination
15	100 A, 240 V, 2P, CB	Main Breaker
16	30 A, 240 V, 2P, CB	Lighting
17	50 A, 120 V, 1P, CB	Signals
18	30 A, 120 V, 1P, CB	Ramp Metering
19	20 A, 120 V, 1P, CB	Irrigation
20	15 A, 120 V, 1P, CB	Lighting Control
21	Photoelectric unit (Note 7)	
22	15 A, 1P, Test switch	Lighting Test Switch
23	60 A, 2PNO Contactor	Lighting
24	15 A, 120 V, 1P, CB	IISNS
25	30 A, 2PNO Contactor	IISNS
26	20 A, 120 V, IP, CB	Telephone Demarcation Cabinet

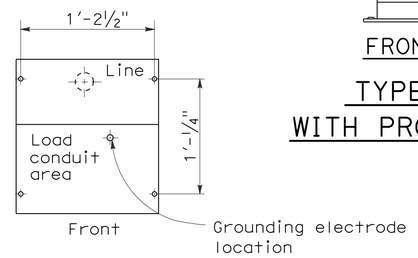

BASE FOR TYPE III-B SERVICE EQUIPMENT ENCLOSURE

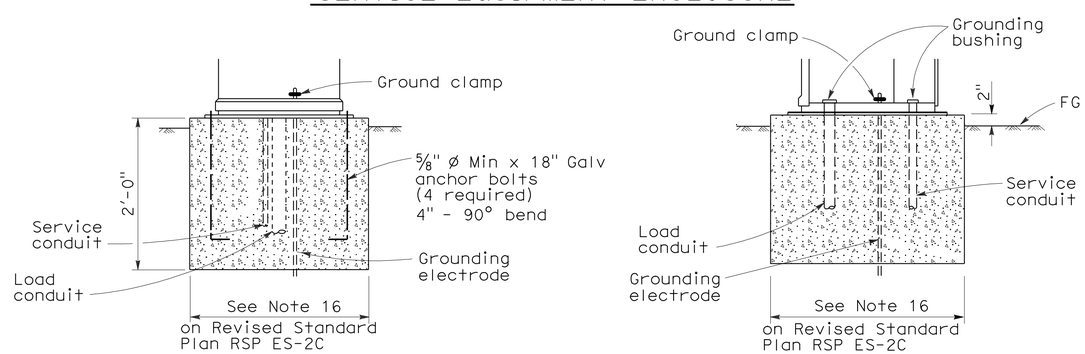

FRONT VIEW

SIDE VIEW

TYPE III-B SERVICE EQUIPMENT ENCLOSURE FOUNDATION DETAILS

NOTES: (FOR SERVICE EQUIPMENT ENCLOSURE)

1. Voltage ratings of service equipment shall conform to the service voltages indicated on the plans.
2. Unless otherwise indicated on the plans, service equipment items shall be provided for each service equipment enclosure as shown.
3. Connect to remote test switch mounted on lighting standards, sign post or structure when required.
4. Items No. 1 and 6 shall be isolated from the service equipment enclosure.
5. Meter sockets shall be 5 clip type.
6. The landing lug shall be suitable for multiple conductors.
7. Type V photoelectric control shall be used unless otherwise indicated on the plans.

STATE OF CALIFORNIA
DEPARTMENT OF TRANSPORTATION

ELECTRICAL SYSTEMS (SERVICE EQUIPMENT AND TYPICAL WIRING DIAGRAM, TYPE III-B SERIES)

NO SCALE

RSP ES-2E DATED OCTOBER 5, 2007 SUPERCEDES STANDARD PLAN ES-2E DATED MAY 1, 2006 - PAGE 407 OF THE STANDARD PLANS BOOK DATED MAY 2006.

REVISED STANDARD PLAN RSP ES-2E

2006 REVISED STANDARD PLAN RSP ES-2E

7-10-07

DIST	COUNTY	ROUTE	POST MILES TOTAL PROJECT	SHEET NO.	TOTAL SHEETS
07	LA	5	4.0/5.9	943	1597

REGISTERED ELECTRICAL ENGINEER

October 5, 2007
PLANS APPROVAL DATE

REGISTERED PROFESSIONAL ENGINEER Jeffery G. McRae No. E14512 Exp. 6-30-08 ELECTRICAL STATE OF CALIFORNIA

The State of California or its officers or agents shall not be responsible for the accuracy or completeness of electronic copies of this plan sheet.

To accompany plans dated 4-9-12

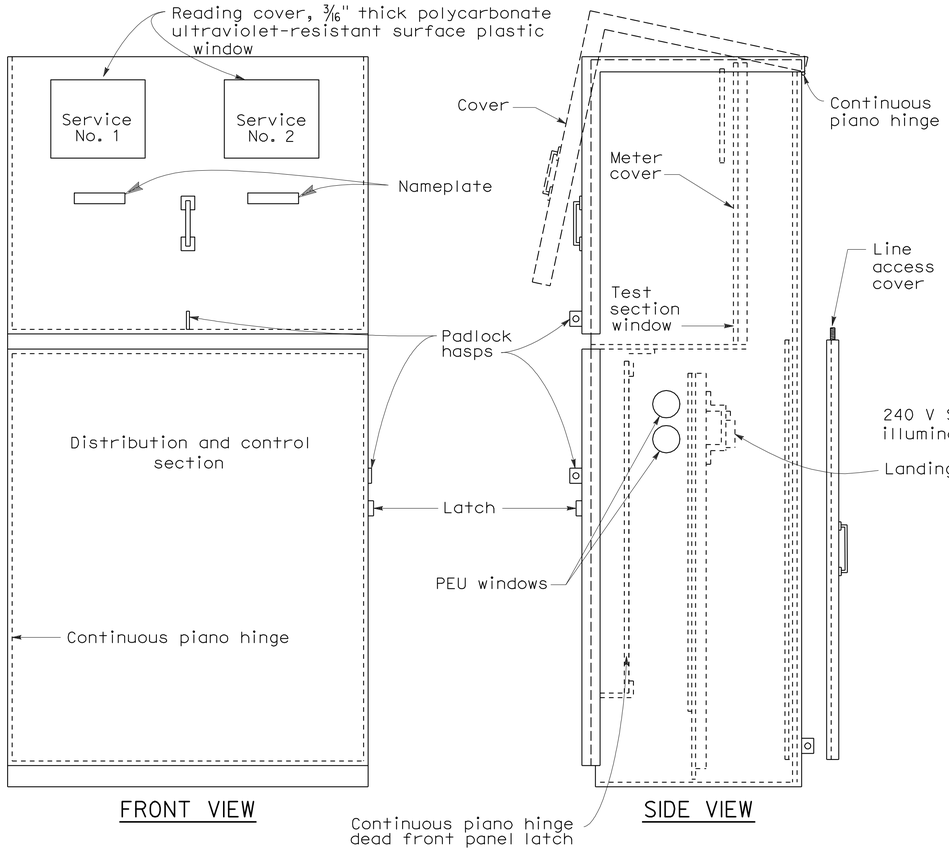

FRONT VIEW

SIDE VIEW

TYPE III-CF SERVICE EQUIPMENT ENCLOSURE WITH PROVISIONS FOR TWO 100 A METERS (TYPICAL)

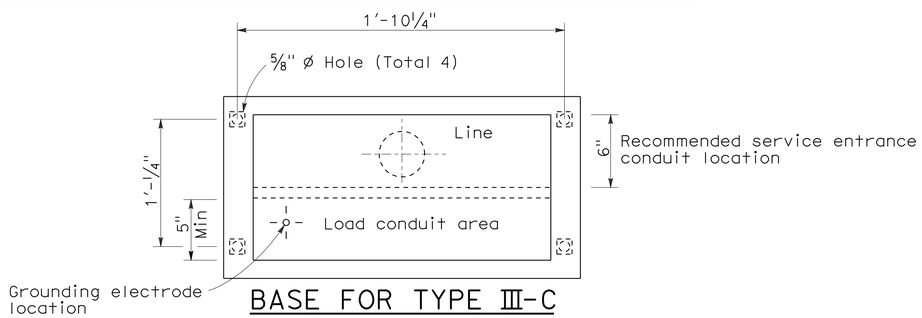

BASE FOR TYPE III-C SERVICE EQUIPMENT ENCLOSURE

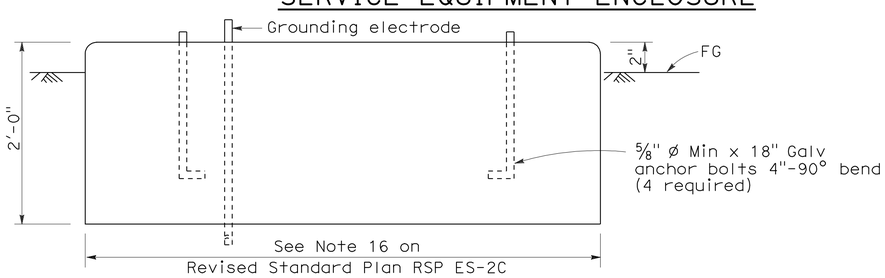

FOUNDATION DETAIL

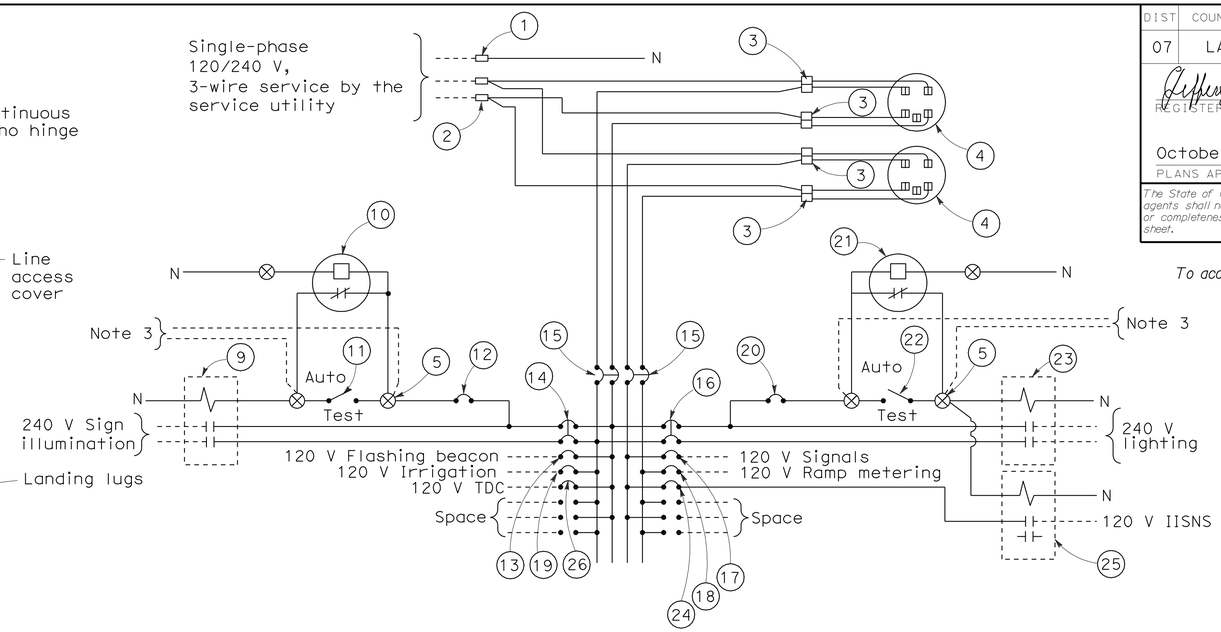

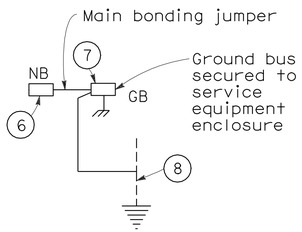

120/240 V SERVICE WIRING DIAGRAM (TYPICAL)

TYPE III-C SERVICE (120/240 V) EQUIPMENT LEGEND

ITEM No.	COMPONENT	NAME PLATE DESCRIPTION	ITEM No.	COMPONENT	NAME PLATE DESCRIPTION
1	Neutral lug		14	30 A, 240 V, 2P, CB	Sign Illumination
2	Landing lug (Note 6)		15	100 A, 240 V, 2P, CB	Main Breaker
3	Test bypass facility		16	30 A, 240 V, 2P, CB	Lighting
4	Meter socket and support		17	50 A, 120 V, 1P, CB	Signals
5	Terminal blocks		18	30 A, 120 V, 1P, CB	Ramp Metering
6	Neutral bus		19	20 A, 120 V, 1P, CB	Irrigation
7	Ground bus		20	15 A, 120 V, 1P, CB	Lighting Control
8	Grounding electrode		21	Photoelectric unit (Note 7)	
9	30 A, 2PNO, Contactor	Sign Illumination	22	15 A, 1P, Test switch	Lighting Control
10	Photoelectric unit (Note 7)		23	60 A, 2PNO Contactor	Lighting
11	15 A, 1P, Test switch	Sign Illumination Test Switch	24	15 A, 120 V, 1P, CB	IISNS
12	15 A, 120 V, 1P, CB	Sign Illumination Control	25	30 A, 2PNO Contactor	IISNS
13	15 A, 120 V, 1P, CB	Flashing Beacon	26	20 A, 120 V, 1P, CB	Telephone Demarcation Cabinet

NOTES: (FOR SERVICE EQUIPMENT ENCLOSURE)

1. Voltage ratings of service equipment shall conform to the service voltages indicated on the plans.
2. Unless otherwise indicated on the plans, service equipment items shall be provided for each service equipment enclosure as shown.
3. Connect to remote test switch mounted on lighting standards, sign post or structure when required.
4. Items No. 1 and 6 shall be isolated from the service equipment enclosure.
5. Meter sockets shall be 5 clip type.
6. The landing lug shall be suitable for multiple conductors.
7. Type V photoelectric control shall be used unless otherwise indicated on the plans.

STATE OF CALIFORNIA
DEPARTMENT OF TRANSPORTATION

ELECTRICAL SYSTEMS (SERVICE EQUIPMENT AND TYPICAL WIRING DIAGRAM TYPE III-C SERIES)

NO SCALE

RSP ES-2F DATED OCTOBER 5, 2007 SUPERCEDES STANDARD PLAN ES-2F DATED MAY 1, 2006 - PAGE 408 OF THE STANDARD PLANS BOOK DATED MAY 2006.

REVISED STANDARD PLAN RSP ES-2F

2006 REVISED STANDARD PLAN RSP ES-2F

8-17-07

DIST	COUNTY	ROUTE	POST MILES TOTAL PROJECT	SHEET NO.	TOTAL SHEETS
07	LA	5	4.0/5.9	944	1597

REGISTERED ELECTRICAL ENGINEER

June 6, 2008
PLANS APPROVAL DATE

REGISTERED PROFESSIONAL ENGINEER
Jeffery G. McRae
No. E14512
Exp. 6-30-10
ELECTRICAL
STATE OF CALIFORNIA

The State of California or its officers or agents shall not be responsible for the accuracy or completeness of electronic copies of this plan sheet.

To accompany plans dated 4-9-12

VISORS

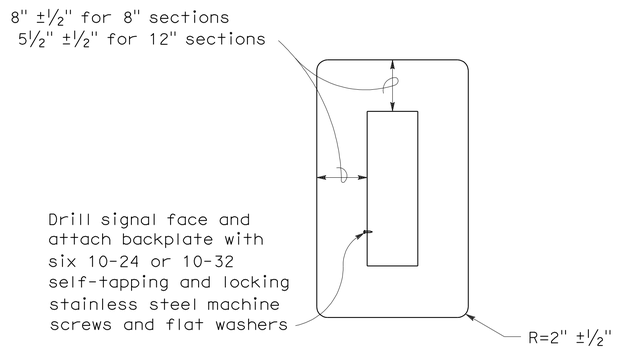

8" AND 12" SECTIONS

BACKPLATE

1/16" minimum thickness
3001-14 aluminum, or plastic when specified

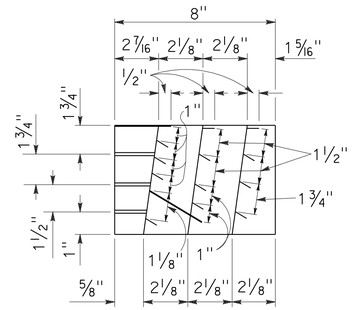

SECTION A-A

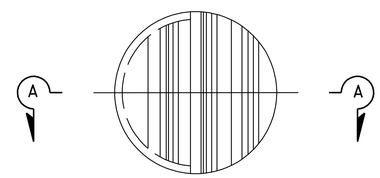

FRONT VIEW

DIRECTIONAL LOUVER

Directional louvers shall be oriented as directed by the Engineer and secured in place with one plated brass machine screw and nut.

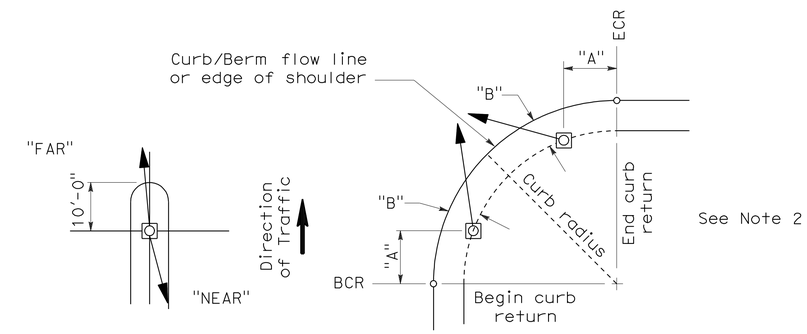

NOTES:

1. Typical signal pole placement unless dimensioned on plans.
2. For "A" and "B" dimensions, see Pole Schedule, or as directed by the Engineer.

SIGNAL STANDARD PLACEMENT DIMENSIONS AND EQUIPMENT LOCATIONS

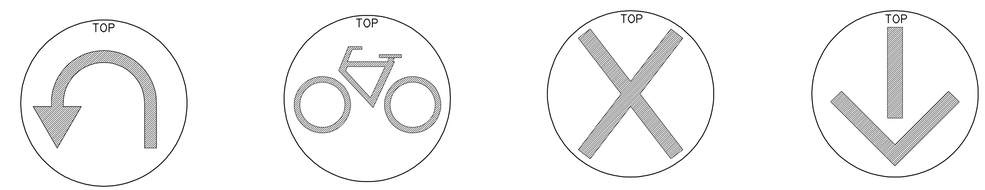

U-TURN SIGNAL FACE | BICYCLE SIGNAL FACE | LANE CONTROL SIGNAL FACE | LANE CONTROL SIGNAL FACE

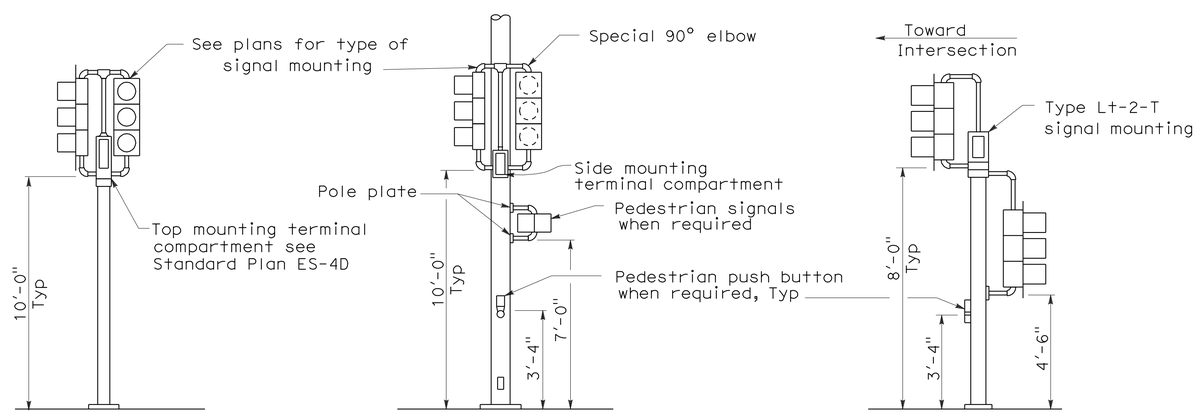

TOP MOUNTED SIGNALS (TV)

Type 1-A, 1-B, 1-C and 1-D standard as indicated on the plans

SIDE MOUNTED SIGNALS (SV AND SP)

Normally used on standards with luminaire or signal mast arm

LEFT TURN LANE SIGNAL

Type 1-A, 1-B, 1-C and 1-D standard as indicated on plans

TYPICAL SIGNAL INSTALLATIONS

STATE OF CALIFORNIA
DEPARTMENT OF TRANSPORTATION

ELECTRICAL SYSTEMS (SIGNAL HEADS AND MOUNTINGS)

NO SCALE

RSP ES-4C DATED JUNE 6, 2008 SUPERSEDES STANDARD PLAN ES-4C DATED MAY 1, 2006 - PAGE 420 OF THE STANDARD PLANS BOOK DATED MAY 2006.

REVISED STANDARD PLAN RSP ES-4C

2006 REVISED STANDARD PLAN RSP ES-4C

5-19-08

DIST	COUNTY	ROUTE	POST MILES TOTAL PROJECT	SHEET NO.	TOTAL SHEETS
07	LA	5	4.0/5.9	945	1597

REGISTERED ELECTRICAL ENGINEER

June 6, 2008
PLANS APPROVAL DATE

REGISTERED PROFESSIONAL ENGINEER Jeffery G. McRae No. E14512 Exp. 6-30-10 ELECTRICAL STATE OF CALIFORNIA

The State of California or its officers or agents shall not be responsible for the accuracy or completeness of electronic copies of this plan sheet.

To accompany plans dated 4-9-12

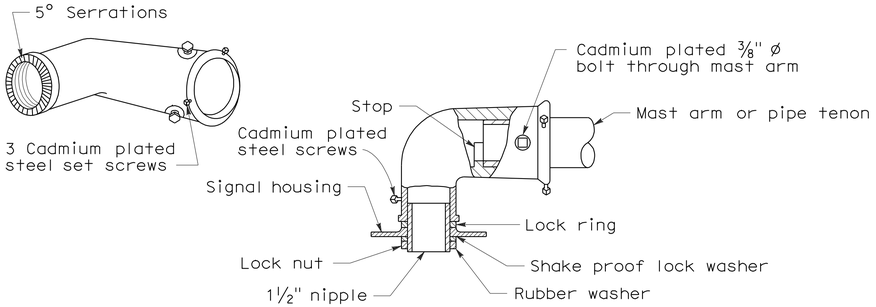

MAST ARM MOUNTING - TYPE "MAT"

For 2 NPS pipe, see Note 1.

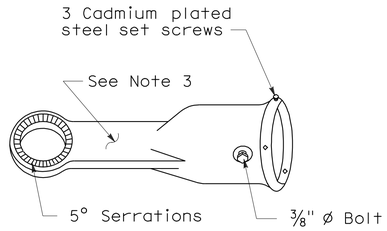

MAST ARM MOUNTING - TYPE "MAS"

For 2 NPS pipe. See Note 1.

SIGNAL SLIP FITTERS

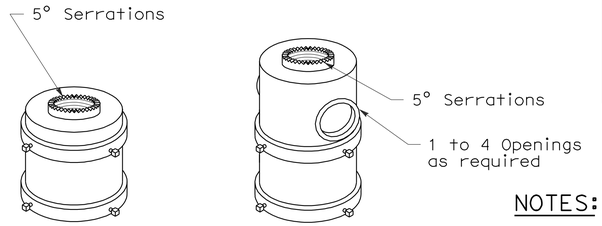

For one mounting For mulitiple mountings

TOP MOUNTINGS

For 4 NPS pipe, see Note 2.

NOTES:

1. After mast arm signal has been plumbed and secured, drill 7/16" hole through mast arm tenon in line with slip fitter hole. Place a cadmium plated 3/8" ø galvanized bolt with washer under bolt head through hole and secure with washer, nut, and locknut. Seal openings between mast arm mountings and mast arm with mastic.
2. (a) Threaded top mounted slip fitter openings shall be 1½ NPS.

   (b) Serrations in fittings shall match those on bottom of signal heads or in lock ring.

   (c) Top opening shall be offset when backplate is used.
3. Wireway shall have a cross section area of 0.95 square inch minimum. Minimum width of ½".

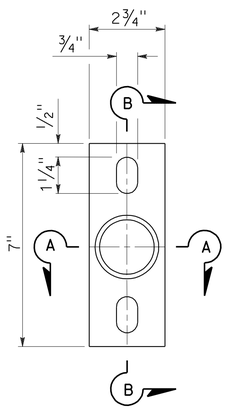

POLE PLATE

For side mountings

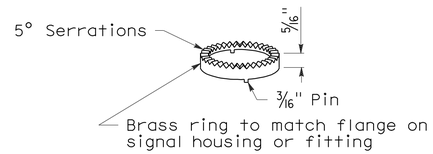

LOCK RING

Use where locking ring is not integral with signal housing or fitting.

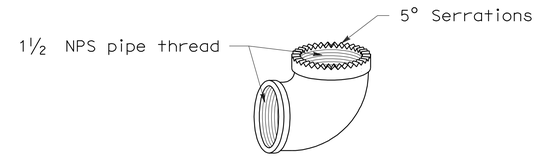

SPECIAL 90° ELBOW

One for each signal head, except those with special slip fitter mounting

MISCELLANEOUS MOUNTING HARDWARE

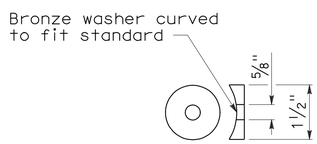

DETAIL "C"

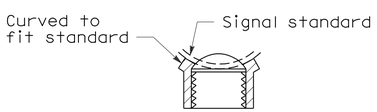

SECTION A-A

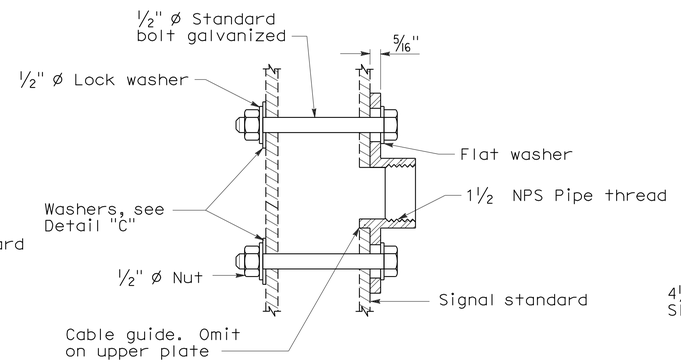

SECTION B-B

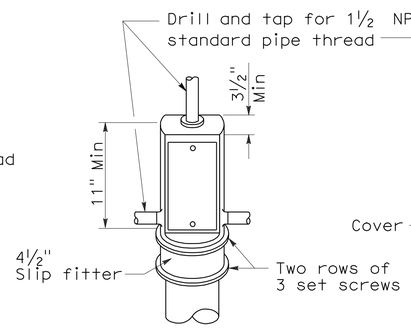

TOP MOUNTING

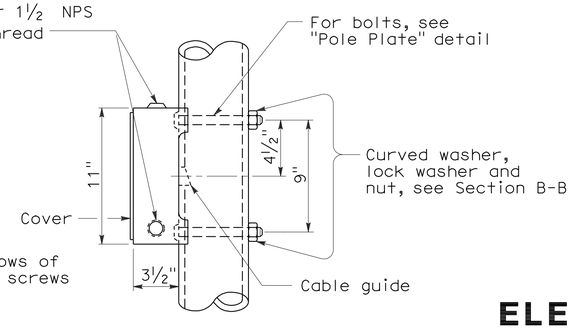

SIDE MOUNTING

TERMINAL COMPARTMENTS

STATE OF CALIFORNIA
DEPARTMENT OF TRANSPORTATION

ELECTRICAL SYSTEMS (SIGNAL HEADS AND MOUNTINGS)

NO SCALE

RSP ES-4D DATED June 6, 2008 SUPERSEDES STANDARD PLAN ES-4D
DATED MAY 1, 2006 - PAGE 421 OF THE STANDARD PLANS BOOK DATED MAY 2006.

REVISED STANDARD PLAN RSP ES-4D

2006 REVISED STANDARD PLAN RSP ES-4D

5-19-08

DIST	COUNTY	ROUTE	POST MILES TOTAL PROJECT	SHEET NO.	TOTAL SHEETS
07	LA	5	4.0/5.9	946	1597

REGISTERED ELECTRICAL ENGINEER

October 5, 2007
PLANS APPROVAL DATE

REGISTERED PROFESSIONAL ENGINEER Jeffery G. McRae No. E14512 Exp. 6-30-08 ELECTRICAL STATE OF CALIFORNIA

The State of California or its officers or agents shall not be responsible for the accuracy or completeness of electronic copies of this plan sheet.

To accompany plans dated 4-9-12

LOOP INSTALLATION PROCEDURE

1. Loops shall be centered in lanes.
2. Saw slots in pavement for loop conductors as shown in details.
3. Distance between side of loop and a lead-in saw cut from adjacent detectors shall be 2'-0" minimum. Distance between lead-in saw cuts shall be 6" minimum.
4. Bottom of saw slot shall be smooth with no sharp edges.
5. Slots shall be washed until clean, blown out and thoroughly dried before installing loop conductors.
6. Adjacent loops on the same sensor unit channel shall be wound in opposite directions.
7. Identify and tag loop circuit pairs in the pull box with loop number, start (S) and finish (F) of conductor. Identify and tag lead-in-cable with sensor number and phase.
8. Install loop conductor in slot using a 3/16" to 1/4" thick wood paddle. Hold loop conductors with wood paddles (at the bottom of the sawed slot) during sealant placement.
9. No more than 2 twisted pairs shall be installed in one sawed slot.
10. Allow additional 5'-0" of slack length of conductor for the lead-in run to pull box.
11. The additional length of each conductor for each loop shall be twisted together into a pair (6 turns per 3'-4" minimum) before being placed in the slot and conduit leading to pull box.
12. Test each loop circuit for continuity, circuit resistance and insulation resistance at the pull box before filling slots.
13. Fill slots as shown in details.
14. Splice loop conductors to lead-in-cable. Splices shall be soldered.
15. End of lead-in-cable and Type 2 loop conductor shall be waterproofed prior to installing in conduit to prevent moisture from entering the cable.
16. Lead-in-cable shall not be spliced between the pull box and the controller cabinet terminals.
17. Test each loop circuit for continuity, circuit resistance and insulation resistance at the controller cabinet location.
18. Where loop conductors are not to be spliced to a lead-in-cable, the ends of the conductors shall be taped and waterproofed with electrical insulating coating.

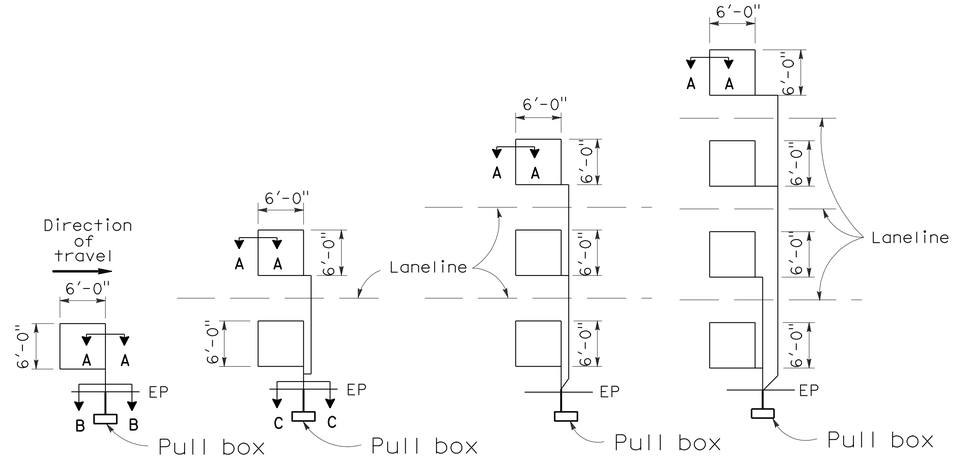

TYPE 1A INSTALLATION | TYPE 2A INSTALLATION | TYPE 3A INSTALLATION | TYPE 4A INSTALLATION

SAWCUT DETAILS

(Type A loop detector configurations illustrated)

1. 1A thru 4A = 1 Type A loop configuration in each lane.
2. 1B thru 4B = 1 Type B loop configuration in each lane.
3. 1C = 1 Type C loop configuration entering lanes as required.
4. 1D thru 4D = 1 Type D loop configuration in each lane.
5. 1E thru 4E = 1 Type E loop configuration in each lane.
6. 1Q thru 4Q = 1 Type Q loop configuration in each lane. (Use Type A, B, C, D, E or Q loop detector configurations only when specified or shown on plans)

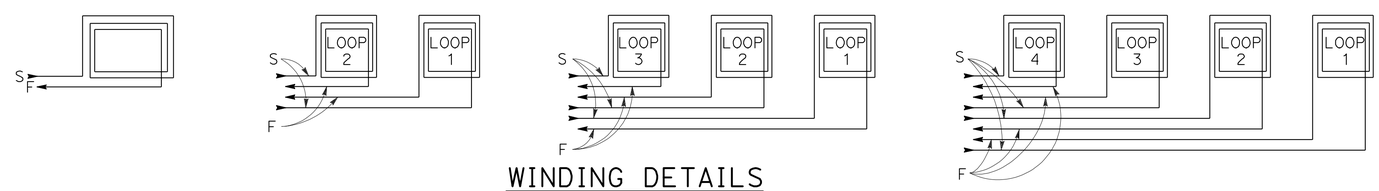

WINDING DETAILS

See Notes 6 and 7

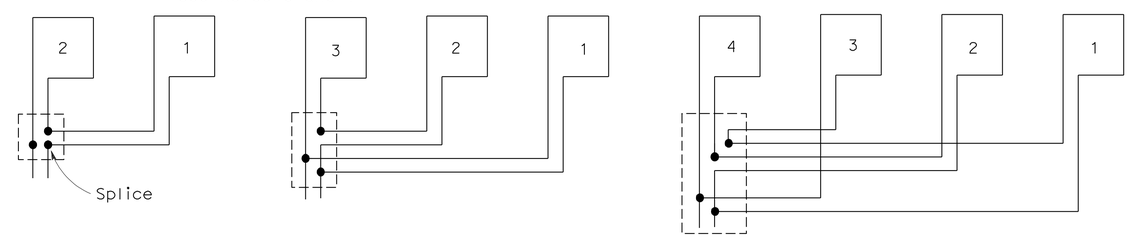

TYPICAL LOOP CONNECTIONS

(Dashed lines represent the pull box)

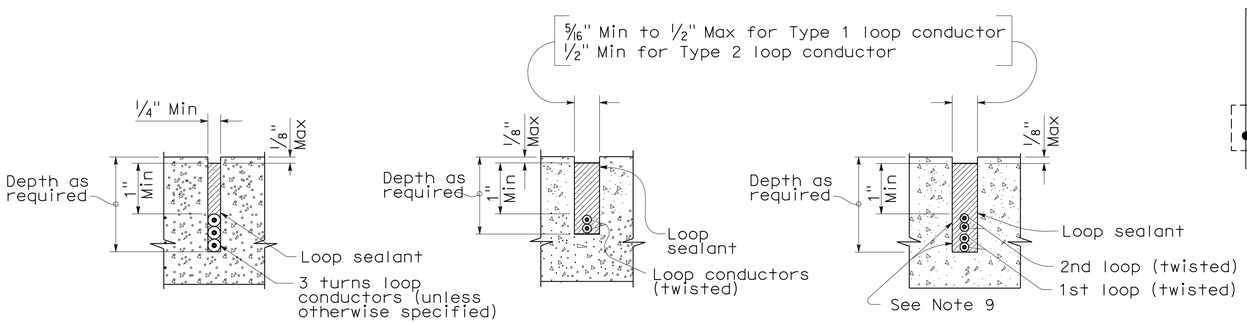

SECTION A-A | SECTION B-B | SECTION C-C

SLOT DETAILS - TYPE 1 AND TYPE 2 LOOP CONDUCTOR

STATE OF CALIFORNIA
DEPARTMENT OF TRANSPORTATION

ELECTRICAL SYSTEMS (DETECTORS)

NO SCALE

RSP ES-5A DATED OCTOBER 5, 2007 SUPERCEDES STANDARD PLAN ES-5A DATED MAY 1, 2006 - PAGE 423 OF THE STANDARD PLANS BOOK DATED MAY 2006.

REVISED STANDARD PLAN RSP ES-5A

2006 REVISED STANDARD PLAN RSP ES-5A

DIST	COUNTY	ROUTE	POST MILES TOTAL PROJECT	SHEET NO.	TOTAL SHEETS
07	LA	5	4.0/5.9	947	1597

REGISTERED CIVIL ENGINEER

October 5, 2007
PLANS APPROVAL DATE

REGISTERED PROFESSIONAL ENGINEER
Stanley P. Johnson
No. C57793
Exp. 3-31-08
CIVIL
STATE OF CALIFORNIA

The State of California or its officers or agents shall not be responsible for the accuracy or completeness of electronic copies of this plan sheet.

To accompany plans dated 4-9-12

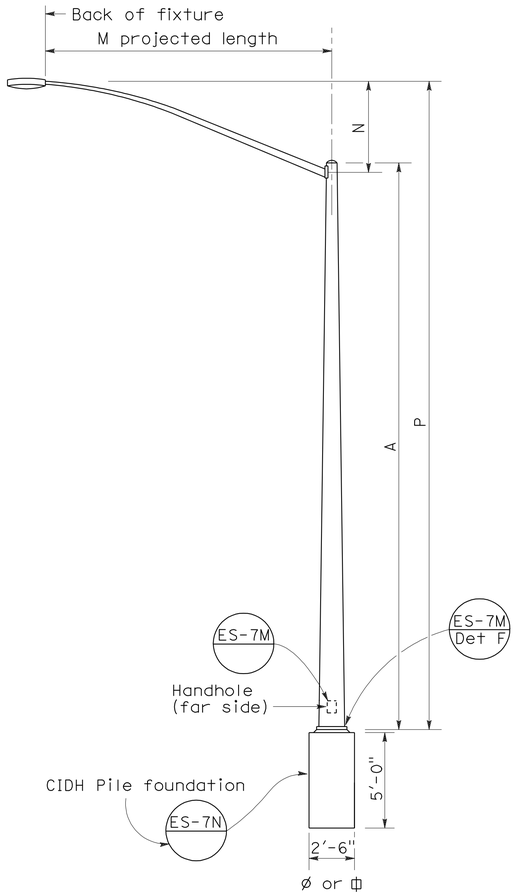

ELEVATION
TYPE 15 AND TYPE 21

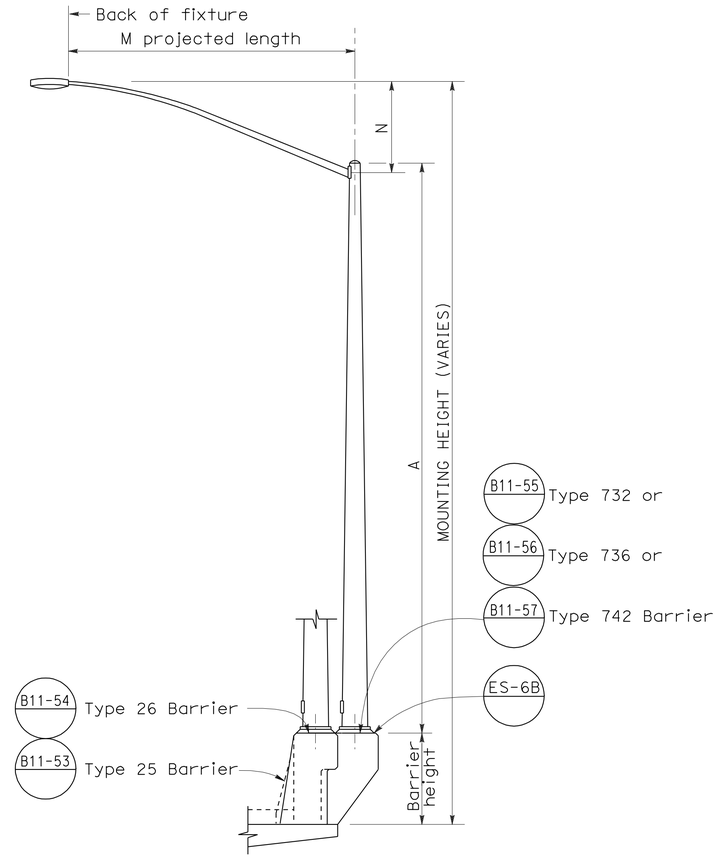

ELEVATION
TYPE 15 AND TYPE 21 BARRIER RAIL MOUNTED

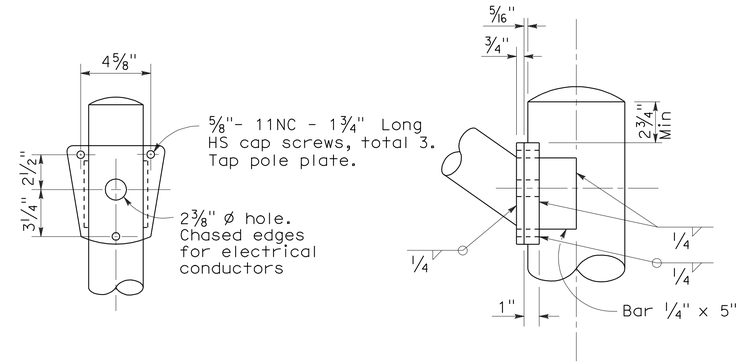

DETAIL R
LUMINAIRE ARM CONNECTION

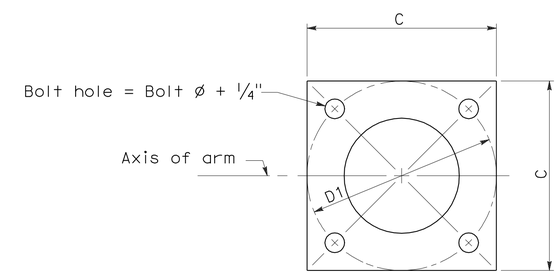

BASE PLATE

POLE TYPE	POLE DATA				BASE PLATE DATA				LUMINAIRE ARM
	A Height	Min OD Base	Min OD Top	Wall Thickness	C	D1 Bolt Circle	Thick-ness	Anchor Bolts Size	
15	30'	8"	3 7/8"	0.1196"	1'-0"	1'-0"	1"	1" ø x 3'-0" x 4"*	6' - 15' [12']
21	35'	8 5/8"	3 7/8"	0.1196"	1'-0"	1'-0"	1"	1 1/4"ø x 3'-0" x 4"*	6' - 15' [12']

* For barrier rail bolts, see Standard Plan ES-6B.

LUMINAIRE ARM DATA					
M Projected Length	N Rise	Min OD At Pole	Nominal Thickness	P Type 15	P Type 21
6'-0"	2'-0"±	3 1/4"	0.1196"	31'-6"±	36'-6"±
8'-0"	2'-6"±	3 1/2"	0.1196"	32'-0"±	37'-0"±
10'-0"	3'-3"±	3 7/8"	0.1196"	32'-9"±	37'-9"±
12'-0"	4'-3"±	3 7/8"	0.1196"	33'-9"±	38'-9"±
15'-0"	4'-9"±	4 1/4"	0.1196"	34'-3"±	39'-3"±

NOTES:

1. ☐ Indicates arm length to be used unless otherwise noted on the plans.
2. For Type 15-SB, use Type 15 standard with Type 30 slip base plate details, see Standard Plan ES-6F.
3. For additional notes, see Standard Plan ES-7M and ES-7N.

STATE OF CALIFORNIA
DEPARTMENT OF TRANSPORTATION

ELECTRICAL SYSTEMS (LIGHTING STANDARD TYPES 15 AND 21)

NO SCALE

RSP ES-6A DATED OCTOBER 5, 2007 SUPERCEDES STANDARD PLAN ES-6A DATED MAY 1, 2006 - PAGE 427 OF THE STANDARD PLANS BOOK DATED MAY 2006.

REVISED STANDARD PLAN RSP ES-6A

2006 REVISED STANDARD PLAN RSP ES-6A

DIST	COUNTY	ROUTE	POST MILES TOTAL PROJECT	SHEET NO.	TOTAL SHEETS
07	LA	5	4.0/5.9	948	1597

REGISTERED CIVIL ENGINEER

January 18, 2008
PLANS APPROVAL DATE

REGISTERED PROFESSIONAL ENGINEER
Stanley P. Johnson
No. C57793
Exp. 03-31-08
CIVIL
STATE OF CALIFORNIA

The State of California or its officers or agents shall not be responsible for the accuracy or completeness of electronic copies of this plan sheet.

To accompany plans dated 4-9-12

LUMINAIRE ARM DATA

PROJECTED LENGTH	THICKNESS	MINIMUM OD @ POLE	MOUNTING HEIGHT
* 6'-0"	0.1196"	3¼"	36'-9"±
8'-0"		3½"	37'-3"±
10'-0"		3¾"	38'-0"±
12'-0"		3¾"	39'-0"±
15'-0"		4¼"	39'-6"±
** 20'-0"	0.1793"	5"	37'-0"±

* Type 30 - arm length 6'-0" - 15'-0" maximum
** Type 31 - arm lengths 20'-0"

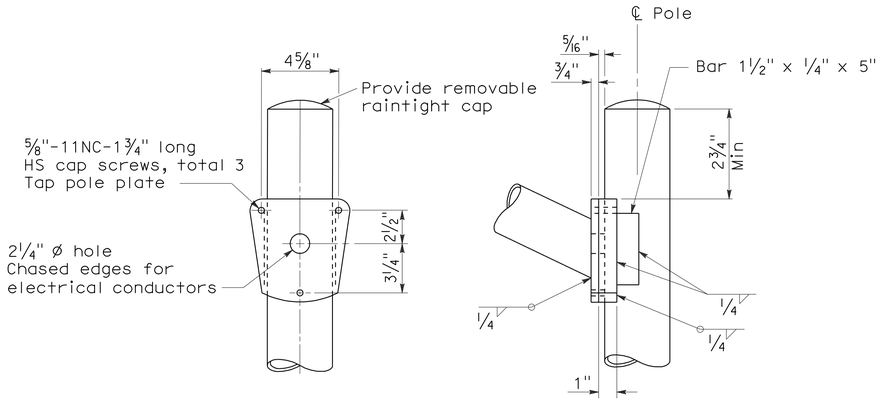

DETAIL A - TYPE 30

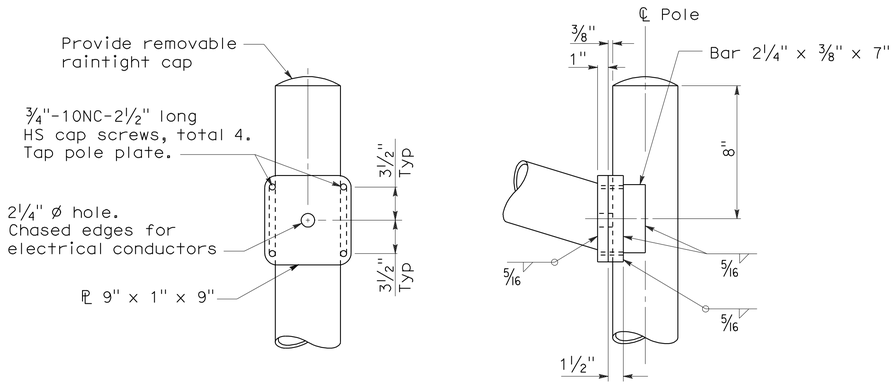

DETAIL A - TYPE 31

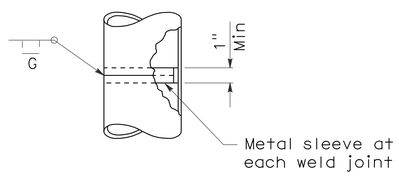

POLE SPLICE

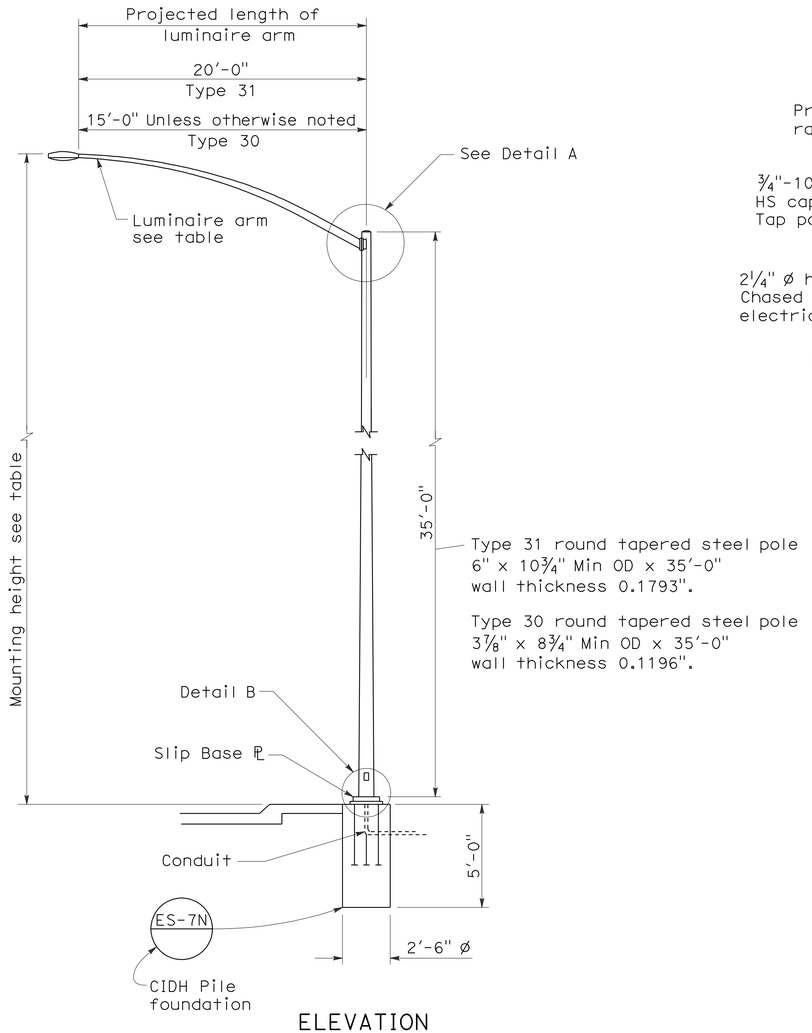

ELEVATION

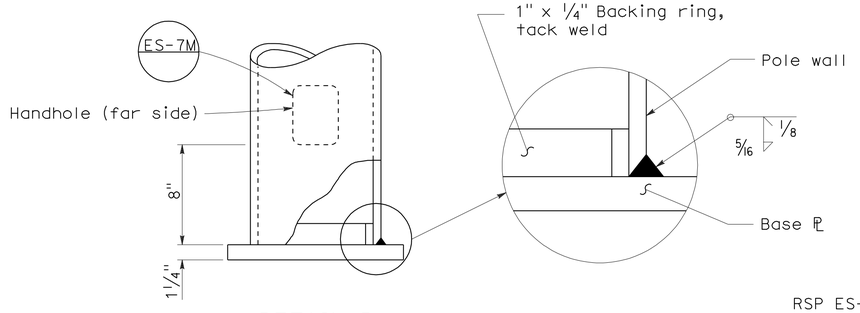

DETAIL B

NOTES:

1. Sheet steel shall have a minimum yield of 48,000 psi.
2. For slip base details see Standard Plan ES-6F.
3. For Type 30 fixed base use Type 15 base plate, and foundation shown on Revised Standard Plan RSP ES-6A. Use 1¼" Dia x 3'-6" x 4" anchor bolts.
4. For Type 31 fixed base use Type 32 base plate, anchor bolts and foundation on Standard Plan ES-6G.
5. Handhole shall be located on downstream side of traffic unless noted otherwise on plans.
6. For additional general notes refer to Standard Plan ES-7M.

STATE OF CALIFORNIA
DEPARTMENT OF TRANSPORTATION

ELECTRICAL SYSTEMS (LIGHTING STANDARD TYPES 30 AND 31)

NO SCALE

RSP ES-6E DATED JANUARY 18, 2008 SUPERCEDES STANDARD PLAN ES-6E DATED MAY 1, 2006 - PAGE 430 OF THE STANDARD PLANS BOOK DATED MAY 2006.

REVISED STANDARD PLAN RSP ES-6E

2006 REVISED STANDARD PLAN RSP ES-6E

11-19-07

DIST	COUNTY	ROUTE	POST MILES TOTAL PROJECT	SHEET NO.	TOTAL SHEETS
07	LA	5	4.0/5.9	949	1597

REGISTERED CIVIL ENGINEER

October 5, 2007
PLANS APPROVAL DATE

REGISTERED PROFESSIONAL ENGINEER
Stanley P. Johnson
No. C57793
Exp. 3-31-08
CIVIL
STATE OF CALIFORNIA

The State of California or its officers or agents shall not be responsible for the accuracy or completeness of electronic copies of this plan sheet.

To accompany plans dated 4-9-12

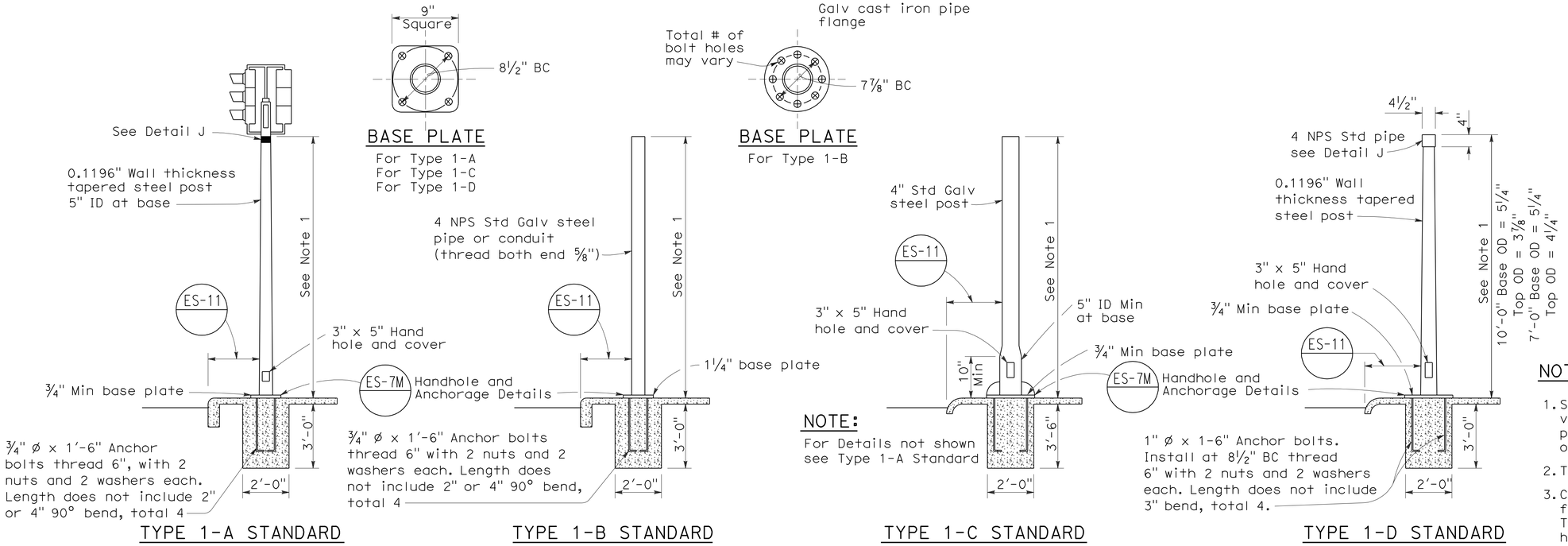

TYPE 1 SIGNAL STANDARDS

NOTES:

1. Standards shall be 10'-0" ± 2" for vehicle signals and 7'-0" ± 2" for pedestrian signals unless otherwise noted on plans.
2. Top of standards shall be 4½" OD.
3. Conduits shall extend 2" maximum above finished surface of foundation and for Types 1-A, 1-C and 1-D shall be sloped toward handhole.
4. Anchor bolts shall be bonded to conduit or grounding conductor.
5. Conduit between standard and adjacent pull box shall be 2" minimum.
6. Paint numbers on roadway side facing traffic when electrolier or post is left of direction of traffic.

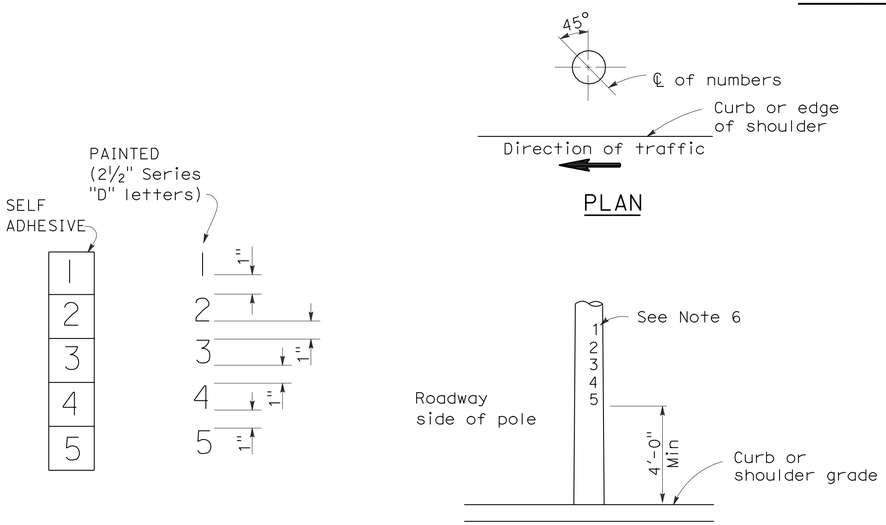

LOCATION OF EQUIPMENT NUMBERS ON STANDARDS AND POSTS

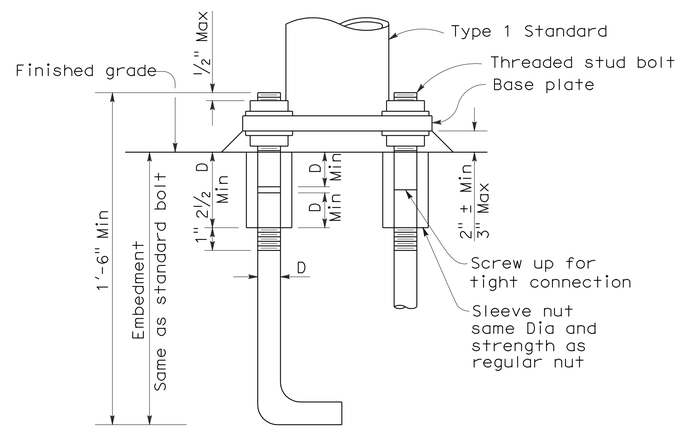

ANCHOR BOLTS WITH SLEEVE NUTS

Sleeve nuts to be used only when shown or specified on Project Plans

D = Diameter of anchor bolt

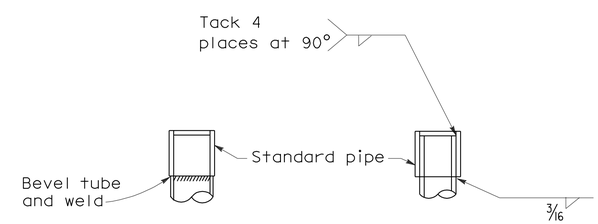

DETAIL J

Tube may be inserted into pipe or butted as required

STATE OF CALIFORNIA
DEPARTMENT OF TRANSPORTATION

ELECTRICAL SYSTEMS (SIGNAL AND LIGHTING STANDARD TYPE 1 STANDARD AND EQUIPMENT NUMBERING)

NO SCALE

RSP ES-7B DATED OCTOBER 5, 2007 SUPERCEDES STANDARD PLAN ES-7B DATED MAY 1, 2006 - PAGE 438 OF THE STANDARD PLANS BOOK DATED MAY 2006.

REVISED STANDARD PLAN RSP ES-7B

2006 REVISED STANDARD PLAN RSP ES-7B

7-10-07

DIST	COUNTY	ROUTE	POST MILES TOTAL PROJECT	SHEET NO.	TOTAL SHEETS
07	LA	5	4.0/5.9	950	1597

REGISTERED CIVIL ENGINEER

October 5, 2007
PLANS APPROVAL DATE

REGISTERED PROFESSIONAL ENGINEER
Stanley P. Johnson
No. C57793
Exp. 3-31-08
CIVIL
STATE OF CALIFORNIA

The State of California or its officers or agents shall not be responsible for the accuracy or completeness of electronic copies of this plan sheet.

To accompany plans dated 4-9-12

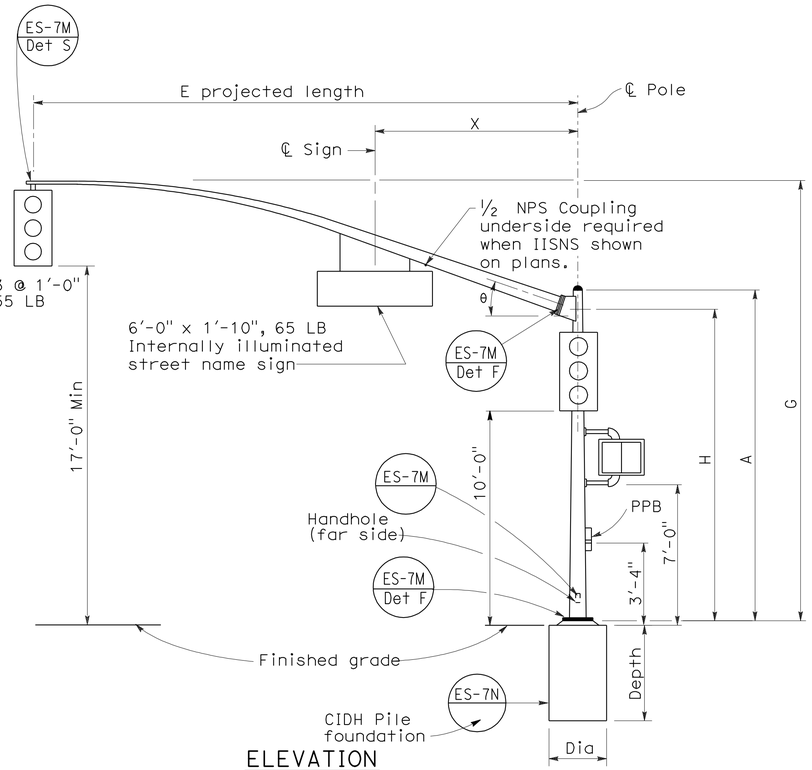

ELEVATION

TYPE 16-2-100, 18-2-100

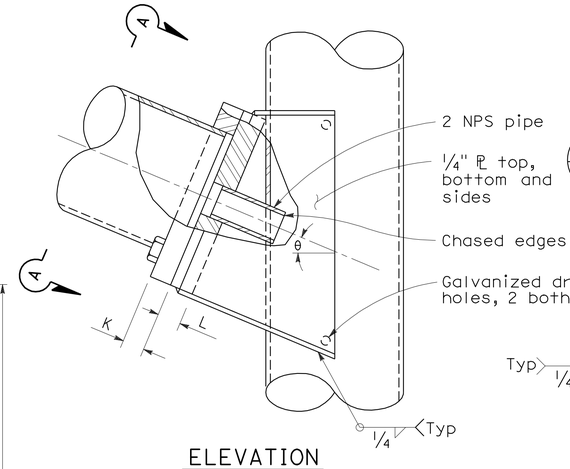

ELEVATION

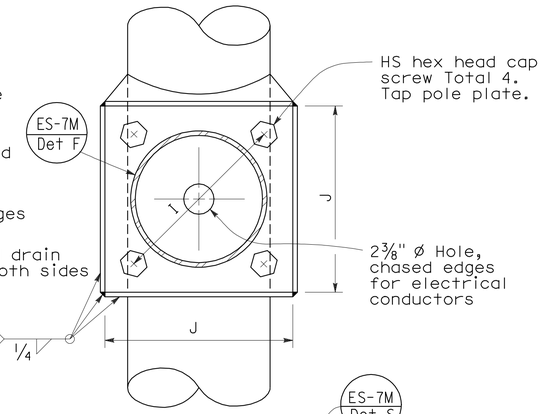

VIEW A-A

SIGNAL ARM CONNECTION DETAILS

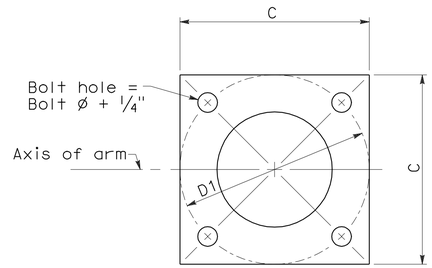

BASE PLATE

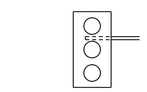

Required for
Type 17-2-100
Type 17A-2-100

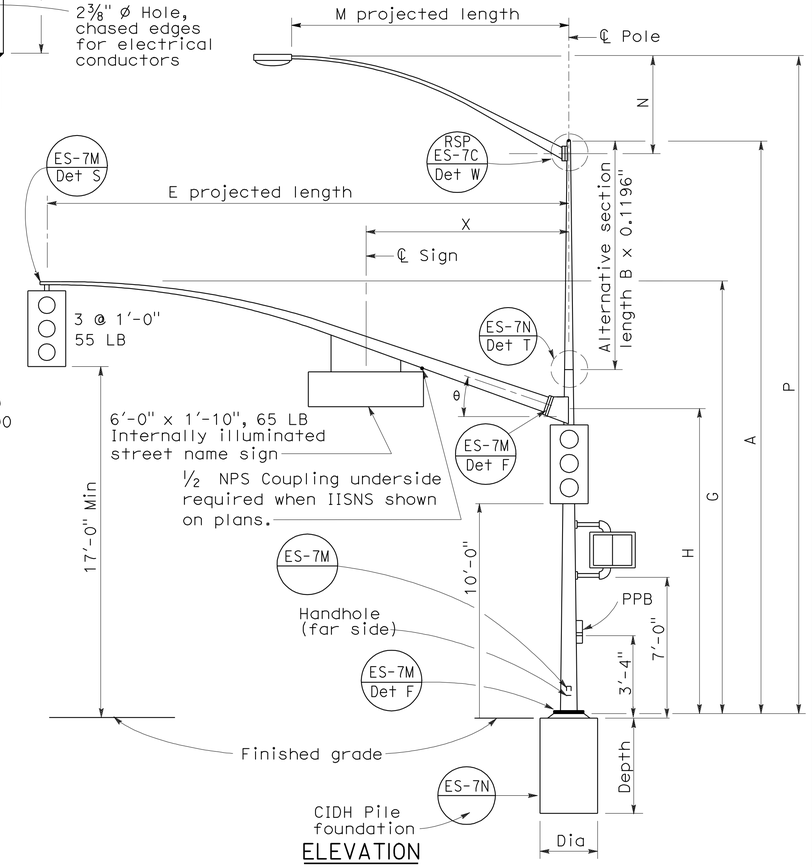

ELEVATION

TYPE 17-2-100, 17A-2-100,
19-2-100, 19A-2-100

SIGNAL ARM DATA											
E Projected Length	G Mounting Height	H	Min OD At Pole	Thickness	I Bolt Circle	HS Cap Screws	J Plate Size	K Arm PL Thickness	L Pole PL Thickness	θ	X Max
15'-0"	21'-8"±	17'-6"	6⅝"	0.1793"	12"	1¼"-7NC-3"	1'-0"	1¼"	1½"	23°	10'-6"
20'-0"	21'-8"±		6⅝"								
25'-0"	22'-8"±	16'-0"	7 5/16"								
30'-0"	23'-0"±		8"								

LUMINAIRE ARM DATA					
M Projected Length	N Rise	Min OD at Pole	Thickness	P Mounting Height	
				30'-0" Pole	35'-0" Pole
6'-0"	2'-0"±	3¼"	0.1196"	31'-6"±	36'-6"±
8'-0"	2'-6"±	3½"		32'-0"±	37'-0"±
10'-0"	3'-3"±	3⅞"		32'-9"±	37'-9"±
12'-0"	4'-3"±			33'-9"±	38'-9"±
15'-0"	4'-9"±	4¼"		34'-3"±	39'-3"±

Pole Type	Load Case	Wind Velocity mph	POLE DATA							BASE PLATE DATA				Luminaire Arm	Signal Arm	CIDH PILE FOUNDATION		
			A Height	Min OD		Thickness	Alternative Section			C	D1 Bolt Circle	Thickness	Anchor Bolts			Diameter	Depth	Reinforced
				Base	Top		B Length	Bottom	Top				Size					
16-2-100	2	100	18'-6"	10¾"	8¼"	0.1793"	None	8"	6⅝"	1'-6"	1'-5½"	1½"	2"Ø x 42" x 6"	None	15'-0", 20'-0"	2'-6"	7'-2"	Yes
17-2-100			30'-0"		6⅝"		10'-0"							6'-15' [12'-0"]				
17A-2-100			35'-0"		5 15/16"		15'-0"		5 15/16"					6'-15' [15'-0"]				
18-2-100			17'-0"		8 7/16"		None							None	25'-0", 30'-0"			
19-2-100			30'-0"		6⅝"	0.2391"	10'-0"	8"	6⅝"					6'-15' [12'-0"]				
19A-2-100			35'-0"		5 15/16"		15'-0"		5 5/16"					6'-15' [15'-0"]				

☐ Indicates arm length to be used unless otherwise noted on plans.

STATE OF CALIFORNIA
DEPARTMENT OF TRANSPORTATION

ELECTRICAL SYSTEMS (SIGNAL AND LIGHTING STANDARD CASE 2 ARM LOADING WIND VELOCITY=100 MPH ARM LENGTHS 15' TO 30')

NO SCALE

RSP ES-7D DATED OCTOBER 5, 2007 SUPERCEDES STANDARD PLAN ES-7D DATED MAY 1, 2006 - PAGE 440 OF THE STANDARD PLANS BOOK DATED MAY 2006.

REVISED STANDARD PLAN RSP ES-7D

2006 REVISED STANDARD PLAN RSP ES-7D

DIST	COUNTY	ROUTE	POST MILES TOTAL PROJECT	SHEET NO.	TOTAL SHEETS
07	LA	5	4.0/5.9	951	1597

REGISTERED CIVIL ENGINEER

June 30, 2006
PLANS APPROVAL DATE

REGISTERED PROFESSIONAL ENGINEER Jeffrey B. Woody No. C41260 Exp. 3-31-07 CIVIL STATE OF CALIFORNIA

The State of California or its officers or agents shall not be responsible for the accuracy or completeness of electronic copies of this plan sheet.

To accompany plans dated 4-9-12

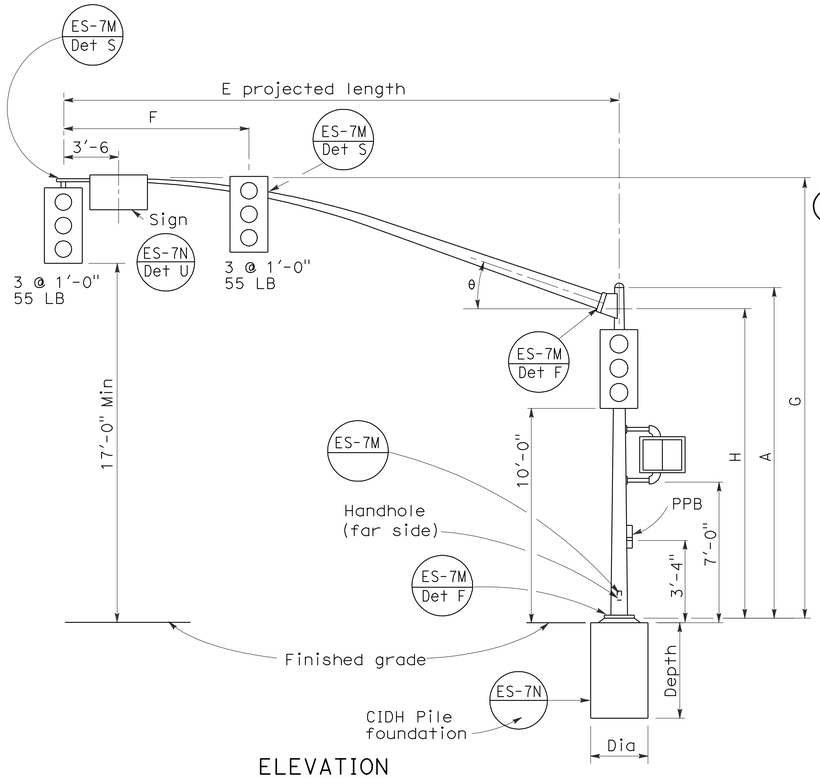

ELEVATION

TYPE 16-3-100, 18-3-100, 23-3-100, 27-3-100

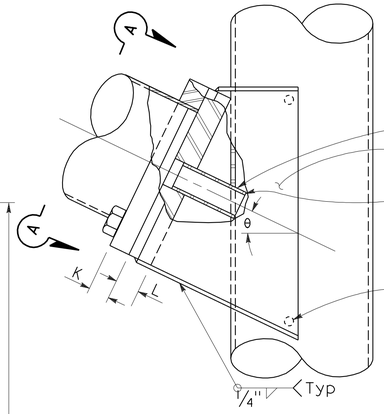

ELEVATION

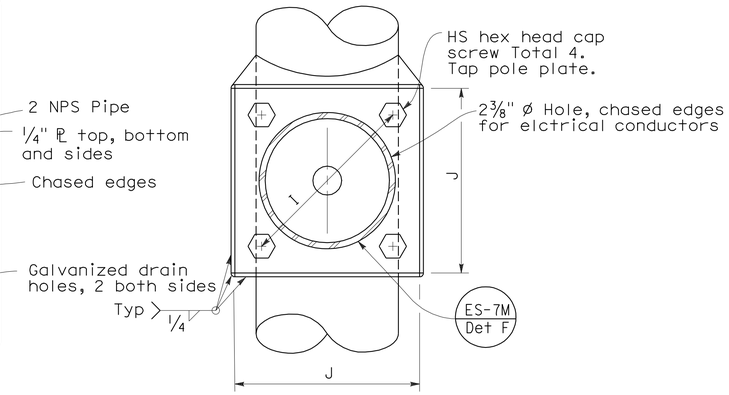

VIEW A-A

SIGNAL ARM CONNECTION DETAILS

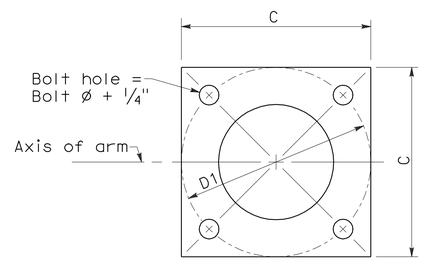

BASE PLATE

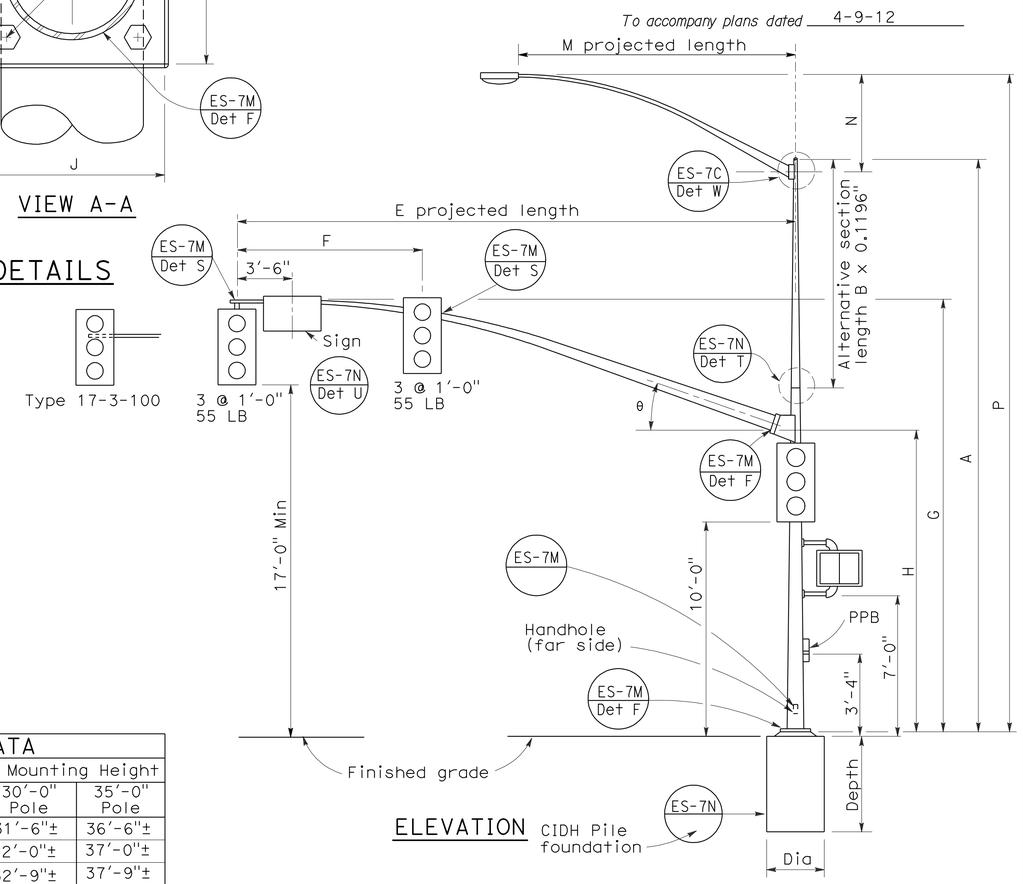

ELEVATION

TYPE 17-3-100, 24A-3-100, 19-3-100, 26-3-100, 19A-3-100, 26A-3-100, 24-3-100

SIGNAL ARM DATA											
E Projected Length	F Min Spacing	G Mounting Height	H	Min OD At Pole	Thickness	I Bolt Circle	HS Cap Screws	J Plate Size	K Arm PL Thickness	L Pole PL Thickness	θ
15'-0"	8'-0"	21'-8"±	17'-6"	6 5/8"	0.1793"	12"	1 1/4"-7NC-3"	1'-0"	1 1/4"	1 1/2"	23°
20'-0"		21'-8"±		7"							
25'-0"	12'-0"	22'-8"±	16'-0"	7 5/16"	0.2391"						
30'-0"				8"							
35'-0"	14'-0"	23'-0"±		8 3/4"		13"		1'-1"	1 1/2"	1 3/4"	21°
40'-0"	15'-0"			9 3/8"							15°
45'-0"		23'-8"±		10 1/16"							

LUMINAIRE ARM DATA					
M Projected Length	N Rise	Min OD at Pole	Thickness	P Mounting Height 30'-0" Pole	P Mounting Height 35'-0" Pole
6'-0"	2'-0"±	3 1/4"	0.1196"	31'-6"±	36'-6"±
8'-0"	2'-6"±	3 1/2"		32'-0"±	37'-0"±
10'-0"	3'-3"±	3 7/8"		32'-9"±	37'-9"±
12'-0"	4'-3"±			33'-9"±	38'-9"±
15'-0"	4'-9"±	4 1/4"		34'-3"±	39'-3"±

Pole Type	Load Case	Wind Velocity mph	POLE DATA: A Height	Min OD Base	Min OD Top	Thickness	Alternative Section B Length	Alternative Section Bottom	Alternative Section Top	BASE PLATE DATA: C	D1 Bolt Circle	Thickness	Anchor Bolts Size	Luminaire Arm	Signal Arm	CIDH PILE FOUNDATION: Diameter	Depth	Reinforced
16-3-100	3	100	18'-6"	10 3/4"	8 1/4"	0.1793"	None			1'-6"	1'-5 1/2"	1 1/2"	2"Ø x 42" x 6"	None	15'-0", 20'-0"	3'-0"	9'-0"	Yes
17-3-100			30'-0"		6 5/8"		10'-0"	8"	7 5/16"					6'-15' [12'-0"]				
18-3-100			17'-0"		8 7/16"	0.2391"	None							None	25'-0", [30'-0"]			
19-3-100			30'-0"	1'-0"	7 7/8"		10'-0"	9 1/4"	7 7/8"					6'-15' [12'-0"]				
19A-3-100			35'-0"		7 3/16"		15'-0"		7 3/16"					6'-15' [15'-0"]				
23-3-100			17'-0"		9 5/8"		None							None	35'-0"			
24-3-100			30'-0"		7 7/8"		10'-0"	9 1/4"	7 7/8"					6'-15' [12'-0"]				
24A-3-100			35'-0"		7 3/16"		15'-0"		7 3/16"					6'-15' [15'-0"]				
26-3-100			30'-0"	1'-1/8"	8"	0.3125"	10'-0"	9 3/8"	8"					6'-15' [12'-0"]	40'-0", [45'-0"]			
26A-3-100			35'-0"		7 5/16"		15'-0"		7 5/16"					6'-15' [15'-0"]				
27-3-100			17'-0"		9 3/4"		None							None				

☐ Indicates arm length to be used unless otherwise noted on plans.

STATE OF CALIFORNIA
DEPARTMENT OF TRANSPORTATION

ELECTRICAL SYSTEMS (SIGNAL AND LIGHTING STANDARD CASE 3 ARM LOADING WIND VELOCITY=100 MPH ARM LENGTHS 15' TO 45')

NO SCALE

RSP ES-7E DATED JUNE 30, 2006 SUPERSEDES STANDARD PLAN DATED MAY 1, 2006 - PAGE 441 OF THE STANDARD PLANS BOOK DATED MAY 2006.

REVISED STANDARD PLAN RSP ES-7E

2006 REVISED STANDARD PLAN RSP ES-7E

5-9-06

DIST	COUNTY	ROUTE	POST MILES TOTAL PROJECT	SHEET NO.	TOTAL SHEETS
07	LA	5	4.0/5.9	952	1597

REGISTERED CIVIL ENGINEER

October 5, 2007
PLANS APPROVAL DATE

REGISTERED PROFESSIONAL ENGINEER Stanley P. Johnson No. C57793 Exp. 3-31-08 CIVIL STATE OF CALIFORNIA

The State of California or its officers or agents shall not be responsible for the accuracy or completeness of electronic copies of this plan sheet.

To accompany plans dated 4-9-12

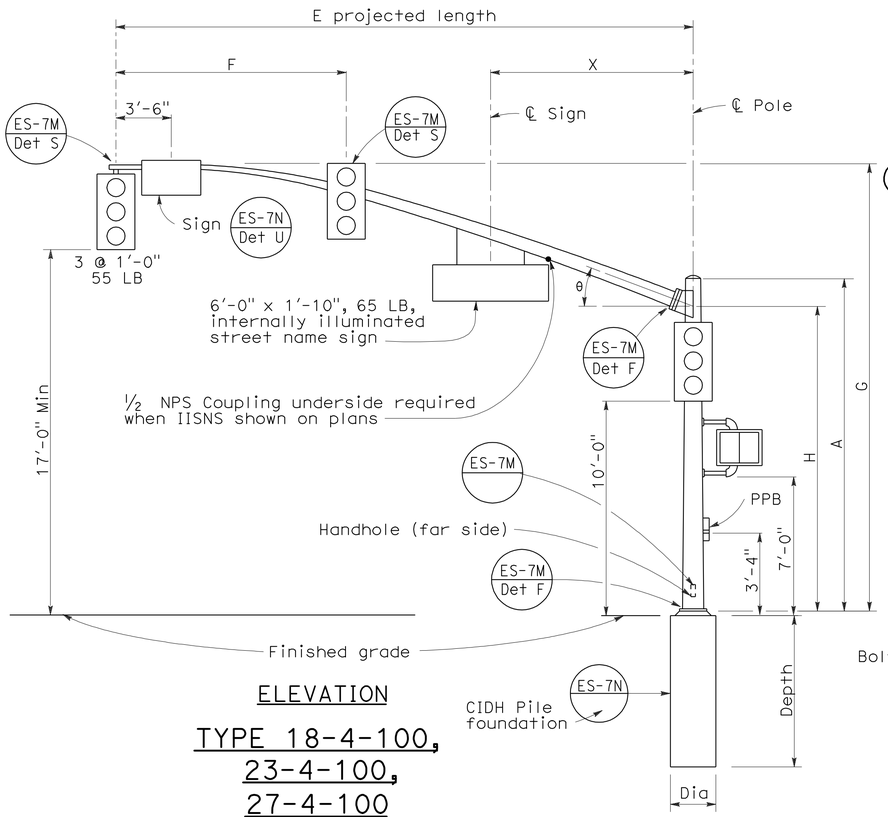

ELEVATION

TYPE 18-4-100,
23-4-100,
27-4-100

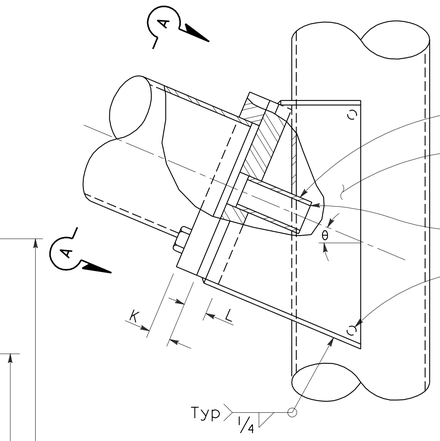

ELEVATION

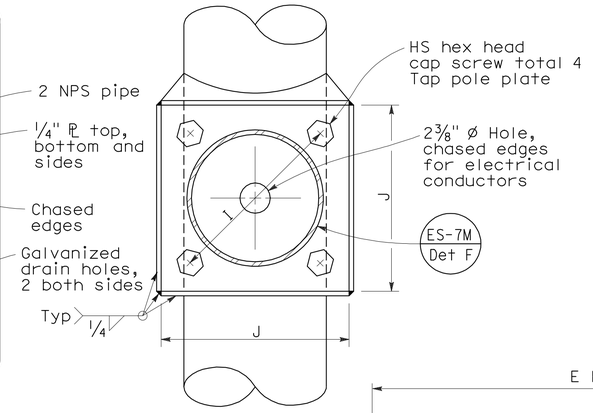

VIEW A-A

SIGNAL ARM CONNECTION DETAILS

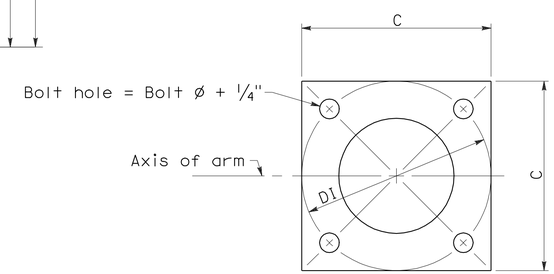

BASE PLATE

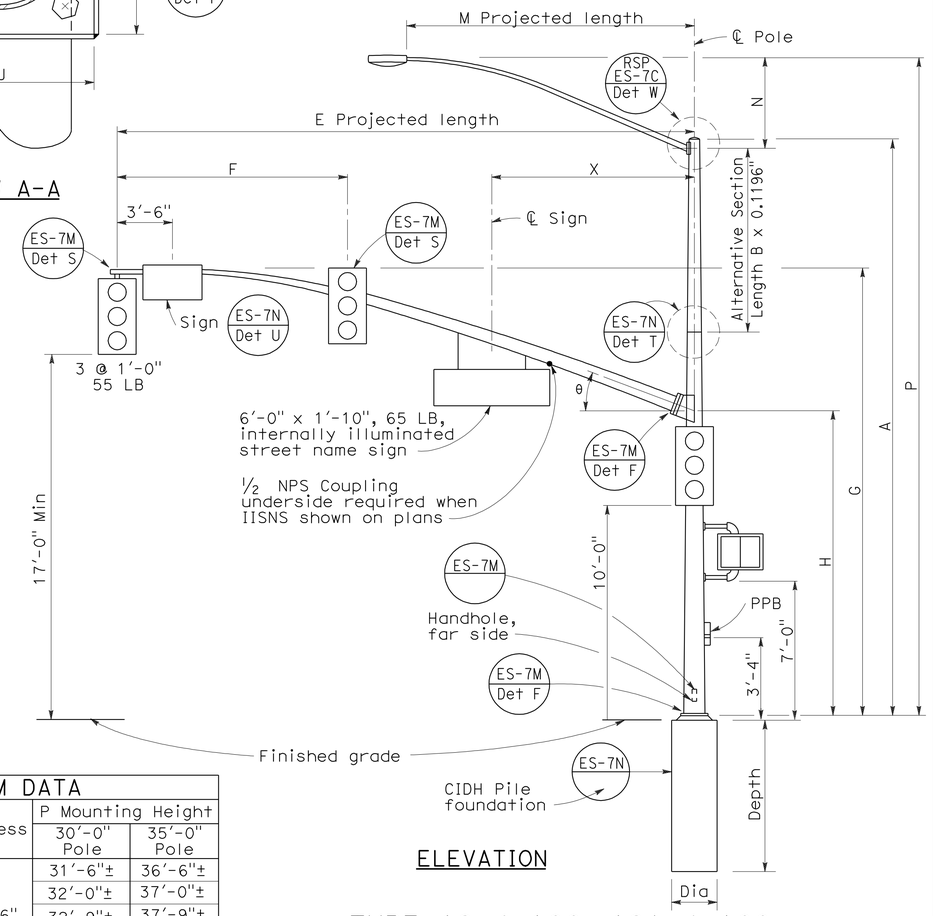

ELEVATION

TYPE 19-4-100, 19A-4-100,
24-4-100, 24A-4-100,
26-4-100, 26A-4-100

SIGNAL ARM DATA												
E Projected Length	F Min Spacing	G Mounting Height	H	Min OD at Pole	Thickness	I Bolt Circle	HS Cap Screws	J Plate Size	K Arm PL Thickness	L Pole PL Thickness	θ	X Max
25'-0"	10'-0"	22'-8"±	16'-0"	7 5/16"	0.2391"	12"	1¼"-7NC-3"	1'-0"	1¼"	1½"	23°	10'-6"
30'-0"	12'-0"	23'-0"±		8"								
35'-0"	14'-0"			8 11/16"		13½"		1'-1½"	1½"	1¾"	21°	
40'-0"	15'-0"			9⅜"							15°	13'-0"
45'-0"		23'-8"±		10¼"								

LUMINAIRE ARM DATA					
M Projected Length	N Rise	Min OD at Pole	Thickness	P Mounting Height 30'-0" Pole	P Mounting Height 35'-0" Pole
6'-0"	2'-0"±	3¼"	0.1196"	31'-6"±	36'-6"±
8'-0"	2'-6"±	3½"		32'-0"±	37'-0"±
10'-0"	3'-3"±	3⅞"		32'-9"±	37'-9"±
12'-0"	4'-3"±			33'-9"±	38'-9"±
15'-0"	4'-9"±	4¼"		34'-3"±	39'-3"±

POLE DATA									BASE PLATE DATA						CIDH PILE FOUNDATION		
Pole Type	Load Case	Wind Velocity mph	A Height	Min OD Base	Min OD Top	Thickness	Alternative Section B Length	Alternative Section Bottom	Alternative Section Top	C	DI Bolt Circle	Thickness	Anchor Bolts Size	Luminaire Arm	Signal Arm	Dia	Depth	Reinforced
18-4-100	4	100	17'-0"	12"	9"	0.2391"	None	9⅜"		1'-6"	1'-6"	1½"	2" Ø x 42" x 6"	None	25'-0", 30'-0"	3'-0"	9'-0"	Yes
19-4-100			30'-0"		8"		10'-0"		8"					6'-15' 12'-0"				
19A-4-100			35'-0"		7 5/16"		15'-0'		7 5/16"					6'-15' 15'-0"				
23-4-100			17'-0"		9"		None							None	35'-0"			
24-4-100			30'-0"		8"		10'-0"	9⅜"	8"					6'-15' 12'-0"				
24A-4-100			35'-0"		7 5/16"		15'-0"		7 5/16"					6'-15' 15'-0"				
26-4-100			30'-0"	12½"	8"	0.3125"	10'-0"	9¾"	8⅜"					6'-15' 12'-0"	40'-0", 45'-0"			
26A-4-100			35'-0"		7 5/16"		15'-0"		7 11/16"					6'-15' 15'-0"				
27-4-100			17'-0"		9¾"		None							None				

☐ Indicates arm length to be used unless otherwise noted on plans.

STATE OF CALIFORNIA
DEPARTMENT OF TRANSPORTATION

ELECTRICAL SYSTEMS (SIGNAL AND LIGHTING STANDARD CASE 4 ARM LOADING WIND VELOCITY=100 MPH ARM LENGTHS 25' TO 45')

NO SCALE

RSP ES-7F DATED OCTOBER 5, 2007 SUPERCEDES RSP ES-7F DATED NOVEMBER 17, 2006 AND STANDARD PLAN ES-7F DATED MAY 1, 2006 - PAGE 442 OF THE STANDARD PLANS BOOK DATED MAY 2006.

REVISED STANDARD PLAN RSP ES-7F

2006 REVISED STANDARD PLAN RSP ES-7F

7-10-07

DIST	COUNTY	ROUTE	POST MILES TOTAL PROJECT	SHEET NO.	TOTAL SHEETS
07	LA	5	4.0/5.9	953	1597

REGISTERED CIVIL ENGINEER

November 17, 2006
PLANS APPROVAL DATE

REGISTERED PROFESSIONAL ENGINEER
Stanley P. Johnson
No. C57793
Exp. 03-31-08
CIVIL
STATE OF CALIFORNIA

The State of California or its officers or agents shall not be responsible for the accuracy or completeness of electronic copies of this plan sheet.

To accompany plans dated 4-9-12

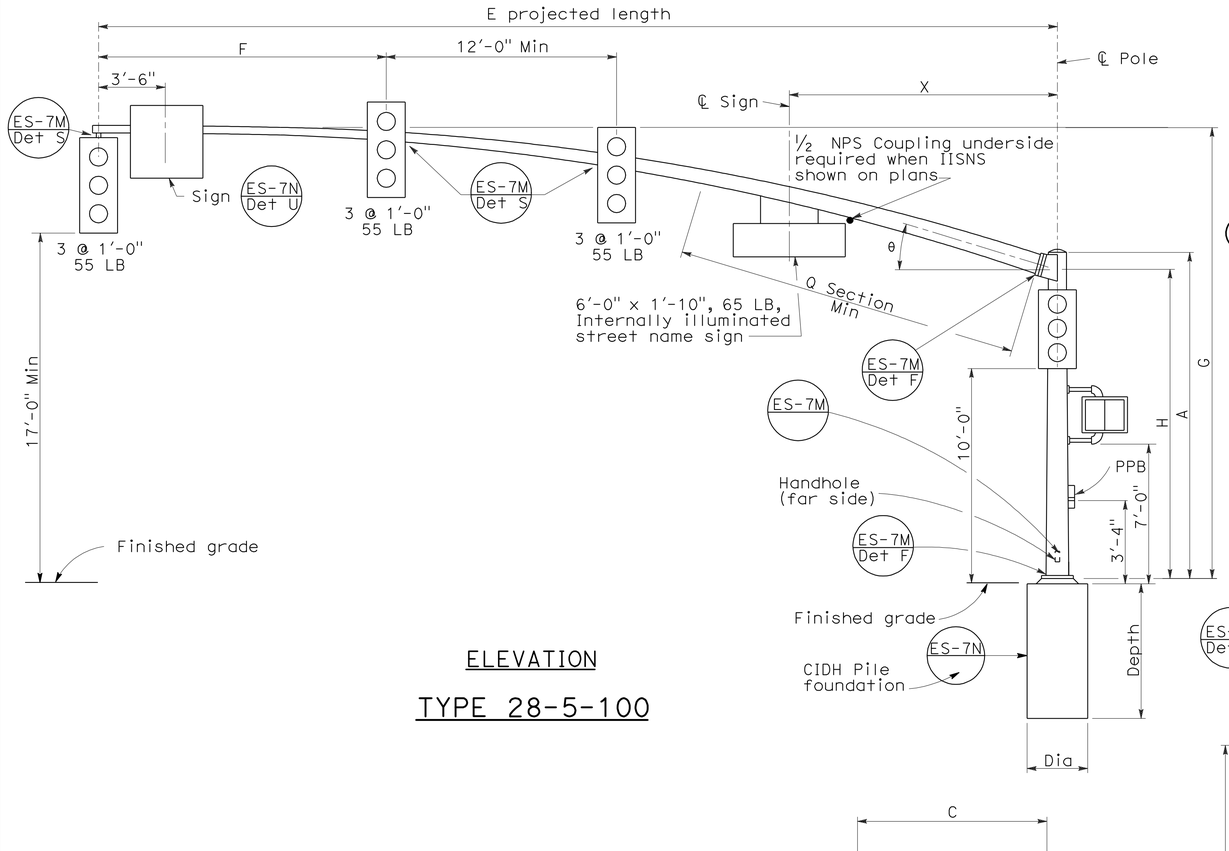

ELEVATION

TYPE 28-5-100

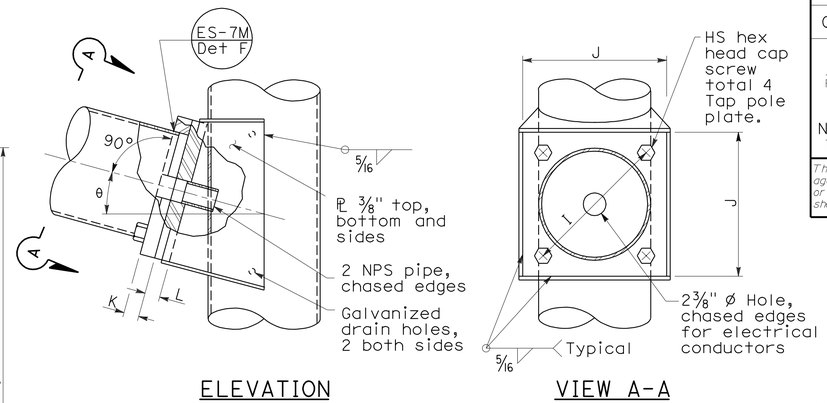

ELEVATION VIEW A-A

SIGNAL ARM CONNECTION DETAILS

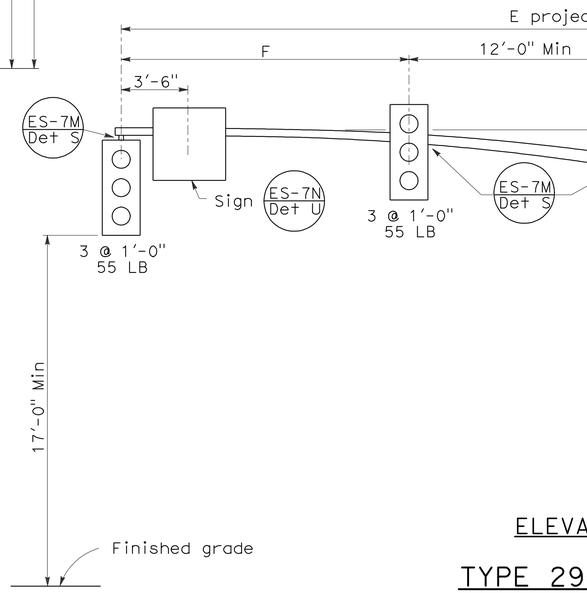

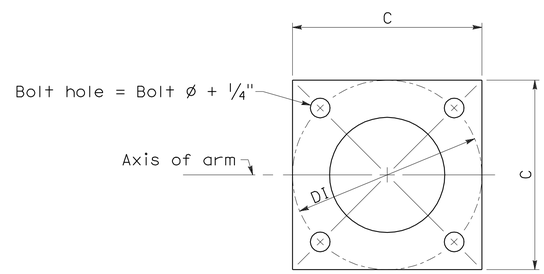

BASE PLATE

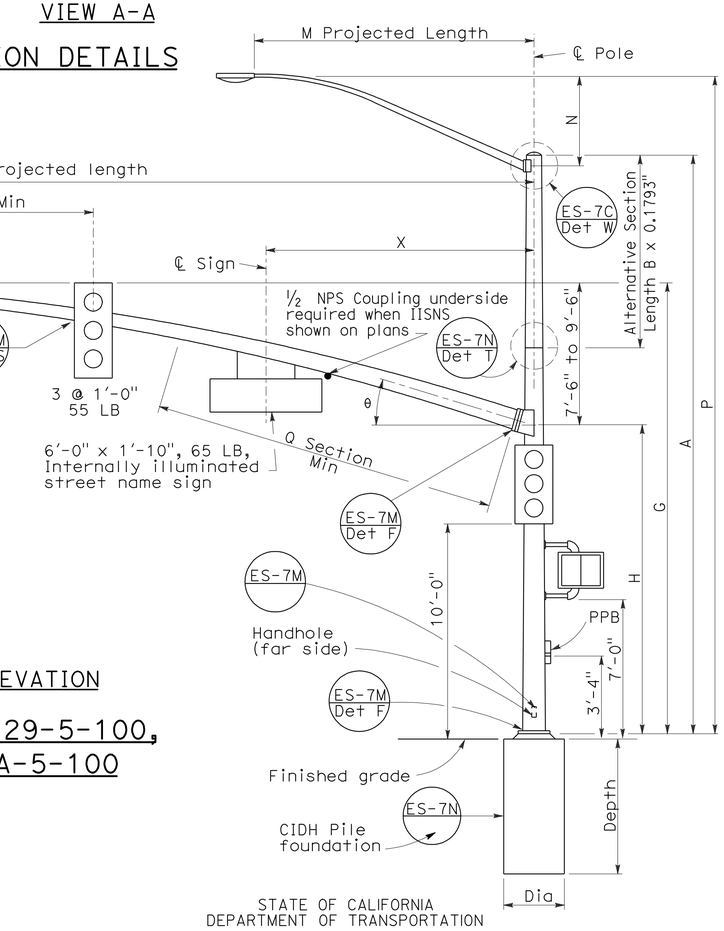

ELEVATION

TYPE 29-5-100, 29A-5-100

LUMINAIRE ARM DATA					
M Projected Length	N Rise	Min OD at Pole	Thickness	P Mounting Height 30'-0" Pole	P Mounting Height 35'-0" Pole
6'-0"	2'-0"±	3 1/4"	0.1196"	31'-6"±	36'-6"±
8'-0"	2'-6"±	3 1/2"		32'-0"±	37'-0"±
10'-0"	3'-3"±	3 7/8"		32'-9"±	37'-9"±
12'-0"	4'-3"±			33'-9"±	38'-9"±
15'-0"	4'-9"±	4 1/4"		34'-3"±	39'-3"±

SIGNAL ARM DATA														
E Projected Length	F Min Spacing	G Mounting Height	H	Min OD at Pole	Thickness	I Bolt Circle	HS Cap Screws	J Plate Size	K Arm ℄ Thickness	L Pole ℄ Thickness	θ	Q Section Length	Q Section Thickness	X Max
50'-0"	15'-0"	23'-7"± to 25'-7"±	16'-0"	11 7/16"	0.1793"	16"	1 1/2"-6NC-3 1/4"	1'-4"	1 3/4"	1 3/4"	15°	18'-0"	0.2391"	14'-0"
55'-0"				1'-1/4"								23'-0"		

POLE DATA									BASE PLATE DATA						CIDH PILE FOUNDATION		
Pole Type	Load Case	Wind Velocity mph	A Height	Min OD Base	Min OD Top	Thickness	Alternative Section B Length	Alternative Section Bottom	Alternative Section Top	C	DI Bolt Circle	Thickness	Anchor Bolts Size	Luminaire Arm	Signal Arm	Dia	Depth	Reinforced
28-5-100	5	100	17'-0"	14"	11 11/16"	0.3125"	None	11 1/4"	9 7/8"	21"	21"	1 3/4"	2" ø x 42" x 6"	None	50'-0", 55'-0"	3'-0"	9'-2"	Yes
29-5-100			30'-0"		9 7/8"		10'-0"							6'-15' [15'-0"]				
29A-5-100			35'-0"		9 3/16"		15'-0"		9 3/16"	23"	23"							

[ ] Indicates arm length to be used unless otherwise noted on plans.

STATE OF CALIFORNIA
DEPARTMENT OF TRANSPORTATION

ELECTRICAL SYSTEMS (SIGNAL AND LIGHTING STANDARD CASE 5 ARM LOADING WIND VELOCITY=100 MPH ARM LENGTHS 50' TO 55')

NO SCALE

RSP ES-7G DATED NOVEMBER 17, 2006 SUPERSEDES STANDARD PLAN ES-7G DATED MAY 1, 2006 - PAGE 443 OF THE STANDARD PLANS BOOK DATED MAY 2006.

REVISED STANDARD PLAN RSP ES-7G

2006 REVISED STANDARD PLAN RSP ES-7G

5-15-06

DIST	COUNTY	ROUTE	POST MILES TOTAL PROJECT	SHEET NO.	TOTAL SHEETS
07	LA	5	4.0/5.9	954	1597

REGISTERED ELECTRICAL ENGINEER

January 20, 2012
PLANS APPROVAL DATE

REGISTERED PROFESSIONAL ENGINEER Jeffery G. McRae No. E14512 Exp. 6-30-12 ELECTRICAL STATE OF CALIFORNIA

The State of California or its officers or agents shall not be responsible for the accuracy or completeness of electronic copies of this plan sheet.

To accompany plans dated 4-9-12

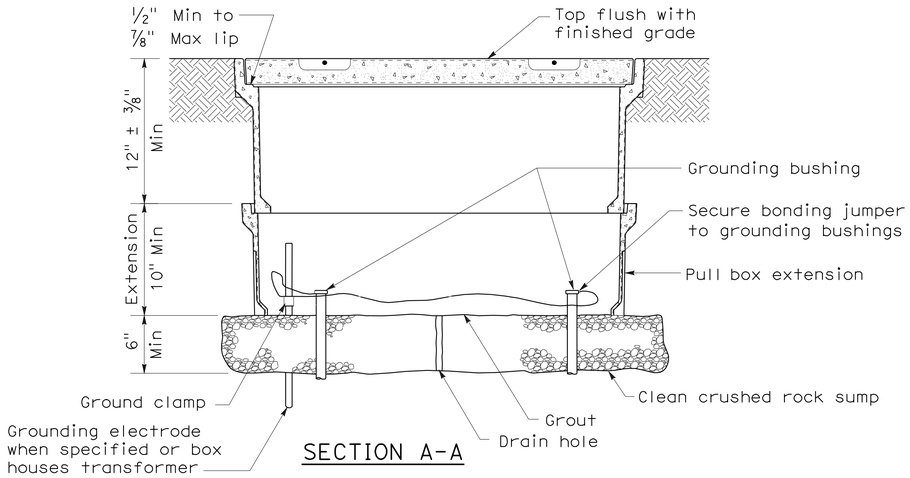

SECTION A-A

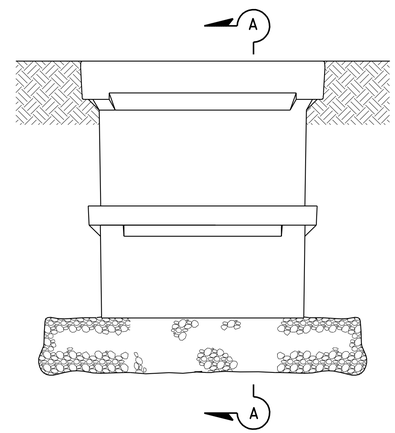

SIDE VIEW

INSTALLATION DETAILS

DETAIL A

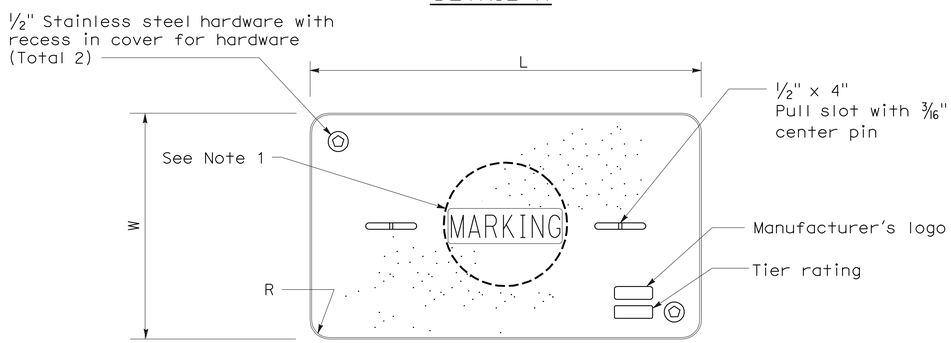

COVER TOP VIEW

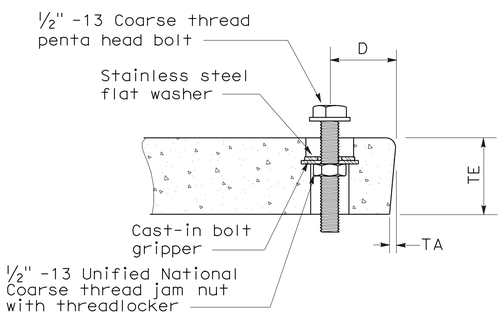

TYPICAL COVER CAPTIVE BOLT

(Or similar)

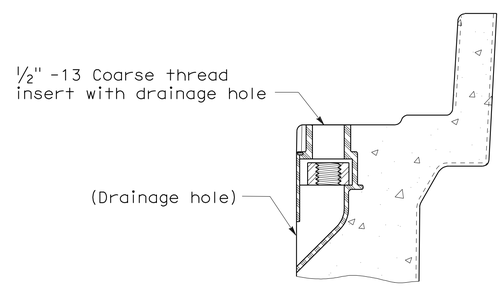

TYPICAL THREADED INSERT

(Or similar)

DIMENSION TABLE										
PULL BOX	PULL BOX			COVER						
	Minimum Depth Box	Minimum Depth Extension	Maximum Weight	L	W	R	TE	TA	D	Maximum Weight
No. 3 1/2	12"	N/A	40 lb	1' - 3 3/8"	10 1/8"	1 3/8"	2"	1/8"	1 3/4"	30 lb
No. 5	12"	10"	55 lb	1' - 11 1/4"	1' - 1 3/4"	1 3/8"	2"	1/8"	1 3/4"	60 lb
No. 6	12"	10"	70 lb	2' - 6 1/2"	1' - 5 1/2"	1 3/8"	2"	1/8"	2"	85 lb

NOTES ON PULL BOXES:

1. Pull box covers must be marked as follows: "SERVICE" Service circuits between service point and service disconnect; "SPRINKLER-CONTROL" sprinkler control circuits, 50 V or less; "CALTRANS" on all pull boxes, except pull boxes marked "SPRINKLER-CONTROL"; and "TELEPHONE" Telephone service;

   A) No. 3 1/2 pull box.
      1) "SIGNAL" - Traffic signal circuits with or without street or sign lighting circuits.
      2) "ST LIGHTING" - Street or sign lighting circuits where voltage is under 600 V.

   B) No. 5, 6, 9 or 9A pull box.
      1) "TRAFFIC SIGNAL" - Traffic signal circuits with or without street or sign lighting circuits.
      2) "STREET LIGHTING" - Street or sign lighting circuits where voltage is under 600 V.
      3) "STREET LIGHTING-HIGH VOLTAGE" - Street or sign lighting circuits where voltage is above 600 V.
      4) "IRRIGATION" - Circuits to irrigation controller 120 V or more.
      5) "RAMP METER" - Ramp meter circuits.
      6) "COUNT STATION" - Count or speed monitor circuits.
      7) "COMMUNICATIONS" - Communication circuits.
      8) "TOS COMMUNICATIONS" - TOS communication line.
      9) "TOS POWER" -TOS power.
      10) "TDC POWER" - Telephone demarcation cabinet power.
      11) "CCTV" - Closed circuit television circuits.
      12) "TMS" - Traffic monitoring station circuits.
      13) "CMS" - Changeable message sign circuits.
      14) "HAR" - Highway advisory radio circuits.

2. The nominal dimensions of the opening in which the cover sets must be the same as the cover dimensions (L and W) plus 1/8" or greater.

3. Covers and boxes must be interchangeable with California Standard. When interchanged with a standard, the top surfaces must be flush within 1/8". Top outside radius of covers and pull boxes must have a 1/8" radius.

4. Pull box extension may be another pull box as long as the bottom edge of the pull box can fit into the cover opening.

STATE OF CALIFORNIA
DEPARTMENT OF TRANSPORTATION

ELECTRICAL SYSTEMS (PULL BOX)

NO SCALE

NSP ES-8A DATED JANUARY 20, 2012 SUPPLEMENTS THE STANDARD PLANS BOOK DATED MAY 2006.

NEW STANDARD PLAN NSP ES-8A

2006 NEW STANDARD PLAN NSP ES-8A

9-28-11

DIST	COUNTY	ROUTE	POST MILES TOTAL PROJECT	SHEET NO.	TOTAL SHEETS
07	LA	5	4.0/5.9	955	1597

REGISTERED ELECTRICAL ENGINEER

January 20, 2012
PLANS APPROVAL DATE

REGISTERED PROFESSIONAL ENGINEER
Jeffery G. McRae
No. E14512
Exp. 6-30-12
ELECTRICAL
STATE OF CALIFORNIA

The State of California or its officers or agents shall not be responsible for the accuracy or completeness of electronic copies of this plan sheet.

To accompany plans dated 4-9-12

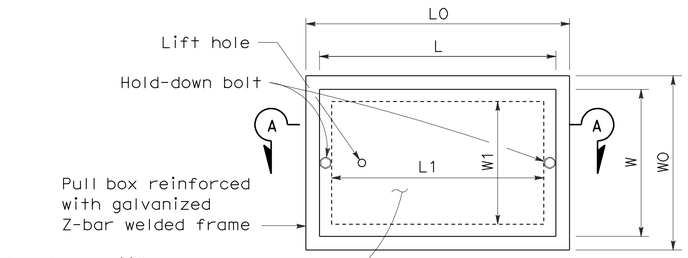

TOP VIEW

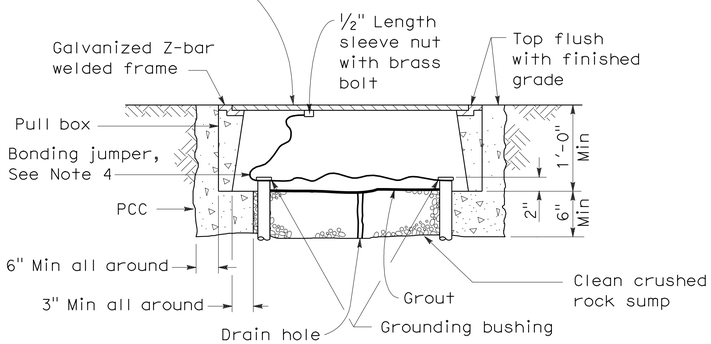

SECTION A-A

No. 3½(T), No. 5(T) AND No. 6(T) TRAFFIC PULL BOX

NOTES ON PULL BOXES:

1. Traffic pull box shall be provided with steel cover and special concrete footing. Steel cover shall have embossed non-skid pattern.
2. Steel reinforcing shall be as regularly used in the standard products of the respective manufacturer.
3. Pull box covers must be marked as follows: "SERVICE" Service circuits between service point and service disconnect; "SPRINKLER-CONTROL" Sprinkler control circuits, 50 V or less; "CALTRANS" On all pull boxes, except pull boxes marked "SPRINKLER-CONTROL"; and "TELEPHONE" Telephone service.
   A) No. 3½(T) pull box.
      1) "SIGNAL" - Traffic signal circuits with or without street or sign lighting circuits.
      2) "ST LIGHTING" - Street or sign lighting circuits where voltage is under 600 V.
   B) No. 5(T) or 6(T) pull box.
      1) "TRAFFIC SIGNAL" - Traffic signal circuits with or without street or sign lighting circuits.
      2) "STREET LIGHTING" - Street or sign lighting circuits where voltage is under 600 V.
      3) "STREET LIGHTING-HIGH VOLTAGE" - Street or sign lighting circuits where voltage is above 600 V.
      4) "IRRIGATION" - Circuits to irrigation controller 120 V or more.
      5) "RAMP METER" - Ramp meter circuits.
      6) "COUNT STATION" - Count or speed monitor circuits.
      7) "COMMUNICATION" - Communication circuits.
      8) "TOS COMMUNICATIONS" - TOS communications line.
      9) "TOS POWER" - TOS power.
      10) "TDC POWER" - Telephone demarcation cabinet power.
      11) "CCTV" - Closed circuit television circuits.
      12) "TMS" - Traffic monitoring station circuits.
      13) "CMS" - Changeable message sign circuits.
      14) "HAR" - Highway advisory radio circuits.
4. Bonding jumper for metal covers shall be 3' long, minimum.
5. The nominal dimensions of the opening in which the cover sets must be the same as the cover dimensions except the length and width dimensions shall be ⅛" greater.
6. Covers and boxes must be interchangeable with California standard male and female gages. When interchanged with a standard male or female gage, the top surfaces must be flush within ⅛".

DIMENSION TABLE

PULL BOX	BOX						COVER				
	Minimum * Thickness	Minimum Depth Box and Extension	WO	LO	L1	W1	L **	W **	R	Edge Thickness	Edge Taper
No. 3½(T)	1½"	1'-0"	1'-5"± 1"	1'-8⅞"±	1'-2½"±	10⅝"± 1"	1'-8"±	1'-1¾"±	0"	½"	None
No. 5(T)	1¾"	1'-0"	1'-11½"± 1"	2'-5½"±	1'-7"±	1'-1"± 1"	2'-3"±	1'-4"±	0"	½"	None
No. 6(T)	2"	1'-0"	2'-6"± 1"	2'-11½"±	1'-11½"±	1'-5"± 1"	2'-9"±	1'-8"±	0"	½"	None

* Excluding conduit web ** Top dimension

STATE OF CALIFORNIA
DEPARTMENT OF TRANSPORTATION

ELECTRICAL SYSTEMS (TRAFFIC RATED PULL BOX)

NO SCALE

NSP ES-8B DATED JANUARY 20, 2012 SUPPLEMENTS THE STANDARD PLANS BOOK DATED MAY 2006.

NEW STANDARD PLAN NSP ES-8B

2006 NEW STANDARD PLAN NSP ES-8B

DIST	COUNTY	ROUTE	POST MILES TOTAL PROJECT	SHEET NO.	TOTAL SHEETS
07	LA	5	4.0/5.9	956	1597

REGISTERED ELECTRICAL ENGINEER

October 5, 2007
PLANS APPROVAL DATE

REGISTERED PROFESSIONAL ENGINEER
Jeffery G. McRae
No. E14512
Exp. 6-30-08
ELECTRICAL
STATE OF CALIFORNIA

The State of California or its officers or agents shall not be responsible for the accuracy or completeness of electronic copies of this plan sheet.

To accompany plans dated 4-9-12

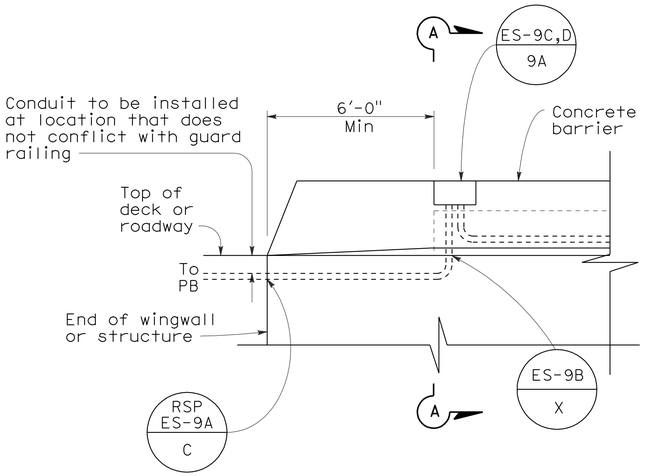

SIDEVIEW

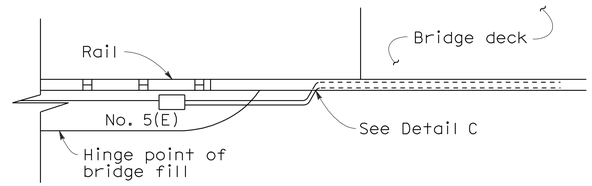

TOP VIEW

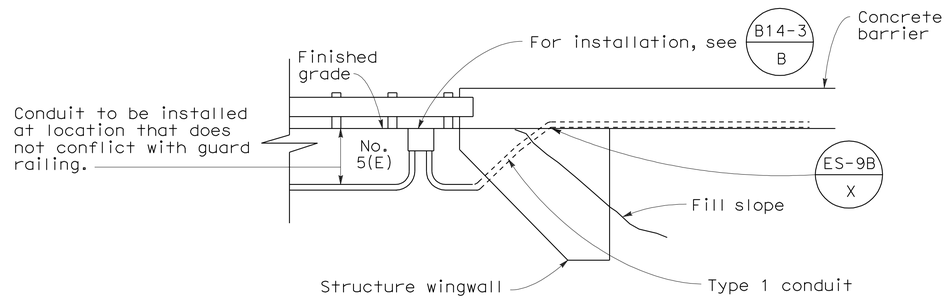

SIDE VIEW
DETAIL I
CONDUIT TERMINATION

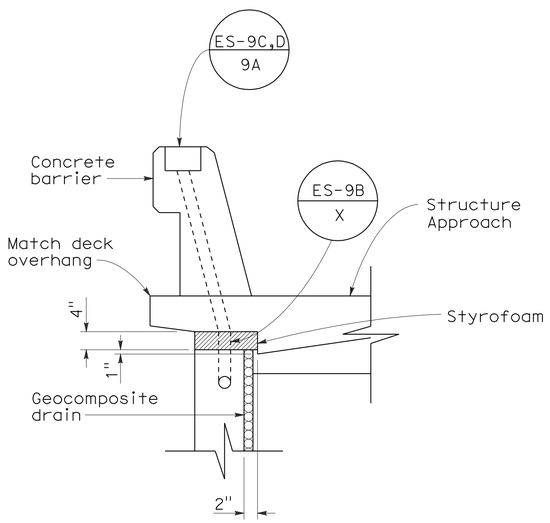

SECTION A-A

DETAIL A
CONDUIT TERMINATION

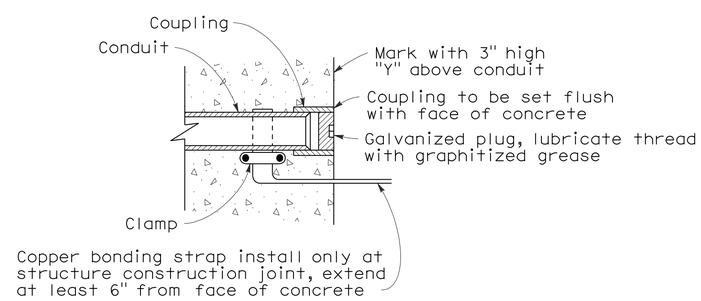

DETAIL C
CONDUIT TERMINATION

STATE OF CALIFORNIA
DEPARTMENT OF TRANSPORTATION

ELECTRICAL SYSTEMS (ELECTRICAL DETAILS STRUCTURE INSTALLATIONS)

NO SCALE

RSP ES-9A DATED OCTOBER 5, 2007 SUPERCEDES STANDARD PLAN ES-9A
DATED MAY 1, 2006 - PAGE 454 OF THE STANDARD PLANS BOOK DATED MAY 2006.

REVISED STANDARD PLAN RSP ES-9A

2006 REVISED STANDARD PLAN RSP ES-9A

DIST	COUNTY	ROUTE	POST MILES TOTAL PROJECT	SHEET NO.	TOTAL SHEETS
07	LA	5	4.0/5.9	957	1597

REGISTERED ELECTRICAL ENGINEER

October 5, 2007
PLANS APPROVAL DATE

REGISTERED PROFESSIONAL ENGINEER Jeffery G. McRae No. E14512 Exp. 6-30-08 ELECTRICAL STATE OF CALIFORNIA

The State of California or its officers or agents shall not be responsible for the accuracy or completeness of electronic copies of this plan sheet.

To accompany plans dated 4-9-12

2006 REVISED STANDARD PLAN RSP ES-9C

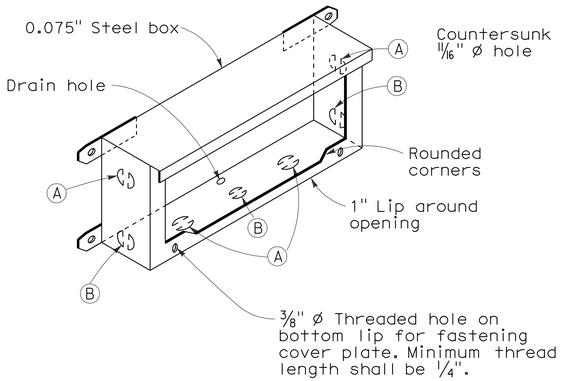

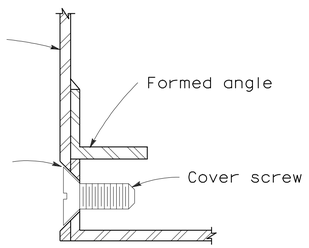

DETAIL J

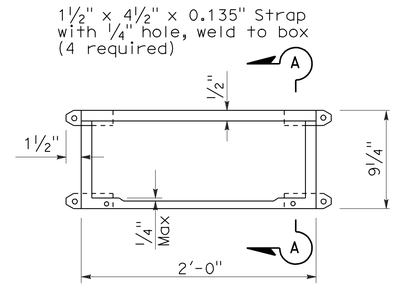

PLAN

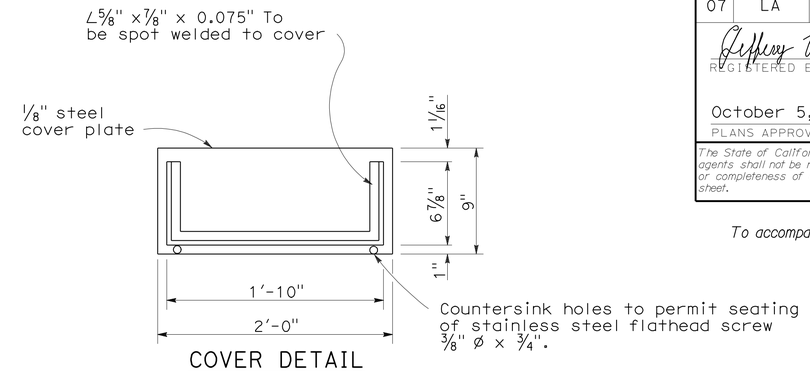

COVER DETAIL

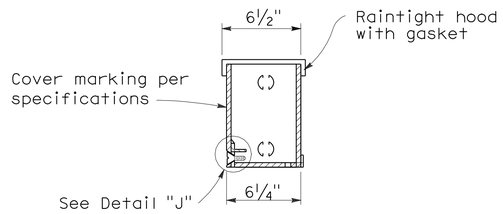

SECTION A-A

INSTALLATION NOTE:

Box shall be parallel to top of railing. Close cover box during pouring with 1/4" plywood of sufficient size to provide 1:1 chamfer on 3 sides of cover. Upper edge of plywood shall fit against lower edge of raintight hood.

No. 9 STRUCTURE PULL BOX

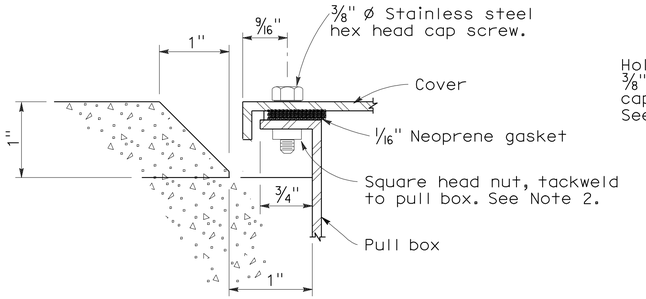

SECTION C-C

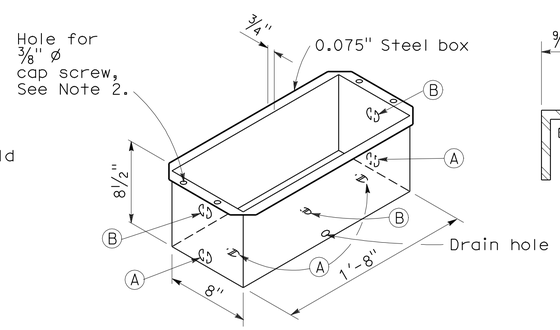

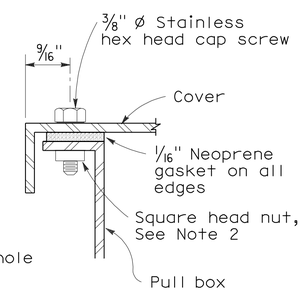

DETAIL A

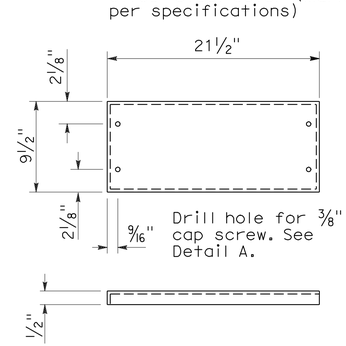

COVER DETAIL

NOTES: No. 9 and 9A Pull Box

1. Corner joints shall be lapped and secured by spot welding or riveting.
2. Where cap screws are used to attach cover to box, either of the following methods of providing adequate threading may be used:
   a. Tack weld square nut to bottom of flange (Total 4), or
   b. Tack weld a 1/4" x 5/8" x 8" bar beneath flange (Total 2).
3. Pound knockouts flat after punching.
4. Multiple size knockouts shall not be permitted.
5. Pull box covers shall be marked as shown on Standard Plan ES-8.

No. 9A STRUCTURE PULL BOX

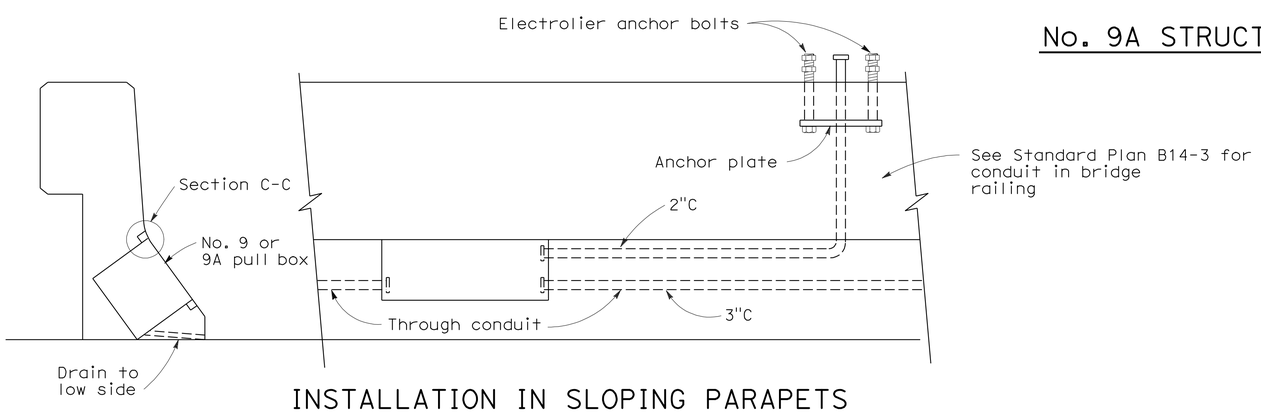

INSTALLATION IN SLOPING PARAPETS

For reinforcement in area of electrolier, see railing sheets. For electrolier anchor bolts, see Standard Plan ES-6B.

KNOCKOUT SCHEDULE
No. 9 AND 9A PULL BOX

(A) 2"C, 1 each end, 2 on bottom.

(B) 3"C, 1 each end, 1 on bottom.

STATE OF CALIFORNIA
DEPARTMENT OF TRANSPORTATION

ELECTRICAL SYSTEMS (ELECTRICAL DETAILS STRUCTURE INSTALLATIONS)

NO SCALE

RSP ES-9C DATED OCTOBER 5, 2007 SUPERCEDES STANDARD PLAN ES-9C DATED MAY 1, 2006 - PAGE 456 OF THE STANDARD PLANS BOOK DATED MAY 2006.

REVISED STANDARD PLAN RSP ES-9C

7-26-07

DIST	COUNTY	ROUTE	POST MILES TOTAL PROJECT	SHEET NO.	TOTAL SHEETS
07	LA	5	4.0/5.9	958	1597

REGISTERED ELECTRICAL ENGINEER

October 5, 2007
PLANS APPROVAL DATE

REGISTERED PROFESSIONAL ENGINEER Jeffery G. McRae No. E14512 Exp. 6-30-08 ELECTRICAL STATE OF CALIFORNIA

The State of California or its officers or agents shall not be responsible for the accuracy or completeness of electronic copies of this plan sheet.

To accompany plans dated 4-9-12

NOTES: (FOR LIGHTING AND SIGN ILLUMINATION CONTROL)

1. The ballast voltages of lighting fixtures and luminaires shall match line service voltages.
2. Voltage rating of photoelectric controls shall conform to the service voltage indicated on the plans.
3. Terminal strip shall be provided for wiring to fixtures.
4. Type SC1A, SC2A, SC3A controls are similar to Types SC1, SC2 and SC3 controls respectively except test switch and wiring are not required.

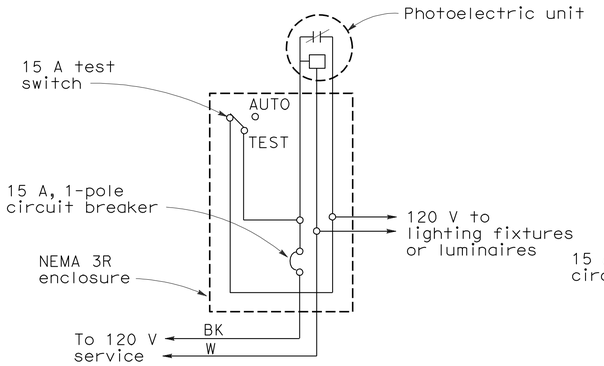

TYPE LC1 CONTROL

For 120 V unswitched circuit with no more than 800 W load.

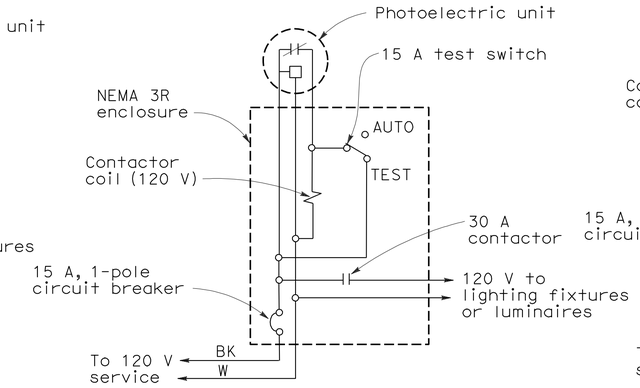

TYPE LC2 CONTROL

For 120 V unswitched circuit

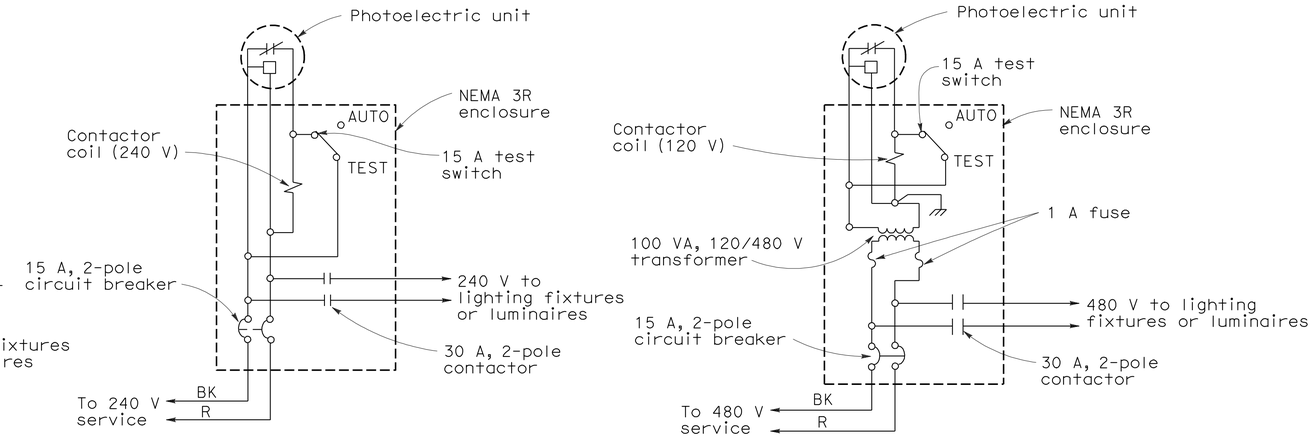

TYPE LC3 CONTROL

For 240 V and 480 V unswitched circuits

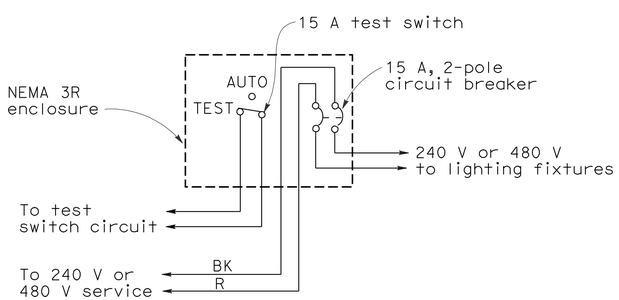

TYPE SC1 CONTROL

For 240 V or 480 V switched circuit, see Note 4 for Type SC1A

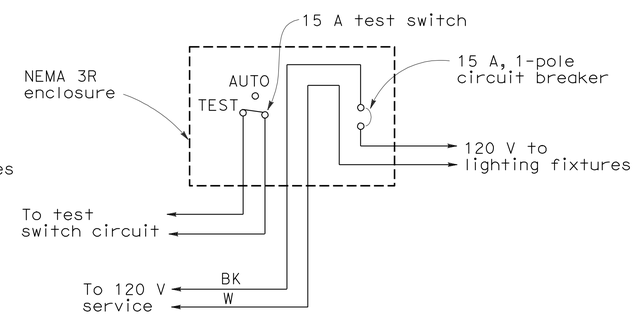

TYPE SC2 CONTROL

For 120 V switched circuit, see Note 4 for Type SC2A

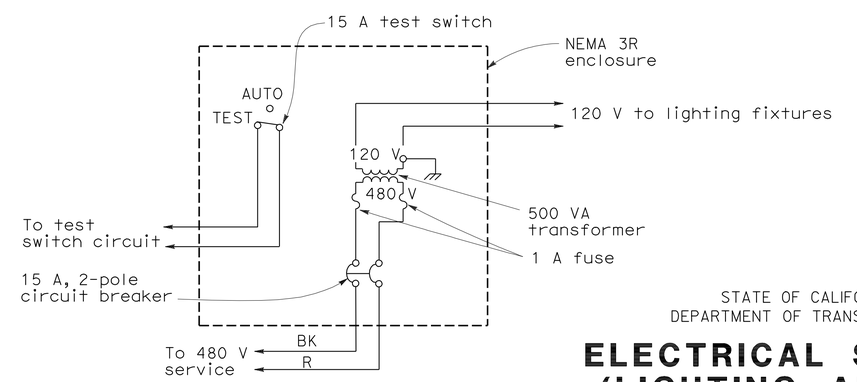

TYPE SC3 CONTROL

For 480 V switched sign circuit, see Note 4 for Type SC3A

STATE OF CALIFORNIA
DEPARTMENT OF TRANSPORTATION

ELECTRICAL SYSTEMS (LIGHTING AND SIGN ILLUMINATION CONTROL)

NO SCALE

RSP ES-15D DATED OCTOBER 5, 2007 SUPERCEDES STANDARD PLAN ES-15D DATED MAY 1, 2006 - PAGE 472 OF THE STANDARD PLANS BOOK DATED MAY 2006.

REVISED STANDARD PLAN RSP ES-15D

2006 REVISED STANDARD PLAN RSP ES-15D

DIST	COUNTY	ROUTE	POST MILES TOTAL PROJECT	SHEET No.	TOTAL SHEETS
07	LA	5	4.0/5.9	959	1597

REGISTERED CIVIL ENGINEER 12-09-11 DATE

4-9-12
PLANS APPROVAL DATE

REGISTERED PROFESSIONAL ENGINEER DAVID FADI NASH MUWANES No. C77659 Exp. 06-30-13 CIVIL STATE OF CALIFORNIA

The State of California or its officers or agents shall not be responsible for the accuracy or completeness of electronic copies of this plan sheet.

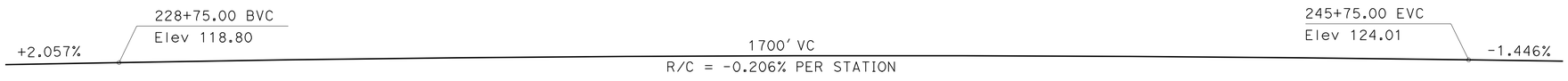

PROFILE GRADE

NO SCALE

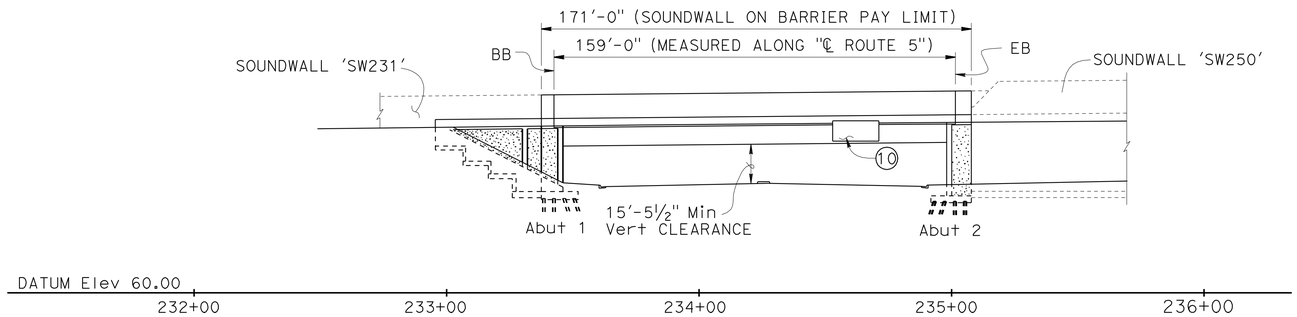

ELEVATION

1" = 30'

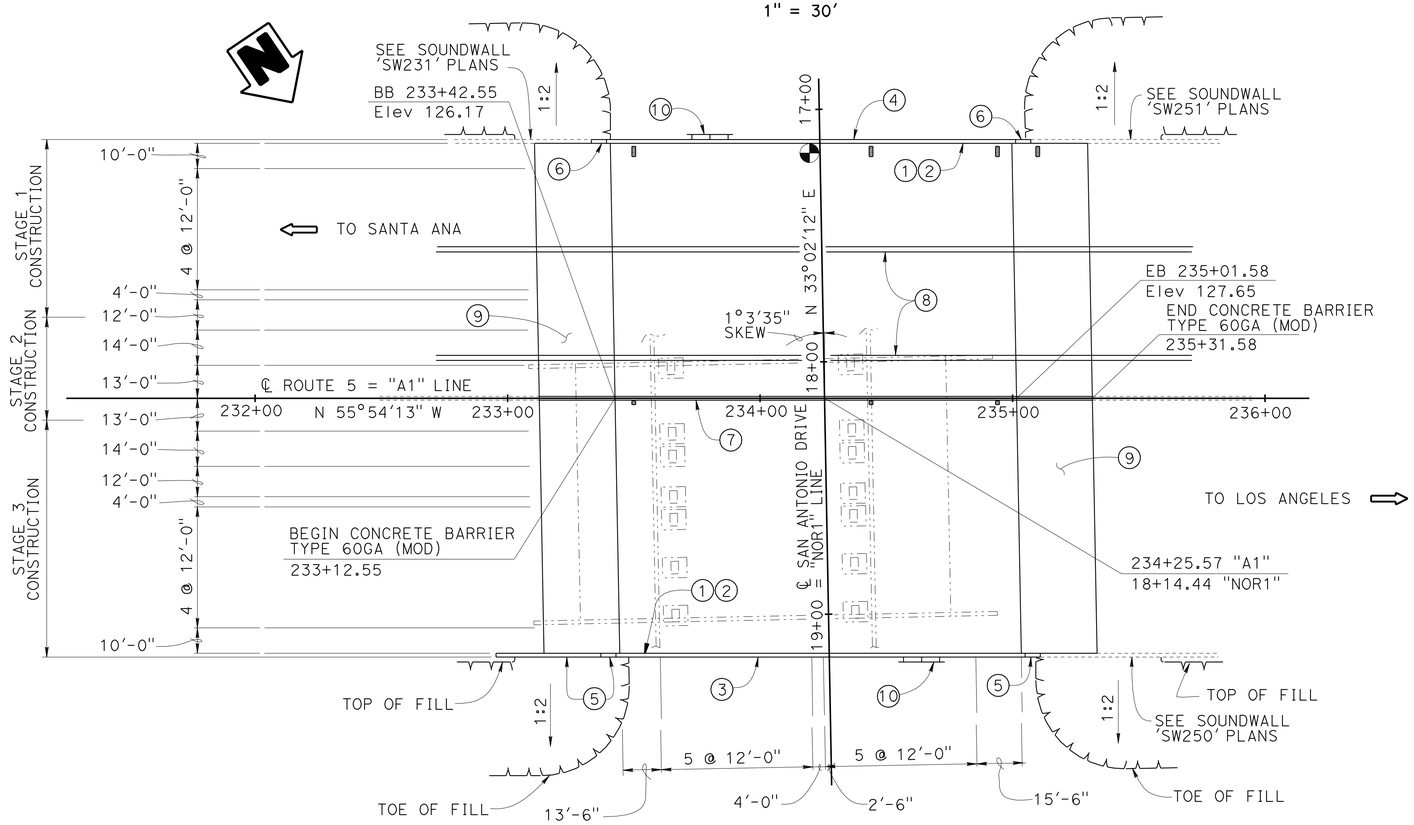

PLAN

1" = 30'

NOTES:

1. Paint "San Antonio Drive Undercrossing"
2. Paint "Bridge No. 53-3060"
3. Concrete Barrier Type 736 (MOD 1)
4. Concrete Barrier Type 736 (MOD 2) with Masonry Block Soundwall
5. Concrete Barrier Type 736A (Mod 1)
6. Concrete Barrier Type 736A (Mod 2) with Masonry Block Soundwall
7. Concrete Barrier Type 60GA Mod
8. Temporary Railing Type "K"
9. Structure Approach Type N, see "STRUCTURE APPROACH TYPE N(30S)" Sheet
10. Bridge Mounted sign, see 'Road Plans'

LEGEND:

- Indicates Point of Min Vert Clearance
- Indicates Existing Bridge, Br. No. 53-0594 to be Removed
- Indicates Deck Drain Type C Modified
- Indicates Deck Drain Type D-1 Modified

QUANTITIES

BRIDGE REMOVAL, LOCATION A	LUMP SUM	
STRUCTURE EXCAVATION (BRIDGE)	4,300	CY
STRUCTURE EXCAVATION (TYPE Y-1) (AERIALLY DEPOSITED LEAD)	345	CY
STRUCTURE EXCAVATION (TYPE Y-2) (AERIALLY DEPOSITED LEAD)	140	CY
STRUCTURE BACKFILL (BRIDGE)	3,600	CY
3" SUPPLY LINE (BRIDGE)	230	LF
FURNISH STEEL PILING (HP 14 X 89)	12,936	LF
DRIVE STEEL PILE (HP 14 X 89)	207	EA
STRUCTURAL CONCRETE, BRIDGE FOOTING	890	CY
STRUCTURAL CONCRETE, BRIDGE	2,510	CY
STRUCTURAL CONCRETE, APPROACH SLAB (TYPE N)	450	CY
ARCHITECTURAL TREATMENT (SUNRAY - SPLIT SLATE)	7,090	SQFT
ARCHITECTURAL TEXTURE (SPLIT SLATE)	2,090	SQFT
FURNISH PRECAST PRESTRESSED CONCRETE WIDE-FLANGE GIRDER (L = 158')	20	EA
ERECT PRECAST PRESTRESSED CONCRETE GIRDER	20	EA
SOUND WALL (MASONRY BLOCK)	1,600	SQFT
JOINT SEAL (MR 1")	410	LF
BAR REINFORCING STEEL (BRIDGE)	533,000	LB
BRIDGE DECK DRAINAGE SYSTEM	3,400	LB
CONCRETE BARRIER (TYPE 60GA MODIFIED)	219	LF
CONCRETE BARRIER (TYPE 736 MODIFIED 1)	159	LF
CONCRETE BARRIER (TYPE 736 MODIFIED 2)	159	LF
CONCRETE BARRIER (TYPE 736A MODIFIED 1)	54	LF
CONCRETE BARRIER (TYPE 736A MODIFIED 2)	12	LF
COMMUNICATION CONDUIT (BRIDGE) (LF)	460	LF

NOTE:
THE CONTRACTOR SHALL VERIFY ALL CONTROLLING FIELD DIMENSIONS BEFORE ORDERING OR FABRICATING ANY MATERIAL.

X Douglas J. Wunnel
DESIGN ENGINEER

	BY	CHECKED
DESIGN	D. MUWANES	E. MATSUMOTO
DETAILS	L. XIONG/ W. ZHANG	D. MUWANES
QUANTITIES	L. BAHIA	D. MUWANES

LOAD & RESISTANCE FACTOR DESIGN — LIVE LOADING: HL93 W/"LOW-BOY"; PERMIT DESIGN VEHICLE
LAYOUT — BY D. MUWANES — CHECKED E. MATSUMOTO
SPECIFICATIONS — BY J. JIANG — PLANS AND SPECS COMPARED V. RENGANATHAN

ORIGINAL SCALE IN INCHES FOR REDUCED PLANS 0 1 2 3

STATE OF CALIFORNIA
DEPARTMENT OF TRANSPORTATION

DIVISION OF ENGINEERING SERVICES
STRUCTURE DESIGN
DESIGN BRANCH 14

BRIDGE NO. 53-3060
POST MILE 4.41

SAN ANTONIO DR UNDERCROSSING (REPLACE)
GENERAL PLAN NO. 1

UNIT: 3613
PROJECT NUMBER & PHASE: 07000018341
CONTRACT NO.: 07-215941

DISREGARD PRINTS BEARING EARLIER REVISION DATES
REVISION DATES: 03-26-12 12-14-11 02-29-12 03-15-12
SHEET 1 OF 46

USERNAME => s103858 DATE PLOTTED => 15-APR-2012 TIME PLOTTED => 06:58

STRUCTURES DESIGN GENERAL PLAN SHEET (ENGLISH) (REV.09-01-10)

FILE => 53-3060-a-gp01.dgn

DIST	COUNTY	ROUTE	POST MILES TOTAL PROJECT	SHEET No.	TOTAL SHEETS
07	LA	5	4.0/5.9	960	1597

REGISTERED CIVIL ENGINEER 12-09-11 DATE

4-9-12
PLANS APPROVAL DATE

REGISTERED PROFESSIONAL ENGINEER
DAVID FADI NASH MUWANES
No. C77659
Exp. 06-30-13
CIVIL
STATE OF CALIFORNIA

The State of California or its officers or agents shall not be responsible for the accuracy or completeness of electronic copies of this plan sheet.

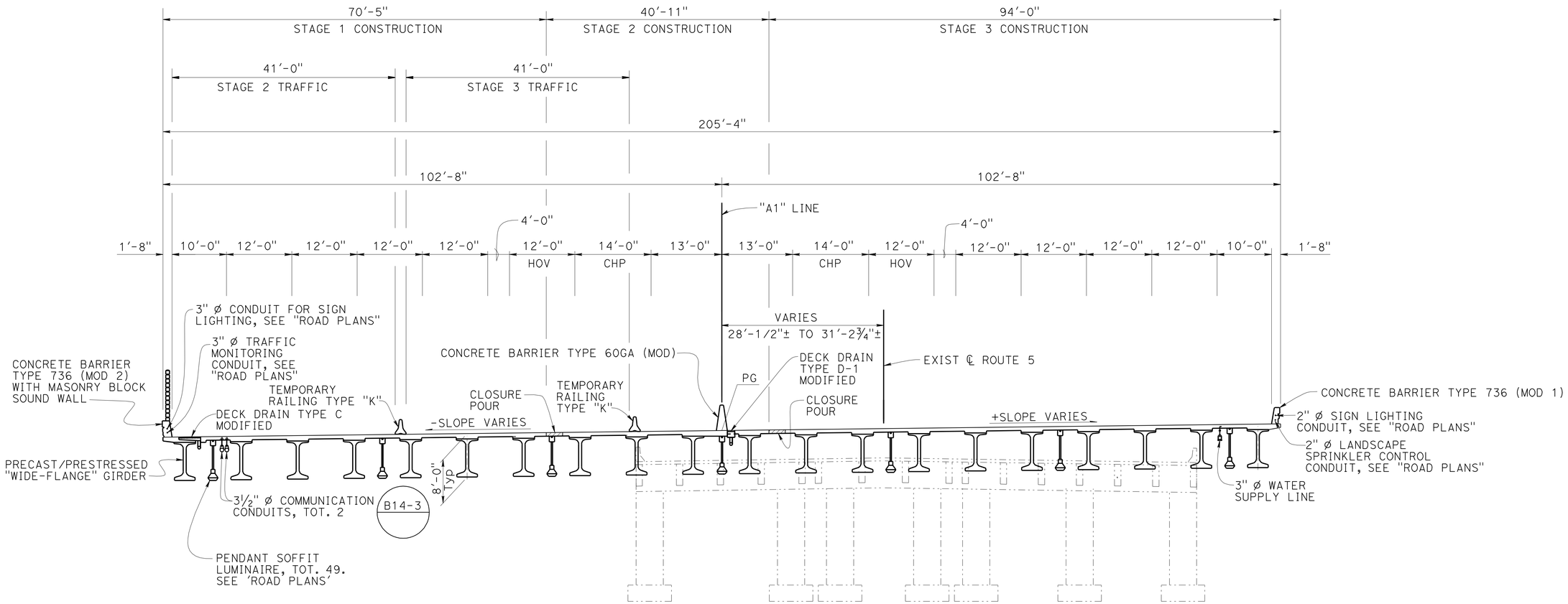

TYPICAL SECTION

1" = 10'

NOTE:
THE CONTRACTOR SHALL VERIFY ALL CONTROLLING FIELD DIMENSIONS BEFORE ORDERING OR FABRICATING ANY MATERIAL.

LEGEND:

-·-·- Indicates Existing Strucure to be removed

X Douglas J. Dunnel DESIGN ENGINEER	DESIGN	BY D. MUWANES	CHECKED E. MATSUMOTO	LOAD & RESISTANCE FACTOR DESIGN	LIVE LOADING: HL93 W/"LOW-BOY": PERMIT DESIGN VEHICLE
	DETAILS	BY L. XIONG / W. ZHANG	CHECKED D. MUWANES	LAYOUT	BY D. MUWANES / CHECKED E. MATSUMOTO
	QUANTITIES	BY L. BAHIA	CHECKED D. MUWANES	SPECIFICATIONS	BY J. JIANG / PLANS AND SPECS COMPARED V. RENGANATHAN

ORIGINAL SCALE IN INCHES FOR REDUCED PLANS 0 1 2 3

STATE OF CALIFORNIA
DEPARTMENT OF TRANSPORTATION

DIVISION OF ENGINEERING SERVICES
STRUCTURE DESIGN
DESIGN BRANCH 14

BRIDGE NO. 53-3060
POST MILE 4.41

SAN ANTONIO DR UNDERCROSSING (REPLACE)
GENERAL PLAN NO. 2

UNIT: 3613
PROJECT NUMBER & PHASE: 07000018341
CONTRACT NO.: 07-215941

DISREGARD PRINTS BEARING EARLIER REVISION DATES

REVISION DATES: 03-02-12 03-06-12 03-12-12 03-22-12

SHEET 2 OF 46

USERNAME => s109858 DATE PLOTTED => 15-APR-2012 TIME PLOTTED => 06:58

STRUCTURES DESIGN GENERAL PLAN SHEET (ENGLISH) (REV.09-01-10)

FILE => 53-3060-a-gp02.dgn

DIST	COUNTY	ROUTE	POST MILES TOTAL PROJECT	SHEET No.	TOTAL SHEETS
07	LA	5	4.0/5.9	961	1597

REGISTERED CIVIL ENGINEER 12-09-11 DATE

4-9-12
PLANS APPROVAL DATE

REGISTERED PROFESSIONAL ENGINEER
DAVID FADI NASH MUWANES
No. C77659
Exp. 06-30-13
CIVIL
STATE OF CALIFORNIA

The State of California or its officers or agents shall not be responsible for the accuracy or completeness of electronic copies of this plan sheet.

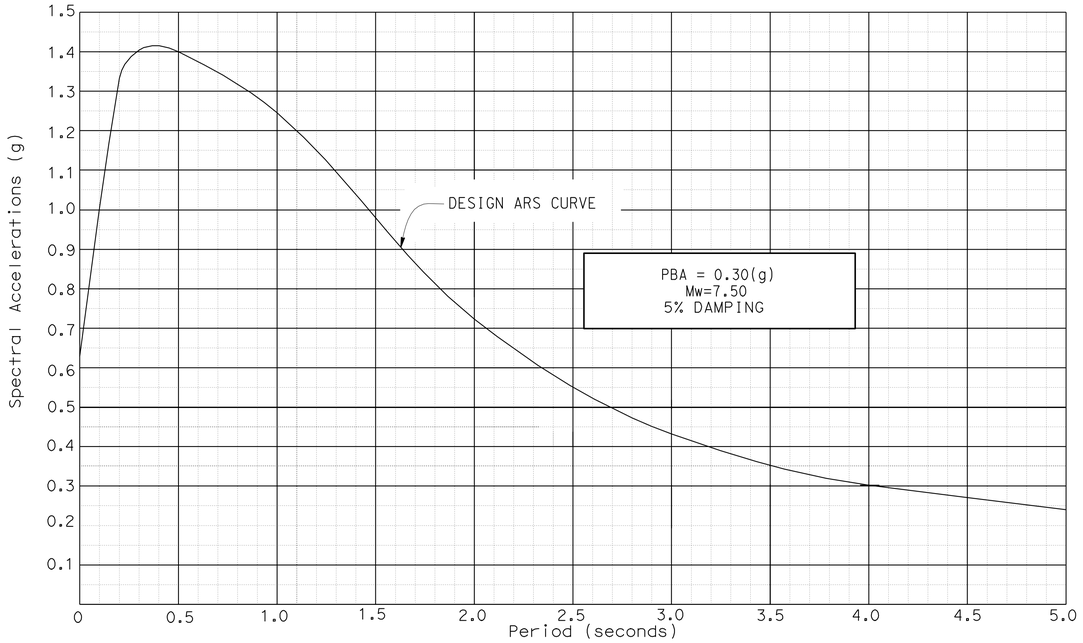

SITE SPECIFIC ACCELERATION RESPONSE SPECTRA

No Scale

STANDARD PLANS 2006

A10A	ACRONYMS AND ABBREVIATIONS (A-L)
A10B	ACRONYMS AND ABBREVIATIONS (M-Z)
A10C	LINES AND SYMBOLS
A10D	LINES AND SYMBOLS
A10E	LINES AND SYMBOLS
A62C	LIMITS OF PAYMENT FOR EXCAVATION AND BACKFILL-BRIDGE
A76D	CONCRETE BARRIER TYPE 60G
B0-1	BRIDGE DETAILS
B0-3	BRIDGE DETAILS
B0-5	BRIDGE DETAILS
B0-13	BRIDGE DETAILS
B3-1	RETAINING WALL TYPE 1
B3-8	RETAINING WALL DETAILS NO. 1
RSP B6-21	JOINT SEALS
B7-5	DECK DRAINS
B7-6	DECK DRAINS - TYPE D-1 AND D-2
B7-8	DECK DRAINAGE DETAILS
B7-10	UTILITY OPENING BOX GIRDER
B11-56	CONCRETE BARRIER TYPE 736
B14-3	COMMUNICATION AND SPRINKLER CONTROL CONDUITS
B14-4	WATER SUPPLY LINE
B14-5	WATER SUPPLY LINE (DETAILS)
RSP P-10	CONCRETE PAVEMENT - DOWEL BAR DETAILS

STANDARD PLAN SHEET NO.

DETAIL NO.

INDEX TO PLANS

SHEET NO.	TITLE
1	GENERAL PLAN NO.1
2	GENERAL PLAN NO.2
3	INDEX TO PLANS
4	GENERAL NOTES
5	DECK CONTOURS
6	FOUNDATION PLAN
7	DEMOLITION PLAN
8	ABUTMENT 1 LAYOUT
9	ABUTMENT 2 LAYOUT
10	ABUTMENT DETAILS NO. 1
11	ABUTMENT DETAILS NO. 2
12	ABUTMENT DETAILS NO. 3
13	ABUTMENT DETAILS NO. 4
14	ARCHITECTURAL DETAILS NO. 1
15	ARCHITECTURAL DETAILS NO. 2
16	ARCHITECTURAL DETAILS NO. 3
17	ARCHITECTURAL DETAILS NO. 4
18	ARCHITECTURAL DETAILS NO. 5
19	ARCHITECTURAL DETAILS NO. 6
20	ARCHITECTURAL DETAILS NO. 7
21	ARCHITECTURAL DETAILS NO. 8
22	ARCHITECTURAL DETAILS NO. 9
23	ARCHITECTURAL DETAILS NO. 10
24	ARCHITECTURAL DETAILS NO. 11
25	ARCHITECTURAL DETAILS NO. 12
26	ARCHITECTURAL DETAILS NO. 13
27	ARCHITECTURAL DETAILS NO. 14
28	TYPICAL SECTION
29	GIRDER LAYOUT NO. 1
30	GIRDER LAYOUT NO. 2
31	PC/PS WIDE-FLANGE GIRDER
32	PC/PS WIDE-FLANGE GIRDER (MISCELLANEOUS DETAILS)
33	SOUNDWALL-MASONARY BLOCK
34	BARRIER ARCHITECTURAL DETAILS NO.1
35	BARRIER ARCHITECTURAL DETAILS NO.2
36	BARRIER ARCHITECTURAL DETAILS NO.3
37	STRUCTURE APPROACH TYPE N(30S)
38	STRUCTURE APPROACH DRAINAGE DETAILS
39	DECK DRAIN LAYOUT
40	DECK DRAIN - TYPE C MODIFIED
41	LOG OF TEST BORINGS 1 OF 6
42	LOG OF TEST BORINGS 2 OF 6
43	LOG OF TEST BORINGS 3 OF 6
44	LOG OF TEST BORINGS 4 OF 6
45	LOG OF TEST BORINGS 5 OF 6
46	LOG OF TEST BORINGS 6 OF 6

PILE DATA TABLE

Support Location	Pile Type	Nominal Resistance (kips)		Design Tip Elevations (ft)	Specified Tip Elevation (ft)	Nominal Driving Resistance (kips)
		Compression	Tension			
Abutment 1	HP14x89	400	0	33.0 (a) 58.0 (c)	33.0	400
Abutment 2	HP14x89	400	0	33.0 (a) 58.0 (c)	33.0	400

NOTES:
1. Design tip elevations for Abutments are controlled by (a) Compression, (c) Settlement.
2. The specified tip elevation shall not be raised above the design tip elevations for lateral load, and tolerable settlement.
3. Design tip elevation for Lateral Load is to be provided by Structure Design.

PILE DATA TABLE - (ABUT 1 RIGHT RETAINING WALL)

Wall Heights	Pile Type	Nominal Resistance (kips)		Design Tip Elevations (ft)	Specified Tip Elevation (ft)	Nominal Driving Resistance (kips)
		Compression	Tension			
H = 28′	HP14x89	280	140	49.0 (a) 62.0 (b)	49.0	280
H = 22′	HP14x89	180	90	62.0 (a) 74.0 (b)	62.0	180
H = 16′	HP14x89	180	90	67.0 (a) 77.0 (b)	67.0	180
H = 10′	HP14x89	180	90	74.0 (a) 82.0 (b)	74.0	180

NOTES:
1. Design tip elevations for Abutments are controlled by (a) Compression, (b) Tension.
2. The specified tip elevation shall not be raised above the design tip elevations for tension load, and lateral load.
3. Design tip elevation for Lateral Load is to be provided by Structure Design.

DIST	COUNTY	ROUTE	POST MILES TOTAL PROJECT	SHEET No.	TOTAL SHEETS
07	LA	5	4.0/5.9	962	1597

REGISTERED CIVIL ENGINEER 12-09-11 DATE

4-9-12
PLANS APPROVAL DATE

REGISTERED PROFESSIONAL ENGINEER
DAVID FADI NASH MUWANES
No. C77659
Exp. 06-30-13
CIVIL
STATE OF CALIFORNIA

The State of California or its officers or agents shall not be responsible for the accuracy or completeness of electronic copies of this plan sheet.

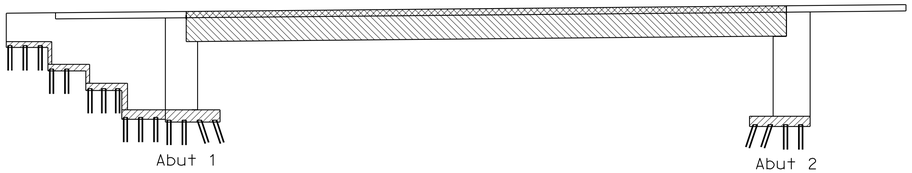

STRUCTURAL CONCRETE, BRIDGE (f'c = 3.6 KSI @ 28 DAYS)

STRUCTURAL CONCRETE, BRIDGE FOOTING (f'c = 3.6 KSI @ 28 DAYS)

PRECAST PRESTRESSED WIDE-FLANGE GIRDER, SEE "PC/PS WIDE FLANGE GIRDER" SHEET

STRUCTURAL CONCRETE DECK, (f'c = 4.0 KSI @ 28 DAYS)

CONCRETE STRENGTH AND TYPE LIMITS

No Scale

GENERAL NOTES
LOAD AND RESISTANCE FACTOR DESIGN

DESIGN:

AASHTO LRFD Bridge Design Specifications, 4th Edition and the California Amendments, preface dated September 2010, except that bridge barriers, approach slabs and standard plan retaining walls are designed using Bridge Design Specifications ('96 AASHTO with revision by Caltrans).

SEISMIC DESIGN:

Caltrans Seismic Design Criteria (SDC), Version 1.6 dated November 2010.

DEAD LOAD:

Includes 35 psf for future wearing surface. No allowance has been made for the use of stay in place steel deck forms.

LIVE LOADING:

HL93 w/ 'Low-Boy' and permit design vehicle

CONCRETE:

fy = 60 ksi
f'c = 3.6 ksi
n = 8
See prestressing notes.

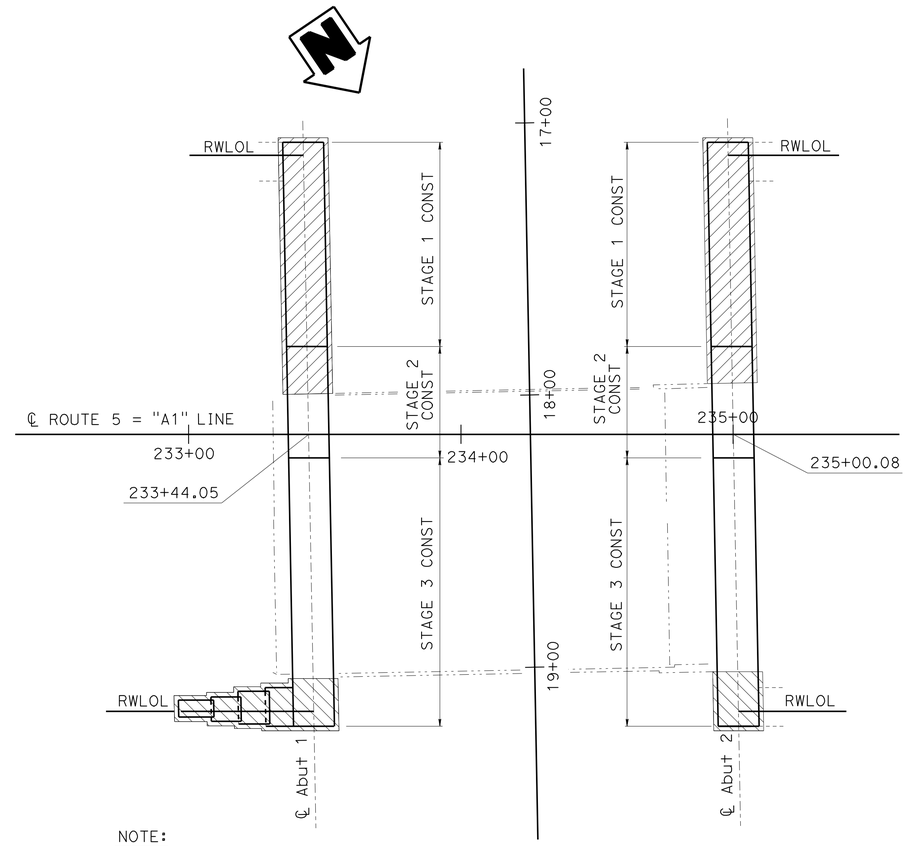

NOTE:

Excavation shown is the top 3'-0" in situ soil and extends 1'-0" horizontally beyond the new Abutment footings, except within limits of existing bridge and roadway

LEGEND:

Indicates area of Deposited Lead Excavation Type Y-1

Indicates area of Deposited Lead Excavation Type Y-2

APPROXIMATE LIMITS OF STRUCTURE EXCAVATION (TYPE Y-1 AND TYPE Y-2)

No Scale

	BY	CHECKED
DESIGN	D. MUWANES	E. MATSUMOTO
DETAILS	W. ZHANG	D. MUWANES
QUANTITIES	L. BAHIA	D.MUWANES

STATE OF CALIFORNIA
DEPARTMENT OF TRANSPORTATION

DIVISION OF ENGINEERING SERVICES
STRUCTURE DESIGN
DESIGN BRANCH 14

BRIDGE NO. 50-3060
POST MILE 4.41

SAN ANTONIO DR UNDERCROSSING (REPLACE)
GENERAL NOTES

STRUCTURES DESIGN DETAIL SHEET (ENGLISH) (REV. 09-01-10)

ORIGINAL SCALE IN INCHES FOR REDUCED PLANS 0 1 2 3

UNIT: 3613
PROJECT NUMBER & PHASE: 07000018341
CONTRACT NO.: 07-215941

DISREGARD PRINTS BEARING EARLIER REVISION DATES

REVISION DATES: 12-08-11 12-09-11 03-12-12

SHEET 4 OF 46

FILE => 53-3060-b-gn.dgn

USERNAME => s109858 DATE PLOTTED => 15-APR-2012 TIME PLOTTED => 06:58

DIST	COUNTY	ROUTE	POST MILES TOTAL PROJECT	SHEET No.	TOTAL SHEETS
07	LA	5	4.0/5.9	963	1597

REGISTERED CIVIL ENGINEER 12-09-11 DATE

4-9-12
PLANS APPROVAL DATE

REGISTERED PROFESSIONAL ENGINEER
DAVID FADI NASH MUWANES
No. C77659
Exp. 06-30-13
CIVIL
STATE OF CALIFORNIA

The State of California or its officers or agents shall not be responsible for the accuracy or completeness of electronic copies of this plan sheet.

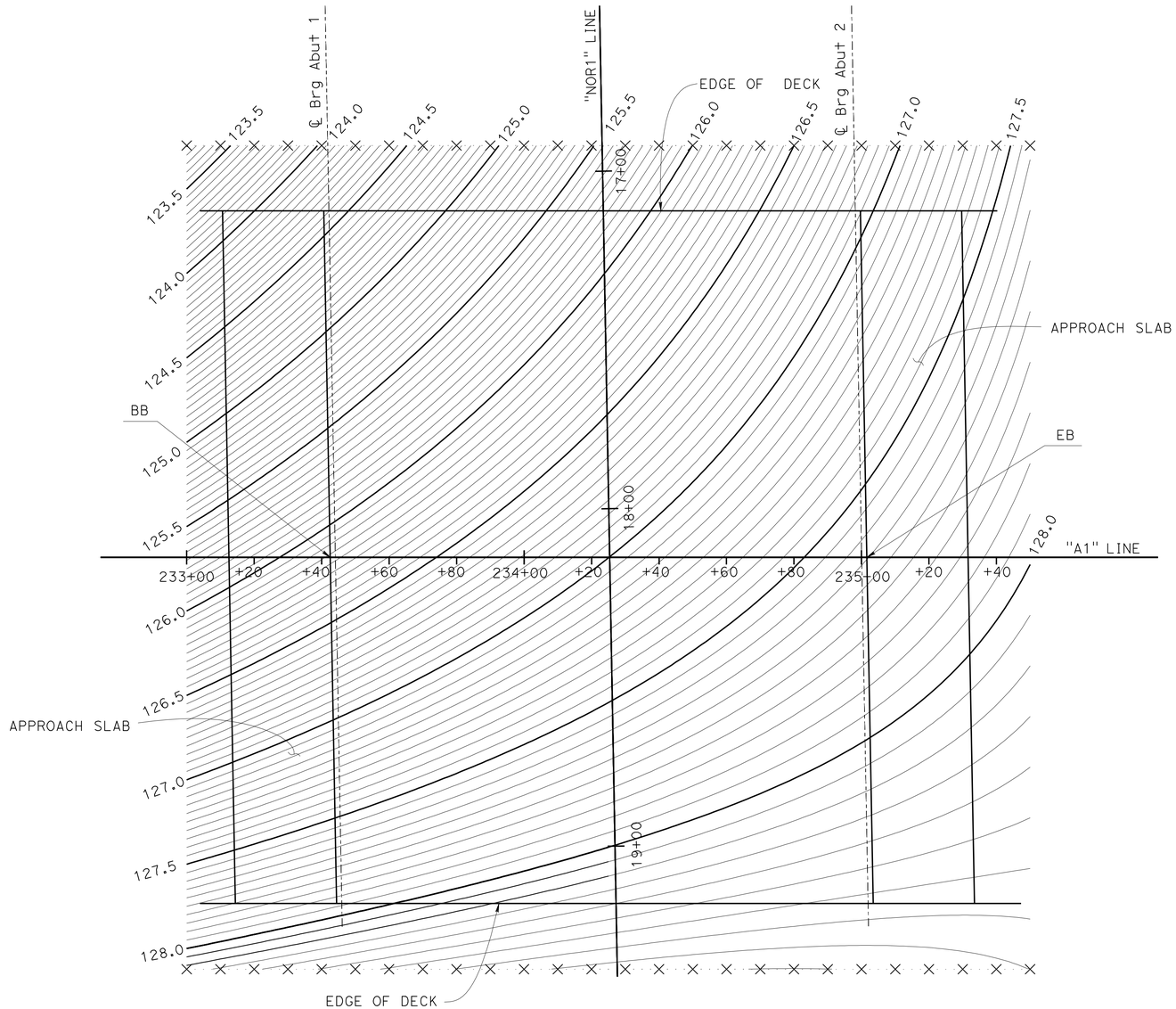

PLAN

1" = 20'-0"

NOTES:

1. 0.05' CONTOUR INTERVAL
2. CONTOURS DO NOT INCLUDE CAMBER
3. BARRIER RAILS NOT SHOWN

LEGEND:

× INDICATES 10' INTERVAL MEASURED ALONG "A1" LINE

	BY	CHECKED
DESIGN	D. MUWANES	E. MATSUMOTO
DETAILS	L. XIONG	D. MUWANES
QUANTITIES	L. BAHIA	D. MUWANES

STATE OF CALIFORNIA
DEPARTMENT OF TRANSPORTATION

DIVISION OF ENGINEERING SERVICES
STRUCTURE DESIGN
DESIGN BRANCH 14

BRIDGE NO. 53-3060
POST MILE 4.41

SAN ANTONIO DR UNDERCROSSING (REPLACE)

DECK CONTOURS

STRUCTURES DESIGN DETAIL SHEET (ENGLISH) (REV. 09-01-10)

ORIGINAL SCALE IN INCHES FOR REDUCED PLANS 0 1 2 3

UNIT: 3613
PROJECT NUMBER & PHASE: 07000018341
CONTRACT NO.: 07-215941

DISREGARD PRINTS BEARING EARLIER REVISION DATES

REVISION DATES: 12-12-11 10-13-11 10-14-11 11-22-11

SHEET 5 OF 46

FILE => 53-3060-c-dc.dgn

USERNAME => s109858 DATE PLOTTED => 15-APR-2012 TIME PLOTTED => 06:59

DIST	COUNTY	ROUTE	POST MILES TOTAL PROJECT	SHEET No	TOTAL SHEETS
07	LA	5	4.0/5.9	964	1597

REGISTERED CIVIL ENGINEER 12-09-11 DATE

4-9-12
PLANS APPROVAL DATE

REGISTERED PROFESSIONAL ENGINEER DAVID FADI NASH MUWANES No. C77659 Exp. 06-30-13 CIVIL STATE OF CALIFORNIA

The State of California or its officers or agents shall not be responsible for the accuracy or completeness of electronic copies of this plan sheet.

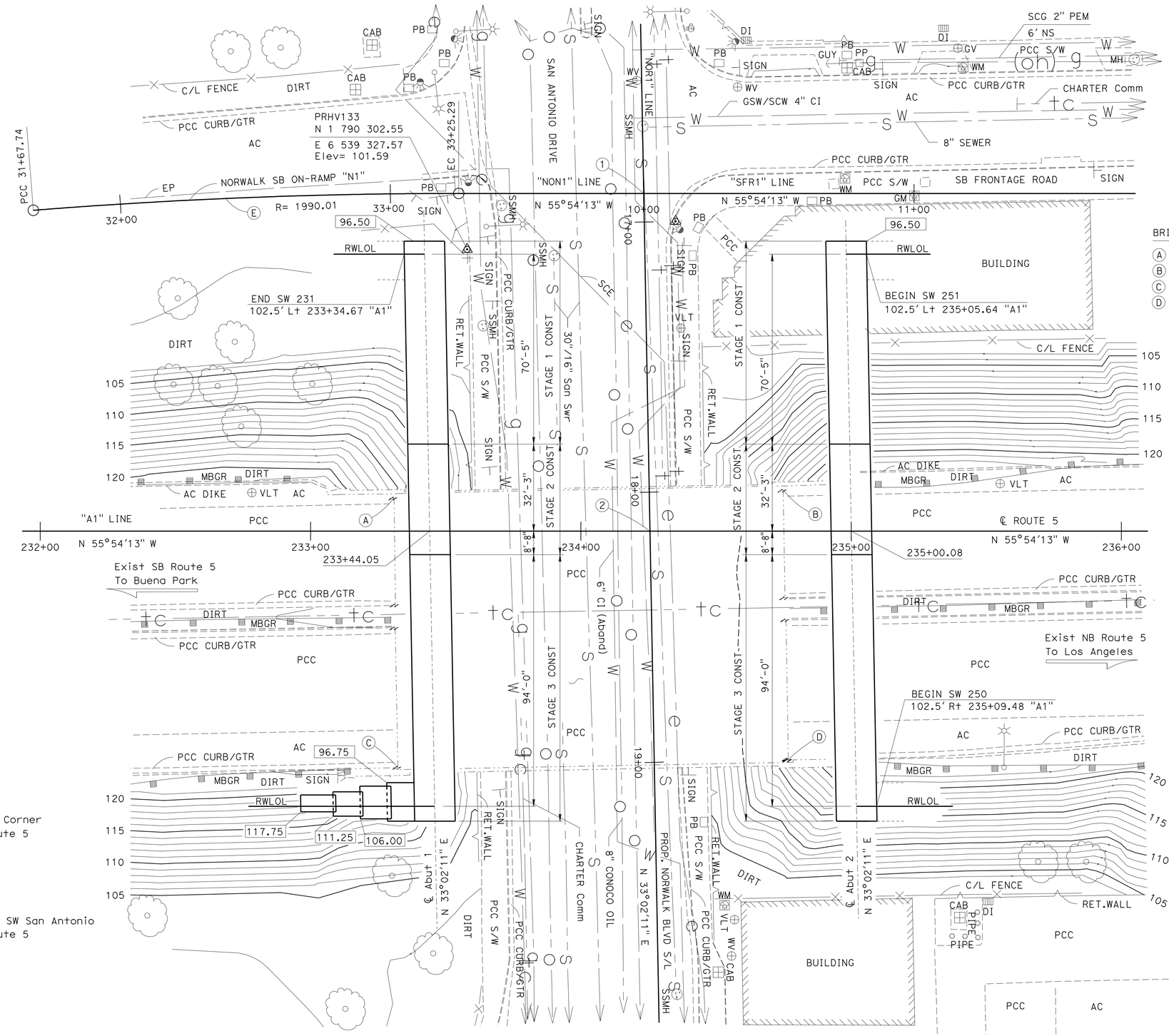

BRIDGE LOCATION (Exist Br.No 53-0594)

Ⓐ 12.31 Ft Lt "A1" Line, ℄ Route 5, Sta 233+30.90, Elev= 122.30±
Ⓑ 15.18 Ft Lt "A1" Line, ℄ Route 5, Sta 234+74.88, Elev= 122.75±
Ⓒ 87.41 Ft Rt "A1" Line, ℄ Route 5, Sta 233+32.33, Elev= 122.11±
Ⓓ 84.57 Ft Rt "A1" Line, ℄ Route 5, Sta 234+76.75, Elev= 122.57±

CURVE DATA				
No.	R	Δ	T	L
Ⓔ	1990.01	04°32'11"	78.82	157.56

① Sta 16+89.42 , PROP. "NOR1" LINE =
Sta 33+93.71 , PROP. "NON1" LINE
Sta 10+00.00 , PROP. "SFR1" LINE
② Sta 18+14.44 , PROP. "NOR1" LINE =
Sta 234+25.56, PROP. "A1" LINE

NOTES:

INDICATES BOTTOM OF FOOTING ELEVATION

SURVEY CONTROL

PRHV-2473

FND: Chzl. X/TC NW Corner
114.68 Ft Lt ℄ Route 5
Sta 234+35.05
N 1 790 337.21
E 6 539 257.89
Elev= 102.10

PRHV-133

FND: Well Mon. E'ly SW San Antonio
104.32 Ft Lt ℄ Route 5
Sta 233+57.93
N 1 790 302.55
E 6 539 327.57
Elev= 101.59

NOTES:

UNDERGROUND UTILITIES AS SHOWN ARE APPROXIMATE

PRELIMINARY INVESTIGATION SECTION

SCALE	VERT.DATUM NAVD88	PHOTOGRAMMETRY AS OF: X			
1"=20'	HORZ.DATUM NAD83 (1991.35)	SURVEYED	BY DISTRICT 07	CHECKED	BY T.PHUNG 12/2010
ALIGNMENT TIES	DIST.TRAVERSE SHEETS	DRAFTED	BY V.PHAM 12/2010	CHECKED	BY S.ALIVIO 12/2010

	BY	CHECKED
DESIGN	D. MUWANES	E. MATSUMOTO
DETAILS	L. XIONG	D. MUWANES
QUANTITIES	L. BAHIA	D. MUWANES

STATE OF CALIFORNIA
DEPARTMENT OF TRANSPORTATION

DIVISION OF ENGINEERING SERVICES
STRUCTURE DESIGN
DESIGN BRANCH 14

BRIDGE NO. 53-3060
POST MILE 4.41

SAN ANTONIO DR UNDERCROSSING (REPLACE)
FOUNDATION PLAN

STRUCTURES FOUNDATION PLAN SHEET (ENGLISH) (REV. 10/25/05)

ORIGINAL SCALE IN INCHES FOR REDUCED PLANS 0 1 2 3

CU 07226
EA 215941

DISREGARD PRINTS BEARING EARLIER REVISION DATES

REVISION DATES: 09-06-11 9-8-11 10-13-11 10-14-11 10-18-11 11-21-11 12-12-11 8-18-11 8-23-11

SHEET 6 OF 46

FILE => 53-3060-e-fp.dgn

USERNAME => s109858 DATE PLOTTED => 15-APR-2012 TIME PLOTTED => 06:59

DIST	COUNTY	ROUTE	POST MILES TOTAL PROJECT	SHEET No.	TOTAL SHEETS
07	LA	5	4.0/5.9	965	1597

REGISTERED CIVIL ENGINEER 12-09-11 DATE

4-9-12
PLANS APPROVAL DATE

REGISTERED PROFESSIONAL ENGINEER
DAVID FADI NASH MUWANES
No. C77659
Exp. 06-30-13
CIVIL
STATE OF CALIFORNIA

The State of California or its officers or agents shall not be responsible for the accuracy or completeness of electronic copies of this plan sheet.

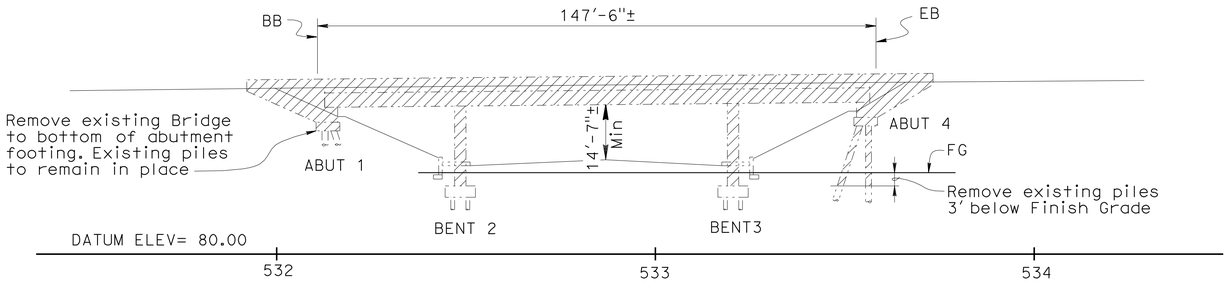

ELEVATION
1" = 20'

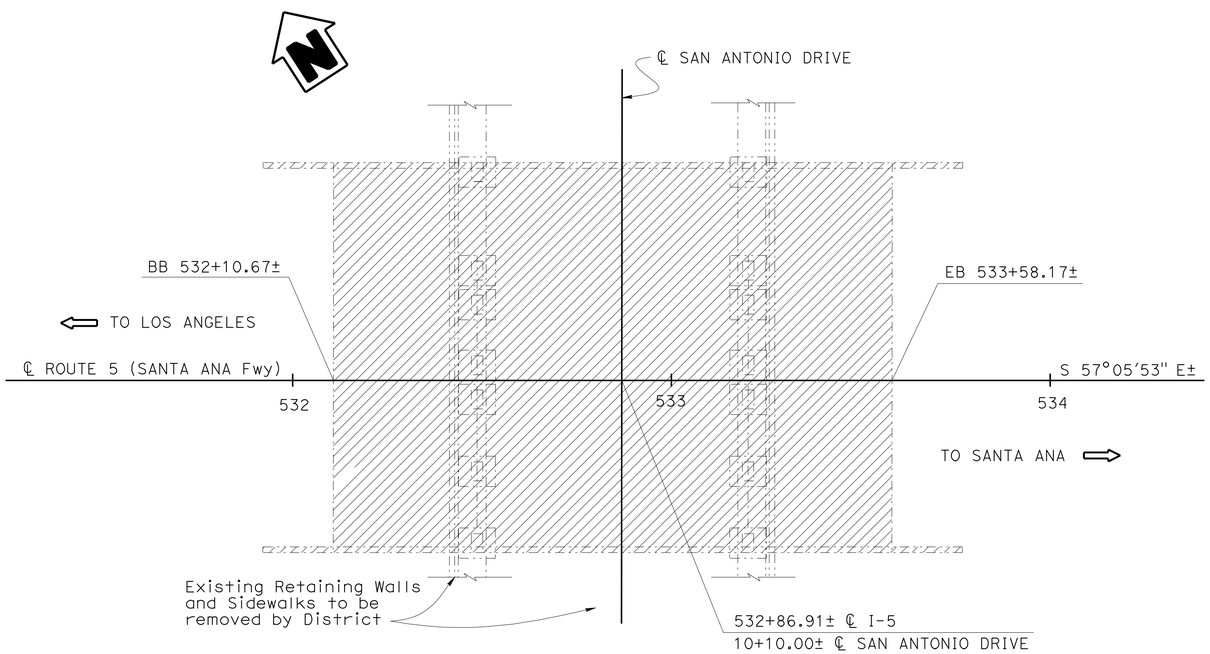

PLAN
1" = 20'

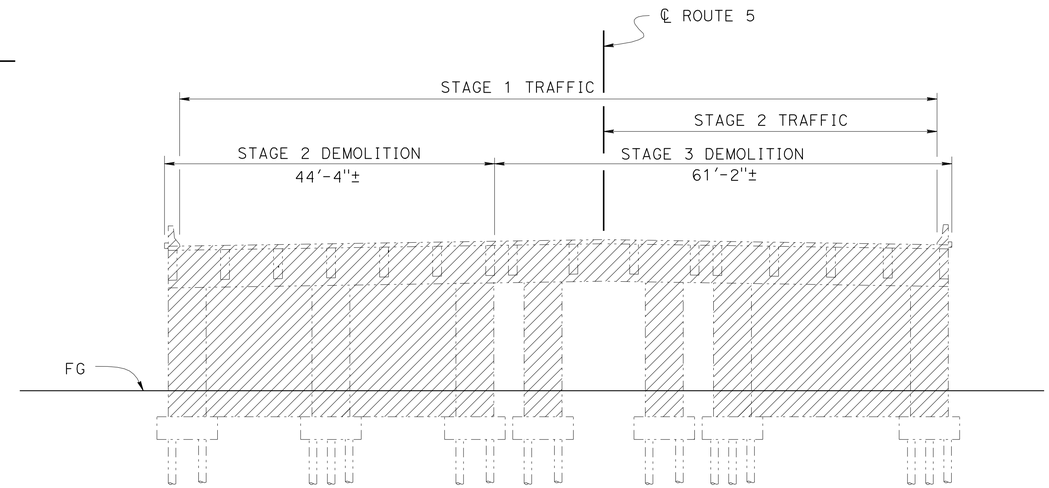

NOTE:

Remove existing Bridge to top of bent footings.
Existing bent footings and piles to remain in place

TYPICAL SECTION
1" = 10'

Legend:

Indicates Existing Strucure to be removed

NOTE:

Partial Bridge to be removed as necessary per Construction Staging, Contractor to verify all controlling field dimensions

DESIGN	BY D. MUWANES	CHECKED E. MATSUMOTO	
DETAILS	BY YINGJUE FENG / W. ZHANG	CHECKED D. MUWANES	
QUANTITIES	BY L. BAHIA	CHECKED D. MUWANES	

STATE OF CALIFORNIA
DEPARTMENT OF TRANSPORTATION

DIVISION OF ENGINEERING SERVICES
STRUCTURE DESIGN
DESIGN BRANCH 14

BRIDGE NO. 53-3060
POST MILE 4.41

SAN ANTONIO DR UNDERCROSSING (REPLACE)
DEMOLITION PLAN

STRUCTURES DESIGN DETAIL SHEET (ENGLISH) (REV. 09-01-10)

ORIGINAL SCALE IN INCHES FOR REDUCED PLANS 0 1 2 3

UNIT: 3613
PROJECT NUMBER & PHASE: 07000018341
CONTRACT NO.: 07-215941

DISREGARD PRINTS BEARING EARLIER REVISION DATES

REVISION DATES: 12-02-11 12-08-11 8-18-11 8-18-11

SHEET 7 OF 46

FILE => 53-3060-e-gp-demo.dgn

USERNAME => s109858 DATE PLOTTED => 15-APR-2012 TIME PLOTTED => 06:59

DIST	COUNTY	ROUTE	POST MILES TOTAL PROJECT	SHEET No.	TOTAL SHEETS
07	LA	5	4.0/5.9	966	1597

REGISTERED CIVIL ENGINEER 12-09-11 DATE

4-9-12
PLANS APPROVAL DATE

REGISTERED PROFESSIONAL ENGINEER DAVID FADI NASH MUWANES No. C77659 Exp. 06-30-13 CIVIL STATE OF CALIFORNIA

The State of California or its officers or agents shall not be responsible for the accuracy or completeness of electronic copies of this plan sheet.

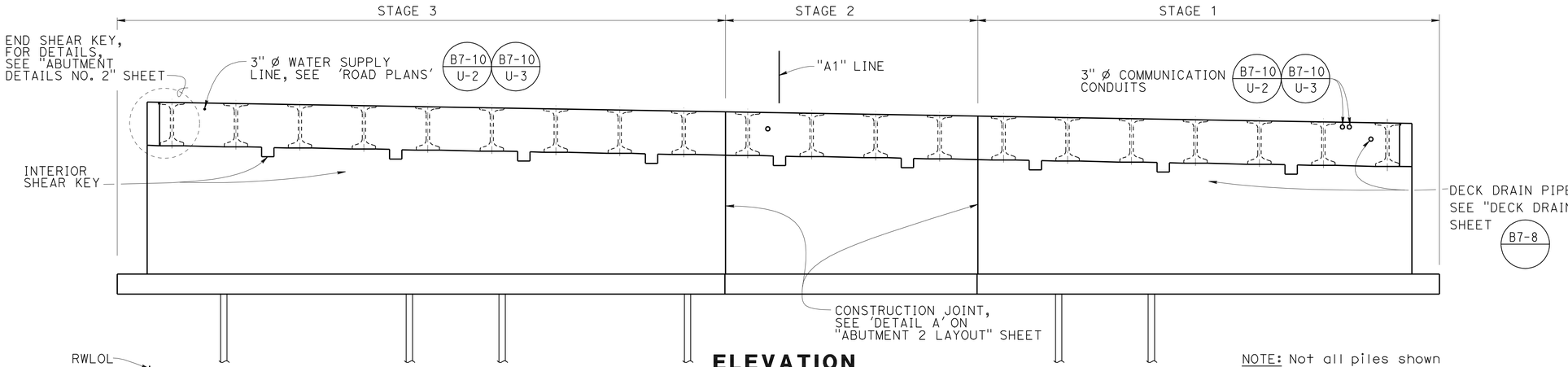

ELEVATION

1" = 10'

NOTE: Not all piles shown

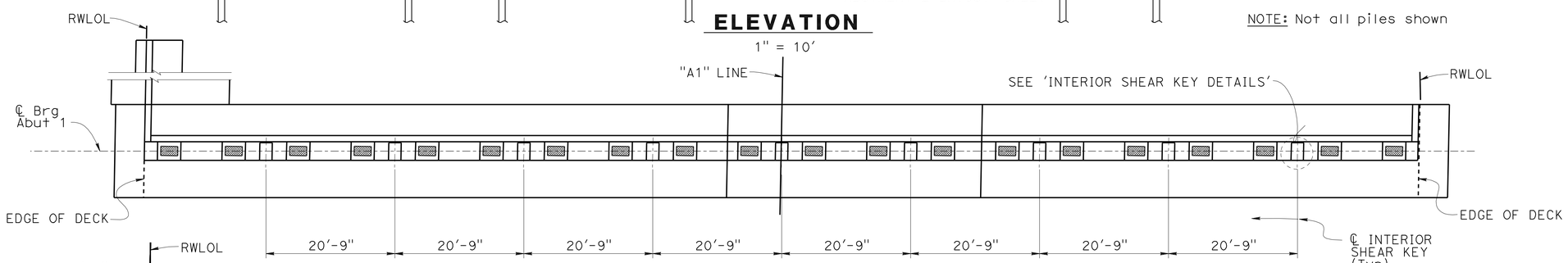

PLAN

1" = 10'

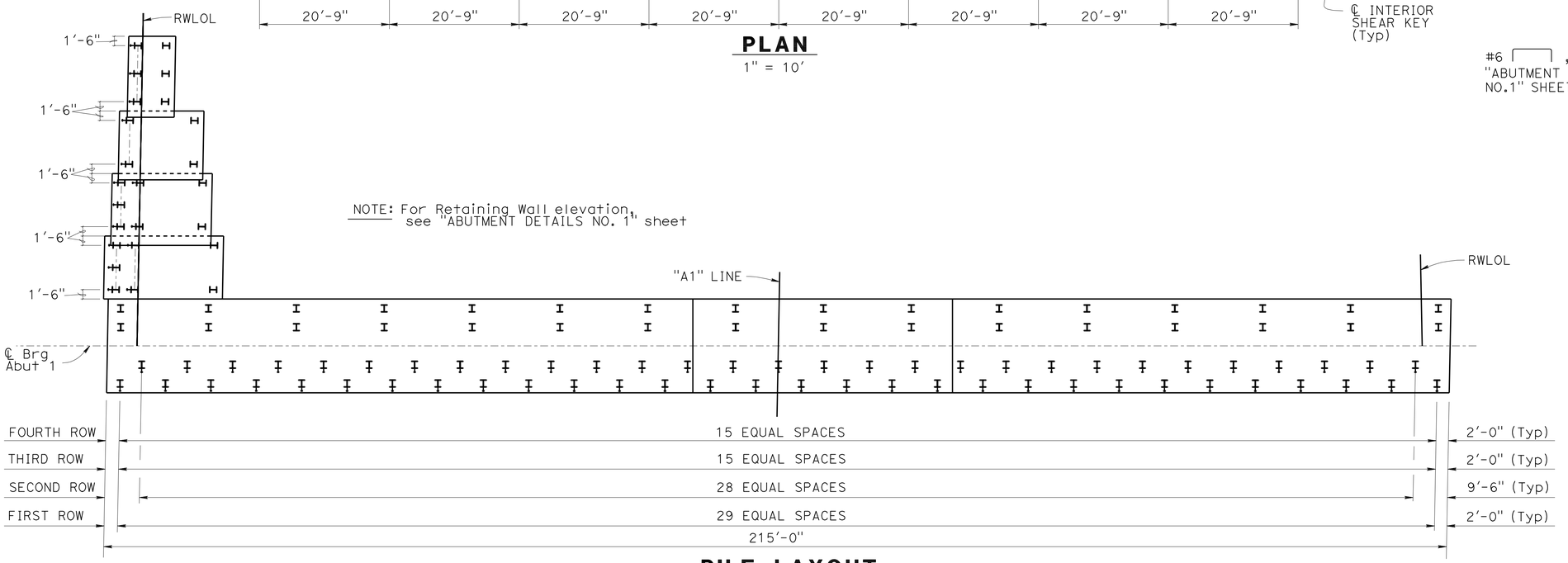

NOTE: For Retaining Wall elevation, see "ABUTMENT DETAILS NO. 1" sheet

PILE LAYOUT

1" = 10'

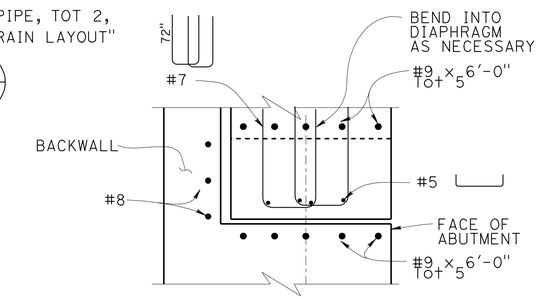

SECTION B-B

¾" = 1'-0"

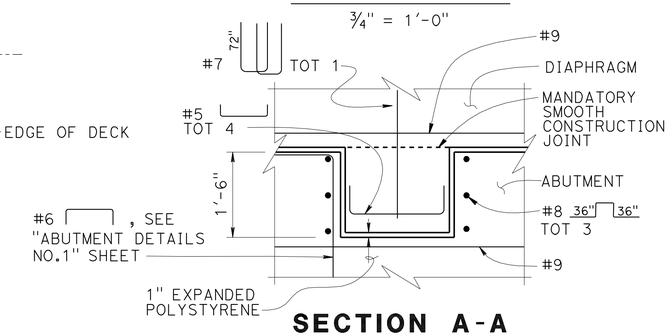

SECTION A-A

¾" = 1'-0"

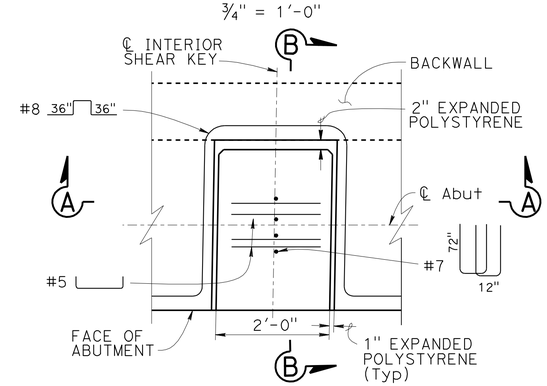

PLAN

INTERIOR SHEAR KEY DETAILS

¾" = 1'-0"

LEGEND:
I INDICATE STRAIGHT PILES
I INDICATE BATTERED PILES

DESIGN	BY D. MUWANES	CHECKED E. MATSUMOTO	
DETAILS	BY L. XIONG/Y. FENG/W. Z.	CHECKED D. MUWANES	
QUANTITIES	BY L. BAHIA	CHECKED D. MUWANES	

STATE OF CALIFORNIA
DEPARTMENT OF TRANSPORTATION

DIVISION OF ENGINEERING SERVICES
STRUCTURE DESIGN
DESIGN BRANCH 14

BRIDGE NO. 53-3060
POST MILE 4.41

SAN ANTONIO DR UNDERCROSSING (REPLACE)
ABUTMENT 1 LAYOUT

STRUCTURES DESIGN DETAIL SHEET (ENGLISH) (REV. 09-01-10)

ORIGINAL SCALE IN INCHES FOR REDUCED PLANS 0 1 2 3

UNIT: 3613
PROJECT NUMBER & PHASE: 07000018341
CONTRACT NO.: 07-215941

DISREGARD PRINTS BEARING EARLIER REVISION DATES

REVISION DATES 03-22-12 12-07-11 12-8-11 12-12-11

SHEET 8 OF 46

FILE => 53-3060-f-alo_01.dgn

USERNAME => s109858 DATE PLOTTED => 15-APR-2012 TIME PLOTTED => 08:59

DIST	COUNTY	ROUTE	POST MILES TOTAL PROJECT	SHEET No.	TOTAL SHEETS
07	LA	5	4.0/5.9	967	1597

REGISTERED CIVIL ENGINEER 12-09-11 DATE

4-9-12
PLANS APPROVAL DATE

REGISTERED PROFESSIONAL ENGINEER
DAVID FADI NASH MUWANES
No. C77659
Exp. 06-30-13
CIVIL
STATE OF CALIFORNIA

The State of California or its officers or agents shall not be responsible for the accuracy or completeness of electronic copies of this plan sheet.

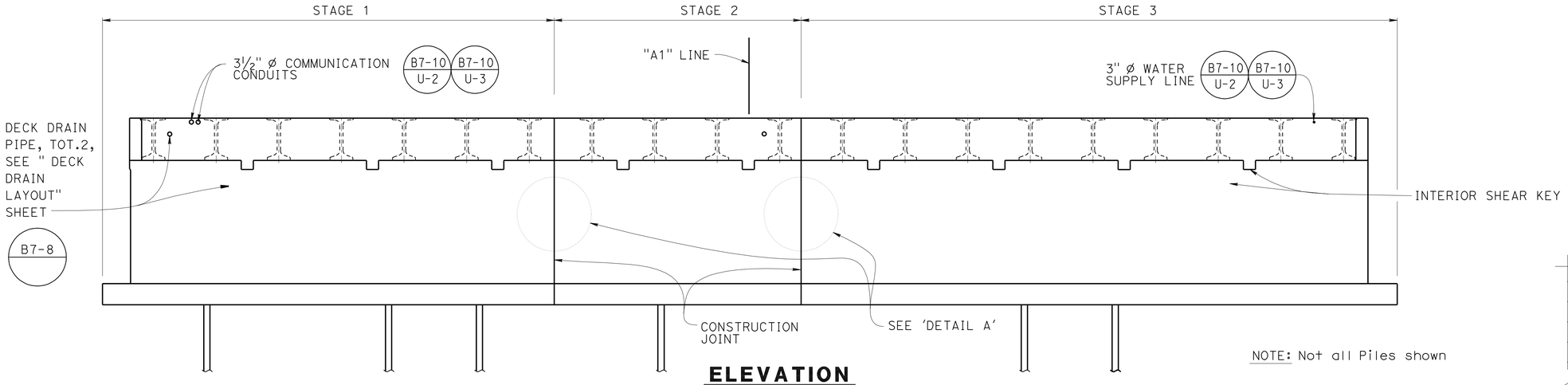

NOTE: Not all Piles shown

ELEVATION
1" = 10'

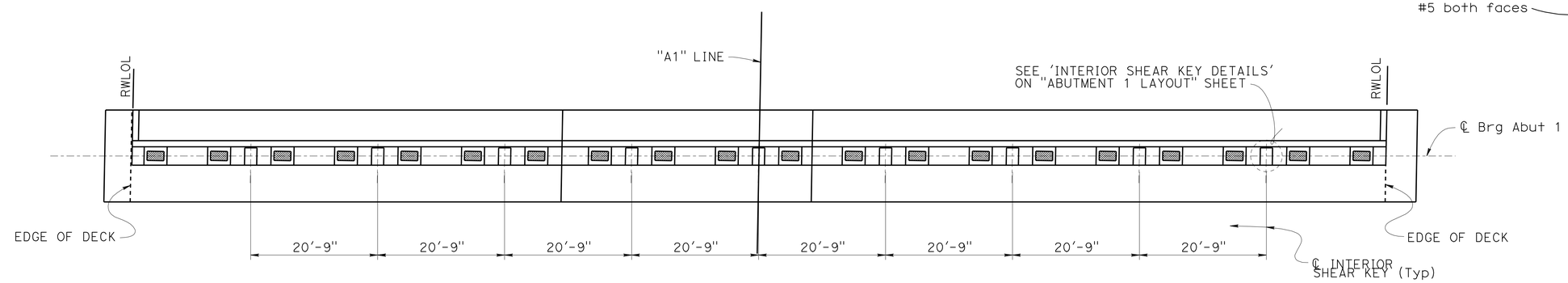

PLAN
1" = 10'

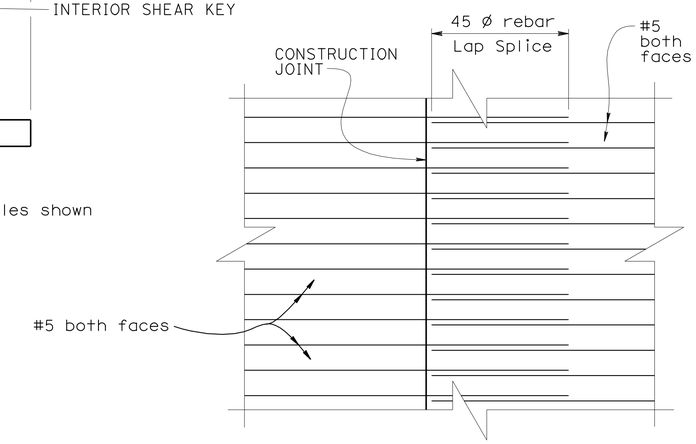

NOTES:

1. Vertical rebar not shown for clarity
2. All Stem Wall, Back Wall and Footing horizontal reinforcement to be lap spliced between stages

DETAIL A
NO SCALE

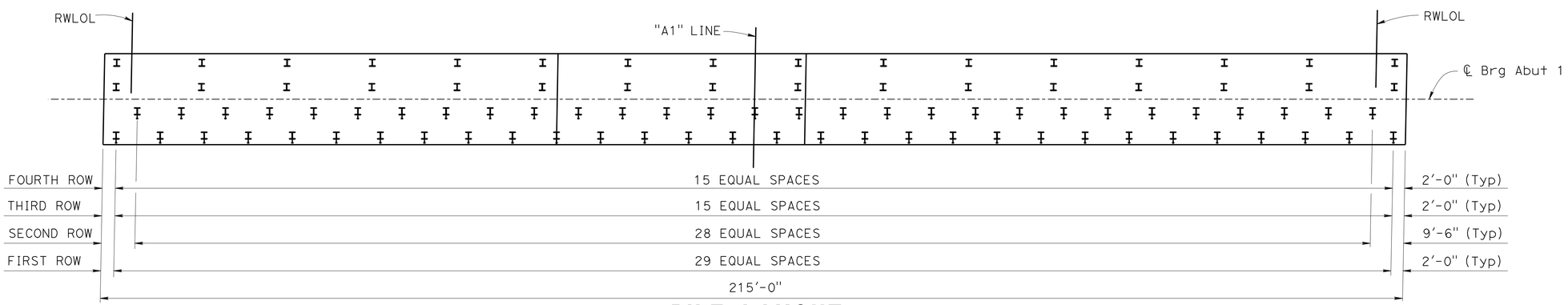

LEGEND:
I INDICATE STRAIGHT PILES
I INDICATE BATTERED PILES

PILE LAYOUT
1" = 10'

DESIGN	BY D. MUWANES	CHECKED E. MATSUMOTO
DETAILS	BY L. XIONG/ W. ZHANG	CHECKED D. MUWANES
QUANTITIES	BY L. BAHIA	CHECKED D. MUWANES

STATE OF CALIFORNIA
DEPARTMENT OF TRANSPORTATION

DIVISION OF ENGINEERING SERVICES
STRUCTURE DESIGN
DESIGN BRANCH 14

BRIDGE NO. 53-3060
POST MILE 4.41

SAN ANTONIO DR UNDERCROSSING (REPLACE)
ABUTMENT 2 LAYOUT

STRUCTURES DESIGN DETAIL SHEET (ENGLISH) (REV. 09-01-10)

ORIGINAL SCALE IN INCHES FOR REDUCED PLANS 0 1 2 3

UNIT: 3613
PROJECT NUMBER & PHASE: 07000018341
CONTRACT NO.: 07-215941

DISREGARD PRINTS BEARING EARLIER REVISION DATES

REVISION DATES: 10-14-11 10-26-11 12-05-11 12-12-11

SHEET 9 OF 46

FILE => 53-3060-f-alo_02.dgn

USERNAME => s103858 DATE PLOTTED => 15-APR-2012 TIME PLOTTED => 06:59

DIST	COUNTY	ROUTE	POST MILES TOTAL PROJECT	SHEET No.	TOTAL SHEETS
07	LA	5	4.0/5.9	968	1597

REGISTERED CIVIL ENGINEER 12-09-11 DATE

4-9-12
PLANS APPROVAL DATE

REGISTERED PROFESSIONAL ENGINEER DAVID FADI NASH MUWANES No. C77659 Exp. 06-30-13 CIVIL STATE OF CALIFORNIA

The State of California or its officers or agents shall not be responsible for the accuracy or completeness of electronic copies of this plan sheet.

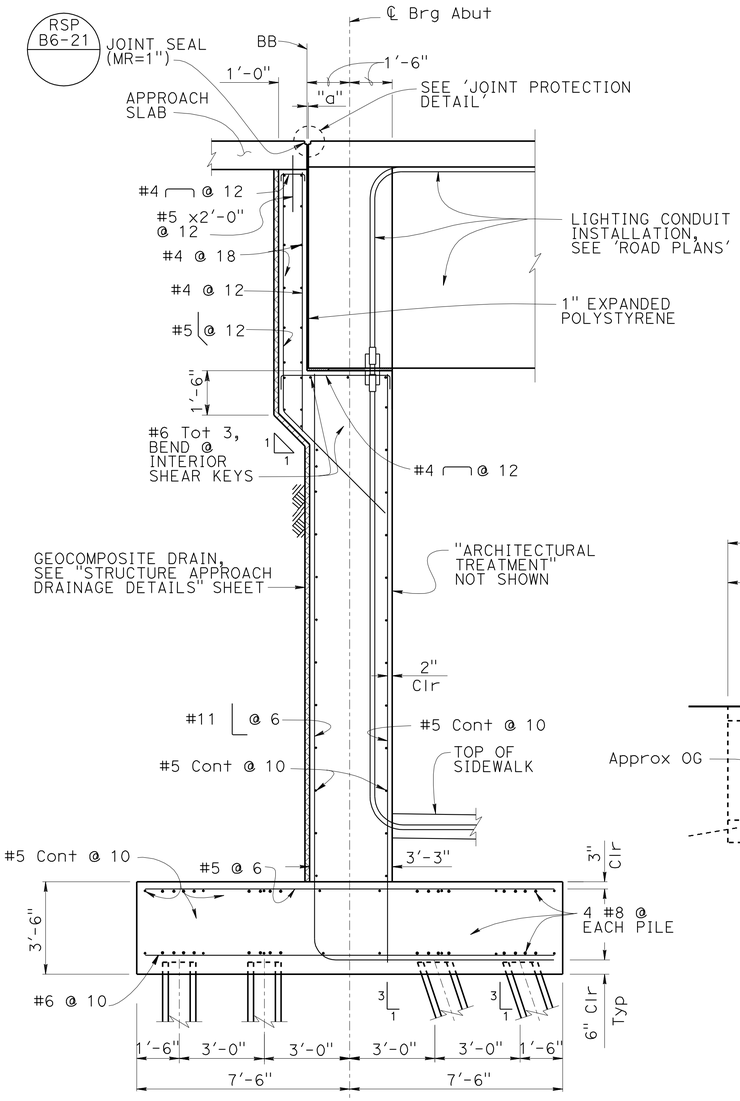

TYPICAL SECTION

3/8" = 1'-0"

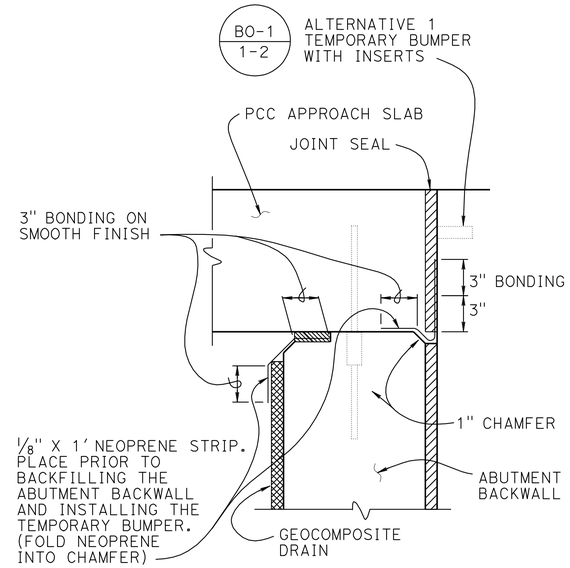

JOINT PROTECTION DETAIL

NO SCALE

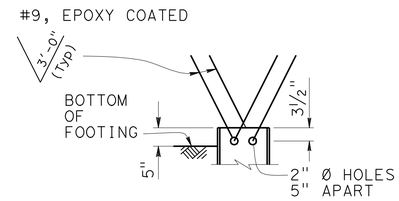

STEEL PILE ANCHOR DETAIL

NO SCALE

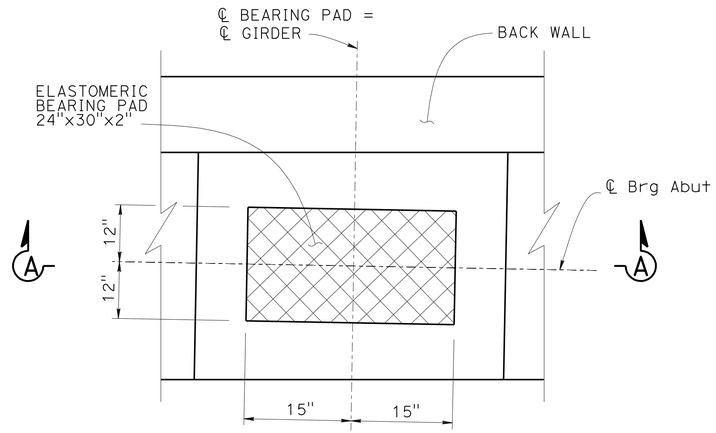

PLAN

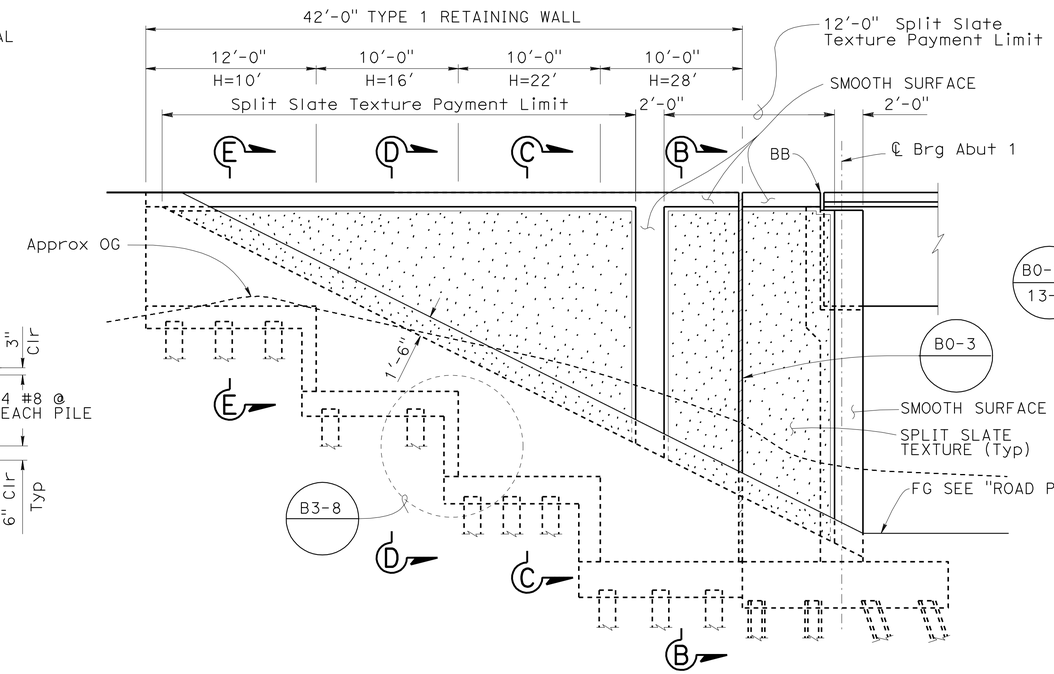

NOTES: 1. FOR 'SECTION B-B, C-C, D-D and E-E', SEE "ABUTMENT DETAILS NO. 4" SHEET
2. TYPE 736A (MOD1) Barrier not shown for clarity

ELEVATION - ABUTMENT 1 RETAINING WALL RIGHT

B3-1

3/16" = 1'-0"

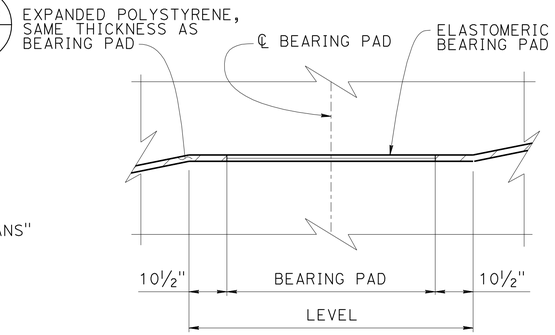

SECTION A-A

BEARING PAD DETAIL

1" = 1'-0"

DESIGN	BY D. MUWANES	CHECKED E. MATSUMOTO	
DETAILS	BY L. XIONG/Y. FENG/W.Z.	CHECKED D. MUWANES	
QUANTITIES	BY L. BAHIA	CHECKED D. MUWANES	

STATE OF CALIFORNIA DEPARTMENT OF TRANSPORTATION

DIVISION OF ENGINEERING SERVICES STRUCTURE DESIGN DESIGN BRANCH 14

BRIDGE NO. 53-3060 POST MILE 4.41

SAN ANTONIO DR UNDERCROSSING (REPLACE)

ABUTMENT DETAILS NO. 1

STRUCTURES DESIGN DETAIL SHEET (ENGLISH) (REV. 09-01-10)

ORIGINAL SCALE IN INCHES FOR REDUCED PLANS 0 1 2 3

UNIT: 3613
PROJECT NUMBER & PHASE: 07000018341
CONTRACT NO.: 07-215941

DISREGARD PRINTS BEARING EARLIER REVISION DATES

REVISION DATES 12-12-11 03-02-12 03-12-12 12-06-12

SHEET 10 OF 46

FILE => 53-3060-g-adet_01.dgn

USERNAME => s109858 DATE PLOTTED => 15-APR-2012 TIME PLOTTED => 06:59

DIST	COUNTY	ROUTE	POST MILES TOTAL PROJECT	SHEET No.	TOTAL SHEETS
07	LA	5	4.0/5.9	969	1597

REGISTERED CIVIL ENGINEER 12-09-11 DATE

4-9-12
PLANS APPROVAL DATE

REGISTERED PROFESSIONAL ENGINEER
DAVID FADI NASH MUWANES
No. C77659
Exp. 06-30-13
CIVIL
STATE OF CALIFORNIA

The State of California or its officers or agents shall not be responsible for the accuracy or completeness of electronic copies of this plan sheet.

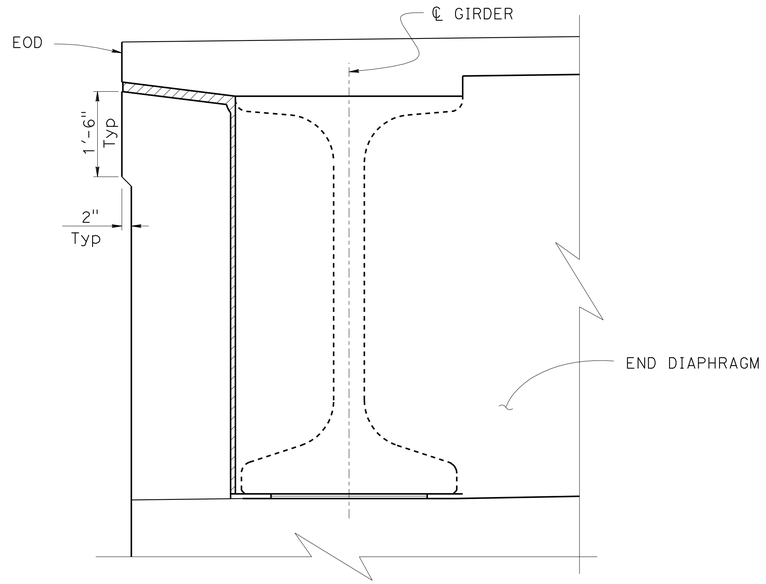

* ABUTMENT 2 LEFT END SHEAR KEY

¾" = 1'-0"

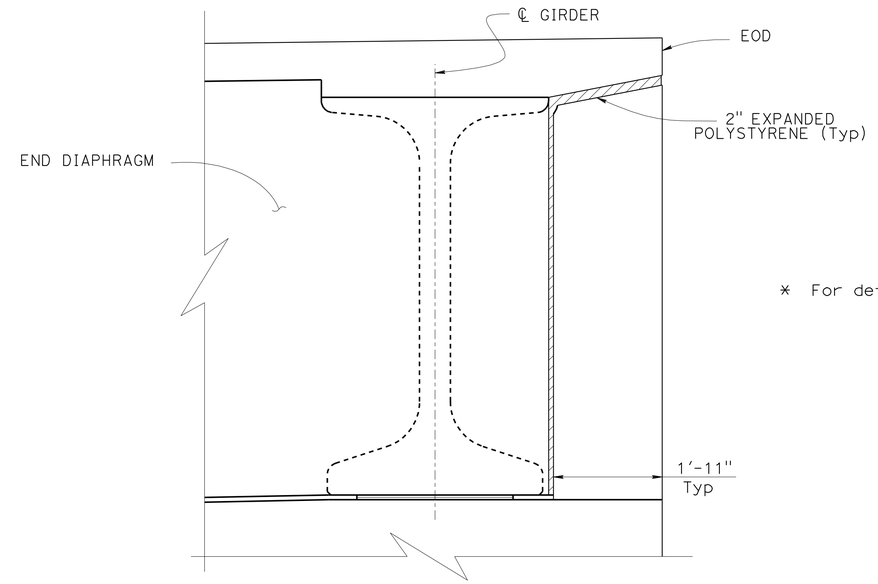

* ABUTMENT 2 RIGHT END SHEAR KEY

¾" = 1'-0"

* For details not shown, see 'ABUTMENT 1 RIGHT END SHEAR KEY'

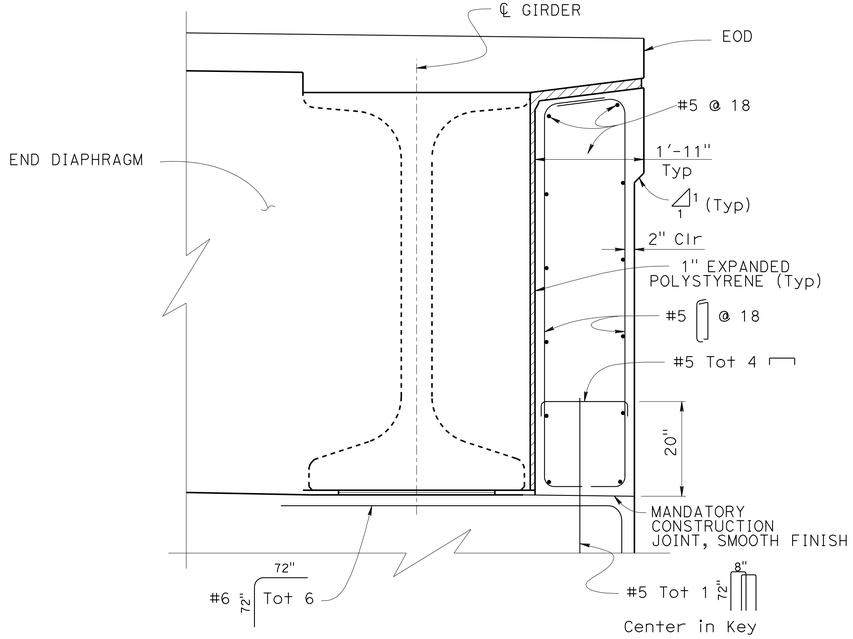

* ABUTMENT 1 LEFT END SHEAR KEY

¾" = 1'-0"

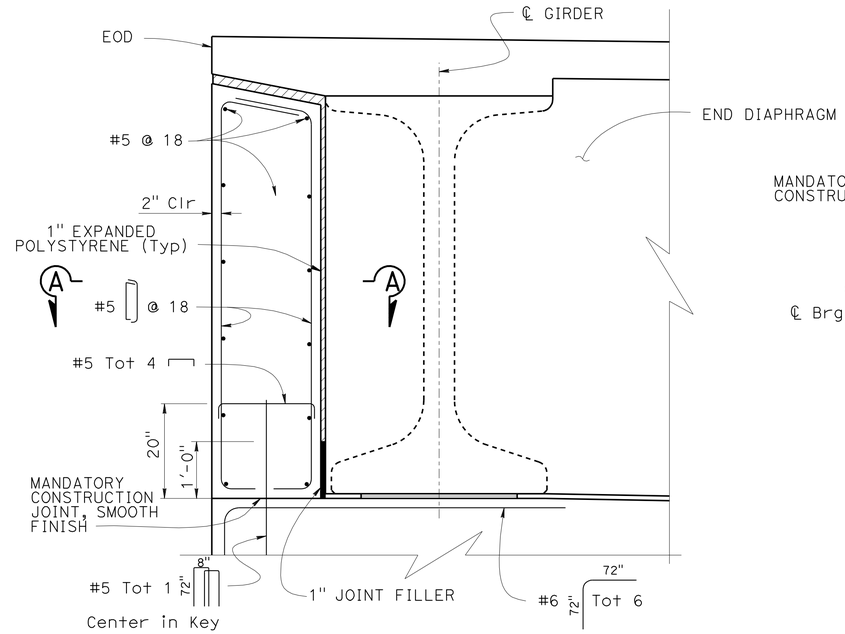

ABUTMENT 1 RIGHT END SHEAR KEY

¾" = 1'-0"

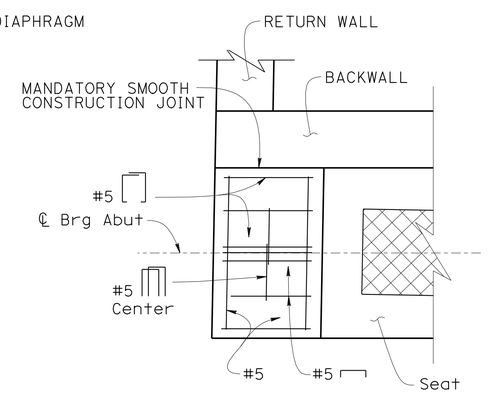

SECTION A-A

¾" = 1'-0"

	BY	CHECKED
DESIGN	D. MUWANES	E. MATSUMOTO
DETAILS	L. XIONG / W. ZHANG	D. MUWANES
QUANTITIES	D. MUWANES	D. MUWANES

STATE OF CALIFORNIA
DEPARTMENT OF TRANSPORTATION

DIVISION OF ENGINEERING SERVICES
STRUCTURE DESIGN
DESIGN BRANCH 14

BRIDGE NO. 53-3060
POST MILE 4.41

SAN ANTONIO DR UNDERCROSSING (REPLACE)

ABUTMENT DETAILS NO. 2

STRUCTURES DESIGN DETAIL SHEET (ENGLISH) (REV. 09-01-10)

ORIGINAL SCALE IN INCHES FOR REDUCED PLANS 0 1 2 3

UNIT: 3613
PROJECT NUMBER & PHASE: 07000018341
CONTRACT NO.: 07-215941

DISREGARD PRINTS BEARING EARLIER REVISION DATES

REVISION DATES: 09-02-11 9-8-11 12-08-11 12-12-11

SHEET 11 OF 46

FILE => 53-3060-g-adet_02.dgn

USERNAME => s109858 DATE PLOTTED => 15-APR-2012 TIME PLOTTED => 07:00

DIST	COUNTY	ROUTE	POST MILES TOTAL PROJECT	SHEET No.	TOTAL SHEETS
07	LA	5	4.0/5.9	970	1597

REGISTERED CIVIL ENGINEER 12-09-11 DATE

4-9-12
PLANS APPROVAL DATE

REGISTERED PROFESSIONAL ENGINEER
DAVID FADI NASH MUWANES
No. C77659
Exp. 06-30-13
CIVIL
STATE OF CALIFORNIA

The State of California or its officers or agents shall not be responsible for the accuracy or completeness of electronic copies of this plan sheet.

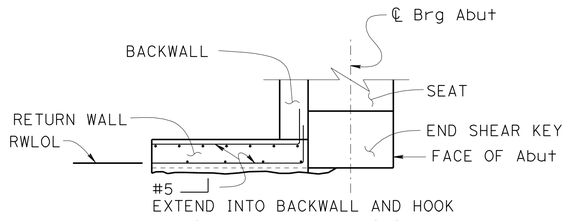

NOTE: Right Return Wall similar

SECTION C-C

3/8" = 1'-0"

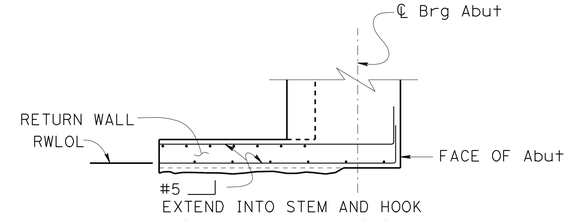

NOTE: Right Return Wall similar

SECTION D-D

3/8" = 1'-0"

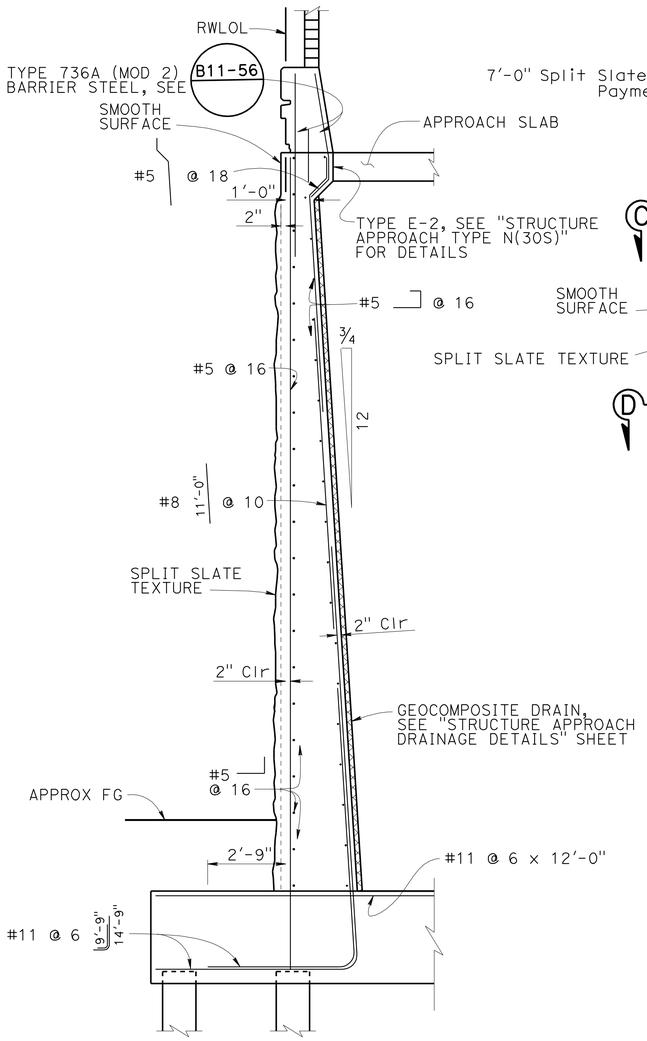

NOTE: Abutment 1 left return wall similar

SECTION A-A

3/8" = 1'-0"

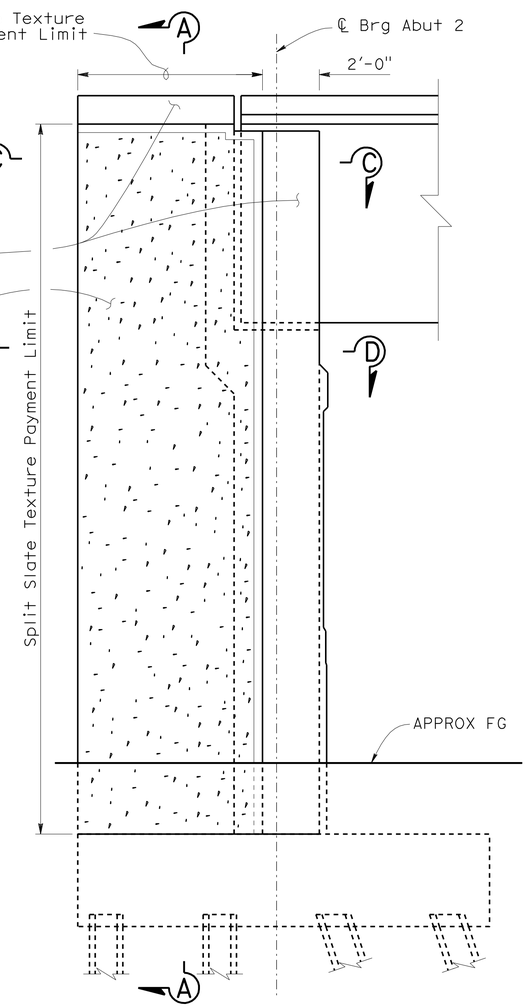

NOTE: Abutment 1 left return wall similar

LEFT RETURN WALL

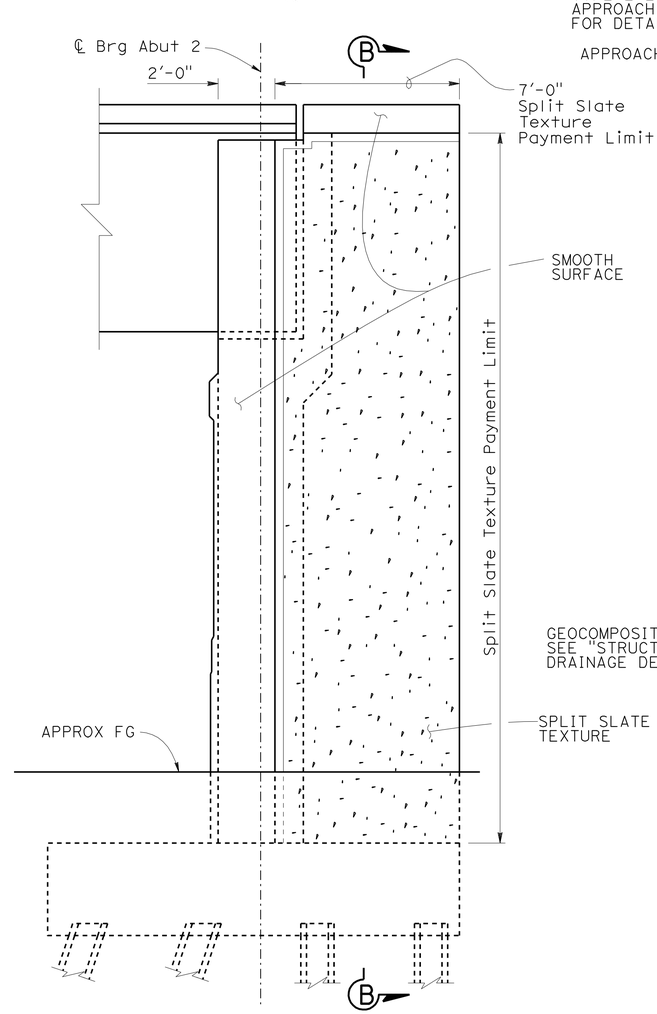

NOTE: Abutment 1 right return wall similar

RIGHT RETURN WALL

ELEVATION - ABUTMENT 2 RETURN WALL

3/8" = 1'-0"

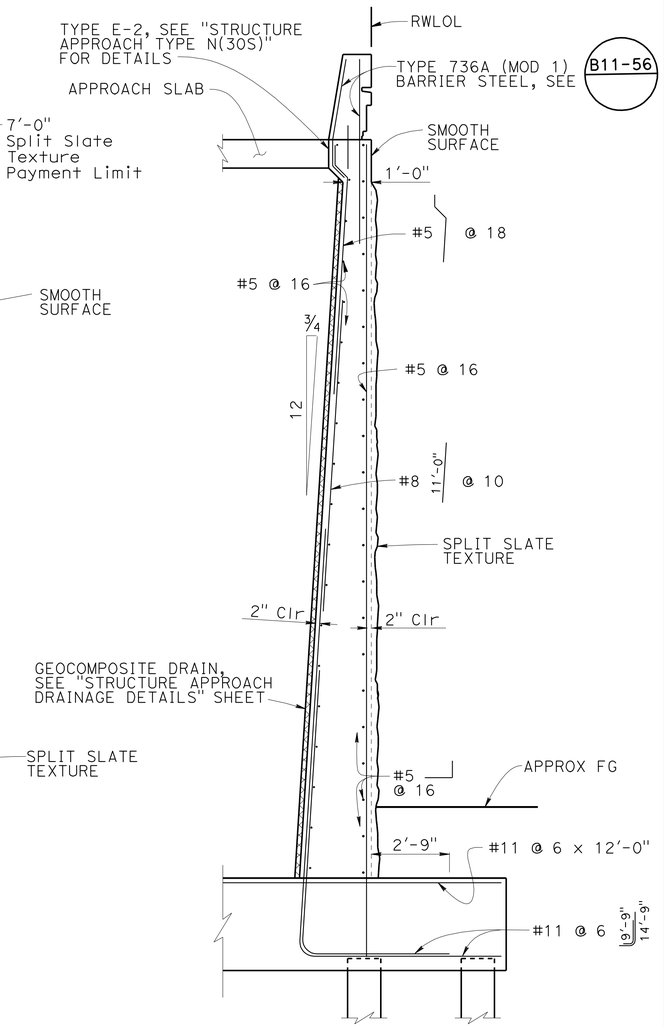

NOTE: Abutment 1 right return wall similar

SECTION B-B

3/8" = 1'-0"

DESIGN	BY D. MUWANES	CHECKED E. MATSUMOTO	
DETAILS	BY L. XIONG/ W. ZHANG	CHECKED D. MUWANES	
QUANTITIES	BY D. MUWANES	CHECKED D. MUWANES	

STATE OF CALIFORNIA
DEPARTMENT OF TRANSPORTATION

DIVISION OF ENGINEERING SERVICES
STRUCTURE DESIGN
DESIGN BRANCH 14

BRIDGE NO. 53-3060
POST MILE 4.41

SAN ANTONIO DR UNDERCROSSING (REPLACE)

ABUTMENT DETAILS NO. 3

STRUCTURES DESIGN DETAIL SHEET (ENGLISH) (REV. 09-01-10)

ORIGINAL SCALE IN INCHES FOR REDUCED PLANS 0 1 2 3

UNIT: 3613
PROJECT NUMBER & PHASE: 07000018341
CONTRACT NO.: 07-215941

DISREGARD PRINTS BEARING EARLIER REVISION DATES

REVISION DATES: 11-16-11 11-17-11 11-18-11 12-08-11

SHEET 12 OF 46

FILE => 53-3060-g-adet_03.dgn

USERNAME => s109858 DATE PLOTTED => 15-APR-2012 TIME PLOTTED => 07:00

DIST	COUNTY	ROUTE	POST MILES TOTAL PROJECT	SHEET No.	TOTAL SHEETS
07	LA	5	4.0/5.9	971	1597

REGISTERED CIVIL ENGINEER 12-09-11 DATE

4-9-12
PLANS APPROVAL DATE

REGISTERED PROFESSIONAL ENGINEER
DAVID FADI NASH MUWANES
No. C77659
Exp. 06-30-13
CIVIL
STATE OF CALIFORNIA

The State of California or its officers or agents shall not be responsible for the accuracy or completeness of electronic copies of this plan sheet.

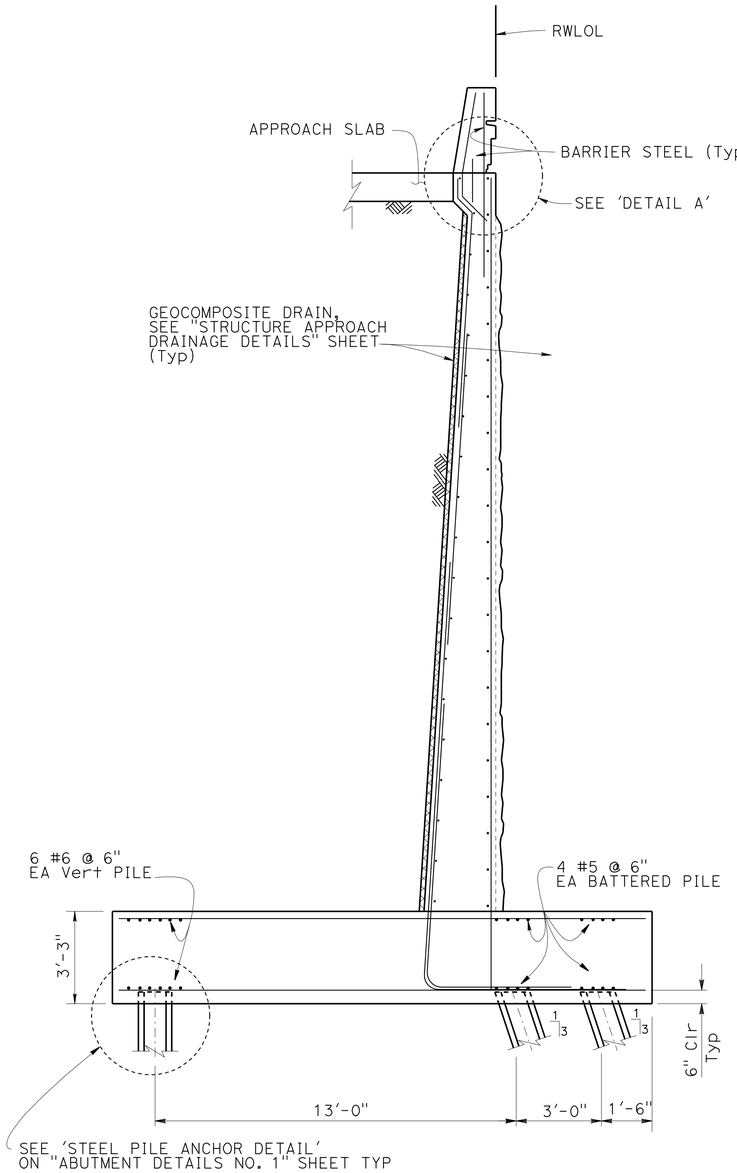

SECTION B-B

3/8" = 1'-0"

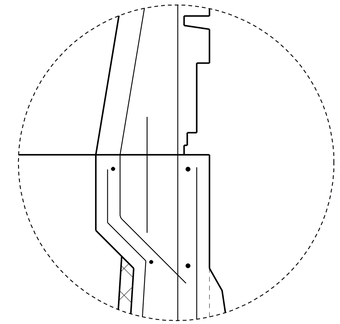

DETAIL A

1" = 1'-0"

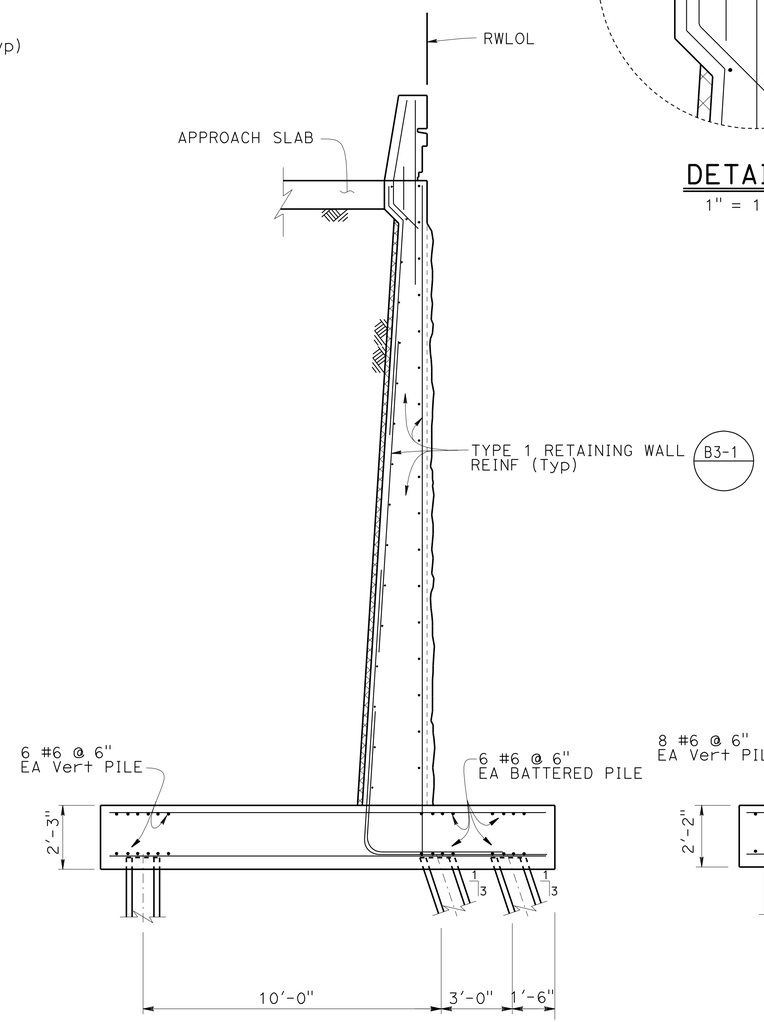

SECTION C-C

3/8" = 1'-0"

NOTES:

1. For 'Steel Pile Anchor Details', see " ABUTMENT LAYOUT NO. 1" sheet
2. For Retaining Wall Reinforcement and dimensions not shown, see Standard Plans B3-1, Type 1 Wall
3. For Location of 'Section B-B, C-C, D-D, and E-E', see "ABUTMENT DETAILS NO.1" sheet

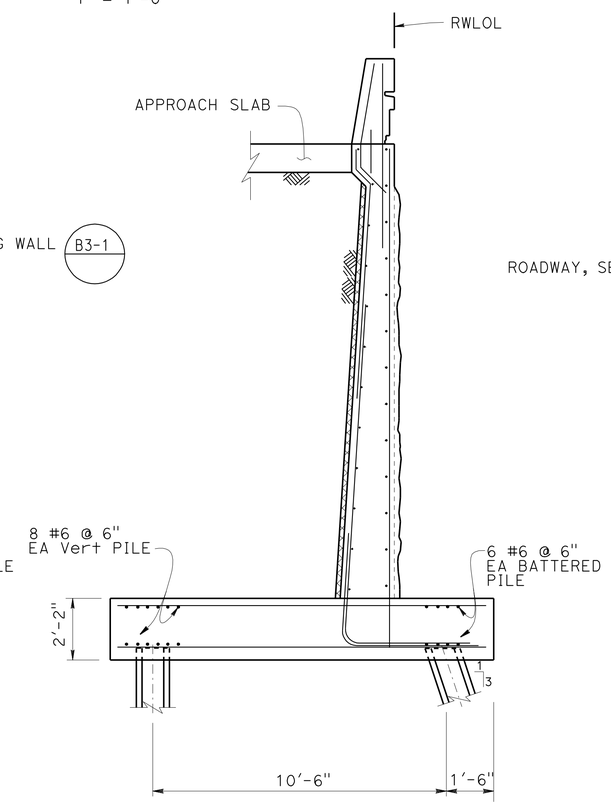

SECTION D-D

3/8" = 1'-0"

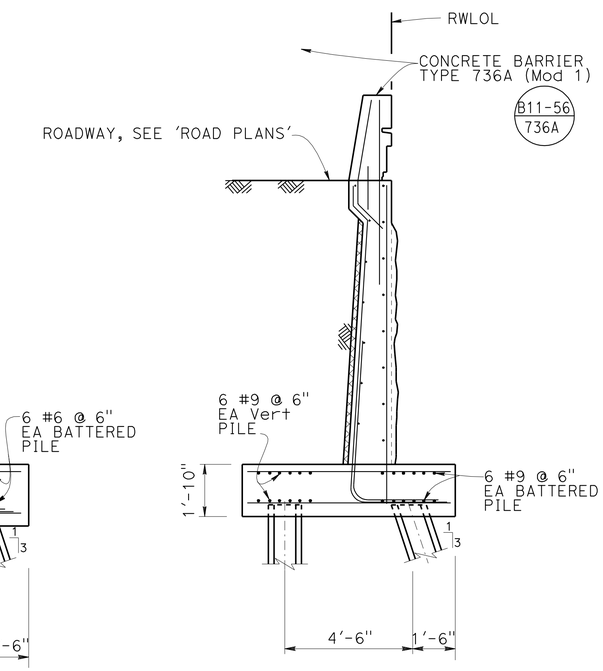

SECTION E-E

3/8" = 1'-0"

DESIGN	BY D. MUWANES	CHECKED E. MAISUMOTO	
DETAILS	BY L. XIONG / Y. FENG	CHECKED D. MUWANES	
QUANTITIES	BY D. MUWANES	CHECKED D. MUWANES	

STATE OF CALIFORNIA
DEPARTMENT OF TRANSPORTATION

DIVISION OF ENGINEERING SERVICES
STRUCTURE DESIGN
DESIGN BRANCH 14

BRIDGE NO. 53-3060
POST MILE 4.41

SAN ANTONIO DR UNDERCROSSING (REPLACE)

ABUTMENT DETAILS NO. 4

STRUCTURES DESIGN DETAIL SHEET (ENGLISH) (REV. 09-01-10)

ORIGINAL SCALE IN INCHES FOR REDUCED PLANS 0 1 2 3

UNIT: 3613
PROJECT NUMBER & PHASE: 07000018341
CONTRACT NO.: 07-215941

DISREGARD PRINTS BEARING EARLIER REVISION DATES

REVISION DATES: 9-8-11 10-13-11 11-16-11 12-12-11

SHEET 13 OF 46

FILE => 53-3060-g-adet_04.dgn

USERNAME => s103858 DATE PLOTTED => 15-APR-2012 TIME PLOTTED => 07:00

ARCHITECTURAL ABBREVIATIONS

&	AND
∟	ANGLE
℄	CENTER LINE
∅	DIAMETER OR ROUND
□	SQUARE
d	PENNY
°	DEGREE
AB	ANCHOR BOLT
ABUT	ABUTMENT
ABV	ABOVE
AC	ASPHALT CONCRETE
ACOUS	ACOUSTICAL
ADJ	ADJUSTABLE
ALT	ALTERNATE
ALUM	ALUMINUM
APA	AMERICAN PLYWOOD ASSOCIATION
ARCH	ARCHITECTURAL, ARCHITECT
ASPH	ASPHALT
BD	BOARD
BIT	BITUMINOUS
BLDG	BUILDING
BLK	BLOCK
BLKG	BLOCKING
BM	BEAM
BN	BOUNDARY NAILING
BOT	BOTTOM
BR	BRIDGE
BTM	BOTTOM
BTWN	BETWEEN
BUR	BUILT-UP-ROOFING
CJ	CONTROL JOINT
CL	CHAIN LINK
CAB	CABINET
CB	CATCH BASIN
CEM	CEMENT
CER	CERAMIC
CH	CLOTHES HOOK
CIDH	CAST IN DRILLED HOLE
CIP	CAST IN PLACE
CKBD	CHALKBOARD
CLG	CEILING
CMU	CONCRETE MASONRY UNIT
CLO	CLOSET
CLR	CLEAR
COL	COLUMN
CONC	CONCRETE
CONN	CONNECTION
CONST	CONSTRUCTION
CONT	CONTINUOUS
CORR	CORRIDOR
CPT	CARPET
CT	CERAMIC TILE
CTR	CENTER
CTSK	COUNTERSUNK
CY	CUBIC YARD
DBL	DOUBLE
DEPT	DEPARTMENT
DET	DETAIL
DF	DOUGLAS FIR
DIA	DIAMETER
DIM	DIMENSION
DN	DOWN
DP	DEEP
DR	DOOR
DS	DOWNSPOUT
DWG	DRAWING
DWR	DRAWER
(E)	EXISTING
E	EAST
EA	EACH
EF	EXHAUST FAN
EHD	ELECTRIC HAND DRYER
EJ	EXPANSION JOINT
EL	ELEVATION (HEIGHT)
ELEC	ELECTRICAL
ELEV	ELEVATION (VIEW)
ELVR	ELEVATOR
EMER	EMERGENCY
ENCL	ENCLOSURE
EP	EDGE OF PAVEMENT
EQ	EQUAL
EPB	ELECTRICAL PANELBOARD
EQUIP	EQUIPMENT
ESCL	ESCALATOR
ETW	EDGE OF TRAVEL WAY
EWC	ELECTRIC WATER COOLER
EXP	EXPANSION
EXPO	EXPOSED, EXPOSURE
EXT	EXTERIOR
FD	FLOOR DRAIN
FDN	FOUNDATION
FE	FIRE EXTINGUISHER
FEC	FIRE EXTINGUISHER CABINET
FF	FINISH FLOOR
FG	FINISH GRADE
FH	FIRE HYDRANT
FHC	FIRE HOSE CABINET
FHMS	FLATHEAD METAL SCREW
FHWS	FLATHEAD WOOD SCREW
FIN	FINISH
FJ	FLOOR JOIST
FLASH	FLASHING
FLR	FLOOR
FLUOR	FLUORESCENT
FOC	FACE OF CONCRETE
FOF	FACE OF FINISH
FOM	FACE OF MASONRY
FOS	FACE OF STUD
FRMG	FRAMING
FRPP	FIBERGLASS REINFORCED PLASTIC PANEL
FT	FEET, FOOT
FTG	FOOTING
FURR	FURRING
FWY	FREEWAY
GA	GAUGE
GAL	GALLON
GALV	GALVANIZED
GB	GRAB BAR
GI	GALVANIZED IRON
GL	GLASS
GLM	GLUE LAMINATED MEMBER
GLZ	GLAZING
GR	GRADE
GSM	GALVANIZED SHEET METAL
GYP	GYPSUM
GYP SHTG	GYPSUM SHEATHING
HB	HOSE BIB
HC	HOLLOW CORE
HD	HEAD, HOLD DOWN
HDR	HEADER
HDWD	HARDWOOD
HDWR	HARDWARE
HEX	HEXAGONAL
HF	HEMLOCK-FIR
HGR	HANGER
HM	HOLLOW METAL
HORIZ	HORIZONTAL
HP	HIGH POINT
HR	HOUR
HSB	HIGH STRENGTH BOLT
HT	HEIGHT
HVAC	HEATING, VENTILATING, AIR CONDITIONING
HWY	HIGHWAY
ID	INSIDE DIAMETER
IN	INCH
INFO	INFORMATION
INSUL	INSULATION
INT	INTERIOR
JAN	JANITOR
JB	JUNCTION BOX
JH	JOIST HANGER
JST	JOIST
JT	JOINT
KIT	KITCHEN
LAB	LABORATORY
LAV	LAVATORY
LBS	POUNDS
LF	LINEAR FEET
LKR	LOCKER
LLV	LONG LEG VERTICAL
LOL	LAYOUT LINE
LPG	LIQUIFIED PETROLEUM GAS
LS	LAG SCREW
M	METER
MAT	MATERIAL
MAX	MAXIMUM
MB	MACHINE BOLT
MBR	MEMBER
MECH	MECHANICAL
MEMB	MEMBRANE
MET	METAL
MFR	MANUFACTURER
MH	MAN HOLE
MIN	MINIMUM
MIR	MIRROR
MISC	MISCELLANEOUS
mm	MILLIMETER
MO	MASONRY OPENING
MOD	MODIFIED
MTD	MOUNTED
MUL	MULLION
N	NORTH
ND	NAPKIN DISPOSAL
NIC	NOT IN CONTRACT
NO	NUMBER
NOM	NOMINAL
NTS	NOT TO SCALE
OBSC	OBSCURE
OC	OVERCROSSING
OD	OUTSIDE DIAMETER
OFF	OFFICE
OFD	OVERFLOW DRAIN
OG	ORIGINAL GROUND
OH	OVERHEAD
OHWS	OVALHEAD WOOD SCREW
OP	OPERATIONS
OPNG	OPENING
OPP	OPPOSITE
OPT	OPTION, OPTIONAL
P	PITCH
PB	POST BASE
PC	POST CAP
PCC	PORTLAND CEMENT CONCRETE
PDF	POWDER DRIVEN FASTENERS
PH	PHILLIPS HEAD
PL	PLATE
PLAM	PLASTIC LAMINATE
PLAS	PLASTER
PLYWD	PLYWOOD
PMF	PRESSED METAL FRAME
PR	PAIR
PRTN	PARTITION
PT	POINT
PTD	PAPER TOWEL DISPENSER
PTD/R	PAPER TOWEL DISPENSER /RECEPTACLE
PVC	POLYVINYL CHLORIDE
PWB	PREFABRICATED WOOD I BEAM
QT	QUARRY TILE
(R)	RELOCATED
R	RADIUS, RISER
R/W	RIGHT OF WAY
RD	ROOF DRAIN
RDWD	REDWOOD
REF	REFERENCE
REFG	REFRIGERATOR
REINF	REINFORCED(ING)
REQ	REQUIRED
RFG	ROOFING
RFSWN	ROUGHSAWN
RH	ROUND HEAD
RHWS	ROUND HEAD WOOD SCREWS
RJ	ROOF JOIST
RM	ROOM
RO	ROUGH OPENING
RSWN	RESAWN
RTE	ROUTE
RW	RETAINING WALL
S	SOUTH
SC	SOLID CORE
SCHED	SCHEDULE
SD	SOAP DISPENSER
SDST	SELF DRILLING SELF TAPPING
SF	SQUARE FEET
SH	SHELF
SHWR	SHOWER
SHT	SHEET
SHTG	SHEATHING
SIM	SIMILAR
SL	SCORE LINE
SMS	SHEET METAL SCREW
SOHD	SECTIONAL OVERHEAD DOOR
SPEC	SPECIFICATION
SPS	STRUCTURAL PLYWOOD SHEATHING
SQ	SQUARE
SRRA	SAFETY ROADSIDE REST AREA
SS	SERVICE SINK
SST	STAINLESS STEEL
STA	STATION
STAG	STAGGER
STD	STANDARD
STL	STEEL
STOR	STORAGE
STRUC	STRUCTURAL
SUSP	SUSPENDED
T	TREAD
T&G	TONGUE & GROOVE
TB	TOLL BOOTH
TEL	TELEPHONE
TEMP	TEMPERED
TER	TERRAZZO
THK	THICK
THLD	THRESHOLD
TJ	TOOLED JOINT
TKBD	TACKBOARD
TN	TOE NAIL
TNVM	TAMPON/NAPKIN VENDING MACHINE
TOC	TOP OF CURB OR CONCRETE
TOP	TOP OF PAVEMENT
TOS	TOE OF SLOPE
TOT	TOTAL
TOW	TOP OF WALL
TS	TUBE STEEL
TSCD	TOILET SEAT COVER DISPENSER
TTD	TOILET TISSUE DISPENSER
TTY	TELETYPEWRITER
TYP	TYPICAL
UNF	UNFINISHED
UON	UNLESS OTHERWISE NOTED
UR	URINAL
VAR	VARIES
VCT	VINYL COMPOSITION TILE
VERT	VERTICAL
VEST	VESTIBULE
VR	VENT RISER
VTR	VENT THRU ROOF
W	WEST
W/	WITH
W/O	WITHOUT
WC	WATER CLOSET
WD	WOOD
WDW	WINDOW
WH	WATER HEATER
WP	WORKING POINT
WR	WATER RESISTANT
WSCT	WAINSCOT
WT	WEIGHT
WTPR	WATERPROOFING
WWF	WELDED WIRE FABRIC
YD	YARD

ARCHITECTURAL GENERAL NOTES

1. THE CONTRACTOR SHALL VERIFY ALL CONTROLLING DIMENSIONS AND FIELD CONDITIONS PRIOR TO ORDERING OR FABRICATING ANY MATERIALS OR ASSEMBLIES FOR CONSTRUCTION
2. THE CONTRACTOR SHALL NOTIFY THE ENGINEER IN WRITING OF ANY DISCREPANCIES BETWEEN THESE PLANS AND ACTUAL MEASUREMENTS OR FIELD CONDITIONS PRIOR TO ORDERING OR FABRICATING ANY MATERIALS OR ASSEMBLIES FOR CONSTRUCTION.

DIST	COUNTY	ROUTE	POST MILES TOTAL PROJECT	SHEET No.	TOTAL SHEETS
07	LA	5	4.0/5.9	972	1597

REGISTERED CIVIL ENGINEER — DATE 1/31/12

PLANS APPROVAL DATE 4-9-12

REGISTERED PROFESSIONAL ENGINEER — H. Javier Chavez — No. 14073 — Exp. 03-31-13 — CIVIL — STATE OF CALIFORNIA

The State of California or its officers or agents shall not be responsible for the accuracy or completeness of electronic copies of this plan sheet.

SYMBOLS FOR ARCHITECTURAL SHEETS

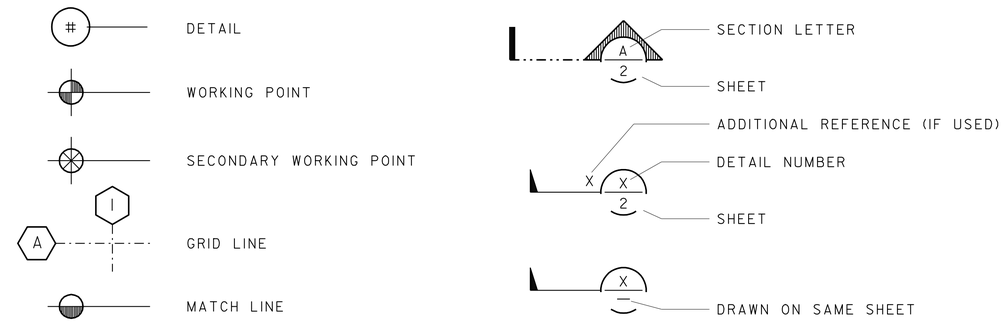

INDEX FOR ARCHITECTURAL SHEETS

A0 ARCHITECTURAL ABBREVIATIONS, SYMBOLS & INDEX
A1 ELEVATION AND ARCHITECTURAL MOTIF AT ABUTMENT 1
A2 ELEVATION AND ARCHITECTURAL MOTIF AT ABUTMENT 1
A3 ELEVATION AND ARCHITECTURAL MOTIF AT ABUTMENT 3
A4 ELEVATION AND ARCHITECTURAL MOTIF AT ABUTMENT 3
A5 SECTIONS AT ABUTMENTS 1 AND 3
A6 ARCHITECTURAL MOTIF DETAILS AT ABUTMENTS 1 & 3
A7 ARCHITECTURAL TILE MOTIF DETAILS
A8 ELEVATION AND ARCHITECTURAL MOTIF AT ABUTMENT 1
A9 ELEVATION AND ARCHITECTURAL MOTIF AT ABUTMENT 1
A10 ELEVATION AND ARCHITECTURAL MOTIF AT ABUTMENT 3
A11 ELEVATION AND ARCHITECTURAL MOTIF AT ABUTMENT 3
A12 ARCHITECTURAL TILE FINISH SCHEDULE AT ABUTMENT 1
A13 ARCHITECTURAL TILE FINISH SCHEDULE AT ABUTMENT 3

A0

	BY	CHECKED
DESIGN	H. CHAVEZ	S. HEATH
DETAILS	S. HEATH	H. CHAVEZ
QUANTITIES	L. BAHIA	D. MUWANES

STATE OF CALIFORNIA
DEPARTMENT OF TRANSPORTATION

DIVISION OF ENGINEERING SERVICES
BRIDGE ARCHITECTURE AND AESTHETICS

BRIDGE NO. 53-3060
POST MILE 4.41

SAN ANTONIO DR UNDERCROSSING (REPLACE)

ARCHITECTURAL DETAILS No. 1

STRUCTURES DESIGN DETAIL SHEET (ENGLISH) (REV. 09-01-10)

ORIGINAL SCALE IN INCHES FOR REDUCED PLANS 0 1 2 3

UNIT: 3613
PROJECT NUMBER & PHASE: 0700001834 1
CONTRACT NO.: 07-215941

DISREGARD PRINTS BEARING EARLIER REVISION DATES

REVISION DATES

SHEET 14 OF 46

FILE => 53-3060-h-arch_01.dgn

USERNAME => s109858 DATE PLOTTED => 15-APR-2012 TIME PLOTTED => 07:00

DIST	COUNTY	ROUTE	POST MILES TOTAL PROJECT	SHEET No.	TOTAL SHEETS
07	LA	5	4.0/5.9	973	1597

REGISTERED CIVIL ENGINEER 1/31/12 DATE

4-9-12
PLANS APPROVAL DATE

REGISTERED PROFESSIONAL ENGINEER H. Javier Chavez No. 14073 Exp. 03-31-13 CIVIL STATE OF CALIFORNIA

The State of California or its officers or agents shall not be responsible for the accuracy or completeness of electronic copies of this plan sheet.

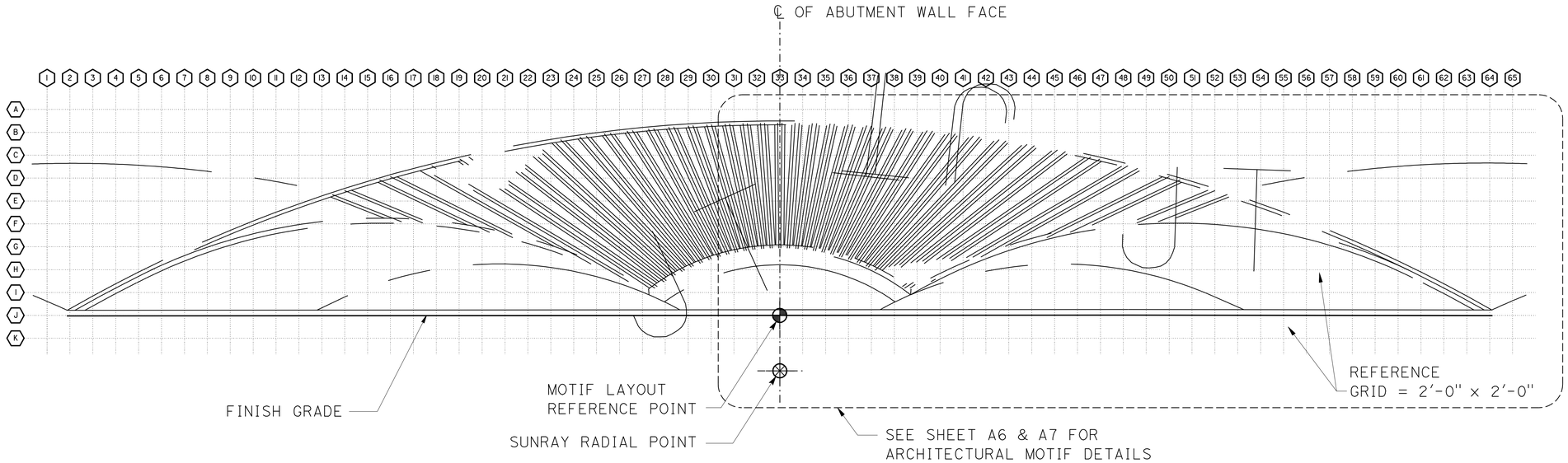

PARTIAL ARCHITECTURAL MOTIF AT ABUTMENT 1

NO SCALE

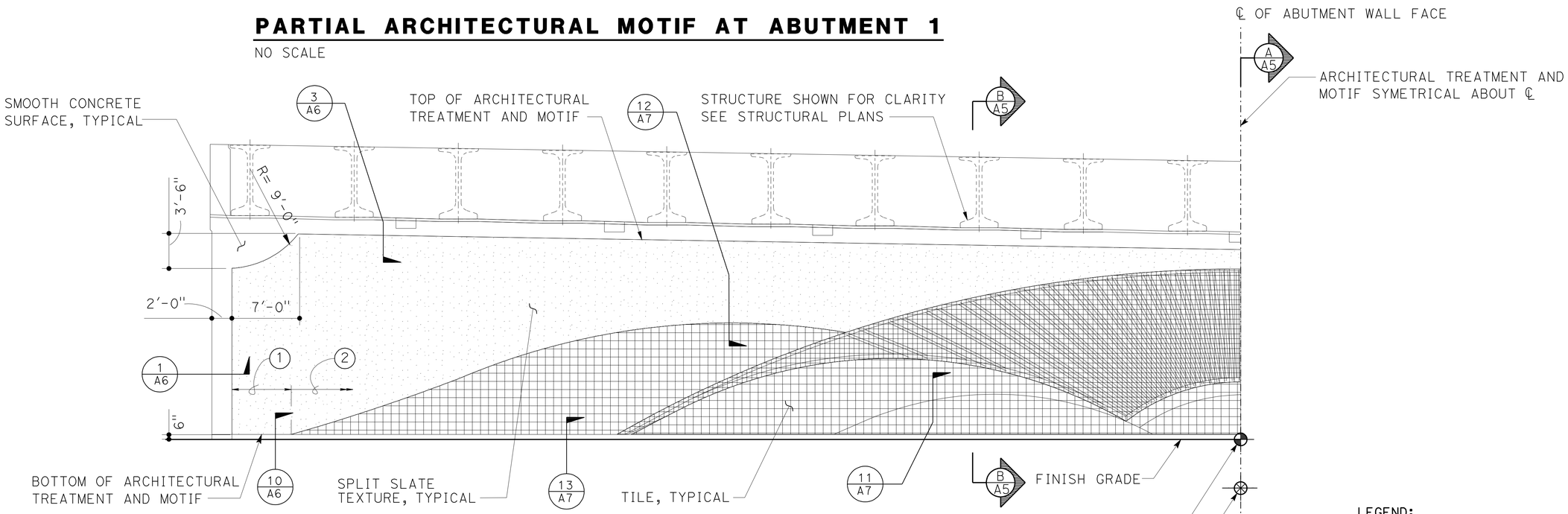

NOTES:

1. Pay Limits "ARCHITECTURAL TEXTURE (SPLIT SLATE)"
2. Pay Limits "ARCHITECTURAL TREATMENT (SUNRAY - SPLIT SLATE)"

PARTIAL ELEVATION AT ABUTMENT 1

NO SCALE

LEGEND:

- TILE-SEE SHT A12 FOR PATTERN LAYOUT
- TEXTURED CONCRETE SURFACE = SPLIT SLATE TEXTURE. SEE DETAIL 1/A5
- SMOOTH CONCRETE SURFACE

A1

DESIGN	BY H. CHAVEZ	CHECKED S. HEATH	
DETAILS	BY S. HEATH	CHECKED H. CHAVEZ	
QUANTITIES	BY L. BAHIA	CHECKED D. MUWANES	

STATE OF CALIFORNIA DEPARTMENT OF TRANSPORTATION

DIVISION OF ENGINEERING SERVICES BRIDGE ARCHITECTURE AND AESTHETICS

BRIDGE NO. 53-3060 POST MILE 4.41

SAN ANTONIO DR UNDERCROSSING (REPLACE)

ARCHITECTURAL DETAILS No. 2

STRUCTURES DESIGN DETAIL SHEET (ENGLISH) (REV. 09-01-10)

ORIGINAL SCALE IN INCHES FOR REDUCED PLANS 0 1 2 3

UNIT: 3613
PROJECT NUMBER & PHASE: 0700001834 1 CONTRACT NO.: 07-215941

DISREGARD PRINTS BEARING EARLIER REVISION DATES

REVISION DATES

SHEET 15 OF 46

FILE => 53-3060-h-arch_02.dgn

USERNAME => s103858 DATE PLOTTED => 15-APR-2012 TIME PLOTTED => 07:00

DIST	COUNTY	ROUTE	POST MILES TOTAL PROJECT	SHEET No.	TOTAL SHEETS
07	LA	5	4.0/5.9	974	1597

REGISTERED CIVIL ENGINEER 1/31/12 DATE

4-9-12
PLANS APPROVAL DATE

REGISTERED PROFESSIONAL ENGINEER H. Javier Chavez No. 14073 Exp. 03-31-13 CIVIL STATE OF CALIFORNIA

The State of California or its officers or agents shall not be responsible for the accuracy or completeness of electronic copies of this plan sheet.

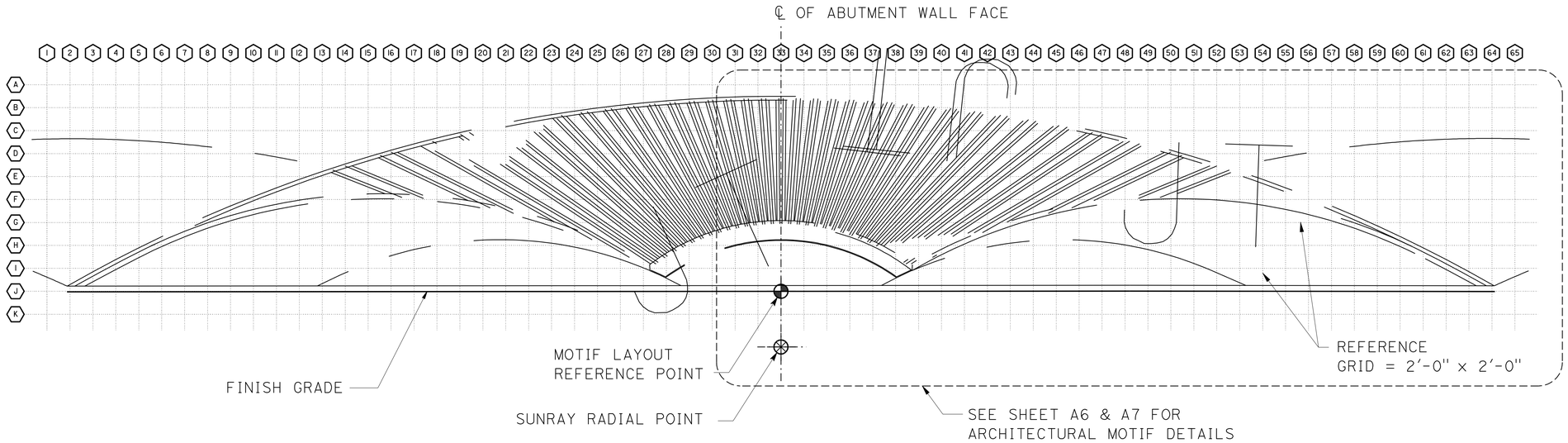

PARTIAL ARCHITECTURAL MOTIF AT ABUTMENT 1

NO SCALE

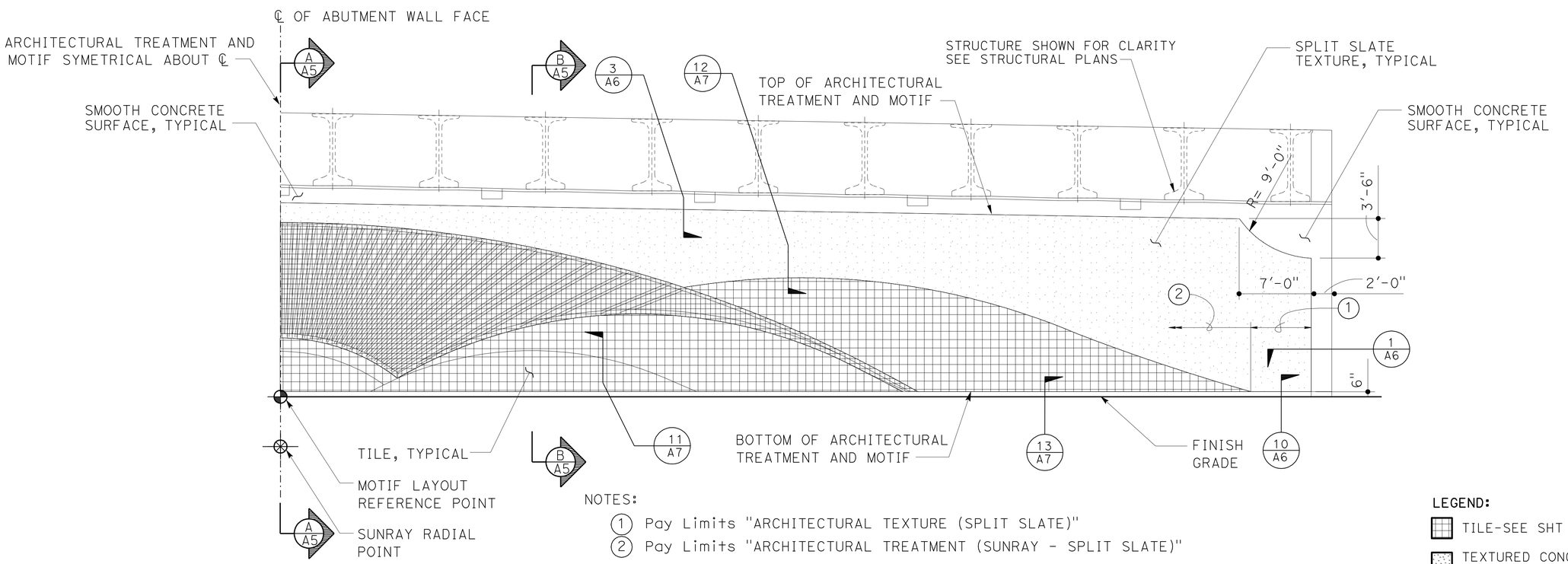

NOTES:

1. Pay Limits "ARCHITECTURAL TEXTURE (SPLIT SLATE)"
2. Pay Limits "ARCHITECTURAL TREATMENT (SUNRAY - SPLIT SLATE)"

LEGEND:

- TILE-SEE SHT A12 FOR PATTERN LAYOUT
- TEXTURED CONCRETE SURFACE = SPLIT SLATE TEXTURE. SEE DETAIL 1/A5
- SMOOTH CONCRETE SURFACE

PARTIAL ELEVATION AT ABUTMENT 1

NO SCALE

A2

	BY	CHECKED
DESIGN	H. CHAVEZ	S. HEATH
DETAILS	S. HEATH	H. CHAVEZ
QUANTITIES	L. BAHIA	D. MUWANES

STATE OF CALIFORNIA DEPARTMENT OF TRANSPORTATION

DIVISION OF ENGINEERING SERVICES BRIDGE ARCHITECTURE AND AESTHETICS

BRIDGE NO. 53-3060 POST MILE 4.41

SAN ANTONIO DR UNDERCROSSING (REPLACE)

ARCHITECTURAL DETAILS No. 3

STRUCTURES DESIGN DETAIL SHEET (ENGLISH) (REV. 09-01-10)

ORIGINAL SCALE IN INCHES FOR REDUCED PLANS 0 1 2 3

UNIT: 3613
PROJECT NUMBER & PHASE: 0700001834 1 CONTRACT NO.: 07-215941

DISREGARD PRINTS BEARING EARLIER REVISION DATES

REVISION DATES

SHEET 16 OF 46

FILE => 53-3060-h-arch_03.dgn

USERNAME => s103858 DATE PLOTTED => 15-APR-2012 TIME PLOTTED => 07:00

DIST	COUNTY	ROUTE	POST MILES TOTAL PROJECT	SHEET No.	TOTAL SHEETS
07	LA	5	4.0/5.9	975	1597

REGISTERED CIVIL ENGINEER 1/31/12 DATE

4-9-12
PLANS APPROVAL DATE

REGISTERED PROFESSIONAL ENGINEER H. Javier Chavez No. 14073 Exp. 03-31-13 CIVIL STATE OF CALIFORNIA

The State of California or its officers or agents shall not be responsible for the accuracy or completeness of electronic copies of this plan sheet.

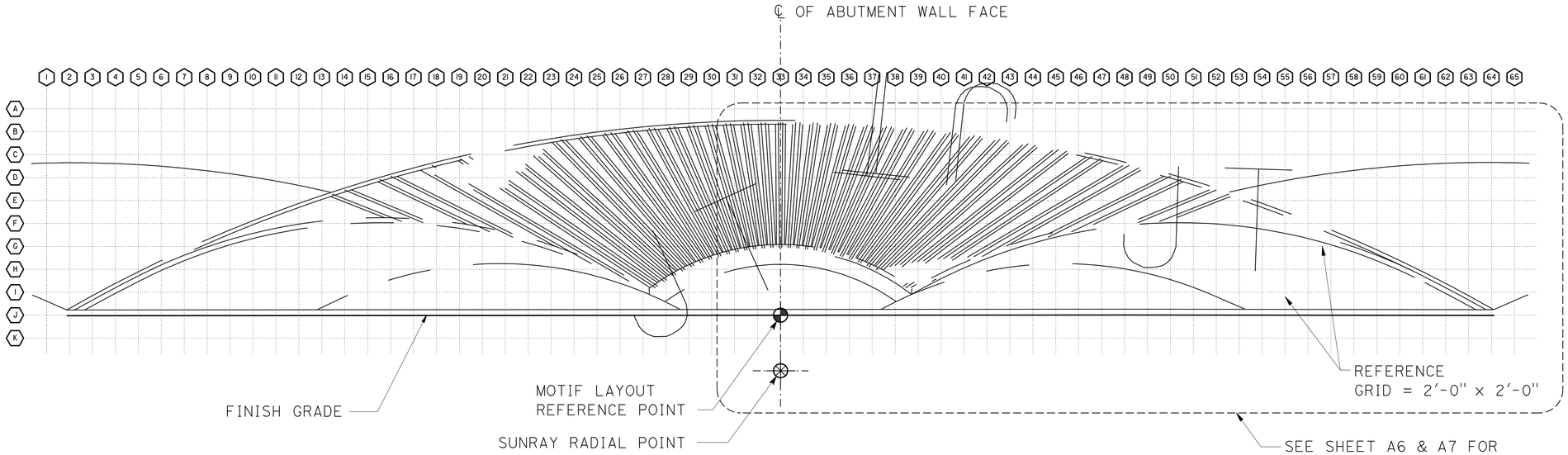

PARTIAL ARCHITECTURAL MOTIF AT ABUTMENT 3

NO SCALE

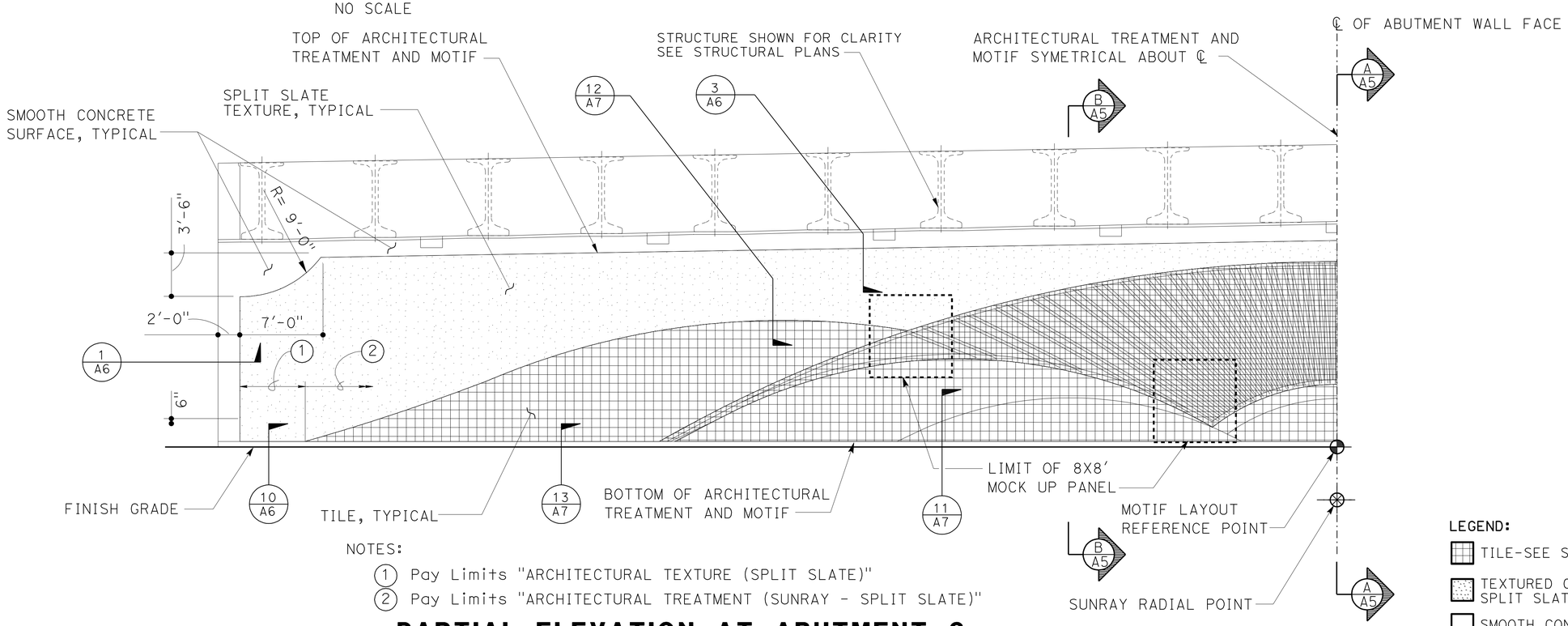

NOTES:

1. Pay Limits "ARCHITECTURAL TEXTURE (SPLIT SLATE)"
2. Pay Limits "ARCHITECTURAL TREATMENT (SUNRAY - SPLIT SLATE)"

PARTIAL ELEVATION AT ABUTMENT 3

NO SCALE

LEGEND:

- TILE-SEE SHT A13 FOR PATTERN LAYOUT
- TEXTURED CONCRETE SURFACE = SPLIT SLATE TEXTURE. SEE DETAIL 1/A5
- SMOOTH CONCRETE SURFACE

A3

DESIGN	BY H. CHAVEZ	CHECKED S. HEATH	
DETAILS	BY S. HEATH	CHECKED H. CHAVEZ	
QUANTITIES	BY L. BAHIA	CHECKED D. MUWANES	

STATE OF CALIFORNIA DEPARTMENT OF TRANSPORTATION

DIVISION OF ENGINEERING SERVICES BRIDGE ARCHITECTURE AND AESTHETICS

BRIDGE NO. 53-3060 POST MILE 4.41

SAN ANTONIO DR UNDERCROSSING (REPLACE)

ARCHITECTURAL DETAILS No. 4

STRUCTURES DESIGN DETAIL SHEET (ENGLISH) (REV. 09-01-10)

ORIGINAL SCALE IN INCHES FOR REDUCED PLANS 0 1 2 3

UNIT: 3613
PROJECT NUMBER & PHASE: 0700001834 1 CONTRACT NO.: 07-215941

DISREGARD PRINTS BEARING EARLIER REVISION DATES

REVISION DATES

SHEET 17 OF 46

FILE => 53-3060-h-arch_04.dgn

USERNAME => s109858 DATE PLOTTED => 15-APR-2012 TIME PLOTTED => 07:01

DIST	COUNTY	ROUTE	POST MILES TOTAL PROJECT	SHEET No.	TOTAL SHEETS
07	LA	5	4.0/5.9	976	1597

REGISTERED CIVIL ENGINEER 1/31/12 DATE

4-9-12
PLANS APPROVAL DATE

REGISTERED PROFESSIONAL ENGINEER H. Javier Chavez No. 14073 Exp. 03-31-13 CIVIL STATE OF CALIFORNIA

The State of California or its officers or agents shall not be responsible for the accuracy or completeness of electronic copies of this plan sheet.

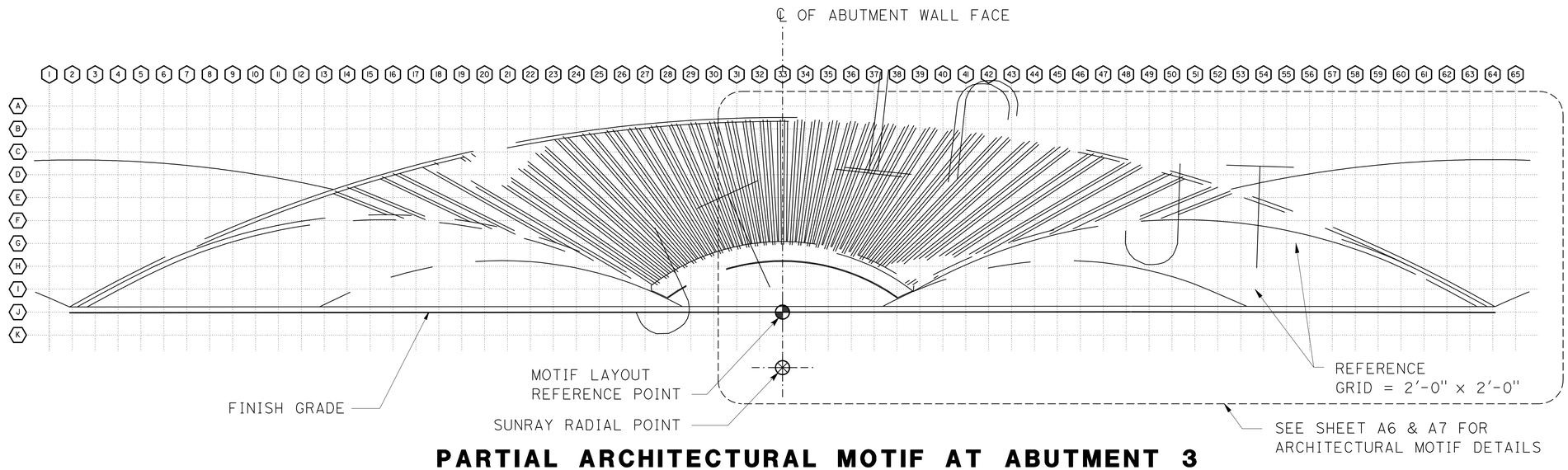

PARTIAL ARCHITECTURAL MOTIF AT ABUTMENT 3

NO SCALE

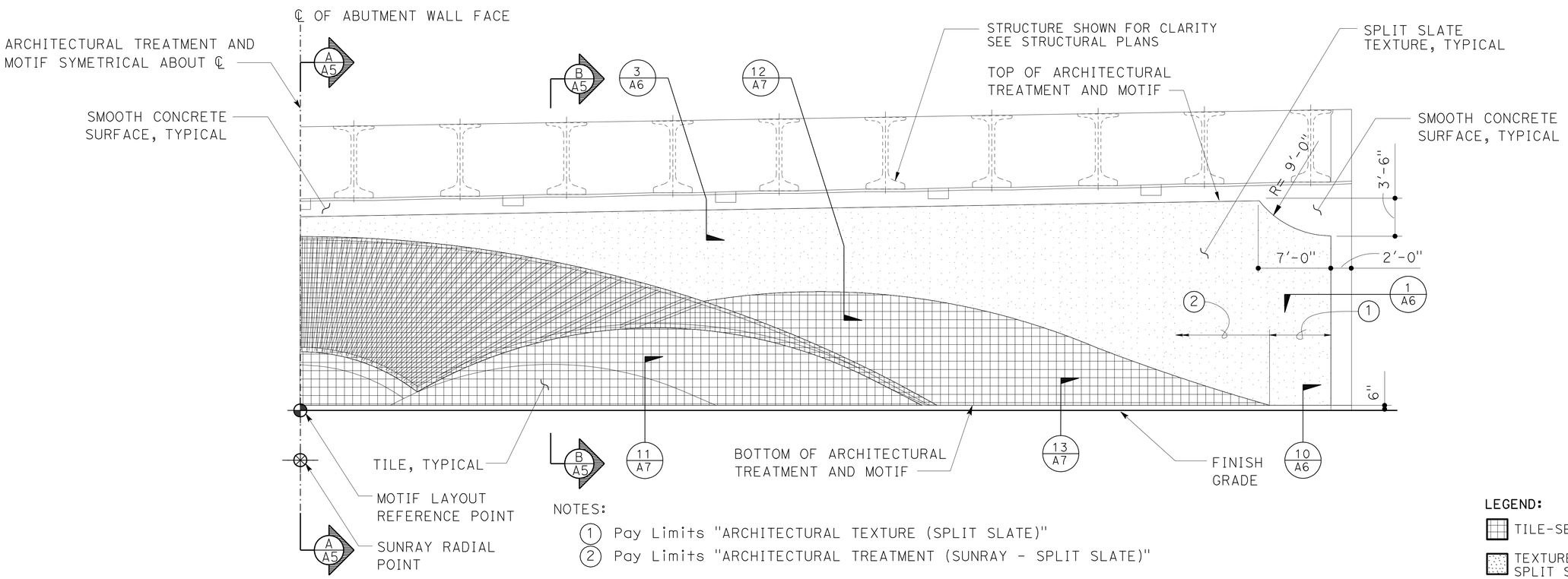

NOTES:

1. Pay Limits "ARCHITECTURAL TEXTURE (SPLIT SLATE)"
2. Pay Limits "ARCHITECTURAL TREATMENT (SUNRAY - SPLIT SLATE)"

PARTIAL ELEVATION AT WEST ABUTMENT 3

NO SCALE

LEGEND:

- TILE-SEE SHT A13 FOR PATTERN LAYOUT
- TEXTURED CONCRETE SURFACE = SPLIT SLATE TEXTURE. SEE DETAIL 1/A5
- SMOOTH CONCRETE SURFACE

A4

	BY	CHECKED
DESIGN	H. CHAVEZ	S. HEATH
DETAILS	S. HEATH	H. CHAVEZ
QUANTITIES	L. BAHIA	D. MUWANES

STATE OF CALIFORNIA DEPARTMENT OF TRANSPORTATION

DIVISION OF ENGINEERING SERVICES BRIDGE ARCHITECTURE AND AESTHETICS

BRIDGE NO. 53-3060 POST MILE 4.41

SAN ANTONIO DR UNDERCROSSING (REPLACE)

ARCHITECTURAL DETAILS No. 5

STRUCTURES DESIGN DETAIL SHEET (ENGLISH) (REV. 09-01-10)

ORIGINAL SCALE IN INCHES FOR REDUCED PLANS 0 1 2 3

UNIT: 3613
PROJECT NUMBER & PHASE: 0700001834 1 CONTRACT NO.: 07-215941

DISREGARD PRINTS BEARING EARLIER REVISION DATES

REVISION DATES

SHEET 18 OF 46

FILE => 53-3060-h-arch_05.dgn

USERNAME => s103958 DATE PLOTTED => 15-APR-2012 TIME PLOTTED => 07:01

NOTE: ALL REFERENCE TO SURFACE DIMENSIONS
OF WALL AND TILE DETAILS ARE FROM
DATUM 0 = FACE OF ABUTMENT WALL, TYPICAL

DIST	COUNTY	ROUTE	POST MILES TOTAL PROJECT	SHEET No.	TOTAL SHEETS
07	LA	5	4.0/5.9	977	1597

REGISTERED CIVIL ENGINEER — DATE 1/31/12

4-9-12
PLANS APPROVAL DATE

REGISTERED PROFESSIONAL ENGINEER — H. Javier Chavez — No. 14073 — Exp. 03-31-13 — CIVIL — STATE OF CALIFORNIA

The State of California or its officers or agents shall not be responsible for the accuracy or completeness of electronic copies of this plan sheet.

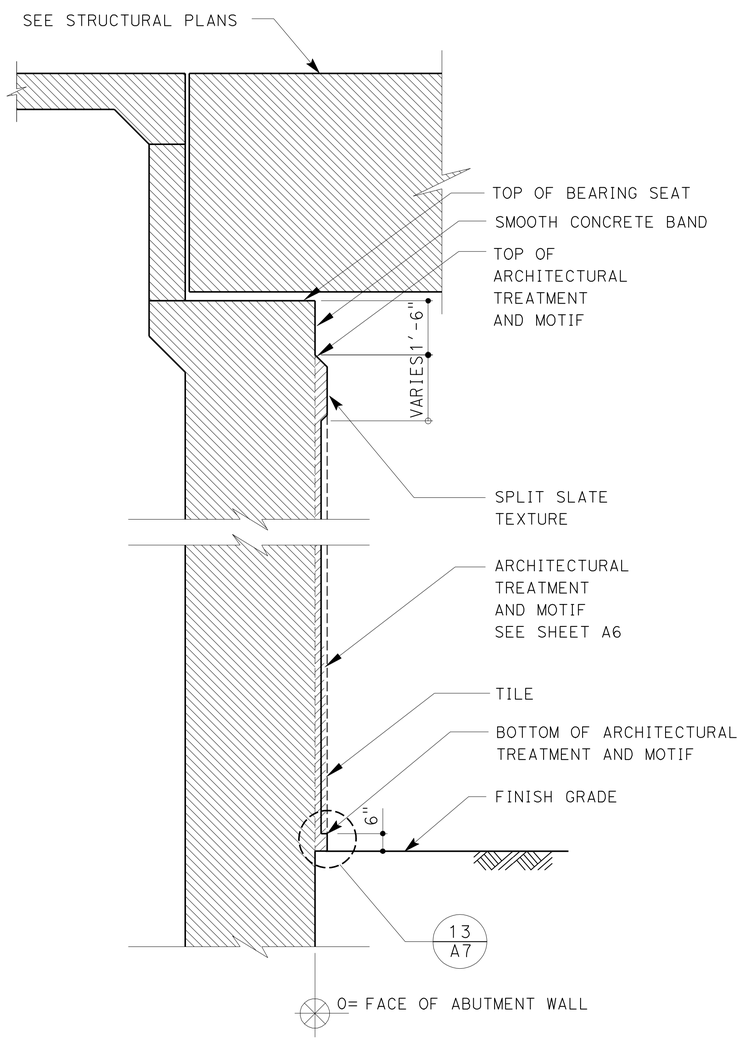

SECTION A-A

NO SCALE

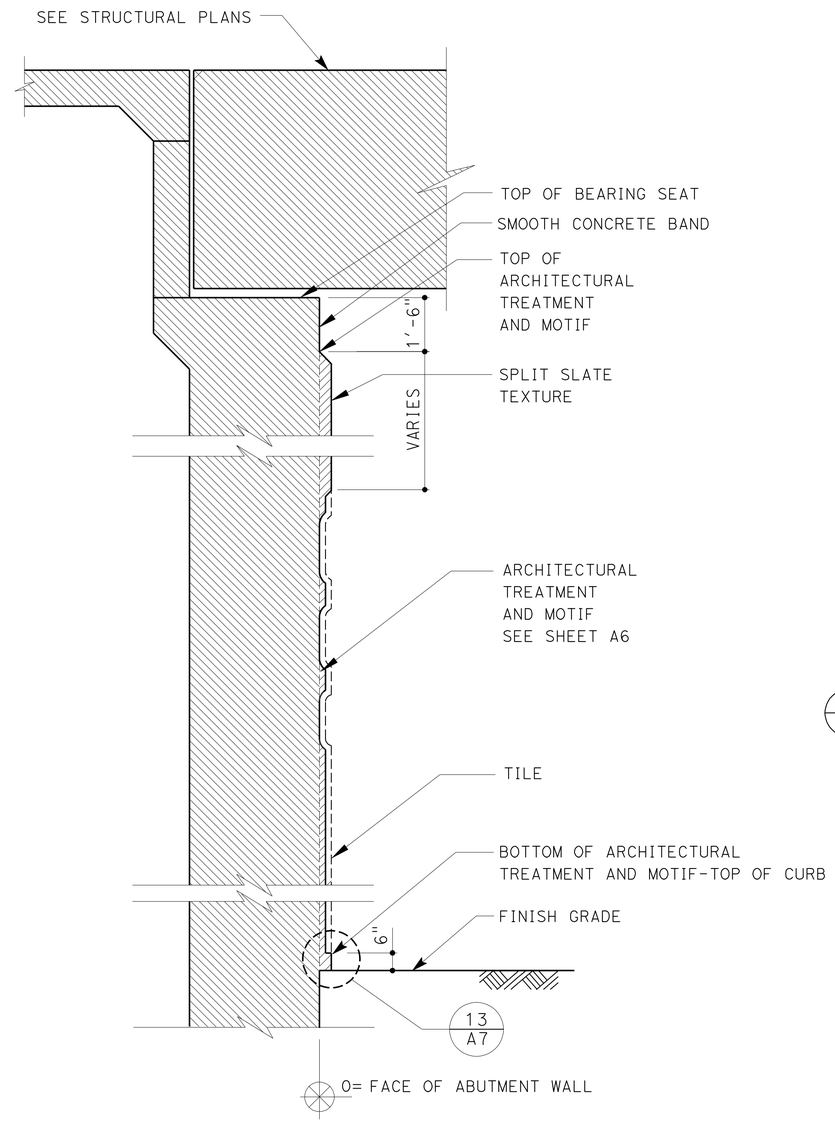

SECTION B-B

NO SCALE

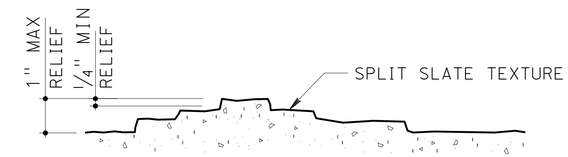

C DETAIL
NO SCALE

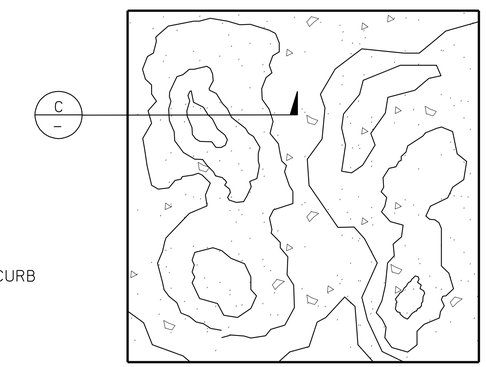

1 **SPLIT SLATE TEXTURE**
NO SCALE

A5

DESIGN	BY H. CHAVEZ	CHECKED S. HEATH	
DETAILS	BY S. HEATH	CHECKED H. CHAVEZ	
QUANTITIES	BY L. BAHIA	CHECKED D. MUWANES	

STATE OF CALIFORNIA
DEPARTMENT OF TRANSPORTATION

DIVISION OF ENGINEERING SERVICES
BRIDGE ARCHITECTURE AND AESTHETICS

BRIDGE NO. 53-3060
POST MILE 4.41

SAN ANTONIO DR UNDERCROSSING (REPLACE)
ARCHITECTURAL DETAILS No. 6

STRUCTURES DESIGN DETAIL SHEET (ENGLISH) (REV. 09-01-10)

ORIGINAL SCALE IN INCHES FOR REDUCED PLANS 0 1 2 3

UNIT: 3613
PROJECT NUMBER & PHASE: 0700001834 1
CONTRACT NO.: 07-215941

DISREGARD PRINTS BEARING EARLIER REVISION DATES

REVISION DATES

SHEET 19 OF 46

FILE => 53-3060-h-arch_06.dgn

USERNAME => s103858 DATE PLOTTED => 15-APR-2012 TIME PLOTTED => 07:01

DIST	COUNTY	ROUTE	POST MILES TOTAL PROJECT	SHEET No.	TOTAL SHEETS
07	LA	5	4.0/5.9	978	1597

REGISTERED CIVIL ENGINEER 1/31/12 DATE

4-9-12
PLANS APPROVAL DATE

REGISTERED PROFESSIONAL ENGINEER H. Javier Chavez No. 14073 Exp. 03-31-13 CIVIL STATE OF CALIFORNIA

The State of California or its officers or agents shall not be responsible for the accuracy or completeness of electronic copies of this plan sheet.

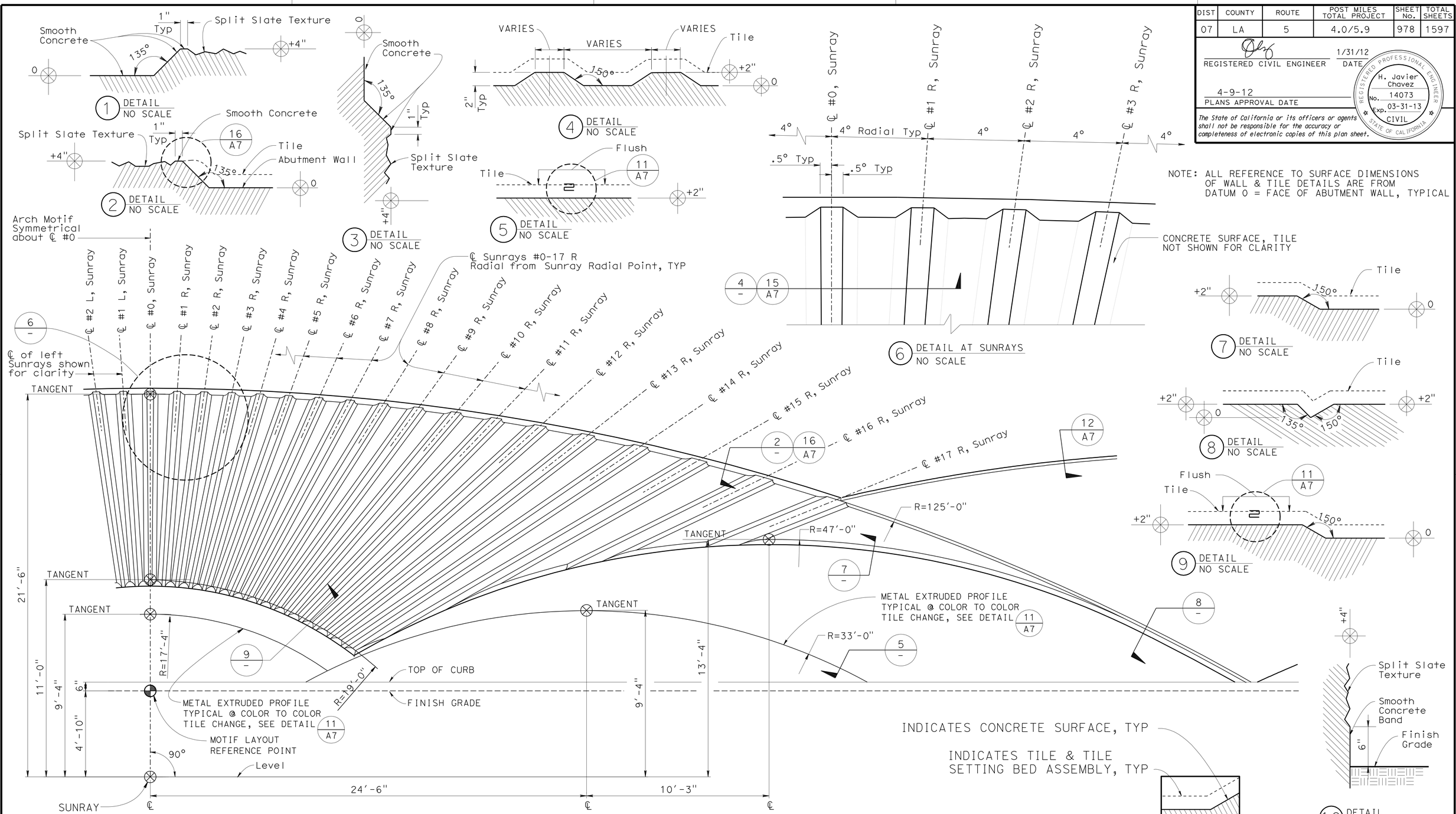

PARTIAL ARCHITECTURAL MOTIF ELEVATION AT ABUTMENT 1&3

NO SCALE

A6

DESIGN	BY H. CHAVEZ	CHECKED S. HEATH	
DETAILS	BY S. HEATH	CHECKED H. CHAVEZ	
QUANTITIES	BY L. BAHIA	CHECKED D. MUWANES	

STATE OF CALIFORNIA
DEPARTMENT OF TRANSPORTATION

DIVISION OF ENGINEERING SERVICES
BRIDGE ARCHITECTURE AND AESTHETICS

BRIDGE NO. 53-3060
POST MILE 4.41

SAN ANTONIO DR UNDERCROSSING (REPLACE)

ARCHITECTURAL DETAILS No. 7

STRUCTURES DESIGN DETAIL SHEET (ENGLISH) (REV. 09-01-10)

ORIGINAL SCALE IN INCHES FOR REDUCED PLANS 0 1 2 3

UNIT: 3613
PROJECT NUMBER & PHASE: 0700001834 1
CONTRACT NO.: 07-215941

DISREGARD PRINTS BEARING EARLIER REVISION DATES

REVISION DATES

SHEET 20 OF 46

FILE => 53-3060-h-arch_07.dgn

USERNAME => s109858 DATE PLOTTED => 15-APR-2012 TIME PLOTTED => 07:01

DIST	COUNTY	ROUTE	POST MILES TOTAL PROJECT	SHEET No.	TOTAL SHEETS
07	LA	5	4.0/5.9	979	1597

REGISTERED CIVIL ENGINEER 1/31/12 DATE

4-9-12
PLANS APPROVAL DATE

REGISTERED PROFESSIONAL ENGINEER H. Javier Chavez No. 14073 Exp. 03-31-13 CIVIL STATE OF CALIFORNIA

The State of California or its officers or agents shall not be responsible for the accuracy or completeness of electronic copies of this plan sheet.

NOTE: ALL REFERENCE TO SURFACE DIMENSIONS OF WALL DETAILS ARE FROM DATUM 0 = FACE OF ABUTMENT TYPICAL

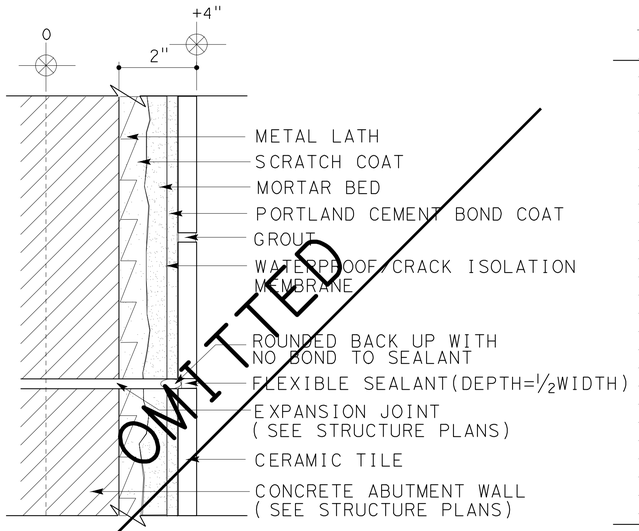

10 EXPANSION JOINT DETAIL
NO SCALE

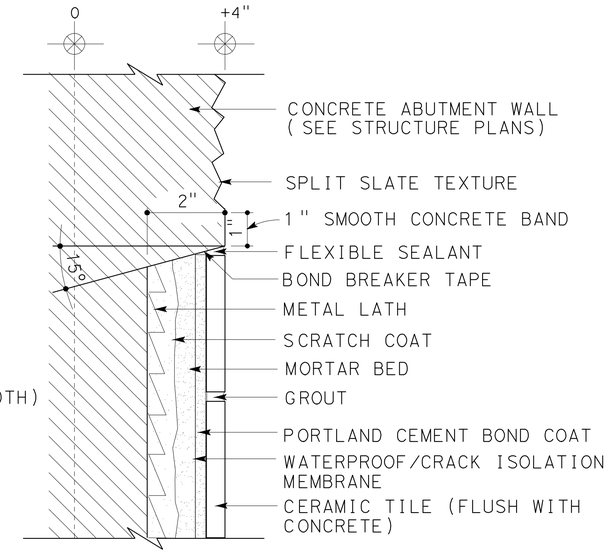

12 TEXTURE/TILE DETAIL
NO SCALE

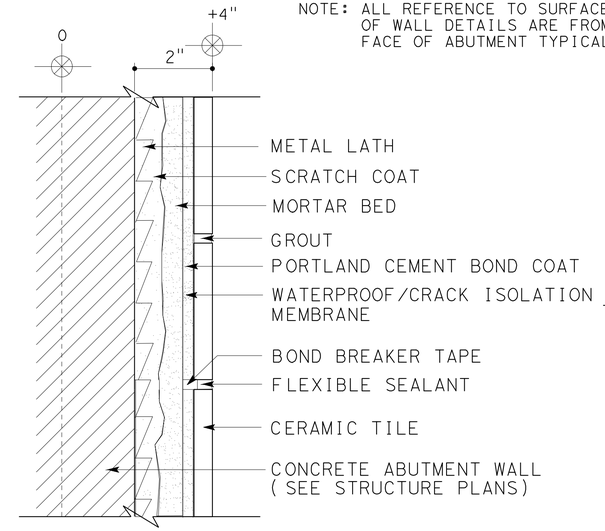

14 MOVEMENT JOINT DETAIL
NO SCALE

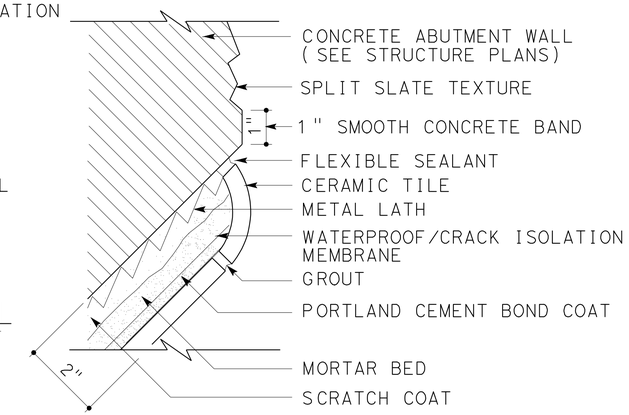

16 TEXTURE/TILE DETAIL
NO SCALE

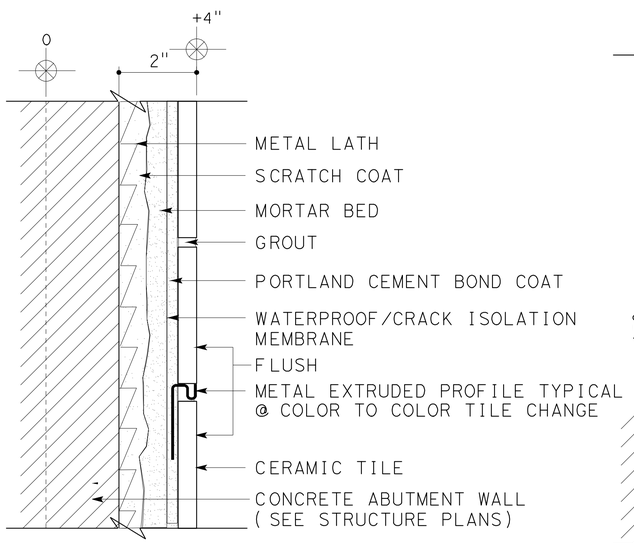

11 COLOR TO COLOR TILE TRIM DETAIL
NO SCALE

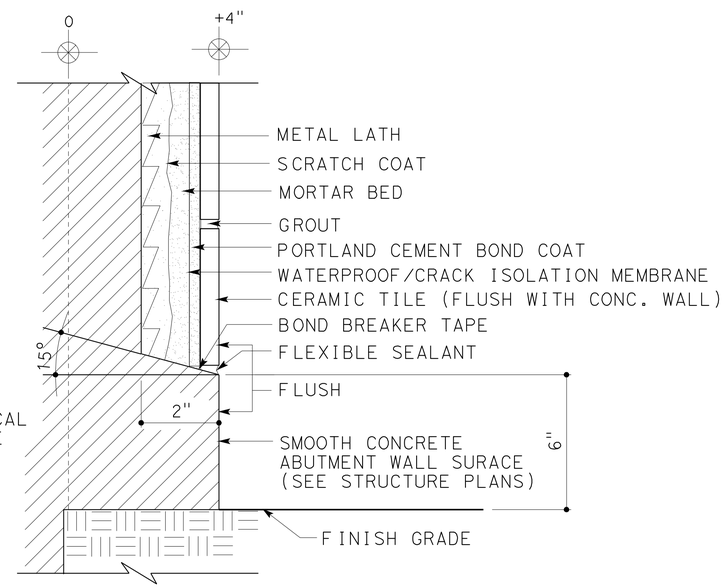

13 SMOOTH CONCRETE/TILE DETAIL
NO SCALE

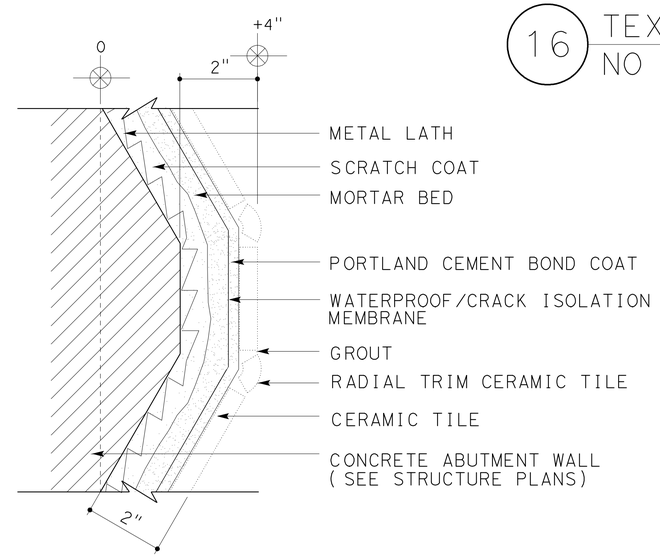

15 TILE DETAIL
NO SCALE

A7

DESIGN	BY H. CHAVEZ	CHECKED S. HEATH	
DETAILS	BY S. HEATH	CHECKED H. CHAVEZ	
QUANTITIES	BY L. BAHIA	CHECKED D. MUWANES	

STATE OF CALIFORNIA
DEPARTMENT OF TRANSPORTATION

DIVISION OF ENGINEERING SERVICES
BRIDGE ARCHITECTURE AND AESTHETICS

BRIDGE NO. 53-3060
POST MILE 4.41

SAN ANTONIO DR UNDERCROSSING (REPLACE)
ARCHITECTURAL DETAILS No. 8

STRUCTURES DESIGN DETAIL SHEET (ENGLISH) (REV. 09-01-10)

ORIGINAL SCALE IN INCHES FOR REDUCED PLANS 0 1 2 3

UNIT: 3613
PROJECT NUMBER & PHASE: 0700001834 1
CONTRACT NO.: 07-215941

DISREGARD PRINTS BEARING EARLIER REVISION DATES

REVISION DATES

SHEET 21 OF 46

FILE => 53-3060-h-arch_08.dgn

USERNAME => s109858 DATE PLOTTED => 15-APR-2012 TIME PLOTTED => 07:01

DIST	COUNTY	ROUTE	POST MILES TOTAL PROJECT	SHEET No.	TOTAL SHEETS
07	LA	5	4.0/5.9	980	1597

REGISTERED CIVIL ENGINEER 1/31/12 DATE

4-9-12
PLANS APPROVAL DATE

REGISTERED PROFESSIONAL ENGINEER H. Javier Chavez No. 14073 Exp. 03-31-13 CIVIL STATE OF CALIFORNIA

The State of California or its officers or agents shall not be responsible for the accuracy or completeness of electronic copies of this plan sheet.

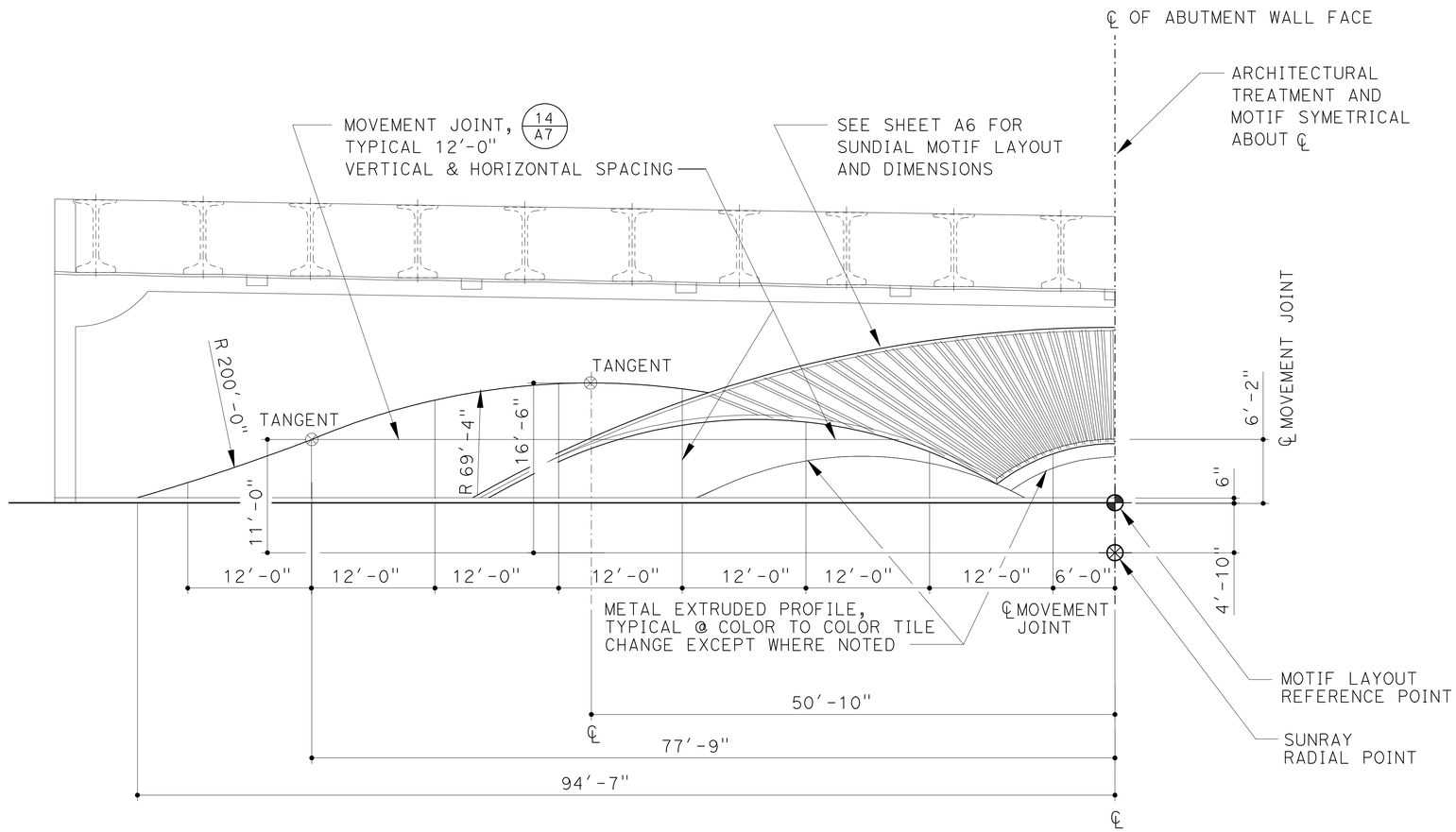

PARTIAL ELEVATION AT ABUTMENT 1

NO SCALE

A8

DESIGN	BY H. CHAVEZ	CHECKED S. HEATH	
DETAILS	BY S. HEATH	CHECKED H. CHAVEZ	
QUANTITIES	BY L. BAHIA	CHECKED D. MUWANES	

STATE OF CALIFORNIA DEPARTMENT OF TRANSPORTATION

DIVISION OF ENGINEERING SERVICES BRIDGE ARCHITECTURE AND AESTHETICS

BRIDGE NO. 53-3060
POST MILE 4.41

SAN ANTONIO DR UNDERCROSSING (REPLACE)

ARCHITECTURAL DETAILS No. 9

STRUCTURES DESIGN DETAIL SHEET (ENGLISH) (REV. 09-01-10)

ORIGINAL SCALE IN INCHES FOR REDUCED PLANS 0 1 2 3

UNIT: 3613
PROJECT NUMBER & PHASE: 0700001834 1 CONTRACT NO.: 07-215941

DISREGARD PRINTS BEARING EARLIER REVISION DATES

REVISION DATES

SHEET 22 OF 46

FILE => 53-3060-h-arch_09.dgn

USERNAME => s109858 DATE PLOTTED => 15-APR-2012 TIME PLOTTED => 07:01

DIST	COUNTY	ROUTE	POST MILES TOTAL PROJECT	SHEET No.	TOTAL SHEETS
07	LA	5	4.0/5.9	981	1597

REGISTERED CIVIL ENGINEER 1/31/12 DATE

4-9-12
PLANS APPROVAL DATE

REGISTERED PROFESSIONAL ENGINEER
H. Javier Chavez
No. 14073
Exp. 03-31-13
CIVIL
STATE OF CALIFORNIA

The State of California or its officers or agents shall not be responsible for the accuracy or completeness of electronic copies of this plan sheet.

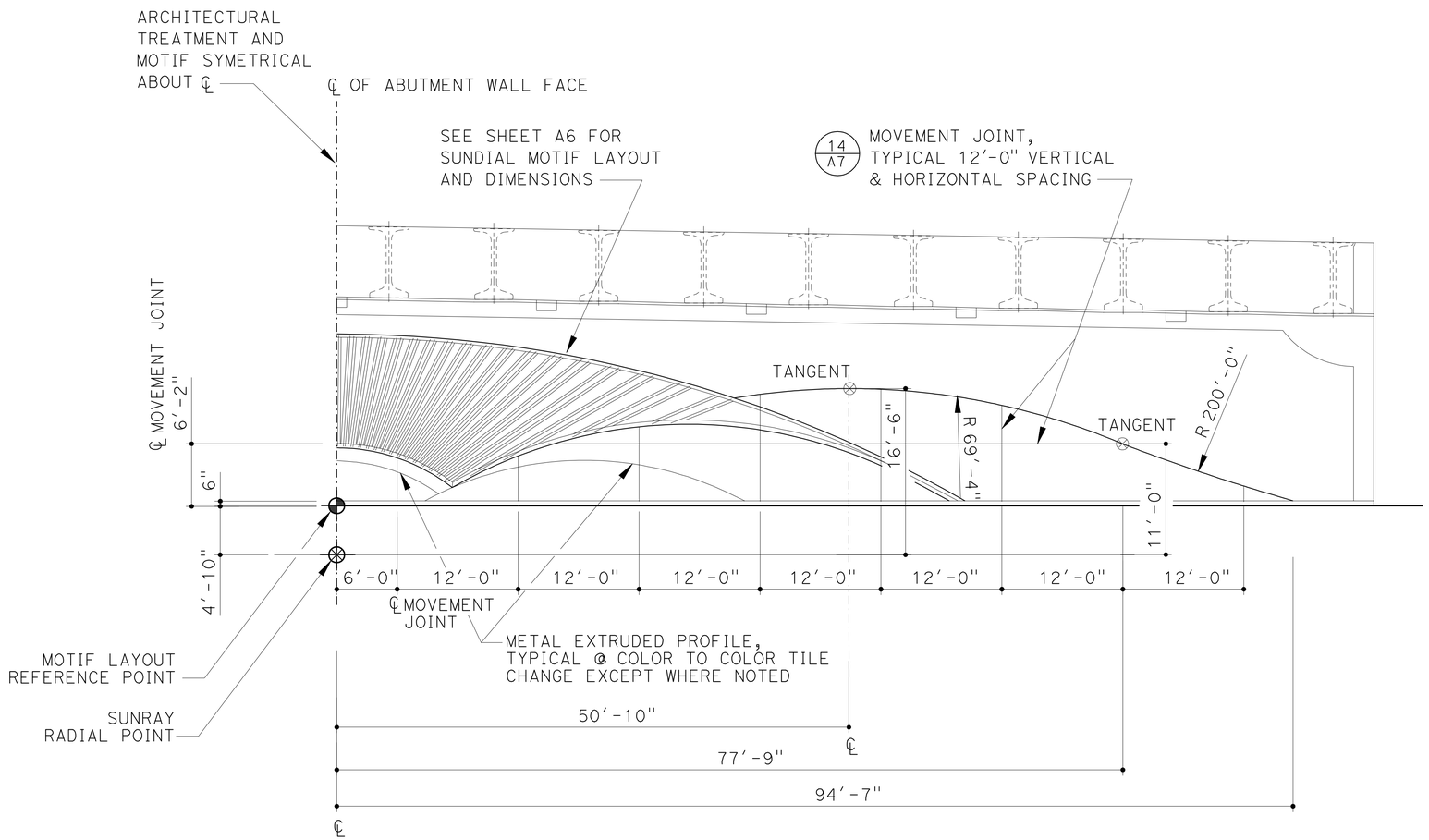

PARTIAL ELEVATION AT ABUTMENT 1

NO SCALE

A9

DESIGN	BY H. CHAVEZ	CHECKED S. HEATH	
DETAILS	BY S. HEATH	CHECKED H. CHAVEZ	
QUANTITIES	BY L. BAHIA	CHECKED D. MUWANES	

STATE OF CALIFORNIA
DEPARTMENT OF TRANSPORTATION

DIVISION OF ENGINEERING SERVICES
BRIDGE ARCHITECTURE AND AESTHETICS

BRIDGE NO. 53-3060
POST MILE 4.41

SAN ANTONIO DR UNDERCROSSING (REPLACE)
ARCHITECTURAL DETAILS No. 10

STRUCTURES DESIGN DETAIL SHEET (ENGLISH) (REV. 09-01-10)

ORIGINAL SCALE IN INCHES FOR REDUCED PLANS 0 1 2 3

UNIT: 3613
PROJECT NUMBER & PHASE: 0700001834 1
CONTRACT NO.: 07-215941

DISREGARD PRINTS BEARING EARLIER REVISION DATES

REVISION DATES

SHEET 23 OF 46

FILE => 53-3060-h-arch_10.dgn

USERNAME => s109858 DATE PLOTTED => 15-APR-2012 TIME PLOTTED => 07:01

DIST	COUNTY	ROUTE	POST MILES TOTAL PROJECT	SHEET No.	TOTAL SHEETS
07	LA	5	4.0/5.9	982	1597

REGISTERED CIVIL ENGINEER — DATE 1/31/12

4-9-12
PLANS APPROVAL DATE

REGISTERED PROFESSIONAL ENGINEER — H. Javier Chavez — No. 14073 — Exp. 03-31-13 — CIVIL — STATE OF CALIFORNIA

The State of California or its officers or agents shall not be responsible for the accuracy or completeness of electronic copies of this plan sheet.

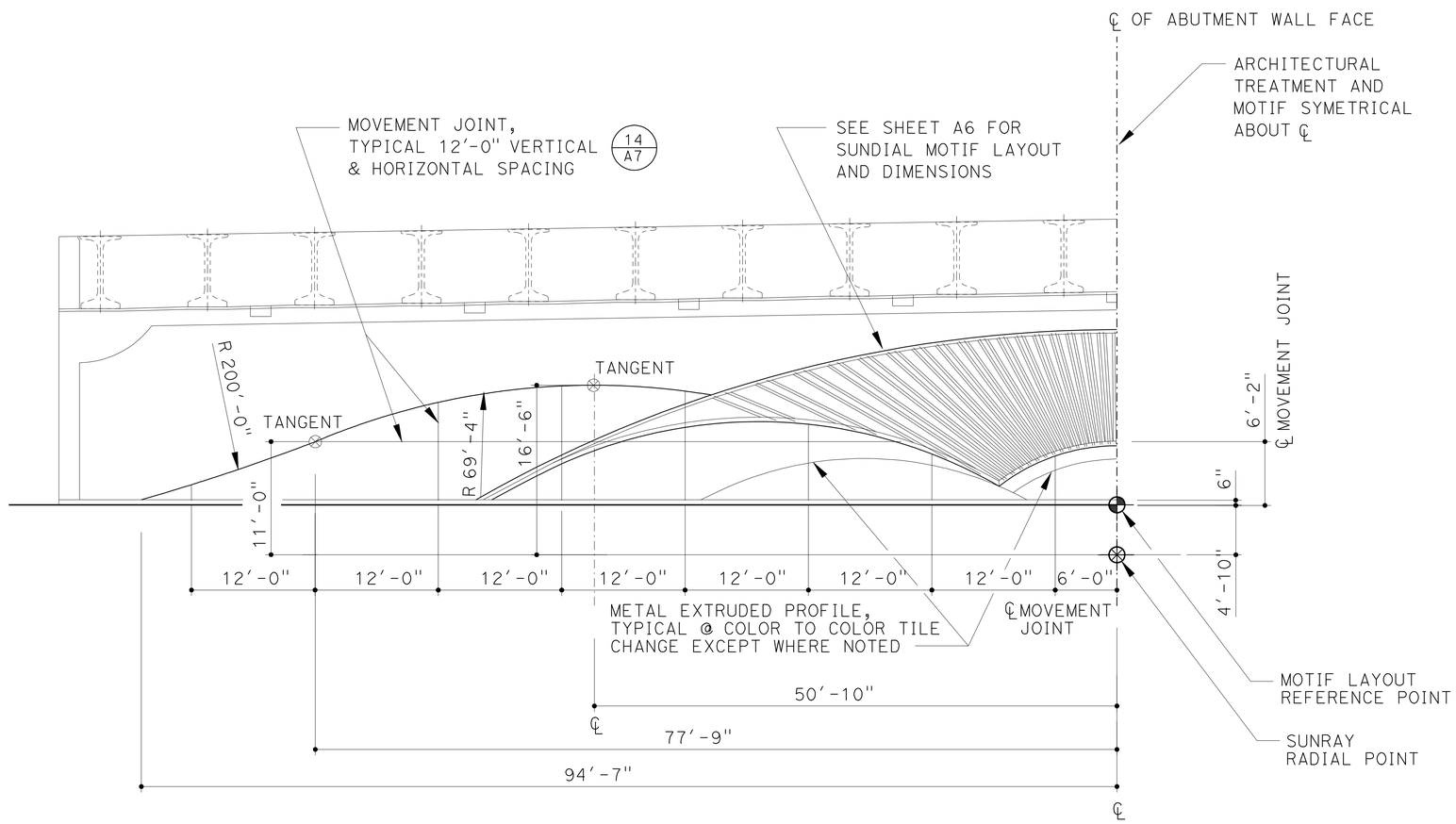

PARTIAL ELEVATION AT ABUTMENT 3

NO SCALE

A10

DESIGN	BY H. CHAVEZ	CHECKED S. HEATH	
DETAILS	BY S. HEATH	CHECKED H. CHAVEZ	
QUANTITIES	BY L. BAHIA	CHECKED D. MUWANES	

STATE OF CALIFORNIA
DEPARTMENT OF TRANSPORTATION

DIVISION OF ENGINEERING SERVICES
BRIDGE ARCHITECTURE AND AESTHETICS

BRIDGE NO. 53-3060
POST MILE 4.41

SAN ANTONIO DR UNDERCROSSING (REPLACE)
ARCHITECTURAL DETAILS No. 11

STRUCTURES DESIGN DETAIL SHEET (ENGLISH) (REV. 09-01-10)

ORIGINAL SCALE IN INCHES FOR REDUCED PLANS 0 1 2 3

UNIT: 3613
PROJECT NUMBER & PHASE: 0700001834 1
CONTRACT NO.: 07-215941

DISREGARD PRINTS BEARING EARLIER REVISION DATES

REVISION DATES

SHEET 24 OF 46

FILE => 53-3060-h-arch_11.dgn

USERNAME => s109858 DATE PLOTTED => 15-APR-2012 TIME PLOTTED => 07:02

DIST	COUNTY	ROUTE	POST MILES TOTAL PROJECT	SHEET No.	TOTAL SHEETS
07	LA	5	4.0/5.9	983	1597

REGISTERED CIVIL ENGINEER 1/31/12 DATE

4-9-12
PLANS APPROVAL DATE

REGISTERED PROFESSIONAL ENGINEER H. Javier Chavez No. 14073 Exp. 03-31-13 CIVIL STATE OF CALIFORNIA

The State of California or its officers or agents shall not be responsible for the accuracy or completeness of electronic copies of this plan sheet.

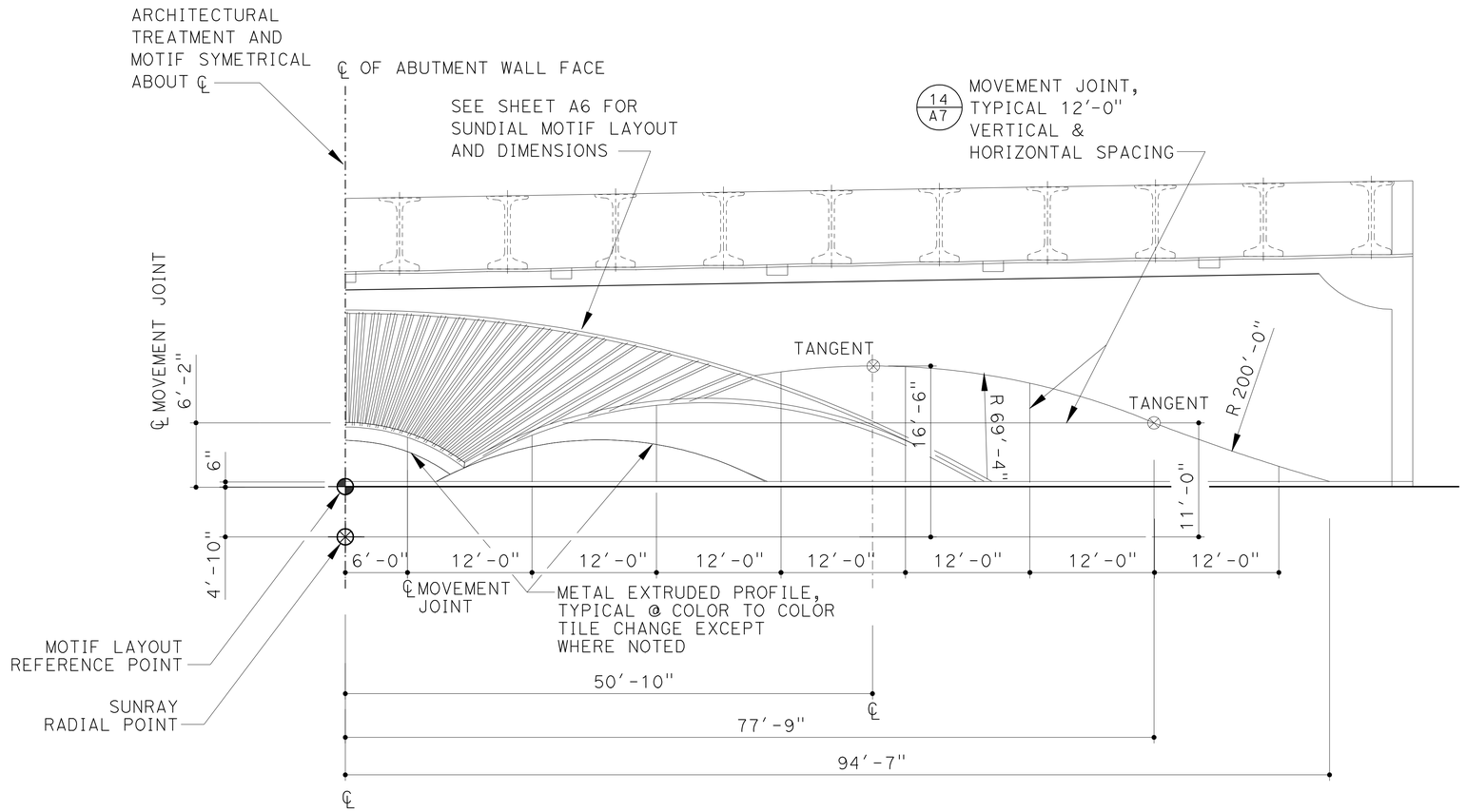

PARTIAL ELEVATION AT ABUTMENT 3

NO SCALE

A11

DESIGN	BY H. CHAVEZ	CHECKED S. HEATH	
DETAILS	BY S. HEATH	CHECKED H. CHAVEZ	
QUANTITIES	BY L. BAHIA	CHECKED D. MUWANES	

STATE OF CALIFORNIA
DEPARTMENT OF TRANSPORTATION

DIVISION OF ENGINEERING SERVICES
BRIDGE ARCHITECTURE AND AESTHETICS

BRIDGE NO. 53-3060
POST MILE 4.41

SAN ANTONIO DR UNDERCROSSING (REPLACE)
ARCHITECTURAL DETAILS No. 12

STRUCTURES DESIGN DETAIL SHEET (ENGLISH) (REV. 09-01-10)

ORIGINAL SCALE IN INCHES FOR REDUCED PLANS 0 1 2 3

UNIT: 3613
PROJECT NUMBER & PHASE: 0700001834 1
CONTRACT NO.: 07-215941

DISREGARD PRINTS BEARING EARLIER REVISION DATES

REVISION DATES

SHEET 25 OF 46

FILE => 53-3060-h-arch_12.dgn

USERNAME => s109858 DATE PLOTTED => 15-APR-2012 TIME PLOTTED => 07:02

DIST	COUNTY	ROUTE	POST MILES TOTAL PROJECT	SHEET No.	TOTAL SHEETS
07	LA	5	4.0/5.9	984	1597

REGISTERED CIVIL ENGINEER 1/31/12 DATE

4-9-12
PLANS APPROVAL DATE

REGISTERED PROFESSIONAL ENGINEER H. Javier Chavez No. 14073 Exp. 03-31-13 CIVIL STATE OF CALIFORNIA

The State of California or its officers or agents shall not be responsible for the accuracy or completeness of electronic copies of this plan sheet.

COLOR SCHEDULE

ITEM	FINISH	MANUFACTURER	COLOR	SIZE	NOTES
1	MFR	MARAZZI SISTEM A TILE	VERDE	12"x12"	MATTE FINISH
2	MFR	MARAZZI SISTEM A TILE	ROSSO	12"x12"	MATTE FINISH
3	MFR	MARAZZI SISTEM A TILE	BLU	12"x12"	MATTE FINISH
4	MFR	MARAZZI SISTEM A TILE	GIALLO	12"x12"	MATTE FINISH
5	MFR	MARAZZI SISTEM A TILE	ARANCIO	12"x12"	MATTE FINISH
6	MFR	AGROB BUCHTAL - CHROMA II TILE	5505-YELLOW 5	12"X24"	SILKY MATT FINISH
7	MFR	AGROB BUCHTAL - CHROMA II TILE	5505-YELLOW 5	30x1.6 cm	RADIAL CORNER #37111 - SEE DETAIL 16/A7
8	MFR	AGROB BUCHTAL - CHROMA II TILE	5533-BLUE 3	12"X24"	SILKY MATT FINISH
9	MFR	AGROB BUCHTAL - CHROMA II TILE	5533-BLUE 3	30x1.6 cm	RADIAL CORNER #37111 - SEE DETAIL 15/A7
A	MFR	SCHLUTER - METAL EXTRUDED PROFILE	EB 80D		SATIN ANODIZED ALUMINUM

COLOR SCHEDULE NOTES

1. THE CONTRACTOR SHALL VERIFY ALL CONTROLLING DIMENSIONS AND FIELD CONDITIONS PRIOR TO ORDERING OR FABRICATING ANY MATERIALS OR ASSEMBLIES FOR CONSTRUCTION
2. MANUFACTURER'S PRODUCTS LISTED HAVE BEEN INCLUDED AS EXAMPLES OF COLOR AND FINISH ONLY. MATCHING PRODUCTS BY OTHER MANUFACTURER'S MAY BE SUBMITTED FOR APPROVAL.
3. SEE THE SPECIAL PROVISIONS FOR THE APPROPRIATE COATING SYSTEM FOR EACH MATERIAL TO BE COATED.
4. ALL MATERIALS SHALL RECEIVE A JOB FINISH, UNLESS NOTED "NJF" = NO JOB FINISH.
5. ITEMS 1-8 ARE COLOR BODY PORCELAIN TILES (THROUGH - BODY COLOR TILE OPTIONAL)
6. THE COLOR AND FINISH OF ANY MATERIAL NOT LISTED WILL BE SELECTED BY THE ENGINEER.
7. TILE JOINTS 1/16" IN TILE AREAS 1 THROUGH 5
8. TILE JOINTS 1/8" IN TILE AREAS 6 THROUGH 9

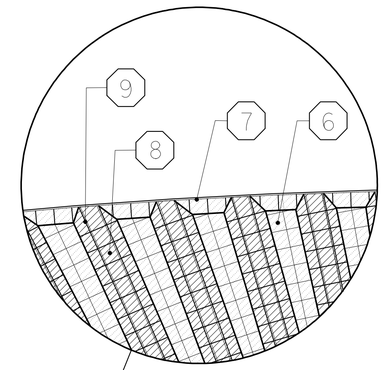

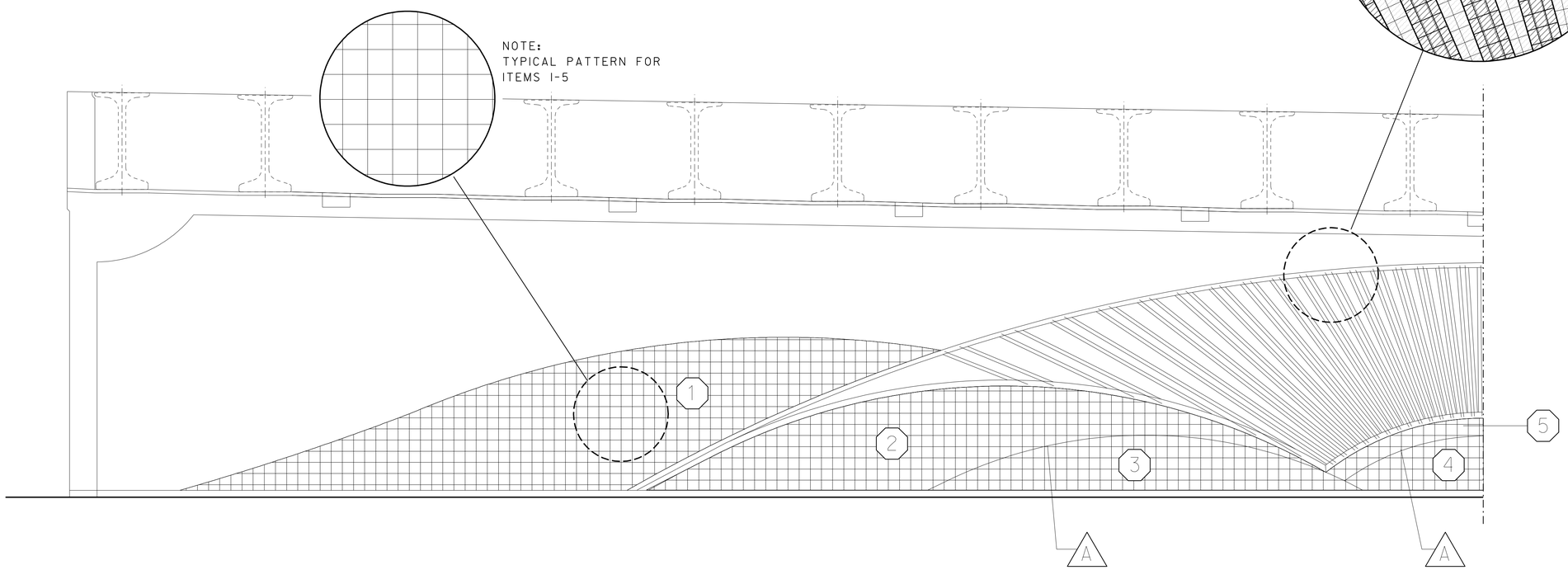

PARTIAL ELEVATION AT ABUTMENT 1

NO SCALE

NOTE:
COLORS AND FINISHES TYPICAL FOR MOTIF
SYMETRICAL ABOUT ℄ OF ABUTMENT WALL FACE

A12

DESIGN	BY H. CHAVEZ	CHECKED S. HEATH	
DETAILS	BY S. HEATH	CHECKED H. CHAVEZ	
QUANTITIES	BY L. BAHIA	CHECKED D. MUWANES	

STATE OF CALIFORNIA
DEPARTMENT OF TRANSPORTATION

DIVISION OF ENGINEERING SERVICES
BRIDGE ARCHITECTURE AND AESTHETICS

BRIDGE NO. 53-3060
POST MILE 4.41

SAN ANTONIO DR UNDERCROSSING (REPLACE)
ARCHITECTURAL DETAILS No. 13

STRUCTURES DESIGN DETAIL SHEET (ENGLISH) (REV. 09-01-10)

ORIGINAL SCALE IN INCHES FOR REDUCED PLANS 0 1 2 3

UNIT: 3613
PROJECT NUMBER & PHASE: 0700001834 1
CONTRACT NO.: 07-215941

DISREGARD PRINTS BEARING EARLIER REVISION DATES

REVISION DATES

SHEET 26 OF 46

FILE => 53-3060-h-arch_13.dgn

USERNAME => s109858 DATE PLOTTED => 15-APR-2012 TIME PLOTTED => 07:02

DIST	COUNTY	ROUTE	POST MILES TOTAL PROJECT	SHEET No.	TOTAL SHEETS
07	LA	5	4.0/5.9	985	1597

REGISTERED CIVIL ENGINEER 1/31/12 DATE

4-9-12
PLANS APPROVAL DATE

REGISTERED PROFESSIONAL ENGINEER H. Javier Chavez No. 14073 Exp. 03-31-13 CIVIL STATE OF CALIFORNIA

The State of California or its officers or agents shall not be responsible for the accuracy or completeness of electronic copies of this plan sheet.

COLOR SCHEDULE

ITEM	FINISH	MANUFACTURER	COLOR	SIZE	NOTES
1	MFR	MARAZZI SISTEM A TILE	VERDE	12"x12"	MATTE FINISH
2	MFR	MARAZZI SISTEM A TILE	ROSSO	12"x12"	MATTE FINISH
3	MFR	MARAZZI SISTEM A TILE	BLU	12"x12"	MATTE FINISH
4	MFR	MARAZZI SISTEM A TILE	GIALLO	12"x12"	MATTE FINISH
5	MFR	MARAZZI SISTEM A TILE	ARANCIO	12"x12"	MATTE FINISH
6	MFR	AGROB BUCHTAL - CHROMA II TILE	5505-YELLOW 5	12"X24"	SILKY MATT FINISH
7	MFR	AGROB BUCHTAL - CHROMA II TILE	5505-YELLOW 5	30x1.6 cm	RADIAL CORNER #37111 - SEE DETAIL 16/A7
8	MFR	AGROB BUCHTAL - CHROMA II TILE	5533-BLUE 3	12"X24"	SILKY MATT FINISH
9	MFR	AGROB BUCHTAL - CHROMA II TILE	5533-BLUE 3	30x1.6 cm	RADIAL CORNER #37111 - SEE DETAIL 15/A7
A	MFR	SCHLUTER - METAL EXTRUDED PROFILE	EB 80D		SATIN ANODIZED ALUMINUM

COLOR SCHEDULE NOTES

1. THE CONTRACTOR SHALL VERIFY ALL CONTROLLING DIMENSIONS AND FIELD CONDITIONS PRIOR TO ORDERING OR FABRICATING ANY MATERIALS OR ASSEMBLIES FOR CONSTRUCTION
2. MANUFACTURER'S PRODUCTS LISTED HAVE BEEN INCLUDED AS EXAMPLES OF COLOR AND FINISH ONLY. MATCHING PRODUCTS BY OTHER MANUFACTURER'S MAY BE SUBMITTED FOR APPROVAL.
3. SEE THE SPECIAL PROVISIONS FOR THE APPROPRIATE COATING SYSTEM FOR EACH MATERIAL TO BE COATED.
4. ALL MATERIALS SHALL RECEIVE A JOB FINISH, UNLESS NOTED "NJF" = NO JOB FINISH.
5. ITEMS 1-8 ARE COLOR BODY PORCELAIN TILES (THROUGH - BODY COLOR TILE OPTIONAL)
6. THE COLOR AND FINISH OF ANY MATERIAL NOT LISTED WILL BE SELECTED BY THE ARCHITECT.
7. TILE JOINTS 1/16" IN TILE AREAS 1 THROUGH 5
8. TILE JOINTS 1/8" IN TILE AREAS 6 THROUGH 9

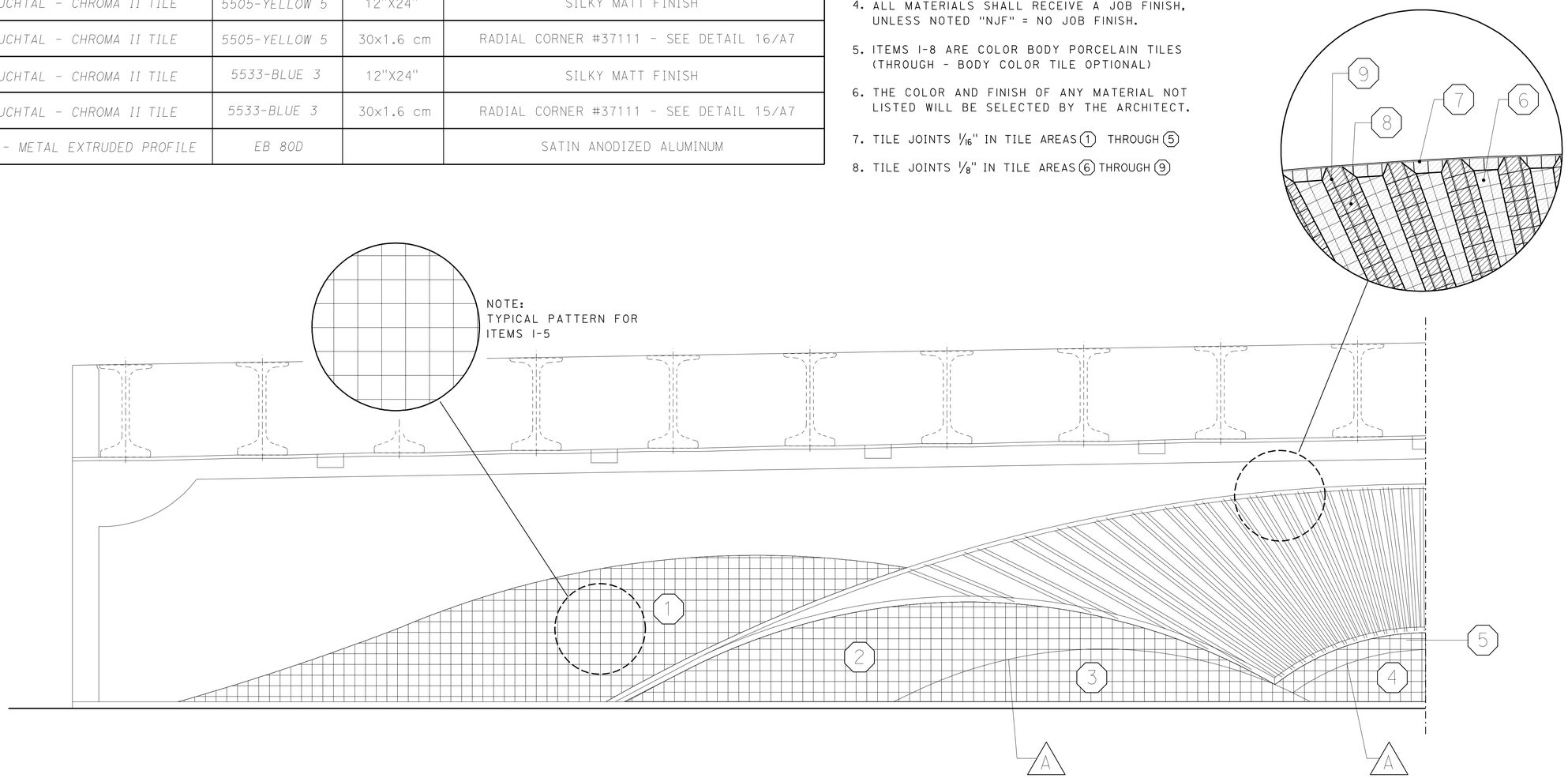

PARTIAL ELEVATION AT ABUTMENT 3

NO SCALE

NOTE:
COLORS AND FINISHES TYPICAL FOR MOTIF
SYMETRICAL ABOUT ℄ OF ABUTMENT WALL FACE

A13

	BY	CHECKED
DESIGN	H. CHAVEZ	S. HEATH
DETAILS	S. HEATH	H. CHAVEZ
QUANTITIES	L. BAHIA	D. MUWANES

STATE OF CALIFORNIA
DEPARTMENT OF TRANSPORTATION

DIVISION OF ENGINEERING SERVICES
BRIDGE ARCHITECTURE AND AESTHETICS

BRIDGE NO. 53-3060
POST MILE 4.41

SAN ANTONIO DR UNDERCROSSING (REPLACE)
ARCHITECTURAL DETAILS No. 14

STRUCTURES DESIGN DETAIL SHEET (ENGLISH) (REV. 09-01-10)

ORIGINAL SCALE IN INCHES FOR REDUCED PLANS 0 1 2 3

UNIT: 3613
PROJECT NUMBER & PHASE: 0700001834 1
CONTRACT NO.: 07-215941

DISREGARD PRINTS BEARING EARLIER REVISION DATES

REVISION DATES

SHEET 27 OF 46

FILE => 53-3060-h-arch_14.dgn

USERNAME => s109858 DATE PLOTTED => 15-APR-2012 TIME PLOTTED => 07:02

DIST	COUNTY	ROUTE	POST MILES TOTAL PROJECT	SHEET No.	TOTAL SHEETS
07	LA	5	4.0/5.9	986	1597

REGISTERED CIVIL ENGINEER 12-09-11 DATE

4-9-12
PLANS APPROVAL DATE

REGISTERED PROFESSIONAL ENGINEER DAVID FADI NASH MUWANES No. C77659 Exp. 06-30-13 CIVIL STATE OF CALIFORNIA

The State of California or its officers or agents shall not be responsible for the accuracy or completeness of electronic copies of this plan sheet.

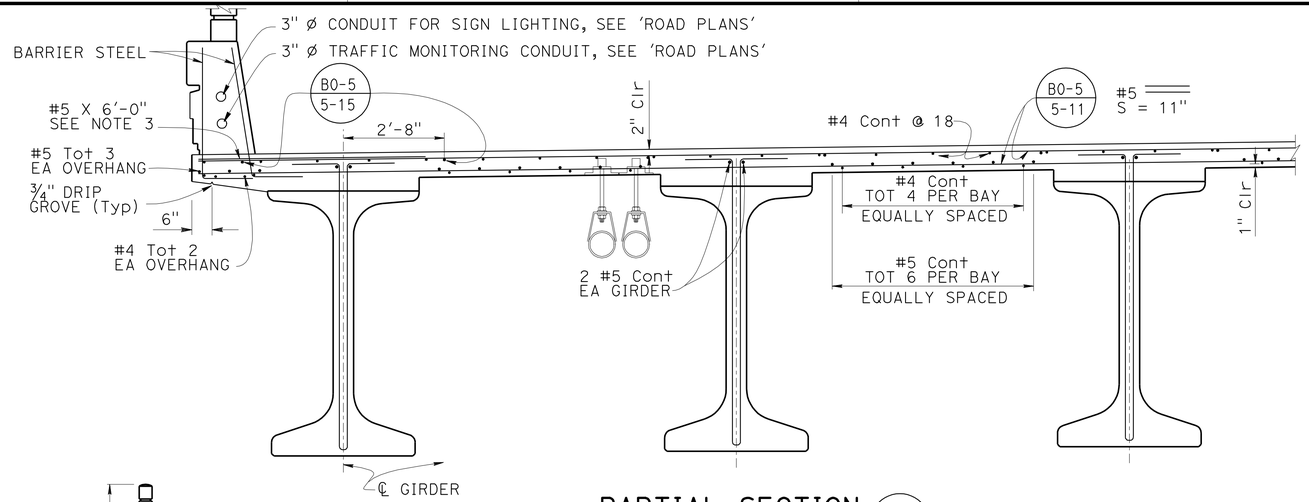

PARTIAL SECTION B14-3

1/2" = 1'-0"

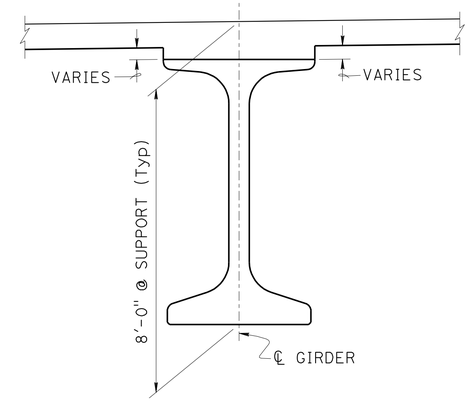

HAUNCH DETAIL

1/2" = 1'-0"

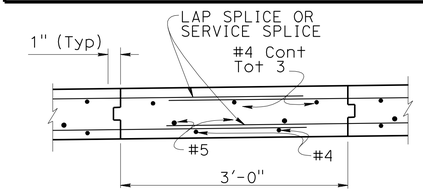

CLOSURE POUR DETAIL

1" = 1'-0"

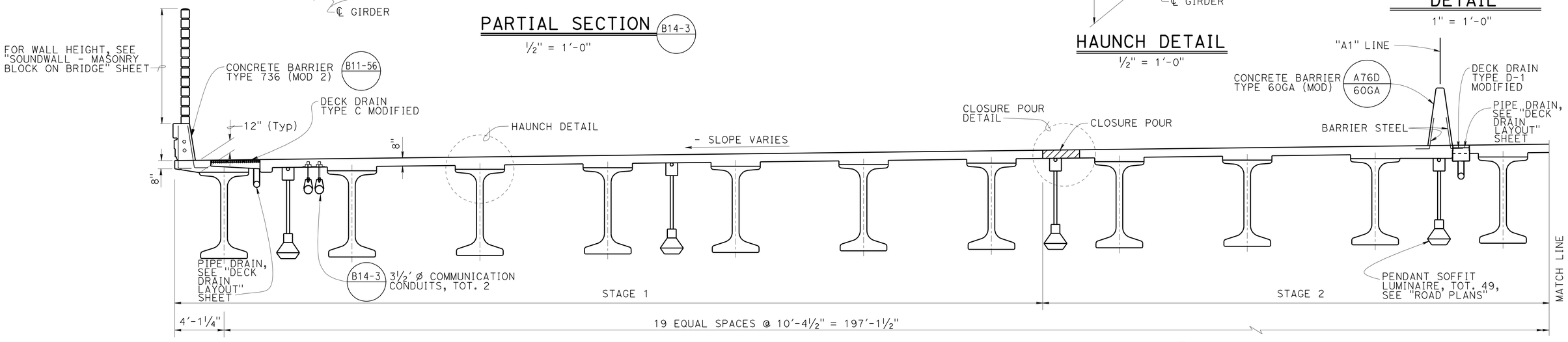

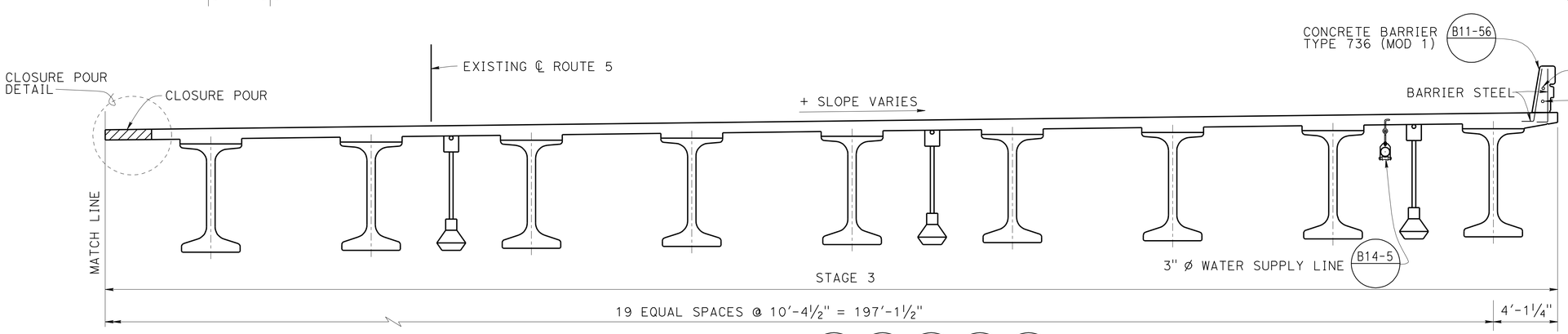

TYPICAL SECTION A76D B0-5 B11-56 B14-3 B14-5

1/4" = 1'-0"

NOTES:

1. See 'Road Plans' for Bridge Mounted Sign and Electrical Conduit
2. For 'Type 736 (Mod 1)' and 'Type 736 (Mod 2)' see "BARRIER ARCHITECTURAL DETAILS NO. 1 and NO. 2" sheets
3. For 'Concrete Barrier Type 60GA (Mod) details, see "BARRIER ARCHITECTURAL DETAILS NO. 3" sheet
4. Bundle Additional #5 Transverse Bar in the Overhang for a distance of 5 feet after BB and before EB
5. Closure Pour shall not be placed until 15 days after adjacent deck pours are completed

	BY	CHECKED
DESIGN	D. MUWANES	E. MATSUMOTO
DETAILS	L. XIONG/Y. FENG	D. MUWANES
QUANTITIES	L. BAHIA	D. MUWANES

STATE OF CALIFORNIA
DEPARTMENT OF TRANSPORTATION

DIVISION OF ENGINEERING SERVICES
STRUCTURE DESIGN
DESIGN BRANCH 14

BRIDGE NO. 53-3060
POST MILE 4.41

SAN ANTONIO DR UNDERCROSSING (REPLACE)

TYPICAL SECTION

STRUCTURES DESIGN DETAIL SHEET (ENGLISH) (REV. 09-01-10)

ORIGINAL SCALE IN INCHES FOR REDUCED PLANS 0 1 2 3

UNIT: 3613
PROJECT NUMBER & PHASE: 07000018341
CONTRACT NO.: 07-215941

DISREGARD PRINTS BEARING EARLIER REVISION DATES

REVISION DATES 03-22-12 03-08-12 03-12-12 03-13-12

SHEET 28 OF 46

FILE => 53-3060-k-ts.dgn

USERNAME => s109858 DATE PLOTTED => 15-APR-2012 TIME PLOTTED => 07:02

DIST	COUNTY	ROUTE	POST MILES TOTAL PROJECT	SHEET No.	TOTAL SHEETS
07	LA	5	4.0/5.9	987	1597

REGISTERED CIVIL ENGINEER 12-09-11 DATE

4-9-12
PLANS APPROVAL DATE

REGISTERED PROFESSIONAL ENGINEER DAVID FADI NASH MUWANES No. C77659 Exp. 06-30-13 CIVIL STATE OF CALIFORNIA

The State of California or its officers or agents shall not be responsible for the accuracy or completeness of electronic copies of this plan sheet.

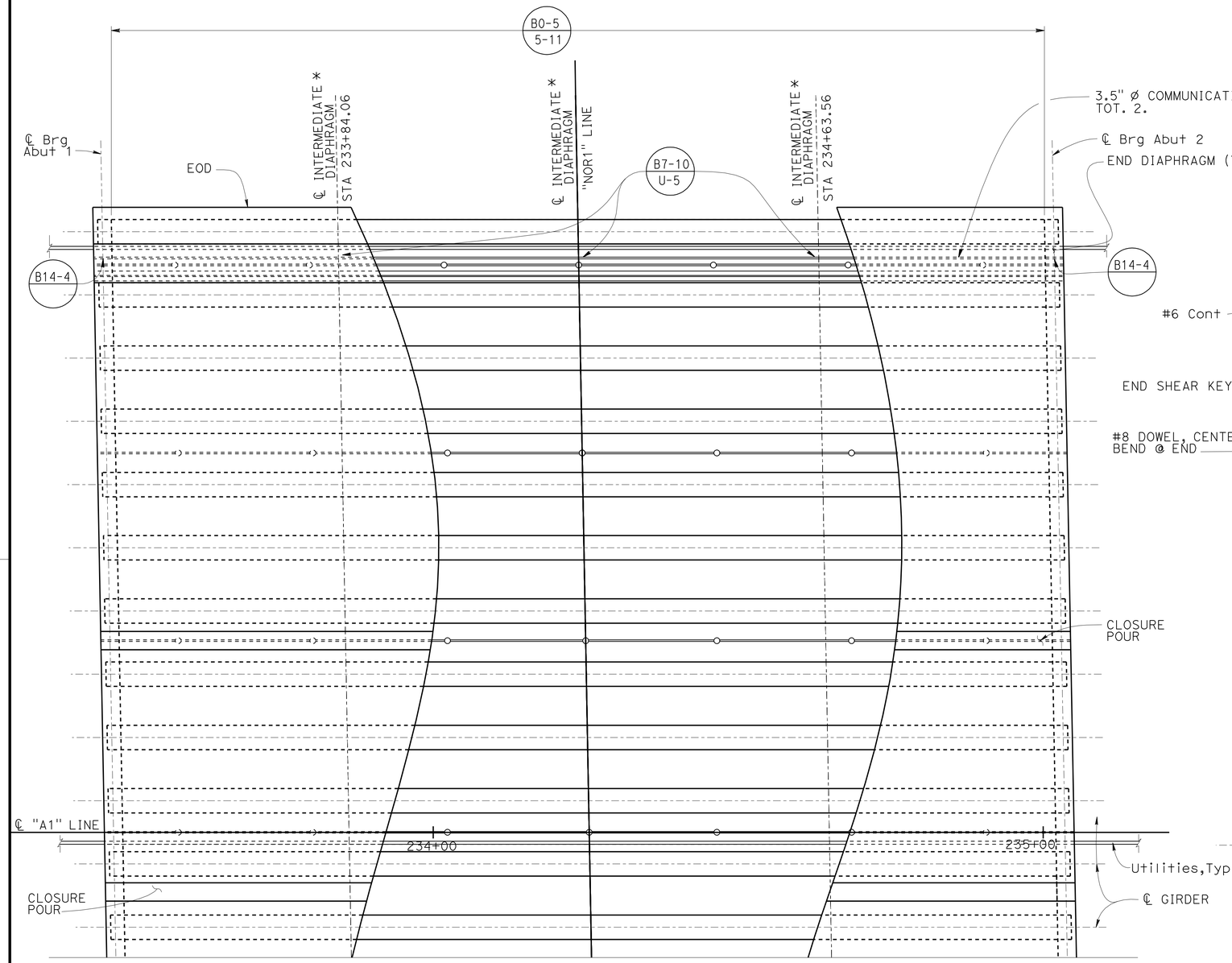

PLAN
1" = 10'-0"
B0-5 B7-10 B14-4

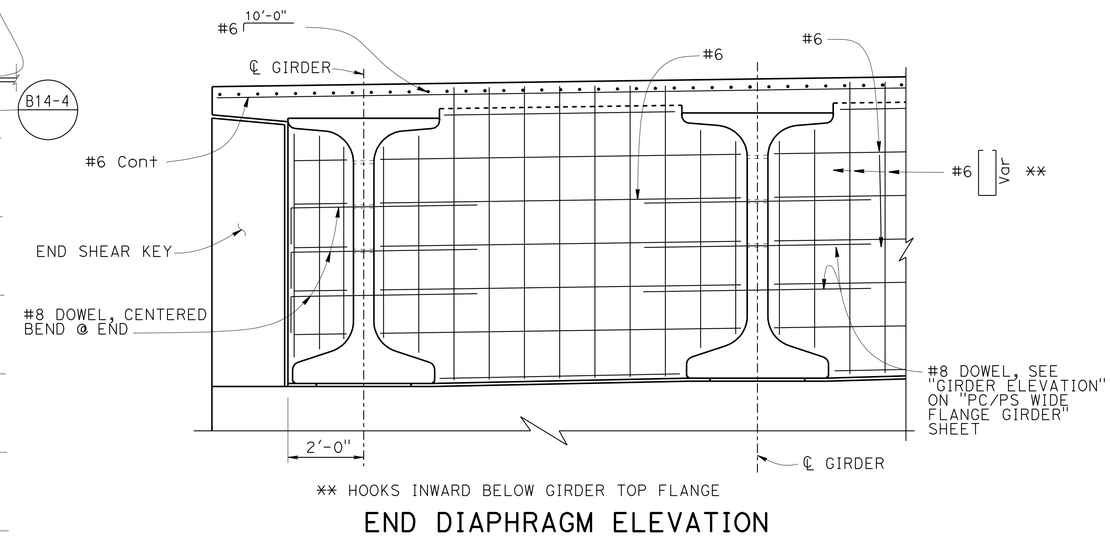

** HOOKS INWARD BELOW GIRDER TOP FLANGE

END DIAPHRAGM ELEVATION
1/2" = 1'-0"

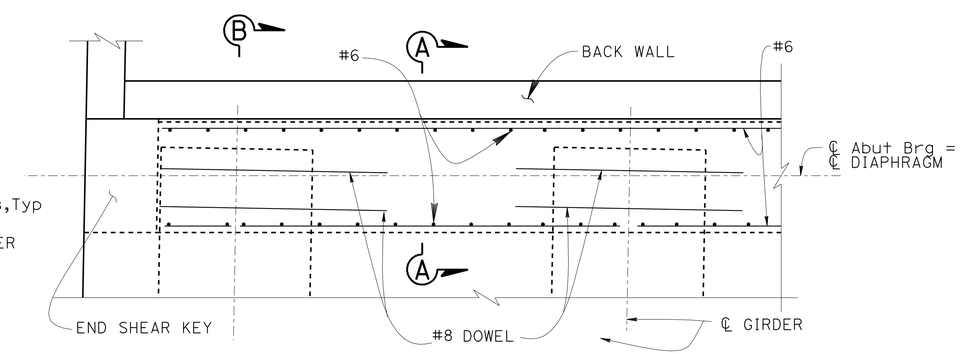

END DIAPHRAGM PLAN
1/2" = 1'-0"

LEGEND:

○ Indicates Pendant Soffit Luminaire, see 'Road Plans'

NOTES:

1. For location of Pendant Soffit Luminares, see 'Road Plans'
2. For 'Section A-A' and 'Section B-B', see "GIRDER LAYOUT NO. 2" sheet

* Place Intermediate Diaphragms parallel with "NOR 1". For Intermediate Diaphragm Details, see"PC/PS WIDE-FLANGE GIRDER (MISCELLANEOUS DETAILS)" sheet

	BY	CHECKED
DESIGN	D. MUWANES	E. MATSUMOTO
DETAILS	L. XIONG /Y. FENG /W. Z.	D. MUWANES
QUANTITIES	L. BAHIA	D. MUWANES

STATE OF CALIFORNIA
DEPARTMENT OF TRANSPORTATION

DIVISION OF ENGINEERING SERVICES
STRUCTURE DESIGN
DESIGN BRANCH 14

BRIDGE NO. 53-3060
POST MILE 4.41

SAN ANTONIO DR UNDERCROSSING (REPLACE)
GIRDER LAYOUT NO. 1

STRUCTURES DESIGN DETAIL SHEET (ENGLISH) (REV. 09-01-10)

ORIGINAL SCALE IN INCHES FOR REDUCED PLANS 0 1 2 3

UNIT: 3613
PROJECT NUMBER & PHASE: 07000018341
CONTRACT NO.: 07-215941

DISREGARD PRINTS BEARING EARLIER REVISION DATES

REVISION DATES: 03-06-12 03-22-12 12-12-11 03-07-12

SHEET 29 OF 46

FILE => 53-3060-1-gio_1.dgn

USERNAME => s109858 DATE PLOTTED => 15-APR-2012 TIME PLOTTED => 07:02

DIST	COUNTY	ROUTE	POST MILES TOTAL PROJECT	SHEET No.	TOTAL SHEETS
07	LA	5	4.0/5.9	988	1597

REGISTERED CIVIL ENGINEER 12-09-11 DATE

4-9-12
PLANS APPROVAL DATE

REGISTERED PROFESSIONAL ENGINEER
DAVID FADI NASH MUWANES
No. C77659
Exp. 06-30-13
CIVIL
STATE OF CALIFORNIA

The State of California or its officers or agents shall not be responsible for the accuracy or completeness of electronic copies of this plan sheet.

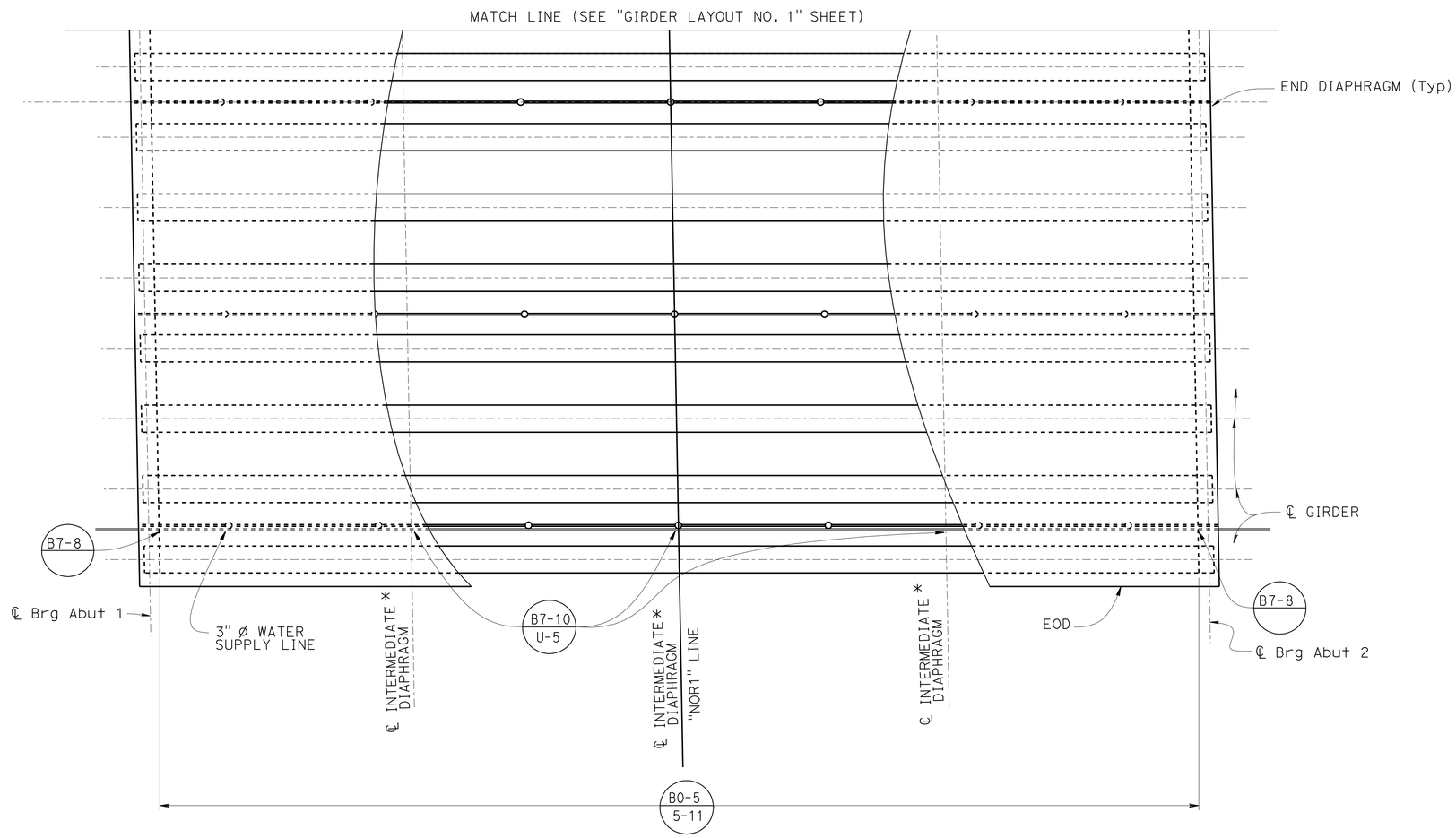

PLAN
1" = 10'-0"

B0-5 B7-8 B7-10

LEGEND:

o Indicates Pendant Soffit Luminaire, see 'Road Plans'

NOTES:

1. For location of 'Section A-A' and 'Section B-B', see "GIRDER LAYOUT NO. 1" sheet

* Place Intermediate Diaphragms parallel with "NOR1" Line. For Intermediate Diaphragm Details, see "PC/PS WIDE-FLANGE GIRDER (MISCELLANEOUS DETAILS)" sheet

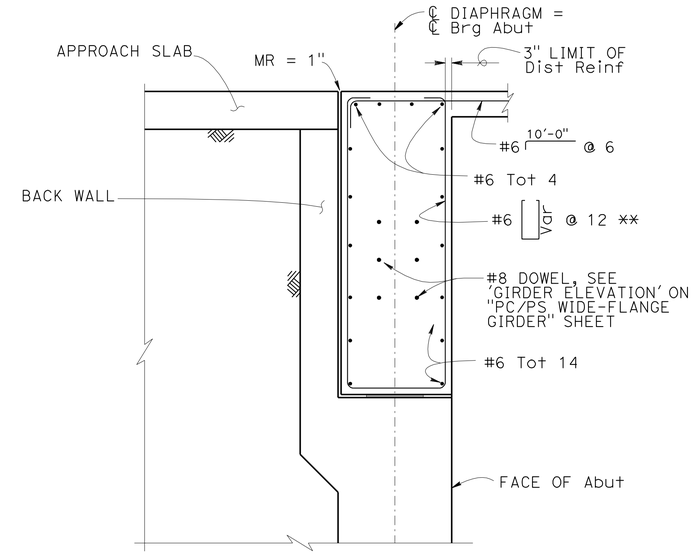

SECTION A-A
1/2" = 1'-0"

** HOOKS INWARD BELOW GIRDER TOP FLANGE.

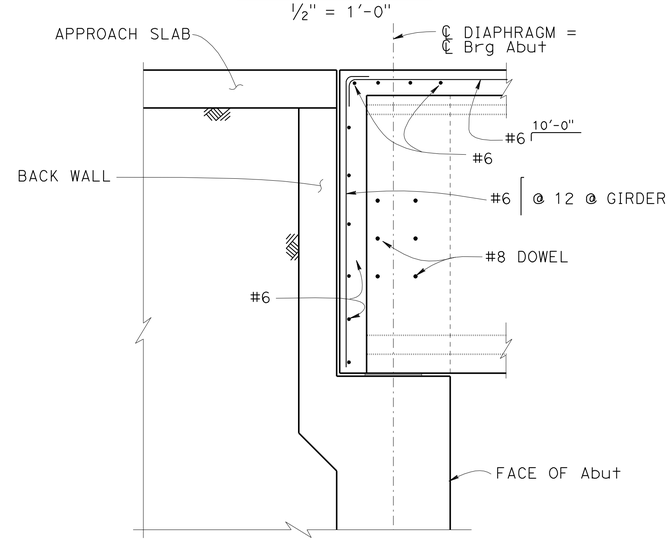

SECTION B-B
1/2" = 1'-0"

DESIGN	BY D. MUWANES	CHECKED E. MATSUMOTO	
DETAILS	BY L. XIONG / Y. FENG	CHECKED D. MUWANES	
QUANTITIES	BY L. BAHIA	CHECKED D. MUWANES	

STATE OF CALIFORNIA
DEPARTMENT OF TRANSPORTATION

DIVISION OF ENGINEERING SERVICES
STRUCTURE DESIGN
DESIGN BRANCH 14

BRIDGE NO. 53-3060
POST MILE 4.41

SAN ANTONIO DR UNDERCROSSING (REPLACE)

GIRDER LAYOUT NO. 2

STRUCTURES DESIGN DETAIL SHEET (ENGLISH) (REV. 09-01-10)

ORIGINAL SCALE IN INCHES FOR REDUCED PLANS 0 1 2 3

UNIT: 3613
PROJECT NUMBER & PHASE: 07000018341
CONTRACT NO.: 07-215941

DISREGARD PRINTS BEARING EARLIER REVISION DATES

REVISION DATES: 03-07-12 03-08-12 03-22-12 12-12-12

SHEET 30 OF 46

FILE => 53-3060-1-gio_2.dgn

USERNAME => s109858 DATE PLOTTED => 15-APR-2012 TIME PLOTTED => 07:02

DIST	COUNTY	ROUTE	POST MILES TOTAL PROJECT	SHEET No.	TOTAL SHEETS
07	LA	5	4.0/5.9	989	1597

REGISTERED CIVIL ENGINEER 12-09-11 DATE

4-9-12
PLANS APPROVAL DATE

REGISTERED PROFESSIONAL ENGINEER DAVID FADI NASH MUWANES No. C77659 Exp. 06-30-13 CIVIL STATE OF CALIFORNIA

The State of California or its officers or agents shall not be responsible for the accuracy or completeness of electronic copies of this plan sheet.

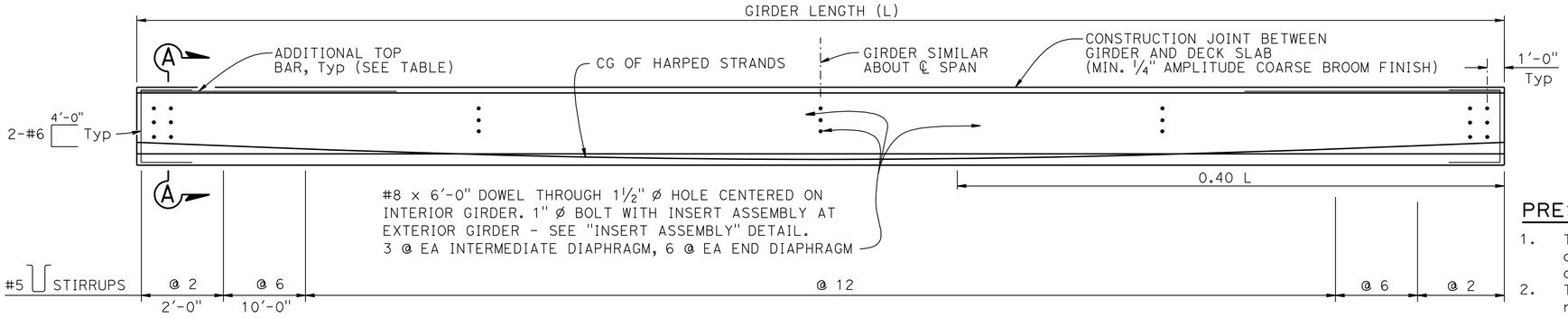

GIRDER ELEVATION

NOTE:
Girder ends to be cast such that a level surface is provided at bearing pads

LOCATION	GIRDER LENGTH (L)	GIRDER DEPTH (D)	NUMBER OF 0.6" ø STRANDS	JACKING FORCE (P)	CONCRETE STRENGTH (ksi)		MIDSPAN DEAD LOAD DEFLECTION (In)		ADDITIONAL TOP BAR (EACH END)
					f'ci	f'c	DECK	RAIL	
ALL GIRDERS	158.0'	84"	62	2724.4 kips (43.94 kips/STRAND)	6.5	8.5	2.43	0.11	#8 x 8' Tot 2

PRESTRESSING NOTES

1. The Jacking Force (P) is the jacking force required at the point of control along the span. The jacking force does not include any fabrication specific losses.
2. The maximum tensile stress in the prestressing steel upon release shall not exceed 75% of the specified minimum ultimate tensile strength of the prestressing steel.
3. The maximum temporary tensile stress (jacking stress) in the prestressing steel shall not exceed 80% of the specified minimum ultimate tensile strength of the prestressing steel.
4. Concrete strength:
   f'ci is at time of initial stressing
   f'c is at 28 days
5. Deflection components are informational and will be used to set screed line elevations.
6. Screed line elevations for deck concrete will be determined by the Engineer.
7. Prestressing strand shall be 270 ksi low relaxation.
8. Strands shall be placed as low as possible in the strand template and symmetrical about ℄ Girder.
9. Approval by Engineer is required for deviation.
10. Strands may be bundled in groups consisting of 3 vertically, 2 horizontally and seperated at the ends.
11. The minimum distance between groups or individual strands is 2" for 0.6" ø strand, measured between centers of adjacent strands.
12. There shall be a minimum of two hold downs per girder for the prestressing.

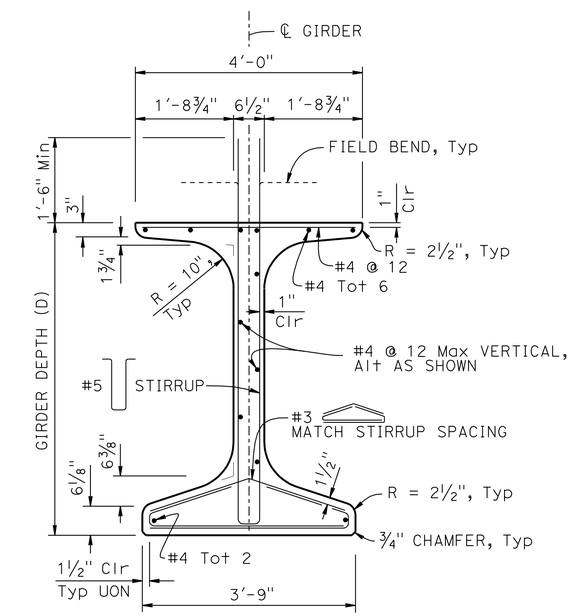

TYPICAL GIRDER SECTION

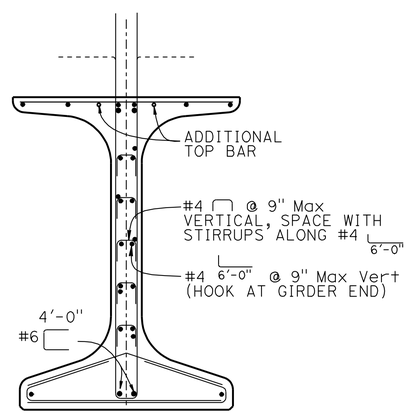

NOTE:
FOR DETAILS NOT SHOWN, SEE 'TYPICAL GIRDER SECTION' DETAIL

SECTION A-A

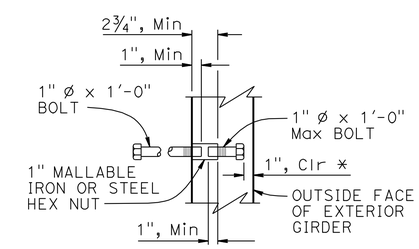

* DIMENSION MAY BE INCREASED WHEN INSERT ASSEMBLY IS USED AT END BLOCK

INSERT ASSEMBLY

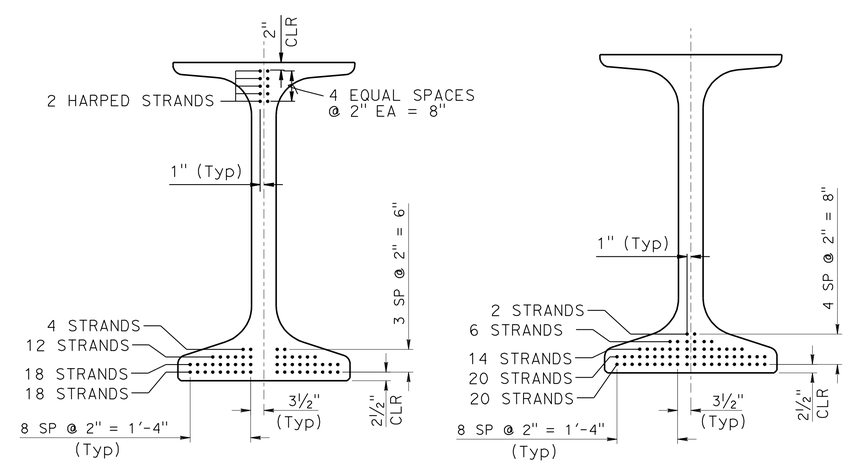

@ GIRDER ENDS @ DRAPE PT.

STRAND TEMPLATE

NOTE: For "WELDED WIRE REINFORCEMENT (WWR) ALTERNATIVE", see "PC/PS WIDE-FLANGE GIRDER (MISCELLANEOUS DETAILS)" sheet

	BY	CHECKED
DESIGN	D. MUWANES	E. MATSUMOTO
DETAILS	L. XIONG/ W. ZHANG	D. MUWANES
QUANTITIES	L. BAHIA	D.MUWANES

STATE OF CALIFORNIA
DEPARTMENT OF TRANSPORTATION

DIVISION OF ENGINEERING SERVICES
STRUCTURE DESIGN
DESIGN BRANCH 14

BRIDGE NO. 50-3060
POST MILE 4.41

SAN ANTONIO DR UNDERCROSSING (REPLACE)
PC/PS WIDE-FLANGE GIRDER

STRUCTURES DESIGN DETAIL SHEET (ENGLISH) (REV. 09-01-10)

ORIGINAL SCALE IN INCHES FOR REDUCED PLANS 0 1 2 3

UNIT: 3613
PROJECT NUMBER & PHASE: 07000018341
CONTRACT NO.: 07-215941

DISREGARD PRINTS BEARING EARLIER REVISION DATES

REVISION DATES 4-5-12

SHEET 31 OF 46

FILE => 53-3060-s-wfg.dgn

USERNAME => s109858 DATE PLOTTED => 15-APR-2012 TIME PLOTTED => 07:02

DIST	COUNTY	ROUTE	POST MILES TOTAL PROJECT	SHEET No.	TOTAL SHEETS
07	LA	5	4.0/5.9	990	1597

REGISTERED CIVIL ENGINEER 12-09-11 DATE

4-9-12
PLANS APPROVAL DATE

REGISTERED PROFESSIONAL ENGINEER
DAVID FADI NASH MUWANES
No. C77659
Exp. 06-30-13
CIVIL
STATE OF CALIFORNIA

The State of California or its officers or agents shall not be responsible for the accuracy or completeness of electronic copies of this plan sheet.

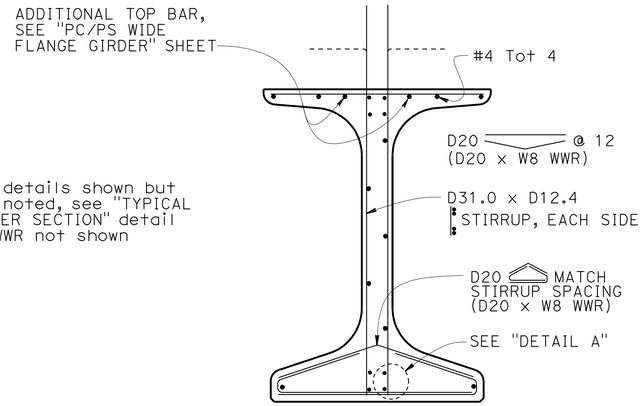

NOTES:
1. For details shown but not noted, see "TYPICAL GIRDER SECTION" detail
2. W8 WWR not shown

WELDED WIRE REINFORCEMENT (WWR) ALTERNATIVE

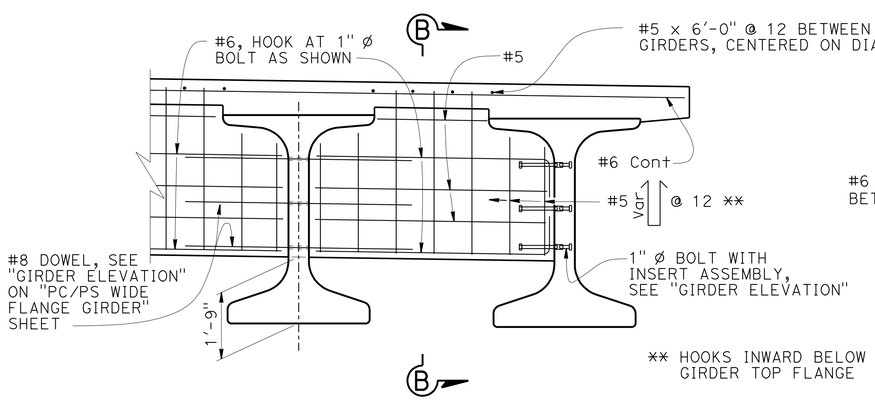

** HOOKS INWARD BELOW GIRDER TOP FLANGE

INTERMEDIATE DIAPHRAGM

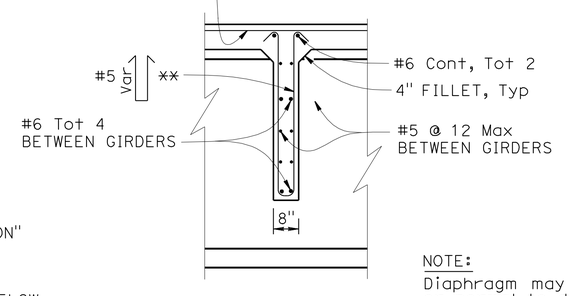

NOTE:
Diaphragm may be vertical or normal to deck grade

SECTION B-B

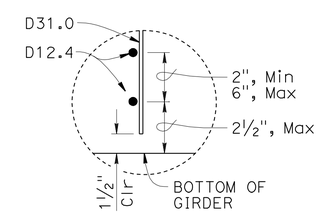

DETAIL A

NOTES:
1. Bottom of stirrup WWR detail shown, top similar
2. Longitudinal wire area shall be 40% or greater of vertical deformed wire's area

NO SCALE

DESIGN	BY D. MUWANES	CHECKED E. MATSUMOTO	
DETAILS	BY L. XIONG/ W. ZHANG	CHECKED D. MUWANES	
QUANTITIES	BY L. BAHIA	CHECKED D.MUWANES	

STATE OF CALIFORNIA
DEPARTMENT OF TRANSPORTATION

DIVISION OF ENGINEERING SERVICES
STRUCTURE DESIGN
DESIGN BRANCH 14

BRIDGE NO. 50-3060
POST MILE 4.41

SAN ANTONIO DR UNDERCROSSING (REPLACE)
PC/PS WIDE-FLANGE GIRDER (MISCELLANEOUS DETAILS)

STRUCTURES DESIGN DETAIL SHEET (ENGLISH) (REV. 09-01-10)

ORIGINAL SCALE IN INCHES FOR REDUCED PLANS 0 1 2 3

UNIT: 3613
PROJECT NUMBER & PHASE: 07000018341
CONTRACT NO.: 07-215941

DISREGARD PRINTS BEARING EARLIER REVISION DATES

REVISION DATES 4-5-12

SHEET 32 OF 46

FILE => 53-3060-s-wfg_misc.dgn

USERNAME => s103858 DATE PLOTTED => 15-APR-2012 TIME PLOTTED => 07:03

DIST	COUNTY	ROUTE	POST MILES TOTAL PROJECT	SHEET No.	TOTAL SHEETS
07	LA	5	4.0/5.9	991	1597

REGISTERED CIVIL ENGINEER — DATE 12-09-11

4-9-12
PLANS APPROVAL DATE

REGISTERED PROFESSIONAL ENGINEER — DAVID FADI NASH MUWANES — No. C77659 — Exp. 06-30-13 — CIVIL — STATE OF CALIFORNIA

The State of California or its officers or agents shall not be responsible for the accuracy or completeness of electronic copies of this plan sheet.

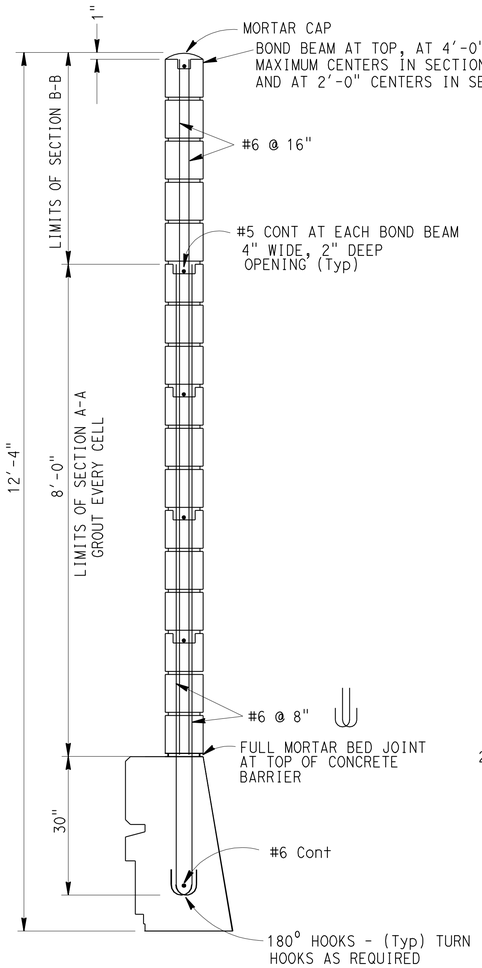

SOUND WALL SECTION

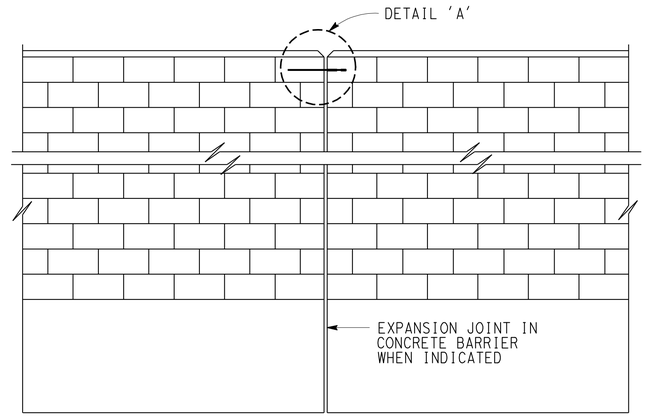

ALIGNMENT KEY DETAIL

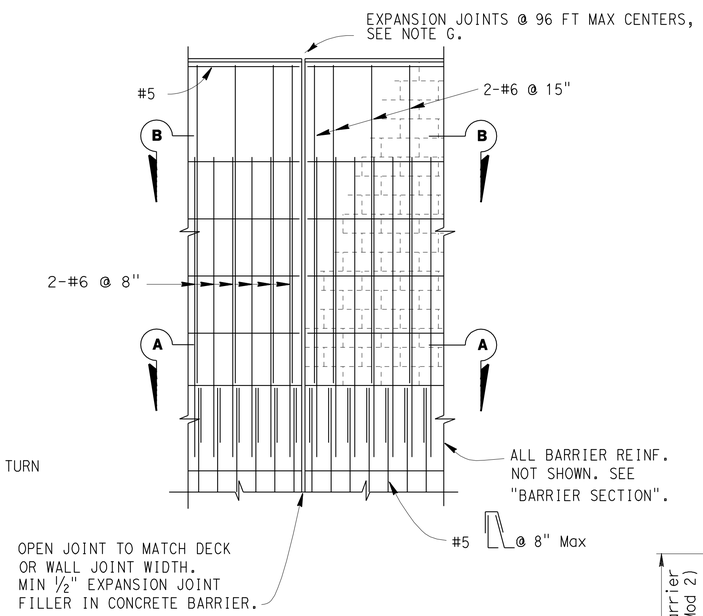

DECK AND WALL JOINT ELEVATION

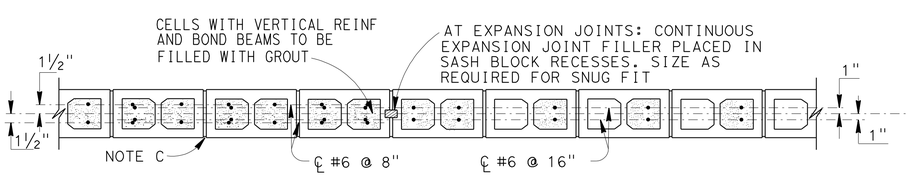

SECTION A-A

SECTION B-B

DESIGN NOTES

DESIGN

Uniform Building Code,1997 Edition and the Bridge Design Specifications.

DESIGN WIND LOAD

37 Psf

DESIGN SEISMIC LOAD

2.0 Dead load

REINFORCED CONCRETE

f'c = 3.6 ksi
fy = 60 ksi

CONCRETE MASONRY

HIGH STRENGTH

f'm = 2500 psi
fy = 60 ksi

LOAD FACTORS AND LOAD COMBINATIONS

Load Factor Design (LFD)

Group A: βD +1.7 E + 1.7 SC
Group B: βD +1.7 E + 1.3 W
Group C: βD +1.3 E + 1.0 EQE
Group D: βD +1.3 E + 1.0 EQD
Group E: βD +1.1 E + 0.85 (EQE + EQD)

Where : β = 0.9 or 1.2, whichever controls in design
D = Dead load
E = Lateral earth pressure
SC = Live load surcharge
W = Wind load
EQD = Seismic dead load
EQE = Seismic earth load

STRENGTH REDUCTION FACTORS, Ø

Reinforced Concrete :

For flexure ..... Ø = 0.90
For shear ..... Ø = 0.85

Concrete masonry:

For flexure ..... Ø = 0.80
For shear ..... Ø = 0.60

Note 1:

Barrier, Deck and Concrete Masonry are designed by the Strength Design Method.

GENERAL NOTES

Note A: For type of block, type of block bond and joint finish, see other sheets.

Note B: When blocks are laid in stacked bond, ladder type, galvanized joint reinforcement shall be provided. A minimum of 2 - 12 gauge wires continuous at 4'-0" maximum to be used. Locate reinforcement in joints that are at the approximate midpoint between bond beams.

Note C: Horizontal joints shall be tooled concave or may be weathered. Vertical joints shall be tooled concave or may be raked.

Note D: All masonry to be high strength unless otherwise noted.

Note E: Concrete to be used for barrier shall contain not less than 590 pounds of cementitious material per cubic yard.

Note F: Expansion joints in concrete barrier and masonry block to match deck joints and at ends of wing walls.

Note G: Expansion joints in Sound Wall (Masonry Block) shall be at each support, center of span, and at ends of each wingwall.

Note H: For dimesions and reinforcement not shown see "Typical Section" sheet.

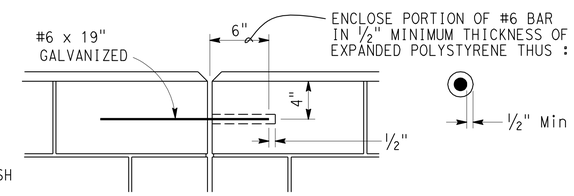

DETAIL A

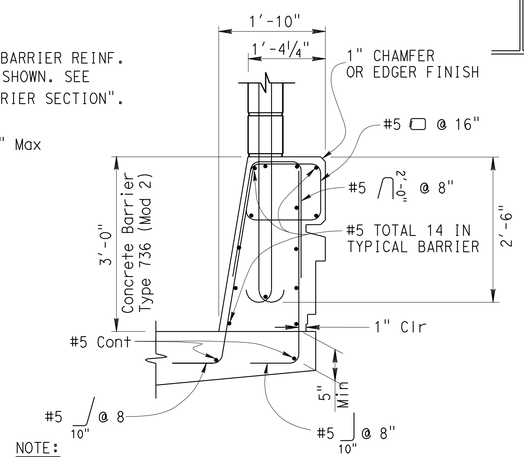

NOTE:

FOR DIMENSIONS AND REINFORCEMENT NOT SHOWN, SEE STD. PLAN B11-56 AND "BARRIER ARCHITECTURAL DETAILS" SHEETS.

BARRIER SECTION ON BRIDGE

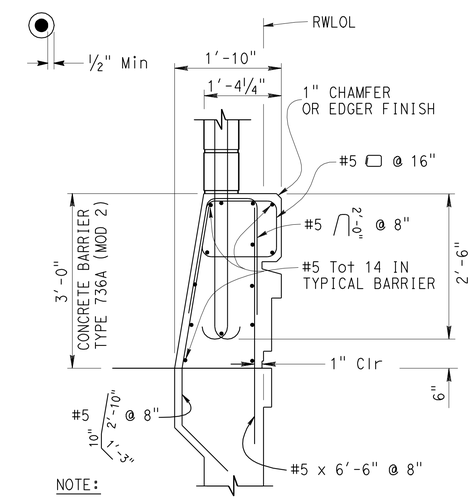

NOTE:

FOR DIMENSIONS AND REINFORCEMENT NOT SHOWN, SEE STD. PLAN B11-56 AND "BARRIER ARCHITECTUIRAL DETAILS" SHEETS.

BARRIER SECTION ON RETAINING WALL

NO SCALE

DESIGN	BY D. MUWANES	CHECKED E. MATSUMOTO	
DETAILS	BY L. XIONG	CHECKED D. MUWANES	
QUANTITIES	BY L. BAHIA	CHECKED D. MUWANES	

STATE OF CALIFORNIA
DEPARTMENT OF TRANSPORTATION

DIVISION OF ENGINEERING SERVICES
STRUCTURE DESIGN
DESIGN BRANCH 14

BRIDGE NO. 53-3060
POST MILE 4.41

SAN ANTONIO DR UNDERCROSSING (REPLACE)

SOUNDWALL-MASONRY BLOCK

STRUCTURES DESIGN DETAIL SHEET (ENGLISH) (REV. 09-01-10)

ORIGINAL SCALE IN INCHES FOR REDUCED PLANS 0 1 2 3

UNIT: 3613
PROJECT NUMBER & PHASE: 07000018341
CONTRACT NO.: 07-215941

DISREGARD PRINTS BEARING EARLIER REVISION DATES

REVISION DATES: 12-12-11 03-13-12 03-22-12 03-26-12

SHEET 33 OF 46

FILE => 53-3060-t-sw.dgn

USERNAME => s109858 DATE PLOTTED => 15-APR-2012 TIME PLOTTED => 07:03

DIST	COUNTY	ROUTE	POST MILES TOTAL PROJECT	SHEET No.	TOTAL SHEETS
07	LA	5	4.0/5.9	992	1597

REGISTERED CIVIL ENGINEER 12-09-11 DATE

4-9-12
PLANS APPROVAL DATE

REGISTERED PROFESSIONAL ENGINEER DAVID FADI NASH MUWANES No. C77659 Exp. 06-30-13 CIVIL STATE OF CALIFORNIA

The State of California or its officers or agents shall not be responsible for the accuracy or completeness of electronic copies of this plan sheet.

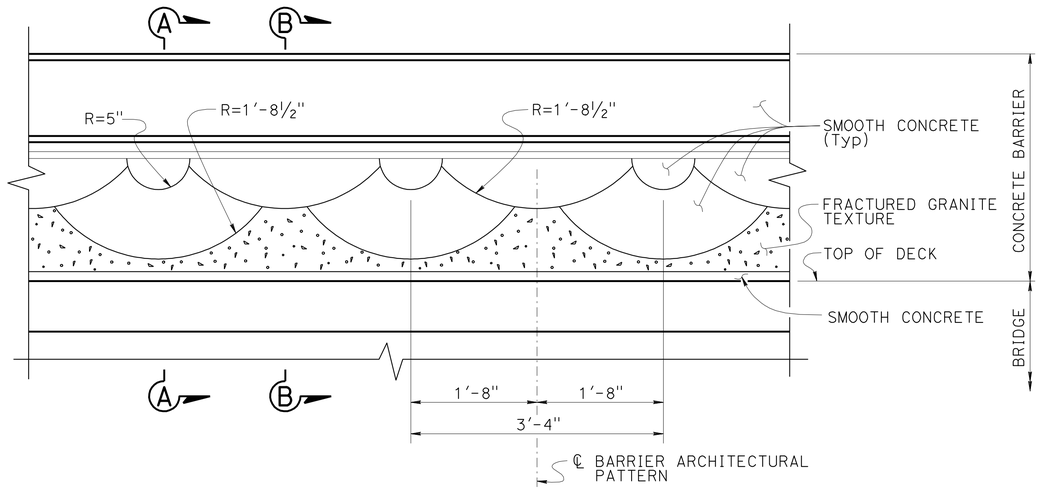

ELEVATION - CONCRETE BARRIER TYPE 736 (MOD 1)
1" = 1'-0"

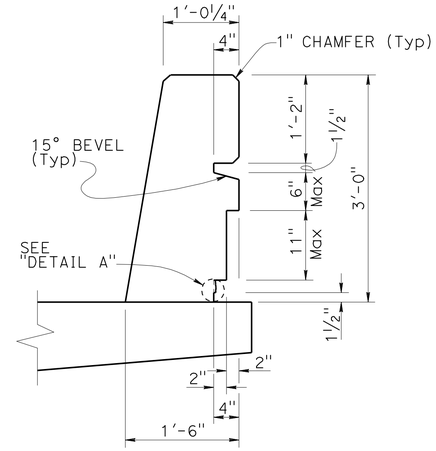

NOTE:
For reinforcement not shown see B11-56

SECTION A-A
1" = 1'-0"

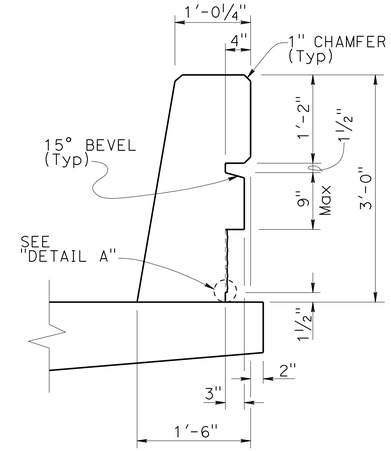

SECTION B-B
1" = 1'-0"

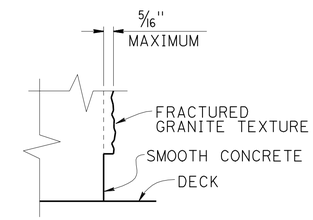

DETAIL A
NO SCALE

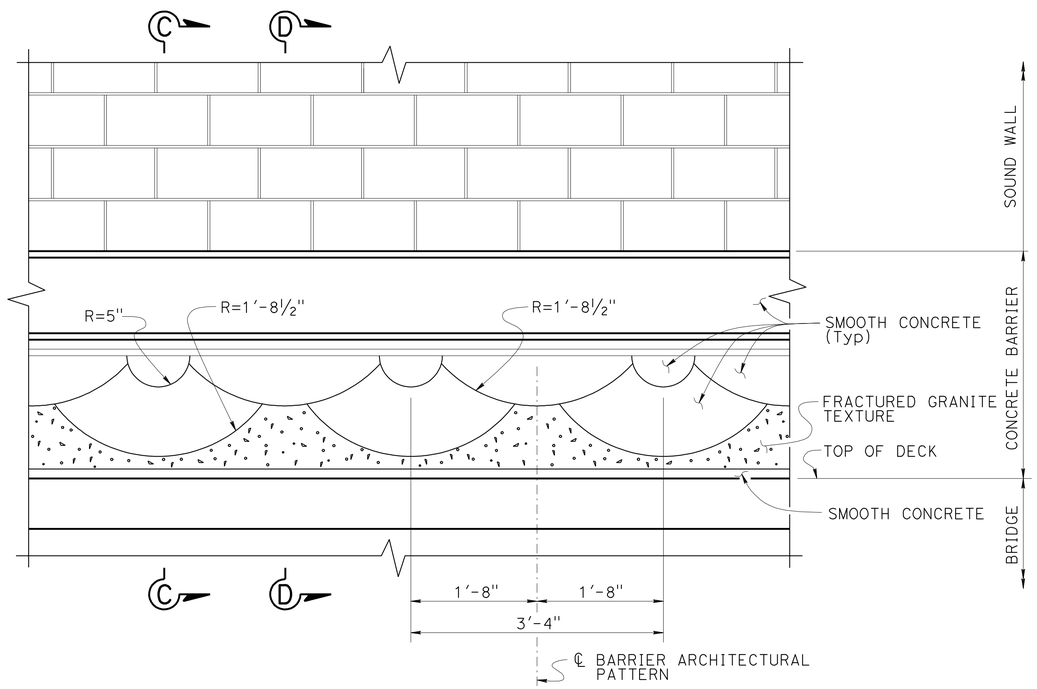

ELEVATION - CONCRETE BARRIER TYPE 736 (MOD 2)
1" = 1'-0"

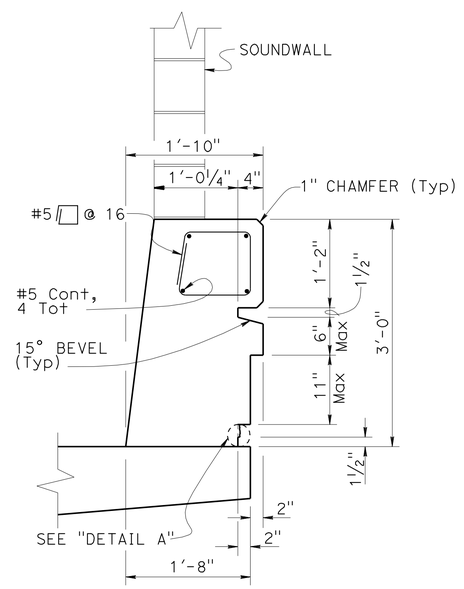

NOTE:
For reinforcement not shown see B11-56 and "SOUNDWALL MASONRY BLOCK BRIDGE" sheet

SECTION C-C
1" = 1'-0"

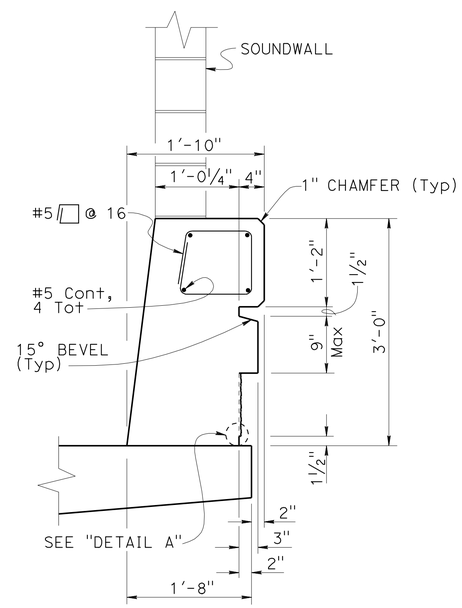

SECTION D-D
1" = 1'-0"

DESIGN	BY D. MUWANES	CHECKED E. MATSUMOTO	
DETAILS	BY L. XIONG	CHECKED D. MUWANES	
QUANTITIES	BY L. BAHIA	CHECKED D. MUWANES	

STATE OF CALIFORNIA
DEPARTMENT OF TRANSPORTATION

DIVISION OF ENGINEERING SERVICES
STRUCTURE DESIGN
DESIGN BRANCH 14

BRIDGE NO. 53-3060
POST MILE 4.41

SAN ANTONIO DR UNDERCROSSING (REPLACE)
BARRIER ARCHITECTURAL DETAILS NO. 1

STRUCTURES DESIGN DETAIL SHEET (ENGLISH) (REV. 09-01-10)

ORIGINAL SCALE IN INCHES FOR REDUCED PLANS 0 1 2 3

UNIT: 3613
PROJECT NUMBER & PHASE: 07000018341
CONTRACT NO.: 07-215941

DISREGARD PRINTS BEARING EARLIER REVISION DATES

REVISION DATES: 12-08-11 12-09-11 12-12-11 03-13-12

SHEET 34 OF 46

FILE => 53-3060-u-brdt01.dgn

USERNAME => s109858 DATE PLOTTED => 15-APR-2012 TIME PLOTTED => 07:03

DIST	COUNTY	ROUTE	POST MILES TOTAL PROJECT	SHEET No.	TOTAL SHEETS
07	LA	5	4.0/5.9	993	1597

REGISTERED CIVIL ENGINEER 12-09-11 DATE

4-9-12
PLANS APPROVAL DATE

REGISTERED PROFESSIONAL ENGINEER
DAVID FADI NASH MUWANES
No. C77659
Exp. 06-30-13
CIVIL
STATE OF CALIFORNIA

The State of California or its officers or agents shall not be responsible for the accuracy or completeness of electronic copies of this plan sheet.

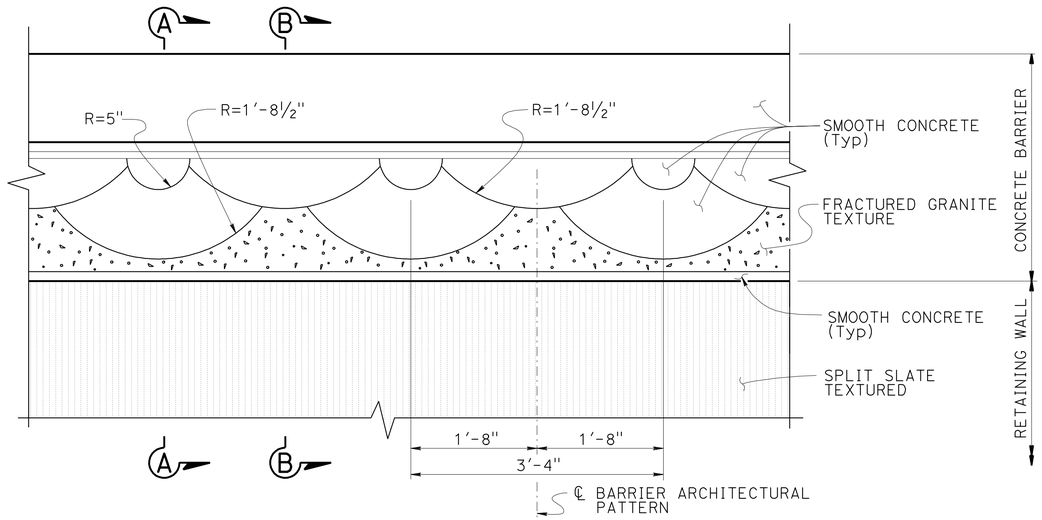

ELEVATION - CONCRETE BARRIER TYPE 736A (MOD 1)
1" = 1'-0"

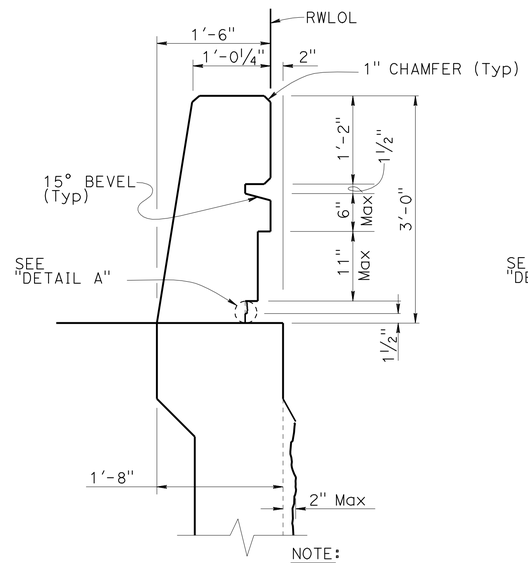

NOTE:
For details not shown see B11-56

SECTION A-A
1" = 1'-0"

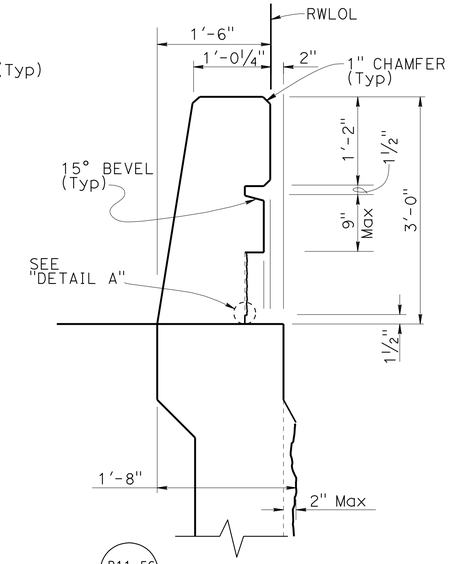

SECTION B-B
1" = 1'-0"

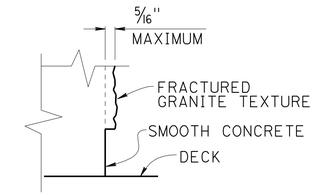

DETAIL A
NO SCALE

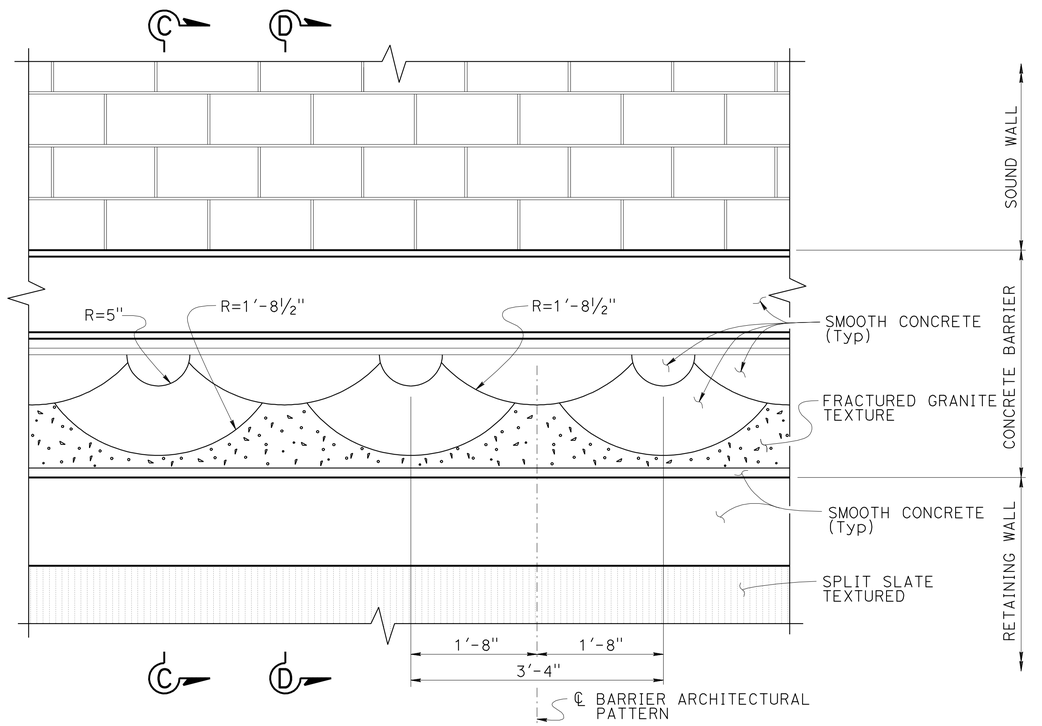

ELEVATION - CONCRETE BARRIER TYPE 736A (MOD 2)
1" = 1'-0"

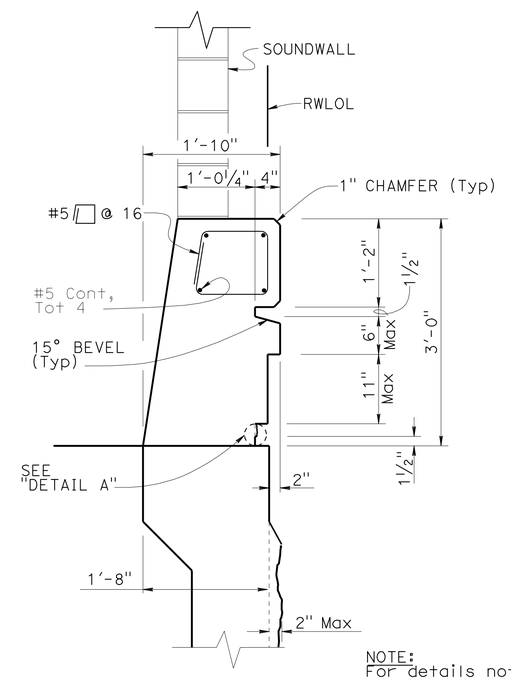

NOTE:
For details not shown see B11-56 and "SOUNDWALL MASONRY BLOCK BRIDGE" sheet

SECTION C-C
1" = 1'-0"

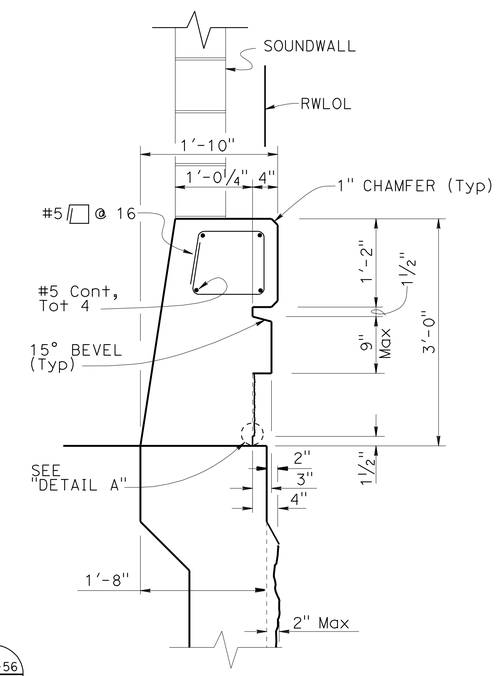

SECTION D-D
1" = 1'-0"

DESIGN	BY D. MUWANES	CHECKED E. MATSUMOTO	
DETAILS	BY L. XIONG / W. ZHANG	CHECKED D. MUWANES	
QUANTITIES	BY L. BAHIA	CHECKED D. MUWANES	

STATE OF CALIFORNIA
DEPARTMENT OF TRANSPORTATION

DIVISION OF ENGINEERING SERVICES
STRUCTURE DESIGN
DESIGN BRANCH 14

BRIDGE NO. 53-3060
POST MILE 4.41

SAN ANTONIO DR UNDERCROSSING (REPLACE)
BARRIER ARCHITECTURAL DETAILS NO. 2

STRUCTURES DESIGN DETAIL SHEET (ENGLISH) (REV. 09-01-10)

ORIGINAL SCALE IN INCHES FOR REDUCED PLANS 0 1 2 3

UNIT: 3613
PROJECT NUMBER & PHASE: 07000018341
CONTRACT NO.: 07-215941

DISREGARD PRINTS BEARING EARLIER REVISION DATES

REVISION DATES: 03-13-12 12-09-11 12-09-11 12-12-11

SHEET 35 OF 46

FILE => 53-3060-u-brdt02.dgn

USERNAME => s109858 DATE PLOTTED => 15-APR-2012 TIME PLOTTED => 07:03

Dist	COUNTY	ROUTE	POST MILES TOTAL PROJECT	SHEET No.	TOTAL SHEETS
07	LA	5	4.0/5.9	994	1597

George Olguin
LICENSED LANDSCAPE ARCHITECT

4-9-12
PLANS APPROVAL DATE

LICENSED LANDSCAPE ARCHITECT GEORGE OLGUIN NO. 4333 STATE OF CALIFORNIA
George Olguin Signature
08-31-12 Renewal Date
10-10-10 Date

THE STATE OF CALIFORNIA OR ITS OFFICERS OR AGENTS SHALL NOT BE RESPONSIBLE FOR THE ACCURACY OR COMPLETENESS OF SCANNED COPIES OF THIS PLAN SHEET.

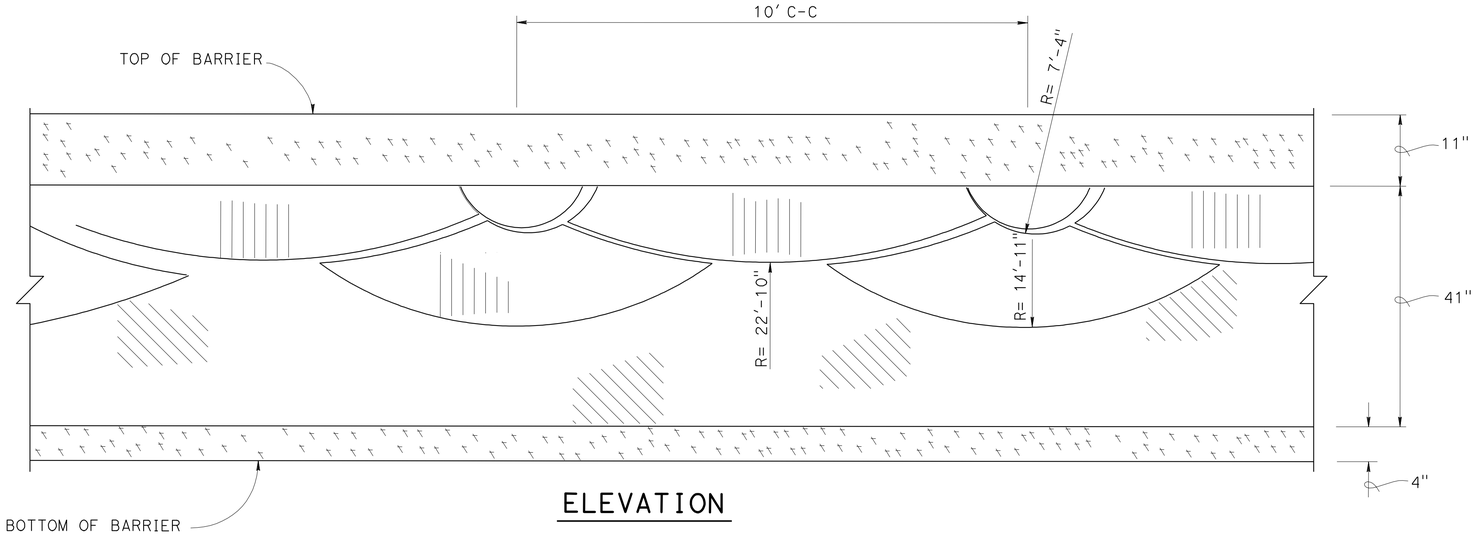

ELEVATION

CONCRETE BARRIER TYPE 60GA (MOD) ARCHITECTURAL SURFACE TREATMENT (SCALLOP WALL PATTERN)

No Scale

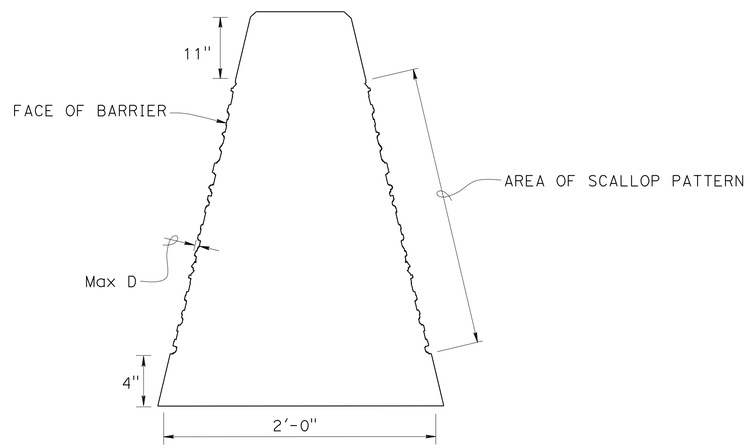

Legend:

- Smooth Finish
- Light Fractured Granite Finish Max D 1/4"-1/2"
- Heavy Fractured Granite Finish Max D 3/4"-1"

Note:

For details not shown see "ROAD PLANS" A76D

TYPICAL SECTION

CONCRETE BARRIER TYPE 60GA (MOD) (SCALLOP PATTERN DIFFERENTIAL)

No Scale

	BY	CHECKED
DESIGN	GEORGE OLGUIN	JENNIFER TAIRA
DETAILS	GEORGE OLGUIN	JENNIFER TAIRA
QUANTITIES	L. BAHIA	D. MUWANES

STATE OF CALIFORNIA
DEPARTMENT OF TRANSPORTATION

DIVISION OF ENGINEERING SERVICES
STRUCTURE DESIGN
DESIGN BRANCH 14

BRIDGE NO. 53-3060
POST MILE 4.41

SAN ANTONIO DR UNDERCROSSING (REPLACE)
BARRIER ARCHITECTURAL DETAILS No. 3

STRUCTURES DESIGN DETAIL SHEET (ENGLISH) (REV. 09-01-10)

ORIGINAL SCALE IN INCHES FOR REDUCED PLANS 0 1 2 3

UNIT: 3613
PROJECT NUMBER & PHASE: 07000018341
CONTRACT NO.: 07-215941

DISREGARD PRINTS BEARING EARLIER REVISION DATES
REVISION DATES 2/24/12 03/15/12

SHEET 36 OF 46

FILE => 53-3060-u-brdt03.dgn

USERNAME => s109858 DATE PLOTTED => 15-APR-2012 TIME PLOTTED => 07:03

DIST	COUNTY	ROUTE	POST MILES TOTAL PROJECT	SHEET No.	TOTAL SHEETS
07	LA	5	4.0/5.9	995	1597

REGISTERED CIVIL ENGINEER 12-09-11 DATE

4-9-12
PLANS APPROVAL DATE

The State of California or its officers or agents shall not be responsible for the accuracy or completeness of electronic copies of this plan sheet.

REGISTERED PROFESSIONAL ENGINEER DAVID FADI NASH MUWANES No. C77659 Exp. 06-30-13 CIVIL STATE OF CALIFORNIA

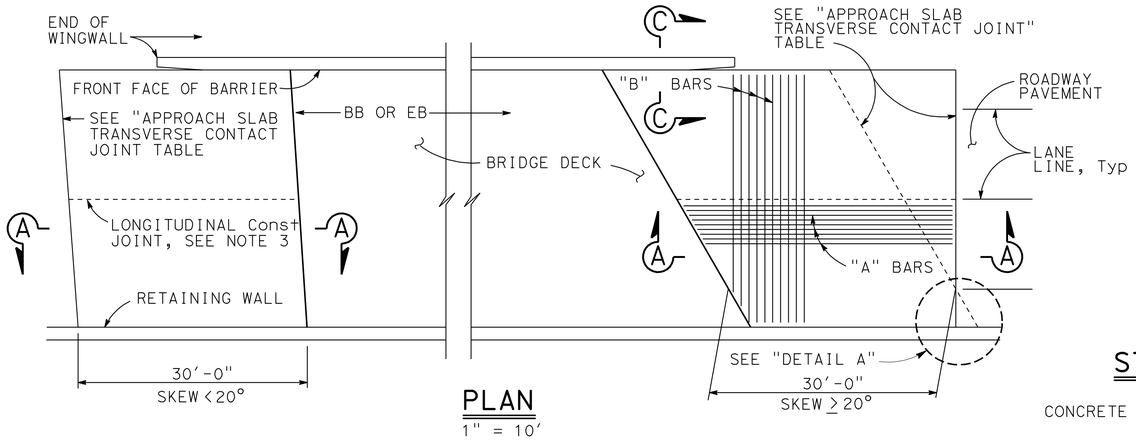

PLAN
1" = 10'

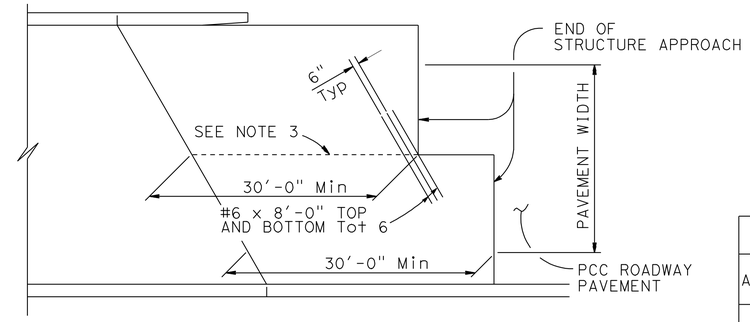

STRUCTURE APPROACH - END STAGGER DETAIL
No Scale

APPROACH SLAB TRANSVERSE CONTACT JOINT		
APPROACH SKEW	WITH AC ROADWAY PAVEMENT	WITH PCC ROADWAY PAVEMENT
< 20°	PARALLEL TO FACE OF PN	PARALLEL TO FACE OF PN
20° - 45°	PARALLEL TO FACE OF PN USE "DETAIL A"	STAGGER LINES 24' TO 36' APART
> 45°	PARALLEL TO FACE OF PN USE "DETAIL A"	STAGGER AT EACH LANE LINE

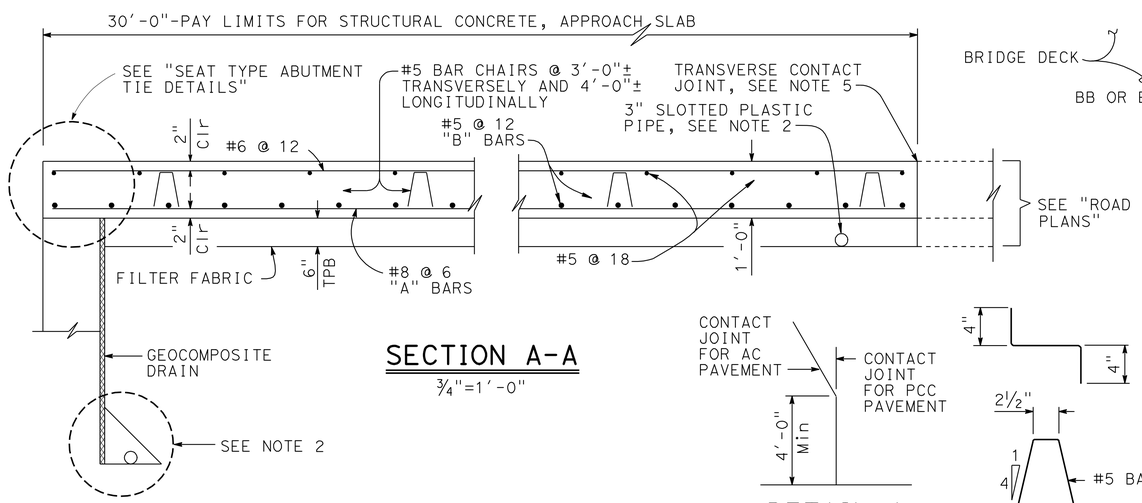

SECTION A-A
¾"=1'-0"

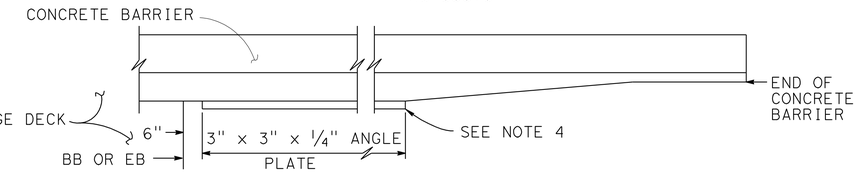

EDGE ANGLE DETAIL
½"=1'-0"

DETAIL A
No Scale

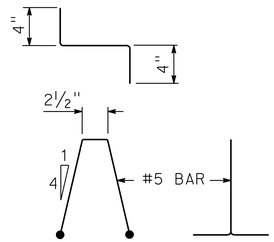

BAR CHAIR DETAIL
1½"=1'-0"

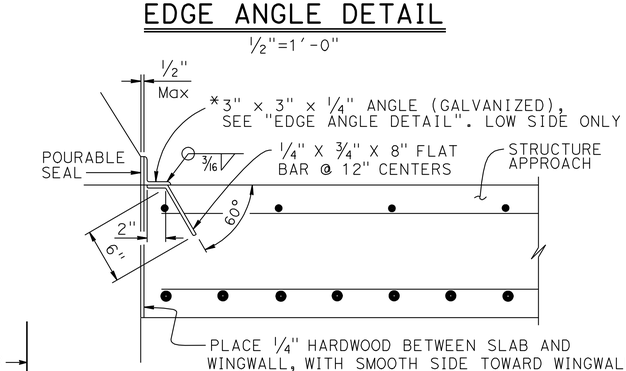

*(TO BE USED WITH CONCRETE BARRIER WITH VERTICAL FACE)

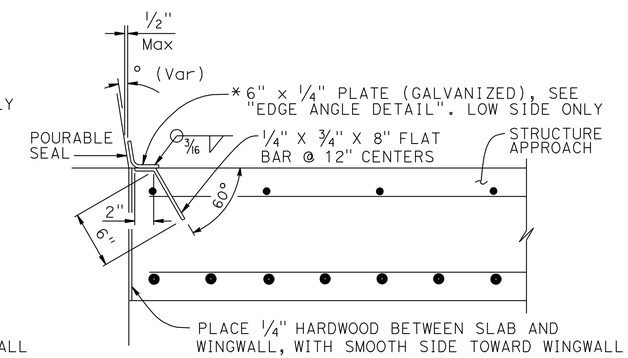

*(TO BE USED WITH CONCRETE BARRIER WITH SLOPING FACE)

DETAIL B
1½" = 1'-0"

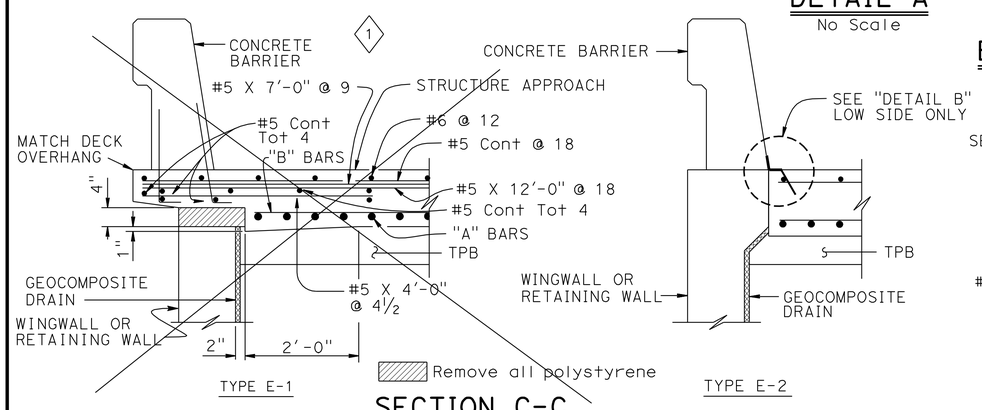

SECTION C-C
¾"=1'-0"

(Type E-1 to be used, unless otherwise shown on plans)

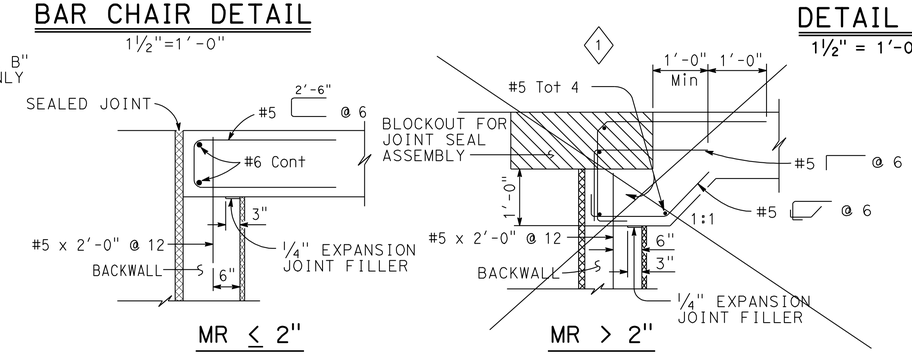

SEAT TYPE ABUTMENT TIE DETAILS (SEE NOTE 1)
¾"=1'-0"

NOTES:

1. For details not shown, see Structure Plans. For MR ≤ 2", adjust bar reinforcement to clear a sawcut for sealed joint, when required
2. For drainage details, see "STRUCTURE APPROACH DRAINAGE DETAILS" sheet
3. Longitudinal construction joints, when permitted by the Engineer, shall be located on lane lines
4. End angle or plate at beginning of barrier transition, end of wingwall or end of structure approach as applicable
5. For transverse contact joint with new PCC paving, refer to Revised Standard Plan P10
6. At the Contractor's option, approach slab transverse reinforcement may be placed parallel to paving notch. Spacing of transverse reinforcement is measured along ℄ roadway

REVISED STANDARD DRAWING

FILE NO. xs3-120

APPROVAL DATE July 2011

1 DETAIL DELETED

STATE OF CALIFORNIA
DEPARTMENT OF TRANSPORTATION

DIVISION OF ENGINEERING SERVICES

BRIDGE NO. 53-3060
POST MILE 4.41

SAN ANTONIO DR UNDERCROSSING (REPLACE)

STRUCTURE APPROACH TYPE N(30S)

DS OSD 2147A (ENGLISH STANDARD DRAWING "XS" BORDER REV. (02-02-11)

ORIGINAL SCALE IN INCHES FOR REDUCED PLANS 0 1 2 3

UNIT: 3613
PROJECT NUMBER & PHASE: 07000018341
CONTRACT NO.: 07-215941

DISREGARD PRINTS BEARING EARLIER REVISION DATES

REVISION DATES: 08-02-11 12-18-11 03-16-12

SHEET 37 OF 46

FILE => 53-3060-u-satn30s.dgn

USERNAME => s109858 DATE PLOTTED => 15-APR-2012 TIME PLOTTED => 07:03

DIST	COUNTY	ROUTE	POST MILES TOTAL PROJECT	SHEET No.	TOTAL SHEETS
07	LA	5	4.0/5.9	996	1597

REGISTERED CIVIL ENGINEER 12-09-11 DATE

4-9-12
PLANS APPROVAL DATE

REGISTERED PROFESSIONAL ENGINEER DAVID FADI NASH MUWANES No. C77659 Exp. 06-30-13 CIVIL STATE OF CALIFORNIA

The State of California or its officers or agents shall not be responsible for the accuracy or completeness of electronic copies of this plan sheet.

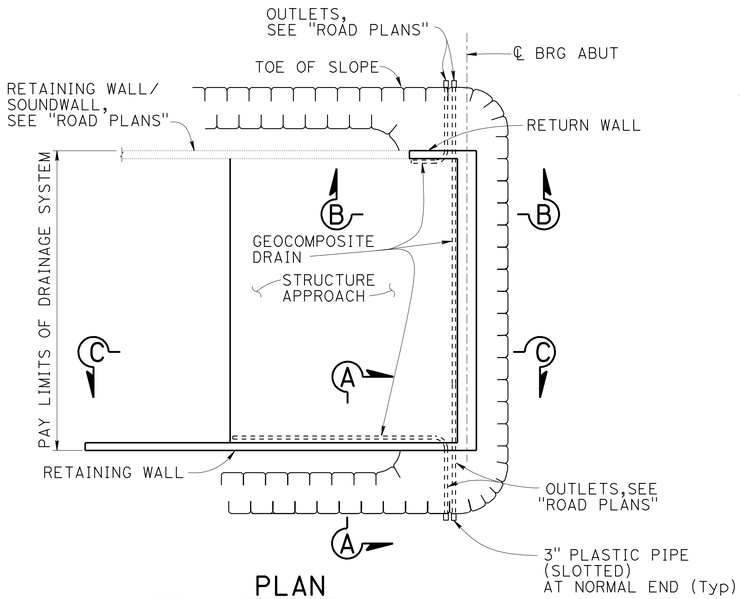

PLAN

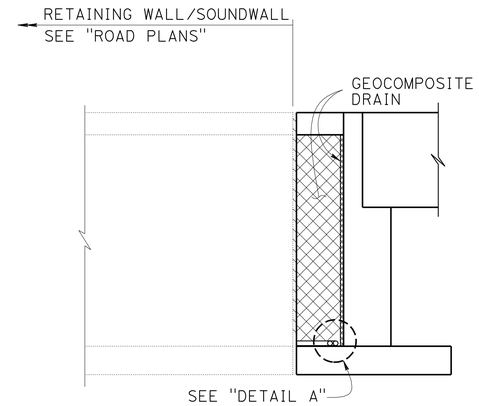

RETURN WALL
SECTION B-B

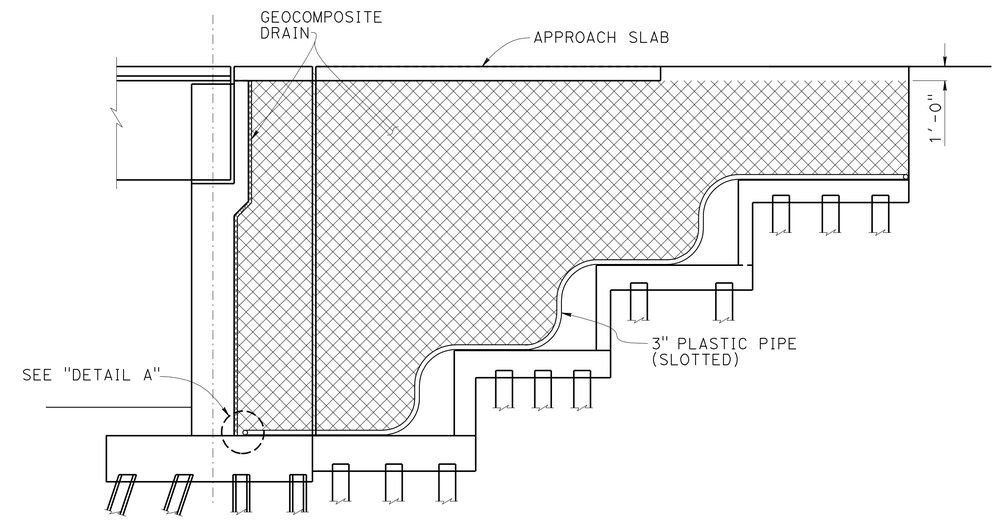

RETAINING WALL DRAINAGE DETAIL
SECTION C-C

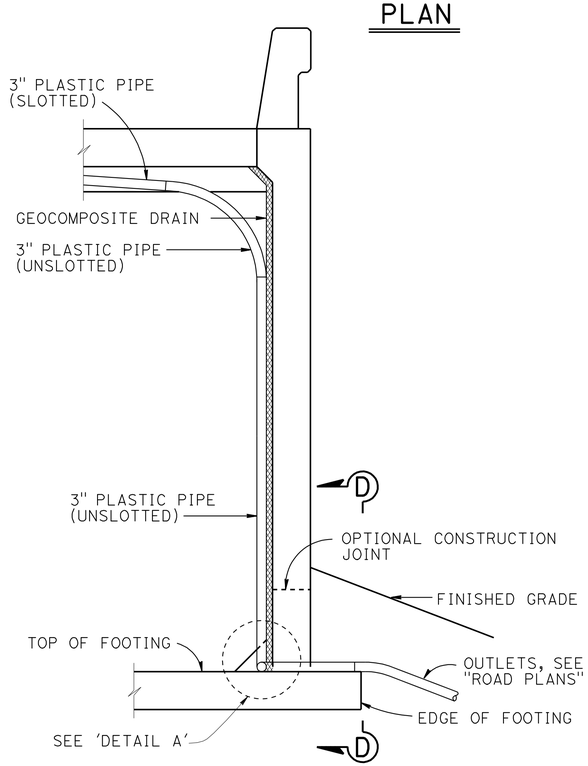

SECTION A-A

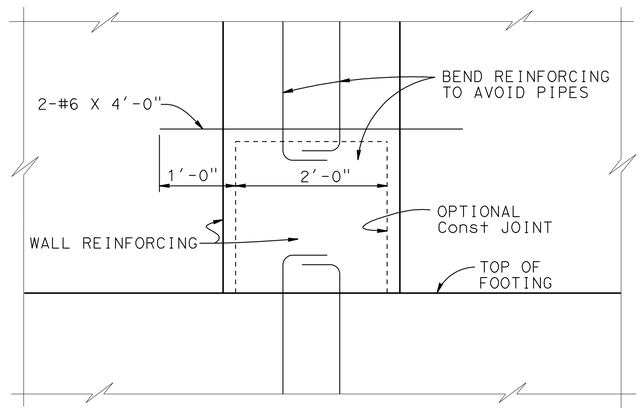

VIEW D-D

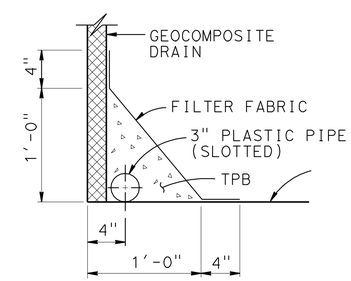

DETAIL A

NOTE: Bends and junctions in 3" plastic pipe are 30" radius Min

NO SCALE

	BY	CHECKED
DESIGN	D. MUWANES	E. MATSUMOTO
DETAILS	L. XIONG	D. MUWANES
QUANTITIES	L. BAHIA	D. MUWANES

STATE OF CALIFORNIA
DEPARTMENT OF TRANSPORTATION

DIVISION OF ENGINEERING SERVICES
STRUCTURE DESIGN
DESIGN BRANCH 14

BRIDGE NO. 53-3060
POST MILE 4.41

SAN ANTONIO DR UNDERCROSSING (REPLACE)
STRUCTURE APPROACH DRAINAGE DETAILS

STRUCTURES DESIGN DETAIL SHEET (ENGLISH) (REV. 09-01-10)

ORIGINAL SCALE IN INCHES FOR REDUCED PLANS 0 1 2 3

UNIT: 3613
PROJECT NUMBER & PHASE: 07000018341
CONTRACT NO.: 07-215941

DISREGARD PRINTS BEARING EARLIER REVISION DATES

REVISION DATES 03-15-12 03-26-12 03-29-12 03-14-12

SHEET 38 OF 46

FILE => 53-3060-v-sadd.dgn

USERNAME => s109858 DATE PLOTTED => 15-APR-2012 TIME PLOTTED => 07:04

DIST	COUNTY	ROUTE	POST MILES TOTAL PROJECT	SHEET No.	TOTAL SHEETS
07	LA	5	4.0/5.9	997	1597

REGISTERED CIVIL ENGINEER 12-09-11 DATE

4-9-12
PLANS APPROVAL DATE

REGISTERED PROFESSIONAL ENGINEER
DAVID FADI NASH MUWANES
No. C77659
Exp. 06-30-13
CIVIL
STATE OF CALIFORNIA

The State of California or its officers or agents shall not be responsible for the accuracy or completeness of electronic copies of this plan sheet.

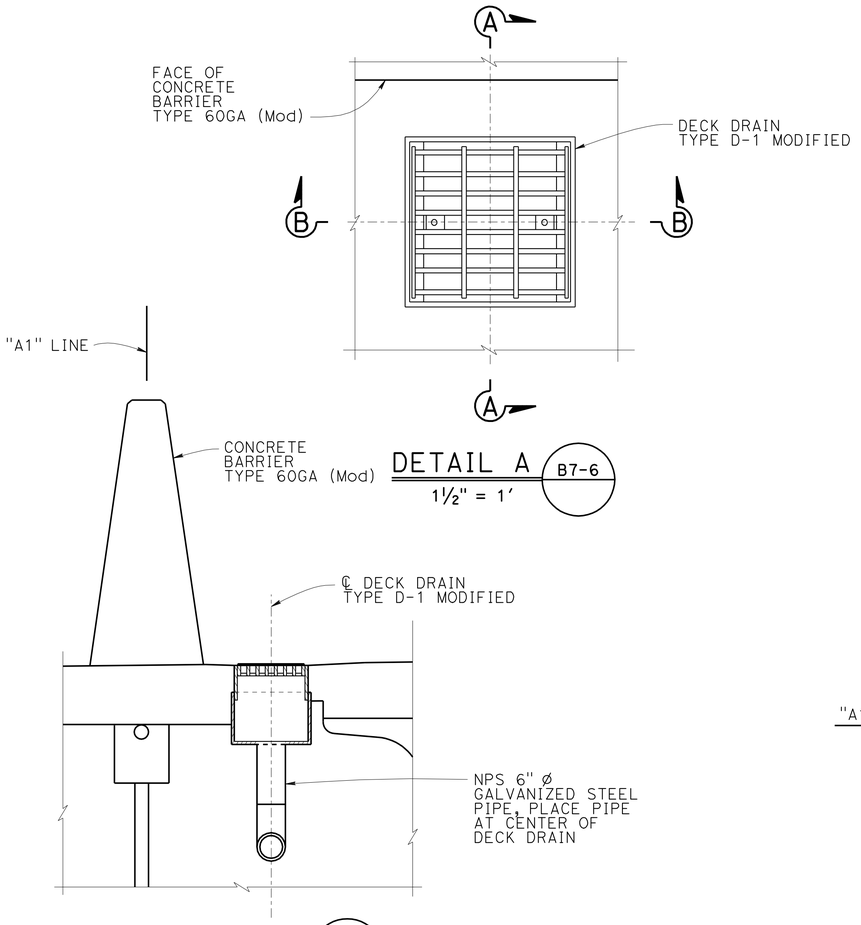

DETAIL A (B7-6)
1½" = 1'

SECTION A-A (B7-6)
¾" = 1'

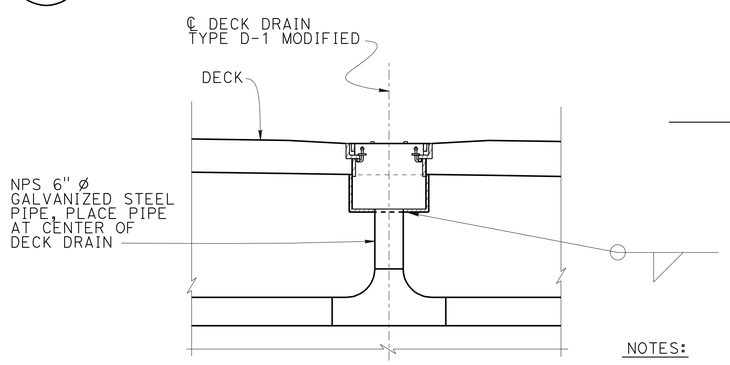

SECTION B-B (B7-6)
¾" = 1'

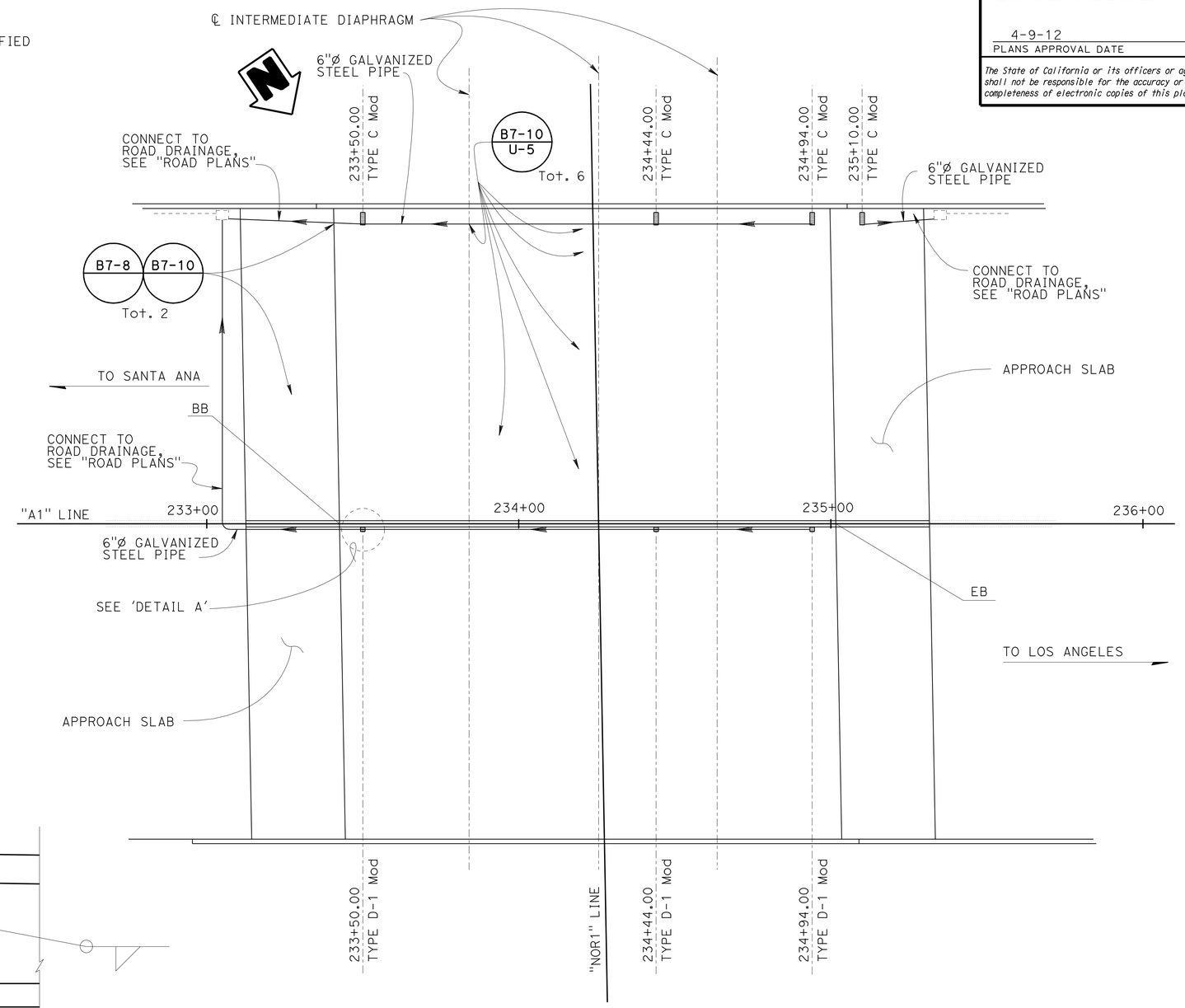

PLAN (B7-6 B7-8 B7-10)
1" = 20'

NOTES:

1. For additional Deck Drain Details, see Standard Plan B7-6, Deck Drains Types D-1 and D-2
2. All metal to be hot dipped galvanized after fabricating

LEGEND:

- Indicates Deck Drain Type C Modified
- Indicates Deck Drain Type D-1 Modified
- Indicates Drainage Pipe with direction of flow, slope 2% min

	BY	CHECKED
DESIGN	D. MUWANES	E. MATSUMOTO
DETAILS	W. ZHANG	D. MUWANES
QUANTITIES	L. BAHIA	D.MUWANES

STATE OF CALIFORNIA
DEPARTMENT OF TRANSPORTATION

DIVISION OF ENGINEERING SERVICES
STRUCTURE DESIGN
DESIGN BRANCH 14

BRIDGE NO. 50-3060
POST MILE 4.41

SAN ANTONIO DR UNDERCROSSING (REPLACE)
DECK DRAIN LAYOUT

STRUCTURES DESIGN DETAIL SHEET (ENGLISH) (REV. 09-01-10)

ORIGINAL SCALE IN INCHES FOR REDUCED PLANS 0 1 2 3

UNIT: 3613
PROJECT NUMBER & PHASE: 07000018341
CONTRACT NO.: 07-215941

DISREGARD PRINTS BEARING EARLIER REVISION DATES

REVISION DATES: 12-09-11 12-09-11 4-5-12

SHEET 39 OF 46

FILE => 53-3060-w-ddlo.dgn

USERNAME => s109858 DATE PLOTTED => 15-APR-2012 TIME PLOTTED => 07:04

DIST	COUNTY	ROUTE	POST MILES TOTAL PROJECT	SHEET No.	TOTAL SHEETS
07	LA	5	4.0/5.9	998	1597

REGISTERED CIVIL ENGINEER — DATE 12-09-11

4-9-12
PLANS APPROVAL DATE

REGISTERED PROFESSIONAL ENGINEER — DAVID FADI NASH MUWANES — No. C177659 — Exp. 06-30-13 — CIVIL — STATE OF CALIFORNIA

The State of California or its officers or agents shall not be responsible for the accuracy or completeness of electronic copies of this plan sheet.

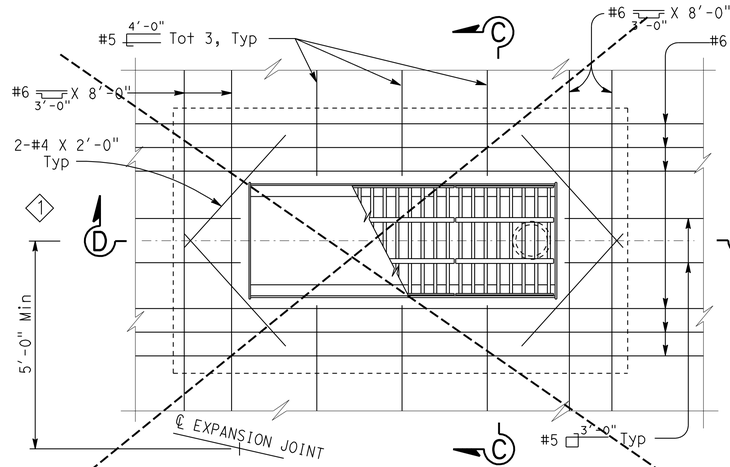

PLAN - MEDIAN INSTALLATION

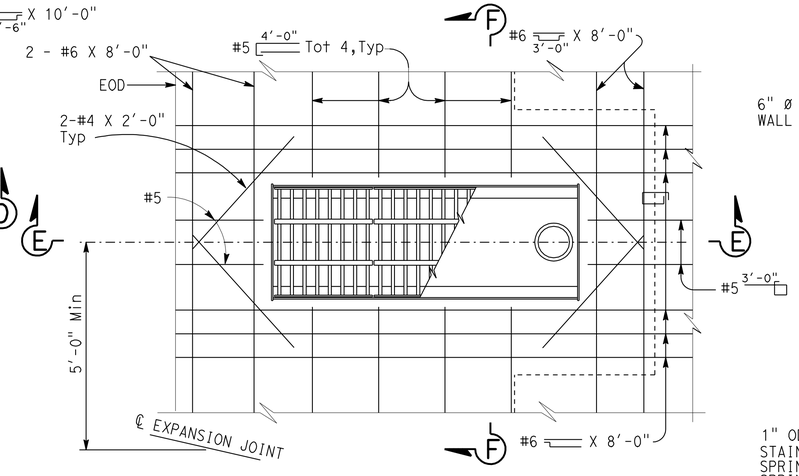

PLAN - CURB INSTALLATION

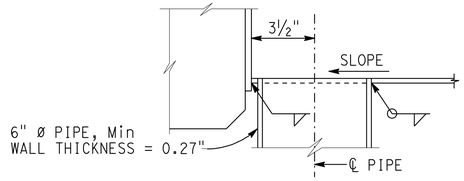

PIPE SECTION

NOTE:
Galvanize deck drain assembly after fabrication. Reinforcement shown at drains is to be placed in addition to typical slab reinforcement. Typical slab reinforcement not shown

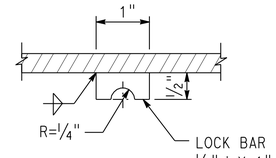

LOCK BAR

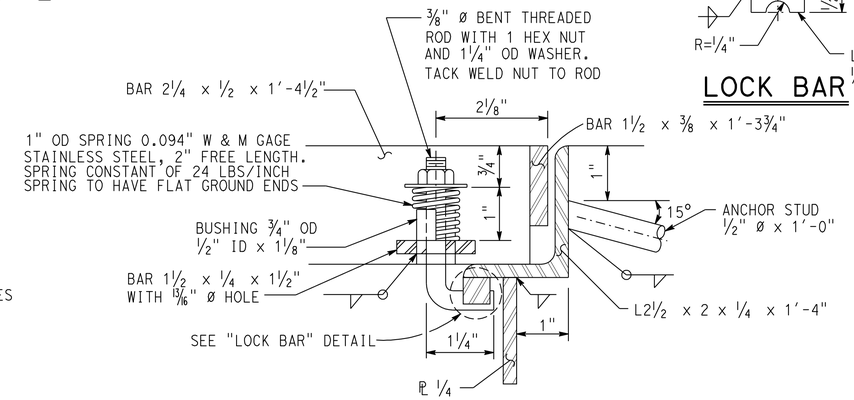

DETAIL A

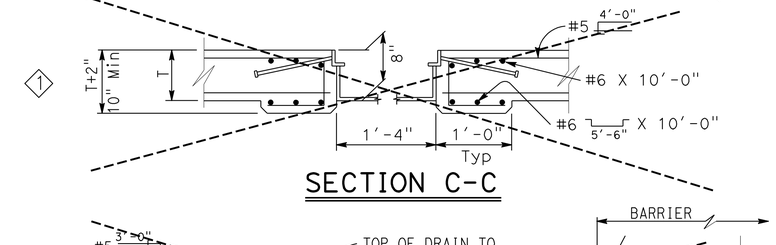

SECTION C-C

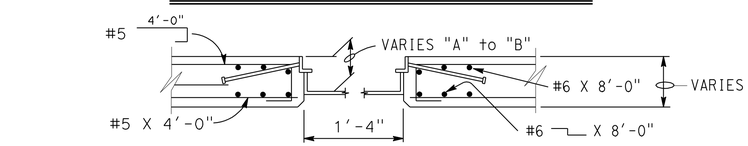

SECTION F-F

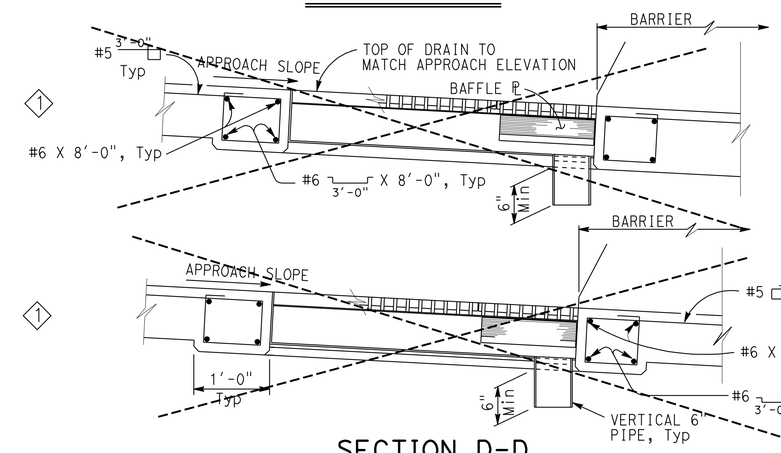

SECTION D-D

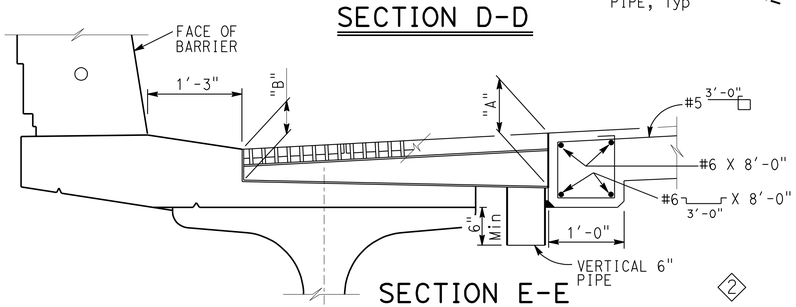

SECTION E-E

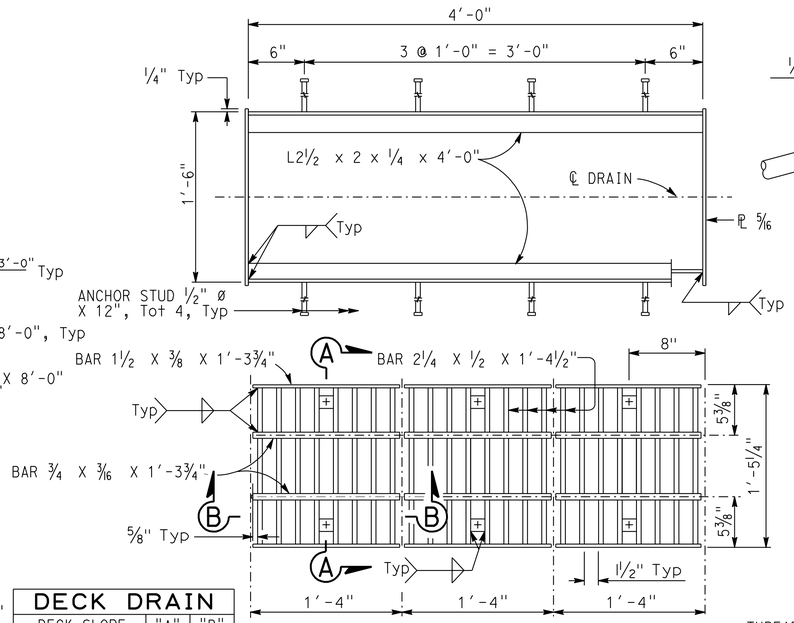

PLAN - FRAME & GRATE

DECK DRAIN		
DECK SLOPE	"A"	"B"
0% TO 6%	9"	5"
7% TO 9%	10"	5"
10% TO 12%	10½"	4"

NOTE:
Grating consists of 3 identical units except for baffle plate. Baffle plate is required only for the grate over the 6" Ø pipe

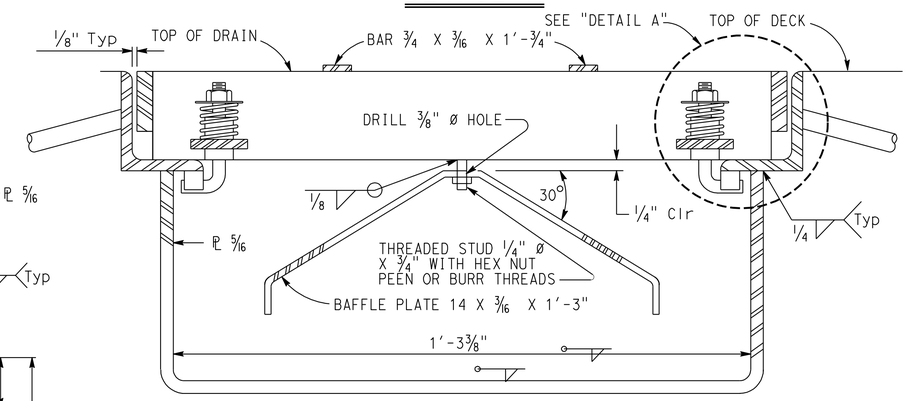

SECTION A-A (FRAME & GRATE)

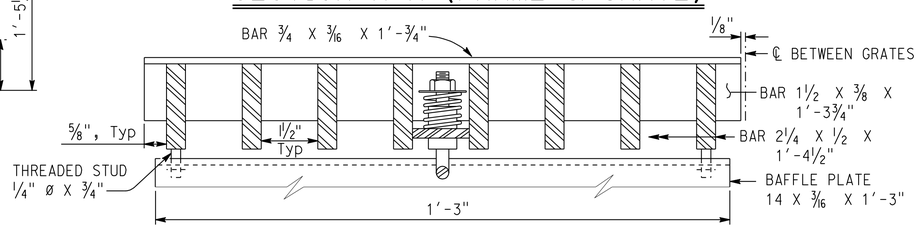

SECTION B-B

NO SCALE

REVISED STANDARD DRAWING	
FILE NO. xs10-010	APPROVAL DATE July 2011

1 Detail Deleted
2 Detail Modified

STATE OF CALIFORNIA
DEPARTMENT OF TRANSPORTATION

DIVISION OF ENGINEERING SERVICES

BRIDGE NO. 53-3060
POST MILE 4.41

SAN ANTONIO DR UNDERCROSSING (REPLACE)
DECK DRAIN - TYPE C MODIFIED

DS OSD 2147A (ENGLISH STANDARD DRAWING "XS" BORDER REV. (02-02-11)

ORIGINAL SCALE IN INCHES FOR REDUCED PLANS 0 1 2 3

UNIT: 3613
PROJECT NUMBER & PHASE: 07000018341
CONTRACT NO.: 07-215941

DISREGARD PRINTS BEARING EARLIER REVISION DATES

REVISION DATES: 09-02-11 10-24-11 12-08-11 12-12-11

SHEET 40 OF 46

FILE => 53-3060-w-ddtc.dgn

USERNAME => s109358 DATE PLOTTED => 15-APR-2012 TIME PLOTTED => 07:04

DIST	COUNTY	ROUTE	POST MILES TOTAL PROJECT	SHEET No.	TOTAL SHEETS
07	LA	5	4.0/5.9	999	1597

REGISTERED CIVIL ENGINEER — DATE 12-09-11

PLANS APPROVAL DATE 4-9-12

REGISTERED PROFESSIONAL ENGINEER — Amare Tsegie No. C67529 Exp. 6-30-13 CIVIL — STATE OF CALIFORNIA

The State of California or its officers or agents shall not be responsible for the accuracy or completeness of electronic copies of this plan sheet.

This LOTB sheet was prepared in accordance with the Caltrans Soil & Rock Logging, Classification, & Presentation Manual (2010 Edition).

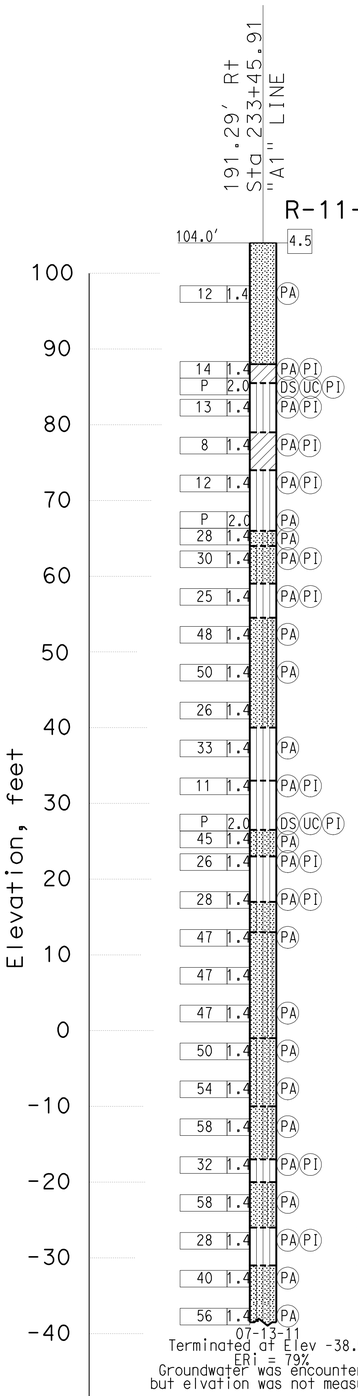

Poorly-graded SAND (SP); medium dense; gray; dry; mostly SAND; fine and medium SAND.

-medium and coarse SAND; dark gray; moist; lenses of SILT (ML).

Lean CLAY (CL); stiff; dark gray; moist; PP=2.0 tsf.

SILT (ML); stiff; dark olive gray; moist; few fine SAND; PP=1.0 tsf.

-lense of SILTY SAND (SM).

Lean CLAY with SAND (CL); very stiff; dark gray; moist; little fine SAND; calcite nodules; PP=3.0 tsf.

SILT with SAND (ML); stiff; olive gray; moist; few fine SAND; few calcite nodules; PP=1.0 tsf.

Poorly-graded SAND with SILT (SP-SM); dense; grayish brown; moist; fine and medium SAND; few fines.

SILTY SAND (SM); dense; reddish brown; moist; fine and medium SAND; little fines.

SANDY SILT (ML); very stiff; olive gray; moist; some fine SAND.

Poorly-graded SAND with SILT (SP-SM); very dense; gray; moist; fine and medium SAND; few fines.

-dense; with lense of SILT (ML).

SILT with SAND (ML); dense; olive gray; moist; little fine SAND; nonplastic fines.

SILT (ML); medium stiff; dark gray; moist; PP=0.8 tsf; occasional rootlets and slight organic odor; light weight (<85 pcf).

SILTY SAND (SM); very dense; olive gray; moist; fine SAND; little fines.

SANDY SILT (ML); hard; dark olive gray; moist; some fine SAND.

SILTY SAND (SM); dense; olive gray; wet; fine SAND.

Poorly-graded SAND with SILT (SP-SM); very dense; dark gray and olive gray; wet; few fines.

SILTY SAND (SM); very dense; olive gray; wet; fine and medium SAND; few fines.

Poorly-graded SAND with SILT (SP-SM); very dense; olive gray and olive brown; wet; fine and medium SAND; few fines.

-lense of SILT (ML).
SILT with SAND (ML) with thin inter-beds of lean CLAY (CL). SILT (ML); medium stiff; olive brown; wet; little fine SAND; PP=0.5 tsf; lean CLAY (CL); medium stiff; olive brown; wet.
Poorly-graded SAND with SILT (SP-SM); very dense; olive brown; moist; fine and medium SAND; few fines.

-light gray; medium and coarse SAND.
SILT with SAND (ML); very stiff; dark gray; wet; little fine SAND; few scattered rootlets and calcite nodules; PP=3.5 tsf.
-few rootlets and calcite nodules.
SILTY SAND (SM); very dense; olive brown; wet; fine SAND; some fines; lenses of CLAY (CL).

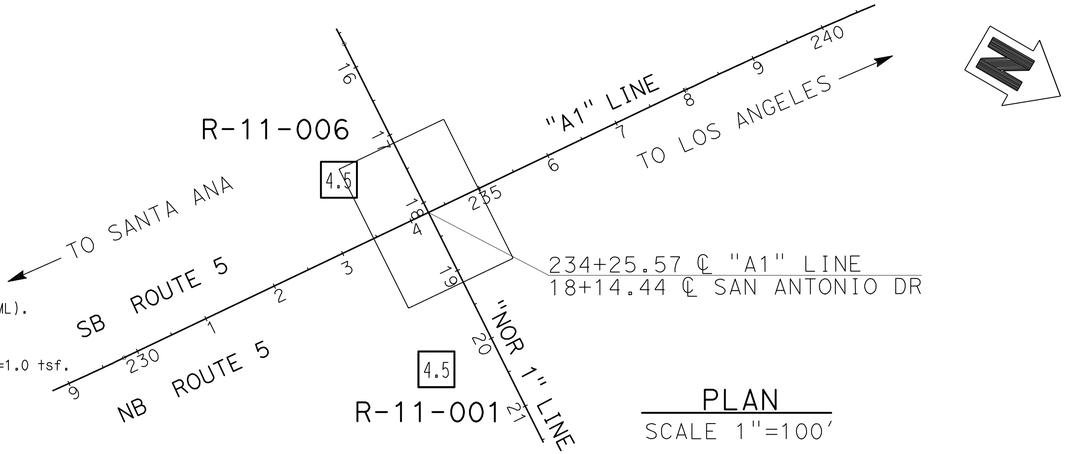

PLAN

SCALE 1"=100'

BENCH MARK

ELEVATION 105.78 FT
LA 5 PM 4.8, 1995
FOUND 2-1/2 INCH CADT DISK IN CONCRETE CURB, FLUSH, STAMPED "LA5 4.8 1995"
THE MARK IS LOCATED ON THE EASTERLY CURB OF THE OFFRAMP GORE FROM
THE SOUTH BOUND 5 (SANTA ANA FWY) TO NORWALK BLVD. AND SAN ANTONIO ST.
NORTHING 1791107.943
EASTING 6538243.925
VERTICAL NAVD88, 0405-CALIFORNIA 5 US FEET.

233+00 234+00 235+00 236+00 237+00 238+00

PROFILE VIEW

VERTICAL SCALE 1"=10'
HORIZONTAL SCALE 1"=20'

ENGINEERING SERVICES	MATERIALS AND GEOTECHNICAL SERVICES	STATE OF CALIFORNIA DEPARTMENT OF TRANSPORTATION	DIVISION OF ENGINEERING SERVICES STRUCTURE DESIGN DESIGN BRANCH 21	BRIDGE NO. 53-3060 POST MILE 4.41	SAN ANTONIO DRIVE UC (REPLACE) LOG OF TEST BORINGS 1 OF 6
FUNCTIONAL SUPERVISOR NAME: CHI-TSENG LIU	DRAWN BY: P.QUACH / T.Panah (URS CORP) CHECKED BY: F.GERAMI	FIELD INVESTIGATION BY: A.TSEGIE/M.ISLAM			

OGS CIVIL LOG OF TEST BORINGS SHEET — ORIGINAL SCALE IN INCHES FOR REDUCED PLANS 0 1 2 3

UNIT: 3658
PROJECT NUMBER & PHASE: 07000018341 CONTRACT NO.: 07-215941

DISREGARD PRINTS BEARING EARLIER REVISION DATES — REVISION DATES 12-09-11 — SHEET 41 OF 46

FILE => 53-3060-z-lotb_01.dgn

USERNAME => s109858 DATE PLOTTED => 15-APR-2012 TIME PLOTTED => 07:04

DIST	COUNTY	ROUTE	POST MILES TOTAL PROJECT	SHEET No.	TOTAL SHEETS
07	LA	5	4.0/5.9	1000	1597

REGISTERED CIVIL ENGINEER — DATE 12-09-11

4-9-12
PLANS APPROVAL DATE

REGISTERED PROFESSIONAL ENGINEER — Amare Tsegie — No. C67529 — Exp. 6-30-13 — CIVIL — STATE OF CALIFORNIA

The State of California or its officers or agents shall not be responsible for the accuracy or completeness of electronic copies of this plan sheet.

This LOTB sheet was prepared in accordance with the Caltrans Soil & Rock Logging, Classification, & Presentation Manual (2010 Edition).

FOR PLAN VIEW, SEE
"LOG OF TEST BORINGS" 1 OF 6

89.87' Lt
Sta 233+37.47
"A1" LINE

R-11-006

102.5'

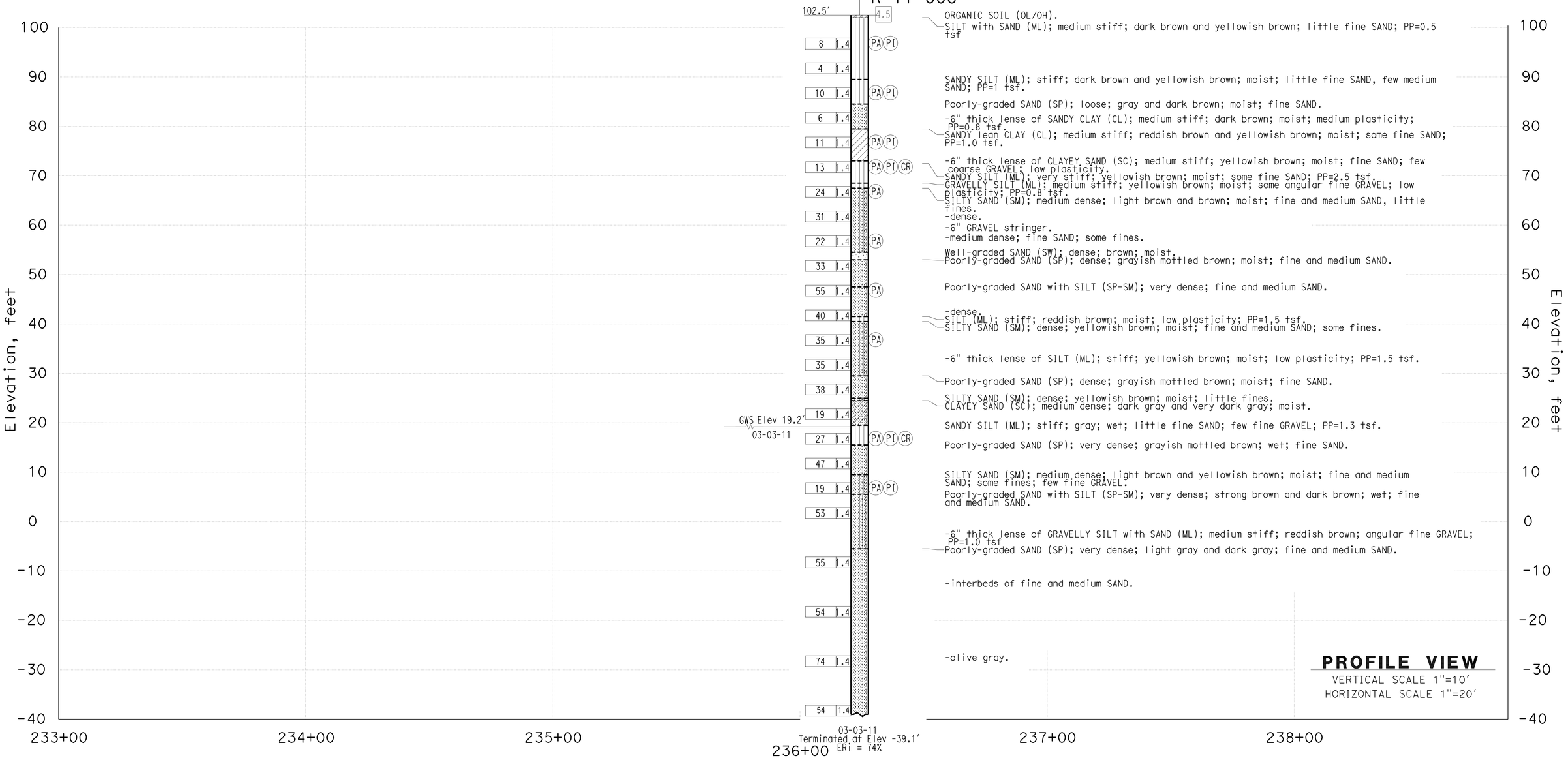

ENGINEERING SERVICES	MATERIALS AND GEOTECHNICAL SERVICES	STATE OF CALIFORNIA DEPARTMENT OF TRANSPORTATION	DIVISION OF ENGINEERING SERVICES STRUCTURE DESIGN DESIGN BRANCH 21	BRIDGE NO. 53-3060 POST MILE 4.41	SAN ANTONIO DRIVE UC (REPLACE) LOG OF TEST BORINGS 2 OF 6
FUNCTIONAL SUPERVISOR NAME: CHI-TSENG LIU	DRAWN BY: P.QUACH / T.Panah (URS CORP) CHECKED BY: F.GERAMI	FIELD INVESTIGATION BY: A.TSEGIE/M.ISLAM			

OGS CIVIL LOG OF TEST BORINGS SHEET

ORIGINAL SCALE IN INCHES FOR REDUCED PLANS 0 1 2 3

UNIT: 3658
PROJECT NUMBER & PHASE: 07000018341 CONTRACT NO.: 07-215941

DISREGARD PRINTS BEARING EARLIER REVISION DATES → REVISION DATES 12-09-11 SHEET 42 OF 46

FILE => 53-3060-z-lotb_02.dgn

USERNAME => s109858 DATE PLOTTED => 15-APR-2012 TIME PLOTTED => 07:04