Dist	COUNTY	ROUTE	POST MILES TOTAL PROJECT	SHEET No.	TOTAL SHEETS
07	LA	5	1.2/2.1	101	602

REGISTERED CIVIL ENGINEER 3/14/11 DATE

6-27-11
PLANS APPROVAL DATE

REGISTERED PROFESSIONAL ENGINEER RALPH M. SASAKI No. 30849 Exp. 3/31/12 CIVIL STATE OF CALIFORNIA

THE STATE OF CALIFORNIA OR ITS OFFICERS OR AGENTS SHALL NOT BE RESPONSIBLE FOR THE ACCURACY OR COMPLETENESS OF SCANNED COPIES OF THIS PLAN SHEET.

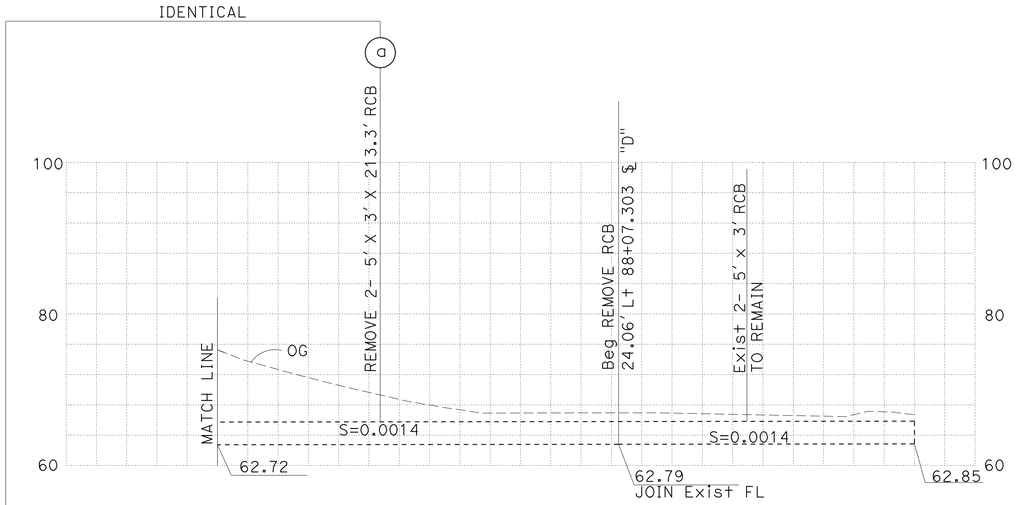

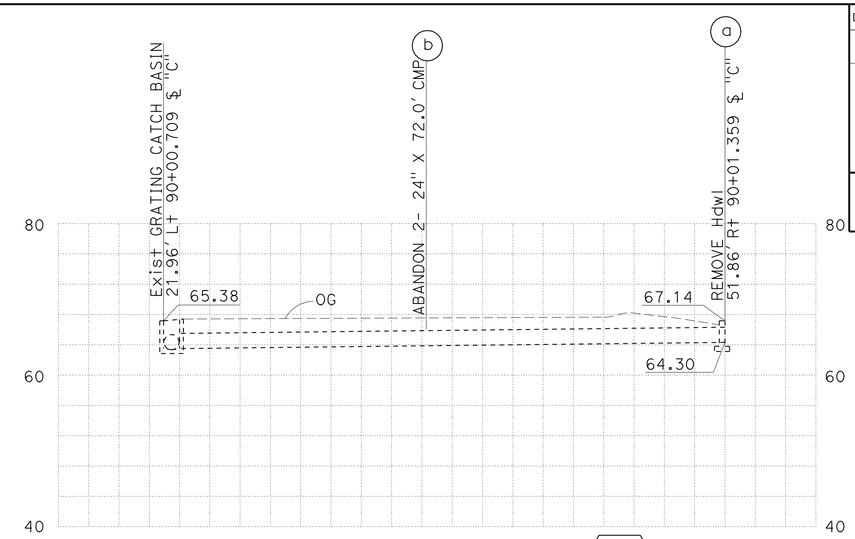

DRAINAGE SYSTEM No. 3-1

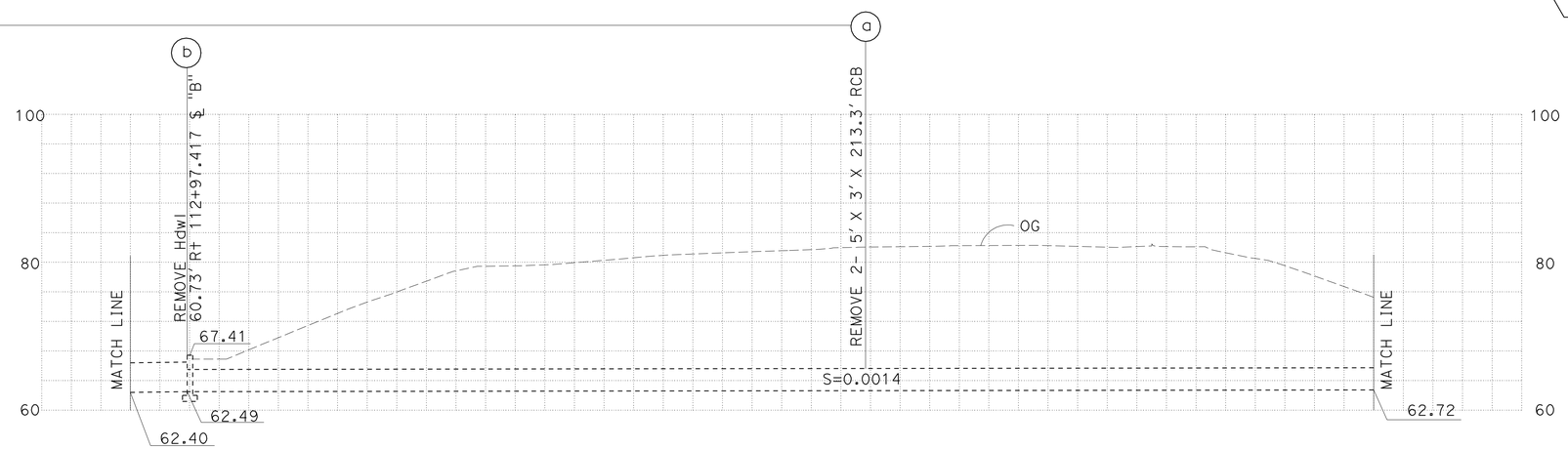

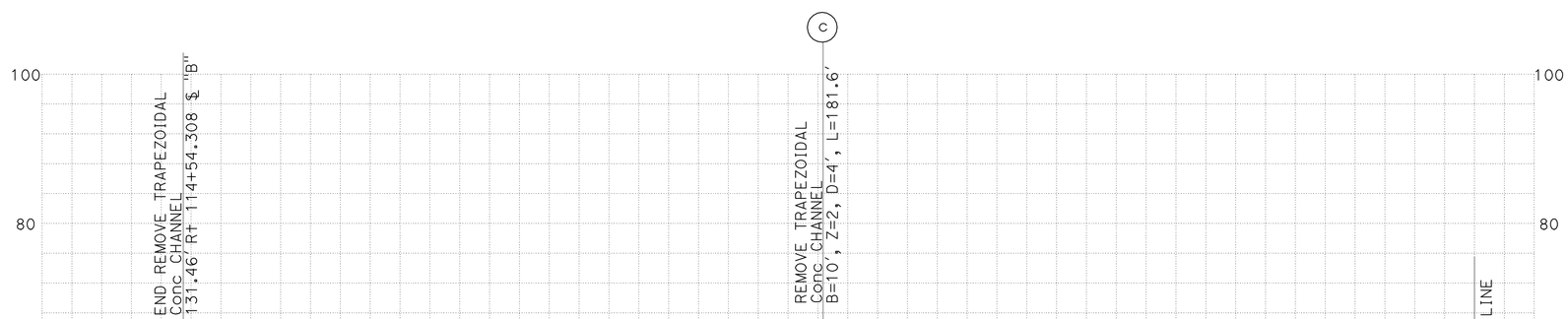

DRAINAGE SYSTEM No. 3-2

DRAINAGE PROFILES

SCALE: 1" = 10' Horiz
1" = 10' Vert

DP-15

STATE OF CALIFORNIA - DEPARTMENT OF TRANSPORTATION
Caltrans® HYDRAULICS

FUNCTIONAL SUPERVISOR: RALPH M. SASAKI
CALCULATED-DESIGNED BY: SIEW MEI TAN
CHECKED BY: RALPH M. SASAKI
REVISED BY
DATE REVISED

LAST REVISION 00-00-00
DATE PLOTTED => 30-JUN-2011
TIME PLOTTED => 16:08

Dist	COUNTY	ROUTE	POST MILES TOTAL PROJECT	SHEET No.	TOTAL SHEETS
07	LA	5	1.2/2.1	102	602

REGISTERED CIVIL ENGINEER 3/14/11 DATE

6-27-11
PLANS APPROVAL DATE

REGISTERED PROFESSIONAL ENGINEER RALPH M. SASAKI No. 30849 Exp. 3/31/12 CIVIL STATE OF CALIFORNIA

THE STATE OF CALIFORNIA OR ITS OFFICERS OR AGENTS SHALL NOT BE RESPONSIBLE FOR THE ACCURACY OR COMPLETENESS OF SCANNED COPIES OF THIS PLAN SHEET.

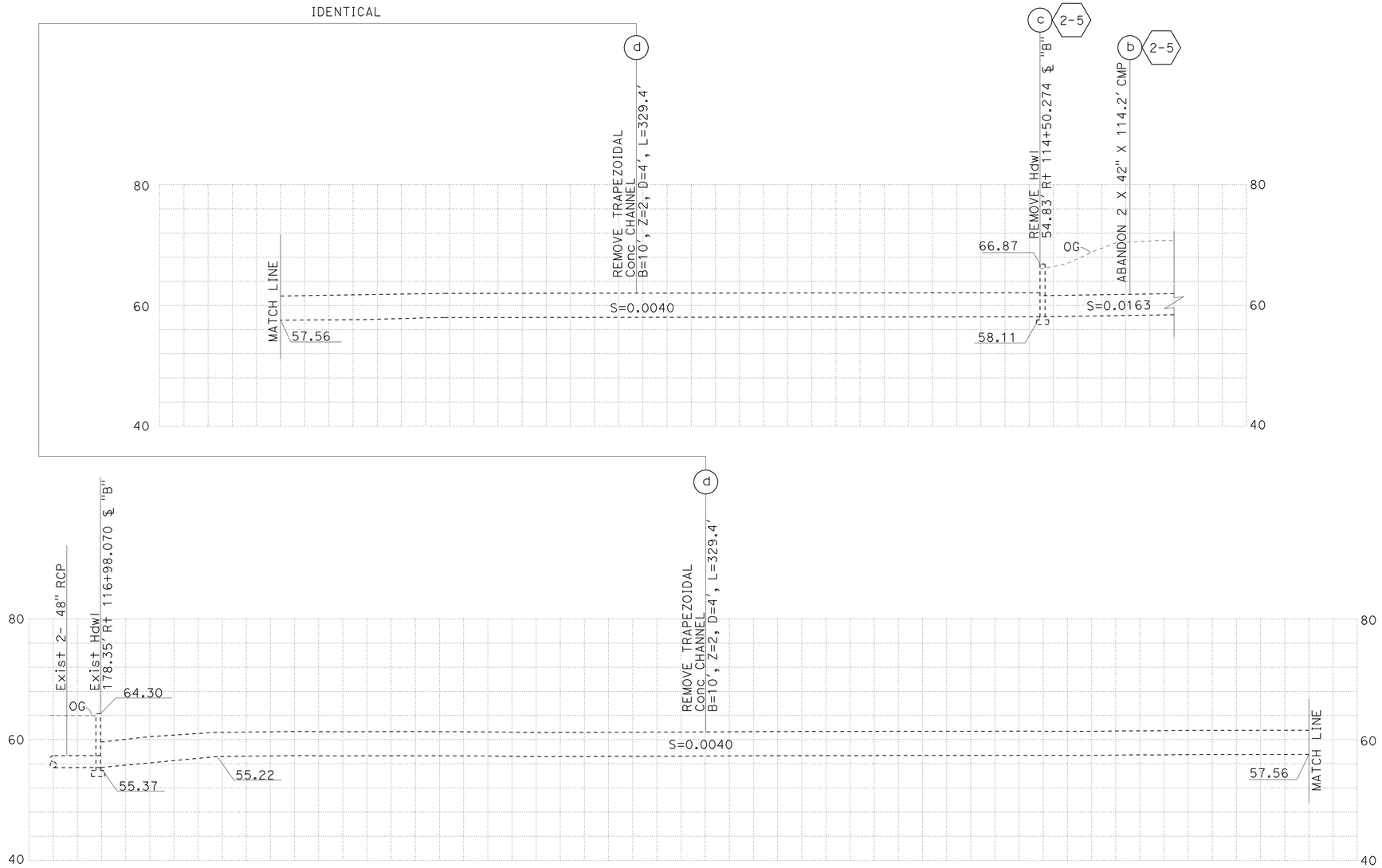

DRAINAGE SYSTEM No. 3-2

DRAINAGE PROFILES

SCALE: 1" = 10' Horiz
1" = 10' Vert

DP-16

STATE OF CALIFORNIA - DEPARTMENT OF TRANSPORTATION
Caltrans® HYDRAULICS

FUNCTIONAL SUPERVISOR: RALPH M. SASAKI
CALCULATED-DESIGNED BY: SIEW MEI TAN
CHECKED BY: RALPH M. SASAKI
REVISED BY
DATE REVISED

LAST REVISION 00-00-00
DATE PLOTTED => 30-JUN-2011
TIME PLOTTED => 16:08

Dist	COUNTY	ROUTE	POST MILES TOTAL PROJECT	SHEET No.	TOTAL SHEETS
07	LA	5	1.2/2.1	103	602

REGISTERED CIVIL ENGINEER 3/14/11 DATE

6-27-11
PLANS APPROVAL DATE

REGISTERED PROFESSIONAL ENGINEER RALPH M. SASAKI No. 30849 Exp. 3/31/12 CIVIL STATE OF CALIFORNIA

THE STATE OF CALIFORNIA OR ITS OFFICERS OR AGENTS SHALL NOT BE RESPONSIBLE FOR THE ACCURACY OR COMPLETENESS OF SCANNED COPIES OF THIS PLAN SHEET.

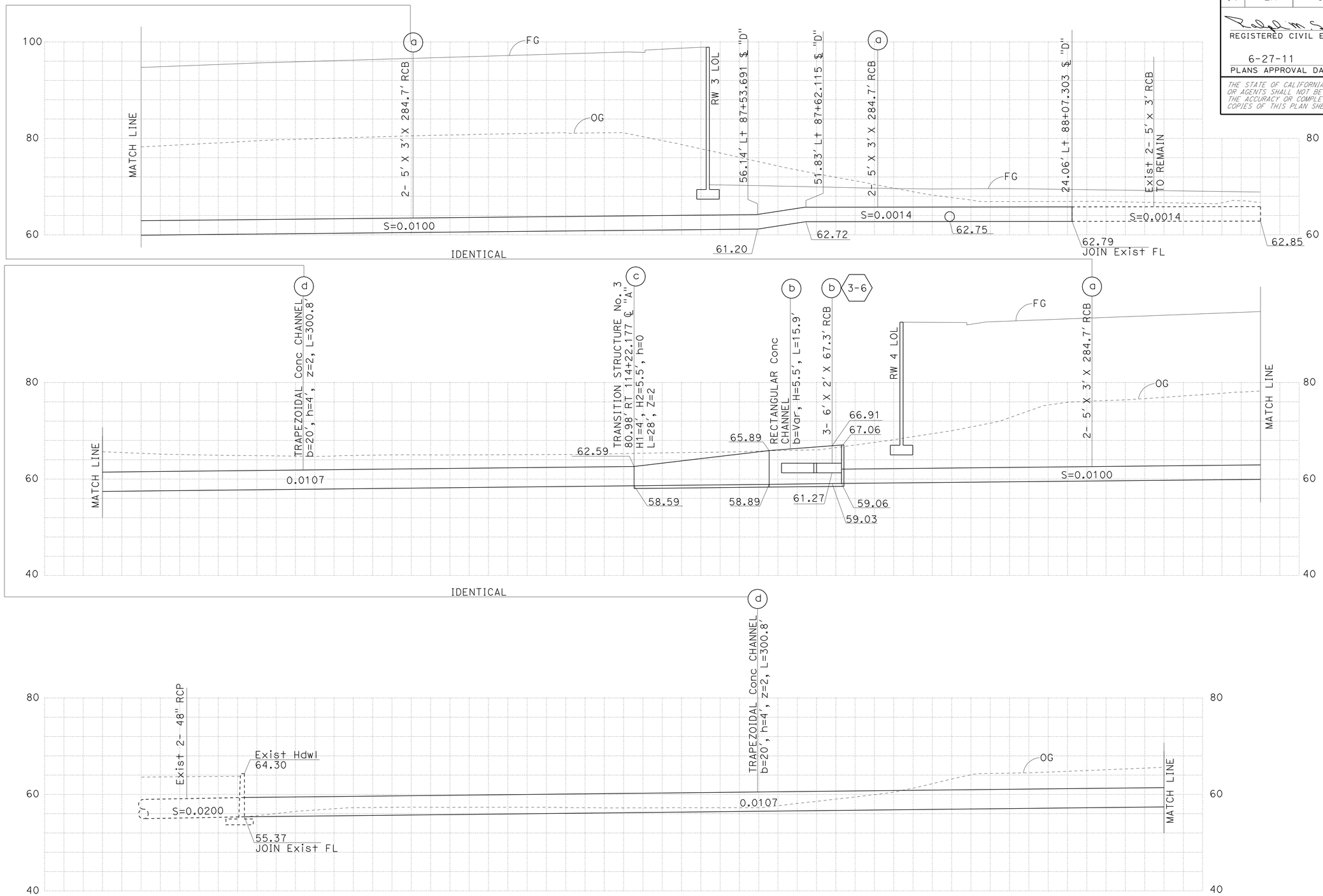

DRAINAGE SYSTEM No. 3-3

DRAINAGE PROFILES

SCALE: 1" = 10' Horiz
1" = 10' Vert

DP-17

STATE OF CALIFORNIA - DEPARTMENT OF TRANSPORTATION
Caltrans® HYDRAULICS

FUNCTIONAL SUPERVISOR: RALPH M. SASAKI
CALCULATED-DESIGNED BY: SIEW MEI TAN
CHECKED BY: RALPH M. SASAKI
REVISED BY
DATE REVISED

LAST REVISION 00-00-00 | DATE PLOTTED => 30-JUN-2011 | TIME PLOTTED => 16:08

Dist	COUNTY	ROUTE	POST MILES TOTAL PROJECT	SHEET No.	TOTAL SHEETS
07	LA	5	1.2/2.1	104	602

REGISTERED CIVIL ENGINEER 3/14/11 DATE

6-27-11
PLANS APPROVAL DATE

REGISTERED PROFESSIONAL ENGINEER RALPH M. SASAKI No. 30849 Exp. 3/31/12 CIVIL STATE OF CALIFORNIA

THE STATE OF CALIFORNIA OR ITS OFFICERS OR AGENTS SHALL NOT BE RESPONSIBLE FOR THE ACCURACY OR COMPLETENESS OF SCANNED COPIES OF THIS PLAN SHEET.

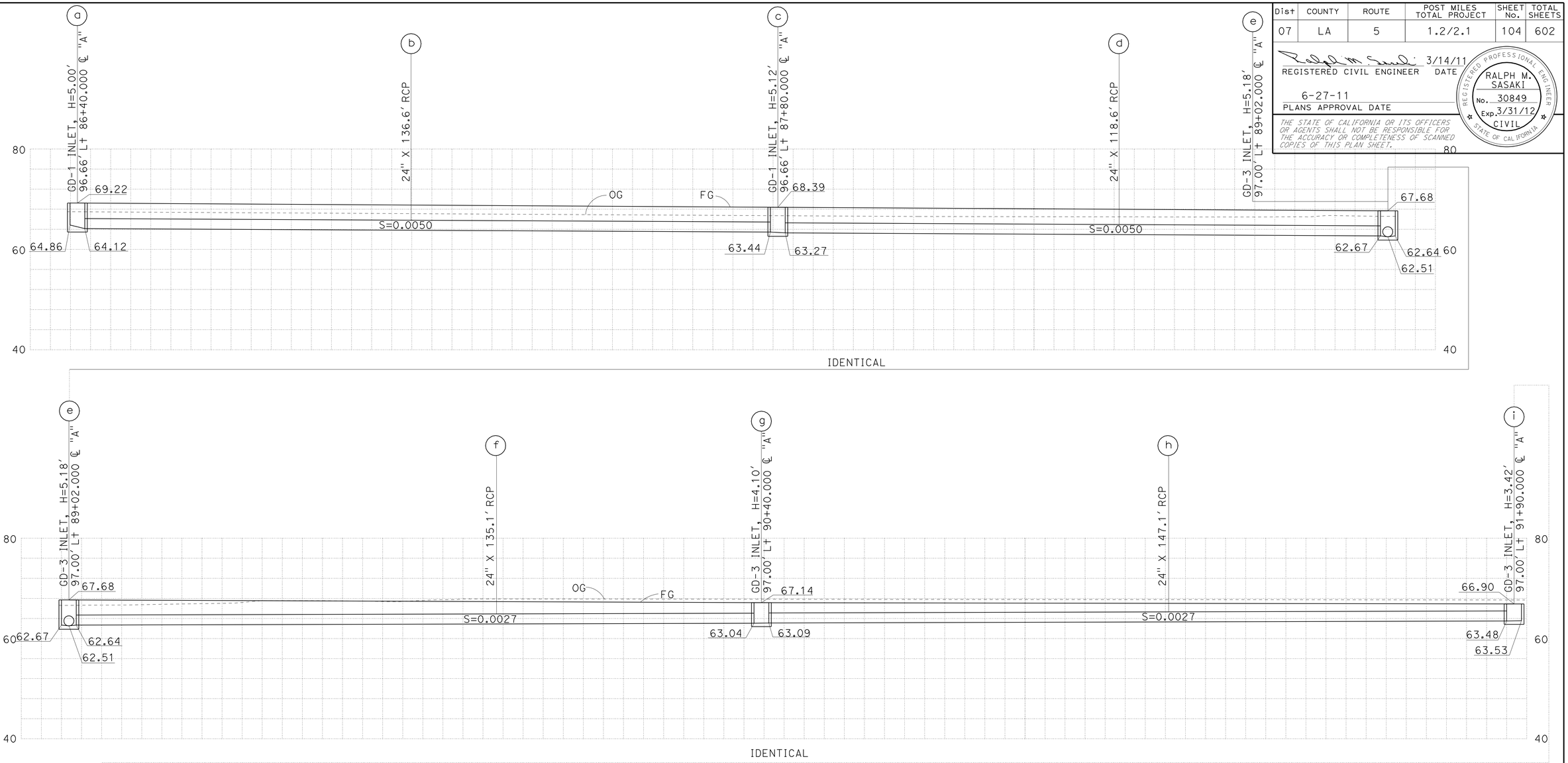

DRAINAGE SYSTEM No. 3-4

DRAINAGE PROFILES

SCALE: 1" = 10′ Horiz
1" = 10′ Vert

DP-18

STATE OF CALIFORNIA - DEPARTMENT OF TRANSPORTATION
Caltrans HYDRAULICS

FUNCTIONAL SUPERVISOR: RALPH M. SASAKI
CALCULATED-DESIGNED BY: SIEW MEI TAN
CHECKED BY: RALPH M. SASAKI
REVISED BY
DATE REVISED

LAST REVISION 00-00-00
DATE PLOTTED => 30-JUN-2011
TIME PLOTTED => 16:09

Dist	COUNTY	ROUTE	POST MILES TOTAL PROJECT	SHEET No.	TOTAL SHEETS
07	LA	5	1.2/2.1	105	602

REGISTERED CIVIL ENGINEER 3/14/11 DATE

6-27-11
PLANS APPROVAL DATE

REGISTERED PROFESSIONAL ENGINEER RALPH M. SASAKI No. 30849 Exp. 3/31/12 CIVIL STATE OF CALIFORNIA

THE STATE OF CALIFORNIA OR ITS OFFICERS OR AGENTS SHALL NOT BE RESPONSIBLE FOR THE ACCURACY OR COMPLETENESS OF SCANNED COPIES OF THIS PLAN SHEET.

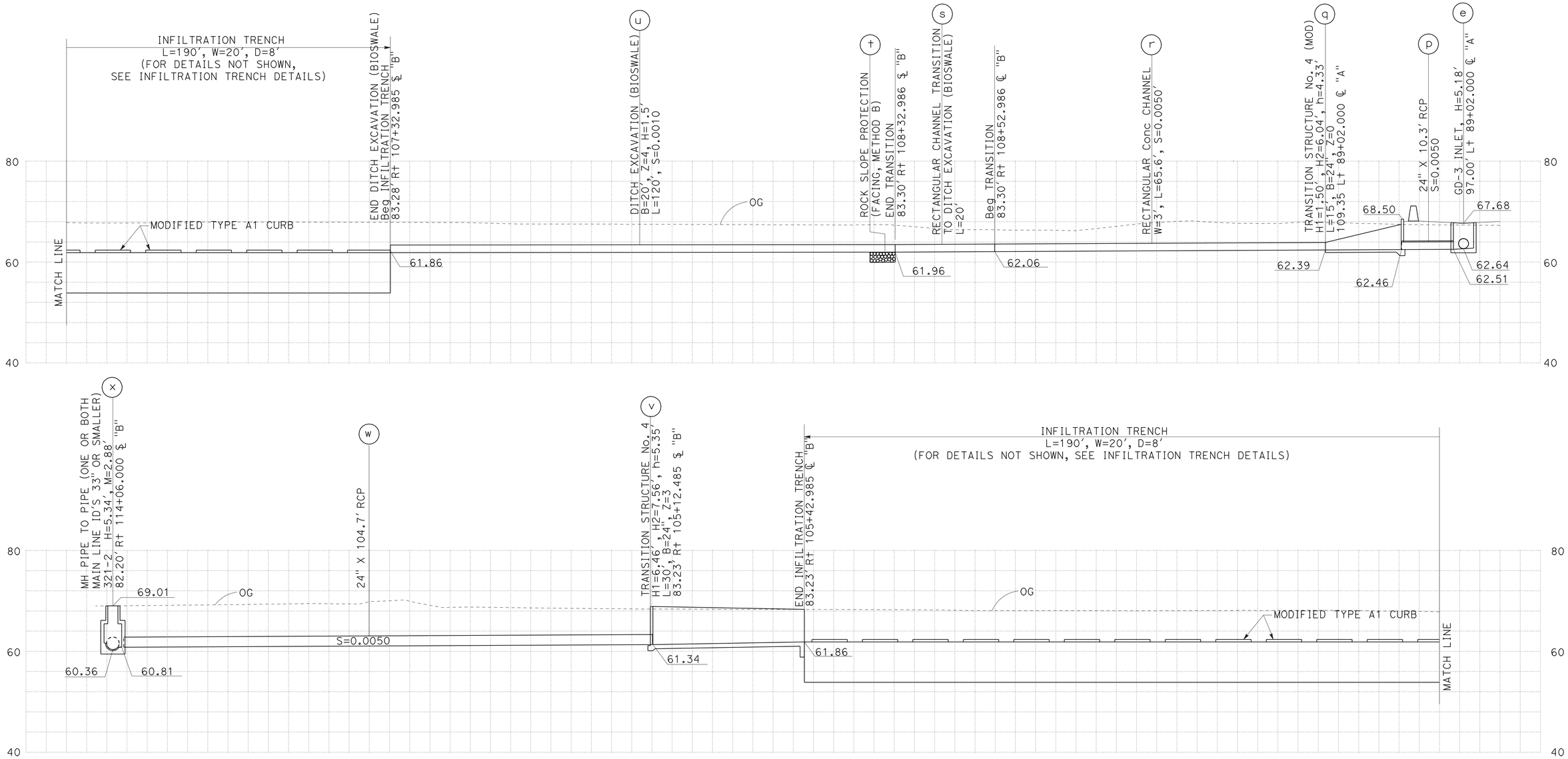

DRAINAGE SYSTEM No. 3-4

DRAINAGE PROFILES

SCALE: 1" = 10' Horiz
1" = 10' Vert

DP-19

STATE OF CALIFORNIA - DEPARTMENT OF TRANSPORTATION
Caltrans® HYDRAULICS

FUNCTIONAL SUPERVISOR: RALPH M. SASAKI
CALCULATED-DESIGNED BY: SIEW MEI TAN
CHECKED BY: RALPH M. SASAKI
REVISED BY
DATE REVISED

LAST REVISION 00-00-00
DATE PLOTTED => 30-JUN-2011
TIME PLOTTED => 16:09

Dist	COUNTY	ROUTE	POST MILES TOTAL PROJECT	SHEET No.	TOTAL SHEETS
07	LA	5	1.2/2.1	106	602

REGISTERED CIVIL ENGINEER 3/14/11 DATE

6-27-11
PLANS APPROVAL DATE

REGISTERED PROFESSIONAL ENGINEER RALPH M. SASAKI No. 30849 Exp. 3/31/12 CIVIL STATE OF CALIFORNIA

THE STATE OF CALIFORNIA OR ITS OFFICERS OR AGENTS SHALL NOT BE RESPONSIBLE FOR THE ACCURACY OR COMPLETENESS OF SCANNED COPIES OF THIS PLAN SHEET.

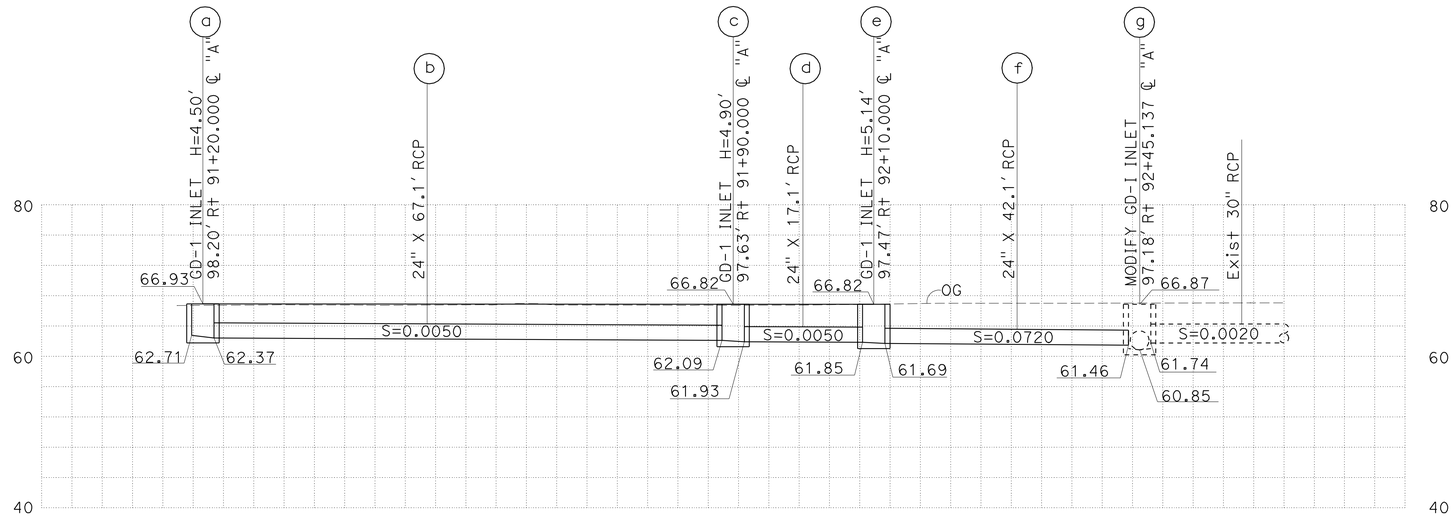

DRAINAGE SYSTEM No. 3-5

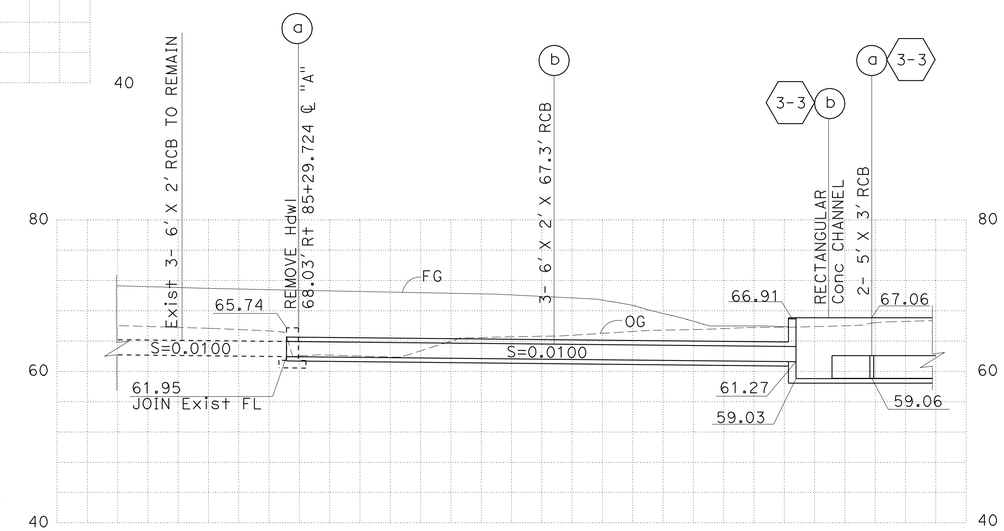

DRAINAGE SYSTEM No. 3-6

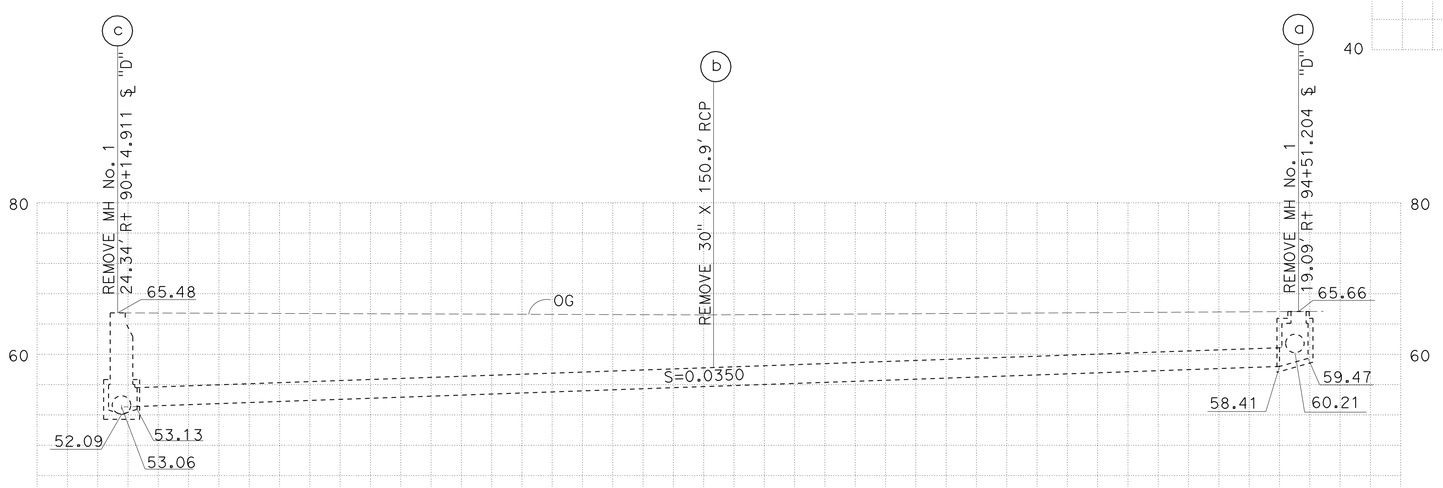

DRAINAGE SYSTEM No. 3-7

DRAINAGE PROFILES

SCALE: 1" = 10' Horiz
1" = 10' Vert

DP-20

STATE OF CALIFORNIA - DEPARTMENT OF TRANSPORTATION
Caltrans HYDRAULICS

FUNCTIONAL SUPERVISOR: RALPH M. SASAKI
CALCULATED-DESIGNED BY: SIEW MEI TAN
CHECKED BY: RALPH M. SASAKI
REVISED BY
DATE REVISED

LAST REVISION 00-00-00
DATE PLOTTED => 30-JUN-2011
TIME PLOTTED => 16:09

Dist	COUNTY	ROUTE	POST MILES TOTAL PROJECT	SHEET No.	TOTAL SHEETS
07	LA	5	1.2/2.1	107	602

REGISTERED CIVIL ENGINEER 3/14/11 DATE

6-27-11
PLANS APPROVAL DATE

REGISTERED PROFESSIONAL ENGINEER RALPH M. SASAKI No. 30849 Exp. 3/31/12 CIVIL STATE OF CALIFORNIA

THE STATE OF CALIFORNIA OR ITS OFFICERS OR AGENTS SHALL NOT BE RESPONSIBLE FOR THE ACCURACY OR COMPLETENESS OF SCANNED COPIES OF THIS PLAN SHEET.

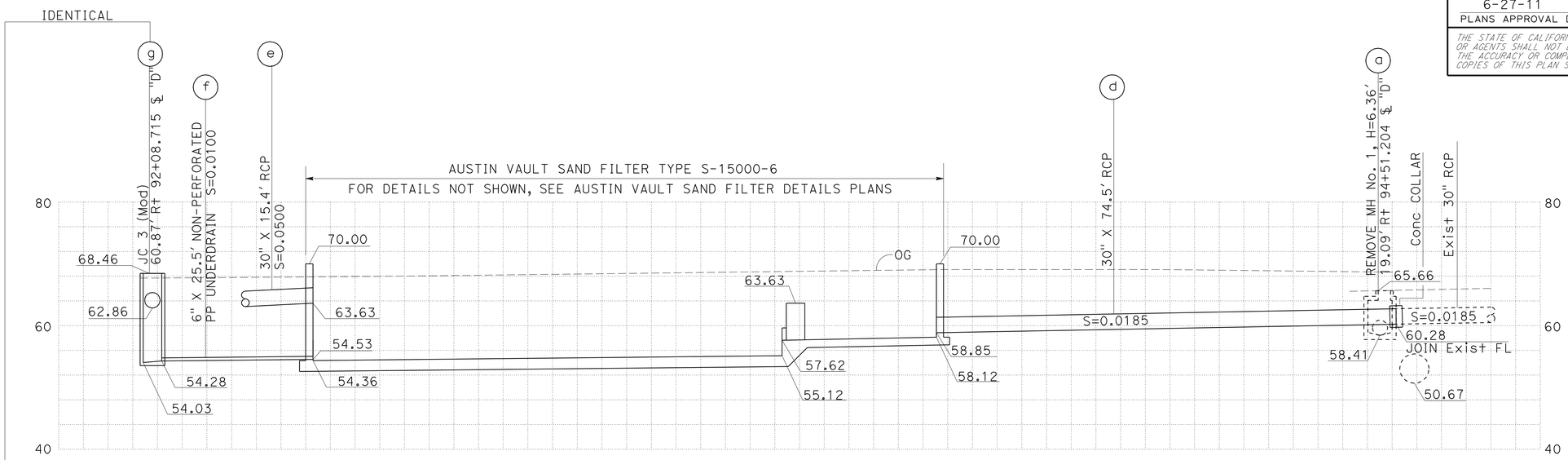

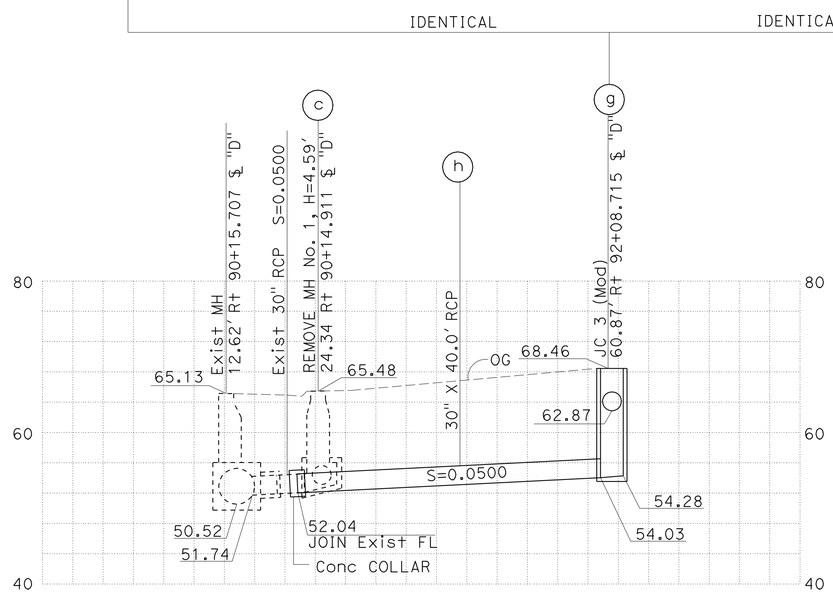

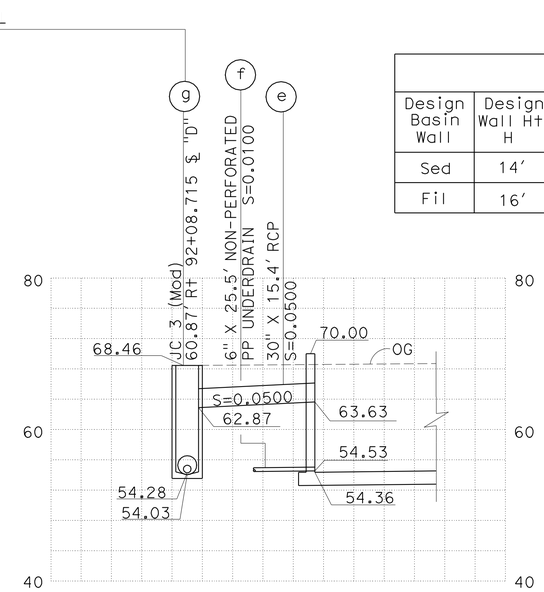

WALL DESIGN TABLE

Design Basin Wall	Design Wall Ht. H	Top of Wall Elevation						Top of Footing Elevation					
		WE1	WE2	WE3	WE4	WE5	WE6	FE0	FE1	FE2	FE3	FE4	FE5
Sed	14'	70.00	70.00	70.00	70.00	70.00	70.00	58.17	58.12	57.62	55.12	54.36	54.34
Fil	16'												

DRAINAGE SYSTEM No. 3-7

DRAINAGE PROFILES

SCALE: 1" = 10' Horiz
1" = 10' Vert

DP-21

STATE OF CALIFORNIA - DEPARTMENT OF TRANSPORTATION
Caltrans HYDRAULICS

FUNCTIONAL SUPERVISOR: RALPH M. SASAKI
CALCULATED-DESIGNED BY: SIEW MEI TAN
CHECKED BY: RALPH M. SASAKI
REVISED BY
DATE REVISED

LAST REVISION 00-00-00
DATE PLOTTED => 30-JUN-2011
TIME PLOTTED => 16:09

Dist	COUNTY	ROUTE	POST MILES TOTAL PROJECT	SHEET No.	TOTAL SHEETS
07	LA	5	1.2/2.1	108	602

REGISTERED CIVIL ENGINEER 3/14/11 DATE

6-27-11
PLANS APPROVAL DATE

REGISTERED PROFESSIONAL ENGINEER RALPH M. SASAKI No. 30849 Exp. 3/31/12 CIVIL STATE OF CALIFORNIA

THE STATE OF CALIFORNIA OR ITS OFFICERS OR AGENTS SHALL NOT BE RESPONSIBLE FOR THE ACCURACY OR COMPLETENESS OF SCANNED COPIES OF THIS PLAN SHEET.

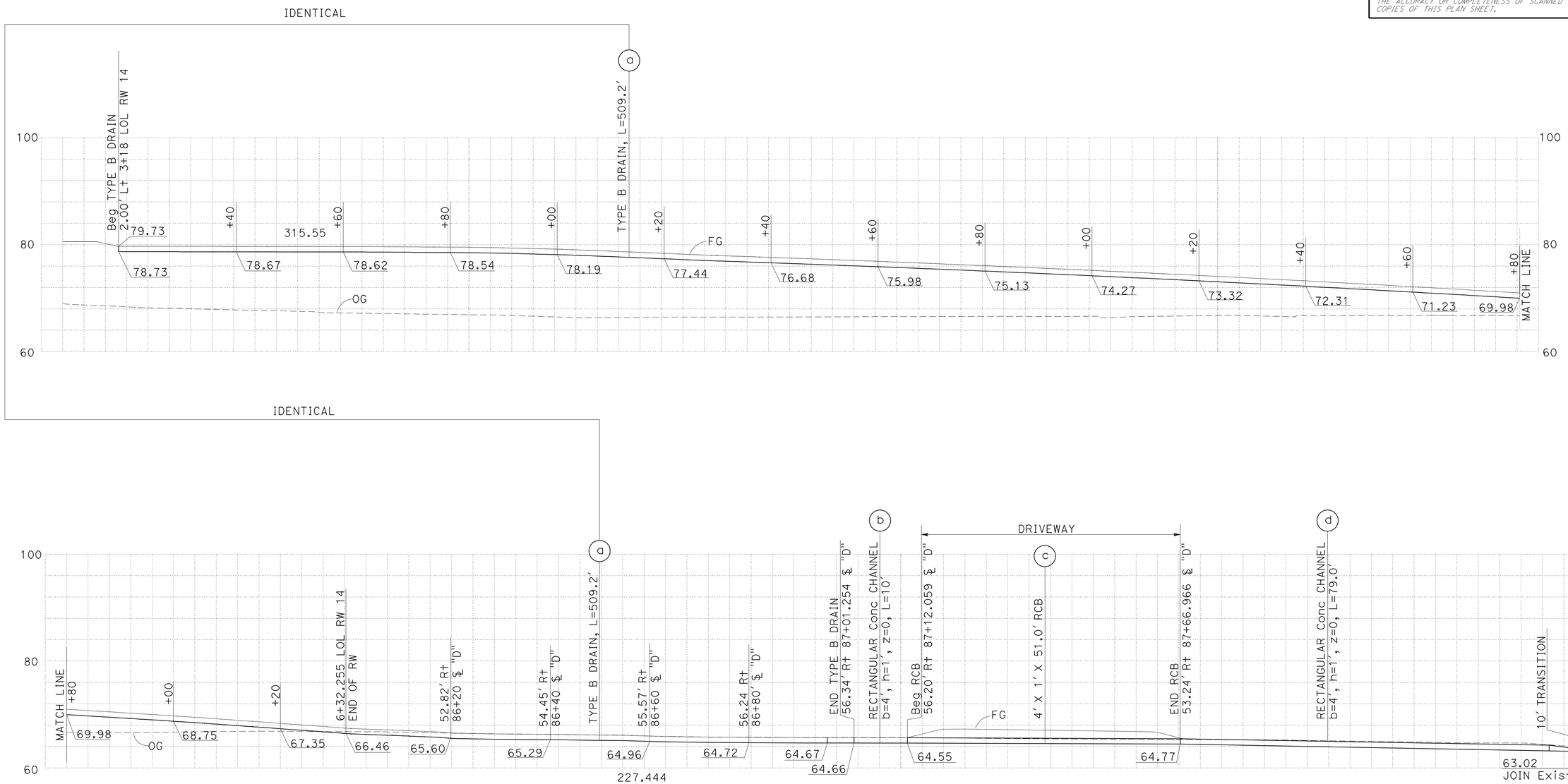

DRAINAGE SYSTEM No. 3-8

DRAINAGE PROFILES

SCALE: 1" = 10' Horiz
1" = 10' Vert

DP-22

REVISED BY	DATE REVISED

CALCULATED-DESIGNED BY: SIEW MEI TAN
CHECKED BY: RALPH M. SASAKI
FUNCTIONAL SUPERVISOR: RALPH M. SASAKI

STATE OF CALIFORNIA - DEPARTMENT OF TRANSPORTATION
Caltrans
HYDRAULICS

LAST REVISION 00-00-00
DATE PLOTTED => 30-JUN-2011
TIME PLOTTED => 16:09

Dist	COUNTY	ROUTE	POST MILES TOTAL PROJECT	SHEET No.	TOTAL SHEETS
07	LA	5	1.2/2.1	109	602

REGISTERED CIVIL ENGINEER 3/14/11 DATE

6-27-11
PLANS APPROVAL DATE

REGISTERED PROFESSIONAL ENGINEER RALPH M. SASAKI No. 30849 Exp. 3/31/12 CIVIL STATE OF CALIFORNIA

THE STATE OF CALIFORNIA OR ITS OFFICERS OR AGENTS SHALL NOT BE RESPONSIBLE FOR THE ACCURACY OR COMPLETENESS OF SCANNED COPIES OF THIS PLAN SHEET.

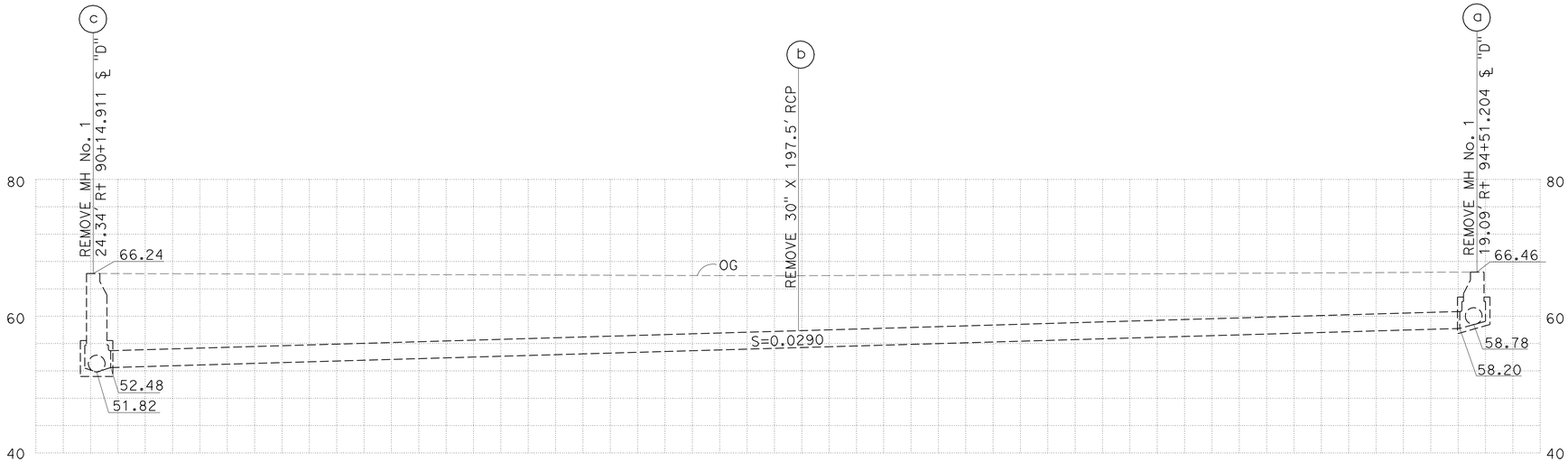

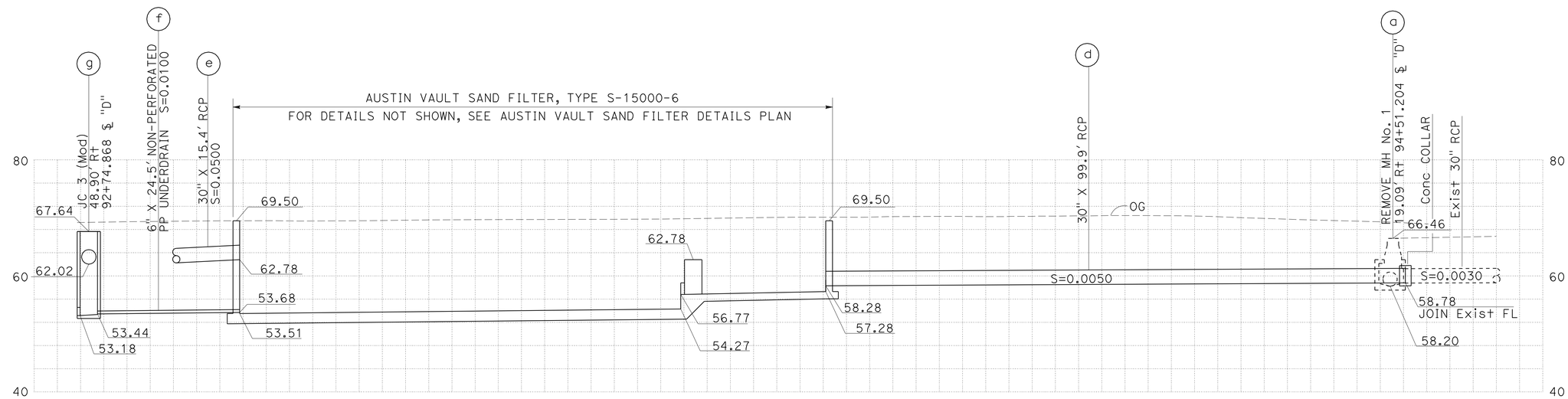

WALL DESIGN TABLE													
Design Basin Wall	Design Wall Ht. H	Top of Wall Elevation						Top of Footing Elevation					
		WE1	WE2	WE3	WE4	WE5	WE6	FE0	FE1	FE2	FE3	FE4	FE5
Sed	14'	69.50	69.50	69.50	69.50	69.50	69.50	57.32	57.27	56.77	54.27	53.51	53.49
Fil	16'												

DRAINAGE SYSTEM No. 4-1

DRAINAGE PROFILES

SCALE: 1" = 10' Horiz
1" = 10' Vert

DP-23

STATE OF CALIFORNIA - DEPARTMENT OF TRANSPORTATION
Caltrans HYDRAULICS

FUNCTIONAL SUPERVISOR: RALPH M. SASAKI
CALCULATED-DESIGNED BY: SIEW MEI TAN
CHECKED BY: RALPH M. SASAKI
REVISED BY
DATE REVISED

LAST REVISION 00-00-00 | DATE PLOTTED => 30-JUN-2011 | TIME PLOTTED => 16:09

Dist	COUNTY	ROUTE	POST MILES TOTAL PROJECT	SHEET No.	TOTAL SHEETS
07	LA	5	1.2/2.1	110	602

REGISTERED CIVIL ENGINEER 3/14/11 DATE

6-27-11
PLANS APPROVAL DATE

REGISTERED PROFESSIONAL ENGINEER RALPH M. SASAKI No. 30849 Exp. 3/31/12 CIVIL STATE OF CALIFORNIA

THE STATE OF CALIFORNIA OR ITS OFFICERS OR AGENTS SHALL NOT BE RESPONSIBLE FOR THE ACCURACY OR COMPLETENESS OF SCANNED COPIES OF THIS PLAN SHEET.

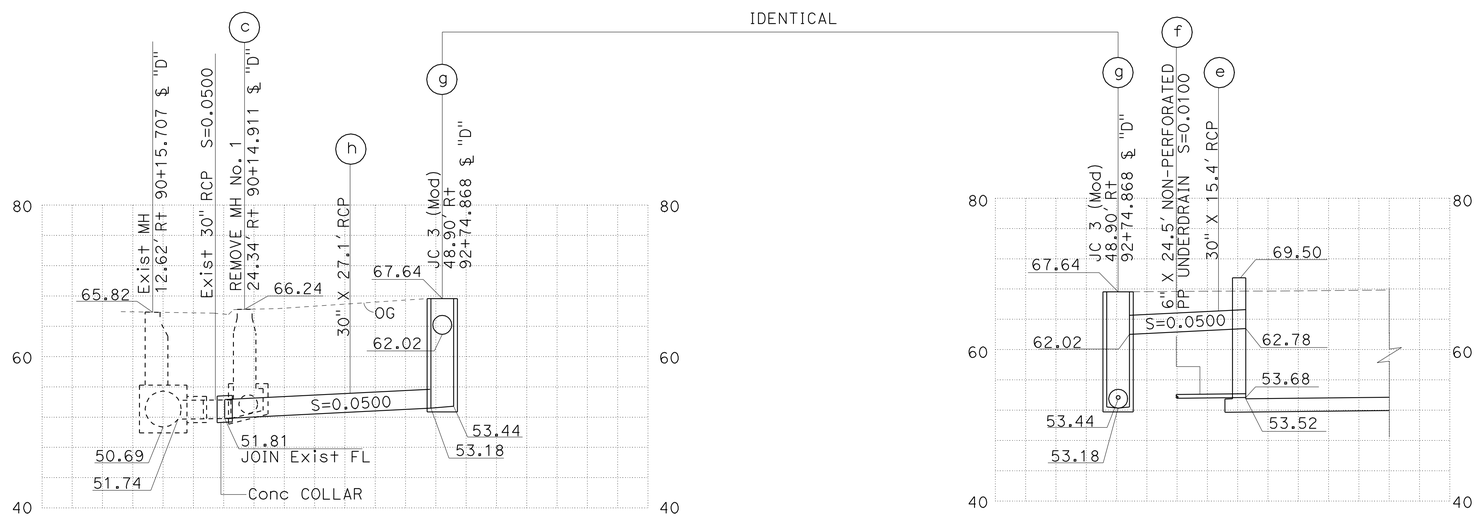

DRAINAGE SYSTEM No. 4-1

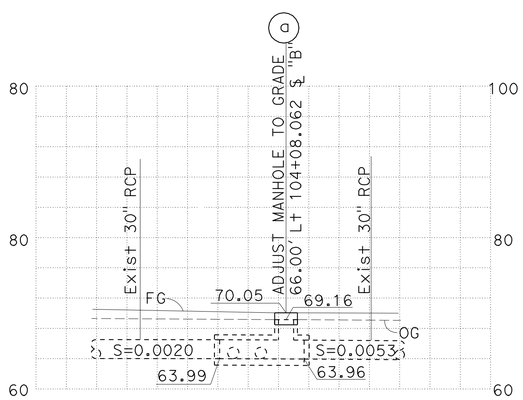

DRAINAGE SYSTEM No. 4-2

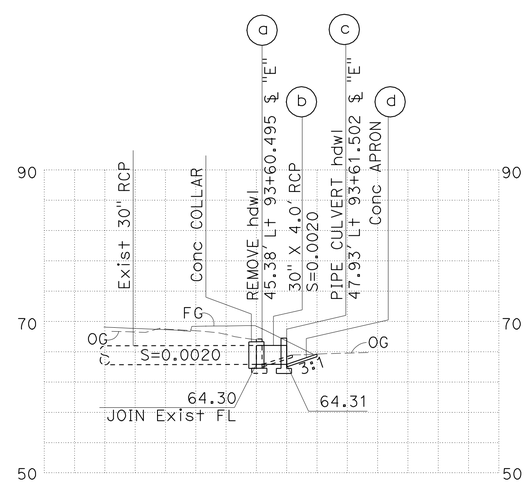

DRAINAGE SYSTEM No. 4-3

DRAINAGE PROFILES

SCALE: 1" = 10' Horiz
1" = 10' Vert

DP-24

STATE OF CALIFORNIA - DEPARTMENT OF TRANSPORTATION
Caltrans HYDRAULICS

FUNCTIONAL SUPERVISOR: RALPH M. SASAKI
CALCULATED-DESIGNED BY: SIEW MEI TAN
CHECKED BY: RALPH M. SASAKI
REVISED BY / DATE REVISED

LAST REVISION 00-00-00 | DATE PLOTTED => 30-JUN-2011 | TIME PLOTTED => 16:09

Dist	COUNTY	ROUTE	POST MILES TOTAL PROJECT	SHEET No.	TOTAL SHEETS
07	LA	5	1.2/2.1	111	602

REGISTERED CIVIL ENGINEER 3/14/11 DATE

6-27-11
PLANS APPROVAL DATE

REGISTERED PROFESSIONAL ENGINEER RALPH M. SASAKI No. 30849 Exp. 3/31/12 CIVIL STATE OF CALIFORNIA

THE STATE OF CALIFORNIA OR ITS OFFICERS OR AGENTS SHALL NOT BE RESPONSIBLE FOR THE ACCURACY OR COMPLETENESS OF SCANNED COPIES OF THIS PLAN SHEET.

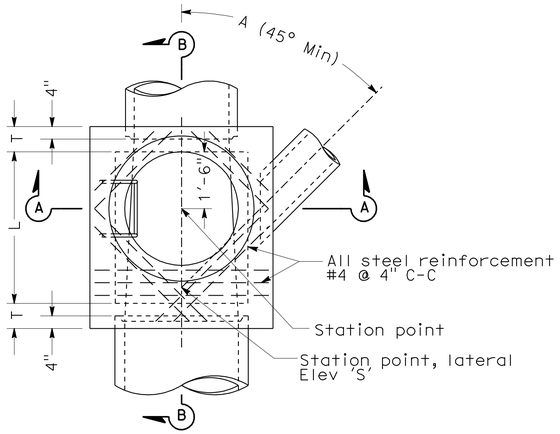

PLAN
(Shaft not shown)

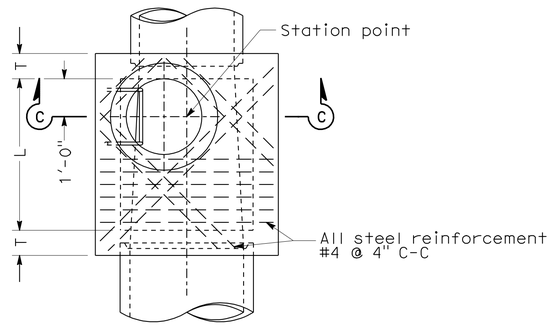

PLAN
DETAIL N
(Shaft not shown)

NOTES:

1. Height 'H' (in Sec A-A and Sec B-B) shall be not less than 4'-8", but may be increased provided that the value of 'M' shall be not less than the minimum specified and that the reducer shall be used. For 'H' (in Sec C-C) see Note 4.
2. Length 'L' shall be 4' unless otherwise shown on drainage plan.
3. Shaft shall be constructed as per Sec C-C and Detail N when depth 'M' from street grade to top of box is less than 2'-10 1/2" for paved streets or 3'-6" for unpaved streets.
4. Depth 'P' may be reduced to an absolute limit of 6" when larger values of 'P' would reduce 'H' (in Sec C-C) to 3'-6" or less.
5. 'T' shall be 8" for values of 'H' up to and including 8'. 'T' shall be 10" for values of 'H' over 8'.
6. Lowest step shall be not more than 16" above the ledge at the side of manhole floor.
7. Body of manhole shall be poured in one continuous operation, except that the Contractor shall have the option of placing at the spring line a construction joint with a longitudinal keyway.
8. Reinforcing steel shall be 1 1/2" clear from face of concrete.
9. Floor of manhole shall be steel-troweled to spring line.
10. Rings, reducer, and pipe for access shaft shall be seated in 1:2 cement mortar and neatly pointed or wiped inside shaft.
11. Manhole frame and cover per Standard Plan B7-11 detail 'U45'.
12. Step detail per Standard Plans D74C.

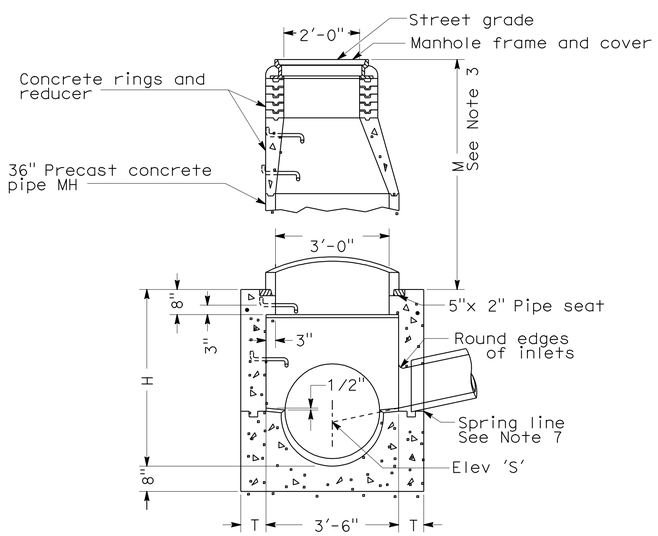

SECTION A-A

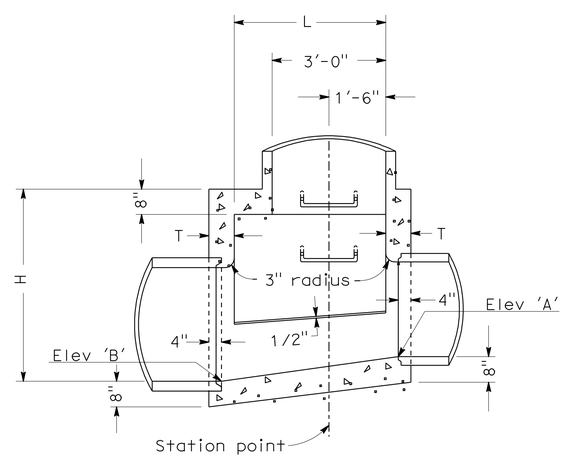

SECTION B-B

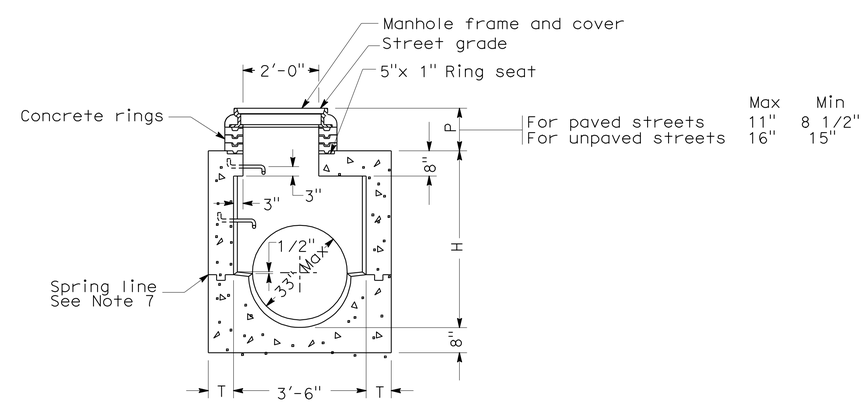

SECTION C-C

MANHOLE No. 1 (MH No. 1)

DRAINAGE DETAILS

NO SCALE

DD-1

STATE OF CALIFORNIA - DEPARTMENT OF TRANSPORTATION
Caltrans® HYDRAULICS

FUNCTIONAL SUPERVISOR: RALPH M. SASAKI
CALCULATED-DESIGNED BY: SIEW MEI TAN
CHECKED BY: RALPH M. SASAKI
REVISED BY / DATE REVISED

LAST REVISION 00-00-00
DATE PLOTTED => 30-JUN-2011
TIME PLOTTED => 15:42

Dist	COUNTY	ROUTE	POST MILES TOTAL PROJECT	SHEET No.	TOTAL SHEETS
07	LA	5	1.2/2.1	112	602

REGISTERED CIVIL ENGINEER 3/14/11 DATE

6-27-11
PLANS APPROVAL DATE

REGISTERED PROFESSIONAL ENGINEER RALPH M. SASAKI No. 30849 Exp. 3/31/12 CIVIL STATE OF CALIFORNIA

THE STATE OF CALIFORNIA OR ITS OFFICERS OR AGENTS SHALL NOT BE RESPONSIBLE FOR THE ACCURACY OR COMPLETENESS OF SCANNED COPIES OF THIS PLAN SHEET.

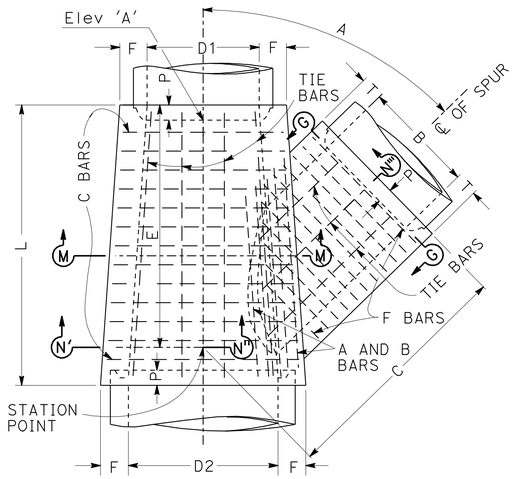

PLAN

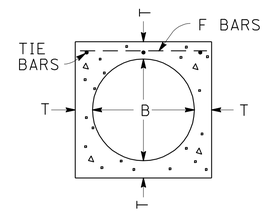

SECTION G-G

NOTES:

1. VALUES FOR 'A', 'B', 'C', 'D1', 'D2', 'E', 'L', Elev 'A', Elev 'B', Elev 'R' AND Elev 'S' ARE SHOWN ON DRAINAGE PLANS.
2. EMBEDMENT 'P' SHALL BE 5" for PIPE DIAMETERS 12" TO 96" AND 8" FOR PIPE DIAMETERS 102" TO 144".
3. FLOOR OF STRUCTURE SHALL BE STEEL - TROWELED TO SPRING LINE.
4. REINFORCING STEEL SHALL BE 1½" CLEAR FROM FACE OF CONCRETE UNLESS OTHERWISE SHOWN. A AND B BARS NEED NOT BE LONGER THAN THE OUTSIDE DIAGONAL WIDTH OF THE LATERAL SPUR.
5. STEEL SCHEDULE:

Dia B or D2	A or B BARS	C or F BARS
12" to 39"	#5 @ 3"	#4 @ 6"
42" to 84"	#6 @ 3"	#5 @ 6"
90" to 144"	#7 @ 3"	#6 @ 6"
TIE BARS - #3 @ 18" C-C		

6. ELEVATION 'S' APPLIES AT CENTER OF MAIN LINE ON PROLONGATION OF INVERT OF SPUR.
7. JUNCTION STRUCTURE SHALL BE POURED IN ONE CONTINUOUS OPERATION, EXCEPT THAT THE CONTRACTOR SHALL HAVE THE OPTION OF PLACING AT THE SPRING LINE A CONSTRUCTION JOINT WITH A LONGITUDINAL KEYWAY.
8. LATERALS - WHERE LATERALS ENTER ON BOTH SIDES OF STRUCTURE, THEY SHALL BE DESIGNATED ON THE DRAINAGE PLAN AS RIGHT OR LEFT, FACING IN THE DIRECTION OF STATIONING.

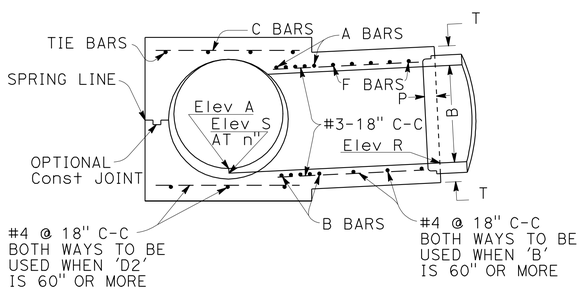

SECTION N'-N"-N'''
PROJECTED ON M-M-N"

TABLE OF VALUES FOR F AND T

D2 or B	F or T	D2 or B	F or T
12"	4"	63"	10"
15"	4 1/4"	66"	10 1/4"
18"	4 1/2"	69"	10 3/4"
21"	5"	72"	11"
24"	5 1/4"	78"	11 3/4"
27"	5 1/2"	84"	12 1/2"
30"	6"	90"	13 1/4"
33"	6 1/4"	96"	14"
36"	6 1/2"	102"	15 1/2"
39"	7"	108"	16"
42"	7 1/2"	114"	16 1/2"
45"	7 3/4"	120"	17"
48"	8"	126"	17"
51"	8 1/2"	132"	17 1/2"
54"	9"	138"	17 1/2"
57"	9 1/4"	144"	18"
60"	9 1/2"		

JUNCTION STRUCTURE No. 2 (JS 2)

DRAINAGE DETAILS

NO SCALE

DD-2

REVISED BY | DATE REVISED
SIEW MEI TAN | RALPH M. SASAKI
CALCULATED-DESIGNED BY | CHECKED BY
FUNCTIONAL SUPERVISOR | RALPH M. SASAKI
STATE OF CALIFORNIA - DEPARTMENT OF TRANSPORTATION
Caltrans® HYDRAULICS

LAST REVISION 00-00-00 | DATE PLOTTED => 30-JUN-2011 | TIME PLOTTED => 15:42

Dist	COUNTY	ROUTE	POST MILES TOTAL PROJECT	SHEET No.	TOTAL SHEETS
07	LA	5	1.2/2.1	113	602

REGISTERED CIVIL ENGINEER 3/14/11 DATE

6-27-11
PLANS APPROVAL DATE

REGISTERED PROFESSIONAL ENGINEER RALPH M. SASAKI No. 30849 Exp. 3/31/12 CIVIL STATE OF CALIFORNIA

THE STATE OF CALIFORNIA OR ITS OFFICERS OR AGENTS SHALL NOT BE RESPONSIBLE FOR THE ACCURACY OR COMPLETENESS OF SCANNED COPIES OF THIS PLAN SHEET.

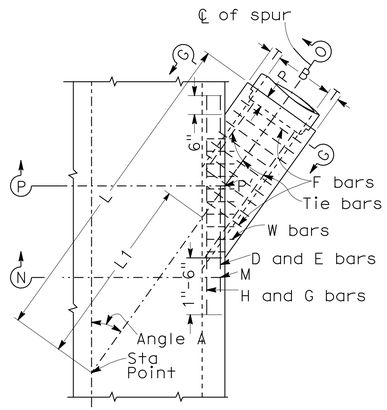

PLAN

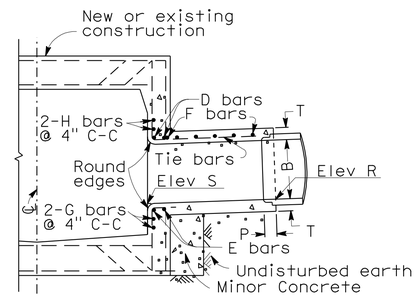

SECTION N-M-P'-O
Projected on P-P'-O

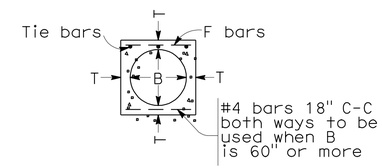

SECTION G-G

NOTES:

1. VALUES for 'A', 'B', 'L', 'L1', 'Elev R' and 'Elev S' are shown on Drainage Plan.
2. STATIONS specified in Drainage Plan apply at intersection of centerlines of main line and lateral.
3. EMBEDMENT 'P' shall be 5" for pipe diameters 12" to 96" and 8" for pipe diameters 102" to 144".
4. REINFORCING STEEL shall be 1½" clear from face of concrete unless otherwise shown. W BARS are of size and spacing specified for wall steel on Drainage Plan, and shall be cut in center of opening and bent into top and bottom of junction structure. OMIT H BARS when soffit of spur is 1' or less below soffit of main line, and omit G bars when invert of spur is 1' or less above floor of main line.
5. STEEL SCHEDULE:

Dia B	D,E,H,G Bars	F Bars
12" to 39"	#5	#4 @ 6" C-C
42" to 84"	#6	#5 @ 6" C-C
90" to 144"	#7	#6 @ 6" C-C
Tie bars - #3 @ 18" C-C		

6. JUNCTION STRUCTURE shall be poured monolithic with main line storm drain or manhole.
7. FLOOR of structure shall be steel-troweled.

TABLE OF VALUES FOR T

B	T	B	T
12"	4"	63"	10"
15"	4 1/4"	66"	10 1/4"
18"	4 1/2"	69"	10 3/4"
21"	5"	72"	11"
24"	5 1/4"	78"	11 3/4"
27"	5 1/2"	84"	12 1/2"
30"	6"	90"	13 1/4"
33"	6 1/4"	96"	14"
36"	6 1/2"	102"	15 1/2"
39"	7"	108"	16"
42"	7 1/2"	114"	16 1/2"
45"	7 3/4"	120"	17"
48"	8"	126"	17"
51"	8 1/2"	132"	17 1/2"
54"	9"	138"	17 1/2"
57"	9 1/4"	144"	18"
60"	9 1/2"		

JUNCTION STRUCTURE No. 3 (JS 3)

DRAINAGE DETAILS

NO SCALE

DD-3

STATE OF CALIFORNIA - DEPARTMENT OF TRANSPORTATION
Caltrans HYDRAULICS

FUNCTIONAL SUPERVISOR: RALPH M. SASAKI
CALCULATED-DESIGNED BY: SIEW MEI TAN
CHECKED BY: RALPH M. SASAKI
REVISED BY
DATE REVISED

LAST REVISION 00-00-00
DATE PLOTTED => 30-JUN-2011
TIME PLOTTED => 15:42

Dist	COUNTY	ROUTE	POST MILES TOTAL PROJECT	SHEET No.	TOTAL SHEETS
07	LA	5	1.2/2.1	114	602

REGISTERED CIVIL ENGINEER 3/14/11 DATE

6-27-11
PLANS APPROVAL DATE

REGISTERED PROFESSIONAL ENGINEER RALPH M. SASAKI No. 30849 Exp. 3/31/12 CIVIL STATE OF CALIFORNIA

THE STATE OF CALIFORNIA OR ITS OFFICERS OR AGENTS SHALL NOT BE RESPONSIBLE FOR THE ACCURACY OR COMPLETENESS OF SCANNED COPIES OF THIS PLAN SHEET.

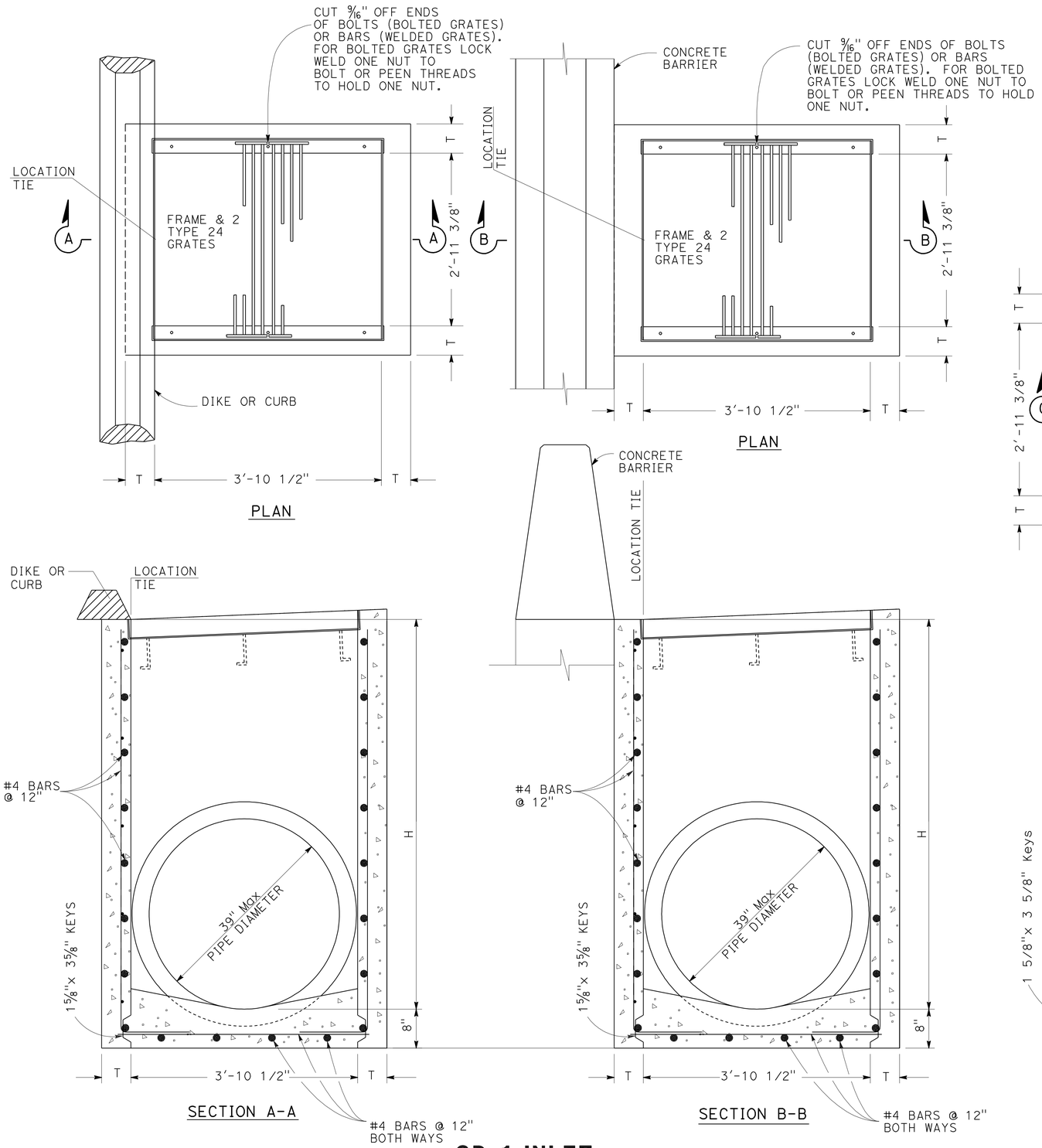

GD-1 INLET

(FOR PIPE DIAMETERS 39" OR LESS)

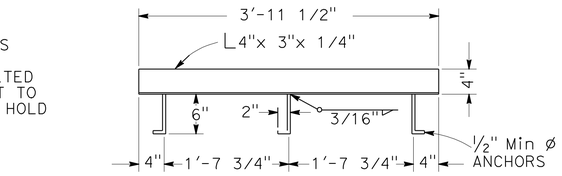

ANCHOR PLACEMENT DETAIL

(GD-1 INLET)

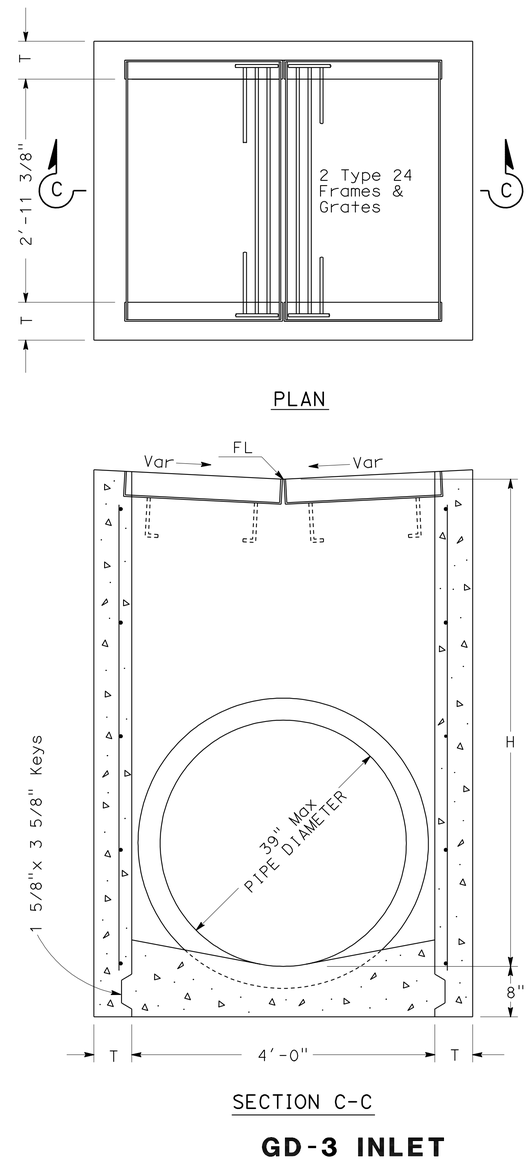

GD-3 INLET

(FOR PIPE DIAMETERS 39" OR LESS)

NOTES:

1. 'H' IS THE DIFFERENCE IN ELEVATION BETWEEN THE OUTLET PIPE FLOW LINE AND THE FLOW LINE OF THE GRATES.
2. STEPS - NONE REQUIRED WHEN 'H' IS 3'-6" OR LESS. INSTALL ONE STEP 16" ± ABOVE FLOOR WHEN 'H' IS MORE THAN 3'-6" AND LESS THAN 5'-0". WHERE 'H' IS MORE THAN 5'-0" STEPS SHALL BE EVENLY SPACED @ 12"± INTERVALS FROM 16"± ABOVE FLOOR TO WITHIN 12"± OF THE TOP OF THE BOX. PLACE STEPS IN WALL WITHOUT PIPE OPENINGS. SEE STANDARD PLAN FOR STEP DETAIL.
3. PIPE(S) CAN BE PLACED IN ANY WALL.
4. REINFORCING STEEL NOT REQUIRED IN WALLS WHEN H=6' OR LESS.
5. REINFORCING STEEL IN WALLS AND INVERT SHALL BE #4 BARS @ 12"± CENTERS PLACED 1½" CLEAR TO INSIDE OF BOX.
6. FOR GRATE, FRAME AND ANCHOR PLACEMENT DETAILS SEE STANDARD PLANS D77A AND 77B.

MISCELLANEOUS IRON & STEEL

Inlet Type	Grate Type	Weight
GD-1	24 - 12	580
GD-3	24 - 12	652

H	T
8'-0" or LESS	6"
8'1" to 20'- 0"	8"

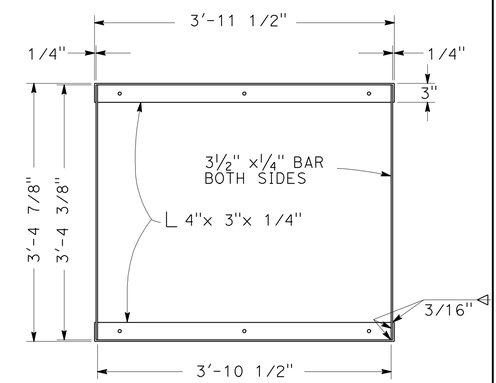

GRATE FRAME DETAIL

(GD-1 INLET)

DRAINAGE DETAILS

NO SCALE

DD-4

REVISED BY	DATE REVISED
SIEW MEI TAN	RALPH M. SASAKI
CALCULATED-DESIGNED BY	CHECKED BY
FUNCTIONAL SUPERVISOR	RALPH M. SASAKI

STATE OF CALIFORNIA - DEPARTMENT OF TRANSPORTATION
Caltrans
HYDRAULICS

LAST REVISION 00-00-00 | DATE PLOTTED => 30-JUN-2011 | TIME PLOTTED => 15:42

Dist	COUNTY	ROUTE	POST MILES TOTAL PROJECT	SHEET No.	TOTAL SHEETS
07	LA	5	1.2/2.1	115	602

REGISTERED CIVIL ENGINEER 3/14/11 DATE

6-27-11
PLANS APPROVAL DATE

REGISTERED PROFESSIONAL ENGINEER RALPH M. SASAKI No. 30849 Exp. 3/31/12 CIVIL STATE OF CALIFORNIA

THE STATE OF CALIFORNIA OR ITS OFFICERS OR AGENTS SHALL NOT BE RESPONSIBLE FOR THE ACCURACY OR COMPLETENESS OF SCANNED COPIES OF THIS PLAN SHEET.

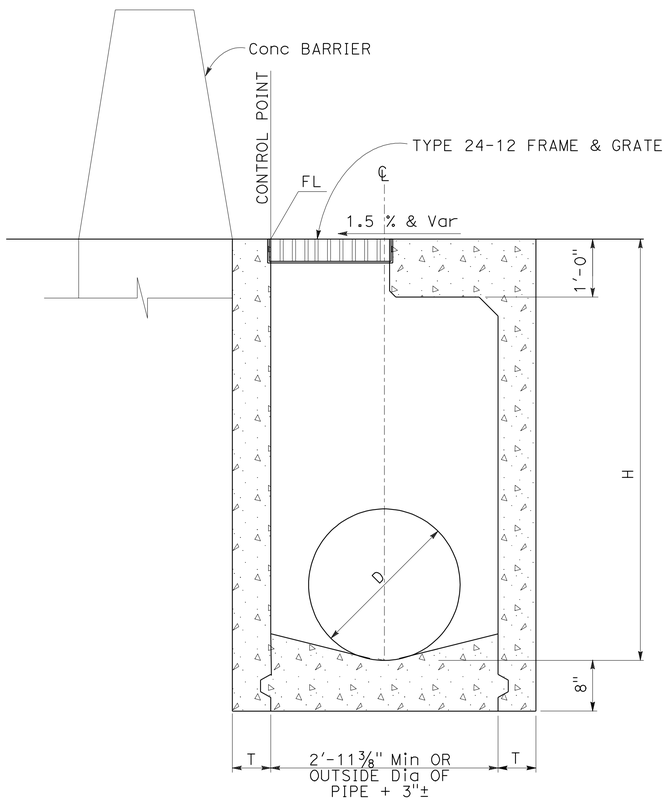

TYPE G2 INLET
AT CONCRETE BARRIER

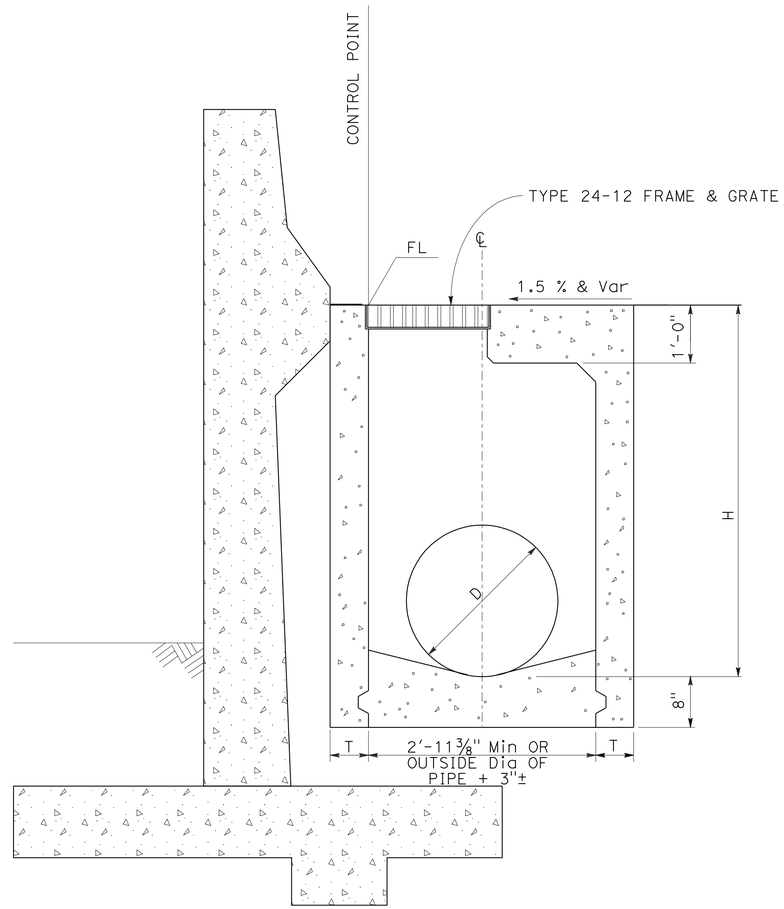

TYPE G2 INLET
DRAINAGE INLET AT WALL

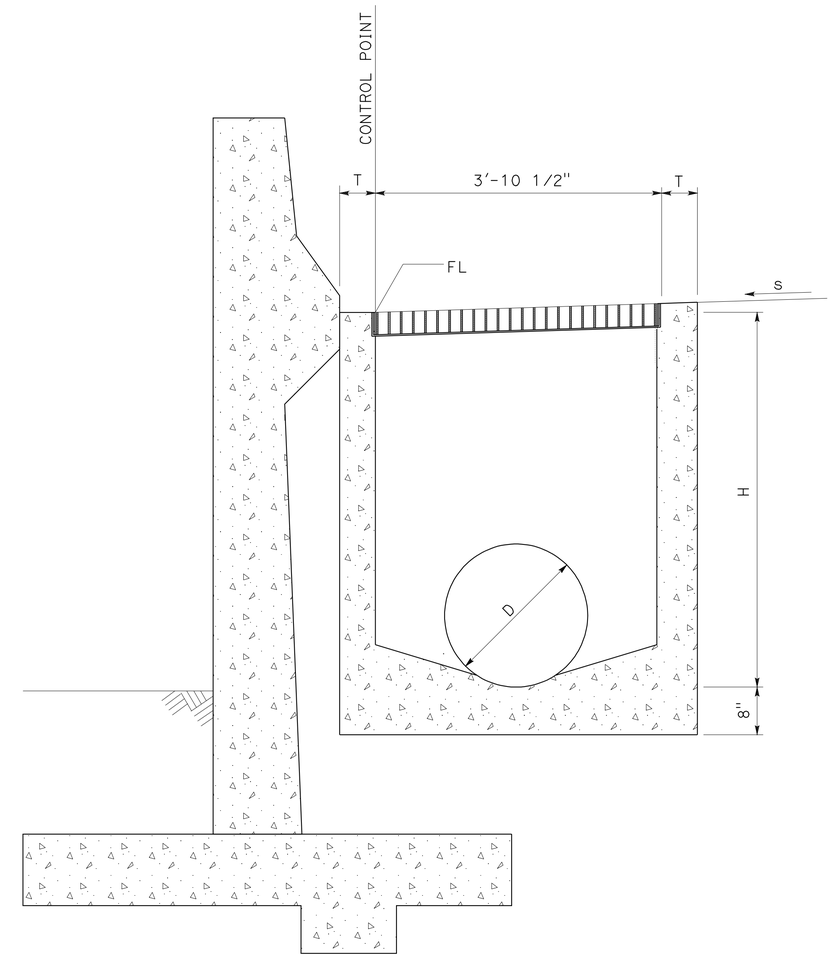

GD-1 INLET
DRAINAGE INLET AT WALL

NOTE:

FOR INFORMATION AND DETAILS NOT SHOWN,
SEE STANDARD PLANS AND DRAINAGE DETAIL SHEETS.

DRAINAGE DETAILS

NO SCALE

DD-5

STATE OF CALIFORNIA - DEPARTMENT OF TRANSPORTATION
Caltrans® HYDRAULICS

FUNCTIONAL SUPERVISOR: RALPH M. SASAKI
CALCULATED-DESIGNED BY: SIEW MEI TAN
CHECKED BY: RALPH M. SASAKI
REVISED BY
DATE REVISED

LAST REVISION 00-00-00
DATE PLOTTED => 30-JUN-2011
TIME PLOTTED => 15:42

Dist	COUNTY	ROUTE	POST MILES TOTAL PROJECT	SHEET No.	TOTAL SHEETS
07	LA	5	1.2/2.1	116	602

REGISTERED CIVIL ENGINEER 3/14/11 DATE

6-27-11
PLANS APPROVAL DATE

REGISTERED PROFESSIONAL ENGINEER RALPH M. SASAKI No. 30849 Exp. 3/31/12 CIVIL STATE OF CALIFORNIA

THE STATE OF CALIFORNIA OR ITS OFFICERS OR AGENTS SHALL NOT BE RESPONSIBLE FOR THE ACCURACY OR COMPLETENESS OF SCANNED COPIES OF THIS PLAN SHEET.

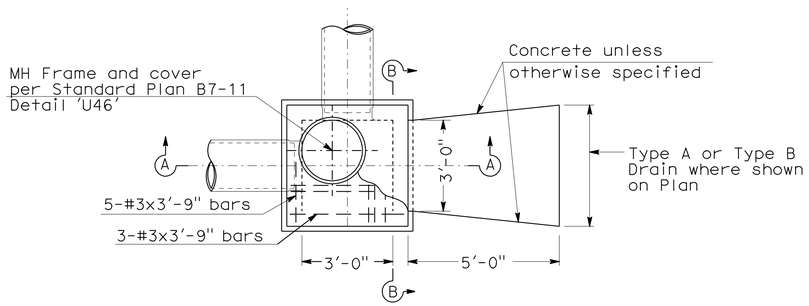

PLAN

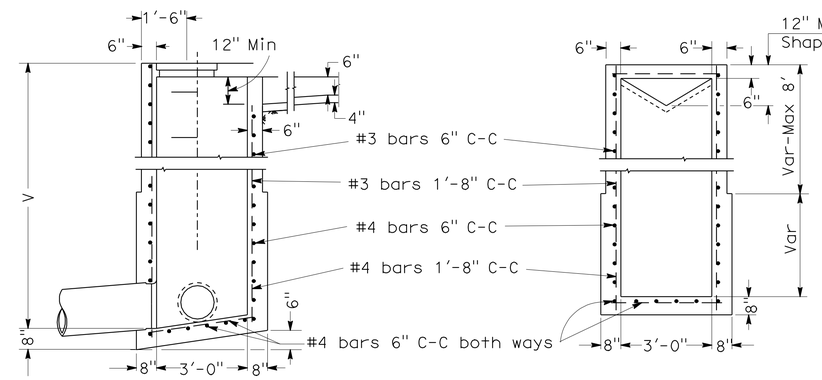

SECTION A-A

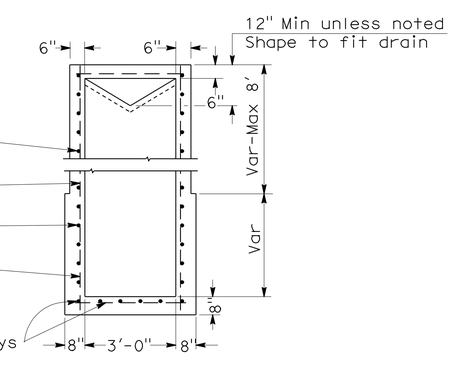

SECTION B-B

NOTES:

1. CONNECTION pipes may be placed in any position around the walls provided they point in the proper direction and the position is otherwise consistent with the Drainage Plan.
2. FLOOR of chamber shall be given a steel-troweled finish and shall slope from all directions to outlet.
3. MANHOLE shall be placed in corner nearest outlet.
4. OUTLET pipe shall be connected to Junction Chamber with Monolithic Connection.
5. STEPS: None required where V=3'-6" or less.
   Install one step 16"± above floor when V is more than 3'-6" and less than 5'-0".
   Where V is more than 5'-0" steps shall be evenly spaced at 12"± intervals from 16"± above floor to within 12"± of the top of the box.

JUNCTION CHAMBER No. 3-C (JC 3-C)

DRAINAGE DETAILS

NO SCALE

DD-6

STATE OF CALIFORNIA - DEPARTMENT OF TRANSPORTATION
Caltrans HYDRAULICS

FUNCTIONAL SUPERVISOR: RALPH M. SASAKI
CALCULATED-DESIGNED BY: SIEW MEI TAN
CHECKED BY: RALPH M. SASAKI
REVISED BY
DATE REVISED

LAST REVISION 00-00-00 | DATE PLOTTED => 30-JUN-2011 | TIME PLOTTED => 15:42

Dist	COUNTY	ROUTE	POST MILES TOTAL PROJECT	SHEET No.	TOTAL SHEETS
07	LA	5	1.2/2.1	117	602

REGISTERED CIVIL ENGINEER 3/14/11 DATE

6-27-11
PLANS APPROVAL DATE

REGISTERED PROFESSIONAL ENGINEER RALPH M. SASAKI No. 30849 Exp. 3/31/12 CIVIL STATE OF CALIFORNIA

THE STATE OF CALIFORNIA OR ITS OFFICERS OR AGENTS SHALL NOT BE RESPONSIBLE FOR THE ACCURACY OR COMPLETENESS OF SCANNED COPIES OF THIS PLAN SHEET.

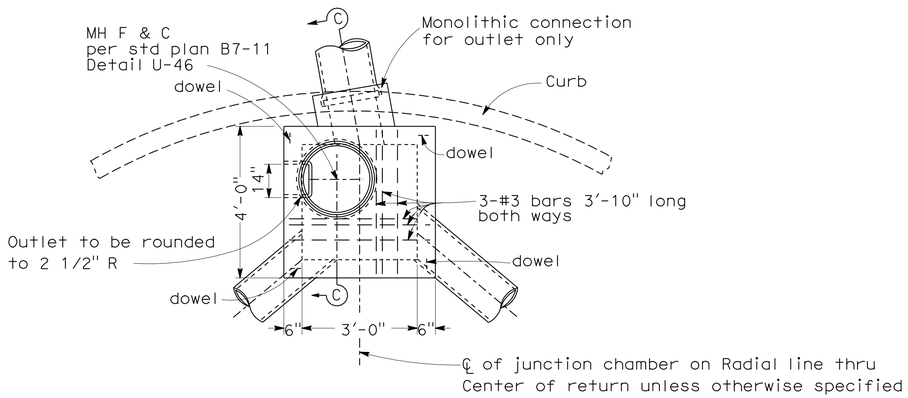

PLAN

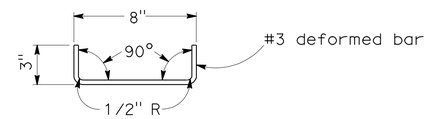

DETAIL OF DOWEL

One at each corner to be used
when top is poured separate

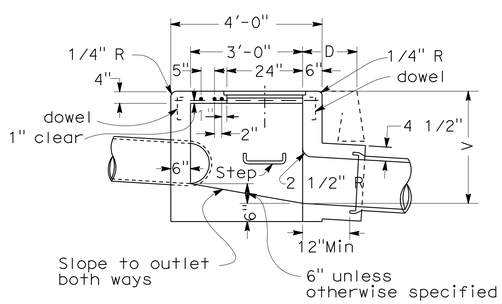

SECTION C-C

NOTES:

1. CONNECTION pipes may be placed in any position around the walls provided they point in the proper direction and the position is otherwise consistent with the Drainage Plan.
2. DIMENSIONS: D=18" unless otherwise specified.
   V=3'-6" unless otherwise specified.
3. EXPOSED SURFACE of the Junction Chamber shall conform in slope, grade, color, finish and scoring to existing sidewalk adjacent to the Junction Chamber. Where no sidewalk exists, the top shall be finished to conform to standard sidewalk slopeand finish, and scoring lines shall conform as nearly as possible to 20" squares.
4. FLOOR of chamber shall be given a steel-troweled finish and shall slope from all directions to outlet.
5. MANHOLE shall be placed in corner nearest outlet.
6. OUTLET pipe shall be connected to Junction Chamber with Monolithic Connection.
7. REINFORCING steel not required in walls when V=6' or less.
8. STEPS: None required where V=3'-6" or less.
   Install one step 16"± above floor when V is more than 3'-6" and less than 5'-0".
   Where V is more than 5'-0" steps shall be evenly spaced at 12"± intervals from 16"± above floor to within 12"± of the top of the box.

JUNCTION CHAMBER No. 3 (JC 3)

DRAINAGE DETAILS

NO SCALE

DD-7

STATE OF CALIFORNIA - DEPARTMENT OF TRANSPORTATION
Caltrans® HYDRAULICS

FUNCTIONAL SUPERVISOR: RALPH M. SASAKI
CALCULATED-DESIGNED BY: SIEW MEI TAN
CHECKED BY: RALPH M. SASAKI
REVISED BY
DATE REVISED

LAST REVISION 00-00-00
DATE PLOTTED => 30-JUN-2011
TIME PLOTTED => 15:42

Dist	COUNTY	ROUTE	POST MILES TOTAL PROJECT	SHEET No.	TOTAL SHEETS
07	LA	5	1.2/2.1	118	602

REGISTERED CIVIL ENGINEER 3/14/11 DATE

6-27-11
PLANS APPROVAL DATE

REGISTERED PROFESSIONAL ENGINEER RALPH M. SASAKI No. 30849 Exp. 3/31/12 CIVIL STATE OF CALIFORNIA

THE STATE OF CALIFORNIA OR ITS OFFICERS OR AGENTS SHALL NOT BE RESPONSIBLE FOR THE ACCURACY OR COMPLETENESS OF SCANNED COPIES OF THIS PLAN SHEET.

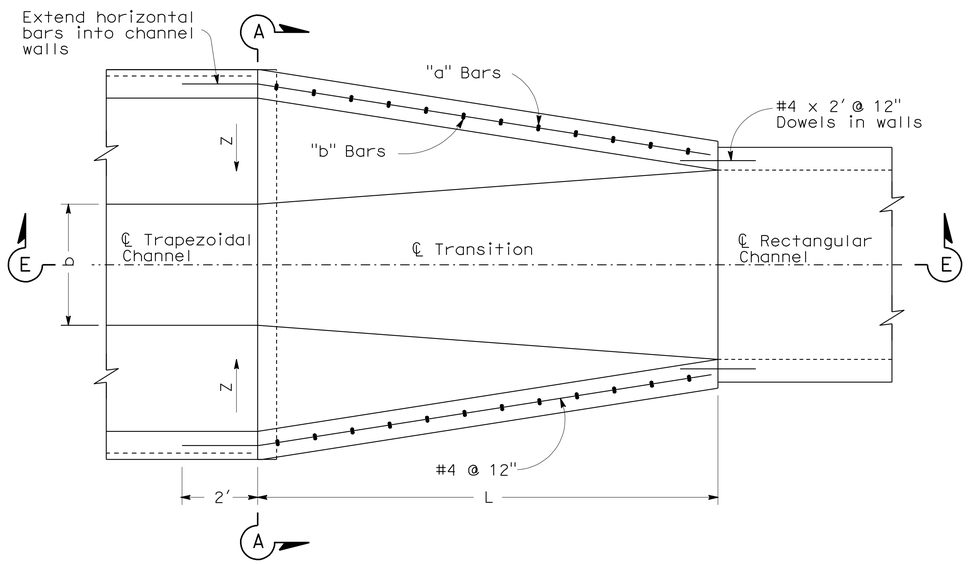

PLAN

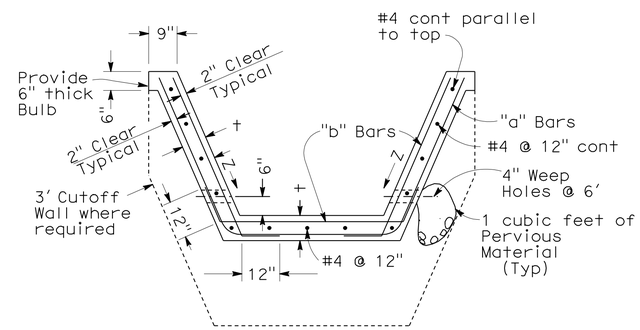

SECTION A-A

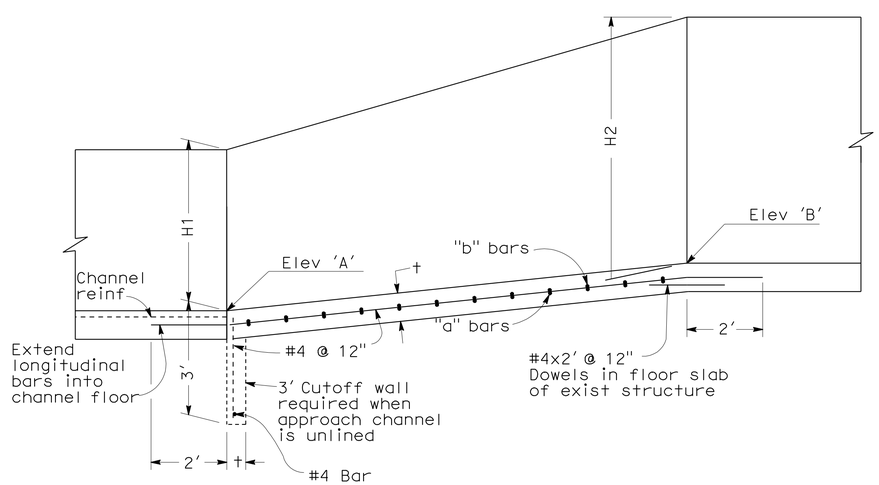

SECTION E-E

TABLE 1

* DESIGN "H"	t	REINFORCEMENT
0' - 4'	6"	#4 @ 12" both ways centered in slab
4' - 6'	6"	"a" bars #5 @ 24" "b" bars #5 @ 24"
6' - 8'	6"	"a" bars #5 @ 12" "b" bars #5 @ 12"
Greater than 8'	10"	"a" bars #6 @ 6" "b" bars #5 @ 12"

* Design "H" varies throughout length of transition. Use larger "H" on short transitions (L=15' or less). For longer transitions, vary reinforcement as indicated above.

NOTES:

1. Provide a construction joint between the transition and the rectangular channel .
2. Extend the longitudinal reinforcing steel of the transition 2' into the trapezoidal channel.
3. In lieu of placing the dowels between the transition and the rectangular channel the longitudinal reinforcing steel of the transition structure may be extended 2' into the storm drain.
4. 'H', 'H2', 'L', 'b', Elev 'A' and Elev 'B', shall be shown on the plans.
5. This structural detail may be applied to transitions with curved bottoms and curved side walls.

TRANSITION STRUCTURE No. 3 (Mod)
(TS No. 3 (Mod))

DRAINAGE DETAILS
NO SCALE
DD-8

STATE OF CALIFORNIA - DEPARTMENT OF TRANSPORTATION
Caltrans HYDRAULICS

FUNCTIONAL SUPERVISOR: RALPH M. SASAKI
CALCULATED-DESIGNED BY: SIEW MEI TAN
CHECKED BY: RALPH M. SASAKI
REVISED BY
DATE REVISED

LAST REVISION 00-00-00 | DATE PLOTTED => 30-JUN-2011 | TIME PLOTTED => 15:42

Dist	COUNTY	ROUTE	POST MILES TOTAL PROJECT	SHEET No.	TOTAL SHEETS
07	LA	5	1.2/2.1	119	602

REGISTERED CIVIL ENGINEER 3/14/11 DATE

6-27-11
PLANS APPROVAL DATE

REGISTERED PROFESSIONAL ENGINEER RALPH M. SASAKI No. 30849 Exp. 3/31/12 CIVIL STATE OF CALIFORNIA

THE STATE OF CALIFORNIA OR ITS OFFICERS OR AGENTS SHALL NOT BE RESPONSIBLE FOR THE ACCURACY OR COMPLETENESS OF SCANNED COPIES OF THIS PLAN SHEET.

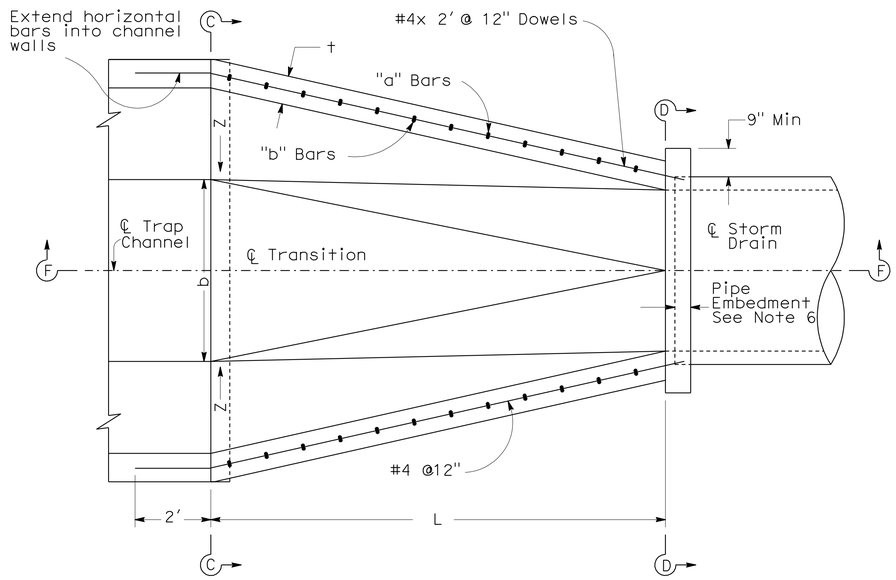

PLAN

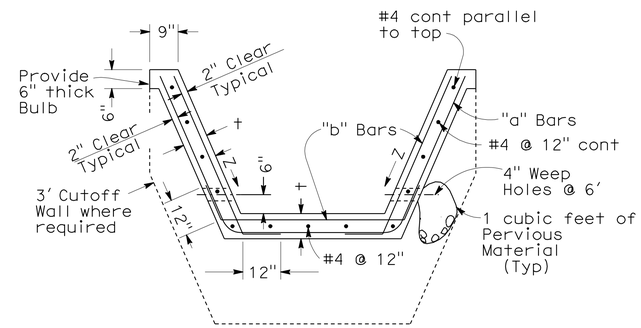

SECTION C-C

TABLE 1

* DESIGN "H"	t	REINFORCEMENT
0' - 4'	6"	#4 @ 12" both ways centered in slab
4' - 6'	6"	"a" bars #5 @ 24" "b" bars #5 @ 24"
6' - 8'	6"	"a" bars #5 @ 12" "b" bars #5 @ 12"
Greater than 8'	10"	"a" bars #6 @ 6" "b" bars #5 @ 12"

* Design "H" varies throughout length of transition. Use larger "H" on short transitions (L=15' or less). For longer transitions, vary reinforcement as indicated above.

NOTES:

1. Provide a construction joint between the transition and the storm drain.
2. Extend the longitudinal reinforcing steel of the transition 2' into the trapezoidal channel.
3. In lieu of placing the dowels between the transition and the rectangular storm drain, the longitudinal reinforcing steel of the transition structure may be extended 2' into the storm drain.
4. 'H', 'H2', 'h', 'L', 'b', Elev 'A' and Elev 'B', shall be shown on the plans.
5. This structural detail may be applied to transitions with curved bottoms and curved side walls.
6. Pipe embedment shall be 5" for 96" or less and 8" for over 96".

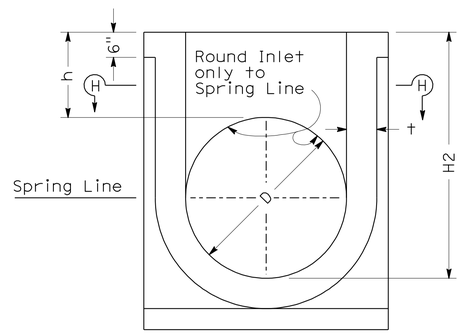

SECTION D-D

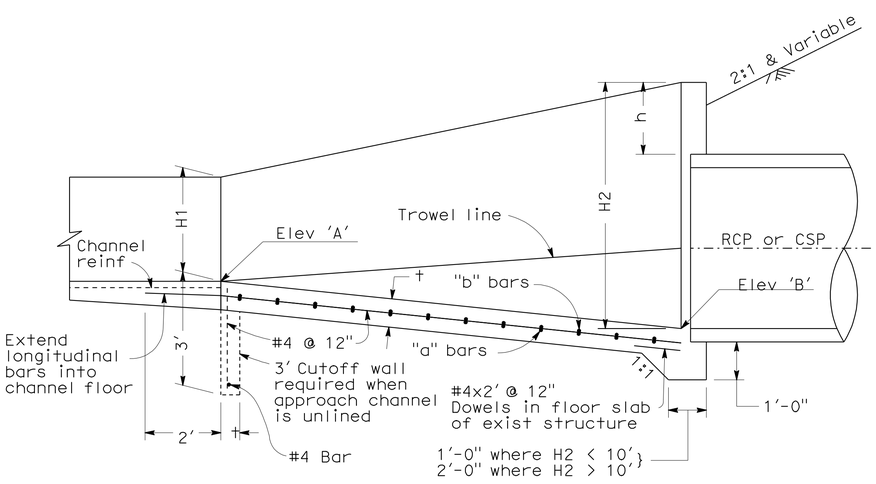

SECTION F-F

TABLE 2

S or D	th	REINFORCEMENT	
		h=6" to 4'	h=5' to 8'
1'-6" to 5'-6"	6"	#4 @ 12"	#4 @ 12"
6' to 10'	6"	#4 @ 8"	#6 @ 9"
12'	8"	#5 @ 9"	#6 @ 6"

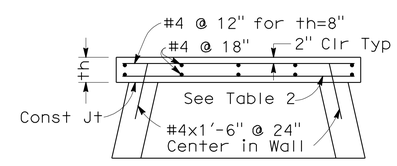

SECTION H-H

TRANSITION STRUCTURE No. 4

(TS No. 4)

DRAINAGE DETAILS

NO SCALE

DD-9

STATE OF CALIFORNIA - DEPARTMENT OF TRANSPORTATION
Caltrans® HYDRAULICS

FUNCTIONAL SUPERVISOR: RALPH M. SASAKI
CALCULATED-DESIGNED BY: SIEW MEI TAN
CHECKED BY: RALPH M. SASAKI
REVISED BY / DATE REVISED

LAST REVISION 00-00-00 | DATE PLOTTED => 30-JUN-2011 | TIME PLOTTED => 15:43

Dist	COUNTY	ROUTE	POST MILES TOTAL PROJECT	SHEET No.	TOTAL SHEETS
07	LA	5	1.2/2.1	120	602

REGISTERED CIVIL ENGINEER 3/14/11 DATE

6-27-11
PLANS APPROVAL DATE

REGISTERED PROFESSIONAL ENGINEER RALPH M. SASAKI No. 30849 Exp. 3/31/12 CIVIL STATE OF CALIFORNIA

THE STATE OF CALIFORNIA OR ITS OFFICERS OR AGENTS SHALL NOT BE RESPONSIBLE FOR THE ACCURACY OR COMPLETENESS OF SCANNED COPIES OF THIS PLAN SHEET.

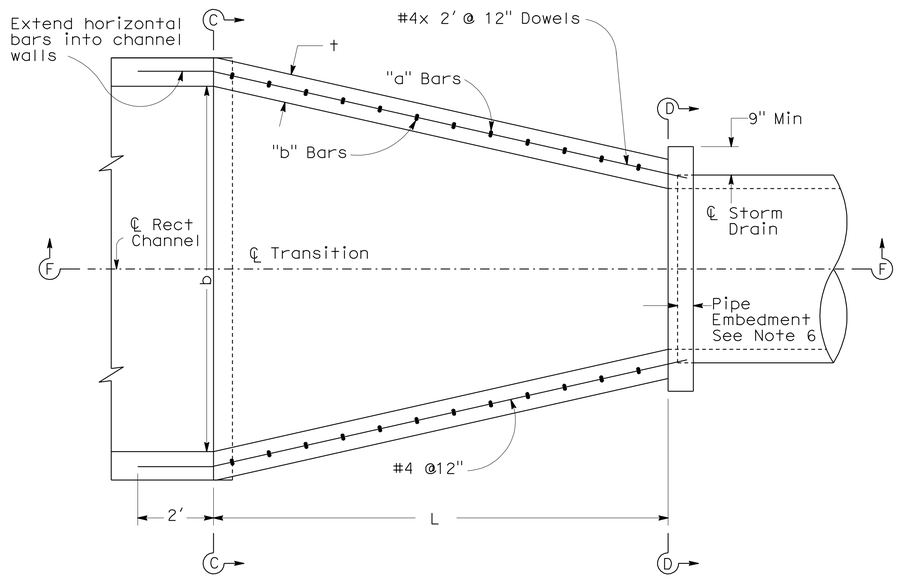

PLAN

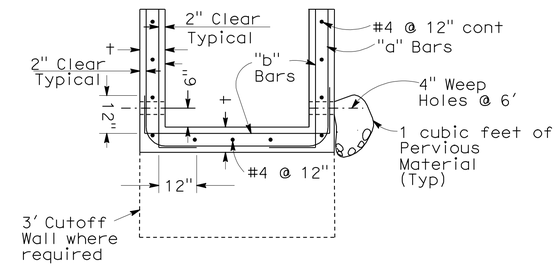

SECTION C-C

TABLE 1

* DESIGN "H"	t	REINFORCEMENT
0' - 4'	6"	#4 @ 12" both ways centered in slab
4' - 6'	6"	"a" bars #5 @ 24" "b" bars #5 @ 24"
6' - 8'	6"	"a" bars #5 @ 12" "b" bars #5 @ 12"
Greater than 8'	10"	"a" bars #6 @ 6" "b" bars #5 @ 12"

* Design "H" varies throughout length of transition. Use larger "H" on short transitions (L=15' or less). For longer transitions, vary reinforcement as indicated above.

NOTES:

1. Provide a construction joint between the transition and the storm drain.
2. Extend the longitudinal reinforcing steel of the transition 2' into the trapezoidal channel.
3. In lieu of placing the dowels between the transition and the rectangular storm drain, the longitudinal reinforcing steel of the transition structure may be extended 2' into the storm drain.
4. 'H', 'H2', 'h', 'L', 'b', Elev 'A' and Elev 'B', shall be shown on the plans.
5. This structural detail may be applied to transitions with curved bottoms and curved side walls.
6. Pipe embedment shall be 5" for 96" or less and 8" for over 96".

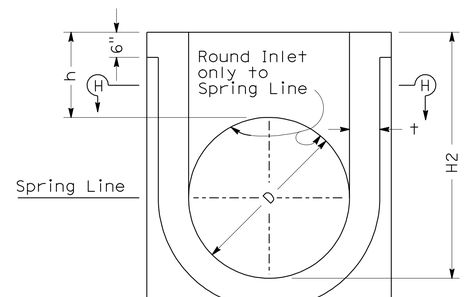

SECTION D-D

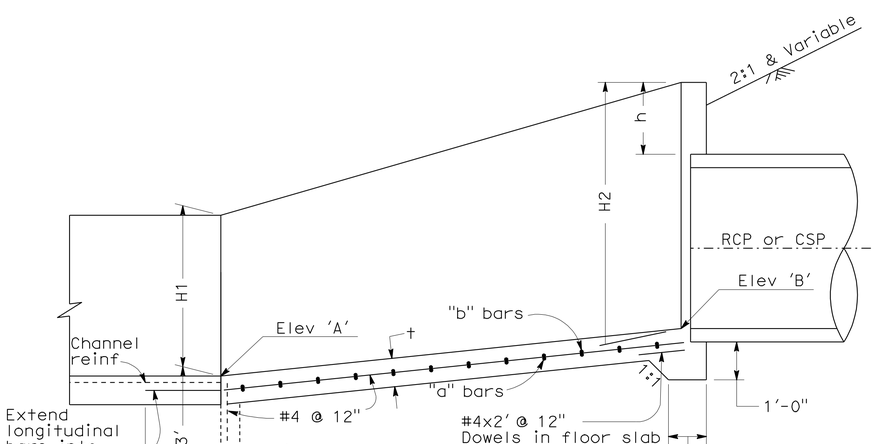

SECTION F-F

TABLE 2

S or D	th	REINFORCEMENT	
		h=6" to 4'	h=5' to 8'
1'-6" to 5'-6"	6"	#4 @ 12"	#4 @ 12"
6' to 10'	6"	#4 @ 8"	#6 @ 9"
12'	8"	#5 @ 9"	#6 @ 6"

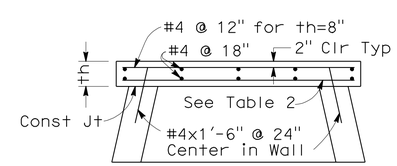

SECTION H-H

TRANSITION STRUCTURE No. 4 (Mod)
(TS No. 4 (Mod))

DRAINAGE DETAILS
NO SCALE
DD-10

STATE OF CALIFORNIA - DEPARTMENT OF TRANSPORTATION
Caltrans HYDRAULICS

FUNCTIONAL SUPERVISOR: RALPH M. SASAKI
CALCULATED-DESIGNED BY: SIEW MEI TAN
CHECKED BY: RALPH M. SASAKI
REVISED BY / DATE REVISED

LAST REVISION 00-00-00 | DATE PLOTTED => 30-JUN-2011 | TIME PLOTTED => 15:43

Dist	COUNTY	ROUTE	POST MILES TOTAL PROJECT	SHEET No.	TOTAL SHEETS
07	LA	5	1.2/2.1	121	602

REGISTERED CIVIL ENGINEER 3/14/11 DATE

6-27-11
PLANS APPROVAL DATE

REGISTERED PROFESSIONAL ENGINEER RALPH M. SASAKI No. 30849 Exp. 3/31/12 CIVIL STATE OF CALIFORNIA

THE STATE OF CALIFORNIA OR ITS OFFICERS OR AGENTS SHALL NOT BE RESPONSIBLE FOR THE ACCURACY OR COMPLETENESS OF SCANNED COPIES OF THIS PLAN SHEET.

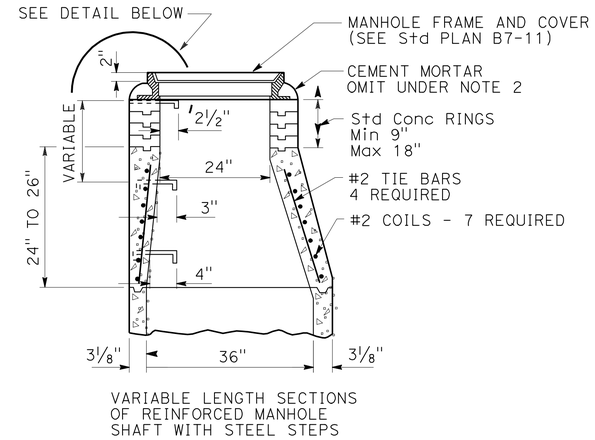

VARIABLE LENGTH SECTIONS OF REINFORCED MANHOLE SHAFT WITH STEEL STEPS

VERTICAL SECTION OF REINFORCED CONCRETE ECCENTRIC MANHOLE SHAFT

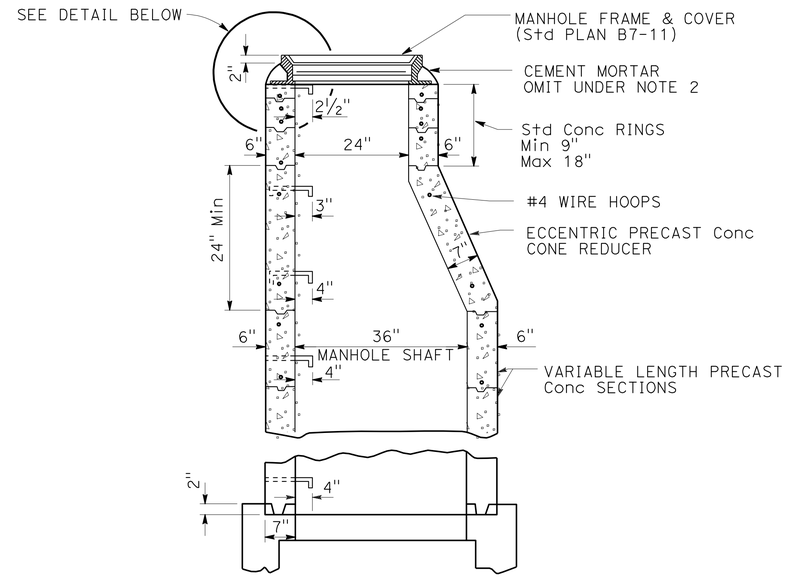

VERTICAL SECTION OF PLAIN CONCRETE ECCENTRIC MANHOLE SHAFT

NOTES:

1. ALL JOINTS SHALL BE FILLED WITH CEMENT MORTAR NEATLY POINTED OR WIPED ON INSIDE OF SHAFT.
2. COLLAR OF CEMENT MORTAR AROUND COVER FRAME SHALL BE OMITTED IN PAVED STREETS.
3. STEPS SHALL BE 4 BEND, ¾" ROUND, GALVANIZED STEEL AND ANCHORED NOT LESS THAN 6" IN THE WALLS OF STRUCTURES. UNLESS OTHERWISE SHOWN, STEPS SHALL BE PLACED 12" ON CENTERS. THE LOWEST STEP SHALL BE NOT MORE THAN 16" ABOVE THE LEDGE AT SIDE OF MANHOLE FLOOR.
4. ECCENTRIC MANHOLE SHAFT REDUCER AND RINGS MAY BE PRECAST CONCRETE. FOR UNREINFORCED SECTIONS, THE MINIMUM THICKNESS SHALL BE 6".
5. 3-INCH RINGS SHALL BE REINFORCED WITH ONE ¼" ROUND STEEL HOOP. 6-INCH RINGS SHALL BE REINFORCED WITH 2 HOOPS.

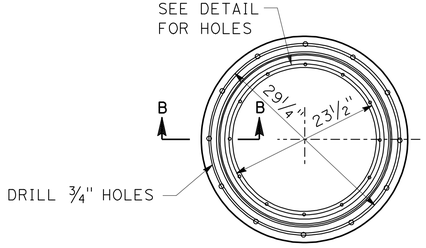

FRAME-PLAN

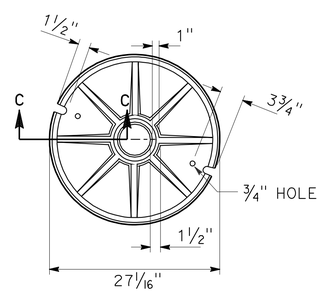

COVER-BOTTOM

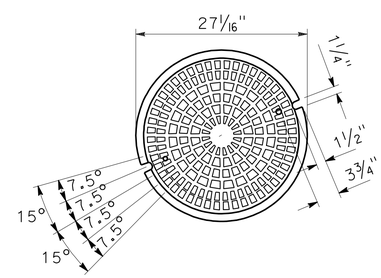

COVER - TOP

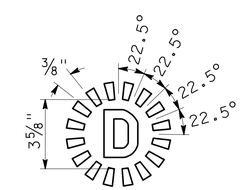

LETTER DETAIL

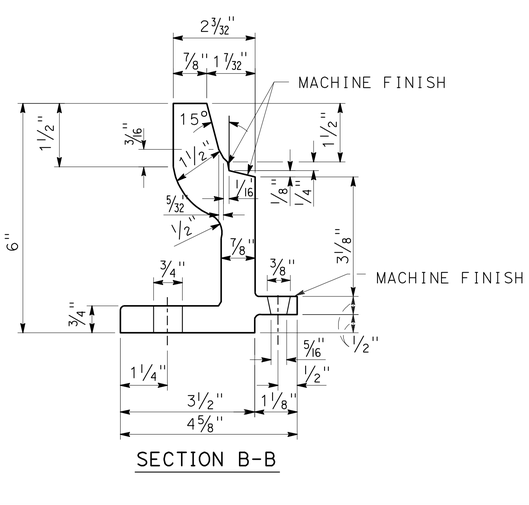

SECTION B-B

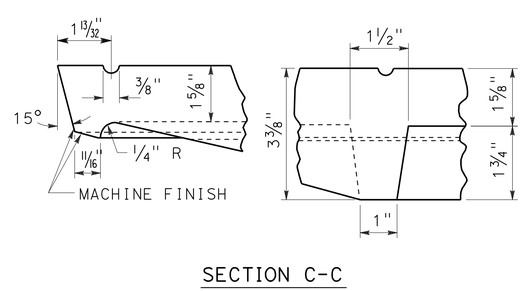

SECTION C-C

STANDARD MANHOLE SHAFT

NOTES:

1. MANHOLE FRAME AND COVER SHALL BE MADE OF GRAY CAST IRON CONFORMING TO THE LATEST SPECIFICATIONS.
2. ALL PARTS OF THE MANHOLE FRAME AND COVER EXCEPT MACHINED SURFACES SHALL BE COATED WITH ASPHALTUM PAINT.
3. MANHOLE FRAME AND COVER SHALL BE TESTED FOR ACCURACY OF FIT AND SHALL BE MARKED IN SETS BEFORE DELIVERY. THE COVER SHALL FIT THE FRAME SNUGLY BUT NOT TIGHTLY.
4. COVERS FOR USE ON STORM DRAIN STRUCTURES SHALL BEAR THE LETTER "D".
5. WEIGHTS OF FRAME, COVER AND PRESSURE PLATE SHALL NOT VARY MORE THAN TWO PERCENT FROM THOSE GIVEN HEREON.
6. USE STANDARD MANHOLE SHAFT UNLESS OTHERWISE SHOWN ON DRAINAGE PLAN.

DRAINAGE DETAILS

NO SCALE

DD-11

STATE OF CALIFORNIA - DEPARTMENT OF TRANSPORTATION
Caltrans® HYDRAULICS

FUNCTIONAL SUPERVISOR: RALPH M. SASAKI
CALCULATED-DESIGNED BY: SIEW MEI TAN
CHECKED BY: RALPH M. SASAKI
REVISED BY
DATE REVISED

LAST REVISION 00-00-00 | DATE PLOTTED => 30-JUN-2011 | TIME PLOTTED => 15:43

Dist	COUNTY	ROUTE	POST MILES TOTAL PROJECT	SHEET No.	TOTAL SHEETS
07	LA	5	1.2/2.1	122	602

REGISTERED CIVIL ENGINEER 3/14/11 DATE

6-27-11
PLANS APPROVAL DATE

REGISTERED PROFESSIONAL ENGINEER RALPH M. SASAKI No. 30849 Exp. 3/31/12 CIVIL STATE OF CALIFORNIA

THE STATE OF CALIFORNIA OR ITS OFFICERS OR AGENTS SHALL NOT BE RESPONSIBLE FOR THE ACCURACY OR COMPLETENESS OF SCANNED COPIES OF THIS PLAN SHEET.

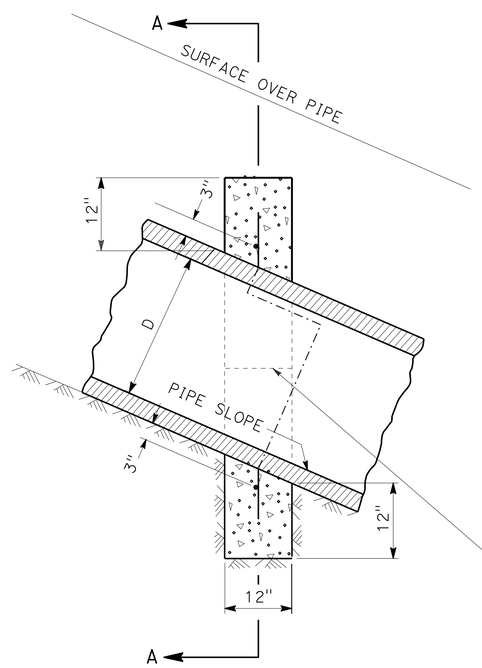

SECTION B-B

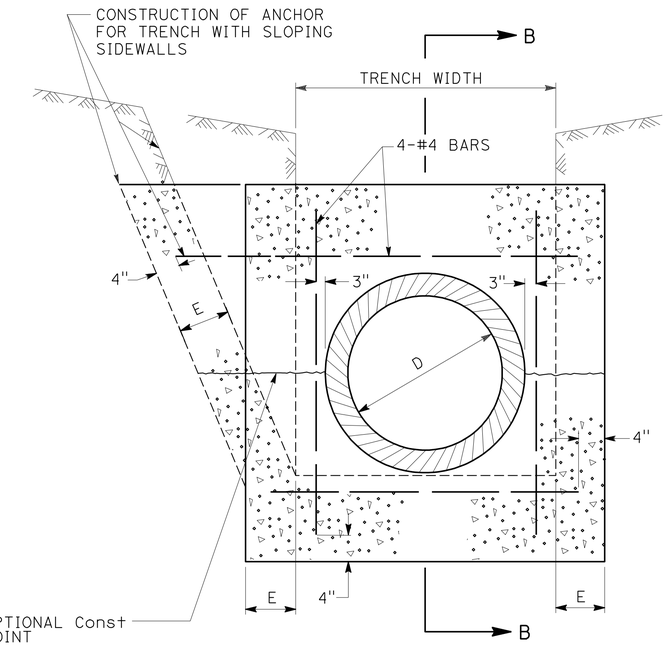

SECTION A-A

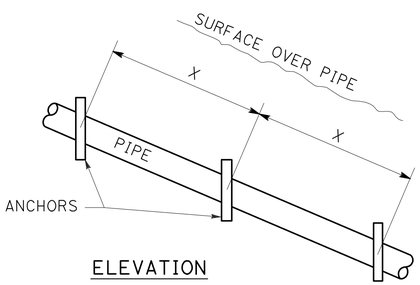

ELEVATION

PIPE SLOPE	X DISTANCE
1:1	12'
1½:1	14'
2:1	16'
2½:1	18'
3:1	20'

NOTES:

1- PIPE ANCHORS REQUIRED ON ALL SLOPES OF 3:1 OR STEEPER.
2- ALL REINFORCING STEEL SHALL BE NUMBER 4 BARS.
3- "E" SHALL BE 8" UNLESS OTHERWISE SPECIFIED.

CONCRETE PIPE ANCHORS

DRAINAGE DETAILS

NO SCALE

DD-12

STATE OF CALIFORNIA - DEPARTMENT OF TRANSPORTATION
Caltrans
HYDRAULICS

FUNCTIONAL SUPERVISOR: RALPH M. SASAKI
CALCULATED-DESIGNED BY: SIEW MEI TAN
CHECKED BY: RALPH M. SASAKI
REVISED BY
DATE REVISED

LAST REVISION 00-00-00
DATE PLOTTED => 30-JUN-2011
TIME PLOTTED => 16:46

Dist	COUNTY	ROUTE	POST MILES TOTAL PROJECT	SHEET No.	TOTAL SHEETS
07	LA	5	1.2/2.1	123	602

REGISTERED CIVIL ENGINEER 3/14/11 DATE

6-27-11
PLANS APPROVAL DATE

REGISTERED PROFESSIONAL ENGINEER RALPH M. SASAKI No. 30849 Exp. 3/31/12 CIVIL STATE OF CALIFORNIA

THE STATE OF CALIFORNIA OR ITS OFFICERS OR AGENTS SHALL NOT BE RESPONSIBLE FOR THE ACCURACY OR COMPLETENESS OF SCANNED COPIES OF THIS PLAN SHEET.

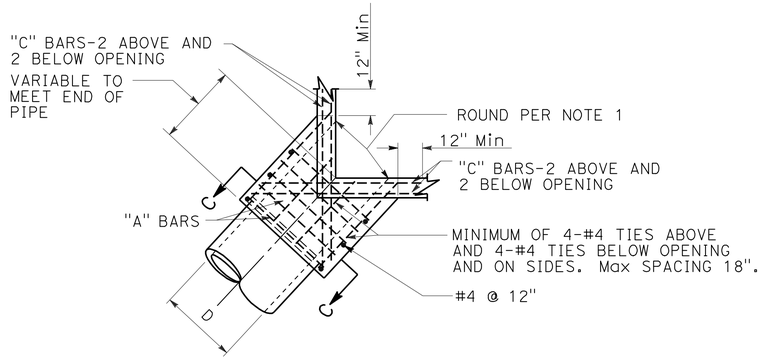

PLAN

CORNER CONNECTION

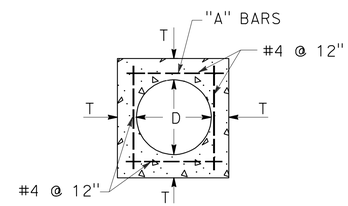

SECTION C-C

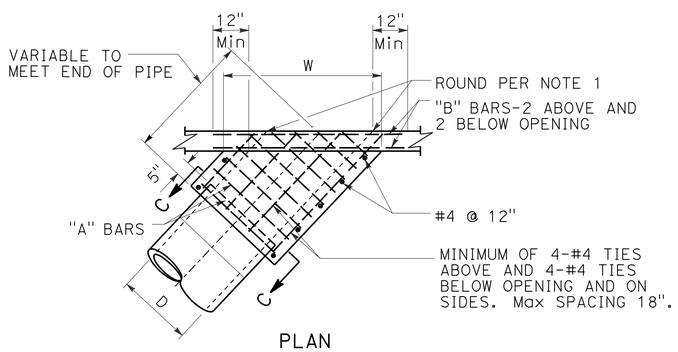

PLAN

SIDE CONNECTION

NOTES:

1. ROUND EDGE OF OUTLET TO 3" RADIUS.
2. REINFORCEMENT SHALL BE 1½" CLEAR FROM THE FACE OF CONCRETE.
3. IN CONNECTING TO AN EXISTING STRUCTURE BREAK OUT PORTIONS OF THE EXISTING STRUCTURE SIX INCHES OUTSIDE ITS INTERSECTION WITH THE NEW CONNECTION. BEND ENDS OF #4 BARS OVER CONNECTION OPENING AS REQUIRED.

D	T	"A"	"B"-"C"
12"	4-½"	#4 @ 6"	#5
15"	4-½"		
18"	5"		
21"	5-½"		
24"	6"		
27"	6-½"		
30"	7"		
33"	7"		
36"	7-½"		
39"	8"		
42"	8"		
45"	8"	#5 @ 6"	#6
48"	8"		
51"	8"		
54"	8"		
57"	10"		
60"	10"		
63"	10"		
66"	11"		
69"	11"		
72"	11"		

MONOLITHIC CONNECTION

FOR PIPES 12" TO 72" INCLUSIVE

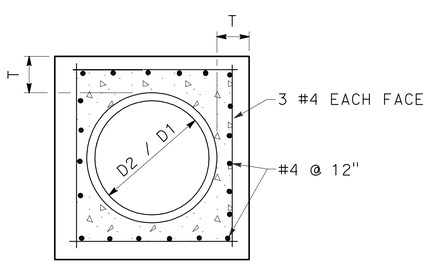

SECTION B-B

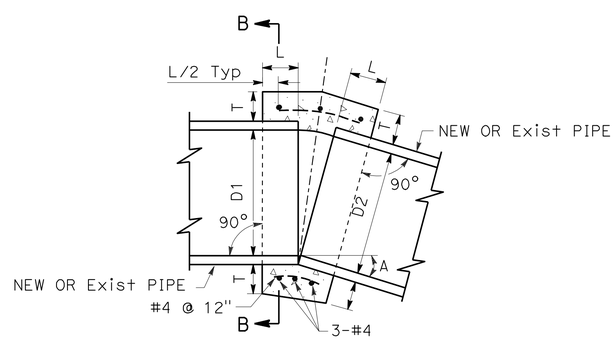

D	L	T
12"	1.0'	4"
18"	1.0'	5"
24"	1.0'	6"
36"	1.5'	8"
48"	1.5'	10"
54"	1.5'	10"
60"	1.75'	11"
66"	1.75'	11"
72"	2.0'	12"

NOTES:

1. WHERE PIPES OF DIFFERENT DIAMETERS ARE JOINED WITH A CONCRETE COLLAR, 'L' AND 'T' SHALL BE THOSE OF THE LARGER PIPE. D=D1 OR D2, WHICHEVER IS GREATER.
2. FOR PIPE SIZE NOT LISTED USE NEXT SIZE LARGER.
3. OMIT REINFORCING ON PIPES 24" AND LESS IN DIAMETER AND ON ALL PIPES WHERE ANGLE A IS LESS THAN 10°.
4. JOIN PIPES AT INVERTS.
5. REINFORCEMENT SHALL BE PLACED 1½" CLEAR FROM OUTSIDE DIAMETER OF PIPE.

CONCRETE COLLAR

DRAINAGE DETAILS

NO SCALE

DD-13

STATE OF CALIFORNIA - DEPARTMENT OF TRANSPORTATION
Caltrans® HYDRAULICS

FUNCTIONAL SUPERVISOR: RALPH M. SASAKI
CALCULATED-DESIGNED BY: SIEW MEI TAN
CHECKED BY: RALPH M. SASAKI
REVISED BY
DATE REVISED

LAST REVISION 00-00-00
DATE PLOTTED => 30-JUN-2011
TIME PLOTTED => 16:46

Dist	COUNTY	ROUTE	POST MILES TOTAL PROJECT	SHEET No.	TOTAL SHEETS
07	LA	5	1.2/2.1	124	602

REGISTERED CIVIL ENGINEER 3/14/11 DATE

6-27-11
PLANS APPROVAL DATE

REGISTERED PROFESSIONAL ENGINEER RALPH M. SASAKI No. 30849 Exp. 3/31/12 CIVIL STATE OF CALIFORNIA

THE STATE OF CALIFORNIA OR ITS OFFICERS OR AGENTS SHALL NOT BE RESPONSIBLE FOR THE ACCURACY OR COMPLETENESS OF SCANNED COPIES OF THIS PLAN SHEET.

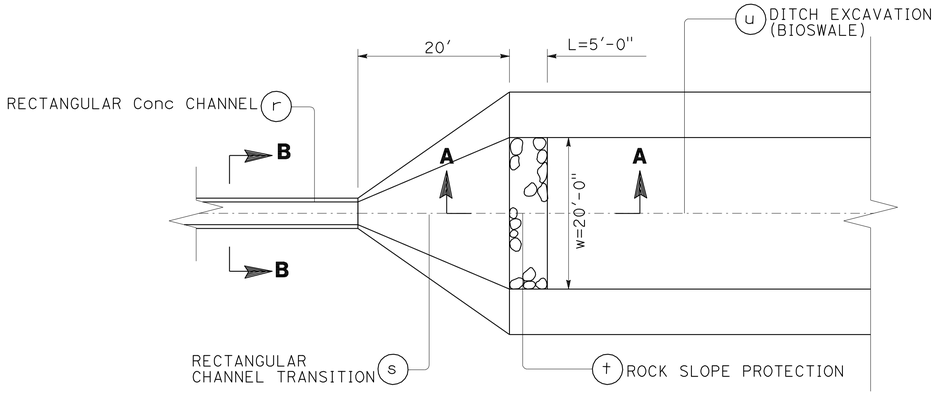

PLAN

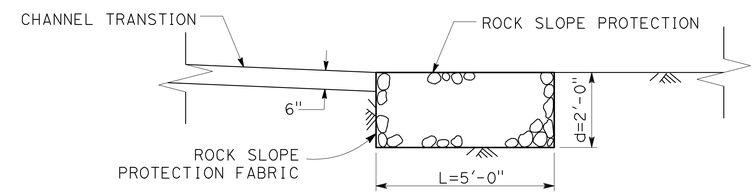

SECTION A-A

ROCK SLOPE PROTECTION DETAIL

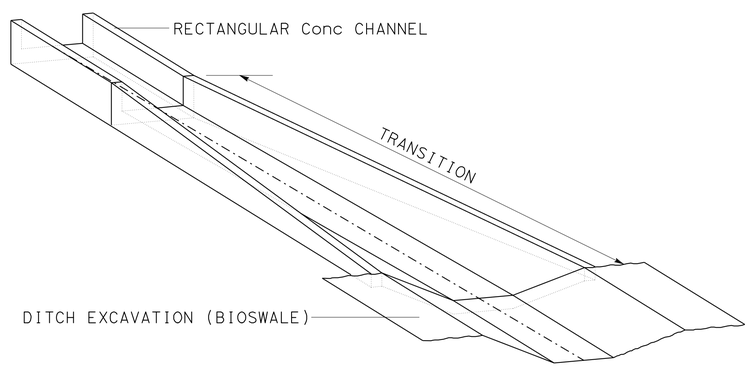

RECTANGULAR CHANNEL TRANSITION TO DITCH EXCAVATION (BIOSWALE)

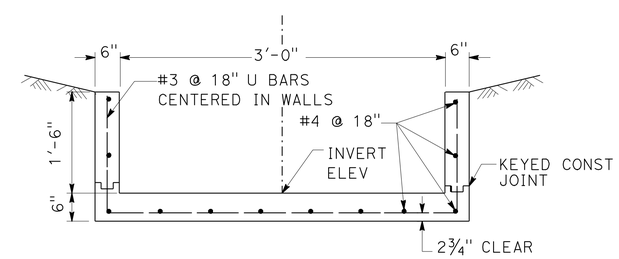

SECTION B-B

RECTANGULAR CHANNEL

DRAINAGE SYSTEM No. 3-4 DETAILS

DRAINAGE DETAILS

NO SCALE

DD-14

STATE OF CALIFORNIA - DEPARTMENT OF TRANSPORTATION
Caltrans® HYDRAULICS

FUNCTIONAL SUPERVISOR: RALPH M. SASAKI
CALCULATED-DESIGNED BY: SIEW MEI TAN
CHECKED BY: RALPH M. SASAKI
REVISED BY
DATE REVISED

LAST REVISION 00-00-00
DATE PLOTTED => 30-JUN-2011
TIME PLOTTED => 16:46

Dist	COUNTY	ROUTE	POST MILES TOTAL PROJECT	SHEET No.	TOTAL SHEETS
07	LA	5	1.2/2.1	125	602

REGISTERED CIVIL ENGINEER 3/14/11 DATE

6-27-11
PLANS APPROVAL DATE

REGISTERED PROFESSIONAL ENGINEER RALPH M. SASAKI No. 30849 Exp. 3/31/12 CIVIL STATE OF CALIFORNIA

THE STATE OF CALIFORNIA OR ITS OFFICERS OR AGENTS SHALL NOT BE RESPONSIBLE FOR THE ACCURACY OR COMPLETENESS OF SCANNED COPIES OF THIS PLAN SHEET.

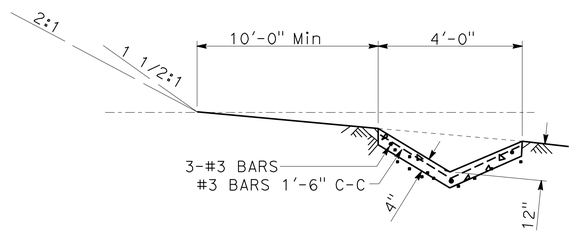

TYPE B DRAIN

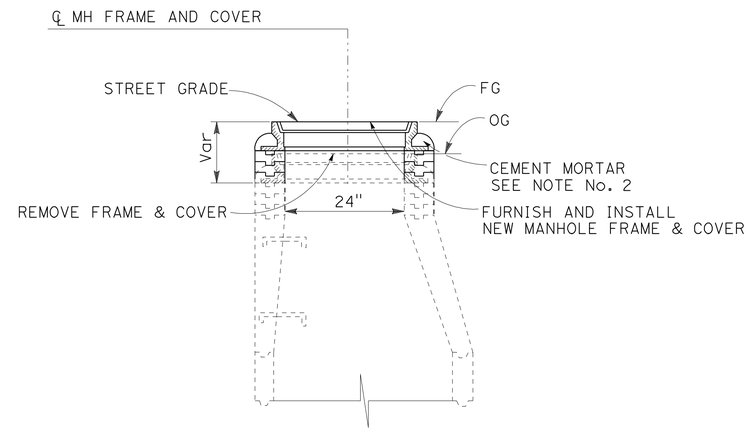

ADJUST MANHOLE TO GRADE

NOTES:

1. FOR DETAILS AND INFORMATION NOT SHOWN SEE MANHOLE DETAIL 321-2.
2. COLLAR OF CEMENT MORTAR AROUND COVER FRAME SHALL BE OMITTED IN PAVED AREAS.

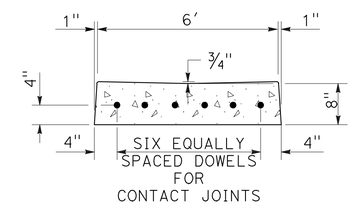

CONCRETE GUTTER

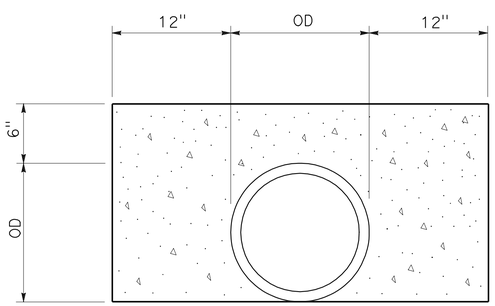

CONCRETE BACKFILL

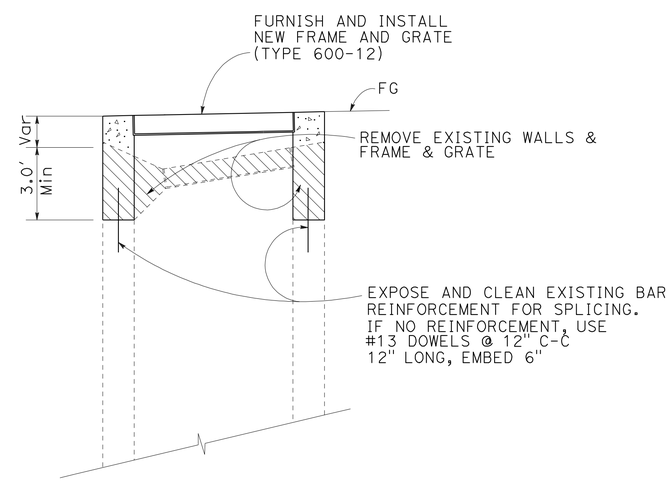

ADJUST INLET

(TYPE G6 INLET SHOWN)

NOTE:

1. FOR DETAILS AND INFORMATION NOT SHOWN SEE STANDARD PLAN.

DRAINAGE DETAILS

NO SCALE

DD-15

STATE OF CALIFORNIA - DEPARTMENT OF TRANSPORTATION
Caltrans® HYDRAULICS

FUNCTIONAL SUPERVISOR: RALPH M. SASAKI
CALCULATED-DESIGNED BY: SIEW MEI TAN
CHECKED BY: RALPH M. SASAKI
REVISED BY
DATE REVISED

LAST REVISION 00-00-00
DATE PLOTTED => 30-JUN-2011
TIME PLOTTED => 16:46

Dist	COUNTY	ROUTE	POST MILES TOTAL PROJECT	SHEET No.	TOTAL SHEETS
07	LA	5	1.2/2.1	126	602

REGISTERED CIVIL ENGINEER 3/14/11 DATE

6-27-11
PLANS APPROVAL DATE

REGISTERED PROFESSIONAL ENGINEER RALPH M. SASAKI No. 30849 Exp. 3/31/12 CIVIL STATE OF CALIFORNIA

THE STATE OF CALIFORNIA OR ITS OFFICERS OR AGENTS SHALL NOT BE RESPONSIBLE FOR THE ACCURACY OR COMPLETENESS OF SCANNED COPIES OF THIS PLAN SHEET.

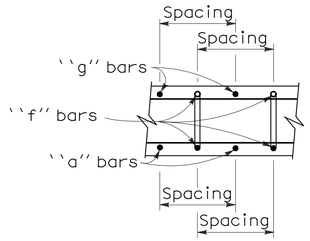

ROOF SECTION
INVERT SIMILAR

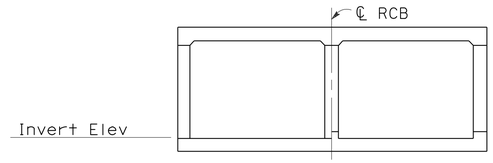

FLAT INVERT ALTERNATIVE

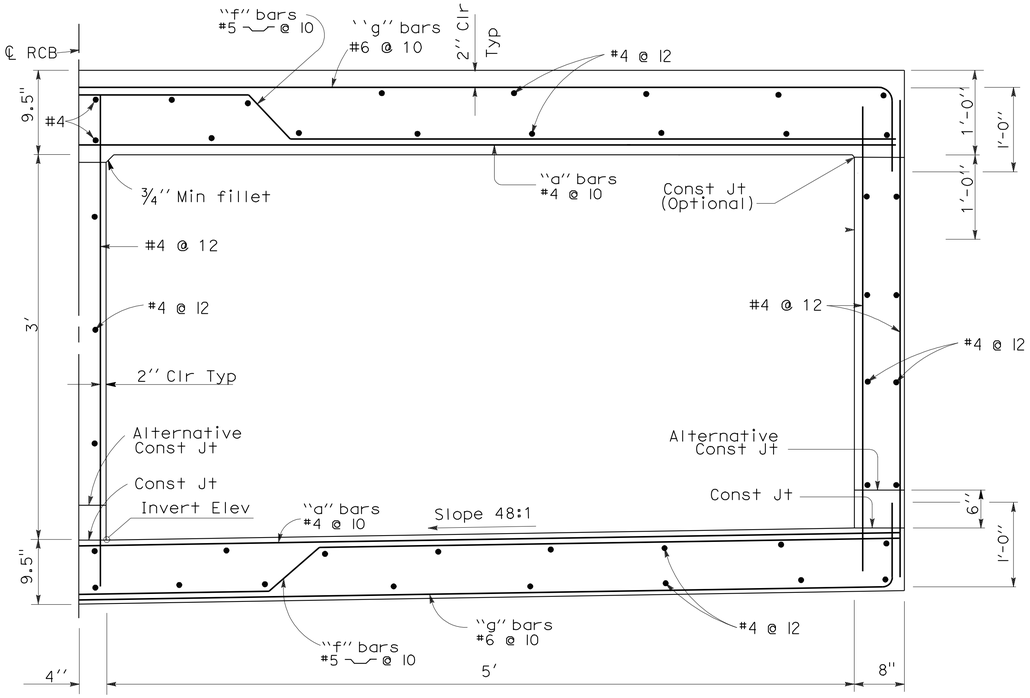

DOUBLE 5' X 3' RCB
FOR MAXIMUM EARTH COVER 34'

DRAINAGE SYSTEM No. 3-3 b

NOTE:

For design and details not shown, see Standard Plan D82.

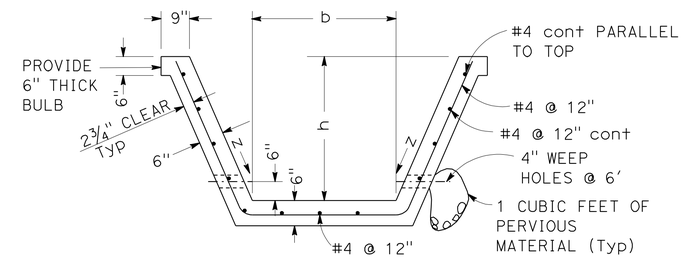

TRAPEZOIDAL CONCRETE CHANNEL

DRAINAGE SYSTEM No. 2-7 d

DRAINAGE SYSTEM No. 3-3 d

DRAINAGE DETAILS
NO SCALE

DD-16

STATE OF CALIFORNIA - DEPARTMENT OF TRANSPORTATION
Caltrans HYDRAULICS

FUNCTIONAL SUPERVISOR: RALPH M. SASAKI
CALCULATED-DESIGNED BY: SIEW MEI TAN
CHECKED BY: RALPH M. SASAKI
REVISED BY
DATE REVISED

LAST REVISION 00-00-00 | DATE PLOTTED => 30-JUN-2011 | TIME PLOTTED => 16:46

Dist	COUNTY	ROUTE	POST MILES TOTAL PROJECT	SHEET No.	TOTAL SHEETS
07	LA	5	1.2/2.1	127	602

REGISTERED CIVIL ENGINEER 3/14/11 DATE

6-27-11
PLANS APPROVAL DATE

REGISTERED PROFESSIONAL ENGINEER RALPH M. SASAKI No. 30849 Exp. 3/31/12 CIVIL STATE OF CALIFORNIA

THE STATE OF CALIFORNIA OR ITS OFFICERS OR AGENTS SHALL NOT BE RESPONSIBLE FOR THE ACCURACY OR COMPLETENESS OF SCANNED COPIES OF THIS PLAN SHEET.

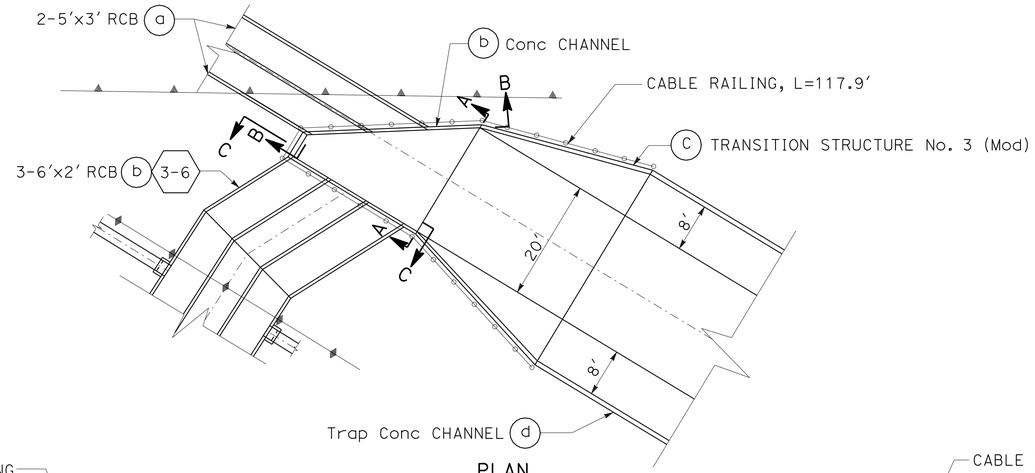

PLAN

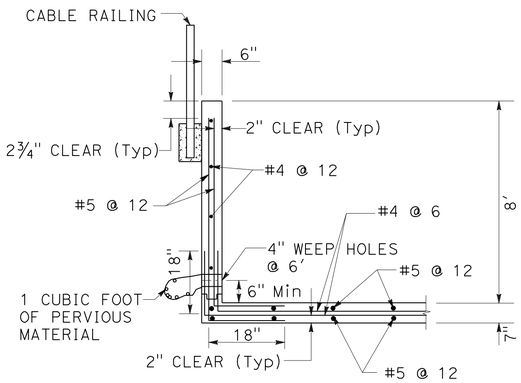

SECTION D-D

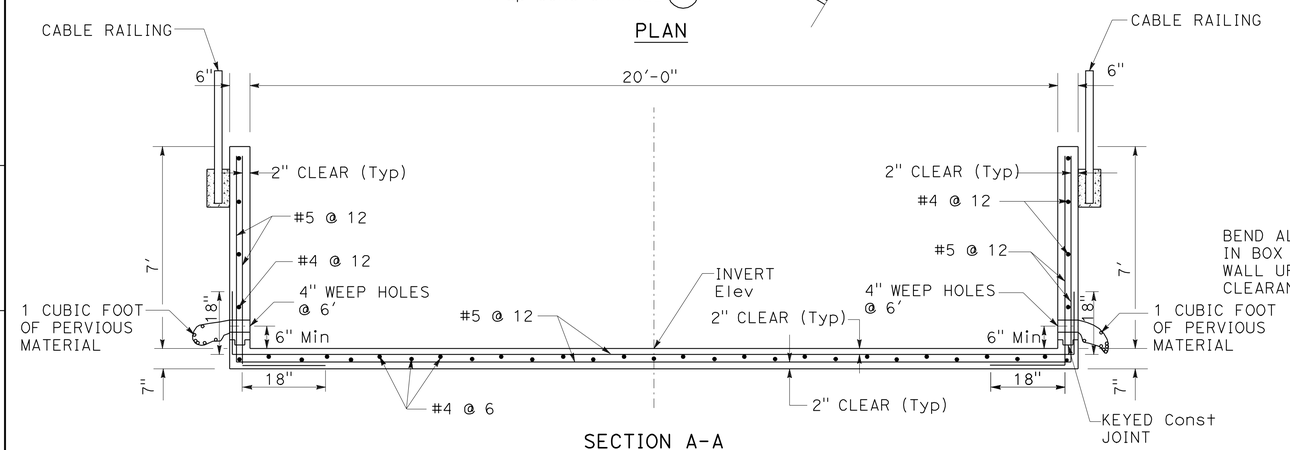

SECTION A-A

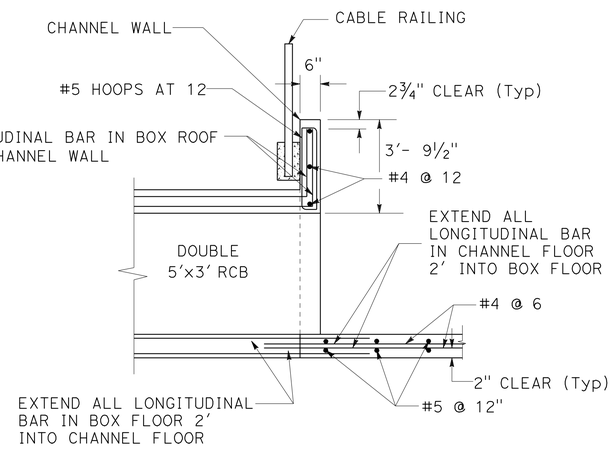

SECTION E-E

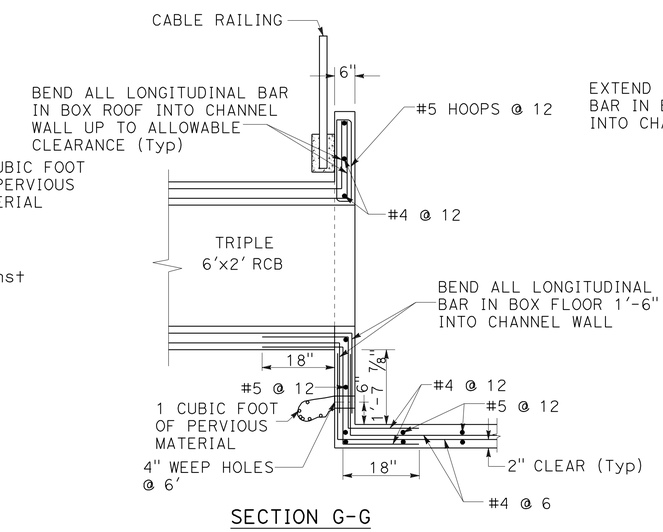

SECTION G-G

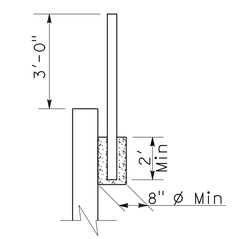

CABLE RAILING

FOR DETAILS NOT SHOWN SEE Std PLAN B11-47

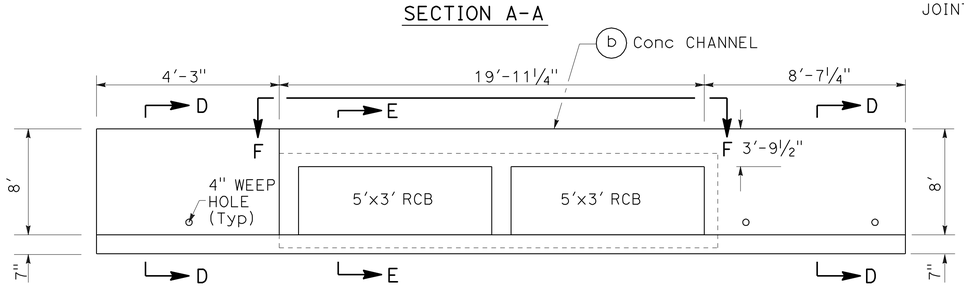

SECTION B-B

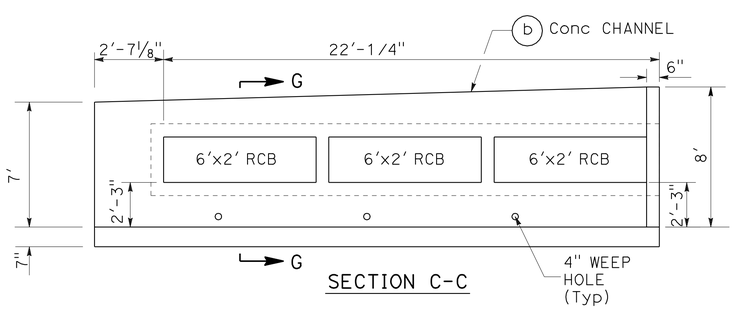

SECTION C-C

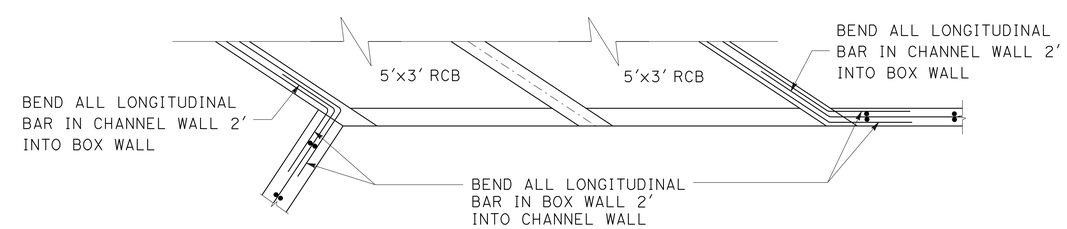

SECTION F-F

DRAINAGE SYSTEM No. 3-3

DRAINAGE DETAILS

NO SCALE

DD-17

STATE OF CALIFORNIA - DEPARTMENT OF TRANSPORTATION
Caltrans® HYDRAULICS

FUNCTIONAL SUPERVISOR: RALPH M. SASAKI
CALCULATED-DESIGNED BY: SIEW MEI TAN
CHECKED BY: RALPH M. SASAKI
REVISED BY
DATE REVISED

LAST REVISION 00-00-00
DATE PLOTTED => 30-JUN-2011
TIME PLOTTED => 16:46

Dist	COUNTY	ROUTE	POST MILES TOTAL PROJECT	SHEET No.	TOTAL SHEETS
07	LA	5	1.2/2.1	128	602

REGISTERED CIVIL ENGINEER 3/14/11 DATE

6-27-11
PLANS APPROVAL DATE

REGISTERED PROFESSIONAL ENGINEER RALPH M. SASAKI No. 30849 Exp. 3/31/12 CIVIL STATE OF CALIFORNIA

THE STATE OF CALIFORNIA OR ITS OFFICERS OR AGENTS SHALL NOT BE RESPONSIBLE FOR THE ACCURACY OR COMPLETENESS OF SCANNED COPIES OF THIS PLAN SHEET.

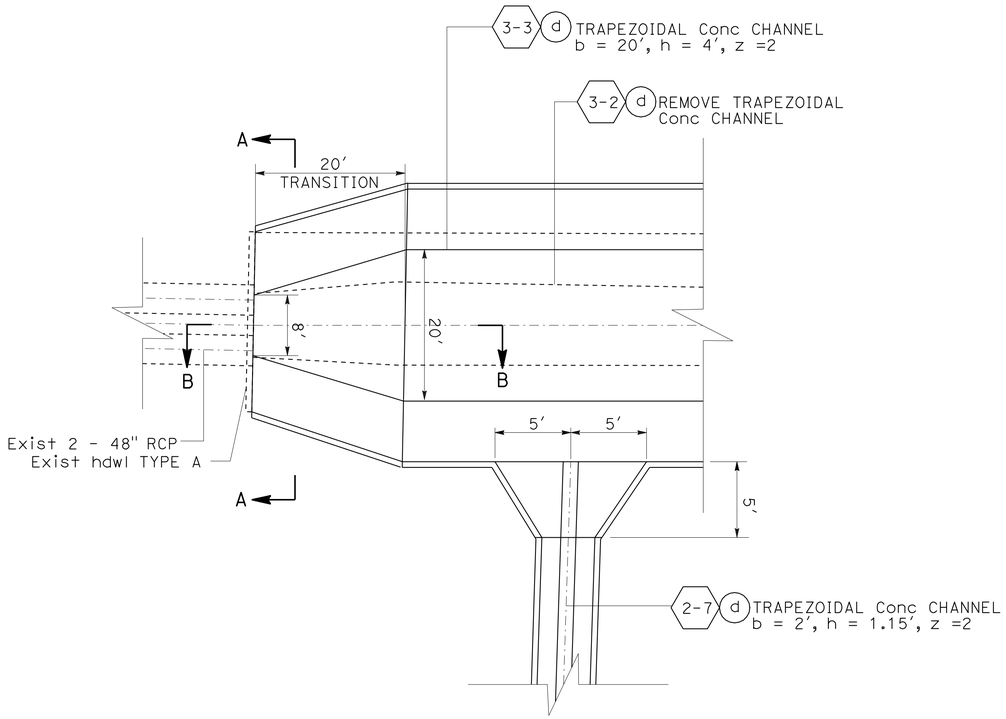

PLAN

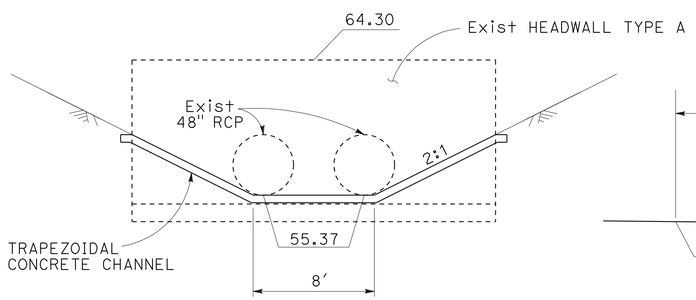

SECTION A-A

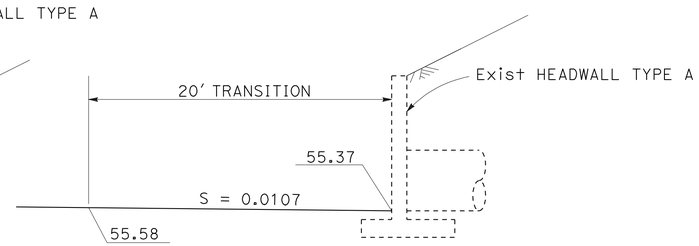

SECTION B-B

INLET TRANSITION DETAILS

DRAINAGE SYSTEM No. 3-3

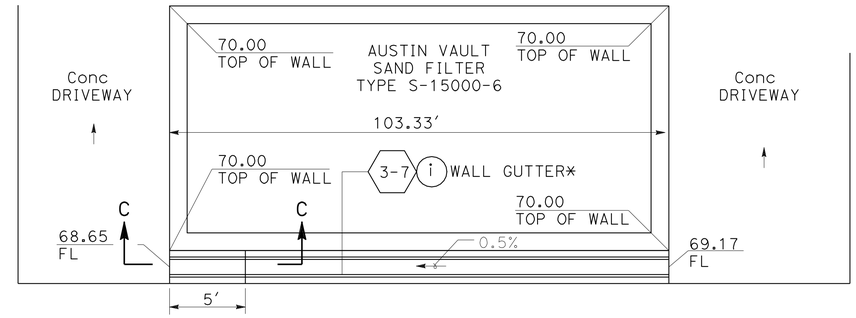

*FOR WALL GUTTER DETAILS NOT SHOWN, SEE Std PLAN B3-9

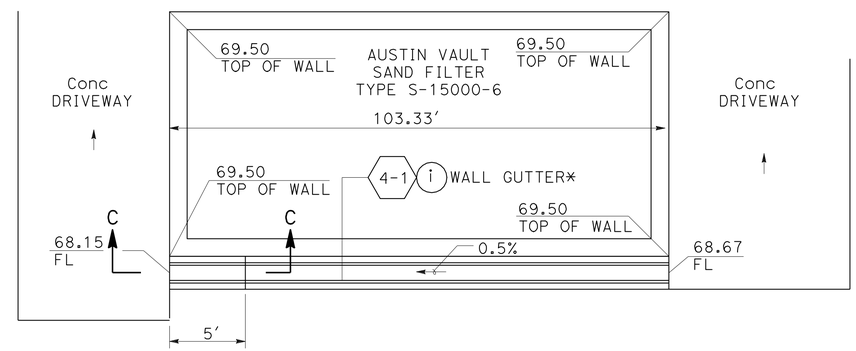

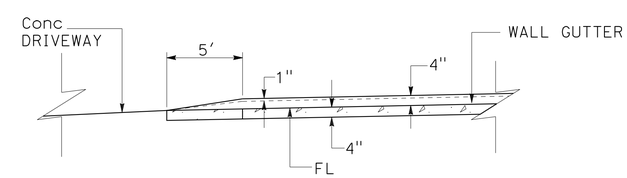

SECTION C-C

WALL GUTTER DETAILS

DRAINAGE SYSTEM No. 3-7 4-1

DRAINAGE DETAILS

NO SCALE

DD-18

STATE OF CALIFORNIA - DEPARTMENT OF TRANSPORTATION
Caltrans HYDRAULICS

FUNCTIONAL SUPERVISOR: RALPH M. SASAKI
CALCULATED-DESIGNED BY: SIEW MEI TAN
CHECKED BY: RALPH M. SASAKI
REVISED BY
DATE REVISED

LAST REVISION 00-00-00
DATE PLOTTED => 30-JUN-2011
TIME PLOTTED => 16:46

Dist	COUNTY	ROUTE	POST MILES TOTAL PROJECT	SHEET No.	TOTAL SHEETS
07	LA	5	1.2/2.1	129	602

REGISTERED CIVIL ENGINEER 3/14/11 DATE

6-27-11
PLANS APPROVAL DATE

REGISTERED PROFESSIONAL ENGINEER RALPH M. SASAKI No. 30849 Exp. 3/31/12 CIVIL STATE OF CALIFORNIA

THE STATE OF CALIFORNIA OR ITS OFFICERS OR AGENTS SHALL NOT BE RESPONSIBLE FOR THE ACCURACY OR COMPLETENESS OF SCANNED COPIES OF THIS PLAN SHEET.

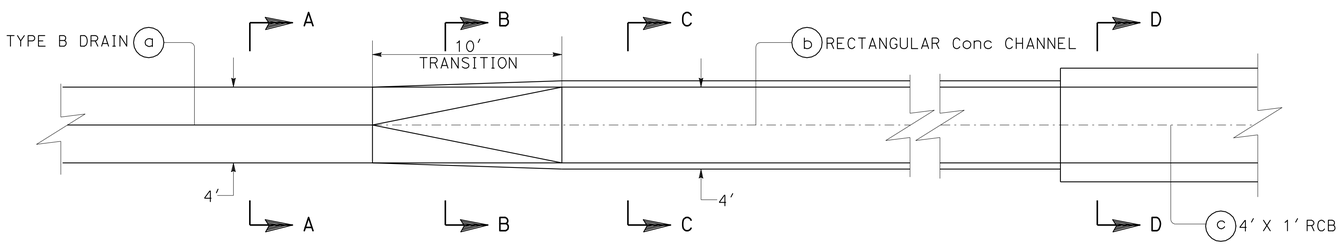

PLAN

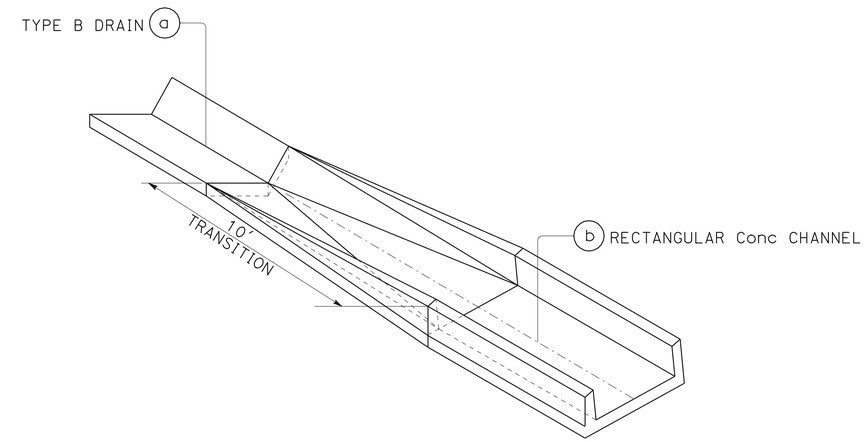

TYPE B DRAIN TRANSITION TO RECTANGULAR Conc CHANNEL

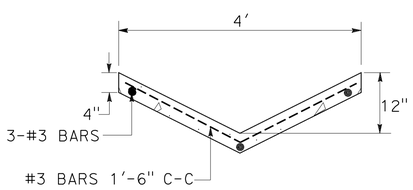

SECTION A-A

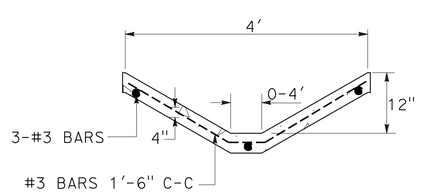

SECTION B-B

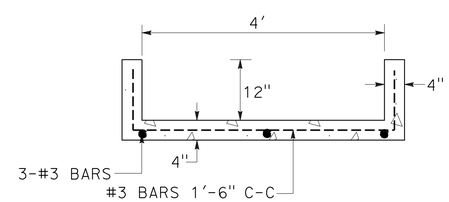

SECTION C-C

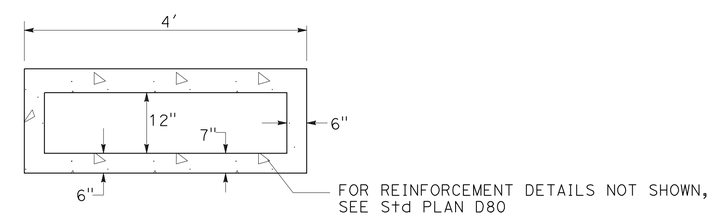

SECTION D-D

CHANNEL TRANSITION DETAILS

DRAINAGE SYSTEM (No.) 3-8

DRAINAGE DETAILS

NO SCALE

DD-19

STATE OF CALIFORNIA - DEPARTMENT OF TRANSPORTATION
Caltrans® HYDRAULICS

FUNCTIONAL SUPERVISOR: RALPH M. SASAKI
CALCULATED-DESIGNED BY: SIEW MEI TAN
CHECKED BY: RALPH M. SASAKI
REVISED BY
DATE REVISED

LAST REVISION 00-00-00
DATE PLOTTED => 30-JUN-2011
TIME PLOTTED => 16:46

Dist	COUNTY	ROUTE	POST MILES TOTAL PROJECT	SHEET No.	TOTAL SHEETS
07	LA	5	1.2/2.1	130	602

REGISTERED CIVIL ENGINEER 3/14/11 DATE

6-27-11
PLANS APPROVAL DATE

REGISTERED PROFESSIONAL ENGINEER RALPH M. SASAKI No. 30849 Exp. 3/31/12 CIVIL STATE OF CALIFORNIA

THE STATE OF CALIFORNIA OR ITS OFFICERS OR AGENTS SHALL NOT BE RESPONSIBLE FOR THE ACCURACY OR COMPLETENESS OF SCANNED COPIES OF THIS PLAN SHEET.

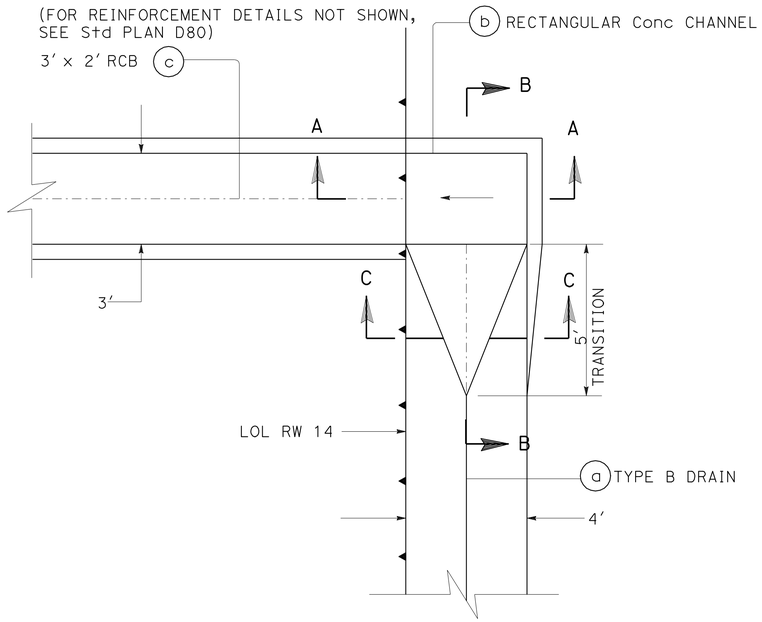

PLAN

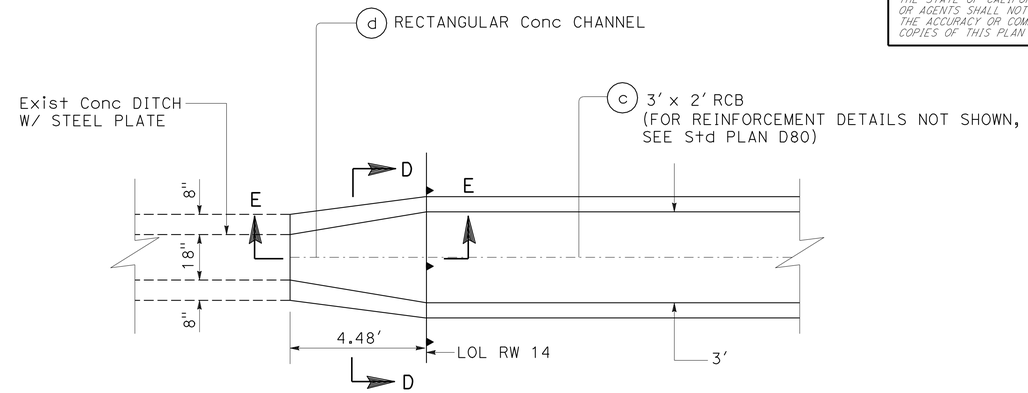

PLAN

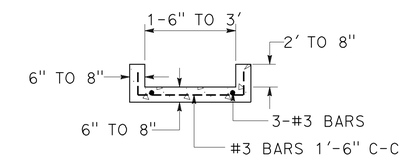

SECTION D-D

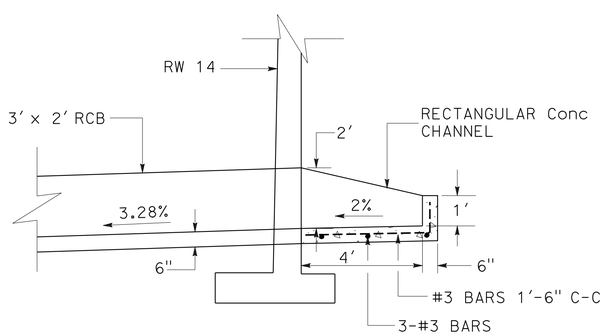

SECTION A-A

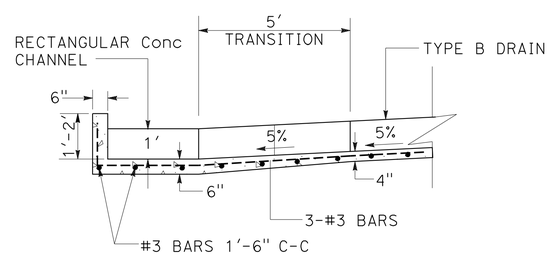

SECTION B-B

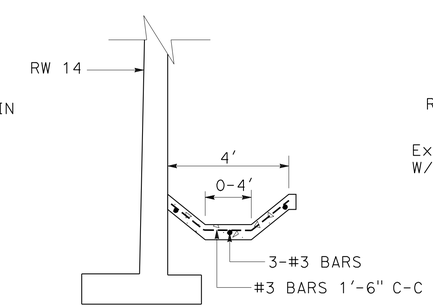

SECTION C-C

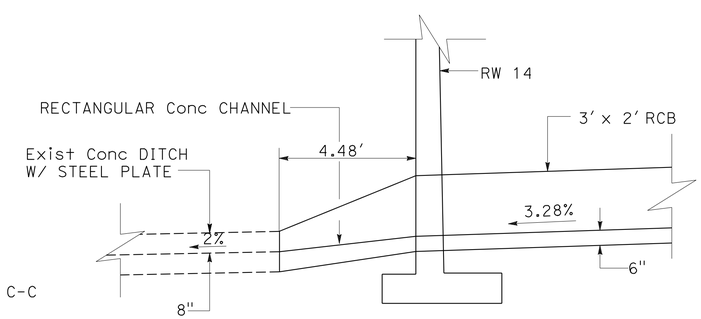

SECTION E-E

CHANNEL TRANSITION DETAILS

DRAINAGE SYSTEM No. 2-12

DRAINAGE DETAILS

NO SCALE

DD-20

STATE OF CALIFORNIA - DEPARTMENT OF TRANSPORTATION
Caltrans® HYDRAULICS

FUNCTIONAL SUPERVISOR: RALPH M. SASAKI
CALCULATED-DESIGNED BY: SIEW MEI TAN
CHECKED BY: RALPH M. SASAKI
REVISED BY
DATE REVISED

LAST REVISION 00-00-00
DATE PLOTTED => 30-JUN-2011
TIME PLOTTED => 16:47

Dist	COUNTY	ROUTE	POST MILES TOTAL PROJECT	SHEET No.	TOTAL SHEETS
07	LA	5	1.2/2.1	131	602

REGISTERED CIVIL ENGINEER 3/14/11 DATE

6-27-11
PLANS APPROVAL DATE

REGISTERED PROFESSIONAL ENGINEER RALPH M. SASAKI No. 30849 Exp. 3/31/12 CIVIL STATE OF CALIFORNIA

THE STATE OF CALIFORNIA OR ITS OFFICERS OR AGENTS SHALL NOT BE RESPONSIBLE FOR THE ACCURACY OR COMPLETENESS OF SCANNED COPIES OF THIS PLAN SHEET.

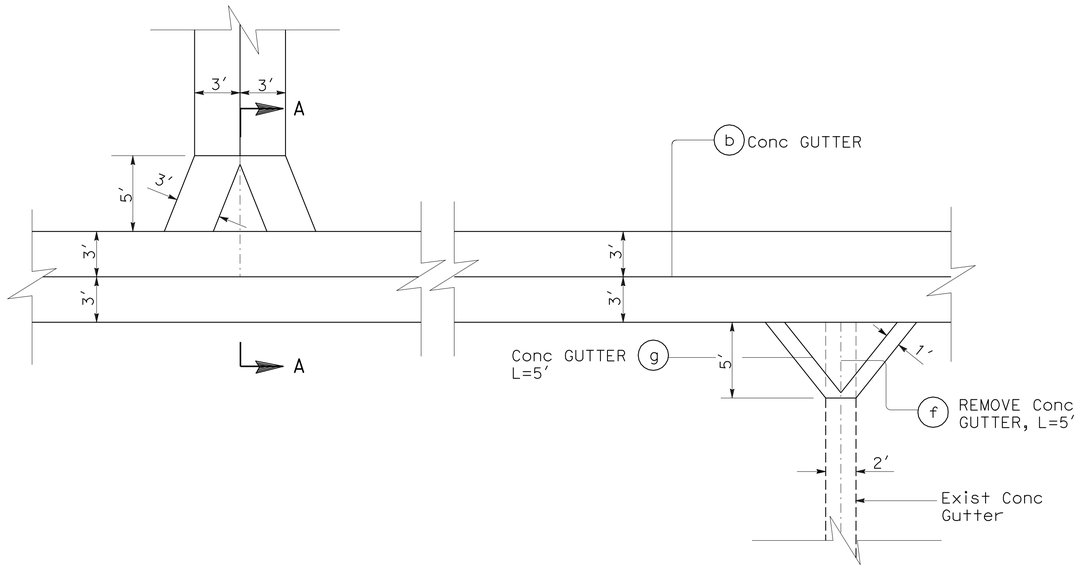

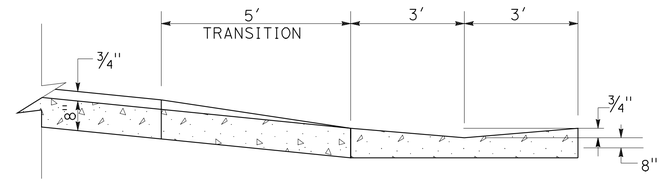

SECTION A-A

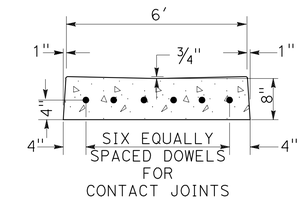

CONCRETE GUTTER DETAILS

CONCRETE GUTTER DETAILS

DRAINAGE SYSTEM No. 2-13

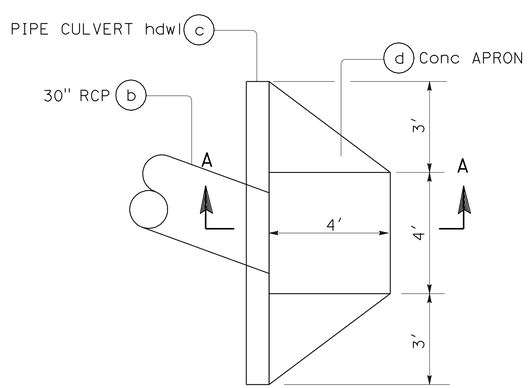

PLAN

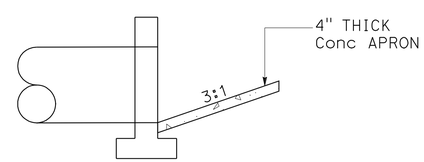

SECTION A-A

CONCRETE APRON DETAILS

DRAINAGE SYSTEM No. 4-3

STATE OF CALIFORNIA - DEPARTMENT OF TRANSPORTATION
Caltrans® HYDRAULICS

FUNCTIONAL SUPERVISOR: RALPH M. SASAKI

CALCULATED-DESIGNED BY: SIEW MEI TAN
CHECKED BY: RALPH M. SASAKI

REVISED BY | DATE REVISED

DRAINAGE DETAILS

NO SCALE

DD-21

LAST REVISION 00-00-00 | DATE PLOTTED => 30-JUN-2011 | TIME PLOTTED => 16:47

Dist	COUNTY	ROUTE	POST MILES TOTAL PROJECT	SHEET No.	TOTAL SHEETS
07	LA	5	1.2/2.1	132	602

REGISTERED CIVIL ENGINEER 3/14/11 DATE

6-27-11
PLANS APPROVAL DATE

REGISTERED PROFESSIONAL ENGINEER RALPH M. SASAKI No. 30849 Exp. 3/31/12 CIVIL STATE OF CALIFORNIA

THE STATE OF CALIFORNIA OR ITS OFFICERS OR AGENTS SHALL NOT BE RESPONSIBLE FOR THE ACCURACY OR COMPLETENESS OF SCANNED COPIES OF THIS PLAN SHEET.

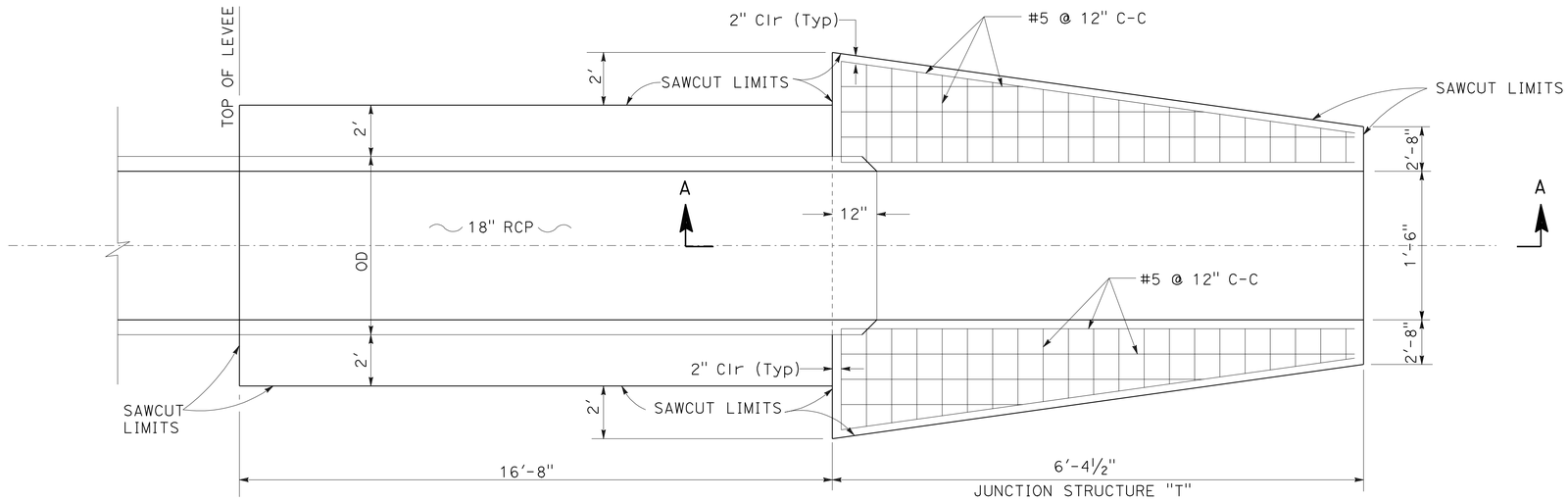

PLAN

CONCRETE REMOVAL NOTES:

1. A SAWCUT SHALL BE MADE ONE AND AND ONE-HALF INCHES DEEP AT THE REMOVAL LIMITS. CARE SHALL BE EXERCISED IN SAWING AT THE REMOVAL LIMITS SO AS NOT TO CUT THE REINFORCING STEEL IN THE REMAINING SLAB. THE EXISTING REINFORCING STEEL SHALL BE RETAINED AND EXTENDED A MINIMUM OF 25" INTO THE NEW CONSTRUCTION.
2. USING HANDHELD EQUIPMENT, THE CONCRETE SHALL BE CAREFULLY REMOVED FOR THE FULL DEPTH OF THE WALL OR SLAB AND FOR A MINIMUM DISTANCE FROM THE SAWCUT EQUAL TO THE LONGEST EXTENSION OF THE EXISTING BARS TO BE EXTENDED INTO NEW CONSTRUCTION. THIS EXTENSION SHALL BE 40 BAR DIAMETERS, UNLESS OTHERWISE SHOWN.
3. EXISTING REINFORCEMENT SHALL BE CUT TO THE REQUIRED BAR EXTENSION.
4. THE REMAINING CONCRETE MAY BE REMOVED BY ANY SUITABLE METHOD UPON APPROVAL OF THE ENGINEER, WHO SHALL BE THE SOLE JUDGE OF THE USE OF ANY CONCRETE REMOVAL EQUIPMENT. EXPLOSIVES, WRECKING BALL, OR OTHER SIMILAR DEVICES, WHICH ARE LIKELY TO DAMAGE THE CONCRETE TO BE LEFT IN PLACE, SHALL NOT BE USED.

ADDITIONAL NOTES:

1. ALL REINFORCEMENT SHALL BE #5 @ 12" C-C UNLESS OTHERWISE NOTED.

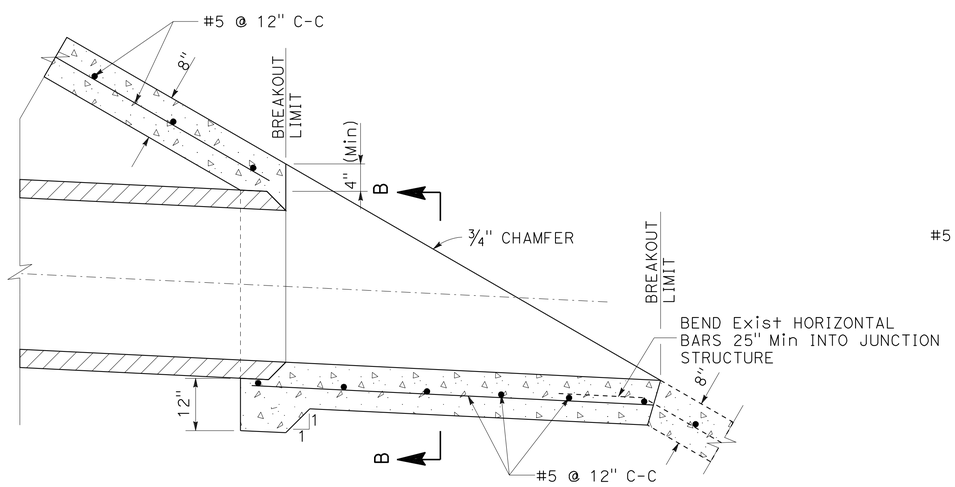

SECTION A-A

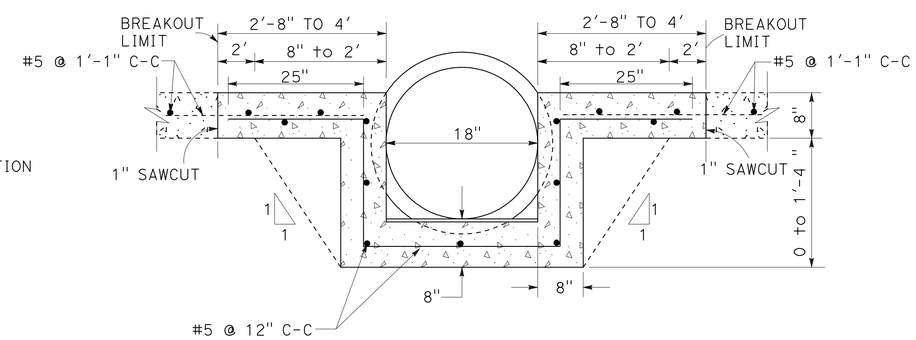

SECTION B-B

JUNCTION STRUCTURE "T"

DRAINAGE DETAILS

NO SCALE

DD-22

STATE OF CALIFORNIA - DEPARTMENT OF TRANSPORTATION
Caltrans HYDRAULICS

FUNCTIONAL SUPERVISOR: RALPH M. SASAKI
CALCULATED-DESIGNED BY: SIEW MEI TAN
CHECKED BY: RALPH M. SASAKI
REVISED BY / DATE REVISED

LAST REVISION 00-00-00 | DATE PLOTTED => 30-JUN-2011 | TIME PLOTTED => 16:47

Dist	COUNTY	ROUTE	POST MILES TOTAL PROJECT	SHEET No.	TOTAL SHEETS
07	LA	5	1.2/2.1	133	602

REGISTERED CIVIL ENGINEER 3/14/11 DATE

6-27-11
PLANS APPROVAL DATE

REGISTERED PROFESSIONAL ENGINEER RALPH M. SASAKI No. 30849 Exp. 3/31/12 CIVIL STATE OF CALIFORNIA

THE STATE OF CALIFORNIA OR ITS OFFICERS OR AGENTS SHALL NOT BE RESPONSIBLE FOR THE ACCURACY OR COMPLETENESS OF SCANNED COPIES OF THIS PLAN SHEET.

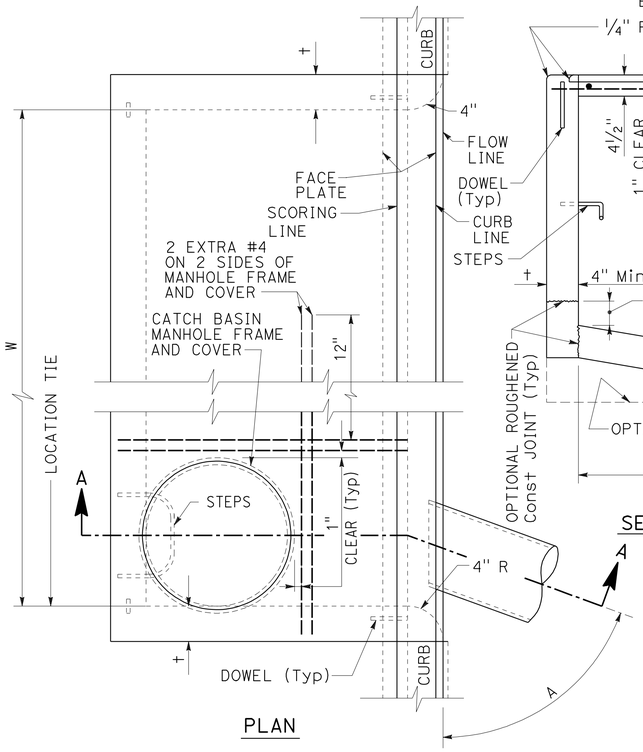

PLAN

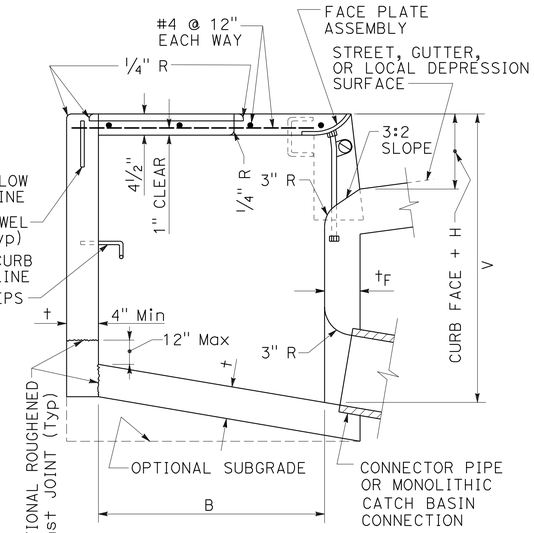

SECTION A-A

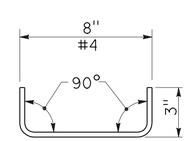

DOWEL DETAIL

NOTES:

1. WHERE THE BASIN IS TO BE CONSTRUCTED WITHIN THE LIMITS OF EXISTING OR PROPOSED SIDEWALK OR IS CONTIGUOUS TO SUCH SIDEWALK, THE TOP SLAB OF THE BASIN MAY BE POURED EITHER MONOLITHIC WITH THE SIDEWALK OR SEPARATELY, USING THE SAME CLASS OF CONCRETE AS IN THE BASIN. WHEN POURED MONOLITHICALLY, THE SIDEWALK SHALL BE PROVIDED WITH A WEAKENED PLANE OR A 1" DEEP SAWCUT CONTINUOUSLY AROUND THE EXTERNAL PERIMETER OF THE CATCH BASIN WALLS, INCLUDING ACROSS THE FULL WIDTH OF THE SIDEWALK. SURFACE OF ALL EXPOSED CONCRETE SHALL CONFORM IN SLOPE, GRADE, COLOR, FINISH, AND SCORING TO EXISTING OR PROPOSED CURB AND WALK ADJACENT TO THE BASIN.

2. ALL CURVED CONCRETE SURFACES SHALL BE FORMED BY CURVED FORMS, AND SHALL NOT BE SHAPED BY PLASTERING.

3. FLOOR OF BASIN SHALL BE GIVEN A STEEL TROWEL FINISH AND SHALL HAVE A LONGITUDINAL AND LATERAL SLOPE OF 1:12 MINIMUM AND 1:3 MAXIMUM, EXCEPT WHERE THE GUTTER GRADE EXCEEDS 8%, IN WHICH CASE THE LONGITUDINAL SLOPE OF THE FLOOR SHALL BE THE SAME AS THE GUTTER GRADE. SLOPE FLOOR FROM ALL DIRECTIONS TO THE OUTLET.

4. DIMENSIONS:

   B = 3′-2"

   V = THE DIFFERENCE IN ELEVATION BETWEEN THE TOP OF THE CURB AND THE INVERT OF THE CATCH BASIN AT THE OUTLET = 4.5′.

   V_U= THE DIFFERENCE IN ELEVATION BETWEEN THE TOP OF THE CURB AND THE INVERT AT THE UPSTREAM END OF THE BASIN, AND SHALL BE DETERMINED BY THE REQUIREMENTS OF NOTE 3, BUT SHALL NOT BE LESS THAN CURB FACE PLUS 12".

   V_I= THE DIFFERENCE IN ELEVATION BETWEEN THE TOP OF THE CURB AND THE INVERT OF THE INLET, NOTED ON THE PLANS.

   H = NOTED ON THE PLANS.

   W = NOTED ON THE PLANS.

   A = THE ANGLE, IN DEGREES, INTERCEPTED BY THE CENTERLINE OF THE CONNECTOR PIPE AND THE CATCH BASIN WALL TO WHICH THE CONNECTOR PIPE IS ATTACHED.

5. PLACE CONNECTOR PIPES AS INDICATED ON THE PLANS. UNLESS OTHERWISE SPECIFIED, THE CONNECTOR PIPE SHALL BE LOCATED AT THE DOWNSTREAM END OF THE BASIN. WHERE THE CONNECTOR PIPE IS SHOWN AT A CORNER, THE CENTERLINE OF THE PIPE SHALL INTERSECT THE INSIDE CORNER OF THE BASIN. THE PIPE MAY BE CUT AND TRIMMED AT A SKEW NECESSARY TO INSURE MINIMUM 3" PIPE EMBEDMENT, ALL AROUND, WITHIN THE CATCH BASIN WALL, AND 3" RADIUS OF ROUNDING OF STRUCTURE CONCRETE, ALL AROUND, ADJACENT TO PIPE ENDS. A MONOLITHIC CATCH BASIN CONNECTION SHALL BE USED TO JOIN THE CONNECTOR PIPE TO THE CATCH BASIN WHENEVER ANGLE "A" IS LESS THAN 70° OR GREATER THAN 110°, OR WHENEVER THE CONNECTOR PIPE IS LOCATED IN A CORNER. THE OPTIONAL USE OF A MONOLITHIC CATCH BASIN CONNECTION IN ANY CASE IS PERMITTED. MONOLITHIC CATCH BASIN CONNECTIONS MAY BE CONSTRUCTED TO AVOID CUTTING STANDARD LENGTHS OF PIPE.

6. STEPS SHALL BE LOCATED AS SHOWN. IF THE CONNECTOR PIPE INTERFERES WITH THE STEPS, THEY SHALL BE LOCATED AT THE CENTERLINE OF THE DOWNSTREAM END WALL. STEPS SHALL BE SPACED 12" APART. THE TOP STEP SHALL BE 7" BELOW THE TOP OF THE MANHOLE AND PROJECT 2 1/2". ALL OTHER STEPS SHALL PROJECT 5".

7. DOWELS ARE REQUIRED AT EACH CORNER AND AT 7′ ON CENTER (MAXIMUM) ALONG THE BACKWALL.

8. THE FOLLOWING DETAILS ARE INCORPORATED HEREIN:

   308 MONOLITHIC CATCH BASIN CONNECTION
   309 CATCH BASIN REINFORCEMENT
   310 CATCH BASIN FACE PLATE ASSEMBLY AND PROTECTION BAR
   312 CATCH BASIN MANHOLE FRAME AND COVER
   635 STEEL STEP
   636 POLYPROPYLENE PLASTIC STEP

STRUCTURAL DATA

WALL AND SLAB DIMENSIONS AND REINFORCEMENT REQUIREMENTS

Max W	Max V	t	t_F	REINFORCEMENT REQUIRED IN: FRONT WALL	REAR WALL	BOTTOM SLAB	END WALL
3.5′	8′	6"	6"	NO REINFORCEMENT	REINFORCEMENT REQUIRED		
3.5′	12′	8"	8"				
7′	6′	6"	6"				
7′	12′	8"	8"				
14′	4′	6"	6"				
↕	8′	6"	8"				
14′	12′	8"	10"				
21′ AND 28′	4′	6"	6"			REINFORCEMENT REQUIRED	
	6′	6"	8"				
	8′	8"	8"				
	10′	8"	10"				
	12′	8"	10"				

FOR W > 28′, V > 12′ OR B > 4′ SEE PLANS

CURB OPENING CATCH BASIN
300-3

DRAINAGE DETAILS
NO SCALE
DD-23

STATE OF CALIFORNIA - DEPARTMENT OF TRANSPORTATION
Caltrans® HYDRAULICS

FUNCTIONAL SUPERVISOR: RALPH M. SASAKI
CALCULATED-DESIGNED BY: SIEW WEI TAN
CHECKED BY: RALPH M. SASAKI
REVISED BY
DATE REVISED

LAST REVISION 00-00-00
DATE PLOTTED => 30-JUN-2011
TIME PLOTTED => 16:47

Dist	COUNTY	ROUTE	POST MILES TOTAL PROJECT	SHEET No.	TOTAL SHEETS
07	LA	5	1.2/2.1	134	602

REGISTERED CIVIL ENGINEER 3/14/11 DATE

6-27-11
PLANS APPROVAL DATE

REGISTERED PROFESSIONAL ENGINEER RALPH M. SASAKI No. 30849 Exp. 3/31/12 CIVIL STATE OF CALIFORNIA

THE STATE OF CALIFORNIA OR ITS OFFICERS OR AGENTS SHALL NOT BE RESPONSIBLE FOR THE ACCURACY OR COMPLETENESS OF SCANNED COPIES OF THIS PLAN SHEET.

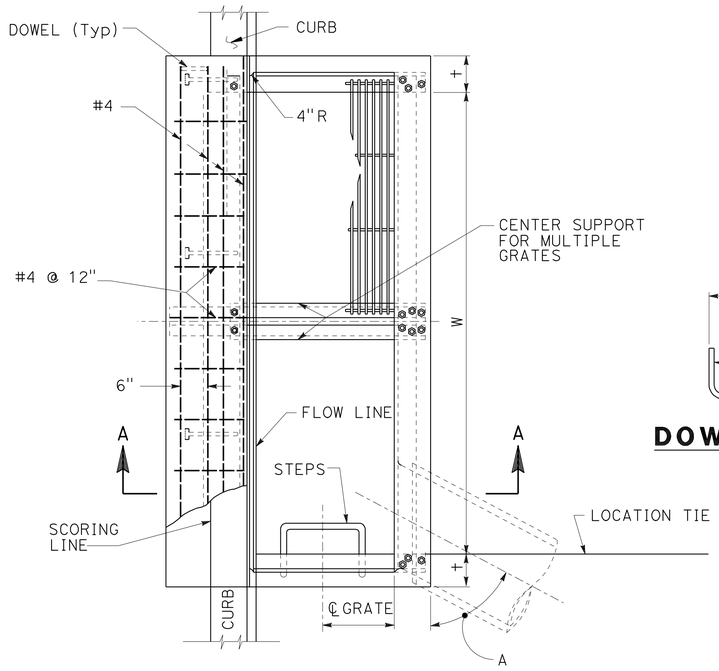

PLAN

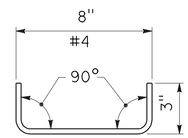

DOWEL DETAIL

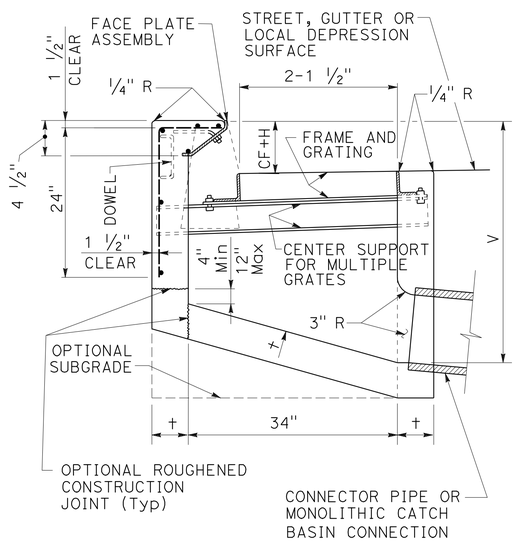

SECTION A-A

STRUCTURAL DATA			
WALL AND SLAB DIMENSIONS AND REINFORCEMENT REQUIREMENTS			
No. OF GRATES	MAXIMUM V	†	REINFORCEMENT FOR WALLS AND SLABS
1-2	4′	6"	NOT REQUIRED
1-2	8′	8"	
1-2	10′	10"	
1-2	12′	10"	REQUIRED
3-4	4′	6"	NOT REQUIRED
3-4	7′	8"	
3-4	8′	8"	REQUIRED
3-4	12′	10"	
5-6	4′	6"	NOT REQUIRED
5-6	6′	8"	
5-6	8′	8"	REQUIRED
5-6	12′	10"	
> 6	4′	6"	
> 6	8′	8"	
> 6	12′	10"	

NOTES:

1. WHERE THE BASIN IS TO BE CONSTRUCTED WITHIN THE LIMITS OF EXISTING OR PROPOSED SIDEWALK OR IS CONTIGUOUS TO SUCH SIDEWALK, THE TOP SLAB OF THE BASIN MAY BE POURED EITHER MONOLITHIC WITH THE SIDEWALK OR SEPARATELY, USING THE SAME CLASS OF CONCRETE AS IN THE BASIN. WHEN POURED MONOLITHICALLY, THE SIDEWALK SHALL BE PROVIDED WITH A WEAKENED PLANE OR A 1" DEEP SAWCUT CONTINUOUSLY AROUND THE EXTERNAL PERIMETER OF THE CATCH BASIN WALLS, INCLUDING ACROSS THE FULL WIDTH OF THE SIDEWALK. SURFACE OF ALL EXPOSED CONCRETE SHALL CONFORM IN SLOPE, GRADE, COLOR, FINISH, AND SCORING TO EXISTING OR PROPOSED CURB AND WALK ADJACENT TO THE BASIN.
2. ALL CURVED CONCRETE SURFACES SHALL BE FORMED BY CURVED FORMS, AND SHALL NOT BE SHAPED BY PLASTERING.
3. ONE GRATING IS REQUIRED UNLESS OTHERWISE SHOWN ON THE PROJECT PLAN.
4. FLOOR OF BASIN SHALL BE GIVEN A STEEL TROWEL FINISH AND SHALL HAVE A LONGITUDINAL AND LATERAL SLOPE OF 1:12 MINIMUM AND 1:3 MAXIMUM, EXCEPT WHERE THE GUTTER GRADE EXCEEDS 8%, IN WHICH CASE THE LONGITUDINAL SLOPE OF THE FLOOR SHALL BE THE SAME AS THE GUTTER GRADE. SLOPE FLOOR FROM ALL DIRECTIONS TO THE OUTLET.
5. DIMENSIONS:
   - V = THE DIFFERENCE IN ELEVATION BETWEEN THE TOP OF THE CURB AND THE INVERT OF THE CATCH BASIN AT THE OUTLET = 4.5′.
   - V_U = THE DIFFERENCE IN ELEVATION BETWEEN THE TOP OF THE CURB AND THE INVERT AT THE UPSTREAM END OF THE BASIN, AND SHALL BE DETERMINED BY THE REQUIREMENTS OF NOTE 4, BUT SHALL NOT BE LESS THAN CURB FACE PLUS 12".
   - V_1 = THE DIFFERENCE IN ELEVATION BETWEEN THE TOP OF THE CURB AND THE INVERT OF THE INLET, NOTED ON THE PLANS.
   - H = NOTED ON THE PROJECT PLANS.
   - W = 2′-11⅜" FOR ONE GRATING; ADD 3′-5 ⅜" FOR EACH ADDITIONAL GRATING.
   - A = THE ANGLE, IN DEGREES, INTERCEPTED BY THE CENTERLINE OF THE CONNECTOR PIPE AND THE CATCH BASIN WALL TO WHICH THE CONNECTOR PIPE IS ATTACHED.
6. PLACE CONNECTOR PIPES AS INDICATED ON THE PLANS. UNLESS OTHERWISE SPECIFIED, THE CONNECTOR PIPE SHALL BE LOCATED AT THE DOWNSTREAM END OF THE BASIN. WHERE THE CONNECTOR PIPE IS SHOWN AT A CORNER, THE CENTERLINE OF THE PIPE SHALL INTERSECT THE INSIDE CORNER OF THE BASIN. THE PIPE MAY BE CUT AND TRIMMED AT A SKEW NECESSARY TO INSURE MINIMUM 3" PIPE EMBEDMENT, ALL AROUND, WITHIN THE CATCH BASIN WALL, AND 3" RADIUS OF ROUNDING OF STRUCTURE CONCRETE, ALL AROUND, ADJACENT TO PIPE ENDS, A MONOLITHIC CATCH BASIN CONNECTION SHALL BE USED TO JOIN THE CONNECTOR PIPE TO THE CATCH BASIN WHENEVER ANGLE A" IS" LESS THAN 70° OR GREATER THAN 110 °, OR WHENEVER THE CONNECTOR PIPE IS LOCATED IN A CORNER. THE OPTIONAL USE OF A MONOLITHIC CATCH BASIN CONNECTION IN ANY CASE IS PERMITTED. MONOLITHIC CATCH BASIN CONNECTIONS MAY BE CONSTRUCTED TO AVOID CUTTING STANDARD LENGTHS OF PIPE.
7. STEPS SHALL BE LOCATED AS SHOWN. IF THE CONNECTOR PIPE INTERFERES WITH THE STEPS, THEY SHALL BE LOCATED ON THE FRONT WALL AT THE CENTERLINE OF THE DOWNSTREAM GRATING. STEPS SHALL BE SPACED 12" PART. THE TOP STEP SHALL BE 7" BELOW THE TOP OF THE GRATING AND PROJECT 2 ½". ALL OTHER STEPS SHALL PROJECT 5".
8. DOWELS ARE REQUIRED AT EACH CORNER AND AT 7′ ON CENTER (MAXIMUM) ALONG THE BACKWALL.
9. THE FOLLOWING DETAILS ARE INCORPORATED HEREIN:
   - 308 MONOLITHIC CATCH BASIN CONNECTION
   - 309 CATCH BASIN REINFORCEMENT
   - 310 CATCH BASIN FACE PLATE ASSEMBLY AND PROTECTION BAR
   - 311 FRAME AND GRATING FOR CATCH BASINS
   - 635 STEEL STEP
   - 636 POLYPROPYLENE PLASTIC STEP

CURB OPENING CATCH BASIN WITH GRATING(S) 302-3

DRAINAGE DETAILS

NO SCALE

DD-24

STATE OF CALIFORNIA - DEPARTMENT OF TRANSPORTATION
Caltrans® HYDRAULICS

FUNCTIONAL SUPERVISOR: RALPH M. SASAKI
CALCULATED-DESIGNED BY: SIEW MEI TAN
CHECKED BY: RALPH M. SASAKI
REVISED BY
DATE REVISED

LAST REVISION 00-00-00 | DATE PLOTTED => 30-JUN-2011 | TIME PLOTTED => 16:47

Dist	COUNTY	ROUTE	POST MILES TOTAL PROJECT	SHEET No.	TOTAL SHEETS
07	LA	5	1.2/2.1	135	602

REGISTERED CIVIL ENGINEER 3/14/11 DATE

6-27-11
PLANS APPROVAL DATE

REGISTERED PROFESSIONAL ENGINEER RALPH M. SASAKI No. 30849 Exp. 3/31/12 CIVIL STATE OF CALIFORNIA

THE STATE OF CALIFORNIA OR ITS OFFICERS OR AGENTS SHALL NOT BE RESPONSIBLE FOR THE ACCURACY OR COMPLETENESS OF SCANNED COPIES OF THIS PLAN SHEET.

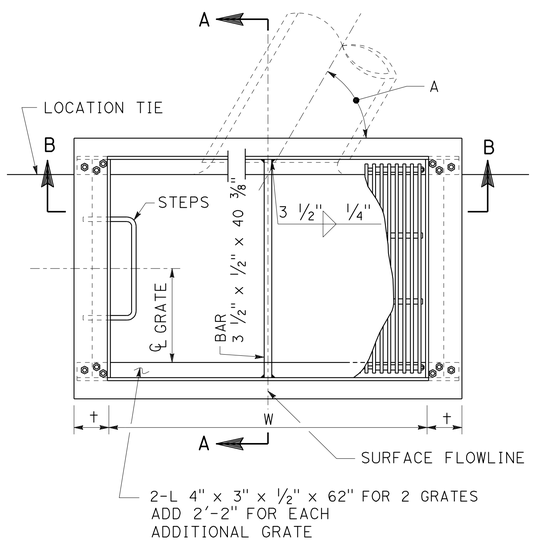

PLAN

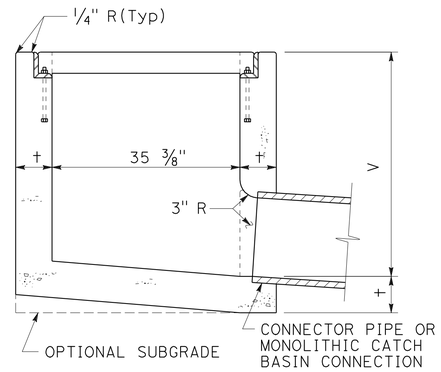

SECTION A-A

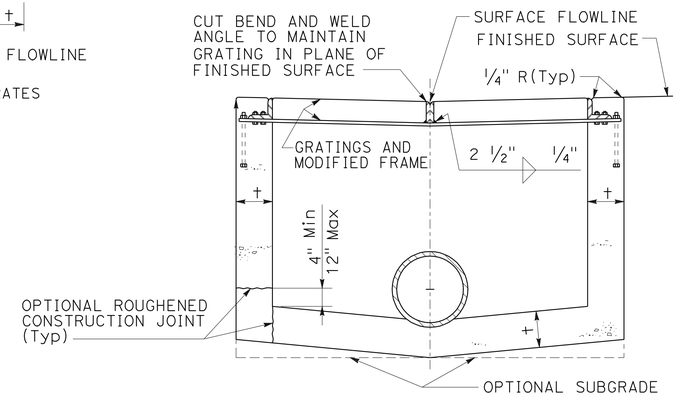

SECTION B-B

STRUCTURAL DATA			
WALL AND SLAB DIMENSIONS AND REINFORCEMENT REQUIREMENTS			
No. OF GRATES	Max V	t	REINFORCEMENT FOR WALLS AND SLABS
2-3	4'	6"	NOT REQUIRED
2-3	8'	8"	
2-3	10'	10"	
2-3	12'	10"	REQUIRED
4-6	4'	6"	NOT REQUIRED
4-6	7'	8"	
4-6	8'	8"	REQUIRED
4-6	12'	10"	
7-9	4'	6"	NOT REQUIRED
7-9	6'	8"	
7-9	8'	8"	REQUIRED
7-9	12'	10"	
> 9	4'	6"	
> 9	8'	8"	
> 9	12'	10"	

NOTES:

1. ALL CURVED CONCRETE SURFACES SHALL BE FORMED BY CURVED FORMS, AND SHALL NOT BE SHAPED BY PLASTERING.
2. TWO GRATINGS ARE REQUIRED UNLESS OTHERWISE SHOWN ON THE PLANS.
3. FLOOR OF BASIN SHALL BE GIVEN A STEEL TROWEL FINISH AND SHALL HAVE A LONGITUDINAL AND LATERAL SLOPE OF 1:12 MINIMUM AND 1:3 MAXIMUM. SLOPE FLOOR FROM ALL DIRECTIONS TO THE OUTLET.
4. DIMENSIONS:

   V = 3'-6"

   V_I = THE DEPTH AT THE INVERT OF THE INLET. NOTED ON THE PLANS.

   W = 4'-3 1/2" FOR TWO GRATINGS; ADD 2'-2" FOR EACH ADDITIONAL GRATING.

   A = THE ANGLE, IN DEGREES, INTERCEPTED BY THE CENTERLINE OF THE CONNECTOR PIPE AND THE CATCH BASIN WALL TO WHICH THE CONNECTOR PIPE IS ATTACHED.
5. PLACE CONNECTOR PIPES AS INDICATED ON THE PLANS. UNLESS OTHERWISE SPECIFIED, THE CONNECTOR PIPE SHALL BE LOCATED AT THE DOWNSTREAM END OF THE BASIN. WHERE THE CONNECTOR PIPE IS SHOWN AT A CORNER, THE CENTERLINE OF THE PIPE SHALL INTERSECT THE INSIDE CORNER OF THE BASIN. THE PIPE MAY BE CUT AND TRIMMED AT A SKEW NECESSARY TO INSURE MINIMUM 3" PIPE EMBEDMENT, ALL AROUND, WITHIN THE CATCH BASIN WALL, AND 3" RADIUS OF ROUNDING OF STRUCTURE CONCRETE, ALL AROUND, ADJACENT TO PIPE ENDS. A MONOLITHIC CATCH BASIN CONNECTION SHALL BE USED TO JOIN THE CONNECTOR PIPE TO THE CATCH BASIN WHENEVER ANGLE A" IS" LESS THAN 70° OR GREATER THAN 110°, OR WHENEVER THE CONNECTOR PIPE IS LOCATED IN A CORNER. THE OPTIONAL USE OF A MONOLITHIC CATCH BASIN CONNECTION IN ANY CASE IS PERMITTED. MONOLITHIC CATCH BASIN CONNECTIONS MAY BE CONSTRUCTED TO AVOID CUTTING STANDARD LENGTHS OF PIPE.
6. STEPS SHALL BE LOCATED AS SHOWN. IF THE CONNECTOR PIPE INTERFERES WITH THE STEPS, THEY SHALL BE LOCATED ON THE OPPOSITE WALL. STEPS SHALL BE SPACED 12" APART. THE TOP STEP SHALL BE 7" BELOW THE TOP OF THE GRATING AND PROJECT 2 1/2". ALL OTHER STEPS SHALL PROJECT 5".
7. THE FOLLOWING DETAILS ARE INCORPORATED HEREIN:

   308 MONOLITHIC CATCH BASIN CONNECTION
   309 CATCH BASIN REINFORCEMENT
   311 FRAME AND GRATING FOR CATCH BASINS
   635 STEEL STEP
   636 POLYPROPYLENE PLASTIC STEP

GRATING CATCH BASIN - ALLEY (TRANSVERSE) 305-3

DRAINAGE DETAILS

NO SCALE

DD-25

STATE OF CALIFORNIA - DEPARTMENT OF TRANSPORTATION
Caltrans HYDRAULICS

FUNCTIONAL SUPERVISOR: RALPH M. SASAKI
CALCULATED-DESIGNED BY: SIEW MEI TAN
CHECKED BY: RALPH M. SASAKI
REVISED BY
DATE REVISED

LAST REVISION 00-00-00
DATE PLOTTED => 30-JUN-2011
TIME PLOTTED => 16:47

Dist	COUNTY	ROUTE	POST MILES TOTAL PROJECT	SHEET No.	TOTAL SHEETS
07	LA	5	1.2/2.1	136	602

REGISTERED CIVIL ENGINEER 3/14/11 DATE

6-27-11
PLANS APPROVAL DATE

REGISTERED PROFESSIONAL ENGINEER RALPH M. SASAKI No. 30849 Exp. 3/31/12 CIVIL STATE OF CALIFORNIA

THE STATE OF CALIFORNIA OR ITS OFFICERS OR AGENTS SHALL NOT BE RESPONSIBLE FOR THE ACCURACY OR COMPLETENESS OF SCANNED COPIES OF THIS PLAN SHEET.

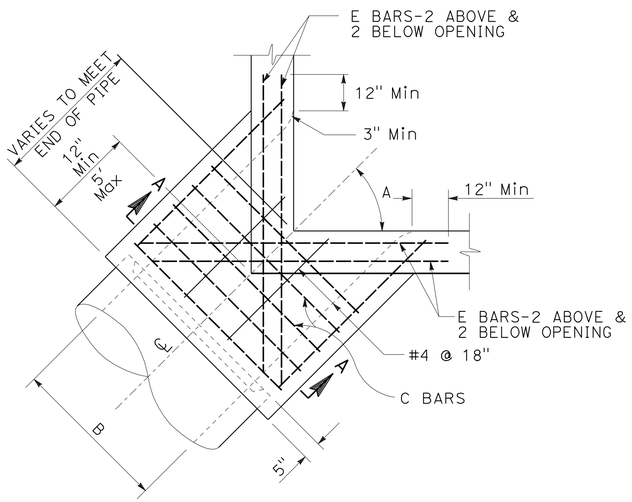

PLAN

CORNER CONNECTION

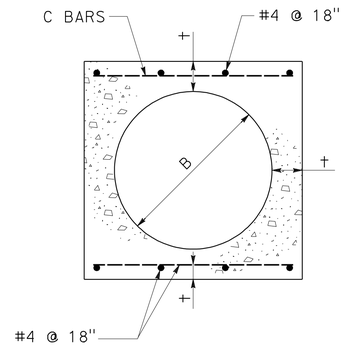

SECTION A-A

STRUCTURAL DATA							
B	†	C BARS	D & E BARS	B	†	C BARS	D & E BARS
12"	4"	#4 @ 6"	#5	42"	7 ½"	#5 @ 6"	#6
15"	4 ¼"			45"	7 ¾"		
18"	4 ½"			48"	8"		
21"	5"			51"	8 ½"		
24"	5 ¼"			54"	9"		
27"	5 ½"			57"	9 ¼"		
30"	6"			60"	9 ½"		
33"	6 ¼"			63"	10"		
36"	6 ½"			66"	10 ¼"		
39"	7"			69"	10 ¾"		
				72"	11"		
FOR B GREATER THAN 72" SEE PLANS							

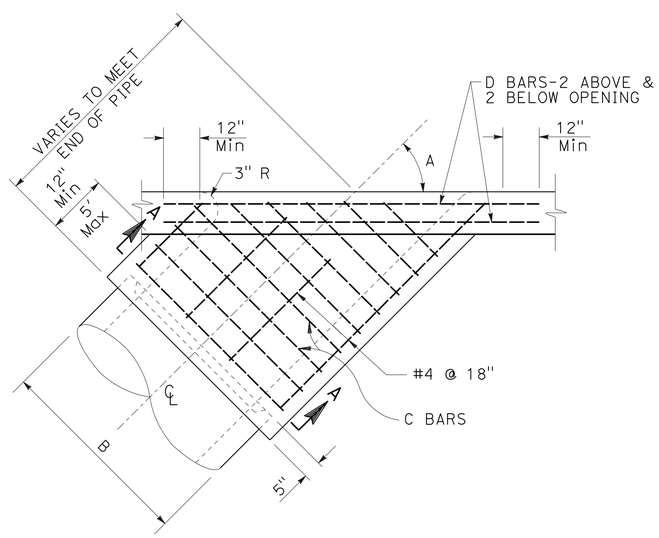

PLAN

SIDE CONNECTION

NOTES:

1. REINFORCING STEEL SHALL BE 1 ½" CLEAR FROM FACE OF CONCRETE UNLESS OTHERWISE SHOWN.
2. REINFORCING STEEL FOR INSIDE FACE OF CATCH BASIN SHALL BE CUT AT CENTER OF OPENING AND BENT INTO WALLS OF MONOLITHIC CATCH BASIN CONNECTION. REINFORCING STEEL FOR OUTSIDE FACE OF CATCH BASIN SHALL BE CUT 2" CLEAR OF OPENING.
3. CONNECTION SHALL BE PLACED MONOLITHIC WITH CATCH BASIN. THE ROUNDED EDGE OF OUTLET SHALL BE CONSTRUCTED BY PLACING CONCRETE WITH THE SAME CLASS OF CONCRETE AS THE CATCH BASIN AGAINST A CURVED FORM WITH A RADIUS OF 3".
4. CONNECTIONS SHALL BE CONSTRUCTED WHEN:
   - (A) PIPES INLET OR OUTLET THROUGH CORNER OF CATCH BASIN
   - (B) ANGLE A FOR PIPES THROUGH 30" IN DIAMETER IS LESS THAN 70° OR GREATER THAN 110°.

MONOLITHIC CATCH BASIN CONNECTION
308-2

DRAINAGE DETAILS
NO SCALE
DD-26

STATE OF CALIFORNIA - DEPARTMENT OF TRANSPORTATION
Caltrans HYDRAULICS

FUNCTIONAL SUPERVISOR: RALPH M. SASAKI
CALCULATED-DESIGNED BY: SIEW MEI TAN
CHECKED BY: RALPH M. SASAKI
REVISED BY
DATE REVISED

LAST REVISION 00-00-00
DATE PLOTTED => 30-JUN-2011
TIME PLOTTED => 16:47

Dist	COUNTY	ROUTE	POST MILES TOTAL PROJECT	SHEET No.	TOTAL SHEETS
07	LA	5	1.2/2.1	137	602

REGISTERED CIVIL ENGINEER 3/14/11 DATE

6-27-11
PLANS APPROVAL DATE

REGISTERED PROFESSIONAL ENGINEER RALPH M. SASAKI No. 30849 Exp. 3/31/12 CIVIL STATE OF CALIFORNIA

THE STATE OF CALIFORNIA OR ITS OFFICERS OR AGENTS SHALL NOT BE RESPONSIBLE FOR THE ACCURACY OR COMPLETENESS OF SCANNED COPIES OF THIS PLAN SHEET.

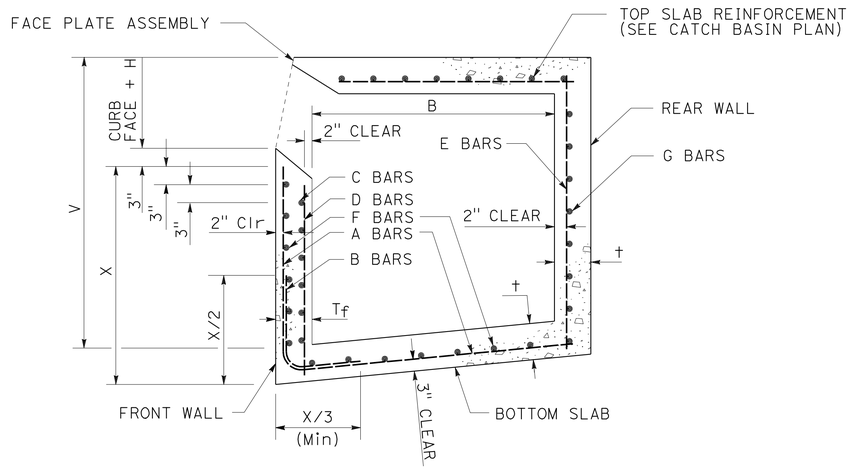

TYPICAL REINFORCEMENT DETAILS

Max W	Max V	t	tf	A & B BARS	C BARS	D BARS	E BARS	F BARS	G BARS
3.5′	8′	6"	6"	—	—	—	—	—	—
3.5′	12′	8"	8"	—	—	—	—	—	—
7′	6′	6"	6"	—	—	—	—	—	—
7′	12′	8"	8"	—	—	—	—	—	—
14′	4′	6"	6"	—	#4 @ 12"	#4 @ 18"	—	—	—
14′	8′	6"	8"	—	#4 @ 12"	#4 @ 18"	—	—	—
14′	12′	8"	10"	—	#4 @ 6"	#4 @ 18"	—	—	—
28′	4′	6"	6"	#4 @ 24"	—	—	—	#4 @ 18"	—
28′	5′	6"	8"	#4 @ 24"	—	—	—	#4 @ 18"	—
28′	6′	6"	8"	#4 @ 18"	—	—	—	#4 @ 18"	—
28′	7′	8"	8"	#4 @ 17"	—	—	—	#4 @ 18"	—
28′	8′	8"	8"	#4 @ 13"	—	—	—	#4 @ 18"	—
28′	9′	8"	10"	#4 @ 15"	—	—	—	#4 @ 18"	—
28′	10′	8"	10"	#4 @ 12"	—	—	—	#4 @ 18"	—
28′	11′	8"	10"	#5 @ 15"	—	—	#4 @ 10"	#4 @ 18"	#4 @ 18"
28′	12′	8"	10"	#4 @ 18"	—	—	#4 @ 10"	#4 @ 18"	#4 @ 18"
FOR W > 28 OR B > 4′ SEE PLANS									

CURB OPENING CATCH BASIN REINFORCEMENT

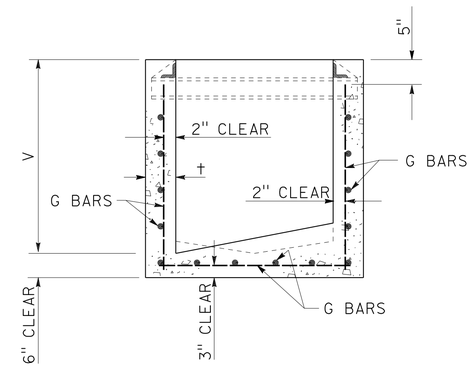

TYPICAL REINFORCEMENT DETAILS

V MAX	t	SIDE AND END WALL STEEL G BARS
4′	6"	#4 @ 10"
8′	8"	#4 @ 6"
12′	10"	#5 @ 6"
FOR V > 12′ SEE PLANS		

GRATING CATCH BASIN REINFORCEMENT

NOTE:

UNLESS OTHERWISE SPECIFIED, REINFORCEMENT FOR CURB OPENINGS AND GRATING CATCH BASINS SHALL TERMINATE 2" FROM FACE OF CONCRETE.

CATCH BASIN REINFORCEMENT

309-2

DRAINAGE DETAILS

NO SCALE

DD-27

STATE OF CALIFORNIA - DEPARTMENT OF TRANSPORTATION
Caltrans® HYDRAULICS

FUNCTIONAL SUPERVISOR: RALPH M. SASAKI
CALCULATED-DESIGNED BY: SIEW MEI TAN
CHECKED BY: RALPH M. SASAKI
REVISED BY
DATE REVISED

LAST REVISION 00-00-00
DATE PLOTTED => 30-JUN-2011
TIME PLOTTED => 16:47

Dist	COUNTY	ROUTE	POST MILES TOTAL PROJECT	SHEET No.	TOTAL SHEETS
07	LA	5	1.2/2.1	138	602

REGISTERED CIVIL ENGINEER 3/14/11 DATE

6-27-11
PLANS APPROVAL DATE

REGISTERED PROFESSIONAL ENGINEER RALPH M. SASAKI No. 30849 Exp. 3/31/12 CIVIL STATE OF CALIFORNIA

THE STATE OF CALIFORNIA OR ITS OFFICERS OR AGENTS SHALL NOT BE RESPONSIBLE FOR THE ACCURACY OR COMPLETENESS OF SCANNED COPIES OF THIS PLAN SHEET.

SUPPORT BOLT AND FACE PLATE 4½" TOP SLAB

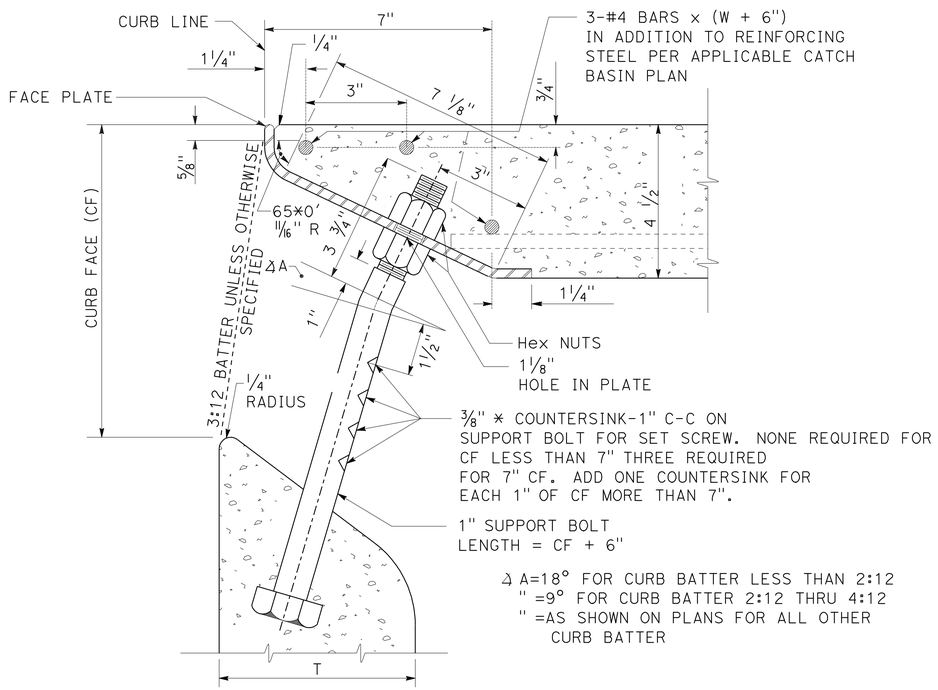

SECTION

SUPPORT BOLT AND FACE PLATE (6)" TOP SLAB

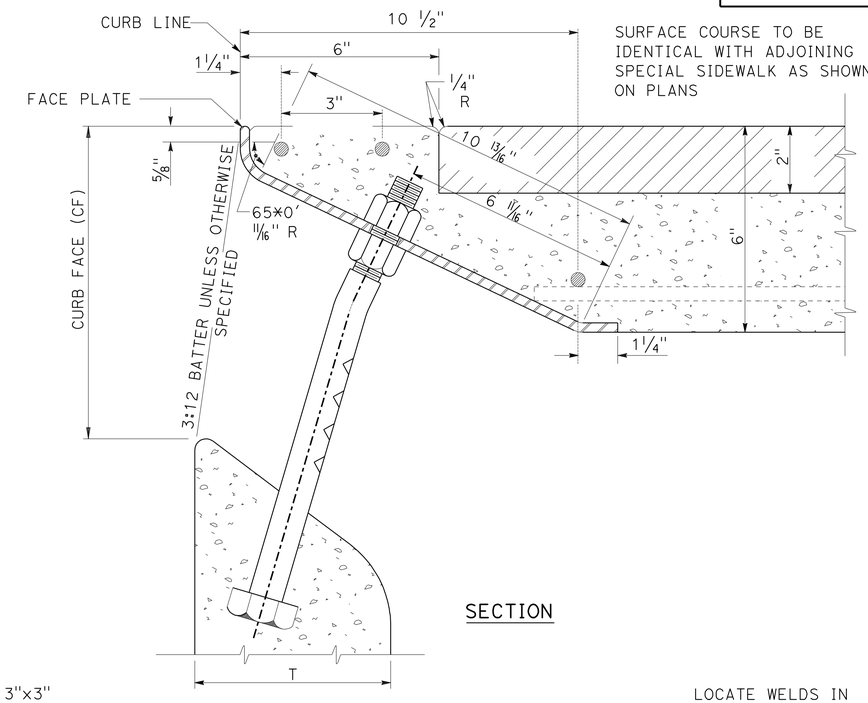

SECTION

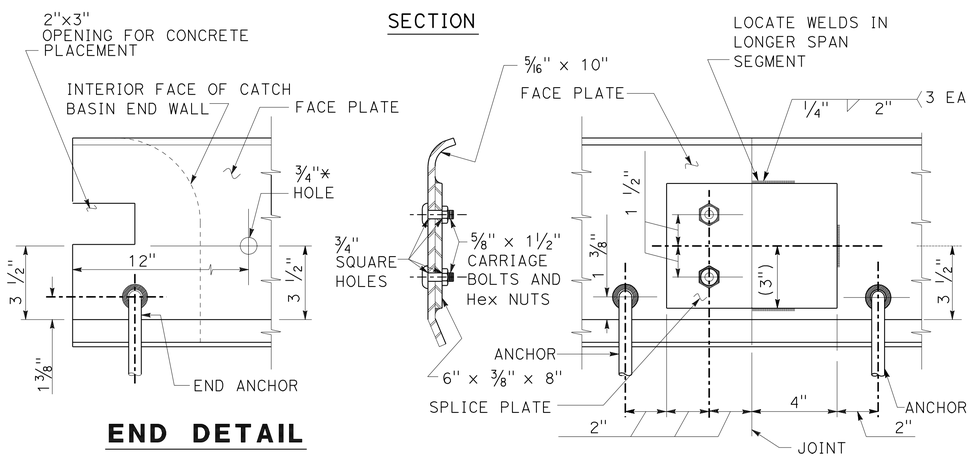

END DETAIL

SPLICE DETAIL

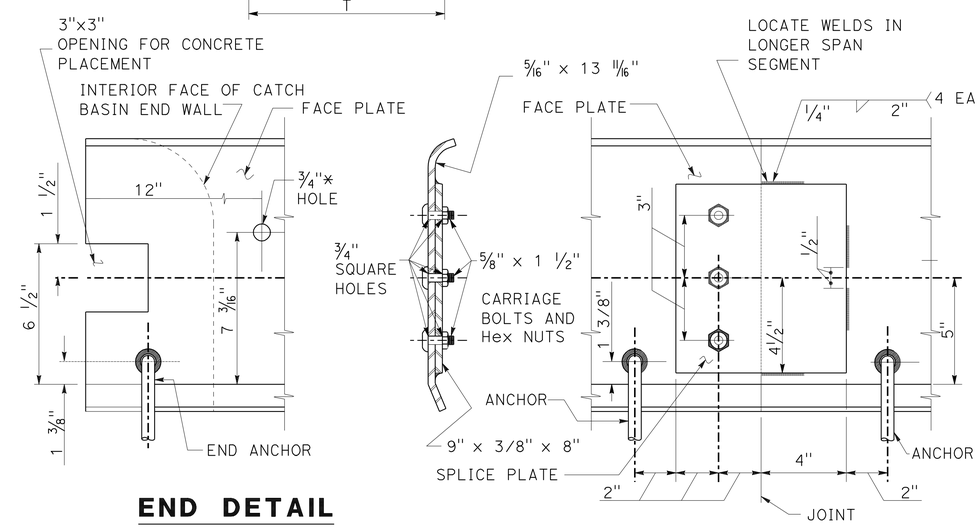

END DETAIL

SPLICE DETAIL

CATCH BASIN FACE PLATE ASSEMBLY AND PROTECTION BAR 310-3

DRAINAGE DETAILS

NO SCALE

DD-28

REVISED BY	DATE REVISED

CALCULATED-DESIGNED BY: SIEW MEI TAN
CHECKED BY: RALPH M. SASAKI
FUNCTIONAL SUPERVISOR: RALPH M. SASAKI

STATE OF CALIFORNIA - DEPARTMENT OF TRANSPORTATION
Caltrans® HYDRAULICS

LAST REVISION 00-00-00 | DATE PLOTTED => 30-JUN-2011 | TIME PLOTTED => 16:47

Dist	COUNTY	ROUTE	POST MILES TOTAL PROJECT	SHEET No.	TOTAL SHEETS
07	LA	5	1.2/2.1	139	602

REGISTERED CIVIL ENGINEER 3/14/11 DATE

6-27-11
PLANS APPROVAL DATE

REGISTERED PROFESSIONAL ENGINEER RALPH M. SASAKI No. 30849 Exp. 3/31/12 CIVIL STATE OF CALIFORNIA

THE STATE OF CALIFORNIA OR ITS OFFICERS OR AGENTS SHALL NOT BE RESPONSIBLE FOR THE ACCURACY OR COMPLETENESS OF SCANNED COPIES OF THIS PLAN SHEET.

FACE PLATE ANCHORS

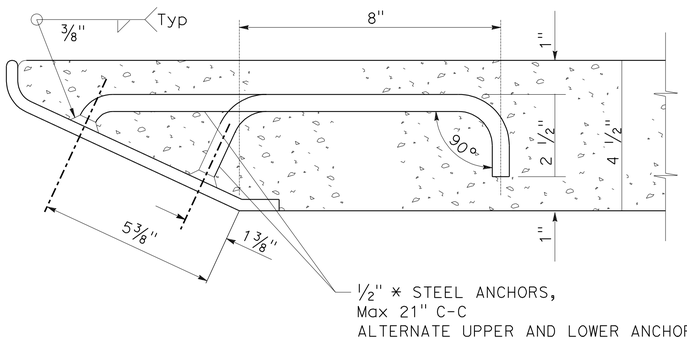

HOOK ANCHOR - 4 1/2" TOP SLAB

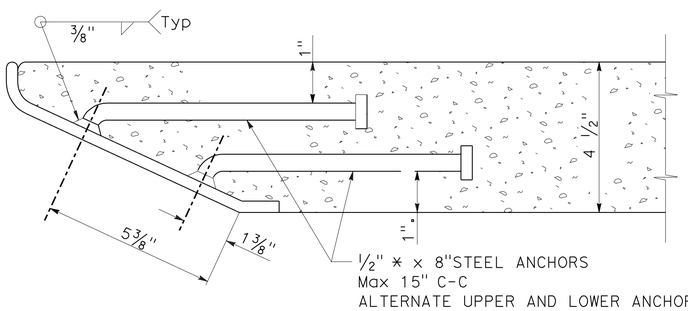

ROUND HEAD ANCHOR - 4 1/2" TOP SLAB

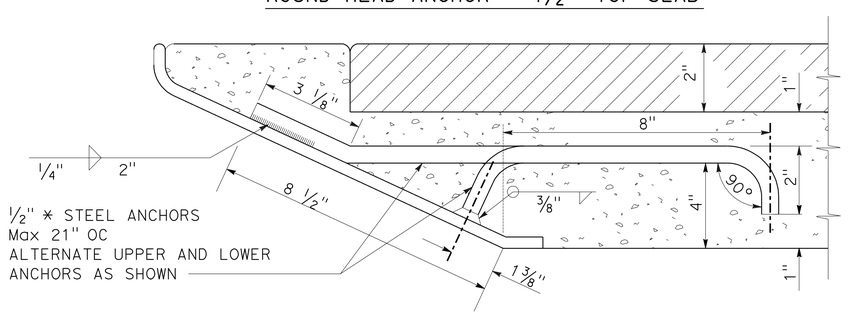

HOOK ANCHOR - 6" TOP SLAB

PROTECTION BAR AND SUPPOST BOLT(S) WITH ADJUSTABLE STIRRUP (S) - (TYPE A)

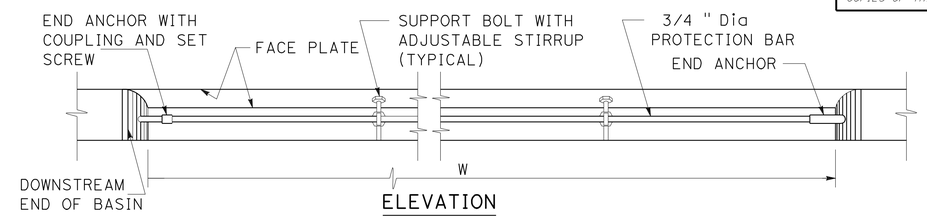

ELEVATION

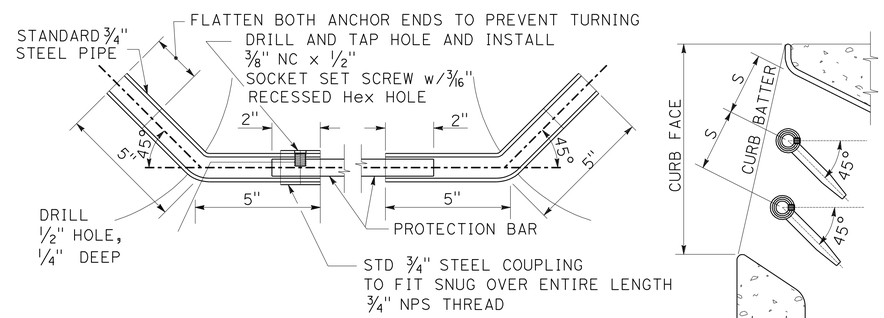

END ANCHOR DETAIL

DOUBLE PROTECTION BAR DETAIL

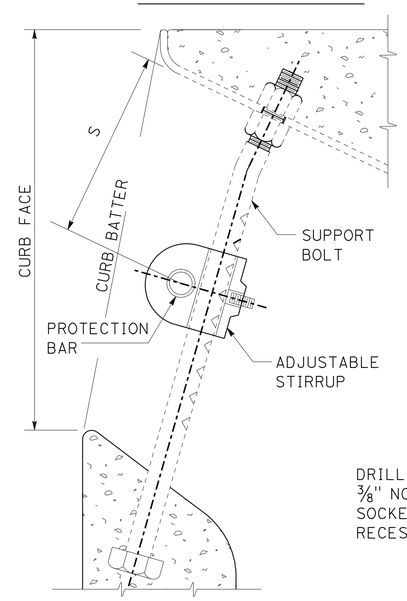

PROTECTION BAR & STIRRUP LOCATION

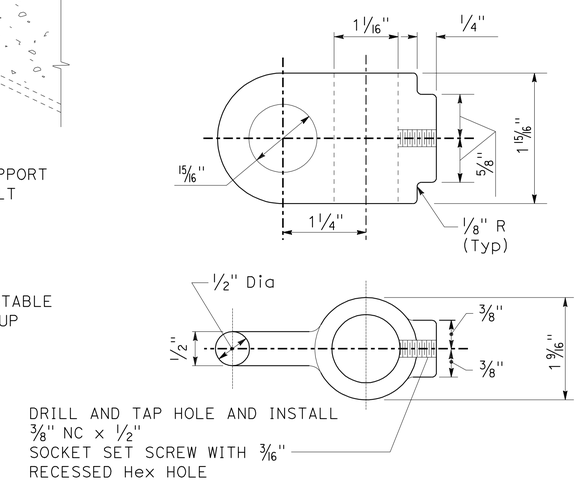

STIRRUP DETAIL

CATCH BASIN FACE PLATE ASSEMBLY AND PROTECTION BAR

310-3

DRAINAGE DETAILS

NO SCALE

DD-29

REVISED BY	DATE REVISED
SIEW MEI TAN	RALPH M. SASAKI
CALCULATED-DESIGNED BY	CHECKED BY
FUNCTIONAL SUPERVISOR	RALPH M. SASAKI

STATE OF CALIFORNIA - DEPARTMENT OF TRANSPORTATION
Caltrans® HYDRAULICS

LAST REVISION 00-00-00 | DATE PLOTTED => 30-JUN-2011 | TIME PLOTTED => 16:48

Dist	COUNTY	ROUTE	POST MILES TOTAL PROJECT	SHEET No.	TOTAL SHEETS
07	LA	5	1.2/2.1	140	602

REGISTERED CIVIL ENGINEER 3/14/11 DATE

6-27-11
PLANS APPROVAL DATE

REGISTERED PROFESSIONAL ENGINEER RALPH M. SASAKI No. 30849 Exp. 3/31/12 CIVIL STATE OF CALIFORNIA

THE STATE OF CALIFORNIA OR ITS OFFICERS OR AGENTS SHALL NOT BE RESPONSIBLE FOR THE ACCURACY OR COMPLETENESS OF SCANNED COPIES OF THIS PLAN SHEET.

PROTECTION BAR AND SUPPORT BOLT(S) WITH FIXED STIRRUP(S) - (TYPE B)

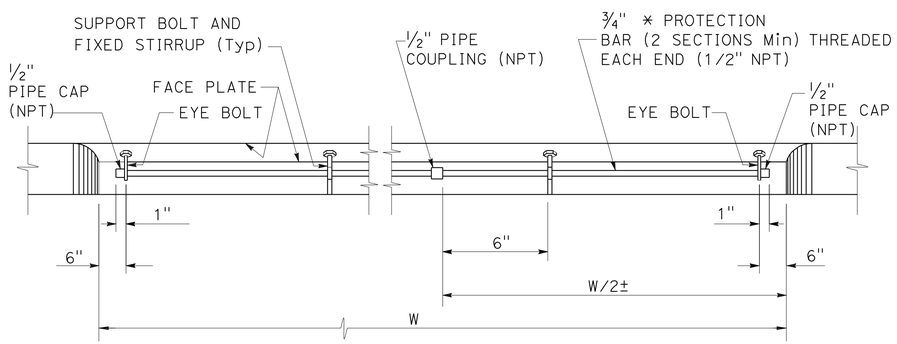

ELEVATION

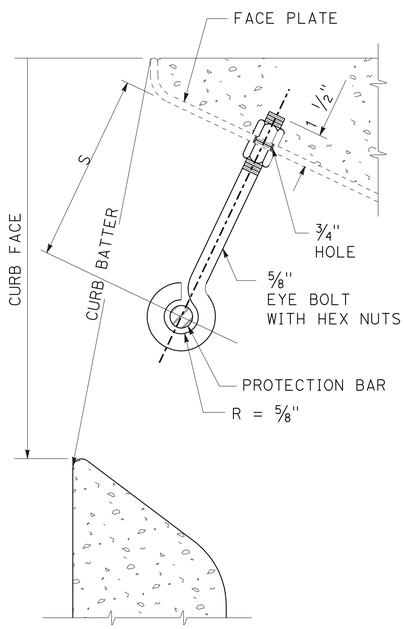

EYE BOLT DETAIL

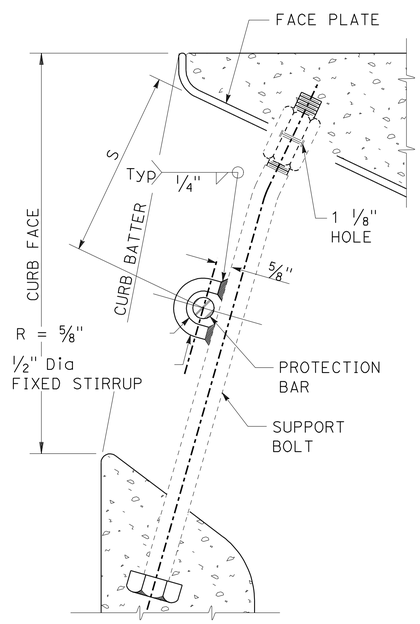

STIRRUP DETAIL

NOTES:

GENERAL

1. ALL PARTS SHALL BE STEEL, EXCEPT SET SCREWS, WHICH SHALL BE STAINLESS STEEL OR BRASS.
2. EXCLUDING SET SCREWS, ALL EXPOSED METAL PARTS SHALL BE GALVANIZED AFTER FABRICATION.
3. CURB FACE SHALL BE AS NOTED ON THE PLANS.
4. CURB BATTER SHALL BE 3:12 UNLESS OTHERWISE SPECIFIED.

FACE PLATE

5. FACE PLATE LENGTHS SHALL BE CATCH BASIN W PLUS 12" EXCEPT AS MODIFIED FOR "A" CURB OPENING CATCH BASIN AT DRIVEWAY".
6. WHEN THE LENGTH OF THE FACE PLATE IS BETWEEN 22′ AND 43′, TWO SECTIONS MAY BE USED. WHEN THE LENGTH EXCEEDS 43′, THREE SECTIONS MAY BE USED. SECTIONS SHALL BE SPLICED ACCORDING TO THE APPLICABLE SPLICE DETAIL. SPLICE SHALL BE PLACED 1′ FROM A SUPPORT BOLT.
7. WHERE CATCH BASINS ARE TO BE CONSTRUCTED ON CURVES, THE MAXIMUM CHORD LENGTH FOR THE FACE PLATE SHALL BE SUCH THAT THE MAXIMUM PERPENDICULAR DISTANCE TO THE TRUE CURVE SHALL NOT EXCEED 1". WHERE MORE THAN ONE CHORD IS REQUIRED, CHORD LENGTHS SHALL BE EQUAL. CHORD SECTIONS SHALL BE SPLICED ACCORDING TO THE APPLICABLE SPLICE DETAIL (MODIFIED TO FIT THE CHORD DEFLECTION) AND A SUPPORT BOLT SHALL BE PLACED 1′ FROM THE SPLICE.
8. ROUND HEAD ANCHORS FOR THE FACE PLATE SHALL BE NELSON H-4F SHEAR CONNECTOR, KSN WELDING SYSTEMS DIVISION SHEAR CONNECTOR OR EQUAL.

SUPPORT BOLT

9. SUPPORT BOLTS ARE REQUIRED WHEN THE LENGTH OF THE CATCH BASIN OPENING IS 7′ OR GREATER, AND SHALL BE EVENLY SPACED ACROSS THE OPENING. SPACING SHALL NOT BE LESS THAN 3′-6" ON CENTER NOR GREATER THAN 5′ ON CENTER.

STIRRUP

10. FOR TYPE A, MATERIAL SHALL BE CAST STEEL.

PROTECTION BAR

11. TYPE A SHALL BE USED UNLESS OTHERWISE SPECIFIED.
12. FOR TYPE A, THE BAR SHALL BE CUT TO FIT IN THE FIELD. WHEN W" IS OVER 21′, THE PROTECTION BAR SHALL CONSIST OF 2 OR MORE SECTIONS. A SPECIAL CONNECTOR BETWEEN THE PROTECTION BAR PIECES SHALL CONSIST OF A 5" LENGTH OF STANDARD ¾" PIPE WITH STANDARD COUPLINGS FULLY THREADED ONTO EACH END DRILLED AND TAPPED FOR A SOCKET SET SCREW AS DETAILED FOR THE DOWNSTREAM END ANCHOR.
13. FOR TYPE B, THE BAR SHALL BE TWO PIECES. TWO EYE BOLTS AND A WELDED STIRRUP ON EACH SUPPORT BOLT ARE REQUIRED.
14. NUMBER OF PROTECTION BARS AND LOCATIONS ARE AS FOLLOWS:

CURB BATTER	MAXIMUM CURB FACE, INCHES												
	6"	7"	8"	9"	10"	11"	12"	13"	14"	15"	16"	17"	18"
0:12	0	0	3.5"	3.5"	4.5"	4.5"	4.5"	5.5"	3.5"	3.5"	4.5"	4.5"	4.5"
1:12	0	0	3.5"	3.5"	4.5"	4.5"	4.5"	5.5"	3.5"	3.5"	4.5"	4.5"	5.5"
2:12	0	0	3.5"	3.5"	4.5"	4.5"	5.5"	3.5"	3.5"	4.5"	4.5"	5.5"	5.5"
3:12	0	0	3.5"	3.5"	4.5"	4.5"	5.5"	3.5"	4.5"	4.5"	5.5"	5.5"	4.5"
4:12	0	3.5"	3.5"	4.5"	4.5"	5.5"	3.5"	3.5"	4.5"	4.5"	5.5"	4.5"	4.5"
	0	1					2*					3*	
	NUMBER OF PROTECTION BARS												

S DIMENSION

FOR OTHER CURB FACE OR BATTER SEE PLANS
* TYPE A PROTECTION BAR ONLY

CATCH BASIN FACE PLATE ASSEMBLY AND PROTECTION BAR

310-3

DRAINAGE DETAILS

NO SCALE

DD-30

STATE OF CALIFORNIA - DEPARTMENT OF TRANSPORTATION
Caltrans HYDRAULICS

FUNCTIONAL SUPERVISOR: RALPH M. SASAKI
CALCULATED-DESIGNED BY: SIEW MEI TAN
CHECKED BY: RALPH M. SASAKI
REVISED BY
DATE REVISED

LAST REVISION 00-00-00 | DATE PLOTTED => 30-JUN-2011 | TIME PLOTTED => 16:48

Dist	COUNTY	ROUTE	POST MILES TOTAL PROJECT	SHEET No.	TOTAL SHEETS
07	LA	5	1.2/2.1	141	602

REGISTERED CIVIL ENGINEER 3/14/11 DATE

6-27-11
PLANS APPROVAL DATE

REGISTERED PROFESSIONAL ENGINEER RALPH M. SASAKI No. 30849 Exp. 3/31/12 CIVIL STATE OF CALIFORNIA

THE STATE OF CALIFORNIA OR ITS OFFICERS OR AGENTS SHALL NOT BE RESPONSIBLE FOR THE ACCURACY OR COMPLETENESS OF SCANNED COPIES OF THIS PLAN SHEET.

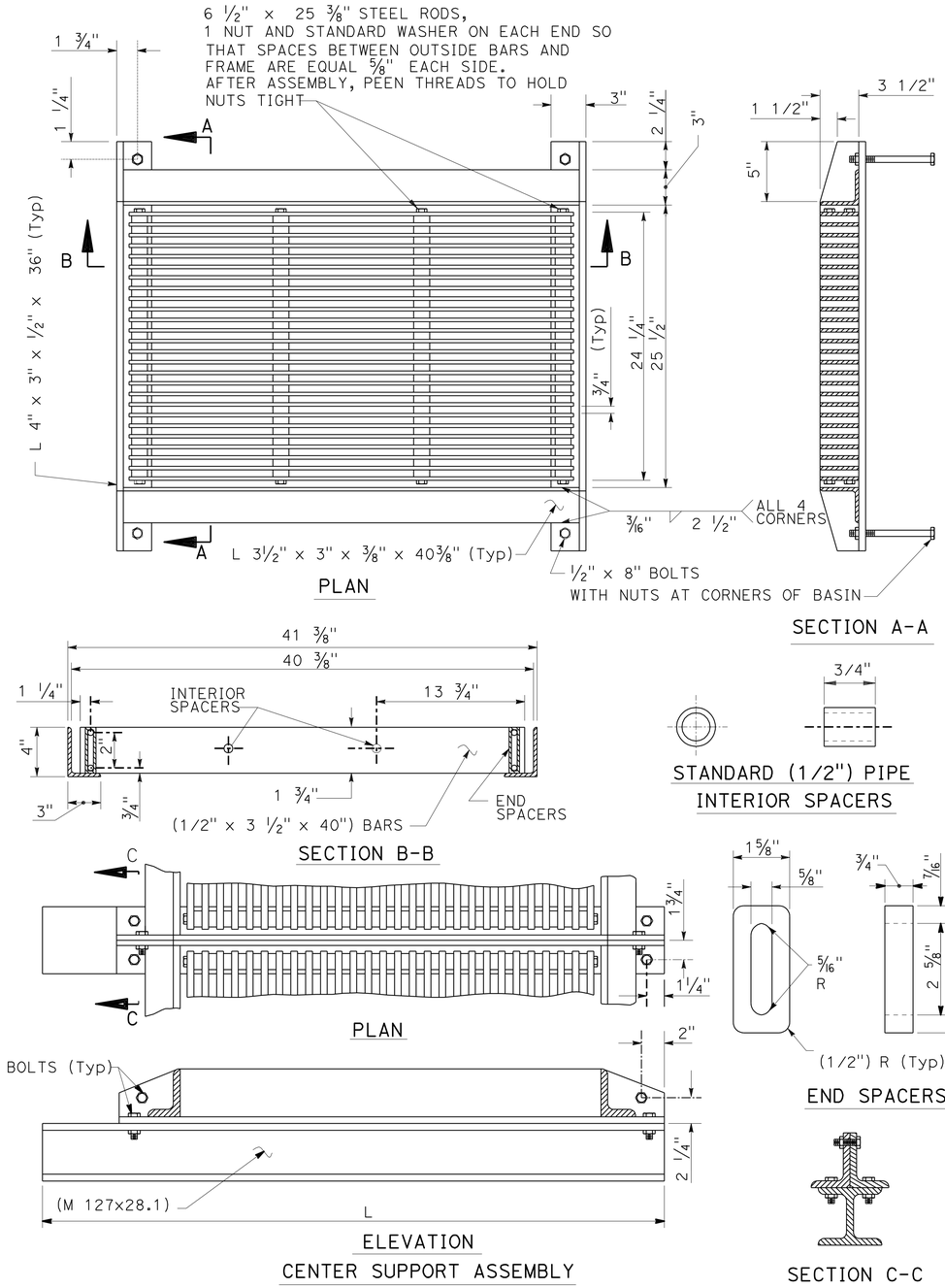

NOTES:

1. ALL PARTS SHALL BE STEEL, EXCEPT THAT END SPACERS MAY BE CAST IRON.
2. ALL PARTS SHALL BE GALVANIZED AFTER FABRICATION, EXCEPT THAT GRATINGS SHALL BE ASSEMBLED AFTER COMPONENT PARTS ARE GALVANIZED.
3. ALL DIMENSIONS ARE FINISHED DIMENSIONS AND INCLUDE GALVANIZING.
4. ALL BOLT HOLES SHALL BE 5/8" DIAMETER.
5. ALL THREADS SHALL BE NATIONAL COARSE SERIES (NC).
6. CENTER SUPPORT ASSEMBLY REQUIRED WHEN TWO OR MORE GRATINGS ARE SPECIFIED ON PLANS.

   L = 64" FOR CURB OPENING CATCH BASIN WITH GRATING(S) AND DEBRIS SKIMMER.

   L = 44" FOR CURB OPENING CATCH BASIN WITH GRATING(S).

   L = 36" FOR CURBSIDE GRATING CATCH BASIN.

   L = 36" FOR GRATING CATCH BASIN-ALLEY (LONGITUDINAL).

FRAME AND GRATING FOR CATCH BASINS 311-3

DRAINAGE DETAILS

NO SCALE

DD-31

STATE OF CALIFORNIA - DEPARTMENT OF TRANSPORTATION
Caltrans HYDRAULICS

FUNCTIONAL SUPERVISOR: RALPH M. SASAKI
CALCULATED-DESIGNED BY: SIEW MEI TAN
CHECKED BY: RALPH M. SASAKI
REVISED BY
DATE REVISED

LAST REVISION 00-00-00 | DATE PLOTTED => 30-JUN-2011 | TIME PLOTTED => 16:48

Dist	COUNTY	ROUTE	POST MILES TOTAL PROJECT	SHEET No.	TOTAL SHEETS
07	LA	5	1.2/2.1	142	602

REGISTERED CIVIL ENGINEER 3/14/11 DATE

6-27-11
PLANS APPROVAL DATE

REGISTERED PROFESSIONAL ENGINEER RALPH M. SASAKI No. 30849 Exp. 3/31/12 CIVIL STATE OF CALIFORNIA

THE STATE OF CALIFORNIA OR ITS OFFICERS OR AGENTS SHALL NOT BE RESPONSIBLE FOR THE ACCURACY OR COMPLETENESS OF SCANNED COPIES OF THIS PLAN SHEET.

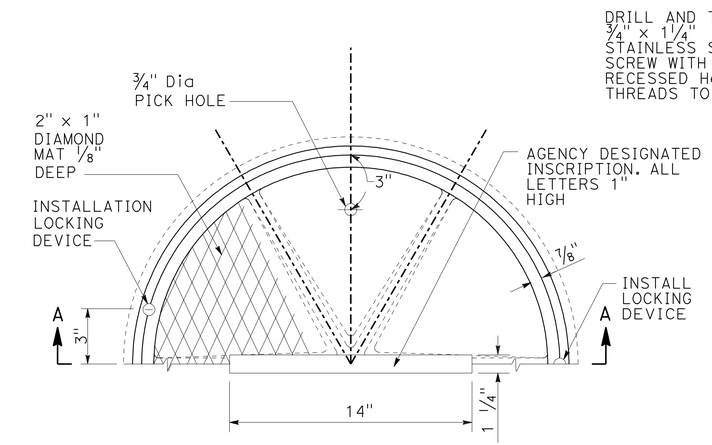

PLAN

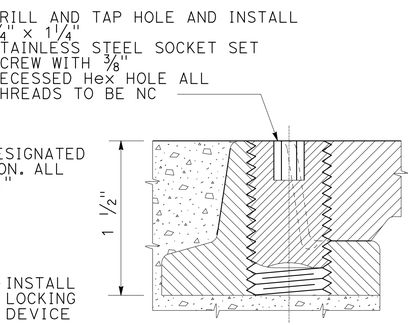

LOCKING DEVICE

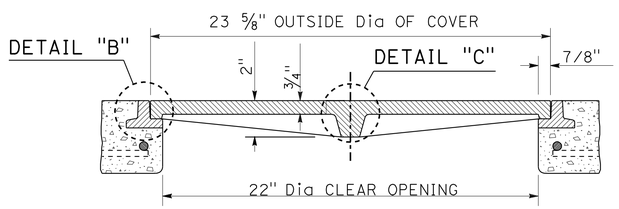

SECTION A-A

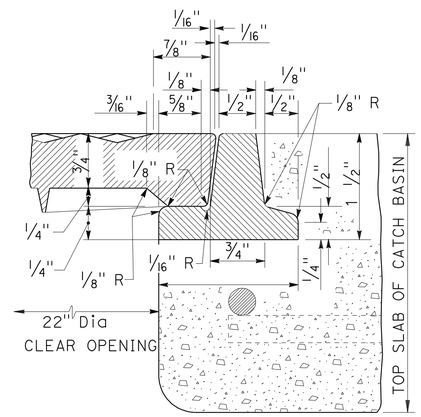

DETAIL "B"

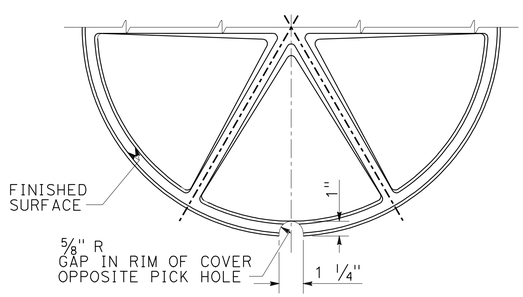

BOTTOM OF MANHOLE COVER

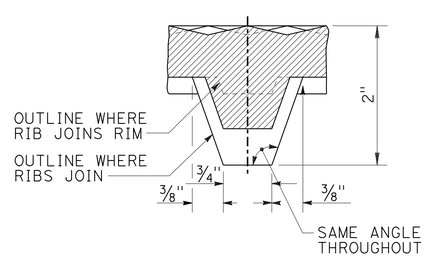

DETAIL "C"

NOTES:

1. THE CAST IRON USED SHALL CONFORM TO ASTM A48 CLASS 35B.
2. THE FRAME AND COVER SHALL BE COATED WITH ASPHALTUM OR BITUMINOUS PAINT AFTER TESTING AND INSPECTION.
3. FOUNDRY IDENTIFYING MARK, HEAT AND DATE SHALL BE CAST ON THE BOTTOM OF THE COVER AND ON THE INSIDE OF THE FRAME.
4. IMPORTED COVERS AND FRAMES SHALL HAVE THE COUNTRY OF ORIGIN MARKING IN COMPLIANCE WITH FEDERAL REGULATIONS.
5. WEIGHT OF FRAME SHALL BE 30 POUNDS. WEIGHT OF COVER SHALL BE 85 POUNDS. ACTUAL WEIGHTS SHALL BE WITHIN A RANGE OF 95% TO 110%.
6. THE MANHOLE FRAME AND COVER SHALL BE INSPECTED BY THE ENGINEER PRIOR TO SHIPMENT TO THE WORK SITE. ACCEPTANCE WILL BE INDICATED BY THE AGENCY'S MARK.
7. THE PROOF-LOAD FOR TEST METHOD B OF SSPWC SECTION 206-3.2 IS 28,600 POUNDS.
8. AGENCY INSCRIPTION SHALL BE AS SPECIFIED ON THE PLANS OR SPECIAL PROVISIONS.

CATCH BASIN
MANHOLE FRAME AND COVER
312-3

DRAINAGE DETAILS
NO SCALE
DD-32

STATE OF CALIFORNIA - DEPARTMENT OF TRANSPORTATION
Caltrans® HYDRAULICS

FUNCTIONAL SUPERVISOR: RALPH M. SASAKI
CALCULATED-DESIGNED BY: SIEW MEI TAN
CHECKED BY: RALPH M. SASAKI
REVISED BY
DATE REVISED

LAST REVISION 00-00-00
DATE PLOTTED => 30-JUN-2011
TIME PLOTTED => 16:48

Dist	COUNTY	ROUTE	POST MILES TOTAL PROJECT	SHEET No.	TOTAL SHEETS
07	LA	5	1.2/2.1	143	602

REGISTERED CIVIL ENGINEER 3/14/11 DATE

6-27-11
PLANS APPROVAL DATE

REGISTERED PROFESSIONAL ENGINEER RALPH M. SASAKI No. 30849 Exp. 3/31/12 CIVIL STATE OF CALIFORNIA

THE STATE OF CALIFORNIA OR ITS OFFICERS OR AGENTS SHALL NOT BE RESPONSIBLE FOR THE ACCURACY OR COMPLETENESS OF SCANNED COPIES OF THIS PLAN SHEET.

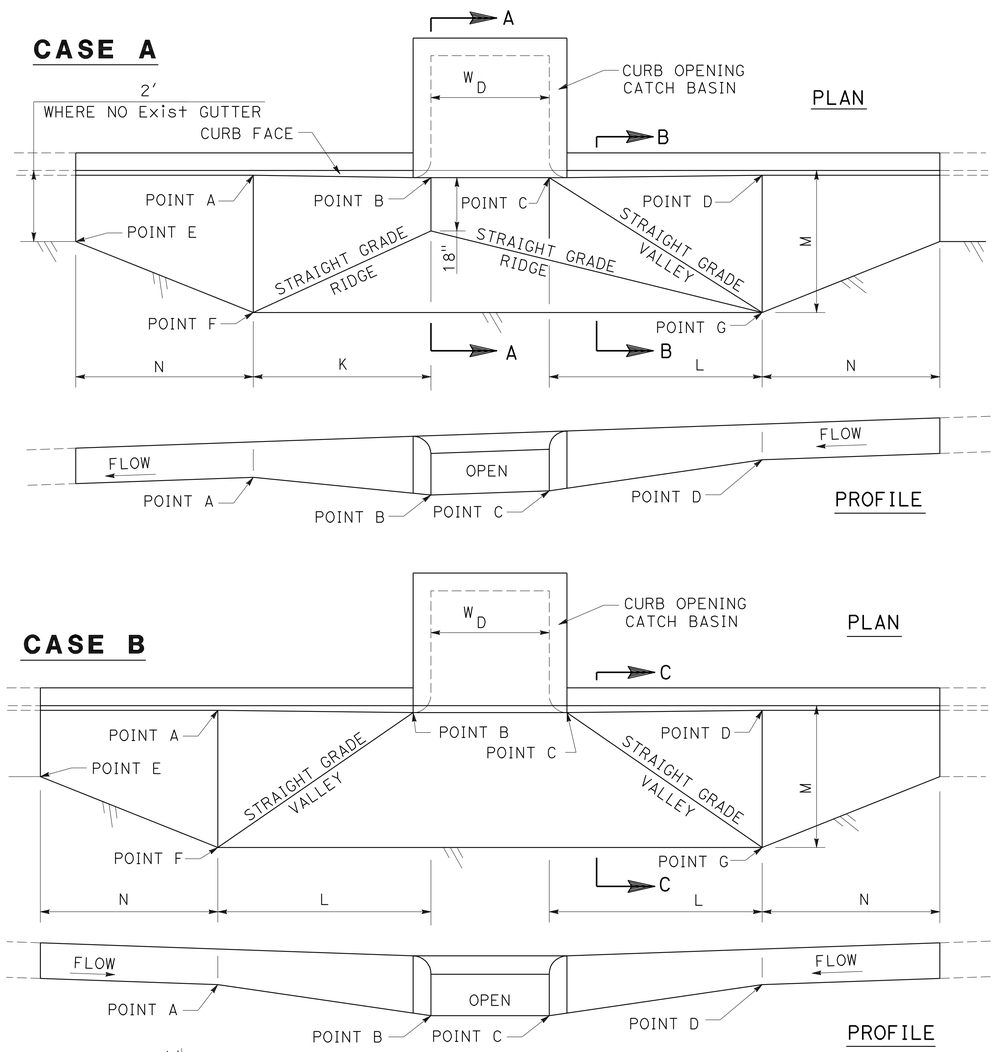

LOCAL DEPRESSIONS AT CATCH BASINS

313-3

DRAINAGE DETAILS

NO SCALE

DD-33

STATE OF CALIFORNIA - DEPARTMENT OF TRANSPORTATION
Caltrans® HYDRAULICS

FUNCTIONAL SUPERVISOR: RALPH M. SASAKI
CALCULATED-DESIGNED BY: SIEW MEI TAN
CHECKED BY: RALPH M. SASAKI
REVISED BY
DATE REVISED

LAST REVISION 00-00-00 | DATE PLOTTED => 30-JUN-2011 | TIME PLOTTED => 16:48

Dist	COUNTY	ROUTE	POST MILES TOTAL PROJECT	SHEET No.	TOTAL SHEETS
07	LA	5	1.2/2.1	144	602

REGISTERED CIVIL ENGINEER 3/14/11 DATE

6-27-11
PLANS APPROVAL DATE

REGISTERED PROFESSIONAL ENGINEER RALPH M. SASAKI No. 30849 Exp. 3/31/12 CIVIL STATE OF CALIFORNIA

THE STATE OF CALIFORNIA OR ITS OFFICERS OR AGENTS SHALL NOT BE RESPONSIBLE FOR THE ACCURACY OR COMPLETENESS OF SCANNED COPIES OF THIS PLAN SHEET.

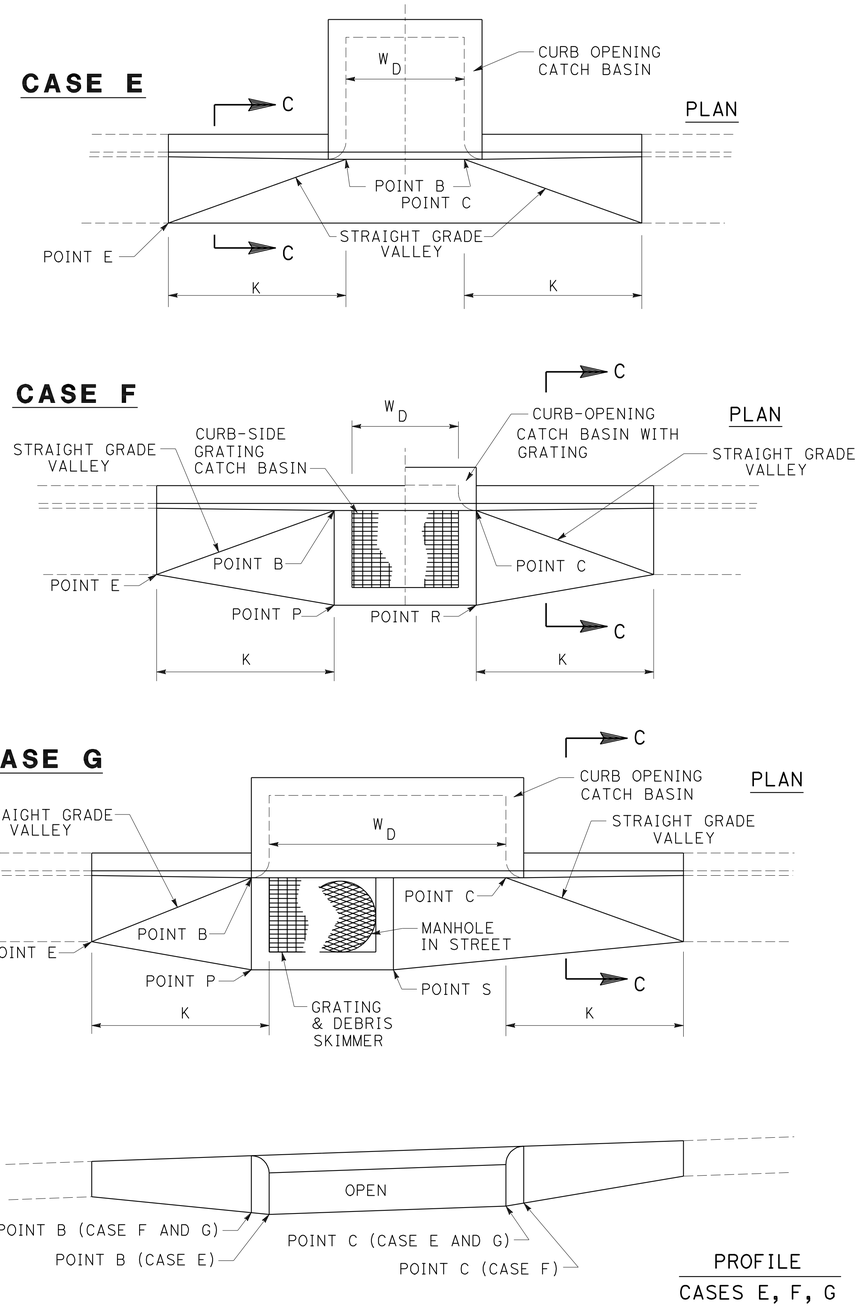

NOTES:

1. ALL EXPOSED EDGES SHALL BE ROUNDED TO A ½" RADIUS.

2. THE CURB FACE AT POINTS A AND D SHALL BE THE NORMAL CURB FACE OF THE ADJACENT CURB. AT POINTS B AND C, THE CURB FACE SHALL BE THE NORMAL CURB FACE OF THE ADJACENT CURB PLUS H. (SEE APPLICABLE CATCH BASIN STANDARD PLAN.)

3. IN EXISTING STREETS WHERE NO PAVEMENT RECONSTRUCTION IS SPECIFIED ON THE PLANS, THE ELEVATION OF THE OUTER EDGE OF THE LOCAL DEPRESSION SHALL MEET THE FINISHED STREET SURFACE.

4. IN NEW STREETS OR IN EXISTING STREETS WHERE PAVEMENT RECONSTRUCTION IS SPECIFIED ON THE PLANS:

   THE ELEVATIONS OF POINTS F AND G SHALL BE SET H1 HIGHER THAN THE GUTTER FLOW LINE ELEVATIONS AT POINTS A AND D, RESPECTIVELY.

   THE ELEVATIONS OF POINTS P AND R SHALL BE SET H2 HIGHER THAN THE GUTTER FLOW LINE ELEVATIONS AT POINTS B AND C, RESPECTIVELY.

   THE ELEVATION OF POINT S SHALL BE SET H2 HIGHER THAN THE ELEVATION AT THE NEAREST GUTTER FLOW LINE.

   WHERE THERE IS NO GUTTER ADJACENT TO THE LOCAL DEPRESSION, THE ELEVATION OF POINT E SHALL BE SET H3 HIGHER THAN THE ELEVATION AT THE NEAREST TOE OF CURB.

5. DIMENSIONS:

   H, H1, H2 AND H3 SHALL BE AS NOTED ON THE PLANS.

   G = 24"

   K = 5'-0"

   L = 6'-0"

   M = 4'-0"

   N = 5'-0"

   W_D = CATCH BASIN W FOR SINGLE CATCH BASIN OR DISTANCE BETWEEN EXTREME END WALLS FOR MULTIPLE CATCH BASINS.

LOCAL DEPRESSIONS AT CATCH BASINS
313-3

DRAINAGE DETAILS
NO SCALE
DD-34

STATE OF CALIFORNIA - DEPARTMENT OF TRANSPORTATION
Caltrans® HYDRAULICS

FUNCTIONAL SUPERVISOR: RALPH M. SASAKI
CALCULATED-DESIGNED BY: SIEW MEI TAN
CHECKED BY: RALPH M. SASAKI
REVISED BY / DATE REVISED

LAST REVISION 00-00-00 | DATE PLOTTED => 30-JUN-2011 | TIME PLOTTED => 16:48

Dist	COUNTY	ROUTE	POST MILES TOTAL PROJECT	SHEET No.	TOTAL SHEETS
07	LA	5	1.2/2.1	145	602

REGISTERED CIVIL ENGINEER 3/14/11 DATE

6-27-11
PLANS APPROVAL DATE

REGISTERED PROFESSIONAL ENGINEER RALPH M. SASAKI No. 30849 Exp. 3/31/12 CIVIL STATE OF CALIFORNIA

THE STATE OF CALIFORNIA OR ITS OFFICERS OR AGENTS SHALL NOT BE RESPONSIBLE FOR THE ACCURACY OR COMPLETENESS OF SCANNED COPIES OF THIS PLAN SHEET.

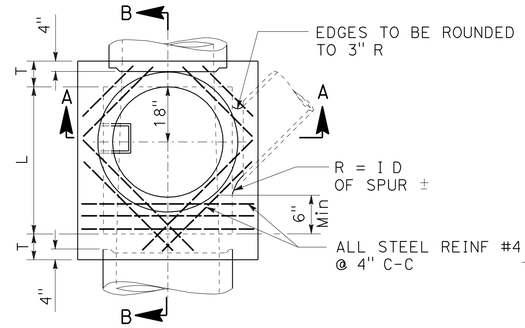

PLAN
(SHAFT NOT SHOWN)

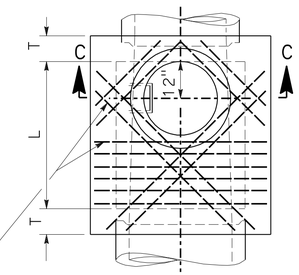

DETAIL "N" PLAN
(RINGS AND COVER NOT SHOWN)
SEE NOTE 1

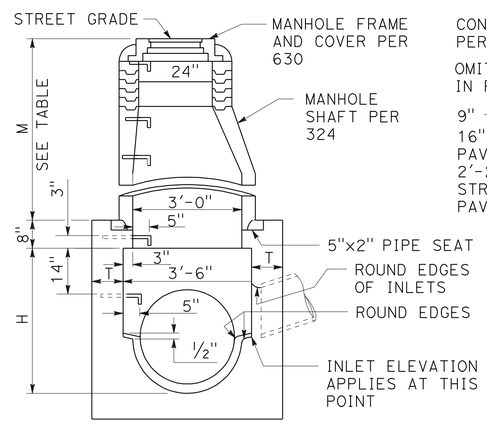

SECTION A-A

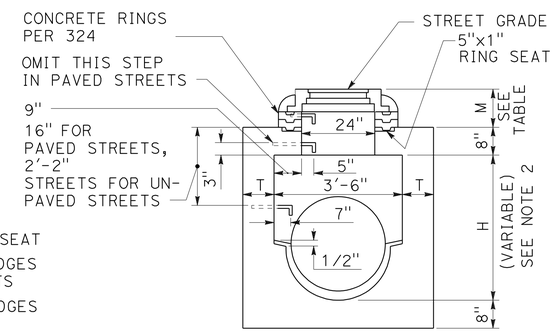

SECTION C-C

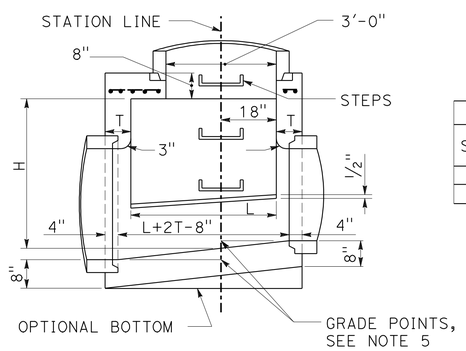

SECTION B-B

TABLE OF VALUES FOR M (SEE NOTE 1)				
SECTION	PAVED STREET		UNPAVED STREET	
	Max	Min	Max	Min
A-A		2'-10½"		3'-6"
C-C	11"	8½"	16"	15"

MANHOLE PIPE-TO-PIPE
(ONE OR BOTH MAIN LINE IDS 33" OR SMALLER)
321-2

DRAINAGE DETAILS
NO SCALE
DD-35

STATE OF CALIFORNIA - DEPARTMENT OF TRANSPORTATION
Caltrans® HYDRAULICS

FUNCTIONAL SUPERVISOR: RALPH M. SASAKI
CALCULATED-DESIGNED BY: SIEW MEI TAN
CHECKED BY: RALPH M. SASAKI
REVISED BY / DATE REVISED

LAST REVISION 00-00-00
DATE PLOTTED => 30-JUN-2011
TIME PLOTTED => 16:48

Dist	COUNTY	ROUTE	POST MILES TOTAL PROJECT	SHEET No.	TOTAL SHEETS
07	LA	5	1.2/2.1	146	602

REGISTERED CIVIL ENGINEER 3/14/11 DATE

6-27-11
PLANS APPROVAL DATE

REGISTERED PROFESSIONAL ENGINEER RALPH M. SASAKI No. 30849 Exp. 3/31/12 CIVIL STATE OF CALIFORNIA

THE STATE OF CALIFORNIA OR ITS OFFICERS OR AGENTS SHALL NOT BE RESPONSIBLE FOR THE ACCURACY OR COMPLETENESS OF SCANNED COPIES OF THIS PLAN SHEET.

NOTES:

1. WHEN DEPTH M FROM STREET GRADE TO THE TOP OF THE BOX IS LESS THAN 2'-10½" FOR PAVED STREETS OR 3'-6" FOR UNPAVED STREETS, CONSTRUCT SHAFT PER SECTION C-C AND DETAIL "N". DEPTH M MAY BE REDUCED TO AN ABSOLUTE LIMIT OF 6" WHEN LARGER VALUES OF M WOULD REDUCE H IN SECTION C-C TO 3'-6" OR LESS.

2. H (IN SECTION A-A AND B-B) SHALL NOT BE LESS THAN 4'-0", BUT MAY BE INCREASED PROVIDED THAT THE VALUE OF M SHALL NOT BE LESS THAN THE MINIMUM SPECIFIED AND THAT THE REDUCER SHALL BE USED. FOR H (IN SECTION C-C) SEE NOTE 1.

3. L SHALL BE 4'-0" UNLESS OTHERWISE SHOWN. L MAY BE INCREASED OR LOCATION OF MANHOLE SHIFTED TO MEET PIPE ENDS, BUT ANY CHANGE IN LOCATION OF THE SPUR MUST BE APPROVED BY THE ENGINEER.

4. T SHALL BE 8" FOR VALUES OF H UP TO AND INCLUDING 8'-0" AND 10" FOR VALUES OF H OVER 8'-0".

5. STATIONS OF MANHOLES SHOWN ON PLANS APPLY AT CENTERLINE OF SHAFT. ELEVATIONS ARE SHOWN AT CENTERLINE OF SHAFT AND REFER TO THE PROLONGED INVERT GRADE LINES. SEE NOTE 3.

6. REINFORCEMENT SHALL CONFORM TO ASTM A 615, GRADE 40, AND SHALL TERMINATE 1½" CLEAR OF CONCRETE SURFACES UNLESS OTHERWISE SHOWN.

7. FLOOR OF MANHOLE SHALL BE STEEL TROWELED TO SPRING LINE.

8. BODY OF MANHOLE SHALL BE POURED IN ONE CONTINUOUS OPERATION EXCEPT THAT A CONSTRUCTION JOINT WITH A LONGITUDINAL KEYWAY MAY BE PLACED AT SPRING LINE.

9. THICKNESS OF THE DECK SHALL VARY WHEN NECESSARY TO PROVIDE A LEVEL SEAT BUT SHALL NOT BE LESS THAN 8".

10. STEPS SHALL CONFORM TO 635 OR 636. UNLESS OTHERWISE SHOWN, STEPS SHALL BE UNIFORMLY SPACED 14" TO 15" C-C. THE LOWEST STEP SHALL NOT BE MORE THAN 24" ABOVE THE LEDGE AT THE SIDE OF THE MANHOLE.

11. THE FOLLOWING CRITERIA SHALL BE USED FOR THIS MANHOLE:

    A. MAIN LINE = 33" INSIDE DIAMETER OR LESS. (EXCEPTION - IF THE MAIN LINE RCP DOWNSTREAM OF THE MANHOLE IS 36" TO 42" INSIDE DIAMETER AND THE MAIN LINE RCP UPSTREAM IS 33" OR LESS.) 320 OR 322 IS NOT APPLICABLE WHERE THE MAIN LINE CONDUIT IS LESS THAN 36" IN DIAMETER.

    B. SEE SECTION A - A. THE MAXIMUM SIZE LATERAL THAT MAY BE CONNECTED TO THIS MANHOLE IS SUCH THAT THE DISTANCE FROM THE OUTSIDE (TOP) OF THE LATERAL TO THE BOTTOM OF THE 8" THICK TOP OF THE MANHOLE CHAMBER, MEASURED VERTICALLY FROM THE END OF THE RCP, SHALL BE A MINIMUM OF 6"

    C. IF THE SIZE OF THE LATERAL IS SUCH THAT THE ABOVE-SPECIFIED MINIMUM DISTANCES CANNOT BE MAINTAINED, THEN ONE OF THE FOLLOWING ALTERNATE SOLUTIONS MUST BE USED.

        1. PROVIDE A SPECIAL STRUCTURE.

        2. PROVIDE TWO STANDARD STRUCTURES, CONSISTING OF THIS MANHOLE PLACED UPSTREAM OR DOWNSTREAM FROM THE APPLICABLE JUNCTION STRUCTURE OR TRANSITION STRUCTURE.

12. MANHOLE FRAME AND COVER SHALL CONFORM TO 630 UNLESS OTHERWISE SHOWN.

MANHOLE PIPE-TO-PIPE
(ONE OR BOTH MAIN LINE IDS 33" OR SMALLER)
321-2

DRAINAGE DETAILS
NO SCALE
DD-36

STATE OF CALIFORNIA - DEPARTMENT OF TRANSPORTATION
Caltrans HYDRAULICS

FUNCTIONAL SUPERVISOR: RALPH M. SASAKI

CALCULATED-DESIGNED BY: SIEW MEI TAN
CHECKED BY: RALPH M. SASAKI

REVISED BY
DATE REVISED

LAST REVISION 00-00-00
DATE PLOTTED => 30-JUN-2011
TIME PLOTTED => 16:48

Dist	COUNTY	ROUTE	POST MILES TOTAL PROJECT	SHEET No.	TOTAL SHEETS
07	LA	5	1.2/2.1	147	602

REGISTERED CIVIL ENGINEER 3/14/11 DATE

6-27-11
PLANS APPROVAL DATE

REGISTERED PROFESSIONAL ENGINEER RALPH M. SASAKI No. 30849 Exp. 3/31/12 CIVIL STATE OF CALIFORNIA

THE STATE OF CALIFORNIA OR ITS OFFICERS OR AGENTS SHALL NOT BE RESPONSIBLE FOR THE ACCURACY OR COMPLETENESS OF SCANNED COPIES OF THIS PLAN SHEET.

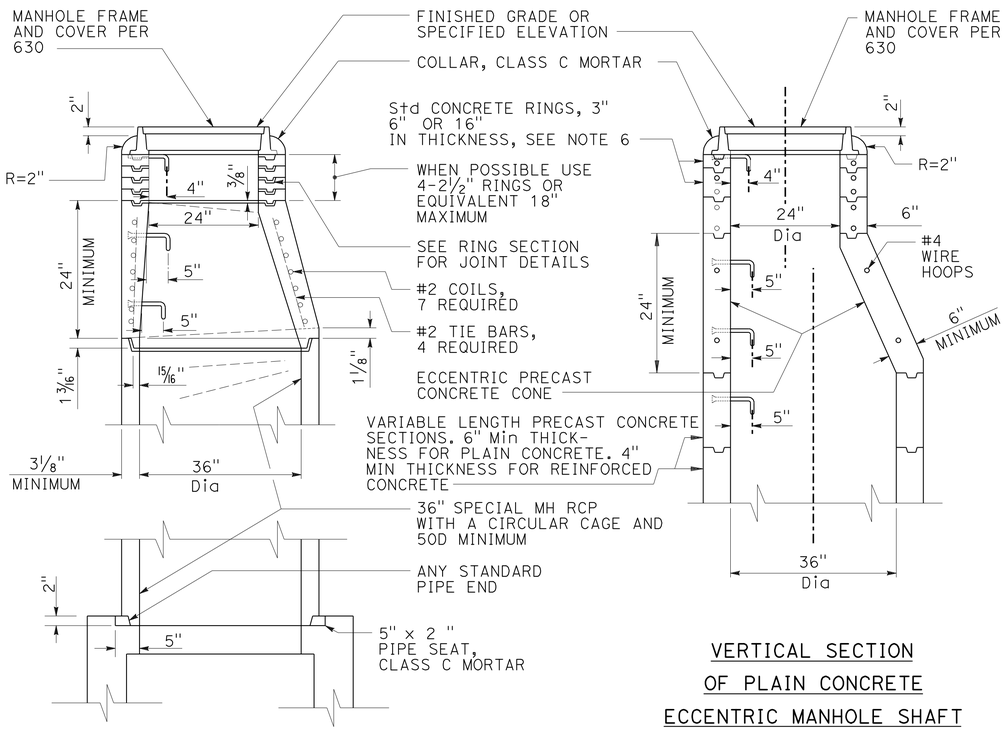

VERTICAL SECTION OF PLAIN CONCRETE ECCENTRIC MANHOLE SHAFT

VERTICAL SECTION OF REINFORCED CONCRETE ECCENTRIC MANHOLE SHAFT

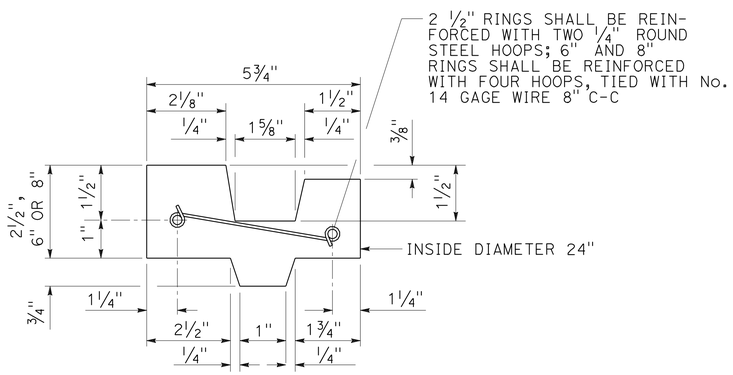

CROSS SECTION OF REINFORCED CONCRETE RING

NOTES:

1. UNLESS OTHERWISE INDICATED THIS STRUCTURE SHALL CONFORM TO ASTM C 478 AND ALL CONCRETE SHALL BE PER SSPWC SECTION 201-1.2.
2. MANHOLE FRAME AND COVER SHALL CONFORM TO 630-3.
3. ALL JOINTS SHALL BE SEALED BY FILLING THE ANNULAR SPACES WITH CLASS C MORTAR. THE INSIDE OF THE SHAFT AT EACH JOINT SHALL BE WIPED CLEAN OF EXCESS MORTAR.
4. PROTECTIVE PLASTIC LINER (T LOCK) OR ENGINEER-APPROVED COATINGS WHERE REQUIRED BY THE PLANS SHALL BE IN ACCORDANCE WITH THE MANUFACTURER'S DIRECTIONS.
5. STEPS SHALL CONFORM TO 635 OR 636. THE TOP STEP SHALL BE PLACED DIRECTLY BENEATH THE MANHOLE FRAME. UNLESS OTHERWISE SHOWN, STEPS SHALL BE UNIFORMLY SPACED 14" TO 15" C-C.
6. THE ECCENTRIC MANHOLE SHAFT REDUCER AND RINGS MAY BE PLAIN CONCRETE. FOR PLAIN CONCRETE SECTIONS THE MINIMUM THICKNESS SHALL BE 6".
7. THE PRECAST CONCRETE MANHOLE STRUCTURES WILL BE INSPECTED BY THE ENGINEER WHO WILL INDICATE ACCEPTANCE FOR SHIPMENT TO THE JOB BY MARKING THE STRUCTURES WITH THE AGENCY'S STAMP.
8. THE VERTICAL SIDES OF THE MANHOLE SHAFT AND THE ECCENTRIC REDUCER SHALL BE LOCATED ABOVE AND IN LINE WITH THE SIDE OF THE STORM DRAIN CONDUIT.
9. CONSTRUCT MANHOLE SAFETY LEDGE PER 330 IF DEPTH OF MANHOLE TO INVERT IS GREATER THAN 20' AND MANHOLE SHAFT IS GREATER THAN 10'. WHEN SAFETY LEDGE IS REQUIRED AND MANHOLE SHAFT IS LESS THAN 12' 326 MUST BE USED.
10. THE FOLLOWING DETAILS ARE INCORPORATED HEREIN:

    630 24" MANHOLE FRAME AND COVER
    635 STEEL STEP
    636 POLYPROPYLENE PLASTIC STEP

MANHOLE SHAFT WITH ECCENTRIC REDUCER 324-2

DRAINAGE DETAILS

NO SCALE

DD-37

STATE OF CALIFORNIA - DEPARTMENT OF TRANSPORTATION
Caltrans HYDRAULICS

FUNCTIONAL SUPERVISOR: RALPH M. SASAKI
CALCULATED-DESIGNED BY: SIEW MEI TAN
CHECKED BY: RALPH M. SASAKI
REVISED BY
DATE REVISED

LAST REVISION 00-00-00
DATE PLOTTED => 30-JUN-2011
TIME PLOTTED => 16:48

Dist	COUNTY	ROUTE	POST MILES TOTAL PROJECT	SHEET No.	TOTAL SHEETS
07	LA	5	1.2/2.1	148	602

REGISTERED CIVIL ENGINEER 3/14/11 DATE

6-27-11
PLANS APPROVAL DATE

REGISTERED PROFESSIONAL ENGINEER RALPH M. SASAKI No. 30849 Exp. 3/31/12 CIVIL STATE OF CALIFORNIA

THE STATE OF CALIFORNIA OR ITS OFFICERS OR AGENTS SHALL NOT BE RESPONSIBLE FOR THE ACCURACY OR COMPLETENESS OF SCANNED COPIES OF THIS PLAN SHEET.

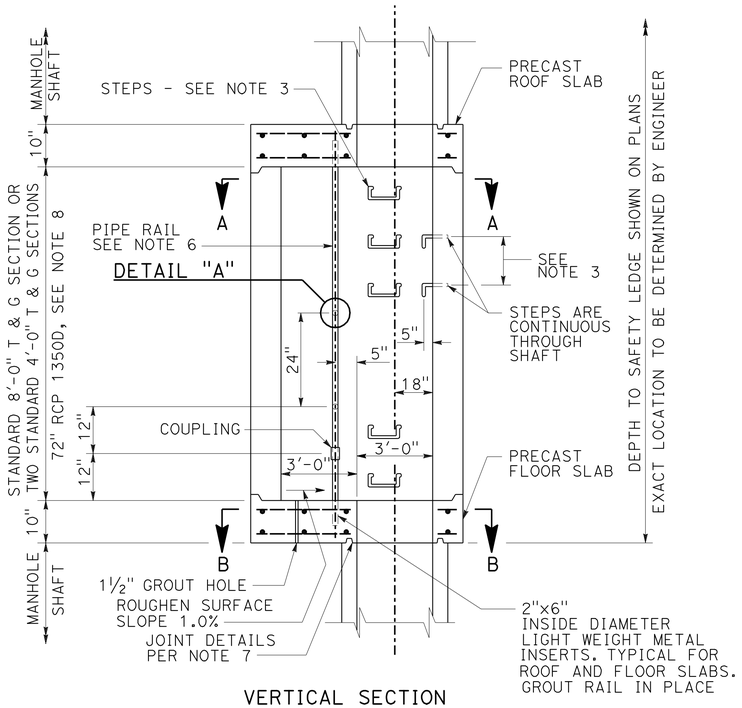

VERTICAL SECTION

NOTES:

1. MANHOLE SHAFT SAFETY LEDGE WILL BE NOTED ON THE PLANS WHEN REQUIRED. IT IS TO BE CONSTRUCTED WHEN DEPTH OF MANHOLE TO INVERT IS GREATER THAN 20' AND MANHOLE SHAFT IS GREATER THAN 10'.
2. A SAFETY LEDGE SHALL NOT BE USED IF A PRESSURE MANHOLE IS REQUIRED.
3. STEPS SHALL CONFORM TO 635 OR 636 AND SHALL BE ANCHORED 4" IN THE WALL OF THE STRUCTURE. STEPS SHALL BE PLACED TO MATCH THE SPACING OF THE MANHOLE SHAFT.
4. REINFORCEMENT SHALL BE PER ASTM A 615, GRADE 40 AND SHALL TERMINATE 2" CLEAR OF CONCRETE SURFACE UNLESS OTHERWISE SHOWN.
5. GROUT HOLES, PIPE AND FITTINGS SHALL BE PROVIDED IN THE FLOOR SLAB. PRESSURE GROUTING SHALL BE USED TO FILL VOIDS AND TO SECURE UNIFORM BEARING. THE GROUT SHALL BE NEAT CEMENT GROUT AND GROUTING PRESSURES SHALL BE AS DETERMINED IN THE FIELD BY THE ENGINEER.
6. PIPE RAIL SHALL BE FABRICATED OF 1¼" STANDARD GALVANIZED PIPE COMPOSED OF TWO SECTIONS 7'-6" & 18" IN LENGTH JOINED BY A GALVANIZED COUPLING. THE COUPLING SHALL BE THREADED A MINIMUM OF 2" ON EACH PIPE LENGTH.
7. ROOF AND FLOOR SLABS SHALL BE PRECAST AND KEYED FOR REINFORCED CONCRETE PIPE SECTIONS AS SHOWN. ALL JOINTS SHALL BE FILLED WITH CLASS C MORTAR AND NEATLY POINTED OR WIPED ON THE INSIDE.
8. 72" RCP SHALL BE PROVIDED WITH TWO CIRCULAR CAGES OF REINFORCEMENT.
9. THE FOLLOWING DETAILS ARE INCORPORATED HEREIN:

   324 MANHOLE SHAFT - WITH ECCENTRIC REDUCER
   635 STEEL STEP
   636 POLYPROPYLENE PLASTIC STEP

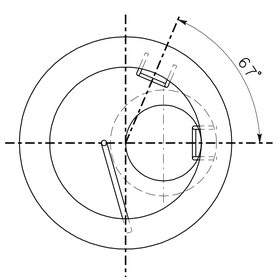

SECTION A-A

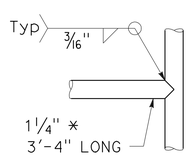

DETAIL "A"

ROTATED 90°

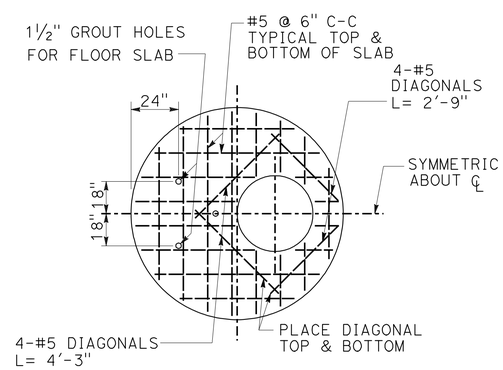

SECTION B-B
REINFORCEMENT DETAILS
FOR FLOOR AND ROOF SLABS

MANHOLE SHAFT SAFETY LEDGE
330-2

DRAINAGE DETAILS
NO SCALE
DD-38

STATE OF CALIFORNIA - DEPARTMENT OF TRANSPORTATION
Caltrans HYDRAULICS

FUNCTIONAL SUPERVISOR: RALPH M. SASAKI
CALCULATED-DESIGNED BY: SIEW WEI TAN
CHECKED BY: RALPH M. SASAKI
REVISED BY
DATE REVISED

LAST REVISION 00-00-00
DATE PLOTTED => 30-JUN-2011
TIME PLOTTED => 16:49

Dist	COUNTY	ROUTE	POST MILES TOTAL PROJECT	SHEET No.	TOTAL SHEETS
07	LA	5	1.2/2.1	149	602

REGISTERED CIVIL ENGINEER 3/14/11 DATE

6-27-11
PLANS APPROVAL DATE

REGISTERED PROFESSIONAL ENGINEER RALPH M. SASAKI No. 30849 Exp. 3/31/12 CIVIL STATE OF CALIFORNIA

THE STATE OF CALIFORNIA OR ITS OFFICERS OR AGENTS SHALL NOT BE RESPONSIBLE FOR THE ACCURACY OR COMPLETENESS OF SCANNED COPIES OF THIS PLAN SHEET.

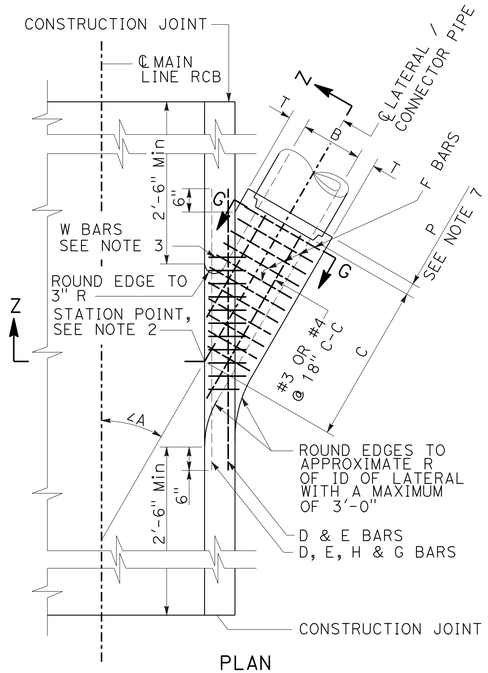

PLAN

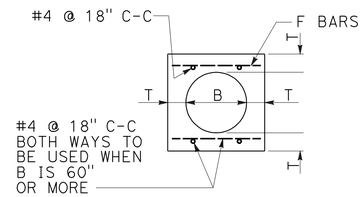

SECTION G-G

B	T	D,E,H & G BARS	F BARS
12"	5"	#5	#4 @ 6" C-C
15"	5"		
18"	5"		
21"	5"		
24"			
27"			
30"	6"		
33"	6 1/4"		
36"	6 1/2"		
39"	7"		
42"	7 1/2"	#6	#5 @ 6" C-C
45"			
48"	8"		
51"	8 1/2"		
54"	9"		
57"	9 1/4"		
60"	9 1/2"		
63"	10"		
66"	10 1/4"		
69"	10 3/4"		
72"	11"		
78"	11 3/4"		
84"	12 1/2"		
90"	13 1/4"	#7	#5 @ 6" C-C
96"	14"		
102"	15 1/2"		
108"	16"		
114"	16 1/2"		
120"	17"		
126"	17"		
132"	17 1/2"		
138"	17 1/2"		
144"	18"		

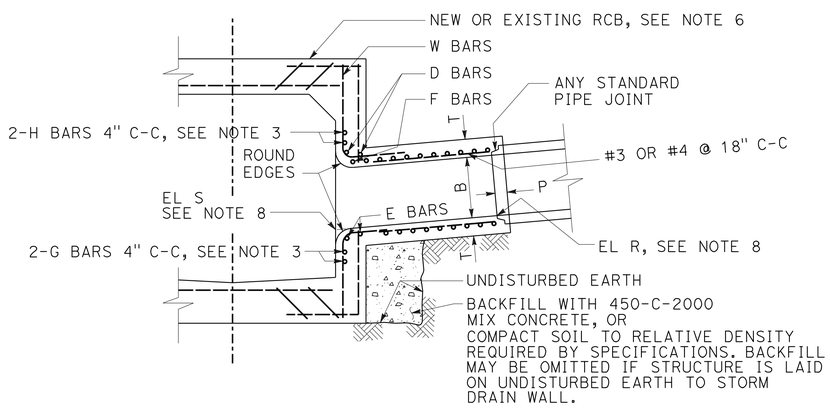

SECTION Z-Z

NOTES

1. VALUES FOR A, B AND C SHALL BE SHOWN ON THE PLANS. ELEVATION R AND ELEVATION S SHALL BE SHOWN WHEN REQUIRED PER NOTE 8.
2. STATIONS SPECIFIED ON THE PLANS APPLY AT THE INTERSECTION OF CENTERLINES OF MAIN LINE AND LATERALS, EXCEPT THAT STATIONS FOR CATCH BASIN CONNECTOR PIPES APPLY AT INSIDE WALL OF STRUCTURE.
3. REINFORCING STEEL SHALL CONFORM TO ASTM A 615, GRADE 40

   UNLESS OTHERWISE SHOWN.

   a. W BARS ARE OF SIZE AND SPACING SPECIFIED FOR WALL STEEL ON PLANS, AND SHALL BE CUT IN CENTER OF OPENING AND BENT INTO TOP AND BOTTOM OF JUNCTION STRUCTURE.
   b. OMIT H BARS WHEN SOFFIT OF SPUR IS 12" OR LESS BELOW SOFFIT OF MAIN LINE, AND OMIT G BARS WHEN INVERT OF SPUR IS 12" OR LESS ABOVE FLOOR OF MAIN LINE.
4. JUNCTION STRUCTURE SHALL BE POURED MONOLITHICALLY WITH MAIN LINE, MANHOLE OR TRANSITION STRUCTURE.
5. FLOOR OF STRUCTURE SHALL BE STEEL-TROWELED TO THE SPRING LINE.
6. WHEN CONNECTING TO EXISTING RCB, BREAKOUT LIMITS AND DETAILS SHALL BE SHOWN ON THE PLANS.
7. EMBEDMENT, P, SHALL BE 5" FOR B = 96" OR LESS
   8" FOR B OVER 96".
8. IF ELEVATION R AND ELEVATION S ARE NOT SHOWN ON THE PLANS THEN THE INLET OPENING SHALL FALL 6" BELOW THE SOFFIT OF THE MAIN LINE WITH THE INLET PIPE LAID ON A STRAIGHT GRADE FROM MAIN LINE TO CATCH BASIN OR TO GRADE BREAK IN INLET LINE. ELEVATION S SHALL BE SHOWN ON THE PLANS IF THE INLET OPENING FALLS MORE THAN 6" BELOW THE SOFFIT OF THE MAIN LINE WITH THE INLET PIPE LAID ON A STRAIGHT GRADE AS STATED ABOVE.

   A STUB IS TO BE PROVIDED FOR A FUTURE CONNECTION.
9. LATERALS OR CONNECTOR PIPES 24" OR LESS IN DIAMETER SHALL BE NO MORE THAN 5' ABOVE THE INVERT. LATERALS OR CONNECTOR PIPES 27" OR LARGER IN DIAMETER SHALL BE NO MORE THAN 18" ABOVE THE INVERT, WITH THE EXCEPTION THAT CATCH BASIN CONNECTOR PIPES LESS THAN 50' IN LENGTH SHALL NOT BE MORE THAN 5' ABOVE THE INVERT.
10. THE NEED FOR AN EDGE BEAM AND/OR ADDITIONAL REINFORCEMENT SHALL BE INVESTIGATED BY THE ENGINEER FOR ANY ONE OF THE FOLLOWING CONDITIONS:
    a. ANGLE A IS LESS THAN 30°
    b. TOP OF INLET PIPE IS LESS THAN 6" BELOW THE SOFFIT
    c. FLOW LINE OF INLET PIPE IS LESS THAN 7" ABOVE THE THE FLOOR OF THE RCB AT THE INSIDE FACE

JUNCTION STRUCTURE - PIPE TO RCB
333-2

DRAINAGE DETAILS
NO SCALE
DD-39

STATE OF CALIFORNIA - DEPARTMENT OF TRANSPORTATION
Caltrans® HYDRAULICS

FUNCTIONAL SUPERVISOR: RALPH M. SASAKI
CALCULATED-DESIGNED BY: SIEW MEI TAN
CHECKED BY: RALPH M. SASAKI
REVISED BY
DATE REVISED

LAST REVISION 00-00-00
DATE PLOTTED => 30-JUN-2011
TIME PLOTTED => 16:49

Dist	COUNTY	ROUTE	POST MILES TOTAL PROJECT	SHEET No.	TOTAL SHEETS
07	LA	5	1.2/2.1	150	602

REGISTERED CIVIL ENGINEER 3/14/11 DATE

6-27-11
PLANS APPROVAL DATE

REGISTERED PROFESSIONAL ENGINEER RALPH M. SASAKI No. 30849 Exp. 3/31/12 CIVIL STATE OF CALIFORNIA

THE STATE OF CALIFORNIA OR ITS OFFICERS OR AGENTS SHALL NOT BE RESPONSIBLE FOR THE ACCURACY OR COMPLETENESS OF SCANNED COPIES OF THIS PLAN SHEET.

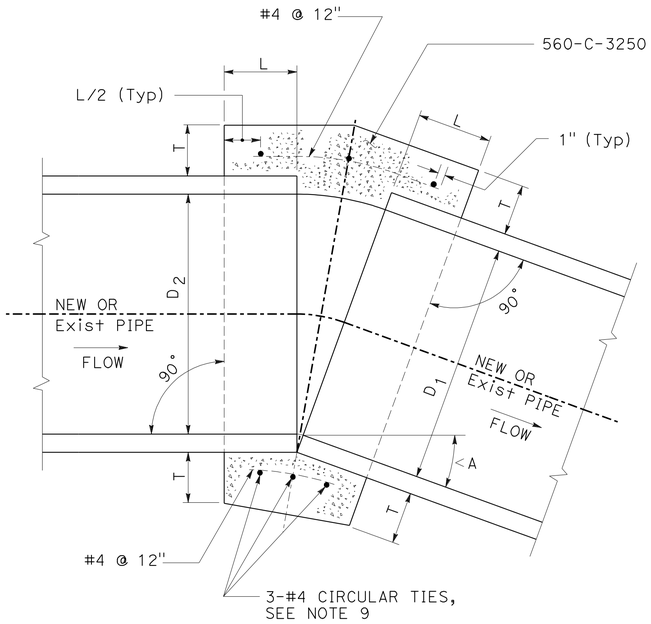

D	L	T
12"	12"	4"
18"	12"	5"
24"	12"	6"
30"	18"	7"
36"	18"	9"
42"	18"	9"
48"	18"	10"
57"	18"	10"
60"	21"	11"
66"	21"	11"
72"	24"	12"

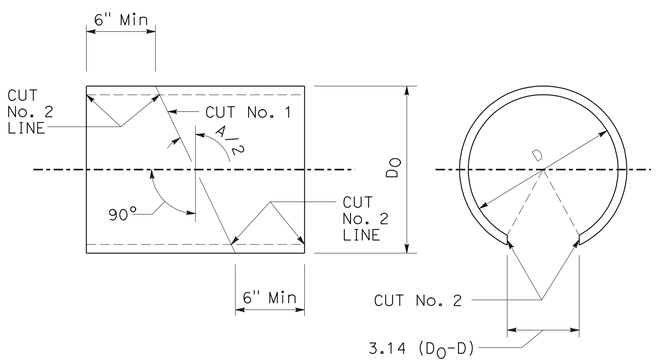

DETAIL "A" (SEE NOTE 10)

SONO-TUBE, OR EQUAL, INTERIOR FORM

CUT No. 1: SAW THE TUBE AT AN ANGLE OF A/2 WITH THE TRANSVERSE PLANE. REVERSE ONE SECTION AND TAPE BOTH SECTIONS TOGETHER FORMING THE DEFLECTION ANGLE A.

CUT No. 2: SAW THE TUBE LONGITUDINALLY REMOVING A STRIP 3.14 (D -DO) WIDE ON THE SIDE OPPOSITE THE OPEN JOINT. BEND THE ENDS OF THE CUT TOGETHER AND INSERT THE TUBE IN THE PIPE.

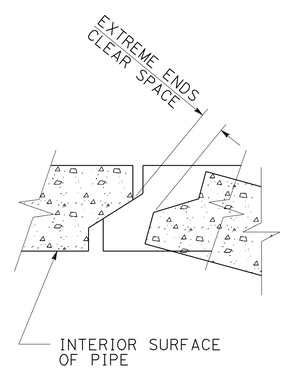

DETAIL "B"

TYPICAL JOINT FOR
REINFORCED CONCRETE PIPE

NOTES:

1. A CONCRETE COLLAR IS REQUIRED WHERE THE CHANGE IN GRADE EXCEEDS 10%.
2. FOR CURVE JOINTS (SEE DETAIL B, SHEET 1)

   IF THE EXTREME ENDS OF THE PIPE LEAVE A CLEAR SPACE THAT IS GREATER THAN 1", BUT IS LESS THAN 3" A CONCRETE COVER IS REQUIRED IN ACCORDANCE WITH SSPWC 306-1.2.4.

   IF THE EXTREME ENDS OF THE PIPE LEAVE A CLEAR SPACE THAT IS EQUAL TO OR GREATER THAN 3", BUT LESS THAN 6", A CONCRETE COLLAR IS REQUIRED. IF THE CLEAR SPACE IS 6" OR GREATER, A TRANSITION STRUCTURE IS REQUIRED.
3. CONCRETE COLLAR SHALL NOT BE USED FOR A SIZE CHANGE ON THE MAIN LINE.
4. CONNECTOR PIPES
   A. WHERE PIPES OF DIFFERENT DIAMETERS ARE JOINED WITH A CONCRETE COLLAR, L AND T SHALL BE THOSE OF THE LARGER PIPE. D=D1 OR D2, WHICHEVER IS GREATER.
   B. WHEN D_1 IS EQUAL TO OR LESS THAN D2, JOIN INVERTS AND WHEN D1 IS GREATER THAN D2, JOIN SOFFITS.
5. FOR PIPE LARGER THAN 72" SPECIAL COLLAR DETAILS ARE REQUIRED.
6. FOR PIPE SIZE NOT LISTED USE NEXT SIZE LARGER.
7. REINFORCEMENT SHALL CONFORM TO ASTM A 615 GRADE 40.
8. WHERE REINFORCING IS REQUIRED THE DIAMETER OF THE CIRCULAR TIES SHALL BE D+(2X WALL THICKNESS) + T.
9. REINFORCING SHALL BE USED WHERE THE PIPE DIAMETER IS GREATER THAN 21" AND ON ALL PIPES WHERE THE SPACES BETWEEN THE EXTREME OUTER ENDS IS 3" OR LARGER.

   CIRCULAR TIES:

PIPE DIAMETER	No. OF CIRCULAR TIES
21" OR LESS	3
24" TO 30"	3
33" TO 57"	4
60" TO 72"	5

   WHERE THE SPACE BETWEEN PIPE ENDS EXCEEDS 3", THE NUMBER OF CIRCULAR TIES SHALL BE INCREASED TO MAINTAIN AN APPROXIMATE SPACING OF 6" O.C.
10. WHERE THE PIPE IS 21" OR LESS IN DIAMETER AN INTERIOR FORM OF UNSEALED SONO-TUBE OR EQUAL SHALL BE USED TO PROVIDE A SMOOTH INTERIOR JOINT. THE PAPER FORM MAY BE LEFT IN PLACE (SEE DETAIL A). WHEN THE PIPE IS 24" OR LARGER A REMOVABLE INTERIOR FORM SHALL BE USED OR THE INTERIOR JOINT SHALL BE COMPLETELY FILLED WITH MORTAR AND NEATLY POINTED.

12" THROUGH 72" CONCRETE COLLAR FOR RCP

380-4

DRAINAGE DETAILS

NO SCALE

DD-40

STATE OF CALIFORNIA - DEPARTMENT OF TRANSPORTATION
Caltrans HYDRAULICS

FUNCTIONAL SUPERVISOR: RALPH M. SASAKI
CALCULATED-DESIGNED BY: SIEW MEI TAN
CHECKED BY: RALPH M. SASAKI
REVISED BY
DATE REVISED

LAST REVISION 00-00-00
DATE PLOTTED => 30-JUN-2011
TIME PLOTTED => 18:08

Dist	COUNTY	ROUTE	POST MILES TOTAL PROJECT	SHEET No.	TOTAL SHEETS
07	LA	5	1.2/2.1	151	602

REGISTERED CIVIL ENGINEER 3/14/11 DATE

6-27-11
PLANS APPROVAL DATE

REGISTERED PROFESSIONAL ENGINEER RALPH M. SASAKI No. 30849 Exp. 3/31/12 CIVIL STATE OF CALIFORNIA

THE STATE OF CALIFORNIA OR ITS OFFICERS OR AGENTS SHALL NOT BE RESPONSIBLE FOR THE ACCURACY OR COMPLETENESS OF SCANNED COPIES OF THIS PLAN SHEET.

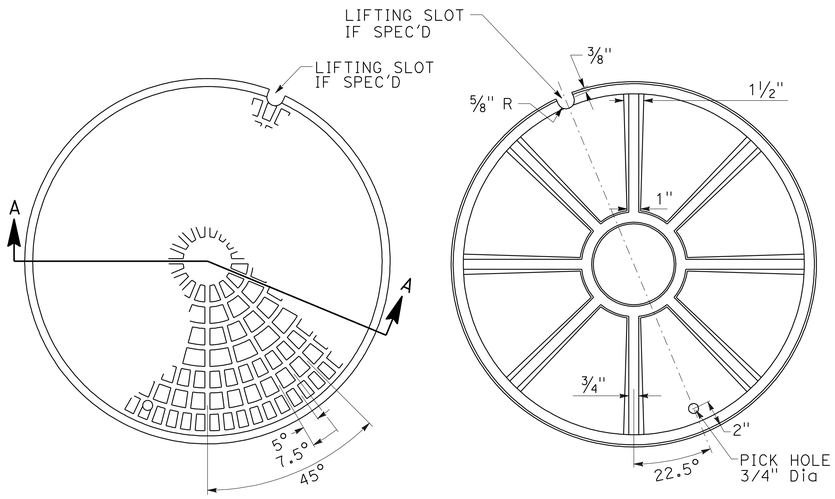

TOP OF COVER **BOTTOM OF COVER**

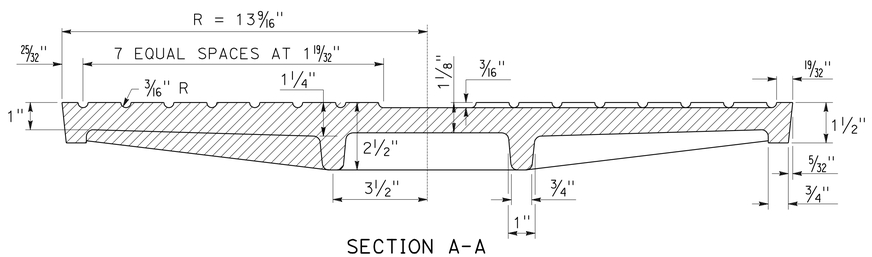

SECTION A-A

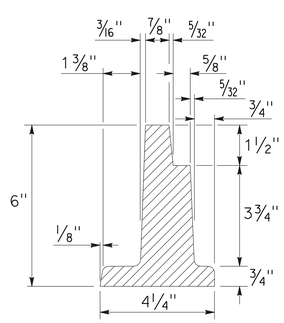

FRAME DETAIL

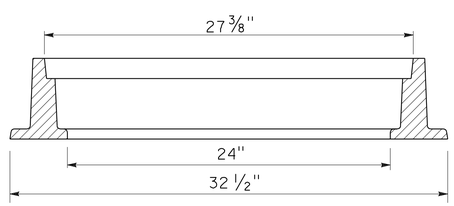

SECTION THRU FRAME

NOTES:

1. THE CAST IRON USED SHALL CONFORM TO ASTM A-48 CLASS 35B.
2. COVERS SHALL BE CAST WITH THE LETTER "D" FOR STORM DRAINS AND "S" FOR SEWERS, AND THE AGENCY'S IDENTIFICATION IN ACCORDANCE WITH INSTRUCTIONS FURNISHED BY THE AGENCY. THE LETTER "D" OR "S" SHALL BE APPROXIMATELY 2 1/2" HIGH WITH 1/2" LINE WIDTH, AND PLACED IN THE CENTER OF THE COVER. ALL LETTERS SHALL BE FLUSH WITH THE FINISHED SURFACE OF THE COVER.
3. FOUNDRY IDENTIFYING MARK, HEAT AND DATE SHALL BE CAST ON THE BOTTOM OF THE COVER AND ON THE INSIDE OF THE FRAME.
4. IMPORTED COVERS AND FRAMES SHALL HAVE THE COUNTRY OF ORIGIN MARKING IN COMPLIANCE WITH FEDERAL REGULATIONS.
5. WEIGHT OF FRAME SHALL BE 260 LBS. WEIGHT OF COVER SHALL BE 175 LBS. ACTUAL WEIGHTS SHALL BE WITHIN A RANGE OF 95% TO 110%.
6. THE MANHOLE FRAME AND COVER SHALL BE INSPECTED BY THE ENGINEER PRIOR TO SHIPMENT TO THE JOBSITE. ACCEPTANCE WILL BE INDICATED BY THE AGENCY'S MARK.
7. THE PROOF-LOAD FOR TEST METHOD B OF SPPWC SECTION 206-3.2 IS 40,700 LBS.
8. COVERS FOR MANHOLES LOCATED IN EASEMENTS, ALLEYS, PARKWAYS AND ALL PLACES OTHER THAN PAVED STREETS SHALL BE PROVIDED WITH SOCKET-SET SCREW LOCKING DEVICES. DRILL AND TAP TWO HOLES TO A DEPTH OF 1" AT 90 DEGREES TO PICK HOLE AND INSTALL 3/4" x 3/4" STAINLESS STEEL SOCKET-SET SCREWS WITH 3/8" RECESSED HEX HEAD. ALL THREADS SHALL BE NC.

24" MANHOLE FRAME AND COVER
630-3

DRAINAGE DETAILS
NO SCALE
DD-41

STATE OF CALIFORNIA - DEPARTMENT OF TRANSPORTATION
Caltrans® HYDRAULICS

FUNCTIONAL SUPERVISOR: RALPH M. SASAKI
CALCULATED-DESIGNED BY: SIEW MEI TAN
CHECKED BY: RALPH M. SASAKI
REVISED BY
DATE REVISED

LAST REVISION 00-00-00 | DATE PLOTTED => 30-JUN-2011 | TIME PLOTTED => 18:08

Dist	COUNTY	ROUTE	POST MILES TOTAL PROJECT	SHEET No.	TOTAL SHEETS
07	LA	5	1.2/2.1	152	602

REGISTERED CIVIL ENGINEER 3/14/11 DATE

6-27-11
PLANS APPROVAL DATE

REGISTERED PROFESSIONAL ENGINEER RALPH M. SASAKI No. 30849 Exp. 3/31/12 CIVIL STATE OF CALIFORNIA

THE STATE OF CALIFORNIA OR ITS OFFICERS OR AGENTS SHALL NOT BE RESPONSIBLE FOR THE ACCURACY OR COMPLETENESS OF SCANNED COPIES OF THIS PLAN SHEET.

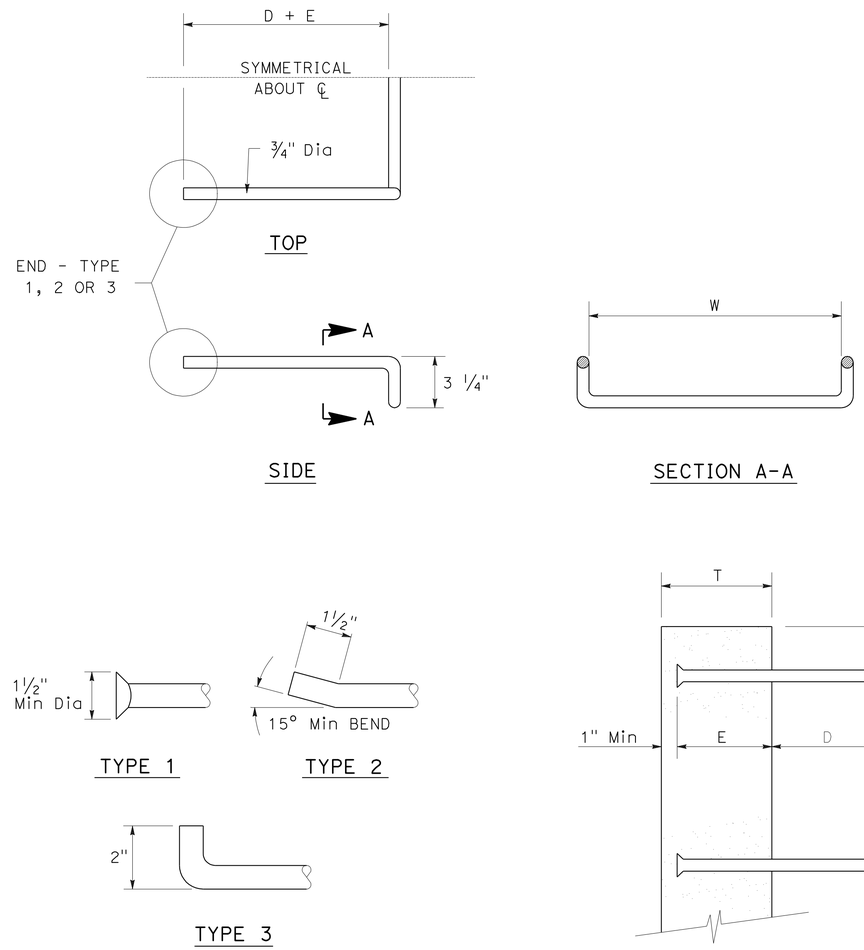

END DETAILS-SIDE VIEW

INSTALLATION DETAIL

UNLESS OTHERWISE NOTED:

D = 7"
E = 6" OR T - 1", WHICHEVER IS LESS
MINIMUM E IS 3"
S = 12" Max, EVENLY SPACED
W = 16" Min

FOR MANHOLES AND UNDERGROUND VAULTS:
S = 16" Max, EVENLY SPACED
W = 14" Min

NOTES:

1. STEPS SHALL BE STEEL CONFORMING TO ASTM A307 AND SHALL BE GALVANIZED AFTER FABRICATION. UNLESS OTHERWISE NOTED, STEPS MAY ALSO BE POLYPROPYLENE STEPS, STEEL REINFORCED, CONFORMING TO 636.
2. IF STAINLESS STEEL STEPS ARE REQUIRED, THE MATERIAL SHALL CONFORM TO ASTM A276, 300 SERIES.
3. STEP ENDS MAY BE TYPE 1, 2 OR 3, AS SHOWN.
4. BOTTOM STEP SHALL BE A MAXIMUM OF 2′ ABOVE FLOOR OR SHELF.
5. STEPS WITH TYPE 1 OR 2 ENDS MAY BE CAST IN PLACE, OR PLACED IN THE CENTER OF 1½" Min Dia DRILLED OR FORMED HOLES AND SET WITH HIGH STRENGTH NON-SHRINK GROUT, 6000 PSI MINIMUM STEPS WITH TYPE 3 ENDS SHALL BE CAST-IN-PLACE.

STEEL STEP
635-3

DRAINAGE DETAILS
NO SCALE
DD-42

STATE OF CALIFORNIA - DEPARTMENT OF TRANSPORTATION
Caltrans® HYDRAULICS

FUNCTIONAL SUPERVISOR: RALPH M. SASAKI
CALCULATED-DESIGNED BY: SIEW MEI TAN
CHECKED BY: RALPH M. SASAKI
REVISED BY
DATE REVISED

LAST REVISION 00-00-00
DATE PLOTTED => 30-JUN-2011
TIME PLOTTED => 18:08

Dist	COUNTY	ROUTE	POST MILES TOTAL PROJECT	SHEET No.	TOTAL SHEETS
07	LA	5	1.2/2.1	153	602

REGISTERED CIVIL ENGINEER 3/14/11 DATE

6-27-11
PLANS APPROVAL DATE

REGISTERED PROFESSIONAL ENGINEER RALPH M. SASAKI No. 30849 Exp. 3/31/12 CIVIL STATE OF CALIFORNIA

THE STATE OF CALIFORNIA OR ITS OFFICERS OR AGENTS SHALL NOT BE RESPONSIBLE FOR THE ACCURACY OR COMPLETENESS OF SCANNED COPIES OF THIS PLAN SHEET.

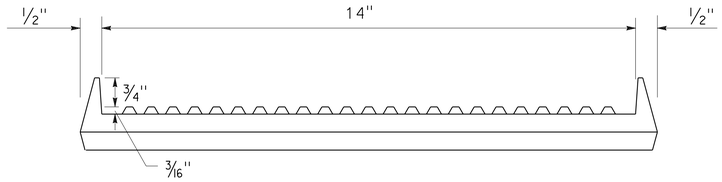

FRONT

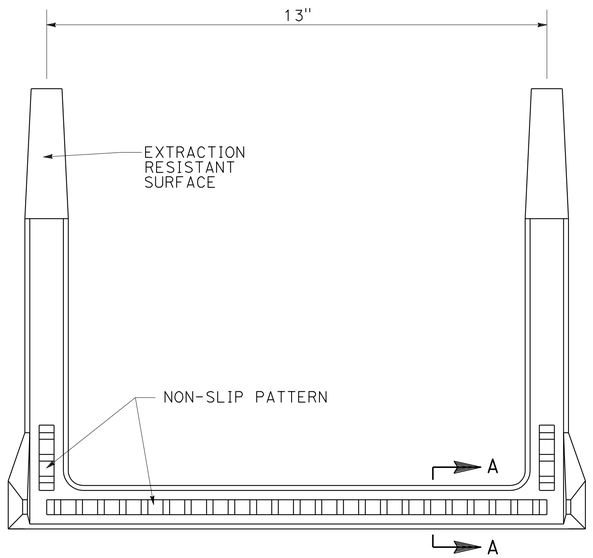

TOP

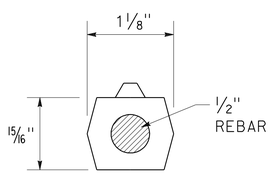

SECTION A-A

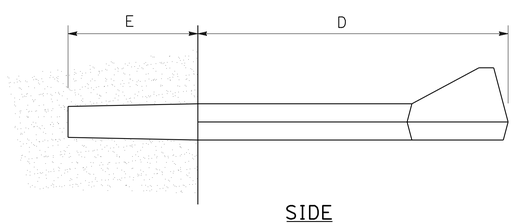

SIDE

NOTES:

1. STEPS SHALL BE STEEL-REINFORCED COPOLYMER POLYPROPYLENE PLASTIC CONFORMING TO:

   (A) ASTM D478 AND C497, EXCEPT THAT THE MINIMUM HORIZONTAL PULLOUT LOAD SHALL BE 1,500 LBS.
   (B) ASTM A615 GRADE 60 DEFORMED REINFORCING STEEL BAR.
   (C) CALIFORNIA CODE OF REGULATIONS TITLE 8, GENERAL INDUSTRY SAFETY ORDERS.

2. STEPS SHALL BE CAPABLE OF WITHSTANDING AN IMPACT LOAD OF 70 FEET-LBS AT 20°F WITHOUT CRACKING OR FRACTURING.

3. THE MINIMUM TOTAL CROSS-SECTIONAL AREA OF THE EXPOSED PORTION OF THE STEP, INCLUDING THE DEFORMED STEEL BAR AND EXCLUDING THE NON-SLIP TREAD SURFACE, SHALL BE 1.0 SQUARE INCH.

4. THE ENTIRE POLYPROPYLENE PLASTIC MATERIAL SURROUNDING THE REINFORCING STEEL BAR SHALL BE CAST MONOLITHICALLY. MINIMUM COVER SHALL BE 3/16".

5. A CERTIFICATION OF COMPLIANCE WITH THE REQUIREMENTS OF NOTES 1 THROUGH 4 PREPARED BY AN INDEPENDENT CERTIFIED LABORATORY SHALL BE SUBMITTED TO THE ENGINEER CONCURRENTLY WITH A REQUEST FOR APPROVAL.

6. E = 3 3/8". FOR VAULTS AND MANHOLES, D = 5 1/2" FOR OTHER INSTALLATIONS, D = 7 1/2". THESE DIMENSIONS MAY BE PLUS OR MINUS 1/4").

7. STEPS SHALL BE EVENLY SPACED. MAXIMUM VERTICAL SPACING OF STEPS SHALL BE 16", WITH THE BOTTOM STEP A MAXIMUM OF 2' ABOVE FLOOR OR SHELF.

8. IF TAPERED STEPS ARE INSTALLED INTO STRAIGHT DRILLED OR FORMED HOLES, APPROVED NON-SHRINK GROUT SHALL BE INJECTED INTO THE HOLE PRIOR TO INSTALLATION. HOLES SHALL BE STRAIGHT AND PARALLEL. EXCEPT AS OTHERWISE NOTED, STEPS SHALL BE INSTALLED IN ACCORDANCE WITH MANUFACTURER'S RECOMMENDED PROCEDURES.

9. A DROP STEP WITH A MINIMUM DROP OF 3/4" MAY BE USED. THE DROP STEP SHALL MEET ALL OTHER CRITERIA OF THIS PLAN.

POLYPROPYLENE-PLASTIC STEP
636-2

DRAINAGE DETAILS
NO SCALE
DD-43

STATE OF CALIFORNIA - DEPARTMENT OF TRANSPORTATION
Caltrans® HYDRAULICS

FUNCTIONAL SUPERVISOR: RALPH M. SASAKI
CALCULATED-DESIGNED BY: SIEW MEI TAN
CHECKED BY: RALPH M. SASAKI
REVISED BY
DATE REVISED

LAST REVISION 00-00-00
DATE PLOTTED => 30-JUN-2011
TIME PLOTTED => 18:09

Dist	COUNTY	ROUTE	POST MILES TOTAL PROJECT	SHEET No.	TOTAL SHEETS
07	LA	5	1.2/2.1	154	602

REGISTERED CIVIL ENGINEER 3/14/11 DATE

6-27-11
PLANS APPROVAL DATE

REGISTERED PROFESSIONAL ENGINEER RALPH M. SASAKI No. 30849 Exp. 3/31/12 CIVIL STATE OF CALIFORNIA

THE STATE OF CALIFORNIA OR ITS OFFICERS OR AGENTS SHALL NOT BE RESPONSIBLE FOR THE ACCURACY OR COMPLETENESS OF SCANNED COPIES OF THIS PLAN SHEET.

SUMMARY OF DRAINAGE QUANTITIES

DRAINAGE PLAN SHEET No.	DRAINAGE SYSTEM No. (⬡)	DRAINAGE UNIT (○)	"H" OR "V" FT	MINOR CONCRETE (MINOR STRUCTURE) CY	MISCELLANEOUS IRON AND STEEL LB	STRUCTURAL CONCRETE, BOX CULVERT CY	BAR REINFORCING STELL (BOX CULVERT) LB	MINOR CONCRETE (BACKFILL) CY	MINOR CONCRETE (DITCH LINING) CY	MINOR CONCRETE (CHANNEL LINING) CY	MINOR CONCRETE (GUTTER DEPRESSION) CY	18" RCP LF	24" RCP LF	30" RCP LF	72" PRECAST CONCRETE PIPE MANHOLE LF	6" NON-PERFORATED PP UNDERDRAIN LF	36" PRECAST CONCRETE PIPE MANHOLE (EXTRA STRENGTH) LF	ROCK SLOPE PROTECTION (FACING, METHOD B) CY	ROCK SLOPE PROTECTION FABRIC SQYD	DITCH EXCAVATION CY	ROADWAY EXCAVATION * CY	ABANDON CULVERT LF	SAND BACKFILL CY	REMOVE CONCRETE CY	REMOVE PIPE LF	REMOVE HEADWALL EA	REMOVE INLET EA	MODIFY INLET EA	ADJUST MANHOLE TO GRADE EA	REMOVE MANHOLE EA	MANHOLE FRAME AND COVER (N) EA	TYPE 24-12 FRAME AND GRATE (N) EA	FRAME AND GRATE FOR CATCH BASIN (N) EA	MAXIMUM COVER FT	DESCRIPTION	STATION
D-1	1-1	a	2.9	1.53	235																									1				COCB, W=3.5′	24.08′ L+ 15+34.000 ℄ "K"
		b						21.19				90.8																					2.6	18" RCP w/ 90.8′ Conc BACKFILL	
		c																									1							REMOVE COCB, W=3.5′, V=4.1′	25.64′ L+ 14+44.974 ℄ "K"
		d										3.7																					2.6	18" RCP	
D-1		e	4.60	1.84	235																									1				JC No. 3	30.55′ L+ 14+44.481 ℄ "K"
D-2	1-2	a	4.00	1.65	580																										2			GD-1 INLET	94.45′ L+ 77+18.000 ℄ "A"
D-2/ D-1		b											194.7																				2.3	24" RCP	
D-1		c	4.51	1.80	580																										2			GD-1 INLET	89.04′ L+ 75+20.000 ℄ "A"
		d											197.2																				2.5	24" RCP	
		e	4.00	1.65	580																										2			GD-1 INLET	81.57′ L+ 73+20.000 ℄ "A"
		f											97.2																				2.0	24" RCP	
		g	4.24	1.72	580																										2			GD-1 INLET	72.18′ L+ 71+20.000 ℄ "A"
		h											83.4																				2.5	24" RCP	
		i	4.64	1.84	580																										2			GD-1 INLET	67.89′ L+ 70+32.000 ℄ "A"
		j											113.3																				3.2	24" RCP	
		k	5.40	2.06	580																										2			GD-1 INLET	53.36′ R+ 70+32.000 ℄ "A"
		l											191.4																				6.0	24" RCP	
		m	8.15	3.86	580																										2			GD-1 INLET	67.89′ L+ 70+32.000 ℄ "A"
		n											172.0																				10.0	24" RCP	
		o	12.13	5.48	580																										2			GD-1 INLET	43.75′ R+ 72+26.000 ℄ "A"
D-2		p											9.5																				12.7	24" RCP	
SHEET TOTALS			23.43	5110				21.19				94.5	1058.7														1			2	16				

(N) -- NOT A SEPARATE PAY ITEM, FOR INFORMATION ONLY
* -- TO BE COMBINED WITH HIGHWAY QUANTITIES

DRAINAGE QUANTITIES
DQ-1

STATE OF CALIFORNIA - DEPARTMENT OF TRANSPORTATION
Caltrans® HYDRAULICS

FUNCTIONAL SUPERVISOR: RALPH M. SASAKI
CALCULATED-DESIGNED BY: SIEW WEI TAN
CHECKED BY: RALPH M. SASAKI
REVISED BY
DATE REVISED

LAST REVISION 00-00-00
DATE PLOTTED => 30-JUN-2011
TIME PLOTTED => 18:09

Dist	COUNTY	ROUTE	POST MILES TOTAL PROJECT	SHEET No.	TOTAL SHEETS
07	LA	5	1.2/2.1	155	602

REGISTERED CIVIL ENGINEER 3/14/11 DATE

6-27-11
PLANS APPROVAL DATE

REGISTERED PROFESSIONAL ENGINEER RALPH M. SASAKI No. 30849 Exp. 3/31/12 CIVIL STATE OF CALIFORNIA

THE STATE OF CALIFORNIA OR ITS OFFICERS OR AGENTS SHALL NOT BE RESPONSIBLE FOR THE ACCURACY OR COMPLETENESS OF SCANNED COPIES OF THIS PLAN SHEET.

NOTE:

ALL JOINTS ARE STANDARD JOINT TYPE.

SUMMARY OF DRAINAGE QUANTITIES

DRAINAGE PLAN SHEET No.	DRAINAGE SYSTEM No. (⬡)	DRAINAGE UNIT (○)	"H" OR "V" (FT)	MINOR CONCRETE (MINOR STRUCTURE) (CY)	MISCELLANEOUS IRON AND STEEL (LB)	STRUCTURAL CONCRETE, BOX CULVERT (CY)	BAR REINFORCING STELL (BOX CULVERT) (LB)	MINOR CONCRETE (BACKFILL) (CY)	MINOR CONCRETE (DITCH LINING) (CY)	MINOR CONCRETE (CHANNEL LINING) (CY)	MINOR CONCRETE (GUTTER DEPRESSION) (CY)	18" RCP (LF)	24" RCP (LF)	30" RCP (LF)	72" PRECAST CONCRETE PIPE MANHOLE (LF)	6" NON-PERFORATED PP UNDERDRAIN (LF)	36" PRECAST CONCRETE PIPE MANHOLE (EXTRA STRENGTH) (LF)	ROCK SLOPE PROTECTION (FACING, METHOD B) (CY)	ROCK SLOPE PROTECTION FABRIC (SQYD)	DITCH EXCAVATION (CY)	ROADWAY EXCAVATION * (CY)	ABANDON CULVERT (LF)	SAND BACKFILL (CY)	REMOVE CONCRETE (CY)	REMOVE PIPE (LF)	REMOVE HEADWALL (EA)	REMOVE INLET (EA)	MODIFY INLET (EA)	ADJUST MANHOLE TO GRADE (EA)	REMOVE MANHOLE (EA)	MANHOLE FRAME AND COVER (N) (EA)	TYPE 24-12 FRAME AND GRATE (N) (EA)	FRAME AND GRATE FOR CATCH BASIN (N) (EA)	MAXIMUM COVER (FT)	DESCRIPTION	STATION
D-2	1-2	q		9.57																															JS 2	38.82′ R+ 74+11.532 ℄ "A"
D-1	1-3	a	3.45	1.13	263																										1			TYPE G3 INLET	4.00′ L+ 10+58.000 ⅊ "K"
		b						11.20				48.0																					1.2	18" RCP W/ 48.0′ Conc BACKFILL	
		c	3.15	1.06	263																										1			TYPE G3 INLET	46.95 R+ 10+68.000 ⅊ "K"
		d						8.89				38.1																					2.0	18" RCP W/ 38.1′ Conc BACKFILL	
		e	3.50	1.14	263																									1				JC-3C	80.06′ R+ 10+38.288 ⅊ "K"
		f							12.44											29.24														TYPE B DRAIN, L=226.9′	
		g										106.5																					6.2	18" RCP	
		h	8.00	2.13	263																										1			TYPE G3 INLET	22.66′ R+ 72+00.000 ⅊ "K"
D-1/ D-2		i										197.2																					10.8	18" RCP	
D-2		j	12.46	5.61	580																										2			GD-1 INLET	109.56′ R+ 77+00.000 ℄ "A"
		k										137.5																					3.5	18" RCP	
		l	5.00	1.94	580																										2			GD-1 INLET	115.79′ R+ 78+40.000 ℄ "A"
		m											43.6																				16.7	24" RCP	
D-2		n		7.18																														JS 2	69.01′ R+ 77+29.855 ℄ "A"
D-2	2-1	a																								1								REMOVE hdwl	62.05′ R+ 81+61.563 ℄ "A"
		b																							34.2								4.0	REMOVE 24" RCP	
		c																									1							REMOVE CB 37Z	83.18′ R+ 81+90.278 ℄ "A"
		d																							38.5								4.0	REMOVE 24" RCP	
		e																						27.21										REMOVE Conc CHANNEL	
SHEET TOTALS				29.76	2212			20.09	12.44			527.3	43.6							29.24				27.21	72.7	1	1				1	7				

(N) -- NOT A SEPARATE PAY ITEM, FOR INFORMATION ONLY
* -- TO BE COMBINED WITH HIGHWAY QUANTITIES

DRAINAGE QUANTITIES
DQ-2

REVISED BY | DATE REVISED
SIEW MEI TAN | RALPH M. SASAKI
CALCULATED-DESIGNED BY | CHECKED BY
FUNCTIONAL SUPERVISOR: RALPH M. SASAKI

STATE OF CALIFORNIA - DEPARTMENT OF TRANSPORTATION
Caltrans® HYDRAULICS

LAST REVISION 00-00-00 | DATE PLOTTED => 30-JUN-2011 | TIME PLOTTED => 18:09

Dist	COUNTY	ROUTE	POST MILES TOTAL PROJECT	SHEET No.	TOTAL SHEETS
07	LA	5	1.2/2.1	156	602

REGISTERED CIVIL ENGINEER 3/14/11 DATE

6-27-11
PLANS APPROVAL DATE

REGISTERED PROFESSIONAL ENGINEER RALPH M. SASAKI No. 30849 Exp. 3/31/12 CIVIL STATE OF CALIFORNIA

THE STATE OF CALIFORNIA OR ITS OFFICERS OR AGENTS SHALL NOT BE RESPONSIBLE FOR THE ACCURACY OR COMPLETENESS OF SCANNED COPIES OF THIS PLAN SHEET.

NOTE:

ALL JOINTS ARE STANDARD JOINT TYPE.

SUMMARY OF DRAINAGE QUANTITIES

DRAINAGE PLAN SHEET No.	DRAINAGE SYSTEM No. (⬡)	DRAINAGE UNIT (○)	"H" OR "V" (FT)	MINOR CONCRETE (MINOR STRUCTURE) (CY)	MISCELLANEOUS IRON AND STEEL (LB)	STRUCTURAL CONCRETE, BOX CULVERT (CY)	BAR REINFORCING STELL (BOX CULVERT) (LB)	MINOR CONCRETE (BACKFILL) (CY)	MINOR CONCRETE (DITCH LINING) (CY)	MINOR CONCRETE (CHANNEL LINING) (CY)	MINOR CONCRETE (GUTTER DEPRESSION) (CY)	18" RCP (LF)	24" RCP (LF)	30" RCP (LF)	72" PRECAST CONCRETE PIPE MANHOLE (LF)	6" NON-PERFORATED PP UNDERDRAIN (LF)	36" PRECAST CONCRETE PIPE MANHOLE (EXTRA STRENGTH) (LF)	ROCK SLOPE PROTECTION (FACING, METHOD B) (CY)	ROCK SLOPE PROTECTION FABRIC (SQYD)	DITCH EXCAVATION (CY)	ROADWAY EXCAVATION * (CY)	ABANDON CULVERT (LF)	SAND BACKFILL (CY)	REMOVE CONCRETE (CY)	REMOVE PIPE (LF)	REMOVE HEADWALL (EA)	REMOVE INLET (EA)	MODIFY INLET (EA)	ADJUST MANHOLE TO GRADE (EA)	REMOVE MANHOLE (EA)	MANHOLE FRAME AND COVER (N) (EA)	TYPE 24-12 FRAME AND GRATE (N) (EA)	FRAME AND GRATE FOR CATCH BASIN (N) (EA)	MAXIMUM COVER (FT)	DESCRIPTION	STATION
D-2	2-2	a																									1									REMOVE CB 37Z	62.05′ R+ 84+38.213 ℄ "A"
D-2/ D-3		b																							16.2									0.7		REMOVE 24" RCP	
D-3		c																									1									REMOVE CB 37Z	62.05′ R+ 84+57.399 ℄ "A"
		d																							33.2									3.0		REMOVE 24" RCP	
D-3		e																						9.30												REMOVE Conc CHANNEL	
D-3	2-3	a																									1									REMOVE CB 37Z	92.37′ L+ 84+58.756 ℄ "A"
D-3/ D-2		b																							16.1									0.2		REMOVE 24" RCP	
D-2		c																									1									REMOVE CB 37Z	92.55′ L+ 84+39.591 ℄ "A"
		d																							13.3									0.6		REMOVE 24" RCP	
D-2	2-4	a																							117.0									6.0		REMOVE 24" RCP	
		b																								1										REMOVE hdwl	67.59′ R+ 115+50.169 ℄ "B"
D-2	2-5	a																									1									REMOVE 2 GRATES INLET	60.00′ L+ 114+50.217 ℄ "B"
		b																				228.4	81.4													ABANDON 2- 42" CMP	
		c																								1										REMOVE hdwl	54.83′ R+ 114+50.274 ℄ "B"
D-2	2-6	a	3.88	1.61	580																												2			GD-1 INLET	111.79′ R+ 81+00.000 ℄ "A"
		b											218.1																					3.8		24" RCP	
		c	6.18	2.27	580																												2			GD-1 INLET	107.86′ R+ 84+00.000 ℄ "A"
D-2/ D-3		d											119.5																					5.6		24" RCP	
SHEET TOTALS				3.88	1160								337.6									228.4	81.4	9.30	195.8	2	5						4				

(N) -- NOT A SEPARATE PAY ITEM, FOR INFORMATION ONLY
* -- TO BE COMBINED WITH HIGHWAY QUANTITIES

DRAINAGE QUANTITIES
DQ-3

STATE OF CALIFORNIA - DEPARTMENT OF TRANSPORTATION
Caltrans® HYDRAULICS

FUNCTIONAL SUPERVISOR: RALPH M. SASAKI
CALCULATED-DESIGNED BY: SIEW WEI TAN
CHECKED BY: RALPH M. SASAKI
REVISED BY
DATE REVISED

LAST REVISION 00-00-00
DATE PLOTTED => 30-JUN-2011
TIME PLOTTED => 18:09

Dist	COUNTY	ROUTE	POST MILES TOTAL PROJECT	SHEET No.	TOTAL SHEETS
07	LA	5	1.2/2.1	157	602

REGISTERED CIVIL ENGINEER 3/14/11 DATE

6-27-11
PLANS APPROVAL DATE

REGISTERED PROFESSIONAL ENGINEER RALPH M. SASAKI No. 30849 Exp. 3/31/12 CIVIL STATE OF CALIFORNIA

THE STATE OF CALIFORNIA OR ITS OFFICERS OR AGENTS SHALL NOT BE RESPONSIBLE FOR THE ACCURACY OR COMPLETENESS OF SCANNED COPIES OF THIS PLAN SHEET.

NOTE:

ALL JOINTS ARE STANDARD JOINT TYPE.

SUMMARY OF DRAINAGE QUANTITIES

DRAINAGE PLAN SHEET No.	DRAINAGE SYSTEM No. (⬡)	DRAINAGE UNIT (○)	"H" OR "V" (FT)	MINOR CONCRETE (MINOR STRUCTURE) (CY)	MISCELLANEOUS IRON AND STEEL (LB)	STRUCTURAL CONCRETE, BOX CULVERT (CY)	BAR REINFORCING STELL (BOX CULVERT) (LB)	MINOR CONCRETE (BACKFILL) (CY)	MINOR CONCRETE (DITCH LINING) (CY)	MINOR CONCRETE (CHANNEL LINING) (CY)	MINOR CONCRETE (GUTTER DEPRESSION) (CY)	18" RCP (LF)	24" RCP (LF)	30" RCP (LF)	72" PRECAST CONCRETE PIPE MANHOLE (LF)	6" NON-PERFORATED PP UNDERDRAIN (LF)	36" PRECAST CONCRETE PIPE MANHOLE (EXTRA STRENGTH) (LF)	ROCK SLOPE PROTECTION (FACING, METHOD B) (CY)	ROCK SLOPE PROTECTION FABRIC (SQYD)	DITCH EXCAVATION (CY)	ROADWAY EXCAVATION * (CY)	ABANDON CULVERT (LF)	SAND BACKFILL (CY)	REMOVE CONCRETE (CY)	REMOVE PIPE (LF)	REMOVE HEADWALL (EA)	REMOVE INLET (EA)	MODIFY INLET (EA)	ADJUST MANHOLE TO GRADE (EA)	REMOVE MANHOLE (EA)	MANHOLE FRAME AND COVER (N) (EA)	TYPE 24-12 FRAME AND GRATE (N) (EA)	FRAME AND GRATE FOR CATCH BASIN (N) (EA)	MAXIMUM COVER (FT)	DESCRIPTION	STATION
D-3	2-6	e		0.29																															J.S. 3	104.78′ R+ 85+22.707 ℄ "A"
		f		0.29																															J.S. 3	104.56′ R+ 85+65.645 ℄ "A"
		g											40.2																					5.9	24" RCP	
D-3		h	6.80	2.45	580																											2			GD-1 INLET	106.98′ R+ 85+80.000 ℄ "A"
D-2	2-7	a	11.88	5.22	326																											1			COCB W/ GRATING	51.61′ R+ 116+60.000 ⅊ "B"
		b										9.4																					10.0	18" RCP	
		c		1.20																															PIPE CULVERT STRAIGHT hdwl	61.24′ R+ 116+58.317 ⅊ "B"
		d								14.02										32.26															TRAPEZOIDAL Conc CHANNEL	
D-2	2-8	a																									1								REMOVE COCB, W=7.0′	18.28′ R+ 83+98.000 ⅊ "D"
		b																							44.3								11.0		REMOVE 18" RCP	
		c																							6.2								6.2		REMOVE 6.2′ MH SHAFT	28.51′ L+ 84+37.165 ⅊ "D"
D-2	2-9	a	5.50		243						0.63																					1			COCB, W=14.0′ W/ LD CASE E	18.28′ R+ 83+98.000 ⅊ "D"
		b										48.2																					28.0	18" RCP	
		c		2.38											9.7																				MH SHAFT SAFETY LEDGE	28.51′ L+ 84+37.165 ⅊ "D"
		d			243												9.8														1				MH SHAFT W ELECTRIC REDUCER	28.51′ L+ 84+37.165 ⅊ "D"
D-2	2-10	a																									1								REMOVE COCB, W=7.0′	17.70′ L+ 84+18.371 ⅊ "D"
		b																				12.9	3.38												ABANDON 18" RCP	
SHEET TOTALS				11.83	1392					14.02	0.63	57.6	40.2		9.7		9.8			32.26		12.9	3.38		50.5		2				1	1	3			

(N) -- NOT A SEPARATE PAY ITEM, FOR INFORMATION ONLY

* -- TO BE COMBINED WITH HIGHWAY QUANTITIES

DRAINAGE QUANTITIES
DQ-4

REVISED BY | DATE REVISED

SIEW MEI TAN | RALPH M. SASAKI

CALCULATED-DESIGNED BY | CHECKED BY

FUNCTIONAL SUPERVISOR: RALPH M. SASAKI

STATE OF CALIFORNIA - DEPARTMENT OF TRANSPORTATION

Caltrans® HYDRAULICS

LAST REVISION 00-00-00 | DATE PLOTTED => 30-JUN-2011 | TIME PLOTTED => 18:09

Dist	COUNTY	ROUTE	POST MILES TOTAL PROJECT	SHEET No.	TOTAL SHEETS
07	LA	5	1.2/2.1	158	602

REGISTERED CIVIL ENGINEER 3/14/11 DATE

6-27-11
PLANS APPROVAL DATE

REGISTERED PROFESSIONAL ENGINEER RALPH M. SASAKI No. 30849 Exp. 3/31/12 CIVIL STATE OF CALIFORNIA

THE STATE OF CALIFORNIA OR ITS OFFICERS OR AGENTS SHALL NOT BE RESPONSIBLE FOR THE ACCURACY OR COMPLETENESS OF SCANNED COPIES OF THIS PLAN SHEET.

DRAINAGE PLAN SHEET No.	DRAINAGE SYSTEM No. (⬡)	DRAINAGE UNIT (○)	"H" OR "V" (FT)	MINOR CONCRETE (MINOR STRUCTURE) (CY)	MISCELLANEOUS IRON AND STEEL (LB)	STRUCTURAL CONCRETE, BOX CULVERT (CY)	BAR REINFORCING STELL (BOX CULVERT) (LB)	MINOR CONCRETE (BACKFILL) (CY)	MINOR CONCRETE (DITCH LINING) (CY)	MINOR CONCRETE (CHANNEL LINING) (CY)	MINOR CONCRETE (GUTTER DEPRESSION) (CY)	18" RCP (LF)	24" RCP (LF)	30" RCP (LF)	72" PRECAST CONCRETE PIPE MANHOLE (LF)	6" NON-PERFORATED PP UNDERDRAIN (LF)	36" PRECAST CONCRETE PIPE MANHOLE (EXTRA STRENGTH) (LF)	ROCK SLOPE PROTECTION (FACING, METHOD B) (CY)	ROCK SLOPE PROTECTION FABRIC (SQYD)	DITCH EXCAVATION (CY)	ROADWAY EXCAVATION * (CY)	ABANDON CULVERT (LF)	SAND BACKFILL (CY)	REMOVE CONCRETE (CY)	REMOVE PIPE (LF)	REMOVE HEADWALL (EA)	REMOVE INLET (EA)	MODIFY INLET (EA)	ADJUST MANHOLE TO GRADE (EA)	REMOVE MANHOLE (EA)	MANHOLE FRAME AND COVER (N) (EA)	TYPE 24-12 FRAME AND GRATE (N) (EA)	FRAME AND GRATE FOR CATCH BASIN (N) (EA)	MAXIMUM COVER (FT)	DESCRIPTION	STATION
D-2/ D-3	2-11	a							55.18											57.92															Conc GUTTER, L=389.0′	
D-3		b	6.06	2.25	652																											2			GD-3 INLET	45.86′ Lt 88+07.980 ℄ "D"
		c											18.3																					3.6	24" RCP	
		d		0.55																															J.S.- PIPE TO RCB	42.61′ Lt 86+89.572 ℄ "D"
D-2	2-12	a							10.63											25.00															TYPE B DRAIN, L=194.0′	
		b								0.47										0.29															RECTANGULAR Conc CHANNEL	
		c				19.00	3327																												3′ x 2′ RCB, L=92.4′	
		d								0.47										0.36															RECTANGULAR Conc CHANNEL	
D-2	2-13	a							43.27											45.41															Conc GUTTER, L=305.0′	
		b							11.40											11.97															Conc GUTTER, L=80.4′	
		c	7.45	3.75	652																												2		GRATING CB-ALLEY (TRANSVERSE)	62.28′ Rt 86+52.000 ℄ "DR1"
		d										36.0																						10.0	18" RCP	
		e		0.54																															JUNCTION STRUCTURE "T"	101.02′ Rt 86+52.000 ℄ "DR1"
D-2	2-14	a																						10.71											REMOVE Conc GUTTER, L=96.4′	
		b																						7.54											REMOVE Conc GUTTER, L=203.5′	
D-3	3-1	a																								1									REMOVE hdwl	51.86′ Rt 90+01.359 ℄ "C"
		b																				144.0	16.76												ABANDON 2- 24" CMP	
SHEET TOTALS			7.09	1304	19.00	3327		120.48	0.94		36.0	18.3								140.95		144.0	16.76	18.25		1						2	2			

(N) -- NOT A SEPARATE PAY ITEM, FOR INFORMATION ONLY
* -- TO BE COMBINED WITH HIGHWAY QUANTITIES

DRAINAGE QUANTITIES
DQ-5

CALCULATED-DESIGNED BY SIEW MEI TAN
CHECKED BY RALPH M. SASAKI
FUNCTIONAL SUPERVISOR RALPH M. SASAKI
REVISED BY
DATE REVISED

STATE OF CALIFORNIA - DEPARTMENT OF TRANSPORTATION
Caltrans HYDRAULICS

LAST REVISION 00-00-00
DATE PLOTTED => 30-JUN-2011
TIME PLOTTED => 18:09

Dist	COUNTY	ROUTE	POST MILES TOTAL PROJECT	SHEET No.	TOTAL SHEETS
07	LA	5	1.2/2.1	159	602

REGISTERED CIVIL ENGINEER 3/14/11 DATE

6-27-11
PLANS APPROVAL DATE

REGISTERED PROFESSIONAL ENGINEER RALPH M. SASAKI No. 30849 Exp. 3/31/12 CIVIL STATE OF CALIFORNIA

THE STATE OF CALIFORNIA OR ITS OFFICERS OR AGENTS SHALL NOT BE RESPONSIBLE FOR THE ACCURACY OR COMPLETENESS OF SCANNED COPIES OF THIS PLAN SHEET.

DRAINAGE PLAN SHEET No.	DRAINAGE SYSTEM No.	DRAINAGE UNIT	"H" OR "V"	MINOR CONCRETE (MINOR STRUCTURE)	MISCELLANEOUS IRON AND STEEL	STRUCTURAL CONCRETE, BOX CULVERT	BAR REINFORCING STELL (BOX CULVERT)	MINOR CONCRETE (BACKFILL)	MINOR CONCRETE (DITCH LINING)	MINOR CONCRETE (CHANNEL LINING)	MINOR CONCRETE (GUTTER DEPRESSION)	18" RCP	24" RCP	30" RCP	72" RCP	6" NON-PERFORATED PP UNDERDRAIN	36" PRECAST CONCRETE PIPE MANHOLE (EXTRA STRENGTH)	ROCK SLOPE PROTECTION (FACING, METHOD B)	ROCK SLOPE PROTECTION FABRIC	DITCH EXCAVATION	ROADWAY EXCAVATION *	ABANDON CULVERT	SAND BACKFILL	REMOVE CONCRETE	REMOVE PIPE	REMOVE HEADWALL	REMOVE INLET	MODIFY INLET	ADJUST MANHOLE TO GRADE	REMOVE MANHOLE	MANHOLE FRAME AND COVER (N)	TYPE 24-12 FRAME AND GRATE (N)	FRAME AND GRATE FOR CATCH BASIN (N)	MAXIMUM COVER	DESCRIPTION	STATION
			FT	CY	LB	CY	LB	CY	CY	CY	CY	LF	LF	LF	LF	LF	LF	CY	SQYD	CY	CY	LF	CY	CY	LF	EA	EA	EA	EA	EA	EA	EA	EA	FT		
D-3	3-2	a																						141.49											REMOVE 2-5'X3' RCB, L=213.3'	
		b																								1									REMOVE hdwl	60.73' R+ 112+97.417 ℄ "B"
D-3	3-2	c																						43.72											REMOVE TRAPEZOIDAL Conc CHANNEL	
		d																						79.30											REMOVE TRAPEZOIDAL Conc CHANNEL	
	3-3	a				187.69	34734																												2 - 5'X3' RCB, L=284.7'	
		b		13.47																	88.43														RECTANGULAR Conc CHANNEL	
		c		22.16																															TRANSITION STRUCTURE No. 3	88.98' R+ 113+22.177LS "B"
		d								219.36											1467.12														TRAPEZOIDAL Conc CHANNEL	
	3-4	a	5.00	1.94	580																											2			GD-1 INLET	96.66' L+ 86+40.000 ℄ "A"
		b											136.6																					2.9	24" RCP	
		c	5.12	1.98	580																											2			GD-1 INLET	96.66' L+ 87+80.000 ℄ "A"
		d											118.6																					3.0	24" RCP	
		e	5.18	1.99	652																											2			GD-3 INLET	97.00' L+ 89+02.000 ℄ "A"
		f											135.1																					3.0	24" RCP	
		g	4.10	1.68	652																											2			GD-3 INLET	97.00' L+ 90+40.000 ℄ "A"
		h											147.1																					2.0	24" RCP	
		i	3.42	1.48	652																											2			GD-3 INLET	97.00' L+ 91+90.000 ℄ "A"
		j											17.1																					1.4	24" RCP	
		k	3.32	1.45	652																											2			GD-3 INLET	97.00' L+ 92+10.000 ℄ "A"
SHEET TOTALS				46.15	3768	187.69	34734			219.36			554.5								1555.55			264.51		1						12				

(N) -- NOT A SEPARATE PAY ITEM, FOR INFORMATION ONLY
* -- TO BE COMBINED WITH HIGHWAY QUANTITIES

DRAINAGE QUANTITIES
DQ-6

CALCULATED-DESIGNED BY SIEW MEI TAN
CHECKED BY RALPH M. SASAKI
REVISED BY
DATE REVISED
FUNCTIONAL SUPERVISOR RALPH M. SASAKI

STATE OF CALIFORNIA - DEPARTMENT OF TRANSPORTATION
Caltrans HYDRAULICS

LAST REVISION 00-00-00
DATE PLOTTED => 30-JUN-2011
TIME PLOTTED => 18:09

Dist	COUNTY	ROUTE	POST MILES TOTAL PROJECT	SHEET No.	TOTAL SHEETS
07	LA	5	1.2/2.1	160	602

REGISTERED CIVIL ENGINEER 3/14/11 DATE

6-27-11
PLANS APPROVAL DATE

REGISTERED PROFESSIONAL ENGINEER RALPH M. SASAKI No. 30849 Exp. 3/31/12 CIVIL STATE OF CALIFORNIA

THE STATE OF CALIFORNIA OR ITS OFFICERS OR AGENTS SHALL NOT BE RESPONSIBLE FOR THE ACCURACY OR COMPLETENESS OF SCANNED COPIES OF THIS PLAN SHEET.

DRAINAGE PLAN SHEET No.	DRAINAGE SYSTEM No.	DRAINAGE UNIT	"H" OR "V"	MINOR CONCRETE (MINOR STRUCTURE)	MISCELLANEOUS IRON AND STEEL	STRUCTURAL CONCRETE, BOX CULVERT	BAR REINFORCING STELL (BOX CULVERT)	MINOR CONCRETE (BACKFILL)	MINOR CONCRETE (DITCH LINING)	MINOR CONCRETE (CHANNEL LINING)	MINOR CONCRETE (GUTTER DEPRESSION)	18" RCP	24" RCP	30" RCP	72" PRECAST CONCRETE PIPE MANHOLE	6" NON-PERFORATED PP UNDERDRAIN	36" PRECAST CONCRETE PIPE MANHOLE (EXTRA STRENGTH)	ROCK SLOPE PROTECTION (FACING, METHOD B)	ROCK SLOPE PROTECTION FABRIC	DITCH EXCAVATION	ROADWAY EXCAVATION *	ABANDON CULVERT	SAND BACKFILL	REMOVE CONCRETE	REMOVE PIPE	REMOVE HEADWALL	REMOVE INLET	MODIFY INLET	ADJUST MANHOLE TO GRADE	REMOVE MANHOLE	MANHOLE FRAME AND COVER (N)	TYPE 24-12 FRAME AND GRATE (N)	FRAME AND GRATE FOR CATCH BASIN (N)	MAXIMUM COVER	DESCRIPTION	STATION
			FT	CY	LB	CY	LB	CY	CY	CY	CY	LF	LF	LF	LF	LF	LF	CY	SQYD	CY	CY	LF	CY	CY	LF	EA	EA	EA	EA	EA	EA	EA	EA	FT		
D-4	3-4	l											17.1																					1.4	24" RCP	
		m	3.22	1.42	652																											2			GD-3 INLET	97.00' L+ 92+30.000 ℄ "A"
		n											67.0																						24" RCP W/ 67.0' Conc BACKFILL	
		o	3.06	1.38	580																											2			GD-1 INLET	93.80' L+ 93+00.000 ℄ "A"
		p											10.3																						24" RCP	
		q		4.35																															TRANSITION STRUCTURE No. 4 (Mod)	109.35' L+ 89+02.000 ℄ "A"
		r								8.50										155.50															RECTANGULAR Conc CHANNEL W=3', L=65.6'	
		s								7.30											23.70														RECTANGULAR CHANNEL TRANSITION	
		t																2.0	42.22																ROCK SLOPE PROTECTION	
		u																			173.33														DITCH EXCAVATION (BIOSWALE)	
		v		36.59																															TRANSITION STRUCTURE No. 4	83.23' R+ 105+12.485 ℄ "B"
		w											104.7																					8.0	24" RCP	
		x		3.23	243												2.9													1				MH PIPE TO PIPE	82.20' R+ 114+06.000 ℄ "B"
D-3	3-5	a	4.50	1.78	580																											2			GD-1 INLET	98.20' R+ 91+20.000 ℄ "A"
		b											67.1																					2.7	24" RCP	
		c	4.90	1.90	580																											2			GD-1 INLET	97.63' R+ 91+90.000 ℄ "A"
		d											17.1																					3.0	24" RCP	
		e	5.14	1.98	580																											2			GD-1 INLET	97.47' R+ 92+10.000 ℄ "A"
		f											42.1																					3.4	24" RCP	
		g																										1							MODIFY GD-1 INLET	97.18' R+ 92+45.137 ℄ "A"
SHEET TOTALS				52.63	3215					15.80			325.4				2.9	2.0	42.22	155.50	197.03							1			1	10				

(N) -- NOT A SEPARATE PAY ITEM, FOR INFORMATION ONLY
* -- TO BE COMBINED WITH HIGHWAY QUANTITIES

DRAINAGE QUANTITIES
DQ-7

STATE OF CALIFORNIA - DEPARTMENT OF TRANSPORTATION
Caltrans HYDRAULICS

FUNCTIONAL SUPERVISOR: RALPH M. SASAKI
CALCULATED-DESIGNED BY: SIEW WEI TAN
CHECKED BY: RALPH M. SASAKI
REVISED BY
DATE REVISED

LAST REVISION 00-00-00
DATE PLOTTED => 30-JUN-2011
TIME PLOTTED => 18:09

Dist	COUNTY	ROUTE	POST MILES TOTAL PROJECT	SHEET No.	TOTAL SHEETS
07	LA	5	1.2/2.1	161	602

REGISTERED CIVIL ENGINEER 3/14/11 DATE

6-27-11
PLANS APPROVAL DATE

REGISTERED PROFESSIONAL ENGINEER RALPH M. SASAKI No. 30849 Exp. 3/31/12 CIVIL STATE OF CALIFORNIA

THE STATE OF CALIFORNIA OR ITS OFFICERS OR AGENTS SHALL NOT BE RESPONSIBLE FOR THE ACCURACY OR COMPLETENESS OF SCANNED COPIES OF THIS PLAN SHEET.

DRAINAGE PLAN SHEET No.	DRAINAGE SYSTEM No.	DRAINAGE UNIT	"H" OR "V" (FT)	MINOR CONCRETE (MINOR STRUCTURE) (CY)	MISCELLANEOUS IRON AND STEEL (LB)	STRUCTURAL CONCRETE, BOX CULVERT (CY)	BAR REINFORCING STELL (BOX CULVERT) (LB)	MINOR CONCRETE (BACKFILL) (CY)	MINOR CONCRETE (DITCH LINING) (CY)	MINOR CONCRETE (CHANNEL LINING) (CY)	MINOR CONCRETE (GUTTER DEPRESSION) (CY)	18" RCP (LF)	24" RCP (LF)	30" RCP (LF)	72" PRECAST CONCRETE PIPE MANHOLE (LF)	6" NON-PERFORATED PP UNDERDRAIN (LF)	36" PRECAST CONCRETE PIPE MANHOLE (EXTRA STRENGTH) (LF)	ROCK SLOPE PROTECTION (FACING, METHOD B) (CY)	ROCK SLOPE PROTECTION FABRIC (SQYD)	DITCH EXCAVATION (CY)	ROADWAY EXCAVATION * (CY)	ABANDON CULVERT (LF)	SAND BACKFILL (CY)	REMOVE CONCRETE (CY)	REMOVE PIPE (LF)	REMOVE HEADWALL (EA)	REMOVE INLET (EA)	MODIFY INLET (EA)	ADJUST MANHOLE TO GRADE (EA)	REMOVE MANHOLE (EA)	MANHOLE FRAME AND COVER (N) (EA)	TYPE 24-12 FRAME AND GRATE (N) (EA)	FRAME AND GRATE FOR CATCH BASIN (N) (EA)	MAXIMUM COVER (FT)	DESCRIPTION	STATION
D-3	3-6	a																								1									REMOVE hdwl	68.03′ R+ 85+29.724 ℄ "A"
		b				50.10	12518																												3 - 6′x2′ RCB, L=67.3′	
D-3	3-7	a																												1					REMOVE MH No. 1	19.09′ R+ 94+51.204 ⅊ "D"
		b																							150.9									9.6	REMOVE 30" RCP	
		c																												1					REMOVE MH No. 1	24.34′ R+ 90+14.911 ⅊ "D"
		d												74.5																				7.0	30" RCP	
		e												15.4																				2.9	30" RCP	
		f														25.5																			6" NON-PERFORATED PP UNDERDRAIN	
		g		4.48	243																										1				JC 3 (Mod)	60.87′ R+ 92+08.715 ⅊ "D"
		h												40.0																				10.7	30" RCP	
		i							3.94											5.59															WALL GUTTER, L=103.40′	
D-3	3-8	a							27.91											65.63															TYPE B DRAIN, L=509.2′	
		b								0.13										2.78															RECTANGULAR Conc CHANNEL	
		c				7.0	1224																												4′ x 1′ RCB	
		d								10.24										21.94															RECTANGULAR Conc CHANNEL	
D-3	3-9	a	4.00	1.94	634																											2			TYPE GDO INLET	4.00′ L+ 114+05.000 ⅊ "B"
		b										47.7																						2.3	18" RCP	
		c	4.02	1.17	263																											1			TYPE G1 INLET	47.73′ R+ 114+05.000 ⅊ "B"
		d										250.8																						2.8	18" RCP	
SHEET TOTALS				7.59	1140	57.1	13742		31.85	10.37		298.5		129.9		25.5				95.94					150.9	1				2	1	3				

(N) -- NOT A SEPARATE PAY ITEM, FOR INFORMATION ONLY
* -- TO BE COMBINED WITH HIGHWAY QUANTITIES

DRAINAGE QUANTITIES
DQ-8

STATE OF CALIFORNIA - DEPARTMENT OF TRANSPORTATION
Caltrans HYDRAULICS

FUNCTIONAL SUPERVISOR: RALPH M. SASAKI
CALCULATED-DESIGNED BY: SIEW WEI TAN
CHECKED BY: RALPH M. SASAKI
REVISED BY
DATE REVISED

LAST REVISION 00-00-00
DATE PLOTTED => 30-JUN-2011
TIME PLOTTED => 18:09

Dist	COUNTY	ROUTE	POST MILES TOTAL PROJECT	SHEET No.	TOTAL SHEETS
07	LA	5	1.2/2.1	162	602

REGISTERED CIVIL ENGINEER 3/14/11 DATE

6-27-11
PLANS APPROVAL DATE

REGISTERED PROFESSIONAL ENGINEER RALPH M. SASAKI No. 30849 Exp. 3/31/12 CIVIL STATE OF CALIFORNIA

THE STATE OF CALIFORNIA OR ITS OFFICERS OR AGENTS SHALL NOT BE RESPONSIBLE FOR THE ACCURACY OR COMPLETENESS OF SCANNED COPIES OF THIS PLAN SHEET.

DRAINAGE PLAN SHEET No.	DRAINAGE SYSTEM No.	DRAINAGE UNIT	"H" OR "V" (FT)	MINOR CONCRETE (MINOR STRUCTURE) (CY)	MISCELLANEOUS IRON AND STEEL (LB)	STRUCTURAL CONCRETE, BOX CULVERT (CY)	BAR REINFORCING STELL (BOX CULVERT) (LB)	MINOR CONCRETE (BACKFILL) (CY)	MINOR CONCRETE (DITCH LINING) (CY)	MINOR CONCRETE (CHANNEL LINING) (CY)	MINOR CONCRETE (GUTTER DEPRESSION) (CY)	18" RCP (LF)	24" RCP (LF)	30" RCP (LF)	72" PRECAST CONCRETE PIPE MANHOLE (LF)	6" NON-PERFORATED PP UNDERDRAIN (LF)	36" PRECAST CONCRETE PIPE MANHOLE (EXTRA STRENGTH) (LF)	ROCK SLOPE PROTECTION (FACING, METHOD B) (CY)	ROCK SLOPE PROTECTION FABRIC (SQYD)	DITCH EXCAVATION (CY)	ROADWAY EXCAVATION * (CY)	ABANDON CULVERT (LF)	SAND BACKFILL (CY)	REMOVE CONCRETE (CY)	REMOVE PIPE (LF)	REMOVE HEADWALL (EA)	REMOVE INLET (EA)	MODIFY INLET (EA)	ADJUST MANHOLE TO GRADE (EA)	REMOVE MANHOLE (EA)	MANHOLE FRAME AND COVER (N) (EA)	TYPE 24-12 FRAME AND GRATE (N) (EA)	FRAME AND GRATE FOR CATCH BASIN (N) (EA)	MAXIMUM COVER (FT)	DESCRIPTION	STATION
D-4	4-1	a																											1					REMOVE MH No. 1	19.09' R+ 94+51.204 ℄ "D"
		b																							197.5								11.0	REMOVE 30" RCP	
		c																											1					REMOVE MH No. 1	24.34' R+ 90+14.911 ℄ "D"
		d												99.9																			9.5	30" RCP	
		e												15.4																			4.1	30" RCP	
		f														24.5																		6" NON-PERFORATED PP UNDERDRAIN	
		g		4.77	243																									1				JC 3 (Mod)	48.90' R+ 92+74.868 ℄ "D"
		h												27.1																			11.7	30" RCP	
		i							3.94											5.59														WALL GUTTER, L=103.40'	
D-4	4-2	a																											1					ADJUST MH TO GRADE	66.00' L+ 104+08.062 ℄ "B"
D-4	4-3	a																									1							REMOVE hdwl	45.38' L+ 93+60.495 ℄ "E"
		b												4.0																			0.6	30" RCP	
		c		1.52																														PIPE CULVERT hdwl	47.93' L+ 93+61.502 ℄ "E"
		d							0.41																									Conc APRON	
SHEET TOTALS				6.29	243				4.35					146.4		24.5				5.59					197.5	1			1	2	1					
GRAND TOTALS				188.65	19544	263.79	51803	41.28	169.12	260.49	0.63	1013.9	2378.3	276.3	9.7	50.0	12.7	2.0	42.22	459.48	1752.58	385.3	101.54	319.27	667.4	7	9	1	1	4	7	51	9			

(N) -- NOT A SEPARATE PAY ITEM, FOR INFORMATION ONLY
* -- TO BE COMBINED WITH HIGHWAY QUANTITIES

DRAINAGE QUANTITIES
DQ-9

STATE OF CALIFORNIA - DEPARTMENT OF TRANSPORTATION
Caltrans HYDRAULICS

FUNCTIONAL SUPERVISOR: RALPH M. SASAKI
CALCULATED-DESIGNED BY: SIEW WEI TAN
CHECKED BY: RALPH M. SASAKI
REVISED BY
DATE REVISED

LAST REVISION 00-00-00
DATE PLOTTED => 30-JUN-2011
TIME PLOTTED => 18:09

Dist	COUNTY	ROUTE	POST MILES TOTAL PROJECT	SHEET No.	TOTAL SHEETS
07	LA	5	1.2/2.1	163	602

Medardo de la Cruz 3/14/11
REGISTERED CIVIL ENGINEER DATE

6-27-11
PLANS APPROVAL DATE

REGISTERED PROFESSIONAL ENGINEER MEDARDO DE LA CRUZ No. C61848 Exp. 6-30-11 CIVIL STATE OF CALIFORNIA

THE STATE OF CALIFORNIA OR ITS OFFICERS OR AGENTS SHALL NOT BE RESPONSIBLE FOR THE ACCURACY OR COMPLETENESS OF SCANNED COPIES OF THIS PLAN SHEET.

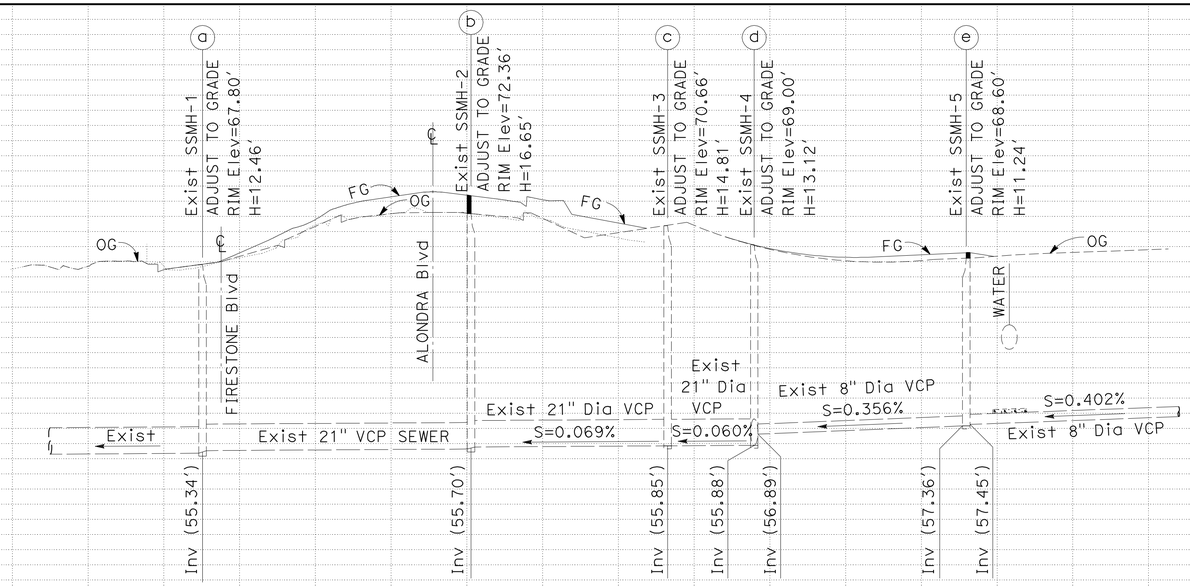

SANITARY SEWER SYSTEM No. 1
PROFILE
SCALE: Horiz 1" = 50'
Vert 1" = 5'

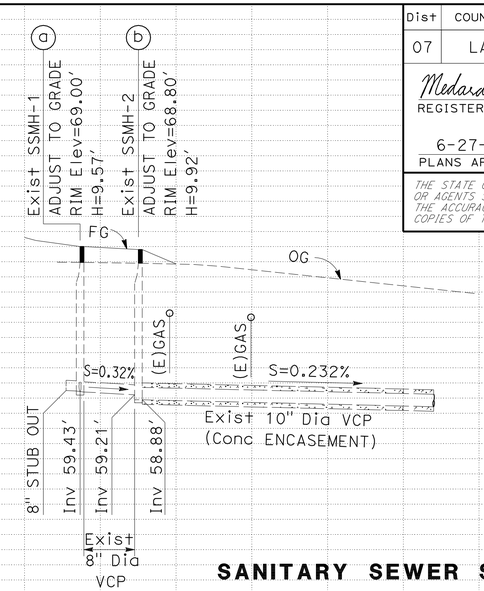

SANITARY SEWER SYSTEM No. 2
PROFILE
SCALE: Horiz 1" = 50'
Vert 1" = 5'

STATION			TOTAL
CY	Exc		
	Emb		

NOTE:
SET TO STREET GRADE AFTER FINAL HMA LIFT HAS BEEN PLACED.

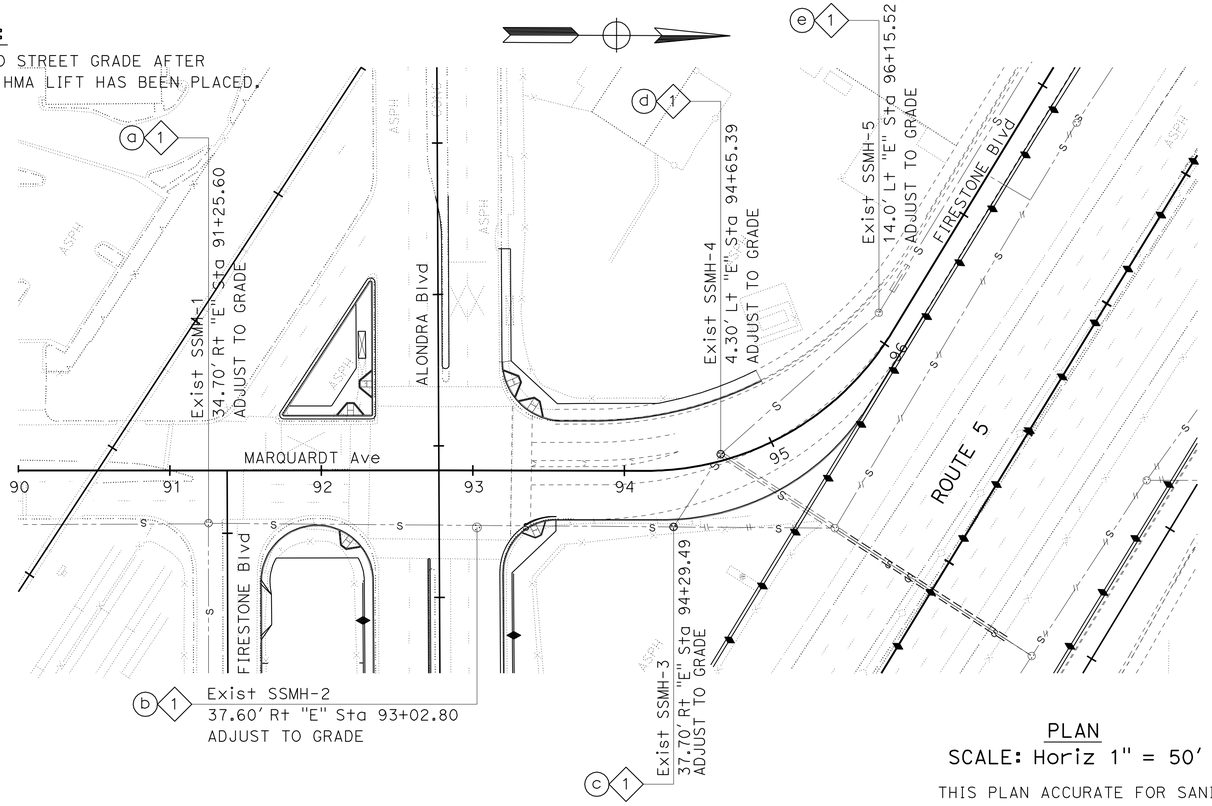

PLAN
SCALE: Horiz 1" = 50'

THIS PLAN ACCURATE FOR SANITARY SEWER WORK ONLY

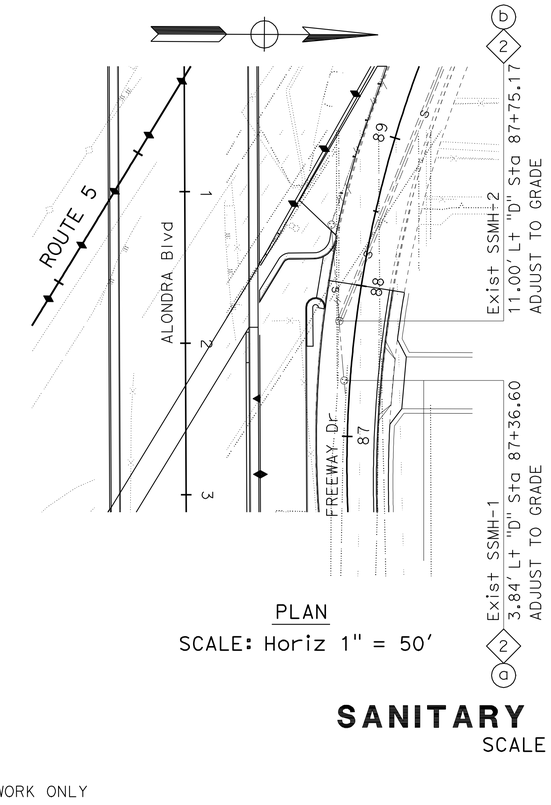

PLAN
SCALE: Horiz 1" = 50'

SANITARY SEWER QUANTITIES

SEWER PLAN SHEET No.	SYSTEM No. ◇	UNIT No. ○	ADJUST MANHOLE TO GRADE (SEWER)	ADJUST FRAME AND COVER TO GRADE (SEWER)	HEIGHT OF MANHOLE
			EA	EA	FT
SS-1	1	a		1	12.46'
		b	1		16.65'
		c		1	14.81'
		d		1	13.12'
		e	1		11.24'
	2	a	1		9.57'
		b	1		9.92'
TOTAL			4	3	

SANITARY SEWER PLAN
SCALE AS SHOWN

SS-1

STATE OF CALIFORNIA - DEPARTMENT OF TRANSPORTATION
Caltrans® OFFICE OF DESIGN A

FUNCTIONAL SUPERVISOR: ASADOUR TERTERIAN
CALCULATED-DESIGNED BY: MARCELO DE LA FUENTE
CHECKED BY: MEDARDO DE LA CRUZ
REVISED BY
DATE REVISED

LAST REVISION 00-00-00 | DATE PLOTTED => 30-JUN-2011 | TIME PLOTTED => 18:10

Dist	COUNTY	ROUTE	POST MILES TOTAL PROJECT	SHEET No.	TOTAL SHEETS
07	LA	5	1.2/2.1	164	602

Medardo de la Cruz 3/14/11
REGISTERED CIVIL ENGINEER DATE

6-27-11
PLANS APPROVAL DATE

REGISTERED PROFESSIONAL ENGINEER MEDARDO DE LA CRUZ No. C61848 Exp. 6-30-11 CIVIL STATE OF CALIFORNIA

THE STATE OF CALIFORNIA OR ITS OFFICERS OR AGENTS SHALL NOT BE RESPONSIBLE FOR THE ACCURACY OR COMPLETENESS OF SCANNED COPIES OF THIS PLAN SHEET.

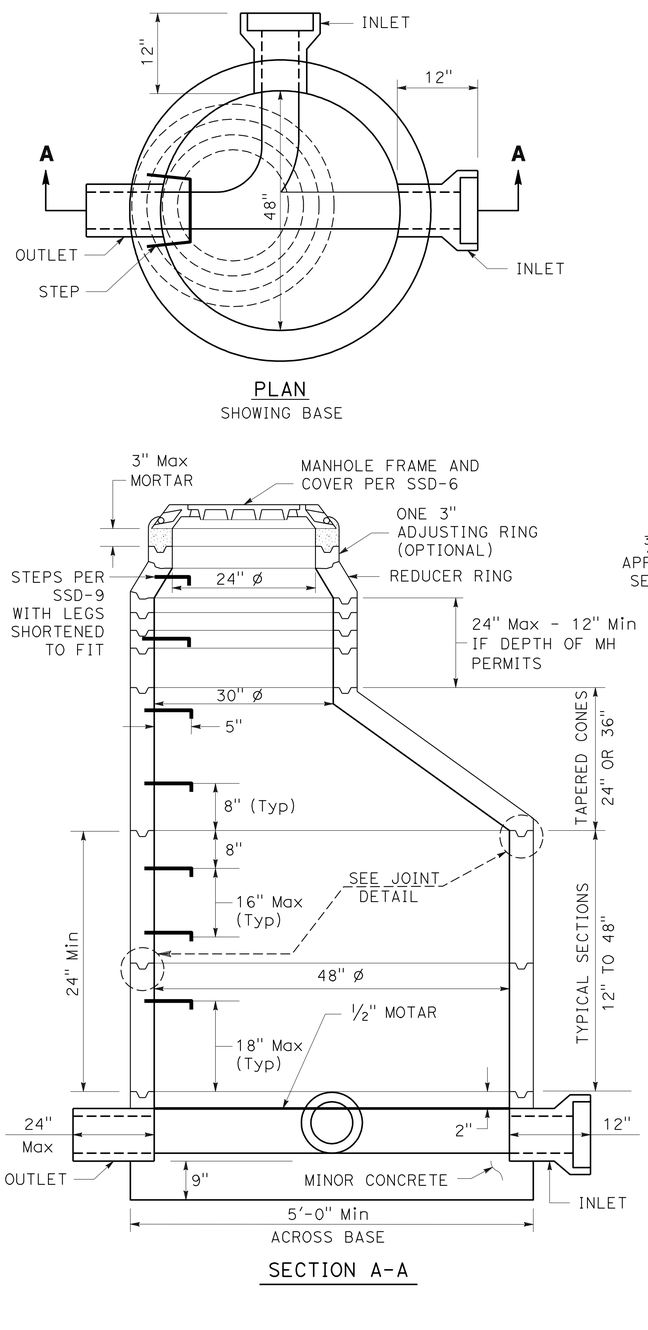

PLAN
SHOWING BASE

SECTION A-A

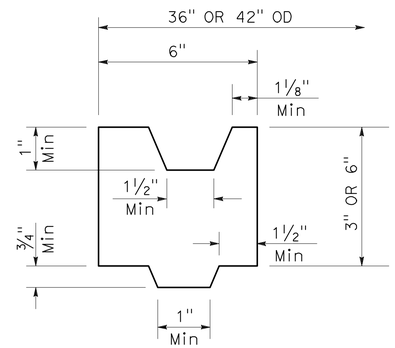

ADJUSTING RING DETAIL

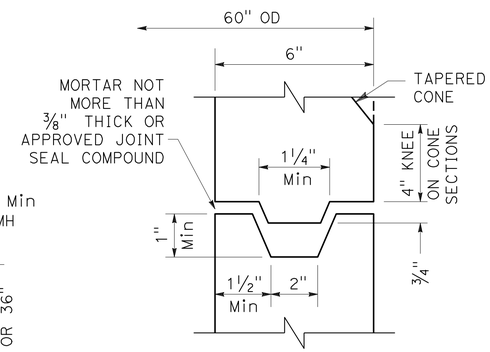

JOINT DETAIL
NON-REINFORCED

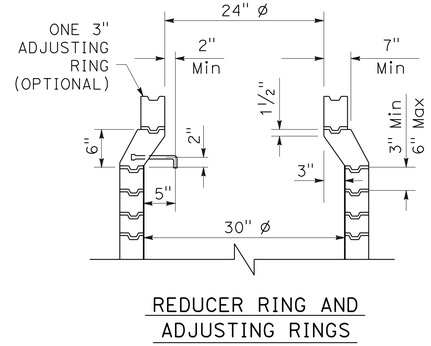

REDUCER RING AND ADJUSTING RINGS

TYPE 200-3

PRECAST CONCRETE SEWER MANHOLE

ABBREVIATIONS:

LACSD SANITATION DISTRICT OF LOS ANGELES COUNTY

NC NATIONAL COURSE

NOTES:

1. MANHOLE STEPS SHALL CONFORM TO SSD-9 TYPE 1 OR 3. THE MANHOLE STEPS SHALL BE UNIFORMLY SPACED AT AT MAXIMUM OF 16". THE LOWEST STEP SHALL BE PLACED NOT LESS THAN 8" NOR MORE THAN 18" ABOVE THE SHELF. THE STEPS SHALL PROJECT 5" INSIDE THE MANHOLE.
2. RISER SECTIONS MAY BE REINFORCED OR UNREINFORCED. REINFORCED SECTIONS SHALL BE REINFORCED IN ACCORDANCE WITH ASTM C 478 AND SHALL HAVE A MINIMUM WALL THICKNESS OF 5". UNREINFORCED RISER SECTIONS SHALL HAVE A MINIMUM WALL THICKNESS OF 6".
3. THE 24" X 48" ECCENTRIC CONES MAY BE REINFORCED OR UNREINFORCED. IF REINFORCED, THE WALL THICKNESS SHALL BE NOT LESS THAN 5". IF UNREINFORCED, THE WALL THICKNESS SHALL NOT BE LESS THAN 6".
4. JOINTS SHALL BE TONGUE AND GROOVE. JOINTS FOR REINFORCED STRUCTURES SHALL CONFORM WITH ASTM C 478 SECTION 14.
5. IF 30" DIAMETER MANHOLE FRAME AND COVER IS REQUIRED, IT SHALL BE INSTALLED WHERE THE REDUCER RING IS SHOWN IN THE SECTION.
6. FOR REINFORCED PRECAST STRUCTURES, ALL REINFORCEMENT SHALL HAVE A MINIMUM OF 2" OF COVER OVER THE STEEL ON THE INSIDE FACE.
7. THE TOP OPENING OF THE MANHOLE AND THE STEPS SHALL BE PLACED DIRECTLY OVER THE OUTLET OF THE STRUCTURE EXCEPT AS OTHERWISE NOTED ON PLANS.

SANITARY SEWER DETAILS

NO SCALE

SSD-1

STATE OF CALIFORNIA - DEPARTMENT OF TRANSPORTATION
Caltrans® OFFICE OF DESIGN A

FUNCTIONAL SUPERVISOR: ASADOUR TERTERIAN
CALCULATED-DESIGNED BY: MARCELO DE LA FUENTE
CHECKED BY: MEDARDO DE LA CRUZ
REVISED BY: MDLF
DATE REVISED: 5/24/11

LAST REVISION 00-00-00
DATE PLOTTED => 30-JUN-2011
TIME PLOTTED => 18:10

Dist	COUNTY	ROUTE	POST MILES TOTAL PROJECT	SHEET No.	TOTAL SHEETS
07	LA	5	1.2/2.1	165	602

Medardo de la Cruz 3/14/11
REGISTERED CIVIL ENGINEER DATE

6-27-11
PLANS APPROVAL DATE

REGISTERED PROFESSIONAL ENGINEER
MEDARDO DE LA CRUZ
No. C61848
Exp. 6-30-11
CIVIL
STATE OF CALIFORNIA

THE STATE OF CALIFORNIA OR ITS OFFICERS OR AGENTS SHALL NOT BE RESPONSIBLE FOR THE ACCURACY OR COMPLETENESS OF SCANNED COPIES OF THIS PLAN SHEET.

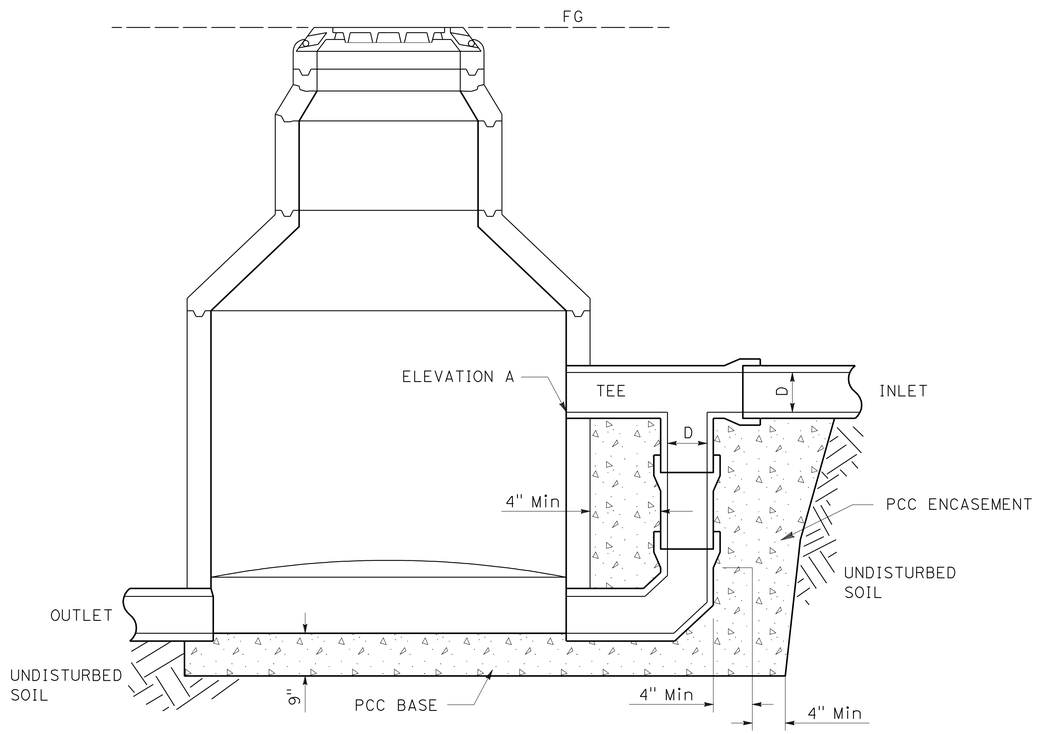

SECTION A-A

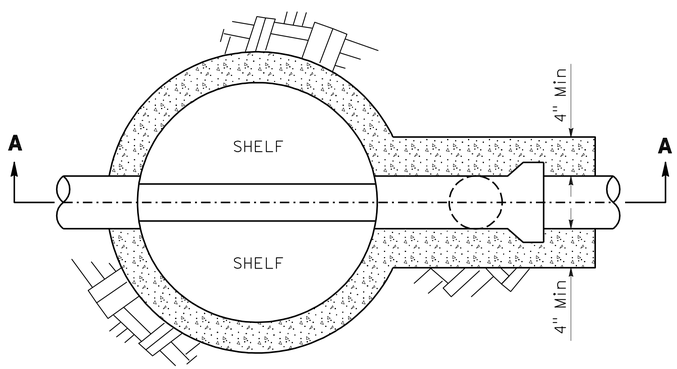

PLAN

NOTES:

1. EXCEPT AS SHOWN ON THIS PLAN, MANHOLES SHALL CONFORM TO SSD-1 OR SSD-3.
2. PIPE FOR THE DROP INLET SHALL BE THE SAME MATERIAL AS THE SEWER UNLESS APPROVED ADAPTORS ARE USED. IF SO, THE PIPE MAY BE VCP, ABS SOLID WALL, ABS COMPOSITE, PVC PLASTIC, OR POLYETHYLENE.
3. FOR BRICK MANHOLES, A BRICK ARCH IS ALSO REQUIRED OVER THE UPPER INLET PIPE.

DROP SEWER MANHOLE

TYPE 202-1

SANITARY SEWER DETAILS

NO SCALE

SSD-2

STATE OF CALIFORNIA - DEPARTMENT OF TRANSPORTATION
Caltrans® OFFICE OF DESIGN A

FUNCTIONAL SUPERVISOR: ASADOUR TERTERIAN

CALCULATED-DESIGNED BY: MARCELO DE LA FUENTE
CHECKED BY: MEDARDO DE LA CRUZ

REVISED BY: MDLF
DATE REVISED: 5/24/11

LAST REVISION 00-00-00
DATE PLOTTED => 30-JUN-2011
TIME PLOTTED => 18:10

Dist	COUNTY	ROUTE	POST MILES TOTAL PROJECT	SHEET No.	TOTAL SHEETS
07	LA	5	1.2/2.1	166	602

Medardo de la Cruz 3/14/11
REGISTERED CIVIL ENGINEER DATE

6-27-11
PLANS APPROVAL DATE

REGISTERED PROFESSIONAL ENGINEER
MEDARDO DE LA CRUZ
No. C61848
Exp. 6-30-11
CIVIL
STATE OF CALIFORNIA

THE STATE OF CALIFORNIA OR ITS OFFICERS OR AGENTS SHALL NOT BE RESPONSIBLE FOR THE ACCURACY OR COMPLETENESS OF SCANNED COPIES OF THIS PLAN SHEET.

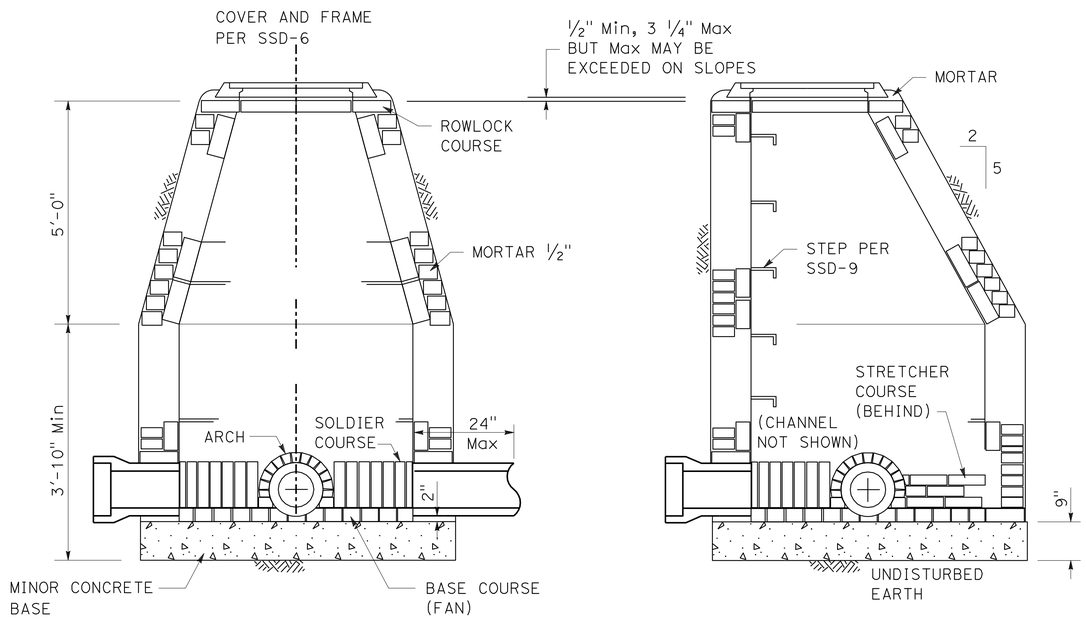

SECTION A-A

SECTION B-B

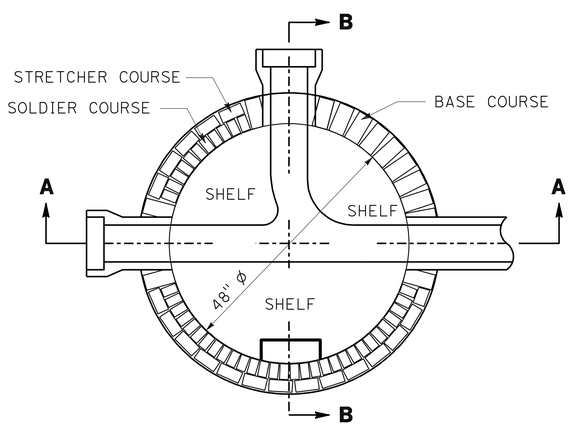

PLAN

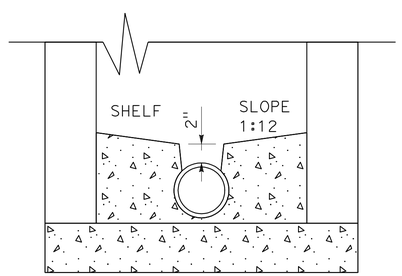

CHANNEL
TYPICAL SECTION

NOTES:

1. STEPS: MANHOLE STEPS SHALL CONFORM WITH SSD-9 . THE TOP STEP SHALL BE PLACED JUST UNDER THE MANHOLE FRAME. THE LOWEST STEP SHALL BE PLACED BETWEEN 8" AND 24" ABOVE THE SHELF.
2. WALL THICKNESS: BRICKWORK SHALL BE 8" THICK TO A DEPTH OF 22'. BRICKWORK BELOW 22' DEEP SHALL BE 12" THICK.
3. A FLEXIBLE JOINT SHALL BE INSTALLED AT THE FIRST JOINT FROM MANHOLE FOR ALL CONNECTIONS EXCEPT THOSE WITH REINFORCED CONCRETE PIPE.

BRICK SEWER MANHOLE

TYPE 203-2

SANITARY SEWER DETAILS

NO SCALE

SSD-3

STATE OF CALIFORNIA - DEPARTMENT OF TRANSPORTATION
Caltrans® OFFICE OF DESIGN A

FUNCTIONAL SUPERVISOR: ASADOUR TERTERIAN
CALCULATED-DESIGNED BY: MARCELO DE LA FUENTE
CHECKED BY: MEDARDO DE LA CRUZ
REVISED BY: MDLF
DATE REVISED: 5/24/11

LAST REVISION 00-00-00
DATE PLOTTED => 30-JUN-2011
TIME PLOTTED => 18:10

Dist	COUNTY	ROUTE	POST MILES TOTAL PROJECT	SHEET No.	TOTAL SHEETS
07	LA	5	1.2/2.1	167	602

Medardo de la Cruz 3/14/11
REGISTERED CIVIL ENGINEER DATE

6-27-11
PLANS APPROVAL DATE

REGISTERED PROFESSIONAL ENGINEER MEDARDO DE LA CRUZ No. C61848 Exp. 6-30-11 CIVIL STATE OF CALIFORNIA

THE STATE OF CALIFORNIA OR ITS OFFICERS OR AGENTS SHALL NOT BE RESPONSIBLE FOR THE ACCURACY OR COMPLETENESS OF SCANNED COPIES OF THIS PLAN SHEET.

NOTES:

1. GENERAL
   - A. EXCEPT AS INDICATED HEREON OR ON THE PLANS, MANHOLES SHALL CONFORM TO SSD-1, PRECAST CONCRETE SEWER MANHOLE AND SSD-3, BRICK SEWER MANHOLE.
   - B. DIMENSION "D" SHALL BE THE SAME AS THE SIZE OF MANHOLE FRAME AND COVER TO BE USED.
   - C. THE CONTRACTOR MAY REUSE THE EXISTING MANHOLE FRAME AND COVER, UNLESS DAMAGED DURING THE WORK OR WHEN OTHERWISE SHOWN IN THE CONTRACT DOCUMENTS. ITEMS DAMAGED BY THE CONTRACTOR SHALL BE REPLACED WITH IDENTICAL NEW ITEMS AT NO EXPENSE TO THE AGENCY.
   - D. EXISTING STEPS LOCATED WITHIN REMOVAL LIMITS SHALL BE REPLACED. WHEN REMOVAL OF EXISTING STEPS BEYOND THE MANHOLE REMOVAL LIMITS IS SHOWN ON THE PLANS, THE STEPS SHALL BE REMOVED TO A DEPTH OF 2" BEYOND THE INSIDE FACE OF THE BRICK MANHOLE AND THE HOLES SHALL BE FILLED WITH CLASS "D" MORTAR.
2. RAISING EXISTING BRICK MANHOLES
   - A. BRICK MANHOLES TO BE RAISED LESS THAN 1′ MAY BE EXTEND VERTICALLY, PROVIDED THAT AT A DEPTH OF 2½" BELOW THE TOP OF THE MANHOLE AT ITS NEW ELEVATION, THE INSIDE DIAMETER OF THE MANHOLE IS 30" OR GREATER.
   - B. BRICK MANHOLES TO BE RAISED LESS THAN 3½" MAY BE RAISED BY APPLYING CLASS "D" MORTAR TO THE TOP OF THE EXISTING BRICKWORK. IF THE BRICK MANHOLE IS TO BE RAISED 3½" OR MORE, A NEW COURSE OR COURSES OF BRICKWORK SHALL BE PLACED ON TOP OF THE EXISTING BRICKWORK.
3. LOWERING EXISTING BRICK MANHOLES
   - A. WHERE A BRICK MANHOLE IS TO BE LOWERED LESS THAN 1′ THE FRAME MAY BE RESET ON THE EXISTING BRICKWORK AND THE 40" MINIMUM BRICKWORK RECONSTRUCTION OMITTED, PROVIDED THAT THE BASE OF THE FRAME DOES NOT OVERHANG THE BRICKWORK ON THE INSIDE SURFACE OF THE MANHOLE MORE THAN AN AVERAGE OF 1½" IN ANY QUADRANT NOR MORE THAN 2" AT ANY POINT.
4. RAISING EXISTING PRECAST CONCRETE SEWER MANHOLES
   - A. PRECAST CONCRETE MANHOLES TO BE RAISED LESS THAN 3" MAY BE RAISED BY APPLYING CLASS "D" MORTAR TO THE TOP OF THE EXISTING MANHOLE, PROVIDED THE TOTAL HEIGHT OF MORTAR, EXISTING AND NEWLY APPLIED, DOES NOT EXCEED 3"
   - B. WHERE THE PRECAST CONCRETE MANHOLE IS TO BE RAISED 3" OR MORE, OR WHERE THE TOTAL HEIGHT OF THE MORTAR, EXISTING AND NEWLY APPLIED, WOULD EXCEED 3", GRADE RINGS SHALL BE UTILIZED. CLASS "D" MORTAR MAY BE USED FOR FINAL ADJUSTMENT, BUT NOT MORE THAN 3" IN HEIGHT. WHERE RAISING THE MANHOLE WOULD RESULT IN THE UPPER SEGMENT OF THE SHAFT BEING MORE THAN 30" IN HEIGHT, REMOVE THE REDUCER AND THE UPPER SEGMENT OF THE SHAFT, INSTALL ADDITIONAL RINGS OR PIPE TO THE LOWER SEGMENT OF THE SHAFT, AND REINSTALL THE REDUCER AND GRADE RINGS AS REQUIRED.
5. LOWERING EXISTING PRECAST CONCRETE SEWER MANHOLES
   - A. REMOVE SUFFICIENT GRADE RINGS TO LOWER THE MANHOLES AS REQUIRED, APPLY CLASS "D" MORTAR TO A HEIGHT NOT EXCEEDING 3" FOR ADJUSTMENT TO FINAL GRADE.
   - B. WHERE REMOVAL OF GRADE RINGS WOULD RESULT IN THE UPPER SEGMENT OF THE SHAFT BEING LESS THAN 12" IN HEIGHT, REMOVE THE REDUCER AND SUFFICIENT SECTIONS OF THE LOWER SEGMENT OF THE SHAFT AND REINSTALL ANY NECESSARY SEGMENT OF THE LOWER SHAFT, THE REDUCER, AND THE GRADE RINGS TO CONFORM TO THE REQUIREMENTS OF THIS PLAN.
   - C. EXISTING GRADE RINGS NEED NOT BE REMOVED IF EXISTING MORTAR IS REMOVED, AND AT LEAST 1½" OF MORTAR MAY BE PLACED ON TOP OF THE EXISTING GRADE RINGS TO RESEAT THE FRAME.
6. REPLACEMENT OF BRICK REDUCER WITH PRECAST CONCRETE REDUCER AND SHAFT

   UNLESS OTHERWISE INDICATED ON THE PLANS, THE CONTRACTOR MAY INSTALL A PRECAST CONCENTRIC CONCRETE REDUCE, CONCRETE GRADE RINGS, AND CONCRETE PIPE IN LIEU OF RECONSTRUCTING A BRICK REDUCER, PROVIDED:
   - A. THE MAXIMUM ID OF SEWER PIPE CONNECTED TO THE MANHOLE DOES NOT EXCEED 8".
   - B. THE CONTRACTOR SECURES PRIOR APPROVAL FROM THE ENGINEER TO INSTALL THE CONCENTRIC REDUCER ONTO THE MANHOLE SHAFT. THE ENGINEER MAY, AS PART OF THE INSTALLATION REQUIREMENTS, REQUIRE THE CONTRACTOR TO COAT THE INSIDE OF THE REDUCER, RINGS, AND PIPE WITH AN APPROVED COATING.
   - C. THE CONCRETE GRADE RINGS, THE CONCRETE REDUCER, AND ANY CONCRETE PIPE SHALL BE JOINED TOGETHER AND BEDDED ONTO THE EXISTING BRICK MANHOLE WITH CLASS "D" MORTAR. THE DEPTH, WIDTH, AND THICKNESS OF THE MORTAR SHALL BE OF SUFFICIENT DIMENSIONS TO PROPERLY AND ADEQUATELY JOIN AND BED THE COMPONENT PARTS.

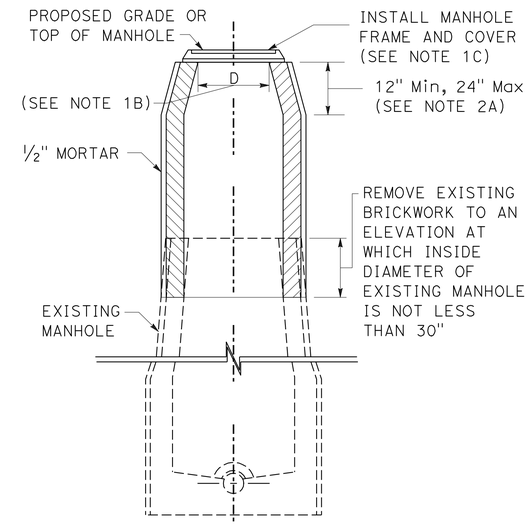

RAISING EXISTING BRICK MANHOLES

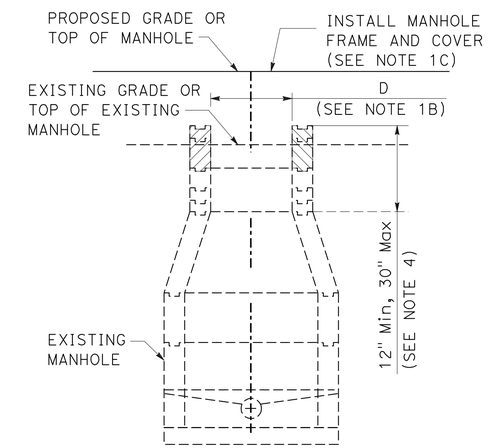

RAISING EXISTING PRECAST CONCRETE SEWER MANHOLES

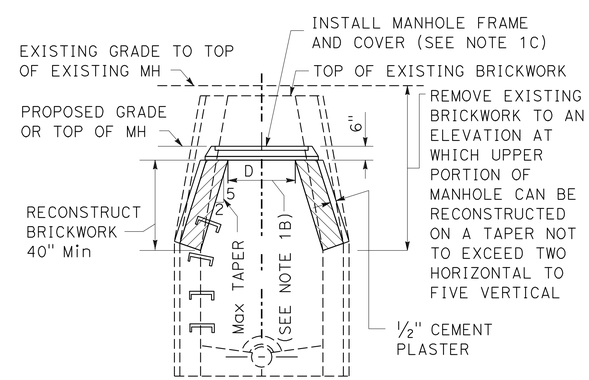

LOWERING EXISTING BRICK MANHOLES

BRICK MANHOLES

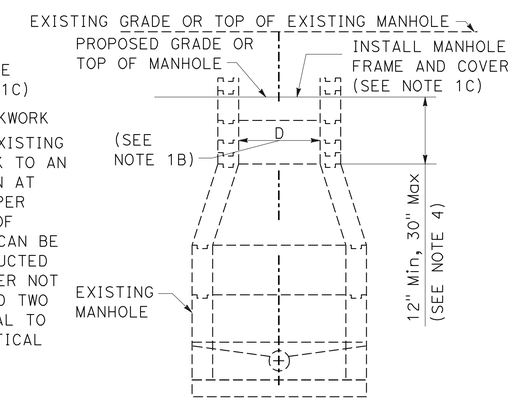

LOWERING EXISTING PRECAST CONCRETE SEWER MANHOLES

PRECAST CONCRETE SEWER MANHOLES

SEWER MANHOLE ADJUSTMENT

TYPE 205-2

SANITARY SEWER DETAILS

NO SCALE

SSD-4

STATE OF CALIFORNIA - DEPARTMENT OF TRANSPORTATION
Caltrans® OFFICE OF DESIGN A

FUNCTIONAL SUPERVISOR: ASADOUR TERTERIAN
CALCULATED-DESIGNED BY: MARCELO DE LA FUENTE
CHECKED BY: MEDARDO DE LA CRUZ
REVISED BY: MDLF
DATE REVISED: 5/24/11

LAST REVISION: 00-00-00
DATE PLOTTED => 30-JUN-2011
TIME PLOTTED => 18:10

Dist	COUNTY	ROUTE	POST MILES TOTAL PROJECT	SHEET No.	TOTAL SHEETS
07	LA	5	1.2/2.1	168	602

Medardo de la Cruz 3/14/11
REGISTERED CIVIL ENGINEER DATE

6-27-11
PLANS APPROVAL DATE

REGISTERED PROFESSIONAL ENGINEER
MEDARDO DE LA CRUZ
No. C61848
Exp. 6-30-11
CIVIL
STATE OF CALIFORNIA

THE STATE OF CALIFORNIA OR ITS OFFICERS OR AGENTS SHALL NOT BE RESPONSIBLE FOR THE ACCURACY OR COMPLETENESS OF SCANNED COPIES OF THIS PLAN SHEET.

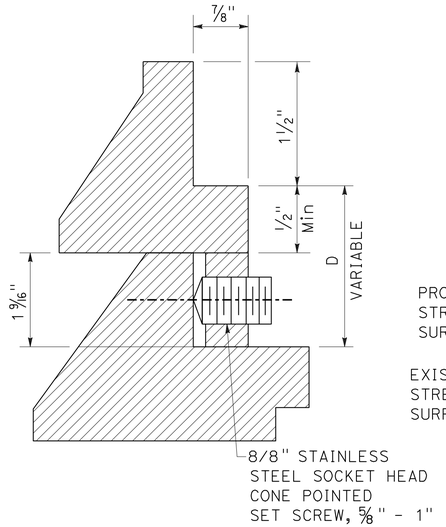

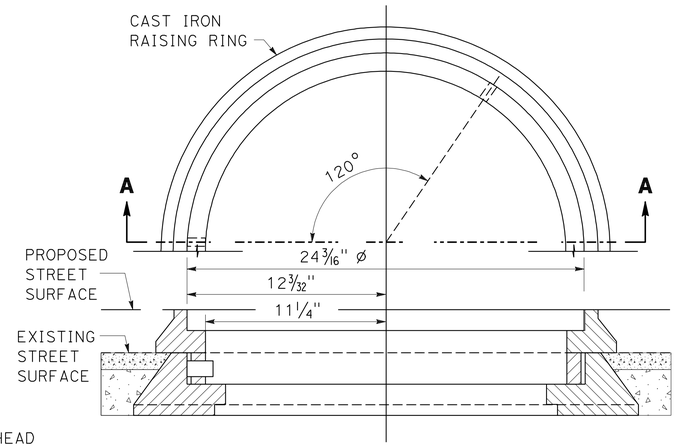

SECTION A-A

CAST IRON RAISING RINGS

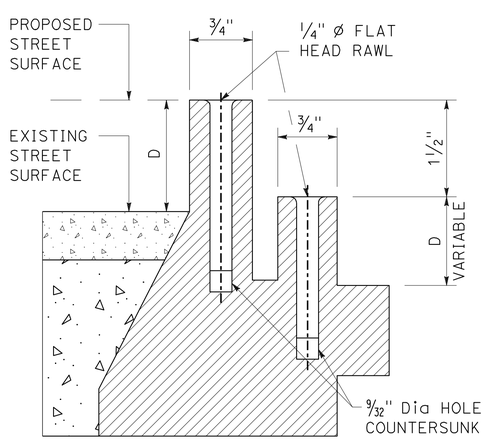

RAWL LENGTH EQUALS D + 1 1/2" Min

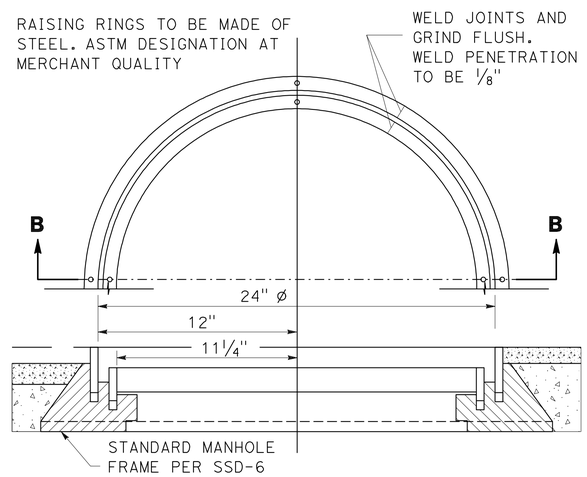

SECTION B-B

STEEL RAISING RINGS

NOTES:

1. MACHINE SEATS FROM CAST IRON RINGS.
2. THE METAL RAISING RINGS MAY BE USED IN LIEU OF THE REGULAR METHOD OF ADJUSTMENT UTILIZING MORTAR OR BRICK AND MORTAR UNDER THE FOLLOWING CONDITIONS.
   A. ONLY ONE ADJUSTMENT WITH RAISING RINGS WILL BE ALLOWED ON ANY MANHOLE.
   B. MAXIMUM "D" SHALL BE 3".

MANHOLE RAISING RINGS

TYPE 206-2

SANITARY SEWER DETAILS

NO SCALE

SSD-5

REVISED BY	DATE REVISED
MDLF	5/24/11

CALCULATED-DESIGNED BY: MARCELO DE LA FUENTE
CHECKED BY: MEDARDO DE LA CRUZ
FUNCTIONAL SUPERVISOR: ASADOUR TERTERIAN

STATE OF CALIFORNIA - DEPARTMENT OF TRANSPORTATION
Caltrans® OFFICE OF DESIGN A

LAST REVISION 00-00-00
DATE PLOTTED => 30-JUN-2011
TIME PLOTTED => 18:10

Dist	COUNTY	ROUTE	POST MILES TOTAL PROJECT	SHEET No.	TOTAL SHEETS
07	LA	5	1.2/2.1	169	602

Medardo de la Cruz 3/14/11
REGISTERED CIVIL ENGINEER DATE

6-27-11
PLANS APPROVAL DATE

REGISTERED PROFESSIONAL ENGINEER MEDARDO DE LA CRUZ No. C61848 Exp. 6-30-11 CIVIL STATE OF CALIFORNIA

THE STATE OF CALIFORNIA OR ITS OFFICERS OR AGENTS SHALL NOT BE RESPONSIBLE FOR THE ACCURACY OR COMPLETENESS OF SCANNED COPIES OF THIS PLAN SHEET.

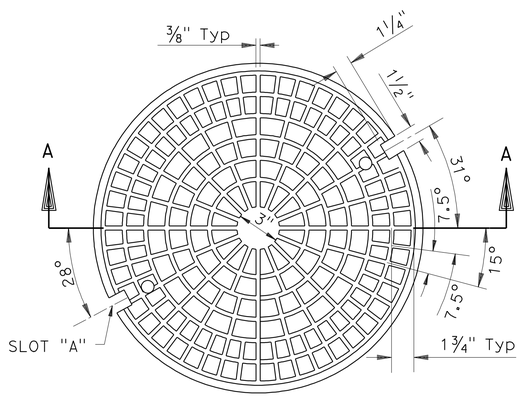

PLAN OF COVER
TOP VIEW

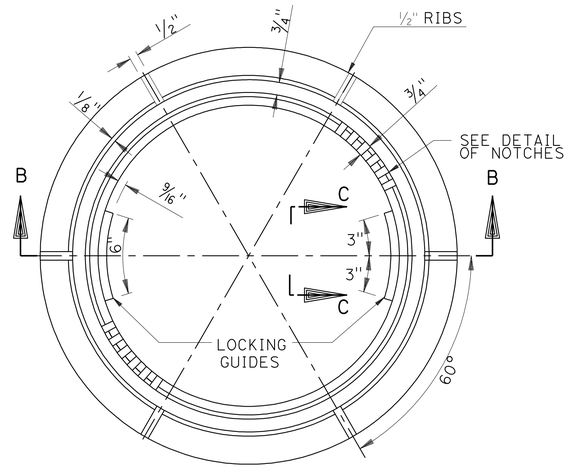

PLAN OF FRAME

NOTES:

1. COVER SHALL BE CAST WITH THE LETTER "D" FOR STORM DRAINS AND "S" FOR SEWERS AND LACSD IDENTIFICATION IN ACCORDANCE WITH INSTRUCTIONS FURNISHED BY THE LACSD AGENCY. THE LETTER "D" OR "S" SHALL BE APPROXIMATELY 2½" HIGH WITH ½" LINE WIDTH AND PLACED IN THE CENTER OF THE COVER. ALL LETTERS SHALL BE FLUSH WITH THE FINISHED SURFACE OF THE COVER.

2. COVER FOR MANHOLES LOCATED IN EASEMENTS, ALLEYS, PARKWAYS AND ALL OTHER PLACES EXCEPT PAVED STREETS SHALL BE PROVIDED WITH SOCKET SET SCREW LOCKING DEVICES. DRILL AND TAP TWO HOLES TO A DEPTH OF 1" AT 90 DEGREES TO PICK HOLE AND INSTALL ¾" X ¾" STAINLESS STEEL SOCKET SET SCREWS WITH ⅜" RECESSED HEX HEAD. ALL THREADS SHALL BE NC.

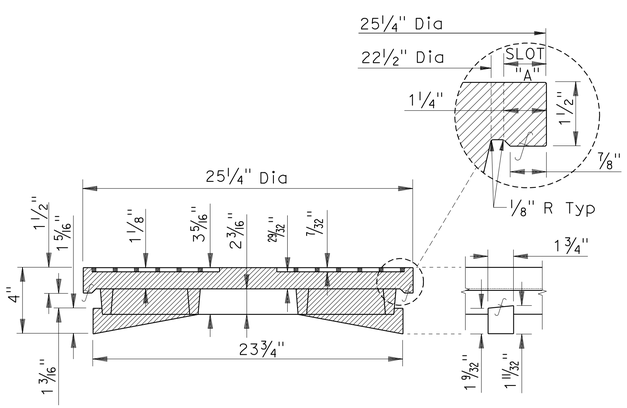

SECTION A-A

COVER LUG
END VIEW

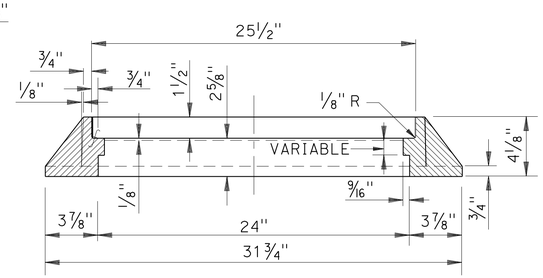

SECTION B-B

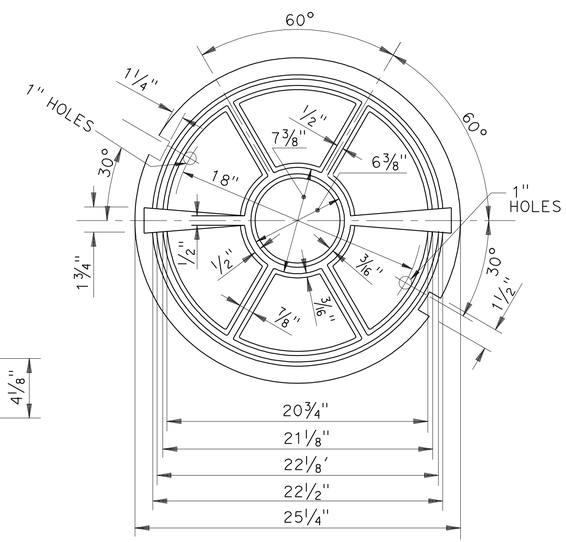

PLAN OF COVER
BOTTOM VIEW

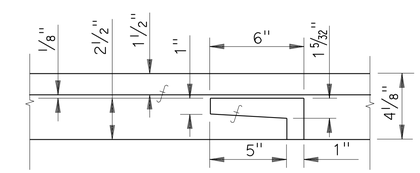

LOCKING GUIDE
SIDE VIEW C-C

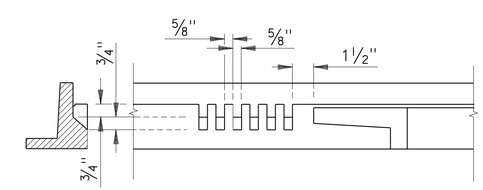

DETAIL OF NOTCHES

24" MANHOLE FRAME AND
COVER LOCKING TYPE

TYPE 210-3

SANITARY SEWER DETAILS

NO SCALE

SSD-6

STATE OF CALIFORNIA - DEPARTMENT OF TRANSPORTATION
Caltrans® OFFICE OF DESIGN A

FUNCTIONAL SUPERVISOR: ASADOUR TERTERIAN
CALCULATED-DESIGNED BY: MARCELO DE LA FUENTE
CHECKED BY: MEDARDO DE LA CRUZ
REVISED BY: MDLF
DATE REVISED: 5/24/11

LAST REVISION 00-00-00
DATE PLOTTED => 30-JUN-2011
TIME PLOTTED => 18:10

Dist	COUNTY	ROUTE	POST MILES TOTAL PROJECT	SHEET No.	TOTAL SHEETS
07	LA	5	1.2/2.1	170	602

Medardo de la Cruz 3/14/11
REGISTERED CIVIL ENGINEER DATE

6-27-11
PLANS APPROVAL DATE

REGISTERED PROFESSIONAL ENGINEER
MEDARDO DE LA CRUZ
No. C61848
Exp. 6-30-11
CIVIL
STATE OF CALIFORNIA

THE STATE OF CALIFORNIA OR ITS OFFICERS OR AGENTS SHALL NOT BE RESPONSIBLE FOR THE ACCURACY OR COMPLETENESS OF SCANNED COPIES OF THIS PLAN SHEET.

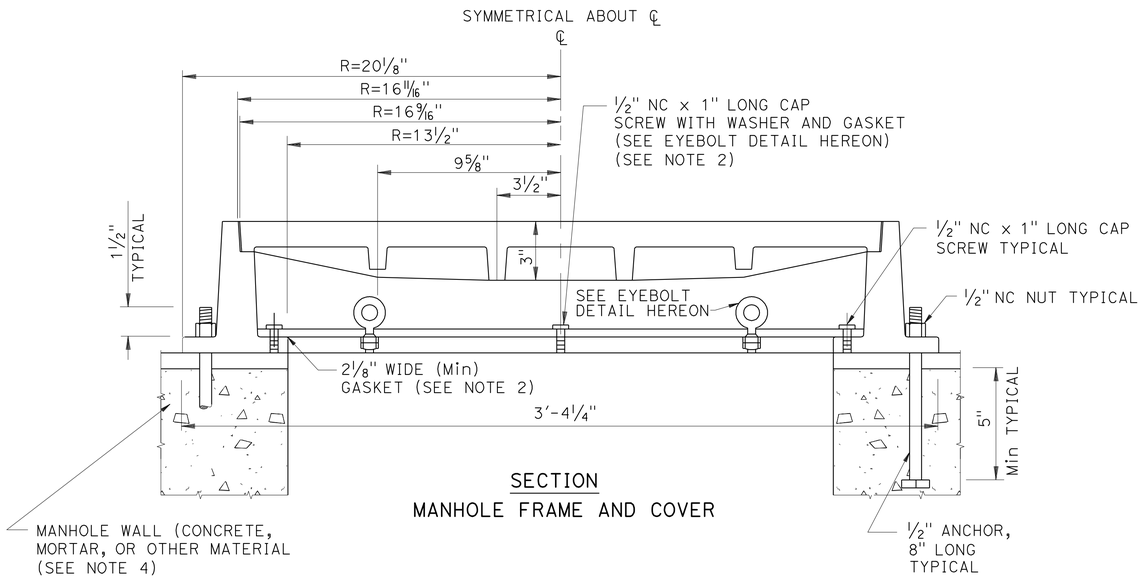

SECTION
MANHOLE FRAME AND COVER

NOTES:

1. EXCEPT AS OTHERWISE INDICATED THE MANHOLE FRAME AND COVER SHALL CONFORM TO SSD-10, 30" MANHOLE FRAME AND COVER.
2. GASKET MATERIAL SHALL BE 1/16" THICK NEOPRENE RUBBER. PRESSURE PLATE GASKET SHALL BE 2'-7 1/4" OD.
3. ALL NUTS AND BOLTS SHALL BE TIGHTENED TO A MINIMUM TORQUE OF 25 FOOT-POUNDS.
4. FRAME SHALL BE SET ON 1/2" THICK MINIMUM WET MORTAR BASE, CLASS "B" MORTAR.

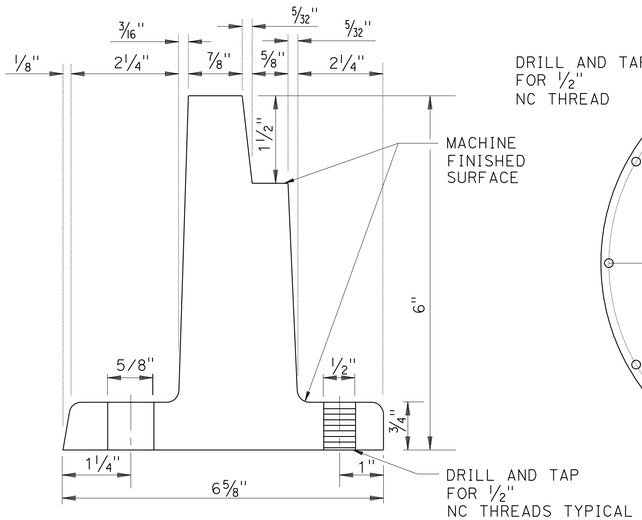

DETAIL OF FRAME

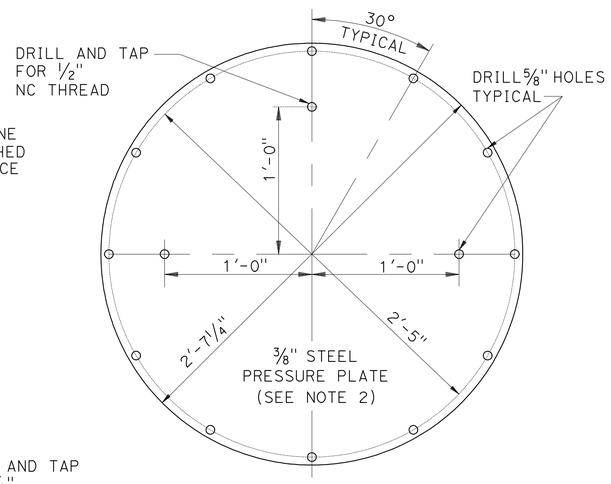

PRESSURE PLATE

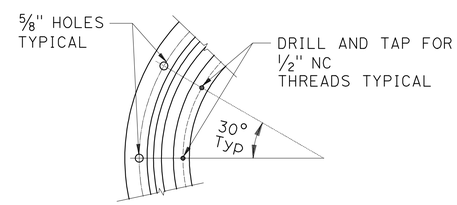

DETAIL OF BOLT HOLE
SPACING IN FRAME

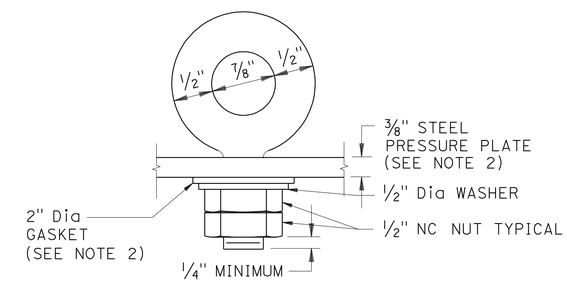

EYEBOLT DETAIL
(2 REQUIRED)

MANHOLE FRAME AND COVER
PRESSURE TYPE

TYPE 211-2

SANITARY SEWER DETAILS
NO SCALE
SSD-7

STATE OF CALIFORNIA - DEPARTMENT OF TRANSPORTATION
Caltrans® OFFICE OF DESIGN A
FUNCTIONAL SUPERVISOR: ASADOUR TERTERIAN
CALCULATED-DESIGNED BY: MARCELO DE LA FUENTE
CHECKED BY: MEDARDO DE LA CRUZ
REVISED BY: MDLF
DATE REVISED: 5/24/11

LAST REVISION 00-00-00 | DATE PLOTTED => 30-JUN-2011 | TIME PLOTTED => 18:10

Dist	COUNTY	ROUTE	POST MILES TOTAL PROJECT	SHEET No.	TOTAL SHEETS
07	LA	5	1.2/2.1	171	602

Medardo de la Cruz 3/14/11
REGISTERED CIVIL ENGINEER DATE

6-27-11
PLANS APPROVAL DATE

REGISTERED PROFESSIONAL ENGINEER
MEDARDO DE LA CRUZ
No. C61848
Exp. 6-30-11
CIVIL
STATE OF CALIFORNIA

THE STATE OF CALIFORNIA OR ITS OFFICERS OR AGENTS SHALL NOT BE RESPONSIBLE FOR THE ACCURACY OR COMPLETENESS OF SCANNED COPIES OF THIS PLAN SHEET.

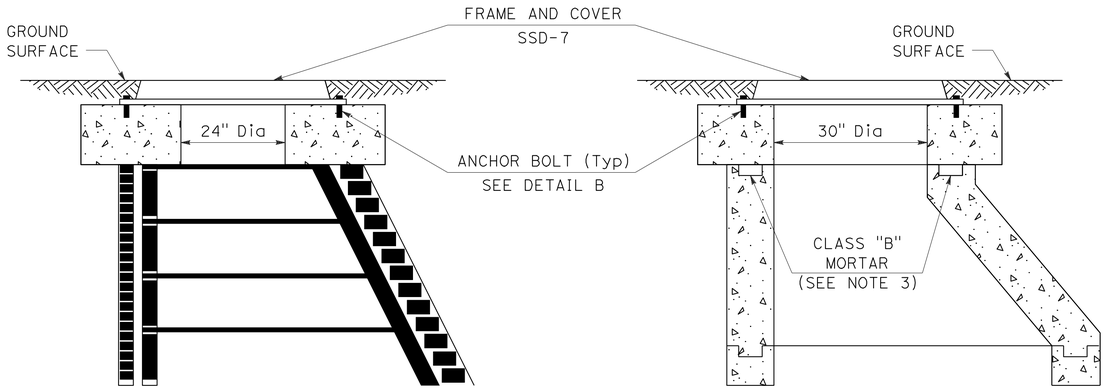

BRICK MANHOLE SHAFT

PRECAST CONCRETE CONE

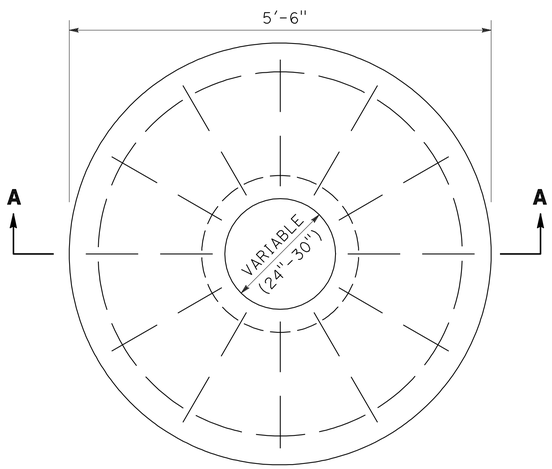

PLAN

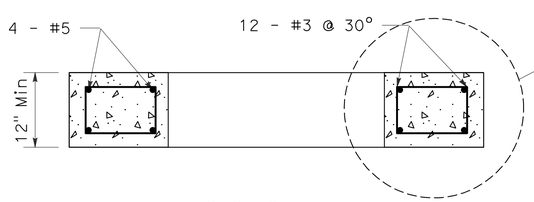

SECTION A-A

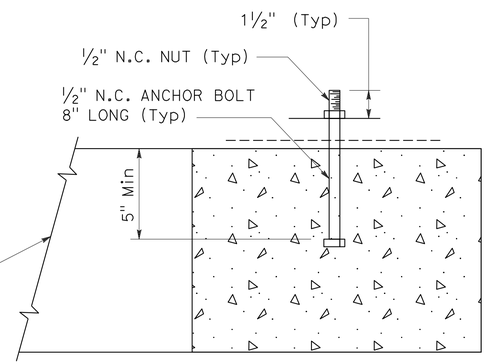

DETAIL B

NOTES:

1. ANCHOR SYSTEM DESIGNED FOR LESS THAN 10' OF HEAD.
2. MINIMUM EMBEDMENT OF ½" ø ANCHOR BOLT WITH HEAD SHALL BE 5".
3. SET CONCRETE ANCHOR ON WET, CLASS "B" MORTAR ON TOP OF BRICK MANHOLE SHAFT OR PRECAST CONCRETE CONE.
4. NUTS ON ANCHOR BOLTS SHALL BE TIGHTENED TO A MINIMUN TORQUE OF 25 FOOT-POUNDS.

ANCHOR SYSTEM FOR
PRESSURE COVER

TYPE 212-2

SANITARY SEWER DETAILS

NO SCALE

SSD-8

REVISED BY	MDLF
DATE REVISED	5/24/11
CALCULATED-DESIGNED BY	MARCELO DE LA FUENTE
CHECKED BY	MEDARDO DE LA CRUZ
FUNCTIONAL SUPERVISOR	ASADOUR TERTERIAN

STATE OF CALIFORNIA - DEPARTMENT OF TRANSPORTATION
Caltrans OFFICE OF DESIGN A

LAST REVISION 00-00-00 | DATE PLOTTED => 30-JUN-2011 | TIME PLOTTED => 18:11

Dist	COUNTY	ROUTE	POST MILES TOTAL PROJECT	SHEET No.	TOTAL SHEETS
07	LA	5	1.2/2.1	172	602

Medardo de la Cruz 3/14/11
REGISTERED CIVIL ENGINEER DATE

6-27-11
PLANS APPROVAL DATE

REGISTERED PROFESSIONAL ENGINEER MEDARDO DE LA CRUZ No. C61848 Exp. 6-30-11 CIVIL STATE OF CALIFORNIA

THE STATE OF CALIFORNIA OR ITS OFFICERS OR AGENTS SHALL NOT BE RESPONSIBLE FOR THE ACCURACY OR COMPLETENESS OF SCANNED COPIES OF THIS PLAN SHEET.

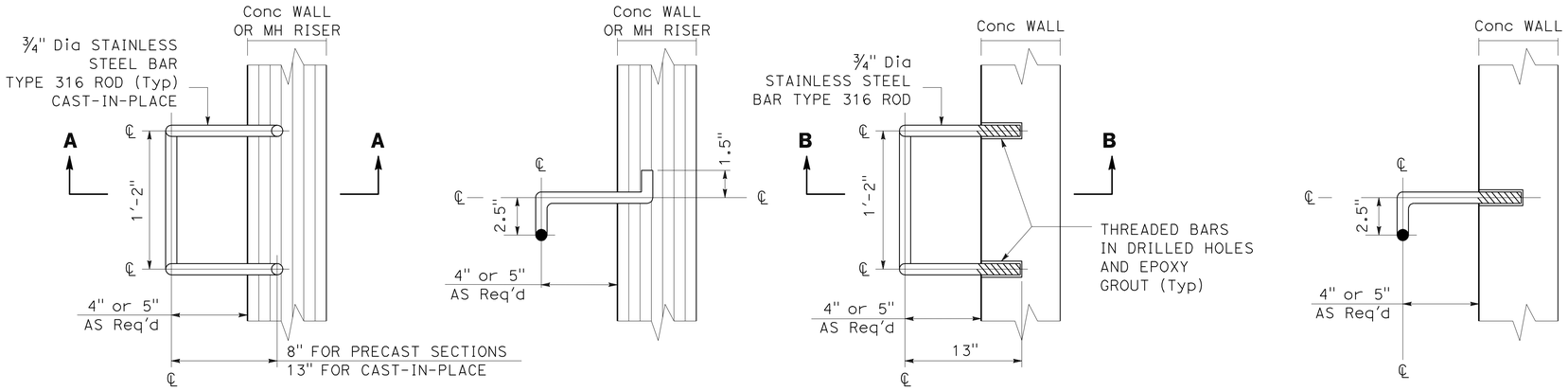

TYPE I MANHOLE STEP

TYPE II MANHOLE STEP

STANDARD MANHOLE STEP

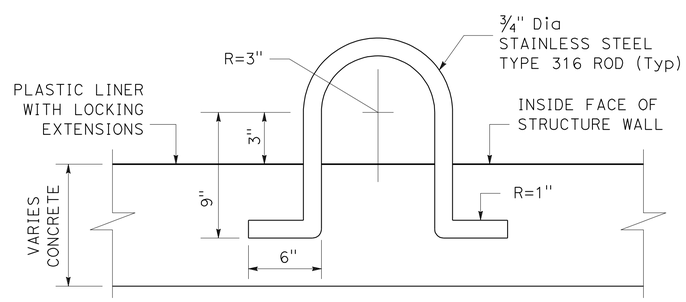

FOR CONCRETE STRUCTURE OR TYPE "A" MANHOLE WALL

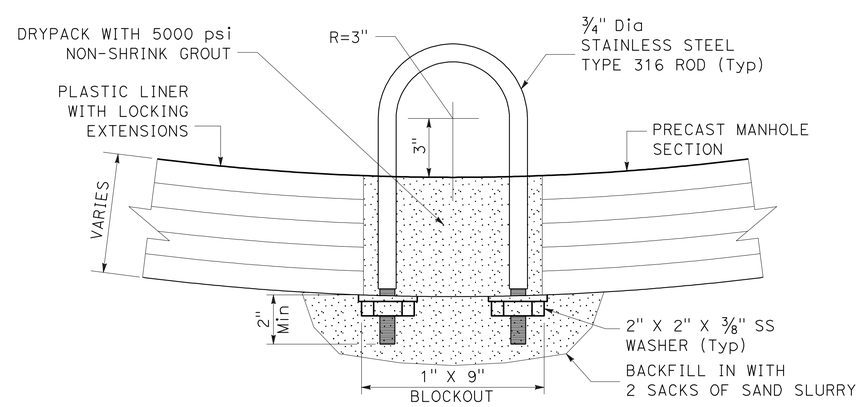

FOR PRECAST MANHOLE SECTION OR CONCRETE WALL LESS THAN 102

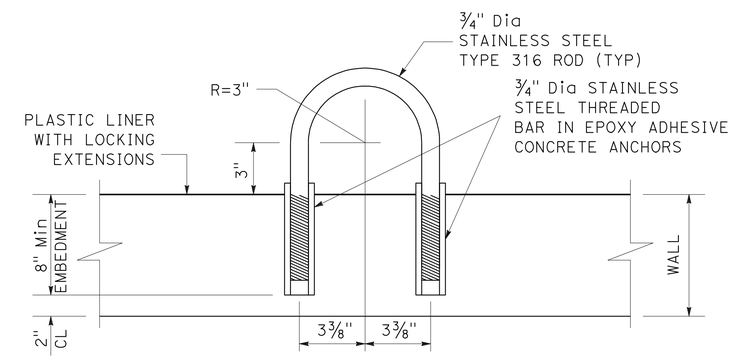

STANDARD PULL RING

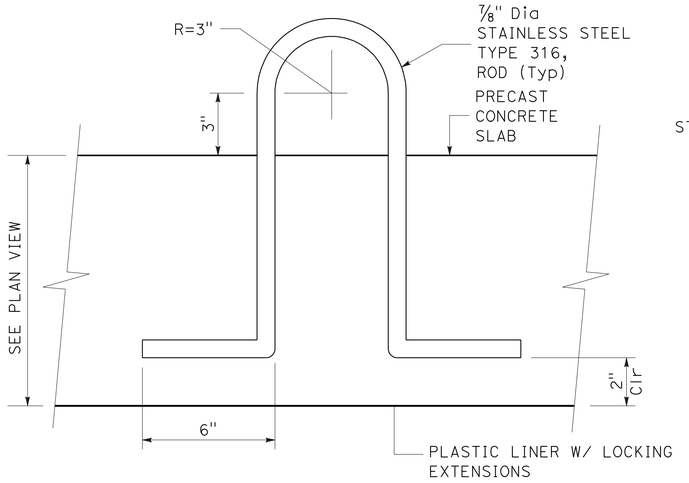

TYPE I LIFTING EYE DETAIL

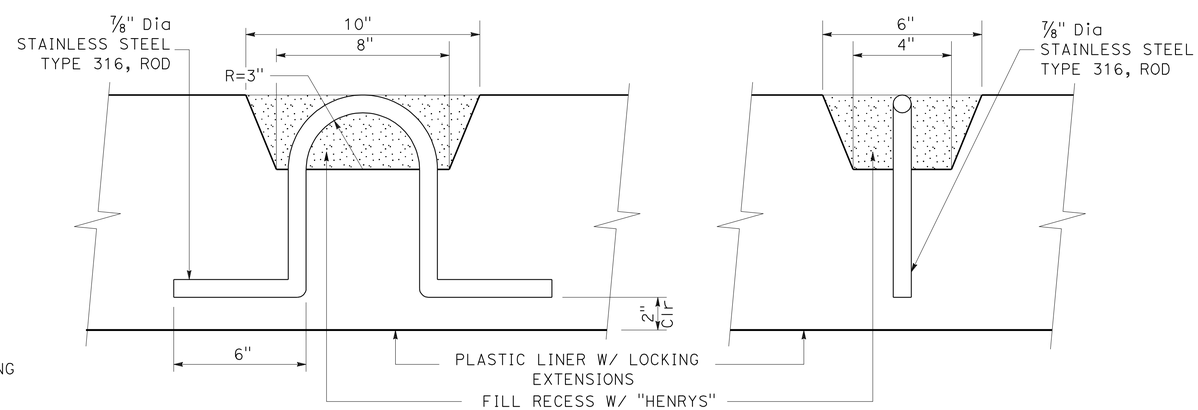

SECTION A-A

SECTION B-B

STANDARD LIFTING EYE

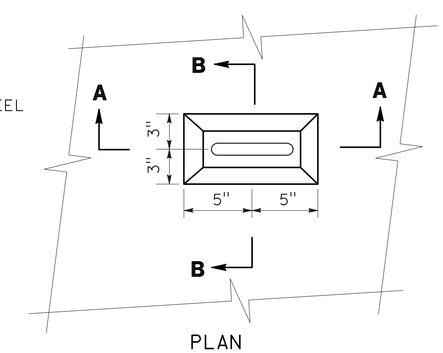

PLAN

SANITARY SEWER DETAILS

NO SCALE

SSD-9

STATE OF CALIFORNIA - DEPARTMENT OF TRANSPORTATION
OFFICE OF DESIGN A

FUNCTIONAL SUPERVISOR: ASADOUR TERTERIAN
CALCULATED-DESIGNED BY: MARCELO DE LA FUENTE
CHECKED BY: MEDARDO DE LA CRUZ
REVISED BY
DATE REVISED

LAST REVISION DATE PLOTTED => 30-JUN-2011
00-00-00 TIME PLOTTED => 18:11

BORDER LAST REVISED 7/2/2010
USERNAME => trstrk
DGN FILE => 721591jc009.dgn
RELATIVE BORDER SCALE IS IN INCHES 0 1 2 3
UNIT 1799
PROJECT NUMBER & PHASE 07000018311

Dist	COUNTY	ROUTE	POST MILES TOTAL PROJECT	SHEET No.	TOTAL SHEETS
07	LA	5	1.2/2.1	173	602

Medardo de la Cruz 3/14/11
REGISTERED CIVIL ENGINEER DATE

6-27-11
PLANS APPROVAL DATE

REGISTERED PROFESSIONAL ENGINEER
MEDARDO DE LA CRUZ
No. C61848
Exp. 6-30-11
CIVIL
STATE OF CALIFORNIA

THE STATE OF CALIFORNIA OR ITS OFFICERS OR AGENTS SHALL NOT BE RESPONSIBLE FOR THE ACCURACY OR COMPLETENESS OF SCANNED COPIES OF THIS PLAN SHEET.

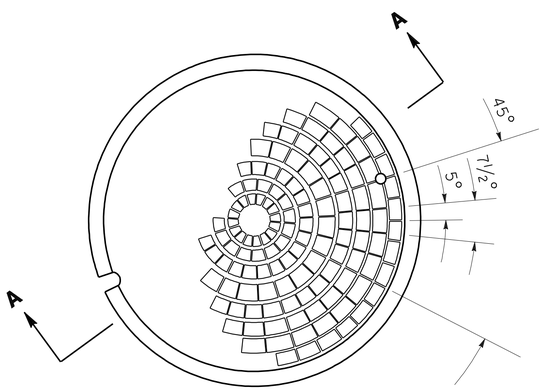

TOP OF COVER

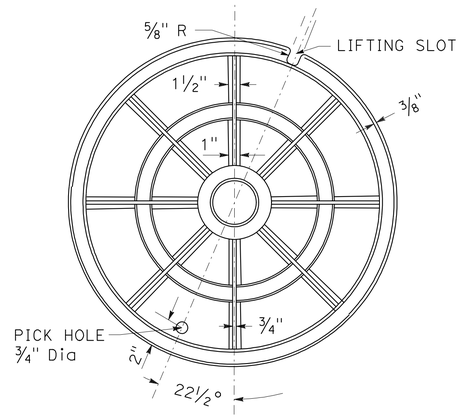

BOTTOM OF COVER

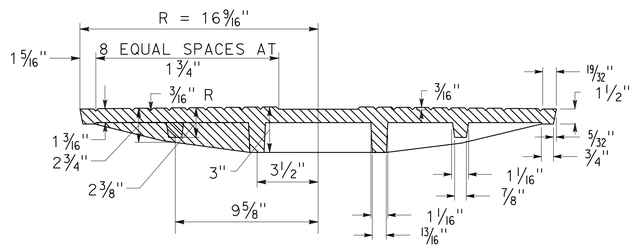

SECTION A-A

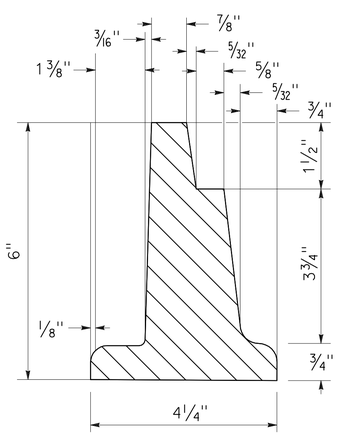

FRAME DETAIL

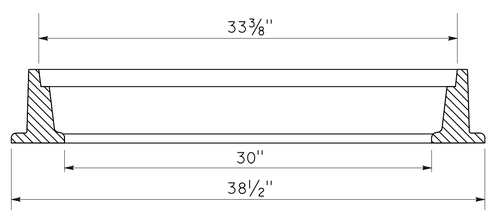

SECTION THRU FRAME

NOTES:

1. COVERS SHALL BE CAST WITH THE LETTER "D" FOR STORM DRAINS AND "S" FOR SEWERS, AND LACSD IDENTIFICATION IN ACCORDANCE WITH INSTRUCTIONS FURNISHED BY LACSD AGENCY. THE LETTER "D" OR "S" SHALL BE APPROXIMATELY 2½" HIGH WITH ½" LINE WIDTH, AND PLACED IN THE CENTER OF THE COVER. ALL LETTERS SHALL BE FLUSH WITH THE FINISHED SURFACE OF THE COVER.
2. COVERS FOR MANHOLES LOCATED IN EASEMENTS, ALLEYS, PARKWAYS, AND ALL PLACES OTHER THAN PAVED STREETS SHALL BE PROVIDED WITH SOCKET- SET SCREW LOCKING DEVICES. DRILL AND TAP TWO HOLES TO A DEPTH OF 1" AT 90 DEGRESS TO PICK HOLE AND INSTALL ¾" X ¾" STAINLESS STEEL SOCKETSET SCREWS WITH ⅜" RECESSED HEX HEAD. ALL THREADS SHALL BE N.C.

30" MANHOLE FRAME AND COVER

TYPE 632-3

SANITARY SEWER DETAILS

NO SCALE

SSD-10

STATE OF CALIFORNIA - DEPARTMENT OF TRANSPORTATION
Caltrans® OFFICE OF DESIGN A

FUNCTIONAL SUPERVISOR: ASADOUR TERTERIAN
CALCULATED-DESIGNED BY: MARCELO DE LA FUENTE
CHECKED BY: MEDARDO DE LA CRUZ
REVISED BY: MDLF
DATE REVISED: 5/24/11

LAST REVISION 00-00-00
DATE PLOTTED => 30-JUN-2011
TIME PLOTTED => 18:11

Dist	COUNTY	ROUTE	POST MILES TOTAL PROJECT	SHEET No.	TOTAL SHEETS
07	LA	5	1.2/2.1	174	602

REGISTERED CIVIL ENGINEER — DATE 03/17/11

PLANS APPROVAL DATE 6-27-11

REGISTERED PROFESSIONAL ENGINEER — DON LUU No. C62286 Exp. 9/30/11 CIVIL — STATE OF CALIFORNIA

THE STATE OF CALIFORNIA OR ITS OFFICERS OR AGENTS SHALL NOT BE RESPONSIBLE FOR THE ACCURACY OR COMPLETENESS OF SCANNED COPIES OF THIS PLAN SHEET.

NOTES:

1. LOCATIONS OF UTILITY FACILITIES SHOWN ON THESE PLANS ARE APPROXIMATE AND SHALL BE VERIFIED BY THE CONTRACTOR PRIOR TO CONSTRUCTIONS.
2. FOR ACCURATE RIGHT OF WAY DATA, CONTACT RIGHT OF WAY ENGINEERING AT THE DISTRICT OFFICE.
3. UTILITY OWNER FOR THIS PROJECT:
   POWER-SOUTHERN CALIFORNIA EDISON (SCE)
   WATER-SANTA FE SPRINGS MUNICIPAL WATER (SFS WTR)
   TELEPHONE-VERIZON (VZN)
   GAS-SOUTHERN CALIFORNIA GAS COMPANY (SCG)
   CHEVRON PIPE LINE COMPANY (CHEVRON)
   SEWER-LOS ANGELES SANITATION DISTRICT (LASD)

ABBREVIATIONS:

ACD	- ASPHALT CEMENT DUCT	HPM	- HIGH PRESSURE MAIN
Asb	- ASBESTOS	MFN	- MICRO FIBER NETWORK
Bu	- BURIED	M	- MEDIUM
Bu Ca	- BURIED CABLE	Nat Gaso	- NATURAL GASOLINE
CA, CAL	- CALIFORNIA	NS	- NORTH SOUTH
Ca Ba	- CATCH BASIN	O	- OIL
CF	- CURB FACE	PM	- PLASTIC MEDIUM
CO	- COMPANY	San Swr	- SANITARY SEWER
Comm	- COMMUNICATION	So	- SOUTHERN
C/L	- CENTER LINE	SN	- SOUTH OF NORTH
Csg	- CASING	Stl	- STEEL
DIP	- DUCTILE IRON PIPE	Trans P	- TRANSMISSION POLE
F/O	- FIBER OPTIC	UB	- UTILITY BOX
FIS	- FIELD IDENTIFIED STRUCTURE	UG	- UNDER GROUND
Gaso	- GASOLINE	WE	- WEST EAST
HB	- HORIZONTAL BEND	Wtr	- WATER
HP	- HIGH PRESSURE		

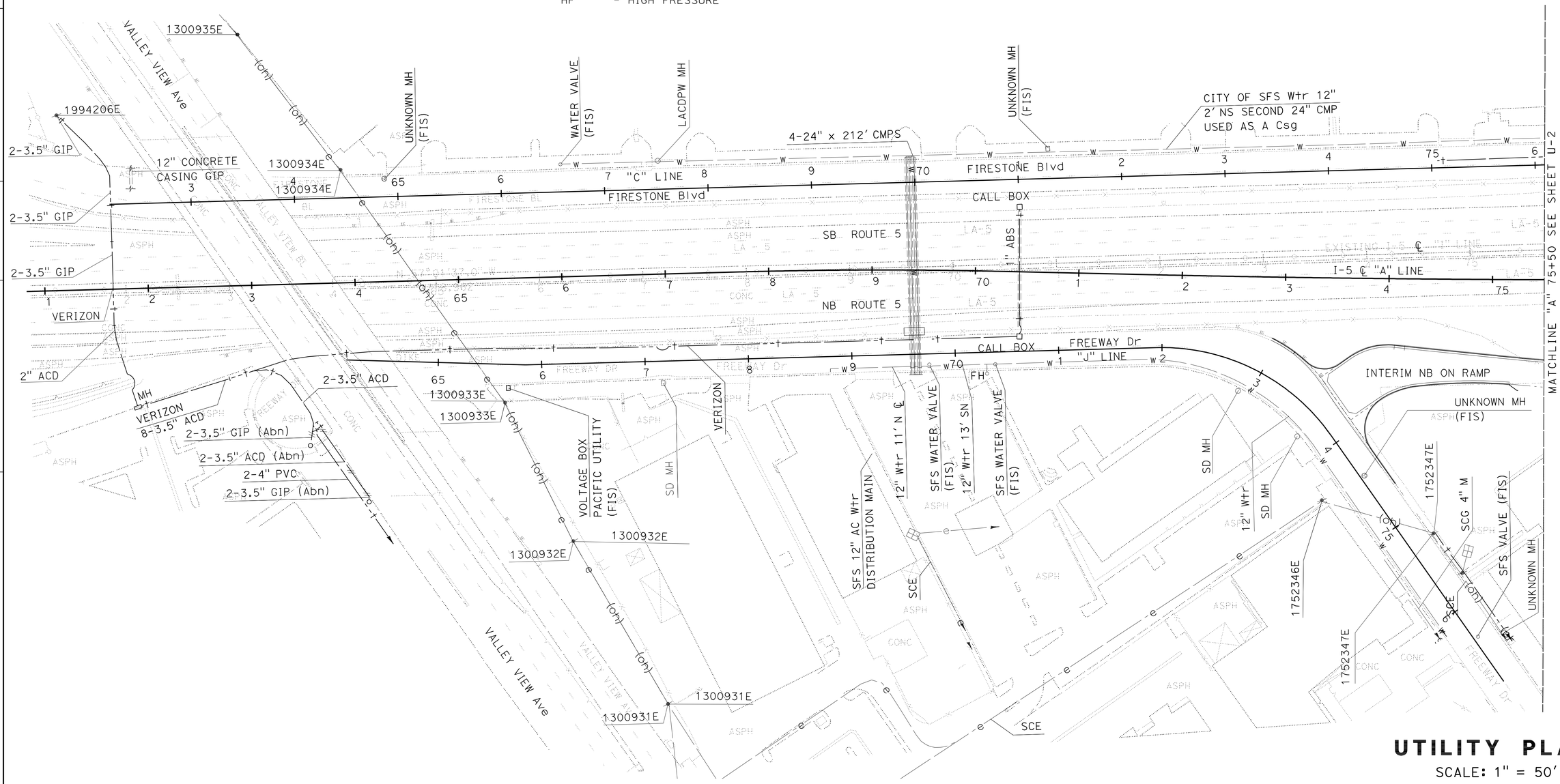

UTILITY PLAN

SCALE: 1" = 50'

U-1

THIS PLAN ACCURATE FOR EXISTING UTILITIES INFORMATION ONLY.

STATE OF CALIFORNIA - DEPARTMENT OF TRANSPORTATION — Caltrans ENGINEERING SERVICES

FUNCTIONAL SUPERVISOR: PARVIZ YEGANEH

CALCULATED-DESIGNED BY: DON LUU — CHECKED BY: DON LUU — REVISED BY — DATE REVISED

LAST REVISION 00-00-00 — DATE PLOTTED => 30-JUN-2011 — TIME PLOTTED => 18:11

Dist	COUNTY	ROUTE	POST MILES TOTAL PROJECT	SHEET No.	TOTAL SHEETS
07	LA	5	1.2/2.1	175	602

REGISTERED CIVIL ENGINEER 03/17/11 DATE

6-27-11
PLANS APPROVAL DATE

REGISTERED PROFESSIONAL ENGINEER DON LUU No. C62286 Exp. 9/30/11 CIVIL STATE OF CALIFORNIA

THE STATE OF CALIFORNIA OR ITS OFFICERS OR AGENTS SHALL NOT BE RESPONSIBLE FOR THE ACCURACY OR COMPLETENESS OF SCANNED COPIES OF THIS PLAN SHEET.

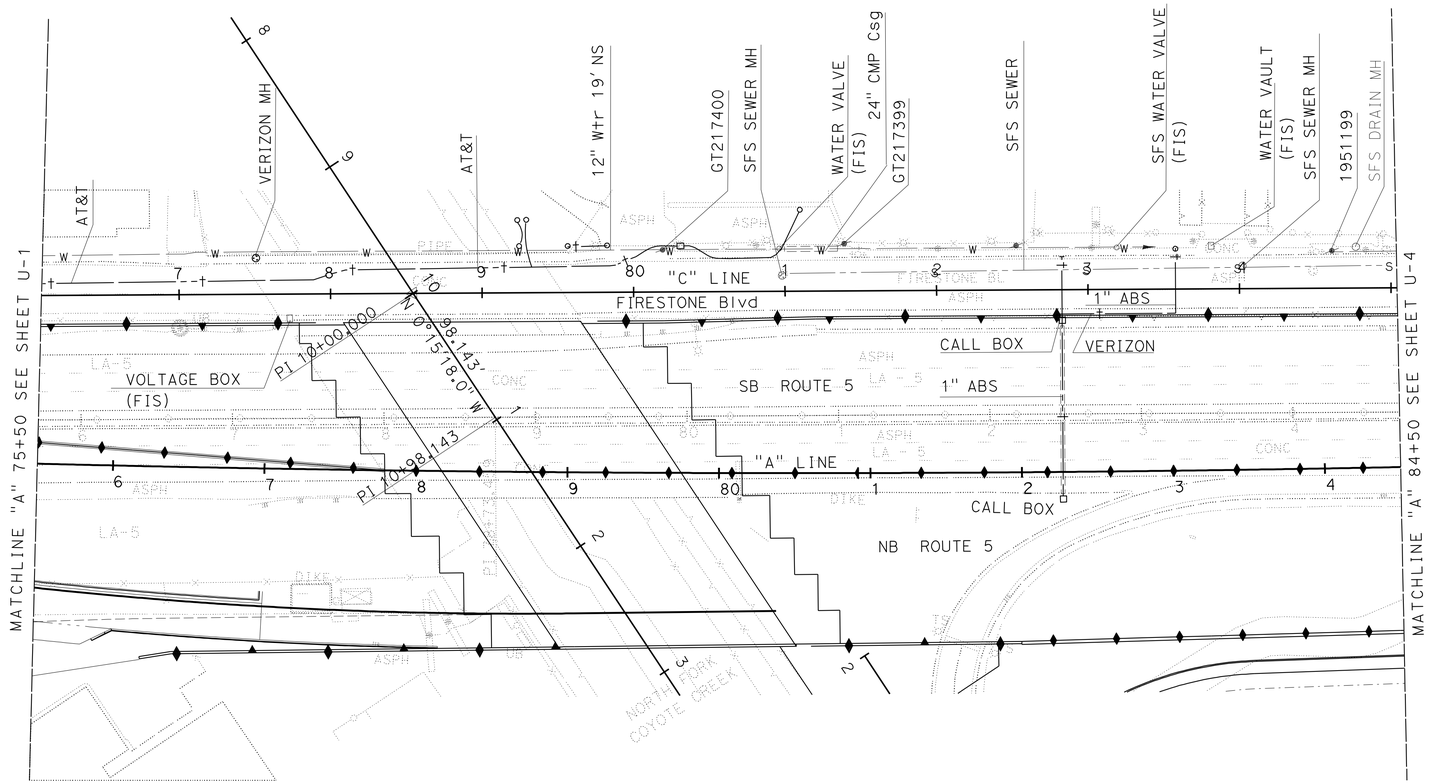

UTILITY PLAN

SCALE: 1" = 50'

U-2

THIS PLAN ACCURATE FOR EXISTING UTILITIES INFORMATION ONLY.

STATE OF CALIFORNIA - DEPARTMENT OF TRANSPORTATION
Caltrans ENGINEERING SERVICES

FUNCTIONAL SUPERVISOR: PARVIZ YEGANEH
CALCULATED-DESIGNED BY: DON LUU
CHECKED BY: DON LUU
REVISED BY
DATE REVISED

LAST REVISION 00-00-00
DATE PLOTTED => 30-JUN-2011
TIME PLOTTED => 18:11

Dist	COUNTY	ROUTE	POST MILES TOTAL PROJECT	SHEET No.	TOTAL SHEETS
07	LA	5	1.2/2.1	176	602

REGISTERED CIVIL ENGINEER 03/17/11 DATE

6-27-11
PLANS APPROVAL DATE

REGISTERED PROFESSIONAL ENGINEER
DON LUU
No. C62286
Exp. 9/30/11
CIVIL
STATE OF CALIFORNIA

THE STATE OF CALIFORNIA OR ITS OFFICERS OR AGENTS SHALL NOT BE RESPONSIBLE FOR THE ACCURACY OR COMPLETENESS OF SCANNED COPIES OF THIS PLAN SHEET.

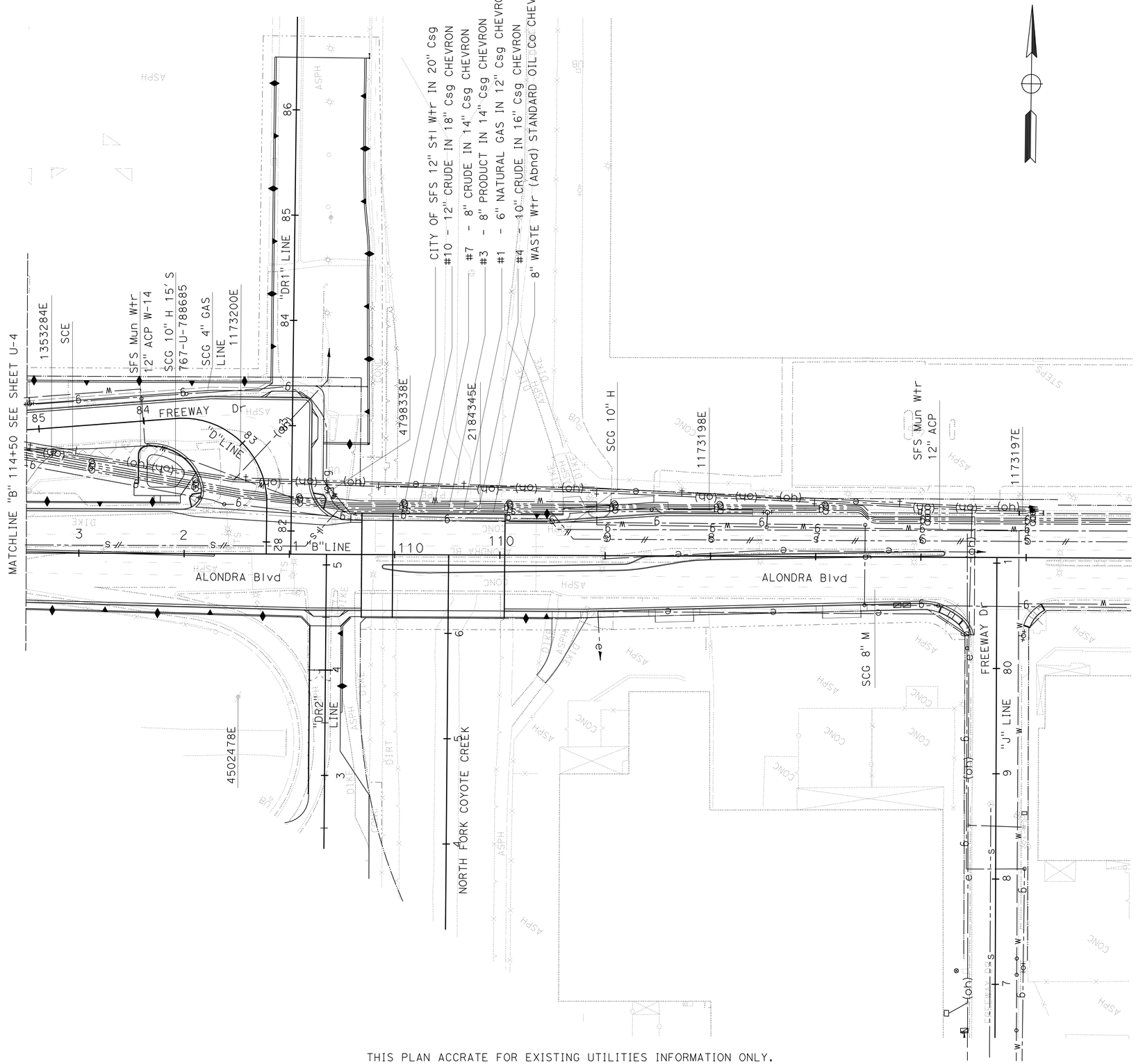

THIS PLAN ACCRATE FOR EXISTING UTILITIES INFORMATION ONLY.

UTILITY PLAN

SCALE: 1" = 50'

U-3

STATE OF CALIFORNIA - DEPARTMENT OF TRANSPORTATION
Caltrans ENGINEERING SERVICES

FUNCTIONAL SUPERVISOR: PARVIZ YEGANEH
CALCULATED-DESIGNED BY: DON LUU
CHECKED BY: DON LUU
REVISED BY
DATE REVISED

LAST REVISION 00-00-00
DATE PLOTTED => 30-JUN-2011
TIME PLOTTED => 18:11

Dist	COUNTY	ROUTE	POST MILES TOTAL PROJECT	SHEET No.	TOTAL SHEETS
07	LA	5	1.2/2.1	177	602

REGISTERED CIVIL ENGINEER 03/17/11 DATE

6-27-11
PLANS APPROVAL DATE

REGISTERED PROFESSIONAL ENGINEER
DON LUU
No. C62286
Exp. 9/30/11
CIVIL
STATE OF CALIFORNIA

THE STATE OF CALIFORNIA OR ITS OFFICERS OR AGENTS SHALL NOT BE RESPONSIBLE FOR THE ACCURACY OR COMPLETENESS OF SCANNED COPIES OF THIS PLAN SHEET.

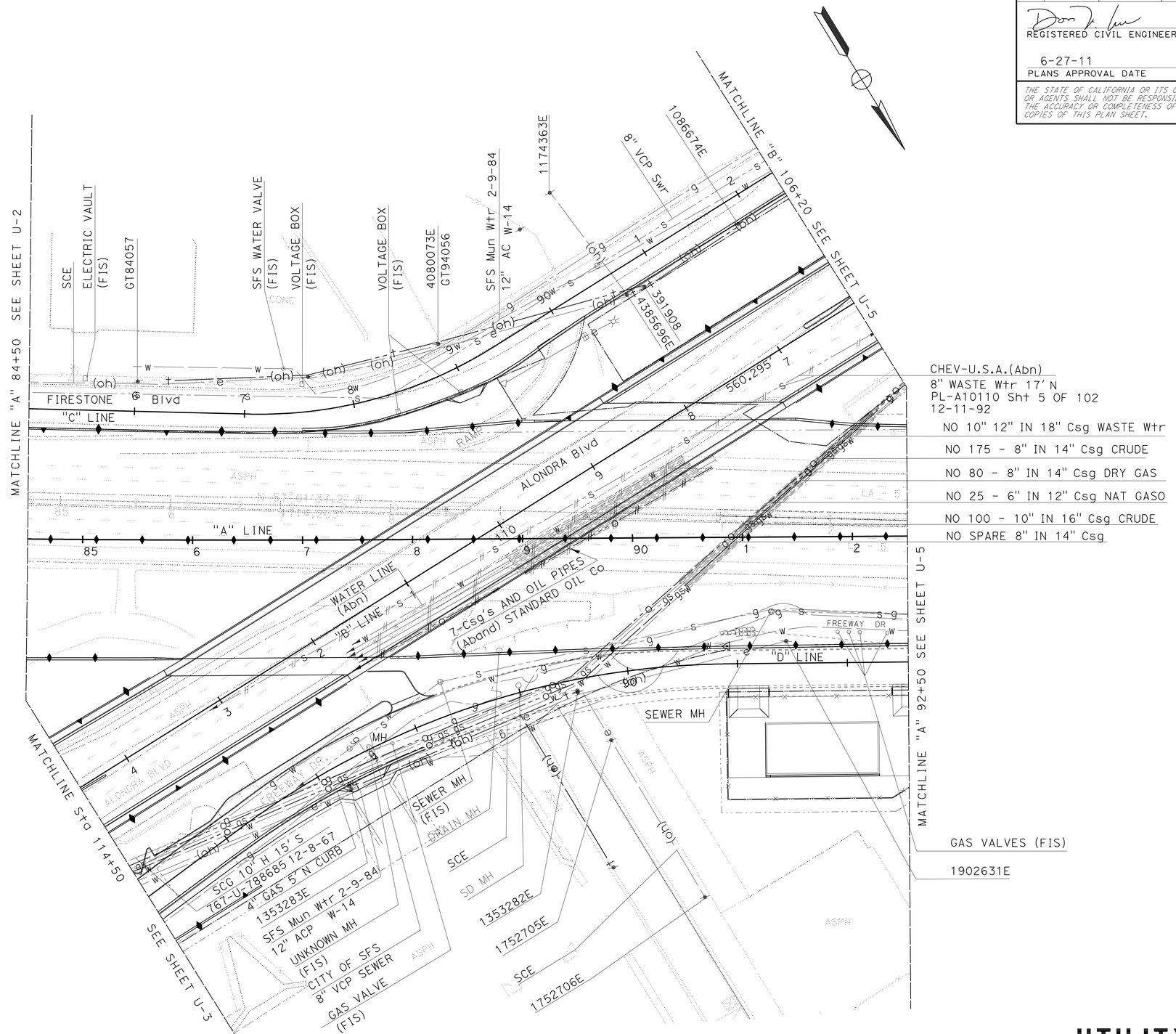

UTILITY PLAN

SCALE: 1" = 50'

U-4

THIS PLAN ACCURATE FOR EXISTING UTILITIES INFORMATION ONLY.

STATE OF CALIFORNIA - DEPARTMENT OF TRANSPORTATION
Caltrans ENGINEERING SERVICES

FUNCTIONAL SUPERVISOR: PARVIZ YEGANEH

CALCULATED-DESIGNED BY: DON LUU
CHECKED BY: DON LUU

REVISED BY
DATE REVISED

LAST REVISION 00-00-00
DATE PLOTTED => 30-JUN-2011
TIME PLOTTED => 18:11

Dist	COUNTY	ROUTE	POST MILES TOTAL PROJECT	SHEET No.	TOTAL SHEETS
07	LA	5	1.2/2.1	178	602

REGISTERED CIVIL ENGINEER 03/17/11 DATE

6-27-11
PLANS APPROVAL DATE

REGISTERED PROFESSIONAL ENGINEER DON LUU No. C62286 Exp. 9/30/11 CIVIL STATE OF CALIFORNIA

THE STATE OF CALIFORNIA OR ITS OFFICERS OR AGENTS SHALL NOT BE RESPONSIBLE FOR THE ACCURACY OR COMPLETENESS OF SCANNED COPIES OF THIS PLAN SHEET.

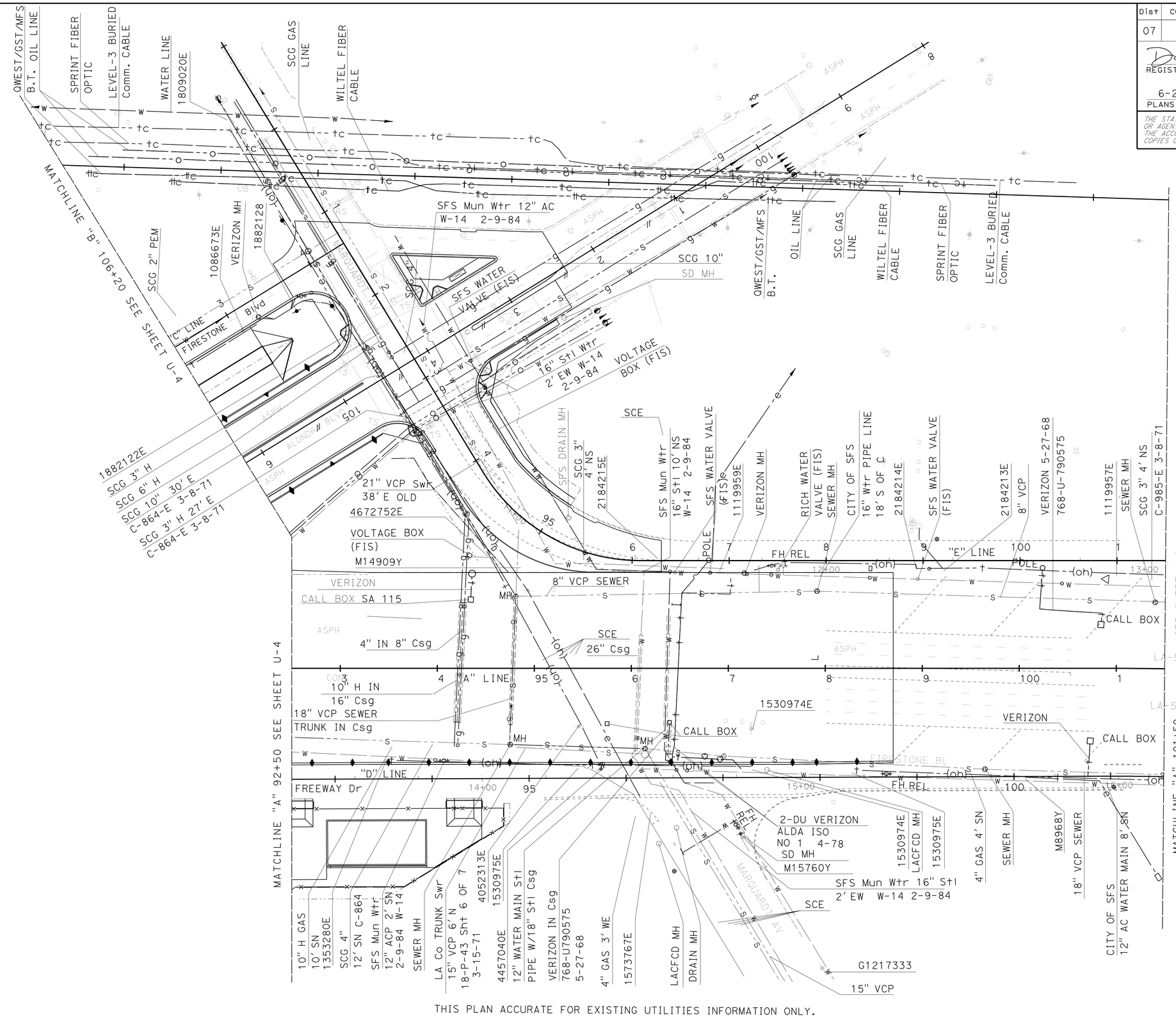

THIS PLAN ACCURATE FOR EXISTING UTILITIES INFORMATION ONLY.

UTILITY PLAN

SCALE: 1" = 50'

U-5

LAST REVISION	00-00-00
DATE PLOTTED =>	30-JUN-2011
TIME PLOTTED =>	18:11

STATE OF CALIFORNIA - DEPARTMENT OF TRANSPORTATION
Caltrans ENGINEERING SERVICES

FUNCTIONAL SUPERVISOR: PARVIZ YEGANEH
CALCULATED-DESIGNED BY: DON LUU
CHECKED BY: DON LUU
REVISED BY
DATE REVISED

Dist	COUNTY	ROUTE	POST MILES TOTAL PROJECT	SHEET No.	TOTAL SHEETS
07	LA	5	1.2/2.1	179	602

REGISTERED CIVIL ENGINEER 03/17/11 DATE

6-27-11
PLANS APPROVAL DATE

REGISTERED PROFESSIONAL ENGINEER
DON LUU
No. C62286
Exp. 9/30/11
CIVIL
STATE OF CALIFORNIA

THE STATE OF CALIFORNIA OR ITS OFFICERS OR AGENTS SHALL NOT BE RESPONSIBLE FOR THE ACCURACY OR COMPLETENESS OF SCANNED COPIES OF THIS PLAN SHEET.

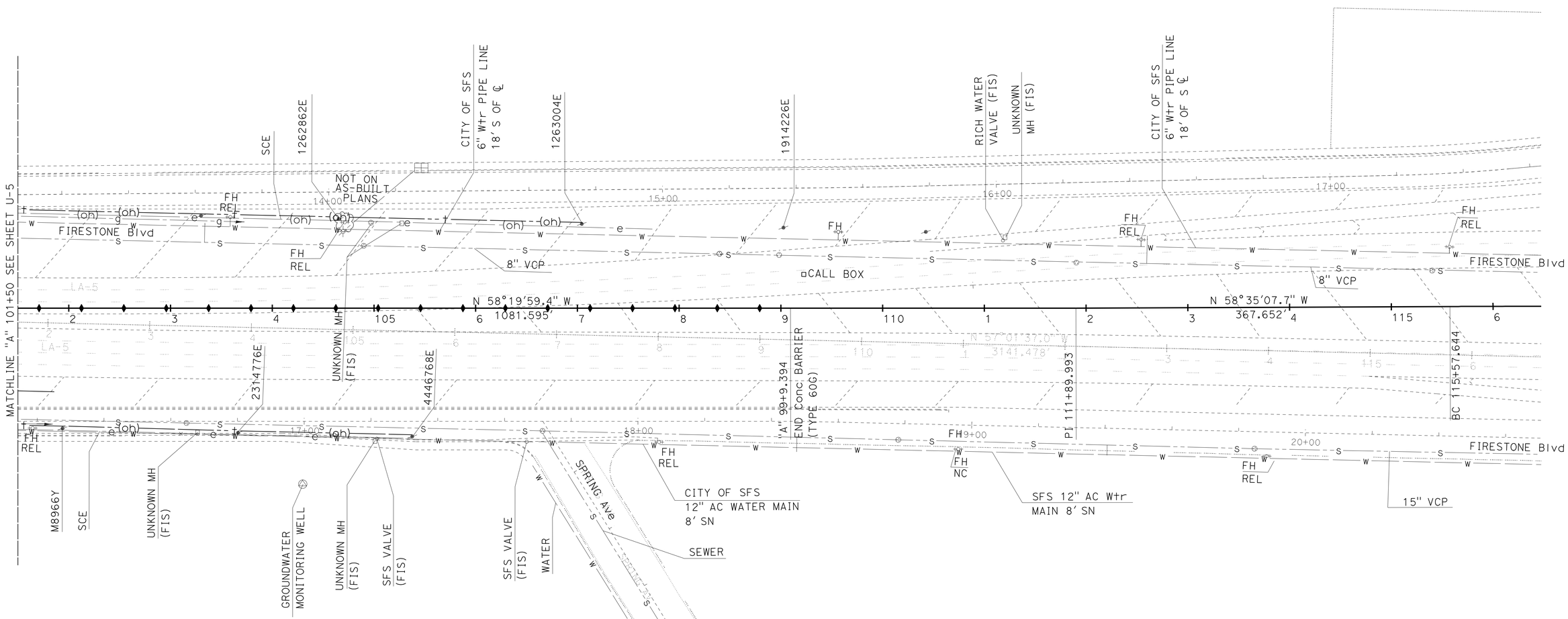

UTILITY PLAN

SCALE: 1" = 50'

U-6

THIS PLAN ACCURATE FOR EXISTING UTILITIES INFORMATION ONLY.

STATE OF CALIFORNIA - DEPARTMENT OF TRANSPORTATION
Caltrans ENGINEERING SERVICES

FUNCTIONAL SUPERVISOR: PARVIZ YEGANEH
CALCULATED-DESIGNED BY: DON LUU
CHECKED BY: DON LUU
REVISED BY
DATE REVISED

LAST REVISION 00-00-00
DATE PLOTTED => 30-JUN-2011
TIME PLOTTED => 18:12

Dist	COUNTY	ROUTE	POST MILES TOTAL PROJECT	SHEET No.	TOTAL SHEETS
07	LA	5	1.2/2.1	180	602

Medardo de la Cruz 3/14/11
REGISTERED CIVIL ENGINEER DATE

6-27-11
PLANS APPROVAL DATE

REGISTERED PROFESSIONAL ENGINEER MEDARDO DE LA CRUZ No. C61848 Exp. 6-30-11 CIVIL STATE OF CALIFORNIA

THE STATE OF CALIFORNIA OR ITS OFFICERS OR AGENTS SHALL NOT BE RESPONSIBLE FOR THE ACCURACY OR COMPLETENESS OF SCANNED COPIES OF THIS PLAN SHEET.

NOTES:

1. LOCATIONS OF CONSTRUCTION AREA SIGNS SHOWN ARE APPROXIMATE. EXACT LOCATIONS WILL BE DETERMINED BY THE ENGINEER.
2. REMOVE OR COVER ALL CONFLICTING SIGNS AS DIRECTED BY THE ENGINEER.
3. "TRAFFIC FINES DOUBLED IN CONSTRUCTION ZONES" SIGNS SHALL BE PLACED APPROXIMATELY 500 FEET IN ADVANCE OF "ROAD WORK AHEAD" OR AS DETERMINED BY THE ENGINEER.
4. FOR ADDITIONAL CONSTRUCTION AREA SIGNS, SEE STAGE CONSTRUCTION TRAFFIC HANDLING PLANS AND TRAFFIC HANDLING PLAN DETOUR LAYOUT SHEETS.

STATIONARY MOUNTED CONSTRUCTION AREA SIGNS

SIGN No. (X)	SIGN CODE FEDERAL	SIGN CODE CALIFORNIA	PANEL SIZE	SIGN MESSAGE	No. OF POST AND SIZE	No. OF SIGNS
(A)	W20-1		48" x 48"	ROAD WORK AHEAD	2 - 6" x 6"	2
(B)	W20-1		36" x 36"	ROAD WORK AHEAD	1 - 6" x 6"	7
(C)	G20-2		36" x 18"	END ROAD WORK	1 - 6" x 6"	8
(D)	R2-1		24" x 36"	SPEED LIMIT 55	1 - 6" x 6"	2
(E)		C40(CA)	72" x 36"	TRAFFIC FINES DOUBLED IN CONSTRUCTION ZONES	2 - 6" x 6"	2
(F)		T7(CA)	132" x 84"	CONSTRUCTION PROJECT FUNDING IDENTIFICATION SIGNS	2 - 6" x 8"	2
TOTAL						23

LEGEND:

CONSTRUCTION AREA SIGN - ONE POST

CONSTRUCTION AREA SIGN - TWO POST

LOS ANGELES COUNTY

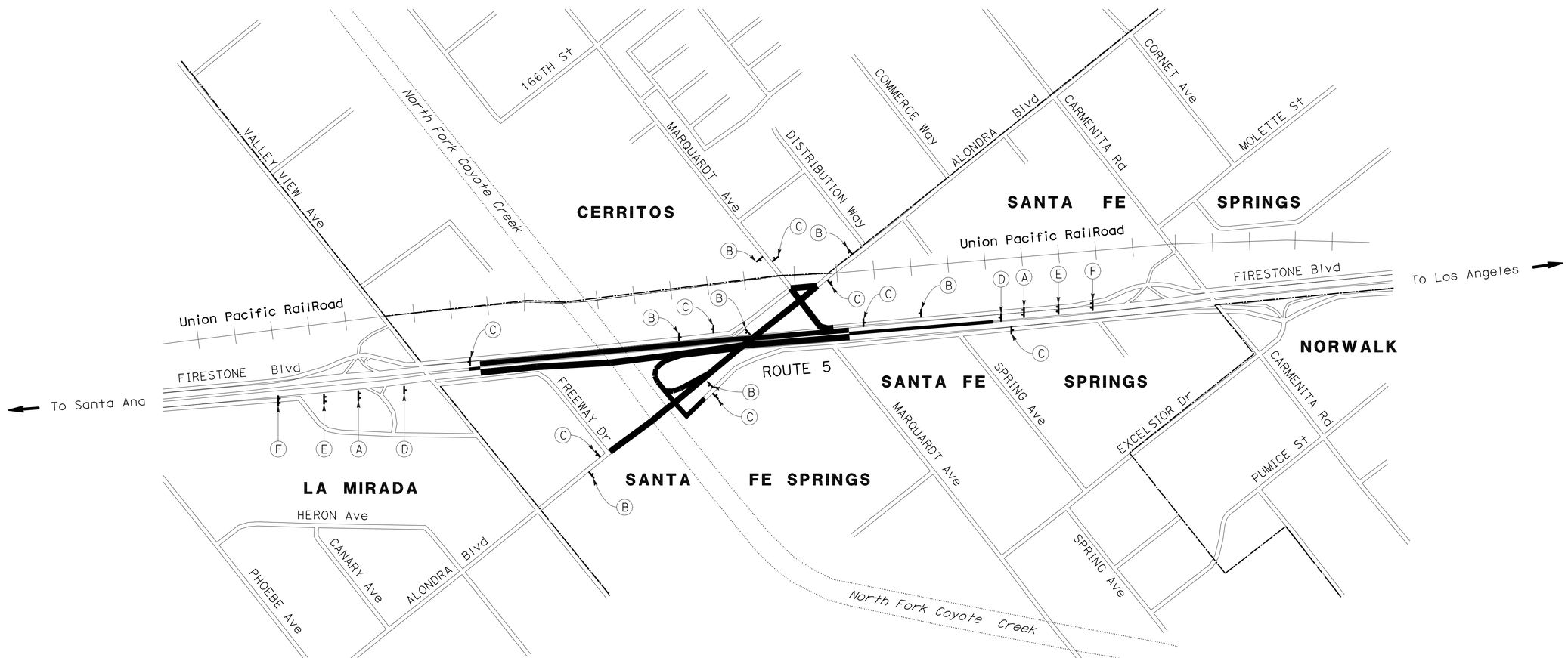

CONSTRUCTION AREA SIGNS

NO SCALE

CS-1

THIS PLAN ACCURATE FOR CONSTRUCTION AREA SIGN WORK ONLY.

STATE OF CALIFORNIA - DEPARTMENT OF TRANSPORTATION
Caltrans OFFICE OF DESIGN A
FUNCTIONAL SUPERVISOR: ASADOUR TERTERIAN
CALCULATED-DESIGNED BY: MARCELO DE LA FUENTE
CHECKED BY: MEDARDO DE LA CRUZ
REVISED BY
DATE REVISED

LAST REVISION 00-00-00
DATE PLOTTED => 30-JUN-2011
TIME PLOTTED => 18:12

Dist	COUNTY	ROUTE	POST MILES TOTAL PROJECT	SHEET No.	TOTAL SHEETS
07	LA	5	1.2/2.1	181	602

Medardo de la Cruz 3/14/11
REGISTERED CIVIL ENGINEER DATE

6-27-11
PLANS APPROVAL DATE

REGISTERED PROFESSIONAL ENGINEER
MEDARDO DE LA CRUZ
No. C61848
Exp. 6-30-11
CIVIL
STATE OF CALIFORNIA

THE STATE OF CALIFORNIA OR ITS OFFICERS OR AGENTS SHALL NOT BE RESPONSIBLE FOR THE ACCURACY OR COMPLETENESS OF SCANNED COPIES OF THIS PLAN SHEET.

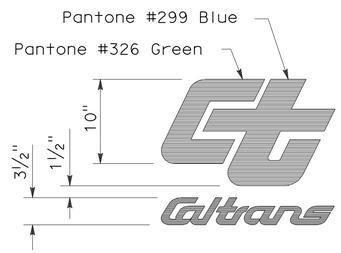

DETAIL A-2

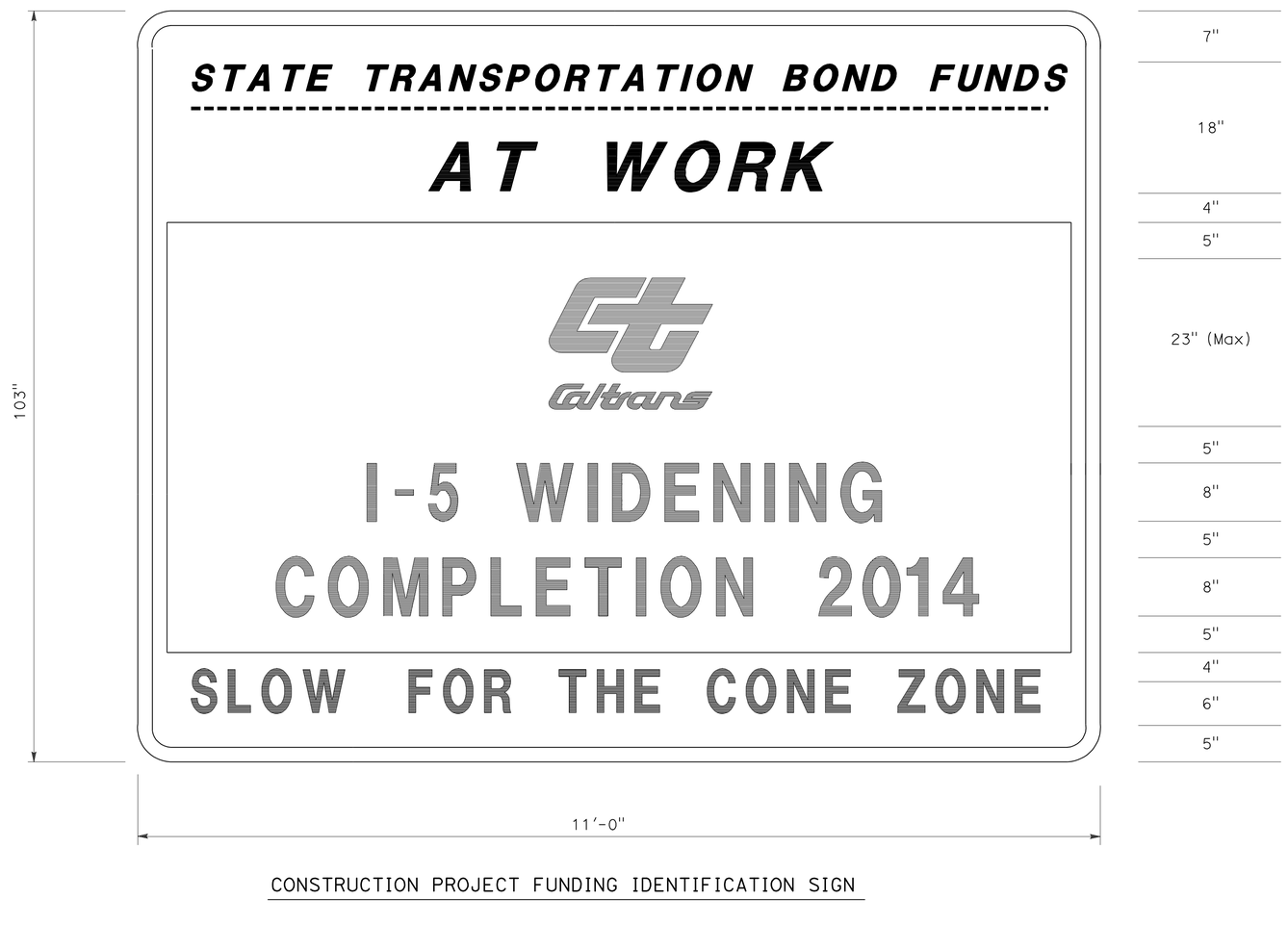

CONSTRUCTION PROJECT FUNDING IDENTIFICATION SIGN

NOTES:

1. THE BORDER OF THE SIGN SHALL BE PURPLE. (PANTONE #520)
2. EXCEPT AS OTHERWISE SHOWN, THE LEGEND OF THE SIGNS SHALL BE BLACK, WHITE AND ORANGE.
3. THE BACKGROUND OF THE SIGNS SHALL BE PURPLE (PANTONE #520) AND WHITE.
4. ALL COLORS EXCEPT BLACK ARE TO BE RETROREFLECTIVE. (RSTM II)
5. SIGN PANELS SHALL COMPLY WITH STANDARD PLANS S93 AND S94.

CONSTRUCTION AREA SIGNS

NO SCALE

CS-2

STATE OF CALIFORNIA - DEPARTMENT OF TRANSPORTATION
Caltrans® OFFICE OF DESIGN A

FUNCTIONAL SUPERVISOR: ASADOUR TERTERIAN
CALCULATED-DESIGNED BY: MARCELO DE LA FUENTE
CHECKED BY: MEDARDO DE LA CRUZ
REVISED BY
DATE REVISED

LAST REVISION 00-00-00
DATE PLOTTED => 10-AUG-2011
TIME PLOTTED => 06:13

Dist	COUNTY	ROUTE	POST MILES TOTAL PROJECT	SHEET No.	TOTAL SHEETS
07	LA	5	1.2/2.1	182	602

Richard Lizardi 3/14/11
REGISTERED CIVIL ENGINEER DATE

6-27-11
PLANS APPROVAL DATE

REGISTERED PROFESSIONAL ENGINEER
RICHARD LIZARDI
No. C53407
Exp. 6/30/11
CIVIL
STATE OF CALIFORNIA

THE STATE OF CALIFORNIA OR ITS OFFICERS OR AGENTS SHALL NOT BE RESPONSIBLE FOR THE ACCURACY OR COMPLETENESS OF SCANNED COPIES OF THIS PLAN SHEET.

LEGEND:

EXISTING ROADBED

CONSTRUCTION THIS STAGE

CONSTRUCTION THIS STAGE (STRUCTURE)

(3)→ No. OF LANES AND DIRECTION OF TRAFFIC

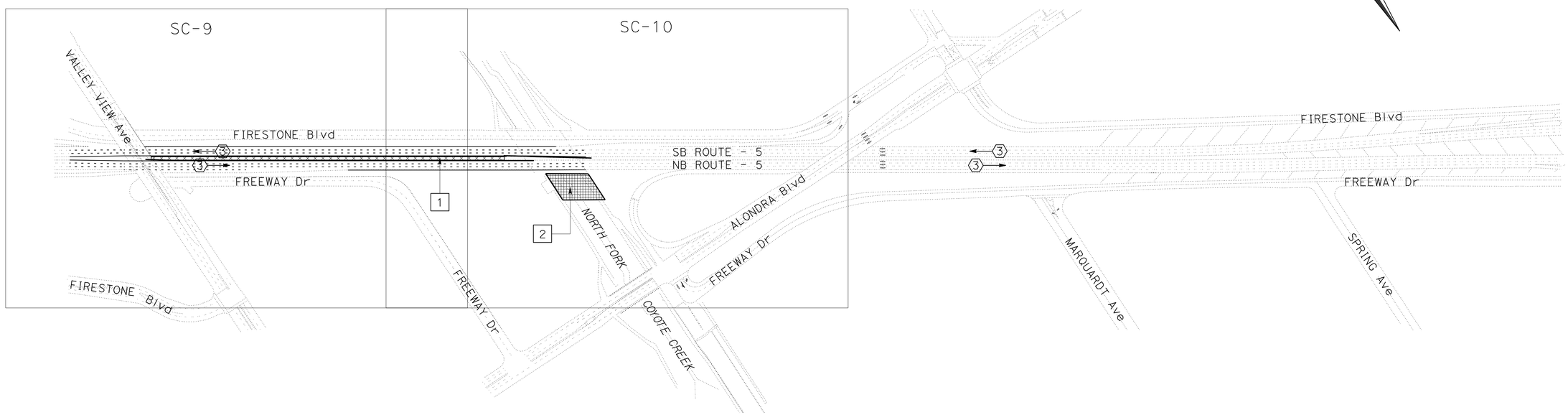

STAGE 1 CONSTRUCTION OVERVIEW

LOCATION	FREEWAY	BRIDGE	RETAINING WALL	ROAD	RAMP	SHEET No.
1	MEDIAN PAVEMENT					SC-9
2		NB NORTH FORK COYOTE CREEK WIDENING (ROUTE 5)				SC-10

STAGE 1 INDEX
STAGE CONSTRUCTION

NO SCALE

SC-1

STATE OF CALIFORNIA - DEPARTMENT OF TRANSPORTATION
Caltrans® OFFICE OF DESIGN A

FUNCTIONAL SUPERVISOR: ASADOUR TERTERIAN
CALCULATED-DESIGNED BY: KEDAR SAWANT
CHECKED BY: RICHARD LIZARDI
REVISED BY
DATE REVISED

LAST REVISION 00-00-00
DATE PLOTTED => 10-AUG-2011
TIME PLOTTED => 06:13

Dist	COUNTY	ROUTE	POST MILES TOTAL PROJECT	SHEET No.	TOTAL SHEETS
07	LA	5	1.2/2.1	183	602

Richard Lizardi 3/14/11
REGISTERED CIVIL ENGINEER DATE

6-27-11
PLANS APPROVAL DATE

REGISTERED PROFESSIONAL ENGINEER
RICHARD LIZARDI
No. C53407
Exp. 6/30/11
CIVIL
STATE OF CALIFORNIA

THE STATE OF CALIFORNIA OR ITS OFFICERS OR AGENTS SHALL NOT BE RESPONSIBLE FOR THE ACCURACY OR COMPLETENESS OF SCANNED COPIES OF THIS PLAN SHEET.

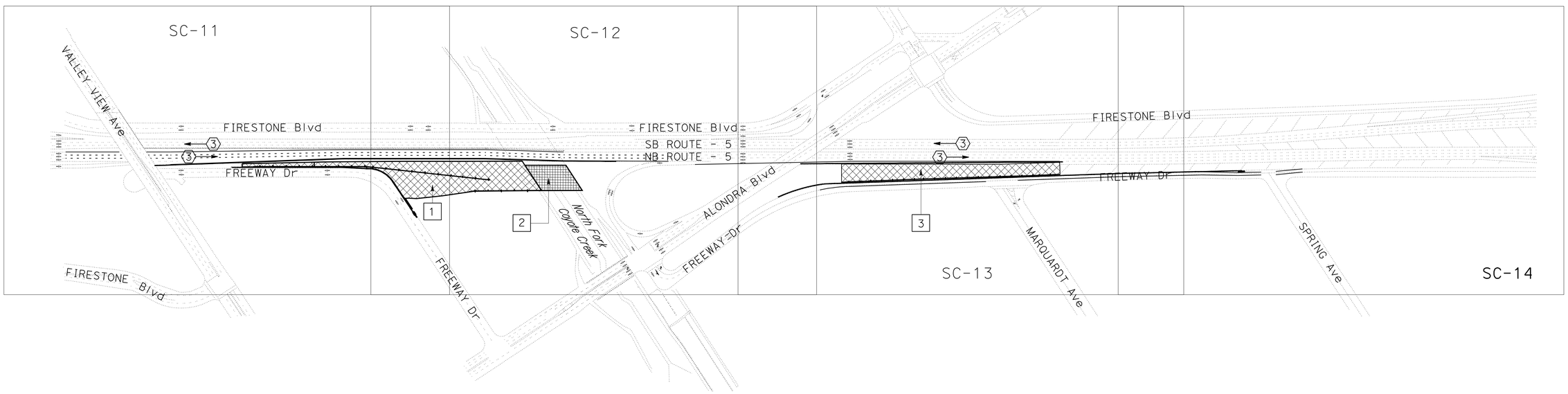

STAGE 2 - PHASE 1 CONSTRUCTION OVERVIEW

LOCATION	FREEWAY	BRIDGE	RETAINING WALL	ROAD	RAMP	SHEET No.
1	NB WIDENING		RW 11		NEW FREEWAY Dr ON RAMP	SC-12
2		NB NORTH FORK COYOTE CREEK WIDENING (ROUTE 5)				SC-12
3	NB WIDENING					SC-13

STAGE 2 PHASE 1 INDEX
STAGE CONSTRUCTION

NO SCALE

SC-2

STATE OF CALIFORNIA - DEPARTMENT OF TRANSPORTATION
Caltrans® OFFICE OF DESIGN A

FUNCTIONAL SUPERVISOR: ASADOUR TERTERIAN
CALCULATED-DESIGNED BY: KEDAR SAWANT
CHECKED BY: RICHARD LIZARDI
REVISED BY
DATE REVISED

LAST REVISION 00-00-00
DATE PLOTTED => 10-AUG-2011
TIME PLOTTED => 06:13

Dist	COUNTY	ROUTE	POST MILES TOTAL PROJECT	SHEET No.	TOTAL SHEETS
07	LA	5	1.2/2.1	184	602

Richard Lizardi 3/14/11
REGISTERED CIVIL ENGINEER DATE

6-27-11
PLANS APPROVAL DATE

REGISTERED PROFESSIONAL ENGINEER
RICHARD LIZARDI
No. C53407
Exp. 6/30/11
CIVIL
STATE OF CALIFORNIA

THE STATE OF CALIFORNIA OR ITS OFFICERS OR AGENTS SHALL NOT BE RESPONSIBLE FOR THE ACCURACY OR COMPLETENESS OF SCANNED COPIES OF THIS PLAN SHEET.

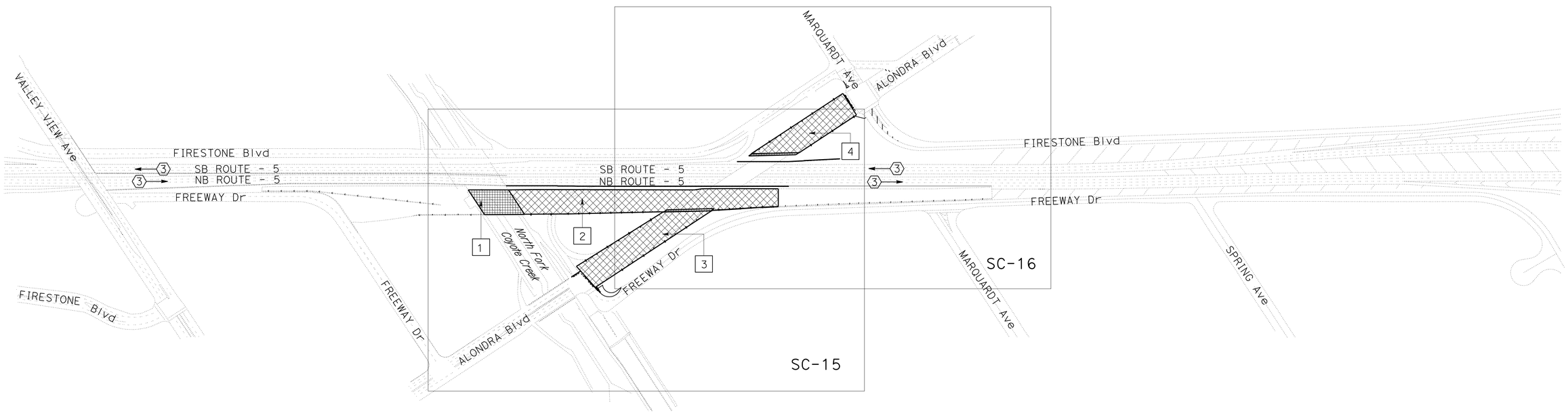

STAGE 2 - PHASE 2 CONSTRUCTION OVERVIEW

LOCATION	FREEWAY	BRIDGE	RETAINING WALL	ROAD	RAMP	SHEET No.
1		NB NORTH FORK COYOTE CREEK WIDENING (ROUTE 5)				SC-15
2	NB WIDENING		RW 7		NB ALONDRA Blvd ON RAMP CLOSED PERMANENTLY*	SC-15/16
3		ABUTMENT 2, ALONDRA Blvd OC	RW 3 & RW 4	ALONDRA Blvd		SC-15
4		ABUTMENT 1, ALONDRA Blvd OC	RW 1 & RW 2	ALONDRA Blvd		SC-16

*CLOSING OF NB ALONDRA Blvd ONRAMP SHOULD NOT BE EARLIER THAN EIGHT WEEKS PRIOR TO THE OPENING OF NB FREEWAY Dr ON RAMP (SEE SC-5).

STAGE 2 PHASE 2 INDEX
STAGE CONSTRUCTION

NO SCALE

SC-3

STATE OF CALIFORNIA - DEPARTMENT OF TRANSPORTATION
Caltrans® OFFICE OF DESIGN A

FUNCTIONAL SUPERVISOR: ASADOUR TERTERIAN
CALCULATED-DESIGNED BY: KEDAR SAWANT
CHECKED BY: RICHARD LIZARDI
REVISED BY: RDL
DATE REVISED: 5/2011

LAST REVISION 00-00-00
DATE PLOTTED => 10-AUG-2011
TIME PLOTTED => 06:13

Dist	COUNTY	ROUTE	POST MILES TOTAL PROJECT	SHEET No.	TOTAL SHEETS
07	LA	5	1.2/2.1	185	602

Richard Lizardi 3/14/11
REGISTERED CIVIL ENGINEER DATE

6-27-11
PLANS APPROVAL DATE

REGISTERED PROFESSIONAL ENGINEER
RICHARD LIZARDI
No. C53407
Exp. 6/30/11
CIVIL
STATE OF CALIFORNIA

THE STATE OF CALIFORNIA OR ITS OFFICERS OR AGENTS SHALL NOT BE RESPONSIBLE FOR THE ACCURACY OR COMPLETENESS OF SCANNED COPIES OF THIS PLAN SHEET.

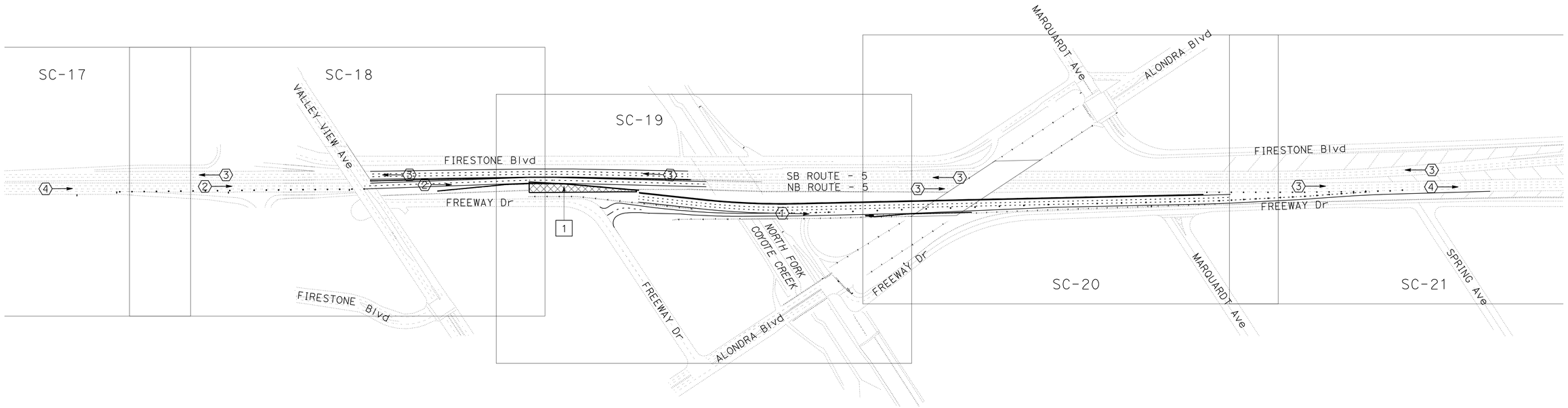

STAGE 2 - PHASE 3 CONSTRUCTION OVERVIEW

LOCATION	FREEWAY	BRIDGE	RETAINING WALL	ROAD	RAMP	SHEET No.
1	NB PAVEMENT TRANSITION				OPEN NB FREEWAY Dr ONRAMP* CLOSE NB VALLEY VIEW Ave ONRAMP	SC-19

*NB VALLEY VIEW Ave ONRAMP WILL BE TEMPORARY CLOSED DURING THIS STAGE.
TRAFFIC SIGNAL ON FREEWAY Dr & ALONDRA Blvd INTERSECTION WILL BE FULLY OPERATIONAL WHEN NB FREEWAY Dr ONRAMP OPENS.

STAGE 2 PHASE 3 INDEX
STAGE CONSTRUCTION

NO SCALE

SC-4

REVISED BY | DATE REVISED
KEDAR SAWANT | RICHARD LIZARDI
CALCULATED-DESIGNED BY | CHECKED BY
FUNCTIONAL SUPERVISOR
ASADOUR TERTERIAN

STATE OF CALIFORNIA - DEPARTMENT OF TRANSPORTATION
Caltrans OFFICE OF DESIGN A

LAST REVISION 00-00-00 | DATE PLOTTED => 10-AUG-2011 | TIME PLOTTED => 06:14

Dist	COUNTY	ROUTE	POST MILES TOTAL PROJECT	SHEET No.	TOTAL SHEETS
07	LA	5	1.2/2.1	186	602

Richard Lizardi 3/14/11
REGISTERED CIVIL ENGINEER DATE

6-27-11
PLANS APPROVAL DATE

REGISTERED PROFESSIONAL ENGINEER
RICHARD LIZARDI
No. C53407
Exp. 6/30/11
CIVIL
STATE OF CALIFORNIA

THE STATE OF CALIFORNIA OR ITS OFFICERS OR AGENTS SHALL NOT BE RESPONSIBLE FOR THE ACCURACY OR COMPLETENESS OF SCANNED COPIES OF THIS PLAN SHEET.

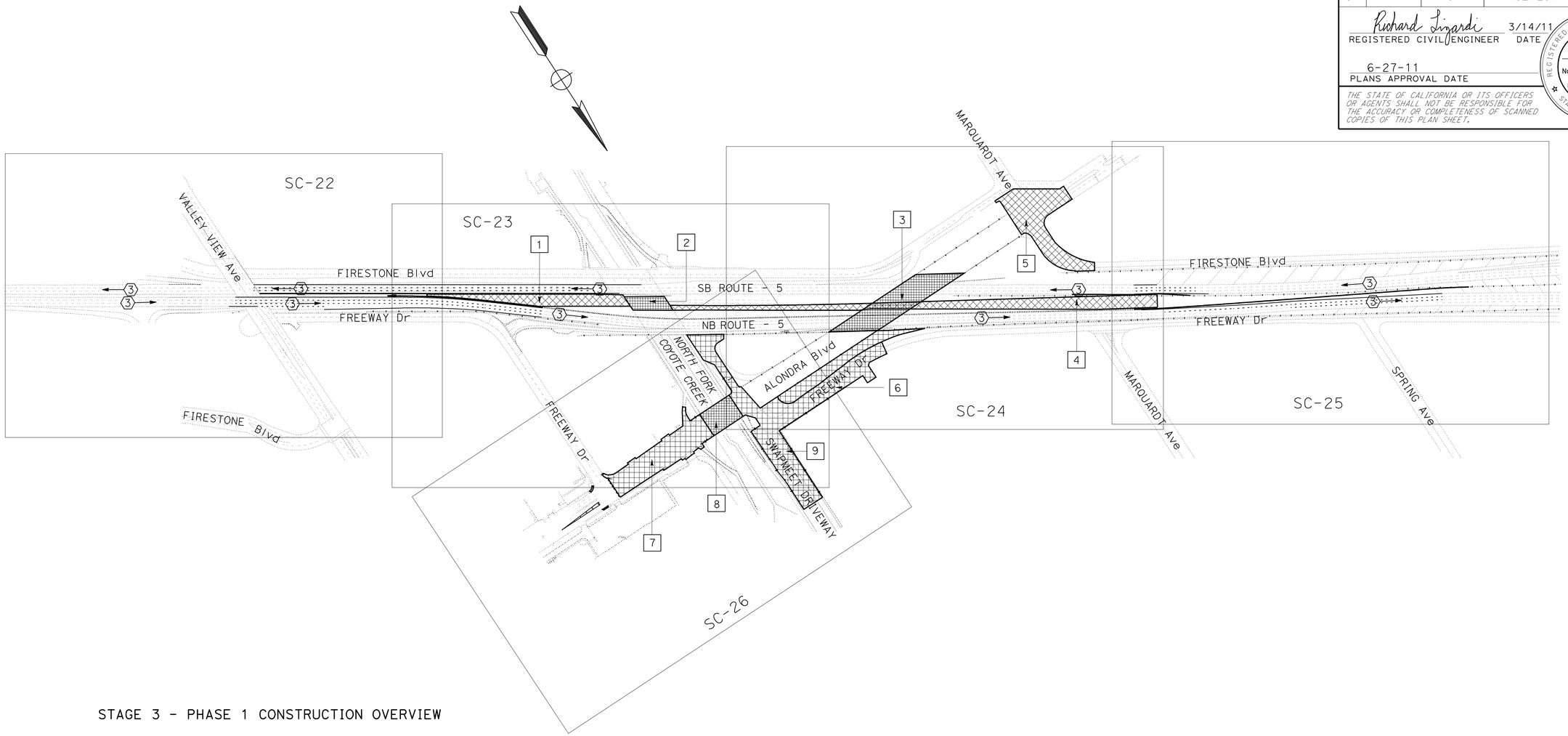

STAGE 3 - PHASE 1 CONSTRUCTION OVERVIEW

LOCATION	FREEWAY	BRIDGE	RETAINING WALL	ROAD	RAMP	SHEET No.
1	MID-SECTION PAVEMENT					SC-23
2		MID-SECTION NORTH FORK COYOTE CREEK Br (ROUTE 5)				SC-23
3	MID-SECTION PAVEMENT	ALONDRA Blvd OC BENT & SPAN				SC-24
4	MID-SECTION PAVEMENT					SC-24
5				ALONDRA Blvd & MARQUARDT Ave INTERSECTION, FIRESTONE Blvd*		SC-24
6				FREEWAY Dr & PARKING LOT		SC-24
7				ALONDRA Blvd		SC-26
8			RW 5, RW 6, RW 12	NORTH FORK COYOTE CREEK Br (ALONDRA Blvd)		SC-26
9			RW 13, RW 14	SWAP MEET DRIVEWAY		SC-26

*NOTE: WORK SHOULD BE FINISHED IN Max 55 HOURS OF WEEKEND CLOSURE.

STAGE 3 PHASE 1 INDEX
STAGE CONSTRUCTION

NO SCALE

SC-5

STATE OF CALIFORNIA - DEPARTMENT OF TRANSPORTATION
Caltrans® OFFICE OF DESIGN A

FUNCTIONAL SUPERVISOR: ASADOUR TERTERIAN
CALCULATED-DESIGNED BY: KEDAR SAWANT
CHECKED BY: RICHARD LIZARDI
REVISED BY
DATE REVISED

LAST REVISION 00-00-00
DATE PLOTTED => 10-AUG-2011
TIME PLOTTED => 06:14

Dist	COUNTY	ROUTE	POST MILES TOTAL PROJECT	SHEET No.	TOTAL SHEETS
07	LA	5	1.2/2.1	187	602

Richard Lizardi 3/14/11
REGISTERED CIVIL ENGINEER DATE

6-27-11
PLANS APPROVAL DATE

REGISTERED PROFESSIONAL ENGINEER
RICHARD LIZARDI
No. C53407
Exp. 6/30/11
CIVIL
STATE OF CALIFORNIA

THE STATE OF CALIFORNIA OR ITS OFFICERS OR AGENTS SHALL NOT BE RESPONSIBLE FOR THE ACCURACY OR COMPLETENESS OF SCANNED COPIES OF THIS PLAN SHEET.

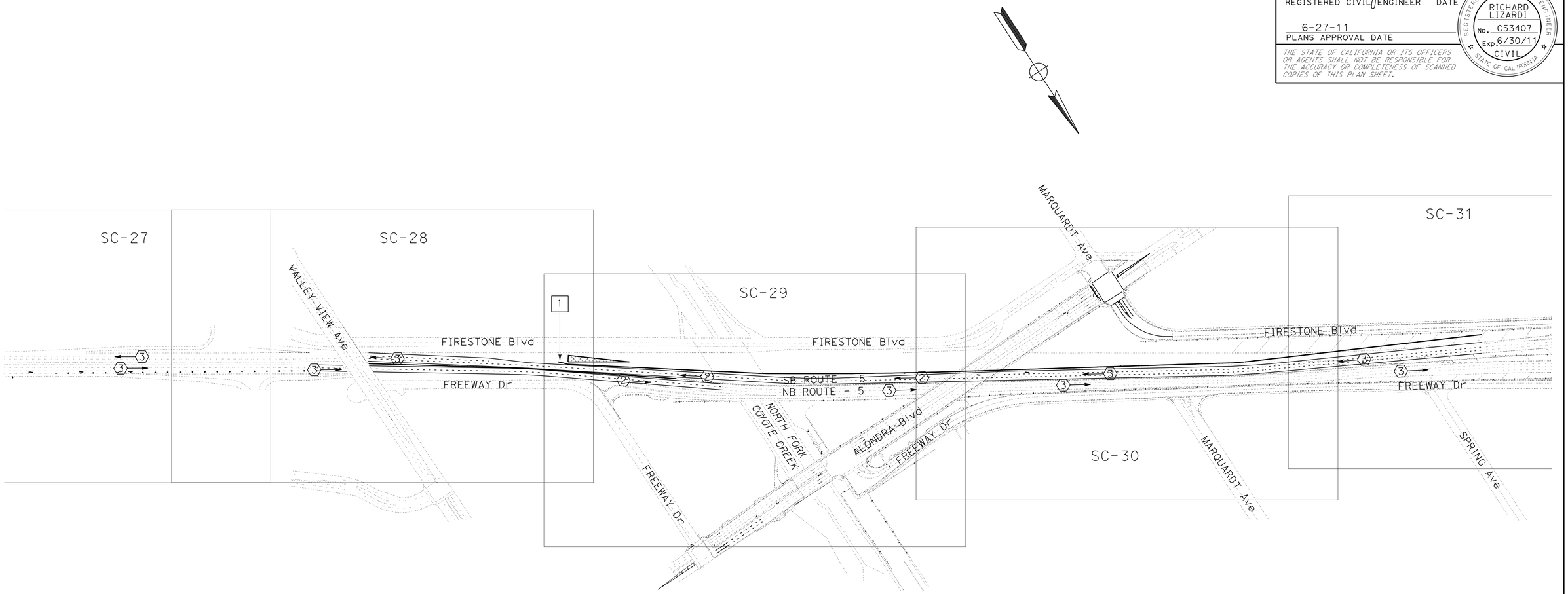

STAGE 3 - PHASE 2 CONSTRUCTION OVERVIEW

LOCATION	FREEWAY	BRIDGE	RETAINING WALL	ROAD	RAMP	SHEET No.
1	SB PAVEMENT TRANSITION				CLOSE SB FIRESTONE Blvd ONRAMP & CLOSE NB VALLEY VIEW Ave ONRAMP*	SC-28 & 29

*NOTE: SB FIRESTONE Blvd ONRAMP WILL BE CLOSED PERMANENTLY & NB VALLEY VIEW Ave ONRAMP WILL BE CLOSED DURING THIS STAGE.

STAGE 3 PHASE 2 INDEX
STAGE CONSTRUCTION

NO SCALE

SC-6

STATE OF CALIFORNIA - DEPARTMENT OF TRANSPORTATION
Caltrans® OFFICE OF DESIGN A

FUNCTIONAL SUPERVISOR: ASADOUR TERTERIAN
CALCULATED-DESIGNED BY: KEDAR SAWANT
CHECKED BY: RICHARD LIZARDI
REVISED BY
DATE REVISED

LAST REVISION 00-00-00 | DATE PLOTTED => 10-AUG-2011 | TIME PLOTTED => 06:14

Dist	COUNTY	ROUTE	POST MILES TOTAL PROJECT	SHEET No.	TOTAL SHEETS
07	LA	5	1.2/2.1	188	602

Richard Lizardi 3/14/11
REGISTERED CIVIL ENGINEER DATE

6-27-11
PLANS APPROVAL DATE

REGISTERED PROFESSIONAL ENGINEER
RICHARD LIZARDI
No. C53407
Exp. 6/30/11
CIVIL
STATE OF CALIFORNIA

THE STATE OF CALIFORNIA OR ITS OFFICERS OR AGENTS SHALL NOT BE RESPONSIBLE FOR THE ACCURACY OR COMPLETENESS OF SCANNED COPIES OF THIS PLAN SHEET.

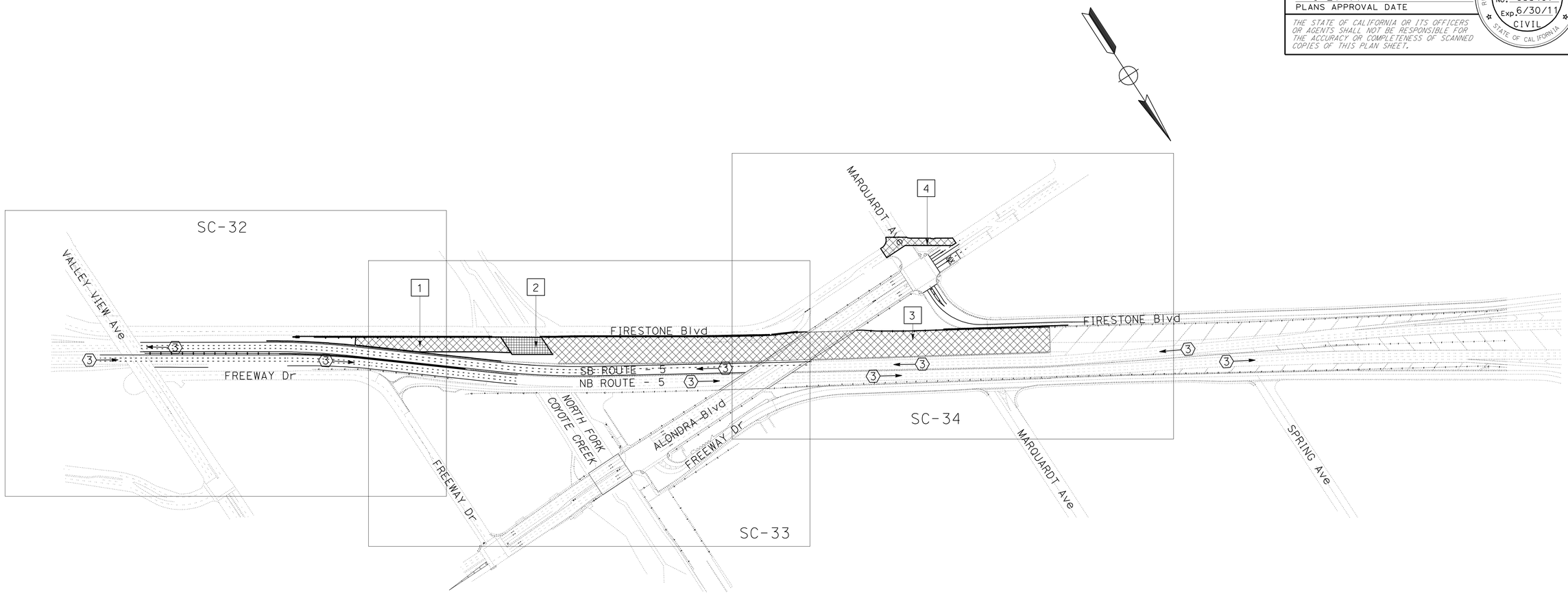

STAGE 4 CONSTRUCTION OVERVIEW

LOCATION	FREEWAY	BRIDGE	RETAINING WALL	ROAD	RAMP	SHEET No.
1	SB PAVEMENT		RW 10			SC-32
2		SB NORTH FORK COYOTE CREEK WIDENING (ROUTE 5)				SC-33
3	SB PAVEMENT		RW 8		CLOSE SB FIRESTONE Blvd ONRAMP (PERMANENT)	SC-34
4				FIRESTONE Blvd & MARQUARDT Ave DIAGONAL*		SC-34

*NOTE: WORK SHOULD BE FINISHED IN MAX. 55 HOURS OF WEEKEND CLOSURE.

STAGE 4 INDEX
STAGE CONSTRUCTION

NO SCALE

SC-7

STATE OF CALIFORNIA - DEPARTMENT OF TRANSPORTATION
Caltrans® OFFICE OF DESIGN A

FUNCTIONAL SUPERVISOR: ASADOUR TERTERIAN
CALCULATED-DESIGNED BY: KEDAR SAWANT
CHECKED BY: RICHARD LIZARDI
REVISED BY
DATE REVISED

LAST REVISION 00-00-00
DATE PLOTTED => 10-AUG-2011
TIME PLOTTED => 06:14

Dist	COUNTY	ROUTE	POST MILES TOTAL PROJECT	SHEET No.	TOTAL SHEETS
07	LA	5	1.2/2.1	189	602

Richard Lizardi 3/14/11
REGISTERED CIVIL ENGINEER DATE

6-27-11
PLANS APPROVAL DATE

REGISTERED PROFESSIONAL ENGINEER
RICHARD LIZARDI
No. C53407
Exp. 6/30/11
CIVIL
STATE OF CALIFORNIA

THE STATE OF CALIFORNIA OR ITS OFFICERS OR AGENTS SHALL NOT BE RESPONSIBLE FOR THE ACCURACY OR COMPLETENESS OF SCANNED COPIES OF THIS PLAN SHEET.

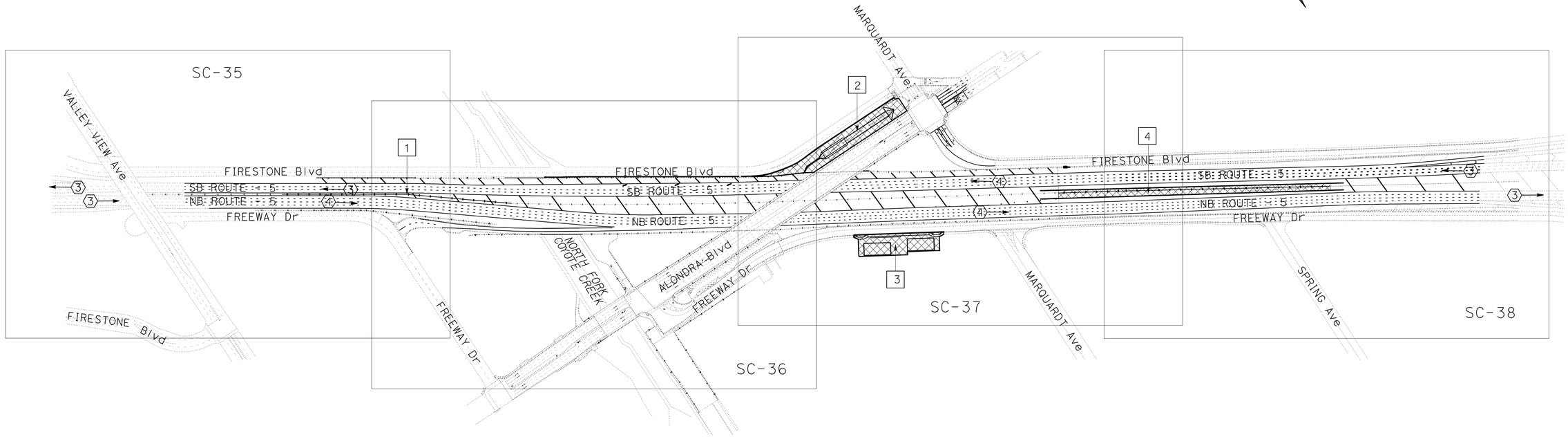

STAGE 5 CONSTRUCTION OVERVIEW

LOCATION	FREEWAY	BRIDGE	RETAINING WALL	ROAD/RAMP	OTHER	SHEET No.
1	MEDIAN BARRIER					SC-37, SC-38
2					BIO-SWALE	SC-37
3					AVSF	SC-37
4	MEDIAN BARRIER					SC-38

STAGE 5 INDEX
STAGE CONSTRUCTION
NO SCALE

SC-8

REVISED BY | DATE REVISED
KEDAR SAWANT | RICHARD LIZARDI
CALCULATED-DESIGNED BY | CHECKED BY
FUNCTIONAL SUPERVISOR
ASADOUR TERTERIAN
STATE OF CALIFORNIA - DEPARTMENT OF TRANSPORTATION
Caltrans OFFICE OF DESIGN A

LAST REVISION 00-00-00 | DATE PLOTTED => 10-AUG-2011 | TIME PLOTTED => 06:14

Dist	COUNTY	ROUTE	POST MILES TOTAL PROJECT	SHEET No.	TOTAL SHEETS
07	LA	5	1.2/2.1	190	602

Richard Lizardi 3/14/11
REGISTERED CIVIL ENGINEER DATE

6-27-11
PLANS APPROVAL DATE

REGISTERED PROFESSIONAL ENGINEER RICHARD LIZARDI No. C53407 Exp. 6/30/11 CIVIL STATE OF CALIFORNIA

THE STATE OF CALIFORNIA OR ITS OFFICERS OR AGENTS SHALL NOT BE RESPONSIBLE FOR THE ACCURACY OR COMPLETENESS OF SCANNED COPIES OF THIS PLAN SHEET.

NOTE:

SEE MUTCD 2010 EDITION FOR DETAILS OF CHANNELIZERS AND ADVANCED WARNING SIGNS LAYOUTS.

LEGEND:

- CONSTRUCTION AREA
- BRIDGE WORK
- Temp RAILING (TYPE K)
- DIRECTION OF TRAVEL
- CONES
- CHANNELIZERS (SURFACE MOUNTED)
- BT (XX) Beg TRAFFIC STRIPE
- ET (XX) END TRAFFIC STRIPE
- T (XX) TRAFFIC STRIPE
- BR (XX) Beg REMOVAL Pvmt DELINEATION
- ER (XX) END REMOVAL Pvmt DELINEATION
- BRT (XX) Beg REMOVAL Pvmt DELINEATION (THERMOPLASTIC)
- ERT (XX) END REMOVAL Pvmt DELINEATION (THERMOPLASTIC)

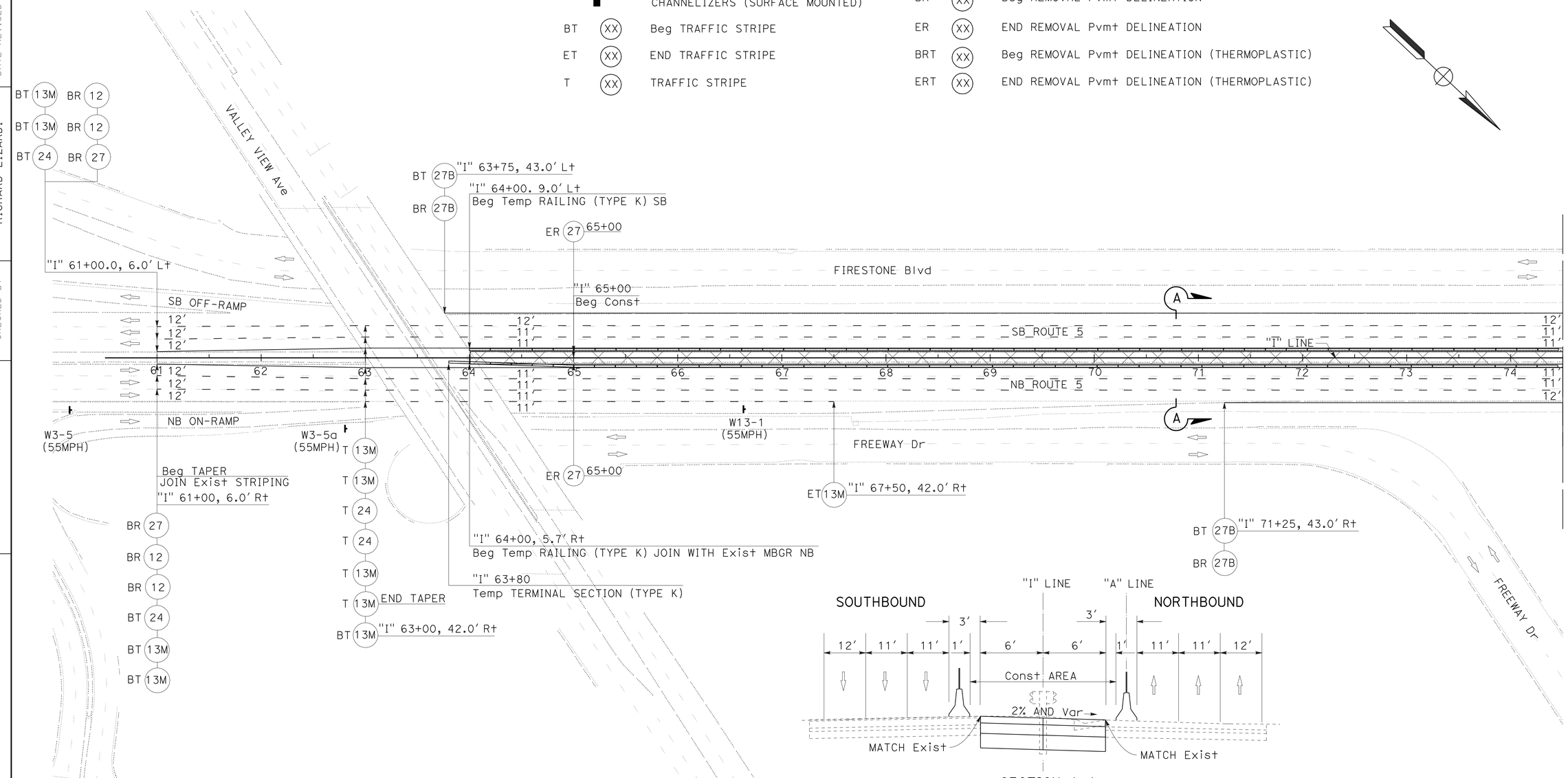

STAGE 1
STAGE CONSTRUCTION AND TRAFFIC HANDLING PLAN

SCALE: 1" = 50'

SC-9

THIS PLAN ACCURATE FOR STAGE CONSTRUCTION AND TRAFFIC HANDLING WORK ONLY.

STATE OF CALIFORNIA - DEPARTMENT OF TRANSPORTATION
Caltrans® OFFICE OF DESIGN A

FUNCTIONAL SUPERVISOR: ASADOUR TERTERIAN
CALCULATED-DESIGNED BY: RICHARD LIZARDI
CHECKED BY: RICHARD LIZARDI
REVISED BY
DATE REVISED

LAST REVISION 00-00-00
DATE PLOTTED => 30-JUN-2011
TIME PLOTTED => 17:17

Dist	COUNTY	ROUTE	POST MILES TOTAL PROJECT	SHEET No.	TOTAL SHEETS
07	LA	5	1.2/2.1	191	602

Richard Lizardi 3/14/11
REGISTERED CIVIL ENGINEER DATE

6-27-11
PLANS APPROVAL DATE

REGISTERED PROFESSIONAL ENGINEER RICHARD LIZARDI No. C53407 Exp. 6/30/11 CIVIL STATE OF CALIFORNIA

THE STATE OF CALIFORNIA OR ITS OFFICERS OR AGENTS SHALL NOT BE RESPONSIBLE FOR THE ACCURACY OR COMPLETENESS OF SCANNED COPIES OF THIS PLAN SHEET.

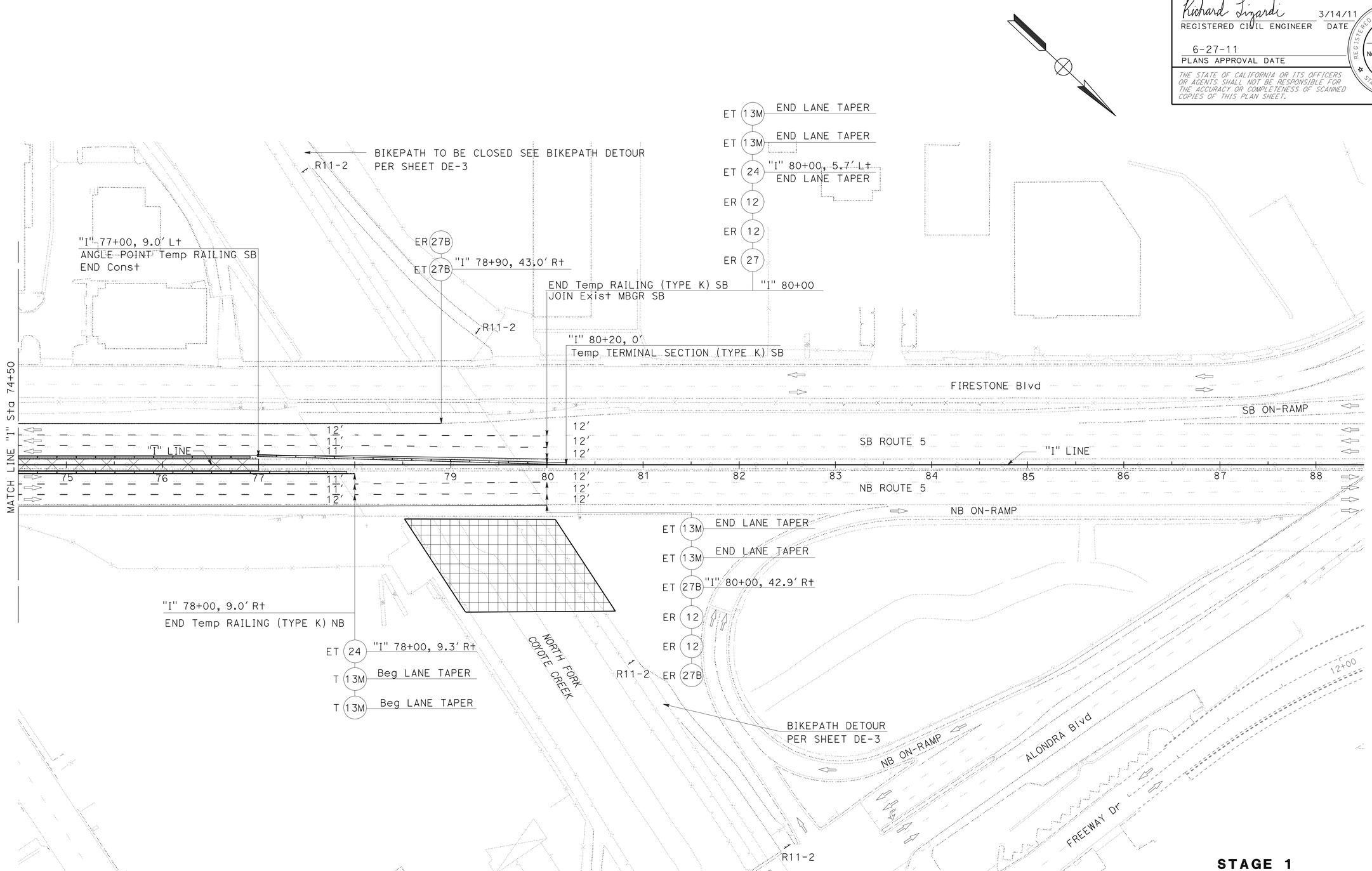

STAGE 1
STAGE CONSTRUCTION AND TRAFFIC HANDLING PLAN

SCALE: 1" = 50'

THIS PLAN ACCURATE FOR STAGE CONSTRUCTION AND TRAFFIC HANDLING WORK ONLY.

SC-10

REVISED BY	DATE REVISED

CALCULATED-DESIGNED BY: RICHARD LIZARDI
CHECKED BY: RICHARD LIZARDI

FUNCTIONAL SUPERVISOR: ASADOUR TERTERIAN

STATE OF CALIFORNIA - DEPARTMENT OF TRANSPORTATION
Caltrans® OFFICE OF DESIGN A

LAST REVISION 00-00-00 | DATE PLOTTED => 30-JUN-2011 | TIME PLOTTED => 17:17

Dist	COUNTY	ROUTE	POST MILES TOTAL PROJECT	SHEET No.	TOTAL SHEETS
07	LA	5	1.2/2.1	192	602

Richard Lizardi 3/14/11
REGISTERED CIVIL ENGINEER DATE

6-27-11
PLANS APPROVAL DATE

REGISTERED PROFESSIONAL ENGINEER RICHARD LIZARDI No. C53407 Exp. 6/30/11 CIVIL STATE OF CALIFORNIA

THE STATE OF CALIFORNIA OR ITS OFFICERS OR AGENTS SHALL NOT BE RESPONSIBLE FOR THE ACCURACY OR COMPLETENESS OF SCANNED COPIES OF THIS PLAN SHEET.

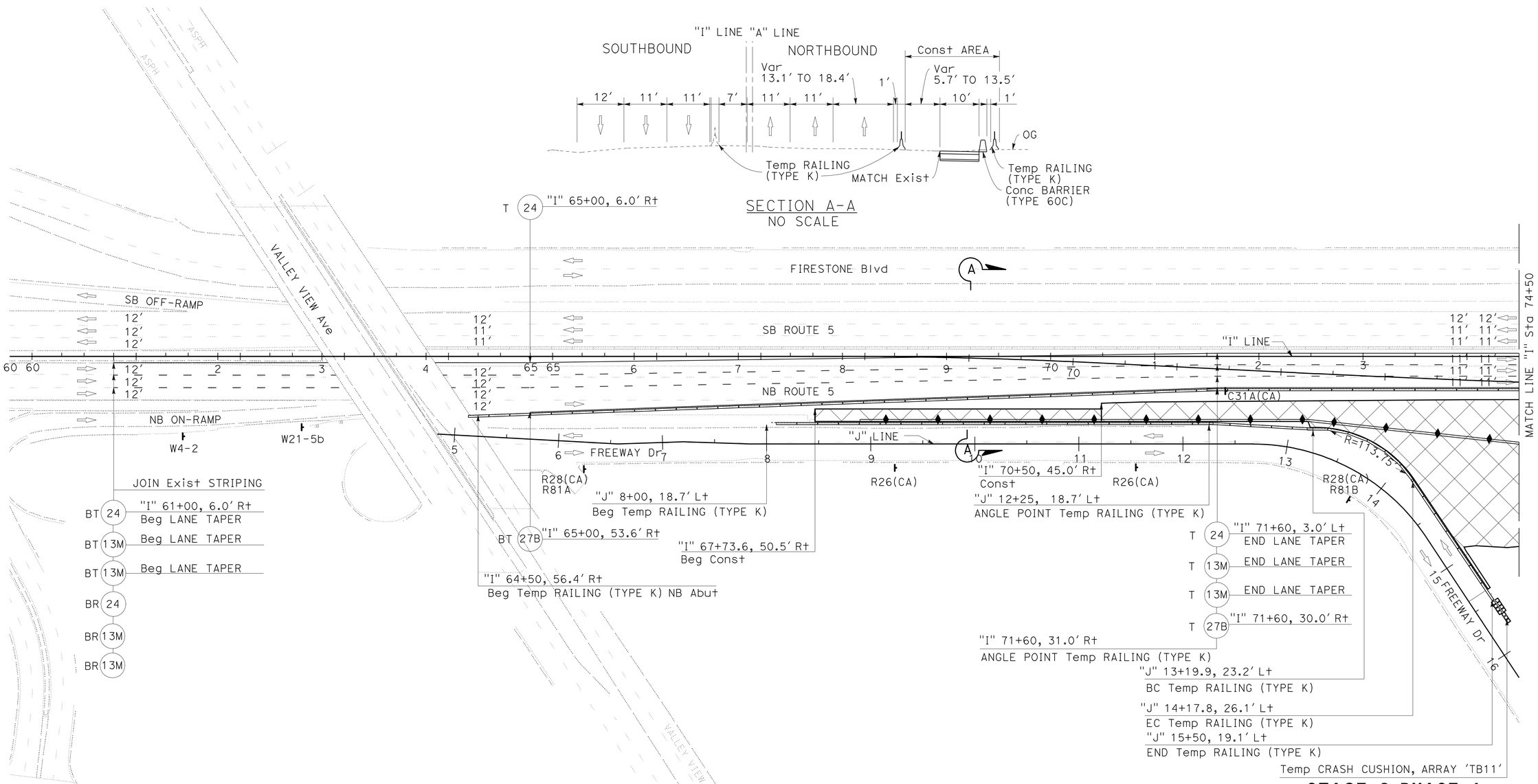

STAGE 2 PHASE 1

STAGE CONSTRUCTION AND TRAFFIC HANDLING PLAN

SCALE: 1" = 50'

SC-11

THIS PLAN ACCURATE FOR STAGE CONSTRUCTION AND TRAFFIC HANDLING WORK ONLY.

REVISED BY	RDL
DATE REVISED	9/7/2010
CALCULATED-DESIGNED BY	RICHARD LIZARDI
CHECKED BY	RICHARD LIZARDI
FUNCTIONAL SUPERVISOR	ASADOUR TERTERIAN

STATE OF CALIFORNIA - DEPARTMENT OF TRANSPORTATION
Caltrans® OFFICE OF DESIGN A

LAST REVISION 00-00-00 | DATE PLOTTED => 30-JUN-2011 | TIME PLOTTED => 17:17

Dist	COUNTY	ROUTE	POST MILES TOTAL PROJECT	SHEET No.	TOTAL SHEETS
07	LA	5	1.2/2.1	193	602

Richard Lizardi 3/14/11
REGISTERED CIVIL ENGINEER DATE

6-27-11
PLANS APPROVAL DATE

REGISTERED PROFESSIONAL ENGINEER RICHARD LIZARDI No. C53407 Exp. 6/30/11 CIVIL STATE OF CALIFORNIA

THE STATE OF CALIFORNIA OR ITS OFFICERS OR AGENTS SHALL NOT BE RESPONSIBLE FOR THE ACCURACY OR COMPLETENESS OF SCANNED COPIES OF THIS PLAN SHEET.

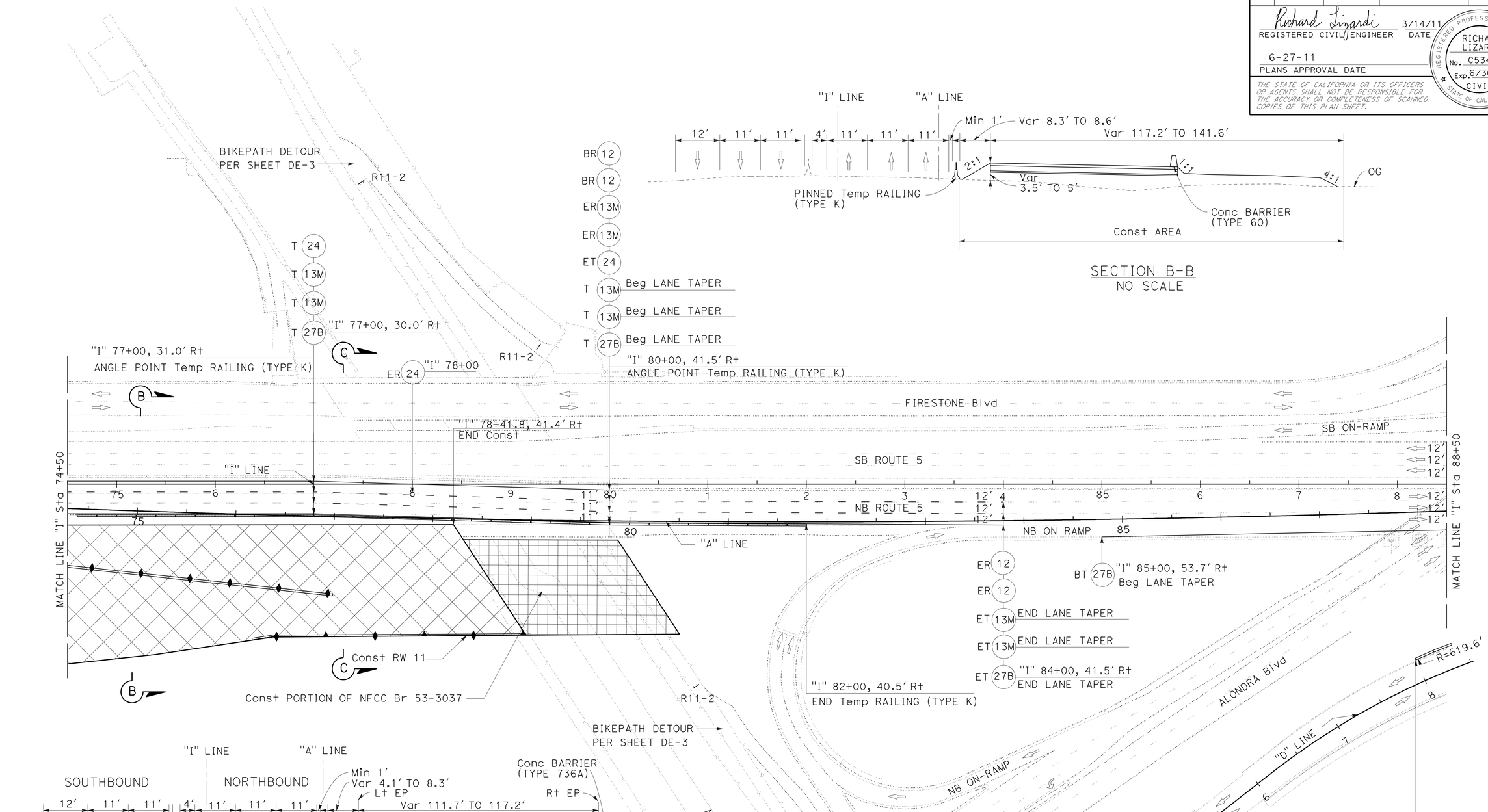

STAGE 2 PHASE 1

STAGE CONSTRUCTION AND TRAFFIC HANDLING PLAN

SCALE: 1" = 50'

THIS PLAN ACCURATE FOR STAGE CONSTRUCTION AND TRAFFIC HANDLING WORK ONLY.

SC-12

STATE OF CALIFORNIA - DEPARTMENT OF TRANSPORTATION
Caltrans® OFFICE OF DESIGN A

FUNCTIONAL SUPERVISOR: ASADOUR TERTERIAN
CALCULATED-DESIGNED BY: RICHARD LIZARDI
CHECKED BY:
REVISED BY:
DATE REVISED:

LAST REVISION 00-00-00 | DATE PLOTTED => 30-JUN-2011 | TIME PLOTTED => 17:17

Dist	COUNTY	ROUTE	POST MILES TOTAL PROJECT	SHEET No.	TOTAL SHEETS
07	LA	5	1.2/2.1	194	602

Richard Lizardi 3/14/11
REGISTERED CIVIL ENGINEER DATE

6-27-11
PLANS APPROVAL DATE

REGISTERED PROFESSIONAL ENGINEER RICHARD LIZARDI No. C53407 Exp. 6/30/11 CIVIL STATE OF CALIFORNIA

THE STATE OF CALIFORNIA OR ITS OFFICERS OR AGENTS SHALL NOT BE RESPONSIBLE FOR THE ACCURACY OR COMPLETENESS OF SCANNED COPIES OF THIS PLAN SHEET.

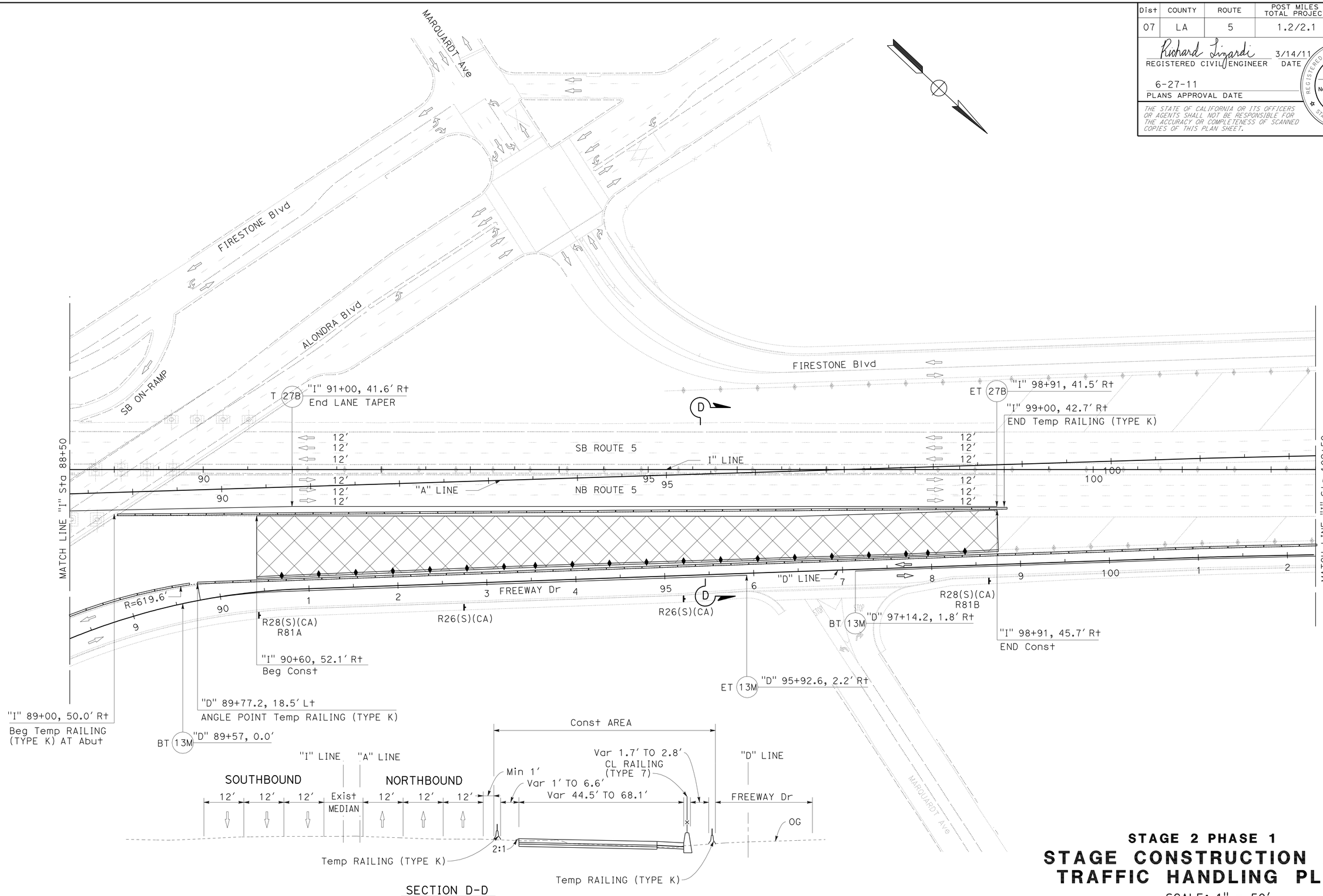

THIS PLAN ACCURATE FOR STAGE CONSTRUCTION AND TRAFFIC HANDLING WORK ONLY.

STAGE 2 PHASE 1

STAGE CONSTRUCTION AND TRAFFIC HANDLING PLAN

SCALE: 1" = 50′

SC-13

REVISED BY	
DATE REVISED	
CALCULATED-DESIGNED BY	RICHARD LIZARDI
CHECKED BY	RICHARD LIZARDI
FUNCTIONAL SUPERVISOR	ASADOUR TERTERIAN

STATE OF CALIFORNIA - DEPARTMENT OF TRANSPORTATION
Caltrans® OFFICE OF DESIGN A

LAST REVISION 00-00-00
DATE PLOTTED => 30-JUN-2011
TIME PLOTTED => 17:18

Dist	COUNTY	ROUTE	POST MILES TOTAL PROJECT	SHEET No.	TOTAL SHEETS
07	LA	5	1.2/2.1	195	602

Richard Lizardi 3/14/11
REGISTERED CIVIL ENGINEER DATE

6-27-11
PLANS APPROVAL DATE

REGISTERED PROFESSIONAL ENGINEER
RICHARD LIZARDI
No. C53407
Exp. 6/30/11
CIVIL
STATE OF CALIFORNIA

THE STATE OF CALIFORNIA OR ITS OFFICERS OR AGENTS SHALL NOT BE RESPONSIBLE FOR THE ACCURACY OR COMPLETENESS OF SCANNED COPIES OF THIS PLAN SHEET.

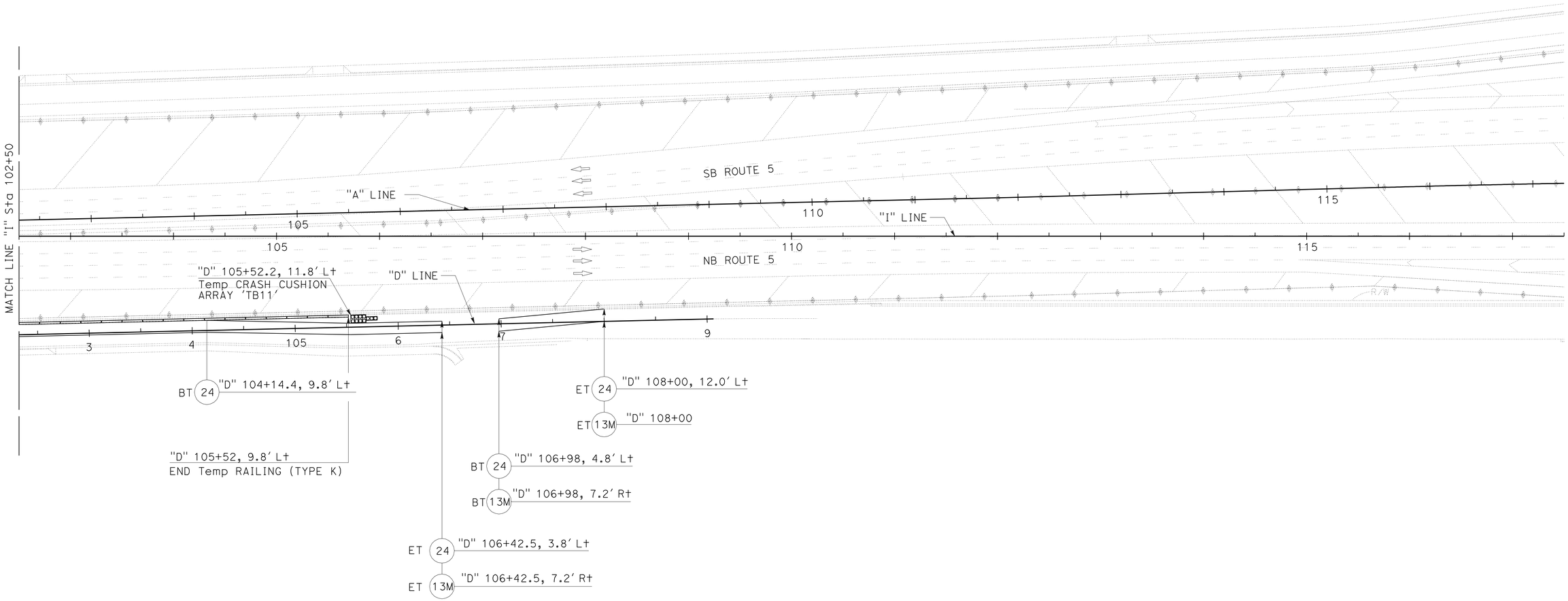

STAGE 2 PHASE 1

STAGE CONSTRUCTION AND TRAFFIC HANDLING PLAN

SCALE: 1" = 50′

SC-14

THIS PLAN ACCURATE FOR STAGE CONSTRUCTION AND TRAFFIC HANDLING WORK ONLY.

REVISED BY	DATE REVISED

CALCULATED-DESIGNED BY: RICHARD LIZARDI
CHECKED BY: RICHARD LIZARDI

FUNCTIONAL SUPERVISOR: ASADOUR TERTERIAN

STATE OF CALIFORNIA - DEPARTMENT OF TRANSPORTATION
Caltrans® OFFICE OF DESIGN A

LAST REVISION 00-00-00 | DATE PLOTTED => 30-JUN-2011 | TIME PLOTTED => 17:18

Dist	COUNTY	ROUTE	POST MILES TOTAL PROJECT	SHEET No.	TOTAL SHEETS
07	LA	5	1.2/2.1	196	602

Richard Lizardi 3/14/11
REGISTERED CIVIL ENGINEER DATE

6-27-11
PLANS APPROVAL DATE

REGISTERED PROFESSIONAL ENGINEER RICHARD LIZARDI No. C53407 Exp. 6/30/11 CIVIL STATE OF CALIFORNIA

THE STATE OF CALIFORNIA OR ITS OFFICERS OR AGENTS SHALL NOT BE RESPONSIBLE FOR THE ACCURACY OR COMPLETENESS OF SCANNED COPIES OF THIS PLAN SHEET.

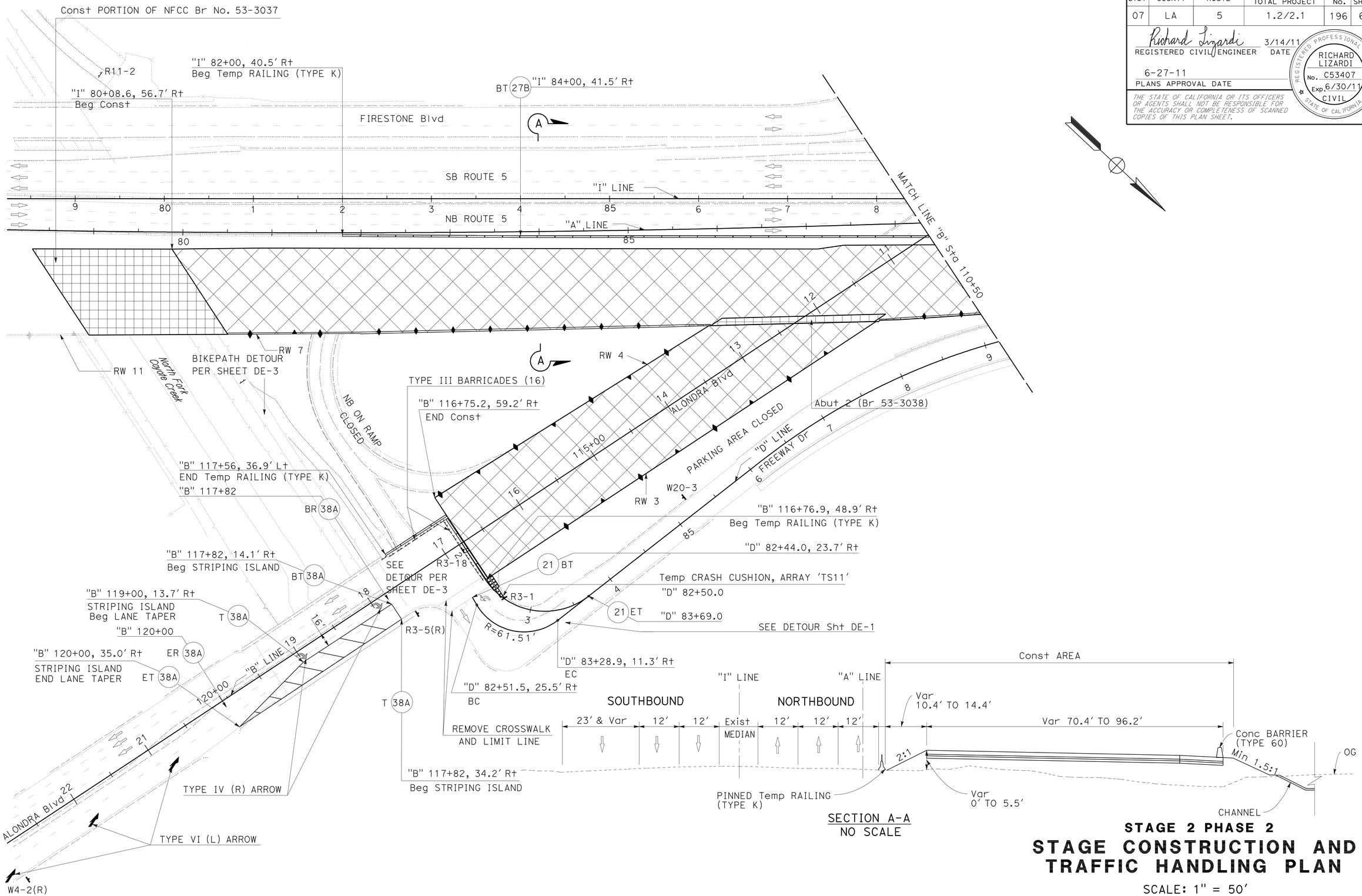

STAGE 2 PHASE 2

STAGE CONSTRUCTION AND TRAFFIC HANDLING PLAN

SCALE: 1" = 50'

THIS PLAN ACCURATE FOR STAGE CONSTRUCTION AND TRAFFIC HANDLING WORK ONLY.

SC-15

REVISED BY	DATE REVISED
	11-16

CALCULATED-DESIGNED BY: RICHARD LIZARDI
CHECKED BY: RICHARD LIZARDI

FUNCTIONAL SUPERVISOR: ASADOUR TERTERIAN

STATE OF CALIFORNIA - DEPARTMENT OF TRANSPORTATION
Caltrans® OFFICE OF DESIGN A

LAST REVISION 00-00-00 | DATE PLOTTED => 30-JUN-2011 | TIME PLOTTED => 17:18

Dist	COUNTY	ROUTE	POST MILES TOTAL PROJECT	SHEET No.	TOTAL SHEETS
07	LA	5	1.2/2.1	197	602

Richard Lizardi 3/14/11
REGISTERED CIVIL ENGINEER DATE

6-27-11
PLANS APPROVAL DATE

REGISTERED PROFESSIONAL ENGINEER RICHARD LIZARDI No. C53407 Exp. 6/30/11 CIVIL STATE OF CALIFORNIA

THE STATE OF CALIFORNIA OR ITS OFFICERS OR AGENTS SHALL NOT BE RESPONSIBLE FOR THE ACCURACY OR COMPLETENESS OF SCANNED COPIES OF THIS PLAN SHEET.

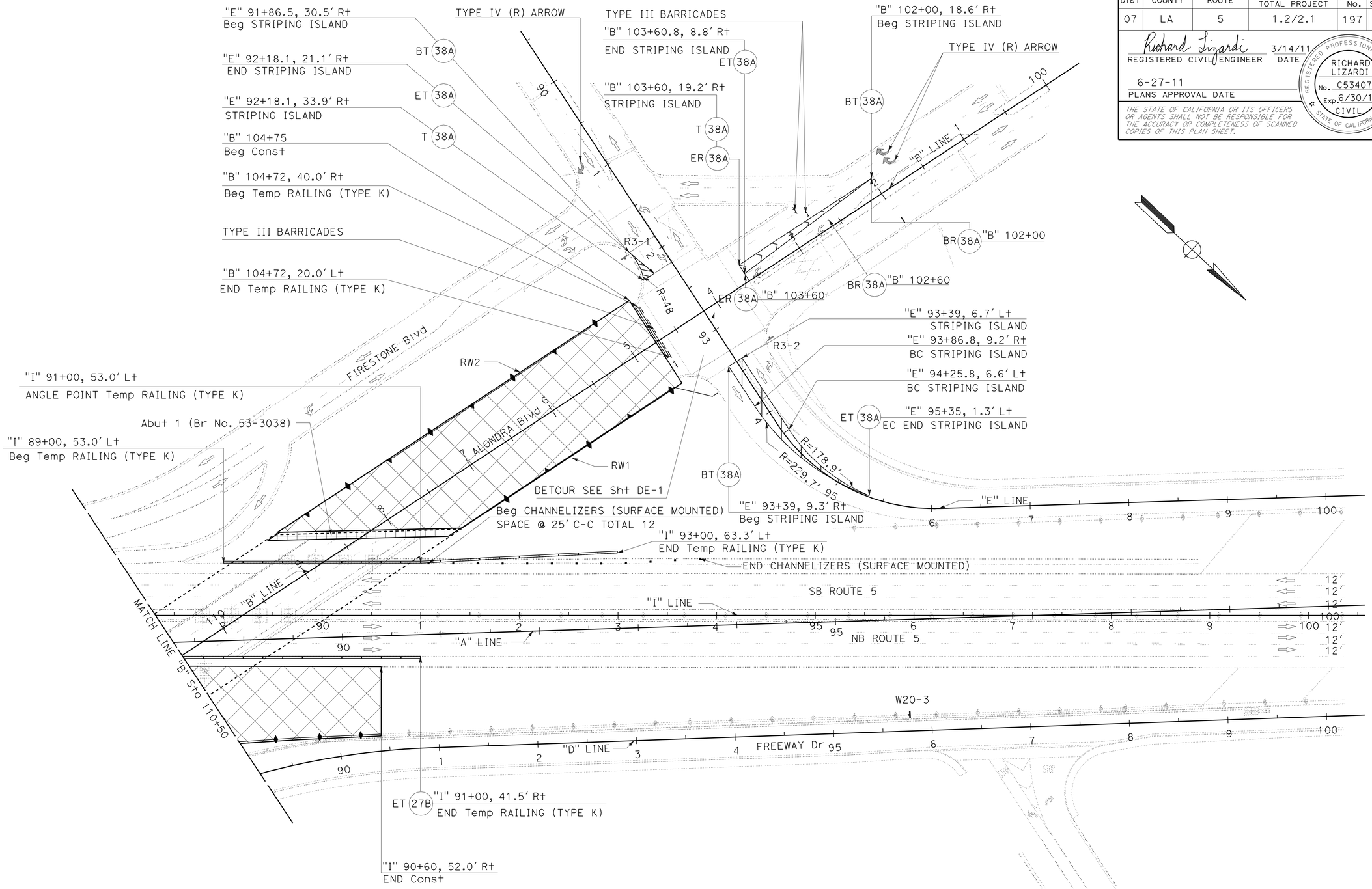

STAGE 2 PHASE 2
STAGE CONSTRUCTION AND TRAFFIC HANDLING PLAN

SCALE: 1" = 50'

THIS PLAN ACCURATE FOR STAGE CONSTRUCTION AND TRAFFIC HANDLING WORK ONLY.

SC-16

REVISED BY | DATE REVISED
RICHARD LIZARDI | RICHARD LIZARDI
CALCULATED-DESIGNED BY | CHECKED BY
FUNCTIONAL SUPERVISOR
ASADOUR TERTERIAN

STATE OF CALIFORNIA - DEPARTMENT OF TRANSPORTATION
Caltrans OFFICE OF DESIGN A

LAST REVISION 00-00-00 | DATE PLOTTED => 26-JUL-2011 | TIME PLOTTED => 14:37

Dist	COUNTY	ROUTE	POST MILES TOTAL PROJECT	SHEET No.	TOTAL SHEETS
07	LA	5	1.2/2.1	198	602

Richard Lizardi 3/14/11
REGISTERED CIVIL ENGINEER DATE

6-27-11
PLANS APPROVAL DATE

REGISTERED PROFESSIONAL ENGINEER
RICHARD LIZARDI
No. C53407
Exp. 6/30/11
CIVIL
STATE OF CALIFORNIA

THE STATE OF CALIFORNIA OR ITS OFFICERS OR AGENTS SHALL NOT BE RESPONSIBLE FOR THE ACCURACY OR COMPLETENESS OF SCANNED COPIES OF THIS PLAN SHEET.

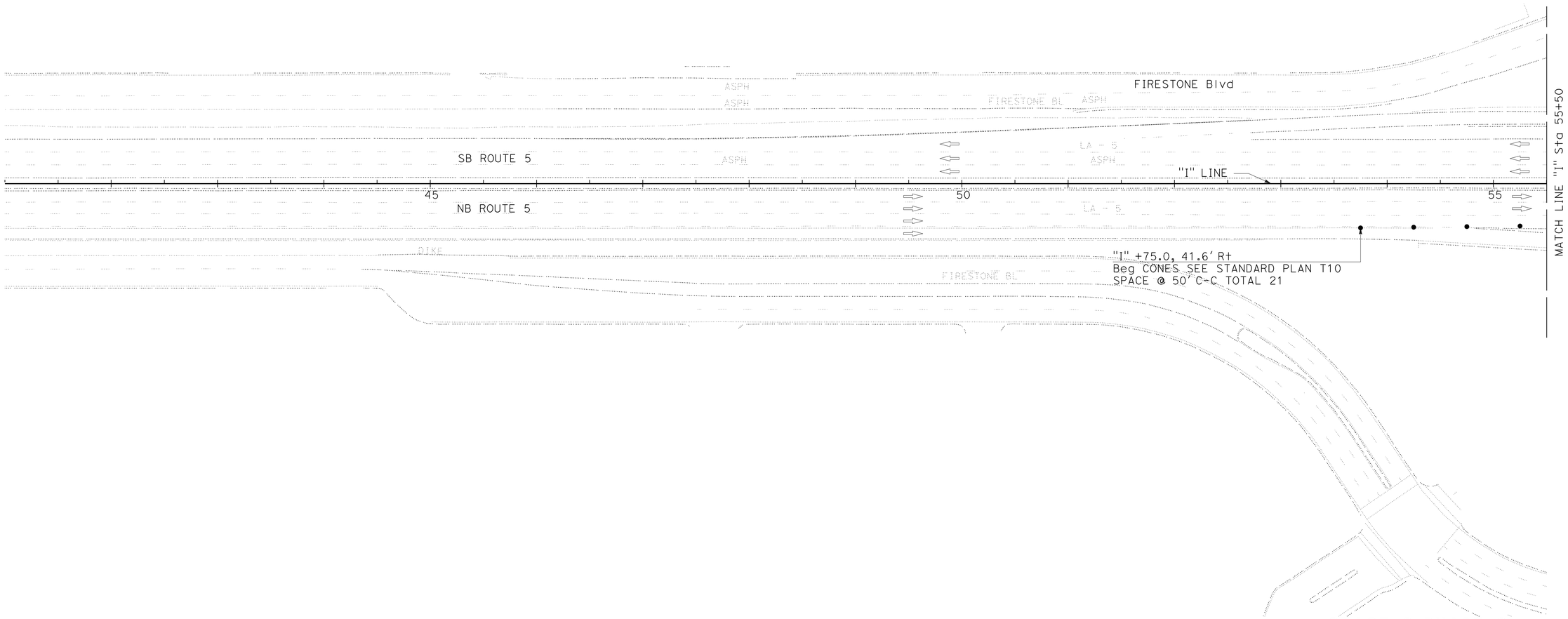

STAGE 2 PHASE 3

STAGE CONSTRUCTION AND TRAFFIC HANDLING PLAN

SCALE: 1" = 50'

SC-17

THIS PLAN ACCURATE FOR STAGE CONSTRUCTION AND TRAFFIC HANDLING WORK ONLY.

REVISED BY	RICHARD LIZARDI
DATE REVISED	RICHARD LIZARDI
CALCULATED-DESIGNED BY	
CHECKED BY	
FUNCTIONAL SUPERVISOR	ASADOUR TERTERIAN

STATE OF CALIFORNIA - DEPARTMENT OF TRANSPORTATION
Caltrans® OFFICE OF DESIGN A

LAST REVISION 00-00-00
DATE PLOTTED => 30-JUN-2011
TIME PLOTTED => 17:18

Dist	COUNTY	ROUTE	POST MILES TOTAL PROJECT	SHEET No.	TOTAL SHEETS
07	LA	5	1.2/2.1	199	602

Richard Lizardi 3/14/11
REGISTERED CIVIL ENGINEER DATE

6-27-11
PLANS APPROVAL DATE

REGISTERED PROFESSIONAL ENGINEER RICHARD LIZARDI No. C53407 Exp. 6/30/11 CIVIL STATE OF CALIFORNIA

THE STATE OF CALIFORNIA OR ITS OFFICERS OR AGENTS SHALL NOT BE RESPONSIBLE FOR THE ACCURACY OR COMPLETENESS OF SCANNED COPIES OF THIS PLAN SHEET.

NOTES:

1. STRIPING IN THIS STAGE SHOULD BE COMPLETED BEFORE THE 52-HOUR CLOSURE.
2. Temp NB ON-RAMP SHALL BE OPENED DURING THE 52-HOUR CLOSURE.

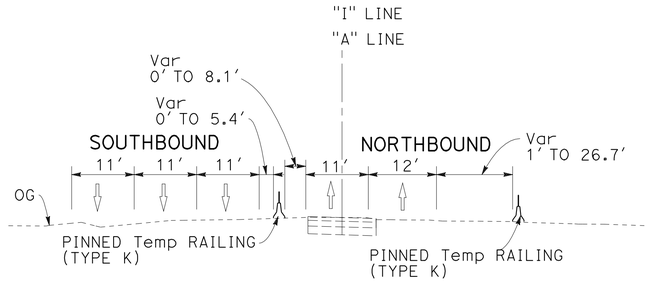

SECTION B-B
NO SCALE

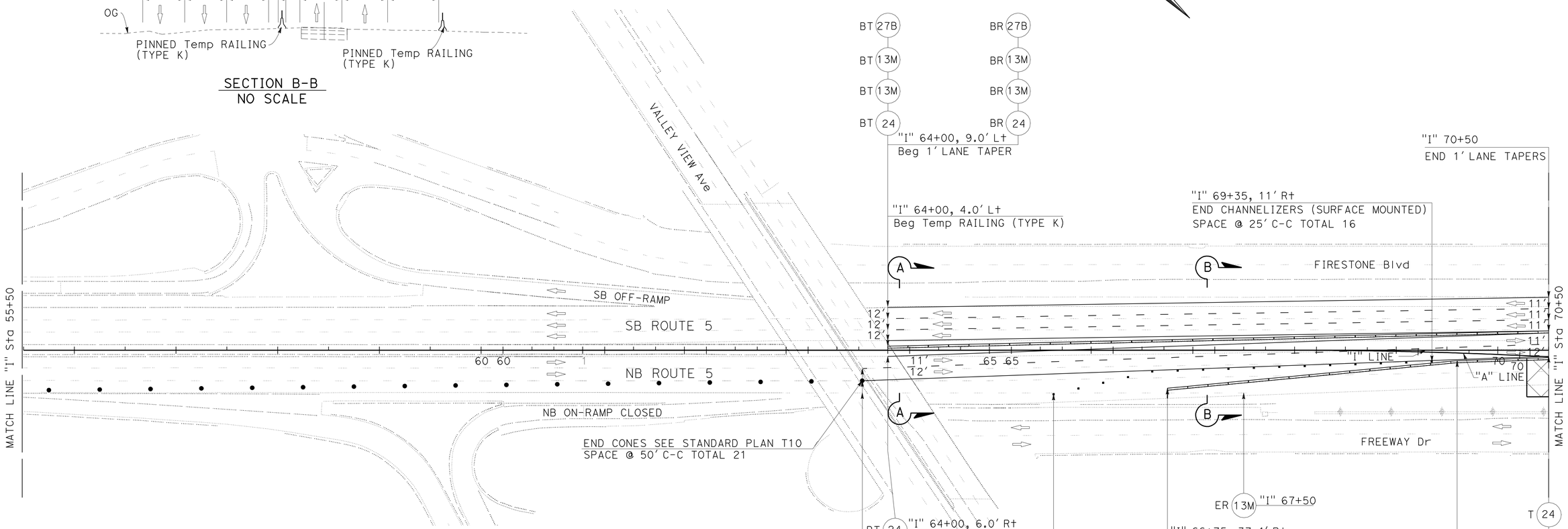

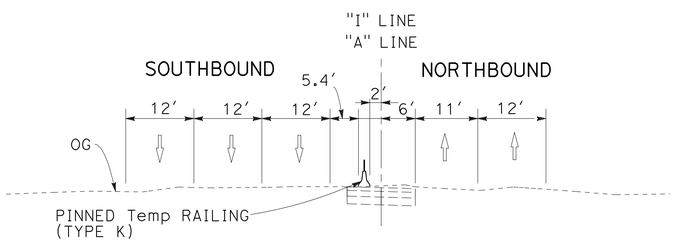

SECTION A-A
NO SCALE

THIS PLAN ACCURATE FOR STAGE CONSTRUCTION AND TRAFFIC HANDLING WORK ONLY.

STAGE 2 PHASE 3

STAGE CONSTRUCTION AND TRAFFIC HANDLING PLAN

SCALE: 1" = 50'

SC-18

REVISED BY	DATE REVISED	RICHARD LIZARDI	FUNCTIONAL SUPERVISOR
RICHARD LIZARDI		ASADOUR TERTERIAN	
CALCULATED-DESIGNED BY	CHECKED BY	STATE OF CALIFORNIA - DEPARTMENT OF TRANSPORTATION	
		Caltrans OFFICE OF DESIGN A	

LAST REVISION 00-00-00 | DATE PLOTTED => 30-JUN-2011 | TIME PLOTTED => 17:18

Dist	COUNTY	ROUTE	POST MILES TOTAL PROJECT	SHEET No.	TOTAL SHEETS
07	LA	5	1.2/2.1	200	602

Richard Lizardi 3/14/11
REGISTERED CIVIL ENGINEER DATE

6-27-11
PLANS APPROVAL DATE

REGISTERED PROFESSIONAL ENGINEER RICHARD LIZARDI No. C53407 Exp. 6/30/11 CIVIL STATE OF CALIFORNIA

THE STATE OF CALIFORNIA OR ITS OFFICERS OR AGENTS SHALL NOT BE RESPONSIBLE FOR THE ACCURACY OR COMPLETENESS OF SCANNED COPIES OF THIS PLAN SHEET.

NOTES:

1. STRIPING IN THIS STAGE SHOULD BE COMPLETED BEFORE THE 52-HOUR CLOSURE.
2. Temp NB ON-RAMP SHALL BE OPENED DURING THE 52-HOUR CLOSURE.

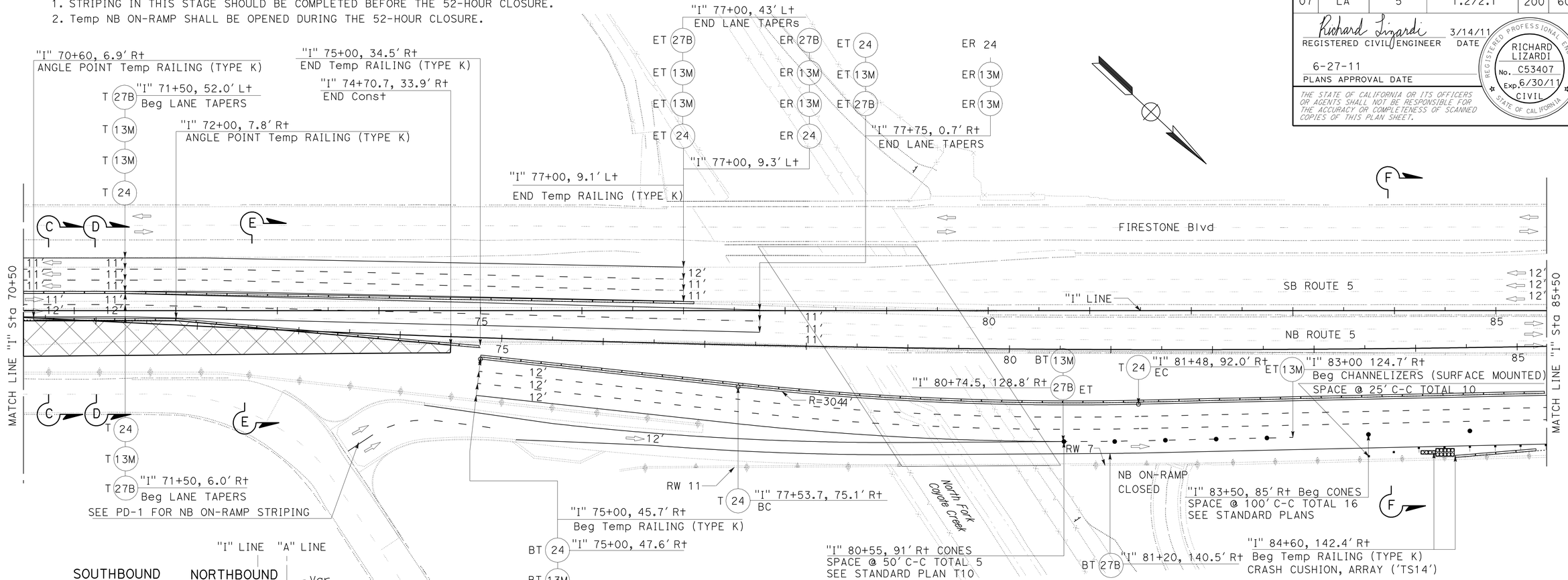

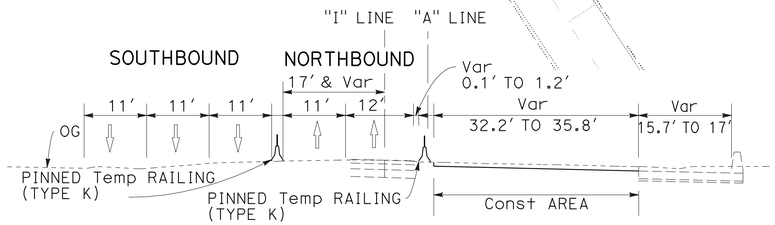

SECTION C-C
NO SCALE

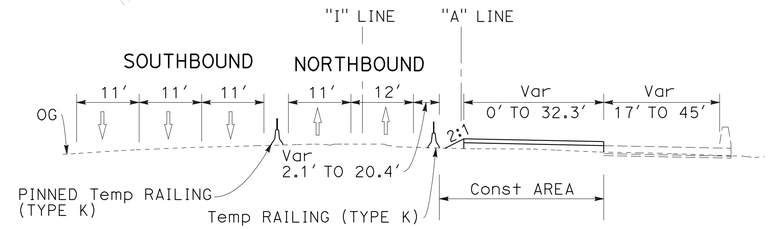

SECTION E-E
NO SCALE

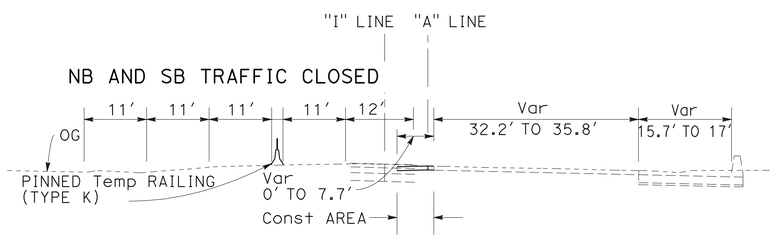

SECTION D-D
NO SCALE

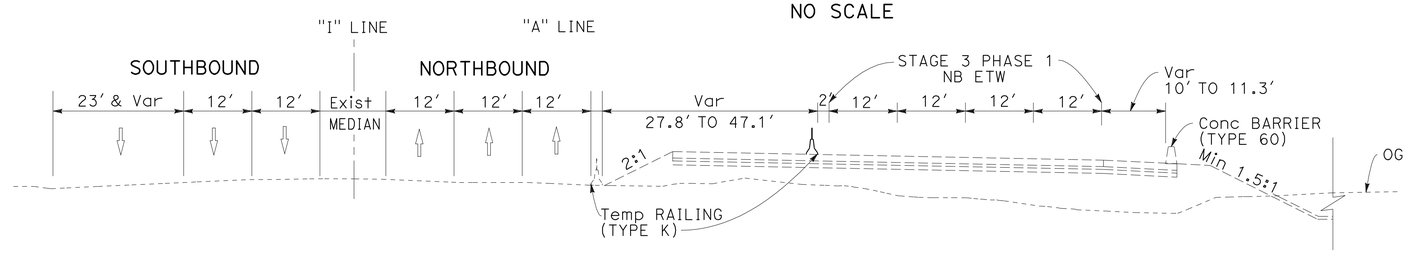

SECTION F-F
NO SCALE

THIS PLAN ACCURATE FOR STAGE CONSTRUCTION AND TRAFFIC HANDLING WORK ONLY.

STAGE 2 PHASE 3

STAGE CONSTRUCTION AND TRAFFIC HANDLING PLAN

SCALE: 1" = 50'

SC-19

STATE OF CALIFORNIA - DEPARTMENT OF TRANSPORTATION
Caltrans® OFFICE OF DESIGN A
FUNCTIONAL SUPERVISOR: ASADOUR TERTERIAN
CALCULATED-DESIGNED BY: RICHARD LIZARDI
CHECKED BY: RICHARD LIZARDI
REVISED BY
DATE REVISED

LAST REVISION 00-00-00
DATE PLOTTED => 30-JUN-2011
TIME PLOTTED => 17:18