Dist	COUNTY	ROUTE	POST MILES TOTAL PROJECT	SHEET No.	TOTAL SHEETS
07	LA	5	1.2/2.1	12	602

Medardo de la Cruz 3/14/11
REGISTERED CIVIL ENGINEER DATE

6-27-11
PLANS APPROVAL DATE

REGISTERED PROFESSIONAL ENGINEER MEDARDO DE LA CRUZ No. C61848 Exp. 6-30-11 CIVIL STATE OF CALIFORNIA

THE STATE OF CALIFORNIA OR ITS OFFICERS OR AGENTS SHALL NOT BE RESPONSIBLE FOR THE ACCURACY OR COMPLETENESS OF SCANNED COPIES OF THIS PLAN SHEET.

CURVE DATA

No. (X)	R	Δ	T	L	ALIGNMENT
2	20000.00′	4°38′46"	811.34′	1621.79′	"A" LINE
50	400.11′	33°25′15"	120.12′	233.39′	"C" LINE
40	754.59′	36°01′03"	245.31′	474.35′	"D" LINE

NOTE:

FOR ACCURATE RIGHT OF WAY DATA, CONTACT RIGHT OF WAY ENGINEERING AT DISTRICT OFFICE.

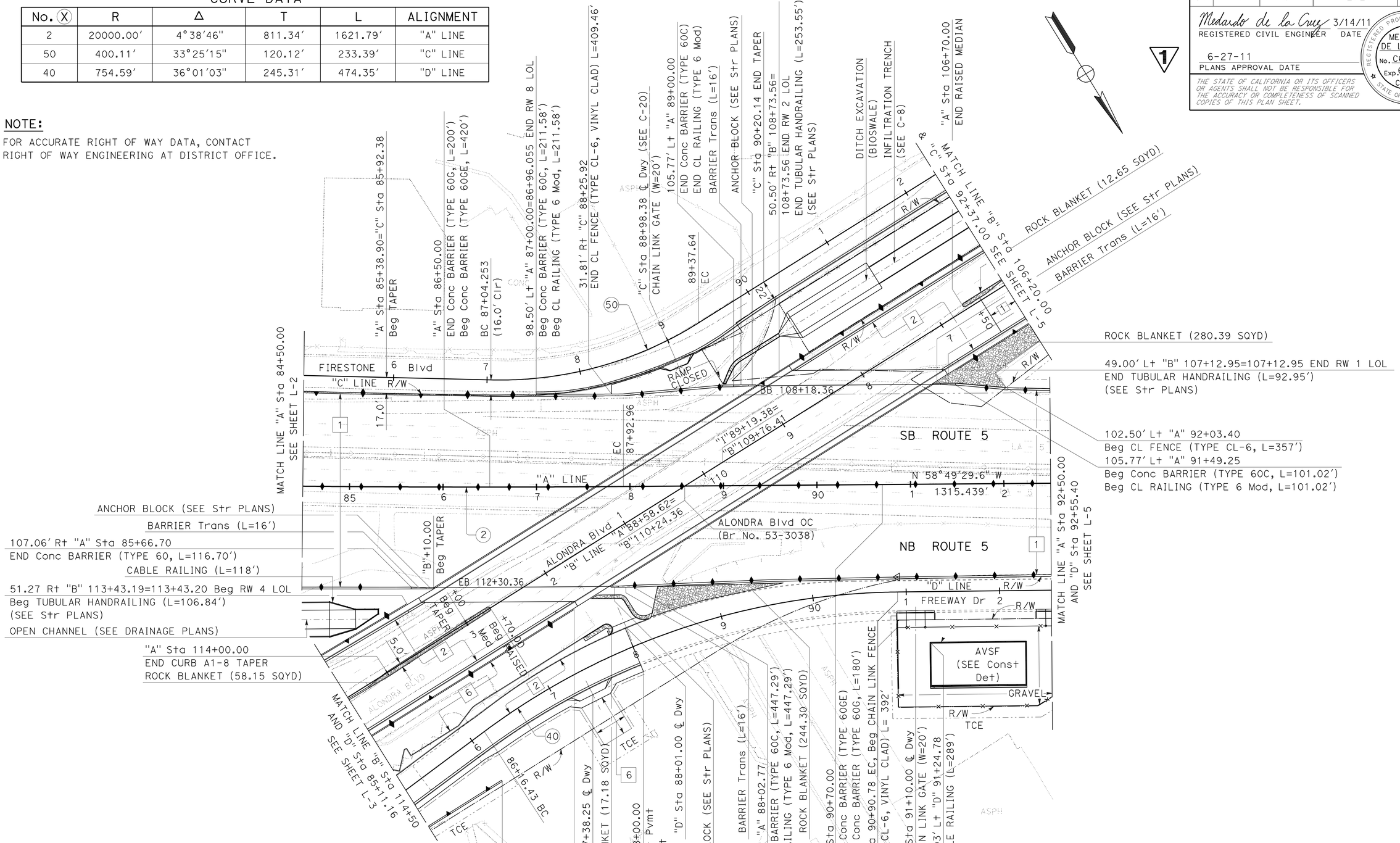

1 REVISED PER ADDENDUM No. 1 DATED OCTOBER 17, 2011

LAYOUT
SCALE: 1" = 50′

L-4

STATE OF CALIFORNIA - DEPARTMENT OF TRANSPORTATION
Caltrans® OFFICE OF DESIGN A

FUNCTIONAL SUPERVISOR: ASADOUR TERTERIAN
CALCULATED-DESIGNED BY: MEDARDO DE LA CRUZ
CHECKED BY: ASADOUR TERTERIAN
REVISED BY
DATE REVISED

LAST REVISION 00-00-00 | DATE PLOTTED => 17-OCT-2011 | TIME PLOTTED => 09:00

Dist	COUNTY	ROUTE	POST MILES TOTAL PROJECT	SHEET No.	TOTAL SHEETS
07	LA	5	1.2/2.1	13	602

Medardo de la Cruz 3/14/11
REGISTERED CIVIL ENGINEER DATE

6-27-11
PLANS APPROVAL DATE

REGISTERED PROFESSIONAL ENGINEER MEDARDO DE LA CRUZ No. C61848 Exp. 6-30-11 CIVIL STATE OF CALIFORNIA

THE STATE OF CALIFORNIA OR ITS OFFICERS OR AGENTS SHALL NOT BE RESPONSIBLE FOR THE ACCURACY OR COMPLETENESS OF SCANNED COPIES OF THIS PLAN SHEET.

NOTE:
FOR ACCURATE RIGHT OF WAY DATA, CONTACT RIGHT OF WAY ENGINEERING AT DISTRICT OFFICE.

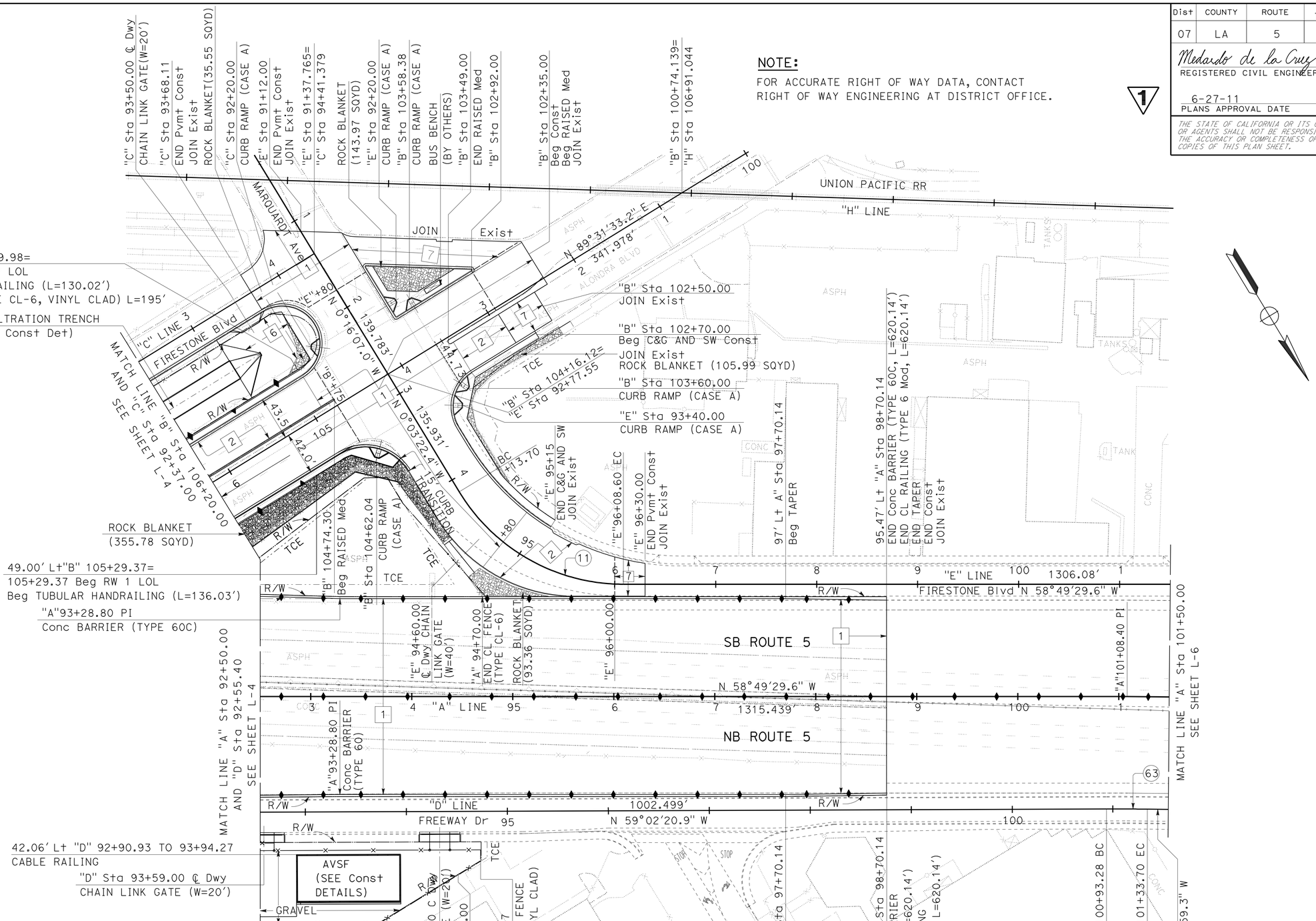

CURVE DATA

No. (X)	R	Δ	T	L	ALIGNMENT
63	3280.83'	0°42'22"	20.21'	40.43'	"D" LINE
11	190.00'	58°46'08"	106.99'	194.88'	"E" LINE

1 REVISED PER ADDENDUM No. 1 DATED OCTOBER 17, 2011

LAYOUT
SCALE: 1" = 50'

L-5

STATE OF CALIFORNIA - DEPARTMENT OF TRANSPORTATION
Caltrans® OFFICE OF DESIGN A

FUNCTIONAL SUPERVISOR: ASADOUR TERTERIAN
CALCULATED-DESIGNED BY: MEDARDO DE LA CRUZ
CHECKED BY: ASADOUR TERTERIAN
REVISED BY / DATE REVISED

LAST REVISION 00-00-00 | DATE PLOTTED => 17-OCT-2011 | TIME PLOTTED => 09:00

Dist	COUNTY	ROUTE	POST MILES TOTAL PROJECT	SHEET No.	TOTAL SHEETS
07	LA	5	1.2/2.1	27	602

Medardo de la Cruz 3/14/11
REGISTERED CIVIL ENGINEER DATE

6-27-11
PLANS APPROVAL DATE

REGISTERED PROFESSIONAL ENGINEER MEDARDO DE LA CRUZ No. C61848 Exp. 6-30-11 CIVIL STATE OF CALIFORNIA

THE STATE OF CALIFORNIA OR ITS OFFICERS OR AGENTS SHALL NOT BE RESPONSIBLE FOR THE ACCURACY OR COMPLETENESS OF SCANNED COPIES OF THIS PLAN SHEET.

1

CURVE DATA

No. ⊕	R	Δ	T	L
11	190′	58°45′37″	106.97′	194.86′
12	1′	146°31′39″	3.33′	2.56′
13	2.25′	180°00′00″	—	7.07′
14	1′	123°16′12″	1.85′	2.15′
15	1′	90°12′10″	1.00′	1.57′
16	35′	89°47′50″	34.88′	54.85′
17	246′	16°59′48″	36.76′	72.98′
18	37′	175°54′46″	1041.17′	114.06′
19	50′	90°18′42″	50.27′	78.81′
20	160′	55°25′32″	84.05′	154.78′
21	0.75′	180°00′00″	—	2.36′

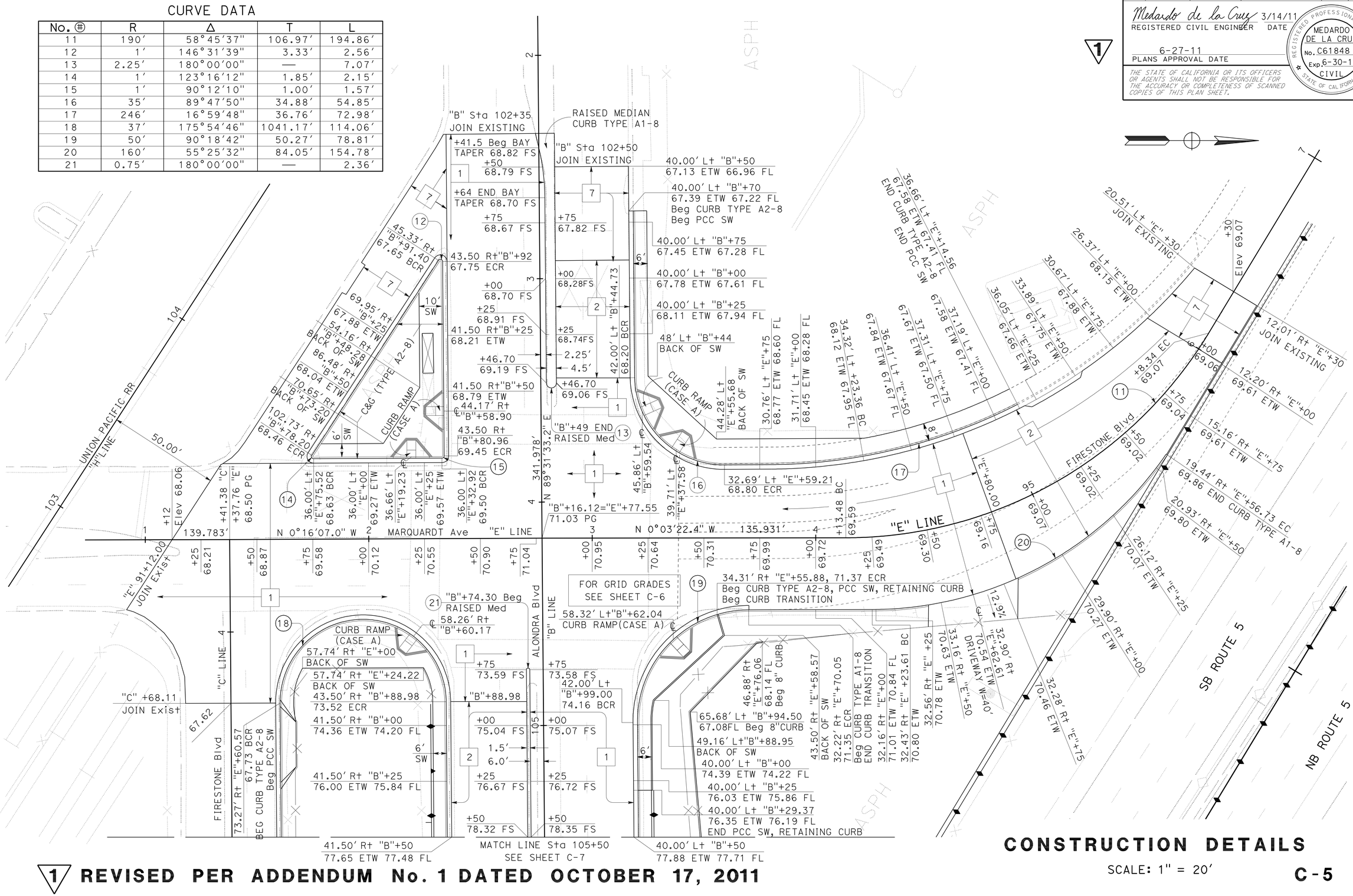

1 REVISED PER ADDENDUM No. 1 DATED OCTOBER 17, 2011

CONSTRUCTION DETAILS

SCALE: 1" = 20′

C-5

STATE OF CALIFORNIA - DEPARTMENT OF TRANSPORTATION
Caltrans OFFICE OF DESIGN A

FUNCTIONAL SUPERVISOR: ASADOUR TERTERIAN
CALCULATED-DESIGNED BY: KEDAR SAWANT
CHECKED BY: MEDARDO DE LA CRUZ
REVISED BY: MDLF
DATE REVISED: 5-24-11

LAST REVISION 00-00-00
DATE PLOTTED => 17-OCT-2011
TIME PLOTTED => 09:00

Dist	COUNTY	ROUTE	POST MILES TOTAL PROJECT	SHEET No.	TOTAL SHEETS
07	LA	5	1.2/2.1	28	602

Medardo de la Cruz 3/14/11
REGISTERED CIVIL ENGINEER DATE

6-27-11
PLANS APPROVAL DATE

REGISTERED PROFESSIONAL ENGINEER MEDARDO DE LA CRUZ No. C61848 Exp. 6-30-11 CIVIL STATE OF CALIFORNIA

THE STATE OF CALIFORNIA OR ITS OFFICERS OR AGENTS SHALL NOT BE RESPONSIBLE FOR THE ACCURACY OR COMPLETENESS OF SCANNED COPIES OF THIS PLAN SHEET.

1

CURVE DATA

No. ⊕	R	Δ	T	L
16	35′	89°47′50"	34.88′	54.85′
18	37′	175°54′46"	1041.17′	114.06′
19	35′	90°18′42"	35.19′	55.17′

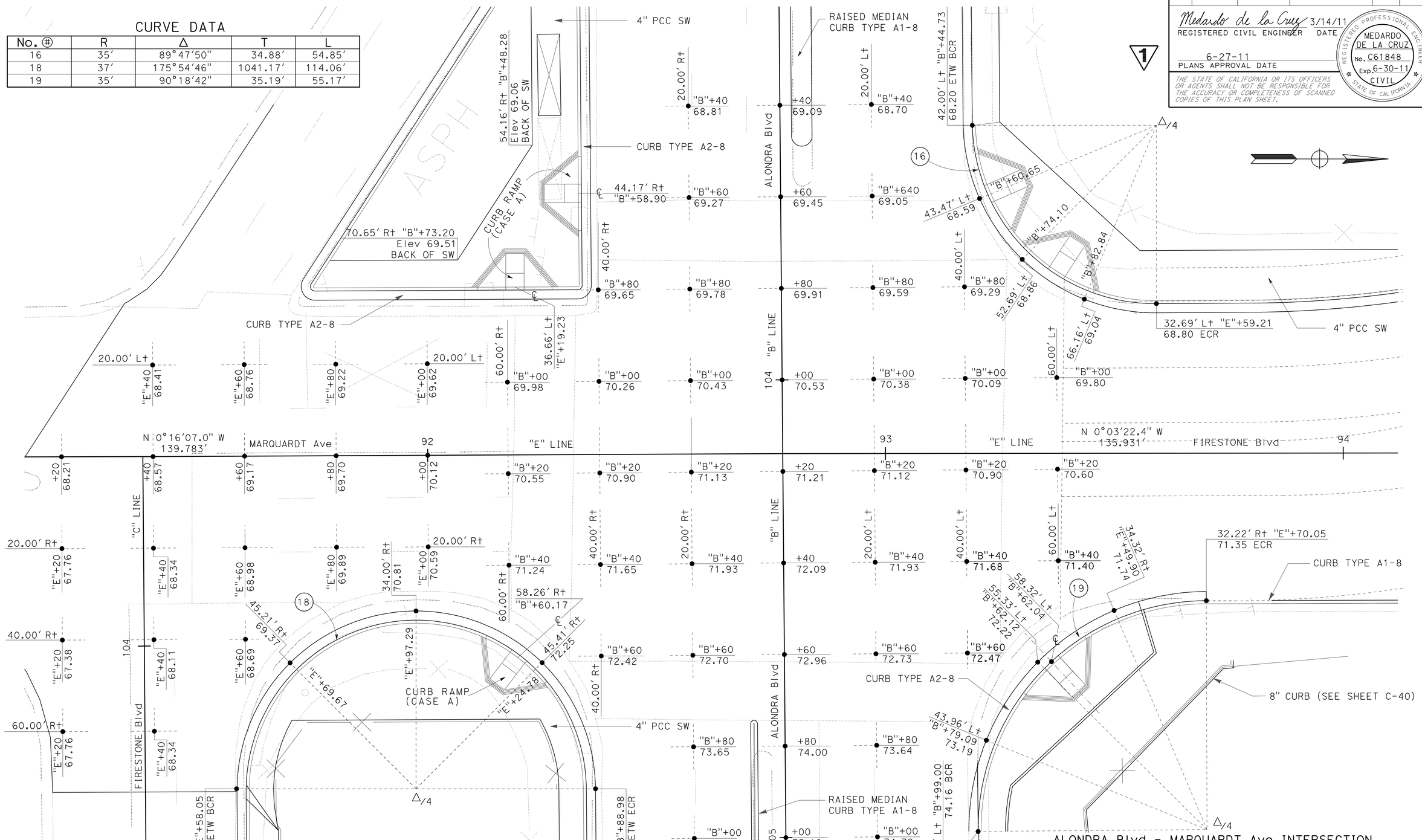

CONSTRUCTION DETAILS

SCALE: 1" = 10′

C-6

1 REVISED PER ADDENDUM No. 1 DATED OCTOBER 17, 2011

STATE OF CALIFORNIA - DEPARTMENT OF TRANSPORTATION
Caltrans® OFFICE OF DESIGN A

FUNCTIONAL SUPERVISOR: ASADOUR TERTERIAN
CALCULATED-DESIGNED BY: KEDAR SAWANT
CHECKED BY: MEDARDO DE LA CRUZ
REVISED BY
DATE REVISED

LAST REVISION 00-00-00
DATE PLOTTED => 17-OCT-2011
TIME PLOTTED => 09:00

Dist	COUNTY	ROUTE	POST MILES TOTAL PROJECT	SHEET No.	TOTAL SHEETS
07	LA	5	1.2/2.1	66	602

Medardo de la Cruz 3/14/11
REGISTERED CIVIL ENGINEER DATE

6-27-11
PLANS APPROVAL DATE

REGISTERED PROFESSIONAL ENGINEER
MEDARDO DE LA CRUZ
No. C61848
Exp. 6-30-11
CIVIL
STATE OF CALIFORNIA

THE STATE OF CALIFORNIA OR ITS OFFICERS OR AGENTS SHALL NOT BE RESPONSIBLE FOR THE ACCURACY OR COMPLETENESS OF SCANNED COPIES OF THIS PLAN SHEET.

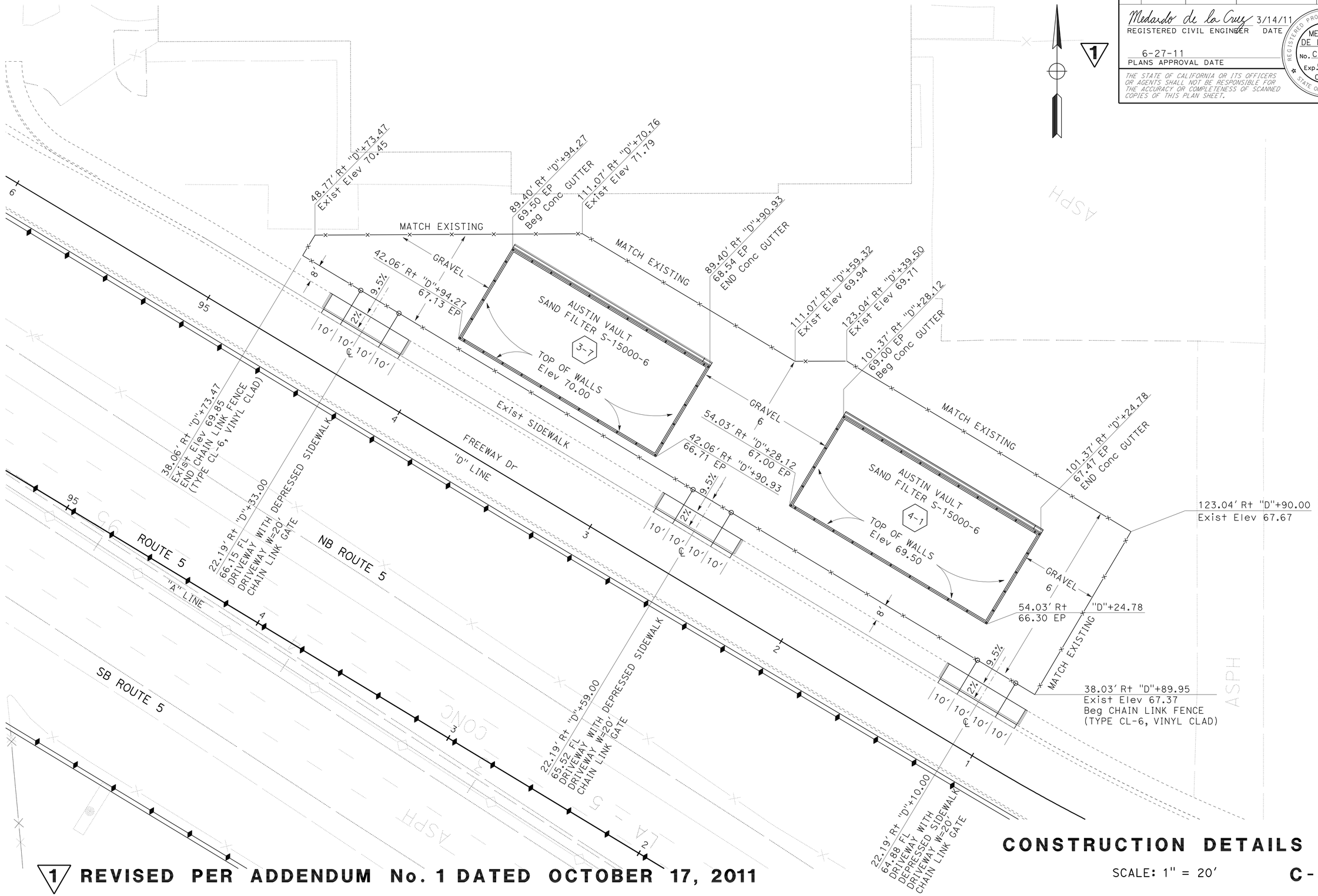

1 REVISED PER ADDENDUM No. 1 DATED OCTOBER 17, 2011

CONSTRUCTION DETAILS

SCALE: 1" = 20'

C-44

STATE OF CALIFORNIA - DEPARTMENT OF TRANSPORTATION
Caltrans OFFICE OF DESIGN A

FUNCTIONAL SUPERVISOR: ASADOUR TERTERIAN
CALCULATED-DESIGNED BY: KEDAR SAWANT
CHECKED BY: MEDARDO DE LA CRUZ
REVISED BY
DATE REVISED

LAST REVISION 00-00-00 | DATE PLOTTED => 17-OCT-2011 | TIME PLOTTED => 09:01

Dist	COUNTY	ROUTE	POST MILES TOTAL PROJECT	SHEET No.	TOTAL SHEETS
07	LA	5	1.2/2.1	69	602

Medardo de la Cruz 3/14/11
REGISTERED CIVIL ENGINEER DATE

6-27-11
PLANS APPROVAL DATE

REGISTERED PROFESSIONAL ENGINEER
MEDARDO DE LA CRUZ
No. C61848
Exp. 6-30-11
CIVIL
STATE OF CALIFORNIA

THE STATE OF CALIFORNIA OR ITS OFFICERS OR AGENTS SHALL NOT BE RESPONSIBLE FOR THE ACCURACY OR COMPLETENESS OF SCANNED COPIES OF THIS PLAN SHEET.

NOTE:

FOR AERIALLY DEPOSITED LEAD (ADL) AREAS SEE SHEET C-16 TO C-19.

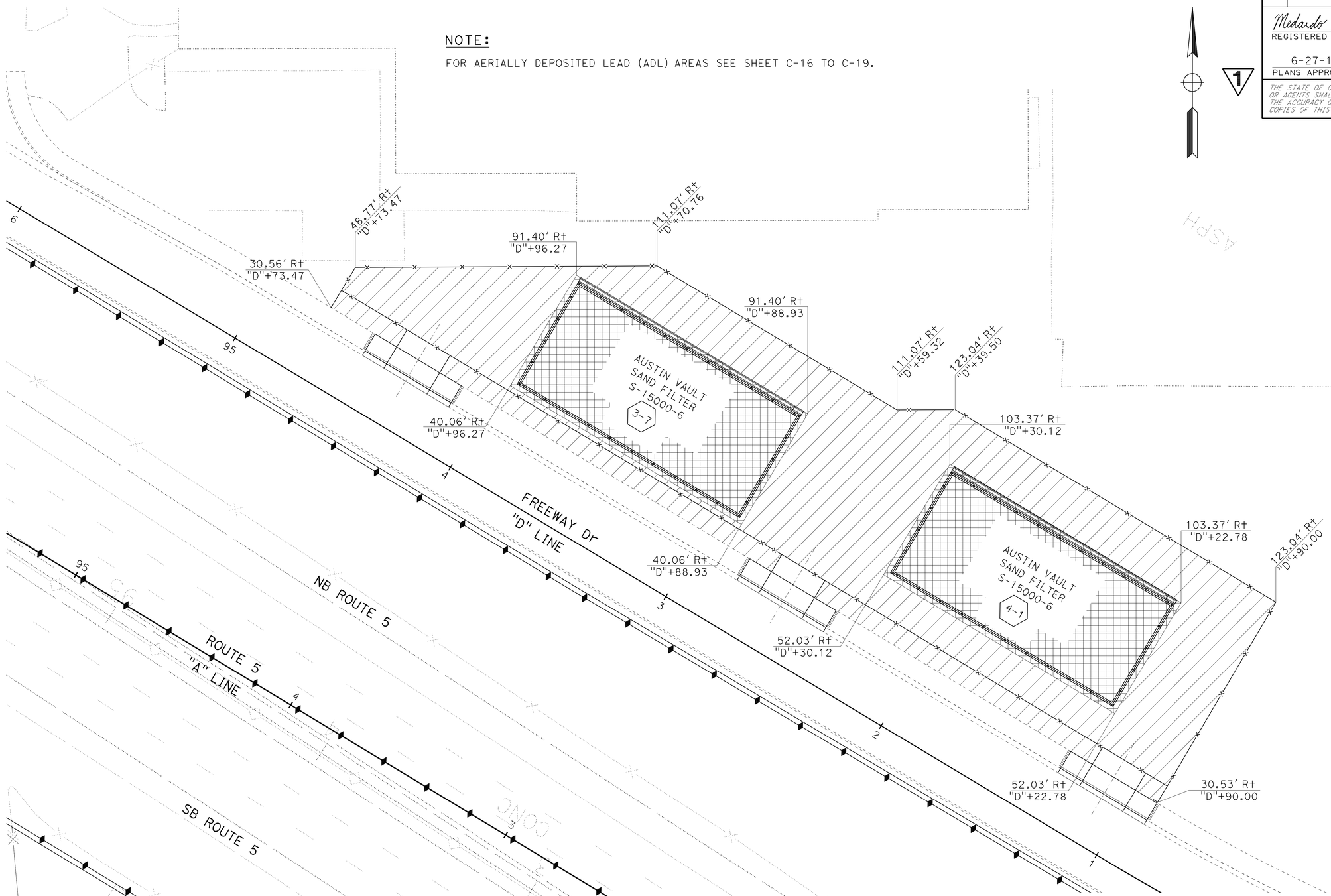

(CONTAMINATED MATERIAL REMOVAL)

CONSTRUCTION DETAILS

SCALE: 1" = 20'

C-47

1 REVISED PER ADDENDUM No. 1 DATED OCTOBER 17, 2011

STATE OF CALIFORNIA - DEPARTMENT OF TRANSPORTATION
Caltrans® OFFICE OF DESIGN A

FUNCTIONAL SUPERVISOR: ASADOUR TERTERIAN

CALCULATED-DESIGNED BY: KEDAR SAWANT
CHECKED BY: MEDARDO DE LA CRUZ

REVISED BY
DATE REVISED

LAST REVISION 00-00-00
DATE PLOTTED => 17-OCT-2011
TIME PLOTTED => 09:01

BORDER LAST REVISED 7/2/2010
USERNAME => s121614
DGN FILE => 721591ga047.dgn
RELATIVE BORDER SCALE IS IN INCHES 0 1 2 3
UNIT 1799
PROJECT NUMBER & PHASE 07000018311

Dist	COUNTY	ROUTE	POST MILES TOTAL PROJECT	SHEET No.	TOTAL SHEETS
07	LA	5	1.2/2.1	70	602

Medardo de la Cruz 3/14/11
REGISTERED CIVIL ENGINEER DATE

6-27-11
PLANS APPROVAL DATE

REGISTERED PROFESSIONAL ENGINEER
MEDARDO DE LA CRUZ
No. C61848
Exp. 6-30-11
CIVIL
STATE OF CALIFORNIA

THE STATE OF CALIFORNIA OR ITS OFFICERS OR AGENTS SHALL NOT BE RESPONSIBLE FOR THE ACCURACY OR COMPLETENESS OF SCANNED COPIES OF THIS PLAN SHEET.

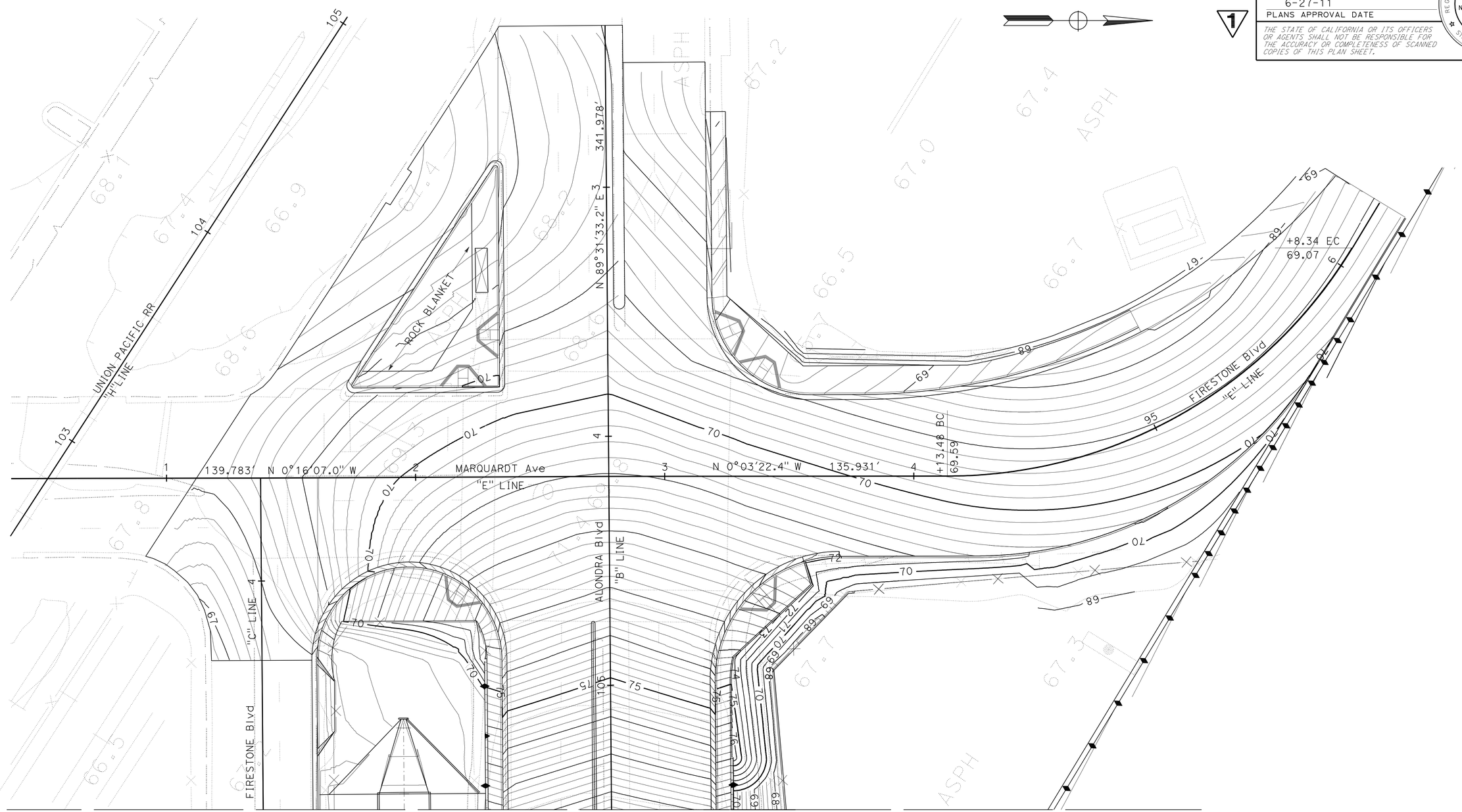

CONTOUR GRADING

SCALE: 1" = 20'

G-1

1 REVISED PER ADDENDUM No. 1 DATED OCTOBER 17, 2011

THIS PLAN ACCURATE FOR CONTOUR GRADING WORK ONLY.

STATE OF CALIFORNIA - DEPARTMENT OF TRANSPORTATION
Caltrans OFFICE OF DESIGN A

FUNCTIONAL SUPERVISOR: ASADOUR TERTERIAN
CALCULATED-DESIGNED BY: KEDAR SAWANT
CHECKED BY: MEDARDO DE LA CRUZ
REVISED BY
DATE REVISED

LAST REVISION 00-00-00
DATE PLOTTED => 17-OCT-2011
TIME PLOTTED => 09:01

Dist	COUNTY	ROUTE	POST MILES TOTAL PROJECT	SHEET No.	TOTAL SHEETS
07	LA	5	1.2/2.1	71	602

Medardo de la Cruz 3/14/11
REGISTERED CIVIL ENGINEER DATE

6-27-11
PLANS APPROVAL DATE

REGISTERED PROFESSIONAL ENGINEER
MEDARDO DE LA CRUZ
No. C61848
Exp. 6-30-11
CIVIL
STATE OF CALIFORNIA

THE STATE OF CALIFORNIA OR ITS OFFICERS OR AGENTS SHALL NOT BE RESPONSIBLE FOR THE ACCURACY OR COMPLETENESS OF SCANNED COPIES OF THIS PLAN SHEET.

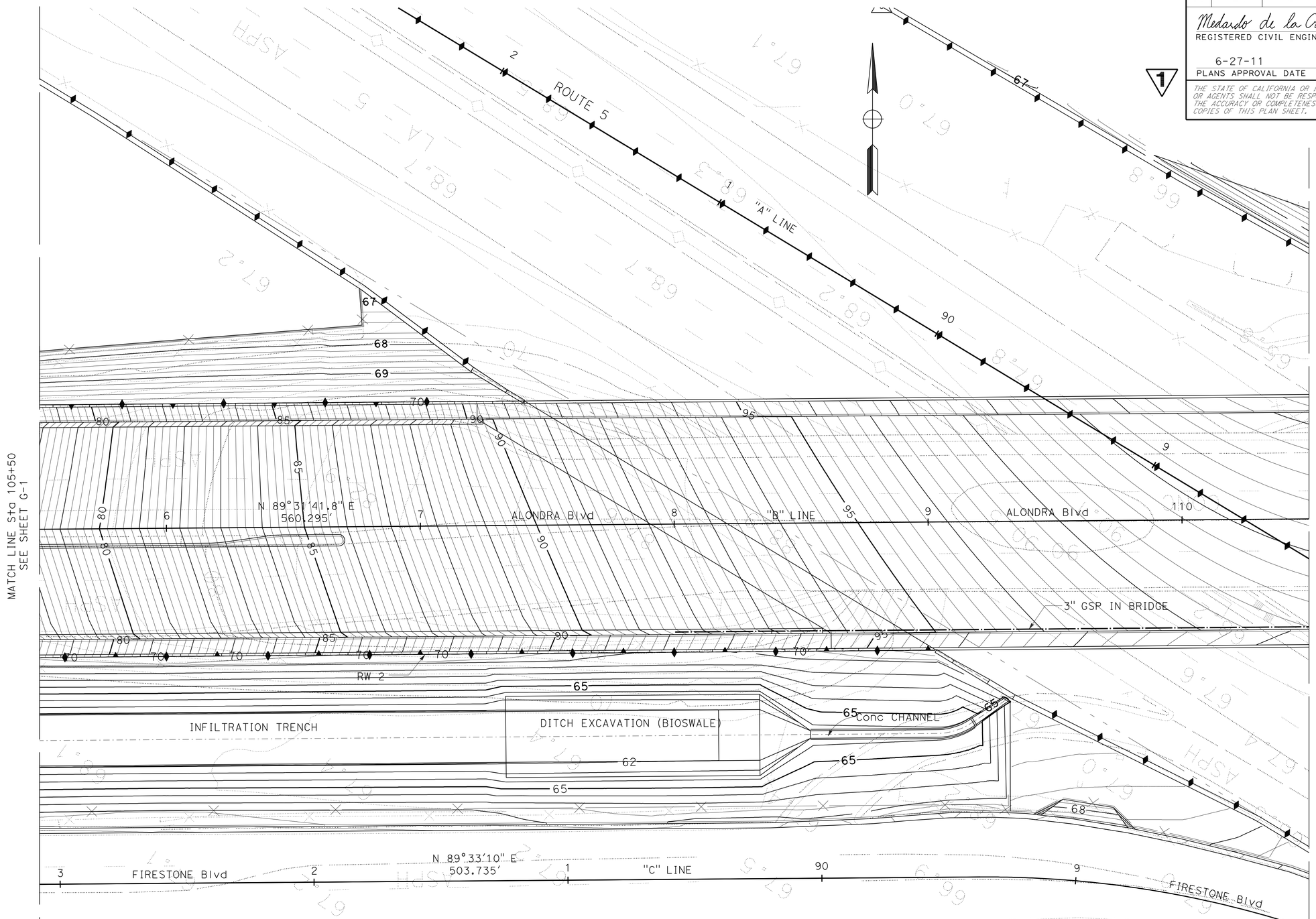

CONTOUR GRADING

SCALE: 1" = 20'

G-2

1 REVISED PER ADDENDUM No. 1 DATED OCTOBER 17, 2011

THIS PLAN ACCURATE FOR CONTOUR GRADING WORK ONLY.

STATE OF CALIFORNIA - DEPARTMENT OF TRANSPORTATION
Caltrans OFFICE OF DESIGN A

FUNCTIONAL SUPERVISOR: ASADOUR TERTERIAN
CALCULATED-DESIGNED BY: KEDAR SAWANT
CHECKED BY: MEDARDO DE LA CRUZ
REVISED BY
DATE REVISED

LAST REVISION 00-00-00
DATE PLOTTED => 17-OCT-2011
TIME PLOTTED => 09:01

Dist	COUNTY	ROUTE	POST MILES TOTAL PROJECT	SHEET No.	TOTAL SHEETS
07	LA	5	1.2/2.1	82	602

Medardo de la Cruz 3/14/11
REGISTERED CIVIL ENGINEER DATE

6-27-11
PLANS APPROVAL DATE

REGISTERED PROFESSIONAL ENGINEER
MEDARDO DE LA CRUZ
No. C61848
Exp. 6-30-11
CIVIL
STATE OF CALIFORNIA

THE STATE OF CALIFORNIA OR ITS OFFICERS OR AGENTS SHALL NOT BE RESPONSIBLE FOR THE ACCURACY OR COMPLETENESS OF SCANNED COPIES OF THIS PLAN SHEET.

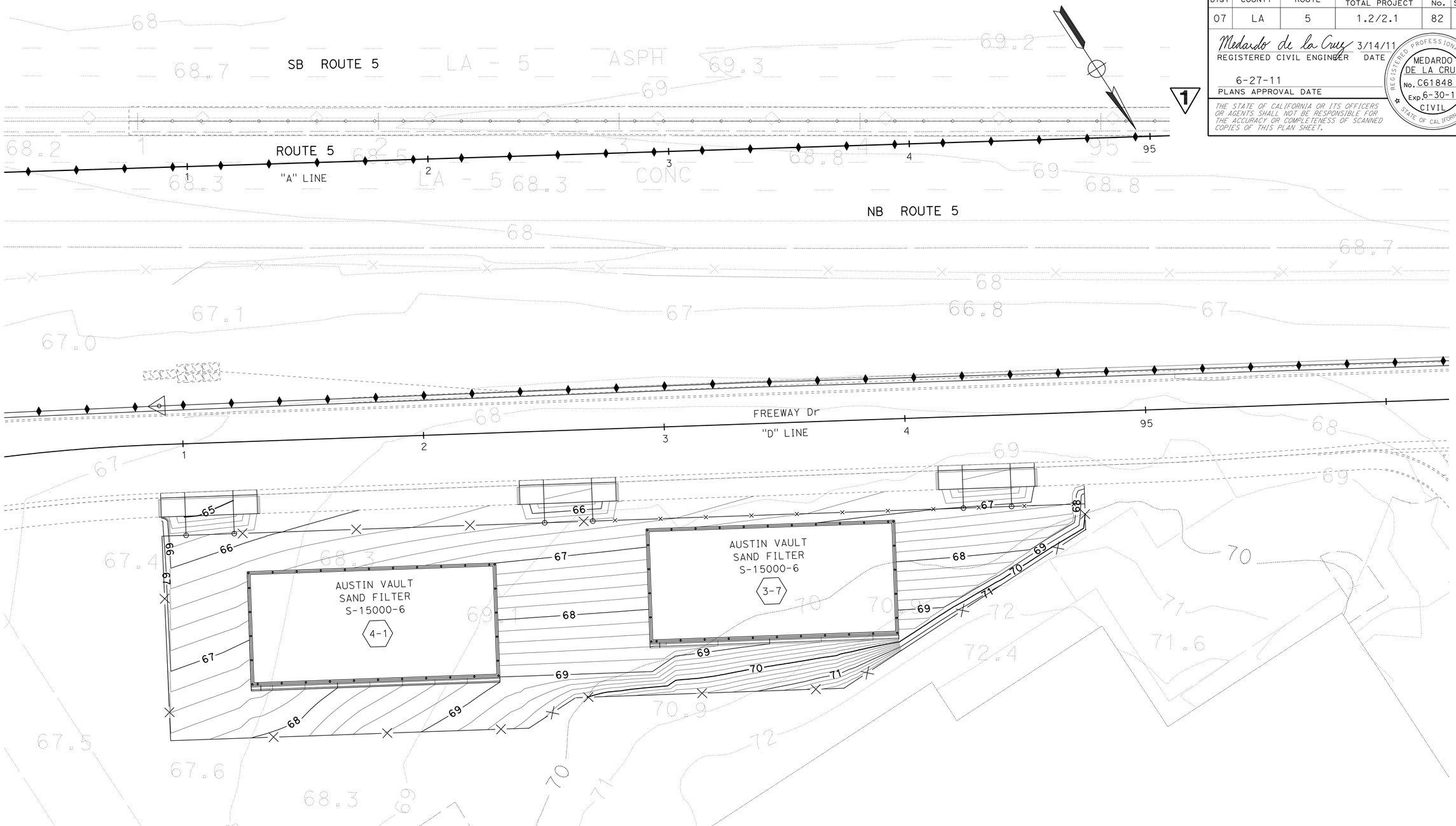

1 REVISED PER ADDENDUM No. 1 DATED OCTOBER 17, 2011

CONTOUR GRADING

SCALE: 1" = 20'

G-13

STATE OF CALIFORNIA - DEPARTMENT OF TRANSPORTATION
Caltrans OFFICE OF DESIGN A

FUNCTIONAL SUPERVISOR: ASADOUR TERTERIAN

CALCULATED-DESIGNED BY: KEDAR SAWANT
CHECKED BY: MEDARDO DE LA CRUZ

REVISED BY
DATE REVISED

LAST REVISION 00-00-00
DATE PLOTTED => 17-OCT-2011
TIME PLOTTED => 09:01

Dist	COUNTY	ROUTE	POST MILES TOTAL PROJECT	SHEET No.	TOTAL SHEETS
07	LA	5	1.2/2.1	234	602

Medardo de la Cruz 3/14/11
REGISTERED CIVIL ENGINEER DATE

6-27-11
PLANS APPROVAL DATE

REGISTERED PROFESSIONAL ENGINEER MEDARDO DE LA CRUZ No. C61848 Exp. 6/30/11 CIVIL STATE OF CALIFORNIA

THE STATE OF CALIFORNIA OR ITS OFFICERS OR AGENTS SHALL NOT BE RESPONSIBLE FOR THE ACCURACY OR COMPLETENESS OF SCANNED COPIES OF THIS PLAN SHEET.

1

NOTES:

1. LOCTIONS OF CONSTRUCTION AREA SIGNS SHOWN ARE APPROXIMATE. EXACT LOCATIONS WILL BE DETERMINED BY THE ENGINEER.
2. SEE STAGE CONSTRUCTION AND TRAFFIC HANDLING PLANS FOR ADDITIONAL CONSTRUCTION AREA SIGNS.

LEGEND:

▬	ROAD CLOSURE
●	TRAFFIC CONE
▮	PORTABLE SIGN
→	DIRECTION OF TRAFFIC

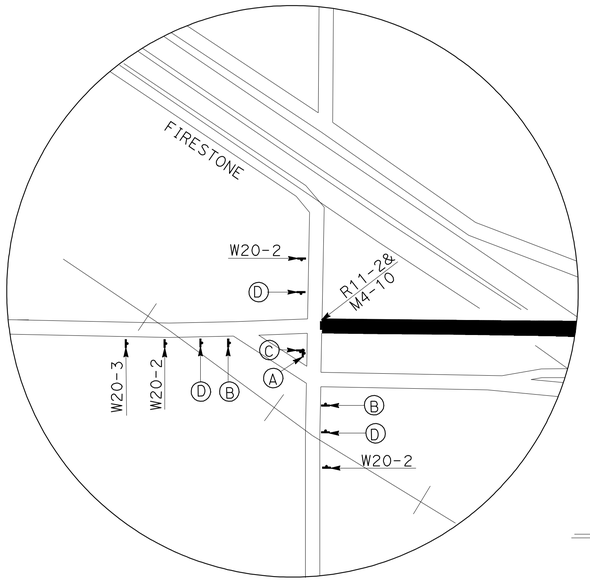

DETAIL"A"

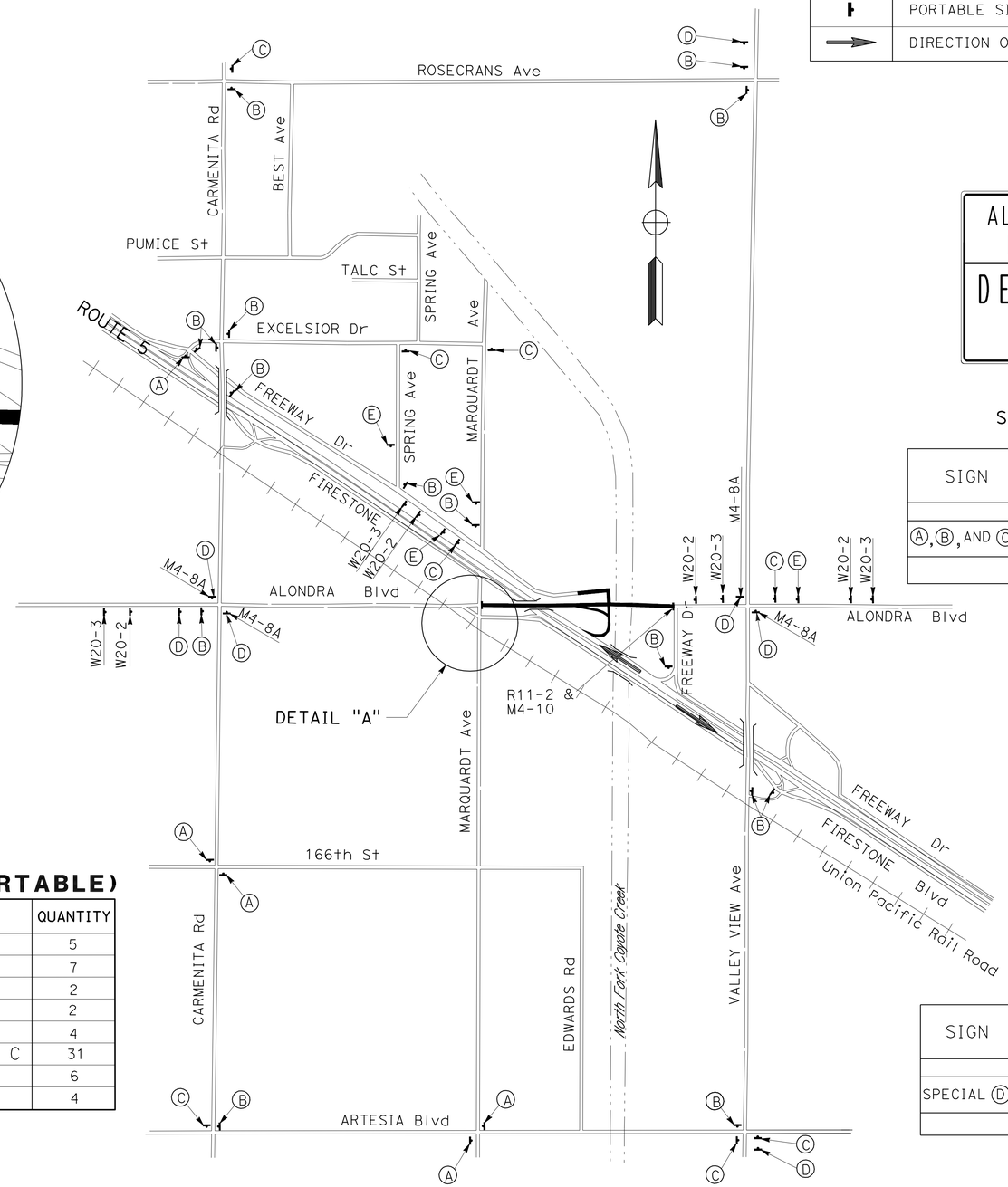

SIGN Ⓐ

SIGN Ⓑ

SIGN Ⓒ

SIGN	SIZE	BORDER WIDTH	MARGIN WIDTH	LETTER SIZE & FONT		CORNER RADIUS
				LINE 1 & 2	LINE 3	
Ⓐ, Ⓑ, AND Ⓒ	48" X 55"	1½"	¾"	6"C	8"D	3"
SIGNS ARE M4-9 (Mod): ARROW 6" CAP-1LINE-12¾"						

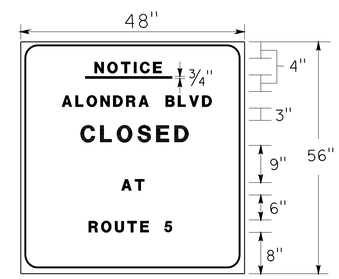

SPECIAL Ⓓ

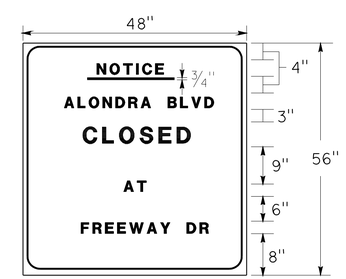

SPECIAL Ⓔ

CONSTRUCTION AREA SIGNS (PORTABLE)

CODE	SIGN MESSAGE	QUANTITY
W20-3	ROAD CLOSED AHEAD	5
W20-2	DETOUR AHEAD	7
R11-2	ROAD CLOSED	2
M4-10	DETOUR(ARROW R&L)	2
M4-8A	END DETOUR	4
M4-9R(MOD)	ALONDRA BLVD DETOUR SIGN A,B & C	31
SIGN "D"	SPECIAL SIGN "D"	6
SIGN "E"	SPECIAL SIGN "E"	4

SIGN	SIZE	BORDER WIDTH	MARGIN WIDTH	LETTER SIZE			CORNER RADIUS
				LINE 1&4	LINE 2&5	LINE 3	
SPECIAL Ⓓ	48" X 56"	1¼"	¾"	4"E	4"D*	6"D*	3"
* CONDENSED SPACING IF NECESSARY							

1 **REVISED PER ADDENDUM No. 1 DATED OCTOBER 17, 2011**

THIS PLAN ACCURATE FOR MOTORIST INFORMATION WORK ONLY.

DETOUR PLAN

STAGE 3 PHASE 1

NO SCALE

DE-2

STATE OF CALIFORNIA - DEPARTMENT OF TRANSPORTATION
Caltrans® OFFICE OF DESIGN A

FUNCTIONAL SUPERVISOR: ASADOUR TERTERIAN
CALCULATED-DESIGNED BY: MANJINDER BRAR
CHECKED BY: MEDARDO DE LA CRUZ
REVISED BY
DATE REVISED

LAST REVISION 00-00-00 | DATE PLOTTED => 17-OCT-2011 | TIME PLOTTED => 09:01

Dist	COUNTY	ROUTE	POST MILES TOTAL PROJECT	SHEET No.	TOTAL SHEETS
07	LA	5	1.2/2.1	265	602

Medardo de la Cruz 3/14/11
REGISTERED CIVIL ENGINEER DATE

6-27-11
PLANS APPROVAL DATE

REGISTERED PROFESSIONAL ENGINEER MEDARDO DE LA CRUZ No. C61848 Exp. 6-30-11 CIVIL STATE OF CALIFORNIA

THE STATE OF CALIFORNIA OR ITS OFFICERS OR AGENTS SHALL NOT BE RESPONSIBLE FOR THE ACCURACY OR COMPLETENESS OF SCANNED COPIES OF THIS PLAN SHEET.

1

NOTE:

[#] PROPOSED STRUCTURAL SECTION No.

PAVEMENT STRUCTURAL SECTION QUANTITIES

SHEET No.	DESCRIPTION	STATION	LOCATION	HOT MIX ASPHALT (TYPE A) TON	HOT MIX ASPHALT (TYPE B) TON	TACK COAT TON	JOINTED PLAIN CONCRETE PAVEMENT CY	COLD PLANE ASPHALT CONCRETE PAVEMENT SQYD	LEAN CONCRETE BASE CY	LEAN CONCRETE BASE (RAPID SETTING) CY	CLASS 3 AGGREGATE BASE CY	REPLACE Conc Pvmt RAPID STRENGTH CONCRETE CY	SEAL PAVEMENT JOINT LF	SEAL ISOLATION JOINT LF
L-1	ROUTE 5 MEDIAN	"A" 63+79.00 TO "A" 70+30.00	R+-L+		396.90	0.54			405.22		101.31			
	NB ROUTE 5 SHOULDER	"A" 67+52.00 TO "A" 70+30.00	R+		150.00	0.19			142.90		35.73			
	ROUTE 5 TRANSITION PAVEMENT	"A" 70+30.00 TO "A" 70+80.00	R+-L+		84.00	0.23								
	NB ROUTE 5	"A" 70+30.00 TO "A" 70+60.00	R+									29		
	SB ROUTE 5	"A" 70+30.00 TO "A" 75+50.00	R+-L+	441.88	2,295.53	4.48		1077.77	2,434.05	444.00	585.76			
	FREEWAY Dr	"J" 72+94.14 TO "J" 74+65.37	L+		80.30	0.26		492.06						
	ROUTE 5 NB ON RAMP	"K" 10+27.02 TO "K" 12+46.90	R+-L+	339.40		0.46			173.27		321.79			
	MAINTENANCE VEHICLE PULLOUT	"K" 12+15.60 TO "K" 12+46.90	R+		8.00	0.01			4.00		7.00			
L-2	NB & SB ROUTE 5	"A" 75+50.00 TO "A" 78+50.00	R+-L+		2,168.90	2.97			2,214.46		553.62		6,317.03	25.40 248.28
	ROUTE 5 NB ON RAMP	"K" 12+46.90 TO "K" 16+97.58	R+-L+	183.00		0.25			94.00		174.00			
	MAINTENANCE VEHICLE PULLOUT	"K" 12+46.90 TO "K" 13+00.00	R+		14.10	0.02			7.19		11.69			
	NB & SB ROUTE 5 PAVEMENT	"A" 79+50.00 TO "A" 84+50.00	R+-L+				3,565.91		1,698.05		2,377.28			
L-3	ALONDRA Blvd	"B" 114+50.00 TO "B" 117+68.68	R+-L+	1,150.20		1.83			587.18		1125.44			153.90
	ALONDRA Blvd	"B" 119+04.59 TO "B" 123+00.00	R+-L+	1,344.40		2.14			686.30		1,315.42			
	ALONDRA Blvd TRANSITION PAVEMENT	"B" 119+04.59 TO "B" 123+51.00	R+-L+		80.10	0.23		490.65						
	FREEWAY Dr	"D" 82+28.80 TO "D" 85+11.61	R+-L+	778.00		1.24			397.19		761.29			
	PARKING LOT	"B" 114+50.00 TO "B" 115+55.33	R+-L+		128.10	0.20			65.37		106.22			
	SWAPMEET DRIVEWAY	"DR1" 82+84.55 TO "DR1" 86+50.00	R+-L+				760.59		380.29		651.93			
	BIKEPATH DRIVEWAY	"DR2" 2+30.00 TO "DR2" 4+42.00	R+-L+		264.20	0.42			134.88		219.17			
	DRIVEWAY	"B" 119+50.00 TO "B" 119+83.25	R+		33.30	0.05			17.00		27.61			
	DRIVEWAY	"B" 120+48.00 TO "B" 120+84.00	R+		6.30	0.01			3.20		5.20			
	DRIVEWAY	"B" 122+06.84 TO "B" 122+42.84	R+		6.30	0.01			3.20		5.20			
	DRIVEWAY	"B" 119+60.00 TO "B" 119+81.07	L+		5.60	0.01			2.88		4.68			
	DRIVEWAY	"B" 120+05.00 TO "B" 120+45.00	L+		7.10	0.01			3.60		5.84			
L-4	NB & SB ROUTE 5	"A" 84+50.00 TO "A" 92+50.00	R+-L+				6,390.76		3,043.22		4,260.51		11,230.27	
	ALONDRA Blvd	"B" 106+20.00 TO "B" 107+90.84	R+-L+	544.63		0.96	51.47		302.52		567.17			
	ALONDRA Blvd	"B" 112+58.00 TO "B" 114+50.00	R+-L+	685.40		1.09			349.92		670.67			
	FREEWAY Dr	"D" 85+11.61 TO "D" 88+00.00	R+-L+	463.20		0.74			236.46		453.21			
	PARKING LOT	"B" 111+43.28 TO "B" 114+50.00	L+		295.00	0.47			150.59		244.70			
	SWAPMEET DRIVEWAY	"D" 87+20.00 TO "D" 87+56.00	R+		44.80	0.07			22.88		37.18			
	AVSF BMP DRIVEWAY	"D" 90+89.72 TO "D" 92+55.40	R+-L+		284.10	0.45			145.02		235.65			
	BIOSWALE BMP PARKING	"C" 87+60.06 TO "C" 89+25.78	R+		82.30	0.13			42.02		68.28			
L-5	NB & SB ROUTE 5	"A" 92+50.00 TO "A" 98+70.14	R+-L+				4,677.00		2,227.14		3,118.00		8,422.70	25.40 190.95
	ALONDRA Blvd [2]	"B" 102+35.00 TO "B" 106+20.00	R+-L+	269.12		0.81			137.48		263.51			
	MARQUARDT Ave & FIRESTONE Blvd [1]	"E" 91+80.00 TO "E" 96+00.00	R+-L+				1747.48		832.25		1165.15			
	RIGHT TURN LANE TO MARQUARDT Ave [7]	"B" 102+35.00 TO "E" 91+12.00	R+-L+		70.74	0.54		433.66						
	FIRESTONE BLVD [2]	"E" 94+80.00 TO "E" 96+00.00	R+-L+	282.38		0.20			144.26		276.49			
	ALONDRA Blvd TRANSITION PAVEMENT [7]	"B" 102+50.00 TO "B" 102+92.00	R+-L+		25.08			153.51						
	FIRESTONE Blvd TRANSITION PAVEMENT	"E" 96+00.00 TO "E" 96+30.00	R+-L+		19.30	0.05		118.32						
	AVSF BMP DRIVEWAY	R+ "D" 92+55.40 TO R+ "D" 94+73.60	R+											
	BIOSWALE BMP PARKING	R+ "C" 93+14.19 TO R+ "C" 93+83.02	R+		86.30	0.14			44.08		71.62			
			TOTAL	6,481.61	6,636.35	21.21	17,193.21	2,765.97	17,132.07	444.00	19,828.32	29	25,970.00	643.93

SUMMARY OF QUANTITIES

1 REVISED PER ADDENDUM No. 1 DATED OCTOBER 17, 2011

Q-2

STATE OF CALIFORNIA - DEPARTMENT OF TRANSPORTATION
Caltrans® OFFICE OF DESIGN A

FUNCTIONAL SUPERVISOR: ASADOUR TERTERIAN
CALCULATED-DESIGNED BY: KEDAR SAWANT
CHECKED BY: MEDARDO DE LA CRUZ
REVISED BY
DATE REVISED

LAST REVISION 00-00-00
DATE PLOTTED => 17-OCT-2011
TIME PLOTTED => 09:01

Dist	COUNTY	ROUTE	POST MILES TOTAL PROJECT	SHEET No.	TOTAL SHEETS
07	LA	5	1.2/2.1	267	602

Medardo de la Cruz 3/14/11
REGISTERED CIVIL ENGINEER DATE

6-27-11
PLANS APPROVAL DATE

REGISTERED PROFESSIONAL ENGINEER MEDARDO DE LA CRUZ No. C61848 Exp. 6-30-11 CIVIL STATE OF CALIFORNIA

THE STATE OF CALIFORNIA OR ITS OFFICERS OR AGENTS SHALL NOT BE RESPONSIBLE FOR THE ACCURACY OR COMPLETENESS OF SCANNED COPIES OF THIS PLAN SHEET.

AUSTIN VAULT SAND FILTER QUANTITIES

DRAINAGE SYSTEM No.	DESCRIPTION	STATION	STRUCTURAL CONCRETE (AUSTIN VAULT)	BAR REINFORCING STEEL (AUSTIN VAULT)	STRUCTURE EXCAVATION (AUSTIN VAULT) CONTAMINATED (1)	STRUCTURE BACKFILL (AUSTIN VAULT)	GABION	CABLE RAILING	SAND BED (AUSTIN VAULT)	PERMEABLE MATERIAL (AUSTIN VAULT)	FILTER FABRIC (AUSTIN VAULT)	Misc METAL (AUSTIN VAULT)	6" PERFORATED PLASTIC PIPE UNDERDRAIN (AUSTIN VAULT)
			CY	LB	CY	CY	CY	LF	CY	CY	SQYD	LB	LF
3-7	AUSTIN VAULT SAND FILTER - PARTIAL SEDIMENT	"A" 91+00.00 TO "A" 92+00.00	540	134,297	3,269	356	30	289	190	175	420	115	250
4-1	AUSTIN VAULT SAND FILTER - PARTIAL SEDIMENT	"A" 91+00.00 TO "A" 92+00.00	544	135,683	3,346	364	30	289	190	175	420	115	250
		TOTAL	1,084	269,980	6,615	720	60	578	380	350	840	230	500

REMOVAL QUANTITIES

SHEET No.	REMOVE: MBGR	CHAIN LINK FENCE	ASPHALT CONCRETE SURFACING	CONCRETE CURB	CONCRETE PAVEMENT	DOUBLE METAL BEAM BARRIER
	LF	LF	SQYD	LF	SQFT	LF
C-1		550	606	2,000	19,178	1,000
		1,140	198	195	18,695	
		63	830	155		
				171		
C-2	82	623	287	1,800	14,103	900
	102	539	482	145	4,824	
	83		289	542	2,295	
			361		25,299	
			2,672		6,921	
			3,741		7,776	
			1,703		15,381	
			1,893			
			969			
C-3	93	300	2,043	1,600	32,652	800
	65	40	1,082	33	25,650	
		173	1,166			
		127	84			
		488	1,536			
		510	370			
			394			
C-4		350	7,531	1,600	19,386	800
		565	683	139	28,980	
		621	659	123		
				114		
				272		
				404		
TOTAL	425	6,089	29,576	9,293	221,140	3,500

LACFCD
57" PIPE PROTECTION QUANTITIES

SHEET No.	LIGHTWEIGHT FILL (EXPANDED POLYSTYRENE BLOCK)	GEOMEMBRANE (TYPE A - GASOLINE RESISTANT)
	CY	SQYD
C-37	1,731	2,315
TOTAL	1,731	2,315

SUMMARY OF QUANTITIES

Q-4

(1) REVISED PER ADDENDUM No. 1 DATED OCTOBER 17, 2011

STATE OF CALIFORNIA - DEPARTMENT OF TRANSPORTATION
Caltrans OFFICE OF DESIGN A

FUNCTIONAL SUPERVISOR: ASADOUR TERTERIAN
CALCULATED-DESIGNED BY: ELIZABETH WARE
CHECKED BY: MEDARDO DE LA CRUZ
REVISED BY / DATE REVISED

LAST REVISION 00-00-00 | DATE PLOTTED => 17-OCT-2011 | TIME PLOTTED => 09:02

Dist	COUNTY	ROUTE	POST MILES TOTAL PROJECT	SHEET No.	TOTAL SHEETS
07	LA	5	1.2/2.1	269	602

Medardo de la Cruz 3/14/11
REGISTERED CIVIL ENGINEER DATE

6-27-11
PLANS APPROVAL DATE

REGISTERED PROFESSIONAL ENGINEER MEDARDO DE LA CRUZ No. C61848 Exp. 6-30-11 CIVIL STATE OF CALIFORNIA

THE STATE OF CALIFORNIA OR ITS OFFICERS OR AGENTS SHALL NOT BE RESPONSIBLE FOR THE ACCURACY OR COMPLETENESS OF SCANNED COPIES OF THIS PLAN SHEET.

CONCRETE BARRIER QUANTITIES

SHEET No.	STATION	CONCRETE BARRIER (TYPE 26 MODIFIED)	CONCRETE BARRIER (TYPE 60)	CONCRETE BARRIER (TYPE 60C)	CONCRETE BARRIER (TYPE 60G)	PORTABLE CONCRETE BARRIER (TYPE 60K)	CONCRETE BARRIER (TYPE 60GE)	CHAIN LINK RAILING (TYPE 7)	CHAIN LINK RAILING (TYPE 6 MODIFIED)	CHAIN LINK FENCE (TYPE CL-6)	CHAIN LINK GATE	TUBULAR HANDRAILING	ALTERNATIVE IN-LINE TERMINAL SYSTEM	METAL BEAM GUARD RAILING (WOOD POST)	TRANSITION RAILING (TYPE WB)	METAL HAND RAILING (TYPE C)	CHAIN LINK FENCE (TYPE CL-6), VINYL CLAD
		LF	LF	LF	LF	LF	LF	LF	LF	LF	EA	LF	EA	LF	LF	LF	LF
L-4	"A" 84+50.00 TO 85+66.70 107.06′ R†		116.70														
	"A" 84+50.00 TO 86+50.00				200.00												
	"A" 87+00.00 TO 89+00.00 98.50′ L†			211.58					211.58								
	"A" 86+50.00 TO 90+70.00						420.00										
	"A" 88+02.77 TO 92+50.00 105.77 R†			447.29					447.29								
	"A" 90+70.00 TO 92+50.00				180.00												
	"A" 91+49.25 TO 92+50.00 105.77 R†			101.02					101.02								
	"A" 92+03.40 TO 92+50.00									79							
	"B" 106+20.00 TO 108+73.56 50.50′ R†											253.56					
	"B" 113+43.19 TO 114+50.00 51.27′ R†											106.84					
	"B" 106+20.00 TO 107+12.95 49.00′ L†											92.95					
	"B" 111+94.67 TO 114+50 49.00′ L†											255.33					
	"C" 88+98.38 R†										1						409.46
	"D" 90+90.78 TO 92+55.40 R†										1						392
SUB-TOTAL			116.70	759.89	380.00		420.00		759.89	79	2	708.68					801.46
L-5	"A" 92+50 TO 94+70 99.00′.L†									278							
	"A" 92+50 TO 98+70.14 95.47′ R†			620.14													
	"A" 92+50 TO 98+70.14 95.47′ R†								620.14								
	"A" 92+50 TO 98+70.14 95.47′ L†			620.14													
	"A" 92+50 TO 98+70.14 95.47′ L†								620.14								
	"A" 92+50 TO 101+50				900												
	"B" 104+84.37 TO 106+20 49.00′ L†											136.03					
	"B" 104+89.98 TO 106+20 50.50′ R†											130.02					
	"C" 93+50.00 R†										1						
	"D" 92+55.40 TO 94+73.47 R†										2						431
	"E" 94+60.00										1						195
SUB-TOTAL				1,240.28	900				1,240.28	278	4	266.05					626
L-6	"A" 101+50 TO 109+09.40				759.40												
SUB-TOTAL					759.40												

SUB-TOTAL OF L1		150.00	770.29		1,170.51			270.42	165.26			1	125	1		
SUB-TOTAL OF L2		250.85	151.28	512.63	229.78				71.57							
SUB-TOTAL OF L3	34.71						411.05	82.13	159.85	4	821.34				72.20	
SUB-TOTAL OF L4		116.70	759.89	380.00		420.00		759.89	79	2	708.68					801.46
SUB-TOTAL OF L5			1,240.28	900				1,240.28	278	4	266.05					626
SUB-TOTAL OF L6				759.40												
TOTAL	34.71	517.55	2,921.74	2,552.03	1,400.29	420.00	411.05	2,352.72	753.86	10	1,796.07	1	125	1	72.20	1427.46

1 REVISED PER ADDENDUM No. 1 DATED OCTOBER 17, 2011

1 1

SUMMARY OF QUANTITIES Q-6

STATE OF CALIFORNIA - DEPARTMENT OF TRANSPORTATION
Caltrans OFFICE OF DESIGN A

FUNCTIONAL SUPERVISOR: ASADOUR TERTERIAN
CALCULATED-DESIGNED BY: MARCELO DE LA FUENTE
CHECKED BY: MEDARDO DE LA CRUZ
REVISED BY
DATE REVISED

LAST REVISION 00-00-00
DATE PLOTTED => 17-OCT-2011
TIME PLOTTED => 09:02

Dist	COUNTY	ROUTE	POST MILES TOTAL PROJECT	SHEET No.	TOTAL SHEETS
07	LA	5	1.2/2.1	271	602

George Olguin
LICENSED LANDSCAPE ARCHITECT

6-27-11
PLANS APPROVAL DATE

LICENSED LANDSCAPE ARCHITECT GEORGE OLGUIN NO. 4333 George Olguin Signature 08-31-12 Renewal Date Date STATE OF CALIFORNIA

THE STATE OF CALIFORNIA OR ITS OFFICERS OR AGENTS SHALL NOT BE RESPONSIBLE FOR THE ACCURACY OR COMPLETENESS OF SCANNED COPIES OF THIS PLAN SHEET.

NOTE:
Underlined portions of botanical name indicate abbreviations used on Planting Plans.

PLANT LIST AND PLANTING SPECIFICATIONS

PLANT GROUP	PLANT No.	SYMBOL	BOTANICAL NAME	COMMON NAME	SIZE	QUANTITY EACH	HOLE SIZE (INCH) Dia	HOLE SIZE (INCH) DEPTH	BASIN TYPE	IRON SULFATE ①	SOIL AMEND ①	COMMERCIAL FERTILIZER ① PLANTING	COMMERCIAL FERTILIZER ① PLT ESTB	BASIN MULCH (CY)	STAKING	PLANTING LIMITS MINIMUM DISTANCE (Ft) FROM TRVD WAY	PVMT	FENCE	WALL	PAVED DITCH	EARTH DITCH	ON CENTER (Ft)	REMARKS
A	1		AGAPANTHUS AFRICANUS "ALBUS"	WHITE LILY OF THE NILE	No. 1	213	②	②	I	—	—	0.5 Oz	0.5 Oz	0.05 CY	—	—	—	—	—	—	—	2	SHRUB
	2		LANTANA MONTEVIDENSIS	NO COMMON NAME	No. 1	105	②	②	I	—	—	0.5 Oz	0.5 Oz	0.05 CY	—	—	—	—	—	—	—	3	SHRUB
	3		LIGUSTRUM JAPONICUM	JAPANESE PRIVET	No. 1	69	②	②	I	—	—	0.5 Oz	0.5 Oz	0.05 CY	—	—	12	10	10	12	10	④	SHRUB
	4		RHAPHIOLEPIS INDICA 'MAJESTIC BEAUTY'	INDIAN HAWTHORN	No. 1	1 ~~27~~ 78	②	②	I	—	—	0.5 Oz	0.5 Oz	0.05 CY	—	—	12	10	10	8	10	④	SHRUB
	5		SALVIA CLEVELANDII 'WINNIFRED GILMAN'	SAGE	No. 1	640	②	②	I	—	—	—	—	—	—	—	8	6	6	6	8	⑥	SHRUB ⑨
H	6		CARPOBROTUS EDULIS	HOTTENTOT FIG	CUTTING	12,714	—	—	—	—	—	15 Oz/ 100 SQFT	15 Oz/ 100 SQFT	—	—	—	6	6	6	6	8	1.5	GROUND COVER
M	7		MUHLENBERGIA RIGENS	DEER GRASS	1⅝"x 8¼"	844	②	②	—	—	—	—	—	—	—	—	—	—	—	—	—	⑥	SHRUB ⑨
T	8		TURF	NO COMMON NAME	SQFT	10,000	—	—	—	—	3 CY/ 1000 SQ FT	10 LB/ 1000 SQ FT	10 LB/ 1000 SQ FT	—	—	—	—	—	—	—	—	—	TURF
U	9		JACARANDA MIMOSIFOLIA	JACARANDA	No. 15	4	②	②	I	—	—	5 Oz	5 Oz	0.15 CY	6	30	—	20	20	15	17	④	TREE
	10		LAGERSTROEMIA INDICA TUSKEGEE	DARK PINK CRAPE MYRTLE	No. 15	11	②	②	I	—	—	5 Oz	5 Oz	0.15 CY	6	30	—	15	15	15	17	④	TREE
	11		PINUS CANARIENSIS	CANARY ISLAND PINE	No. 15	1 ~~12~~ 27	②	②	I	—	—	5 Oz	5 Oz	0.15 CY	6	30	—	15	15	15	17	④	TREE
	12		TRISTANIA CONFERTA	BRISBANE BOX	No. 15	4	②	②	I	—	—	5 Oz	5 Oz	0.15 CY	6	30	—	15	15	15	17	④	TREE
Z	13		WASHINGTONIA ROBUSTA	MEXICAN FAN PALM	20 Ft	15	②	②	I	—	—	5 Oz	5 Oz	—	—	40	—	10	10	15	17	④	PALM TREE ⑧

APPLICABLE WHEN CIRCLED:

① - Quantities shown are "per plant" unless shown as SQFT or SQYD application rates.
② - Sufficient to receive root ball.
3 - Does not apply to mulch areas.
④ - As shown on plans.
5 - Unless otherwise shown on plans.
⑥ - See detail.
7 - See Special Provisions.
⑧ - Height of palm trees shall be from the top of the rootball to the bottom of the first frond
⑨ - Mulch shall be kept 6" away from stem of plant

331 CY MULCH

ROCK BLANKET (SEE LAYOUT PLANS)

NOTE:
Underlined portions of botanical name indicate abbreviations used on Planting Plans.

1 REVISED PER ADDENDUM No. 1 DATED OCTOBER 17, 2011

PLANT LIST
PL-1

REVISED BY | DATE REVISED
CATHERINE ZEPEDA | GEORGE OLGUIN
CALCULATED-DESIGNED BY | CHECKED BY
SENIOR LANDSCAPE ARCHITECT
JENNIFER TAIRA
STATE OF CALIFORNIA - DEPARTMENT OF TRANSPORTATION
Caltrans® LANDSCAPE ARCHITECTURE

LAST REVISION 05-23-11 | DATE PLOTTED => 17-OCT-2011 | TIME PLOTTED => 09:02

Dist	COUNTY	ROUTE	POST MILES TOTAL PROJECT	SHEET No.	TOTAL SHEETS
07	LA	5	1.2/2.1	279	602

George Olguin
LICENSED LANDSCAPE ARCHITECT

6-27-11
PLANS APPROVAL DATE

LICENSED LANDSCAPE ARCHITECT
GEORGE OLGUIN
No. 4333
George Olguin
Signature
08-31-12
Renewal Date
Date
STATE OF CALIFORNIA

THE STATE OF CALIFORNIA OR ITS OFFICERS OR AGENTS SHALL NOT BE RESPONSIBLE FOR THE ACCURACY OR COMPLETENESS OF SCANNED COPIES OF THIS PLAN SHEET.

1

NOTE:

FOR ACCURATE RIGHT OF WAY DATA, CONTACT
RIGHT OF WAY ENGINEERING AT THE DISTRICT OFFICE.

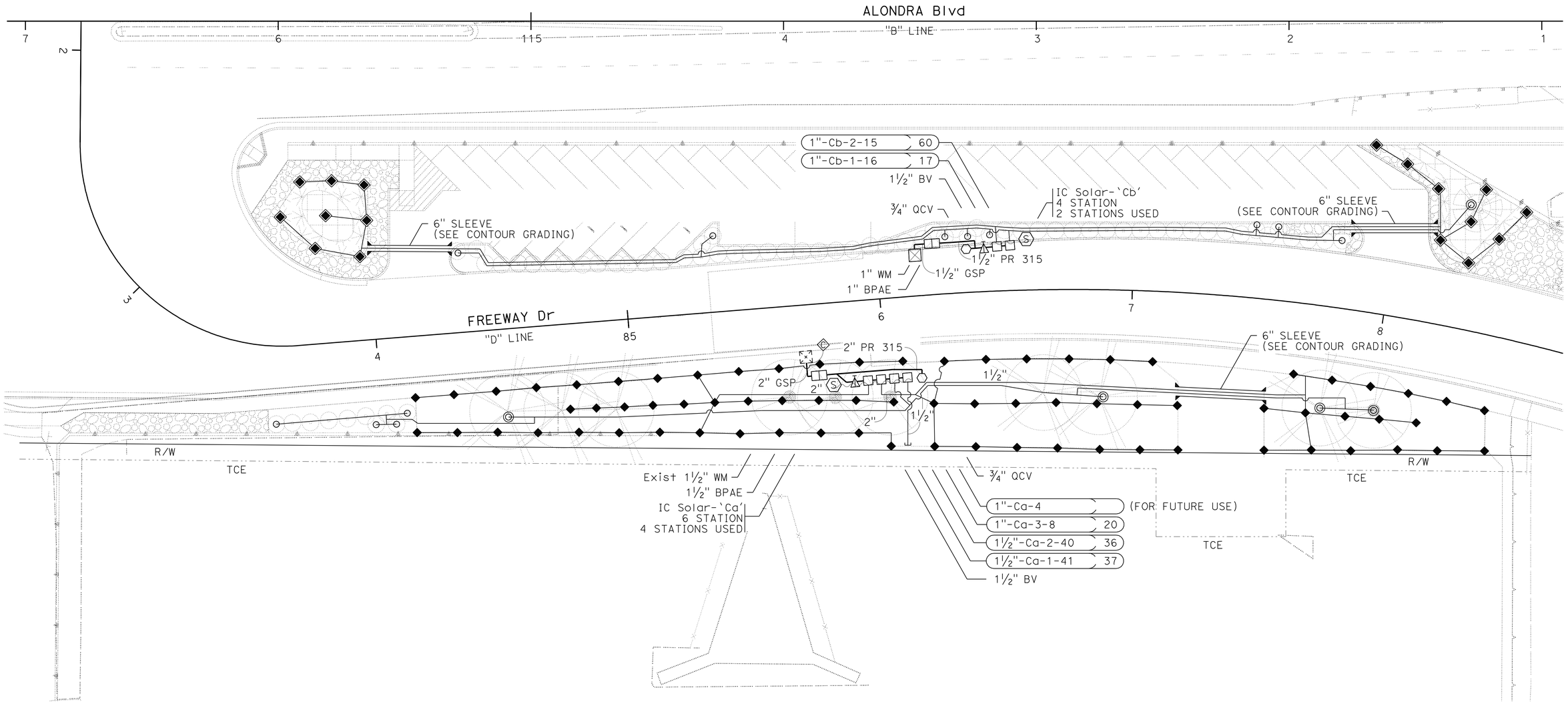

IRRIGATION PLAN

SCALE 1" = 20'

IP-4

1 **REVISED PER ADDENDUM No. 1 DATED OCTOBER 17, 2011**

THIS PLAN IS ACCURATE FOR IRRIGATION WORK ONLY.

REVISED BY | DATE REVISED

NAMSIK LEE | JENNIFER TAIRA

CALCULATED-DESIGNED BY | CHECKED BY

SENIOR LANDSCAPE ARCHITECT | JENNIFER TAIRA

STATE OF CALIFORNIA - DEPARTMENT OF TRANSPORTATION
Caltrans® LANDSCAPE ARCHITECTURE

LAST REVISION 00-00-00 | DATE PLOTTED => 17-OCT-2011 | TIME PLOTTED => 09:02

Dist	COUNTY	ROUTE	POST MILES TOTAL PROJECT	SHEET No.	TOTAL SHEETS
07	LA	5	1.2/2.1	279A	602

George Olguin
LICENSED LANDSCAPE ARCHITECT

6-27-11
PLANS APPROVAL DATE

LICENSED LANDSCAPE ARCHITECT GEORGE OLGUIN NO. 4333 George Olguin Signature 08-31-12 Renewal Date Date STATE OF CALIFORNIA

THE STATE OF CALIFORNIA OR ITS OFFICERS OR AGENTS SHALL NOT BE RESPONSIBLE FOR THE ACCURACY OR COMPLETENESS OF SCANNED COPIES OF THIS PLAN SHEET.

SUMMARY OF QUANTITIES

MATERIAL	UNIT	TOTAL
GRAVEL (Misc AREAS)	SQYD	1827.97
CLASS 2 AB (N)	CY	487.46
CHAIN LINK FENCE (TYPE CL-6, VINYL CLAD)	LF	822.76
EDGING (N)	LF	958.00

(N) - NOT A SEPARATE PAY ITEM, FOR INFORMATION ONLY.

- GRAVEL (Misc AREAS)

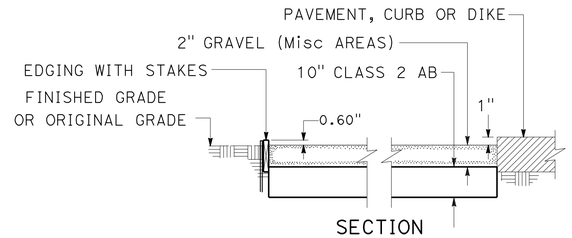

SECTION
GRAVEL (Misc AREAS)
NO SCALE

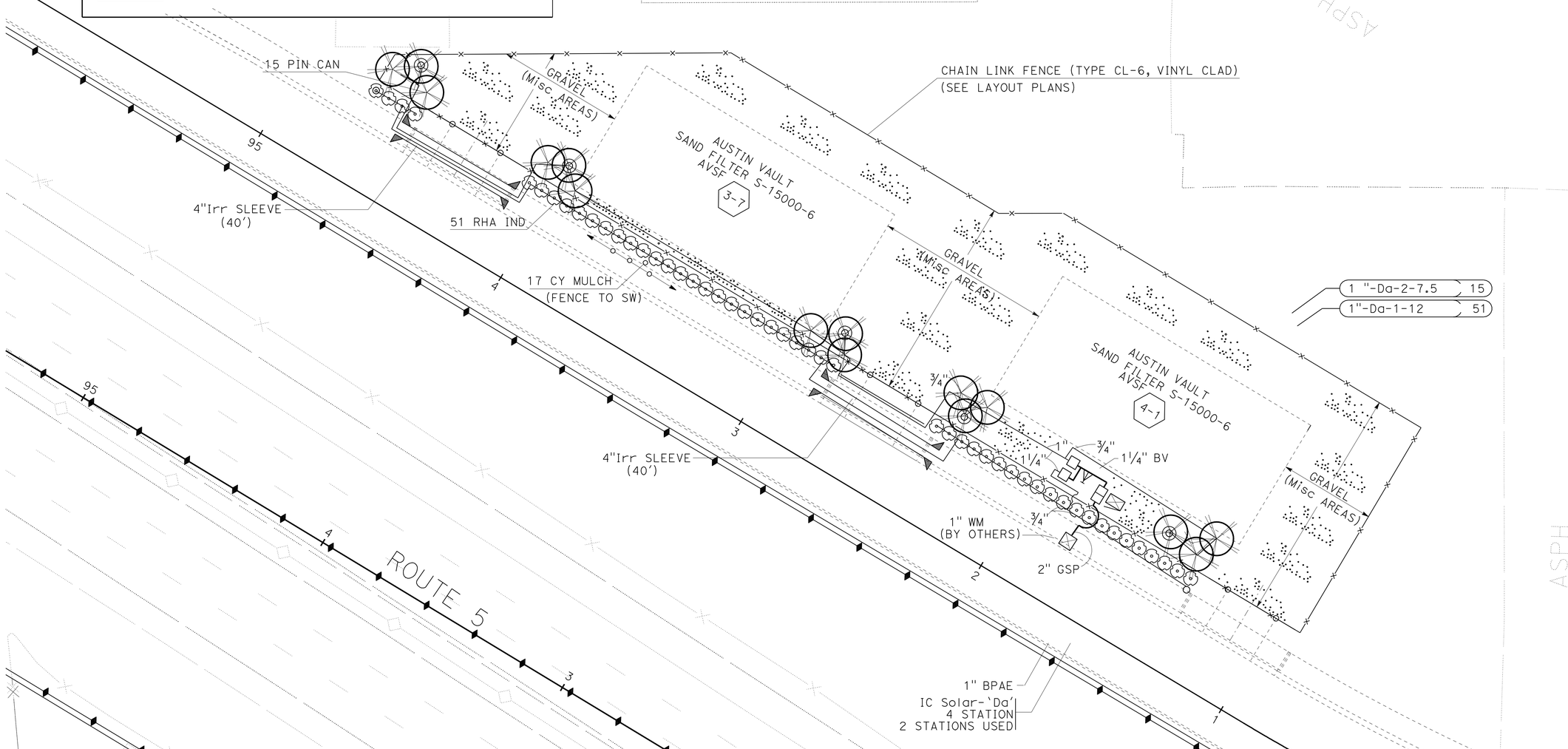

THIS PLAN ACCURATE FOR PLANTING AND IRRIGATION ONLY

1 ADDED PER ADDENDUM No. 1 DATED OCTOBER 17, 2011

PLANTING PLAN AND IRRIGATION PLAN

SCALE: 1" = 20'

PI-1

STATE OF CALIFORNIA - DEPARTMENT OF TRANSPORTATION
Caltrans LANDSCAPE ARCHITECTURE

SENIOR LANDSCAPE ARCHITECT: JENNIFER TAIRA
CALCULATED-DESIGNED BY: GEORGE OLGUIN
CHECKED BY: YI SU
REVISED BY
DATE REVISED

LAST REVISION 00-00-00
DATE PLOTTED => 17-OCT-2011
TIME PLOTTED => 10:24

Dist	COUNTY	ROUTE	POST MILES TOTAL PROJECT	SHEET No.	TOTAL SHEETS
07	LA	5	1.2/2.1	329	602

Medardo de la Cruz 3/14/11
REGISTERED CIVIL ENGINEER DATE

6-27-11
PLANS APPROVAL DATE

REGISTERED PROFESSIONAL ENGINEER
MEDARDO DE LA CRUZ
No. C61848
Exp. 6-30-11
CIVIL
STATE OF CALIFORNIA

THE STATE OF CALIFORNIA OR ITS OFFICERS OR AGENTS SHALL NOT BE RESPONSIBLE FOR THE ACCURACY OR COMPLETENESS OF SCANNED COPIES OF THIS PLAN SHEET.

NOTE:

FOR ACCURATE RIGHT OF WAY DATA, CONTACT
RIGHT OF WAY ENGINEERING AT THE DISTRICT OFFICE.

LEGEND:

(No.) PARCEL NUMBER

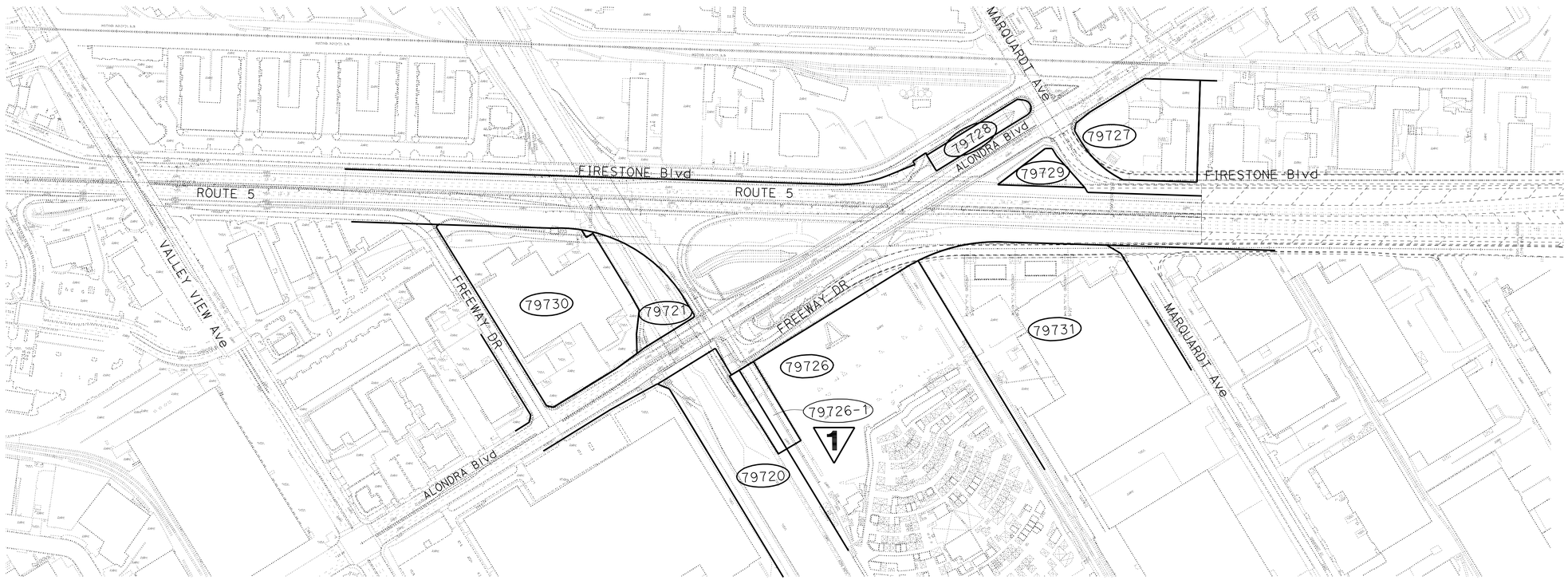

1 REVISED PER ADDENDUM No. 1 DATED OCTOBER 17, 2011

THIS PLAN ACCURATE FOR RIGHT-OF-WAY INFORMATION ONLY

RIGHT-OF-WAY INFORMATION

NO SCALE

RI-1

STATE OF CALIFORNIA - DEPARTMENT OF TRANSPORTATION
Caltrans OFFICE OF DESIGN A

FUNCTIONAL SUPERVISOR: ASADOUR TERTERIAN

CALCULATED-DESIGNED BY: MANJINDER BRAR
CHECKED BY: MEDARDO DE LA CRUZ

REVISED BY
DATE REVISED

LAST REVISION 00-00-00
DATE PLOTTED => 17-OCT-2011
TIME PLOTTED => 09:02

DIST	COUNTY	ROUTE	POST MILES TOTAL PROJECT	SHEET NO.	TOTAL SHEETS
07	LA	5	1.2/2.1	342A	602

REGISTERED CIVIL ENGINEER

June 6, 2008
PLANS APPROVAL DATE

REGISTERED PROFESSIONAL ENGINEER Hector David Cordova No. C41957 Exp. 3-31-10 CIVIL STATE OF CALIFORNIA

The State of California or its officers or agents shall not be responsible for the accuracy or completeness of electronic copies of this plan sheet.

1

To accompany plans dated 6-27-11

2006 REVISED STANDARD PLAN RSP A90A

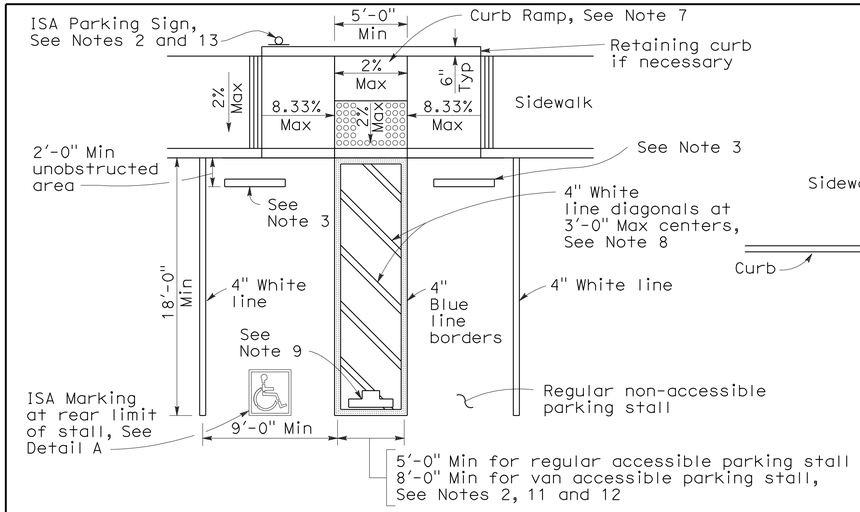

SINGLE PARKING STALL

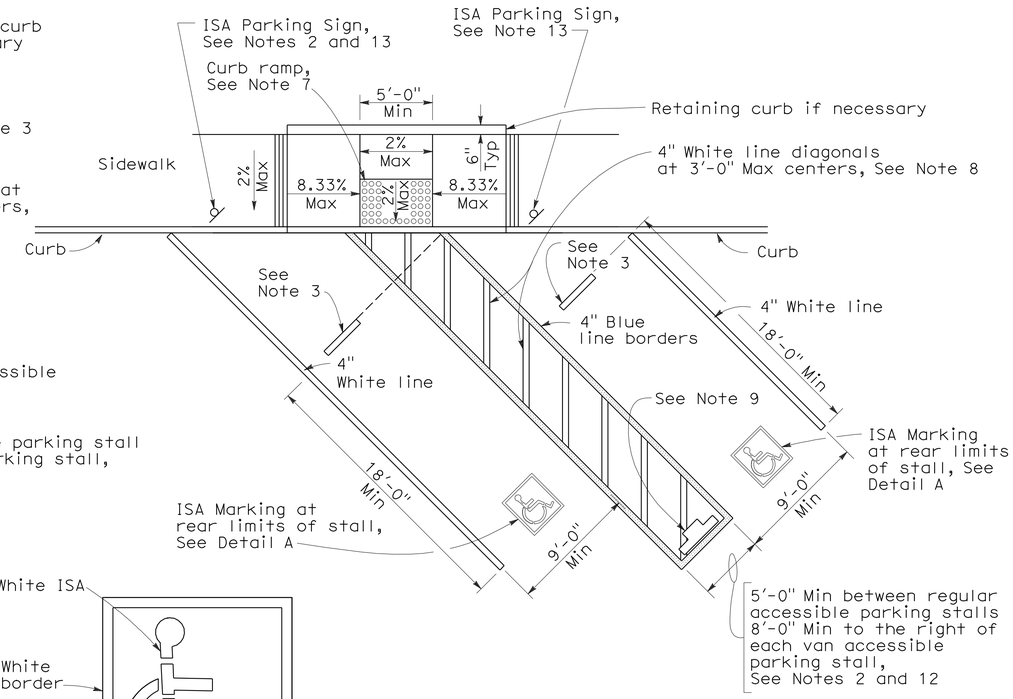

DIAGONAL DOUBLE PARKING STALLS

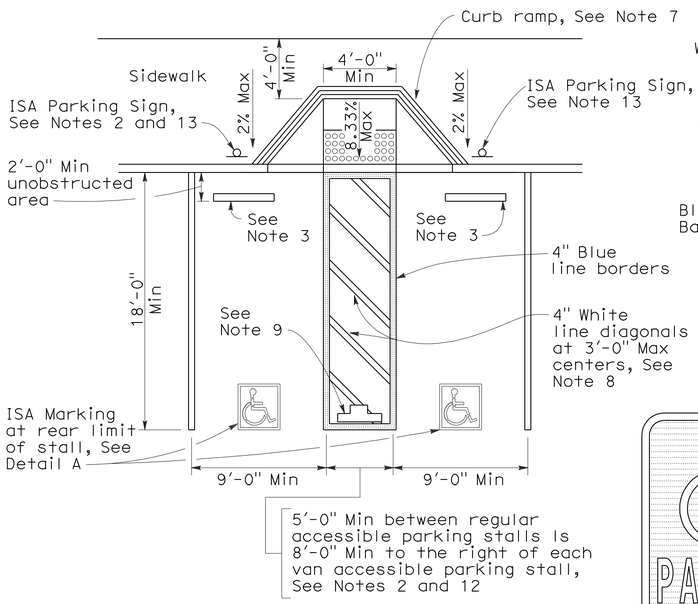

DOUBLE PARKING STALL

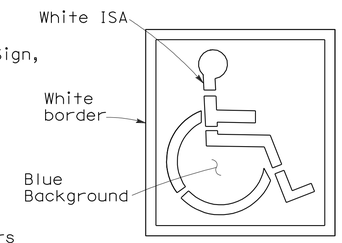

ISA MARKING
See Revised Std Plan RSP A24C

DETAIL A

TABLE A

Total Number of Parking Spaces or Stalls	Minimum Number of Disabled Accessible Parking Spaces or Stalls
1-25	1
26-50	2
51-75	3
76-100	4
101-150	5
151-200	6
201-300	7
301-400	8
401-500	9
501-1000	2 percent of total
Greater than 1001	20 plus 1 for each 100 or fraction thereof over 1001

SIGN R99 (CA)

PLAQUE R99B (CA)

SIGN R99 (CA) with PLAQUE R99B (CA)
See Note 6

SIGN R99C (CA)
See Note 6

UNAUTHORIZED VEHICLES PARKED IN DESIGNATED ACCESSIBLE SPACES NOT DISPLAYING DISTINGUISHING PLACARDS OR SPECIAL LICENSE PLATES ISSUED FOR PERSONS WITH DISABILITIES WILL BE TOWED AWAY AT THE OWNER'S EXPENSE

TOWED VEHICLES MAY BE RECLAIMED AT
(Insert Address)

OR BY TELEPHONING
(Insert Telephone Number)

SIGN R100B (CA)
See Note 10

SIGN R7-8b
See Notes 2 and 6

1 **ADDED PER ADDENDUM No. 1 DATED OCTOBER 17, 2011**

ISA = International Symbol of Accessibility

OFF-STREET PARKING SIGNS
(Parking lot or garage)
See Note 6

NOTES:

1. Accessible parking spaces serving a particular building shall be located on the shortest accessible route of travel from adjacent parking to an accessible entrance. In parking facilities that do not serve a particular building, accessible parking shall be located on the shortest accessible route of travel to an accessible pedestrian entrance of the parking facility.
2. One in every eight accessible off-street parking stalls, but not less than one, shall be served by an accessible aisle of 8'-0" minimum width and shall be signed van accessible. The R7-8b sign shall be mounted below the R99B (CA) plaque or the R99C (CA) sign.
3. In each parking stall, a curb or bumper shall be provided and located to prevent encroachment of vehicles over the required width of walkways. Parking stalls shall be so located that persons with disabilities are not compelled to wheel or walk behind parked cars other than their own.
4. Surface slopes of accessible off-street parking stalls shall be the minimum possible and shall not exceed 2 percent in any direction.
5. Table A shall be used to determine the required number of accessible parking stalls in each parking lot or garage.
6. Where Plaque R99B (CA), Sign R99C (CA) or Sign R7-8b are installed, the bottom of the sign or plaque panel shall be a minimum of 7'-0" above the surrounding surface.
7. Curb ramps shall conform to the details shown on Revised Standard Plan RSP A88A.
8. Blue paint, instead of white may be used for marking accessibility aisles in areas where snow may cause white markings to not be visible.
9. The words "NO PARKING", shall be painted in white letters no less than 1'-0" high and located so that it is visible to traffic enforcement officials. See Revised Standard Plan RSP A90B for details of the "NO PARKING" pavement marking.
10. A R100B (CA) sign shall be posted in a conspicuous place at each entrance to off-street parking facilities or immediately adjacent to and visible from each stall. The sign shall include the address where the towed vehicle may be reclaimed and the telephone number of the local traffic law enforcement agency.
11. Where a single (non-van) accessible parking space is provided, the loading and unloading access aisle shall be on the passenger side of the vehicle as the vehicle is going forward into the parking space.
12. Where a van accessible parking space is provided, the loading and unloading access aisle shall be 8'-0" wide minimum, and shall be on the passenger side of the vehicle as the vehicle is going forward into the parking space.
13. Accessible Parking Only Sign shall be Sign R99C (CA) or Sign R99 (CA) with Plaque R99B (CA).

STATE OF CALIFORNIA
DEPARTMENT OF TRANSPORTATION

ACCESSIBLE PARKING OFF-STREET

NO SCALE

RSP A90A DATED JUNE 6, 2008 SUPERSEDES STANDARD PLAN A90A
DATED MAY 1, 2006 - PAGE 117 OF THE STANDARD PLANS BOOK DATED MAY 2006.

REVISED STANDARD PLAN RSP A90A

6-3-08

DIST	COUNTY	ROUTE	POST MILES TOTAL PROJECT	SHEET No	TOTAL SHEETS
07	LA	5	1.2/2.1	387	602

REGISTERED CIVIL ENGINEER 3-2-11 DATE

6-27-11
PLANS APPROVAL DATE

The State of California or its officers or agents shall not be responsible for the accuracy or completeness of electronic copies of this plan sheet.

REGISTERED PROFESSIONAL ENGINEER Phu V. Nguyen No. 60358 Exp. 6-30-12 CIVIL STATE OF CALIFORNIA

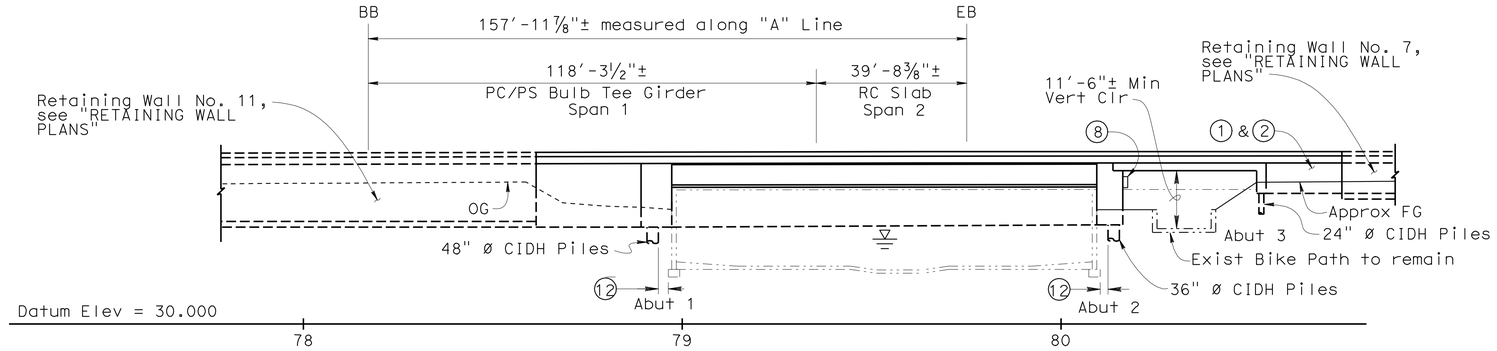

ELEVATION
1" = 20'-0"

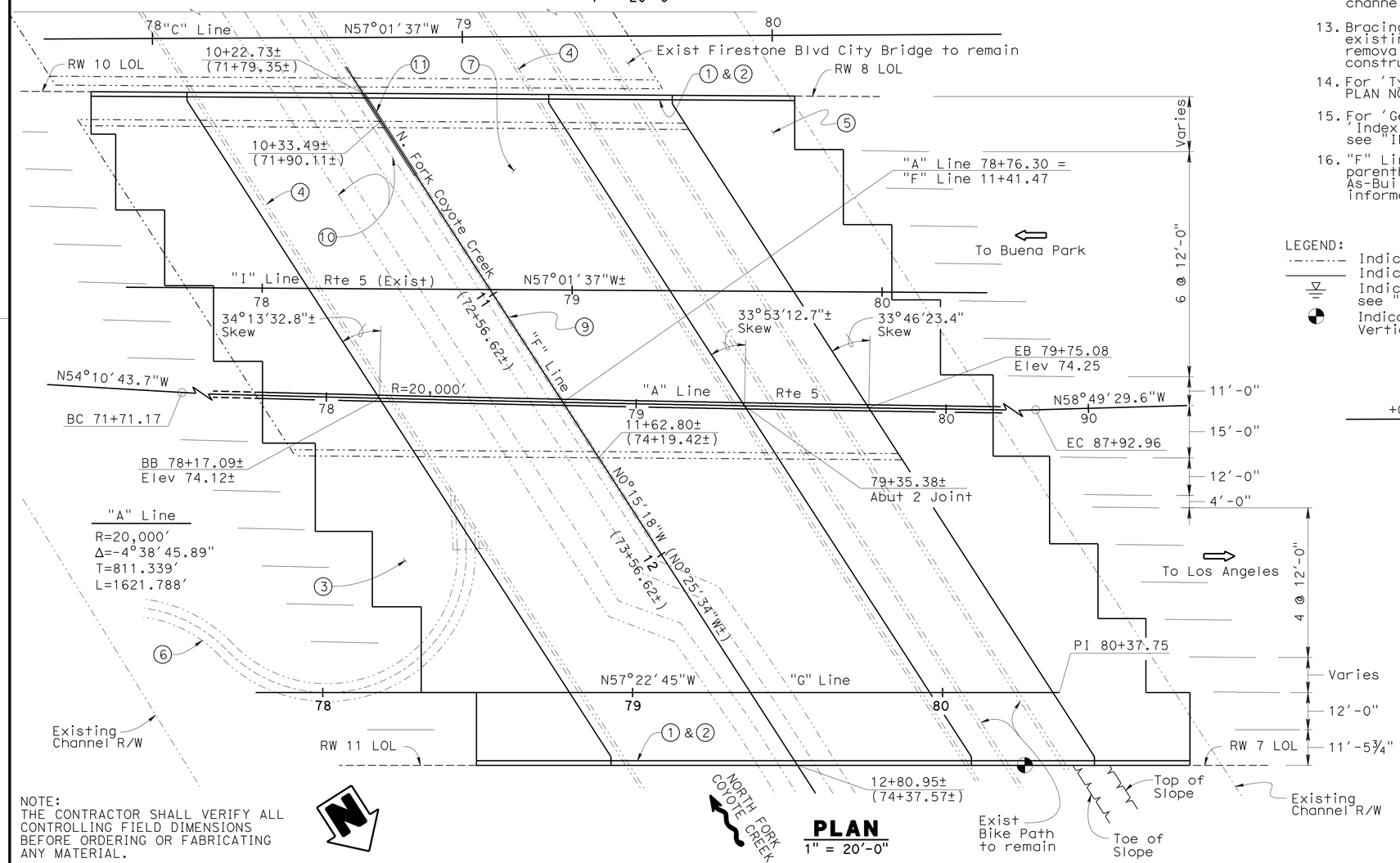

PLAN
1" = 20'-0"

NOTE:
THE CONTRACTOR SHALL VERIFY ALL CONTROLLING FIELD DIMENSIONS BEFORE ORDERING OR FABRICATING ANY MATERIAL.

NOTES:

1. Paint "NORTH FORK COYOTE CRK BR"
2. Paint "53-3037"
3. Structure Approach Type N(30S)
4. Exist outer channel walls to remain
5. Structure Approach Type N(30D)
6. Existing culvert. Not to be maintained by LACDPW/LACFCD
7. Remove existing Bridge No. 53-1363 on I-5
8. Lighting for bike path, see "ROAD PLANS"
9. Exist center pier and pier nose to be removed
10. Exist low flow channel
11. Construct new pier nose
12. 12" Min clearance from pile to exist channel footing
13. Bracing/shoring is required at existing piers prior to bridge removal and during bridge construction
14. For 'Typical Section', see "GENERAL PLAN NO. 2" sheet
15. For 'General Notes', 'Pile Data Table', 'Index to Plans' and 'Standard Plans', see "INDEX TO PLANS" sheet
16. "F" Line stationing and bearing in parentheses indicates original Channel As-Built stations, and are shown for informational purposes only

1 REVISED PER ADDENDUM No. 1 DATED OCTOBER 17, 2011

LEGEND:
- Indicates Existing Structure
- Indicates New Structure
- Indicates High Water Elevation, see "FOUNDATION PLAN" sheet
- Indicates Point of Minimum Vertical Clearance

PROFILE GRADE
No Scale

QUANTITIES

BRIDGE REMOVAL, LOCATION B		LUMP SUM	
STRUCTURE EXCAVATION (BRIDGE)		690	CY
STRUCTURE BACKFILL (BRIDGE)		160	CY
STRUCTURE BACKFILL (SLURRY CEMENT)		166	CY
GEOSYNTHETIC REINFORCED EMBANKMENT		3,600	SQFT
44" PERMANENT STEEL CASING		265	LF
56" PERMANENT STEEL CASING		207	LF
24" CAST-IN-DRILLED-HOLE CONCRETE PILING	1,542	~~1,662~~	LF
36" CAST-IN-DRILLED-HOLE CONCRETE PILING	1,481	~~703~~	LF
48" CAST-IN-DRILLED-HOLE CONCRETE PILING	1,149	~~1,433~~	LF
STRUCTURAL CONCRETE, BRIDGE		3,110	CY
STRUCTURAL CONCRETE, APPROACH SLAB (TYPE N)		620	CY
ARCHITECTURAL TREATMENT		5,100	SQFT
ARCHITECTURAL SURFACE (BARRIER)		825	SQFT
DRILL AND BOND DOWEL		342	LF
FURNISH PRECAST PRESTRESSED CONCRETE BULB-TEE GIRDER (110'-120')		24	EA
ERECT PRECAST CONCRETE GIRDER		24	EA
JOINT SEAL (MR 1/2")		255	LF
JOINT SEAL (MR 1")		515	LF
BAR REINFORCING STEEL (BRIDGE)	835,000	~~793,000~~	LB
HEADED BAR REINFORCEMENT		28	EA
CONCRETE BARRIER (TYPE 60GA)		234	LF
CONCRETE BARRIER (TYPE 736)		449	LF
COMMUNICATION CONDUIT (BRIDGE)		486	LF

1

Ramin Rashedi, DESIGN ENGINEER	DESIGN	BY Karen Doll	CHECKED Mohey El-Mously	LOAD & RESISTANCE FACTOR DESIGN	LIVE LOADING: HL93 W/"LOW-BOY"; PERMIT DESIGN VEHICLE
	DETAILS	BY Pauline Tong	CHECKED Mohey El-Mously	LAYOUT BY Karen Doll	CHECKED Mohey El-Mously
	QUANTITIES	BY Mark Okimura	CHECKED Yeo Yoon	SPECIFICATIONS BY Theresa Nedwick	PLANS AND SPECS COMPARED Theresa Nedwick

STATE OF CALIFORNIA
DEPARTMENT OF TRANSPORTATION

DIVISION OF ENGINEERING SERVICES
STRUCTURE DESIGN
DESIGN BRANCH 11

BRIDGE NO. 53-3037
POST MILE 1.47

N. FORK COYOTE CRK BR (REPLACEMENT)
GENERAL PLAN NO. 1

STRUCTURES DESIGN GENERAL PLAN SHEET (ENGLISH) (REV. 10/25/05)

ORIGINAL SCALE IN INCHES FOR REDUCED PLANS 0 1 2 3

CU 07227
EA 215911

DISREGARD PRINTS BEARING EARLIER REVISION DATES

REVISION DATES: ~~4-30-09~~ ~~12-23-10~~ 1-19-11 ~~5-4-10~~ ~~8-9-10~~ ~~8-24-10~~ ~~9-20-10~~ ~~10-7-10~~ ~~11-15-10~~

SHEET 1 OF 31

FILE => 53-3037-a-gp01.add

STRUCTURES DESIGN GENERAL PLAN SHEET (ENGLISH) (REV.07-24-06)

USERNAME => s121614 DATE PLOTTED => 17-OCT-2011 TIME PLOTTED => 09:04

DIST	COUNTY	ROUTE	POST MILES TOTAL PROJECT	SHEET No	TOTAL SHEETS
07	LA	5	1.2/2.1	497	602

REGISTERED CIVIL ENGINEER 3-2-11 DATE

6-27-11
PLANS APPROVAL DATE

REGISTERED PROFESSIONAL ENGINEER Phu V. Nguyen No. 60358 Exp. 6-30-12 CIVIL STATE OF CALIFORNIA

The State of California or its officers or agents shall not be responsible for the accuracy or completeness of electronic copies of this plan sheet.

STANDARD PLANS
Dated May 2006

A10A	ACRONYMS AND ABBREVIATIONS (A-L)
A10B	ACRONYMS AND ABBREVIATIONS (M-Z)
A62B	LIMITS OF PAYMENT FOR EXCAVATION AND BACKFILL- BRIDGE SURCHARGE AND WALL
B0-3	BRIDGE DETAILS
B2-5	PILE DETAILS CLASS 90 AND CLASS 140
B3-1	RETAINING WALL TYPE 1
B3-8	RETAINING WALL DETAILS NO. 1
B11-54	CONCRETE BARRIER TYPE 26
D102	UNDERDRAINS

Standard Plan Sheet No.
Detail No.

INDEX TO PLANS

Sheet No.	Title
1	GENERAL PLAN
2	STRUCTURE PLAN NO. 1
3	STRUCTURE PLAN NO. 2
4	RETAINING WALL DETAILS NO. 1
5	RETAINING WALL DETAILS NO. 2
6	RETAINING WALL DETAILS NO. 3
7	RETAINING WALL DETAILS NO. 4
8	RETAINING WALL DETAILS NO. 5
9	RETAINING WALL DETAILS NO. 6
10	ARCHITECTURAL TREATMENT DETAILS NO. 1
11	ARCHITECTURAL TREATMENT DETAILS NO. 2
12	ARCHITECTURAL TREATMENT DETAILS NO. 3
13	ARCHITECTURAL TREATMENT DETAILS NO. 4
14	BARRIER MOTIF DETAILS
15	PILE CASING DETAIL

QUANTITIES

STRUCTURE EXCAVATION (BRIDGE)-CONTAMINATED	495	CY	
STRUCTURE BACKFILL (RETAINING WALL)	375	CY	
EARTH RETAINING STRUCTURE, LOCATION A	1,525 ~~1,857~~	SQFT	1
FURNISH PILING (CLASS 90) (ALTERNATIVE W)	1,539	LF	
DRIVE PILE (CLASS 90) (ALTERNATIVE W)	27	EA	
STRUCTURAL CONCRETE, RETAINING WALL	199	CY	
STRUCTURAL CONCRETE, BARRIER SLAB	57 ~~77~~	CY	1
ARCHITECTURAL TREATMENT	1,156	SQFT	
ARCHITECTURAL SURFACE (BARRIER)	349	SQFT	
BAR REINFORCING STEEL (RETAINING WALL)	19,500	LB	
CONCRETE BARRIER (TYPE 26 MODIFIED)	184 ~~220~~	LF	1
20" DIAMETER PILE CASING	608	LF	

Note:

(1) For slope see "RETAINING WALL DETAILS NO. 2 AND NO. 3" sheet

* Maintain a minimum of 6" between soil reinforcements, Typ

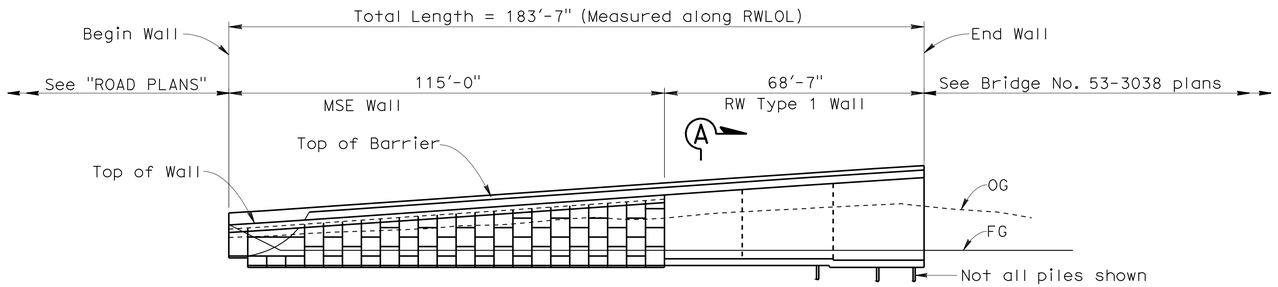

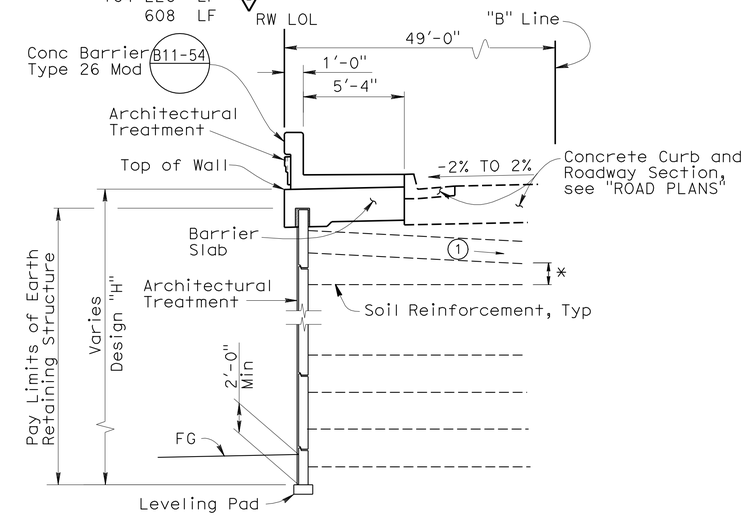

TYPICAL SECTION AT MSE WALL

1/4"=1'-0"

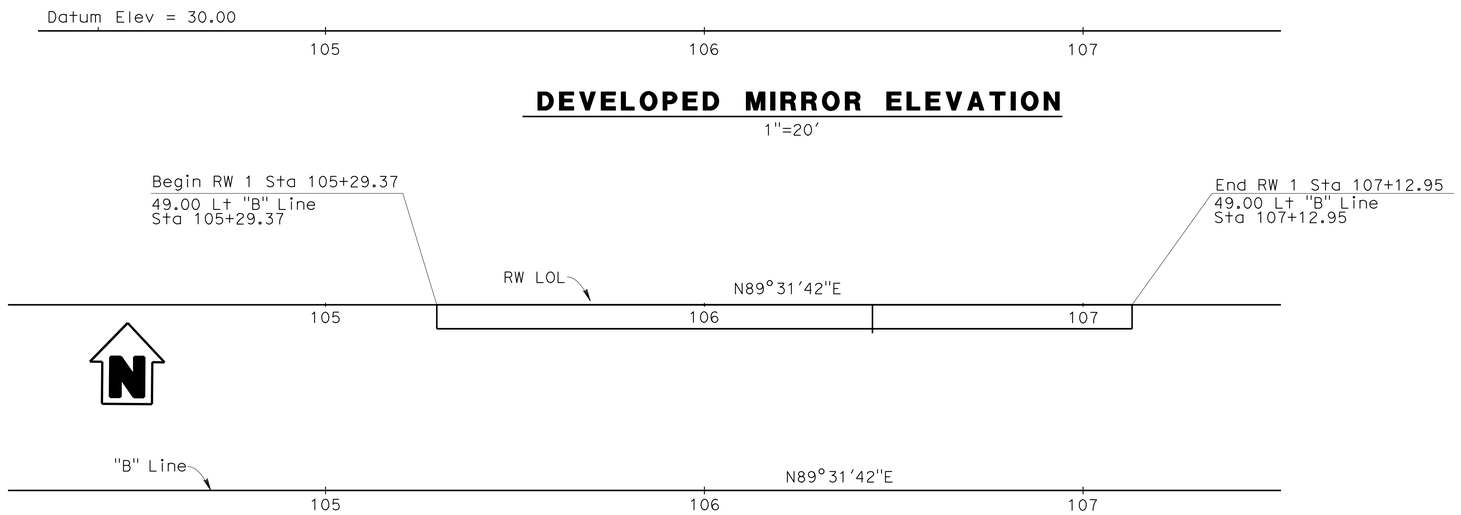

DEVELOPED MIRROR ELEVATION

1"=20'

PLAN

1"=20'

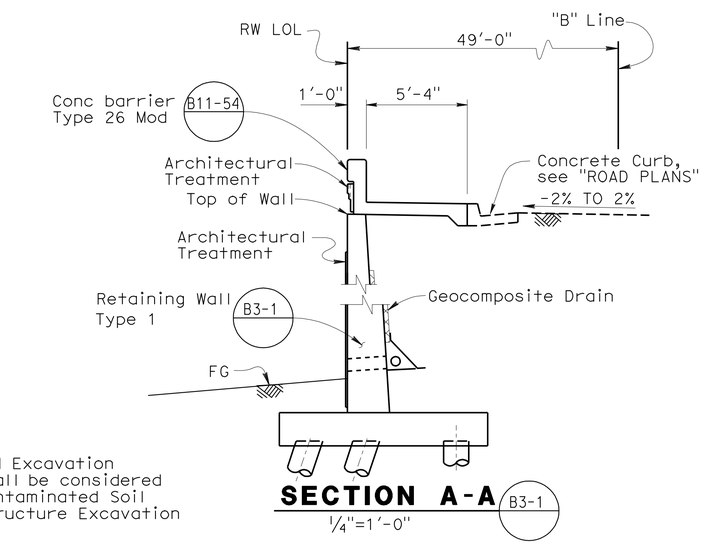

Note: All Excavation shall be considered Contaminated Soil Structure Excavation

SECTION A-A B3-1

1/4"=1'-0"

1 REVISED PER ADDENDUM No. 1 DATED OCTOBER 17, 2011

Ramin Rashedi, DESIGN ENGINEER	DESIGN	BY Phu Nguyen	CHECKED Ubong Inyang		
	DETAILS	BY Jaime Ramirez	CHECKED Ubong Inyang	LAYOUT: BY Phu Nguyen	CHECKED Ubong Inyang
	QUANTITIES	BY Tony Yoon	CHECKED Loren Goldthwait	SPECIFICATIONS: BY Theresa Nedwick	PLANS AND SPECS COMPARED Theresa Nedwick

STATE OF CALIFORNIA
DEPARTMENT OF TRANSPORTATION

DIVISION OF ENGINEERING SERVICES
STRUCTURE DESIGN
DESIGN BRANCH 11

BRIDGE NO. 53E0151
POST MILE 1.68

RETAINING WALL NO. 1
GENERAL PLAN

ORIGINAL SCALE IN INCHES FOR REDUCED PLANS 0 1 2 3

CU 07227
EA 215911

DISREGARD PRINTS BEARING EARLIER REVISION DATES

REVISION DATES: 12-28-09, 4-5-11, 3-22-11, 1-21-10, 3-18-10, 4-8-10, 9-18-10, 1-14-11, 2-1-11, 3-8-11

SHEET 1 OF 15

STRUCTURES DESIGN GENERAL PLAN SHEET (ENGLISH) (REV.07-24-06)

FILE => rw1-a-gp01.add

USERNAME => s8121614 DATE PLOTTED => 17-OCT-2011 TIME PLOTTED => 09:04

DIST	COUNTY	ROUTE	POST MILES TOTAL PROJECT	SHEET No	TOTAL SHEETS
07	LA	5	1.2/2.1	512	602

REGISTERED CIVIL ENGINEER 3-2-11 DATE

6-27-11
PLANS APPROVAL DATE

REGISTERED PROFESSIONAL ENGINEER Phu V. Nguyen No. 60358 Exp. 6-30-12 CIVIL STATE OF CALIFORNIA

The State of California or its officers or agents shall not be responsible for the accuracy or completeness of electronic copies of this plan sheet.

STANDARD PLANS
Dated May 2006

A10A	ACRONYMS AND ABBREVIATIONS (A-L)
A10B	ACRONYMS AND ABBREVIATIONS (M-Z)
A62B	LIMITS OF PAYMENT FOR EXCAVATION AND BACKFILL- BRIDGE SURCHARGE AND WALL
D102	UNDERDRAINS
BO-3	BRIDGE DETAILS
B3-1	RETAINING WALL TYPE 1
B3-8	RETAINING WALL DETAILS NO. 1
B11-54	CONCRETE BARRIER TYPE 26

Standard Plan Sheet No.
Detail No.

INDEX TO PLANS

Sheet No.	Title
1	GENERAL PLAN
2	STRUCTURE PLAN NO. 1
3	STRUCTURE PLAN NO. 2
4	STRUCTURE PLAN NO. 3
5	RETAINING WALL DETAILS NO. 1
6	RETAINING WALL DETAILS NO. 2
7	RETAINING WALL DETAILS NO. 3
8	RETAINING WALL DETAILS NO. 4
9	RETAINING WALL DETAILS NO. 5
10	RETAINING WALL DETAILS NO. 6
11	ARCHITECTURAL TREATMENT DETAILS NO. 1
12	ARCHITECTURAL TREATMENT DETAILS NO. 2
13	ARCHITECTURAL TREATMENT DETAILS NO. 3
14	ARCHITECTURAL TREATMENT DETAILS NO. 4
15	BARRIER MOTIF DETAILS
16	LUMINAIRE CORBEL DETAILS NO. 1
17	LUMINAIRE CORBEL DETAILS NO. 2

QUANTITIES

STRUCTURE EXCAVATION (RETAINING WALL)	460	CY
STRUCTURE BACKFILL (RETAINING WALL)	630	CY
EARTH RETAINING STRUCTURE, LOCATION B	4,895	SQFT
FURNISH PILING (CLASS 90) (ALTERNATIVE W)	2,751	LF
DRIVE PILE (CLASS 90) (ALTERNATIVE W)	49	EA
STRUCTURAL CONCRETE, RETAINING WALL	220	CY
STRUCTURAL CONCRETE, BARRIER SLAB	150	CY
ARCHITECTURAL TREATMENT	1,630 ~~1,840~~	SQFT 1
ARCHITECTURAL SURFACE (BARRIER)	620 ~~670~~	SQFT
BAR REINFORCING STEEL (RETAINING WALL)	37,840	LB
CONCRETE BARRIER (TYPE 26 MODIFIED)	369	LF

Notes:

1. Maintain a minimum of 6" between soil reinforcements, Typ.
2. Precast Concrete Panels with Architectural Treatment (Split Slate Texture)

* For slope, see "RETAINING WALL DETAILS NO. 2 and NO. 3" sheets.

O Electrolier, see "ROAD PLANS"

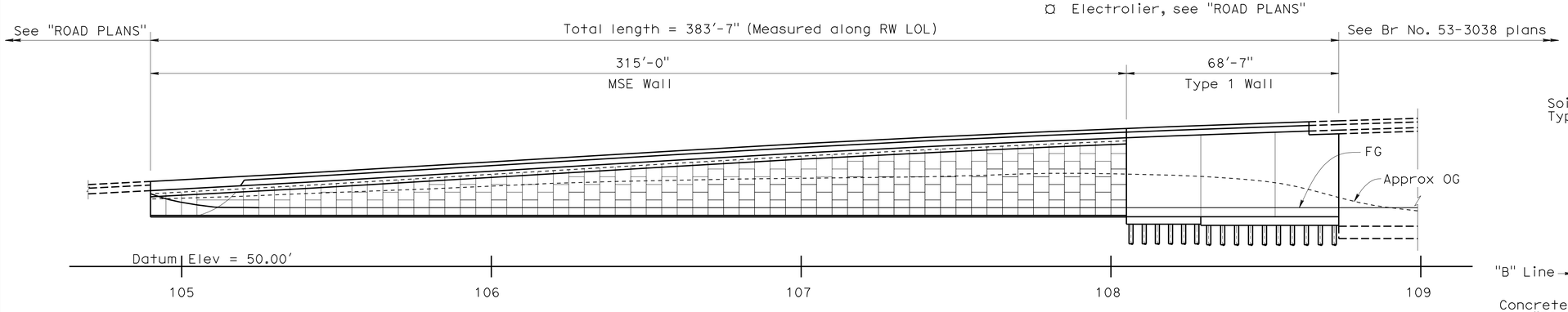

ELEVATION
1" = 20'

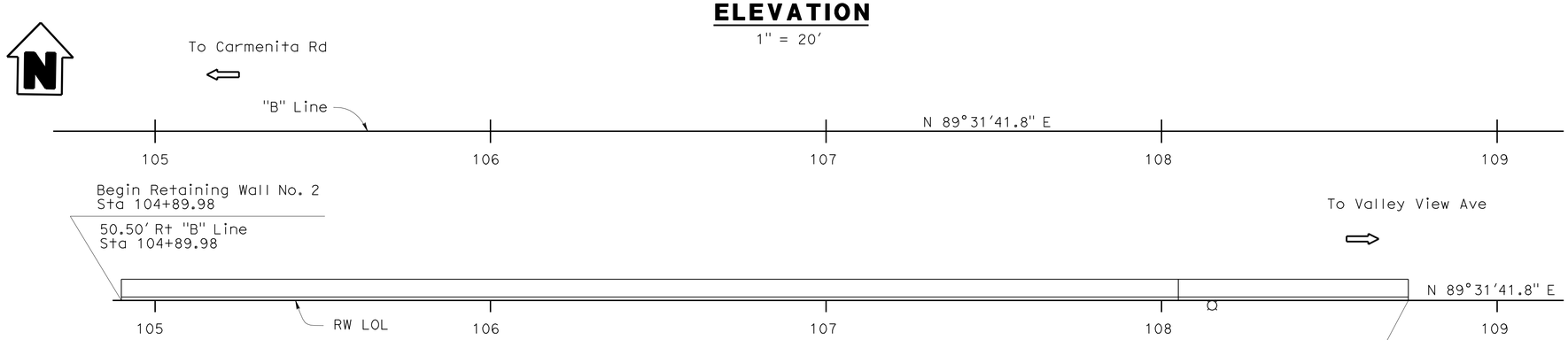

PLAN
1" = 20'

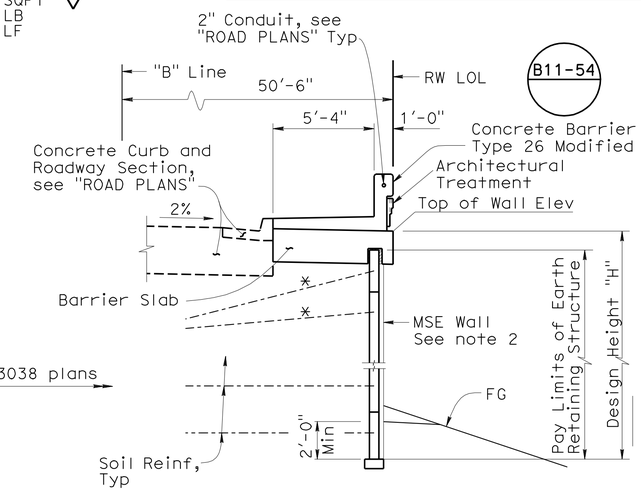

TYPICAL SECTION AT MSE WALL
1/4"=1'-0"

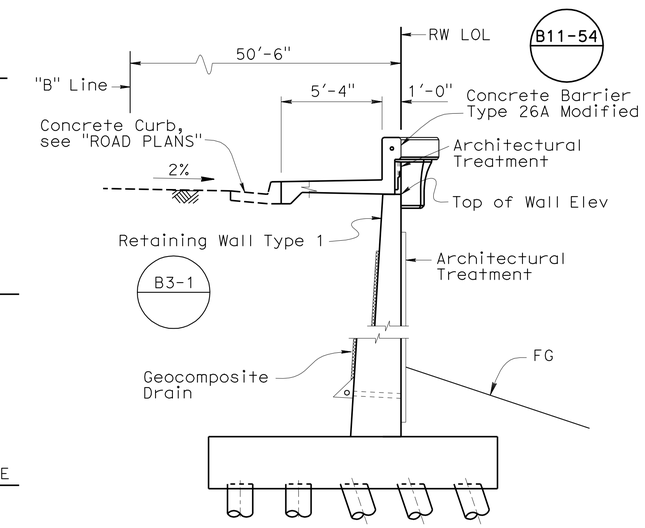

TYPICAL SECTION AT RETAINING WALL TYPE 1
1/4"=1'-0"

1 REVISED PER ADDENDUM No. 1 DATED OCTOBER 17, 2011

DESIGN	BY Mark Okimura	CHECKED Yeo Yoon			
DETAILS	BY David Elliott	CHECKED Yeo Yoon	LAYOUT	BY Mark Okimura	CHECKED Yeo Yoon
QUANTITIES	BY Mark Okimura	CHECKED Pauline Tong	SPECIFICATIONS	BY Theresa Nedwick	PLANS AND SPECS COMPARED Theresa Nedwick

Ramin Rashedi
DESIGN ENGINEER

ORIGINAL SCALE IN INCHES FOR REDUCED PLANS 0 1 2 3

STATE OF CALIFORNIA
DEPARTMENT OF TRANSPORTATION

DIVISION OF ENGINEERING SERVICES
STRUCTURE DESIGN
DESIGN BRANCH 11

CU 07227
EA 215911

BRIDGE NO. 53E0152
POST MILE 1.68

RETAINING WALL NO. 2
GENERAL PLAN

DISREGARD PRINTS BEARING EARLIER REVISION DATES

REVISION DATES: 10-14-09 4-29-10 5-10-10 7-12-10 9-3-10 1-10-11 3-8-11 5-2-11 6-14-11

SHEET 1 OF 17

STRUCTURES DESIGN GENERAL PLAN SHEET (ENGLISH) (REV.07-24-06)

FILE => rw2-a-gp01.add

USERNAME => s12614 DATE PLOTTED => 17-OCT-2011 TIME PLOTTED => 09:05

DIST	COUNTY	ROUTE	POST MILES TOTAL PROJECT	SHEET No	TOTAL SHEETS
07	LA	5	1.2/2.1	565	602

REGISTERED CIVIL ENGINEER 3-2-11 DATE

6-27-11
PLANS APPROVAL DATE

REGISTERED PROFESSIONAL ENGINEER Phu V. Nguyen No. 60358 Exp. 6-30-12 CIVIL STATE OF CALIFORNIA

The State of California or its officers or agents shall not be responsible for the accuracy or completeness of electronic copies of this plan sheet.

QUANTITIES

STRUCTURE EXCAVATION (RETAINING WALL)	646	CY
STRUCTURE BACKFILL (RETAINING WALL)	829	CY
STRUCTURAL CONCRETE, RETAINING WALL	407	CY
ARCHITECTURAL TREATMENT	2,598 ~~259~~	SQFT
ARCHITECTURAL SURFACE (BARRIER)	1,319 ~~131~~	SQFT
BAR REINFORCING STEEL (RETAINING WALL)	24,500	LB
CONCRETE BARRIER (TYPE 736)	746	LF

1

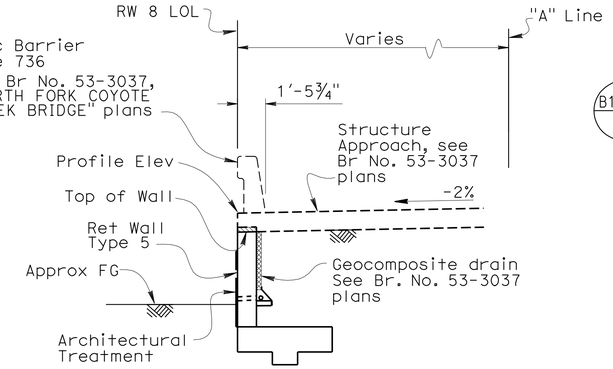

TYPICAL SECTION AT STRUCTURE APPROACH (B3-7)

¼"=1'-0"

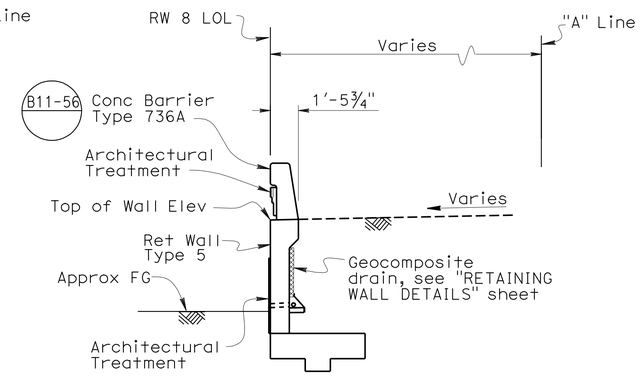

TYPICAL SECTION (B3-7) (B3-8)

¼"=1'-0"

Notes:

1. Provide ½" open joint in Barrier. Provide Waterstop from (B0-3)
2. Expand Waterstop 6" into Barrier
3. For 'Index to Plans' and 'Standard Plans', see "RETAINING WALL DETAILS" sheet

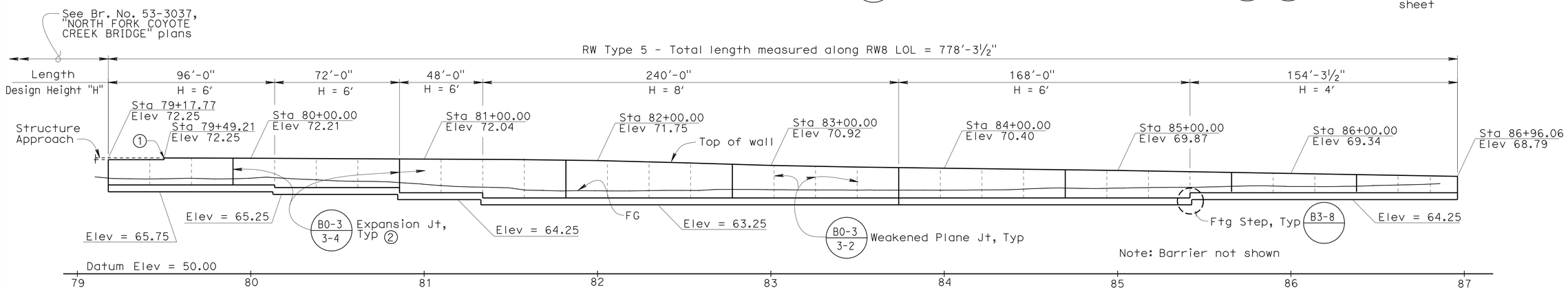

DEVELOPED MIRROR ELEVATION

Horiz 1"=30'
Vert 1"=10'

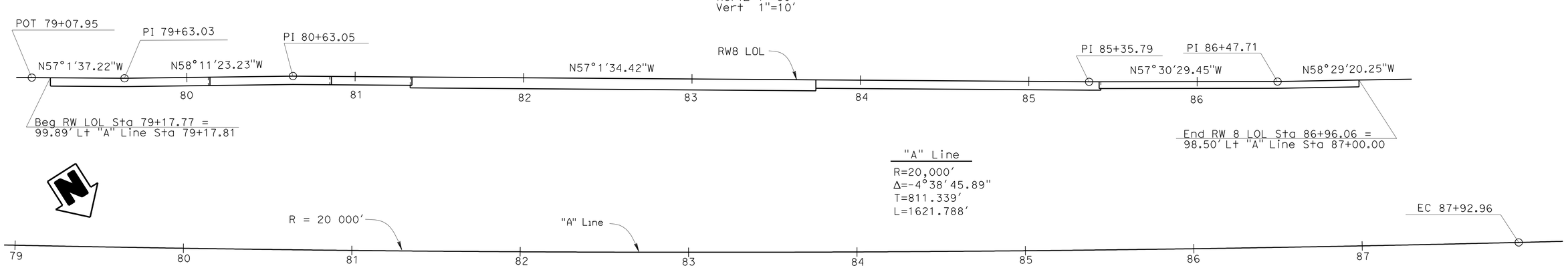

PLAN

1"=30'

1 **REVISED PER ADDENDUM No. 1 DATED OCTOBER 17, 2011**

DESIGN	BY Buster Hansen	CHECKED Mark Okimura			
DETAILS	BY Bruno Jenko	CHECKED Mark Okimura	LAYOUT	BY Buster Hansen	CHECKED Mark Okimura
QUANTITIES	BY Dary Tavatli	CHECKED Tom Bittermann	SPECIFICATIONS	BY Theresa Nedwick	PLANS AND SPECS COMPARED Theresa Nedwick

Ramin Rashedi
DESIGN ENGINEER

STATE OF CALIFORNIA
DEPARTMENT OF TRANSPORTATION

DIVISION OF ENGINEERING SERVICES
STRUCTURE DESIGN
DESIGN BRANCH 11

BRIDGE NO. RW8
POST MILE 1.47

RETAINING WALL NO. 8
GENERAL PLAN

ORIGINAL SCALE IN INCHES FOR REDUCED PLANS 0 1 2 3

CU 07227
EA 215911

DISREGARD PRINTS BEARING EARLIER REVISION DATES

REVISION DATES: ~~1-5-10~~ ~~3-10-10~~ ~~3-11-10~~ ~~4-26-10~~ ~~6-04-10~~ ~~1-19-11~~ 3-8-11

SHEET 1 OF 4

STRUCTURES DESIGN GENERAL PLAN SHEET (ENGLISH) (REV.07-24-06)

FILE => rw8-a-gp01.dgn

USERNAME => s6121614 DATE PLOTTED => 17-OCT-2011 TIME PLOTTED => 09:05

DIST	COUNTY	ROUTE	POST MILES TOTAL PROJECT	SHEET No	TOTAL SHEETS
07	LA	5	1.2/2.1	569	602

REGISTERED CIVIL ENGINEER 3-2-11 DATE

6-27-11
PLANS APPROVAL DATE

REGISTERED PROFESSIONAL ENGINEER Phu V. Nguyen No. 60358 Exp. 6-30-12 CIVIL STATE OF CALIFORNIA

The State of California or its officers or agents shall not be responsible for the accuracy or completeness of electronic copies of this plan sheet.

INDEX TO PLANS

Sheet No.	Title
1	GENERAL PLAN
2	RETAINING WALL DETAILS
3	BARRIER MOTIF DETAILS
4	ARCHITECTURAL TREATMENT

QUANTITIES

STRUCTURE EXCAVATION (RETAINING WALL)		600	CY
STRUCTURE BACKFILL (RETAINING WALL)		605	CY
STRUCTURAL CONCRETE, RETAINING WALL		295	CY
ARCHITECTURAL TREATMENT	1,454	~~3,250~~	SQFT
ARCHITECTURAL SURFACE (BARRIER)	717	~~1,350~~	SQFT
BAR REINFORCING STEEL (RETAINING WALL)		26,700	LB
CONCRETE BARRIER (TYPE 736)	430	~~490~~	LF

1

STANDARD PLANS
Dated May 2006

A10A	ACRONYMS AND ABBREVIATIONS (A-L)
A10B	ACRONYMS AND ABBREVIATIONS (M-Z)
A62B	LIMITS OF PAYMENT FOR EXCAVATION AND BACKFILL- BRIDGE SURCHARGE AND WALL
BO-3	BRIDGE DETAILS
B3-7	RETAINING WALL TYPE 5
B3-8	RETAINING WALL DETAILS NO. 1
B11-56	CONCRETE BARRIER TYPE 736

Standard Plan Sheet No.

Detail No.

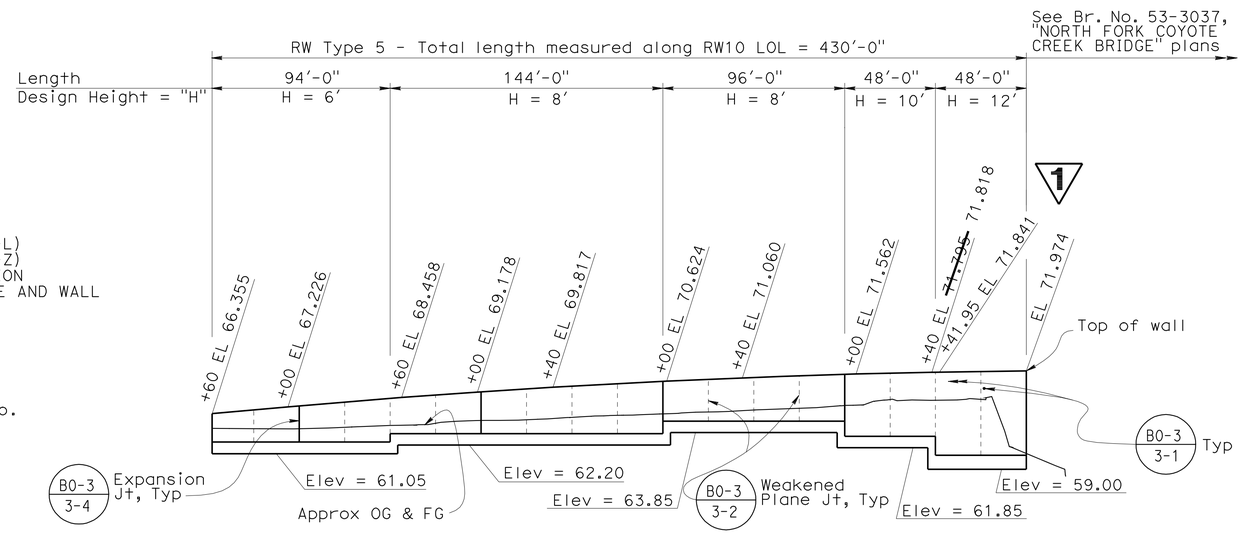

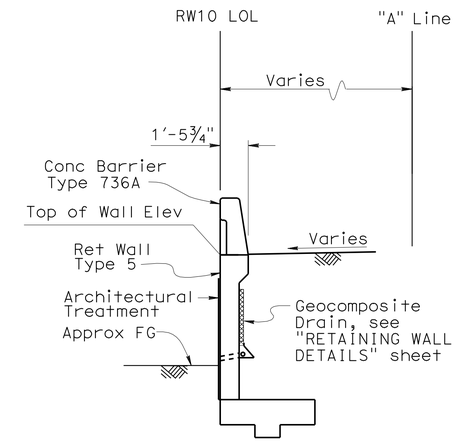

TYPICAL SECTION
¼"=1'-0"

B3-7

Note: Barrier not shown

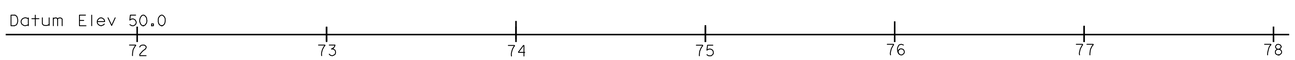

MIRROR ELEVATION
Horiz 1"= 40'
Vert 1"= 10'

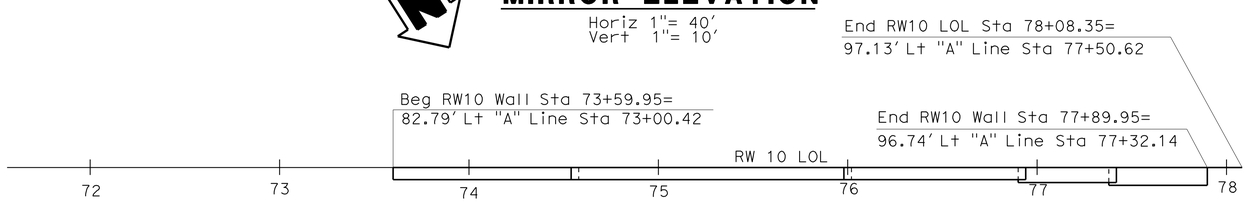

"A" Line
R=20,000'
Δ=-4°38'45.89"
T=811.339'
L=1621.788'

PLAN
1" = 40'

1 REVISED PER ADDENDUM No. 1 DATED OCTOBER 17, 2011

DESIGN	BY Ubong Inyang	CHECKED Yeo Yoon			
DETAILS	BY T. Bittermann	CHECKED Yeo Yoon	LAYOUT	BY Ubong Inyang	CHECKED Yeo Yoon
QUANTITIES	BY Ubong Inyang	CHECKED Bill Kemp	SPECIFICATIONS	BY Theresa Nedwick	PLANS AND SPECS COMPARED Theresa Nedwick

Ramin Rashedi
DESIGN ENGINEER

ORIGINAL SCALE IN INCHES FOR REDUCED PLANS 0 1 2 3

STATE OF CALIFORNIA
DEPARTMENT OF TRANSPORTATION

DIVISION OF ENGINEERING SERVICES
STRUCTURE DESIGN
DESIGN BRANCH 11

CU 07227
EA 215911

BRIDGE NO. RW10
POST MILE 1.47

RETAINING WALL NO. 10
GENERAL PLAN

DISREGARD PRINTS BEARING EARLIER REVISION DATES

REVISION DATES: ~~11-8-09~~ 3-8-11 ~~1-22-10~~ ~~3-11-10~~ ~~6-4-10~~ ~~9-09-10~~ ~~11/05/10~~ ~~11/18/10~~ ~~1-14-11~~

SHEET 1 OF 4

STRUCTURES DESIGN GENERAL PLAN SHEET (ENGLISH) (REV.07-24-06)

FILE => rw10-a-gp01.dgn

USERNAME => s12614 DATE PLOTTED => 17-OCT-2011 TIME PLOTTED => 09:05

DIST	COUNTY	ROUTE	POST MILES TOTAL PROJECT	SHEET No	TOTAL SHEETS
07	LA	5	1.2/2.1	590	602

REGISTERED CIVIL ENGINEER — DATE 3-2-11

6-27-11
PLANS APPROVAL DATE

REGISTERED PROFESSIONAL ENGINEER — Phu V. Nguyen — No. 60358 — Exp. 6-30-12 — CIVIL — STATE OF CALIFORNIA

The State of California or its officers or agents shall not be responsible for the accuracy or completeness of electronic copies of this plan sheet.

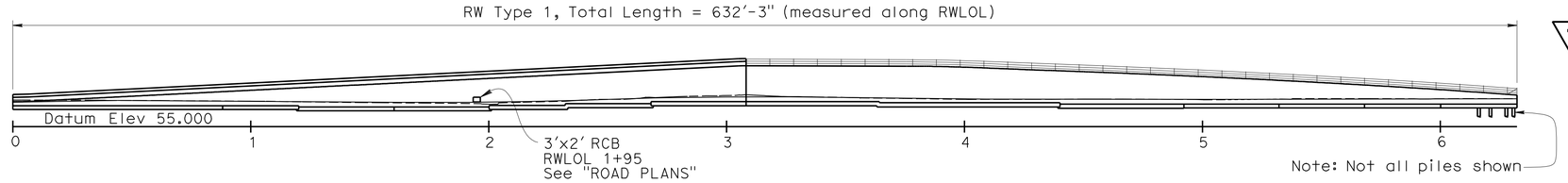

DEVELOPED ELEVATION

1"=30'-0"

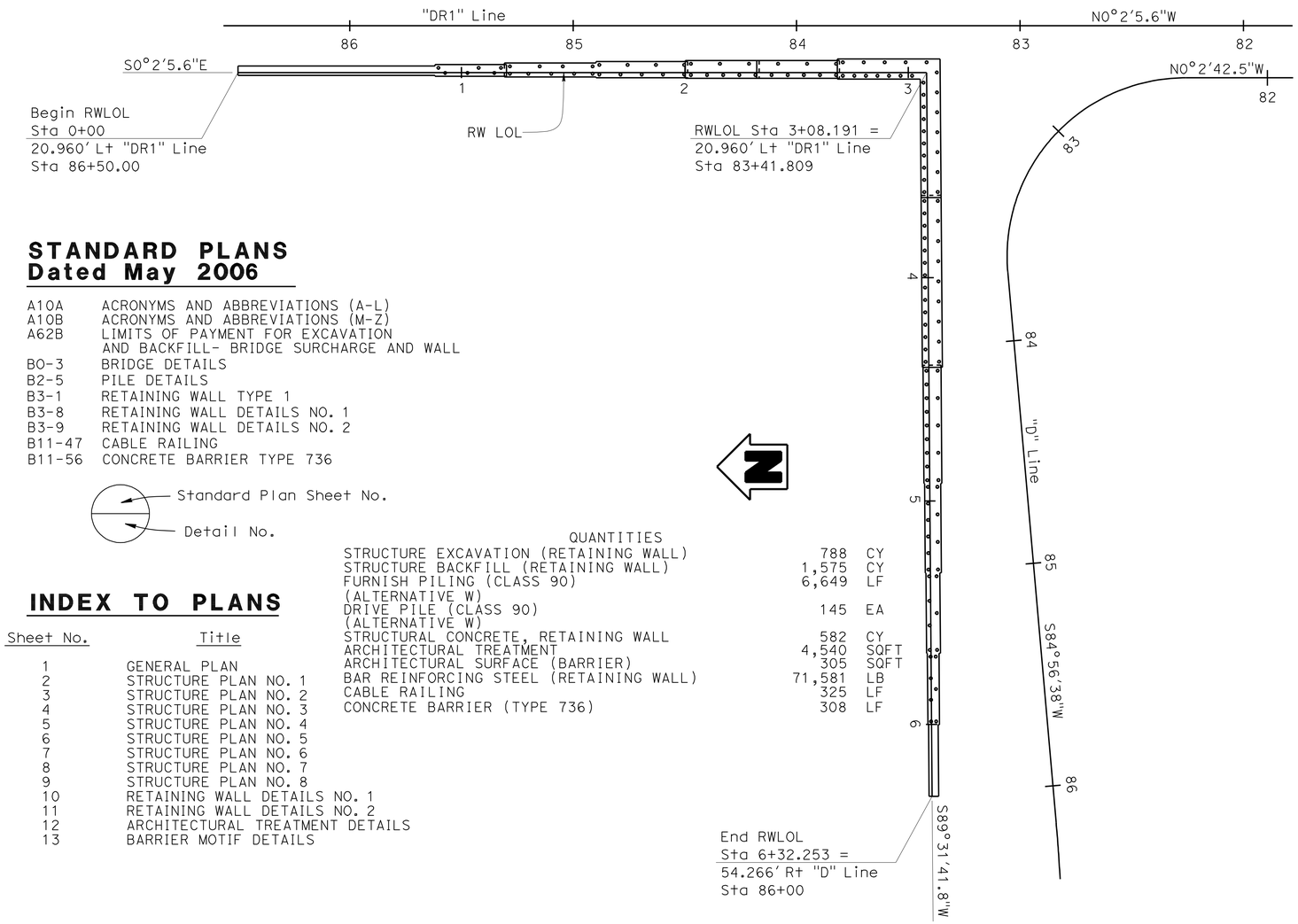

PLAN

1"=30'-0"

STANDARD PLANS
Dated May 2006

A10A	ACRONYMS AND ABBREVIATIONS (A-L)
A10B	ACRONYMS AND ABBREVIATIONS (M-Z)
A62B	LIMITS OF PAYMENT FOR EXCAVATION AND BACKFILL- BRIDGE SURCHARGE AND WALL
B0-3	BRIDGE DETAILS
B2-5	PILE DETAILS
B3-1	RETAINING WALL TYPE 1
B3-8	RETAINING WALL DETAILS NO. 1
B3-9	RETAINING WALL DETAILS NO. 2
B11-47	CABLE RAILING
B11-56	CONCRETE BARRIER TYPE 736

Standard Plan Sheet No.

Detail No.

QUANTITIES

STRUCTURE EXCAVATION (RETAINING WALL)	788	CY
STRUCTURE BACKFILL (RETAINING WALL)	1,575	CY
FURNISH PILING (CLASS 90) (ALTERNATIVE W)	6,649	LF
DRIVE PILE (CLASS 90) (ALTERNATIVE W)	145	EA
STRUCTURAL CONCRETE, RETAINING WALL	582	CY
ARCHITECTURAL TREATMENT	4,540	SQFT
ARCHITECTURAL SURFACE (BARRIER)	305	SQFT
BAR REINFORCING STEEL (RETAINING WALL)	71,581	LB
CABLE RAILING	325	LF
CONCRETE BARRIER (TYPE 736)	308	LF

INDEX TO PLANS

Sheet No.	Title
1	GENERAL PLAN
2	STRUCTURE PLAN NO. 1
3	STRUCTURE PLAN NO. 2
4	STRUCTURE PLAN NO. 3
5	STRUCTURE PLAN NO. 4
6	STRUCTURE PLAN NO. 5
7	STRUCTURE PLAN NO. 6
8	STRUCTURE PLAN NO. 7
9	STRUCTURE PLAN NO. 8
10	RETAINING WALL DETAILS NO. 1
11	RETAINING WALL DETAILS NO. 2
12	ARCHITECTURAL TREATMENT DETAILS
13	BARRIER MOTIF DETAILS

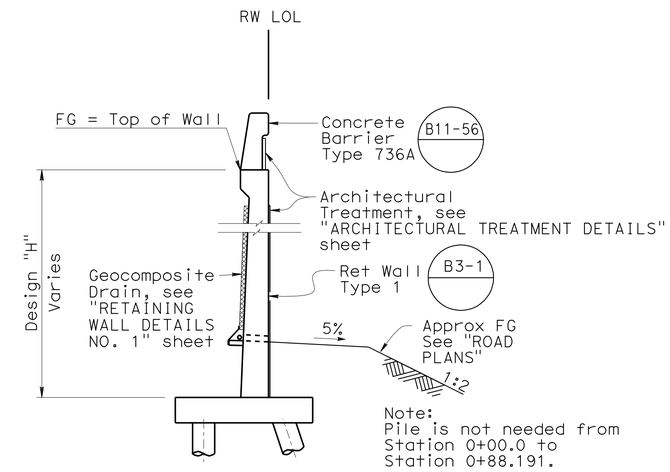

TYPICAL SECTION

No Scale
(RWLOL Sta 0+88.191 to Sta 3+08.191)

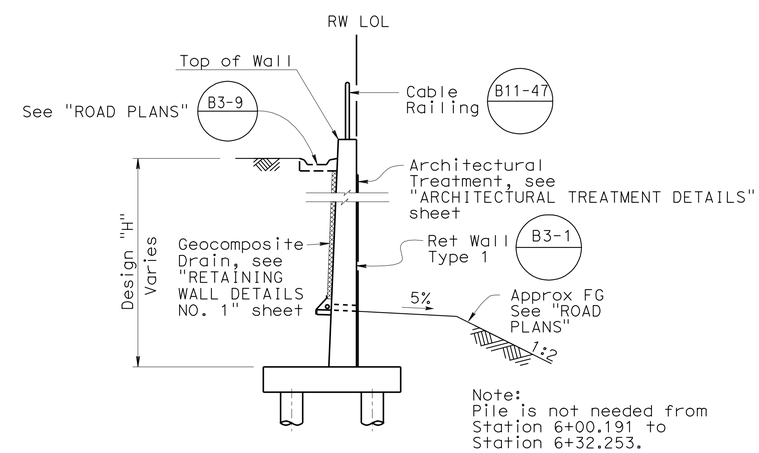

TYPICAL SECTION

No Scale
(RWLOL Sta 3+08.191 to Sta 6+00.191)

1 REVISED PER ADDENDUM No. 1 DATED OCTOBER 17, 2011

DESIGN	BY Matthew J Schott	CHECKED Ruperd Wilson			
DETAILS	BY Matthew J Schott	CHECKED Ruperd Wilson	LAYOUT	BY Matthew J Schott	CHECKED Ruperd Wilson
QUANTITIES	BY Matthew J Schott	CHECKED Ruperd Wilson	SPECIFICATIONS	BY T. Nedwick	PLANS AND SPECS COMPARED T. Nedwick

Ramin Rashedi
DESIGN ENGINEER

STATE OF CALIFORNIA
DEPARTMENT OF TRANSPORTATION

DIVISION OF ENGINEERING SERVICES
STRUCTURE DESIGN
DESIGN BRANCH 11

BRIDGE NO. RW14
POST MILE 1.5

RETAINING WALL NO. 14
GENERAL PLAN

STRUCTURES DESIGN GENERAL PLAN SHEET (ENGLISH) (REV. 10/25/05)

ORIGINAL SCALE IN INCHES FOR REDUCED PLANS 0 1 2 3

CU 07227
EA 215911

DISREGARD PRINTS BEARING EARLIER REVISION DATES

REVISION DATES: 6-14-10, 8-18-10, 1-19-11, 3-8-11

SHEET 1 OF 13

FILE => rw14-a-gp01.add

STRUCTURES DESIGN GENERAL PLAN SHEET (ENGLISH) (REV.07-24-06)

USERNAME => s12614 DATE PLOTTED => 17-OCT-2011 TIME PLOTTED => 09:05

DIST	COUNTY	ROUTE	POST MILES TOTAL PROJECT	SHEET No	TOTAL SHEETS
07	LA	5	1.2/2.1	591	602

1

REGISTERED CIVIL ENGINEER 3-2-11 DATE

6-27-11
PLANS APPROVAL DATE

REGISTERED PROFESSIONAL ENGINEER Phu V. Nguyen No. 60358 Exp. 6-30-12 CIVIL STATE OF CALIFORNIA

The State of California or its officers or agents shall not be responsible for the accuracy or completeness of electronic copies of this plan sheet.

NOTES:

1. Indicates Class 90 Piles, Alternative "W" (B2-5)
2. Indicates battered 1:3 Class 90 Piles, Alternative "W" (B2-5)
3. Pile tip elevation = 18.0

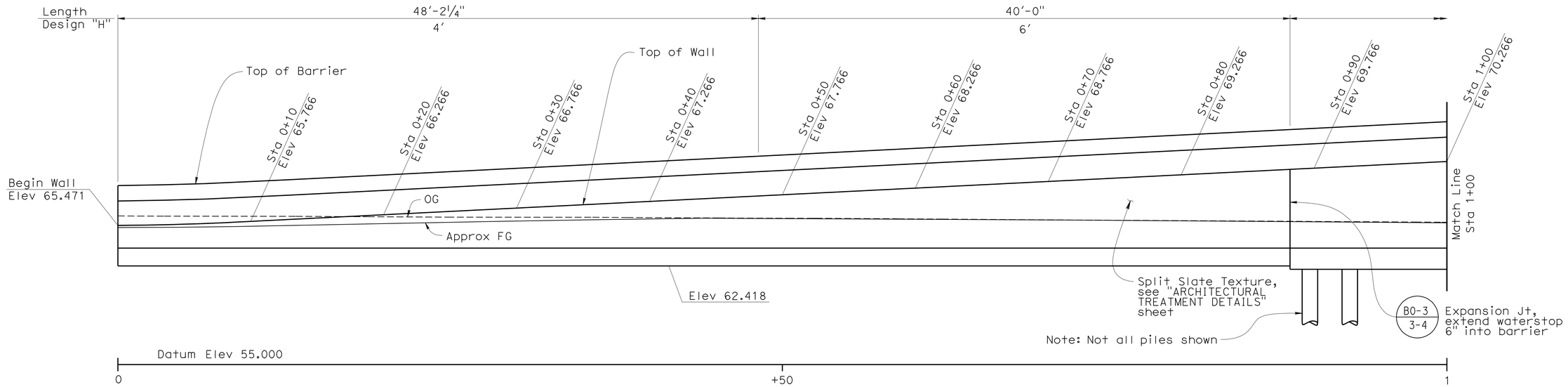

DEVELOPED ELEVATION

¼"=1'-0"

(B0-3 / 3-1) (B0-3 / 3-2) (B0-3 / 3-4)

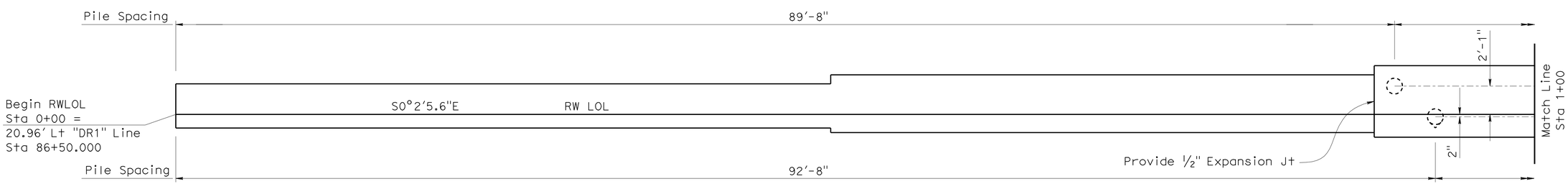

PLAN

¼"=1'-0"

N

1 **REVISED PER ADDENDUM No. 1 DATED OCTOBER 17, 2011**

	BY	CHECKED
DESIGN	Matthew J Schott	Ruperd Wilson
DETAILS	Matthew J Schott	Ruperd Wilson
QUANTITIES	Matthew J Schott	Ruperd Wilson

STATE OF CALIFORNIA
DEPARTMENT OF TRANSPORTATION

DIVISION OF ENGINEERING SERVICES
STRUCTURE DESIGN
DESIGN BRANCH 11

BRIDGE NO. RW14
POST MILE 1.5

RETAINING WALL NO. 14
STRUCTURE PLAN NO. 1

STRUCTURES DESIGN DETAIL SHEET (ENGLISH) (REV. 10/25/05)

ORIGINAL SCALE IN INCHES FOR REDUCED PLANS 0 1 2 3

CU 07227
EA 215911

DISREGARD PRINTS BEARING EARLIER REVISION DATES 6-14-10

REVISION DATES

SHEET 2 OF 13

FILE => rw14-c-sp01.dgn

USERNAME => s6121614 DATE PLOTTED => 17-OCT-2011 TIME PLOTTED => 09:05

DIST	COUNTY	ROUTE	POST MILES TOTAL PROJECT	SHEET No	TOTAL SHEETS
07	LA	5	1.2/2.1	592	602

REGISTERED CIVIL ENGINEER 3-2-11 DATE

6-27-11
PLANS APPROVAL DATE

REGISTERED PROFESSIONAL ENGINEER Phu V.XNguyen No. 60398 Exp. 6-30-12 CIVIL STATE OF CALIFORNIA

The State of California or its officers or agents shall not be responsible for the accuracy or completeness of electronic copies of this plan sheet.

NOTES:

1. Indicates Class 90 Piles, Alternative "W" (B2-5)
2. Indicates battered 1:3 Class 90 Piles, Alternative "W" (B2-5)
3. Pile tip elevation = 18.0

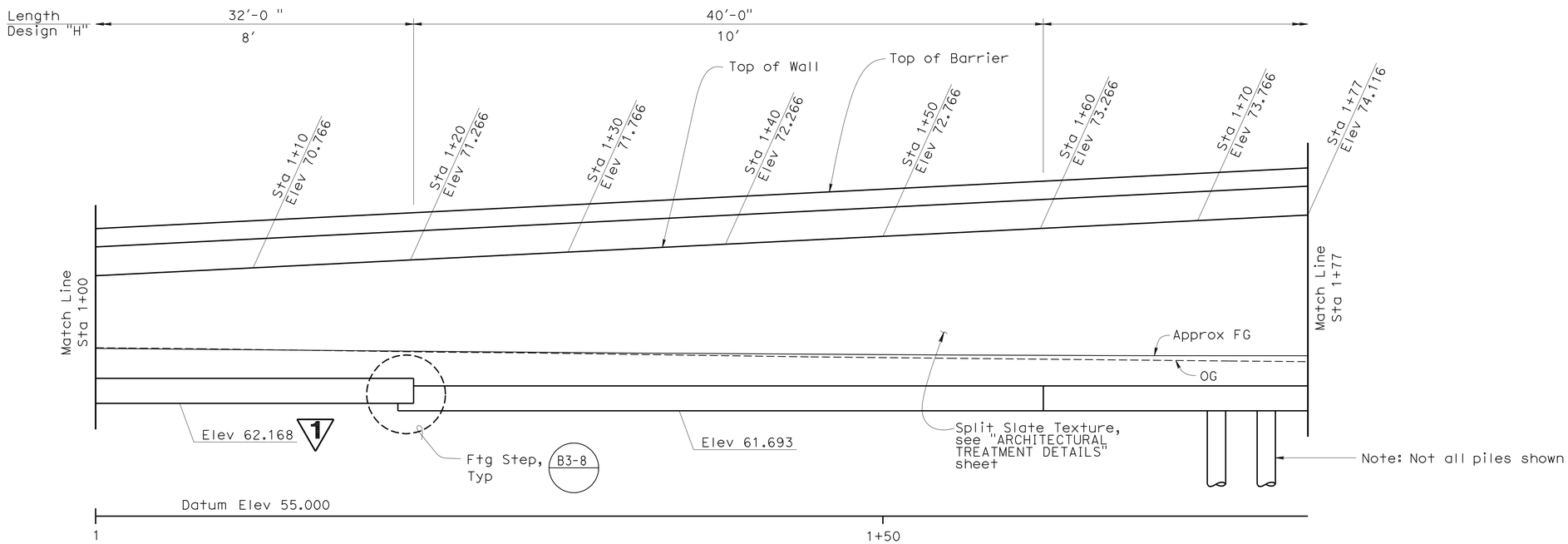

DEVELOPED ELEVATION

1/4"=1'-0"

(B0-3 / 3-1) (B0-3 / 3-2) (B0-3 / 3-4)

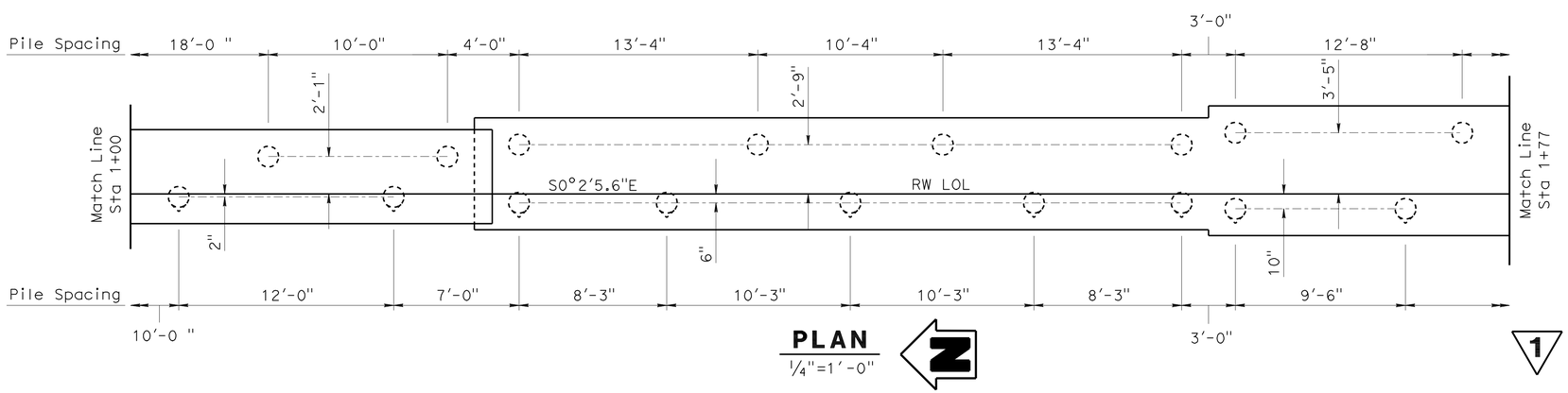

PLAN

1/4"=1'-0"

1 REVISED PER ADDENDUM No. 1 DATED OCTOBER 17, 2011

DESIGN	BY Matthew J Schott	CHECKED Ruperd Wilson	
DETAILS	BY Matthew J Schott	CHECKED Ruperd Wilson	
QUANTITIES	BY Matthew J Schott	CHECKED Ruperd Wilson	

STATE OF CALIFORNIA
DEPARTMENT OF TRANSPORTATION

DIVISION OF ENGINEERING SERVICES
STRUCTURE DESIGN
DESIGN BRANCH 11

BRIDGE NO. RW14
POST MILE 1.5

RETAINING WALL NO. 14
STRUCTURE PLAN NO. 2

STRUCTURES DESIGN DETAIL SHEET (ENGLISH) (REV. 10/25/05)

ORIGINAL SCALE IN INCHES FOR REDUCED PLANS 0 1 2 3

CU 07227
EA 215911

DISREGARD PRINTS BEARING EARLIER REVISION DATES

REVISION DATES: 6-14-10

SHEET 3 OF 13

FILE => rw14-c-sp02.add

USERNAME => s12614 DATE PLOTTED => 17-OCT-2011 TIME PLOTTED => 09:05

DIST	COUNTY	ROUTE	POST MILES TOTAL PROJECT	SHEET No	TOTAL SHEETS
07	LA	5	1.2/2.1	594	602

REGISTERED CIVIL ENGINEER 3-2-11 DATE

6-27-11
PLANS APPROVAL DATE

REGISTERED PROFESSIONAL ENGINEER Phu V. Nguyen No. 60358 Exp. 6-30-12 CIVIL STATE OF CALIFORNIA

The State of California or its officers or agents shall not be responsible for the accuracy or completeness of electronic copies of this plan sheet.

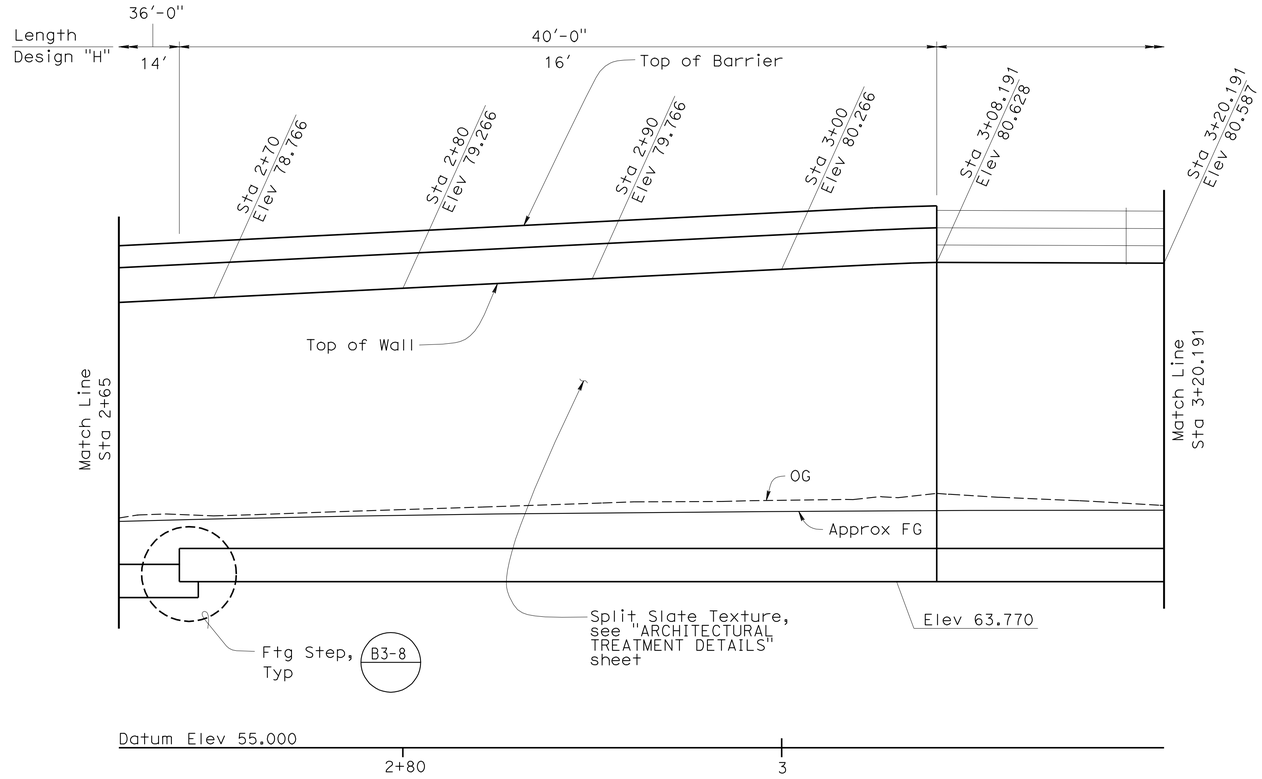

DEVELOPED ELEVATION

B0-3 3-1 | B0-3 3-2 | B0-3 3-4

1/4"=1'-0"

NOTES:

1. Indicates Class 90 Piles, Alternative "W" B2-5
2. Indicates battered 1:3 Class 90 Piles, Alternative "W" B2-5
3. Pile tip elevation = 18.0

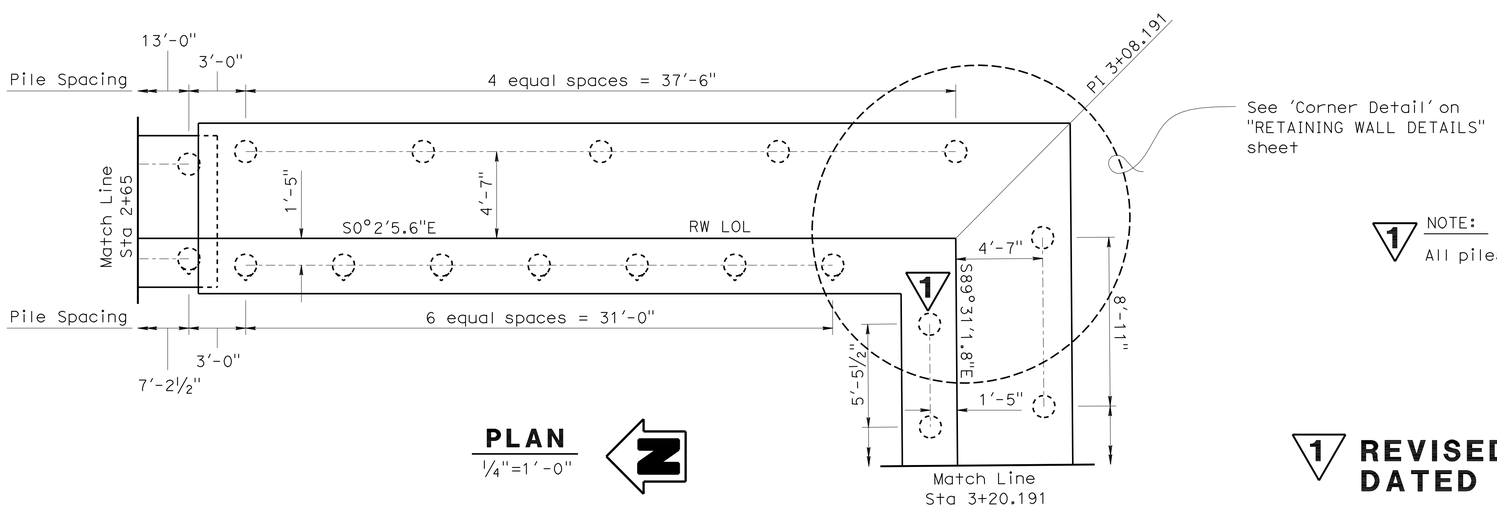

PLAN

1/4"=1'-0"

1 NOTE:

All piles are vertical from Sta 3+08.191 To Sta 6+00.191.

1 REVISED PER ADDENDUM No. 1 DATED OCTOBER 17, 2011

DESIGN	BY Matthew J Schott	CHECKED Ruperd Wilson	
DETAILS	BY Matthew J Schott	CHECKED Ruperd Wilson	
QUANTITIES	BY Matthew J Schott	CHECKED Ruperd Wilson	

STATE OF CALIFORNIA DEPARTMENT OF TRANSPORTATION

DIVISION OF ENGINEERING SERVICES STRUCTURE DESIGN DESIGN BRANCH 11

BRIDGE NO. RW14 | POST MILE 1.5

RETAINING WALL NO. 14
STRUCTURE PLAN NO. 4

STRUCTURES DESIGN DETAIL SHEET (ENGLISH) (REV. 10/25/05)

ORIGINAL SCALE IN INCHES FOR REDUCED PLANS 0 1 2 3

CU 07227
EA 215911

DISREGARD PRINTS BEARING EARLIER REVISION DATES 6-14-10

REVISION DATES

SHEET 5 OF 13

FILE => rw14-c-sp04.add

USERNAME => s12161 4 DATE PLOTTED => 17-OCT-2011 TIME PLOTTED => 09:06

DIST	COUNTY	ROUTE	POST MILES TOTAL PROJECT	SHEET No	TOTAL SHEETS
07	LA	5	1.2/2.1	595	602

REGISTERED CIVIL ENGINEER 3-2-11 DATE

6-27-11
PLANS APPROVAL DATE

REGISTERED PROFESSIONAL ENGINEER Phu V. Nguyen No. 60358 Exp. 6-30-12 CIVIL STATE OF CALIFORNIA

The State of California or its officers or agents shall not be responsible for the accuracy or completeness of electronic copies of this plan sheet.

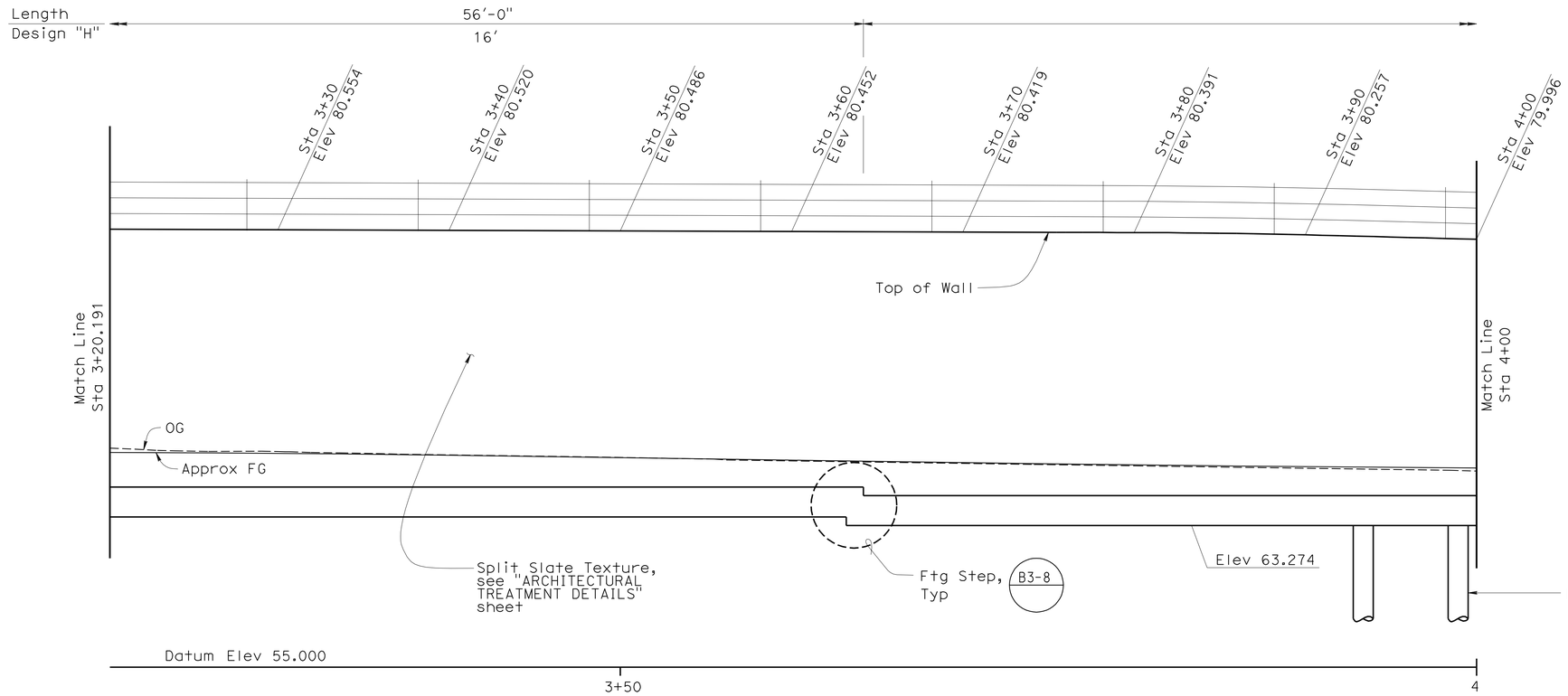

DEVELOPED ELEVATION

B0-3 3-1 B0-3 3-2 B0-3 3-4

1/4"=1'-0"

NOTES:

1. ○ Indicates Class 90 Piles, Alternative "W" B2-5
2. ~~○ Indicates battered 1:3 Class 90 Piles, Alternative "W" B2-5~~
3. Pile tip elevation = 18.0

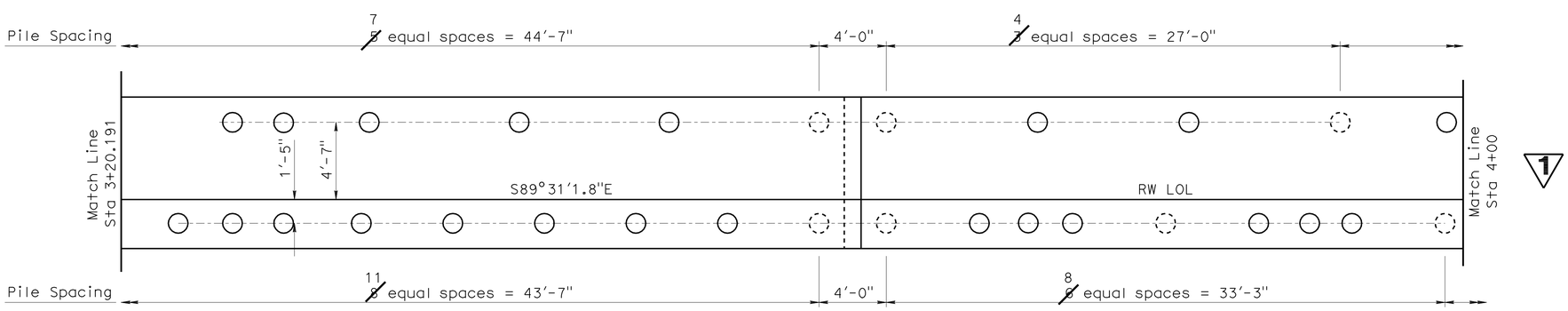

PLAN

1/4"=1'-0"

N

1 REVISED PER ADDENDUM No. 1 DATED OCTOBER 17, 2011

	BY	CHECKED
DESIGN	Matthew J Schott	Ruperd Wilson
DETAILS	Matthew J Schott	Ruperd Wilson
QUANTITIES	Matthew J Schott	Ruperd Wilson

STATE OF CALIFORNIA
DEPARTMENT OF TRANSPORTATION

DIVISION OF ENGINEERING SERVICES
STRUCTURE DESIGN
DESIGN BRANCH 11

BRIDGE NO. RW14
POST MILE 1.5

RETAINING WALL NO. 14
STRUCTURE PLAN NO. 5

STRUCTURES DESIGN DETAIL SHEET (ENGLISH) (REV. 10/25/05)

ORIGINAL SCALE IN INCHES FOR REDUCED PLANS 0 1 2 3

CU 07227
EA 215911

DISREGARD PRINTS BEARING EARLIER REVISION DATES

REVISION DATES 6-14-10

SHEET 6 OF 13

FILE => rw14-c-sp05.add

USERNAME => s121614 DATE PLOTTED => 17-OCT-2011 TIME PLOTTED => 09:06

DIST	COUNTY	ROUTE	POST MILES TOTAL PROJECT	SHEET No	TOTAL SHEETS
07	LA	5	1.2/2.1	596	602

REGISTERED CIVIL ENGINEER 3-2-11 DATE

6-27-11
PLANS APPROVAL DATE

REGISTERED PROFESSIONAL ENGINEER Phu V. Nguyen No. 60358 Exp. 6-30-12 CIVIL STATE OF CALIFORNIA

The State of California or its officers or agents shall not be responsible for the accuracy or completeness of electronic copies of this plan sheet.

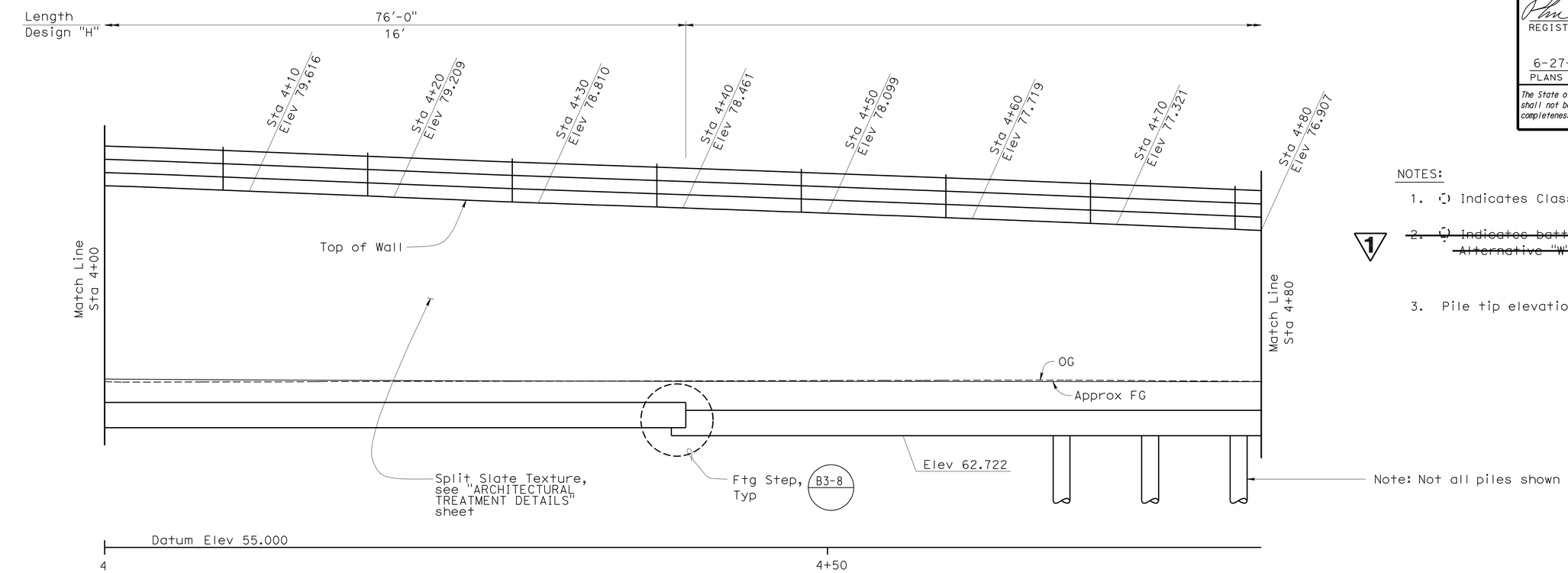

DEVELOPED ELEVATION

B0-3 3-1 | B0-3 3-2 | B0-3 3-4

1/4"=1'-0"

NOTES:

1. Indicates Class 90 Piles, Alternative "W" B2-5
2. ~~Indicates battered 1:3 Class 90 Piles, Alternative "W"~~ ~~B2-5~~
3. Pile tip elevation = 18.0

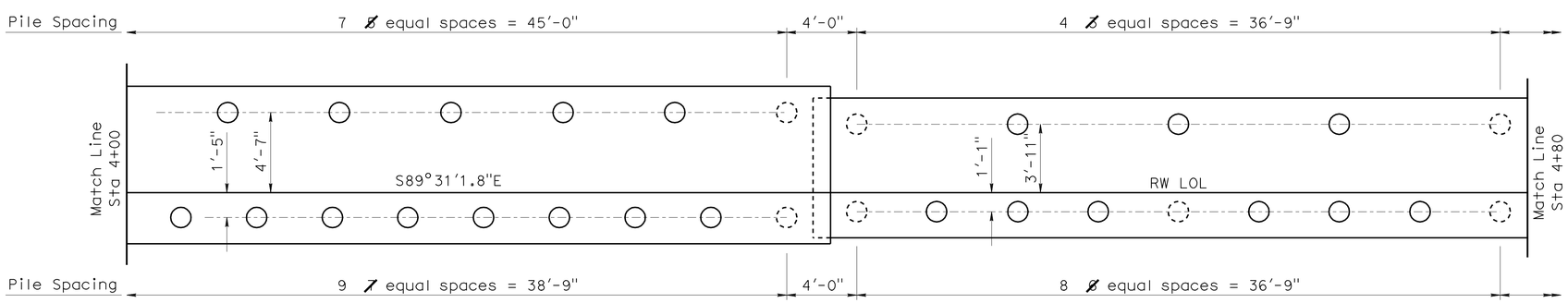

PLAN

1/4"=1'-0"

1 REVISED PER ADDENDUM No. DATED OCTOBER 17, 2011

	BY	CHECKED
DESIGN	Matthew J Schott	Ruperd Wilson
DETAILS	Matthew J Schott	Ruperd Wilson
QUANTITIES	Matthew J Schott	Ruperd Wilson

STATE OF CALIFORNIA
DEPARTMENT OF TRANSPORTATION

DIVISION OF ENGINEERING SERVICES
STRUCTURE DESIGN
DESIGN BRANCH 11

BRIDGE NO. RW14
POST MILE 1.5

RETAINING WALL NO. 14
STRUCTURE PLAN NO. 6

STRUCTURES DESIGN DETAIL SHEET (ENGLISH) (REV. 10/25/05)

ORIGINAL SCALE IN INCHES FOR REDUCED PLANS 0 1 2 3

CU 07227
EA 215911

DISREGARD PRINTS BEARING EARLIER REVISION DATES 6-14-10

REVISION DATES

SHEET 7 OF 13

FILE => rw14-c-sp06.add

USERNAME => s126614 DATE PLOTTED => 17-OCT-2011 TIME PLOTTED => 09:06

DIST	COUNTY	ROUTE	POST MILES TOTAL PROJECT	SHEET No	TOTAL SHEETS
07	LA	5	1.2/2.1	597	602

REGISTERED CIVIL ENGINEER 3-2-11 DATE

6-27-11
PLANS APPROVAL DATE

The State of California or its officers or agents shall not be responsible for the accuracy or completeness of electronic copies of this plan sheet.

REGISTERED PROFESSIONAL ENGINEER Phu V. Nguyen No. 60358 Exp. 6-30-12 CIVIL STATE OF CALIFORNIA

1

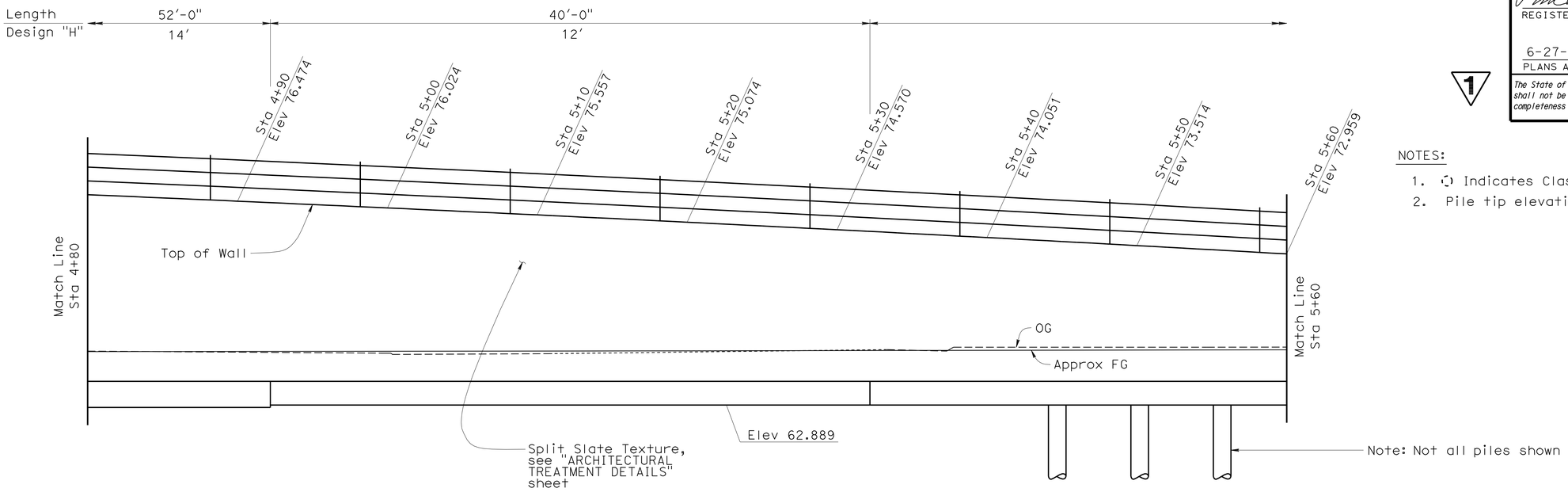

DEVELOPED ELEVATION

1/4"=1'-0"

B0-3 3-1 | B0-3 3-2 | B0-3 3-4

NOTES:

1. ⊙ Indicates Class 90 Piles, Alternative "W" B2-5
2. Pile tip elevation = 18.0

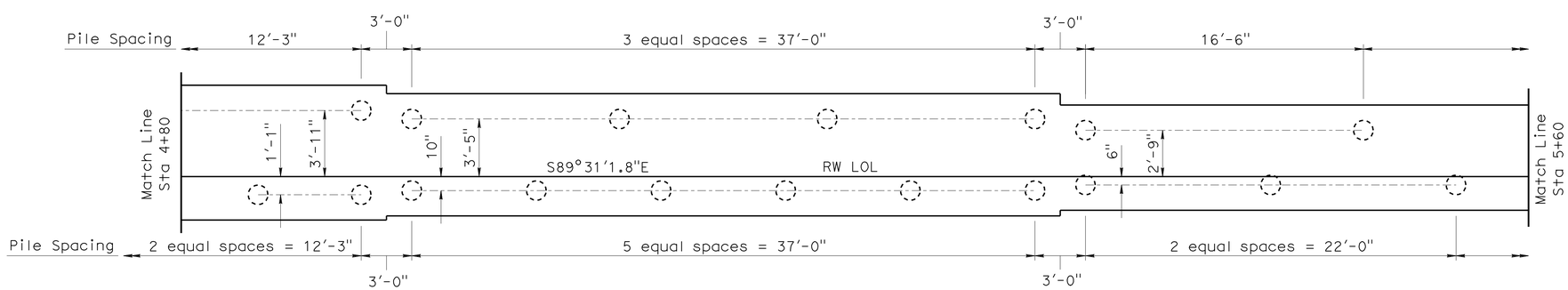

PLAN

1/4"=1'-0"

N

1 REVISED PER ADDENDUM No. 1 DATED OCTOBER 17, 2011

DESIGN	BY Matthew J Schott	CHECKED Ruperd Wilson	
DETAILS	BY Matthew J Schott	CHECKED Ruperd Wilson	
QUANTITIES	BY Matthew J Schott	CHECKED Ruperd Wilson	

STATE OF CALIFORNIA DEPARTMENT OF TRANSPORTATION

DIVISION OF ENGINEERING SERVICES STRUCTURE DESIGN DESIGN BRANCH 11

BRIDGE NO. RW14
POST MILE 1.5

RETAINING WALL NO. 14
STRUCTURE PLAN NO. 7

STRUCTURES DESIGN DETAIL SHEET (ENGLISH) (REV. 10/25/05)

ORIGINAL SCALE IN INCHES FOR REDUCED PLANS 0 1 2 3

CU 07227
EA 215911

DISREGARD PRINTS BEARING EARLIER REVISION DATES 6-14-10

REVISION DATES

SHEET 8 OF 13

FILE => rw14-c-sp07.add

USERNAME => s121614 DATE PLOTTED => 17-OCT-2011 TIME PLOTTED => 09:06

DIST	COUNTY	ROUTE	POST MILES TOTAL PROJECT	SHEET No	TOTAL SHEETS
07	LA	5	1.2/2.1	598	602

REGISTERED CIVIL ENGINEER 3-2-11 DATE

6-27-11
PLANS APPROVAL DATE

REGISTERED PROFESSIONAL ENGINEER
Phu V. Nguyen
No. 60358
Exp. 6-30-12
CIVIL
STATE OF CALIFORNIA

The State of California or its officers or agents shall not be responsible for the accuracy or completeness of electronic copies of this plan sheet.

1

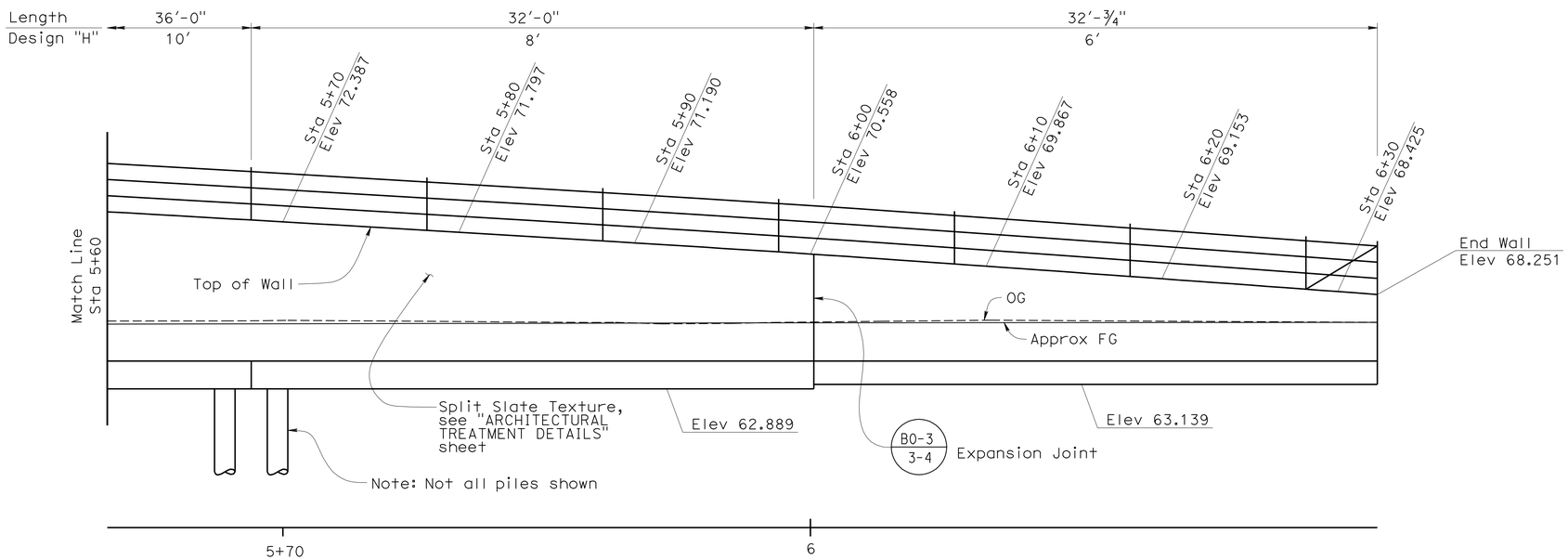

DEVELOPED ELEVATION

1/4"=1'-0"

B0-3 3-1 | B0-3 3-2 | B0-3 3-4

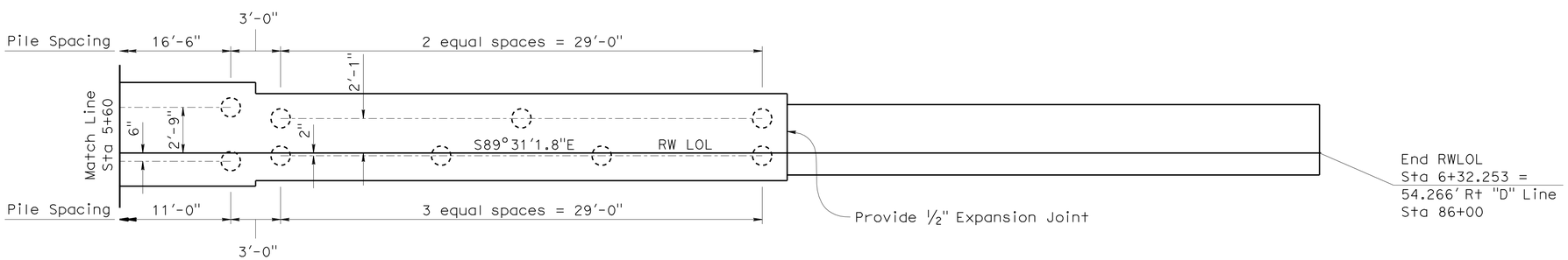

PLAN

1/4"=1'-0"

N

NOTES:

1. ⊙ Indicates Class 90 Piles, Alternative "W" B2-5
2. Pile tip elevation = 18.0

1 **REVISED PER ADDENDUM No. 1 DATED OCTOBER 17, 2011**

	BY	CHECKED
DESIGN	Matthew J Schott	Ruperd Wilson
DETAILS	Matthew J Schott	Ruperd Wilson
QUANTITIES	Matthew J Schott	Ruperd Wilson

STATE OF CALIFORNIA
DEPARTMENT OF TRANSPORTATION

DIVISION OF ENGINEERING SERVICES
STRUCTURE DESIGN
DESIGN BRANCH 11

BRIDGE NO. RW14
POST MILE 1.5

RETAINING WALL NO. 14
STRUCTURE PLAN NO. 8

STRUCTURES DESIGN DETAIL SHEET (ENGLISH) (REV. 10/25/05)

ORIGINAL SCALE IN INCHES FOR REDUCED PLANS 0 1 2 3

CU 07227
EA 215911

DISREGARD PRINTS BEARING EARLIER REVISION DATES 6-14-10

REVISION DATES

SHEET 9 OF 13

FILE => rw14-c-sp08.add

USERNAME => s126614 DATE PLOTTED => 17-OCT-2011 TIME PLOTTED => 09:06