DIST	COUNTY	ROUTE	POST MILES TOTAL PROJECT	SHEET No.	TOTAL SHEETS
07	LA	710	17.2/26.4	1401	1507

REGISTERED CIVIL ENGINEER — DATE 03/01/11

6-27-11
PLANS APPROVAL DATE

REGISTERED PROFESSIONAL ENGINEER — CHUNG-YUAN WEN — No. C 50690 — Exp. 09/30/11 — CIVIL — STATE OF CALIFORNIA

The State of California or its officers or agents shall not be responsible for the accuracy or completeness of electronic copies of this plan sheet.

(AA) Sta 57+25.728 SB ON RAMP FROM SB ATLANTIC BLVD=
Sta 421+60.889 ATLANTIC BLVD

(BB) Sta 1157+80.995 ℄ ROUTE 710=
Sta 422+78.0598 ATLANTIC BLVD

Bridge Location
(A) - 57.773 Lt ℄ Sta 1156+66.655 Elev=181.390 ±
(B) - 58.076 Lt ℄ Sta 1158+15.375 Elev=179.398 ±
(C) - 58.798 Rt ℄ Sta 1159+36.227 Elev=172.641 ±
(D) - 58.980 Rt ℄ Sta 1157+56.822 Elev=174.037 ±

CURVE DATA

No.	R	Δ	T	L
(1)	2000.000	76°26′21″	1574.951	2668.229
(2)	20000.000	00°57′27″	167.131	334.255
(3)	1066.000	3°37′28″	33.727	67.431
(4)	1990.000	17°02′24″	298.119	591.837
(5)	412.000	29°00′58″	106.612	208.648
(6)	142.000	293°53′09″	92.417	728.358

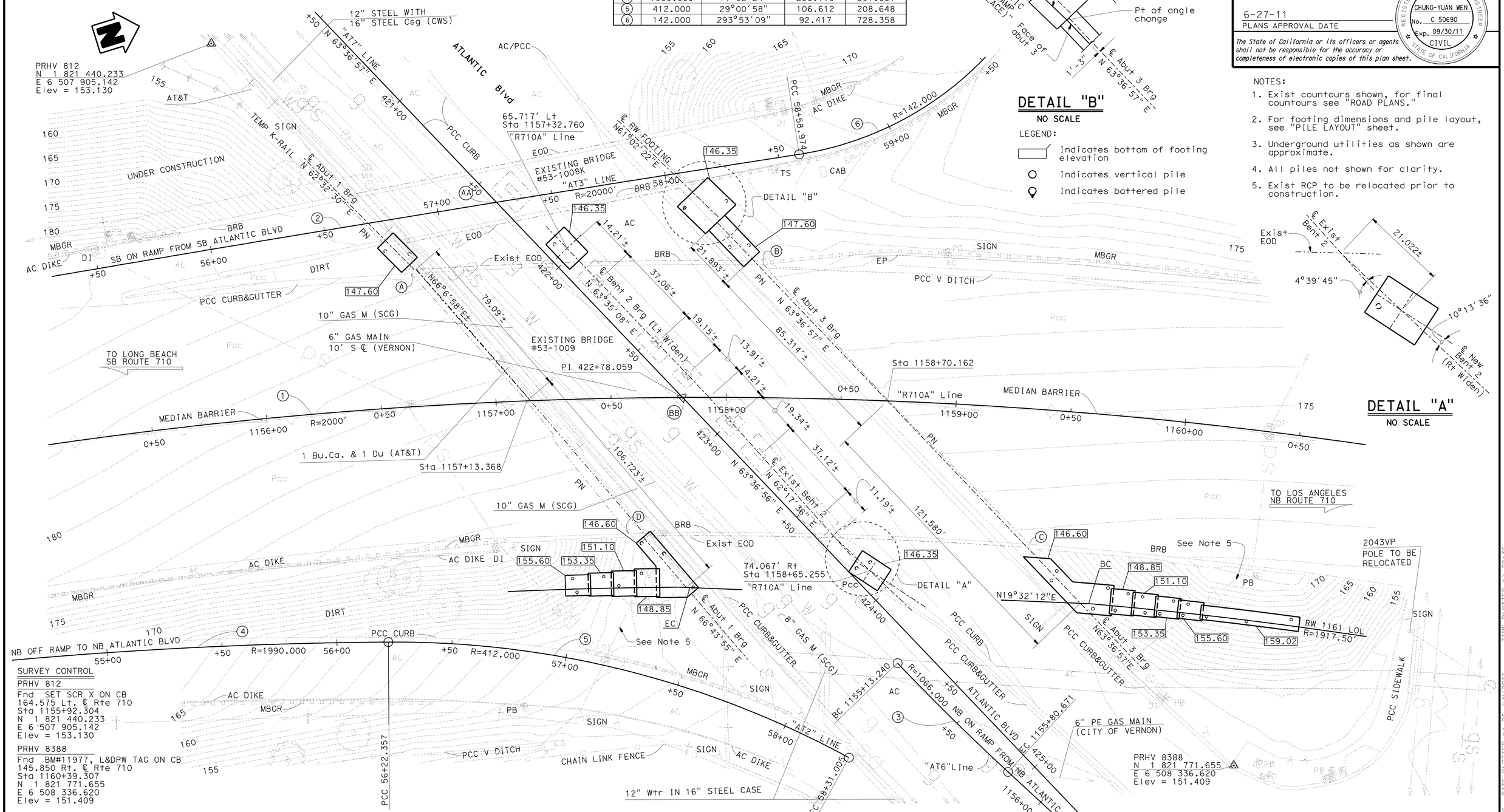

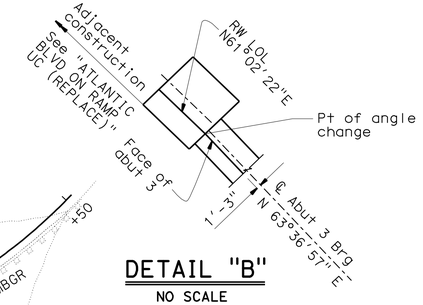

DETAIL "B"
NO SCALE

LEGEND:
- Indicates bottom of footing elevation
- Indicates vertical pile
- Indicates battered pile

NOTES:
1. Exist countours shown, for final countours see "ROAD PLANS."
2. For footing dimensions and pile layout, see "PILE LAYOUT" sheet.
3. Underground utilities as shown are approximate.
4. All piles not shown for clarity.
5. Exist RCP to be relocated prior to construction.

DETAIL "A"
NO SCALE

PRELIMINARY INVESTIGATION SECTION					
SCALE 1"=20′	VERT.DATUM NAVD 88	PHOTOGRAMMETRY AS OF: X			
HORZ.DATUM NAD 83	SURVEYED	BY DISTRICT	CHECKED	BY C. Stewart	
ALIGNMENT TIES DIST TRAV SHEETS	DRAFTED	BY M. Sadaghiani 06-09	CHECKED	BY L. Manabo 06-09	

DESIGN	BY K. Kim	CHECKED G. Matthews
DETAILS	BY M. Kingra / P. Perez	CHECKED K. Kim
QUANTITIES	BY K. Kim	CHECKED K. Ghosh

STATE OF CALIFORNIA
DEPARTMENT OF TRANSPORTATION

DIVISION OF ENGINEERING SERVICES
STRUCTURE DESIGN
DESIGN BRANCH 21

BRIDGE NO. 53-1009
POST MILE 21.92

ATLANTIC BLVD UC (WIDEN)
FOUNDATION PLAN

STRUCTURES FOUNDATION PLAN SHEET (ENGLISH) (REV. 09-01-10)

ORIGINAL SCALE IN INCHES FOR REDUCED PLANS 0 1 2 3

UNIT: 3623
PROJECT NUMBER & PHASE: 0700020869-1
CONTRACT NO.: 202111

DISREGARD PRINTS BEARING EARLIER REVISION DATES

REVISION DATES: 1/8/09 9/22/10 03/01/11

SHEET 6 OF 33

FILE => 53-1009-d-fp.dgn

USERNAME => s124496 DATE PLOTTED => 28-JUN-2011 TIME PLOTTED => 20:36

DIST	COUNTY	ROUTE	POST MILES TOTAL PROJECT	SHEET No.	TOTAL SHEETS
07	LA	710	17.2/26.4	1402	1507

REGISTERED CIVIL ENGINEER 03/01/11 DATE

6-27-11
PLANS APPROVAL DATE

REGISTERED PROFESSIONAL ENGINEER CHUNG-YUAN WEN No. C 50690 Exp. 09/30/11 CIVIL STATE OF CALIFORNIA

The State of California or its officers or agents shall not be responsible for the accuracy or completeness of electronic copies of this plan sheet.

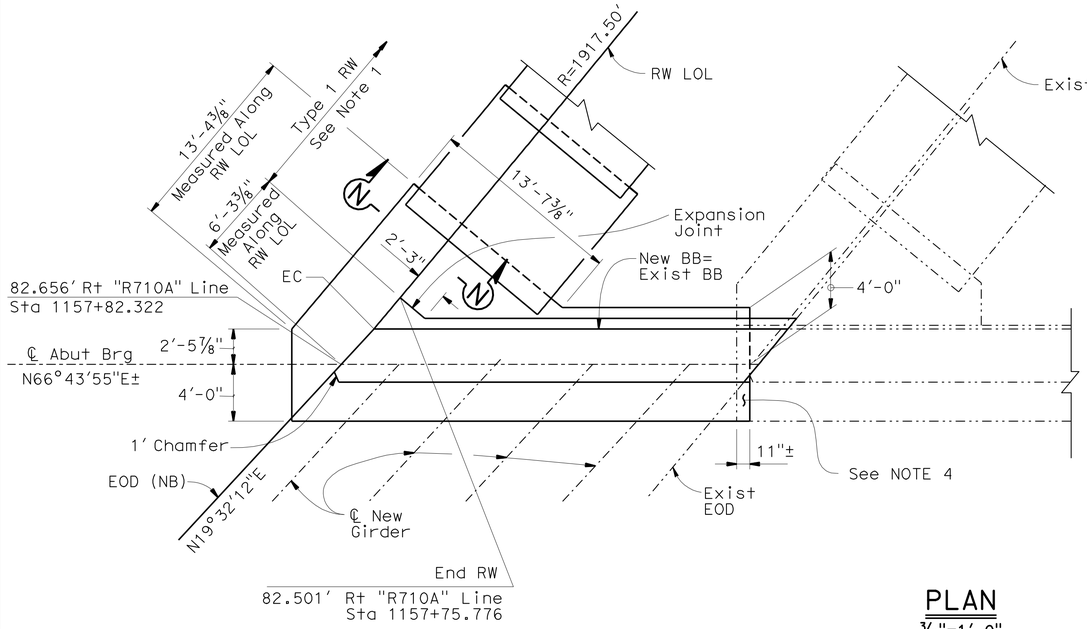

PLAN
3/16"=1'-0"

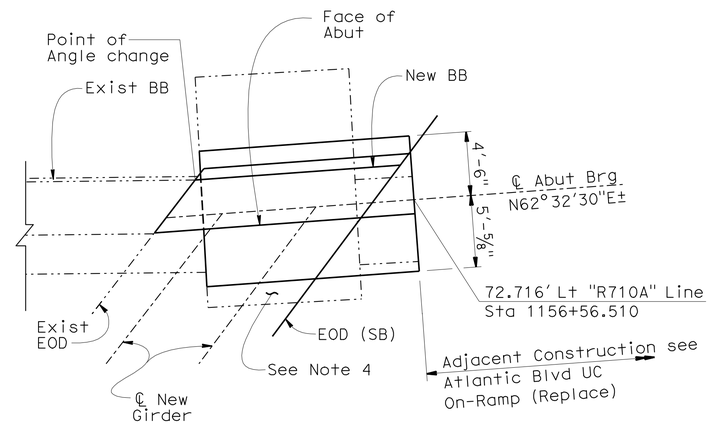

NOTES:

1. For Retaining Wall Details, see "ABUTMENT DETAILS NO. 4" sheet.
2. For Sections A-A, B-B, and Elastomeric Bearing Pad Details, see "ABUTMENT DETAILS NO. 1" sheet.
3. For Section N-N, see "ABUTMENT DETAILS NO. 2" sheet
4. For concrete removal details, see "REMOVAL PLAN" sheets.
5. For Pile Layout, see "ABUTMENT PILE LAYOUT" sheet.

LEGEND:

Class 2 Surface Finish (Gun Finish)

Exist Structure

New Structure

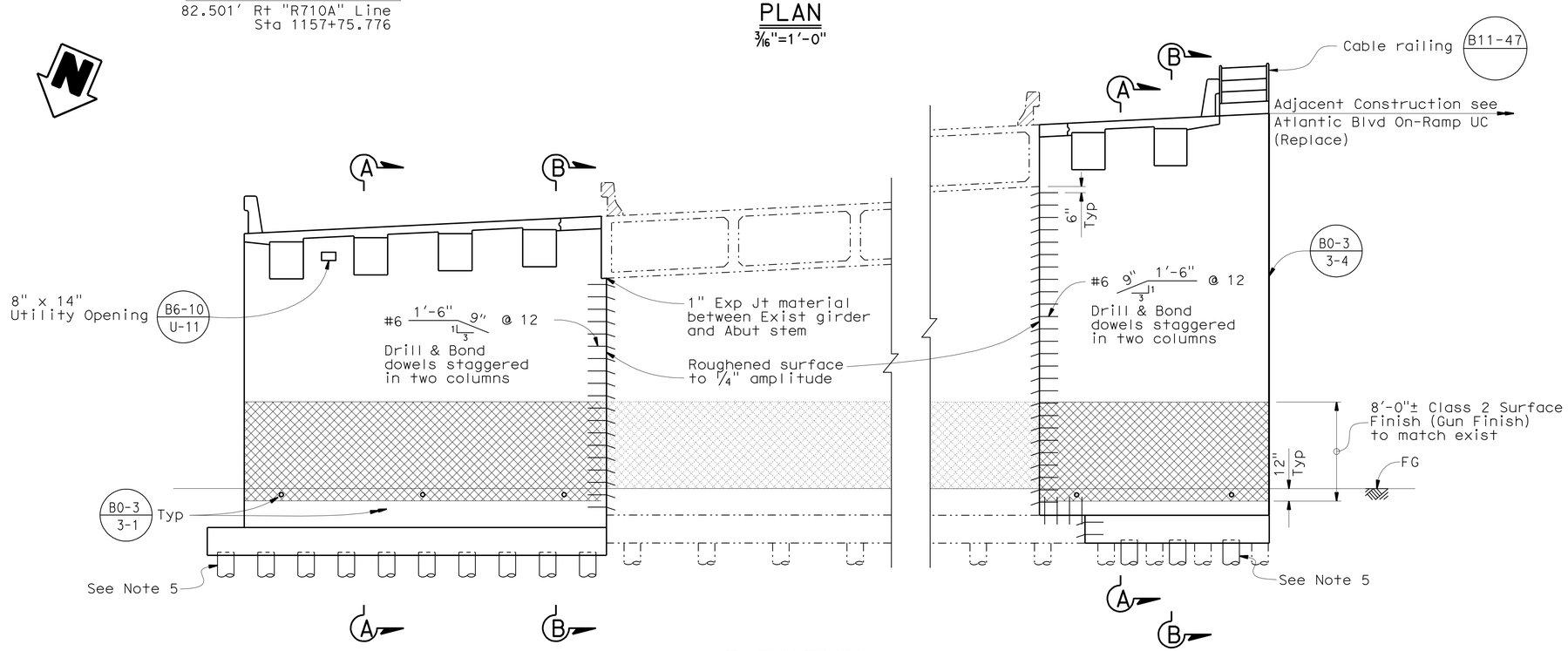

ELEVATION
3/16" = 1'-0"

NOTE:
THE CONTRACTOR SHALL VERIFY ALL CONTROLLING FIELD DIMENSIONS BEFORE ORDERING OR FABRICATING ANY MATERIAL.

	BY	CHECKED
DESIGN	K. Kim	G. Matthews
DETAILS	M. Kingra / P. Perez	K. Kim
QUANTITIES	K. Kim	K. Ghosh

STATE OF CALIFORNIA
DEPARTMENT OF TRANSPORTATION

DIVISION OF ENGINEERING SERVICES
STRUCTURE DESIGN
DESIGN BRANCH 21

BRIDGE NO. 53-1009
POST MILE 21.92

ATLANTIC BLVD UC (WIDEN)
ABUTMENT 1 LAYOUT

STRUCTURES DESIGN DETAIL SHEET (ENGLISH) (REV. 09-01-10)

ORIGINAL SCALE IN INCHES FOR REDUCED PLANS 0 1 2 3

UNIT: 3623
PROJECT NUMBER & PHASE: 0700020869-1
CONTRACT NO.: 202111

DISREGARD PRINTS BEARING EARLIER REVISION DATES

REVISION DATES: 01/02/10 08/28/10 11/23/10 03/01/11

SHEET 7 OF 33

FILE => 53-1009-e-a01_1o.dgn

USERNAME => s124496 DATE PLOTTED => 28-JUN-2011 TIME PLOTTED => 20:36

DIST	COUNTY	ROUTE	POST MILES TOTAL PROJECT	SHEET No.	TOTAL SHEETS
07	LA	710	17.2/26.4	1403	1507

REGISTERED CIVIL ENGINEER 03/01/11 DATE

6-27-11
PLANS APPROVAL DATE

REGISTERED PROFESSIONAL ENGINEER CHUNG-YUAN WEN No. C 50690 Exp. 09/30/11 CIVIL STATE OF CALIFORNIA

The State of California or its officers or agents shall not be responsible for the accuracy or completeness of electronic copies of this plan sheet.

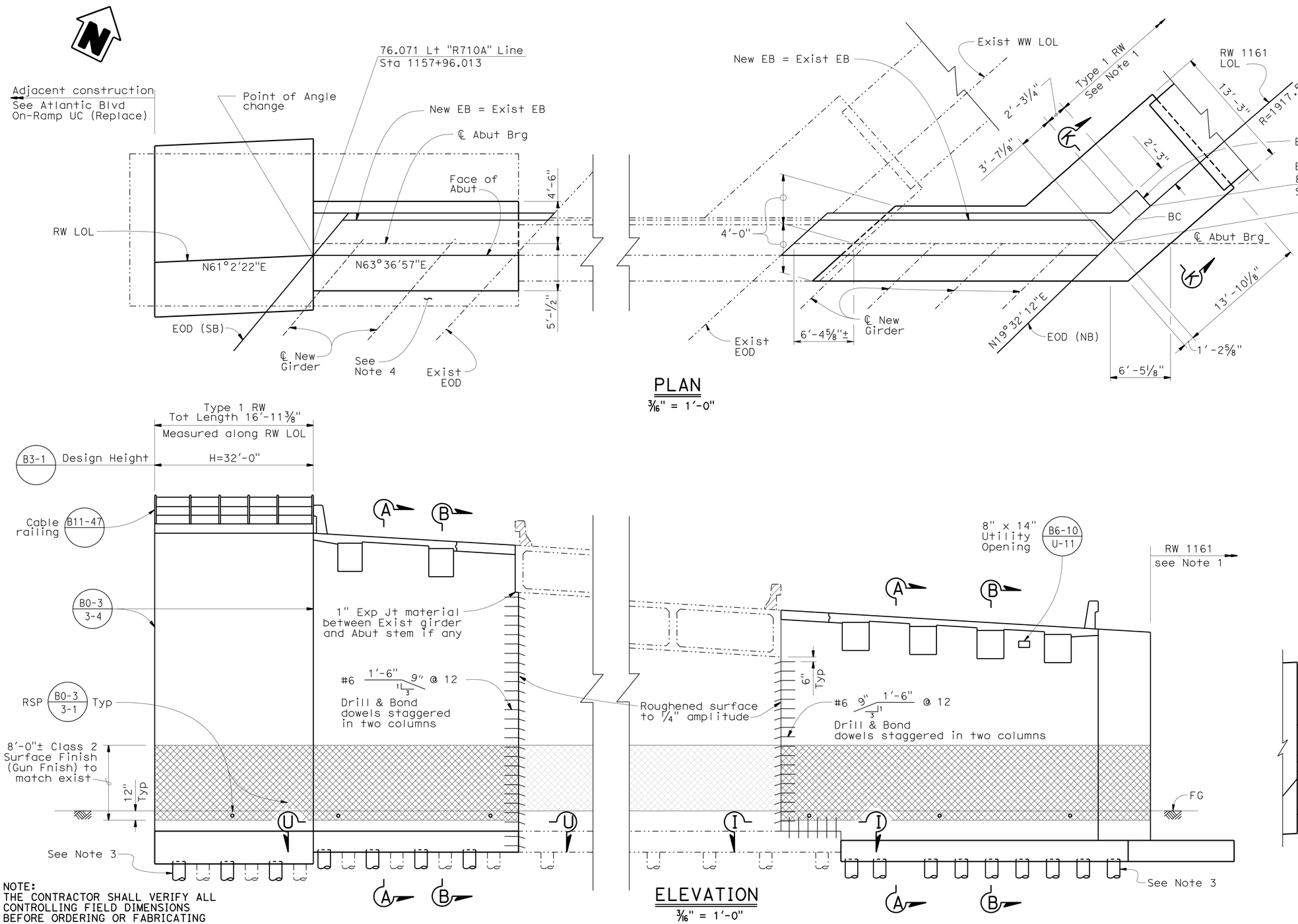

PLAN
3/16" = 1'-0"

ELEVATION
3/16" = 1'-0"

NOTES:

1. For Retaining Wall Details, see "RETAINING WALL NO. 1161" sheet.
2. For Sections A-A, B-B, and Elastomeric Bearing Pad Details, see "ABUTMENT DETAILS NO. 1" sheet.
3. For Pile Layout, see "ABUTMENT PILE LAYOUT" sheet.
4. For concrete removal details, see "REMOVAL PLAN" sheets.
5. For Sections K-K and I-I, see "ABUTMENT DETAILS NO. 3" sheet.

LEGEND:

- Class 2 Surface Finish (Gun Finish)
- Expanded Polystyrene
- Exist Structure
- New Structure

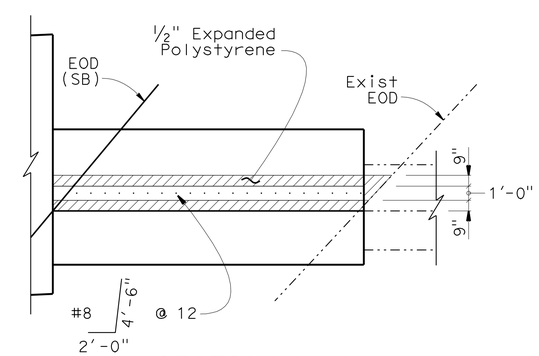

SECTION U-U
3/16" = 1'-0"

NOTE:
THE CONTRACTOR SHALL VERIFY ALL CONTROLLING FIELD DIMENSIONS BEFORE ORDERING OR FABRICATING ANY MATERIAL.

	BY	CHECKED
DESIGN	K. Kim	G. Matthews
DETAILS	M. Kingra / P. Perez	K. Kim
QUANTITIES	K. Kim	K. Ghosh

STATE OF CALIFORNIA
DEPARTMENT OF TRANSPORTATION

DIVISION OF ENGINEERING SERVICES
STRUCTURE DESIGN
DESIGN BRANCH 21

BRIDGE NO. 53-1009
POST MILE 21.92

ATLANTIC BLVD UC (WIDEN)
ABUTMENT 3 LAYOUT

STRUCTURES DESIGN DETAIL SHEET (ENGLISH) (REV. 09-01-10)

ORIGINAL SCALE IN INCHES FOR REDUCED PLANS 0 1 2 3

UNIT: 3623
PROJECT NUMBER & PHASE: 0700020869-1
CONTRACT NO.: 202111

DISREGARD PRINTS BEARING EARLIER REVISION DATES
REVISION DATES 09/30/10 11/29/10 03/01/11

SHEET 8 OF 33

FILE => 53-1009-e-a03_lo.dgn

USERNAME => s124496 DATE PLOTTED => 28-JUN-2011 TIME PLOTTED => 20:36

DIST	COUNTY	ROUTE	POST MILES TOTAL PROJECT	SHEET No.	TOTAL SHEETS
07	LA	710	17.2/26.4	1404	1507

REGISTERED CIVIL ENGINEER — DATE 03/01/11

6-27-11
PLANS APPROVAL DATE

REGISTERED PROFESSIONAL ENGINEER — CHUNG-YUAN WEN — No. C 50690 — Exp. 09/30/11 — CIVIL — STATE OF CALIFORNIA

The State of California or its officers or agents shall not be responsible for the accuracy or completeness of electronic copies of this plan sheet.

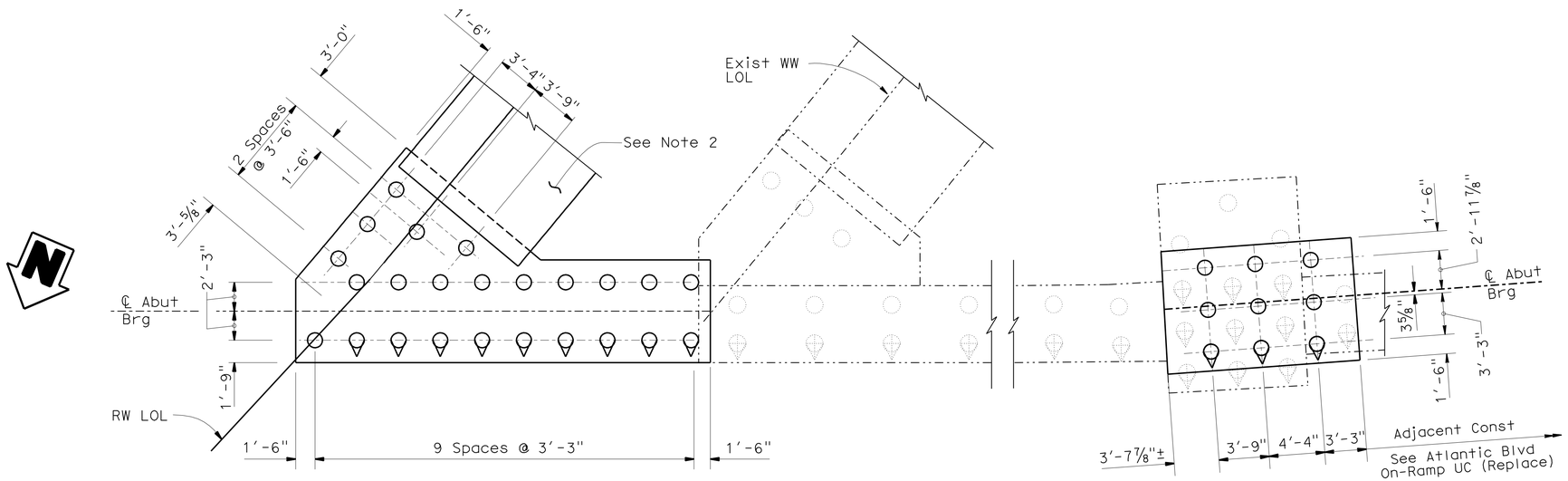

ABUTMENT 1

3/16" = 1'-0"

NOTES:

1. For concrete removal details, see "REMOVAL PLAN" sheets.
2. For RW Pile Layout, see "ABUTMENT DETAILS NO. 4" and "RETAINING WALL NO. 1161" sheet.
3. Existing piles should be verified and pile spacing shown is subjected to change.

LEGEND:

- Vertical pile
- Batter pile
- Exist vertical pile
- Exist batter pile
- Exist structure
- New structure

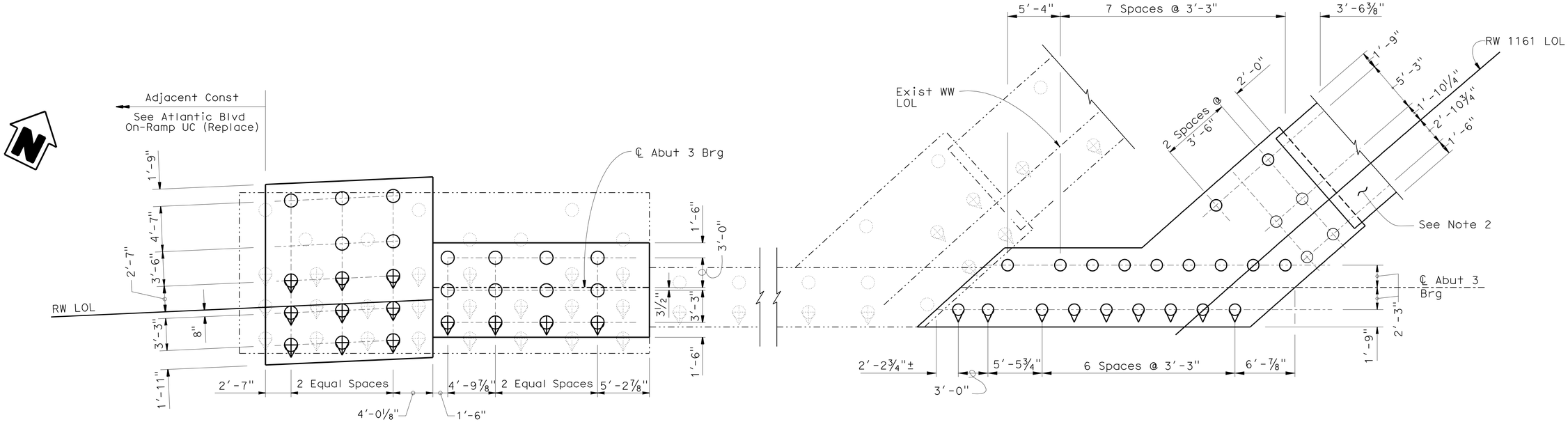

ABUTMENT 3

3/16" = 1'-0"

NOTE:
THE CONTRACTOR SHALL VERIFY ALL CONTROLLING FIELD DIMENSIONS BEFORE ORDERING OR FABRICATING ANY MATERIAL.

	BY	CHECKED
DESIGN	K. Kim	G. Matthews
DETAILS	M. Kingra	K. Kim
QUANTITIES	K. Kim	K. Ghosh

STATE OF CALIFORNIA
DEPARTMENT OF TRANSPORTATION

DIVISION OF ENGINEERING SERVICES
STRUCTURE DESIGN
DESIGN BRANCH 21

BRIDGE NO. 53-1009
POST MILE 21.92

ATLANTIC BLVD UC (WIDEN)
ABUTMENT PILE LAYOUT

STRUCTURES DESIGN DETAIL SHEET (ENGLISH) (REV. 09-01-10)

ORIGINAL SCALE IN INCHES FOR REDUCED PLANS 0 1 2 3

UNIT: 3623
PROJECT NUMBER & PHASE: 0700020869-1
CONTRACT NO.: 202111

DISREGARD PRINTS BEARING EARLIER REVISION DATES

REVISION DATES: 9/10/10 11/23/10 01/21/11 03/01/11

SHEET 9 OF 33

FILE => 53-1009-e-plo01.dgn

USERNAME => s124496 DATE PLOTTED => 28-JUN-2011 TIME PLOTTED => 20:36

DIST	COUNTY	ROUTE	POST MILES TOTAL PROJECT	SHEET No.	TOTAL SHEETS
07	LA	710	17.2/26.4	1405	1507

REGISTERED CIVIL ENGINEER 03/01/11 DATE

6-27-11
PLANS APPROVAL DATE

REGISTERED PROFESSIONAL ENGINEER CHUNG-YUAN WEN No. C 50690 Exp. 09/30/11 CIVIL STATE OF CALIFORNIA

The State of California or its officers or agents shall not be responsible for the accuracy or completeness of electronic copies of this plan sheet.

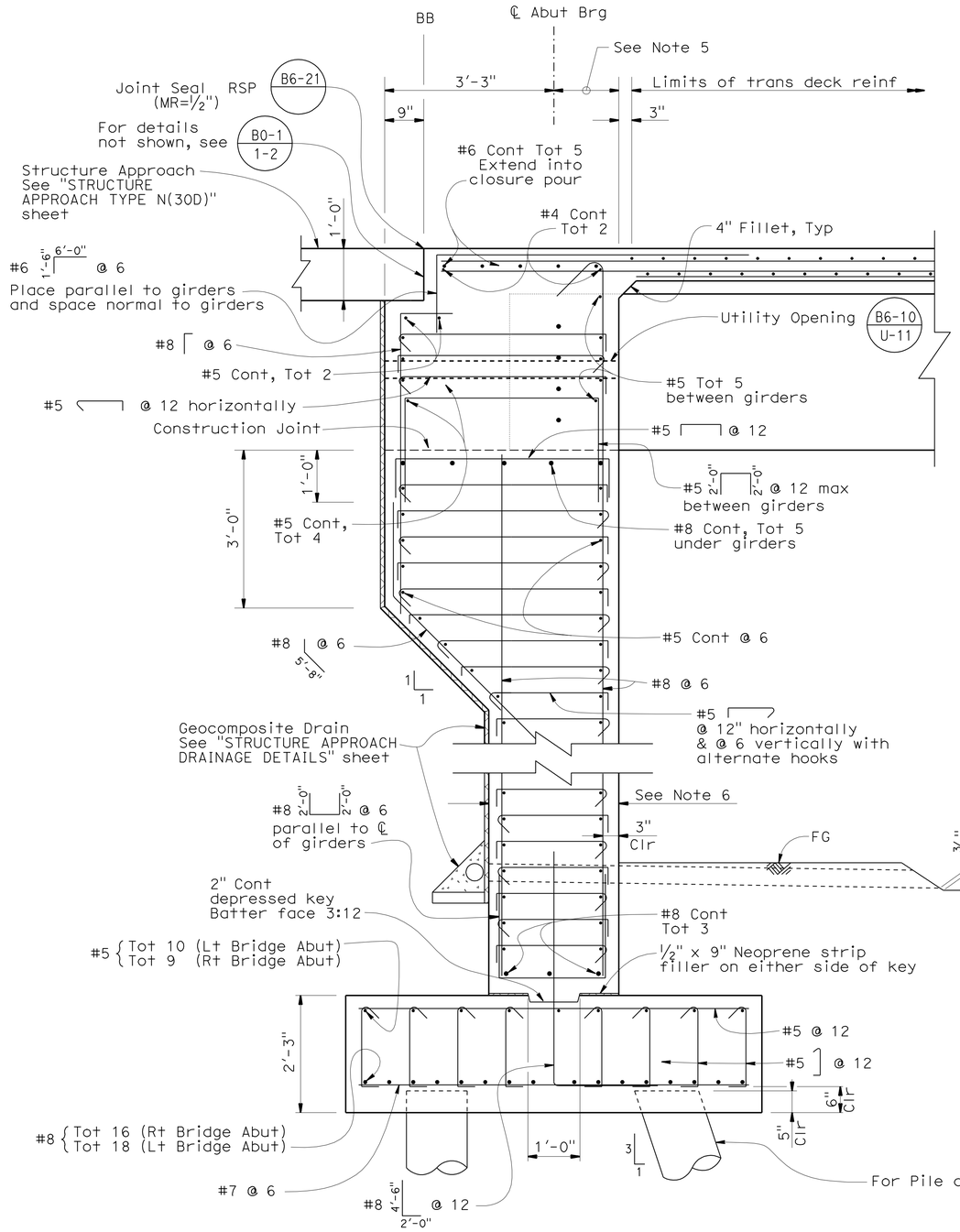

SECTION A-A (BETWEEN GIRDERS)

3/4" = 1'-0"

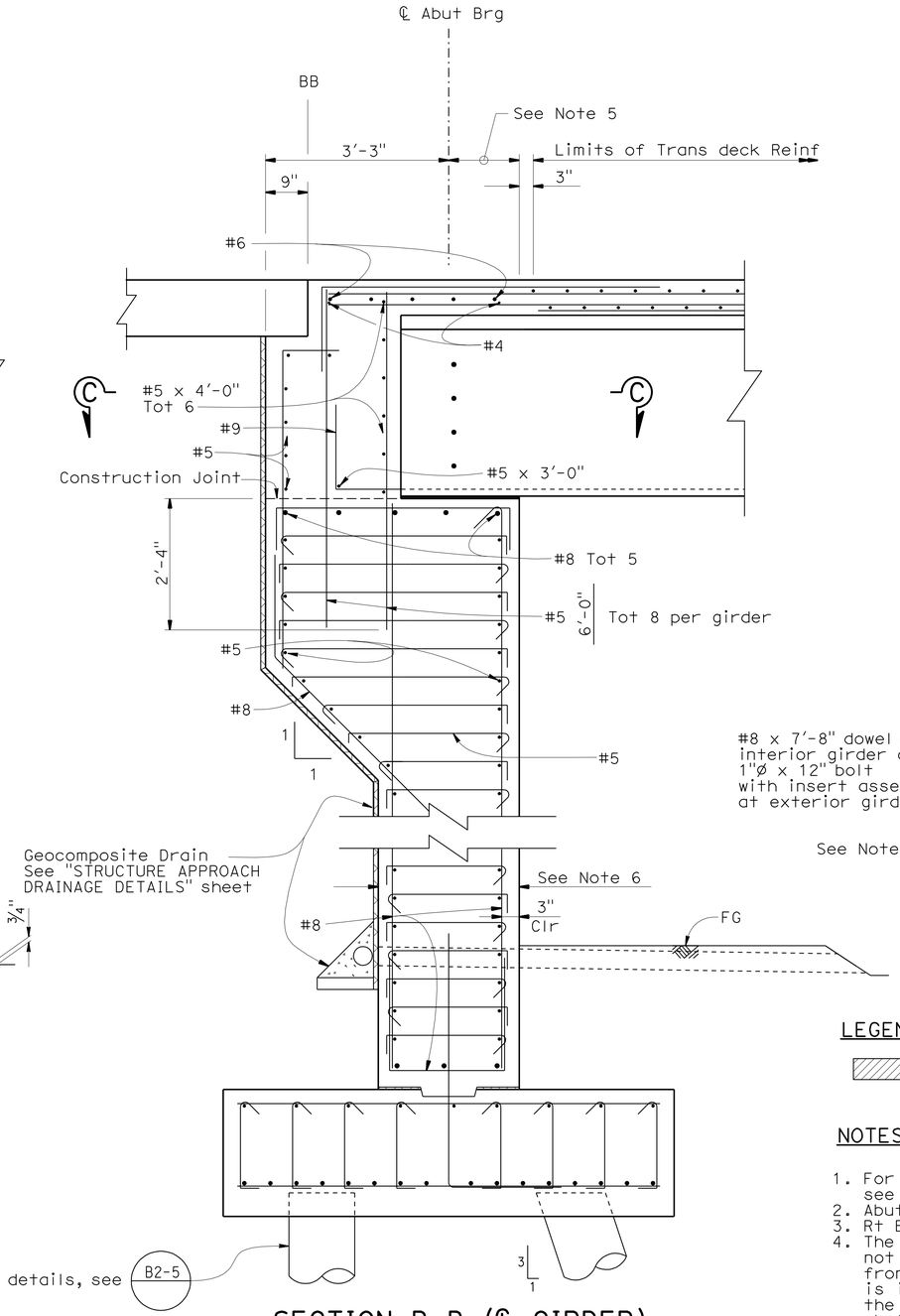

SECTION B-B (℄ GIRDER)

3/4" = 1'-0"

Note: For details not shown, see "SECTION A-A"

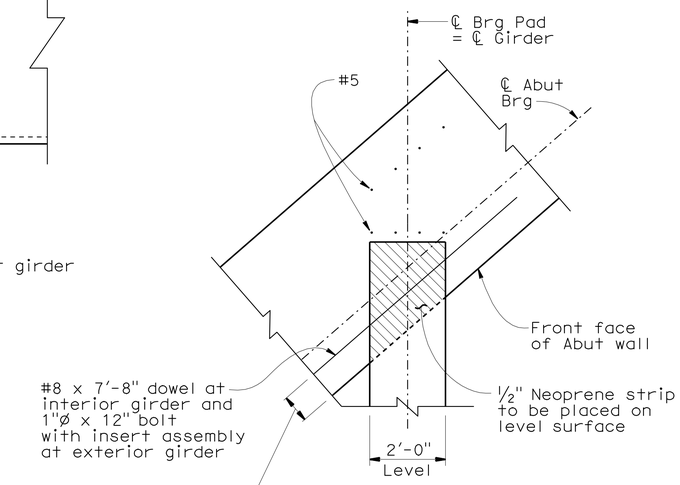

SECTION C-C

1/2" = 1'-0"

LEGEND:

Neoprene Strip

NOTES:

1. For location of SECTIONS A-A and B-B, see "ABUTMENT LAYOUT" sheet.
2. Abutment 1 shown, Abutment 3 similar.
3. Rt Bridge Abut shown, Lt Bridge Abut similar.
4. The backfill behind the abutments shall not be placed higher than the backfill in front of the abutments until the superstructure is in place. After the superstructure is in place, the rest of the backfill behind the abutments shall be placed uniformly at both abutments to equalize soil pressure.
5. 1'-3" except 1'-0" for Lt Bridge Abut 1.
6. 2'-6" except 2'-3" for Lt Bridge Abut 1.
7. 9" except 6" for Lt Bridge Abut 1.

NOTE:
THE CONTRACTOR SHALL VERIFY ALL CONTROLLING FIELD DIMENSIONS BEFORE ORDERING OR FABRICATING ANY MATERIAL.

	BY	CHECKED
DESIGN	K. Kim	G. Matthews
DETAILS	M. Kingra / P. Perez	K. Kim
QUANTITIES	K. Kim	K. Ghosh

STATE OF CALIFORNIA
DEPARTMENT OF TRANSPORTATION

DIVISION OF ENGINEERING SERVICES
STRUCTURE DESIGN
DESIGN BRANCH 21

BRIDGE NO. 53-1009
POST MILE 21.92

ATLANTIC BLVD UC (WIDEN)
ABUTMENT DETAILS NO. 1

STRUCTURES DESIGN DETAIL SHEET (ENGLISH) (REV. 09-01-10)

ORIGINAL SCALE IN INCHES FOR REDUCED PLANS 0 1 2 3

UNIT: 3623
PROJECT NUMBER & PHASE: 0700020869-1
CONTRACT NO.: 202111

DISREGARD PRINTS BEARING EARLIER REVISION DATES

REVISION DATES: 8/18/10 8/28/10 10/04/10 11/23/10

SHEET 10 OF 33

FILE => 53-1009-f-a_dt01.dgn

USERNAME => s124496 DATE PLOTTED => 28-JUN-2011 TIME PLOTTED => 20:36

DIST	COUNTY	ROUTE	POST MILES TOTAL PROJECT	SHEET No.	TOTAL SHEETS
07	LA	710	17.2/26.4	1406	1507

REGISTERED CIVIL ENGINEER 03/01/11 DATE

6-27-11
PLANS APPROVAL DATE

REGISTERED PROFESSIONAL ENGINEER CHUNG-YUAN WEN No. C 50690 Exp. 09/30/11 CIVIL STATE OF CALIFORNIA

The State of California or its officers or agents shall not be responsible for the accuracy or completeness of electronic copies of this plan sheet.

LEGEND:

Neoprene Strip

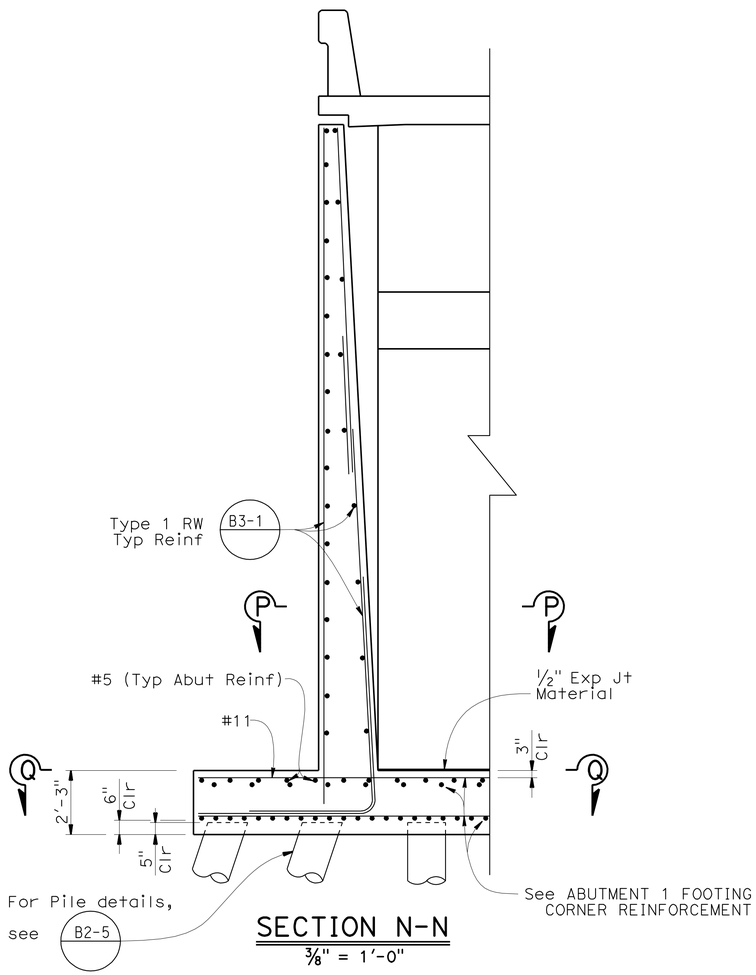

SECTION N-N

3/8" = 1'-0"

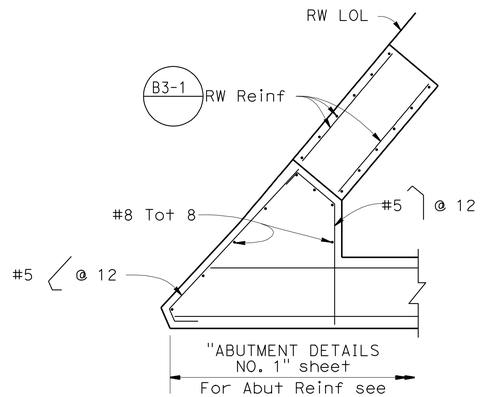

SECTION P-P

No Scale

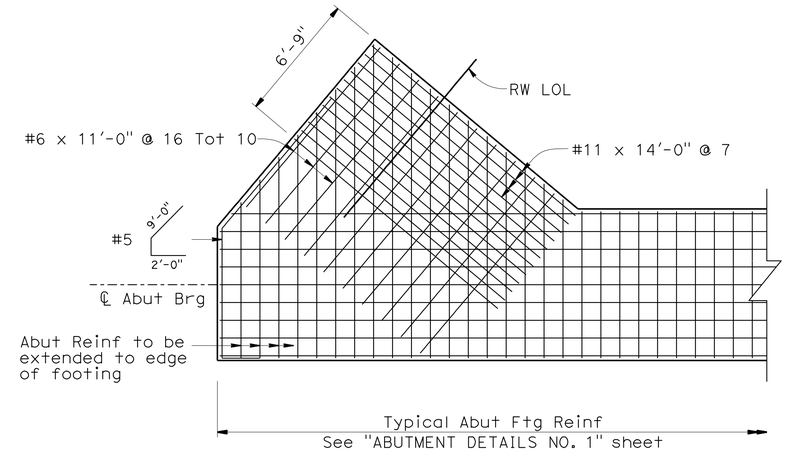

TOP REINFORCEMENT

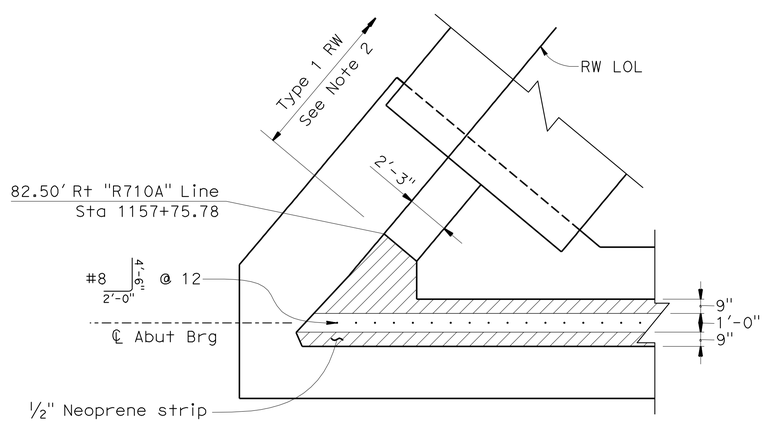

SECTION Q-Q

1/4" = 1'-0"

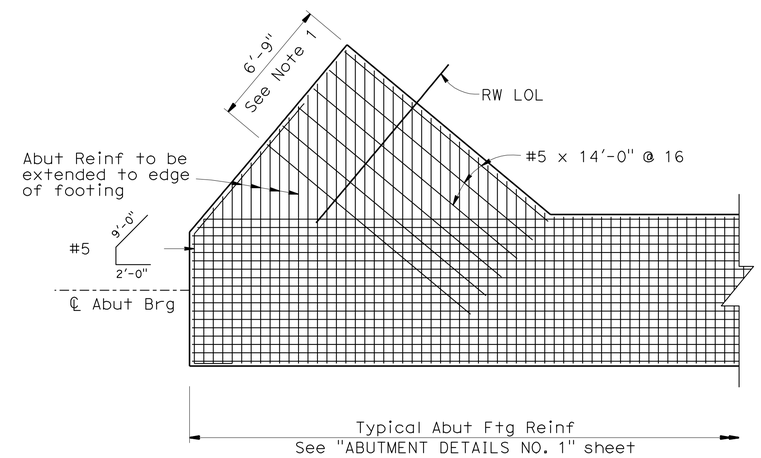

BOTTOM REINFORCEMENT

ABUTMENT 1 CORNER FOOTING

1/4" = 1'-0"

NOTES:

1. See B3-1 for RW stem reinforcement extending into footing.
2. For RW details, see "ABUTMENT DETAILS NO. 4" sheet.
3. For location of Section N-N, see "ABUTMENT 1 LAYOUT" sheet.

NOTE:
THE CONTRACTOR SHALL VERIFY ALL CONTROLLING FIELD DIMENSIONS BEFORE ORDERING OR FABRICATING ANY MATERIAL.

	BY	CHECKED
DESIGN	K. Kim	G. Matthews
DETAILS	M. Kingra /J. Valencia	K. Kim
QUANTITIES	K. Kim	K. Ghosh

STATE OF CALIFORNIA
DEPARTMENT OF TRANSPORTATION

DIVISION OF ENGINEERING SERVICES
STRUCTURE DESIGN
DESIGN BRANCH 21

BRIDGE NO. 53-1009
POST MILE 21.92

ATLANTIC BLVD UC (WIDEN)
ABUTMENT DETAILS NO. 2

STRUCTURES DESIGN DETAIL SHEET (ENGLISH) (REV. 09-01-10)

ORIGINAL SCALE IN INCHES FOR REDUCED PLANS 0 1 2 3

UNIT: 3623
PROJECT NUMBER & PHASE: 0700020869-1
CONTRACT NO.: 202111

DISREGARD PRINTS BEARING EARLIER REVISION DATES

REVISION DATES: 8/23/10 10/01/10 11/23/10 03/01/11

SHEET 11 OF 33

FILE => 53-1009-f-a_dt02.dgn

USERNAME => s124496 DATE PLOTTED => 28-JUN-2011 TIME PLOTTED => 20:36

DIST	COUNTY	ROUTE	POST MILES TOTAL PROJECT	SHEET No.	TOTAL SHEETS
07	LA	710	17.2/26.4	1407	1507

REGISTERED CIVIL ENGINEER 03/01/11 DATE

6-27-11
PLANS APPROVAL DATE

REGISTERED PROFESSIONAL ENGINEER CHUNG-YUAN WEN No. C 50690 Exp. 09/30/11 CIVIL STATE OF CALIFORNIA

The State of California or its officers or agents shall not be responsible for the accuracy or completeness of electronic copies of this plan sheet.

NOTES:

1. See B3-1 for RW stem reinforcement extending into footing.
2. For RW details, see "RETAINING WALL NO. 1161" sheet.
3. For location of Section K-K, see "ABUTMENT 3 LAYOUT" sheet.
4. Typical abutment footing reinforcement. See "ABUTMENT DETAILS NO. 1" sheet.

LEGEND:

Neoprene Strip

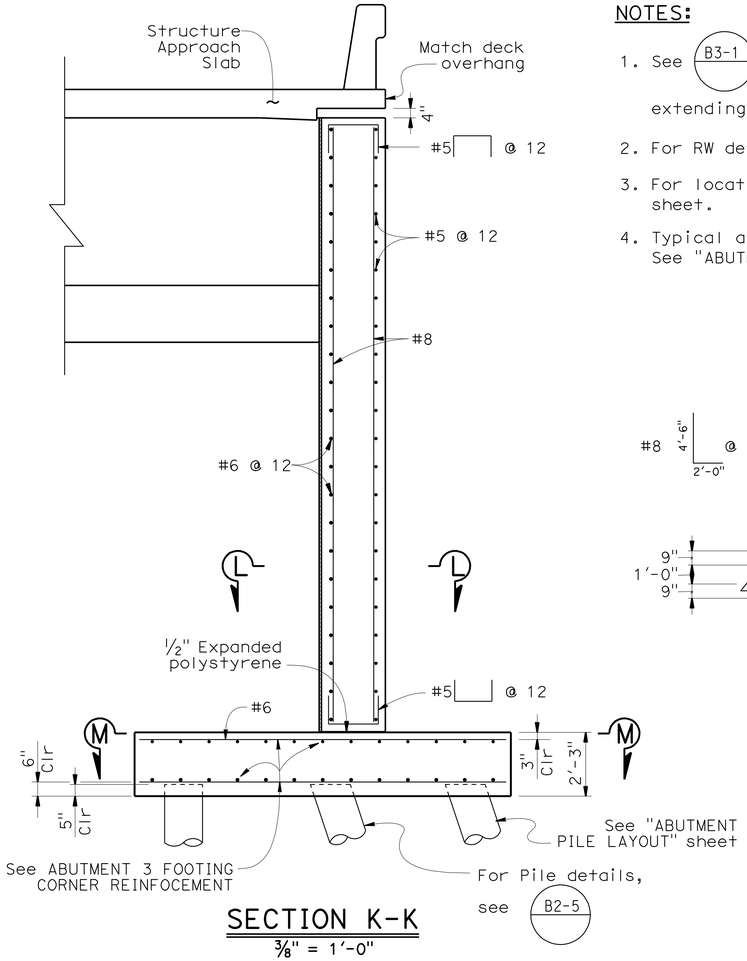

SECTION K-K
⅜" = 1'-0"

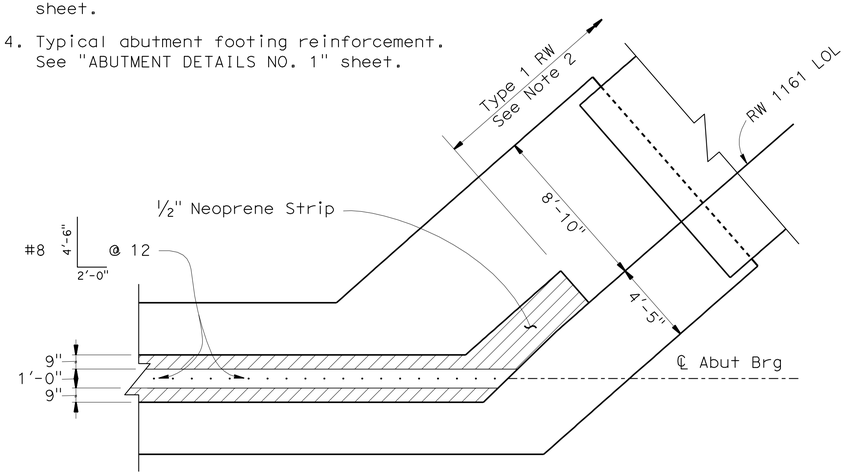

SECTION M-M
¼" = 1'-0"

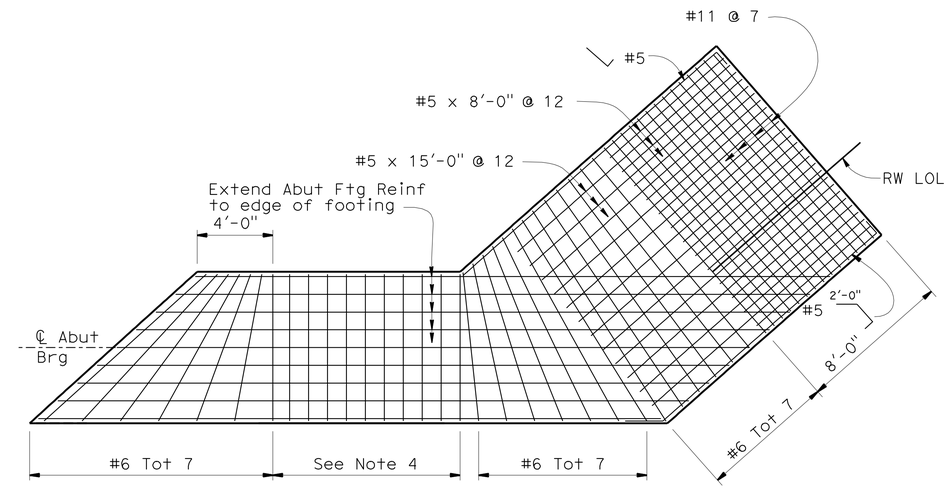

TOP REINFORCEMENT

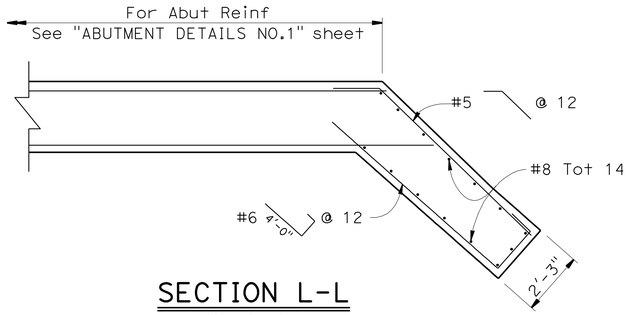

SECTION L-L
No Scale

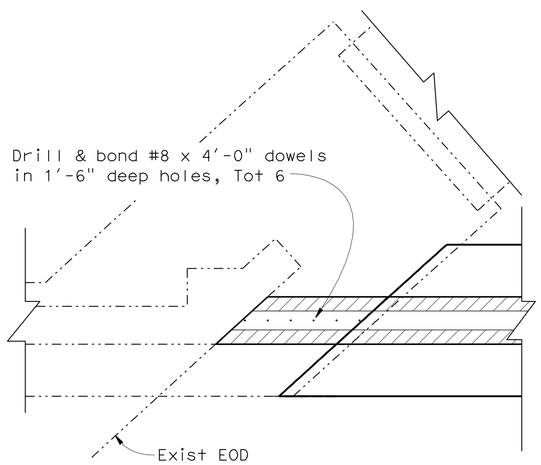

SECTION I-I
¼" = 1'-0"

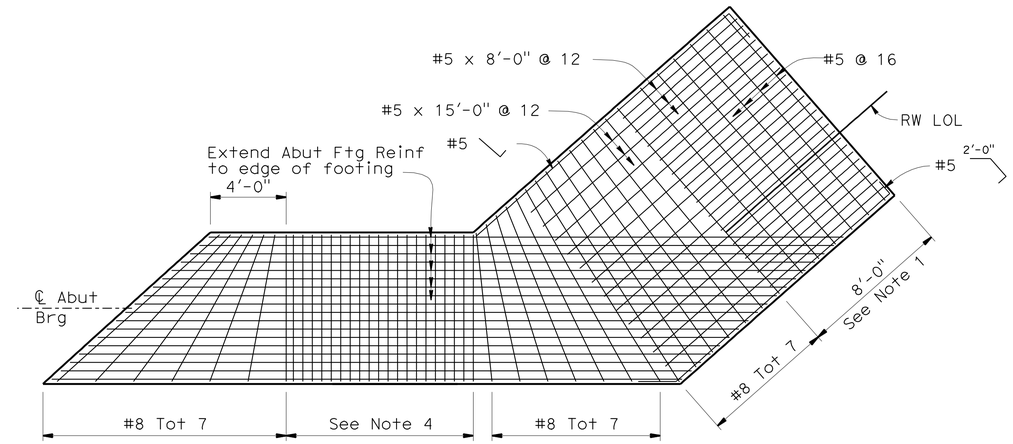

BOTTOM REINFORCEMENT

ABUTMENT 3 CORNER FOOTING
¼" = 1'-0"

NOTE:
THE CONTRACTOR SHALL VERIFY ALL CONTROLLING FIELD DIMENSIONS BEFORE ORDERING OR FABRICATING ANY MATERIAL.

	BY	CHECKED
DESIGN	K. Kim	G. Matthews
DETAILS	M. Kingra /J. Valencia	K. Kim
QUANTITIES	K. Kim	K. Ghosh

STATE OF CALIFORNIA
DEPARTMENT OF TRANSPORTATION

DIVISION OF ENGINEERING SERVICES
STRUCTURE DESIGN
DESIGN BRANCH 21

BRIDGE NO. 53-1009
POST MILE 21.92

ATLANTIC BLVD UC (WIDEN)
ABUTMENT DETAILS NO. 3

STRUCTURES DESIGN DETAIL SHEET (ENGLISH) (REV. 09-01-10)

ORIGINAL SCALE IN INCHES FOR REDUCED PLANS 0 1 2 3

UNIT: 3623
PROJECT NUMBER & PHASE: 0700020869-1
CONTRACT NO.: 202111

DISREGARD PRINTS BEARING EARLIER REVISION DATES
REVISION DATES 9/10/10 10/04/10 11/23/10

SHEET 12 OF 33

FILE => 53-1009-f-a_dt03.dgn

USERNAME => s124496 DATE PLOTTED => 28-JUN-2011 TIME PLOTTED => 20:37

DIST	COUNTY	ROUTE	POST MILES TOTAL PROJECT	SHEET No.	TOTAL SHEETS
07	LA	710	17.2/26.4	1408	1507

REGISTERED CIVIL ENGINEER 03/01/11 DATE

6-27-11
PLANS APPROVAL DATE

REGISTERED PROFESSIONAL ENGINEER CHUNG-YUAN WEN No. C 50690 Exp. 09/30/11 CIVIL STATE OF CALIFORNIA

The State of California or its officers or agents shall not be responsible for the accuracy or completeness of electronic copies of this plan sheet.

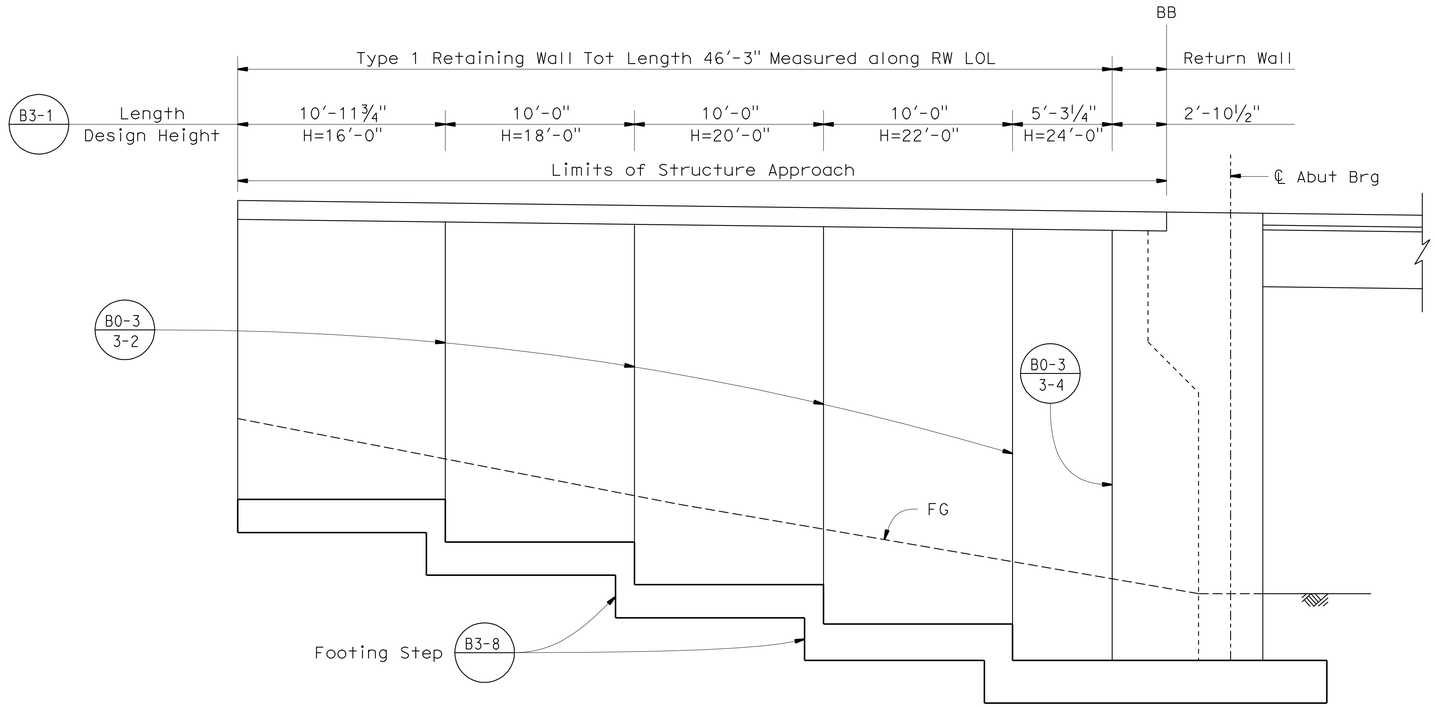

ABUTMENT 1 RW ELEVATION - RIGHT WIDEN

¼" = 1'-0"

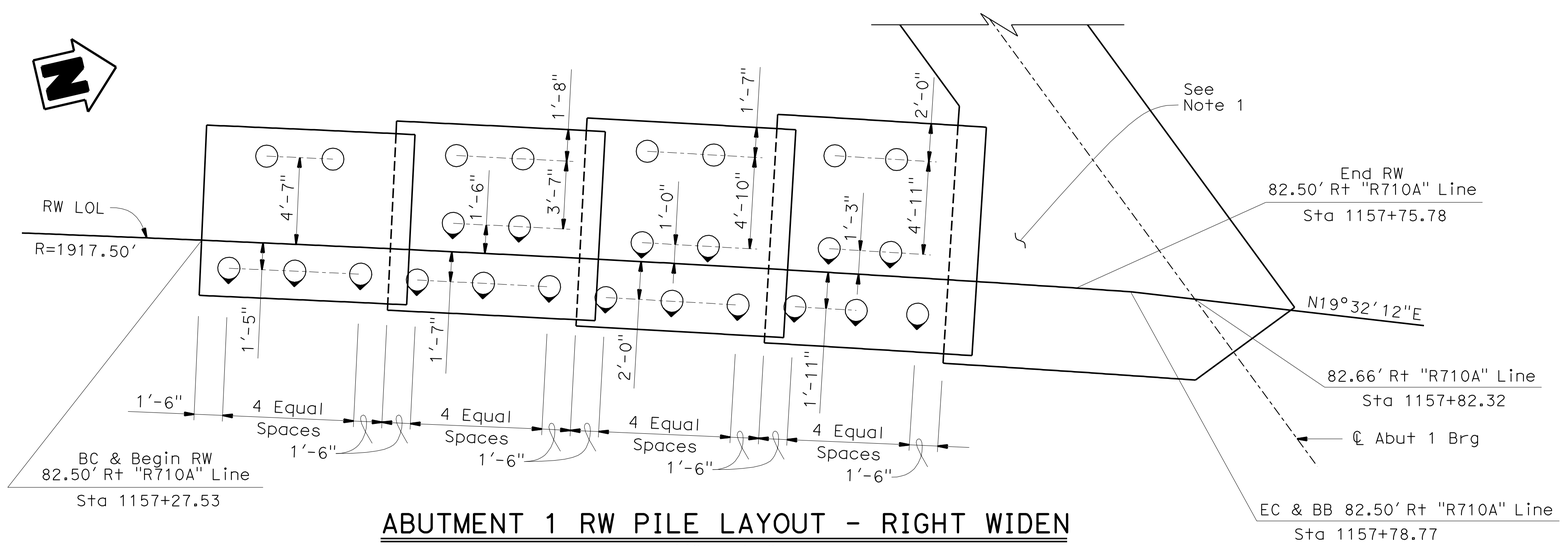

ABUTMENT 1 RW PILE LAYOUT - RIGHT WIDEN

¼" = 1'-0"

NOTE:
1. For Pile Layout, see "ABUTMENT PILE LAYOUT" sheet.

LEGEND:

- Vertical Pile
- Battered Pile

NOTE:
THE CONTRACTOR SHALL VERIFY ALL CONTROLLING FIELD DIMENSIONS BEFORE ORDERING OR FABRICATING ANY MATERIAL.

DESIGN	BY K. Kim	CHECKED G. Matthews	
DETAILS	BY M. Kingra / P. Perez	CHECKED K. Kim	
QUANTITIES	BY K. Kim	CHECKED K. Ghosh	

STATE OF CALIFORNIA
DEPARTMENT OF TRANSPORTATION

DIVISION OF ENGINEERING SERVICES
STRUCTURE DESIGN
DESIGN BRANCH 21

BRIDGE NO. 53-1009
POST MILE 21.92

ATLANTIC BLVD UC (WIDEN)
ABUTMENT DETAILS NO. 4

STRUCTURES DESIGN DETAIL SHEET (ENGLISH) (REV. 09-01-10)

ORIGINAL SCALE IN INCHES FOR REDUCED PLANS 0 1 2 3

UNIT: 3623
PROJECT NUMBER & PHASE: 0700020869-1
CONTRACT NO.: 202111

DISREGARD PRINTS BEARING EARLIER REVISION DATES

REVISION DATES 08/09/10 08/28/10 10/01/10 03/01/11

SHEET 13 OF 33

FILE => 53-1009-f-a_dt04.dgn

USERNAME => s124496 DATE PLOTTED => 28-JUN-2011 TIME PLOTTED => 20:37

DIST	COUNTY	ROUTE	POST MILES TOTAL PROJECT	SHEET No.	TOTAL SHEETS
07	LA	710	17.2/26.4	1409	1507

REGISTERED CIVIL ENGINEER 03/01/11 DATE

6-27-11
PLANS APPROVAL DATE

REGISTERED PROFESSIONAL ENGINEER CHUNG-YUAN WEN No. C 50690 Exp. 09/30/11 CIVIL STATE OF CALIFORNIA

The State of California or its officers or agents shall not be responsible for the accuracy or completeness of electronic copies of this plan sheet.

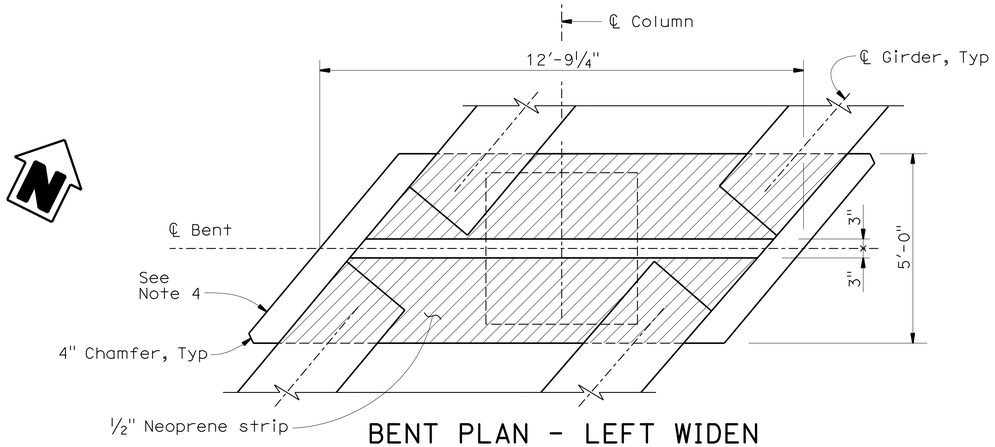

BENT PLAN - LEFT WIDEN

½" = 1'-0"

NOTES:

1. No splice shall be used for top main reinforcement in cap beams and columns.
2. For Section Z-Z, see "BENT DETAILS NO.3" sheet.
3. For Footing details, see "BENT DETAILS NO.3" sheet.
4. Face of bent cap to be parallel to outside face of girder.
5. Mortar pad to be level in all directions.

LEGEND:

Neoprene Strip

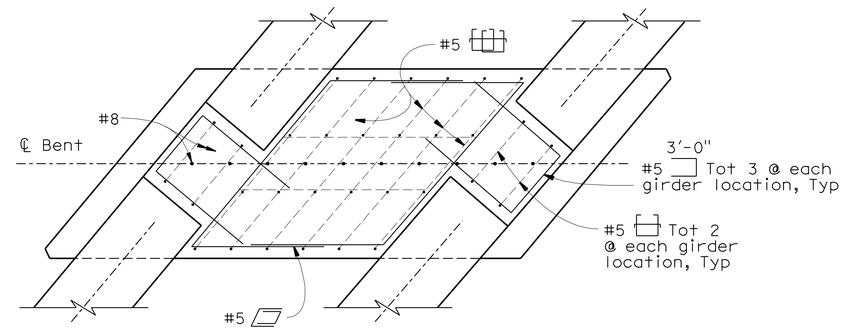

SECTION X-X

½" = 1'-0"

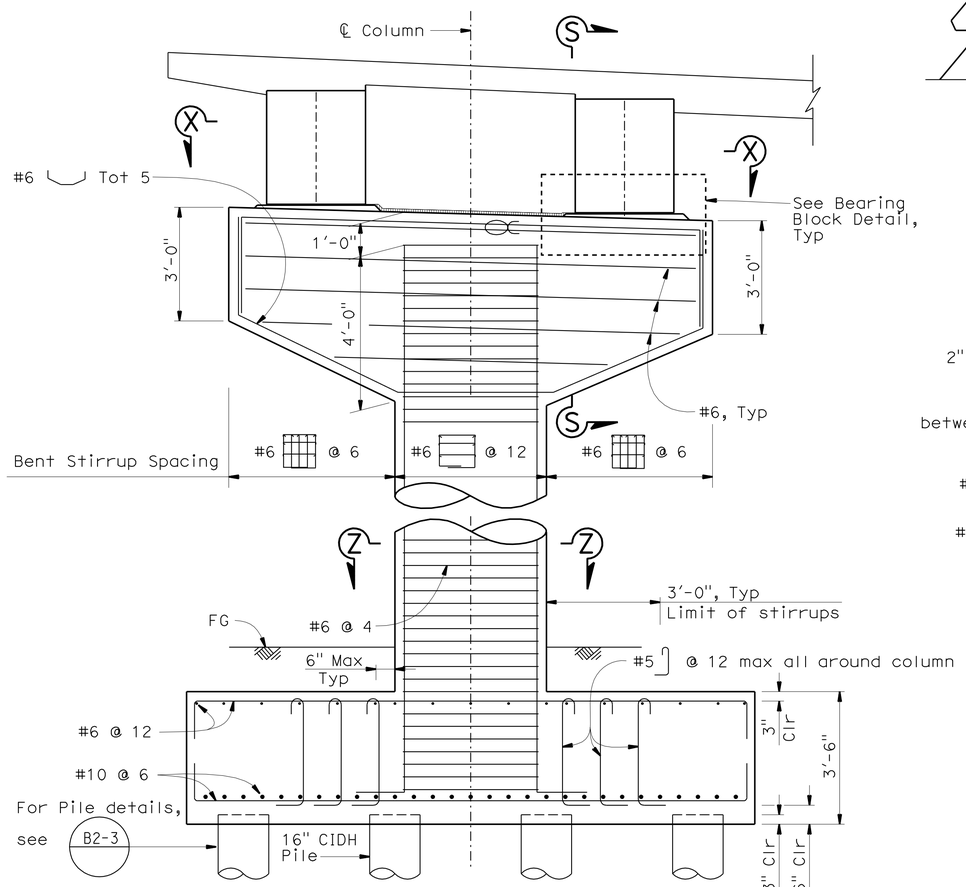

BENT ELEVATION - LEFT WIDEN

½" = 1'-0"

NOTE:
THE CONTRACTOR SHALL VERIFY ALL CONTROLLING FIELD DIMENSIONS BEFORE ORDERING OR FABRICATING ANY MATERIAL.

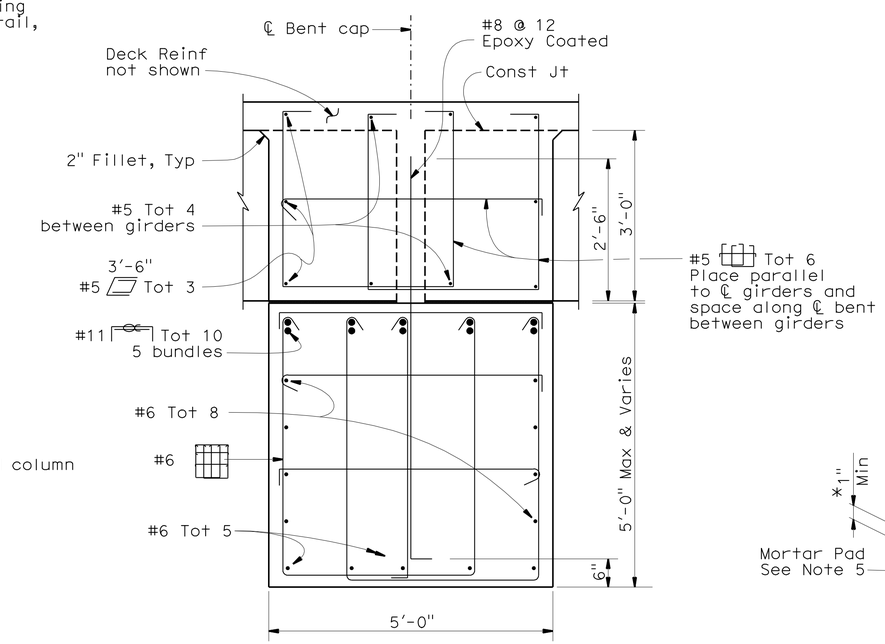

SECTION S-S

¾" = 1'-0"

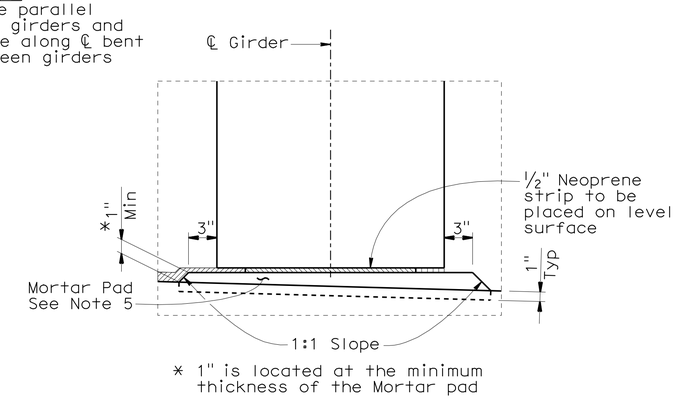

BEARING BLOCK DETAIL

No Scale

DESIGN	BY K. Kim	CHECKED G. Matthews	
DETAILS	BY M. Kingra / P. Perez	CHECKED K. Kim	
QUANTITIES	BY K. Kim	CHECKED K. Ghosh	

STATE OF CALIFORNIA
DEPARTMENT OF TRANSPORTATION

DIVISION OF ENGINEERING SERVICES
STRUCTURE DESIGN
DESIGN BRANCH 21

BRIDGE NO. 53-1009
POST MILE 21.92

ATLANTIC BLVD UC (WIDEN)
BENT DETAILS NO. 1

STRUCTURES DESIGN DETAIL SHEET (ENGLISH) (REV. 09-01-10)

ORIGINAL SCALE IN INCHES FOR REDUCED PLANS 0 1 2 3

UNIT: 3623
PROJECT NUMBER & PHASE: 0700020869-1
CONTRACT NO.: 202111

DISREGARD PRINTS BEARING EARLIER REVISION DATES

REVISION DATES 09/02/10 10/01/10 03/01/11

SHEET 14 OF 33

FILE => 53-1009-h-b01dt01.dgn

USERNAME => s124496 DATE PLOTTED => 28-JUN-2011 TIME PLOTTED => 20:37

DIST	COUNTY	ROUTE	POST MILES TOTAL PROJECT	SHEET No.	TOTAL SHEETS
07	LA	710	17.2/26.4	1410	1507

REGISTERED CIVIL ENGINEER — DATE 03/01/11

6-27-11
PLANS APPROVAL DATE

REGISTERED PROFESSIONAL ENGINEER — CHUNG-YUAN WEN — No. C 50690 — Exp. 09/30/11 — CIVIL — STATE OF CALIFORNIA

The State of California or its officers or agents shall not be responsible for the accuracy or completeness of electronic copies of this plan sheet.

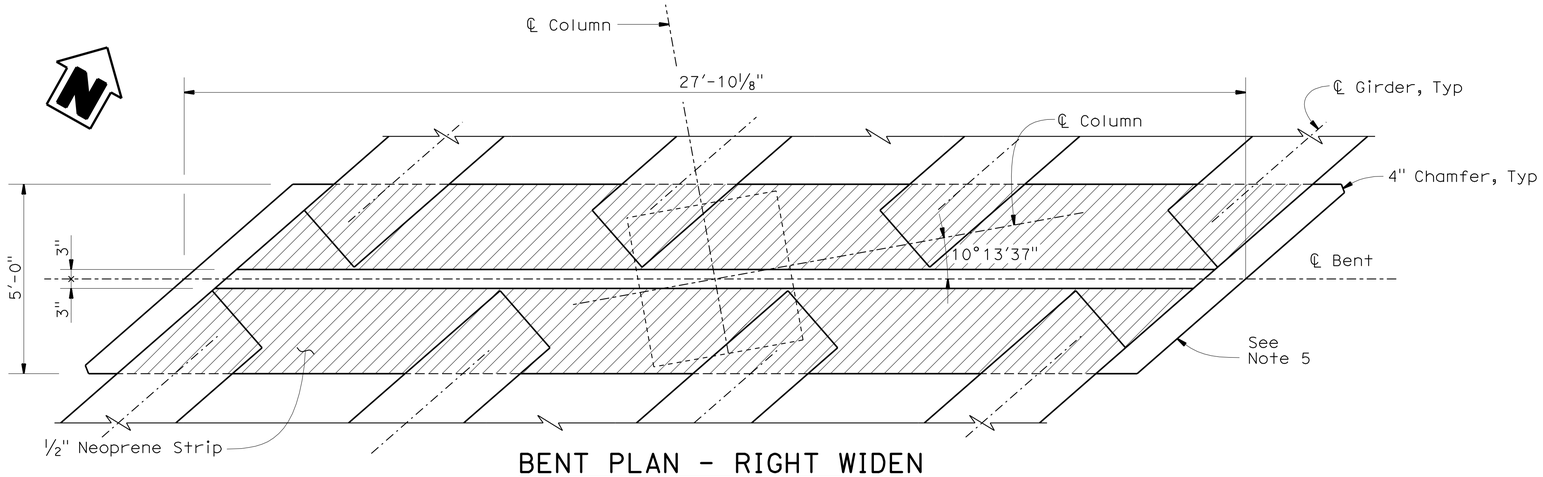

BENT PLAN - RIGHT WIDEN

1/2" = 1'-0"

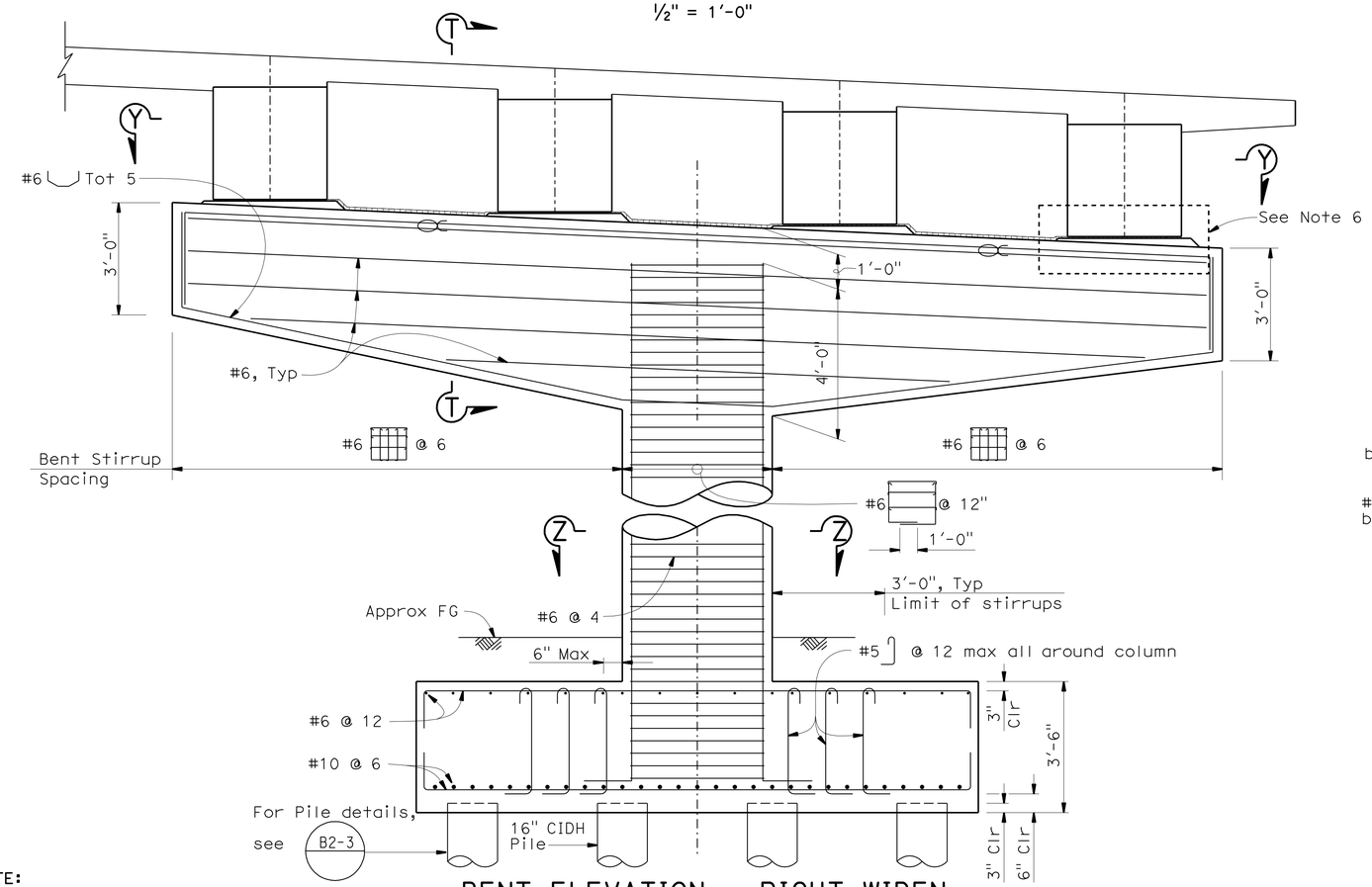

BENT ELEVATION - RIGHT WIDEN

1/2" = 1'-0"

NOTE:
THE CONTRACTOR SHALL VERIFY ALL CONTROLLING FIELD DIMENSIONS BEFORE ORDERING OR FABRICATING ANY MATERIAL.

NOTES:

1. No splice shall be used for main reinforcement in cap beams and columns.
2. For Section Z-Z, see "BENT DETAILS NO.3" sheet.
3. For footing details, see "BENT DETAILS NO.3" sheet.
4. For Section Y-Y, see "BENT DETAILS NO.3" sheet.
5. Face of bent cap to be parallel to outside face of girder.
6. For Bearing Block Detail, see "BENT DETAILS NO. 1" sheet.

LEGENDS:

Neoprene Strip

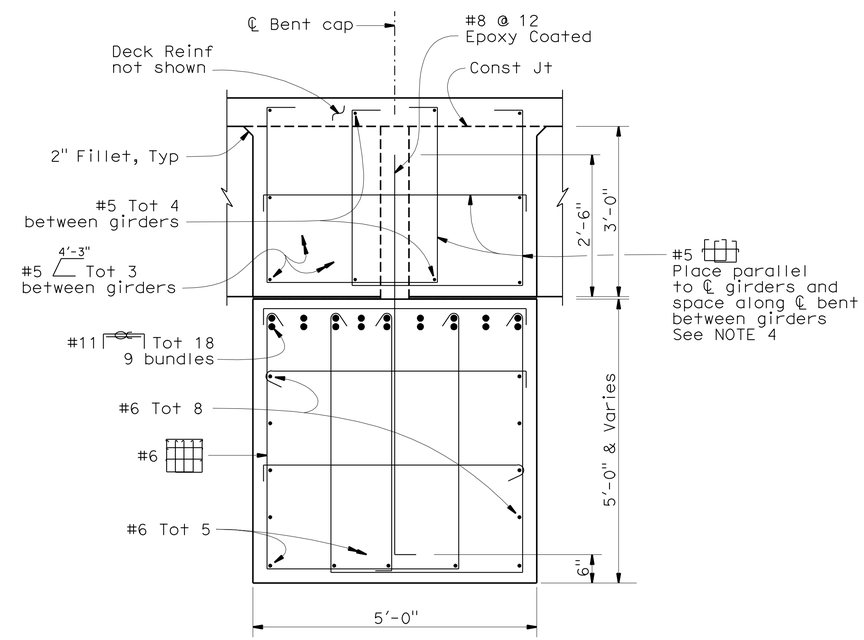

SECTION T-T

3/4" = 1'-0"

DESIGN	BY K. Kim	CHECKED G. Matthews	
DETAILS	BY M. Kingra / P. Perez	CHECKED K. Kim	
QUANTITIES	BY K. Kim	CHECKED K. Ghosh	

STATE OF CALIFORNIA
DEPARTMENT OF TRANSPORTATION

DIVISION OF ENGINEERING SERVICES
STRUCTURE DESIGN
DESIGN BRANCH 21

BRIDGE NO. 53-1009
POST MILE 21.92

ATLANTIC BLVD UC (WIDEN)
BENT DETAILS NO. 2

STRUCTURES DESIGN DETAIL SHEET (ENGLISH) (REV. 09-01-10)

ORIGINAL SCALE IN INCHES FOR REDUCED PLANS 0 1 2 3

UNIT: 3623
PROJECT NUMBER & PHASE: 0700020869-1
CONTRACT NO.: 202111

DISREGARD PRINTS BEARING EARLIER REVISION DATES

REVISION DATES: 09/01/10 09/02/10 10/01/10 03/01/11

SHEET 15 OF 33

FILE => 53-1009-n-b01dt02.dgn

USERNAME => s124496 DATE PLOTTED => 28-JUN-2011 TIME PLOTTED => 20:37

DIST	COUNTY	ROUTE	POST MILES TOTAL PROJECT	SHEET No.	TOTAL SHEETS
07	LA	710	17.2/26.4	1411	1507

REGISTERED CIVIL ENGINEER 03/01/11 DATE

6-27-11
PLANS APPROVAL DATE

REGISTERED PROFESSIONAL ENGINEER CHUNG-YUAN WEN No. C 50690 Exp. 09/30/11 CIVIL STATE OF CALIFORNIA

The State of California or its officers or agents shall not be responsible for the accuracy or completeness of electronic copies of this plan sheet.

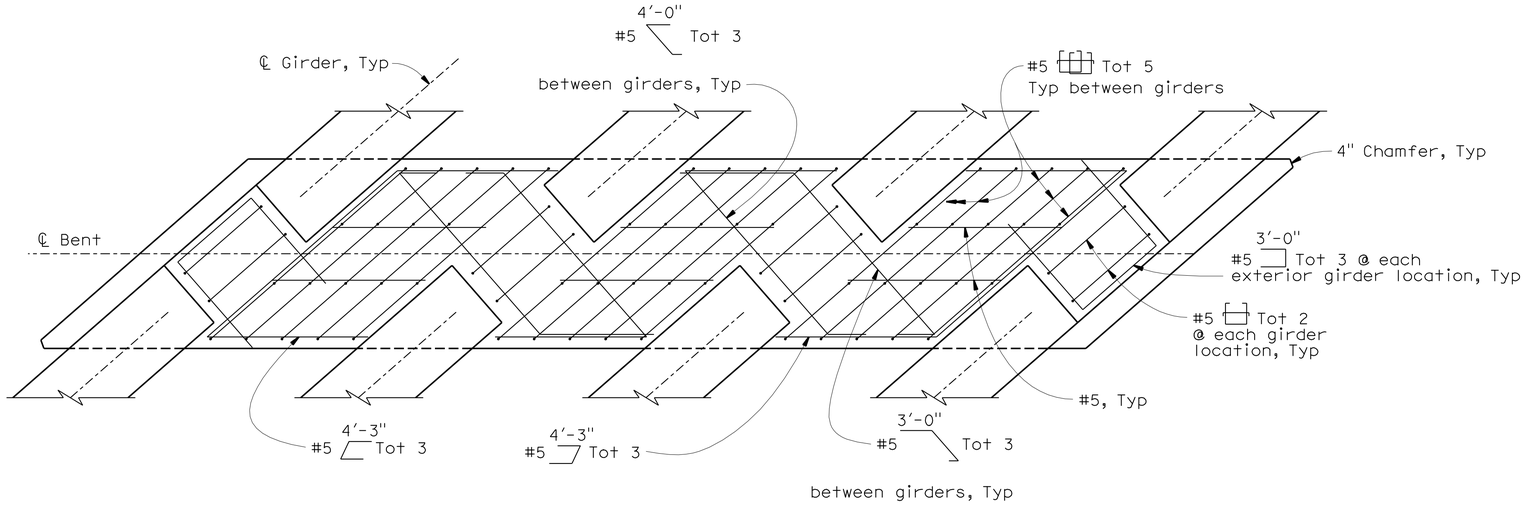

SECTION Y-Y

½" = 1'-0"

NOTES:

1. For location of Section Z-Z, see "BENT DETAILS NO.1" and BENT DETAILS NO.2" sheets.
2. For location of Section Y-Y, see "BENT DETAILS NO.2" sheet.

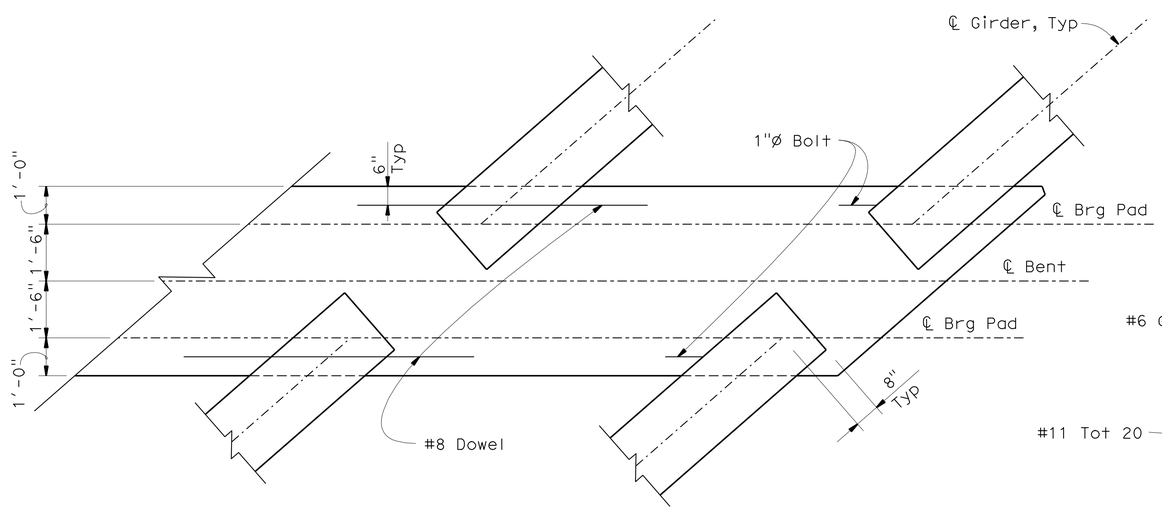

GIRDER END DETAIL

No Scale

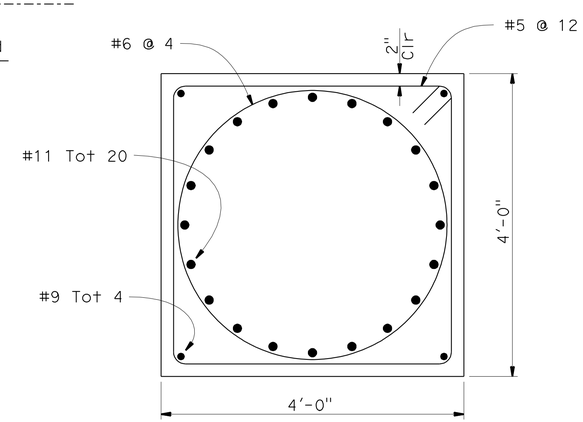

SECTION Z-Z

1" = 1'-0"

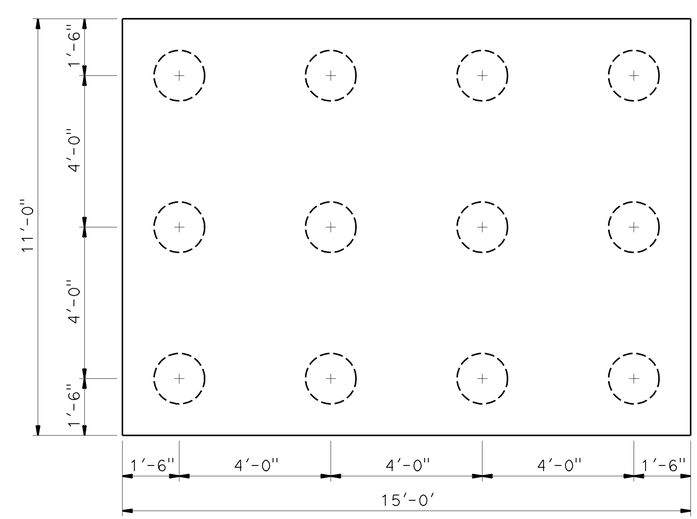

FOOTING PLAN

½" = 1'-0"

NOTE:
THE CONTRACTOR SHALL VERIFY ALL CONTROLLING FIELD DIMENSIONS BEFORE ORDERING OR FABRICATING ANY MATERIAL.

	BY	CHECKED
DESIGN	K. Kim	G. Matthews
DETAILS	M. Kingra / P. Perez	K. Kim
QUANTITIES	K. Kim	K. Ghosh

STATE OF CALIFORNIA
DEPARTMENT OF TRANSPORTATION

DIVISION OF ENGINEERING SERVICES
STRUCTURE DESIGN
DESIGN BRANCH 21

BRIDGE NO. 53-1009
POST MILE 21.92

ATLANTIC BLVD UC (WIDEN)
BENT DETAILS NO. 3

STRUCTURES DESIGN DETAIL SHEET (ENGLISH) (REV. 09-01-10)

ORIGINAL SCALE IN INCHES FOR REDUCED PLANS 0 1 2 3

UNIT: 3623
PROJECT NUMBER & PHASE: 0700020869-1
CONTRACT NO.: 202111

DISREGARD PRINTS BEARING EARLIER REVISION DATES

REVISION DATES 07/12/10 08/04/10 10/01/10 03/01/11

SHEET 16 OF 33

FILE => 53-1009-h-b01dt03.dgn

USERNAME => s124496 DATE PLOTTED => 28-JUN-2011 TIME PLOTTED => 20:37

DIST	COUNTY	ROUTE	POST MILES TOTAL PROJECT	SHEET No.	TOTAL SHEETS
07	LA	710	17.2/26.4	1412	1507

REGISTERED CIVIL ENGINEER — DATE 03/01/11

6-27-11
PLANS APPROVAL DATE

REGISTERED PROFESSIONAL ENGINEER — CHUNG-YUAN WEN — No. C 50690 — Exp. 09/30/11 — CIVIL — STATE OF CALIFORNIA

The State of California or its officers or agents shall not be responsible for the accuracy or completeness of electronic copies of this plan sheet.

LEGEND:

-·-·-·- Indicates Existing Structure

——— Indicates New Construction

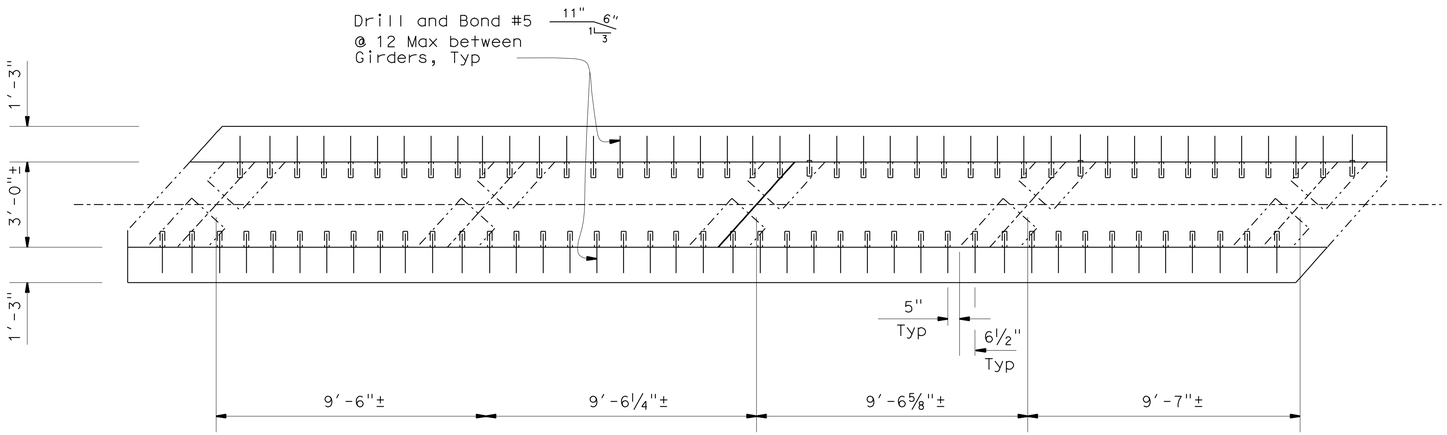

DRILL AND BOND DOWELL PATTERN PLAN

NO SCALE

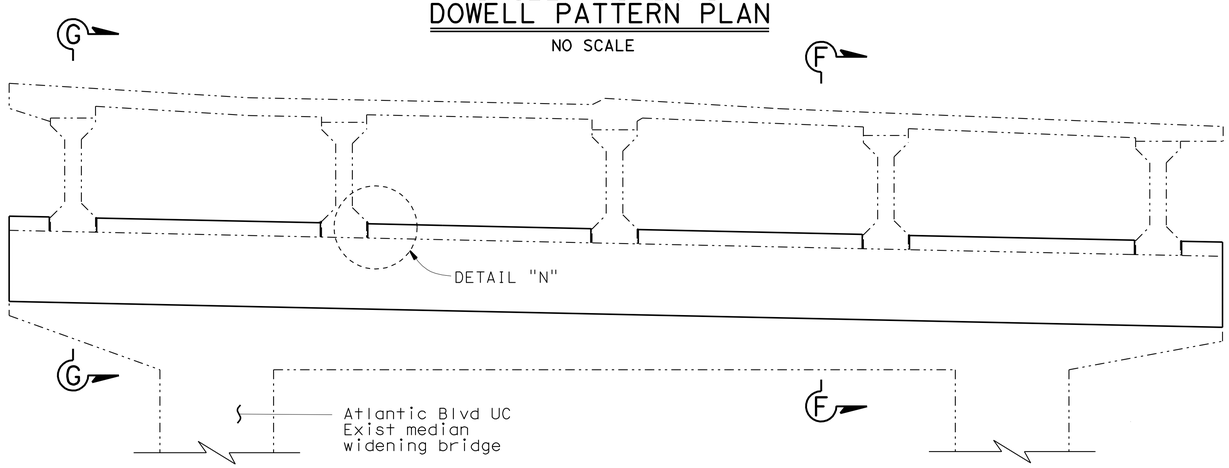

EXIST BENT RETROFIT

NO SCALE

NOTE: Median barrier replacement not shown.

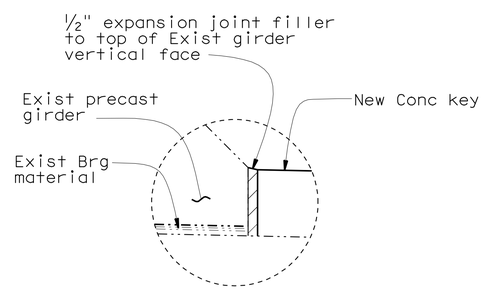

DETAIL "N"

NO SCALE

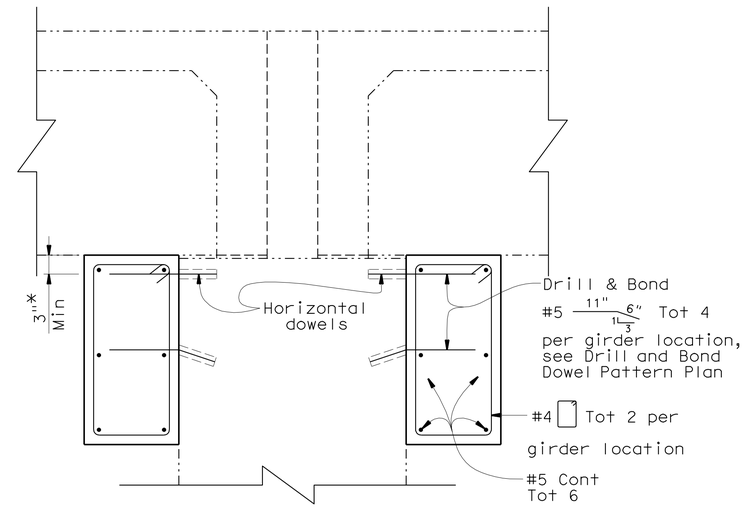

SECTION G-G

1" = 1'-0"

NOTE: For information not shown, see "SECTION F-F"

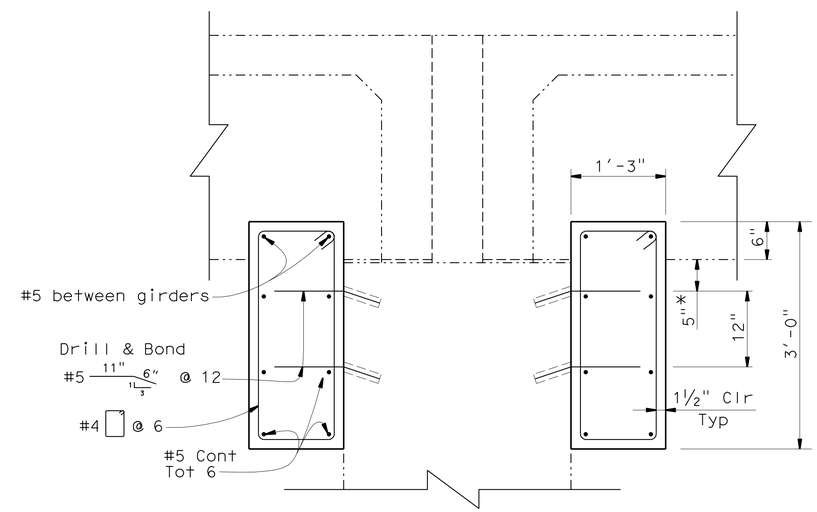

SECTION F-F

1" = 1'-0"

* Contractor shall adjust location of drill and bond to avoid exist reinforcement

NOTE:
THE CONTRACTOR SHALL VERIFY ALL CONTROLLING FIELD DIMENSIONS BEFORE ORDERING OR FABRICATING ANY MATERIAL.

	BY	CHECKED
DESIGN	K. Kim	G. Matthews
DETAILS	M. Kingra / P. Perez	K. Kim
QUANTITIES	K. Kim	K. Ghosh

STATE OF CALIFORNIA
DEPARTMENT OF TRANSPORTATION

DIVISION OF ENGINEERING SERVICES
STRUCTURE DESIGN
DESIGN BRANCH 21

BRIDGE NO. 53-1009
POST MILE 21.92

ATLANTIC BLVD UC (WIDEN)
BENT RETROFIT DETAILS

STRUCTURES DESIGN DETAIL SHEET (ENGLISH) (REV. 09-01-10)

ORIGINAL SCALE IN INCHES FOR REDUCED PLANS 0 1 2 3

UNIT: 3623
PROJECT NUMBER & PHASE: 0700020869-1
CONTRACT NO.: 202111

DISREGARD PRINTS BEARING EARLIER REVISION DATES

REVISION DATES: 08/05/10 08/26/10 03/01/11

SHEET 17 OF 33

FILE => 53-1009-j-b_retrof.dgn

USERNAME => s124496 DATE PLOTTED => 28-JUN-2011 TIME PLOTTED => 20:37

DIST	COUNTY	ROUTE	POST MILES TOTAL PROJECT	SHEET No.	TOTAL SHEETS
07	LA	710	17.2/26.4	1413	1507

REGISTERED CIVIL ENGINEER 03/01/11 DATE

6-27-11
PLANS APPROVAL DATE

REGISTERED PROFESSIONAL ENGINEER CHUNG-YUAN WEN No. C 50690 Exp. 09/30/11 CIVIL STATE OF CALIFORNIA

The State of California or its officers or agents shall not be responsible for the accuracy or completeness of electronic copies of this plan sheet.

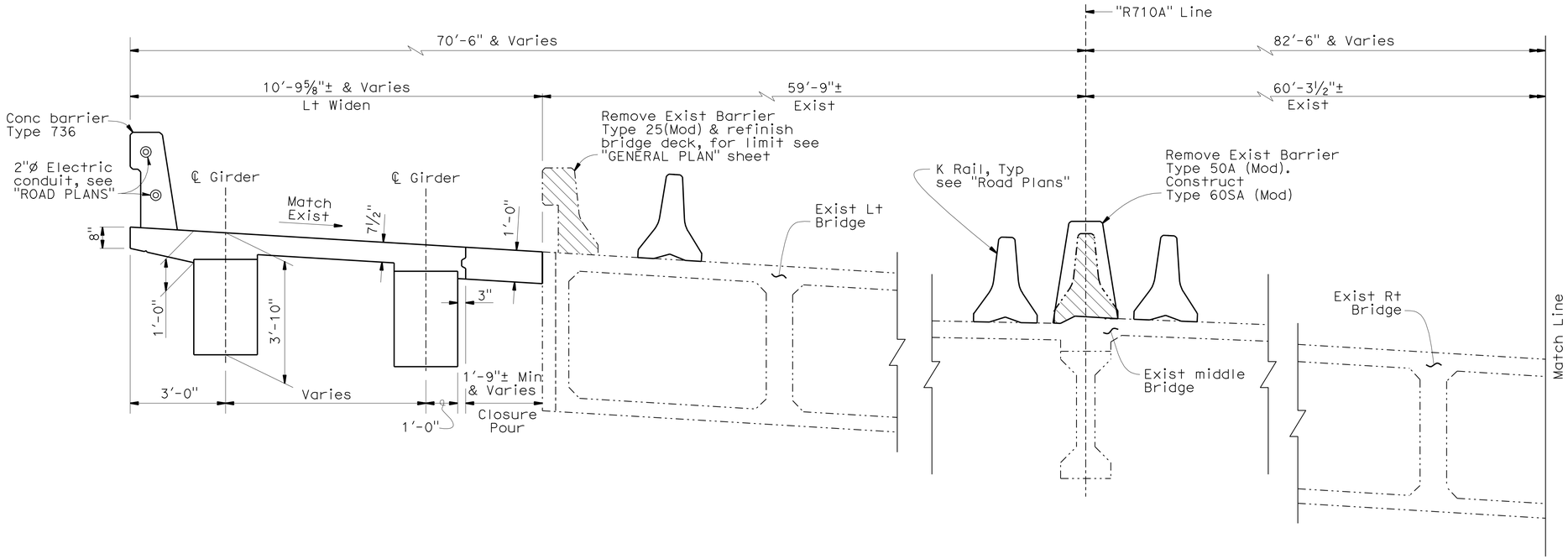

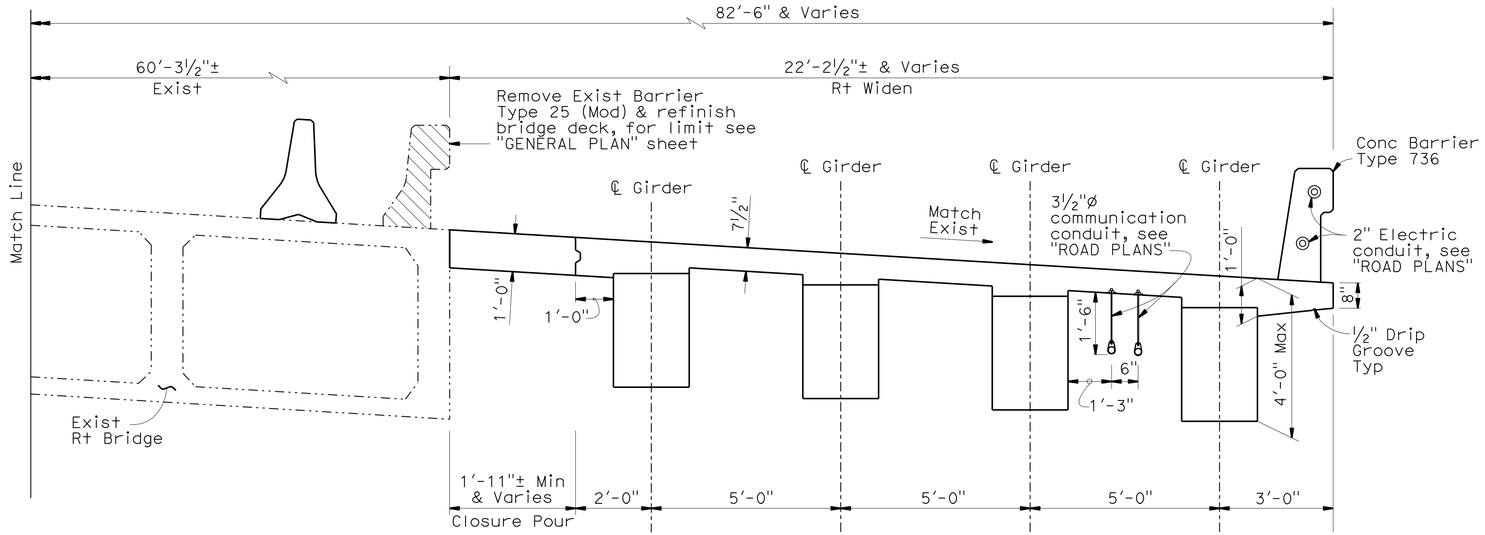

TYPICAL SECTION

½" = 1'-0"

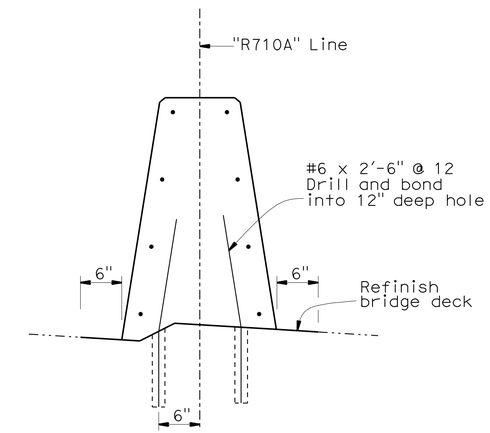

CONCRETE BARRIER TYPE 60SA (MOD)

A76G

No Scale

LEGEND:

- Indicates existing structure
- Indicates new construction
- Indicates Bridge Removal (Portion)

NOTE:
THE CONTRACTOR SHALL VERIFY ALL CONTROLLING FIELD DIMENSIONS BEFORE ORDERING OR FABRICATING ANY MATERIAL.

	BY	CHECKED
DESIGN	K. Kim	G. Matthews
DETAILS	M. Kingra / P. Perez	K. Kim
QUANTITIES	K. Kim	K. Ghosh

STATE OF CALIFORNIA
DEPARTMENT OF TRANSPORTATION

DIVISION OF ENGINEERING SERVICES
STRUCTURE DESIGN
DESIGN BRANCH 21

BRIDGE NO. 53-1009
POST MILE 21.92

ATLANTIC BLVD UC (WIDEN)
TYPICAL SECTION NO. 1

STRUCTURES DESIGN DETAIL SHEET (ENGLISH) (REV. 09-01-10)

ORIGINAL SCALE IN INCHES FOR REDUCED PLANS 0 1 2 3

UNIT: 3623
PROJECT NUMBER & PHASE: 0700020869-1
CONTRACT NO.: 202111

DISREGARD PRINTS BEARING EARLIER REVISION DATES

REVISION DATES: 08/28/10 9/28/10 10/28/10 03/01/11

SHEET 18 OF 33

FILE => 53-1009-k-ts01.dgn

USERNAME => s124496 DATE PLOTTED => 28-JUN-2011 TIME PLOTTED => 20:37

DIST	COUNTY	ROUTE	POST MILES TOTAL PROJECT	SHEET No.	TOTAL SHEETS
07	LA	710	17.2/26.4	1414	1507

REGISTERED CIVIL ENGINEER 03/01/11 DATE

6-27-11
PLANS APPROVAL DATE

REGISTERED PROFESSIONAL ENGINEER CHUNG-YUAN WEN No. C 50690 Exp. 09/30/11 CIVIL STATE OF CALIFORNIA

The State of California or its officers or agents shall not be responsible for the accuracy or completeness of electronic copies of this plan sheet.

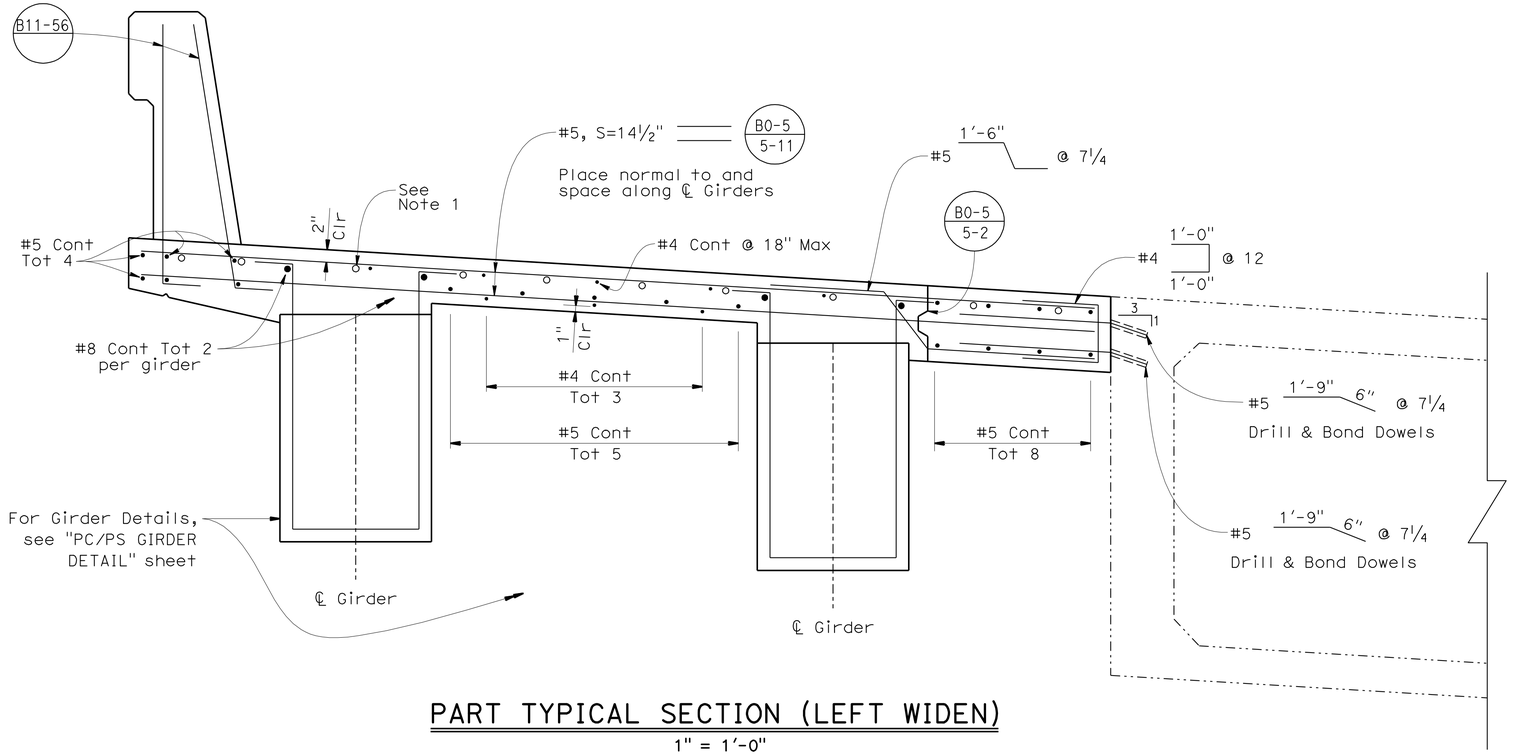

PART TYPICAL SECTION (LEFT WIDEN)

1" = 1'-0"

NOTES:

1. For additional top deck reinforcement, see "GIRDER REINFORCEMENT" sheet.

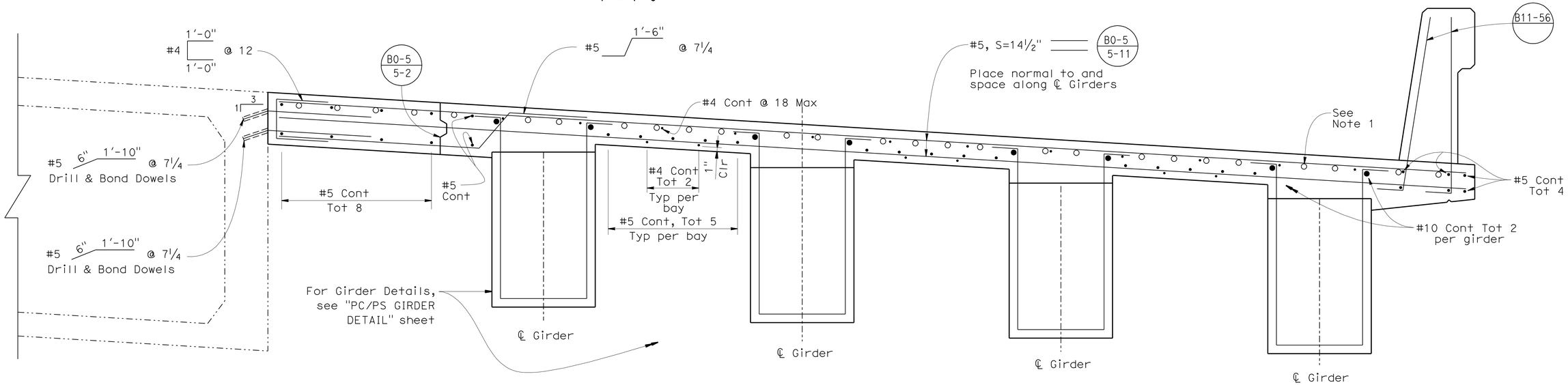

PART TYPICAL SECTION (RIGHT WIDEN)

1" = 1'-0"

NOTE:
THE CONTRACTOR SHALL VERIFY ALL CONTROLLING FIELD DIMENSIONS BEFORE ORDERING OR FABRICATING ANY MATERIAL.

	BY	CHECKED
DESIGN	K. Kim	G. Matthews
DETAILS	M. Kingra / P. Perez	K. Kim
QUANTITIES	K. Kim	K. Ghosh

STATE OF CALIFORNIA
DEPARTMENT OF TRANSPORTATION

DIVISION OF ENGINEERING SERVICES
STRUCTURE DESIGN
DESIGN BRANCH 21

BRIDGE NO. 53-1009
POST MILE 21.92

ATLANTIC BLVD UC (WIDEN)
TYPICAL SECTION NO. 2

STRUCTURES DESIGN DETAIL SHEET (ENGLISH) (REV. 09-01-10)

ORIGINAL SCALE IN INCHES FOR REDUCED PLANS 0 1 2 3

UNIT: 3623
PROJECT NUMBER & PHASE: 0700020869-1
CONTRACT NO.: 202111

DISREGARD PRINTS BEARING EARLIER REVISION DATES

REVISION DATES 08/18/10 09/28/10 10/08/10 03/01/11

SHEET 19 OF 33

FILE => 53-1009-k-ts02.dgn

USERNAME => s124496 DATE PLOTTED => 28-JUN-2011 TIME PLOTTED => 20:37

DIST	COUNTY	ROUTE	POST MILES TOTAL PROJECT	SHEET No.	TOTAL SHEETS
07	LA	710	17.2/26.4	1415	1507

REGISTERED CIVIL ENGINEER — 03/01/11 DATE

6-27-11
PLANS APPROVAL DATE

REGISTERED PROFESSIONAL ENGINEER — CHUNG-YUAN WEN — No. C 50690 — Exp. 09/30/11 — CIVIL — STATE OF CALIFORNIA

The State of California or its officers or agents shall not be responsible for the accuracy or completeness of electronic copies of this plan sheet.

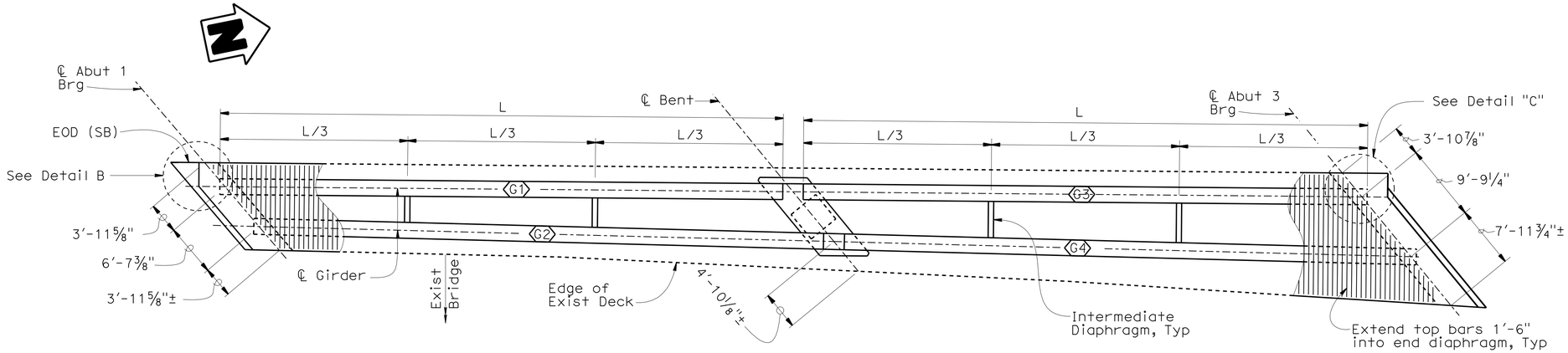

GIRDER LAYOUT - LEFT WIDEN

⅛" = 1'-0"

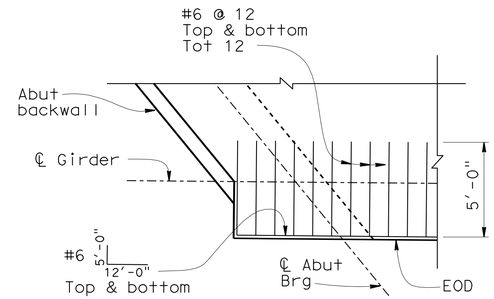

DETAIL "C"

NO SCALE
(See Note 2)

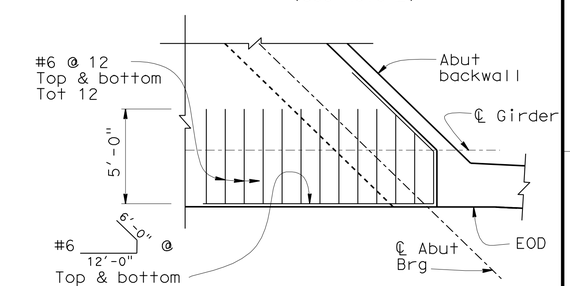

DETAIL "B"

NO SCALE
(See Note 2)

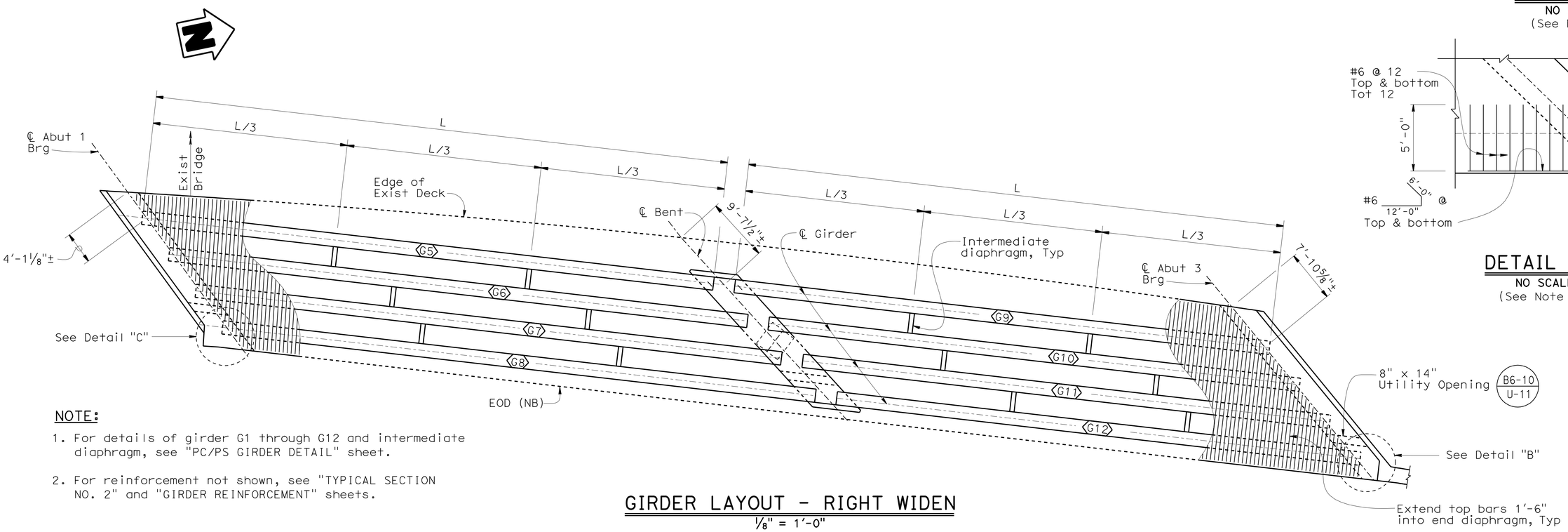

GIRDER LAYOUT - RIGHT WIDEN

⅛" = 1'-0"

NOTE:

1. For details of girder G1 through G12 and intermediate diaphragm, see "PC/PS GIRDER DETAIL" sheet.
2. For reinforcement not shown, see "TYPICAL SECTION NO. 2" and "GIRDER REINFORCEMENT" sheets.

NOTE:
THE CONTRACTOR SHALL VERIFY ALL CONTROLLING FIELD DIMENSIONS BEFORE ORDERING OR FABRICATING ANY MATERIAL.

	BY	CHECKED
DESIGN	K. Kim	G. Matthews
DETAILS	M. Kingra /J. Valencia	K. Kim
QUANTITIES	K. Kim	K. Ghosh

STATE OF CALIFORNIA
DEPARTMENT OF TRANSPORTATION

DIVISION OF ENGINEERING SERVICES
STRUCTURE DESIGN
DESIGN BRANCH 21

BRIDGE NO. 53-1009
POST MILE 21.92

ATLANTIC BLVD UC (WIDEN)
GIRDER LAYOUT

STRUCTURES DESIGN DETAIL SHEET (ENGLISH) (REV. 09-01-10)

ORIGINAL SCALE IN INCHES FOR REDUCED PLANS 0 1 2 3

UNIT: 3623
PROJECT NUMBER & PHASE: 0700020869-1
CONTRACT NO.: 202111

DISREGARD PRINTS BEARING EARLIER REVISION DATES

REVISION DATES: 8/4/10 8/26/10 10/01/10 03/01/11

SHEET 20 OF 33

FILE => 53-1009-1-g_lo.dgn

USERNAME => s124496 DATE PLOTTED => 28-JUN-2011 TIME PLOTTED => 20:37

DIST	COUNTY	ROUTE	POST MILES TOTAL PROJECT	SHEET No.	TOTAL SHEETS
07	LA	710	17.2/26.4	1416	1507

REGISTERED CIVIL ENGINEER — DATE 03/01/11

6-27-11
PLANS APPROVAL DATE

REGISTERED PROFESSIONAL ENGINEER — CHUNG-YUAN WEN — No. C 50690 — Exp. 09/30/11 — CIVIL — STATE OF CALIFORNIA

The State of California or its officers or agents shall not be responsible for the accuracy or completeness of electronic copies of this plan sheet.

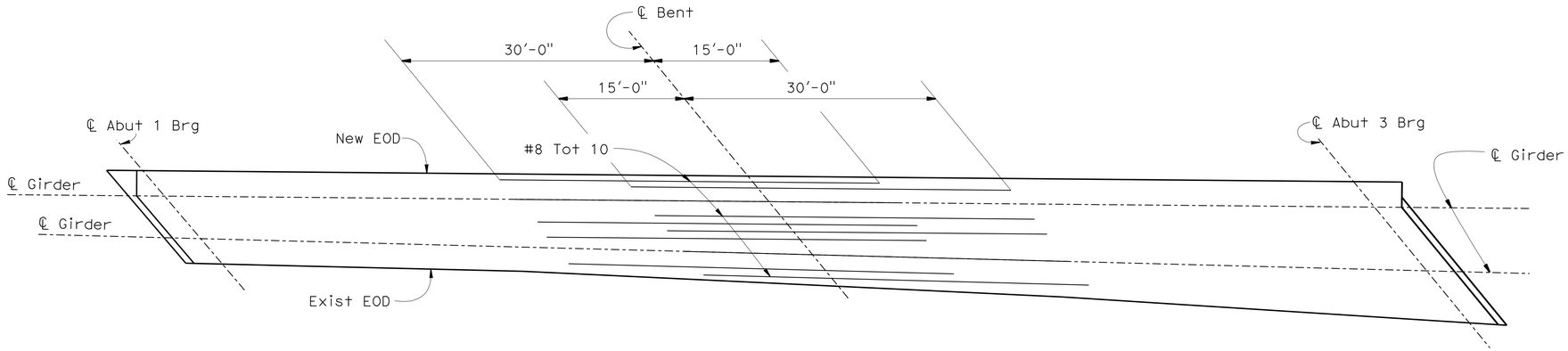

ADDITIONAL TOP REINFORCEMENT - LEFT WIDEN

1/8" = 1'-0"

NOTE:

1. No splices allowed in additional top deck reinforcements.

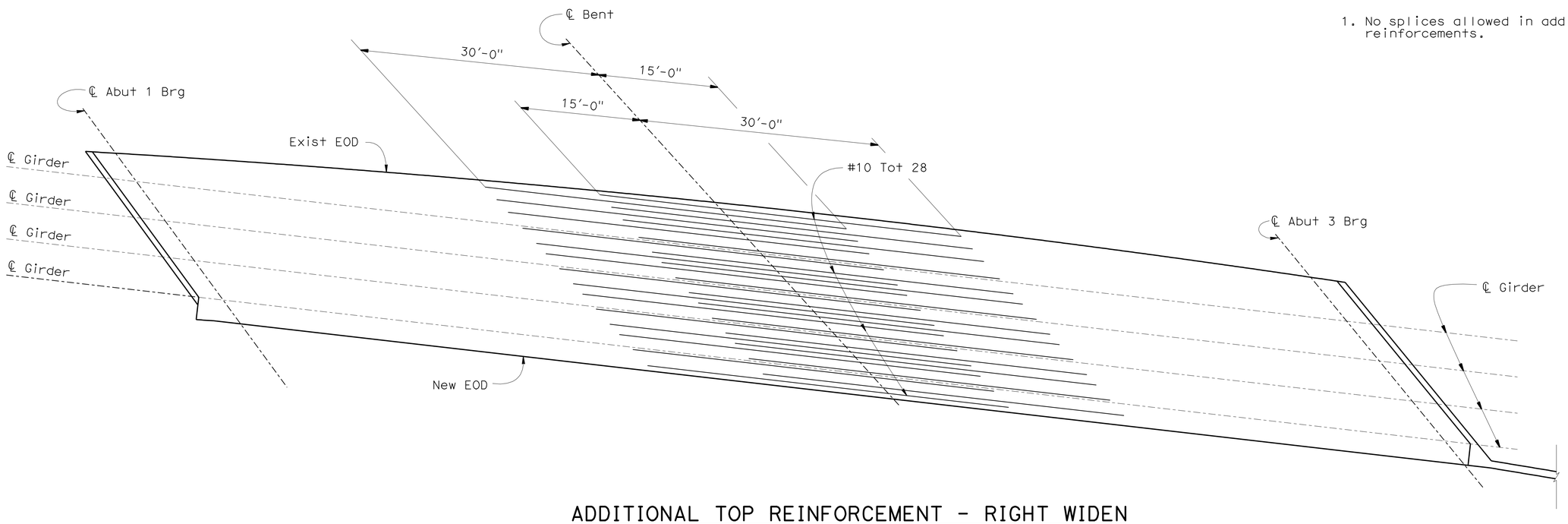

ADDITIONAL TOP REINFORCEMENT - RIGHT WIDEN

1/8" = 1'-0"

NOTE:
THE CONTRACTOR SHALL VERIFY ALL CONTROLLING FIELD DIMENSIONS BEFORE ORDERING OR FABRICATING ANY MATERIAL.

	BY	CHECKED
DESIGN	K. Kim	G. Matthews
DETAILS	M. Kingra / P. Perez	K. Kim
QUANTITIES	K. Kim	K. Ghosh

STATE OF CALIFORNIA
DEPARTMENT OF TRANSPORTATION

DIVISION OF ENGINEERING SERVICES
STRUCTURE DESIGN
DESIGN BRANCH 21

BRIDGE NO. 53-1009
POST MILE 21.92

ATLANTIC BLVD UC (WIDEN)
GIRDER REINFORCEMENT

STRUCTURES DESIGN DETAIL SHEET (ENGLISH) (REV. 09-01-10)

ORIGINAL SCALE IN INCHES FOR REDUCED PLANS 0 1 2 3

UNIT: 3623
PROJECT NUMBER & PHASE: 0700020869-1
CONTRACT NO.: 202111

DISREGARD PRINTS BEARING EARLIER REVISION DATES → 08/28/10 10/01/10 03/01/11

REVISION DATES

SHEET 21 OF 33

FILE => 53-1009-1-gir_reinf.dgn

USERNAME => s124496 DATE PLOTTED => 28-JUN-2011 TIME PLOTTED => 20:37

DIST	COUNTY	ROUTE	POST MILES TOTAL PROJECT	SHEET No.	TOTAL SHEETS
07	LA	710	17.2/26.4	1417	1507

REGISTERED CIVIL ENGINEER 03/01/11 DATE

6-27-11
PLANS APPROVAL DATE

REGISTERED PROFESSIONAL ENGINEER CHUNG-YUAN WEN No. C 50690 Exp. 09/30/11 CIVIL STATE OF CALIFORNIA

The State of California or its officers or agents shall not be responsible for the accuracy or completeness of electronic copies of this plan sheet.

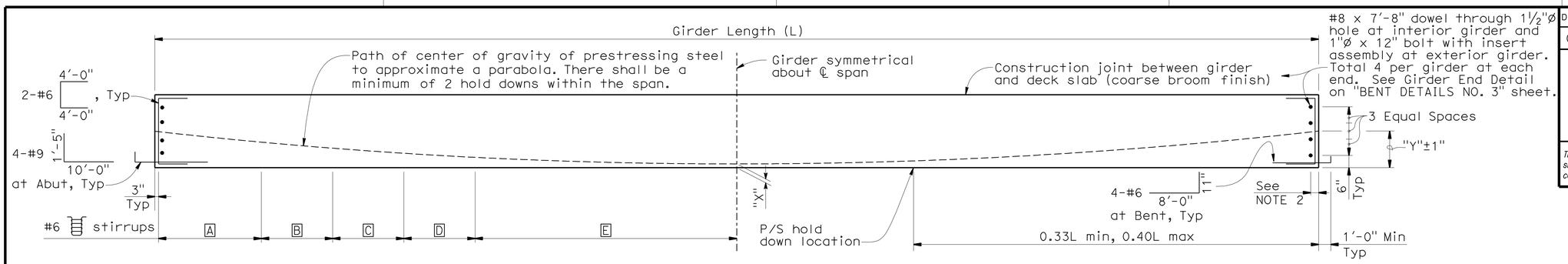

GIRDER ELEVATION

NO SCALE

Location	A	B	C	D	E
G1 - G4	12 @ 3"	9 @ 4"	12 @ 6"	12 @ 12"	18" Max
G5 - G12	12 @ 3"	9 @ 4"	12 @ 6"	12 @ 12"	18" Max

Location	Length (L) (in)	"X" (in)	Jacking Force (P) (kips)	"Y" (in)	Concrete Strength (ksi)		Midspan Dead Load Deflection (in)	
					f'_{ci}	f'_c	Deck	Rail
G1	851.75	6.00	1200	18.00	5	7	1.00	0.10
G2	862.25	6.00	1200	18.00	5	7	1.00	0.10
G3	853.25	6.00	1200	18.00	5	7	1.00	0.10
G4	865.75	6.00	1200	18.00	5	7	1.00	0.10
G5	1039.00	6.00	1200	18.00	5	7	1.00	0.10
G6	1052.25	6.00	1200	18.00	5	7	1.00	0.10
G7	1065.25	6.00	1200	18.00	5	7	1.25	0.10
G8	1078.50	6.00	1500	18.00	6	8.5	1.50	0.10
G9	972.75	6.00	1200	18.00	5	7	1.00	0.10
G10	966.00	6.00	1200	18.00	5	7	1.00	0.10
G11	959.25	6.00	1200	18.00	5	7	1.00	0.10
G12	952.50	6.00	1200	18.00	5	7	1.00	0.10

NOTES:

1. Harped strands may be bundled in groups consisting of 3 vertically, 2 horizontally, and separated at the ends.
2. ℄ hole to be placed parallel to ℄ Bent / ℄ Abut Bearing, see "ABUTMENT DETAILS NO. 1" and "BENT DETAILS NO. 3" sheets for the details.

PRESTRESSING NOTES

1. Jacking Force (P):
   The Jacking Force required at the point of control along the span.
   The Jacking Force does not include any fabrication specific losses.
2. Concrete Strength:
   f'_{ci} is at time of initial stressing.
   f'_c is at 28 days.
3. Deflection components are informational and will be used to set screed line elevations.
4. Screed line elevations for deck concrete will be determined by the Engineer.

NOTE:
THE CONTRACTOR SHALL VERIFY ALL CONTROLLING FIELD DIMENSIONS BEFORE ORDERING OR FABRICATING ANY MATERIAL.

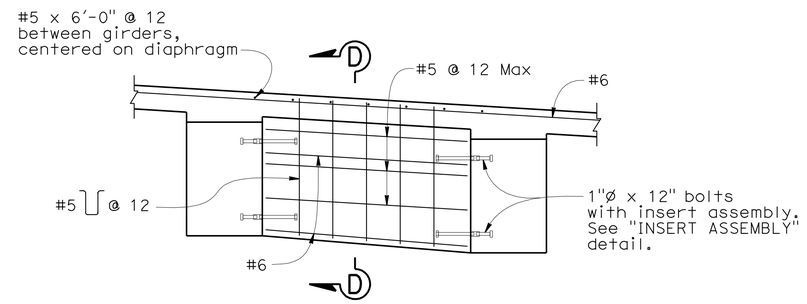

INTERMEDIATE DIAPHRAGM

No Scale

(Lt Bridge shown, Rt Bridge similar)

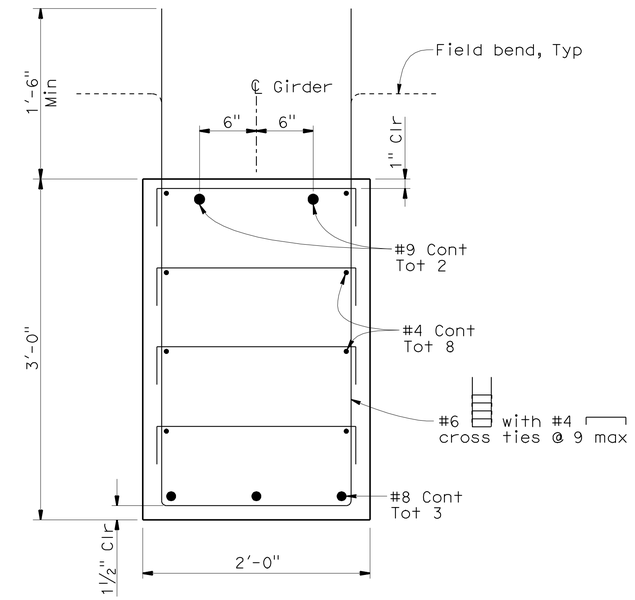

TYPICAL GIRDER SECTION

1½" = 1'-0"

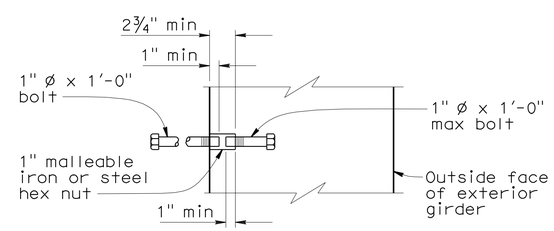

INSERT ASSEMBLY

No Scale

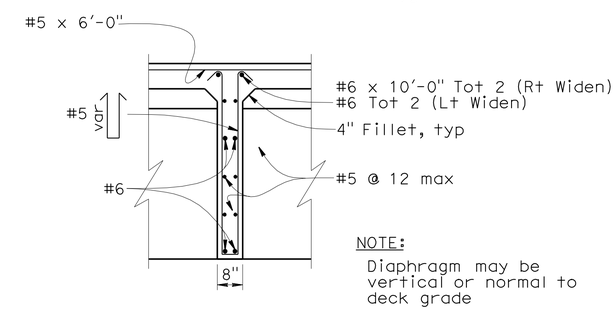

NOTE:
Diaphragm may be vertical or normal to deck grade

SECTION D-D

No Scale

DESIGN	BY K. Kim	CHECKED G. Matthews	
DETAILS	BY M. Kingra /J. Valencia	CHECKED K. Kim	
QUANTITIES	BY K. Kim	CHECKED K. Ghosh	

STATE OF CALIFORNIA
DEPARTMENT OF TRANSPORTATION

DIVISION OF ENGINEERING SERVICES
STRUCTURE DESIGN
DESIGN BRANCH 21

BRIDGE NO. 53-1009
POST MILE 21.92

ATLANTIC BLVD UC (WIDEN)
PC/PS GIRDER DETAILS

STRUCTURES DESIGN DETAIL SHEET (ENGLISH) (REV. 09-01-10)

ORIGINAL SCALE IN INCHES FOR REDUCED PLANS 0 1 2 3

UNIT: 3623
PROJECT NUMBER & PHASE: 0700020869-1
CONTRACT NO.: 202111

DISREGARD PRINTS BEARING EARLIER REVISION DATES
REVISION DATES 8/28/10 10/04/10 03/01/11

SHEET 22 OF 33

FILE => 53-1009-m-gdt.dgn

USERNAME => s124496 DATE PLOTTED => 28-JUN-2011 TIME PLOTTED => 20:37

DIST	COUNTY	ROUTE	POST MILES TOTAL PROJECT	SHEET No.	TOTAL SHEETS
07	LA	710	17.2/26.4	1418	1507

REGISTERED CIVIL ENGINEER 03/01/11 DATE

6-27-11
PLANS APPROVAL DATE

REGISTERED PROFESSIONAL ENGINEER CHUNG-YUAN WEN No. C 50690 Exp. 09/30/11 CIVIL STATE OF CALIFORNIA

The State of California or its officers or agents shall not be responsible for the accuracy or completeness of electronic copies of this plan sheet.

NOTE:

1. Pile Layout, see "ABUTMENT PILE LAYOUT" sheet.

LEGEND:

Vertical Pile

Battered Pile

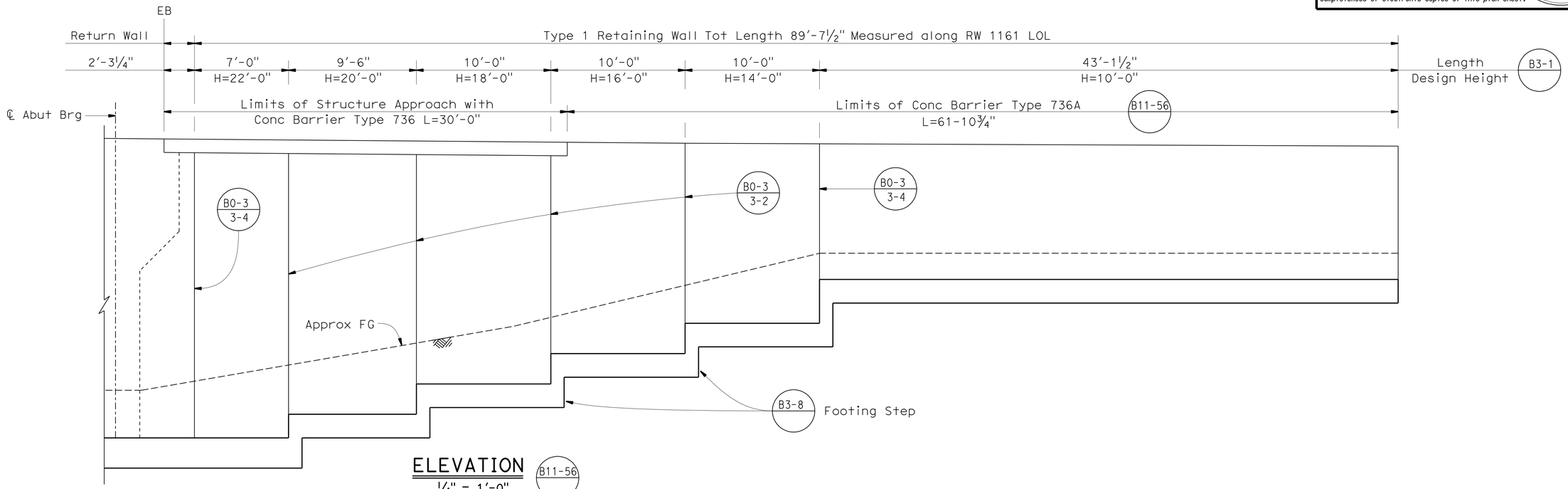

ELEVATION

B11-56

¼" = 1'-0"

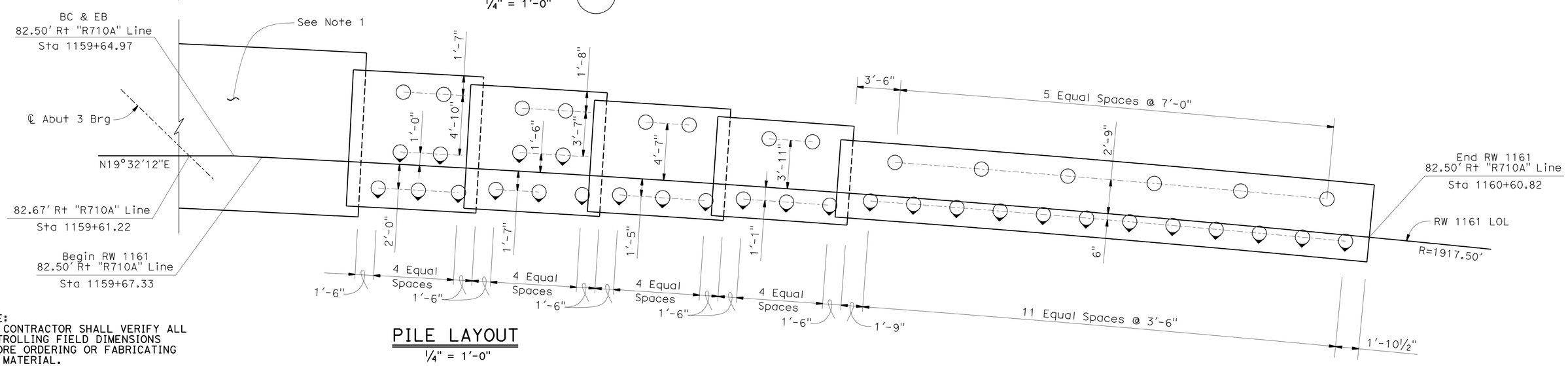

PILE LAYOUT

¼" = 1'-0"

NOTE:
THE CONTRACTOR SHALL VERIFY ALL CONTROLLING FIELD DIMENSIONS BEFORE ORDERING OR FABRICATING ANY MATERIAL.

	BY	CHECKED
DESIGN	K. Kim	G. Matthews
DETAILS	M. Kingra / P. Perez	K. Kim
QUANTITIES	K. Kim	K. Ghosh

STATE OF CALIFORNIA
DEPARTMENT OF TRANSPORTATION

DIVISION OF ENGINEERING SERVICES
STRUCTURE DESIGN
DESIGN BRANCH 21

BRIDGE NO. 53-1009
POST MILE 21.92

ATLANTIC BLVD UC (WIDEN)
RETAINING WALL NO. 1161

STRUCTURES DESIGN DETAIL SHEET (ENGLISH) (REV. 09-01-10)

ORIGINAL SCALE IN INCHES FOR REDUCED PLANS 0 1 2 3

UNIT: 3623
PROJECT NUMBER & PHASE: 0700020869-1
CONTRACT NO.: 202111

DISREGARD PRINTS BEARING EARLIER REVISION DATES

REVISION DATES: 08/26/10 10/01/10 11/23/10

SHEET 23 OF 33

FILE => 53-1009-n-rw_lo.dgn

USERNAME => s124496 DATE PLOTTED => 28-JUN-2011 TIME PLOTTED => 20:38

RELEASED 11-10-97

DIST	COUNTY	ROUTE	POST MILES TOTAL PROJECT	SHEET No.	TOTAL SHEETS
07	LA	710	17.2/26.4	1419	1507

REGISTERED CIVIL ENGINEER 03/01/11 DATE

6-27-11
PLANS APPROVAL DATE

REGISTERED PROFESSIONAL ENGINEER CHUNG-YUAN WEN No. C 50690 Exp. 09/30/11 CIVIL STATE OF CALIFORNIA

The State of California or its officers or agents shall not be responsible for the accuracy or completeness of electronic copies of this plan sheet.

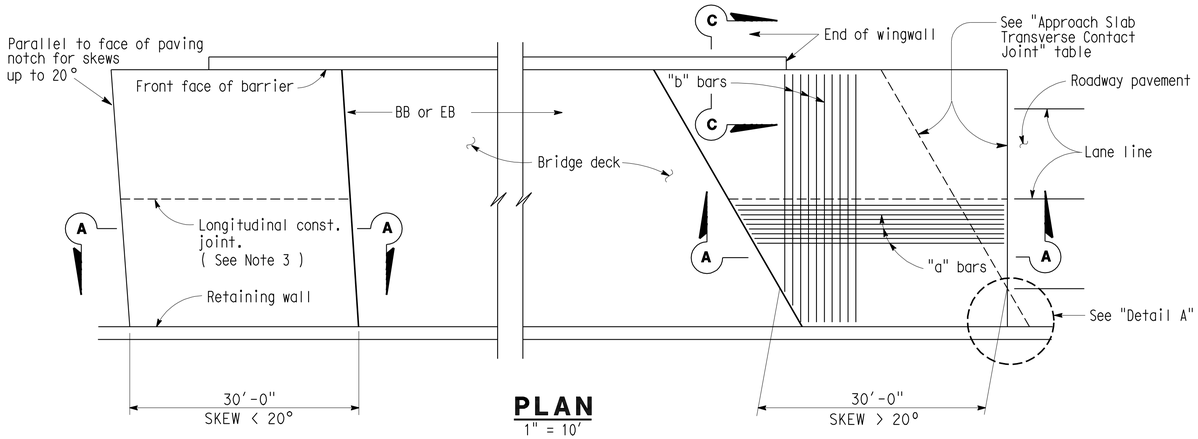

PLAN
1" = 10'

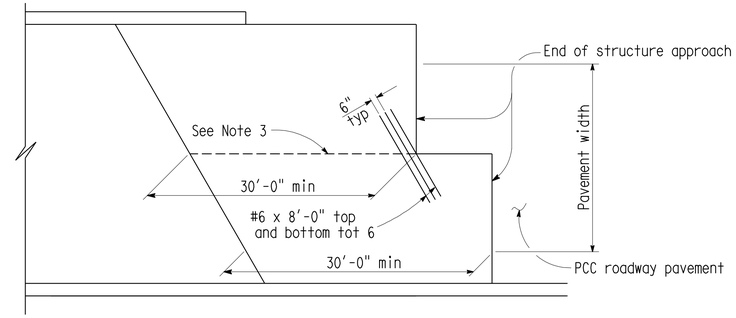

STRUCTURE APPROACH - END STAGGER DETAIL
No Scale

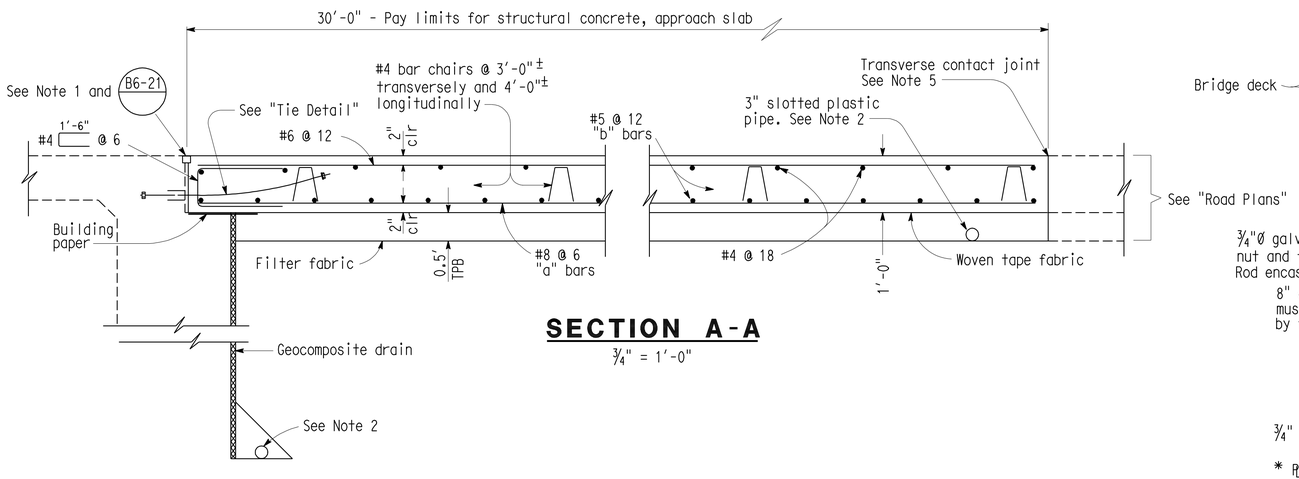

SECTION A-A
¾" = 1'-0"

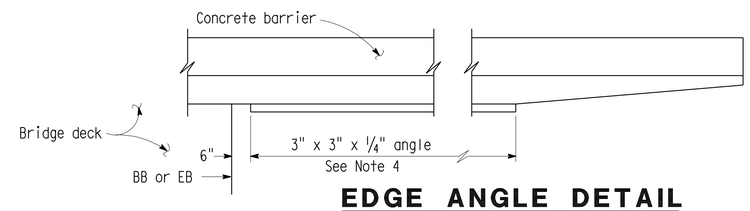

EDGE ANGLE DETAIL
½" = 1'-0"

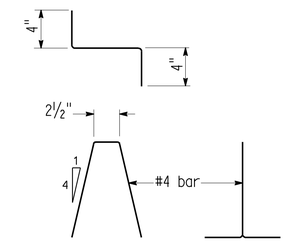

BAR CHAIR DETAIL
1½" = 1'-0"

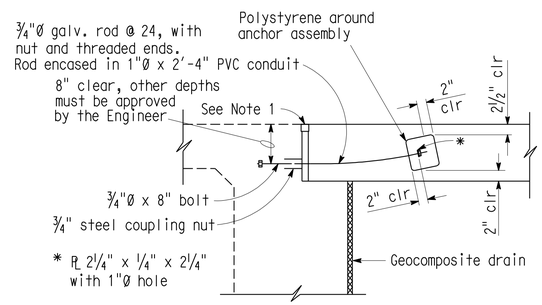

TIE DETAIL
¾" = 1'-0"

APPROACH SLAB TRANSVERSE CONTACT JOINT		
APPROACH SKEW	WITH AC ROADWAY PAVEMENT	WITH PCC ROADWAY PAVEMENT
< 20°	Parallel to face of paving notch	Parallel to face of paving notch
20° - 45°	Parallel to face of P N use (Detail A)	Stagger lines 24' to 36' apart
> 45°	Parallel to face of P N use (Detail A)	Stagger at each lane line

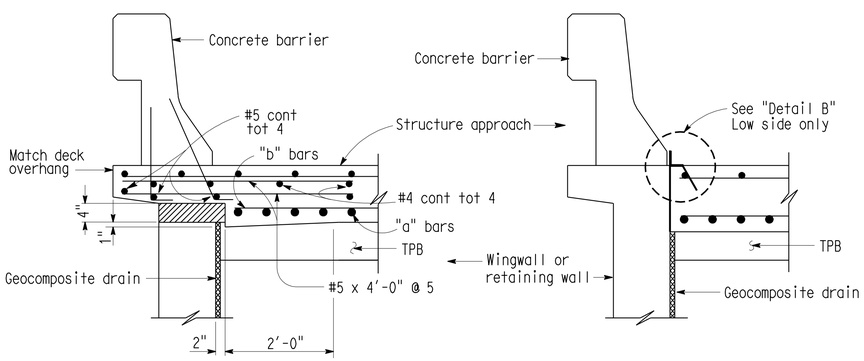

TYPE E-1 TYPE E-2

SECTION C-C
¾" = 1'-0"
(Type E-1 to be used, unless otherwise shown on plans)

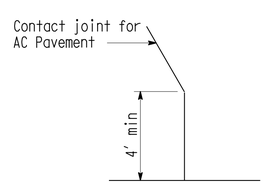

DETAIL A
No Scale

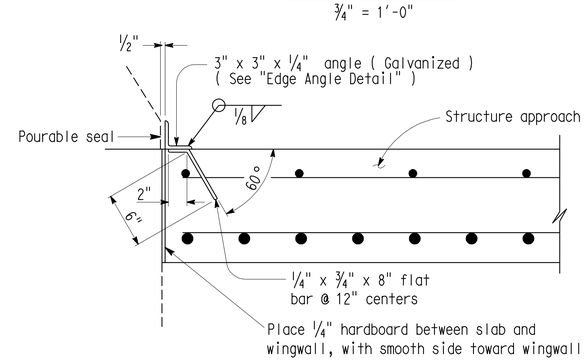

DETAIL B
1½" = 1'-0"

NOTES:

1. For details not noted or shown, see Structure Plans.
2. For drainage details, see "Structure Approach Drainage Details" sheet.
3. Longitudinal construction joints, when permitted by the Engineer, shall be located on lane lines.
4. End angle at beginning of barrier transition, end of wingwall or end of structure approach, as applicable
5. For transverse contact joint with new PCC paving, refer to revised Standard Plan P10.
6. At the contractor's option, approach slab transverse reinforcement may be placed parallel to paving notch. Spacing of transverse reinforcement is measured along ℄ roadway.

Polystyrene to be removed.

EXPEDITE

STANDARD DRAWING
FILE NO. XS 22-24
APPROVAL DATE 8/92

STATE OF CALIFORNIA DEPARTMENT OF TRANSPORTATION

DIVISION OF ENGINEERING SERVICES

BRIDGE NO. 53-1009
POST MILE 21.92

ATLANTIC BLVD UC (WIDEN)
STRUCTURE APPROACH TYPE N(30D)

DS OSD 2147A (ENGLISH STANDARD DRAWING "XS" BORDER REV. (02-02-11)

ORIGINAL SCALE IN INCHES FOR REDUCED PLANS 0 1 2 3

UNIT: 3623
PROJECT NUMBER & PHASE: 0700020869-1 CONTRACT NO.: 202111

DISREGARD PRINTS BEARING EARLIER REVISION DATES

REVISION DATES 03/01/11

SHEET 24 OF 33

FILE => 53-1009-s-str_ap_1.dgn

XS22224.DGN

USERNAME => s124196 DATE PLOTTED => 28-JUN-2011 TIME PLOTTED => 20:38

DIST	COUNTY	ROUTE	POST MILES TOTAL PROJECT	SHEET No.	TOTAL SHEETS
07	LA	710	17.2/26.4	1420	1507

REGISTERED CIVIL ENGINEER 03/01/11 DATE

6-27-11
PLANS APPROVAL DATE

REGISTERED PROFESSIONAL ENGINEER CHUNG-YUAN WEN No. C 50690 Exp. 09/30/11 CIVIL STATE OF CALIFORNIA

The State of California or its officers or agents shall not be responsible for the accuracy or completeness of electronic copies of this plan sheet.

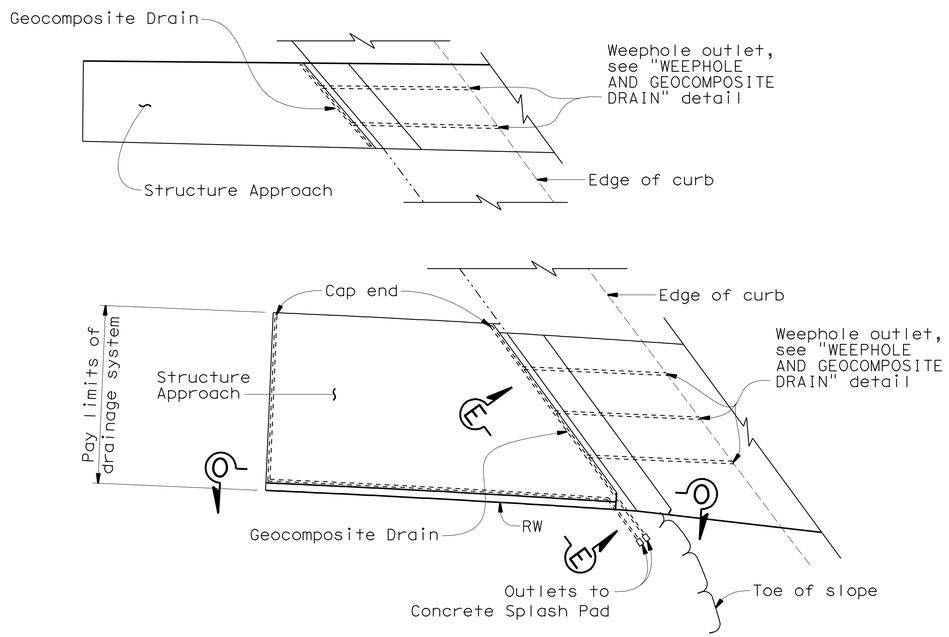

TYPICAL PLAN

1" = 10'
(Abutment 1 shown, Abutment 3 similar)

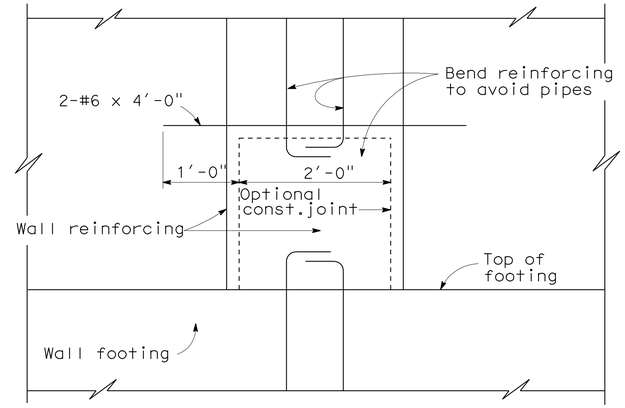

SECTION H-H

1"=1'-0"

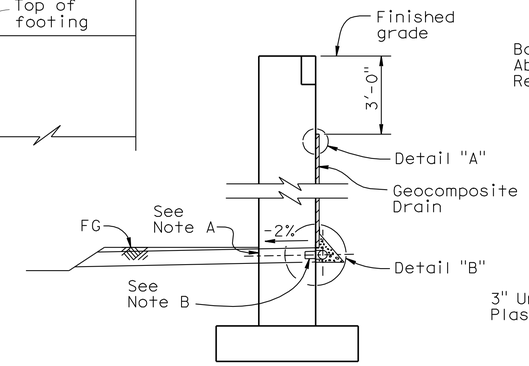

WALL SECTION

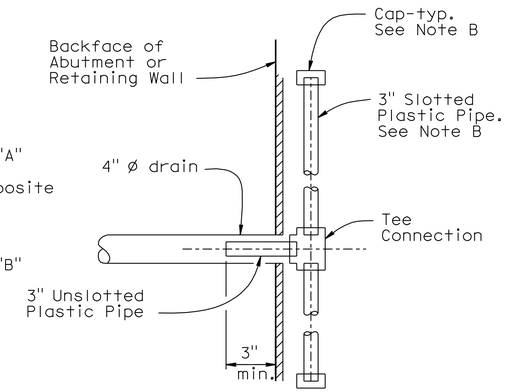

SECTION A-A

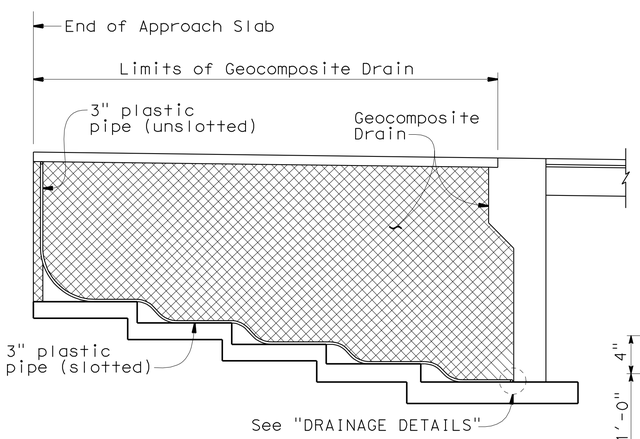

SECTION O-O

1/8" = 1'-0"

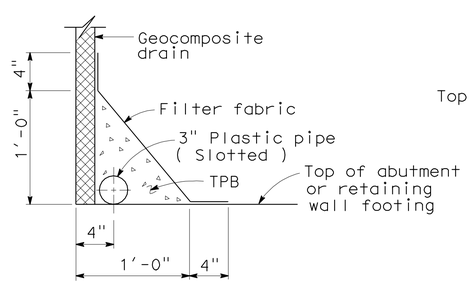

DRAINAGE DETAILS

No Scale

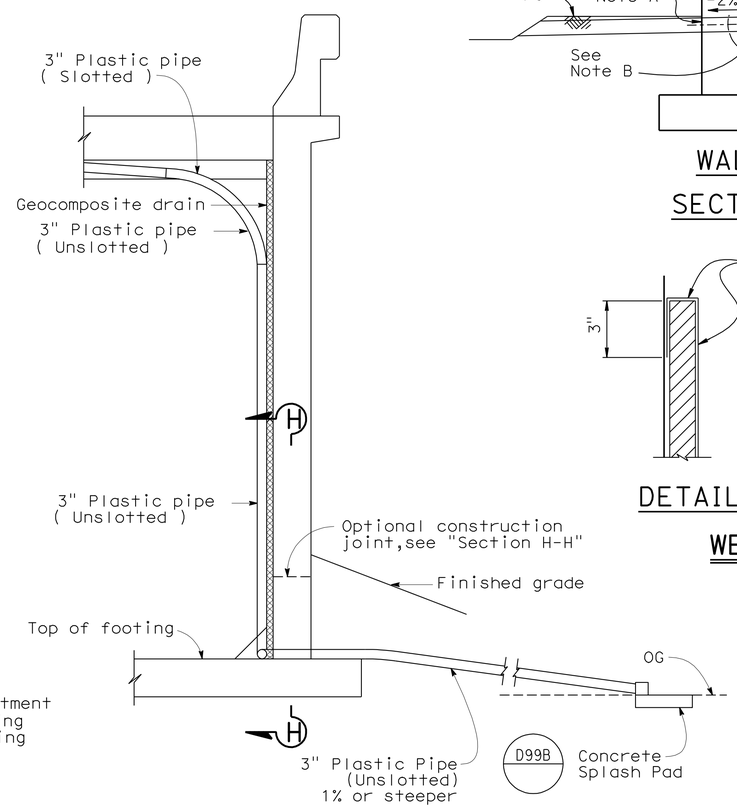

SECTION E-E

1/2"=1'-0"

NOTE: Bends and junctions in 3" plastic pipe are 30" radius min.

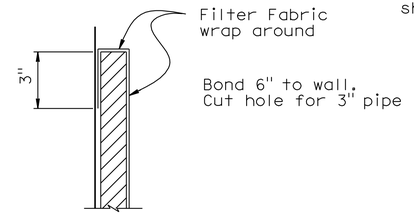

DETAIL "A"

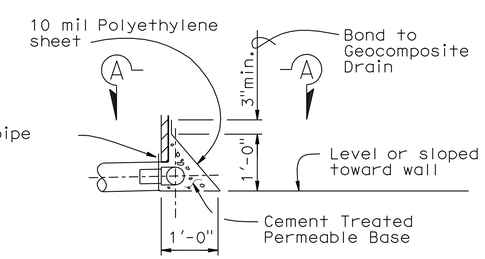

DETAIL "B"

WEEP HOLE AND GEOCOMPOSITE DRAIN

ALTERNATIVE TO BRIDGE DETAIL BO-3 / 3-1

Notes:

A. 4" ø drains at intermediate sag points and at 25' max center to center (9' c-c for Type 3 and 9'-3" c-c for Type 4 retaining walls).
For walls adjacent to sidewalks or curbs, provide 4" cast iron or asbestos cement pipe under the sidewalk to discharge through curb face.
Exposed wall drains shall be located 3"± above finished grade.

B. Geocomposite drain, cement treated permeable base, and 3"ø slotted plastic pipe continuous behind retaining wall or abutment. Cap ends of pipe. Provide "Tee" connection at each 4" ø drain.

C. Connect the low end of plastic pipe to the main outlet pipe as apprlicable.

NOTE:
THE CONTRACTOR SHALL VERIFY ALL CONTROLLING FIELD DIMENSIONS BEFORE ORDERING OR FABRICATING ANY MATERIAL.

	BY	CHECKED
DESIGN	K. Kim	G. Matthews
DETAILS	M. Kingra / P. Perez	K. Kim
QUANTITIES	K. Kim	K. Ghosh

STATE OF CALIFORNIA
DEPARTMENT OF TRANSPORTATION

DIVISION OF ENGINEERING SERVICES
STRUCTURE DESIGN
DESIGN BRANCH 21

BRIDGE NO. 53-1009
POST MILE 21.92

ATLANTIC BLVD UC (WIDEN)
STRUCTURE APPROACH DRAINAGE DETAILS

STRUCTURES DESIGN DETAIL SHEET (ENGLISH) (REV. 09-01-10)

ORIGINAL SCALE IN INCHES FOR REDUCED PLANS 0 1 2 3

UNIT: 3623
PROJECT NUMBER & PHASE: 0700020869-1
CONTRACT NO.: 202111

DISREGARD PRINTS BEARING EARLIER REVISION DATES
REVISION DATES 08/31/10 09/01/10 03/01/11
SHEET 25 OF 33

FILE => 53-1009-u-sadd.dgn

USERNAME => s124496 DATE PLOTTED => 28-JUN-2011 TIME PLOTTED => 20:38

DIST	COUNTY	ROUTE	POST MILES TOTAL PROJECT	SHEET No	TOTAL SHEETS
07	LA	710	17.2/26.4	1421	1507

Tatjana Halda 12-14-10
REGISTERED CIVIL ENGINEER

6-27-11
PLANS APPROVAL DATE

REGISTERED PROFESSIONAL ENGINEER Tatjana L. Halda No. C68293 Exp. 9-30-11 CIVIL STATE OF CALIFORNIA

The State of California or its officers or agents shall not be responsible for the accuracy or completeness of electronic copies of this plan sheet.

This LOTB sheet was prepared in accordance with the Caltrans Soil & Rock Logging, Classification, & Presentation Manual (June 2010).

BENCH MARK

RTK 722
PD: Fd Pk/Tin NB 710 shldr, 16.5′
S/Atlantic Bl brdg rail
62.9′ Rt CL Rte 710
Sta 1156+88.4
N 1821485.5130
E 6508148.8370
Elev = 174.5 ft

PRHV 8388
PD: Fd bm # 11977, L & DPW
tag on CB 1′ N/ECR
SW cor Atlantic/Bandini
145.9′ Rt CL Rte 710
Sta 1160+39.31
N 1821771.6550
E 6508336.6200
Elev = 151.4 ft

PRHV 812
PD: Fd scr X on CB,
NB side Atlantic Bl
90′ W/710 onramp brdg
164.6′ Lt CL Rte 710
Sta 1155+92.30
N 1821440.2330
E 6507905.1420
Elev = 153.1 ft

PRHV 7613
PD: Fd Pk SB 710 shldr, 55′
S/Atlantic Bl brdg rail
-55.215′ Lt CL Rte 710
55.2′ Lt CL Rte 710
Sta 1156+13.36
N 1821439.5580
E 6508016.7320
Elev = 182.3 ft

PRHV 7815
PD: Fd 2x2 W shldr 710sb
off ramp to Atlantic Blvd.
behind MBGR, 15′ N/brdg rail
88.9′ Lt CL Rte 710
Sta 1162+09.36
N 1822026.9130
E 6508202.6830
Elev = 174.5 ft

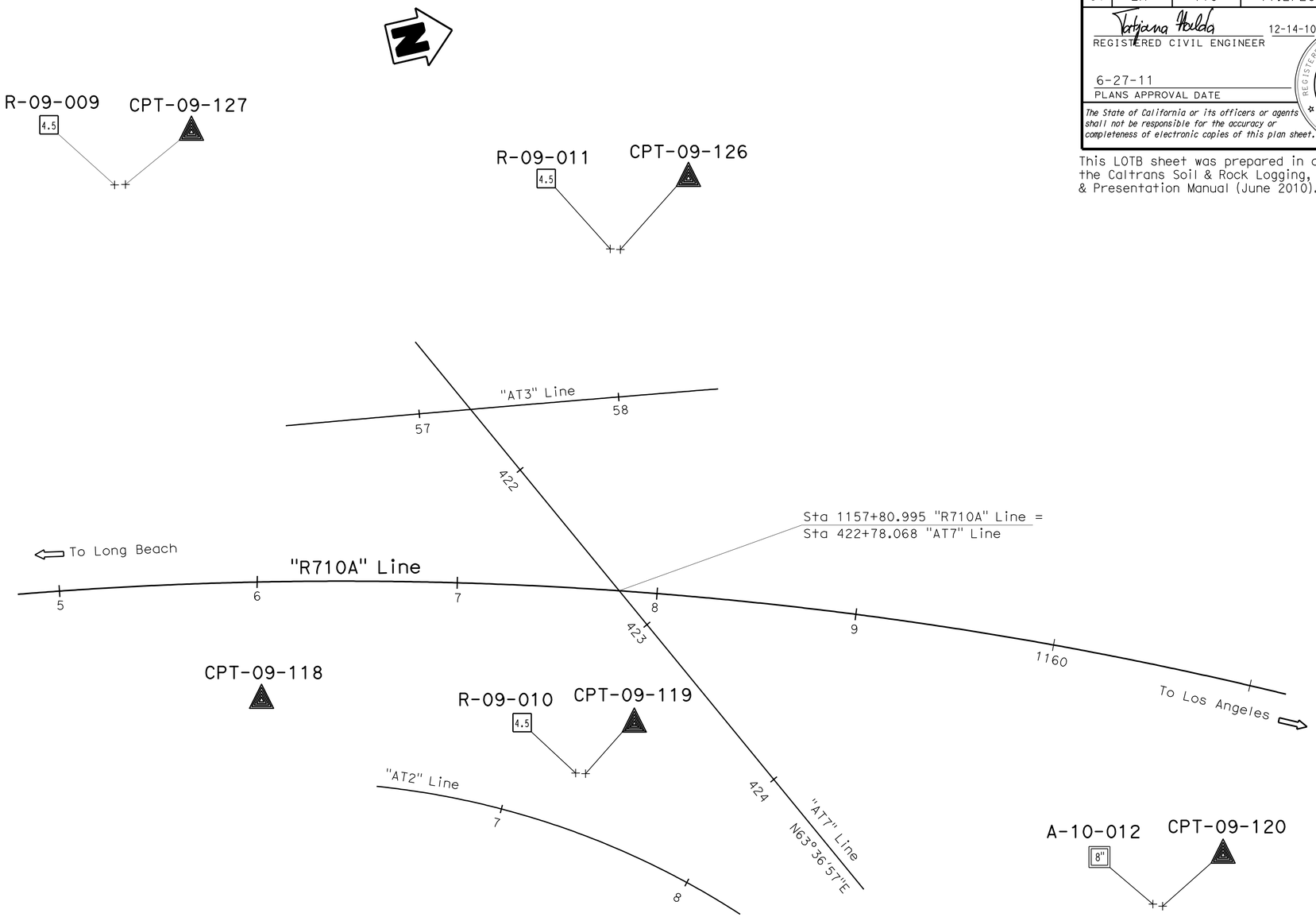

PLAN
1" = 30′

ENGINEERING SERVICES	GEOTECHNICAL SERVICES	STATE OF CALIFORNIA DEPARTMENT OF TRANSPORTATION	DIVISION OF ENGINEERING SERVICES STRUCTURE DESIGN DESIGN BRANCH	BRIDGE NO. 53-1009 POST MILES 21.92	ATLANTIC BLVD UC (WIDEN) LOG OF TEST BORINGS 1 OF 8
FUNCTIONAL SUPERVISOR NAME: S. Karimi	DRAWN BY: F. Nguyen 10/10 CHECKED BY: K. Lai	FIELD INVESTIGATION BY: T. Halda			

OGS CIVIL LOG OF TEST BORINGS SHEET

ORIGINAL SCALE IN INCHES FOR REDUCED PLANS 0 1 2 3

CU 07
EA 202111

DISREGARD PRINTS BEARING EARLIER REVISION DATES 12-14-10

REVISION DATES

SHEET 26 OF 33

FILE => 53-1009-z-lotb01.dgn

USERNAME => s124436 DATE PLOTTED => 28-JUN-2011 TIME PLOTTED => 20:38

DIST	COUNTY	ROUTE	POST MILES TOTAL PROJECT	SHEET No	TOTAL SHEETS
07	LA	710	17.2/26.4	1422	1507

Tatjana Halda 12-14-10
REGISTERED CIVIL ENGINEER

6-27-11
PLANS APPROVAL DATE

REGISTERED PROFESSIONAL ENGINEER
Tatjana L. Halda
No. C68293
Exp. 9-30-11
CIVIL
STATE OF CALIFORNIA

The State of California or its officers or agents shall not be responsible for the accuracy or completeness of electronic copies of this plan sheet.

This LOTB sheet was prepared in accordance with the Caltrans Soil & Rock Logging, Classification, & Presentation Manual (June 2010).

FOR PLAN VIEW, SEE
"LOG OF TEST BORINGS" 1 OF 8

Note: No ground water encountered during field investigation.

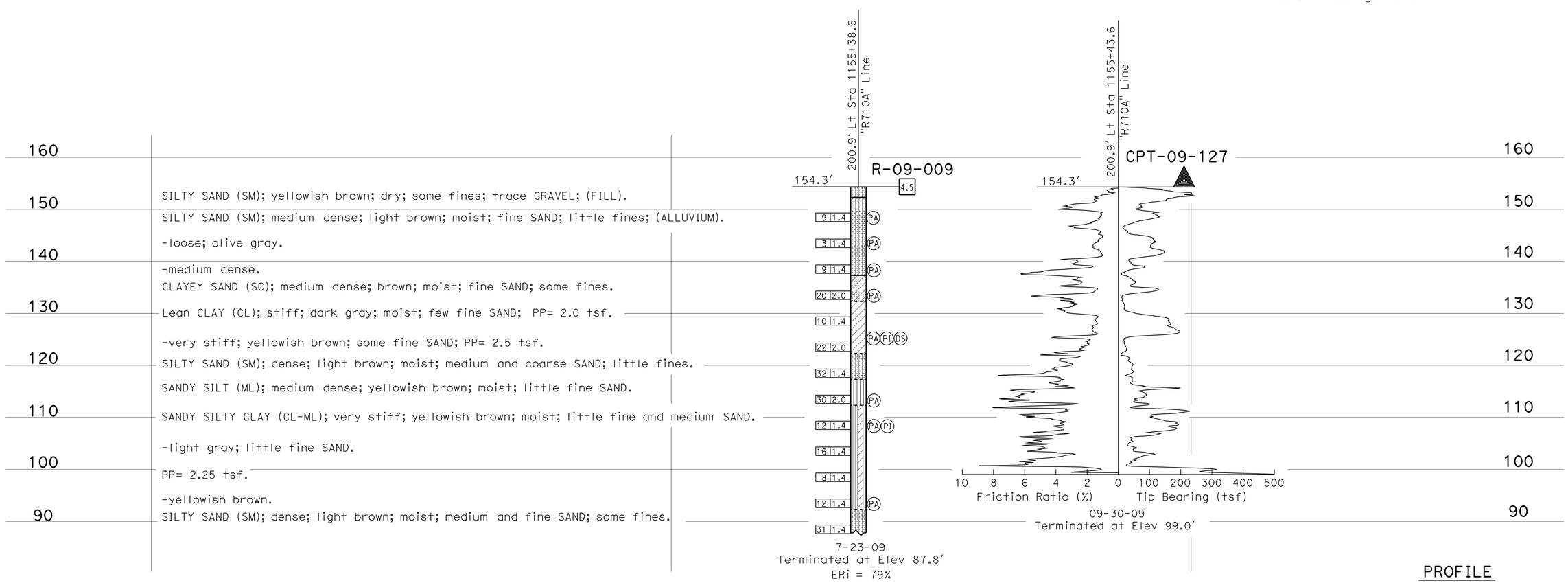

PROFILE
Horiz: 1" = 1'
Vert: 1" = 10'

ENGINEERING SERVICES	GEOTECHNICAL SERVICES	STATE OF CALIFORNIA DEPARTMENT OF TRANSPORTATION	DIVISION OF ENGINEERING SERVICES STRUCTURE DESIGN	BRIDGE NO. 53-1009	ATLANTIC BLVD UC (WIDEN)
FUNCTIONAL SUPERVISOR	DRAWN BY: C. Christian/ F. Nguyen 10/10	FIELD INVESTIGATION BY:	DESIGN BRANCH	POST MILES 21.92	LOG OF TEST BORINGS 2 OF 8
NAME: S. Karimi	CHECKED BY: K. Lai	T. Halda			

OGS CIVIL LOG OF TEST BORINGS SHEET

ORIGINAL SCALE IN INCHES FOR REDUCED PLANS 0 1 2 3

CU 07
EA 202111

DISREGARD PRINTS BEARING EARLIER REVISION DATES → 12-06-10 12-14-10

REVISION DATES

SHEET 27 OF 33

FILE => 53-1009-z-lotb02.dgn

USERNAME => s124496 DATE PLOTTED => 28-JUN-2011 TIME PLOTTED => 20:38

DIST	COUNTY	ROUTE	POST MILES TOTAL PROJECT	SHEET No	TOTAL SHEETS
07	LA	710	17.2/26.4	1423	1507

Tatjana Halda 12-14-10
REGISTERED CIVIL ENGINEER

6-27-11
PLANS APPROVAL DATE

REGISTERED PROFESSIONAL ENGINEER Tatjana L. Halda No. C68293 Exp. 9-30-11 CIVIL STATE OF CALIFORNIA

The State of California or its officers or agents shall not be responsible for the accuracy or completeness of electronic copies of this plan sheet.

This LOTB sheet was prepared in accordance with the Caltrans Soil & Rock Logging, Classification, & Presentation Manual (June 2010).

FOR PLAN VIEW, SEE
"LOG OF TEST BORINGS" 1 OF 8

Note: No ground water encountered during field investigation.

PROFILE
Horiz: 1" = 20'
Vert: 1" = 10'

ENGINEERING SERVICES	GEOTECHNICAL SERVICES	STATE OF CALIFORNIA DEPARTMENT OF TRANSPORTATION	DIVISION OF ENGINEERING SERVICES STRUCTURE DESIGN DESIGN BRANCH	BRIDGE NO. 53-1009 POST MILES 21.92	ATLANTIC BLVD UC (WIDEN) LOG OF TEST BORINGS 3 OF 8
FUNCTIONAL SUPERVISOR NAME: S. Karimi	DRAWN BY: C. Christian/ F. Nguyen 10/10 CHECKED BY: K. Lai	FIELD INVESTIGATION BY: T. Halda			

OGS CIVIL LOG OF TEST BORINGS SHEET

ORIGINAL SCALE IN INCHES FOR REDUCED PLANS 0 1 2 3

CU 07
EA 202111

DISREGARD PRINTS BEARING EARLIER REVISION DATES 12-04-10 12-14-10

REVISION DATES

SHEET 28 OF 33

FILE => 53-1009-z-lotb03.dgn

USERNAME => s124196 DATE PLOTTED => 28-JUN-2011 TIME PLOTTED => 20:38

DIST	COUNTY	ROUTE	POST MILES TOTAL PROJECT	SHEET No	TOTAL SHEETS
07	LA	710	17.2/26.4	1424	1507

Tatjana Halda 12-14-10
REGISTERED CIVIL ENGINEER

6-27-11
PLANS APPROVAL DATE

REGISTERED PROFESSIONAL ENGINEER Tatjana L. Halda No. C68293 Exp. 9-30-11 CIVIL STATE OF CALIFORNIA

The State of California or its officers or agents shall not be responsible for the accuracy or completeness of electronic copies of this plan sheet.

This LOTB sheet was prepared in accordance with the Caltrans Soil & Rock Logging, Classification, & Presentation Manual (June 2010).

FOR PLAN VIEW, SEE
"LOG OF TEST BORINGS" 1 OF 8

Note: No ground water encountered during field investigation.

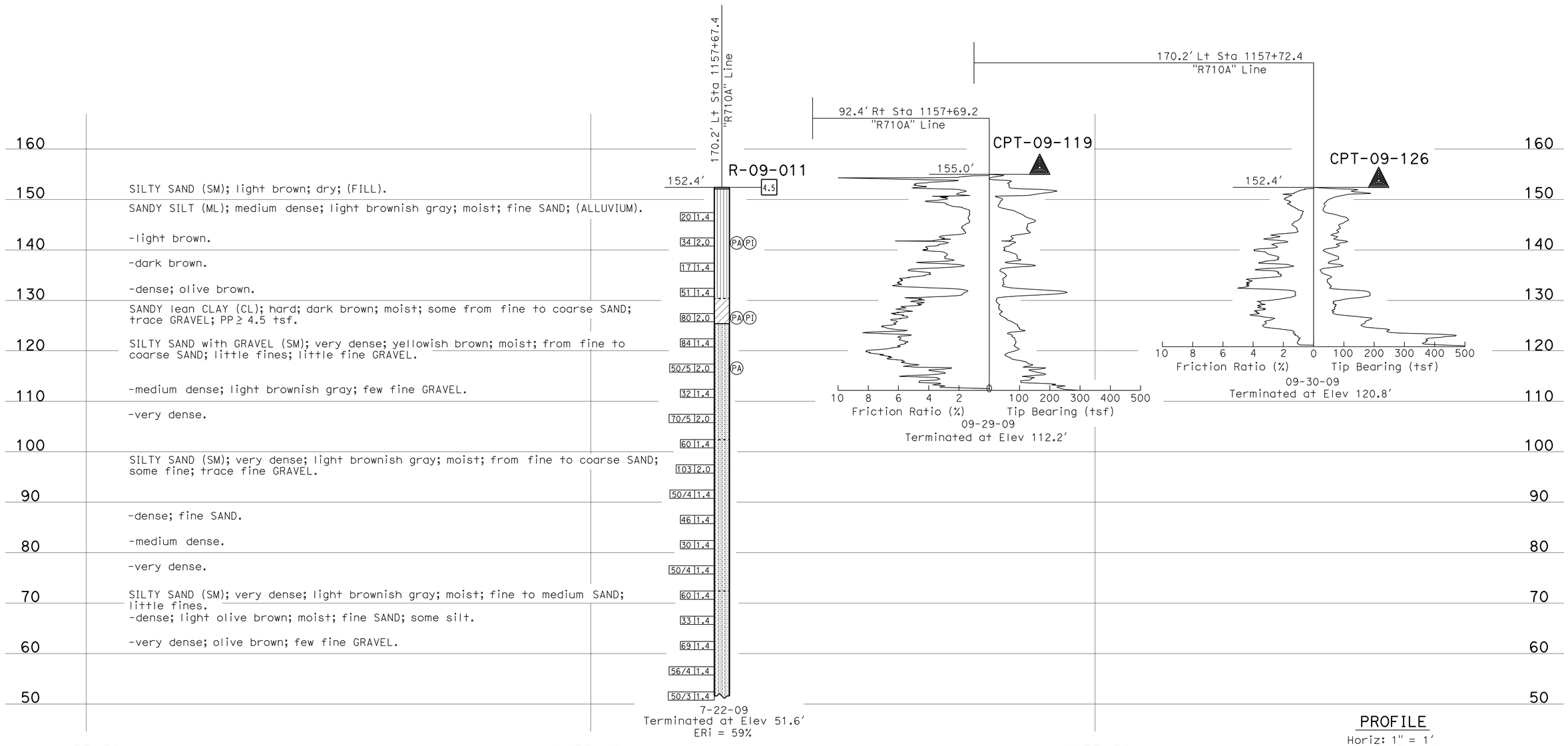

PROFILE
Horiz: 1" = 1'
Vert: 1" = 10'

ENGINEERING SERVICES	GEOTECHNICAL SERVICES	STATE OF CALIFORNIA DEPARTMENT OF TRANSPORTATION	DIVISION OF ENGINEERING SERVICES STRUCTURE DESIGN	BRIDGE NO. 53-1009	ATLANTIC BLVD UC (WIDEN)
FUNCTIONAL SUPERVISOR	DRAWN BY: C. Christian/ F. Nguyen 10/10	FIELD INVESTIGATION BY:	DESIGN BRANCH	POST MILES 21.92	LOG OF TEST BORINGS 4 OF 8
NAME: S. Karimi	CHECKED BY: K. Lai	T. Halda			

OGS CIVIL LOG OF TEST BORINGS SHEET

ORIGINAL SCALE IN INCHES FOR REDUCED PLANS 0 1 2 3

CU 07
EA 202111

DISREGARD PRINTS BEARING EARLIER REVISION DATES 12-04-10 12-14-10

REVISION DATES

SHEET 29 OF 33

FILE => 53-1009-z-lotb04.dgn

USERNAME => s124496 DATE PLOTTED => 28-JUN-2011 TIME PLOTTED => 20:38

DIST	COUNTY	ROUTE	POST MILES TOTAL PROJECT	SHEET No	TOTAL SHEETS
07	LA	710	17.2/26.4	1425	1507

Tatjana Halda 12-14-10
REGISTERED CIVIL ENGINEER

6-27-11
PLANS APPROVAL DATE

REGISTERED PROFESSIONAL ENGINEER
Tatjana L. Halda
No. C68293
Exp. 9-30-11
CIVIL
STATE OF CALIFORNIA

The State of California or its officers or agents shall not be responsible for the accuracy or completeness of electronic copies of this plan sheet.

This LOTB sheet was prepared in accordance with the Caltrans Soil & Rock Logging, Classification, & Presentation Manual (June 2010).

FOR PLAN VIEW, SEE
"LOG OF TEST BORINGS" 1 OF 8

Note: No ground water encountered during field investigation.

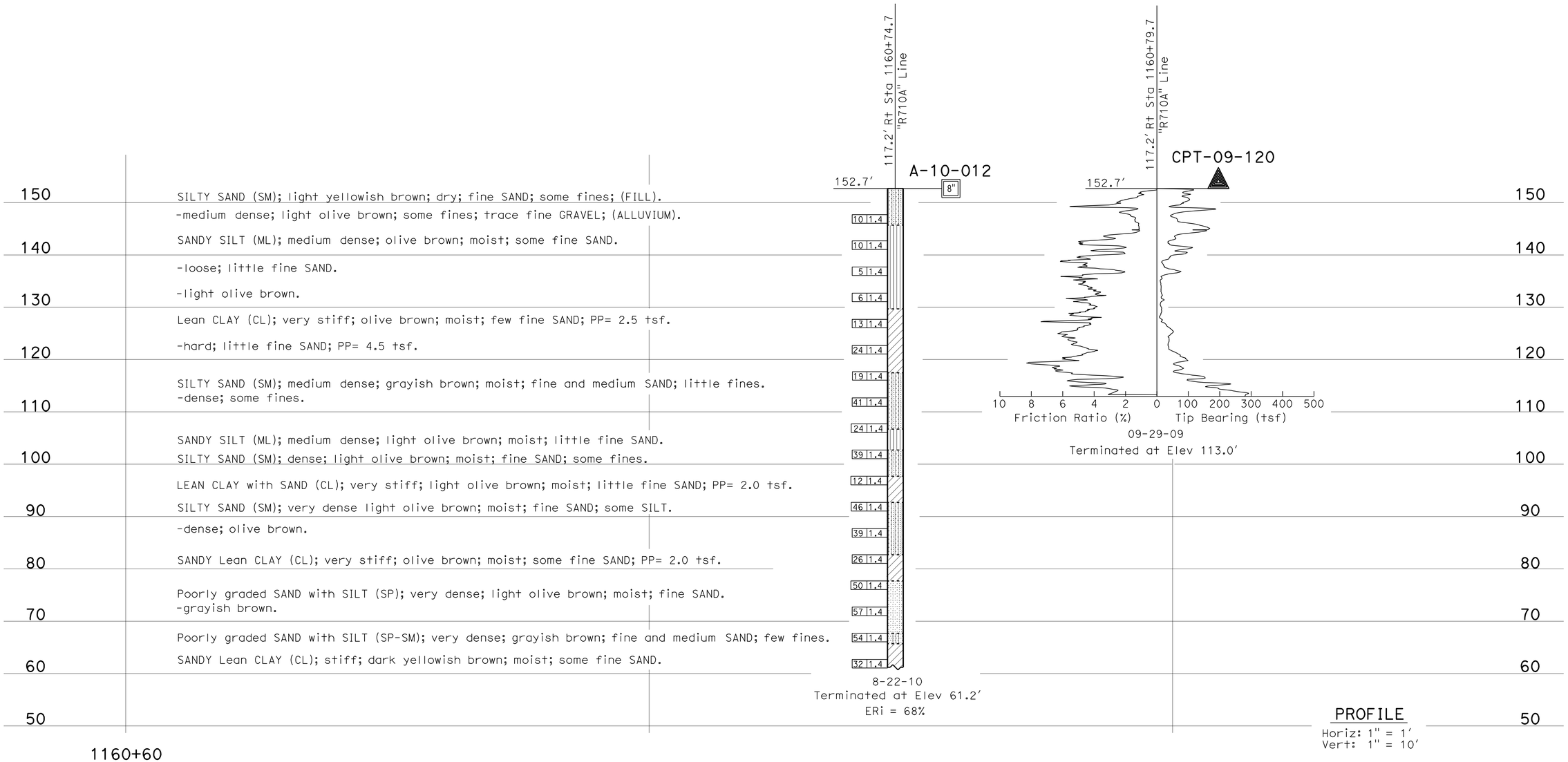

PROFILE
Horiz: 1" = 1'
Vert: 1" = 10'

ENGINEERING SERVICES	GEOTECHNICAL SERVICES	STATE OF CALIFORNIA DEPARTMENT OF TRANSPORTATION	DIVISION OF ENGINEERING SERVICES STRUCTURE DESIGN	BRIDGE NO. 53-1009	ATLANTIC BLVD UC (WIDEN)
FUNCTIONAL SUPERVISOR	DRAWN BY: C. Christian/ F. Nguyen 10/10	FIELD INVESTIGATION BY:	DESIGN BRANCH	POST MILES 21.92	LOG OF TEST BORINGS 5 OF 8
NAME: S. Karimi	CHECKED BY: K. Lai	T. Halda			

OGS CIVIL LOG OF TEST BORINGS SHEET

ORIGINAL SCALE IN INCHES FOR REDUCED PLANS 0 1 2 3

CU 07
EA 202111

DISREGARD PRINTS BEARING EARLIER REVISION DATES 12-14-10

REVISION DATES

SHEET 30 OF 33

FILE => 53-1009-z-lotb05.dgn

USERNAME => s124496 DATE PLOTTED => 28-JUN-2011 TIME PLOTTED => 20:38

REFERENCE: CALTRANS SOIL & ROCK LOGGING, CLASSIFICATION, AND PRESENTATION MANUAL (2010)

DIST	COUNTY	ROUTE	POST MILES TOTAL PROJECT	SHEET No	TOTAL SHEETS
07	LA	710	17.2/26.4	1426	1507

Tatjana Halda 12-14-10
REGISTERED CIVIL ENGINEER

6-27-11
PLANS APPROVAL DATE

REGISTERED PROFESSIONAL ENGINEER
Tatjana L. Halda
No. C68293
Exp. 9-30-11
CIVIL
STATE OF CALIFORNIA

The State of California or its officers or agents shall not be responsible for the accuracy or completeness of electronic copies of this plan sheet.

CEMENTATION

Description	Criteria
Weak	Crumbles or breaks with handling or little finger pressure.
Moderate	Crumbles or breaks with considerable finger pressure.
Strong	Will not crumble or break with finger pressure.

BOREHOLE IDENTIFICATION

Symbol	Hole Type	Description
Size	A	Auger Boring (hollow or solid stem bucket)
Size	R RW RC P	Rotary drilled boring (conventional) Rotary drilled with self-casing wire-line Rotary core with continuously-sampled, self-casing wire-line Rotary percussion boring (air)
Size	R	Rotary drilled diamond core
Size	HD HA	Hand driven (1-inch soil tube) Hand Auger
●	D	Dynamic Cone Penetration Boring
▲	CPT	Cone Penetration Test (ASTM D 5778)
⬚	O	Other (note on LOTB)

Note: Size in inches.

CONSISTENCY OF COHESIVE SOILS

Description	Shear Strength (tsf)	Pocket Penetrometer Measurement, PP, (tsf)	Torvane Measurement, TV, (tsf)	Vane Shear Measurement, VS, (tsf)
Very Soft	Less than 0.12	Less than 0.25	Less than 0.12	Less than 0.12
Soft	0.12 - 0.25	0.25 - 0.5	0.12 - 0.25	0.12 - 0.25
Medium Stiff	0.25 - 0.5	0.5 - 1	0.25 - 0.5	0.25 - 0.5
Stiff	0.5 - 1	1 - 2	0.5 - 1	0.5 - 1
Very Stiff	1 - 2	2 - 4	1 - 2	1 - 2
Hard	Greater than 2	Greater than 4	Greater than 2	Greater than 2

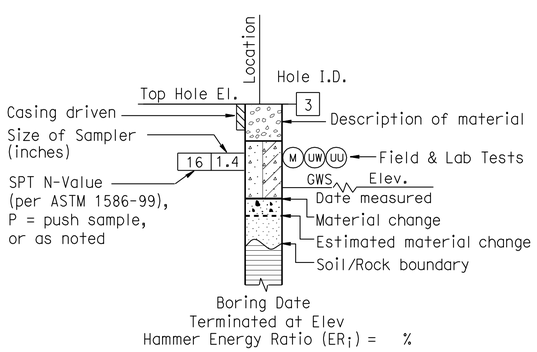

ROTARY BORING

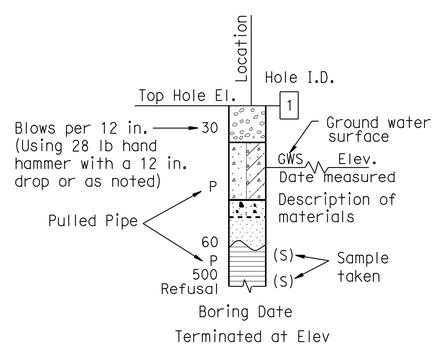

HAND BORING

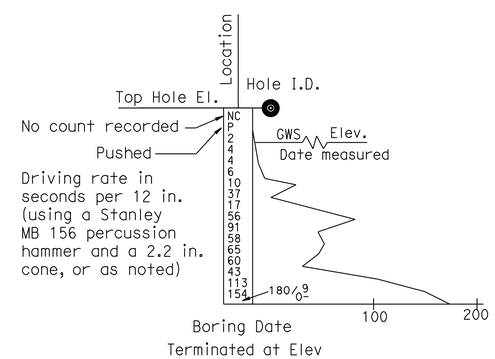

DYNAMIC CONE PENETRATION BORING

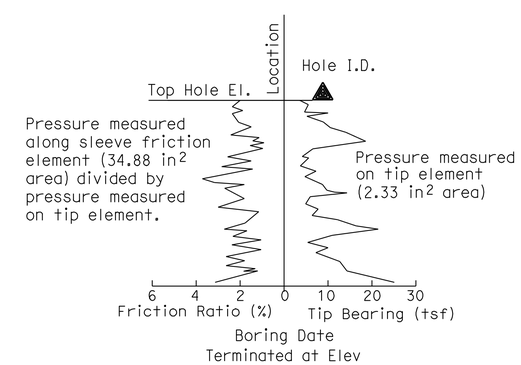

CONE PENETRATION TEST (CPT) BORING

ENGINEERING SERVICES	GEOTECHNICAL SERVICES	STATE OF CALIFORNIA DEPARTMENT OF TRANSPORTATION	DIVISION OF ENGINEERING SERVICES STRUCTURE DESIGN DESIGN BRANCH	BRIDGE NO. 53-1009 POST MILE 21.92	ATLANTIC BLVD UC (WIDEN) LOG OF TEST BORINGS 6 OF 8
	PREPARED BY: F. Nguyen 10/10				

GS LOTB SOIL LEGEND

ORIGINAL SCALE IN INCHES FOR REDUCED PLANS 0 1 2 3

CU 07
EA 202111

DISREGARD PRINTS BEARING EARLIER REVISION DATES 12-14-10

REVISION DATES

SHEET 31 OF 33

FILE => 53-1009-z-lotb06.dgn

USERNAME => s124396 DATE PLOTTED => 28-JUN-2011 TIME PLOTTED => 20:38

REFERENCE: CALTRANS SOIL & ROCK LOGGING, CLASSIFICATION, AND PRESENTATION MANUAL (2010)

DIST	COUNTY	ROUTE	POST MILES TOTAL PROJECT	SHEET No	TOTAL SHEETS
07	LA	710	17.2/26.4	1427	1507

Tatjana Halda 12-14-10
REGISTERED CIVIL ENGINEER

6-27-11
PLANS APPROVAL DATE

REGISTERED PROFESSIONAL ENGINEER Tatjana L. Halda No. C68293 Exp. 9-30-11 CIVIL STATE OF CALIFORNIA

The State of California or its officers or agents shall not be responsible for the accuracy or completeness of electronic copies of this plan sheet.

GROUP SYMBOLS AND NAMES

Graphic/Symbol	Group Names
GW	Well-graded GRAVEL Well-graded GRAVEL with SAND
GP	Poorly-graded GRAVEL Poorly-graded GRAVEL with SAND
GW-GM	Well-graded GRAVEL with SILT Well-graded GRAVEL with SILT and SAND
GW-GC	Well-graded GRAVEL with CLAY (or SILTY CLAY) Well-graded GRAVEL with CLAY and SAND (or SILTY CLAY and SAND)
GP-GM	Poorly-graded GRAVEL with SILT Poorly-graded GRAVEL with SILT and SAND
GP-GC	Poorly-graded GRAVEL with CLAY (or SILTY CLAY) Poorly-graded GRAVEL with CLAY and SAND (or SILTY CLAY and SAND)
GM	SILTY GRAVEL SILTY GRAVEL with SAND
GC	CLAYEY GRAVEL CLAYEY GRAVEL with SAND
GC-GM	SILTY, CLAYEY GRAVEL SILTY, CLAYEY GRAVEL with SAND
SW	Well-graded SAND Well-graded SAND with GRAVEL
SP	Poorly-graded SAND Poorly-graded SAND with GRAVEL
SW-SM	Well-graded SAND with SILT Well-graded SAND with SILT and GRAVEL
SW-SC	Well-graded SAND with CLAY (or SILTY CLAY) Well-graded SAND with CLAY and GRAVEL (or SILTY CLAY and GRAVEL)
SP-SM	Poorly-graded SAND with SILT Poorly-graded SAND with SILT and GRAVEL
SP-SC	Poorly-graded SAND with CLAY (or SILTY CLAY) Poorly-graded SAND with CLAY and GRAVEL (or SILTY CLAY and GRAVEL)
SM	SILTY SAND SILTY SAND with GRAVEL
SC	CLAYEY SAND CLAYEY SAND with GRAVEL
SC-SM	SILTY, CLAYEY SAND SILTY, CLAYEY SAND with GRAVEL
PT	PEAT
	COBBLES COBBLES and BOULDERS BOULDERS

Graphic/Symbol	Group Names
CL	Lean CLAY Lean CLAY with SAND Lean CLAY with GRAVEL SANDY lean CLAY SANDY lean CLAY with GRAVEL GRAVELLY lean CLAY GRAVELLY lean CLAY with SAND
CL-ML	SILTY CLAY SILTY CLAY with SAND SILTY CLAY with GRAVEL SANDY SILTY CLAY SANDY SILTY CLAY with GRAVEL GRAVELLY SILTY CLAY GRAVELLY SILTY CLAY with SAND
ML	SILT SILT with SAND SILT with GRAVEL SANDY SILT SANDY SILT with GRAVEL GRAVELLY SILT GRAVELLY SILT with SAND
OL	ORGANIC lean CLAY ORGANIC lean CLAY with SAND ORGANIC lean CLAY with GRAVEL SANDY ORGANIC lean CLAY SANDY ORGANIC lean CLAY with GRAVEL GRAVELLY ORGANIC lean CLAY GRAVELLY ORGANIC lean CLAY with SAND
OL	ORGANIC SILT ORGANIC SILT with SAND ORGANIC SILT with GRAVEL SANDY ORGANIC SILT SANDY ORGANIC SILT with GRAVEL GRAVELLY ORGANIC SILT GRAVELLY ORGANIC SILT with SAND
CH	Fat CLAY Fat CLAY with SAND Fat CLAY with GRAVEL SANDY fat CLAY SANDY fat CLAY with GRAVEL GRAVELLY fat CLAY GRAVELLY fat CLAY with SAND
MH	Elastic SILT Elastic SILT with SAND Elastic SILT with GRAVEL SANDY elastic SILT SANDY elastic SILT with GRAVEL GRAVELLY elastic SILT GRAVELLY elastic SILT with SAND
OH	ORGANIC fat CLAY ORGANIC fat CLAY with SAND ORGANIC fat CLAY with GRAVEL SANDY ORGANIC fat CLAY SANDY ORGANIC fat CLAY with GRAVEL GRAVELLY ORGANIC fat CLAY GRAVELLY ORGANIC fat CLAY with SAND
OH	ORGANIC elastic SILT ORGANIC elastic SILT with SAND ORGANIC elastic SILT with GRAVEL SANDY ORGANIC elastic SILT SANDY ORGANIC elastic SILT with GRAVEL GRAVELLY ORGANIC elastic SILT GRAVELLY ORGANIC elastic SILT with SAND
OL/OH	ORGANIC SOIL ORGANIC SOIL with SAND ORGANIC SOIL with GRAVEL SANDY ORGANIC SOIL SANDY ORGANIC SOIL with GRAVEL GRAVELLY ORGANIC SOIL GRAVELLY ORGANIC SOIL with SAND

FIELD AND LABORATORY TESTING

- (C) Consolidation (ASTM D 2435)
- (CL) Collapse Potential (ASTM D 5333)
- (CP) Compaction Curve (CTM 216)
- (CR) Corrosivity Testing (CTM 643, CTM 422, CTM 417)
- (CU) Consolidated Undrained Triaxial (ASTM D 4767)
- (DS) Direct Shear (ASTM D 3080)
- (EI) Expansion Index (ASTM D 4829)
- (M) Moisture Content (ASTM D 2216)
- (OC) Organic Content-% (ASTM D 2974)
- (P) Permeability (CTM 220)
- (PA) Particle Size Analysis (ASTM D 422)
- (PI) Plasticity Index (AASHTO T 90) Liquid Limit (AASHTO T 89)
- (PL) Point Load Index (ASTM D 5731)
- (PM) Pressure Meter
- (R) R-Value (CTM 301)
- (SE) Sand Equivalent (CTM 217)
- (SG) Specific Gravity (AASHTO T 100)
- (SL) Shrinkage Limit (ASTM D 427)
- (SW) Swell Potential (ASTM D 4546)
- (UC) Unconfined Compression-Soil (ASTM D 2166) Unconfined Compression-Rock (ASTM D 2938)
- (UU) Unconsolidated Undrained Triaxial (ASTM D 2850)
- (UW) Unit Weight (ASTM D 4767)

APPARENT DENSITY OF COHESIONLESS SOILS

Description	SPT N_{60} (Blows / 12 in.)
Very Loose	0 - 5
Loose	5 - 10
Medium Dense	10 - 30
Dense	30 - 50
Very Dense	Greater than 50

MOISTURE

Description	Criteria
Dry	No discernable moisture
Moist	Moisture present, but no free water
Wet	Visible free water

PERCENT OR PROPORTION OF SOILS

Description	Criteria
Trace	Particles are present but estimated to be less than 5%
Few	5% - 10%
Little	15% - 25%
Some	30% - 45%
Mostly	50% - 100%

PARTICLE SIZE

Description		Size (in.)
Boulder		Greater than 12
Cobble		3 - 12
Gravel	Coarse	3/4 - 3
	Fine	1/5 - 3/4
Sand	Coarse	1/16 - 1/5
	Medium	1/64 - 1/16
	Fine	1/300 - 1/64
Silt and Clay		Less than 1/300

ENGINEERING SERVICES

GEOTECHNICAL SERVICES
PREPARED BY: F. Nguyen 10/10

STATE OF CALIFORNIA
DEPARTMENT OF TRANSPORTATION

DIVISION OF ENGINEERING SERVICES
STRUCTURE DESIGN
DESIGN BRANCH

BRIDGE NO. 53-1009
POST MILE 21.92

ATLANTIC BLVD UC (WIDEN)
LOG OF TEST BORINGS 7 OF 8

GS LOTB SOIL LEGEND

ORIGINAL SCALE IN INCHES FOR REDUCED PLANS 0 1 2 3

CU 07
EA 202111

DISREGARD PRINTS BEARING EARLIER REVISION DATES 12-14-10

REVISION DATES

SHEET 32 OF 33

FILE => 53-1009-z-lotb07.dgn

USERNAME => s124096 DATE PLOTTED => 28-JUN-2011 TIME PLOTTED => 20:38

FED. ROAD DIST. NO.	STATE	ROUTE	FISCAL YEAR	SHEET NO.	TOTAL SHEETS
2	CAL.			75	

DIST.	COUNTY	ROUTE	POST MILE	SHEET NO.	TOTAL SHEETS
VII	LA	10	8	28-29	

March 1, 1945

Rte 7
PM 21.9

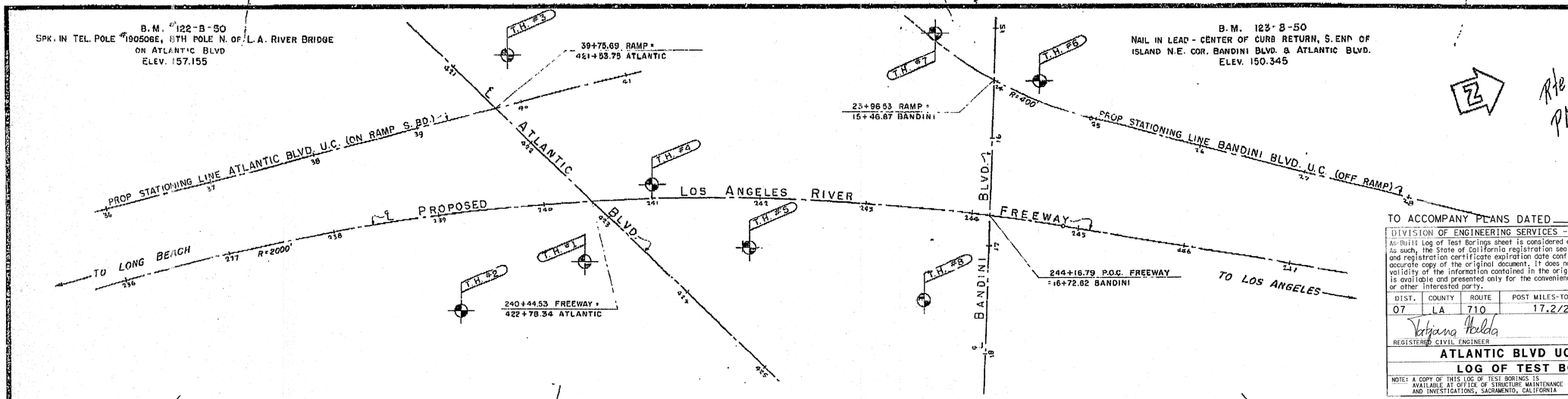

TO ACCOMPANY PLANS DATED 6-27-11

DIVISION OF ENGINEERING SERVICES - GEOTECHNICAL SERVICES

As-Built Log of Test Borings sheet is considered an informational document only. As such, the State of California registration seal with signature, license number and registration certificate expiration date confirm that this is a true and accurate copy of the original document. It does not attest to the accuracy or validity of the information contained in the original document. This drawing is available and presented only for the convenience of any bidder, contractor or other interested party.

DIST.	COUNTY	ROUTE	POST MILES-TOTAL PROJECT	Sheet No.	Total Sheets
07	LA	710	17.2/26.4	1428	1507

Tatjana Halda — 12-14-10
REGISTERED CIVIL ENGINEER — DATE

REGISTERED PROFESSIONAL ENGINEER — Tatjana L. Halda — No. C68293 — Exp. 9-30-11 — CIVIL — STATE OF CALIFORNIA

ATLANTIC BLVD UC (WIDEN)

LOG OF TEST BORINGS

8 OF 8

NOTE: A COPY OF THIS LOG OF TEST BORINGS IS AVAILABLE AT OFFICE OF STRUCTURE MAINTENANCE AND INVESTIGATIONS, SACRAMENTO, CALIFORNIA

CU: 07
EA: 202111

BRIDGE No. 53-1009

Sheet 33 of 33

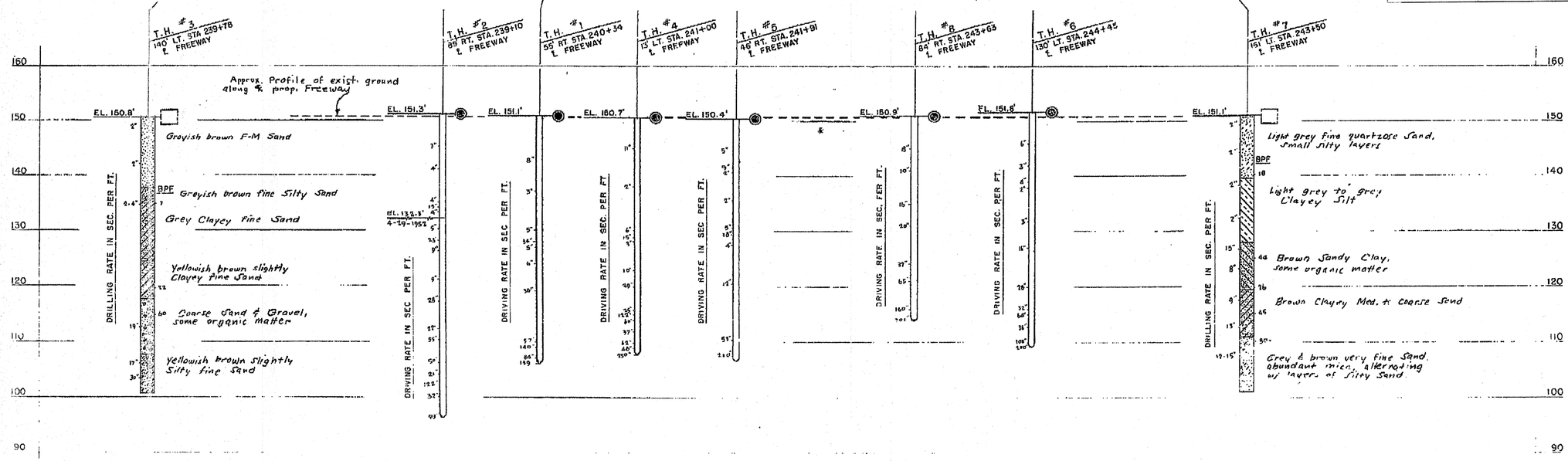

Test Boring By Bridge Dept.

Core Drill April-May 1952

NOTE: Blows per foot are blows required to drive a 1.4 inch cont pipe one foot with a 140 # drop hammer from a free fall of 30 inches.

CLASSIFICATION OF MATERIAL, BASED ON STANDARD GRADE SIZE LIMITS

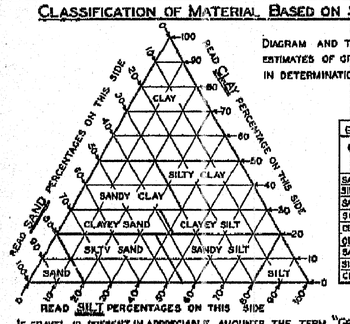

DIAGRAM AND TABLE SHOWING THE BASIS FOR ESTIMATES OF GRADE SIZE DISTRIBUTION USED IN DETERMINATION OF CLASS NAMES.

GROUPING USED IN TRIANGULAR CLASSIFICATION

CLASS NAME	PERCENTAGE OF SIZES PRESENT		
	SAND	SILT	CLAY
SAND	80-100	0-20	0-20
SILTY SAND	40-80	0-60	0-20
SANDY SILT	0-45	35-80	0-20
SILT	0-20	60-100	0-20
CLAYEY SAND	30-80	0-42	20-30
CLAYEY SILT	0-30	30-80	20-30
SANDY CLAY	30-70	0-40	30-60
SILTY CLAY	0-30	20-70	30-60
CLAY	0-50	0-50	50-100

IF GRAVEL IS PRESENT IN APPRECIABLE AMOUNTS THE TERM "GRAVELLY" MAY BE ADDED TO THE CLASS NAME, VIZ. "GRAVELLY SAND". THE TERMS "COARSE", "MEDIUM" AND "FINE" WHEN USED TO DESCRIBE GRAVEL, SAND AND SILT REFER TO STANDARD GRADE SIZE LIMITS.

LEGEND OF BORING OPERATIONS

- PLAN OF ANY BORING
- 1" SAMPLER BORING
- ROTARY WASH BORING
- 1" CLOSED SAMPLER DRIVEN
- CORE BORING
- 2½" PENETROMETER DRIVEN
- 1⅜" SAMPLER BORING
- 2" TO 5" AUGER BORING
- 6" TO 20" AUGER BORING
- CASING DRIVEN
- JET BORING
- (S) SAMPLE TAKEN
- 1⅝" A-ROD DRIVEN

THE APPROPRIATE BORING SYMBOLS DESIGNATING THE METHOD OF OPERATION ARE SHOWN AT THE UPPER RIGHT-HAND CORNER OF THE RESPECTIVE BORING. WHERE TOOL CHANGES WERE MADE DURING THE BORING OPERATION SYMBOLS ARE SHOWN AT THE POINT OF CHANGE.

LEGEND OF EARTH MATERIALS

- GRAVEL — G
- SAND — S
- SILT — SI
- CLAY — C
- SILTY SAND — SI S
- CLAYEY SAND — C S
- SANDY SILT — S SI
- CLAYEY SILT — C SI
- SANDY CLAY — SC
- SILTY CLAY — SI C
- PEAT and/or ORGANIC CLAY — O
- SANDSTONE — SS
- SHALE — SH
- BROKEN ROCK (FRAGMENTS) — BR
- ROCK — R
- FILL MATERIAL

ABBREVIATIONS

EL. 69.4	ELEVATION OF GROUND AT TEST HOLE
bpf	BLOWS PER FOOT — (SEE NOTE ABOVE)
P	PULLED PIPE
M	MOISTURE AS % DRY WEIGHT
EL. 64.3 8-12-49	ELEVATION OF GROUND WATER AND DATE

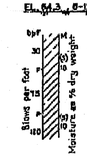

NOTES

THE CONTRACTOR'S ATTENTION IS DIRECTED TO SECTION 2, ARTICLE (c) OF THE STANDARD SPECIFICATIONS AND TO THE SPECIAL PROVISIONS ACCOMPANYING THIS SET OF PLANS.

CLASSIFICATION OF EARTH MATERIAL AS SHOWN ON THIS SHEET IS BASED UPON FIELD INSPECTION AND IS NOT TO BE CONSTRUED TO IMPLY MECHANICAL ANALYSIS.

Box #124

ATLANTIC & BANDINI BLVD. U.C.

LOG OF TEST BORINGS

SCALE HORIZ. 1" = 50' VERT. 1" = 10'

FILE NO.

BRIDGE No. 53-1009-1008 ~~877-876~~

DRAWING NO. 8-3097-26

PREL. DRAWING NO. P-3097 93 61

53-1009-z-lotb08.tif

DIST	COUNTY	ROUTE	POST MILES TOTAL PROJECT	SHEET No.	TOTAL SHEETS
07	LA	710	17.2/26.4	1429	1507

REGISTERED CIVIL ENGINEER — DATE 03/01/11

6-27-11
PLANS APPROVAL DATE

REGISTERED PROFESSIONAL ENGINEER — Carl Duan No. C59976 Exp. 06-30-12 CIVIL — STATE OF CALIFORNIA

The State of California or its officers or agents shall not be responsible for the accuracy or completeness of electronic copies of this plan sheet.

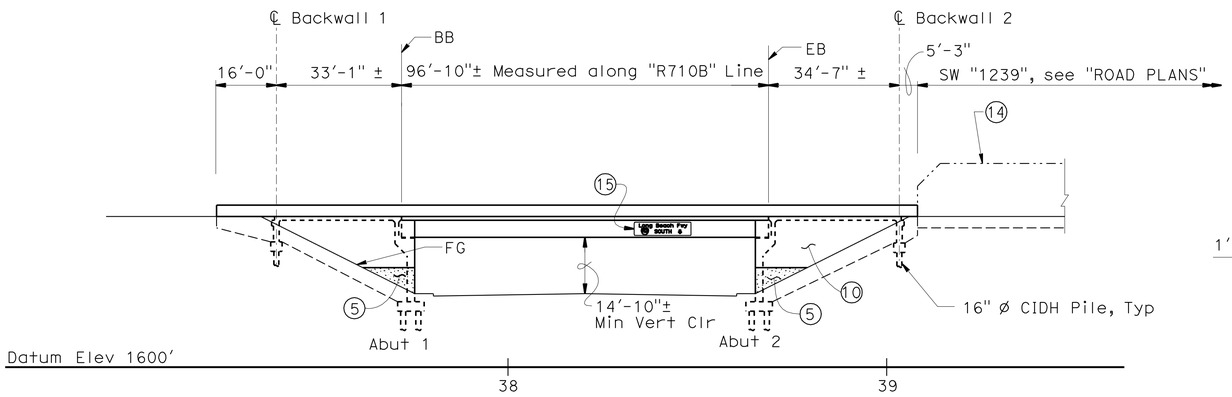

ELEVATION
1" = 20'

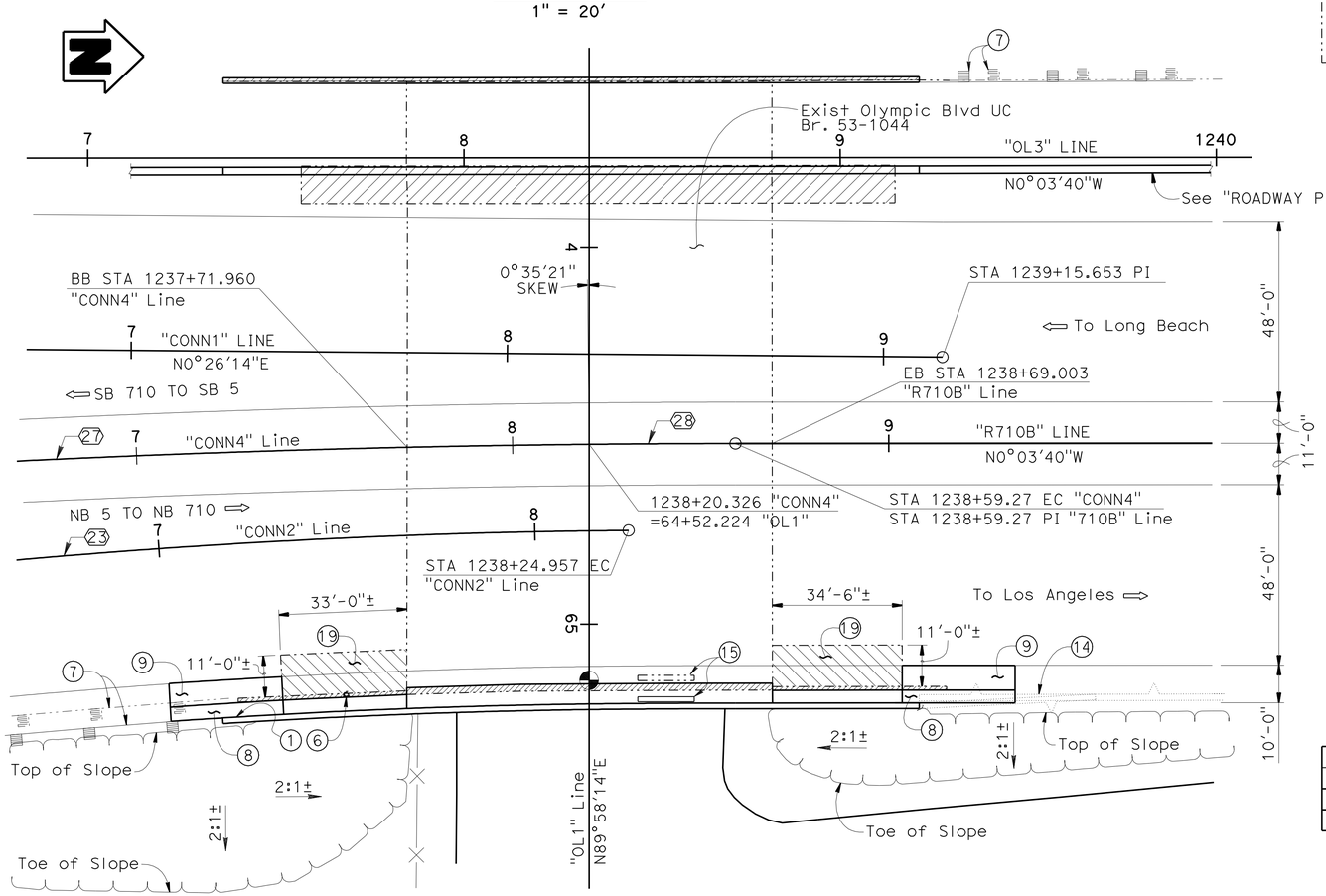

PLAN
1" = 20'

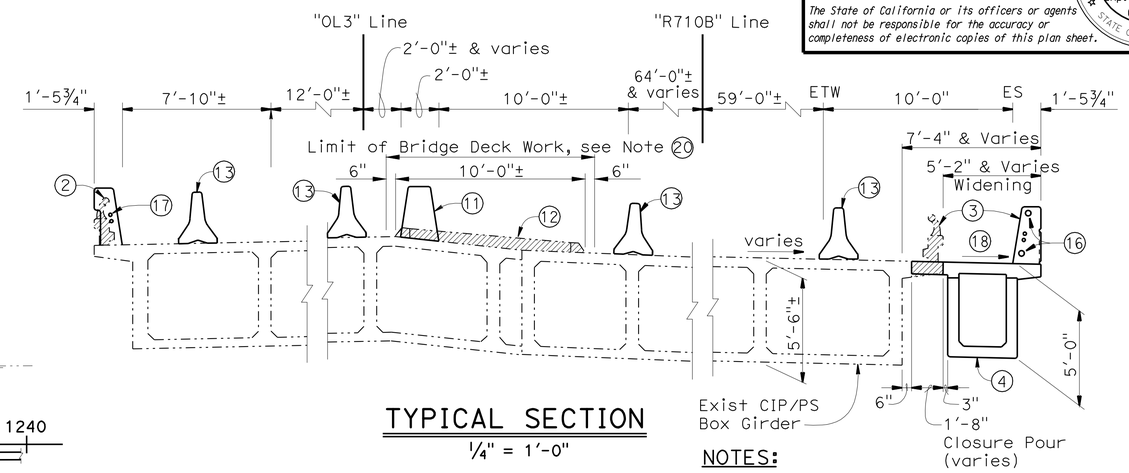

TYPICAL SECTION
¼" = 1'-0"

NOTE:
THE CONTRACTOR SHALL VERIFY ALL CONTROLLING FIELD DIMENSIONS BEFORE ORDERING OR FABRICATING ANY MATERIAL.

LEGEND:

- Indicates Bridge Removal (portion)
- Indicates Existing Structure
- Indicates direction of traffic
- Minimum Vertical Clearance
- Indicates Remove AC Overlay, prepare Concrete Bridge Deck and place Polyester Concrete Overlay

CONSTRUCTION SEQUENCE:

1. Construct Abutment footings and stems.
2. Erect PC/PS U-Girder on abutment seats.
3. Place Deck concrete.
4. Complete Abutment construction.
5. Construct Barriers.
6. Construct Approach Slas and complete remaining work.

CURVE DATA

No.	R	Δ	T	L
23	2000.00'	17°56'41"	315.78'	626.39'
27	4018.52'	1°59'54"	70.09'	140.16'
28	4000.00'	4°56'44"	172.74'	345.26'

Note: For quantities, see "INDEX TO PLANS" sheet.

NOTES:

1. Paint "Br. No. 53-1044" & "OLYMPIC BLVD UC"
2. Remove Type 1 Barrier Railing. Construct Concrete Barrier Type 736R
3. Remove Type 1 Barrier Railing. Construct Concrete Barrier Type 736 (Mod)
4. PC/PS Concrete U-Girder
5. Gun Finish to match exist
6. Existing Electrolier to be relocated, see "ROAD PLANS"
7. Existing MBGR to be replaced or modified, see "ROAD PLANS"
8. Structure Approach Type N(30D)
9. Structure Approach Type R(30D)
10. Bin Type Abutment
11. Concrete Barrier Type 60SA (Mod)
12. Existing Raised Median to be removed
13. Temporary Barrier Type K, see "ROAD PLANS"
14. Existing Soundwall to be replaced, see "ROAD PLANS"
15. Relocate bridge mounted sign, see "ROAD PLANS"
16. 2 - 3½" Fiber-Optic and 2 - 2" Electrical Conduits, see "ROAD PLANS"
17. 2 - 2" Electrical Conduits, see "ROAD PLANS"
18. Match existing slope
19. Remove 2" AC overlay. Prepare Concrete Bridge Deck and place 2" Polyester Concrete Overlay, see "ABUTMENT DETAILS NO. 3" sheet
20. Remove ¾" of existing bridge deck surface. Prepare Concrete Bridge Deck and place ¾" Polyester Concrete Overlay

CHUNG-YUAN WEN
DESIGN ENGINEER

	BY	CHECKED
DESIGN	C. DUAN / C. LIM	T. TRAN
DETAILS	G. DICKERSON	C. DUAN
QUANTITIES	C. LIM	T. TRAN

LOAD & RESISTANCE FACTOR DESIGN — LIVE LOADING: HL93 W/"LOW-BOY"; PERMIT DESIGN VEHICLE
LAYOUT — BY C. DUAN — CHECKED T. TRAN
SPECIFICATIONS — BY K. ELLINGSON — PLANS AND SPECS COMPARED K. ELLINGSON

STATE OF CALIFORNIA
DEPARTMENT OF TRANSPORTATION

DIVISION OF ENGINEERING SERVICES
STRUCTURE DESIGN
DESIGN BRANCH 21

BRIDGE NO. 53-1044
POST MILE 23.44

OLYMPIC BLVD UC (WIDEN)
GENERAL PLAN

ORIGINAL SCALE IN INCHES FOR REDUCED PLANS 0 1 2 3

UNIT: 3623
PROJECT NUMBER & PHASE: 0700020869 & 1 CONTRACT NO.: 202111

DISREGARD PRINTS BEARING EARLIER REVISION DATES — REVISION DATES 3/8/06 3/1/11 2/28/11 — SHEET 1 OF 17

USERNAME => s124496 DATE PLOTTED => 28-JUN-2011 TIME PLOTTED => 20:39

STRUCTURES DESIGN GENERAL PLAN SHEET (ENGLISH) (REV.09-01-10)

FILE => 53-1044-a-gp01.dgn

DIST	COUNTY	ROUTE	POST MILES TOTAL PROJECT	SHEET No.	TOTAL SHEETS
07	LA	710	17.2/26.4	1430	1507

REGISTERED CIVIL ENGINEER — DATE 03/01/11

6-27-11
PLANS APPROVAL DATE

REGISTERED PROFESSIONAL ENGINEER — Carl Duan — No. C59976 — Exp. 06-30-12 — CIVIL — STATE OF CALIFORNIA

The State of California or its officers or agents shall not be responsible for the accuracy or completeness of electronic copies of this plan sheet.

GENERAL NOTES
LOAD AND RESISTANCE FACTOR DESIGN

DESIGN: AASHTO LRFD Bridge Design Specifications, 4th Edition and the Caltrans Amendments, preface dated 2008; except that Earth Retaining Systems, Barrier and Structural Approach Slabs are designed using Bridge Design Specifications ('96 AASHTO w/ Revisions by Caltrans).

SEISMIC DESIGN: Caltrans Seismic Design Criteria (SDC) Version 1.4, June, 2006

DEAD LOAD: Includes 35 Psf future wearing surface.

LIVE LOADING: HL93 and permit design load.

SEISMIC LOADING: SDC Modified ARS Curve
Soil Type D, magnitude 7.0 ± 0.25
Peak Ground Acceleration = 0.6g

REINFORCED CONCRETE: ASTM A706

f_y = 60 ksi

f'_c = 3.6 ksi (except as shown on concrete Strength and Type Limits Diagram).

PRESTRESSED CONCRETE: See "Prestressing Notes" on "GIRDER DETAILS" sheet.

STANDARD PLANS DATED MAY 2006

A10A	ACRONYMS AND ABBREVIATIONS (A-L)
A10B	ACRONYMS AND ABBREVIATIONS (M-Y)
A62C	LIMITS OF PAYMENT FOR EXCAVATION AND BACKFILL - BRIDGE
A76G	CONCRETE BARRIER TYPE 60S
B0-3	BRIDGE DETAILS
B0-5	BRIDGE DETAILS
B0-13	BRIDGE DETAILS
B2-3	16" & 24" CAST-IN-DRILLED-HOLE CONCRETE PILE
RSP B6-21	JOINT SEALS (MAXIMUM MOVEMENT RATING = 2")
B11-56	CONCRETE BARRIER TYPE 736
D99B	EDGE DRAIN OUTLETS AND VENT DETAILS
T3	TEMPORARY RAILING (TYPE K)

STANDARD PLAN SHEET NO.
DETAIL NO.

PILE DATA TABLE

Location	Pile Type	Design Loading (kips)	Nominal Resistance (kips)		Cut-Off Elevation (ft)	Design Tip Elevation (ft)	Specified Tip Elevation (ft)
			Compression	Tension			
Backwall 1	16" CIDH	80	160	N/A	192.69	160.0[1] 167.0[2]	160.0
Abut 1	16" CIDH	95	190	N/A	176.89	143.0[1] 151.0[2]	140.0
Abut 2	16" CIDH	95	190	N/A	176.89	144.0[1] 151.0[2]	144.0
Backwall 2	16" CIDH	75	150	N/A	192.39	163.0[1] 167.0[2]	163.0

NOTE:
Design tip elevations are controlled by the following:
(1) Nominal Resistance in Compression
(2) Nominal lateral Resistance - Fixed Head Condition (0.25 lateral deflection at top of pile)

NOTE:
THE CONTRACTOR SHALL VERIFY ALL CONTROLLING FIELD DIMENSIONS BEFORE ORDERING OR FABRICATING ANY MATERIAL.

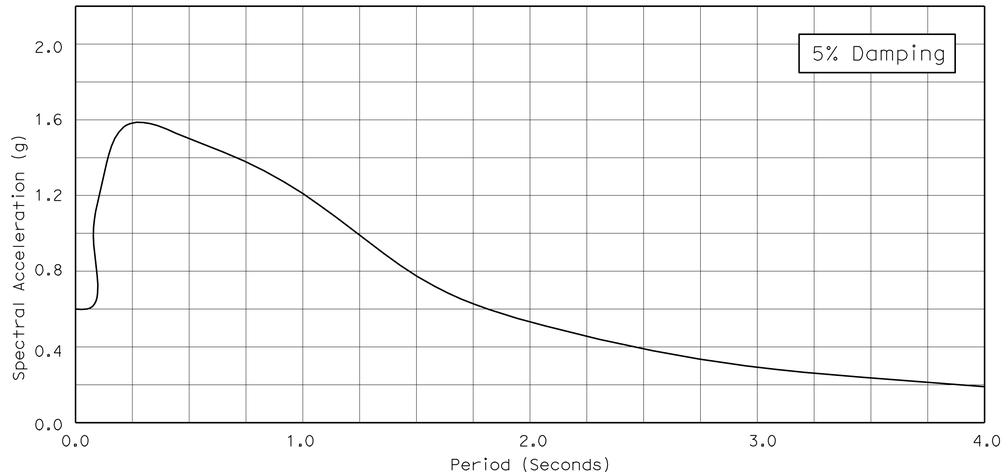

MODIFIED ARS CURVE
No Scale

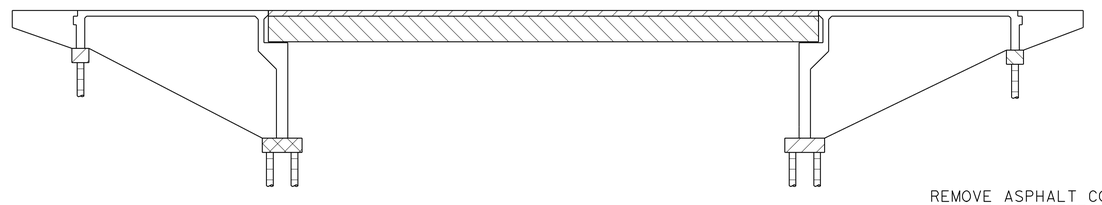

CONCRETE STRENGTH AND TYPE LIMITS
No Scale

- Structural Concrete, Bridge (4,000 psi at 28 days)
- Structural Concrete, Bridge (5,000 psi at 28 days)
- Structural Concrete, Bridge footing
- PC/PS U-Beam Girder, see "GIRDER DETAILS" sheet
- 16" CIDH concrete pile

INDEX TO PLANS

Sheet No.	Title
1.	GENERAL PLAN
2.	INDEX TO PLANS
3.	FOUNDATION PLAN
4.	ABUTMENT LAYOUT
5.	ABUTMENT DETAILS NO. 1
6.	ABUTMENT DETAILS NO. 2
7.	ABUTMENT DETAILS NO. 3
8.	TYPICAL SECTION
9.	GIRDER LAYOUT
10.	GIRDER DETAILS
11.	MISCELLANEOUS DETAILS
12.	CONCRETE BARRIER TYPE 736 (MOD)
13.	STRUCTURE APPROACH TYPE N(30D)
14.	STRUCTURE APPROACH TYPE R(30D)
15.	STRUCTURE APPROACH DRAINAGE DETAILS
16.	LOG OF TEST BORINGS 1 OF 2
17.	LOG OF TEST BORINGS 2 OF 2

QUANTITIES

REMOVE ASPHALT CONCRETE SURFACING	710	SQFT
REMOVE CONCRETE DECK SURFACE	1,740	SQFT
PREPARE CONCRETE BRIDGE DECK SURFACE	2,290	SQFT
BRIDGE REMOVAL (PORTION), LOCATION E	LUMP	SUM
STRUCTURE EXCAVATION (BRIDGE)	45	CY
STRUCTURE EXCAVATION (TYPE Z-2) (AERIALLY DEPOSITED LEAD)	56	CY
STRUCTURE BACKFILL (BRIDGE)	87	CY
AGGREGATE BASE (APPROACH SLAB)	2	CY
16" CAST-IN-DRILLED-HOLE CONCRETE PILING	404	LF
STRUCTURAL CONCRETE, BRIDGE FOOTING	13	CY
STRUCTURAL CONCRETE, BRIDGE	102	CY
STRUCTURAL CONCRETE, APPROACH SLAB (TYPE N)	12	CY
STRUCTURAL CONCRETE, APPROACH SLAB (TYPE R)	11	CY
PAVING NOTCH EXTENSION	10	CF
DRILL AND BOND DOWEL	520	LF
FURNISH PRECAST PRESTRESSED CONCRETE U-GIRDER (90'-100')	1	EA
ERECT PRECAST PRESTRESSED CONCRETE U-GIRDER	1	EA
FURNISH POLYESTER CONCRETE OVERLAY	220	CF
PLACE POLYESTER CONCRETE OVERLAY	2,290	SQFT
CORE CONCRETE (2")	65	LF
JOINT SEAL (MR 1/2")	34	LF
JOINT SEAL (MR 1")	34	LF
BAR REINFORCING STEEL (BRIDGE)	34,100	LB
PUBLIC SAFETY PLAN	LUMP	SUM
MISCELLANEOUS METAL (BRIDGE)	405	LB
CONCRETE BARRIER (TYPE 736 MODIFIED)	186	LF
CONCRETE BARRIER (TYPE 736R)	194	LF
CONCRETE BARRIER (TYPE 60SA MOD)	226	LF

	BY	CHECKED
DESIGN	C. DUAN	T. TRAN
DETAILS	J. VALENCIA / G. D.	C. DUAN
QUANTITIES	C. LIM	T. TRAN

STATE OF CALIFORNIA
DEPARTMENT OF TRANSPORTATION

DIVISION OF ENGINEERING SERVICES
STRUCTURE DESIGN
DESIGN BRANCH 21

BRIDGE NO. 53-1044
POST MILE 23.44

OLYMPIC BLVD UC (WIDEN)
INDEX TO PLANS

STRUCTURES DESIGN DETAIL SHEET (ENGLISH) (REV. 09-01-10)

ORIGINAL SCALE IN INCHES FOR REDUCED PLANS 0 1 2 3

UNIT: 3623
PROJECT NUMBER & PHASE: 0700020869 & 1 CONTRACT NO.: 202111

DISREGARD PRINTS BEARING EARLIER REVISION DATES — REVISION DATES 6/28/10 11/29/10 3/1/11

SHEET 2 OF 17

FILE => 53-1044-a-itp.dgn

USERNAME => s124496 DATE PLOTTED => 28-JUN-2011 TIME PLOTTED => 20:39

DIST	COUNTY	ROUTE	POST MILES TOTAL PROJECT	SHEET No.	TOTAL SHEETS
07	LA	710	17.2/26.4	1431	1507

REGISTERED CIVIL ENGINEER — DATE 03/01/11

6-27-11
PLANS APPROVAL DATE

The State of California or its officers or agents shall not be responsible for the accuracy or completeness of electronic copies of this plan sheet.

REGISTERED PROFESSIONAL ENGINEER — Carl Duan — No. C59976 — Exp. 06-30-12 — CIVIL — STATE OF CALIFORNIA

Bridge Location

1 - 97.076 Lt. ℄ NB 5 To NB 710 Connector, Sta 1237+73.962, Elev 205.105
2 - 64.598 Rt. ℄ NB5 To NB 710 Connector, Sta 1237+70.392, Elev 202.905
3 - 96.199 Lt. ℄ Rte 710, Sta 1238+69.027, Elev 204.757
4 - 64.505 Rt. ℄ Rte 710, Sta 1238+69.042, Elev 203.302

No.	R	Δ	T	L
5	2000.000	17°56′41"	315.780	626.389
6	4000.000	04°56′44"	172.740	345.265

A 63+76.034 ℄ Olympic Blvd = 1238+33.245 SB 710 On Ramp From Olympic

B 64+28.217 ℄ Olympic Blvd = 1238+21.721 SB 710 To SB 5 Separation

C 64+52.224 ℄ Olympic Blvd = 1238+20.327 NB 5 To NB 710 Connector

D 64+75.239 ℄ Olympic Blvd = 1238+14.447 NB 710 To NB 5 Separation

E 65+57.245 ℄ Olympic Blvd = 38+19.220 NB 710 On Ramp From Olympic

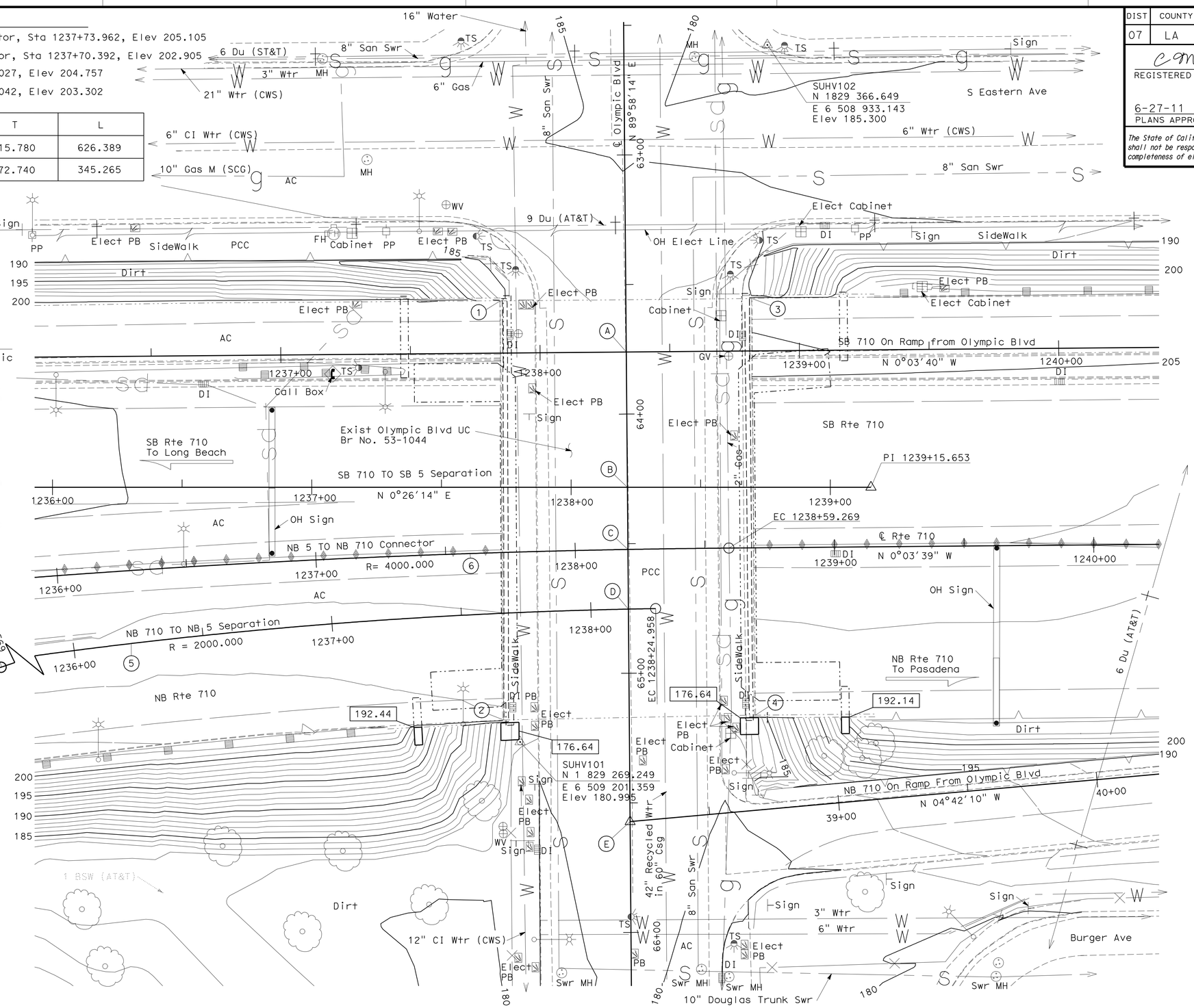

SURVEY CONTROL

SUHV101
Fd: Set Chzl X on SideWalk
42.188 Rt. ℄ Olympic Blvd
Sta 65+26.148
N 1 829 269.249
E 6 509 201.359
Elev 180.995

SUHV102
Fd: Set PK on AC SideWalk
55.354 Lt. ℄ Rte Olympic Blvd
Sta 62+57.989
N 1 829 366.649
E 6 508 933.143
Elev 185.300

NOTE:
THE CONTRACTOR SHALL VERIFY ALL CONTROLLING FIELD DIMENSIONS BEFORE ORDERING OR FABRICATING ANY MATERIAL.

NOTES:
Underground utilities as shown are approximate.
Denotes bottom of footing elevation.

PRELIMINARY INVESTIGATION SECTION

SCALE 1:20	VERT.DATUM NAVD88	PHOTOGRAMMETRY AS OF: X			
HORZ.DATUM NAD83		SURVEYED	BY D7	CHECKED	BY T. Phung/C. Stewart
ALIGNMENT TIES Dist Traverse Sheets		DRAFTED	BY C. Pham	CHECKED	BY E. Viajar

DESIGN	BY C. DUAN	CHECKED T. TRAN
DETAILS	BY J. VALENCIA	CHECKED C. DUAN
QUANTITIES	BY C. LIM	CHECKED T. TRAN

STATE OF CALIFORNIA
DEPARTMENT OF TRANSPORTATION

DIVISION OF ENGINEERING SERVICES
STRUCTURE DESIGN
DESIGN BRANCH 21

BRIDGE NO. 53-1044
POST MILE 23.44

OLYMPIC BLVD UC (WIDEN)
FOUNDATION PLAN

STRUCTURES FOUNDATION PLAN SHEET (ENGLISH) (REV. 09-01-10)

ORIGINAL SCALE IN INCHES FOR REDUCED PLANS 0 1 2 3

UNIT: 3623
PROJECT NUMBER & PHASE: 0700020869 & 1 CONTRACT NO.: 202111

DISREGARD PRINTS BEARING EARLIER REVISION DATES

REVISION DATES: 8/30/10 12/23/10 1/28/11 3/1/11

SHEET 3 OF 17

FILE => 53-1044-e-fdp101.dgn

DIST	COUNTY	ROUTE	POST MILES TOTAL PROJECT	SHEET No.	TOTAL SHEETS
07	LA	710	17.2/26.4	1432	1507

REGISTERED CIVIL ENGINEER — DATE 03/01/11

6-27-11
PLANS APPROVAL DATE

REGISTERED PROFESSIONAL ENGINEER — Carl Duan — No. C59976 — Exp. 06-30-12 — CIVIL — STATE OF CALIFORNIA

The State of California or its officers or agents shall not be responsible for the accuracy or completeness of electronic copies of this plan sheet.

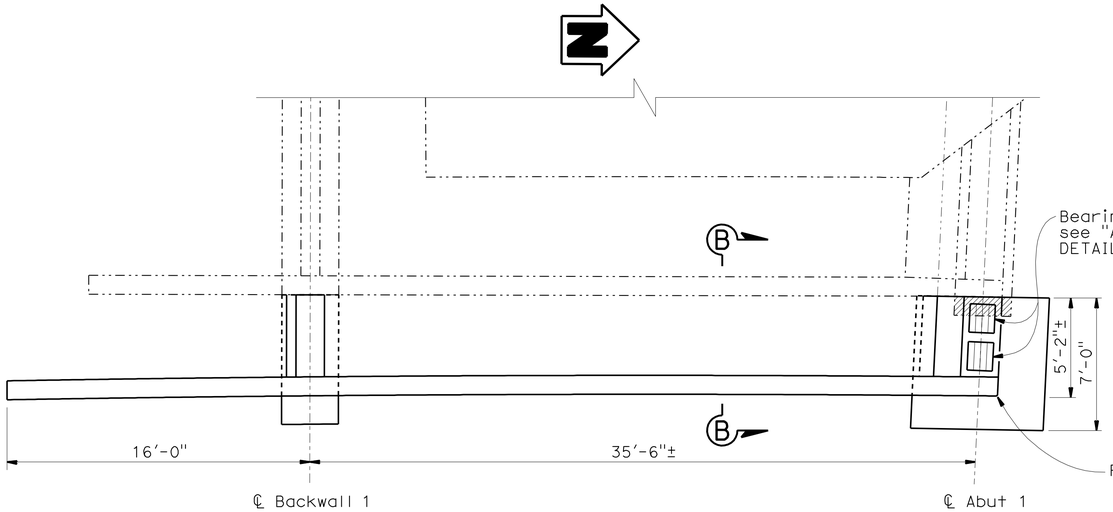

ABUTMENT 1 PLAN

1/4" = 1'-0"

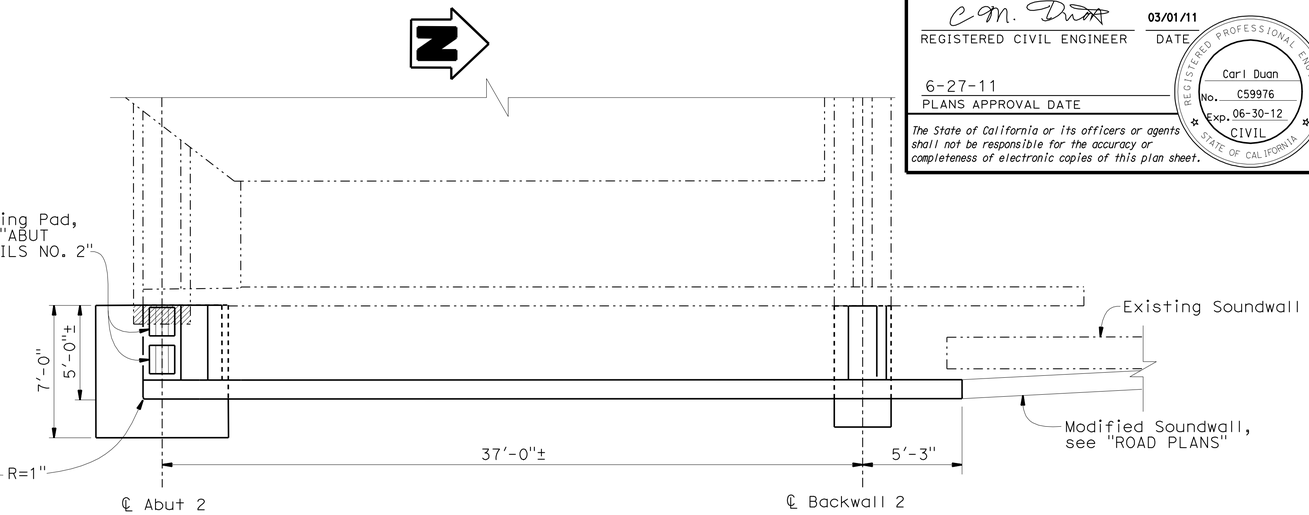

ABUTMENT 2 PLAN

1/4" = 1'-0"

Notes:

1. For "Section A-A" and "Section B-B", see "ABUTMENT DETAILS NO. 3" sheet.

Legend:

- Indicates bridge removal (portion)
- Indicates existing structure
- Indicates new structure

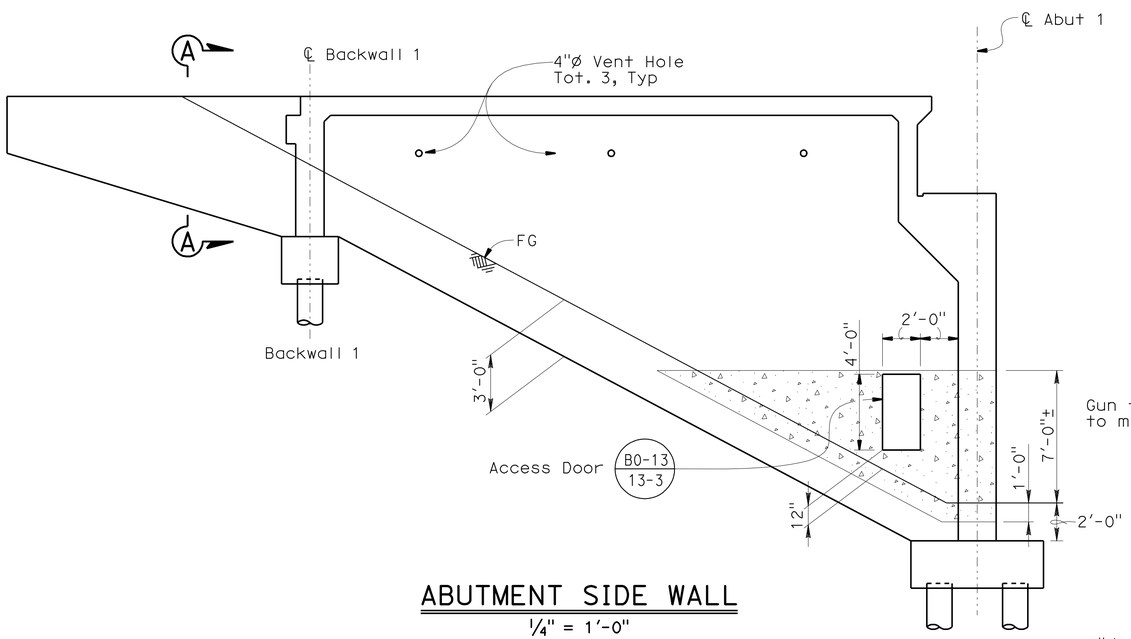

ABUTMENT SIDE WALL

1/4" = 1'-0"

Note:
Abutment 1 Side Wall shown,
Abutment 2 Side Wall similar.

NOTE:
THE CONTRACTOR SHALL VERIFY ALL CONTROLLING FIELD DIMENSIONS BEFORE ORDERING OR FABRICATING ANY MATERIAL.

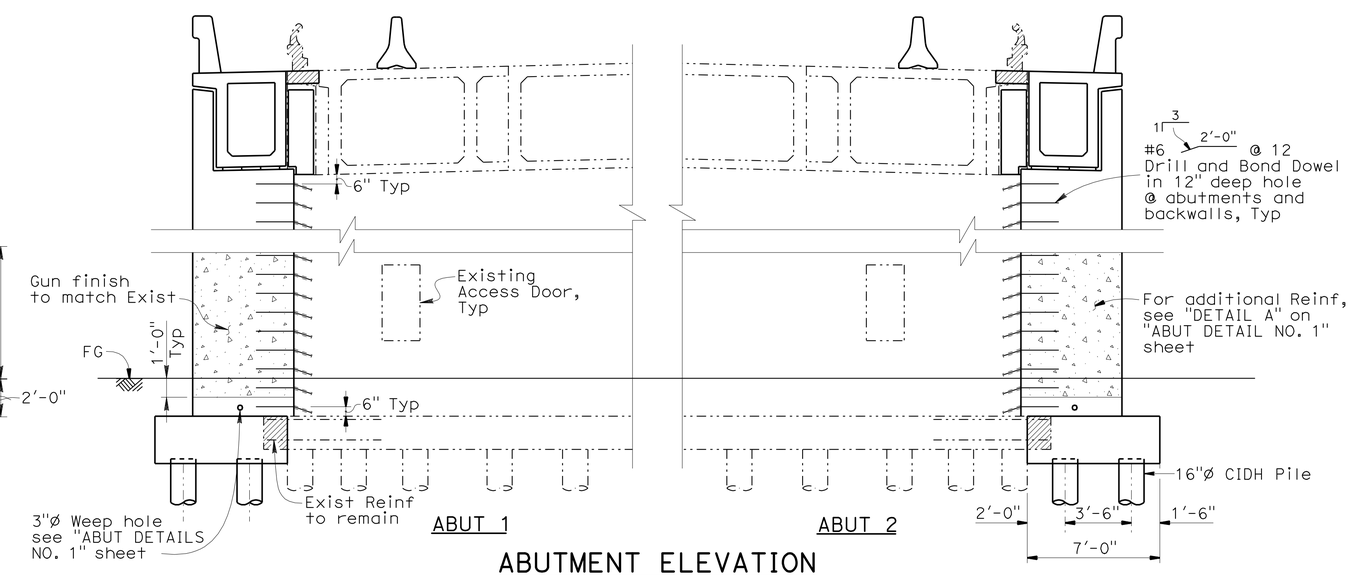

ABUTMENT ELEVATION

1/4" = 1'-0"

DESIGN	BY C. DUAN	CHECKED T. TRAN	
DETAILS	BY J. VALENCIA / G. D.	CHECKED C. DUAN	
QUANTITIES	BY C. LIM	CHECKED T. TRAN	

STATE OF CALIFORNIA
DEPARTMENT OF TRANSPORTATION

DIVISION OF ENGINEERING SERVICES
STRUCTURE DESIGN
DESIGN BRANCH 21

BRIDGE NO. 53-1044
POST MILE 23.44

OLYMPIC BLVD UC (WIDEN)
ABUTMENT LAYOUT

STRUCTURES DESIGN DETAIL SHEET (ENGLISH) (REV. 09-01-10)

ORIGINAL SCALE IN INCHES FOR REDUCED PLANS 0 1 2 3

UNIT: 3623
PROJECT NUMBER & PHASE: 0700020869 & 1 CONTRACT NO.: 202111

DISREGARD PRINTS BEARING EARLIER REVISION DATES — REVISION DATES 6/9/10 11/22/10 3/1/11 — SHEET 4 OF 17

FILE => 53-1044-f-a01_lo1.dgn

USERNAME => s124496 DATE PLOTTED => 28-JUN-2011 TIME PLOTTED => 20:39

DIST	COUNTY	ROUTE	POST MILES TOTAL PROJECT	SHEET No.	TOTAL SHEETS
07	LA	710	17.2/26.4	1433	1507

REGISTERED CIVIL ENGINEER — DATE 03/01/11

6-27-11
PLANS APPROVAL DATE

REGISTERED PROFESSIONAL ENGINEER — Carl Duan No. C59976 Exp. 06-30-12 CIVIL — STATE OF CALIFORNIA

The State of California or its officers or agents shall not be responsible for the accuracy or completeness of electronic copies of this plan sheet.

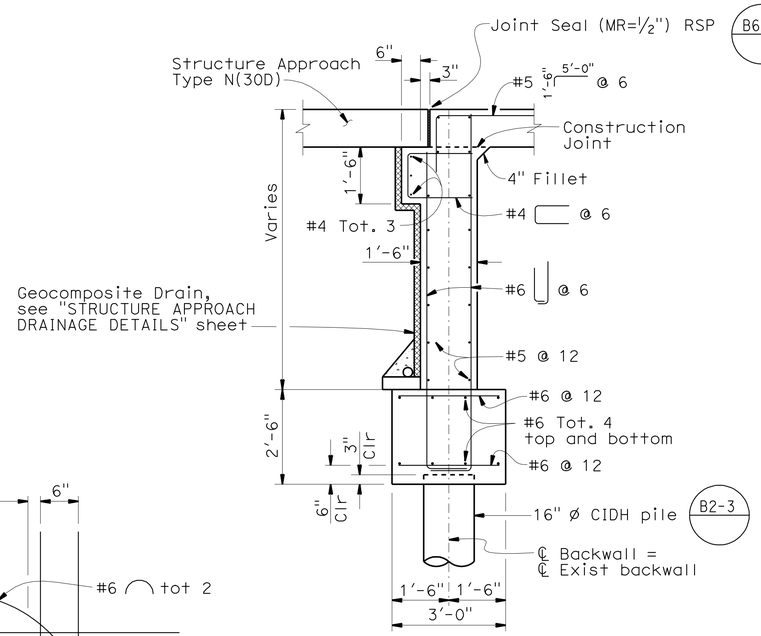

BACKWALL
½" = 1'-0"

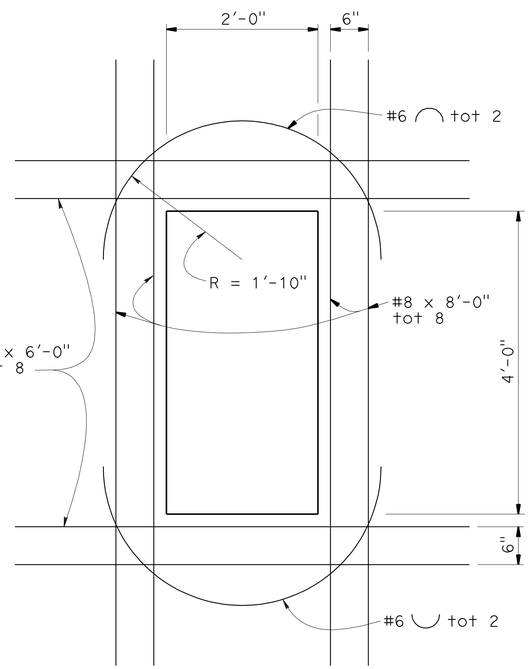

Additional Reinforcement for Access Door

DETAIL A
1" = 1'-0"

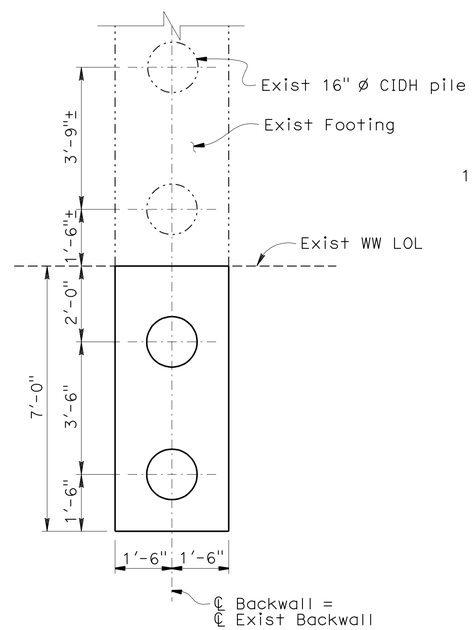

BACKWALL FOOTING
½" = 1'-0"

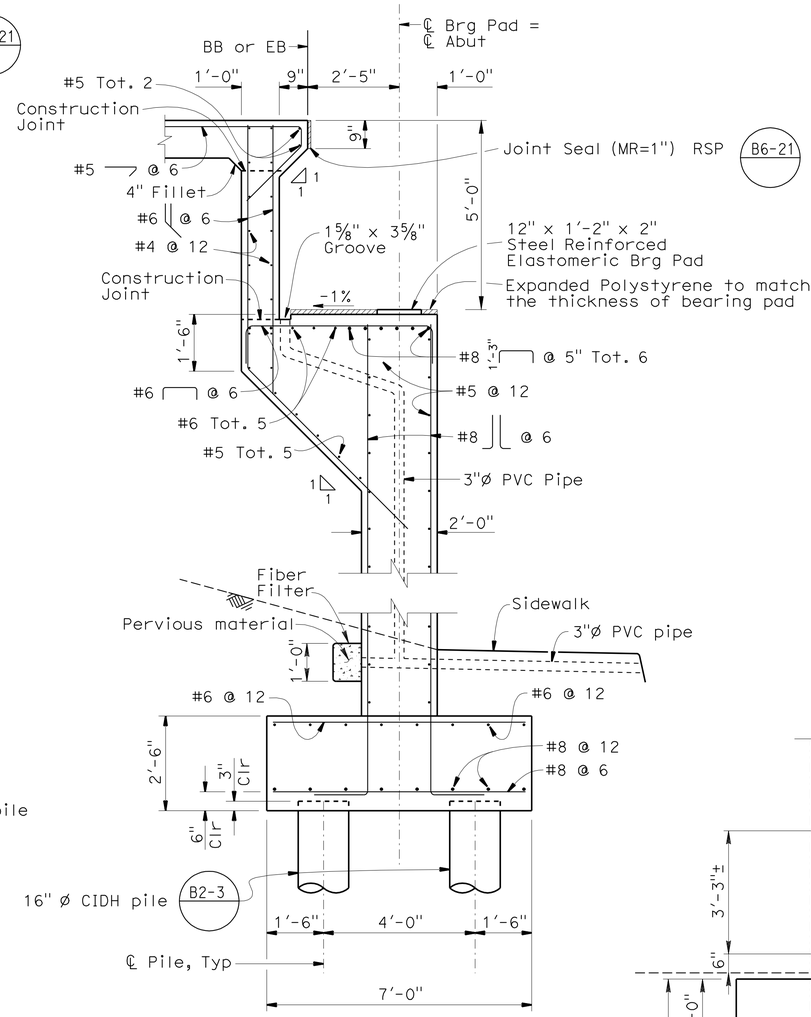

FRONTWALL
½" = 1'-0"

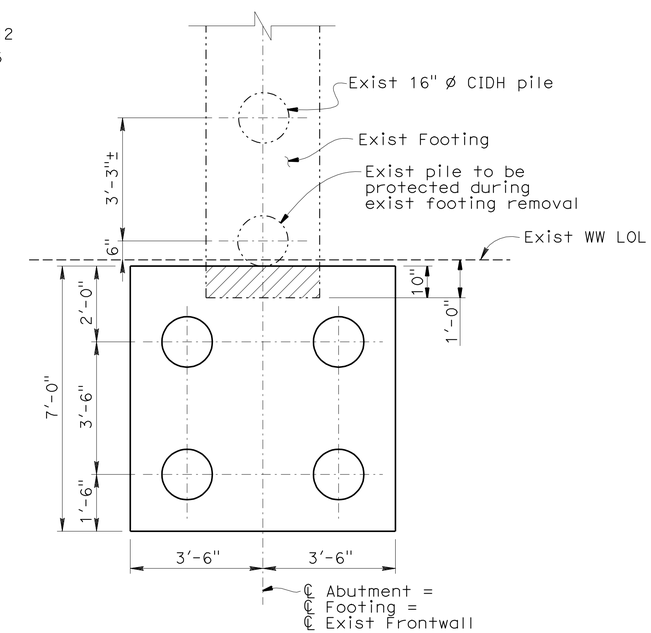

FRONTWALL FOOTING
½" = 1'-0"

Legend:

- Indicates existing structure
- Indicates new structure
- Indicates bridge removal (portion)

NOTE:
THE CONTRACTOR SHALL VERIFY ALL CONTROLLING FIELD DIMENSIONS BEFORE ORDERING OR FABRICATING ANY MATERIAL.

DESIGN	BY C. DUAN	CHECKED T. TRAN	
DETAILS	BY G. DICKERSON / Y. FENG	CHECKED C. DUAN	
QUANTITIES	BY C. LIM	CHECKED T. TRAN	

STATE OF CALIFORNIA
DEPARTMENT OF TRANSPORTATION

DIVISION OF ENGINEERING SERVICES
STRUCTURE DESIGN
DESIGN BRANCH 21

BRIDGE NO. 53-1044
POST MILE 23.44

OLYMPIC BLVD UC (WIDEN)
ABUTMENT DETAILS NO. 1

STRUCTURES DESIGN DETAIL SHEET (ENGLISH) (REV. 09-01-10)

ORIGINAL SCALE IN INCHES FOR REDUCED PLANS 0 1 2 3

UNIT: 3623
PROJECT NUMBER & PHASE: 0700020869 & 1 CONTRACT NO.: 202111

DISREGARD PRINTS BEARING EARLIER REVISION DATES

REVISION DATES: 8/03/10 3/1/11 2/10/11

SHEET 5 OF 17

FILE => 53-1044-f-a01dt01.dgn

USERNAME => s124496 DATE PLOTTED => 28-JUN-2011 TIME PLOTTED => 20:39

DIST	COUNTY	ROUTE	POST MILES TOTAL PROJECT	SHEET No.	TOTAL SHEETS
07	LA	710	17.2/26.4	1434	1507

REGISTERED CIVIL ENGINEER — DATE 03/01/11

6-27-11
PLANS APPROVAL DATE

REGISTERED PROFESSIONAL ENGINEER — Carl Duan No. C59976 Exp. 06-30-12 CIVIL — STATE OF CALIFORNIA

The State of California or its officers or agents shall not be responsible for the accuracy or completeness of electronic copies of this plan sheet.

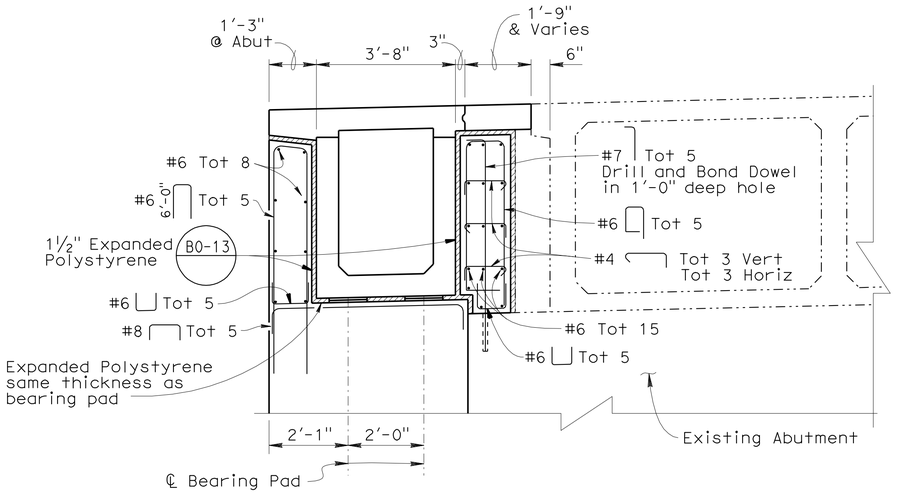

ABUTMENT SHEAR KEY

½" = 1'-0"

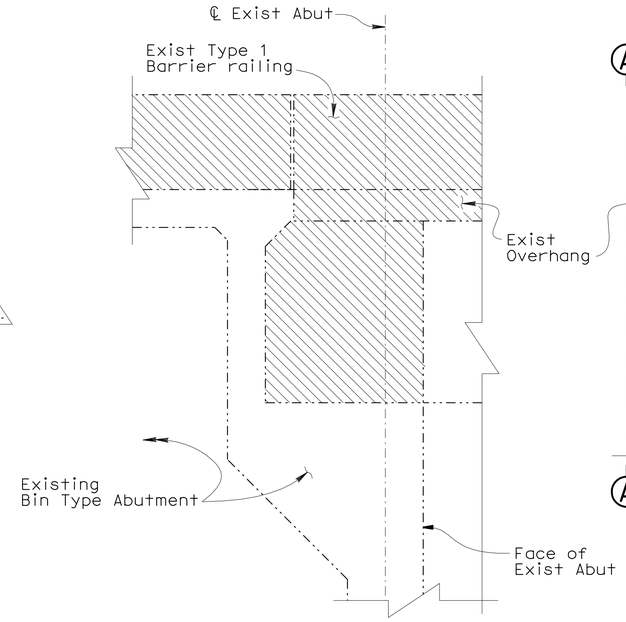

SECTION A-A

½" = 1'-0"

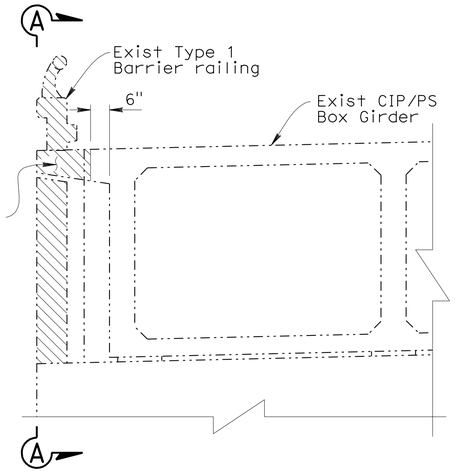

CONCRETE REMOVAL

½" = 1'-0"

Legend:

- Indicates existing structure
- Indicates new structure
- Indicates bridge removal (portion)
- Structure Excavation (Type Z-2) (Aerially Deposited Lead)
- Structure excavation
- Structure Backfill

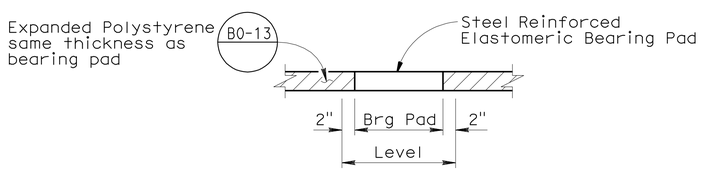

ABUTMENT BEARING PAD DETAIL

No Scale

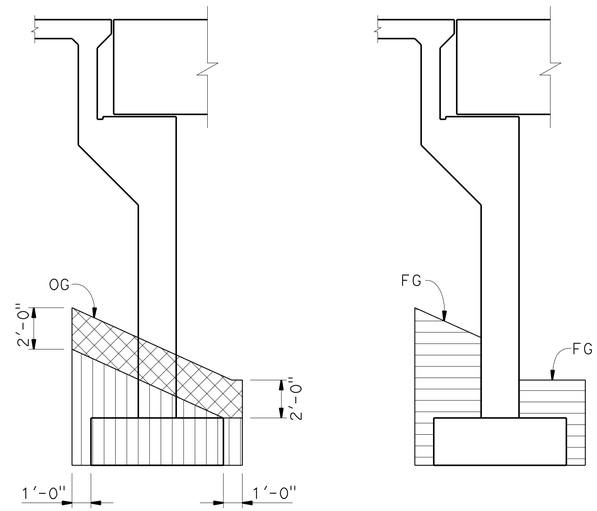

EXCAVATION — BACKFILL

FRONTWALL

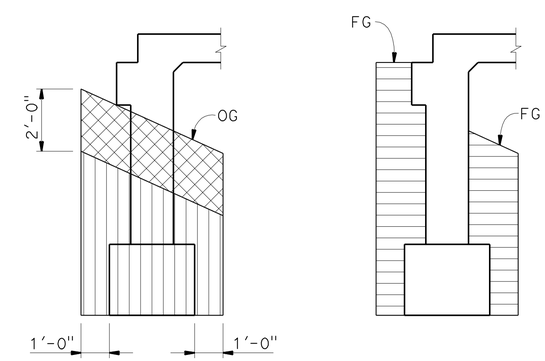

EXCAVATION — BACKFILL

BACKWALL

LIMITS OF PAYMENT FOR EXCAVATION & BACKFILL

NO SCALE

NOTE:
THE CONTRACTOR SHALL VERIFY ALL CONTROLLING FIELD DIMENSIONS BEFORE ORDERING OR FABRICATING ANY MATERIAL.

	BY	CHECKED
DESIGN	C. DUAN	T. TRAN
DETAILS	G. DICKERSON	C. DUAN
QUANTITIES	C. LIM	T. TRAN

STATE OF CALIFORNIA DEPARTMENT OF TRANSPORTATION

DIVISION OF ENGINEERING SERVICES STRUCTURE DESIGN — DESIGN BRANCH 21

BRIDGE NO. 53-1044 — POST MILE 23.44

OLYMPIC BLVD UC (WIDEN)
ABUTMENT DETAILS NO. 2

STRUCTURES DESIGN DETAIL SHEET (ENGLISH) (REV. 09-01-10)

ORIGINAL SCALE IN INCHES FOR REDUCED PLANS 0 1 2 3

UNIT: 3623
PROJECT NUMBER & PHASE: 0700020869 & 1 CONTRACT NO.: 202111

DISREGARD PRINTS BEARING EARLIER REVISION DATES → 8/28/10 3/1/11 2/2/11

SHEET 6 OF 17

FILE => 53-1044-f-a01dt02.dgn

USERNAME => s124496 DATE PLOTTED => 28-JUN-2011 TIME PLOTTED => 20:39

DIST	COUNTY	ROUTE	POST MILES TOTAL PROJECT	SHEET No.	TOTAL SHEETS
07	LA	710	17.2/26.4	1435	1507

REGISTERED CIVIL ENGINEER — DATE 03/01/11

6-27-11
PLANS APPROVAL DATE

REGISTERED PROFESSIONAL ENGINEER — Carl Duan No. C59976 Exp. 06-30-12 CIVIL — STATE OF CALIFORNIA

The State of California or its officers or agents shall not be responsible for the accuracy or completeness of electronic copies of this plan sheet.

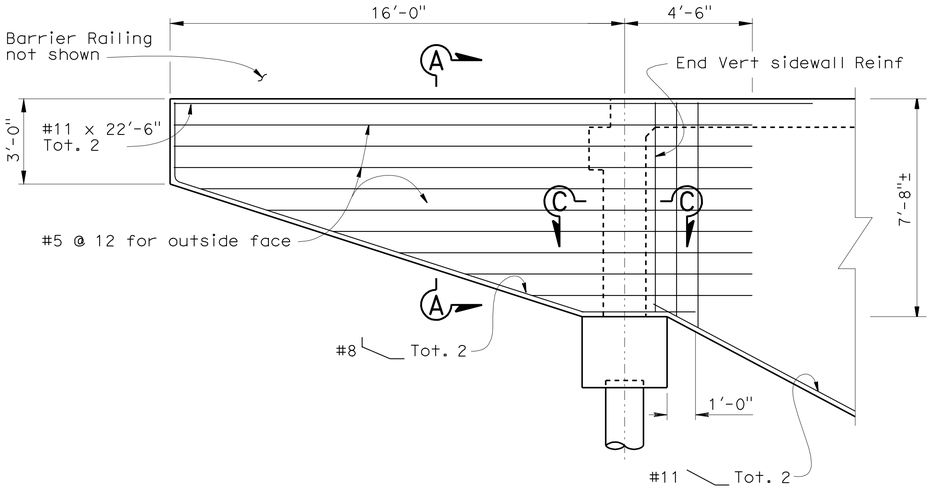

WINGWALL ELEVATION ABUTMENT 1

3/8" = 1'-0"

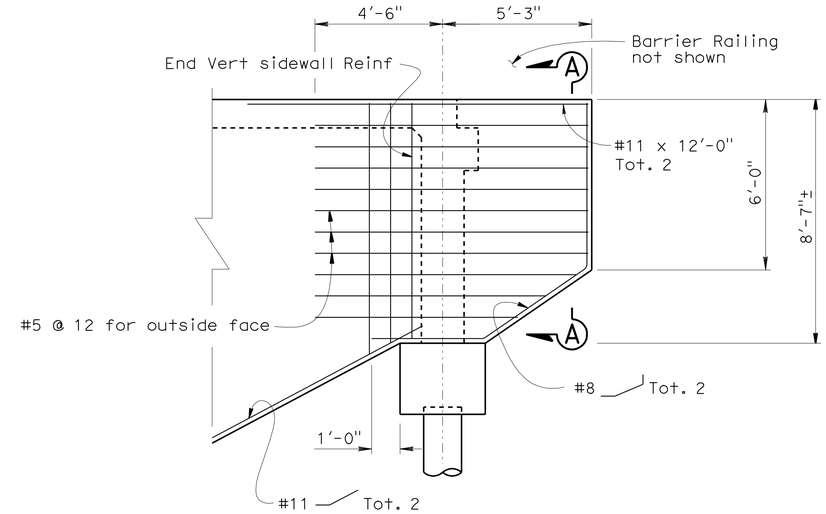

WINGWALL ELEVATION ABUTMENT 2

3/8" = 1'-0"

Legend:

Indicates existing structure

Indicates new structure

Indicates AC Overlay removal and replaced with Polyester Concrete

Notes:

1. Smooth the existing concrete surface for washer bearing. Bolts need to be snug-tight.

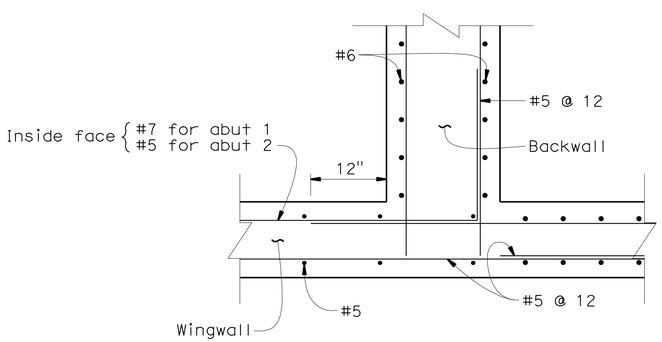

SECTION C-C

1" = 1'-0"

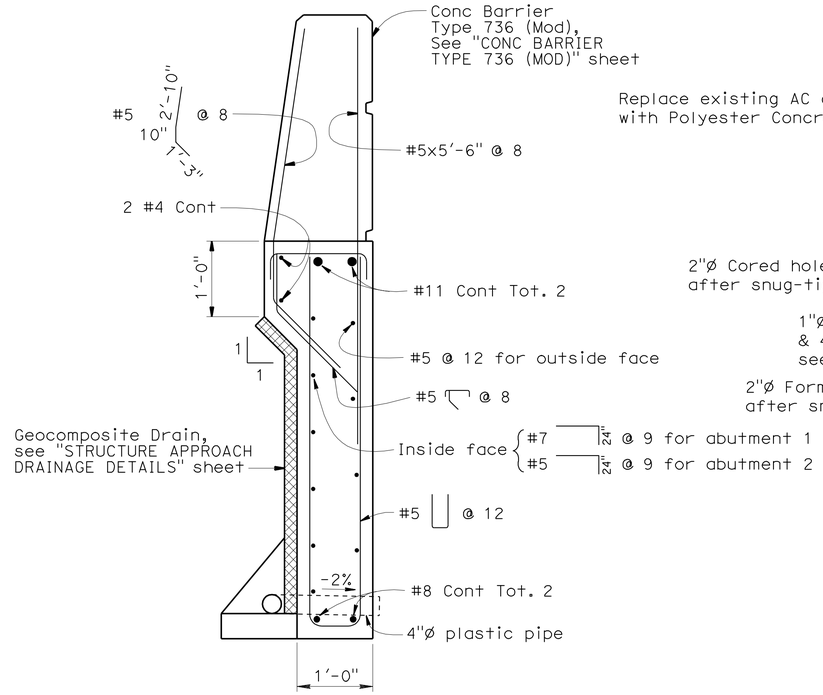

SECTION A-A

1" = 1'-0"

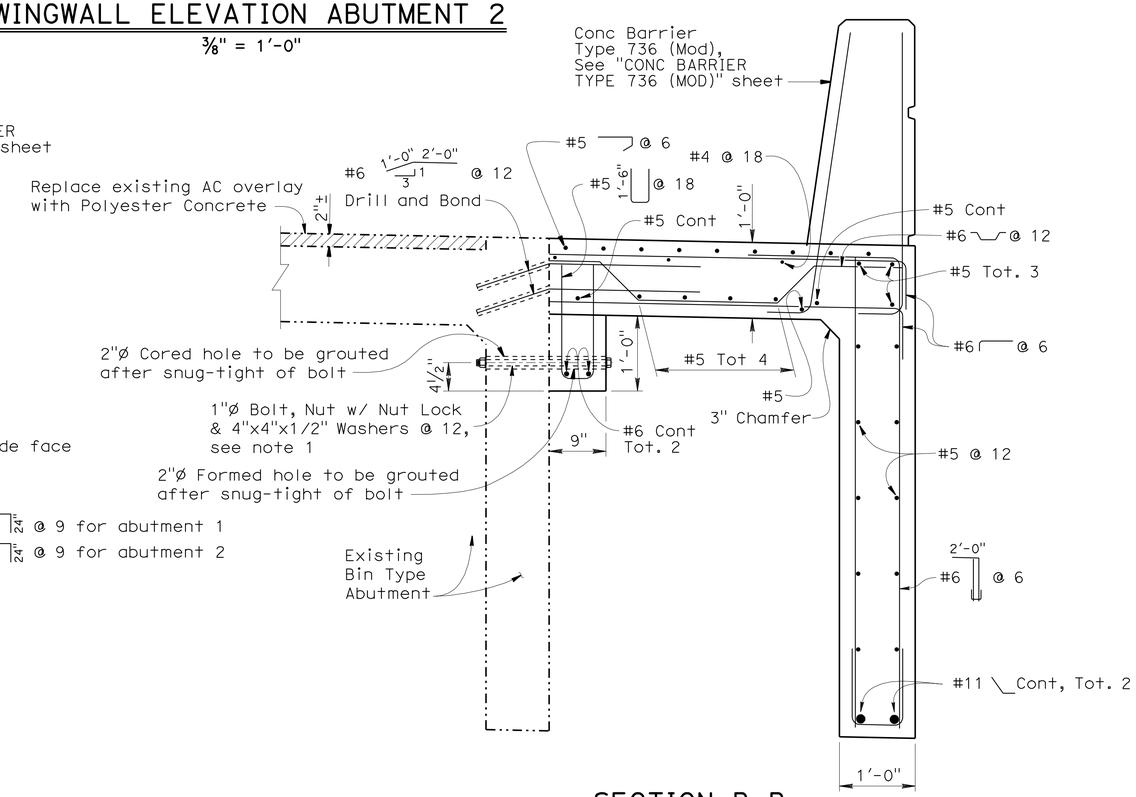

SECTION B-B

1" = 1'-0"

NOTE:
THE CONTRACTOR SHALL VERIFY ALL CONTROLLING FIELD DIMENSIONS BEFORE ORDERING OR FABRICATING ANY MATERIAL.

	BY	CHECKED
DESIGN	T. TRAN	C. DUAN
DETAILS	G. DICKERSON	C. DUAN
QUANTITIES	C. LIM	T. TRAN

STATE OF CALIFORNIA
DEPARTMENT OF TRANSPORTATION

DIVISION OF ENGINEERING SERVICES
STRUCTURE DESIGN
DESIGN BRANCH 21

BRIDGE NO. 53-1044
POST MILE 23.44

OLYMPIC BLVD UC (WIDEN)
ABUTMENT DETAILS NO. 3

STRUCTURES DESIGN DETAIL SHEET (ENGLISH) (REV. 09-01-10)

ORIGINAL SCALE IN INCHES FOR REDUCED PLANS 0 1 2 3

UNIT: 3623
PROJECT NUMBER & PHASE: 0700020869 & 1 CONTRACT NO.: 202111

DISREGARD PRINTS BEARING EARLIER REVISION DATES

REVISION DATES: 8/04/10 3/1/11 3/18/11

SHEET 7 OF 17

FILE => 53-1044-f-a01dt03.dgn

USERNAME => s124496 DATE PLOTTED => 28-JUN-2011 TIME PLOTTED => 20:39

DIST	COUNTY	ROUTE	POST MILES TOTAL PROJECT	SHEET No.	TOTAL SHEETS
07	LA	710	17.2/26.4	1436	1507

REGISTERED CIVIL ENGINEER — DATE 03/01/11

6-27-11
PLANS APPROVAL DATE

REGISTERED PROFESSIONAL ENGINEER — Carl Duan No. C59976 Exp. 06-30-12 CIVIL — STATE OF CALIFORNIA

The State of California or its officers or agents shall not be responsible for the accuracy or completeness of electronic copies of this plan sheet.

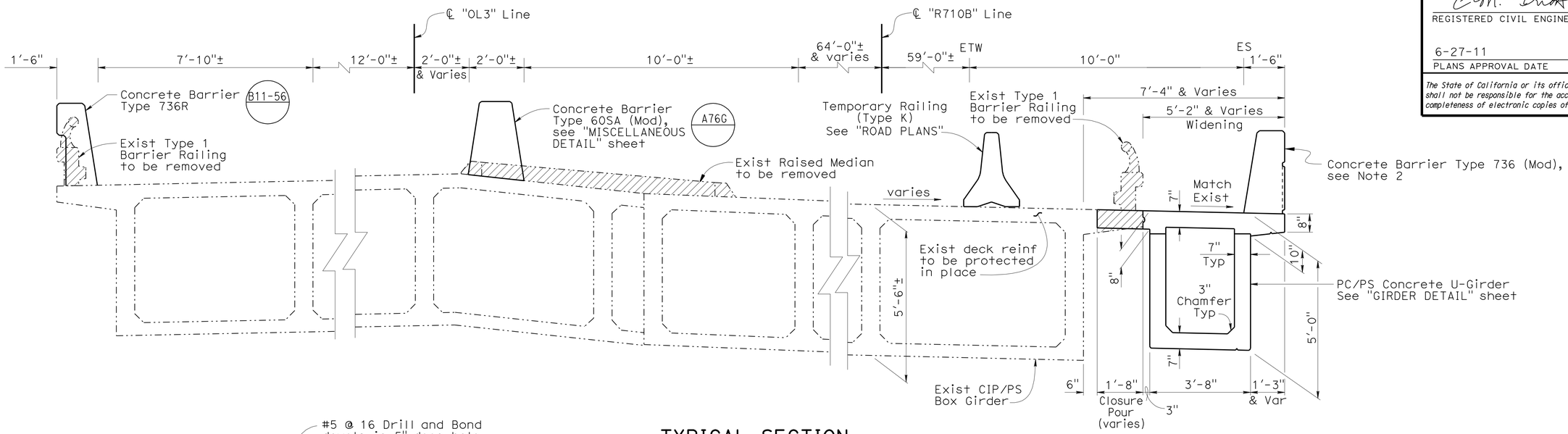

TYPICAL SECTION

½" = 1'-0"

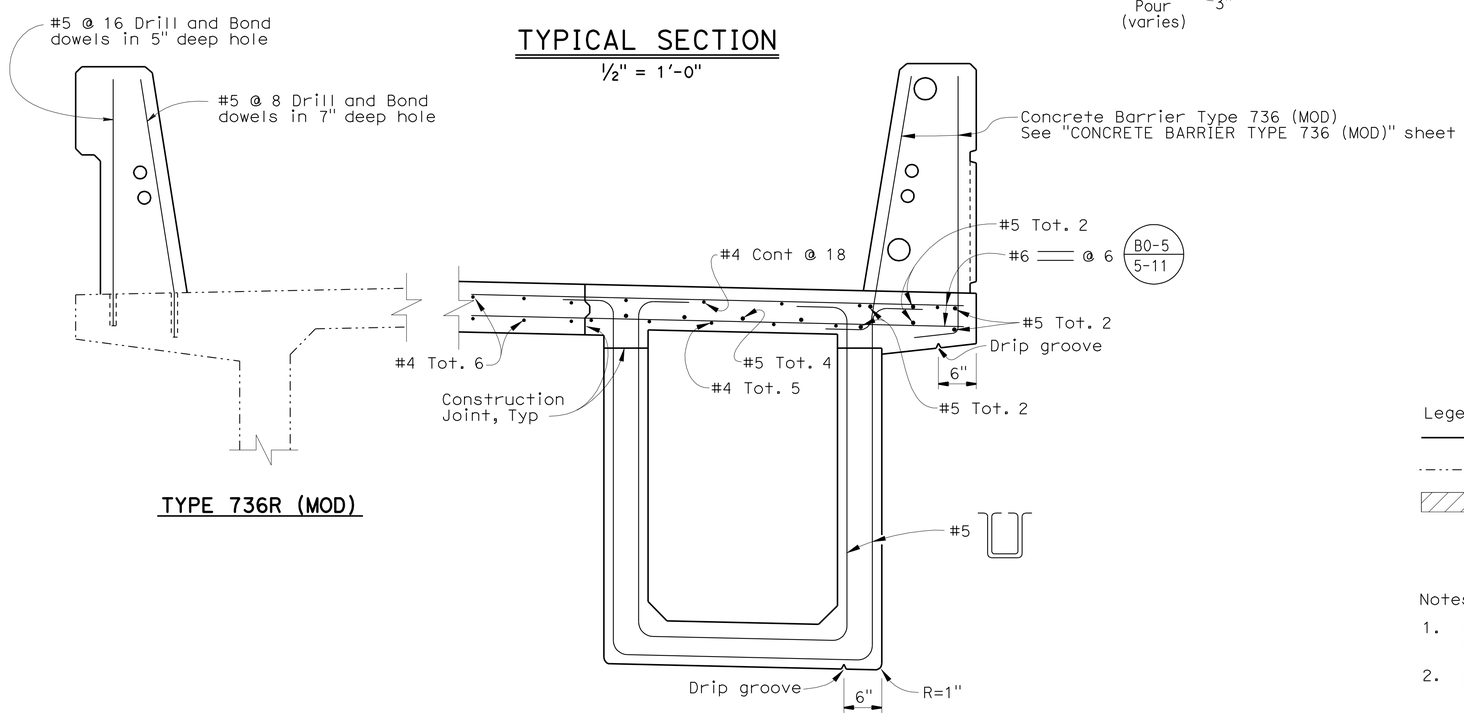

TYPE 736R (MOD)

PART TYPICAL SECTION

1" = 1'-0"

Legend:

- Indicates new structure
- Indicates existing structure
- Indicates bridge removal (portion)

Notes:

1. For depth and layout of drill and bond dowels, see "MISCELLANEOUS DETAILS" sheet.
2. For Utility Conduit and Achitectural details, see "CONCRETE BARRIER TYPE 736 (MOD)" sheet.

NOTE:
THE CONTRACTOR SHALL VERIFY ALL CONTROLLING FIELD DIMENSIONS BEFORE ORDERING OR FABRICATING ANY MATERIAL.

	BY	CHECKED
DESIGN	C. DUAN	T. TRAN
DETAILS	J. VALENCIA / G. D.	C. DUAN
QUANTITIES	C. LIM	T. TRAN

STATE OF CALIFORNIA
DEPARTMENT OF TRANSPORTATION

DIVISION OF ENGINEERING SERVICES
STRUCTURE DESIGN
DESIGN BRANCH 21

BRIDGE NO. 53-1044
POST MILE 23.44

OLYMPIC BLVD UC (WIDEN)
TYPICAL SECTION

STRUCTURES DESIGN DETAIL SHEET (ENGLISH) (REV. 09-01-10)

ORIGINAL SCALE IN INCHES FOR REDUCED PLANS 0 1 2 3

UNIT: 3623
PROJECT NUMBER & PHASE: 0700020869 & 1 CONTRACT NO.: 202111

DISREGARD PRINTS BEARING EARLIER REVISION DATES

REVISION DATES: 01/20/10 12/23/10 3/1/11

SHEET 8 OF 17

FILE => 53-1044-k-ts01.dgn

USERNAME => s124096 DATE PLOTTED => 28-JUN-2011 TIME PLOTTED => 20:39

DIST	COUNTY	ROUTE	POST MILES TOTAL PROJECT	SHEET No.	TOTAL SHEETS
07	LA	710	17.2/26.4	1437	1507

REGISTERED CIVIL ENGINEER — DATE 03/01/11

6-27-11
PLANS APPROVAL DATE

REGISTERED PROFESSIONAL ENGINEER — Carl Duan — No. C59976 — Exp. 06-30-12 — CIVIL — STATE OF CALIFORNIA

The State of California or its officers or agents shall not be responsible for the accuracy or completeness of electronic copies of this plan sheet.

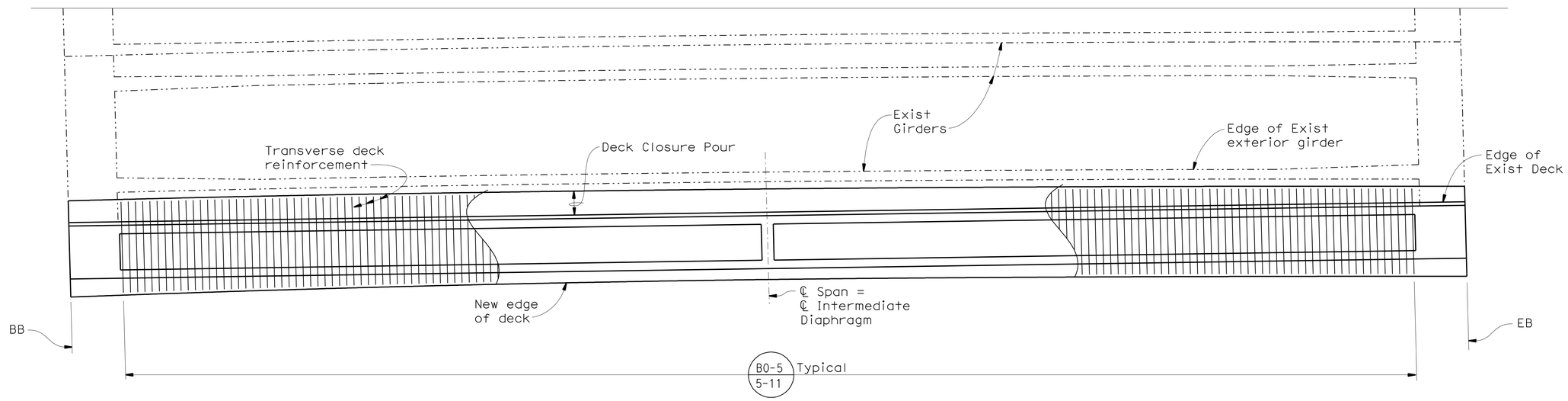

GIRDER LAYOUT

1/4" = 1'-0"

Legend:

Indicates existing structure

Indicates new structure

NOTE:
THE CONTRACTOR SHALL VERIFY ALL CONTROLLING FIELD DIMENSIONS BEFORE ORDERING OR FABRICATING ANY MATERIAL.

	BY	CHECKED
DESIGN	C. DUAN	T. TRAN
DETAILS	G. DICKERSON	C. DUAN
QUANTITIES	C. LIM	T. TRAN

STATE OF CALIFORNIA
DEPARTMENT OF TRANSPORTATION

DIVISION OF ENGINEERING SERVICES
STRUCTURE DESIGN
DESIGN BRANCH 21

BRIDGE NO. 53-1044
POST MILE 23.44

OLYMPIC BLVD UC (WIDEN)
GIRDER LAYOUT

STRUCTURES DESIGN DETAIL SHEET (ENGLISH) (REV. 09-01-10)

ORIGINAL SCALE IN INCHES FOR REDUCED PLANS 0 1 2 3

UNIT: 3623
PROJECT NUMBER & PHASE: 0700020869 & 1 CONTRACT NO.: 202111

DISREGARD PRINTS BEARING EARLIER REVISION DATES

REVISION DATES: 1/26/10 9/22/10 3/1/11

SHEET 9 OF 17

FILE => 53-1044-1-g_1o01.dgn

USERNAME => s124496 DATE PLOTTED => 28-JUN-2011 TIME PLOTTED => 20:39

DIST	COUNTY	ROUTE	POST MILES TOTAL PROJECT	SHEET No.	TOTAL SHEETS
07	LA	710	17.2/26.4	1438	1507

REGISTERED CIVIL ENGINEER — DATE 03/01/11

6-27-11
PLANS APPROVAL DATE

REGISTERED PROFESSIONAL ENGINEER — Carl Duan No. C59976 Exp. 06-30-12 CIVIL — STATE OF CALIFORNIA

The State of California or its officers or agents shall not be responsible for the accuracy or completeness of electronic copies of this plan sheet.

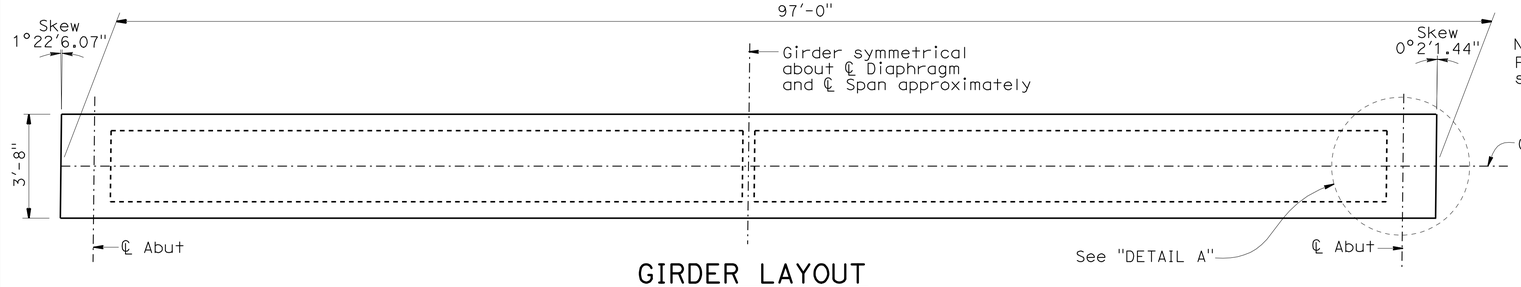

Note:
For clarity of girder skew, see "GENERAL PLAN" sheet

GIRDER LAYOUT

HORIZ SCALE 3/16" = 1'-0"
VERT SCALE 3/8" = 1'-0"

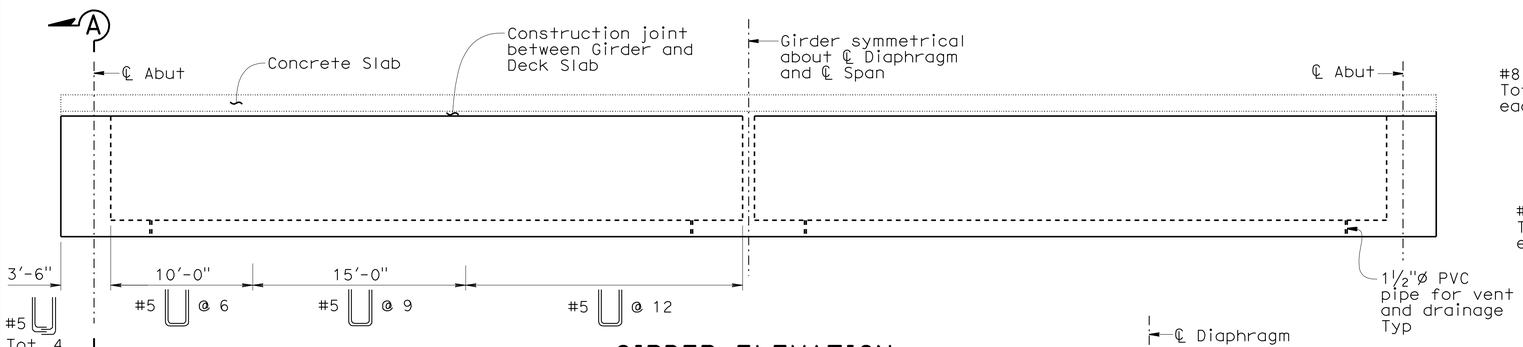

GIRDER ELEVATION

HORIZ SCALE 3/16" = 1'-0"
VERT SCALE 3/8" = 1'-0"

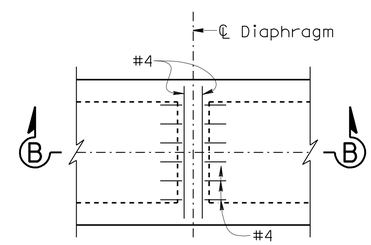

PLAN

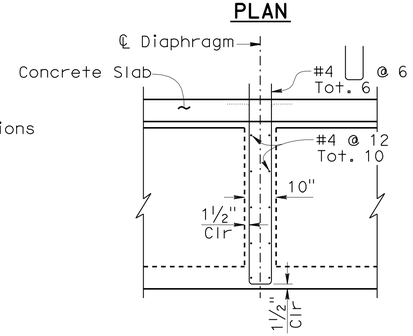

SECTION B-B

DIAPHRAGM DETAILS

½" = 1'-0"

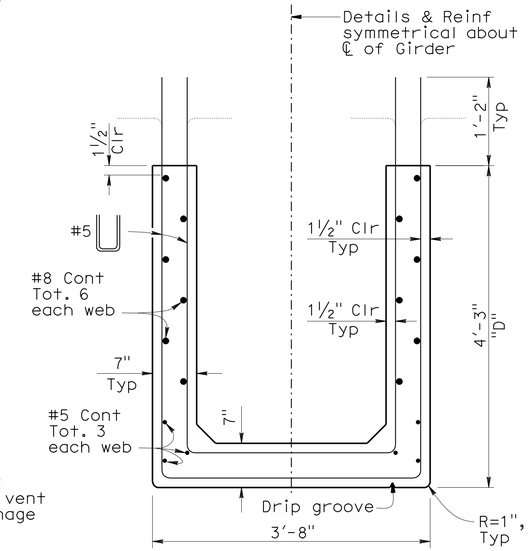

TYPICAL GIRDER SECTION

1" = 1'-0"

(For details not shown, see "STRAND & DEBONDING PATTERN" detail)

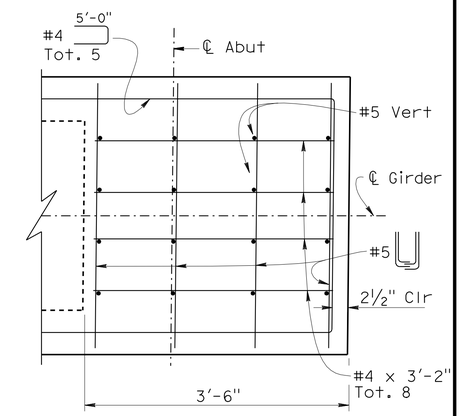

DETAIL A

1" = 1'-0"

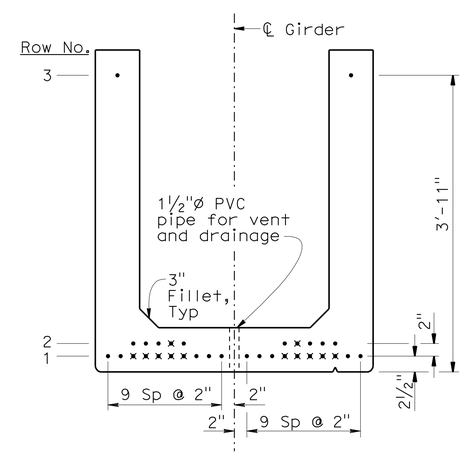

STRAND & DEBONDING PATTERN

1" = 1'-0"

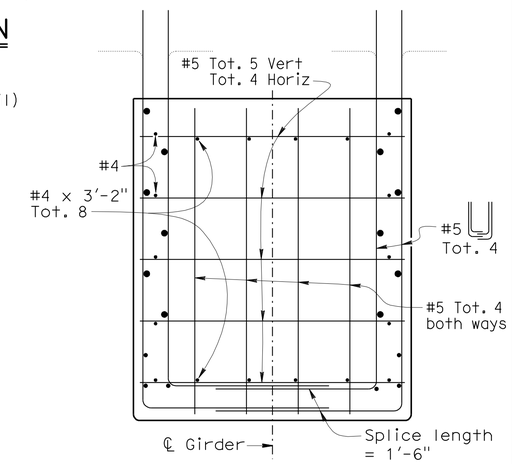

SECTION A-A

1" = 1'-0"

Legend:
- • Bonded Strands
- × Debonded Strands

Row No.	Total No. of 0.6"ø Strands	No. of Debonded Strands	Debonded Length
1	20	10	10'-0" @ end
2	10	2	10'-0" @ end

PRESTRESSING NOTES:

Jacking Force (P): The force required at center of span after all losses

Concrete Strength: f'ci is at time of initial stressing, ksi.
f'c is at 28 days, ksi.

Deflection Components: Informational-to be used in setting screed line elevations

Screed line elevations for deck concrete will be determined by the Engineer.

Girder Length	"D"	Number of 0.6" ø Strands	P Jack	Concrete Strength (ksi)		Midspan Dead Load Deflection (in)	
				f'ci	f'c	Deck	Rail
97'-0"	4'-3"	32	1408 kips (44 kips/strand)	6	7	0.87	0.23

NOTE:
THE CONTRACTOR SHALL VERIFY ALL CONTROLLING FIELD DIMENSIONS BEFORE ORDERING OR FABRICATING ANY MATERIAL.

	BY	CHECKED
DESIGN	C. DUAN	T. TRAN
DETAILS	J. VALENCIA / G. D.	C. DUAN
QUANTITIES	C. LIM	T. TRAN

STATE OF CALIFORNIA
DEPARTMENT OF TRANSPORTATION

DIVISION OF ENGINEERING SERVICES
STRUCTURE DESIGN
DESIGN BRANCH 21

BRIDGE NO. 53-1044
POST MILE 23.44

OLYMPIC BLVD UC (WIDEN)
GIRDER DETAILS

STRUCTURES DESIGN DETAIL SHEET (ENGLISH) (REV. 09-01-10)

ORIGINAL SCALE IN INCHES FOR REDUCED PLANS 0 1 2 3

UNIT: 3623
PROJECT NUMBER & PHASE: 0700020869 & 1 CONTRACT NO.: 202111

DISREGARD PRINTS BEARING EARLIER REVISION DATES — REVISION DATES 6/28/10 12/23/10 3/1/11

SHEET 10 OF 17

FILE => 53-1044-1-gdt01.dgn

USERNAME => s124496 DATE PLOTTED => 28-JUN-2011 TIME PLOTTED => 20:39

DIST	COUNTY	ROUTE	POST MILES TOTAL PROJECT	SHEET No.	TOTAL SHEETS
07	LA	710	17.2/26.4	1439	1507

REGISTERED CIVIL ENGINEER — DATE 03/01/11

6-27-11
PLANS APPROVAL DATE

REGISTERED PROFESSIONAL ENGINEER — Carl Duan — No. C59976 — Exp. 06-30-12 — CIVIL — STATE OF CALIFORNIA

The State of California or its officers or agents shall not be responsible for the accuracy or completeness of electronic copies of this plan sheet.

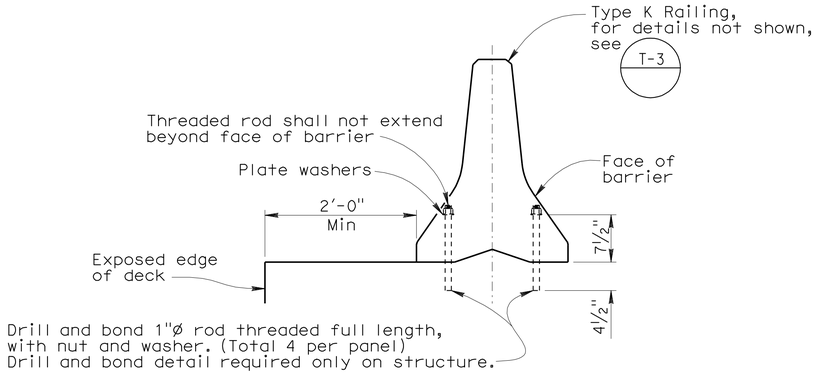

TYPE K RAILING ATTACHMENT

No Scale

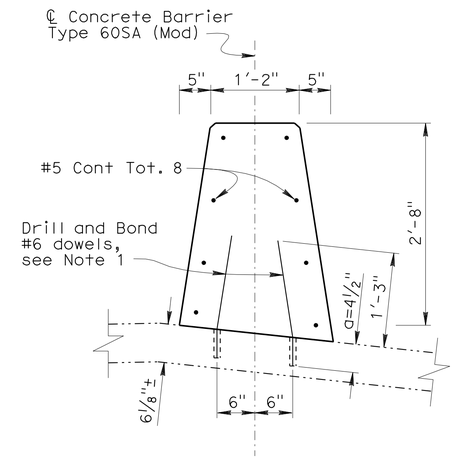

CONCRETE BARRIER TYPE 60SA (Modified)

1" = 1'-0"

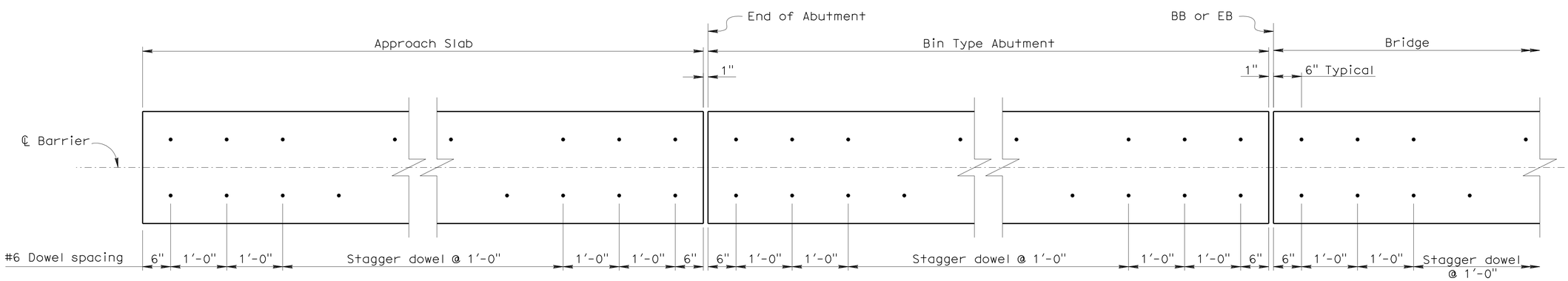

MEDIAN BARRIER DOWEL LAYOUT
(CONCRETE BARRIER TYPE 60SA (MODIFIED))

1" = 1'-0"

Legend:

—··—··— Indicates existing structure

——— Indicates new structure

NOTE:
THE CONTRACTOR SHALL VERIFY ALL CONTROLLING FIELD DIMENSIONS BEFORE ORDERING OR FABRICATING ANY MATERIAL.

	BY	CHECKED
DESIGN	C. DUAN	T. TRAN
DETAILS	G. DICKERSON	C. DUAN
QUANTITIES	C. LIM	T. TRAN

STATE OF CALIFORNIA
DEPARTMENT OF TRANSPORTATION

DIVISION OF ENGINEERING SERVICES
STRUCTURE DESIGN
DESIGN BRANCH 21

BRIDGE NO. 53-1044
POST MILE 23.44

OLYMPIC BLVD UC (WIDEN)
MISCELLANEOUS DETAILS

STRUCTURES DESIGN DETAIL SHEET (ENGLISH) (REV. 09-01-10)

ORIGINAL SCALE IN INCHES FOR REDUCED PLANS 0 1 2 3

UNIT: 3623
PROJECT NUMBER & PHASE: 0700020869 & 1 CONTRACT NO.: 202111

DISREGARD PRINTS BEARING EARLIER REVISION DATES → REVISION DATES 8/10/10 9/29/10 3/1/11

SHEET 11 OF 17

FILE => 53-1044-r-miscdt01.dgn

USERNAME => s124496 DATE PLOTTED => 28-JUN-2011 TIME PLOTTED => 20:40

DIST	COUNTY	ROUTE	POST MILES TOTAL PROJECT	SHEET No.	TOTAL SHEETS
07	LA	710	17.2/26.4	1440	1507

REGISTERED CIVIL ENGINEER — DATE 03/01/11

6-27-11
PLANS APPROVAL DATE

REGISTERED PROFESSIONAL ENGINEER — Carl Duan — No. C59976 — Exp. 06-30-12 — CIVIL — STATE OF CALIFORNIA

The State of California or its officers or agents shall not be responsible for the accuracy or completeness of electronic copies of this plan sheet.

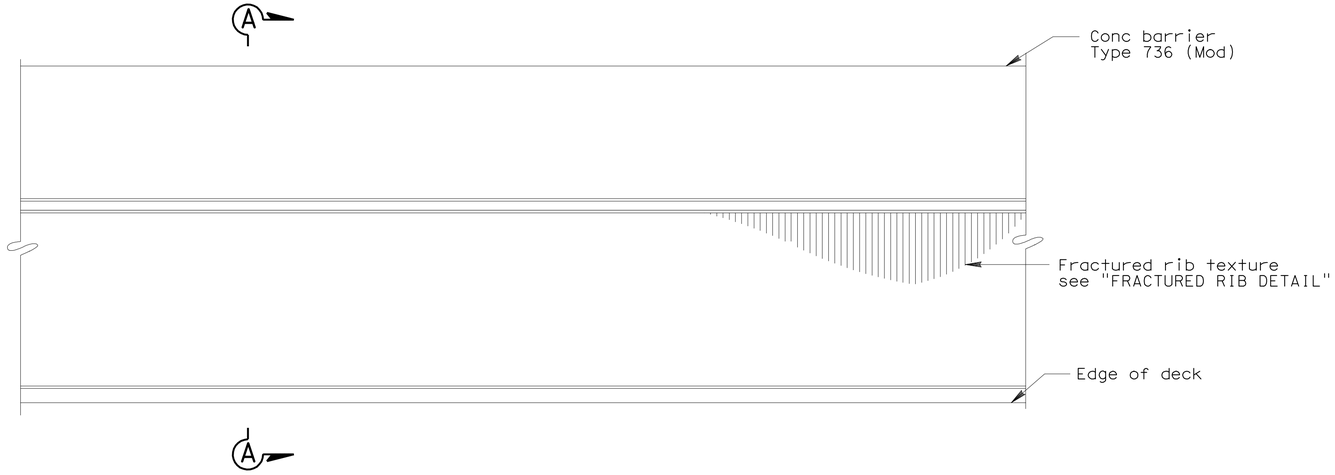

TYPE 736 (MOD) BARRIER ELEVATION - ARCHITECTURAL TREATMENT

1½" = 1'-0"

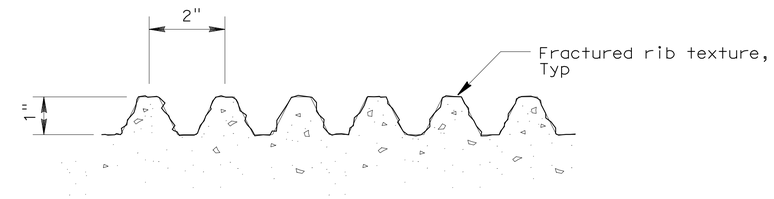

FRACTURED RIB DETAIL

No scale

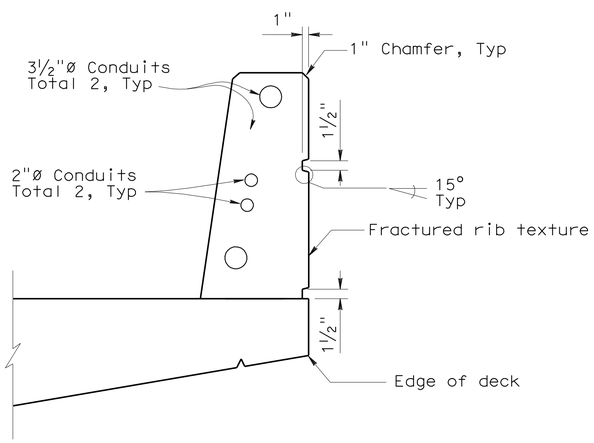

TYPE 736 (MOD) - TYP ARCHITECTURAL AND UTILITY DETAILS

1" = 1'-0"

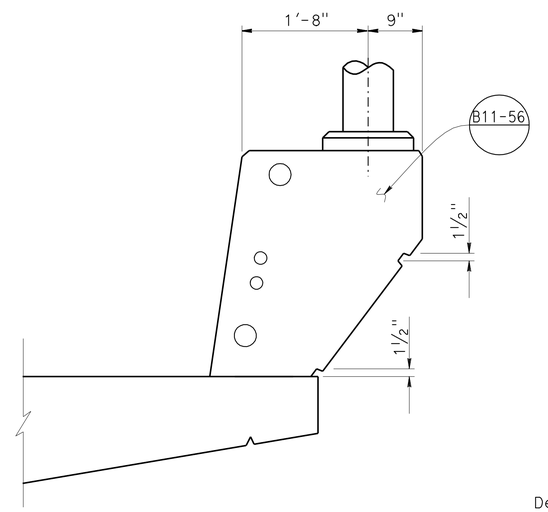

TYPE 736 (MOD) - PEDESTAL ARCHITECTURAL AND UTILITY DETAILS

1" = 1'-0"

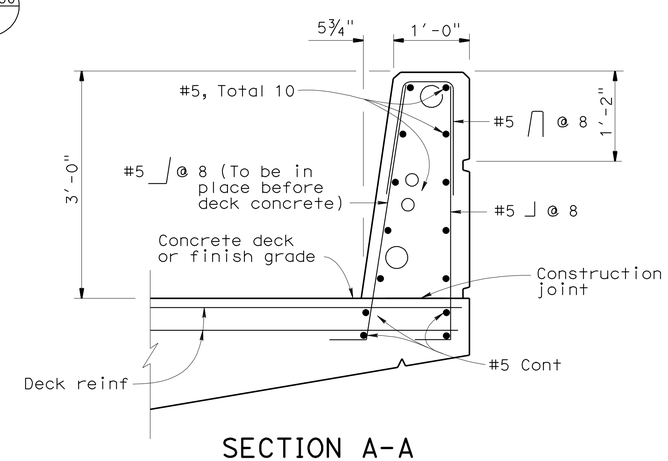

SECTION A-A

1" = 1'-0"

Note:
For details not shown, see "Standard Plan - Consrete Barrier Type 736".

NOTE:
THE CONTRACTOR SHALL VERIFY ALL CONTROLLING FIELD DIMENSIONS BEFORE ORDERING OR FABRICATING ANY MATERIAL.

	BY	CHECKED
DESIGN	C. DUAN	T. TRAN
DETAILS	M. KINGRA / Y. FENG	C. DUAN
QUANTITIES	C. LIM	T. TRAN

STATE OF CALIFORNIA
DEPARTMENT OF TRANSPORTATION

DIVISION OF ENGINEERING SERVICES
STRUCTURE DESIGN
DESIGN BRANCH 21

BRIDGE NO. 53-1044
POST MILE 23.44

OLYMPIC BLVD UC (WIDEN)
CONCRETE BARRIER TYPE 736 (MOD)

STRUCTURES DESIGN DETAIL SHEET (ENGLISH) (REV. 09-01-10)

ORIGINAL SCALE IN INCHES FOR REDUCED PLANS 0 1 2 3

UNIT: 3623
PROJECT NUMBER & PHASE: 0700020869 & 1 CONTRACT NO.: 202111

DISREGARD PRINTS BEARING EARLIER REVISION DATES

REVISION DATES: 8/13/10 8/23/10 8/31/10 3/1/11

SHEET 12 OF 17

FILE => 53-1044-s-brdt.dgn

USERNAME => s124496 DATE PLOTTED => 28-JUN-2011 TIME PLOTTED => 20:40

DIST	COUNTY	ROUTE	POST MILES TOTAL PROJECT	SHEET No.	TOTAL SHEETS
07	LA	710	17.2/26.4	1441	1507

REGISTERED CIVIL ENGINEER — DATE 03/01/11

6-27-11
PLANS APPROVAL DATE

REGISTERED PROFESSIONAL ENGINEER — Carl Duan No. C59976 Exp. 06-30-12 CIVIL — STATE OF CALIFORNIA

The State of California or its officers or agents shall not be responsible for the accuracy or completeness of electronic copies of this plan sheet.

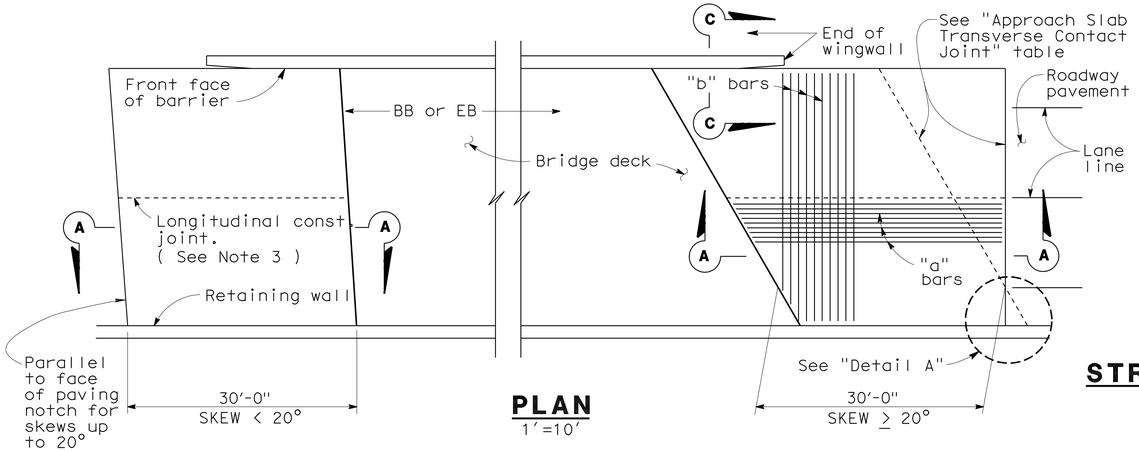

PLAN
1"=10'

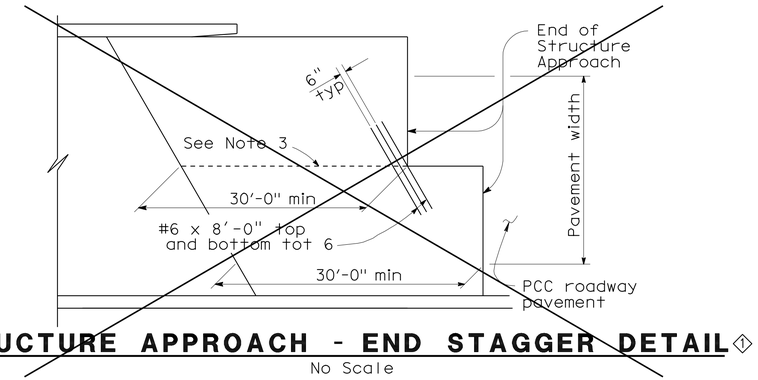

STRUCTURE APPROACH - END STAGGER DETAIL ①
No Scale

APPROACH SLAB TRANSVERSE CONTACT JOINT		
APPROACH SKEW	WITH AC ROADWAY PAVEMENT	WITH PCC ROADWAY PAVEMENT
< 20°	Parallel to face of paving notch	Parallel to face of paving notch
20°- 45°	Parallel to face of P N use (Detail A)	Stagger lines 24' to 36' apart
> 45°	Parallel to face of P N use (Detail A)	Stagger at each lane line

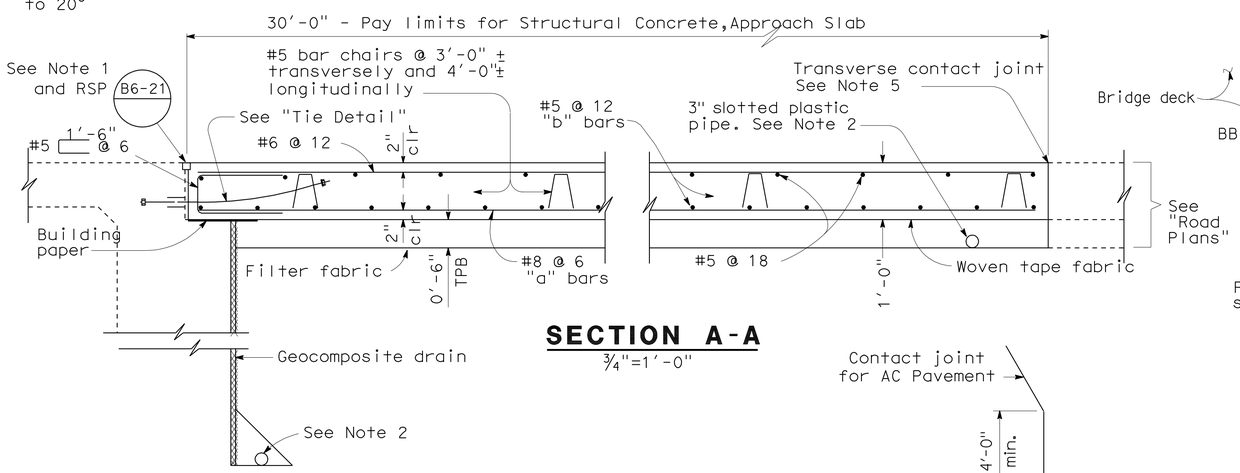

SECTION A-A
¾"=1'-0"

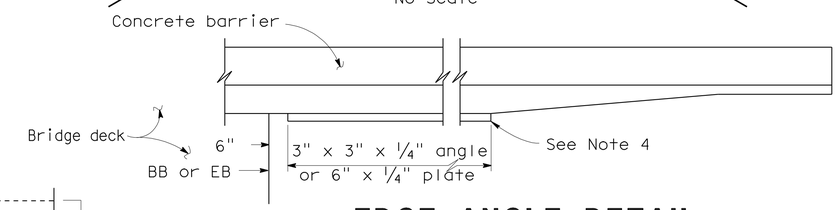

EDGE ANGLE DETAIL
½"=1'-0"

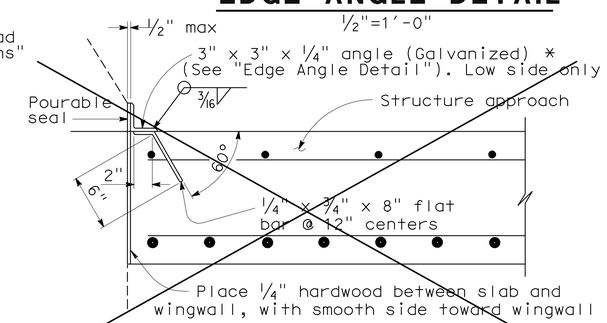

*(TO BE USED WITH TYPE 25 OR TYPE 27 CONCRETE BARRIER) ①

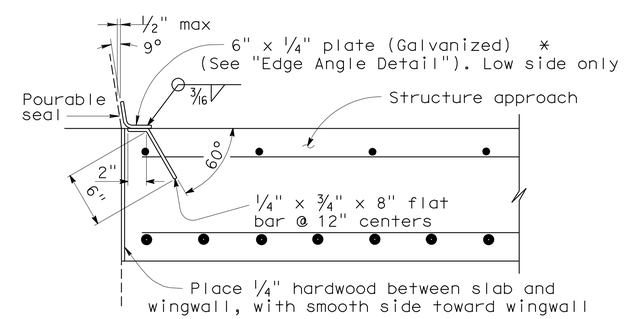

*(TO BE USED WITH TYPE 732 OR TYPE 736 CONCRETE BARRIER)

DETAIL B
1½"=1'-0"

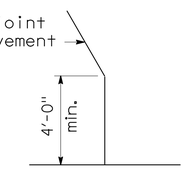

DETAIL A
No Scale

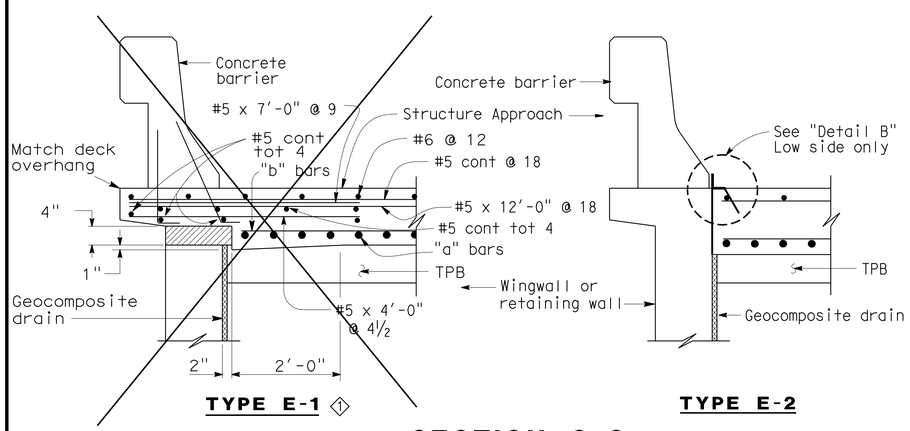

TYPE E-1 ① TYPE E-2

SECTION C-C
¾"=1'-0"

(Type E-1 to be used, unless otherwise shown on plans)

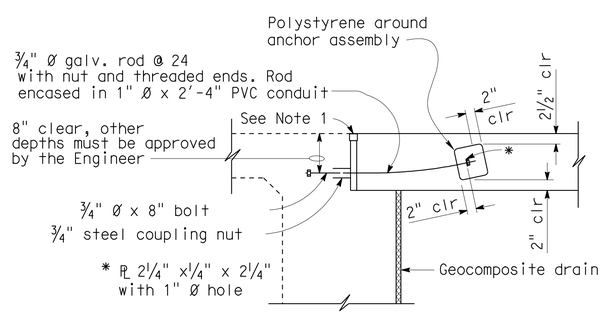

TIE DETAIL
¾"=1'-0"

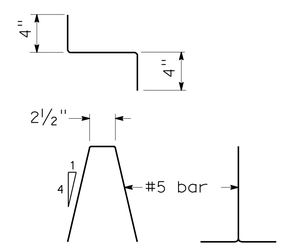

BAR CHAIR DETAIL
1½"=1'-0"

NOTES:

1. For details not noted or shown, see Structure Plans.
2. For drainage details, see "Structure Approach Drainage Details" sheet.
3. Longitudinal construction joints, when permitted by the Engineer, shall be located on lane lines.
4. End angle or plate at beginning of barrier transition, end of wingwall or end of structure approach, as applicable.
5. For transverse contact joint with new PCC paving, refer to Standard Plan P10.
6. At the contractor's option, approach slab transverse reinforcement may be placed parallel to paving notch. Spacing of transverse reinforcement is measured along ℄ roadway.

~~Polystyrene to be removed.~~ ①

SPECIAL DETAILS

REVISED STANDARD DRAWING

FILE NO. xs3-180e

APPROVAL DATE 8-12-08

① Does not apply

STATE OF CALIFORNIA DEPARTMENT OF TRANSPORTATION

DIVISION OF ENGINEERING SERVICES

BRIDGE NO. 53-1044

POST MILE 23.44

OLYMPIC BLVD UC (WIDEN)

STRUCTURE APPROACH TYPE N(30D)

DS OSD 2147A (ENGLISH STANDARD DRAWING "XS" BORDER REV. (02-02-11)

ORIGINAL SCALE IN INCHES FOR REDUCED PLANS 0 1 2 3

UNIT: 3623
PROJECT NUMBER & PHASE: 0700020869 & 1 CONTRACT NO.: 202111

DISREGARD PRINTS BEARING EARLIER REVISION DATES

REVISION DATES 8/14/10 8/31/10 3/1/11

SHEET 13 OF 17

FILE => 53-1044-s-sa_N30D.dgn

USERNAME => s124496 DATE PLOTTED => 28-JUN-2011 TIME PLOTTED => 20:40

DIST	COUNTY	ROUTE	POST MILES TOTAL PROJECT	SHEET No.	TOTAL SHEETS
07	LA	710	17.2/26.4	1442	1507

REGISTERED CIVIL ENGINEER — DATE 03/01/11

6-27-11
PLANS APPROVAL DATE

REGISTERED PROFESSIONAL ENGINEER — Carl Duan No. C59976 Exp. 06-30-12 CIVIL — STATE OF CALIFORNIA

The State of California or its officers or agents shall not be responsible for the accuracy or completeness of electronic copies of this plan sheet.

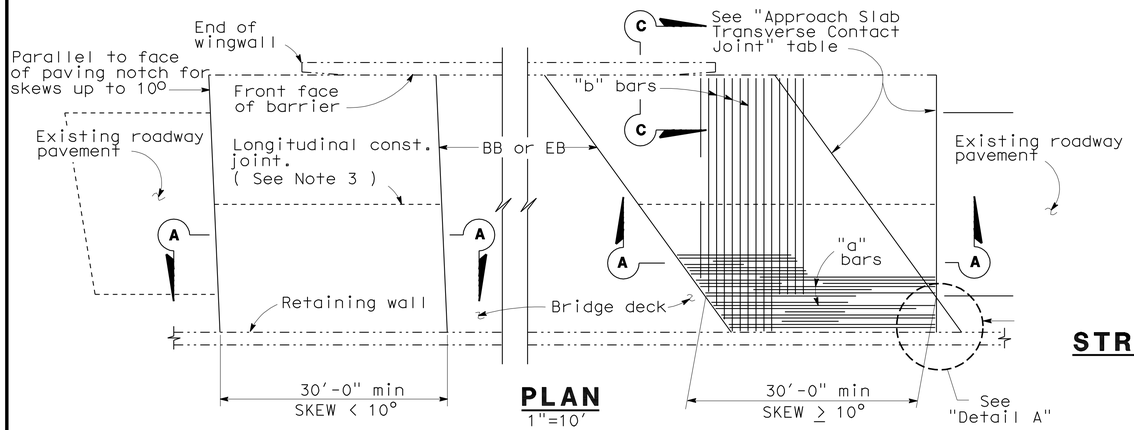

PLAN
1"=10'

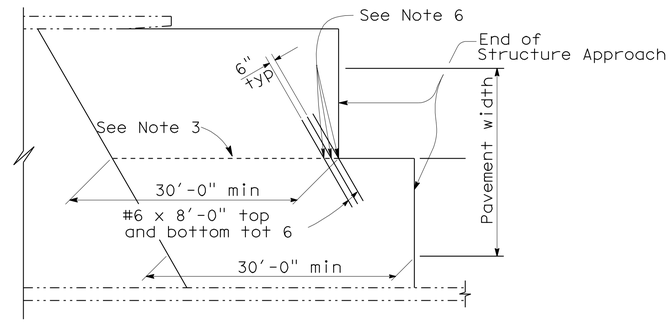

STRUCTURE APPROACH - END STAGGER DETAIL
No Scale

APPROACH SLAB TRANSVERSE CONTACT JOINT		
APPROACH SKEW	WITH AC ROADWAY PAVEMENT	WITH PCC ROADWAY PAVEMENT
< 10°	Parallel to face of paving notch	Parallel to face of paving notch
10° - 45°	Parallel to face of P N use (Detail A)	Stagger lines 24' to 36' apart
> 45°	Parallel to face of P N use (Detail A)	Stagger at each lane line

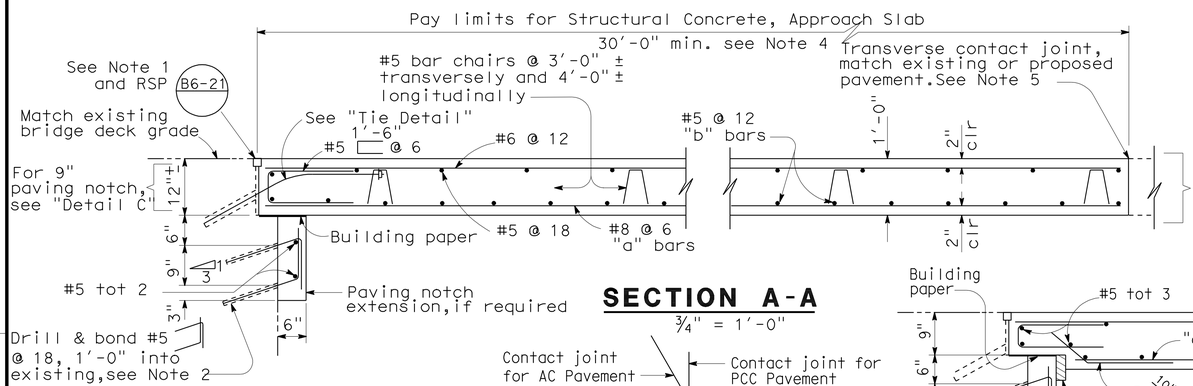

SECTION A-A
¾" = 1'-0"

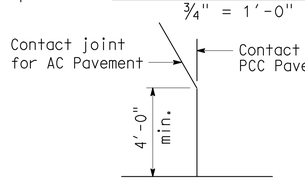

DETAIL A
No Scale

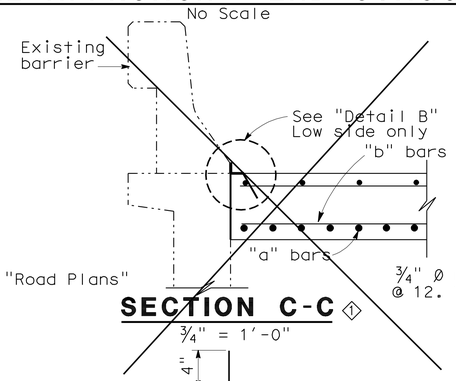

SECTION C-C ◇1
¾" = 1'-0"

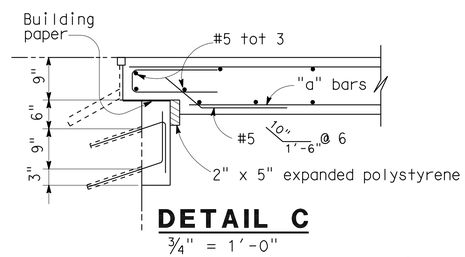

DETAIL C
¾" = 1'-0"

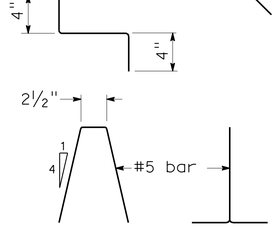

BAR CHAIR DETAIL
1½" = 1'-0"

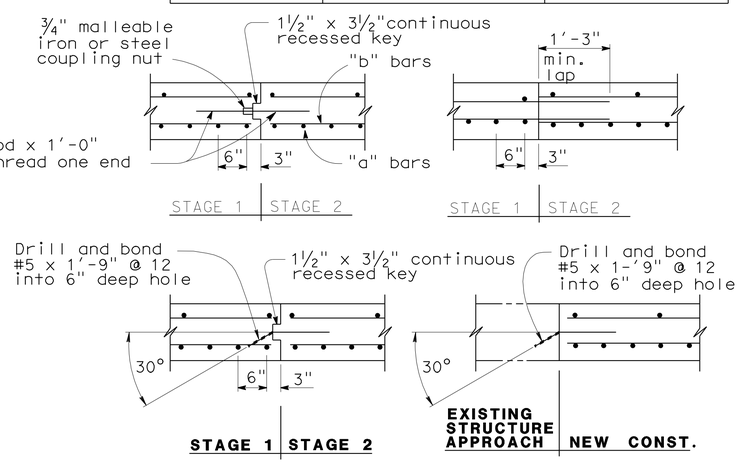

LONGITUDINAL CONSTRUCTION JOINT ALTERNATIVES
¾" = 1'-0"

NOTES:

1. For details not shown or noted, see Structure Plans. Adjust bar reinforcement to clear a sawcut for sealed joint, when required.
2. Space to avoid existing prestress anchorages and main reinforcement.
3. Longitudinal construction joints, when permitted by the Engineer, shall be located on lane lines.
4. Transverse contact joint shall be a minimum of 5'-0" from an existing or constructed weakened plane joint.
5. For transverse contact joint with new PCC paving, refer to Standard Plan P10.
6. Couplers are required for stage construction.
7. End angle or plate at beginning of barrier transition, end of wingwall or end of structure approach as applicable.

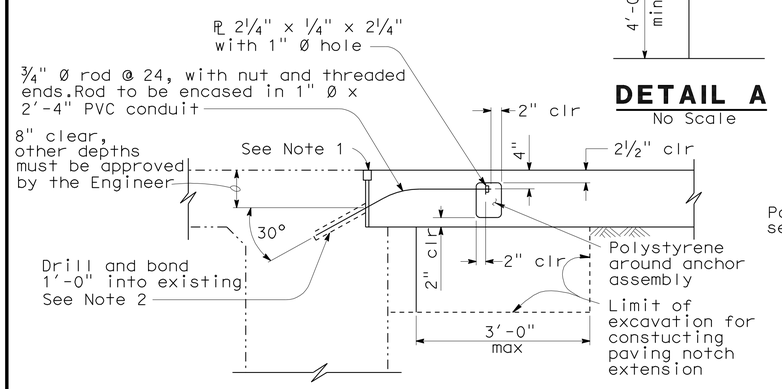

TIE DETAIL
¾" = 1'-0"

NOTE: For details not shown, see "Section A-A".

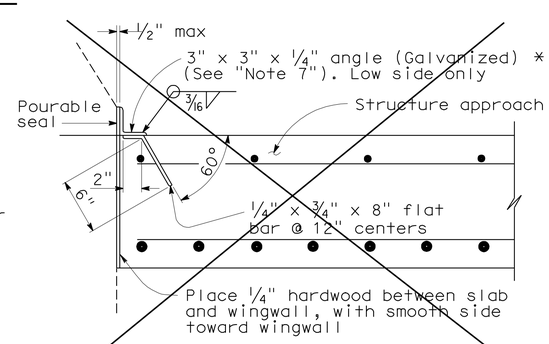

*(TO BE USED WITH TYPE 25 OR TYPE 27 CONCRETE BARRIER) ◇1

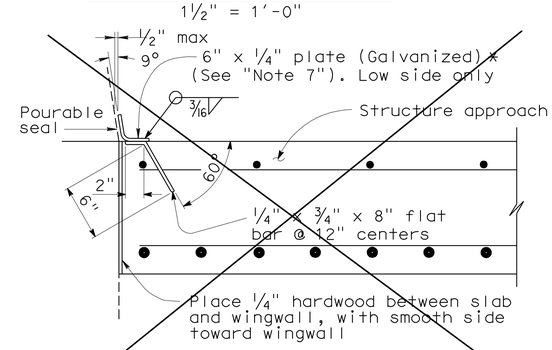

*(TO BE USED WITH TYPE 732 OR TYPE 736 CONCRETE BARRIER) ◇1

DETAIL B
1½" = 1'-0"

SPECIAL DETAILS

REVISED STANDARD DRAWING
FILE NO. xs3-140e
APPROVAL DATE 3-14-05

◇1 Does not apply

STATE OF CALIFORNIA DEPARTMENT OF TRANSPORTATION

DIVISION OF ENGINEERING SERVICES

BRIDGE NO. 53-1044
POST MILE 23.44

OLYMPIC BLVD UC (WIDEN)
STRUCTURE APPROACH TYPE R(30D)

DS OSD 2147A (ENGLISH STANDARD DRAWING "XS" BORDER REV. (02-02-11)

ORIGINAL SCALE IN INCHES FOR REDUCED PLANS 0 1 2 3

UNIT: 3623
PROJECT NUMBER & PHASE: 0700020869 & 1 CONTRACT NO.: 202111

DISREGARD PRINTS BEARING EARLIER REVISION DATES

REVISION DATES 3/1/11

SHEET 14 OF 17

FILE => 53-1044-s-sa_R30D.dgn

USERNAME => s124496 DATE PLOTTED => 28-JUN-2011 TIME PLOTTED => 20:40

DIST	COUNTY	ROUTE	POST MILES TOTAL PROJECT	SHEET No.	TOTAL SHEETS
07	LA	710	17.2/26.4	1443	1507

REGISTERED CIVIL ENGINEER — DATE 03/01/11

6-27-11
PLANS APPROVAL DATE

REGISTERED PROFESSIONAL ENGINEER — Carl Duan No. C59976 Exp. 06-30-12 CIVIL — STATE OF CALIFORNIA

The State of California or its officers or agents shall not be responsible for the accuracy or completeness of electronic copies of this plan sheet.

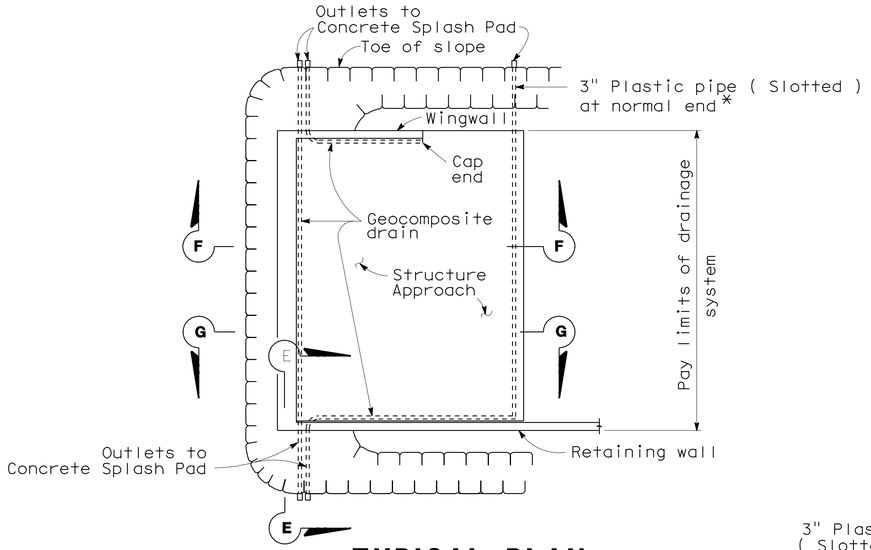

TYPICAL PLAN
1"=10'
*For pipe layout at staggered end, see "Detail B".

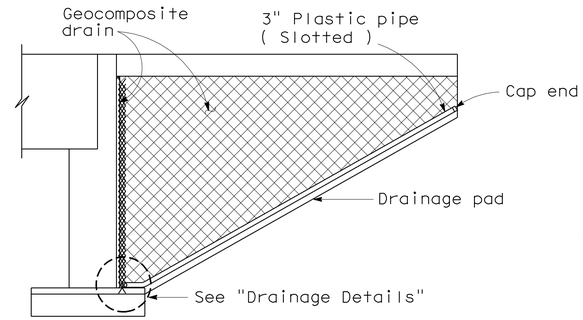

CANTILEVER WINGWALL
SECTION F-F
1/4"=1'-0"

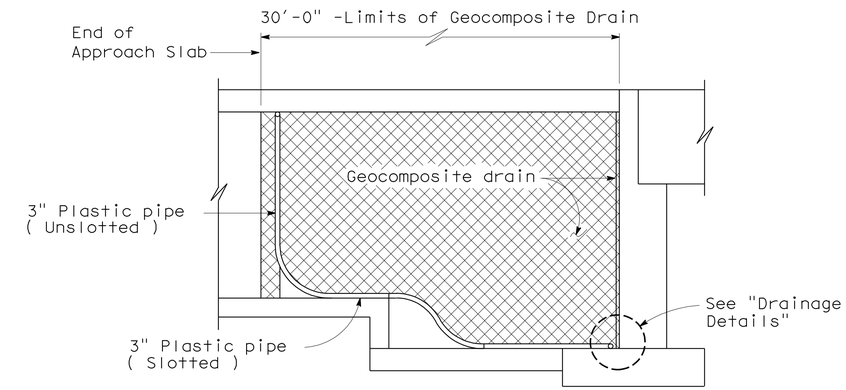

RETAINING WALL WINGWALL
SECTION G-G
1/4"=1'-0"

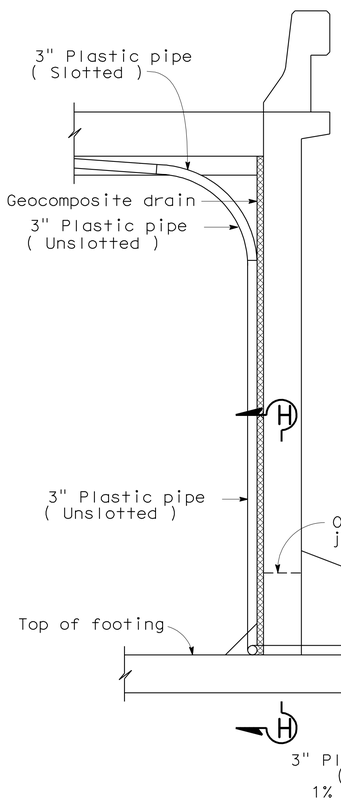

SECTION E-E
1/2"=1'-0"

NOTE: Bends and junctions in 3" plastic pipe are 30" radius min.

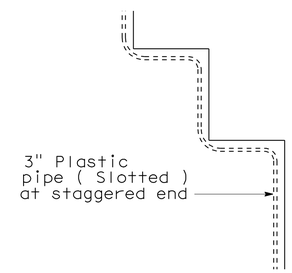

DETAIL B
No Scale

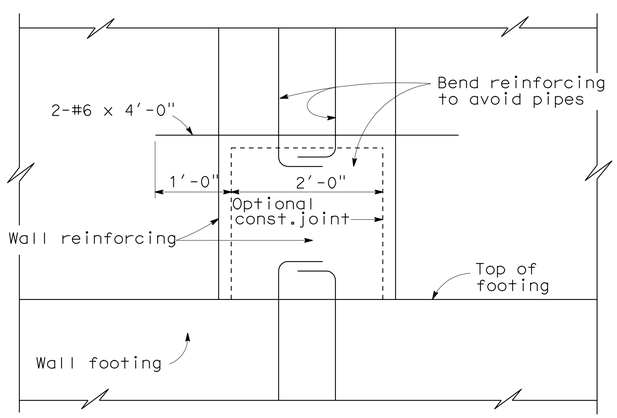

SECTION H-H
1"=1'-0"

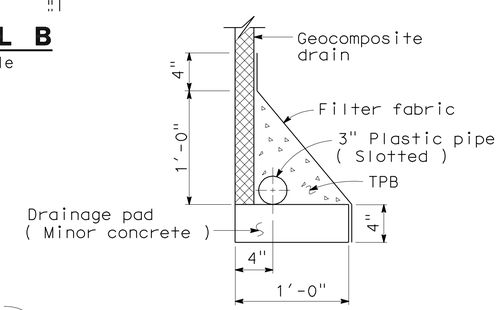

WITHOUT FOOTING

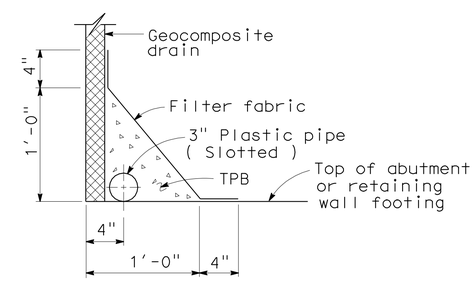

WITH FOOTING

DRAINAGE DETAILS
1 1/2"=1'-0"

_____ STANDARD DRAWING

FILE NO. xs3-110e — APPROVAL DATE 4-23-98

STATE OF CALIFORNIA DEPARTMENT OF TRANSPORTATION

DIVISION OF ENGINEERING SERVICES

BRIDGE NO. 53-1044 — POST MILE 23.44

OLYMPIC BLVD UC (WIDEN)

STRUCTURE APPROACH DRAINAGE DETAILS

DS OSD 2147A (ENGLISH STANDARD DRAWING "XS" BORDER REV. (02-02-11)

ORIGINAL SCALE IN INCHES FOR REDUCED PLANS 0 1 2 3

UNIT: 3623
PROJECT NUMBER & PHASE: 0700020869 & 1 CONTRACT NO.: 202111

DISREGARD PRINTS BEARING EARLIER REVISION DATES — REVISION DATES 3/1/11 — SHEET 15 OF 17

FILE => 53-1044-s-sadd.dgn

USERNAME => s124496 DATE PLOTTED => 28-JUN-2011 TIME PLOTTED => 20:40

DIST	COUNTY	ROUTE	KILOMETER POST TOTAL PROJECT	SHEET No	TOTAL SHEETS
07	LA	710			

REGISTERED ENGINEER 1-24-05

PLANS APPROVAL DATE

REGISTERED PROFESSIONAL ENGINEER GAMINI C. WEERATUNGA No. 2403 Exp. 9-30-06 GEOTECHNICAL STATE OF CALIFORNIA

The State of California or its officers or agents shall not be responsible for the accuracy or completeness of electronic copies of this plan sheet.

Caltrans Metric

BENCH MARK

Elevations shown hereon are in terms of The North American Vertical Datum of 1998 based locally upon Caltrans Bench Marks:

PRHV110 Elev 56.374 m
PRHV111 Elev 54.484 m
PRHV112 Elev 55.096 m

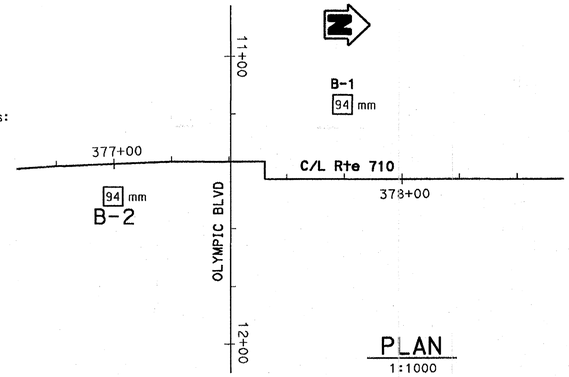

PLAN

1:1000

LEGEND (SOIL)

21 51 SA AL DS CR 17.3 17.3

Moisture content (%)
Dry density (kN/m3)

SA = Gradation
AL = Atterberg limits
DS = Direct Shear
CR = Corrosion

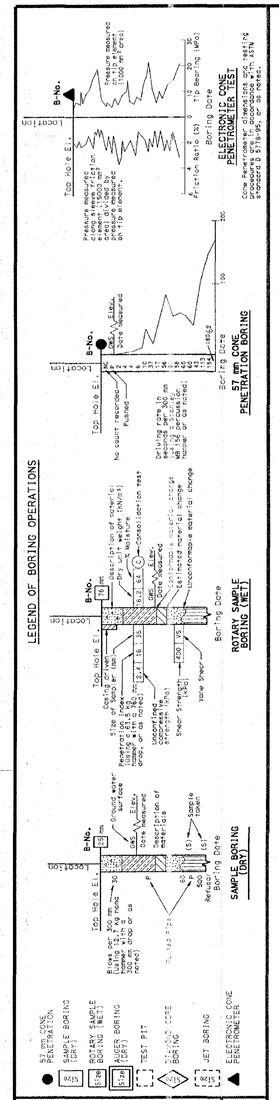

B-2

11.3 m Rt Sta 376+99.3 C/L Rte 710

Elev	N	Description
62 m		61.70 — 94 mm 0.20 m Thick asphalt concrete pavement.
		SANDY CLAY (CL), light brown, slightly moist, low plastic, fine to medium grained SAND, some GRAVEL. Olive brown.
59 m		
56 m	17 51	SA AL CR SANDY SILT (ML), stiff, light brown, slightly moist, low plastic SILT with medium grained SAND.
	43 51	
53 m	23 51	SANDY CLAY (CL), very stiff, dark brown, moist, low to medium plastic, fine to medium grained SAND.
	20 51	SANDY CLAY/SANDY SILT (CL/ML), very stiff, light brown, slightly moist, low plastic SILT and CLAY, fine grained SAND.
50 m	37 51	SAND to SILTY SAND (SP/SM), medium dense, yellowish brown, moist, medium to coarse grained SAND with GRAVEL up to 51 mm.
	15 51	SANDY SILT (ML), stiff, light brown, moist, low plastic, fine grained SAND some GRAVEL up to 38 mm.
47 m	25 51	SA AL SANDY CLAY (CL), very stiff, dark brown, moist, low plastic, fine grained SAND.
	21 51	SA AL DS 17.3 17.3 Becomes more CLAYEY, stiff, dark brown
44 m	28 51	
	31 51	Very stiff.
41 m	25 51	
	40 51	
38 m	44 51	Very stiff to hard.
	31 35	
	43 51	SA AL DS 18.2 13.3 Very stiff to hard, reddish brown, moist.
35 m	31 51	
	36 35	
	40 35	
32 m		

11-16-04

Boring terminated at 27.29 m below the ground surface. No ground water encountered. Borehole was backfilled with cuttings and grout on 11-16-04.

376+90

B-1

25.8 m Lt Sta 377+79.4 C/L Rte 710

Elev	N	Description
62.30	94 mm	0.30 m Thick asphaltt concrete pavement. 152 mm Thick base coarse GRAVEL.
		SILTY SAND (SM), dense, dark brown, slightly moist, fine grained SAND, some GRAVEL.
		SANDY SILT (ML), light brown, moist, fine grained SAND.
59 m		SILT (ML), light brown, moist, low plastic, some CLAY, trace fine grained SAND.
	24 35	SILT with SAND (ML), very stiff, light brown, moist, low plastic, some CLAY, fine grained SAND.
56 m	9 51	Lean CLAY (CL), stiff, dark brown to black, slightly moist, low plastic, some SILT, trace fine grained SAND.
	20 35	Very stiff, light brown.
53 m		SANDY CLAY (CL), dark brown, some GRAVEL up to 12 mm size.
	10 51	Lean CLAY (CL), stiff, light brown, slightly moist, low plastic, 102 to 152 mm thick layer of SANDY SILT with fine grained SAND.
	16 51	Dark brown, some SILT, some fine grained SAND.
50 m	28 35	SANDY SILT/SILTY SAND (ML/SM), very stiff to medium dense, light brown, moist, low plastic, SILT with fine grained SAND, 102 to 152 mm thick layer of SILTY SAND with GRAVEL.
	22 51	Lean CLAY (CL), stiff, dark brown to brown, slightly moist, low plastic, thin layer of SILT.
47 m	15 51	SA AL 51 to 102 mm Thick layer of SILT with SAND.
	18 51	SA AL DS 15.0 26.8 Olive brown, moist, very stiff CLAY, low plastic.
44 m	18 51	Very stiff, olive brown, moist, low plastic, trace fine grained SAND.
	26 51	SA AL CR
41 m	44 51	SILT with SAND (ML), very stiff to hard, light brown, moist, low plastic, fine grained SAND.
	28 51	Lean CLAY (CL), very stiff, brown, moist, medium plastic, some fine grained SAND, thin layers of SILT to SANDY SILT.
	29 51	SA AL DS 14.2 31.2
	8 51	
	36 35	

11-15-04

Boring terminated at 26.68 m below the ground surface. No ground water encountered. Borehole was backfilled with cuttings and grout on 11-15-04.

377+90

TO ACCOMPANY PLANS DATED 6-27-11

DIVISION OF ENGINEERING SERVICES - GEOTECHNICAL SERVICES

As-Built Log of Test Borings sheet is considered an informational document only. As such, the State of California registration seal with signature, license number and registration certificate expiration date confirm that this is a true and accurate copy of the original document. It does not attest to the accuracy or validity of the information contained in the original document. This drawing is available and presented only for the convenience of any bidder, contractor or other interested party.

DIST.	COUNTY	ROUTE	POST MILE-TOTAL PROJECT	Sheet No.	Total Sheets
07	LA	710	17.2/26.4	1444	1507

REGISTERED GEOTECHNICAL ENGINEER 12/14/10 DATE

REGISTERED PROFESSIONAL ENGINEER Gamini Weeratunga No. 2403 Exp. 9-30-12 GEOTECHNICAL STATE OF CALIFORNIA

OLYMPIC BLVD UC (WIDEN)

LOG OF TEST BORINGS 1 OF 2

NOTE: A COPY OF THIS LOG OF TEST BORINGS IS AVAILABLE AT OFFICE OF STRUCTURE MAINTENANCE AND INVESTIGATIONS, SACRAMENTO, CALIFORNIA

CU: 07 EA: 202111

BRIDGE No. 53-1044

Sheet 16 of 17

ENGINEERING SERVICES	GEOTECHNICAL SERVICES	FIELD INVESTIGATION BY:	STATE OF CALIFORNIA DEPARTMENT OF TRANSPORTATION	DIVISION OF STRUCTURES STRUCTURE DESIGN	BRIDGE NO. 53-1044	OLYMPIC BLVD UC (MEDIAN WIDENING)
DRAWN BY F. Nguyen 01/05		G. Weeratunga			KILOMETER POST 23.44	LOG OF TEST BORINGS 1 OF 2
CHECKED BY G. Weeratunga						

OGS CIVIL LOG OF TEST BORINGS SHEET (METRIC) (REV. 4/04)

ORIGINAL SCALE IN MILLIMETERS FOR REDUCED PLANS 0 10 20 30 40 50 60 70 80 90 100

CU 07 EA 242601

DISREGARD PRINTS BEARING EARLIER REVISION DATES

REVISION DATES (PRELIMINARY STAGE ONLY) 1-14-05 1-18-05 1-24-05 SHEET OF

53-1044-z-lotb01.tif

V-0260 (1)

FED. ROAD DIST. NO.	STATE	PROJ. NO.	FISCAL YEAR	SHEET NO.	TOTAL SHEETS
2	CAL.				

Dist.	County	Route	Section	Sheet No.	Total Sheets
VII	LA	167	B	633	726

Bridge Engineer — Civil Engineer-in-Charge

APPROVED APRIL 26 1954

To accompany plans dated April 27, 1964

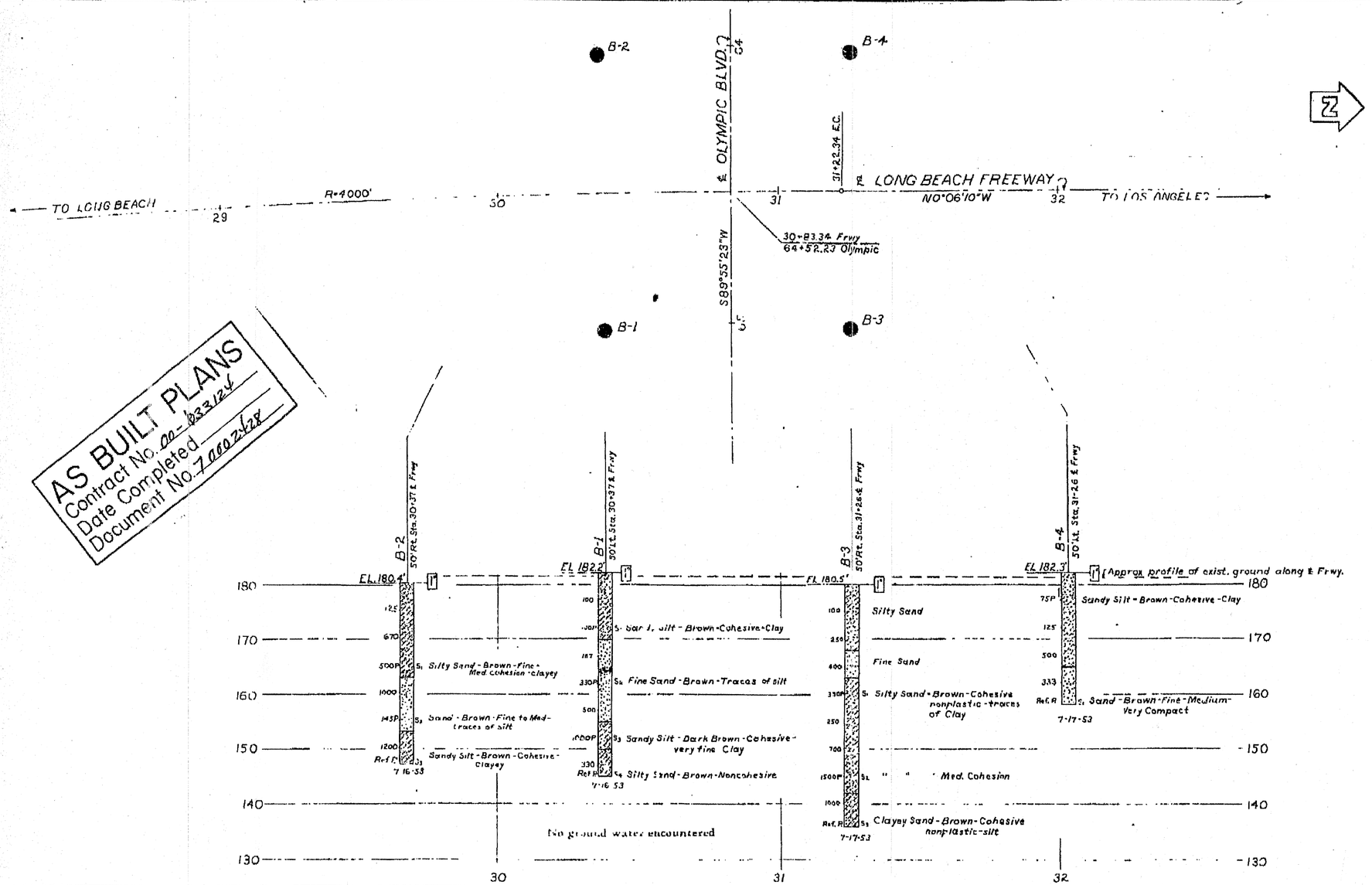

AS BUILT PLANS
Contract No. 00-033124
Date Completed
Document No. 7 000 2428

TBM ELEV. 184.110

Chis☐ Edge of signal base, S.W. Corner of Olympic Blvd. & Eastern Ave, 25'± Lt, Sta. 29+35 ± Eastern Ave.

TBM ELEV. 178.545

Chis☐ On curb 24'± E of B.C.R., N.E. Corner of Sydney Drive & Olympic Blvd.

TO ACCOMPANY PLANS DATED 6-27-11

DIVISION OF ENGINEERING SERVICES - GEOTECHNICAL SERVICES

As-Built Log of Test Borings sheet is considered an informational document only. As such, the State of California registration seal with signature, license number and registration certificate expiration date confirm that this is a true and accurate copy of the original document. It does not attest to the accuracy or validity of the information contained in the original document. This drawing is available and presented only for the convenience of any bidder, contractor or other interested party.

DIST.	COUNTY	ROUTE	POST MILE-TOTAL PROJECT	Sheet No.	Total Sheets
07	LA	710	17.2/26.4	1445	1507

REGISTERED GEOTECHNICAL ENGINEER — DATE 12/17/10

REGISTERED PROFESSIONAL ENGINEER Gamini Weeratunga No. 2403 Exp. 9-30-12 GEOTECHNICAL STATE OF CALIFORNIA

OLYMPIC BLVD UC (WIDEN)

LOG OF TEST BORINGS 2 OF 2

NOTE: A COPY OF THIS LOG OF TEST BORINGS IS AVAILABLE AT OFFICE OF STRUCTURE MAINTENANCE AND INVESTIGATIONS, SACRAMENTO, CALIFORNIA

CU: 07
EA: 202111

BRIDGE No. 53-1044

Sheet 17 of 17

CLASSIFICATION OF MATERIAL BASED ON STANDARD GRADE SIZE LIMITS

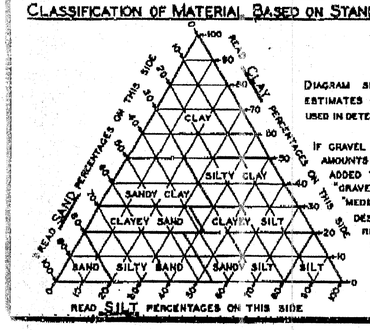

DIAGRAM SHOWING THE BASIS FOR ESTIMATES OF GRADE SIZE DISTRIBUTION USED IN DETERMINATION OF CLASS NAMES

IF GRAVEL IS PRESENT IN APPRECIABLE AMOUNTS THE TERM "GRAVELLY" MAY BE ADDED TO THE CLASS NAME, VIS. "GRAVELLY SAND". THE TERMS "COARSE", "MEDIUM" AND "FINE" WHEN USED TO DESCRIBE GRAVEL, SAND AND SILT REFER TO STANDARD GRADE SIZE LIMITS.

LEGEND OF EARTH MATERIALS

- GRAVEL
- SAND
- SILT
- CLAY
- SANDY CLAY OR CLAYEY SAND
- SANDY SILT OR SILTY SAND
- SILTY CLAY OR CLAYEY SILT
- PEAT AND/OR ORGANIC CLAY
- FILLED MATERIAL
- IGNEOUS ROCK
- SEDIMENTARY ROCK
- METAMORPHIC ROCK

LEGEND OF BORING OPERATIONS

- PLAN OF ANY BORING
- PENETROMETER
- 2¼" CONE PENETROMETER
- SAMPLER BORING (DRY)
- ROTARY BORING (WET)
- AUGER BORING (DRY)
- JET BORING
- CORE BORING
- TEST PIT

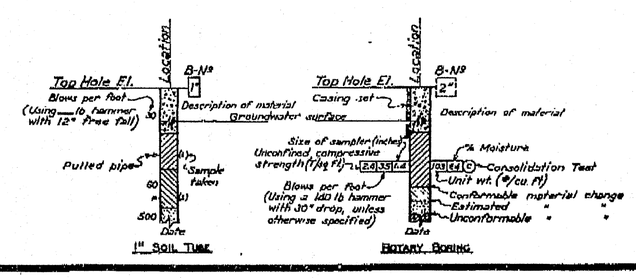

NOTES

THE CONTRACTOR'S ATTENTION IS DIRECTED TO SECTION 2, ARTICLE (c) OF THE STANDARD SPECIFICATIONS AND TO THE SPECIAL PROVISIONS ACCOMPANYING THIS SET OF PLANS. CLASSIFICATION OF EARTH MATERIAL AS SHOWN ON THIS SHEET IS BASED UPON FIELD INSPECTION AND IS NOT TO BE CONSTRUED TO IMPLY MECHANICAL ANALYSIS. PENETROMETER BORINGS HAVING A RATE OF PENETRATION MEASURED IN SECONDS PER FOOT ARE DRIVEN WITH A No 2 McKIERNAN-TERRY AIR HAMMER AT 115 PSI.

STATE OF CALIFORNIA
DEPARTMENT OF PUBLIC WORKS
DIVISION OF HIGHWAYS

OLYMPIC BLVD UNDERCROSSING WIDENING

LOG OF TEST BORINGS

SCALE: HORIZ. 1"=20' VERT. 1"=10' | BRIDGE 53-1044 | FILE | DRAWING 53104-9

PREL. DRAWING NO. P-3542

53-1044-z-lotb02.tif

DIST	COUNTY	ROUTE	POST MILES TOTAL PROJECT	SHEET No.	TOTAL SHEETS
07	LA	710	17.2/26.4	1446	1507

REGISTERED CIVIL ENGINEER — DATE 03/01/11

6-27-11
PLANS APPROVAL DATE

REGISTERED PROFESSIONAL ENGINEER — HTOON H. WIN — No. 77897 — Exp. 06/30/11 — CIVIL — STATE OF CALIFORNIA

The State of California or its officers or agents shall not be responsible for the accuracy or completeness of electronic copies of this plan sheet.

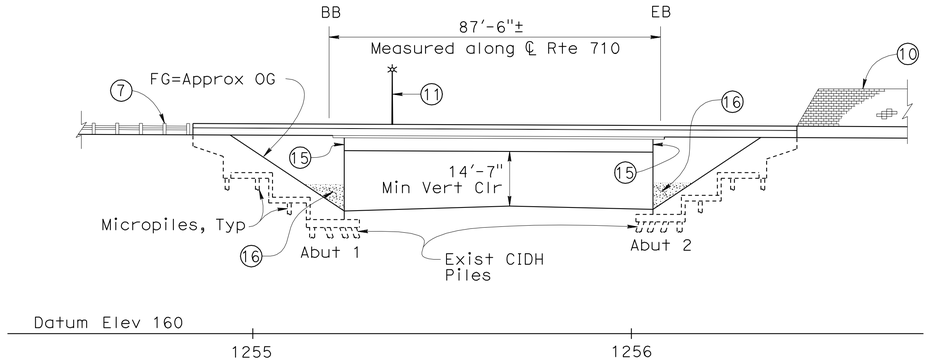

MIRRORED ELEVATION

1" = 20'

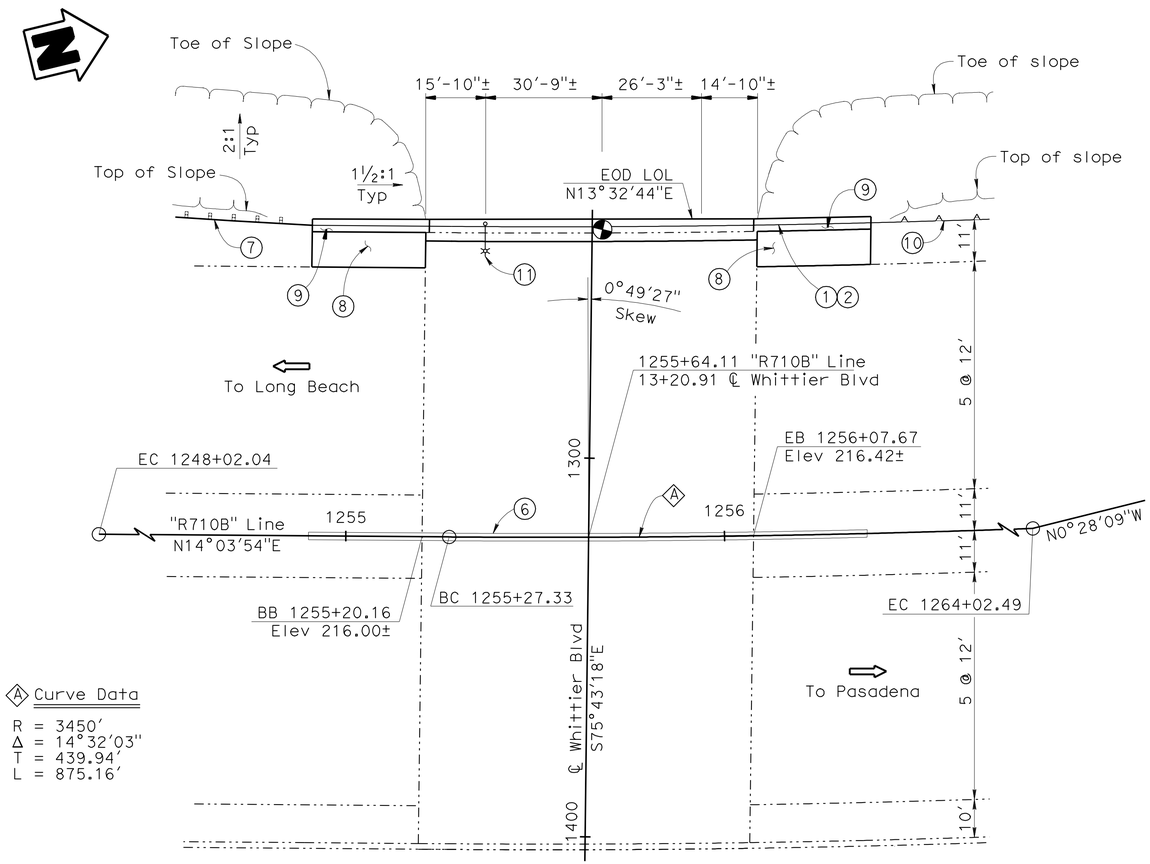

Curve Data

R = 3450'
Δ = 14°32'03"
T = 439.94'
L = 875.16'

PLAN

1" = 20'

NOTE:
THE CONTRACTOR SHALL VERIFY ALL CONTROLLING FIELD DIMENSIONS BEFORE ORDERING OR FABRICATING ANY MATERIAL.

LEGEND:

- Bridge removal (Portion)
- Point of minimum vertical clearance
- Exist structure
- New structure
- Traffic direction

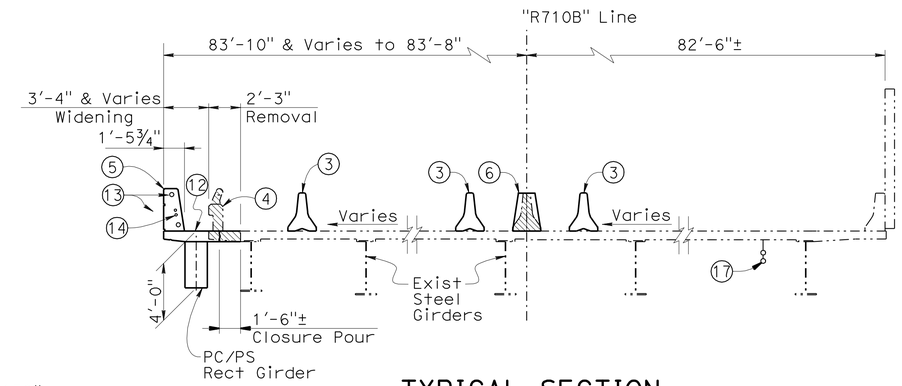

TYPICAL SECTION

3/16" = 1'-0"

NOTES:

1. Paint "BR NO. 53-1150"
2. Paint "WHITTIER BLVD UNDERCROSSING"
3. Temporary Railing, Type K, see "Road Plans"
4. Existing concrete barrier Type 1 and utilities to be removed
5. Concrete Barrier Type 736 (Mod) with fracture rib texture
6. Remove Concrete Barrier Type 50. Construct Concrete Barrier Type 60SA (Mod). Refinish deck
7. MBGR, see "Road Plans"
8. Structure Approach R(30D)
9. Structure Approach N(30S)
10. Remove portion of exist SW. Construct SW1256, see "Road Plans"
11. Type 21 electrolier, see "Road Plans"
12. Match exist cross slope
13. Future 2-3½" communication conduits
14. 2-2" electric conduits, see "Road Plans"
15. Abutment retrofit (Treated lumber block)
16. Class 2 Surface Finish (Gun Finish)
17. 2-3½" fiber optic conduits, see "Road Plans"

QUANTITIES

BRIDGE REMOVAL (PORTION), LOCATION F	LUMP	SUM
STRUCTURE EXCAVATION (BRIDGE)	50	CY
STRUCTURE EXCAVATION (TYPE Z-2) (AERIALLY DEPOSITED LEAD)	31	CY
STRUCTURE BACKFILL (BRIDGE)	21	CY
AGGREGATE BASE (APPROACH SLAB)	3	CY
MICROPILE (NPS 12 XX-STRONG)	6	EA
STRUCTURAL CONCRETE, BRIDGE	62	CY
STRUCTURAL CONCRETE, APPROACH SLAB (TYPE N)	9	CY
STRUCTURAL CONCRETE, APPROACH SLAB (TYPE R)	25	CY
PAVING NOTCH EXTENSION	15	CF
DRILL AND BOND DOWEL	125	LF
FURNISH PRECAST PRESTRESSED RECTANGULAR CONCRETE GIRDER (80'-90')	1	EA
ERECT PRECAST PRESTRESSED RECTANGULAR CONCRETE GIRDER	1	EA
REFINISH BRIDGE DECK	150	SQFT
CORE CONCRETE (13")	9	LF
JOINT SEAL (MR 1")	27	LF
BAR REINFORCING STEEL (BRIDGE)	12,300	LB
ABUTMENT LUMBER BLOCKING	4.9	MFBM
CONCRETE BARRIER (TYPE 736 MODIFIED)	159	LF
CONCRETE BARRIER (TYPE 60SA MOD)	118	LF

CHUNG-YUAN WEN
DESIGN ENGINEER

	BY	CHECKED
DESIGN	J. YANG/H. WIN	F. WEI
DETAILS	M.K./H.W./J.V.	F. WEI
QUANTITIES	H. WIN	T. TRAN

LOAD & RESISTANCE FACTOR DESIGN — LIVE LOADING: HL93 W/"LOW-BOY"; PERMIT DESIGN VEHICLE

	BY	CHECKED
LAYOUT	M. KINGRA	F. WEI
SPECIFICATIONS	K. Ellingson	PLANS AND SPECS COMPARED: K. Ellingson

ORIGINAL SCALE IN INCHES FOR REDUCED PLANS 0 1 2 3

STATE OF CALIFORNIA
DEPARTMENT OF TRANSPORTATION

DIVISION OF ENGINEERING SERVICES
STRUCTURE DESIGN
DESIGN BRANCH 21

BRIDGE NO. 53-1150
POST MILE 23.77

WHITTIER BLVD UC (WIDEN)
GENERAL PLAN

UNIT: 3623
PROJECT NUMBER & PHASE: 0700020869 & 1 CONTRACT NO.: 202111

DISREGARD PRINTS BEARING EARLIER REVISION DATES — REVISION DATES: 01-30-09 03-01-11 02-08-11

SHEET 1 OF 16

USERNAME => s1244396 DATE PLOTTED => 28-JUN-2011 TIME PLOTTED => 20:40

STRUCTURES DESIGN GENERAL PLAN SHEET (ENGLISH) (REV.09-01-10)

FILE => 53-1150-a-gp01.dgn

DIST	COUNTY	ROUTE	POST MILES TOTAL PROJECT	SHEET No.	TOTAL SHEETS
07	LA	710	17.2/26.4	1447	1507

REGISTERED CIVIL ENGINEER — DATE 03/01/11

6-27-11
PLANS APPROVAL DATE

REGISTERED PROFESSIONAL ENGINEER — HTOON H. WIN — No. 77897 — Exp. 06/30/11 — CIVIL — STATE OF CALIFORNIA

The State of California or its officers or agents shall not be responsible for the accuracy or completeness of electronic copies of this plan sheet.

GENERAL NOTES
LOAD AND RESISTANCE FACTOR DESIGN

DESIGN:	AASHTO LRFD Bridge Design Specifications, 4th Edition and the Caltrans Amendments, preface dated 2008; except that earth retaining systems, Bridge Barrier and Structure approach slabs are designed using Bridge Design Specifications ('96 AASHTO w/ Revisions by Caltrans)
SEISMIC DESIGN:	Caltrans Seismic Design Criteria (SDC) Version 1.4, June 2006
DEAD LOAD:	Includes 35 psf for future wearing surface
LIVE LOADING:	HL93 and permit design load
SEISMIC LOADING:	SDC Modified ARS Curve Soil Type D, magnitude 7.25±0.25 Peak Rock Acceleration = 0.6g
REINFORCED CONCRETE:	fy = 60 ksi, ASTM A706 f'c, see "Concrete Strength and Type Limits"
PRESTRESSED CONCRETE:	See PRESTRESSING NOTES on "PC/PS GIRDER DETAILS"

INDEX TO PLANS

SHEET NO.	TITLE
1.	GENERAL PLAN
2.	INDEX TO PLANS
3.	FOUNDATION PLAN
4.	ABUTMENT LAYOUT
5.	ABUTMENT DETAILS
6.	TYPICAL SECTION
7.	PC/PS GIRDER DETAILS
8.	ABUTMENT RETROFIT DETAILS
9.	MISCELLANEOUS DETAILS
10.	STRUCTURE APPROACH R(30D)
11.	STRUCTURE APPROACH N(30S)
12.	LOG OF TEST BORINGS 1 OF 5
13.	LOG OF TEST BORINGS 2 OF 5
14.	LOG OF TEST BORINGS 3 OF 5
15.	LOG OF TEST BORINGS 4 OF 5
16.	LOG OF TEST BORINGS 5 OF 5

STANDARD PLANS DATED MAY 2006

	A10A	ACRONYMS AND ABBREVIATIONS (A-L)
	A10B	ACRONYMS AND ABBREVIATIONS (M-Z)
	A10C	SYMBOLS (SHEET 1 OF 2)
	A10D	SYMBOLS (SHEET 2 OF 2)
	A62C	LIMITS OF PAYMENT FOR EXCAVATION AND BACKFILL - BRIDGE
	BO-1	BRIDGE DETAILS
	BO-3	BRIDGE DETAILS
	BO-5	BRIDGE DETAILS
	BO-13	BRIDGE DETAILS
RSP	B6-21	JOINT SEALS (MAX MOVEMENT RATING=2")
	B7-1	BOX GIRDER DETAILS
	B11-56	CONCRETE BARRIER TYPE 736
	B14-3	COMMUNICATION AND SPRINKLER CONTROL CONDUITS
	ES-9B	ELECTRICAL SYSTEMS
RSP	P10	CONCRETE PAVEMENT - DOWEL BAR DETAILS
	T3	TEMPORARY RAILING (TYPE K)

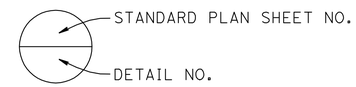

MICROPILE DATA

Location	Pile Type	Pile No (Note 6)	Nominal Resistance (kips/pile) Compression	Nominal Resistance (kips/pile) Tension	Design Tip Elev (ft)	Specified Tip Elev (ft)
Abut 1 WW	NPS 12 xx-Strong	1	121	0	166.3 (a-I) 172.8 (a-II) 176.8 (c)	166.3
		2	121	0	172.8 (a-I) 177.8 (a-II) 180.8 (c)	172.8
		3	121	0	172.8 (a-I) 177.8 (a-II) 180.8 (c)	172.8
Abut 2 WW	NPS 12 xx-Strong	1	112.6	0	166.8 (a-I) 175.3 (a-II) 178.3 (c)	166.8
		2	112.6	0	172.8 (a-I) 178.8 (a-II) 182.8 (c)	172.8
		3	112.6	0	172.8 (a-I) 178.8 (a-II) 182.8 (c)	172.8

NOTES:

(1) Design tip elevations are controlled by: (a-I) Compression (Strength Limit), (a-II) Compression (Extreme Event), and (c) Settlement, respectively.
(2) The micropiles specified tip elevation shall not be raised.
(3) Design tip elevation for Lateral Load is provided by SD.
(4) Predrilled holes are required. Refer to the standard special provisions for elevation of bottom of predrilled holes.
(5) The micropiles shall be designed to develop their load carrying capacity by using skin friction.
(6) For pile number, see "FOUNDATION PLAN" sheet

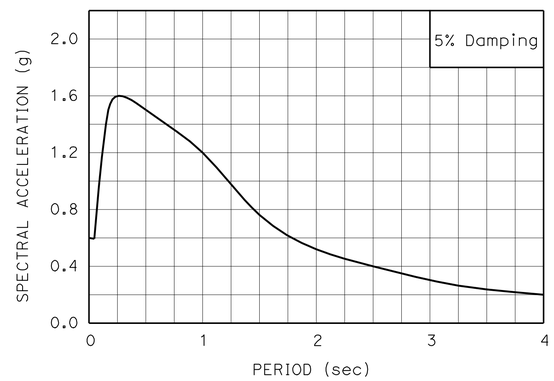

ARS CURVE
No Scale

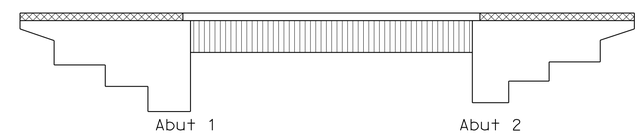

CONCRETE STRENGTH AND TYPE LIMITS
No Scale

- Structural Concrete, Bridge 4000 psi @ 28 days
- Structural Concrete, PC/PS Rect Girder. See "PC/PS GIRDER DETAILS" Sheet
- Structural Concrete, Approach Slab 3600 psi @ 28 days

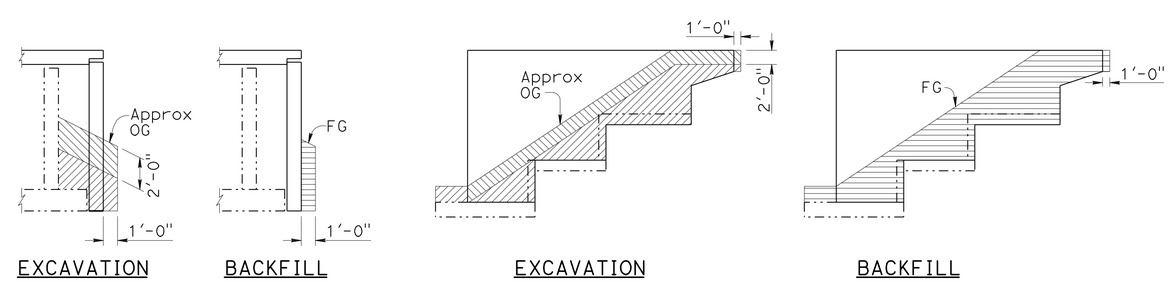

LIMITS OF PAYMENT FOR EXCAVATION AND BACKFILL
No Scale

- Structure Excavation
- Structure Excavation (Aerially Deposited Lead Type Z-2)
- Structure Backfill

NOTE:
THE CONTRACTOR SHALL VERIFY ALL CONTROLLING FIELD DIMENSIONS BEFORE ORDERING OR FABRICATING ANY MATERIAL.

	BY	CHECKED
DESIGN	H. WIN	F. WEI
DETAILS	H. WIN/J. VALENCIA	F. WEI
QUANTITIES	H. WIN	T. TRAN

STATE OF CALIFORNIA
DEPARTMENT OF TRANSPORTATION

DIVISION OF ENGINEERING SERVICES
STRUCTURE DESIGN
DESIGN BRANCH 21

BRIDGE NO. 53-1150
POST MILE 23.77

WHITTIER BLVD UC (WIDEN)
INDEX TO PLANS

STRUCTURES DESIGN DETAIL SHEET (ENGLISH) (REV. 09-01-10)

ORIGINAL SCALE IN INCHES FOR REDUCED PLANS 0 1 2 3

UNIT: 3623
PROJECT NUMBER & PHASE: 0700020869 & 1 CONTRACT NO.: 202111

DISREGARD PRINTS BEARING EARLIER REVISION DATES

REVISION DATES: 12-01-09 03-01-11 02-06-11

SHEET 2 OF 16

FILE => 53-1150-a-itp.dgn

USERNAME => s124496 DATE PLOTTED => 28-JUN-2011 TIME PLOTTED => 20:40

DIST	COUNTY	ROUTE	POST MILES TOTAL PROJECT	SHEET No.	TOTAL SHEETS
07	LA	710	17.2/26.4	1448	1507

REGISTERED CIVIL ENGINEER — DATE 03/01/11

6-27-11
PLANS APPROVAL DATE

REGISTERED PROFESSIONAL ENGINEER — HTOON H. WIN — No. 77897 — Exp. 06/30/11 — CIVIL — STATE OF CALIFORNIA

The State of California or its officers or agents shall not be responsible for the accuracy or completeness of electronic copies of this plan sheet.

CURVE DATA				
No.	R	Δ	T	L
5	3450.00	14°32′03″	439.94	875.16

Bridge #53-1150 SB 710 Location

1 - 79.47 Lt. "R710B" Line, Sta.1255+20.69, Elev.=214.21±
2 - 1.31 Lt. "R710B" Line, Sta.1255+20.18, Elev.=216.22±
3 - 1.50 Lt. "R710B" Line, Sta.1256+07.43, Elev.=216.80±
4 - 79.31 Lt. "R710B" Line, Sta.1256+09.72, Elev.=214.01±

A STA. 1255+64.11 "R710B" Line =
STA. 13+20.91 WHITTIER BLVD

NOTES:

1. Underground utilities as shown are approximate.
2. For Edge of Deck LOL, see "GENERAL PLAN".

LEGEND:

☐ Denotes Micropile
See "INDEX TO PLANS" for Elevations
See "ABUTMENT LAYOUT" for locations

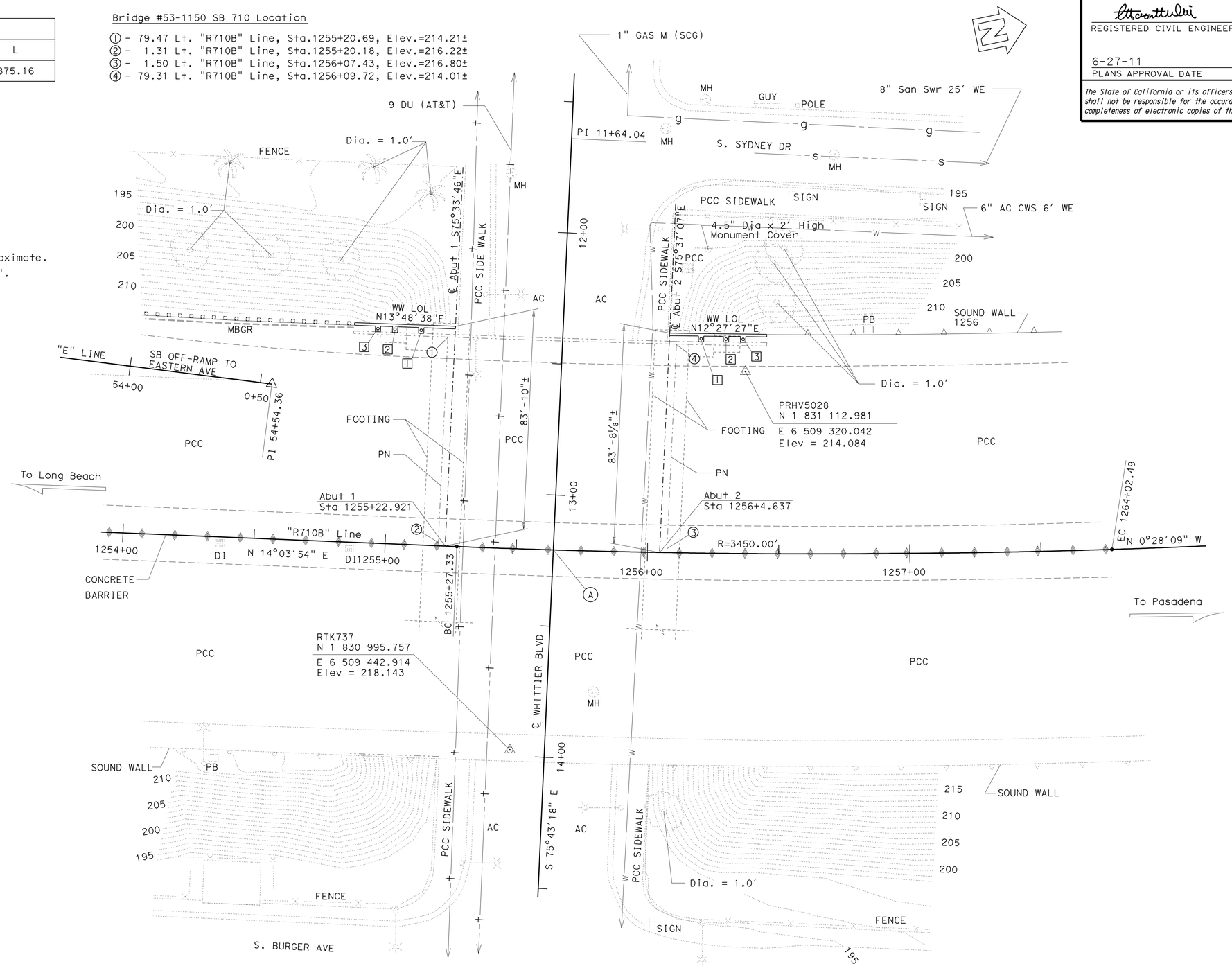

SURVEY CONTROL

PRHV5028
SET PK ON SB RTE 710 SHOLDER
69.36′Lt. ℄ Rte 710
Sta. 1256+36.73
N 1 831 112.982
E 6 509 320.042
Elev = 214.084

RTK737
PK ON NB RTE 710 SHOLDER
76.69′Rt. ℄ Rte 710
Sta. 1255+50.16
N 1 830 995.757
E 6 509 442.914
Elev = 218.143

NOTE:
THE CONTRACTOR SHALL VERIFY ALL CONTROLLING FIELD DIMENSIONS BEFORE ORDERING OR FABRICATING ANY MATERIAL.

PRELIMINARY INVESTIGATION SECTION

SCALE	VERT.DATUM NAVD 88	PHOTOGRAMMETRY AS OF: X			
1:20	HORZ.DATUM NAD 83(1991.35)	SURVEYED	BY C. STEWART/ T.PHUNG	CHECKED	BY C. STEWART 07/09
ALIGNMENT TIES	Dist. Trav. Sheets	DRAFTED	BY S. ABASSY 09/2009	CHECKED	BY S. ALVIO 9/09

DESIGN	BY H. WIN	CHECKED	F. WEI
DETAILS	BY H. WIN	CHECKED	F. WEI
QUANTITIES	BY H. WIN	CHECKED	T. TRAN

STATE OF CALIFORNIA
DEPARTMENT OF TRANSPORTATION

DIVISION OF ENGINEERING SERVICES
STRUCTURE DESIGN
DESIGN BRANCH 21

BRIDGE NO. 53-1150
POST MILE 23.77

WHITTIER BLVD UC (WIDEN)
FOUNDATION PLAN

STRUCTURES FOUNDATION PLAN SHEET (ENGLISH) (REV. 09-01-10)

ORIGINAL SCALE IN INCHES FOR REDUCED PLANS 0 1 2 3

UNIT: 3623
PROJECT NUMBER & PHASE: 0700020869 & 1 CONTRACT NO.: 202111

DISREGARD PRINTS BEARING EARLIER REVISION DATES

REVISION DATES: 10-01-10 11-18-10 12-15-10 03/01/11

SHEET 3 OF 16

FILE => 53-1150-e-fdp101.dgn

DIST	COUNTY	ROUTE	POST MILES TOTAL PROJECT	SHEET No.	TOTAL SHEETS
07	LA	710	17.2/26.4	1449	1507

REGISTERED CIVIL ENGINEER — DATE 03/01/11

6-27-11
PLANS APPROVAL DATE

REGISTERED PROFESSIONAL ENGINEER — HTOON H. WIN — No. 77897 — Exp. 06/30/11 — CIVIL — STATE OF CALIFORNIA

The State of California or its officers or agents shall not be responsible for the accuracy or completeness of electronic copies of this plan sheet.

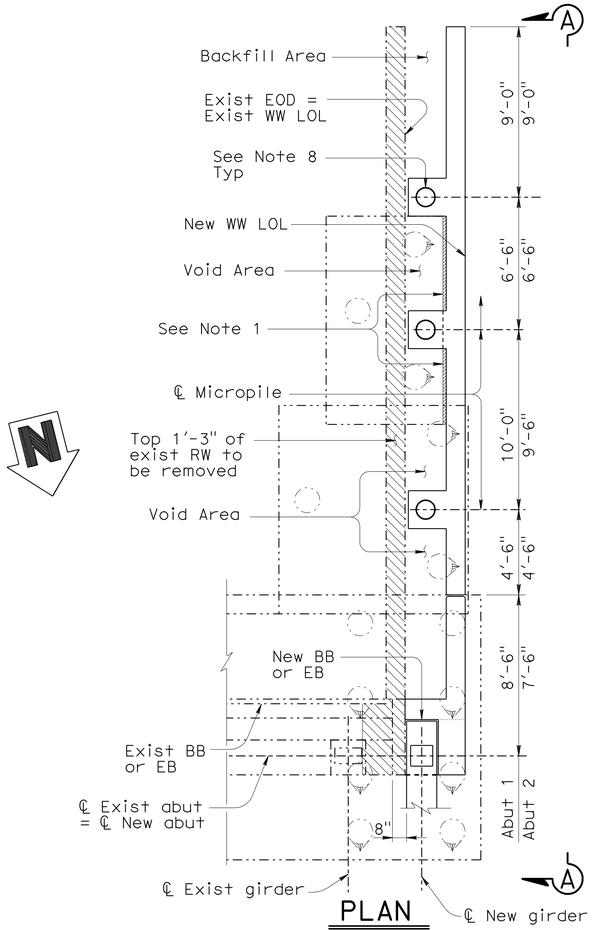

PLAN
1/4" = 1'-0"

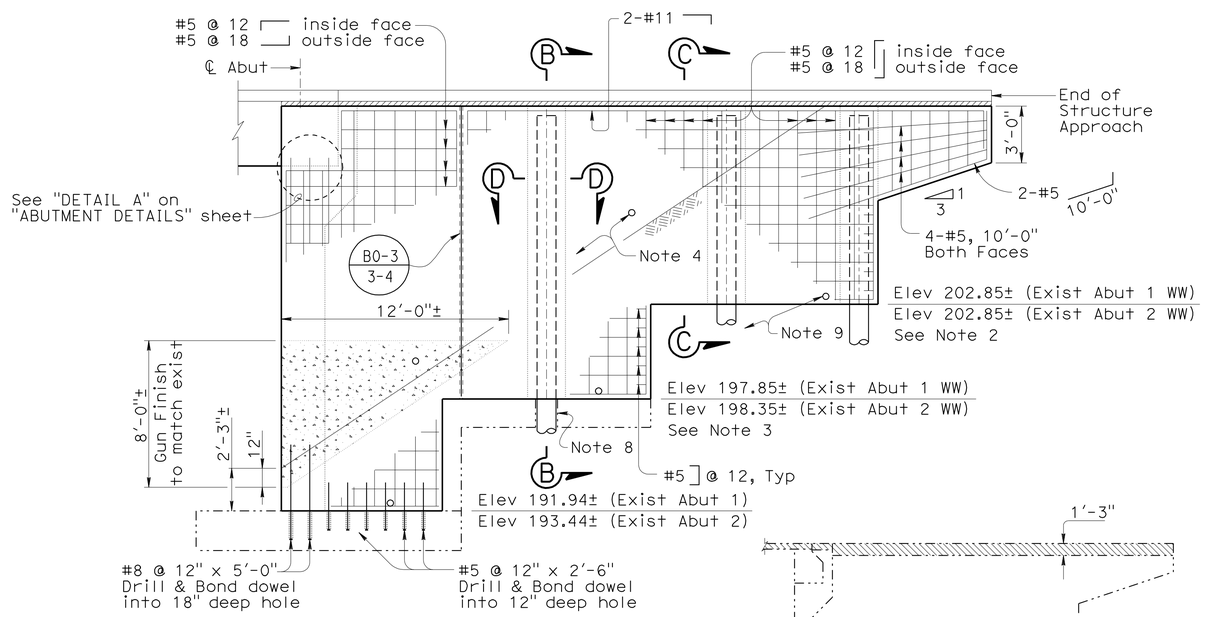

VIEW A-A
1/4" = 1'-0"
(Exist Piles and Conc Barrier not Shown)

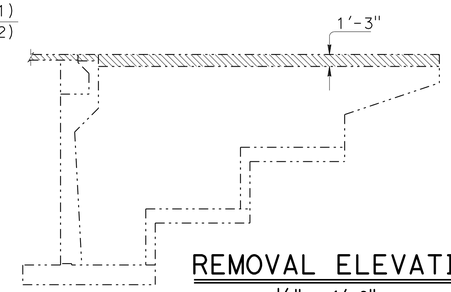

REMOVAL ELEVATION
1/8" = 1'-0"
(Abut 1 shown, Abut 2 similar)

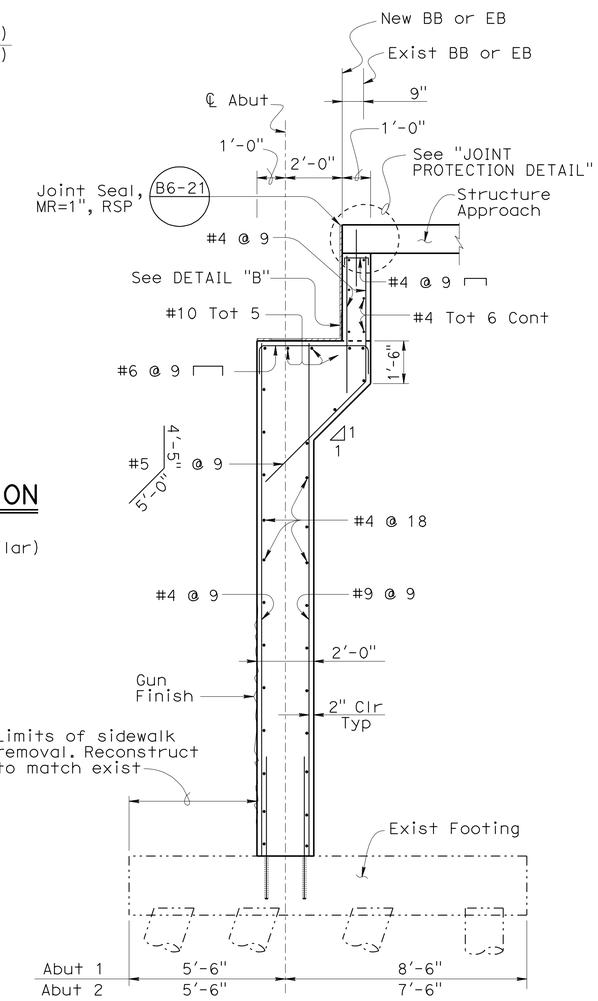

ABUTMENT SECTION
3/8" = 1'-0"

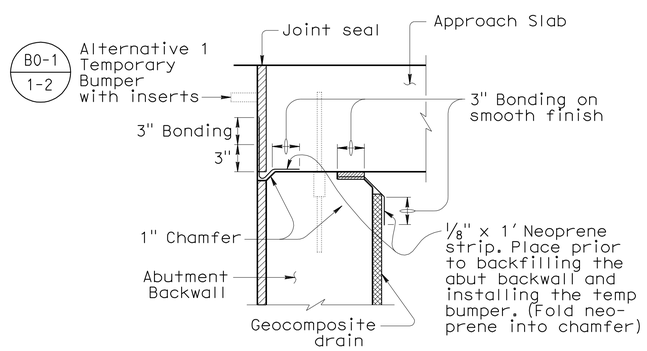

JOINT PROTECTION DETAIL
No Scale

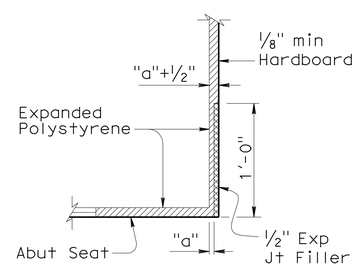

DETAIL "B"
B0-13
1 1/2" = 1'-0"

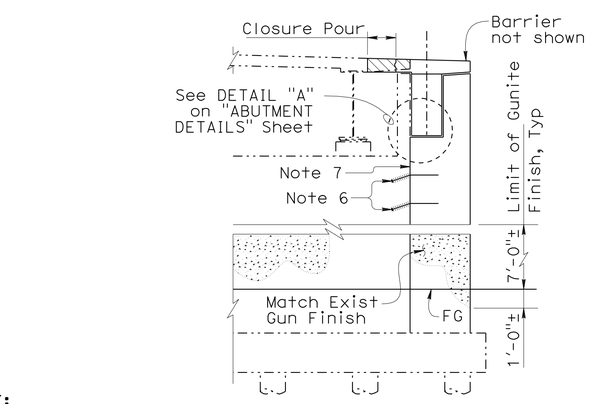

ELEVATION
1/4" = 1'-0"

NOTE:
THE CONTRACTOR SHALL VERIFY ALL CONTROLLING FIELD DIMENSIONS BEFORE ORDERING OR FABRICATING ANY MATERIAL.

NOTES:

1. Fill gap between new wall and exist footing with polystyrene, see Section C-C on ABUTMENT DETAILS" sheet.
2. New Bottom of Wall Elev = Exist Bottom of Footing Elev.
3. New Bottom of Wall Elev = Exist Top of Footing Elev.
4. Total 2 at each abut. See "EXIST DRAINAGE DETAIL" on "ABUTMENT DETAILS" sheet.
5. For SECTION B-B, C-C, and D-D, see "ABUTMENT DETAILS" sheet.
6. See "DRILL AND BOND DOWELS" on "ABUTMENT DETAILS" sheet.
7. Roughen exist abutment surface to 1/4" amplitude.
8. 13" Cored Hole in exist footings.
9. Total 3 at each abut. See "NEW DRAINAGE DETAIL" on "ABUTMENT DETAILS" sheet.

LEGEND:

- Micropile NPS12 xx-Strong Grouted
- Exist CIDH 16" ø 1:3 Batter
- Exist CIDH 16" ø
- Bridge Removal (Portion)
- Polystyrene

	BY	CHECKED
DESIGN	H. WIN	F. WEI
DETAILS	H. WIN/J. VALENCIA	F. WEI
QUANTITIES	H. WIN	T. CHU/T. TRAN

STATE OF CALIFORNIA
DEPARTMENT OF TRANSPORTATION

DIVISION OF ENGINEERING SERVICES
STRUCTURE DESIGN
DESIGN BRANCH 21

BRIDGE NO. 53-1150
POST MILE 23.77

WHITTIER BLVD UC (WIDEN)
ABUTMENT LAYOUT

STRUCTURES DESIGN DETAIL SHEET (ENGLISH) (REV. 09-01-10)

ORIGINAL SCALE IN INCHES FOR REDUCED PLANS 0 1 2 3

UNIT: 3623
PROJECT NUMBER & PHASE: 0700020869 & 1 CONTRACT NO.: 202111

DISREGARD PRINTS BEARING EARLIER REVISION DATES

REVISION DATES: 11-30-09 02-09-11 03-01-11

SHEET 4 OF 16

FILE => 53-1150-f-a01_lo1.dgn

USERNAME => s124496 DATE PLOTTED => 28-JUN-2011 TIME PLOTTED => 20:41

DIST	COUNTY	ROUTE	POST MILES TOTAL PROJECT	SHEET No.	TOTAL SHEETS
07	LA	710	17.2/26.4	1450	1507

REGISTERED CIVIL ENGINEER — DATE 03/01/11

6-27-11
PLANS APPROVAL DATE

REGISTERED PROFESSIONAL ENGINEER — HTOON H. WIN — No. 77897 — Exp. 06/30/11 — CIVIL — STATE OF CALIFORNIA

The State of California or its officers or agents shall not be responsible for the accuracy or completeness of electronic copies of this plan sheet.

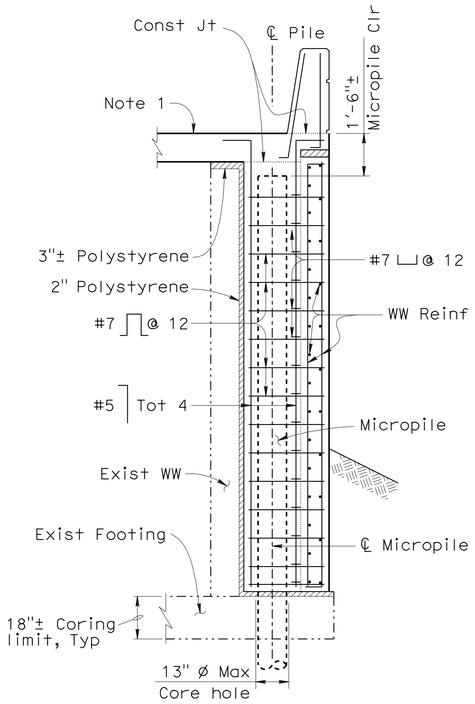

SECTION B-B
3/8" = 1'-0"

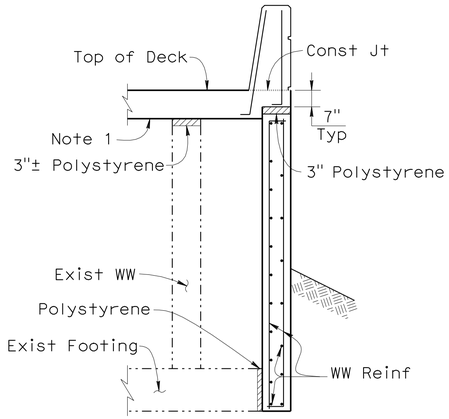

SECTION C-C
3/8" = 1'-0"

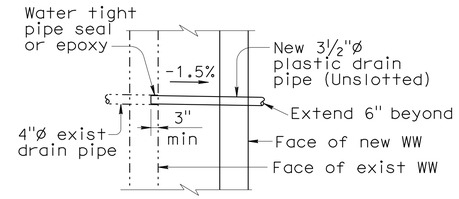

EXIST DRAINAGE DETAIL
3/8" = 1'-0"

LEGEND:
- Exist Structure
- New Structure
- Expanded Polystyrene

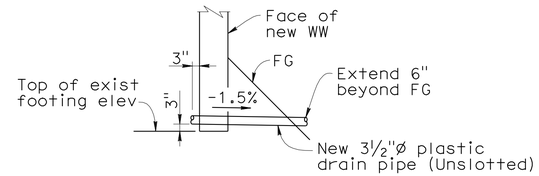

NEW DRAINAGE DETAIL
3/8" = 1'-0"

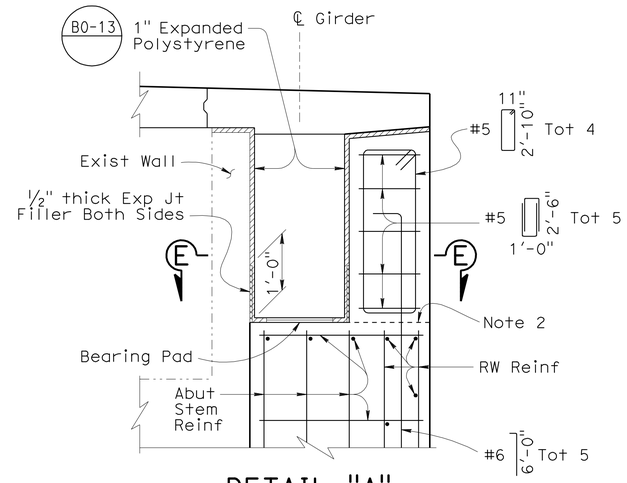

DETAIL "A"
3/4" = 1'-0"

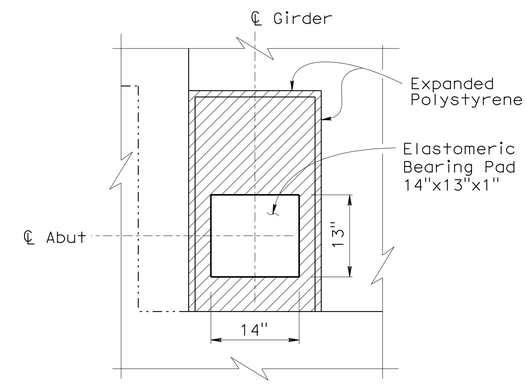

PLAN

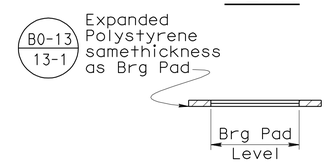

BEARING PAD DETAIL
1" = 1'-0"

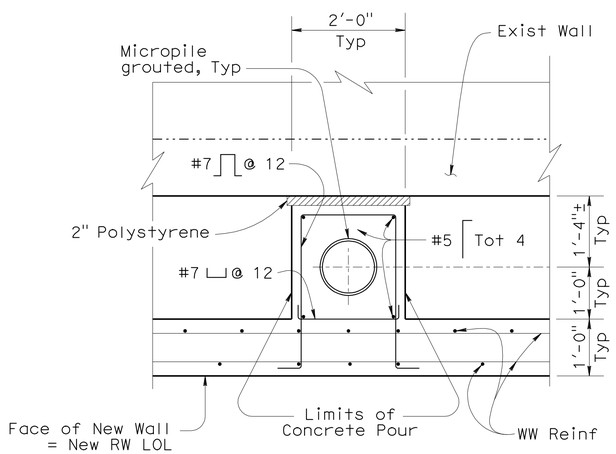

SECTION D-D
3/4" = 1'-0"

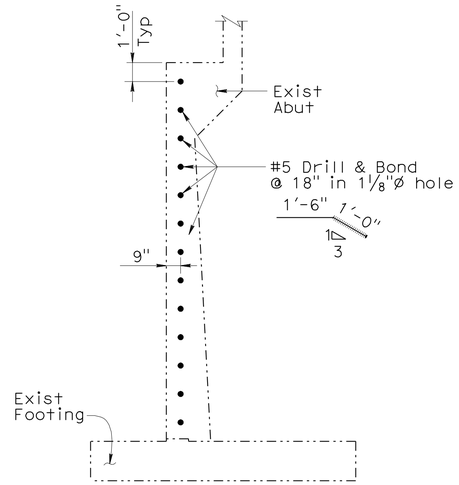

DRILL AND BOND DOWELS
1/4" = 1'-0"
(Abut 1 shown, Abut 2 similar)

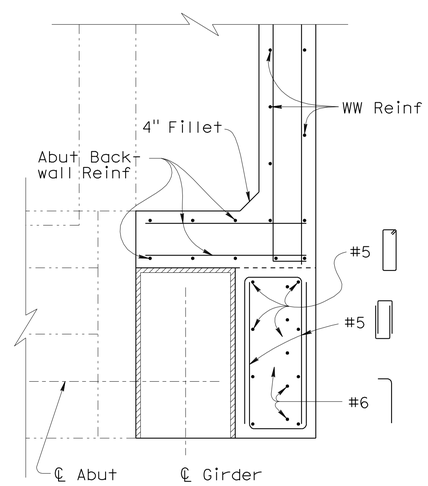

SECTION E-E
3/4" = 1'-0"

NOTES:
1. For approach slab reinf, see "STRUCTURE APPROACH N(30S)" and "STRUCTURE APPROACH R(30D)".
2. Smooth construction joint. Apply bond breaker before casting shear key.

NOTE:
THE CONTRACTOR SHALL VERIFY ALL CONTROLLING FIELD DIMENSIONS BEFORE ORDERING OR FABRICATING ANY MATERIAL.

	BY	CHECKED
DESIGN	H. WIN	F. WEI
DETAILS	H. WIN	F. WEI
QUANTITIES	H. WIN	T. CHU

STATE OF CALIFORNIA
DEPARTMENT OF TRANSPORTATION

DIVISION OF ENGINEERING SERVICES
STRUCTURE DESIGN
DESIGN BRANCH 21

BRIDGE NO. 53-1150
POST MILE 23.77

WHITTIER BLVD UC (WIDEN)
ABUTMENT DETAILS

STRUCTURES DESIGN DETAIL SHEET (ENGLISH) (REV. 09-01-10)

ORIGINAL SCALE IN INCHES FOR REDUCED PLANS 0 1 2 3

UNIT: 3623
PROJECT NUMBER & PHASE: 0700020869 & 1 CONTRACT NO.: 202111

DISREGARD PRINTS BEARING EARLIER REVISION DATES → 11-30-09 03-01-11 02-09-11

SHEET 5 OF 16

FILE => 53-1150-f-a01dt01.dgn

USERNAME => s124496 DATE PLOTTED => 28-JUN-2011 TIME PLOTTED => 20:41

DIST	COUNTY	ROUTE	POST MILES TOTAL PROJECT	SHEET No.	TOTAL SHEETS
07	LA	710	17.2/26.4	1451	1507

REGISTERED CIVIL ENGINEER — DATE 03/01/11

6-27-11
PLANS APPROVAL DATE

REGISTERED PROFESSIONAL ENGINEER — HTOON H. WIN — No. 77897 — Exp. 06/30/11 — CIVIL — STATE OF CALIFORNIA

The State of California or its officers or agents shall not be responsible for the accuracy or completeness of electronic copies of this plan sheet.

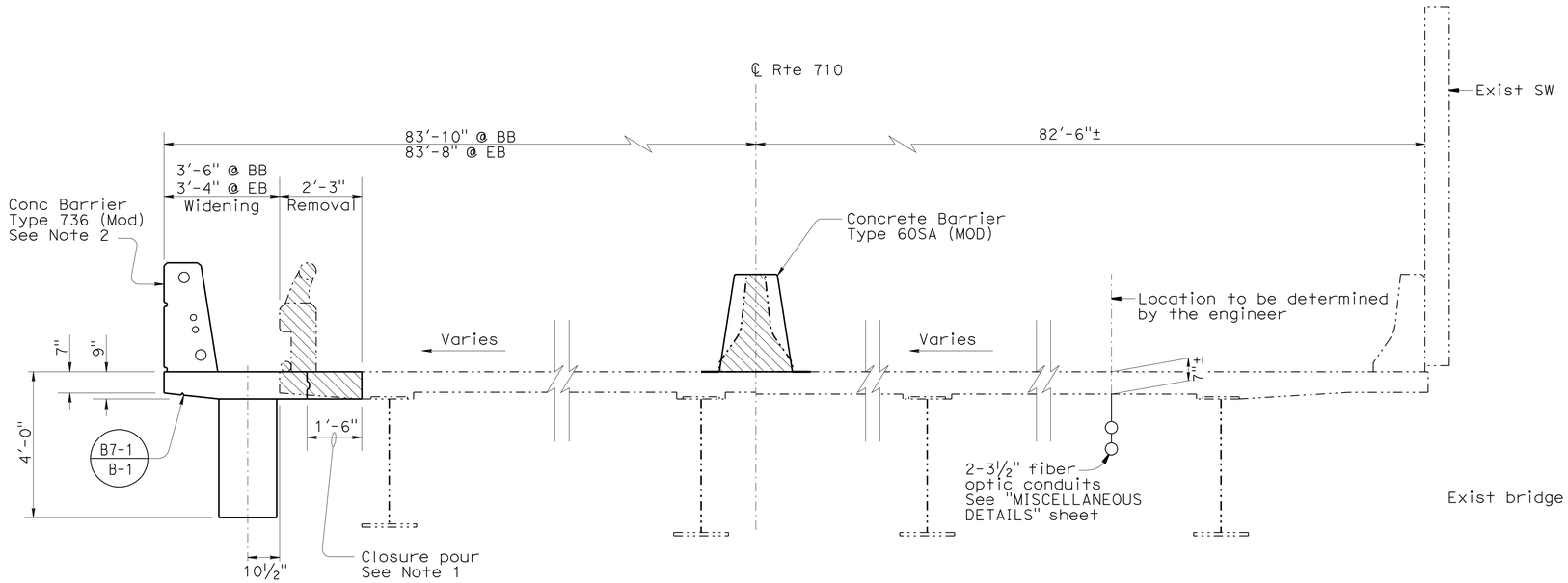

TYPICAL SECTION

½" = 1'-0"

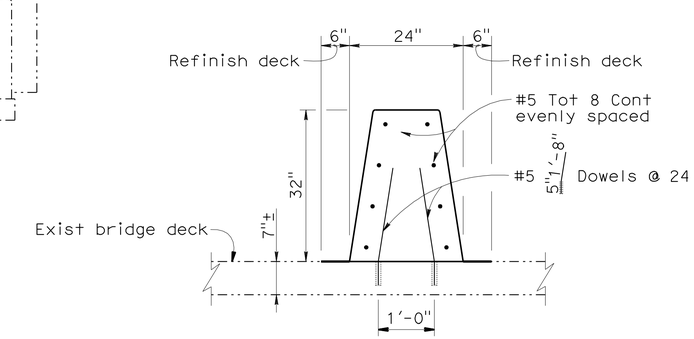

CONCRETE BARRIER TYPE 60SA (MOD)

¾" = 1'-0"

NOTES:

1. Closure pour concrete shall not be placed sooner than 15 days after adjacent deck concrete.
2. Barrier shall not be placed sooner than 15 days after closure pour. See "MISCELLANEOUS DETAILS" sheet for details.
3. Splice to every existing transverse deck reinforcing bar. Align new reinforcing bars with existing. Cut existing transverse reinforcing bars to fit in closure pour.

LEGEND:

- Existing Structure
- New Structure
- Bridge Removal (Portion)

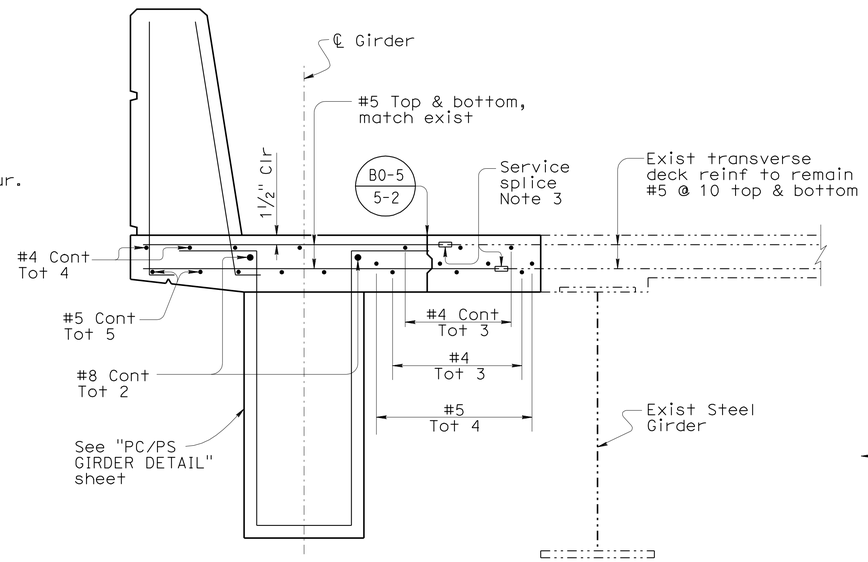

PART TYPICAL SECTION

1" = 1'-0"

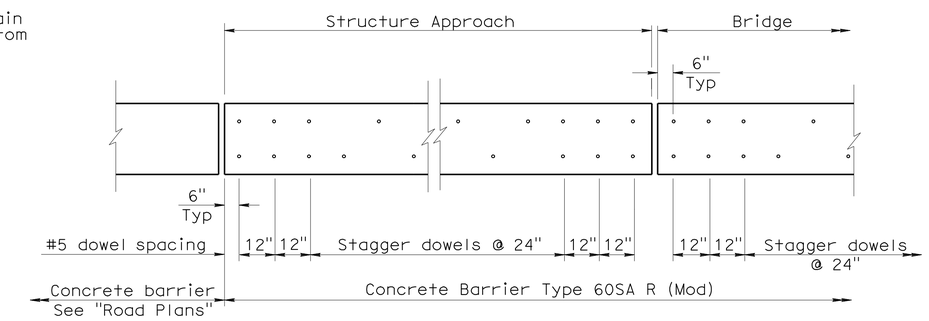

MEDIAN BARRIER DOWEL LAYOUT

NO SCALE

NOTE:
THE CONTRACTOR SHALL VERIFY ALL CONTROLLING FIELD DIMENSIONS BEFORE ORDERING OR FABRICATING ANY MATERIAL.

	BY	CHECKED
DESIGN	H. WIN	F. WEI
DETAILS	S. JIANG/H. WIN	F. WEI
QUANTITIES	H. WIN	T. CHU

STATE OF CALIFORNIA
DEPARTMENT OF TRANSPORTATION

DIVISION OF ENGINEERING SERVICES
STRUCTURE DESIGN
DESIGN BRANCH 21

BRIDGE NO. 53-1150
POST MILE 23.77

WHITTIER BLVD UC (WIDEN)
TYPICAL SECTION

STRUCTURES DESIGN DETAIL SHEET (ENGLISH) (REV. 09-01-10)

ORIGINAL SCALE IN INCHES FOR REDUCED PLANS 0 1 2 3

UNIT: 3623
PROJECT NUMBER & PHASE: 0700020869 & 1 CONTRACT NO.: 202111

DISREGARD PRINTS BEARING EARLIER REVISION DATES

REVISION DATES: 12-02-09 11-22-10 03-01-11

SHEET 6 OF 16

FILE => 53-1150-k-ts01.dgn

USERNAME => s124496 DATE PLOTTED => 29-JUN-2011 TIME PLOTTED => 06:48

DIST	COUNTY	ROUTE	POST MILES TOTAL PROJECT	SHEET No.	TOTAL SHEETS
07	LA	710	17.2/26.4	1452	1507

REGISTERED CIVIL ENGINEER — DATE 03/01/11

6-27-11
PLANS APPROVAL DATE

REGISTERED PROFESSIONAL ENGINEER — HTOON H. WIN — No. 77897 — Exp. 06/30/11 — CIVIL — STATE OF CALIFORNIA

The State of California or its officers or agents shall not be responsible for the accuracy or completeness of electronic copies of this plan sheet.

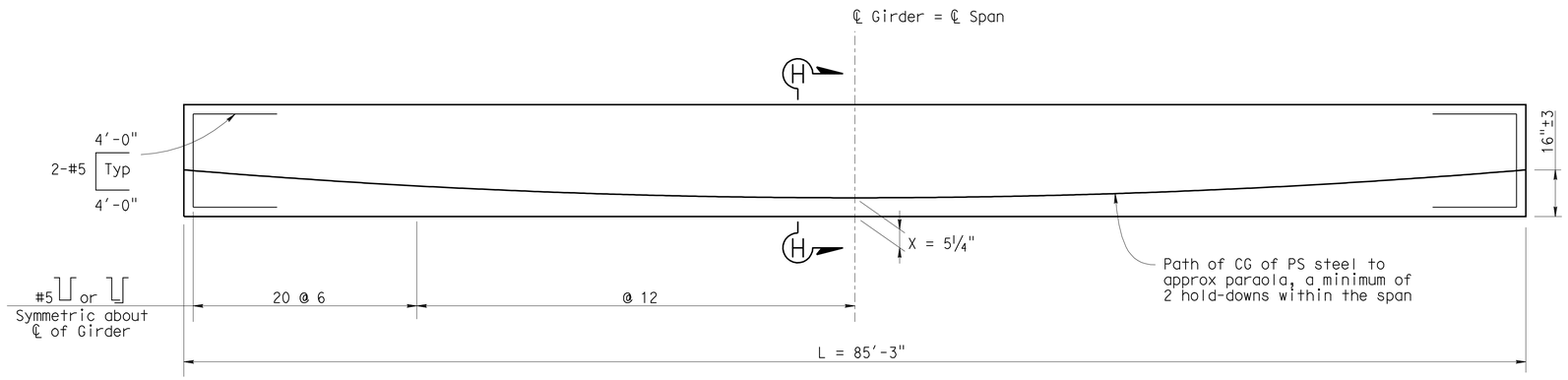

GIRDER ELEVATION

No Scale

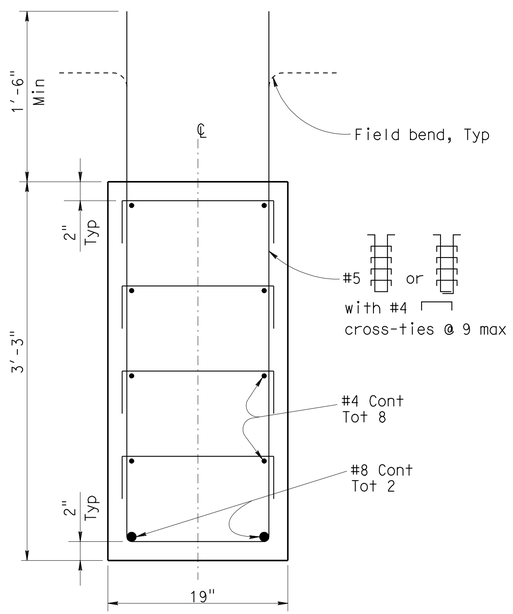

SECTION H-H

1½" = 1'-0"

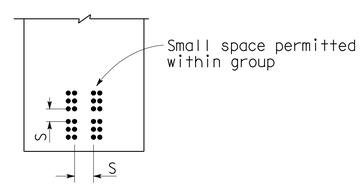

CLEARANCES FOR PRETENSIONED STRANDS

1. Strands may be bundled in groups consisting of 3 vertically 2 horizontally, and separated at the ends.
2. The min distance "S" between groups or individual strands is 1½" for ⅜" strands, 1¾" for 7/16" strands and ½" strands, 2" for 0.6" strands.
3. "S" is measured between centers of adjacent strands.
4. Approval of Engineer is required for deviation.

PRESTRESSING NOTES

1. The Jacking Force, Pj = 1050 kip.
   Pj required at the point of control along the span.
   Pj does not include any fabrication specific losses.
2. f'ci = 5300 psi at time of initial stressing.
   f'c = 6000 psi at 28 days.
3. Deflection components at mid span are informational and will be used in setting screed line elevations: 1½" at deck and ½" at barrier.
4. Screed line elevations for deck concrete will be determined by the Engineer.
5. PS strand shall be 270 ksi low relaxation and 0.6" Ø.
6. Contractor may interpolate "Pj" and "X" values between limits shown, as approved by the Engineer.

NOTE:
THE CONTRACTOR SHALL VERIFY ALL CONTROLLING FIELD DIMENSIONS BEFORE ORDERING OR FABRICATING ANY MATERIAL.

	BY	CHECKED
DESIGN	H. WIN	F. WEI
DETAILS	H. WIN	F. WEI
QUANTITIES	H. WIN	T. CHU

STATE OF CALIFORNIA
DEPARTMENT OF TRANSPORTATION

DIVISION OF ENGINEERING SERVICES
STRUCTURE DESIGN
DESIGN BRANCH 21

BRIDGE NO. 53-1150
POST MILE 23.77

WHITTIER BLVD UC (WIDEN)
PC/PS GIRDER DETAILS

STRUCTURES DESIGN DETAIL SHEET (ENGLISH) (REV. 09-01-10)

ORIGINAL SCALE IN INCHES FOR REDUCED PLANS 0 1 2 3

UNIT: 3623
PROJECT NUMBER & PHASE: 0700020869 & 1 CONTRACT NO.: 202111

DISREGARD PRINTS BEARING EARLIER REVISION DATES

REVISION DATES: 01-05-10 02-10-10 10-01-10 03-01-11

SHEET 7 OF 16

FILE => 53-1150-1-gdt01.dgn

USERNAME => s124496 DATE PLOTTED => 29-JUN-2011 TIME PLOTTED => 06:48

DIST	COUNTY	ROUTE	POST MILES TOTAL PROJECT	SHEET No.	TOTAL SHEETS
07	LA	710	17.2/26.4	1453	1507

REGISTERED CIVIL ENGINEER — DATE 03/01/11

6-27-11
PLANS APPROVAL DATE

REGISTERED PROFESSIONAL ENGINEER — HTOON H. WIN — No. 77897 — Exp. 06/30/11 — CIVIL — STATE OF CALIFORNIA

The State of California or its officers or agents shall not be responsible for the accuracy or completeness of electronic copies of this plan sheet.

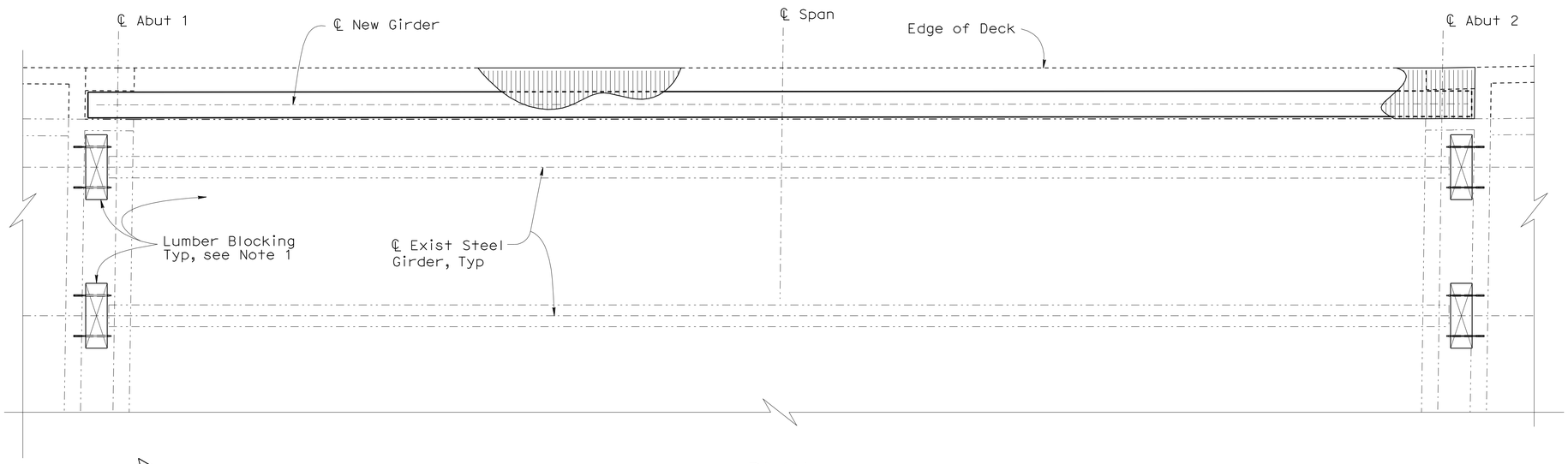

PLAN
1/4"=1'-0"

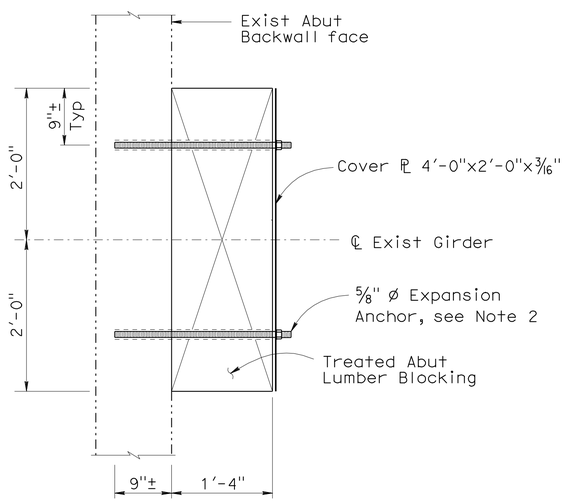

LUMBER BLOCKING PLAN
1" = 1'-0"
(Exist Girder Not Shown For Clarity)

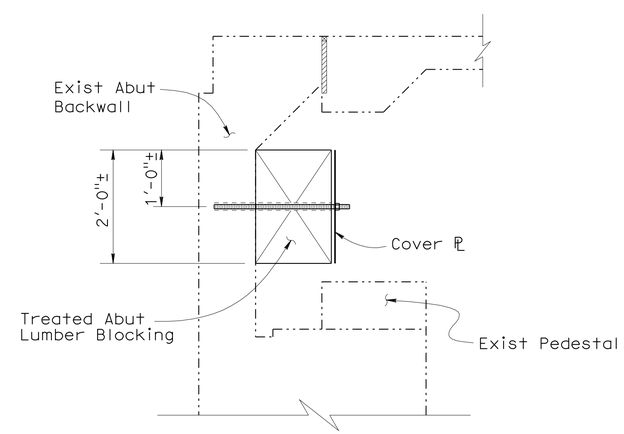

LUMBER BLOCKING ELEVATION
3/4" = 1'-0"
(Exist Girder Not Shown For Clarity)

NOTES:

1. Abut lumber blocking at exist steel girders. 19 at each abut. 38 total.
2. Avoid damaging exist reinf during drilling. Exist backwall reinf @ 18" both ways.

NOTE:
THE CONTRACTOR SHALL VERIFY ALL CONTROLLING FIELD DIMENSIONS BEFORE ORDERING OR FABRICATING ANY MATERIAL.

DESIGN	BY H. WIN	CHECKED F. WEI	
DETAILS	BY H. WIN	CHECKED F. WEI	
QUANTITIES	BY H. WIN	CHECKED T. TRAN	

STATE OF CALIFORNIA
DEPARTMENT OF TRANSPORTATION

DIVISION OF ENGINEERING SERVICES
STRUCTURE DESIGN
DESIGN BRANCH 21

BRIDGE NO. 53-1150
POST MILE 23.77

WHITTIER BLVD UC (WIDEN)
ABUTMENT RETROFIT DETAILS

STRUCTURES DESIGN DETAIL SHEET (ENGLISH) (REV. 09-01-10)

ORIGINAL SCALE IN INCHES FOR REDUCED PLANS 0 1 2 3

UNIT: 3623
PROJECT NUMBER & PHASE: 0700020869 & 1 CONTRACT NO.: 202111

DISREGARD PRINTS BEARING EARLIER REVISION DATES

REVISION DATES: 12-15-10 | 03-01-11 | 11-19-10

SHEET 8 OF 16

FILE => 53-1150-m-a01rdt01.dgn

USERNAME => s124496 DATE PLOTTED => 29-JUN-2011 TIME PLOTTED => 06:48

DIST	COUNTY	ROUTE	POST MILES TOTAL PROJECT	SHEET No.	TOTAL SHEETS
07	LA	710	17.2/26.4	1454	1507

REGISTERED CIVIL ENGINEER — DATE 03/01/11

6-27-11
PLANS APPROVAL DATE

REGISTERED PROFESSIONAL ENGINEER — HTOON H. WIN — No. 77897 — Exp. 06/30/11 — CIVIL — STATE OF CALIFORNIA

The State of California or its officers or agents shall not be responsible for the accuracy or completeness of electronic copies of this plan sheet.

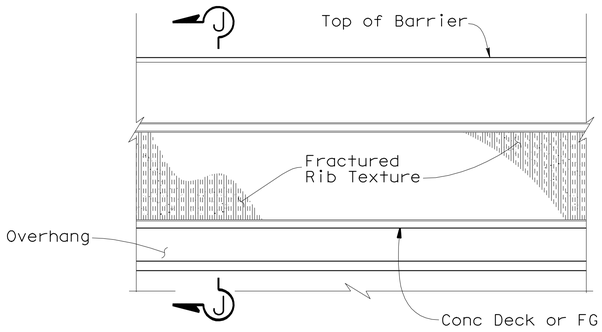

TYPE 736 (MOD) BARRIER ELEVATION ARCHITECTURAL TREATMENT

3/4" = 1'-0"

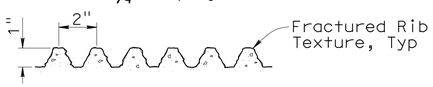

FRACTURED RIB DETAIL

3" = 1'-0"

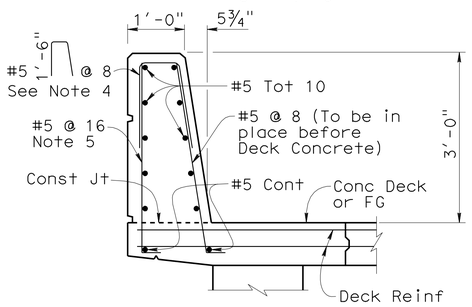

SECTION J-J

3/4" = 1'-0"

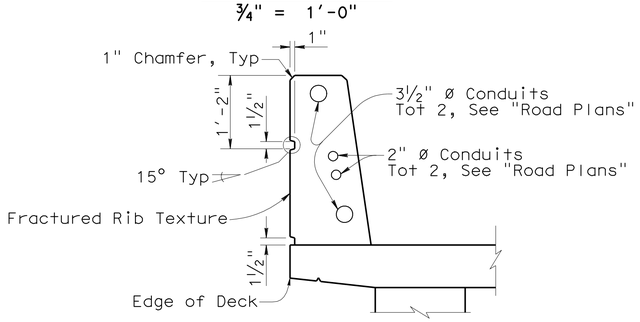

TYPE 736 (MOD) ARCHITECTURAL AND UTILITY DETAILS

3/4" = 1'-0"

NOTE:
THE CONTRACTOR SHALL VERIFY ALL CONTROLLING FIELD DIMENSIONS BEFORE ORDERING OR FABRICATING ANY MATERIAL.

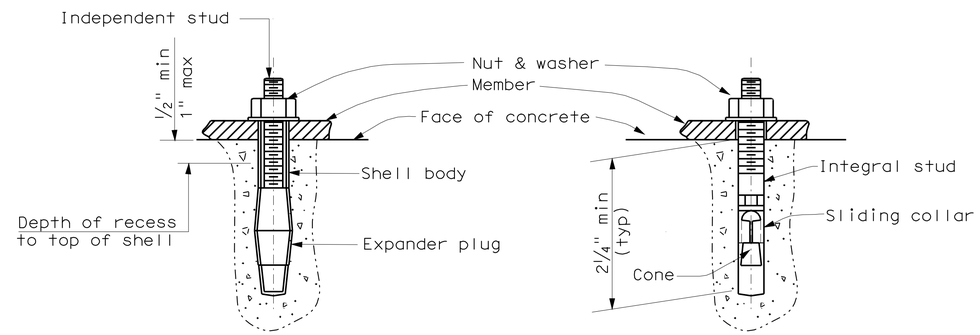

TYP. SHELL-TYPE MEA — TYP. STUD-TYPE MEA

MECHANICAL EXPANSION BOLT ANCHORS (MEA)

NO SCALE

LEGEND:

-·-·-·- Existing Structure

NOTES:

1. All steel shall be galvanized after fabrication.
2. 1/8" "U" pin plate may be welded or one piece sheet metal formed plates to fit.
3. Strap and 3/4" expansion anchorage spaced at max. and staggered between clevis plates.
4. Rebar may be adjusted to clear utility pull boxes.
5. For details not shown, see STANDARD PLAN B11-56.

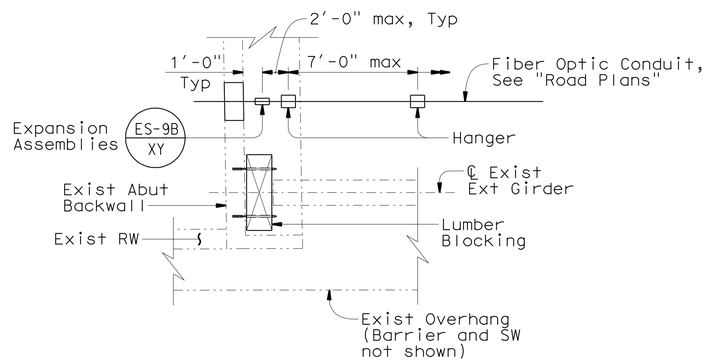

PLAN

FIBER OPTIC CONDUIT

NO SCALE

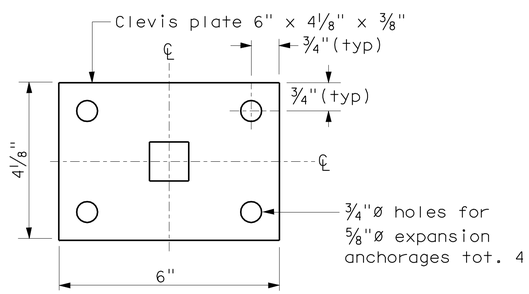

CLEVIS PLATE

NO SCALE

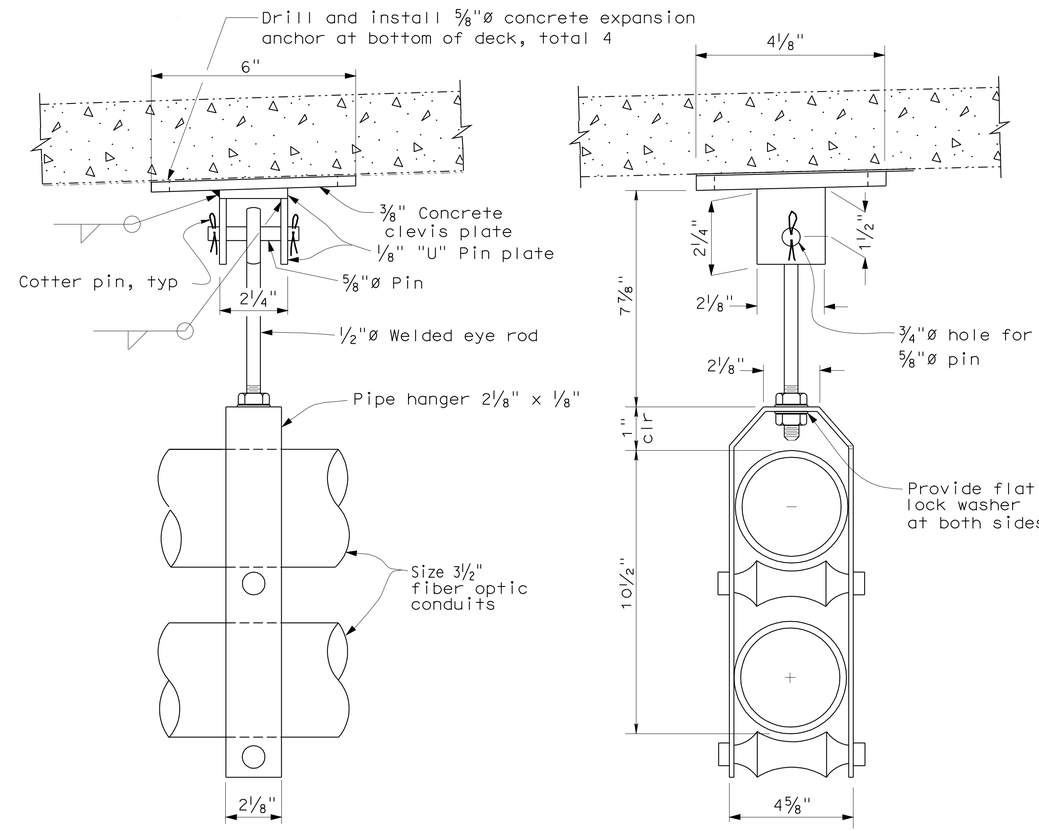

SIDE ELEVATION — TYPICAL SECTION

CONDUIT SUPPORT DETAILS

NO SCALE

DESIGN	BY K. GHOSH/H. WIN	CHECKED F. WEI	
DETAILS	BY M. KINGRA/H. WIN	CHECKED F. WEI	
QUANTITIES	BY H. WIN	CHECKED T. TRAN	

STATE OF CALIFORNIA
DEPARTMENT OF TRANSPORTATION

DIVISION OF ENGINEERING SERVICES
STRUCTURE DESIGN
DESIGN BRANCH 21

BRIDGE NO. 53-1150
POST MILE 23.77

WHITTIER BLVD UC (WIDEN)
MISCELLANEOUS DETAILS

STRUCTURES DESIGN DETAIL SHEET (ENGLISH) (REV. 09-01-10)

ORIGINAL SCALE IN INCHES FOR REDUCED PLANS 0 1 2 3

UNIT: 3623
PROJECT NUMBER & PHASE: 0700020869 & 1 CONTRACT NO.: 202111

DISREGARD PRINTS BEARING EARLIER REVISION DATES → REVISION DATES 02-24-10 03-09-10 10-01-10 03-01-11

SHEET 9 OF 16

FILE => 53-1150-s-miscdt.dgn

USERNAME => s124496 DATE PLOTTED => 29-JUN-2011 TIME PLOTTED => 06:48

DIST	COUNTY	ROUTE	POST MILES TOTAL PROJECT	SHEET No.	TOTAL SHEETS
07	LA	710	17.2/26.4	1455	1507

REGISTERED CIVIL ENGINEER — DATE 03/01/11

6-27-11
PLANS APPROVAL DATE

REGISTERED PROFESSIONAL ENGINEER — HTOON H. WIN — No. 77897 — Exp. 06/30/11 — CIVIL — STATE OF CALIFORNIA

The State of California or its officers or agents shall not be responsible for the accuracy or completeness of electronic copies of this plan sheet.

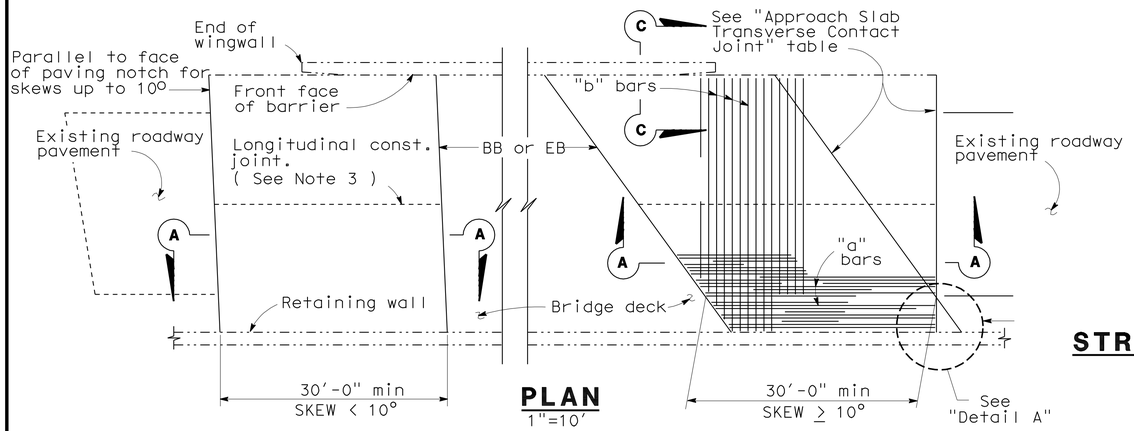

PLAN
1"=10'

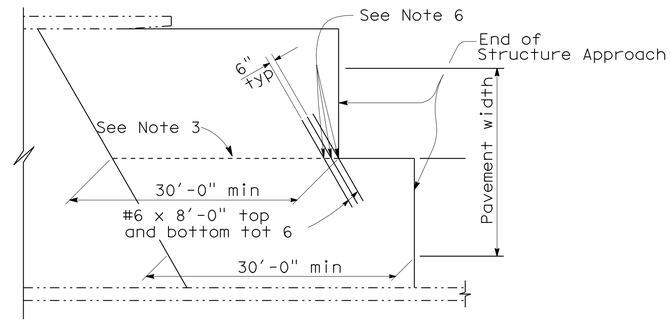

STRUCTURE APPROACH - END STAGGER DETAIL
No Scale

APPROACH SLAB TRANSVERSE CONTACT JOINT		
APPROACH SKEW	WITH AC ROADWAY PAVEMENT	WITH PCC ROADWAY PAVEMENT
< 10°	Parallel to face of paving notch	Parallel to face of paving notch
10° - 45°	Parallel to face of P N use (Detail A)	Stagger lines 24' to 36' apart
> 45°	Parallel to face of P N use (Detail A)	Stagger at each lane line

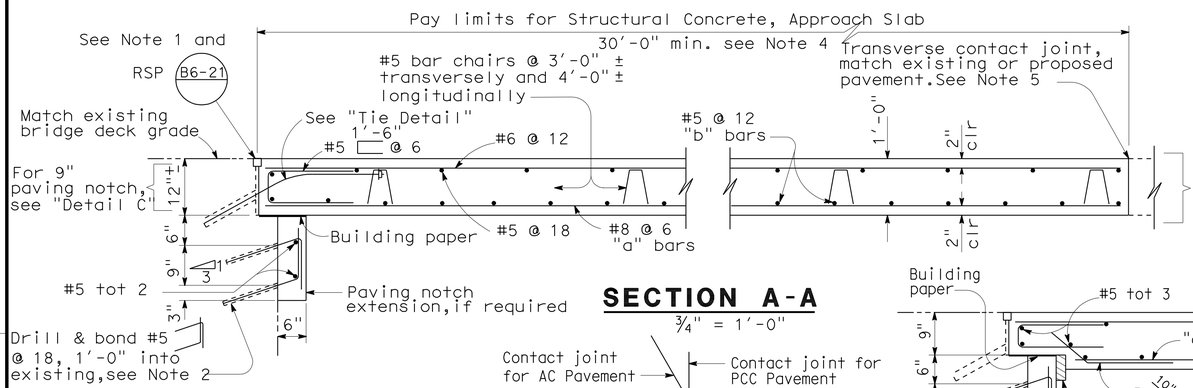

SECTION A-A
¾" = 1'-0"

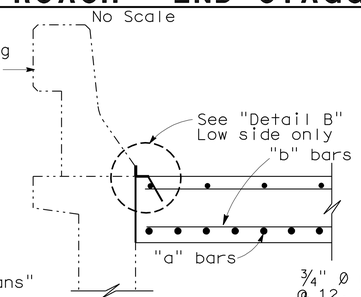

SECTION C-C
¾" = 1'-0"

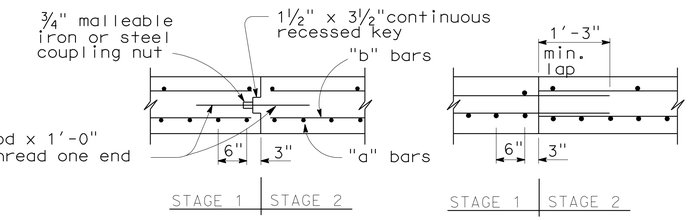

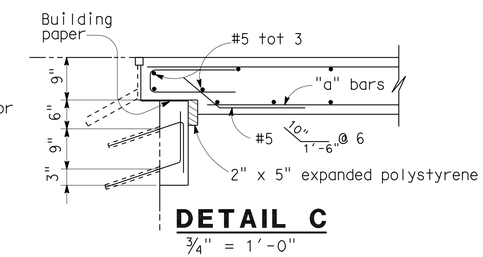

DETAIL C
¾" = 1'-0"

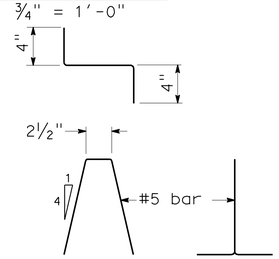

BAR CHAIR DETAIL
1½" = 1'-0"

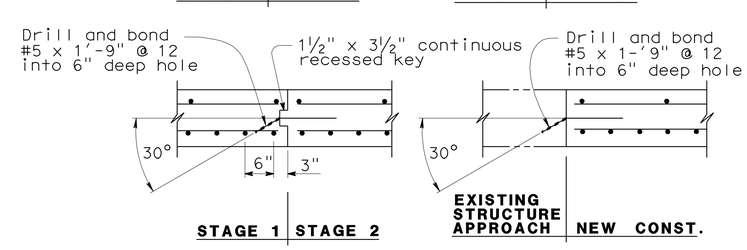

LONGITUDINAL CONSTRUCTION JOINT ALTERNATIVES
¾" = 1'-0"

NOTES:

1. For details not shown or noted, see Structure Plans. Adjust bar reinforcement to clear a sawcut for sealed joint, when required.
2. Space to avoid existing prestress anchorages and main reinforcement.
3. Longitudinal construction joints, when permitted by the Engineer, shall be located on lane lines.
4. Transverse contact joint shall be a minimum of 5'-0" from an existing or constructed weakened plane joint.
5. For transverse contact joint with new PCC paving, refer to Standard Plan P10.
6. Couplers are required for stage construction.
7. End angle or plate at beginning of barrier transition, end of wingwall or end of structure approach as applicable.

DETAIL A
No Scale

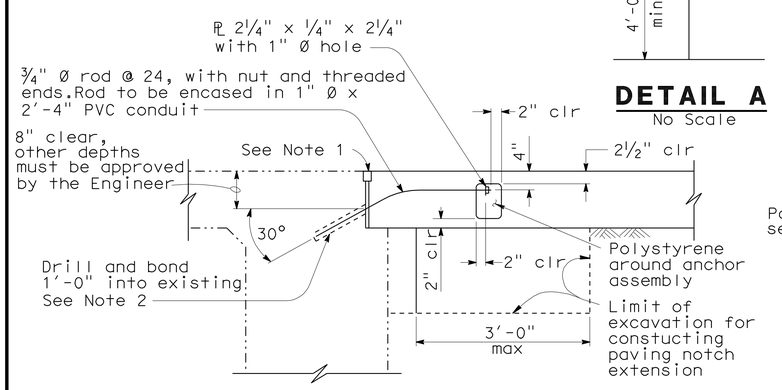

TIE DETAIL
¾" = 1'-0"

NOTE: For details not shown, see "Section A-A".

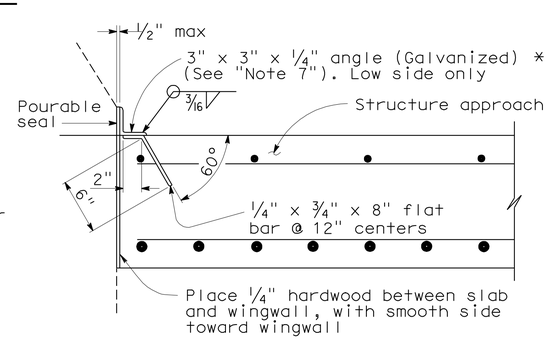

*(TO BE USED WITH TYPE 25 OR TYPE 27 CONCRETE BARRIER)

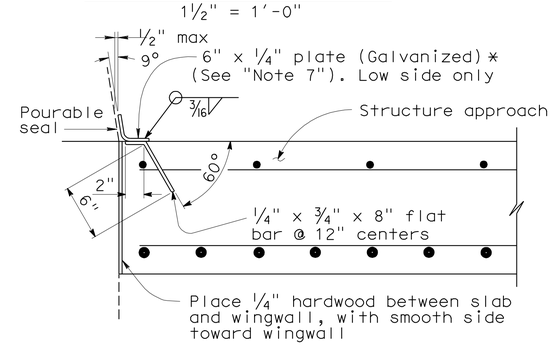

*(TO BE USED WITH TYPE 732 OR TYPE 736 CONCRETE BARRIER)

DETAIL B
1½" = 1'-0"

_____ STANDARD DRAWING

FILE NO. xs3-140e — APPROVAL DATE 3-14-05

STATE OF CALIFORNIA DEPARTMENT OF TRANSPORTATION — DIVISION OF ENGINEERING SERVICES

BRIDGE NO. 53-1150 — POST MILE 23.77

WHITTIER BLVD UC (WIDEN)
STRUCTURE APPROACH TYPE R(30D)

DS OSD 2147A (ENGLISH STANDARD DRAWING "XS" BORDER REV. (02-02-11)

ORIGINAL SCALE IN INCHES FOR REDUCED PLANS 0 1 2 3

UNIT: 3623
PROJECT NUMBER & PHASE: 0700020869 & 1 CONTRACT NO.: 202111

DISREGARD PRINTS BEARING EARLIER REVISION DATES → 03-01-11

REVISION DATES — SHEET 10 OF 16

FILE => 53-1150-s-sa_R(30D).dgn

USERNAME => s124496 DATE PLOTTED => 23-JUN-2011 TIME PLOTTED => 06:48

DIST	COUNTY	ROUTE	POST MILES TOTAL PROJECT	SHEET No.	TOTAL SHEETS
07	LA	710	17.2/26.4	1456	1507

REGISTERED CIVIL ENGINEER — DATE 03/01/11

6-27-11
PLANS APPROVAL DATE

REGISTERED PROFESSIONAL ENGINEER — HTOON H. WIN No. 77897 Exp. 06/30/11 CIVIL — STATE OF CALIFORNIA

The State of California or its officers or agents shall not be responsible for the accuracy or completeness of electronic copies of this plan sheet.

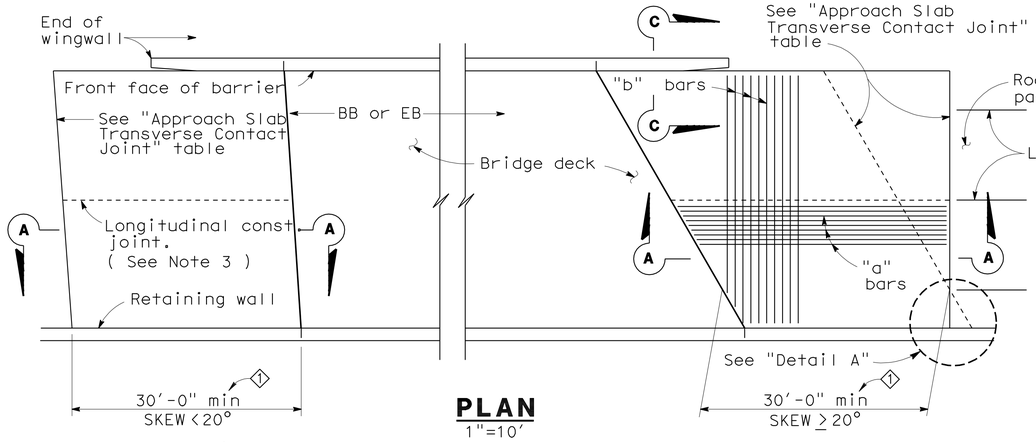

PLAN
1"=10'

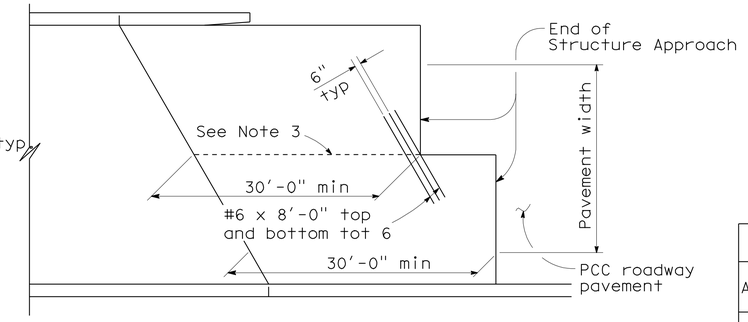

STRUCTURE APPROACH - END STAGGER DETAIL
No Scale

APPROACH SLAB TRANSVERSE CONTACT JOINT		
APPROACH SKEW	WITH AC ROADWAY PAVEMENT	WITH PCC ROADWAY PAVEMENT
< 20°	Parallel to face of paving notch	Parallel to face of paving notch
20° - 45°	Parallel to face of P N use (Detail A)	Stagger lines 24' to 36' apart.
> 45°	Parallel to face of P N use (Detail A)	Stagger at each lane line.

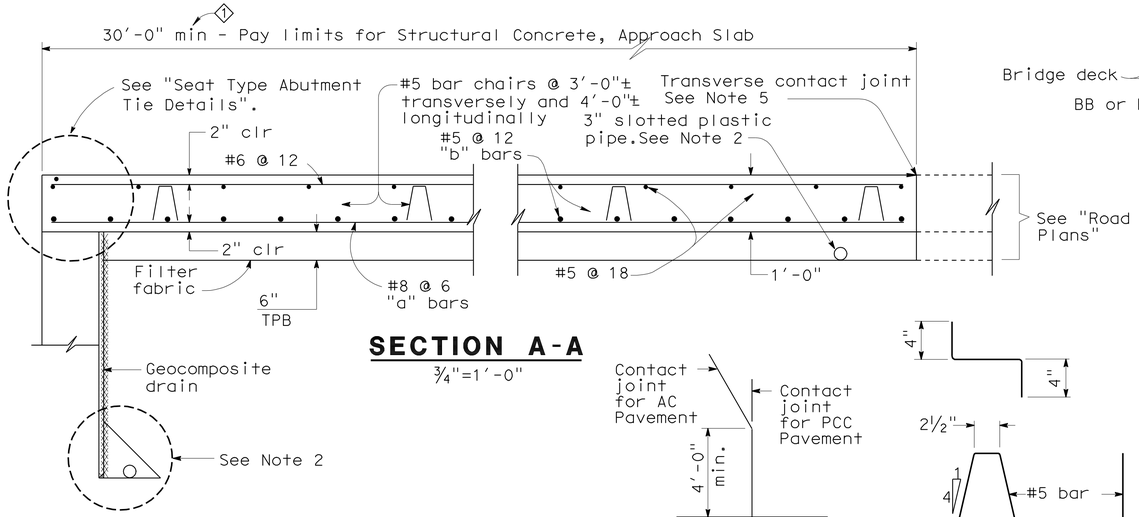

SECTION A-A
¾"=1'-0"

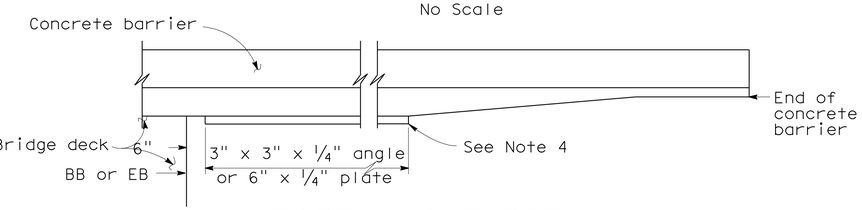

EDGE ANGLE DETAIL
½"=1'-0"

DETAIL A
No Scale

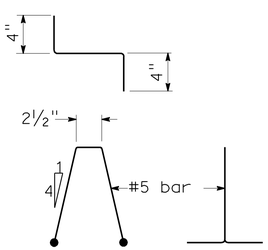

BAR CHAIR DETAIL
1½"=1'-0"

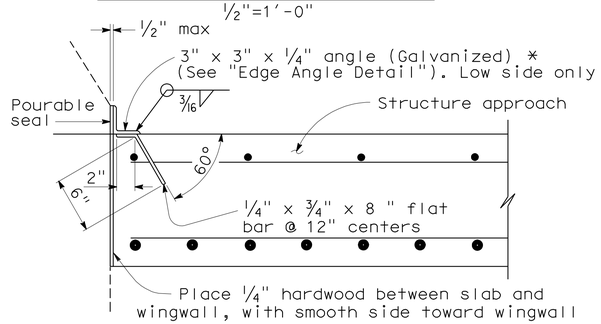

***(TO BE USED WITH TYPE 25 OR TYPE 27 CONCRETE BARRIER)**

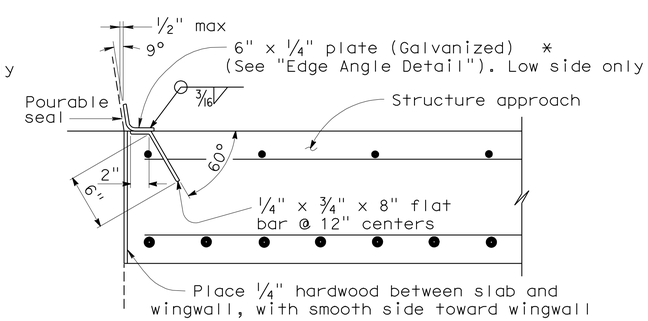

***(TO BE USED WITH TYPE 732 OR TYPE 736 CONCRETE BARRIER)**

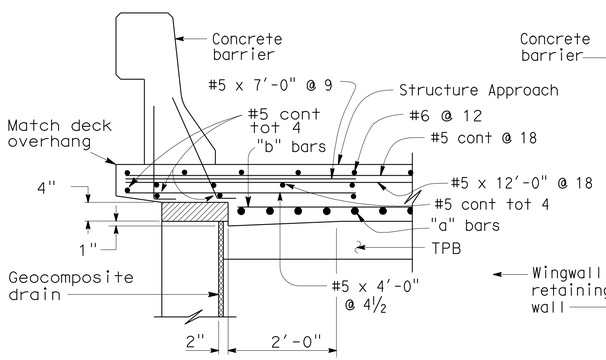

TYPE E-1

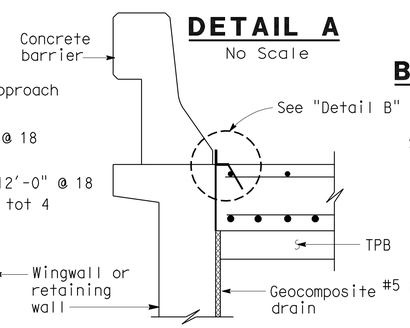

TYPE E-2

SECTION C-C
¾"=1'-0"

(Type E-1 to be used,unless otherwise shown on plans)

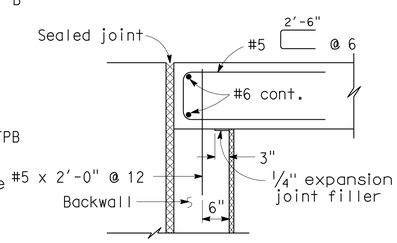

MR ≤ 2"

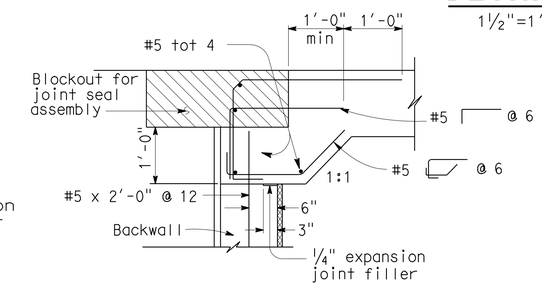

MR > 2"

SEAT TYPE ABUTMENT TIE DETAILS (SEE NOTE 1)
¾"=1'-0"

DETAIL B
1½"=1'-0"

NOTES:

1. For details not shown,see Structure Plans. For MR ≤ 2",adjust bar reinforcement to clear a sawcut for sealed joint,when required.
2. For drainage details,see "Structure Approach Drainage Details" sheet.
3. Longitudinal construction joints,when permitted by the Engineer, shall be located on lane lines.
4. End angle or plate at beginning of barrier transition, end of wingwall or end of structure approach as applicable.
5. For transverse contact joint with new PCC paving, refer to Standard Plan P10.
6. At the contractor's option, approach slab transverse reinforcement may be placed parallel to paving notch. Spacing of transverse reinforcement is measured along ℄ roadway.

Remove all polystyrene.

SPECIAL DETAILS

REVISED STANDARD DRAWING

FILE NO. xs3-120e — APPROVAL DATE 3-14-05

1 Revised Note

STATE OF CALIFORNIA DEPARTMENT OF TRANSPORTATION

DIVISION OF ENGINEERING SERVICES

BRIDGE NO. 53-1150 — POST MILE 23.77

WHITTIER BLVD UC (WIDEN)

STRUCTURE APPROACH TYPE N(30S)

DS OSD 2147A (ENGLISH STANDARD DRAWING "XS" BORDER REV. (02-02-11)

ORIGINAL SCALE IN INCHES FOR REDUCED PLANS 0 1 2 3

UNIT: 3623
PROJECT NUMBER & PHASE: 0700020869 & 1 CONTRACT NO.: 202111

DISREGARD PRINTS BEARING EARLIER REVISION DATES — REVISION DATES 02-06-11 03-01-11

SHEET 11 OF 16

FILE => 53-1150-s-saN(30S).dgn

USERNAME => s6124496 DATE PLOTTED => 29-JUN-2011 TIME PLOTTED => 06:48

DIST	COUNTY	ROUTE	POST MILES TOTAL PROJECT	SHEET No	TOTAL SHEETS
07	LA	710	17.2/26.4	1457	1507

Joseph S. Pratt 1-7-11
CERTIFIED ENGINEERING GEOLOGIST DATE

6-27-11
PLANS APPROVAL DATE

REGISTERED GEOLOGIST Joseph S. Pratt No. 2141 Exp. 5-31-11 CERTIFIED ENGINEERING GEOLOGIST STATE OF CALIFORNIA

The State of California or its officers or agents shall not be responsible for the accuracy or completeness of electronic copies of this plan sheet.

This LOTB sheet was prepared in accordance with the Caltrans Soil & Rock Logging, Classification, & Presentation Manual (June 2010).

BENCH MARK

RTK737 Elev 218.143′
Fd PK Nail at Aerial Target HV219, NB710 shldr, 30′ north of begin Whittier Blvd UC, 76.694′ Rt Sta 1255+50.16 C/L Rte 710.
N 1830995.7570
E 6509442.9140

PRHV2138 Elev 195.030′
Fd ChsX in Swalk southside Whittier Blvd, 45′ west Whittier Blvd UC, 125.251′ Lt Sta 1255+29.30 C/L Rte 710.
N 1831024.0250
E 6509241.8890

NAVD88

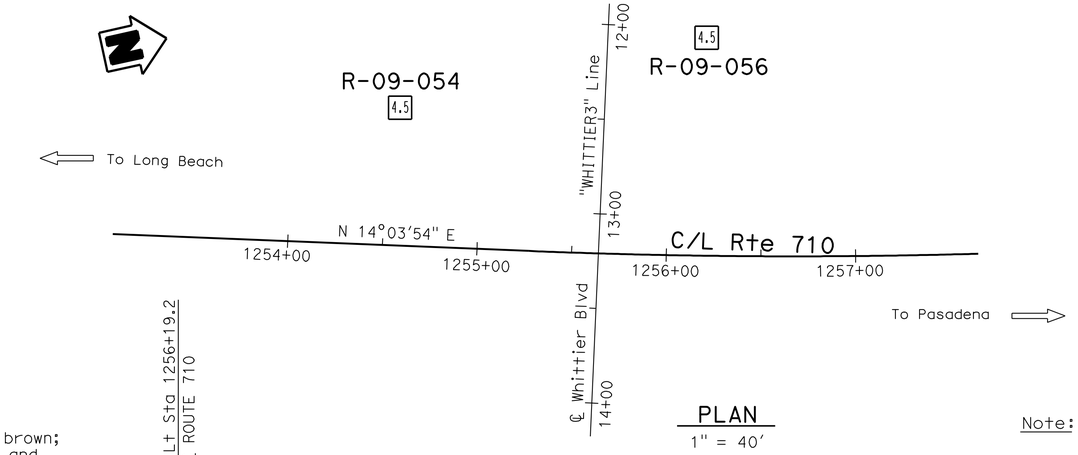

PLAN
1" = 40′

Note: No ground water encountered during field investigation.

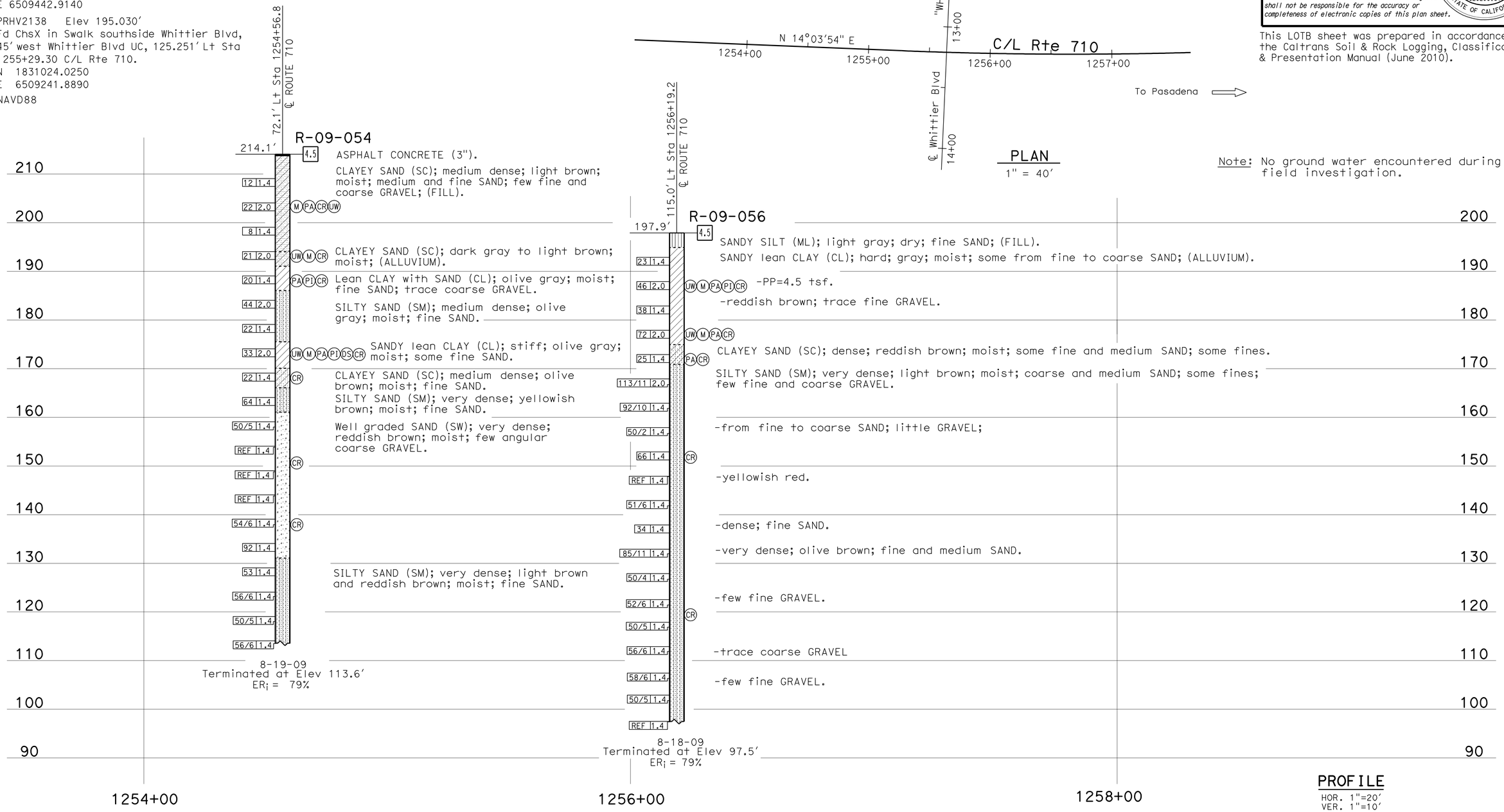

PROFILE
HOR. 1"=20′
VER. 1"=10′

ENGINEERING SERVICES	GEOTECHNICAL SERVICES	STATE OF CALIFORNIA DEPARTMENT OF TRANSPORTATION	DIVISION OF ENGINEERING SERVICES STRUCTURE DESIGN	BRIDGE NO. 53-1150	WHITTIER BLVD UC (WIDEN)
FUNCTIONAL SUPERVISOR	DRAWN BY: C. Christian; W. Tang 10/10	FIELD INVESTIGATION BY:	DESIGN BRANCH	POST MILES 23.77	LOG OF TEST BORINGS 1 OF 5
NAME: S. Karimi	CHECKED BY: T. Halda	Kevin Lai			

OGS CIVIL LOG OF TEST BORINGS SHEET

ORIGINAL SCALE IN INCHES FOR REDUCED PLANS 0 1 2 3

CU 07
EA 202111

DISREGARD PRINTS BEARING EARLIER REVISION DATES

REVISION DATES: 12-09-10 12-16-10 01-06-10

SHEET 12 OF 16

FILE => 53-1150-z-lotb01.dgn

USERNAME => s124496 DATE PLOTTED => 29-JUN-2011 TIME PLOTTED => 06:49

DIST	COUNTY	ROUTE	POST MILES TOTAL PROJECT	SHEET No	TOTAL SHEETS
07	LA	710	17.2/26.4	1458	1507

Joseph S. Pratt — CERTIFIED ENGINEERING GEOLOGIST — 1-7-11 DATE

REGISTERED GEOLOGIST — Joseph S. Pratt No. 2141 Exp. 5-31-11 — CERTIFIED ENGINEERING GEOLOGIST — STATE OF CALIFORNIA

6-27-11
PLANS APPROVAL DATE

The State of California or its officers or agents shall not be responsible for the accuracy or completeness of electronic copies of this plan sheet.

REFERENCE: CALTRANS SOIL & ROCK LOGGING, CLASSIFICATION, AND PRESENTATION MANUAL (2010)

CEMENTATION

Description	Criteria
Weak	Crumbles or breaks with handling or little finger pressure.
Moderate	Crumbles or breaks with considerable finger pressure.
Strong	Will not crumble or break with finger pressure.

BOREHOLE IDENTIFICATION

Symbol	Hole Type	Description
Size	A	Auger Boring (hollow or solid stem bucket)
Size	R RW RC P	Rotary drilled boring (conventional) Rotary drilled with self-casing wire-line Rotary core with continuously-sampled, self-casing wire-line Rotary percussion boring (air)
Size	R	Rotary drilled diamond core
Size	HD HA	Hand driven (1-inch soil tube) Hand Auger
●	D	Dynamic Cone Penetration Boring
▲	CPT	Cone Penetration Test (ASTM D 5778)
⬚	O	Other (note on LOTB)

Note: Size in inches.

CONSISTENCY OF COHESIVE SOILS

Description	Shear Strength (tsf)	Pocket Penetrometer Measurement, PP, (tsf)	Torvane Measurement, TV, (tsf)	Vane Shear Measurement, VS, (tsf)
Very Soft	Less than 0.12	Less than 0.25	Less than 0.12	Less than 0.12
Soft	0.12 - 0.25	0.25 - 0.5	0.12 - 0.25	0.12 - 0.25
Medium Stiff	0.25 - 0.5	0.5 - 1	0.25 - 0.5	0.25 - 0.5
Stiff	0.5 - 1	1 - 2	0.5 - 1	0.5 - 1
Very Stiff	1 - 2	2 - 4	1 - 2	1 - 2
Hard	Greater than 2	Greater than 4	Greater than 2	Greater than 2

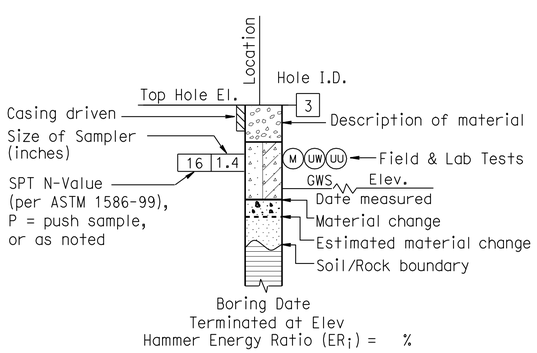

ROTARY BORING

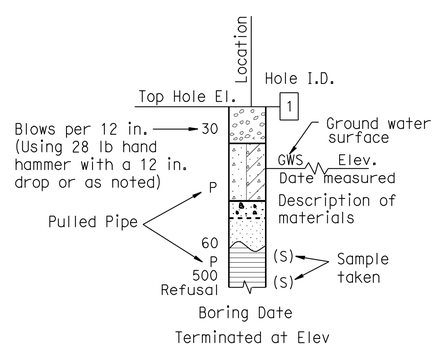

HAND BORING

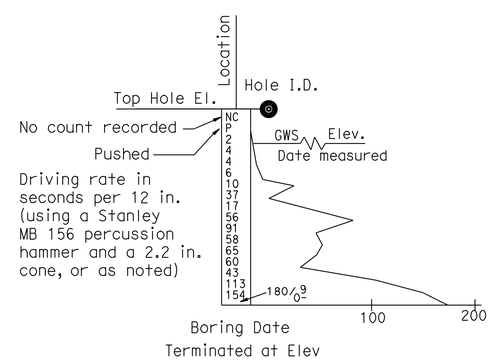

DYNAMIC CONE PENETRATION BORING

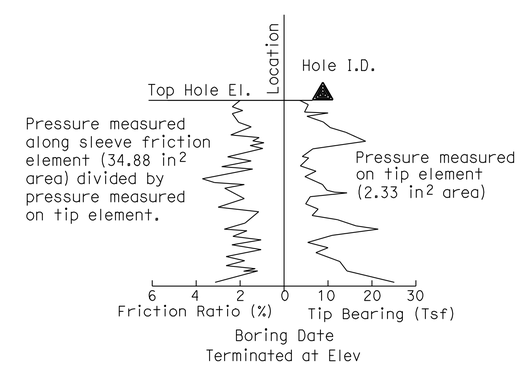

CONE PENETRATION TEST (CPT) BORING

ENGINEERING SERVICES	GEOTECHNICAL SERVICES	STATE OF CALIFORNIA DEPARTMENT OF TRANSPORTATION	DIVISION OF ENGINEERING SERVICES STRUCTURE DESIGN DESIGN BRANCH	BRIDGE NO. 53-1150 / POST MILE 23.77	WHITTIER BLVD UC LOG OF TEST BORINGS 2 OF 5
	PREPARED BY: W. Tang 10/10				

GS LOTB SOIL LEGEND

ORIGINAL SCALE IN INCHES FOR REDUCED PLANS 0 1 2 3

CU 07
EA 202101

DISREGARD PRINTS BEARING EARLIER REVISION DATES

REVISION DATES

SHEET 13 OF 16

FILE => 53-1150-z-lotb02.dgn

USERNAME => s124496 DATE PLOTTED => 29-JUN-2011 TIME PLOTTED => 06:49

REFERENCE: CALTRANS SOIL & ROCK LOGGING, CLASSIFICATION, AND PRESENTATION MANUAL (2010)

DIST	COUNTY	ROUTE	POST MILES TOTAL PROJECT	SHEET No	TOTAL SHEETS
07	LA	710	17.2/26.4	1459	1507

Joseph S. Pratt 1-7-11
CERTIFIED ENGINEERING GEOLOGIST DATE

6-27-11
PLANS APPROVAL DATE

REGISTERED GEOLOGIST Joseph S. Pratt No. 2141 Exp. 5-31-11 CERTIFIED ENGINEERING GEOLOGIST STATE OF CALIFORNIA

The State of California or its officers or agents shall not be responsible for the accuracy or completeness of electronic copies of this plan sheet.

GROUP SYMBOLS AND NAMES

Graphic/Symbol	Group Names	Graphic/Symbol	Group Names
GW	Well-graded GRAVEL Well-graded GRAVEL with SAND	CL	Lean CLAY Lean CLAY with SAND Lean CLAY with GRAVEL SANDY lean CLAY SANDY lean CLAY with GRAVEL GRAVELLY lean CLAY GRAVELLY lean CLAY with SAND
GP	Poorly-graded GRAVEL Poorly-graded GRAVEL with SAND		
GW-GM	Well-graded GRAVEL with SILT Well-graded GRAVEL with SILT and SAND	CL-ML	SILTY CLAY SILTY CLAY with SAND SILTY CLAY with GRAVEL SANDY SILTY CLAY SANDY SILTY CLAY with GRAVEL GRAVELLY SILTY CLAY GRAVELLY SILTY CLAY with SAND
GW-GC	Well-graded GRAVEL with CLAY (or SILTY CLAY) Well-graded GRAVEL with CLAY and SAND (or SILTY CLAY and SAND)		
GP-GM	Poorly-graded GRAVEL with SILT Poorly-graded GRAVEL with SILT and SAND	ML	SILT SILT with SAND SILT with GRAVEL SANDY SILT SANDY SILT with GRAVEL GRAVELLY SILT GRAVELLY SILT with SAND
GP-GC	Poorly-graded GRAVEL with CLAY (or SILTY CLAY) Poorly-graded GRAVEL with CLAY and SAND (or SILTY CLAY and SAND)		
GM	SILTY GRAVEL SILTY GRAVEL with SAND	OL	ORGANIC lean CLAY ORGANIC lean CLAY with SAND ORGANIC lean CLAY with GRAVEL SANDY ORGANIC lean CLAY SANDY ORGANIC lean CLAY with GRAVEL GRAVELLY ORGANIC lean CLAY GRAVELLY ORGANIC lean CLAY with SAND
GC	CLAYEY GRAVEL CLAYEY GRAVEL with SAND		
GC-GM	SILTY, CLAYEY GRAVEL SILTY, CLAYEY GRAVEL with SAND	OL	ORGANIC SILT ORGANIC SILT with SAND ORGANIC SILT with GRAVEL SANDY ORGANIC SILT SANDY ORGANIC SILT with GRAVEL GRAVELLY ORGANIC SILT GRAVELLY ORGANIC SILT with SAND
SW	Well-graded SAND Well-graded SAND with GRAVEL		
SP	Poorly-graded SAND Poorly-graded SAND with GRAVEL	CH	Fat CLAY Fat CLAY with SAND Fat CLAY with GRAVEL SANDY fat CLAY SANDY fat CLAY with GRAVEL GRAVELLY fat CLAY GRAVELLY fat CLAY with SAND
SW-SM	Well-graded SAND with SILT Well-graded SAND with SILT and GRAVEL		
SW-SC	Well-graded SAND with CLAY (or SILTY CLAY) Well-graded SAND with CLAY and GRAVEL (or SILTY CLAY and GRAVEL)	MH	Elastic SILT Elastic SILT with SAND Elastic SILT with GRAVEL SANDY elastic SILT SANDY elastic SILT with GRAVEL GRAVELLY elastic SILT GRAVELLY elastic SILT with SAND
SP-SM	Poorly-graded SAND with SILT Poorly-graded SAND with SILT and GRAVEL		
SP-SC	Poorly-graded SAND with CLAY (or SILTY CLAY) Poorly-graded SAND with CLAY and GRAVEL (or SILTY CLAY and GRAVEL)	OH	ORGANIC fat CLAY ORGANIC fat CLAY with SAND ORGANIC fat CLAY with GRAVEL SANDY ORGANIC fat CLAY SANDY ORGANIC fat CLAY with GRAVEL GRAVELLY ORGANIC fat CLAY GRAVELLY ORGANIC fat CLAY with SAND
SM	SILTY SAND SILTY SAND with GRAVEL		
SC	CLAYEY SAND CLAYEY SAND with GRAVEL	OH	ORGANIC elastic SILT ORGANIC elastic SILT with SAND ORGANIC elastic SILT with GRAVEL SANDY ORGANIC elastic SILT SANDY ORGANIC elastic SILT with GRAVEL GRAVELLY ORGANIC elastic SILT GRAVELLY ORGANIC elastic SILT with SAND
SC-SM	SILTY, CLAYEY SAND SILTY, CLAYEY SAND with GRAVEL		
PT	PEAT	OL/OH	ORGANIC SOIL ORGANIC SOIL with SAND ORGANIC SOIL with GRAVEL SANDY ORGANIC SOIL SANDY ORGANIC SOIL with GRAVEL GRAVELLY ORGANIC SOIL GRAVELLY ORGANIC SOIL with SAND
	COBBLES COBBLES and BOULDERS BOULDERS		

FIELD AND LABORATORY TESTING

- (C) Consolidation (ASTM D 2435)
- (CL) Collapse Potential (ASTM D 5333)
- (CP) Compaction Curve (CTM 216)
- (CR) Corrosivity Testing (CTM 643, CTM 422, CTM 417)
- (CU) Consolidated Undrained Triaxial (ASTM D 4767)
- (DS) Direct Shear (ASTM D 3080)
- (EI) Expansion Index (ASTM D 4829)
- (M) Moisture Content (ASTM D 2216)
- (OC) Organic Content-% (ASTM D 2974)
- (P) Permeability (CTM 220)
- (PA) Particle Size Analysis (ASTM D 422)
- (PI) Plasticity Index (AASHTO T 90) Liquid Limit (AASHTO T 89)
- (PL) Point Load Index (ASTM D 5731)
- (PM) Pressure Meter
- (R) R-Value (CTM 301)
- (SE) Sand Equivalent (CTM 217)
- (SG) Specific Gravity (AASHTO T 100)
- (SL) Shrinkage Limit (ASTM D 427)
- (SW) Swell Potential (ASTM D 4546)
- (UC) Unconfined Compression-Soil (ASTM D 2166) Unconfined Compression-Rock (ASTM D 2938)
- (UU) Unconsolidated Undrained Triaxial (ASTM D 2850)
- (UW) Unit Weight (ASTM D 4767)

APPARENT DENSITY OF COHESIONLESS SOILS

Description	SPT N_{60} (Blows / 12 in.)
Very Loose	0 - 5
Loose	5 - 10
Medium Dense	10 - 30
Dense	30 - 50
Very Dense	Greater than 50

MOISTURE

Description	Criteria
Dry	No discernable moisture
Moist	Moisture present, but no free water
Wet	Visible free water

PERCENT OR PROPORTION OF SOILS

Description	Criteria
Trace	Particles are present but estimated to be less than 5%
Few	5% - 10%
Little	15% - 25%
Some	30% - 45%
Mostly	50% - 100%

PARTICLE SIZE

Description		Size (in.)
Boulder		Greater than 12
Cobble		3 - 12
Gravel	Coarse	3/4 - 3
	Fine	1/5 - 3/4
Sand	Coarse	1/16 - 1/5
	Medium	1/64 - 1/16
	Fine	1/300 - 1/64
Silt and Clay		Less than 1/300

ENGINEERING SERVICES	GEOTECHNICAL SERVICES	STATE OF CALIFORNIA DEPARTMENT OF TRANSPORTATION	DIVISION OF ENGINEERING SERVICES STRUCTURE DESIGN DESIGN BRANCH	BRIDGE NO. 53-1150 POST MILE 23.77	WHITTIER BLVD UC LOG OF TEST BORINGS 3 OF 5
	PREPARED BY: W. Tang 10/10				

GS LOTB SOIL LEGEND

ORIGINAL SCALE IN INCHES FOR REDUCED PLANS 0 1 2 3

CU 07
EA 202101

DISREGARD PRINTS BEARING EARLIER REVISION DATES

REVISION DATES

SHEET 14 OF 16

FILE => 53-1150-z-lotb03.dgn

USERNAME => s124496 DATE PLOTTED => 29-JUN-2011 TIME PLOTTED => 06:49

FED. ROAD DIV. NO.	STATE	PROJ. NO.	FISCAL YEAR	SHEET NO.	TOTAL SHEETS
7	CAL.				

DIST.	COUNTY	ROUTE	SECTION	SHEET NO.	TOTAL SHEETS
VII	LA	~~167~~		64	726

BRIDGE ENGINEER — CIVIL ENGINEER—LICENSE 5985

DATE APPROVED April 27, 1964

BENCH MARK #A-34-53

Set L & T in So. curb Whittier Blvd. 990' E of ℄ Lord Blvd in front of Hot Dog Stand.

ELEV. 91.80

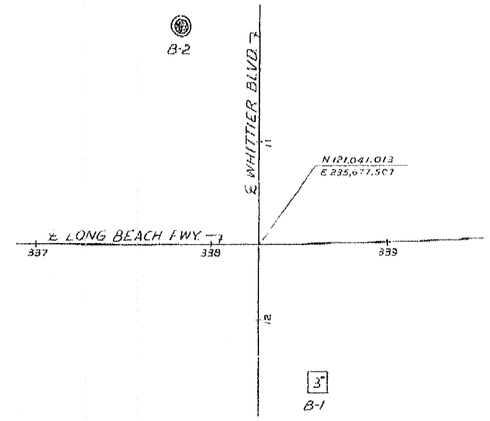

PLAN
Scale: 1" = 40'

TO ACCOMPANY PLANS DATED 6-27-11

DIVISION OF ENGINEERING SERVICES - GEOTECHNICAL SERVICES

As-Built Log of Test Borings sheet is considered an informational document only. As such, the State of California registration seal with signature, license number and registration certificate expiration date confirm that this is a true and accurate copy of the original document. It does not attest to the accuracy or validity of the information contained in the original document. This drawing is available and presented only for the convenience of any bidder, contractor or other interested party.

DIST.	COUNTY	ROUTE	POST MILE-TOTAL PROJECT	Sheet No.	Total Sheets
07	LA	710	17.2/26.4	1460	1507

Joseph S. Pratt — CERTIFIED ENGINEERING GEOLOGIST — DATE 1/7/11

PROFESSIONAL GEOLOGIST — Joseph S. Pratt — No. 2141 — Exp. 5-31-11 — CERTIFIED ENGINEERING GEOLOGIST — STATE OF CALIFORNIA

WHITTIER BLVD UC (WIDEN)

LOG OF TEST BORINGS 4 OF 5

NOTE: A COPY OF THIS LOG OF TEST BORINGS IS AVAILABLE AT OFFICE OF STRUCTURE MAINTENANCE AND INVESTIGATIONS, SACRAMENTO, CALIFORNIA

CU: 07
EA: 202111

BRIDGE No. 53-1150

Sheet 15 of 16

Note: As-Built Vertical Datum
NGVD29 Datum Conversion
NAVD88 = NGVD29 + 1.83'

AS BUILT PLANS
Contract No. 00-133124
Date Completed
Document No. 7000224128

BRIDGE DEPARTMENT

Approximate existing ground line along ℄ Long Beach Fwy.

INFORMATION ON ACTUAL FOUNDATION CONDITIONS ENCOUNTERED IS ON FILE IN BRIDGE GEOLOGY SECTION

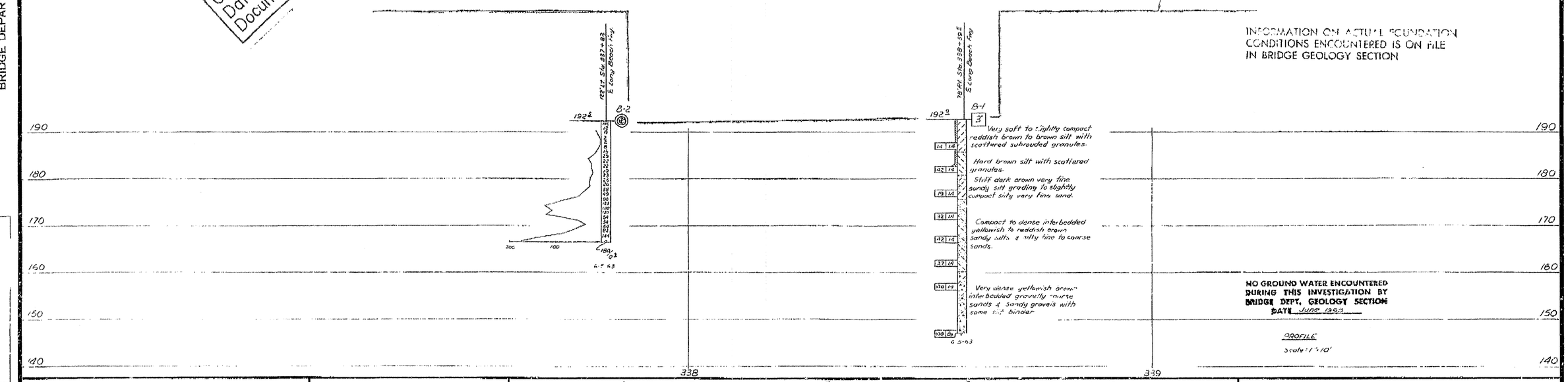

NO GROUND WATER ENCOUNTERED DURING THIS INVESTIGATION BY BRIDGE DEPT. GEOLOGY SECTION
DATE June 1963

PROFILE
Scale: 1" = 10'

CLASSIFICATION OF MATERIAL BASED ON STANDARD GRADE SIZE LIMITS

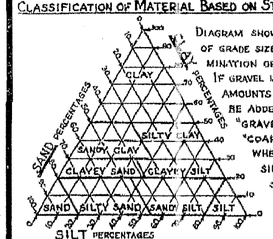

DIAGRAM SHOWING THE BASIS FOR ESTIMATES OF GRADE SIZE DISTRIBUTION USED IN DETERMINATION OF CLASS NAMES.

IF GRAVEL IS PRESENT IN APPRECIABLE AMOUNTS THE TERM "GRAVELLY" MAY BE ADDED TO THE CLASS NAME, VIZ. "GRAVELLY SAND". THE TERMS "COARSE", "MEDIUM" AND "FINE" WHEN USED TO DESCRIBE SAND, SILT AND GRAVEL REFER TO STANDARD GRADE SIZE LIMITS.

LEGEND OF EARTH MATERIALS

- GRAVEL
- SAND
- SILT
- CLAY
- SANDY CLAY OR CLAYEY SAND
- SANDY SILT OR SILTY SAND
- SILTY CLAY OR CLAYEY SILT
- PEAT AND/OR ORGANIC MATTER
- FILL MATERIAL
- IGNEOUS ROCK
- SEDIMENTARY ROCK
- METAMORPHIC ROCK

LEGEND OF BORING OPERATIONS

- PENETROMETER
- 2¼" CONE PENETROMETER
- SAMPLER BORING (DRY)
- ROTARY BORING (WET)
- AUGER BORING (DRY)
- JET BORING
- CORE BORING
- TEST PIT

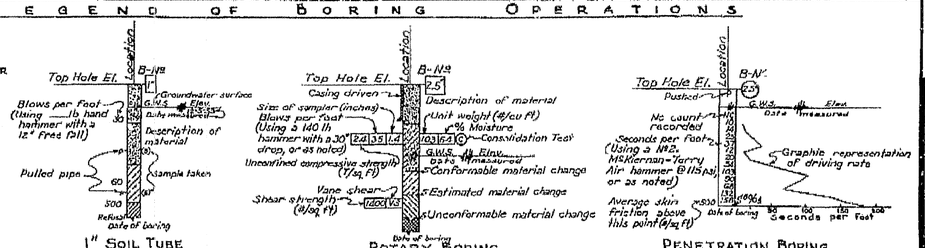

NOTE

Classification of earth material as shown on this sheet is based upon field inspection and is not to be construed to imply mechanical analysis. 7/72

STATE OF CALIFORNIA
DEPARTMENT OF PUBLIC WORKS
DIVISION OF HIGHWAYS

SHEET	OF
8	8

ROUTE ~~167/2~~ SEPARATION (WIDEN)

LOG OF TEST BORINGS

SCALE As Noted	BRIDGE 53-1150	FILE	DRAWING 531150-8

PREL. DRAWING NO. P-

53-1150-z-lotb04.tif

U-0260(5) I-084-1(11)

FED. ROAD DIV. NO	STATE	PROJ. NO.	FISCAL YEAR	SHEET NO.	TOTAL SHEETS
7	CAL.			213	370

DIST.	COUNTY	ROUTE	SECTION	SHEET NO.	TOTAL SHEETS
VII	LA	~~167~~		~~A-8~~	~~52~~

BRIDGE ENGINEER — CIVIL AND STRUCTURAL ENGINEER — LICENSE DATA

DATE APPROVED December 23, 1958

TO ACCOMPANY PLANS DATED 6-27-11

DIVISION OF ENGINEERING SERVICES - GEOTECHNICAL SERVICES

As-Built Log of Test Borings sheet is considered an informational document only. As such, the State of California registration seal with signature, license number and registration certificate expiration date confirm that this is a true and accurate copy of the original document. It does not attest to the accuracy or validity of the information contained in the original document. This drawing is available and presented only for the convenience of any bidder, contractor or other interested party.

DIST.	COUNTY	ROUTE	POST MILE-TOTAL PROJECT	Sheet No.	Total Sheets
07	LA	710	17.2/26.4	1461	1507

Joseph S. Pratt 1/7/11
CERTIFIED ENGINEERING GEOLOGIST DATE

PROFESSIONAL GEOLOGIST — Joseph S. Pratt — No. 2141 — Exp. 5-31-11 — CERTIFIED ENGINEERING GEOLOGIST — STATE OF CALIFORNIA

WHITTIER BLVD UC (WIDEN)

LOG OF TEST BORINGS 5 OF 5

NOTE: A COPY OF THIS LOG OF TEST BORINGS IS AVAILABLE AT OFFICE OF STRUCTURE MAINTENANCE AND INVESTIGATIONS, SACRAMENTO, CALIFORNIA

CU: 07
EA: 202111

BRIDGE No. 53-1150

Sheet 16 of 16

Note: As-Built Vertical Datum
NGVD29 Datum Conversion
NAVD88 = NGVD29 + 1.83'

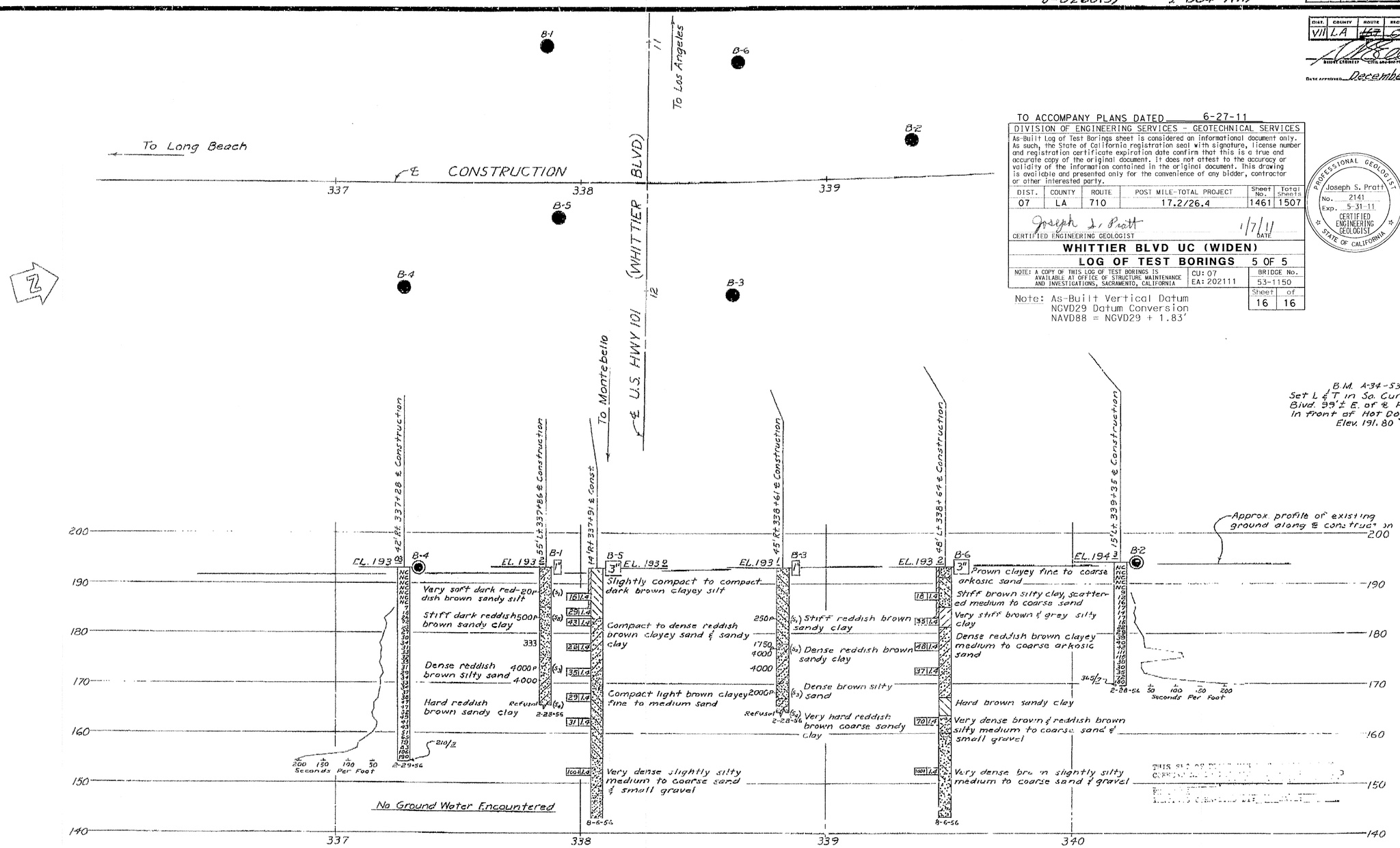

BRIDGE DEPARTMENT

DRAWN
CHECKED

Approval Recommended by

Approved

CLASSIFICATION OF MATERIAL BASED ON STANDARD GRADE SIZE LIMITS

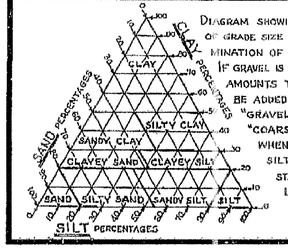

DIAGRAM SHOWING THE BASIS FOR ESTIMATES OF GRADE SIZE DISTRIBUTION USED IN DETERMINATION OF CLASS NAMES.

IF GRAVEL IS PRESENT IN APPRECIABLE AMOUNTS THE TERM "GRAVELLY" MAY BE ADDED TO THE CLASS NAME, VIZ. "GRAVELLY SAND." THE TERMS "COARSE", "MEDIUM" AND "FINE" WHEN USED TO DESCRIBE SAND, SILT AND GRAVEL REFER TO STANDARD GRADE SIZE LIMITS.

LEGEND OF EARTH MATERIALS

- GRAVEL
- SAND
- SILT
- CLAY
- SANDY CLAY OR CLAYEY SAND
- SANDY SILT OR SILTY SAND
- SILTY CLAY OR CLAYEY SILT
- PEAT AND/OR ORGANIC MATTER
- FILL MATERIAL
- IGNEOUS ROCK
- SEDIMENTARY ROCK
- METAMORPHIC ROCK

LEGEND OF BORING OPERATIONS

- PLAN OF ANY BORING
- PENETROMETER
- 2¼" CONE PENETROMETER
- SAMPLER BORING (DRY)
- ROTARY BORING (WET)
- AUGER BORING (DRY)
- JET BORING
- CORE BORING
- TEST PIT

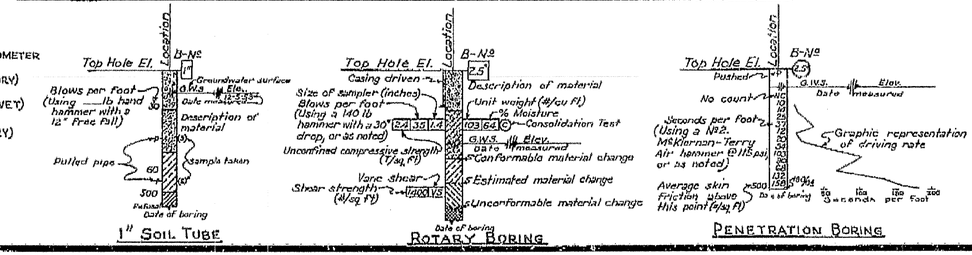

NOTES

The contractor's attention is directed to Section 2, Article (c) of the Standard Specifications and to the Special Provisions accompanying this set of plans.

Classification of earth material as shown on this sheet is based upon field inspection and is not to be construed to imply mechanical analysis.

STATE OF CALIFORNIA
DEPARTMENT OF PUBLIC WORKS
DIVISION OF HIGHWAYS

ROUTE ~~167/2~~ SEPARATION

LOG OF TEST BORINGS

SCALE Horiz. 1"=20' Vert. 1"=10' | BRIDGE 53-1150 | FILE | DRAWING C-4043-8

PREL. DRAWING NO. P-4043 61

53-1150-z-lotb05.tif

DIST	COUNTY	ROUTE	POST MILES TOTAL PROJECT	SHEET No.	TOTAL SHEETS
07	LA	710	17.2/26.4	1462	1507

REGISTERED CIVIL ENGINEER — DATE 03/01/11

6-27-11
PLANS APPROVAL DATE

REGISTERED PROFESSIONAL ENGINEER — CHUNG-YUAN WEN — No. C 50690 — Exp. 09/30/11 — CIVIL — STATE OF CALIFORNIA

The State of California or its officers or agents shall not be responsible for the accuracy or completeness of electronic copies of this plan sheet.

CONSTRUCTION SEQUENCE

1. Construct Abutment footings and stems.
2. Erect PC/PS U-Girder on abutment seats.
3. Place deck concrete.
4. Complete construction of Abutments and Retaining walls.
5. Construct Barriers.
6. Construct Approach slabs and the remaining work.

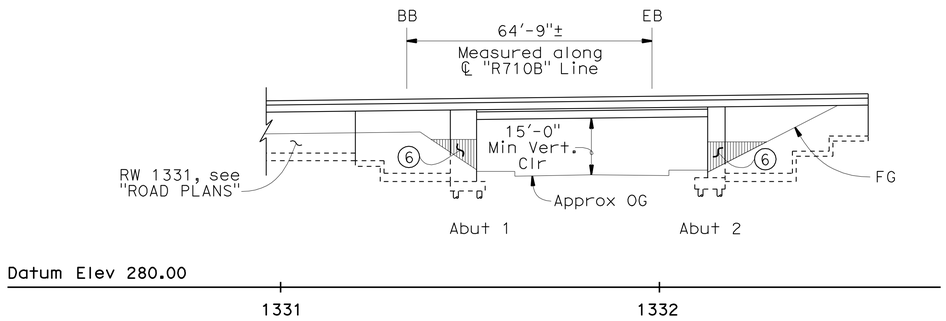

ELEVATION

1" = 20'

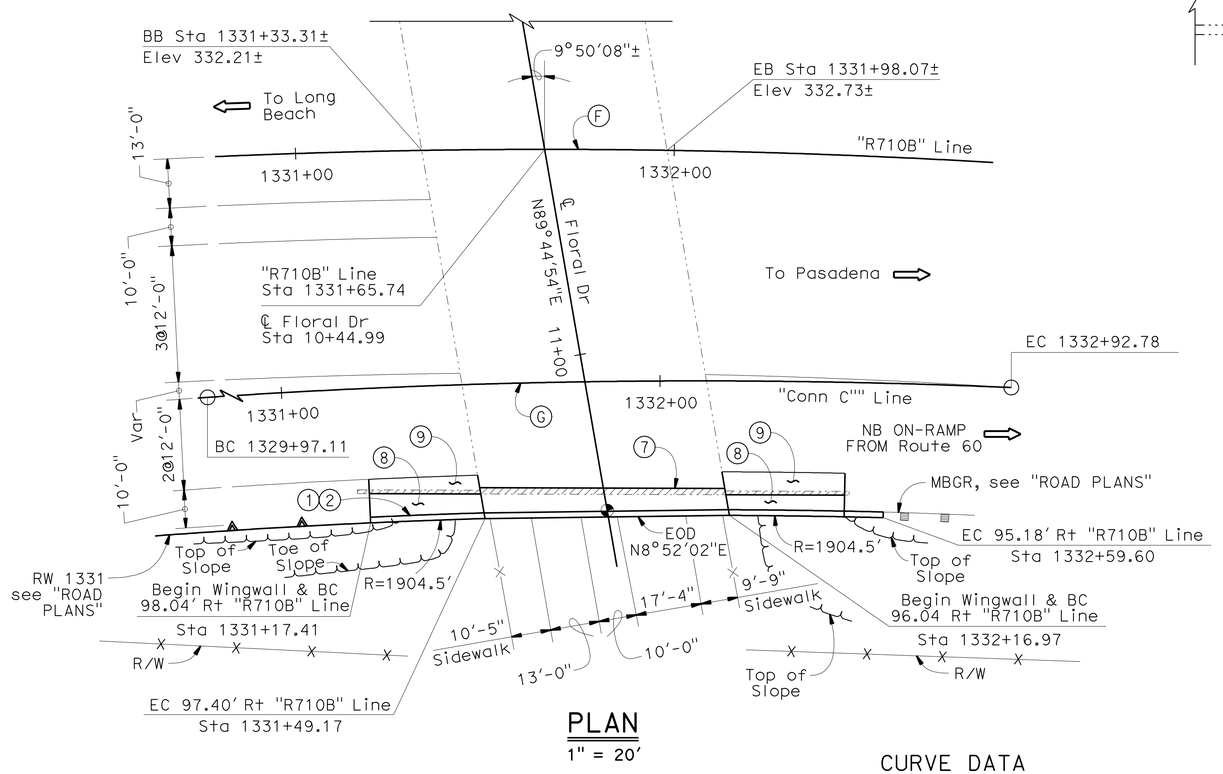

PLAN

1" = 20'

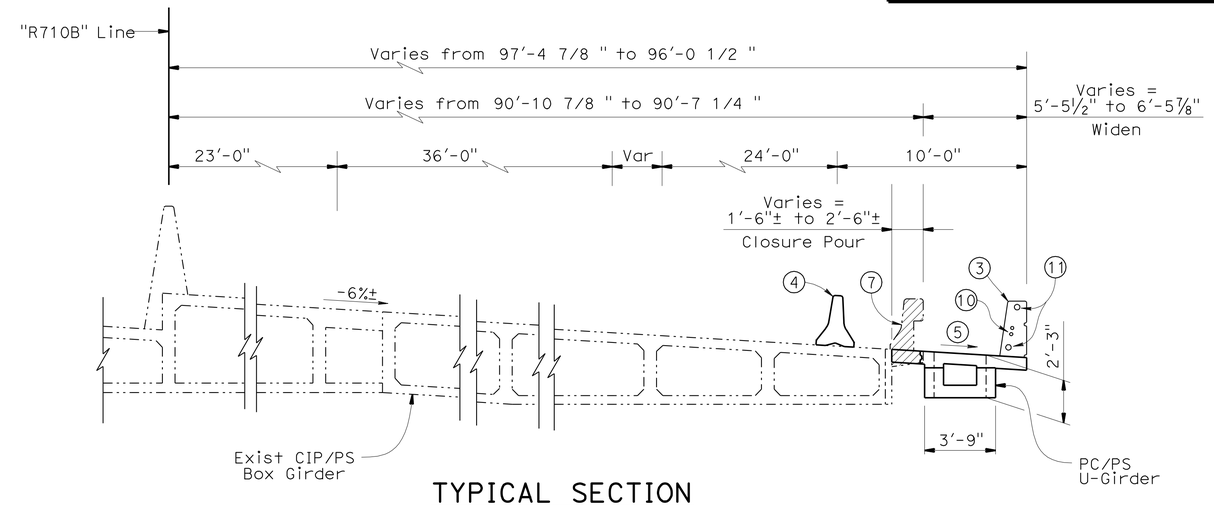

TYPICAL SECTION

¼" = 1'-0"

LEGEND:

1. Paint "BR NO. 53-1155" & year constructed
2. Paint "FLORAL DR. UC"
3. Concrete Barrier Type 736 (Mod) with Fractured Rib Texture, see "BARRIER DETAILS" sheet
4. Temporary Railing Type K, see "ROAD PLANS"
5. Match existing profile and cross slope existing
6. Class 2 Surface Finish (Gun finish) to match
7. Remove existing Concrete Barrier Type 25 and overhang
8. Structure Approach Type N(30S)
9. Structure Approach Type R(30D)
10. 2 - 2"ø Electric Conduits, see "ROAD PLANS"
11. 2 - 3 1/2 "ø Communication Conduits, see "ROAD PLANS"

Denotes traffic direction
Point of minimum vertical clearance
Bridge Removal (Portion)
Indicates New Structure
Indicates Existing Structure

QUANTITIES

BRIDGE REMOVAL (PORTION), LOCATION G	LUMP	SUM
STRUCTURE EXCAVATION (BRIDGE)	120	CY
STRUCTURE EXCAVATION (TYPE Z-2) (AERIALLY DEPOSITED LEAD)	56	CY
STRUCTURE BACKFILL (BRIDGE)	160	CY
LEAN CONCRETE BACKFILL	36	CY
AGGREGATE BASE (APPROACH SLAB)	1	CY
16" CAST-IN-DRILLED-HOLE CONCRETE PILING	350	LF
STRUCTURAL CONCRETE, BRIDGE FOOTING	50	CY
STRUCTURAL CONCRETE, BRIDGE	83	CY
STRUCTURAL CONCRETE, APPROACH SLAB (TYPE N)	14	CY
STRUCTURAL CONCRETE, APPROACH SLAB (TYPE R)	10	CY
PAVING NOTCH EXTENSION	6	CF
DRILL AND BOND DOWEL	210	LF
FURNISH PRECAST PRESTRESSED CONCRETE U-GIRDER (60'-70')	1	EA
ERECT PRECAST PRESTRESSED CONCRETE U-GIRDER	1	EA
REFINISH BRIDGE DECK	49	SQFT
JOINT SEAL (MR 1/2")	21	LF
BAR REINFORCING STEEL (BRIDGE)	20,860	LB
CONCRETE BARRIER (TYPE 736 MODIFIED)	135	LF

CURVE DATA

No.	R	Δ	T	L
F	1999.999	36°2'16"	650.571	1257.960
G	1940.000	8°43'56"	148.122	295.669

NOTE:
THE CONTRACTOR SHALL VERIFY ALL CONTROLLING FIELD DIMENSIONS BEFORE ORDERING OR FABRICATING ANY MATERIAL.

CHUNG-YUAN WEN
DESIGN ENGINEER

	BY	CHECKED
DESIGN	S. Yeh	C. Duan
DETAILS	P. Perez	C Wen / C. Duan
QUANTITIES	S. Yeh	L. Sanchez-Manzo

LOAD & RESISTANCE FACTOR DESIGN — LIVE LOADING: HL93 W/"LOW-BOY"; PERMIT DESIGN VEHICLE

	BY	CHECKED
LAYOUT	P. Perez	S. Yeh
SPECIFICATIONS	K. Ellingson	PLANS AND SPECS COMPARED K. Ellingson

ORIGINAL SCALE IN INCHES FOR REDUCED PLANS 0 1 2 3

STATE OF CALIFORNIA
DEPARTMENT OF TRANSPORTATION

DIVISION OF ENGINEERING SERVICES
STRUCTURE DESIGN
DESIGN BRANCH 21

BRIDGE NO. 53-1155R
POST MILE 25.21

FLORAL DRIVE UC (WIDEN)
GENERAL PLAN

UNIT: 3623
PROJECT NUMBER & PHASE: 0700020869 & 1 CONTRACT NO.: 202111

DISREGARD PRINTS BEARING EARLIER REVISION DATES — REVISION DATES 08-13-10 10-01-10 11-24-10 03/01/11

SHEET 1 OF 20

USERNAME => s6124496 DATE PLOTTED => 29-JUN-2011 TIME PLOTTED => 06:49

FILE => 53-1155-a-gp01.dgn

DIST	COUNTY	ROUTE	POST MILES TOTAL PROJECT	SHEET No.	TOTAL SHEETS
07	LA	710	17.2/26.4	1463	1507

REGISTERED CIVIL ENGINEER 03/01/11 DATE

6-27-11
PLANS APPROVAL DATE

REGISTERED PROFESSIONAL ENGINEER CHUNG-YUAN WEN No. C 50690 Exp. 09/30/11 CIVIL STATE OF CALIFORNIA

The State of California or its officers or agents shall not be responsible for the accuracy or completeness of electronic copies of this plan sheet.

GENERAL NOTES
LOAD AND RESISTANCE FACTOR DESIGN

DESIGN: AASHTO LRFD Bridge Design Specifications, 4th Edition and the Caltrans Amendments, preface dated 2008; except that earth retaining systems, Bridge Barrier and Structure approach slabsare designed using Bridge Design Specifications ('96 AASHTO w/ Revisions by Caltrans).

SEISMIC DESIGN: Caltrans Seismic Design Criteria (SDC) Version 1.5

LIVE LOADING: HL93 and permit design load.

SEISMIC LOADING: SDC Modified ARS Curve
Soil Type D, Magnitude 7.0 ± 0.25
Peak Ground Acceleration = 0.58g

REINFORCED CONCRETE: ASTM A706

f'_y = 60 ksi

f'_c = 3.6 ksi (except as shown on concrete Strength and Type Limits Diagram).

PRESTRESSED CONCRETE: See "Prestressing Notes" on "GIRDER DETAILS" sheet.

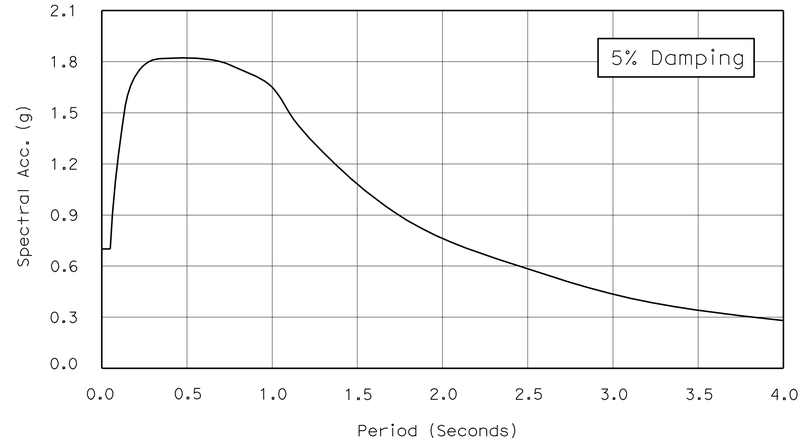

ARS CURVE
No Scale

INDEX TO PLANS

Sheet No.	Title
1.	GENERAL PLAN
2.	INDEX TO PLANS
3.	FOUNDATION PLAN
4.	ABUTMENT 1 LAYOUT
5.	ABUTMENT 2 LAYOUT
6.	ABUTMENT DETAILS NO. 1
7.	ABUTMENT DETAILS NO. 2
8.	ABUTMENT DETAILS NO. 3
9.	TYPICAL SECTION
10.	GIRDER LAYOUT
11.	GIRDER DETAILS
12.	STRUCTURE APPROACH SLAB TYPE N(30S)
13.	STRUCTURE APPROACH SLAB TYPE R(30D)
14.	STRUCTURE APPROACH DRAINAGE DETAILS
15.	CONCRETE BARRIER TYPE 736 (MOD)
16.	LOG OF TEST BORINGS 1 OF 5
17.	LOG OF TEST BORINGS 2 OF 5
18.	LOG OF TEST BORINGS 3 OF 5
19.	LOG OF TEST BORINGS 4 OF 5
20.	LOG OF TEST BORINGS 5 OF 5

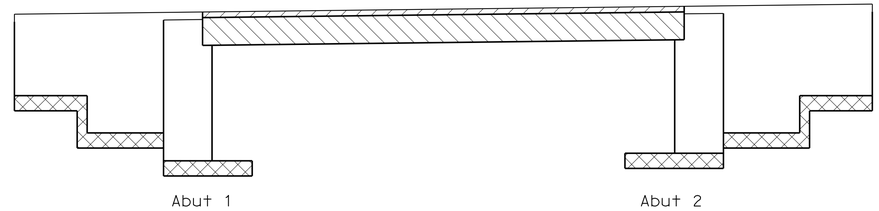

PILE DATA TABLE

Location	Pile Type	Design Loading (kips	Nominal Resistance (kips)		Cut-Off Elevation (ft)	Design Tip Elevation (ft)	Specified Tip Elevation (ft)
			Compression	Tension			
Abut 1	16" CIDH	140	230	N/A	305.14	259.0 [1] 289.0 [2] 284.0 [3]	259
Abut 2	16" CIDH	90	176	N/A	306.14	265.0 [1] 290.0 [2] 285.0 [3]	265

NOTE:

Design tip elevations are controlled by the following:

(1) Nominal Resistance in Compression

(2) Nominal lateral Resistance - Fixed Head Condition (0.25 lateral deflection at top of pile)

(3) Nominal Lateral Resistance - Free Head Condition (0.25 lateral deflection at top of pile)

CONCRETE STRENGTH AND TYPE LIMITS
No Scale

- Structural Concrete, Bridge (4,000 psi at 28 days)
- Structural Concrete, Bridge (5,000 psi at 28 days)
- Structural Concrete, Bridge footing
- PC/PS U-Beam Girder, See "Girder Detail Sheet"

STANDARD PLANS DATED MAY 2006

	A10A	ACRONYMS AND ABBREVIATIONS
	A10B	ACRONYMS AND ABBREVIATIONS
	A10C	SYMBOLS
	A10D	SYMBOLS
	A62B	LIMITS OF PAYMENT FOR EXCAVATION AND BACKFILL BRIDGE SURCHARGE AND WALL
	A62C	LIMITS OF PAYMENT FOR EXCAVATION AND BACKFILL BRIDGE
	B0-3	BRIDGE DETAILS
	B0-5	BRIDGE DETAILS
	B0-13	BRIDGE DETAILS
	B2-3	16" & 24" CIDH PILE
	B3-1	RETAINING WALL TYPE 1 H = 4' THROUGH 30'
	B3-8	REATAINING WALL DETAILS NO. 1
RSP	B6-21	JOINT SEAL (MAX MOVEMENT RATING = 2")
	B11-56	CONCRETE BARRIER TYPE 736
	B14-3	COMMUNICATION AND SPRINKLER CONTROL CONDUITS (CONDUIT LESS THAN 4")
	D99B	EDGE DRAIN OUTLETS AND VENT DETAILS
RSP	P10	CONCRETE PAVEMENT - DOWEL BAR DETAILS
	T3	TEMPORARY RAILING (TYPE K)

STANDARD PLAN SHEET NO.

DETAIL NO.

NOTE:
THE CONTRACTOR SHALL VERIFY ALL CONTROLLING FIELD DIMENSIONS BEFORE ORDERING OR FABRICATING ANY MATERIAL.

	BY	CHECKED
DESIGN	S. Yeh	C. Duan
DETAILS	T. Cotton/P. Perez	C. Wen
QUANTITIES	S. Yeh	L. Sanchez-Manzo

STATE OF CALIFORNIA
DEPARTMENT OF TRANSPORTATION

DIVISION OF ENGINEERING SERVICES
STRUCTURE DESIGN
DESIGN BRANCH 21

BRIDGE NO. 53-1155R
POST MILE 25.21

FLORAL DRIVE UC (WIDEN)
INDEX TO PLANS

STRUCTURES DESIGN DETAIL SHEET (ENGLISH) (REV. 09-01-10)

ORIGINAL SCALE IN INCHES FOR REDUCED PLANS 0 1 2 3

UNIT: 3623
PROJECT NUMBER & PHASE: 0700020869 & 1 CONTRACT NO.: 202111

DISREGARD PRINTS BEARING EARLIER REVISION DATES

REVISION DATES: 08-13-10 10-01-10 11-24-10 03/01/11

SHEET 2 OF 20

FILE => 53-1155-a-ltpln.dgn

USERNAME => s124496 DATE PLOTTED => 29-JUN-2011 TIME PLOTTED => 06:49

DIST	COUNTY	ROUTE	POST MILES TOTAL PROJECT	SHEET No.	TOTAL SHEETS
07	LA	710	17.2/26.4	1464	1507

REGISTERED CIVIL ENGINEER — DATE 03/01/11

6-27-11
PLANS APPROVAL DATE

REGISTERED PROFESSIONAL ENGINEER — CHUNG-YUAN WEN — No. C 50690 — Exp. 09/30/11 — CIVIL — STATE OF CALIFORNIA

The State of California or its officers or agents shall not be responsible for the accuracy or completeness of electronic copies of this plan sheet.

① Sta 9+80.56, "FLRLGEO1" LINE, ℄ FLORAL DR =
Sta 1331+50.80, "S710R60" LINE, SB OFF-RAMP
② Sta 10+44.99, "FLRLGEO1" LINE, ℄ FLORAL DR =
Sta 1331+65.74, "STCCH5" LINE, "R710B" Line
③ Sta 11+07.28, "FLRLGEO1" LINE, ℄ FLORAL DR =
Sta 1331+80.19, "CONN C"" LINE, NB ON-RAMP

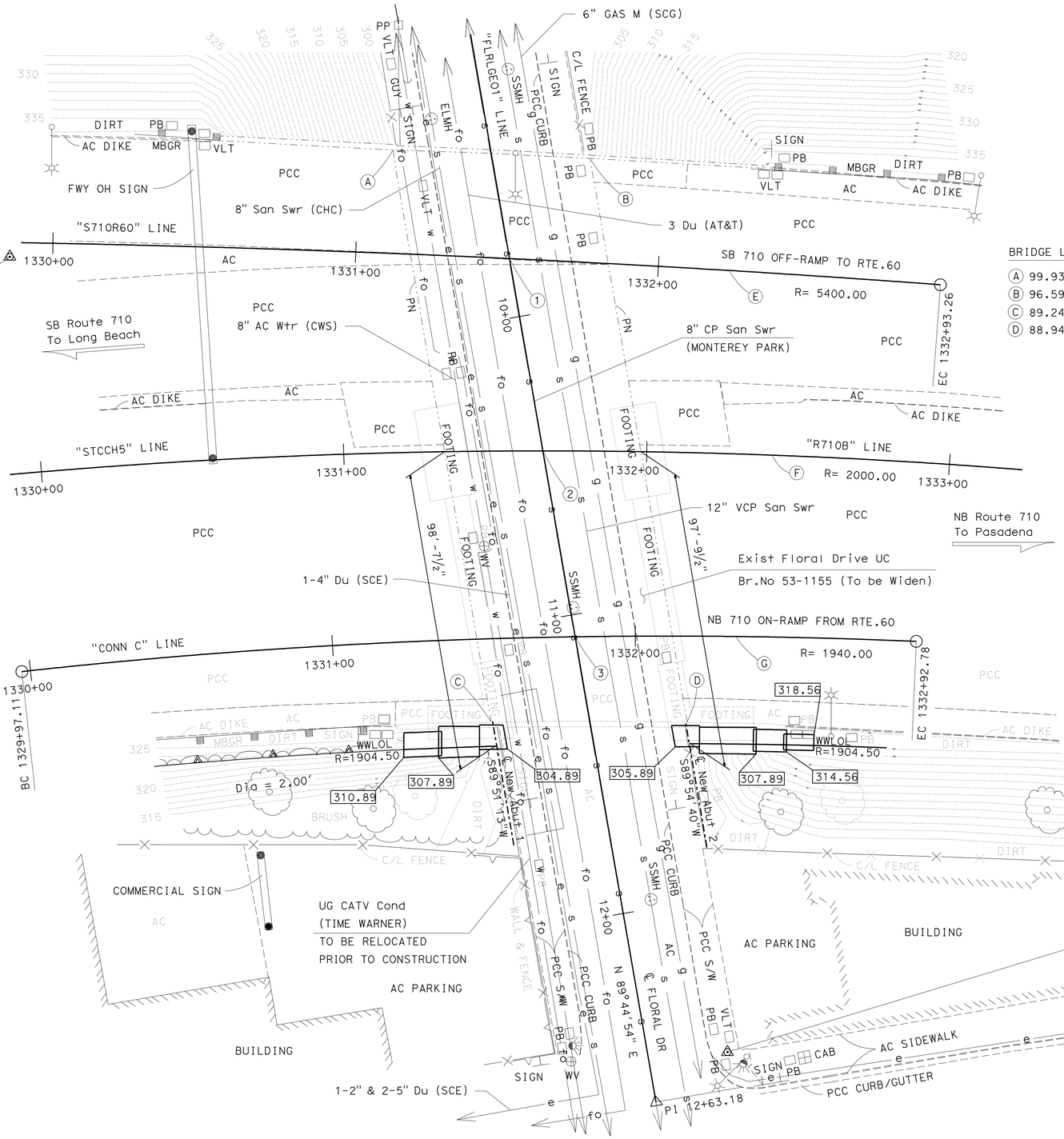

BRIDGE LOCATION (Exist Br.No 53-1155)

Ⓐ 99.93 Ft Lt "STCCH5" Line, "R710B" Line Sta 1331+18.69, Elev= 337.00±
Ⓑ 96.59 Ft Lt "STCCH5" Line, "R710B" Line Sta 1331+80.59, Elev= 337.10±
Ⓒ 89.24 Ft Rt "STCCH5" Line, "R710B" Line Sta 1331+47.78, Elev= 327.17±
Ⓓ 88.94 Ft Rt "STCCH5" Line, "R710B" Line Sta 1332+15.51, Elev= 327.89±

CURVE DATA				
No.	R	Δ	T	L
Ⓔ	5400.00	08°53'18"	419.69	837.70
Ⓕ	2000.00	36°02'16"	650.57	1257.96
Ⓖ	1940.00	08°43'56"	148.12	295.67

SURVEY CONTROL

PRHV-5002

FND PK On SB 710 SHDR
71.60 Ft Lt "R710B" Line
Sta 1329+95.69
N 1 838 348.17
E 6 510 074.30
Elev= 333.16

PRHV-7806

FND Fd L&T NW Corner Floral-Ford, 8' NE/ECR
197.45 Ft Rt "R710B" Line
Sta 1332+33.27
N 1 838 537.92
E 6 510 372.65
Elev= 314.85

NOTES:

UNDERGROUND UTILITIES AS SHOWN ARE APPROXIMATE

▭ DENOTES BOTTOM FOOTING ELEVATION

PRELIMINARY INVESTIGATION SECTION

SCALE	VERT.DATUM NAVD88	PHOTOGRAMMETRY AS OF: X			
1"=20'	HORZ.DATUM NAD83 (92)	SURVEYED	BY DISTRICT 07	CHECKED	BY T.PHUNG 08/2009
ALIGNMENT TIES	DIST.TRAVERSE SHEETS	DRAFTED	BY V.PHAM 08/2009	CHECKED	BY S.ALIVIO 08/2009

DESIGN	BY S. Yeh	CHECKED C. Duan	
DETAILS	BY P. Perez	CHECKED C. Wen / C. Duan	
QUANTITIES	BY S. Yeh	CHECKED L. Sanchez-Manzo	

STATE OF CALIFORNIA
DEPARTMENT OF TRANSPORTATION

DIVISION OF ENGINEERING SERVICES
STRUCTURE DESIGN
DESIGN BRANCH 21

BRIDGE NO. 53-1155
POST MILE 25.21

FLORAL DRIVE UC (WIDEN)
FOUNDATION PLAN

STRUCTURES FOUNDATION PLAN SHEET (ENGLISH) (REV. 09-01-10)

ORIGINAL SCALE IN INCHES FOR REDUCED PLANS 0 1 2 3

UNIT: 3623
PROJECT NUMBER & PHASE: 0700020869 & 1 CONTRACT NO.: 202111

DISREGARD PRINTS BEARING EARLIER REVISION DATES → REVISION DATES 11/28/09 10/01/10 11/24/10 03/01/11

SHEET 3 OF 20

FILE => 53-1155-e-fdpl.dgn

DIST	COUNTY	ROUTE	POST MILES TOTAL PROJECT	SHEET No.	TOTAL SHEETS
07	LA	710	17.2/26.4	1465	1507

REGISTERED CIVIL ENGINEER — 03/01/11 DATE

6-27-11
PLANS APPROVAL DATE

REGISTERED PROFESSIONAL ENGINEER — CHUNG-YUAN WEN — No. C 50690 — Exp. 09/30/11 — CIVIL — STATE OF CALIFORNIA

The State of California or its officers or agents shall not be responsible for the accuracy or completeness of electronic copies of this plan sheet.

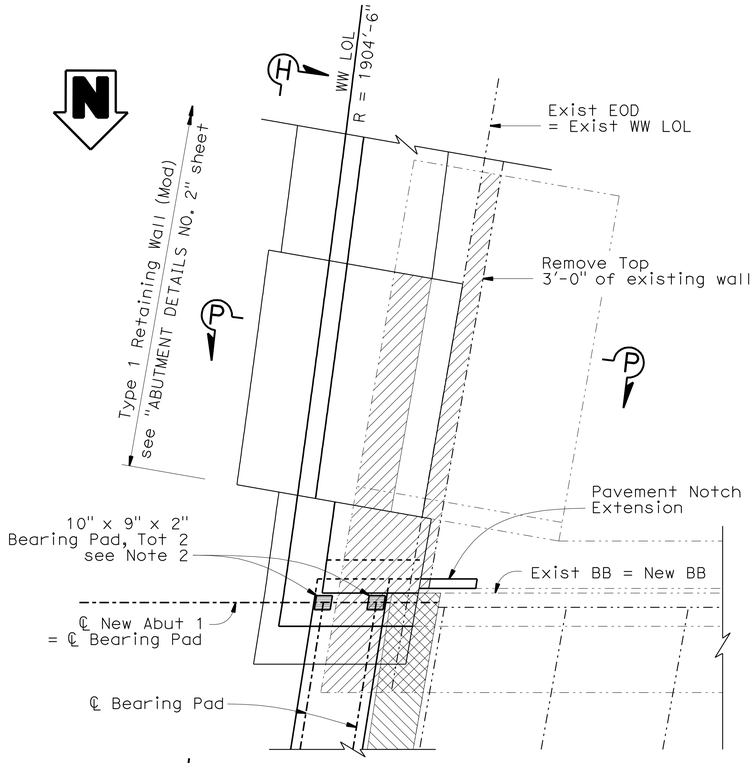

ABUTMENT 1 PLAN

1/4" = 1'-0"

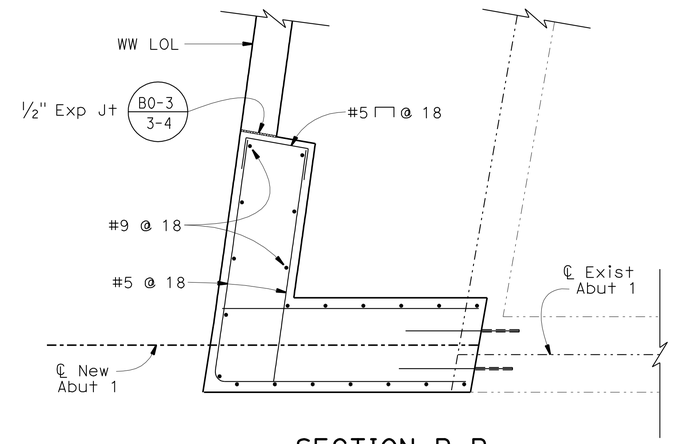

SECTION R-R

1/2" = 1'-0"

Note: For details not shown, see Typical Section on "ABUTMENT DETAILS NO. 1" sheet.

NOTES:

1. For location of Section H-H, Section P-P, and Section Q-Q see "ABUTMENT DETAILS NO. 2" sheet.
2. See "BEARING PAD DETAIL" on "ABUTMENT DETAILS NO. 1" sheet.

LEGEND:

- Indicates Bridge Removal (Portion)
- Indicates closure pour
- Indicates New Structure
- Indicates Existing Structure

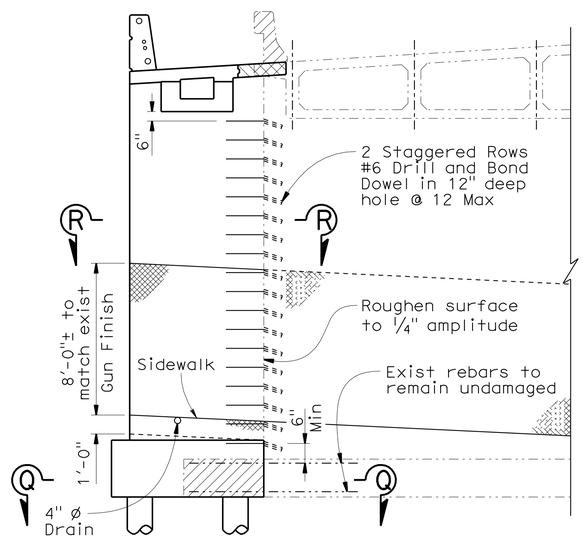

ABUTMENT 1 ELEVATION

1/4" = 1'-0"

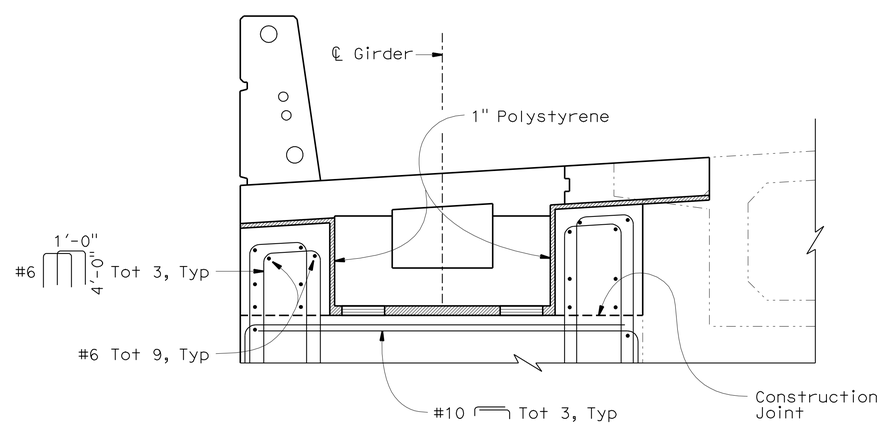

ABUTMENT 1 SHEAR KEY

3/4" = 1'-0"

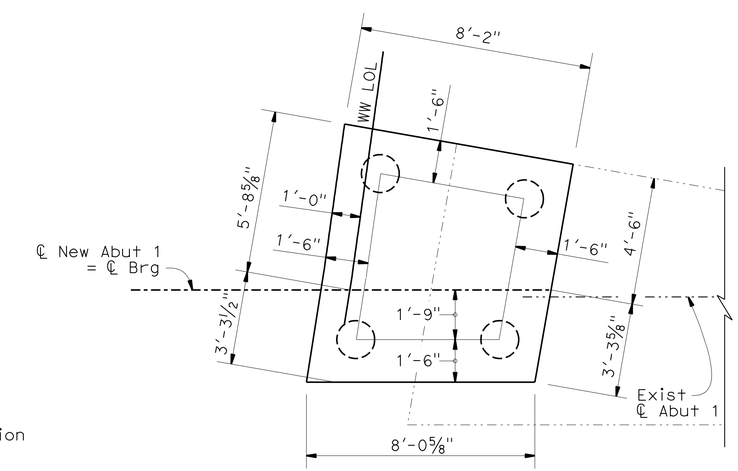

ABUTMENT 1 FOOTING & PILE LAYOUT

3/8" = 1'-0"

NOTE:
THE CONTRACTOR SHALL VERIFY ALL CONTROLLING FIELD DIMENSIONS BEFORE ORDERING OR FABRICATING ANY MATERIAL.

	BY	CHECKED
DESIGN	S. Yeh	C. Duan
DETAILS	P. Perez/S. Jiang	C. Wen
QUANTITIES	S. Yeh	L. Sanchez-Manzo

STATE OF CALIFORNIA
DEPARTMENT OF TRANSPORTATION

DIVISION OF ENGINEERING SERVICES
STRUCTURE DESIGN
DESIGN BRANCH 21

BRIDGE NO. 53-1155R
POST MILE 25.21

FLORAL DRIVE UC (WIDEN)

ABUTMENT 1 LAYOUT

STRUCTURES DESIGN DETAIL SHEET (ENGLISH) (REV. 09-01-10)

ORIGINAL SCALE IN INCHES FOR REDUCED PLANS 0 1 2 3

UNIT: 3623
PROJECT NUMBER & PHASE: 0700020869 & 1 CONTRACT NO.: 202111

DISREGARD PRINTS BEARING EARLIER REVISION DATES — REVISION DATES 08-13-10 10-01-10 11-24-10 03/01/11

SHEET 4 OF 20

FILE => 53-1155-f-a01_lo.dgn

USERNAME => s124496 DATE PLOTTED => 29-JUN-2011 TIME PLOTTED => 06:49

DIST	COUNTY	ROUTE	POST MILES TOTAL PROJECT	SHEET No.	TOTAL SHEETS
07	LA	710	17.2/26.4	1466	1507

REGISTERED CIVIL ENGINEER — DATE 03/01/11

6-27-11
PLANS APPROVAL DATE

REGISTERED PROFESSIONAL ENGINEER — CHUNG-YUAN WEN — No. C 50690 — Exp. 09/30/11 — CIVIL — STATE OF CALIFORNIA

The State of California or its officers or agents shall not be responsible for the accuracy or completeness of electronic copies of this plan sheet.

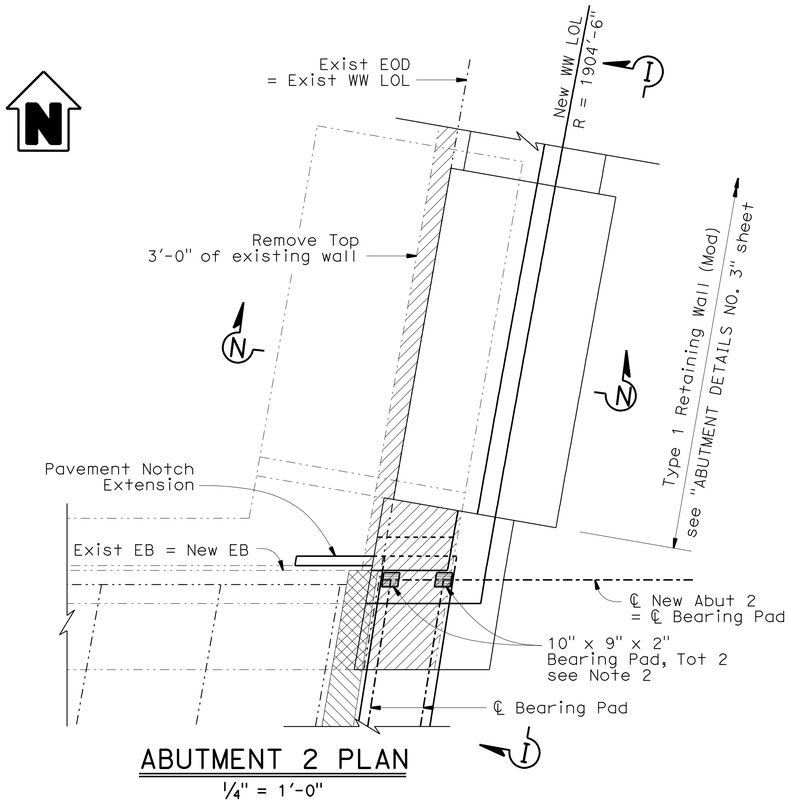

ABUTMENT 2 PLAN

1/4" = 1'-0"

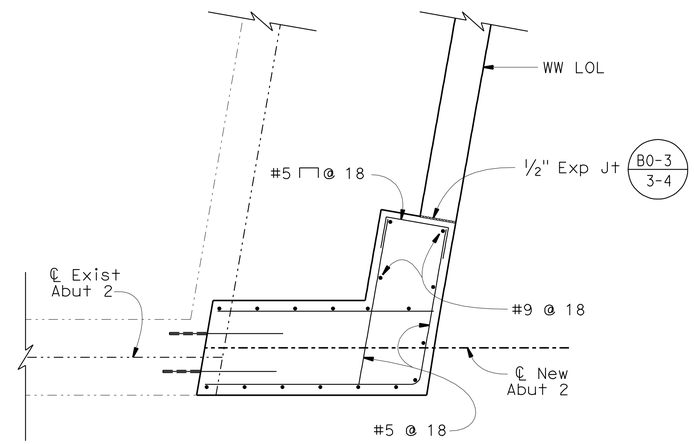

SECTION S-S

1/2" = 1'-0"

Note: For details not shown, see Typical Section on "ABUTMENT DETAILS NO. 1" sheet.

NOTES:

1. For location of Section I-I, Section M-M, and Section N-N, see "ABUTMENT DETAILS NO. 3" sheet.
2. See "BEARING PAD DETAIL" on "ABUTMENT DETAILS NO. 1" sheet.

LEGEND:

- Indicates Bridge Removal (Portion)
- Indicates closure pour
- Indicates New Structure
- Indicates Existing Structure

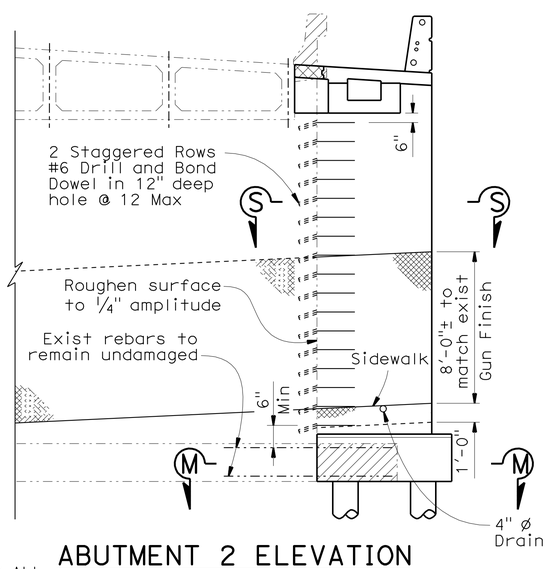

ABUTMENT 2 ELEVATION

1/4" = 1'-0"

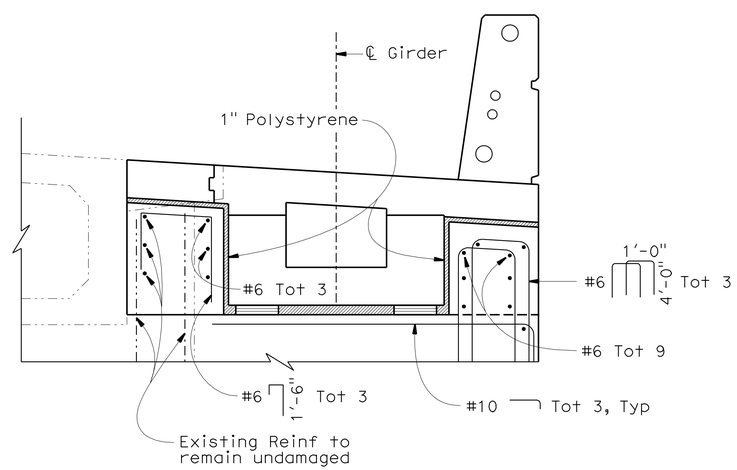

ABUTMENT 2 SHEAR KEY

3/4" = 1'-0"

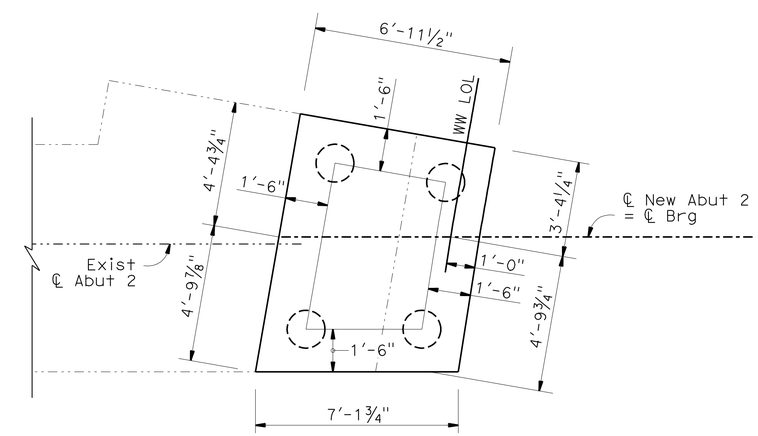

ABUTMENT 2 FOOTING & PILE LAYOUT

3/8" = 1'-0"

NOTE:
THE CONTRACTOR SHALL VERIFY ALL CONTROLLING FIELD DIMENSIONS BEFORE ORDERING OR FABRICATING ANY MATERIAL.

	BY	CHECKED
DESIGN	S. Yeh	C. Duan
DETAILS	P. Perez/S. Jiang	C. Wen
QUANTITIES	S. Yeh	L. Sanchez-Manzo

STATE OF CALIFORNIA
DEPARTMENT OF TRANSPORTATION

DIVISION OF ENGINEERING SERVICES
STRUCTURE DESIGN
DESIGN BRANCH 21

BRIDGE NO. 53-1155R
POST MILE 25.21

FLORAL DRIVE UC (WIDEN)
ABUTMENT 2 LAYOUT

STRUCTURES DESIGN DETAIL SHEET (ENGLISH) (REV. 09-01-10)

ORIGINAL SCALE IN INCHES FOR REDUCED PLANS 0 1 2 3

UNIT: 3623
PROJECT NUMBER & PHASE: 0700020869 & 1 CONTRACT NO.: 202111

DISREGARD PRINTS BEARING EARLIER REVISION DATES

REVISION DATES: 08-13-10 10-01-10 11-24-10 03/01/11

SHEET 5 OF 20

FILE => 53-1155-f-a02_lo.dgn

USERNAME => s124496 DATE PLOTTED => 29-JUN-2011 TIME PLOTTED => 06:49

DIST	COUNTY	ROUTE	POST MILES TOTAL PROJECT	SHEET No.	TOTAL SHEETS
07	LA	710	17.2/26.4	1467	1507

REGISTERED CIVIL ENGINEER — DATE 03/01/11

6-27-11
PLANS APPROVAL DATE

REGISTERED PROFESSIONAL ENGINEER — CHUNG-YUAN WEN — No. C 50690 — Exp. 09/30/11 — CIVIL — STATE OF CALIFORNIA

The State of California or its officers or agents shall not be responsible for the accuracy or completeness of electronic copies of this plan sheet.

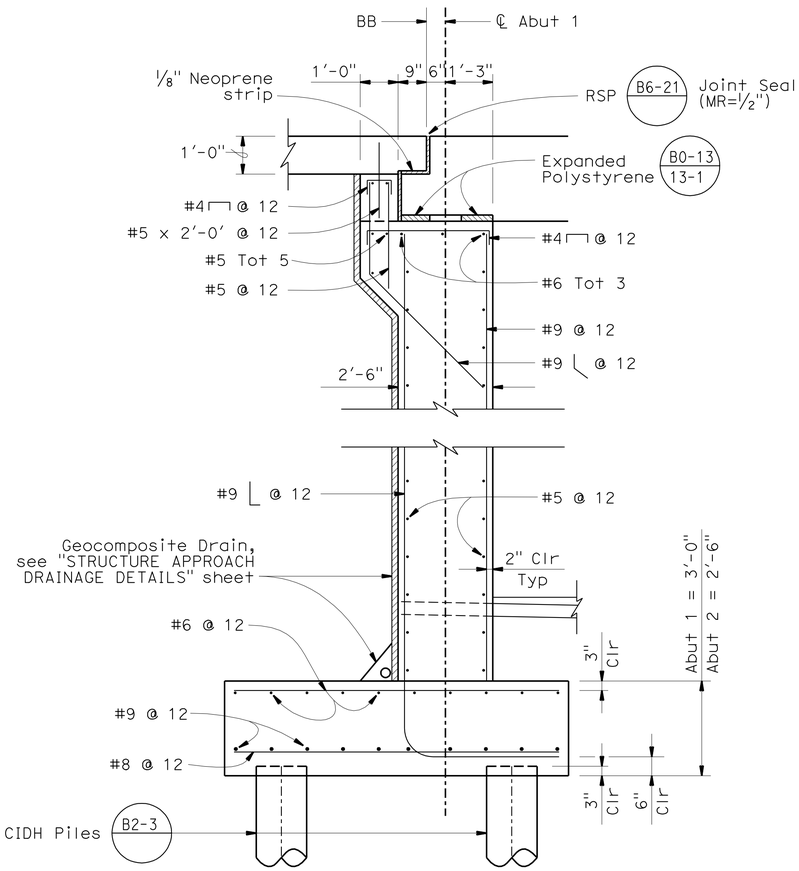

TYPICAL SECTION

1/2" = 1'-0"

Note: Abutment 1 shown, Abutment 2 similar

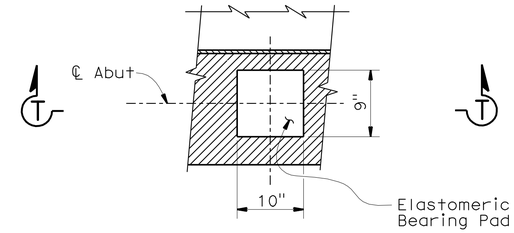

PLAN

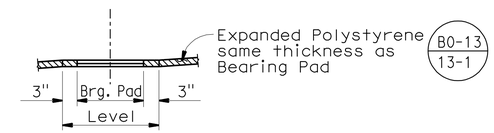

SECTION T-T
BEARING PAD DETAIL

No Scale

Details typical at all bearing pads

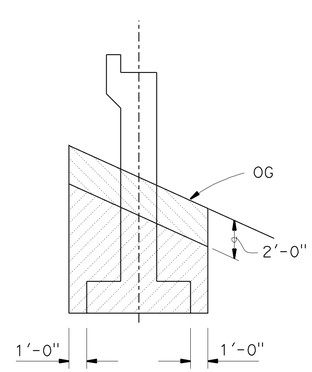

EXCAVATION

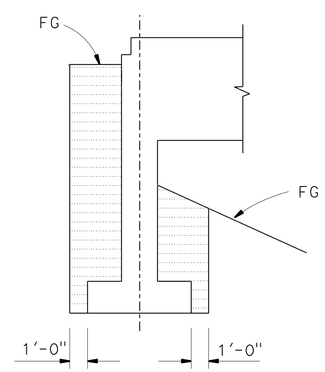

BACKFILL

ABUTMENT

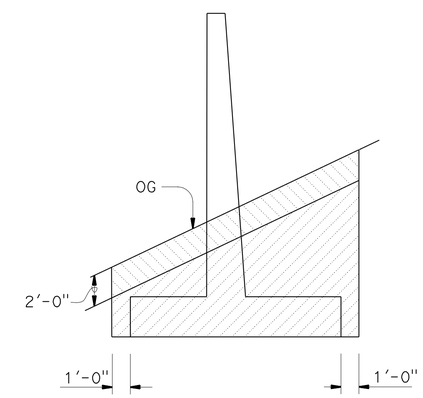

EXCAVATION

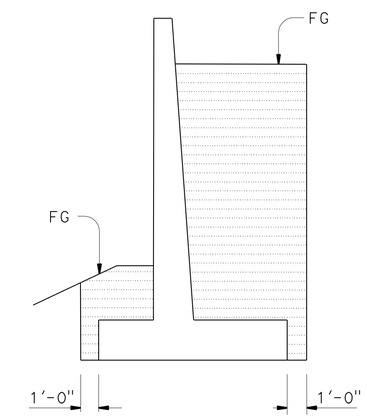

BACKFILL

RETAINING WALL

LIMITS OF PAYMENT FOR EXCAVATION AND BACKFILL

NO SCALE

NOTES:

1. Abutment 1 shown, Abutment 2 similar.
2. Abutment footing reinforcement extend to return wall, space equally.

LEGEND:

- Structure Excavation (Aerially Deposited Lead Type Z-2)
- Structure excavation
- Structure Backfill

NOTE:
THE CONTRACTOR SHALL VERIFY ALL CONTROLLING FIELD DIMENSIONS BEFORE ORDERING OR FABRICATING ANY MATERIAL.

	BY	CHECKED
DESIGN	S. Yeh	C. Duan
DETAILS	P. Perez/S. Jiang	C. Wen
QUANTITIES	S. Yeh	L. Sanchez-Manzo

STATE OF CALIFORNIA
DEPARTMENT OF TRANSPORTATION

DIVISION OF ENGINEERING SERVICES
STRUCTURE DESIGN
DESIGN BRANCH 21

BRIDGE NO. 53-1155R
POST MILE 25.21

FLORAL DRIVE UC (WIDEN)
ABUTMENT DETAILS NO. 1

STRUCTURES DESIGN DETAIL SHEET (ENGLISH) (REV. 09-01-10)

ORIGINAL SCALE IN INCHES FOR REDUCED PLANS 0 1 2 3

UNIT: 3623
PROJECT NUMBER & PHASE: 0700020869 & 1 CONTRACT NO.: 202111

DISREGARD PRINTS BEARING EARLIER REVISION DATES

REVISION DATES: 05/22/10 10/08/10 11/24/10 03/01/11

SHEET 6 OF 20

FILE => 53-1155-f-abut_dt01.dgn

USERNAME => s124496 DATE PLOTTED => 29-JUN-2011 TIME PLOTTED => 06:49

DIST	COUNTY	ROUTE	POST MILES TOTAL PROJECT	SHEET No.	TOTAL SHEETS
07	LA	710	17.2/26.4	1468	1507

REGISTERED CIVIL ENGINEER 03/01/11 DATE

6-27-11
PLANS APPROVAL DATE

REGISTERED PROFESSIONAL ENGINEER CHUNG-YUAN WEN No. C 50690 Exp. 09/30/11 CIVIL STATE OF CALIFORNIA

The State of California or its officers or agents shall not be responsible for the accuracy or completeness of electronic copies of this plan sheet.

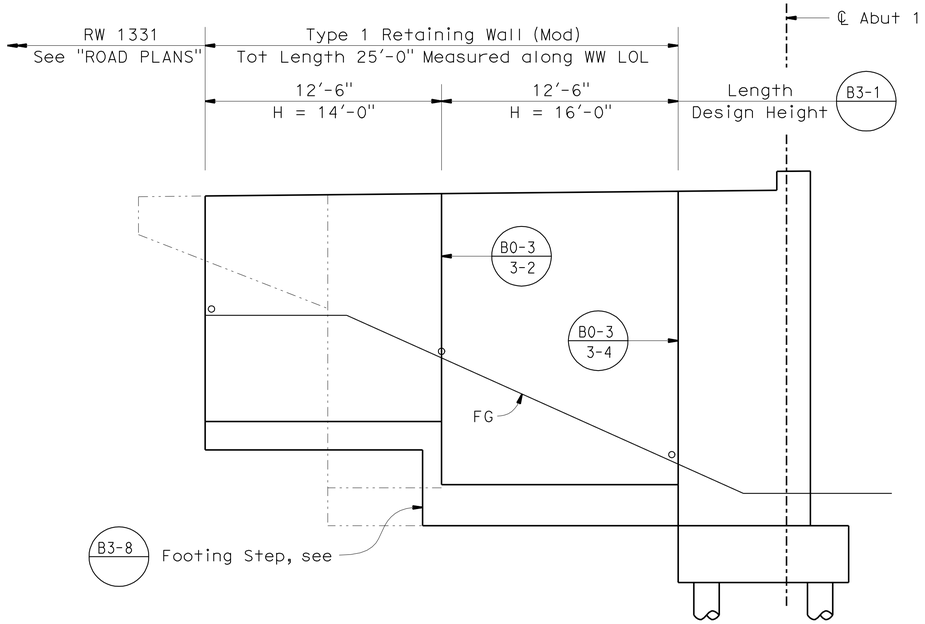

ELEVATION H-H

1/4" = 1'-0"

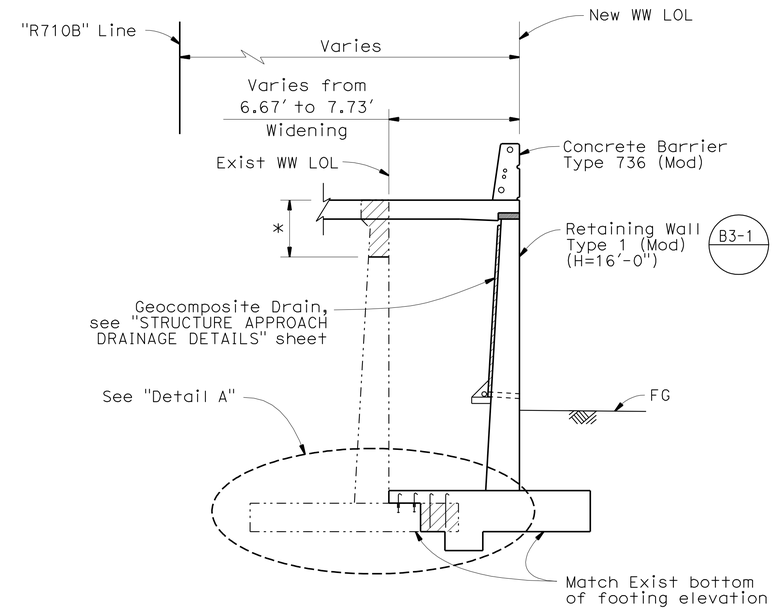

SECTION P-P

1/4" = 1'-0"

* Remove top 3'-0" of Exist WW

NOTES:

1. Top of wall elevations are measured along WW LOL.
2. For bottom of Retaining Wall footing elevation, see "FOUNDATION PLAN" sheet.
3. For location of Elevation H-H and Section P-P, see "ABUTMENT 1 LAYOUT" sheet.
4. For reinforced concrete wall stem joint details, see B0-3/3-3 B0-3/3-4

LEGEND:

Indicates Bridge Removal (Portion)

Indicates New Structure

Indicates Existing Structure

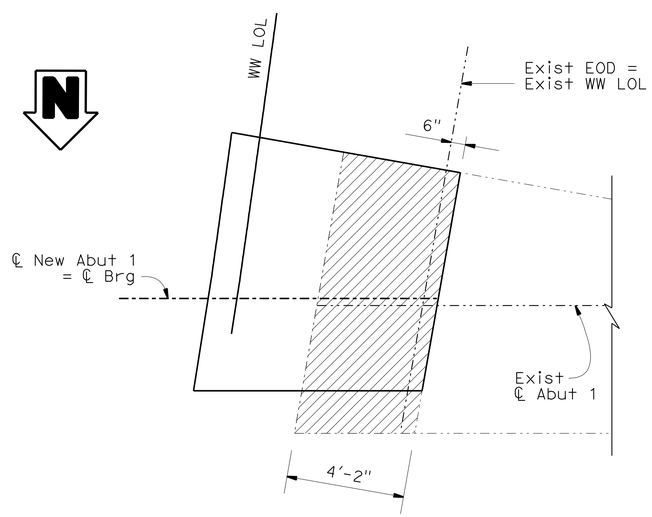

SECTION Q-Q

3/8" = 1'-0"

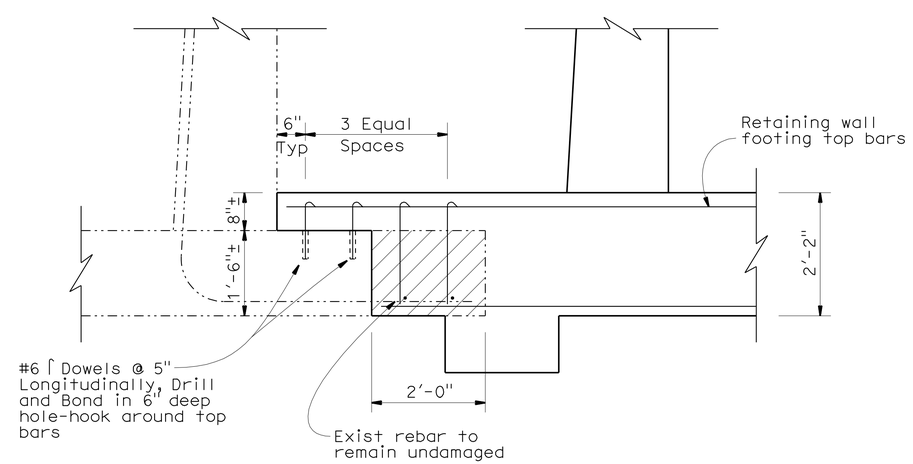

DETAIL A

3/4" = 1'-0"

NOTE:
THE CONTRACTOR SHALL VERIFY ALL CONTROLLING FIELD DIMENSIONS BEFORE ORDERING OR FABRICATING ANY MATERIAL.

	BY	CHECKED
DESIGN	S. Yeh	C. Duan
DETAILS	P. Perez/S. Jiang	C. Wen
QUANTITIES	S. Yeh	L. Sanchez-Manzo

STATE OF CALIFORNIA
DEPARTMENT OF TRANSPORTATION

DIVISION OF ENGINEERING SERVICES
STRUCTURE DESIGN
DESIGN BRANCH 21

BRIDGE NO. 53-1155R
POST MILE 25.21

FLORAL DRIVE UC (WIDEN)
ABUTMENT DETAILS NO. 2

STRUCTURES DESIGN DETAIL SHEET (ENGLISH) (REV. 09-01-10)

ORIGINAL SCALE IN INCHES FOR REDUCED PLANS 0 1 2 3

UNIT: 3623
PROJECT NUMBER & PHASE: 0700020869 & 1 CONTRACT NO.: 202111

DISREGARD PRINTS BEARING EARLIER REVISION DATES

REVISION DATES 08/13/10 10/04/10 11/24/10 03/01/11

SHEET 7 OF 20

FILE => 53-1155-f-abut_dt02.dgn

USERNAME => s124496 DATE PLOTTED => 29-JUN-2011 TIME PLOTTED => 06:49

DIST	COUNTY	ROUTE	POST MILES TOTAL PROJECT	SHEET No.	TOTAL SHEETS
07	LA	710	17.2/26.4	1469	1507

REGISTERED CIVIL ENGINEER 03/01/11 DATE

6-27-11
PLANS APPROVAL DATE

REGISTERED PROFESSIONAL ENGINEER CHUNG-YUAN WEN No. C 50690 Exp. 09/30/11 CIVIL STATE OF CALIFORNIA

The State of California or its officers or agents shall not be responsible for the accuracy or completeness of electronic copies of this plan sheet.

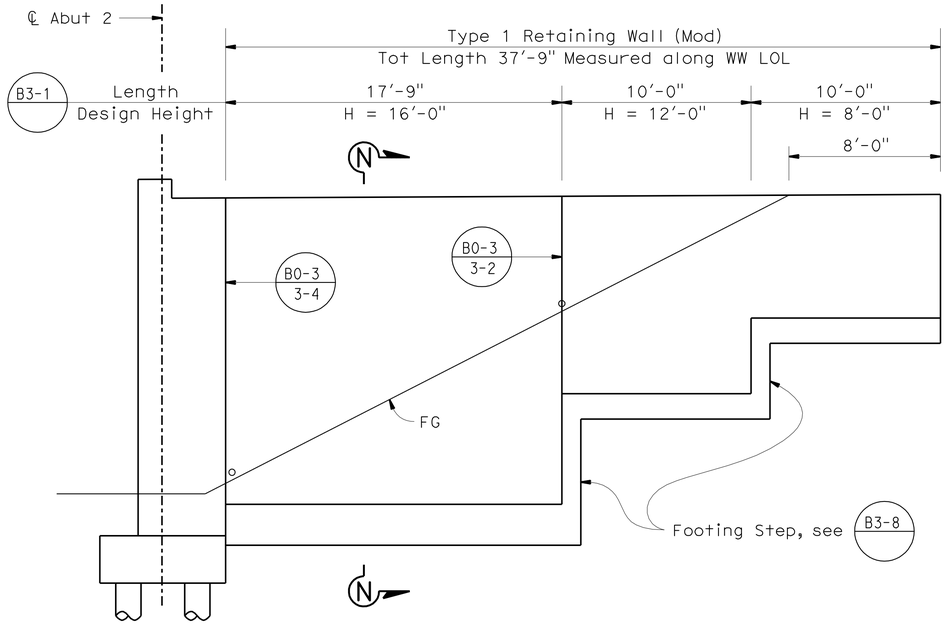

ELEVATION I-I

1/4" = 1'-0"

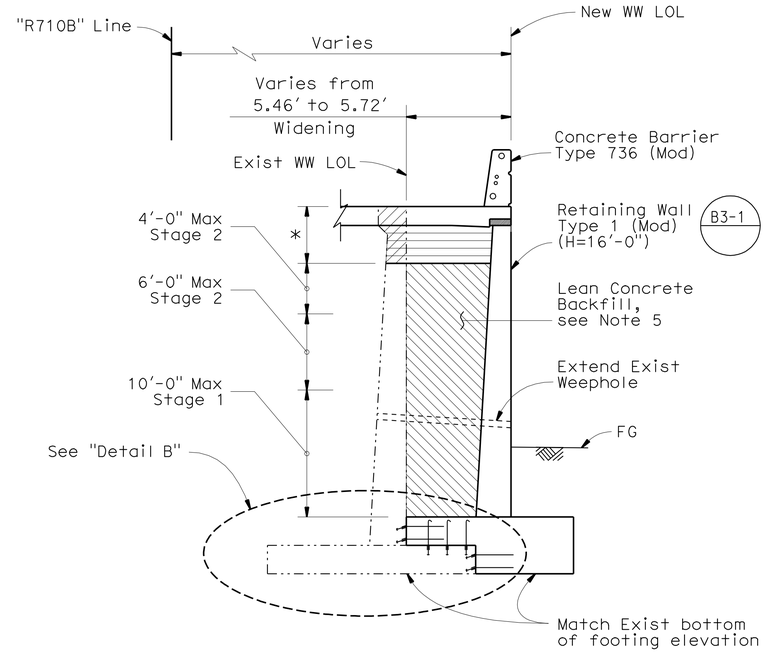

SECTION N-N

1/4" = 1'-0"

* Remove top 3'-0" of Exist WW

NOTES:

1. Top of wall elevations are measured along WW LOL.
2. For bottom of Retaining Wall footing elevation, see "FOUNDATION PLAN" sheet.
3. For location of Elevation I-I and Section N-N, see "ABUTMENT 2 LAYOUT" sheet.
4. For reinforced concrete wall stem joint details, see B0-3/3-3 B0-3/3-4
5. Three days are needed to wait between stages of lean concrete pouring.

LEGEND:

- Indicates Bridge Removal (Portion)
- Lean Concrete Backfill
- Indicates Structure Backfill
- Indicates New Structure
- Indicates Existing Structure

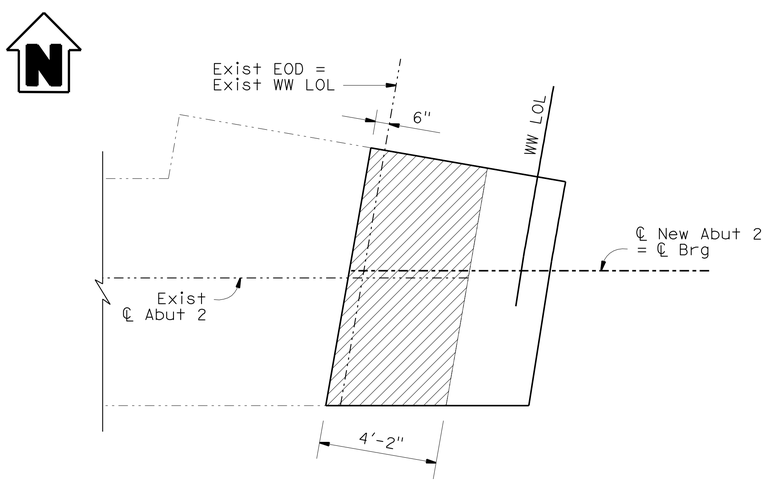

SECTION M-M

3/8" = 1'-0"

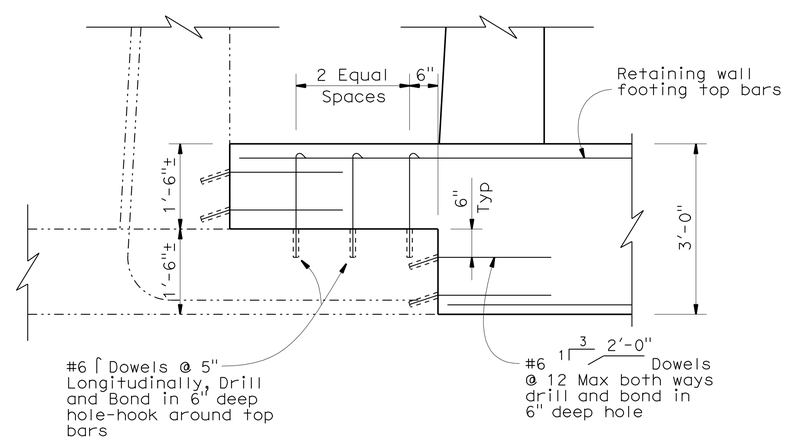

DETAIL B

3/4" = 1'-0"

NOTE:
THE CONTRACTOR SHALL VERIFY ALL CONTROLLING FIELD DIMENSIONS BEFORE ORDERING OR FABRICATING ANY MATERIAL.

	BY	CHECKED
DESIGN	S. Yeh	C. Duan
DETAILS	P. Perez/S. Jiang	C. Wen
QUANTITIES	S. Yeh	L. Sanchez-Manzo

STATE OF CALIFORNIA
DEPARTMENT OF TRANSPORTATION

DIVISION OF ENGINEERING SERVICES
STRUCTURE DESIGN
DESIGN BRANCH 21

BRIDGE NO. 53-1155R
POST MILE 25.21

FLORAL DRIVE UC (WIDEN)
ABUTMENT DETAILS NO. 3

STRUCTURES DESIGN DETAIL SHEET (ENGLISH) (REV. 09-01-10)

ORIGINAL SCALE IN INCHES FOR REDUCED PLANS 0 1 2 3

UNIT: 3623
PROJECT NUMBER & PHASE: 0700020869 & 1 CONTRACT NO.: 202111

DISREGARD PRINTS BEARING EARLIER REVISION DATES → 08/13/10 10/04/10 11/24/10 03/01/11

SHEET 8 OF 20

FILE => 53-1155-f-abut_dt03.dgn

USERNAME => s124496 DATE PLOTTED => 29-JUN-2011 TIME PLOTTED => 06:50

DIST	COUNTY	ROUTE	POST MILES TOTAL PROJECT	SHEET No.	TOTAL SHEETS
07	LA	710	17.2/26.4	1470	1507

REGISTERED CIVIL ENGINEER — DATE 03/01/11

6-27-11
PLANS APPROVAL DATE

REGISTERED PROFESSIONAL ENGINEER — CHUNG-YUAN WEN — No. C 50690 — Exp. 09/30/11 — CIVIL — STATE OF CALIFORNIA

The State of California or its officers or agents shall not be responsible for the accuracy or completeness of electronic copies of this plan sheet.

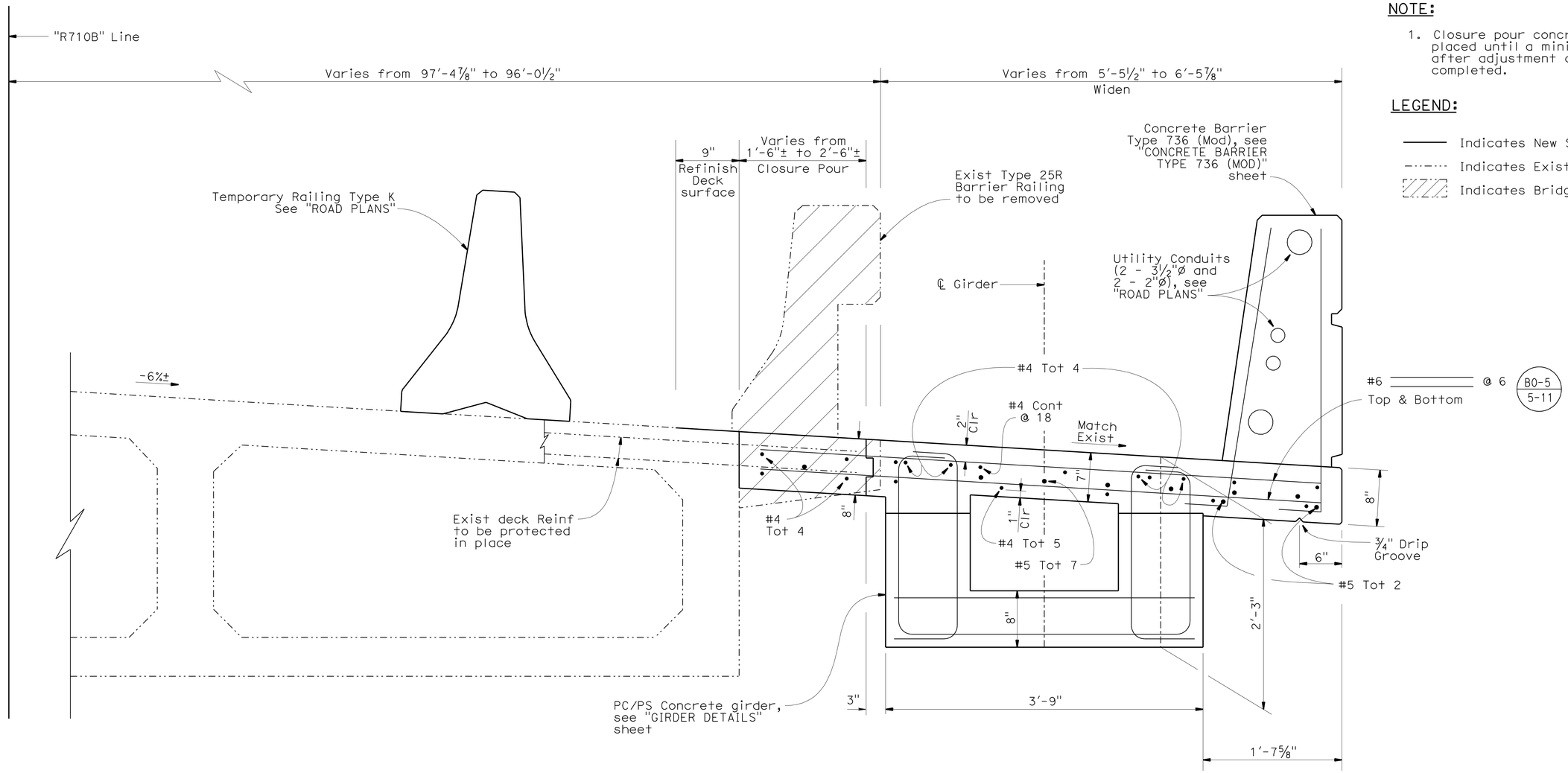

TYPICAL SECTION

1½" = 1'-0"

B0-5

NOTE:
THE CONTRACTOR SHALL VERIFY ALL CONTROLLING FIELD DIMENSIONS BEFORE ORDERING OR FABRICATING ANY MATERIAL.

NOTE:

1. Closure pour concrete shall not be placed until a minimum of 60 days after adjustment deck pours are completed.

LEGEND:

- Indicates New Structure
- Indicates Existing Structure
- Indicates Bridge Removal (Portion)

	BY	CHECKED
DESIGN	S. Yeh	C. Duan
DETAILS	P. Perez/T. Cotton	C. Wen
QUANTITIES	S. Yeh	L. Sanchez-Manzo

STATE OF CALIFORNIA
DEPARTMENT OF TRANSPORTATION

DIVISION OF ENGINEERING SERVICES
STRUCTURE DESIGN
DESIGN BRANCH 21

BRIDGE NO. 53-1155R
POST MILE 25.21

FLORAL DRIVE UC (WIDEN)
TYPICAL SECTION

STRUCTURES DESIGN DETAIL SHEET (ENGLISH) (REV. 09-01-10)

ORIGINAL SCALE IN INCHES FOR REDUCED PLANS 0 1 2 3

UNIT: 3623
PROJECT NUMBER & PHASE: 0700020869 & 1 CONTRACT NO.: 202111

DISREGARD PRINTS BEARING EARLIER REVISION DATES

REVISION DATES: 08/23/10 10/08/10 11/24/10 03/01/11

SHEET 9 OF 20

FILE => 53-1155-k-ts.dgn

USERNAME => s124496 DATE PLOTTED => 29-JUN-2011 TIME PLOTTED => 06:50

DIST	COUNTY	ROUTE	POST MILES TOTAL PROJECT	SHEET No.	TOTAL SHEETS
07	LA	710	17.2/26.4	1471	1507

REGISTERED CIVIL ENGINEER — DATE 03/01/11

6-27-11
PLANS APPROVAL DATE

REGISTERED PROFESSIONAL ENGINEER
CHUNG-YUAN WEN
No. C 50690
Exp. 09/30/11
CIVIL
STATE OF CALIFORNIA

The State of California or its officers or agents shall not be responsible for the accuracy or completeness of electronic copies of this plan sheet.

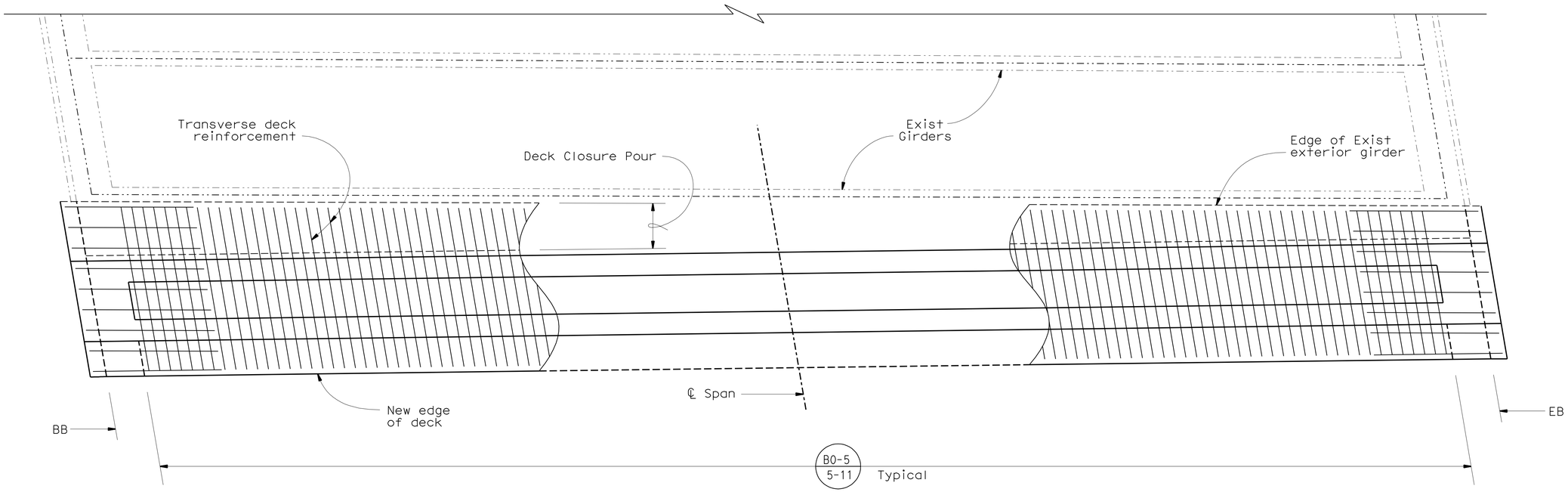

GIRDER LAYOUT

3/8" = 1'-0"

NOTE:
THE CONTRACTOR SHALL VERIFY ALL CONTROLLING FIELD DIMENSIONS BEFORE ORDERING OR FABRICATING ANY MATERIAL.

	BY	CHECKED
DESIGN	S. Yeh	C. Duan
DETAILS	P. Perez	C. Wen
QUANTITIES	S. Yeh	L. Sanchez-Manzo

STATE OF CALIFORNIA
DEPARTMENT OF TRANSPORTATION

DIVISION OF ENGINEERING SERVICES
STRUCTURE DESIGN
DESIGN BRANCH 21

BRIDGE NO. 53-1155R
POST MILE 25.21

FLORAL DRIVE UC (WIDEN)
GIRDER LAYOUT

STRUCTURES DESIGN DETAIL SHEET (ENGLISH) (REV. 09-01-10)

ORIGINAL SCALE IN INCHES FOR REDUCED PLANS 0 1 2 3

UNIT: 3623
PROJECT NUMBER & PHASE: 0700020869 & 1 CONTRACT NO.: 202111

DISREGARD PRINTS BEARING EARLIER REVISION DATES
REVISION DATES: 05/11/10 10/01/10 11/24/10 03/01/11

SHEET 10 OF 20

FILE => 53-1155-1-g_10.dgn

USERNAME => s124496 DATE PLOTTED => 29-JUN-2011 TIME PLOTTED => 06:50

DIST	COUNTY	ROUTE	POST MILES TOTAL PROJECT	SHEET No.	TOTAL SHEETS
07	LA	710	17.2/26.4	1472	1507

REGISTERED CIVIL ENGINEER 03/01/11 DATE

6-27-11
PLANS APPROVAL DATE

REGISTERED PROFESSIONAL ENGINEER CHUNG-YUAN WEN No. C 50690 Exp. 09/30/11 CIVIL STATE OF CALIFORNIA

The State of California or its officers or agents shall not be responsible for the accuracy or completeness of electronic copies of this plan sheet.

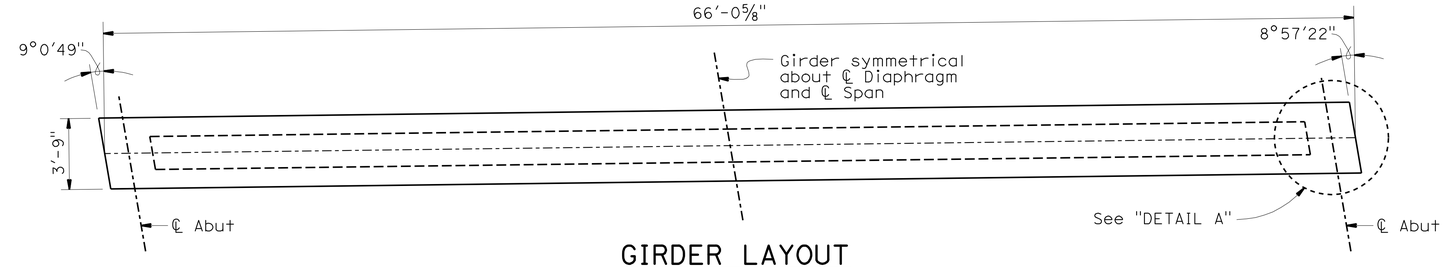

GIRDER LAYOUT

¼" = 1'-0"

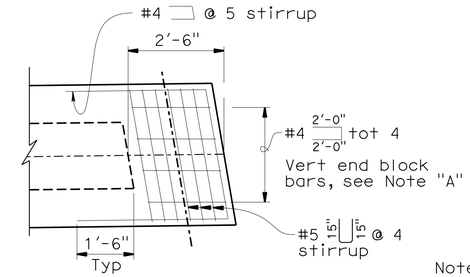

DETAIL A

½" = 1'-0"

Note "A"
Adjust bar spacing as required to avoid interference with the dowel hole

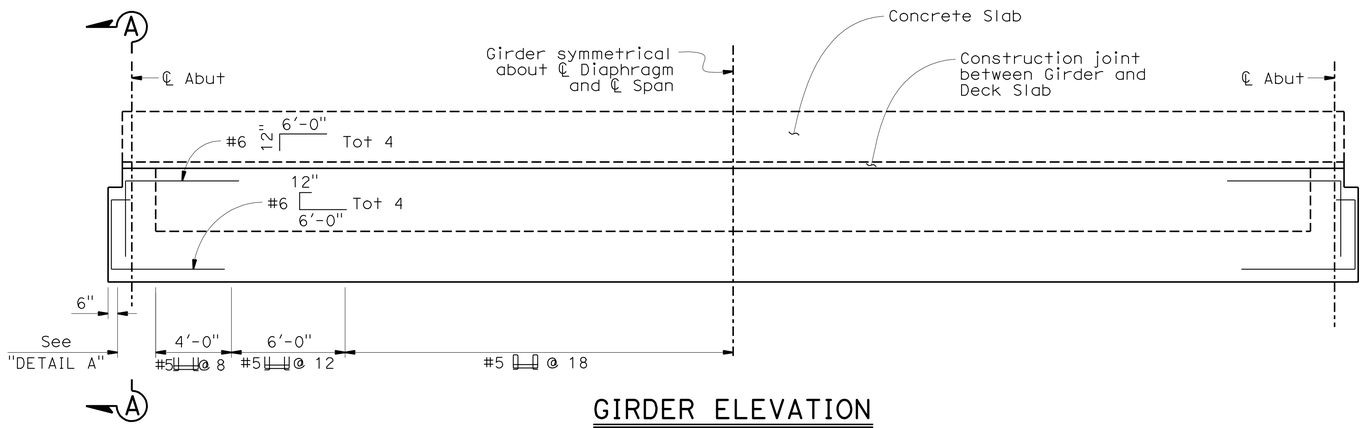

GIRDER ELEVATION

Horiz Scale ¼" = 1'-0"
Vert Scale 1" = 1'-0"

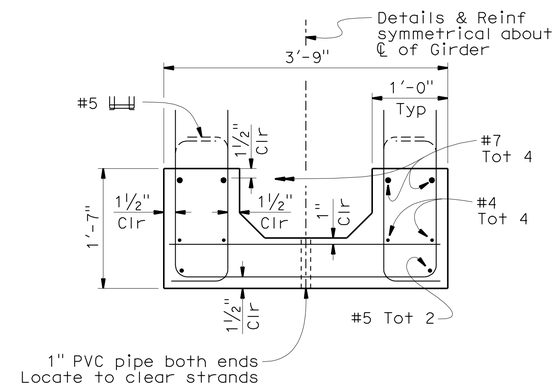

TYPICAL GIRDER SECTION

1" = 1'-0"

(For details not shown, see "STRAND & DEBONDING PATTERN" detail)

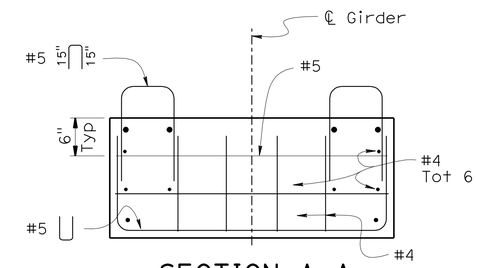

SECTION A-A

1" = 1'-0"

NOTE:

1. Contractor to provide details for overhang supports prior to fabrication.

PRESTRESSING NOTES:

Jacking Force (P): The force required at center of span after all losses

Concrete Strength: f'ci is at time of initial stressing, f'c is at 28 days, ksi.

Deflection Components: Informational-to be used in setting screed line elevations

Screed line elevations for deck concrete will be determined by the Engineer.

Girder Length	"D"	Number of 0.6" ø Strands	P Jack	Concrete Strength (ksi)		Midspan Dead Load Deflection (in)	
				f'ci	f'c	Deck	Rail
66'-0⅝"	1'-7"	40	1758 kips (44 kips/strand)	6	8	2.55	0.37

NOTE:
THE CONTRACTOR SHALL VERIFY ALL CONTROLLING FIELD DIMENSIONS BEFORE ORDERING OR FABRICATING ANY MATERIAL.

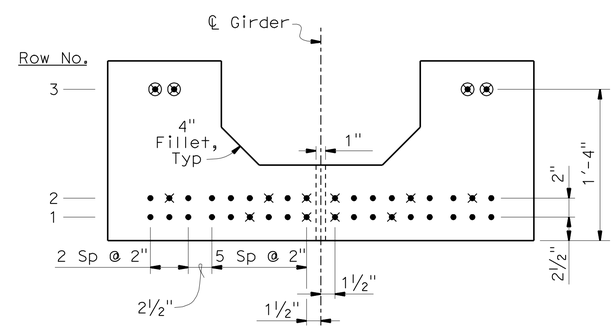

STRAND & DEBONDING PATTERN

1½" = 1'-0"

Row No.	Total No. of 0.6"ø Strands	No. of Debonded Strands	Debonded Length
3	4	4	20'-0" @ middle
2	18	4 4	15'-0" @ end
1	18	4	15'-0" @ end

DESIGN	BY S. Yeh	CHECKED C. Duan	
DETAILS	BY P. Perez/S. Jiang	CHECKED C. Wen	
QUANTITIES	BY S. Yeh	CHECKED L. Sanchez-Manzo	

STATE OF CALIFORNIA
DEPARTMENT OF TRANSPORTATION

DIVISION OF ENGINEERING SERVICES
STRUCTURE DESIGN
DESIGN BRANCH 21

BRIDGE NO. 53-1155R
POST MILE 25.21

FLORAL DRIVE UC (WIDEN)
GIRDER DETAILS

STRUCTURES DESIGN DETAIL SHEET (ENGLISH) (REV. 09-01-10)

ORIGINAL SCALE IN INCHES FOR REDUCED PLANS 0 1 2 3

UNIT: 3623
PROJECT NUMBER & PHASE: 0700020869 & 1 CONTRACT NO.: 202111

DISREGARD PRINTS BEARING EARLIER REVISION DATES
REVISION DATES 05-04-10 10-01-10 11-24-10 03/01/11
SHEET 11 OF 20

FILE => 53-1155-I-gdt.dgn

USERNAME => s124496 DATE PLOTTED => 29-JUN-2011 TIME PLOTTED => 06:50

DIST	COUNTY	ROUTE	POST MILES TOTAL PROJECT	SHEET No.	TOTAL SHEETS
07	LA	710	17.2/26.4	1473	1507

REGISTERED CIVIL ENGINEER 03/01/11 DATE

6-27-11
PLANS APPROVAL DATE

REGISTERED PROFESSIONAL ENGINEER CHUNG-YUAN WEN No. C 50690 Exp. 09/30/11 CIVIL STATE OF CALIFORNIA

The State of California or its officers or agents shall not be responsible for the accuracy or completeness of electronic copies of this plan sheet.

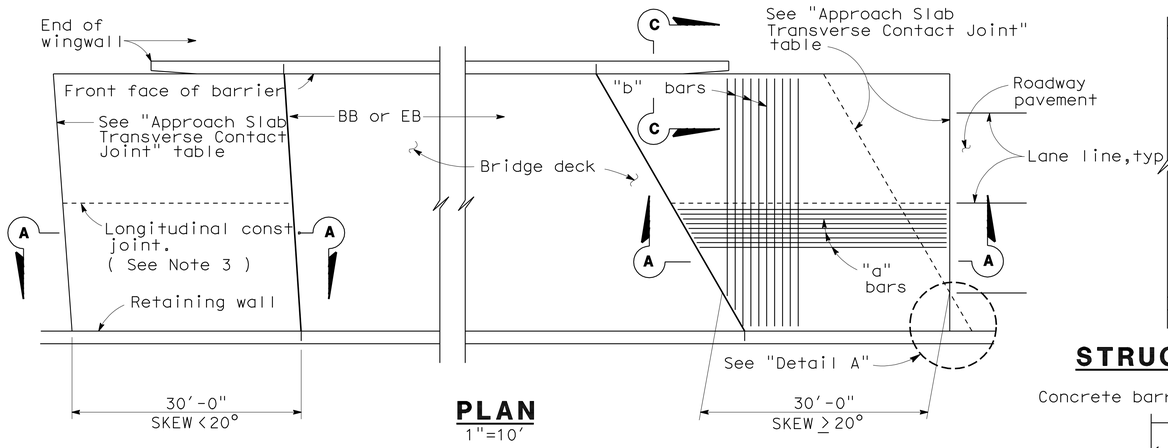

PLAN
1"=10'

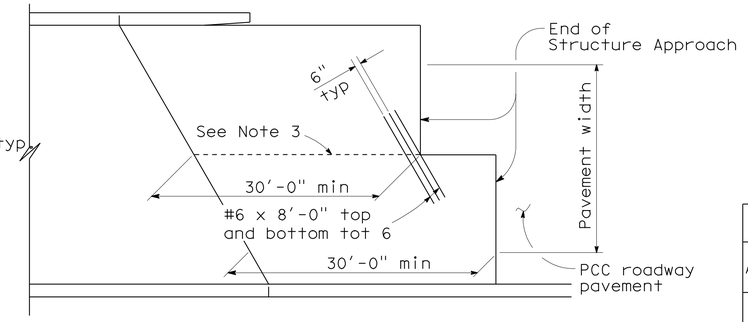

STRUCTURE APPROACH - END STAGGER DETAIL
No Scale

APPROACH SLAB TRANSVERSE CONTACT JOINT		
APPROACH SKEW	WITH AC ROADWAY PAVEMENT	WITH PCC ROADWAY PAVEMENT
< 20°	Parallel to face of paving notch	Parallel to face of paving notch
20° - 45°	Parallel to face of P N use (Detail A)	Stagger lines 24' to 36' apart.
> 45°	Parallel to face of P N use (Detail A)	Stagger at each lane line.

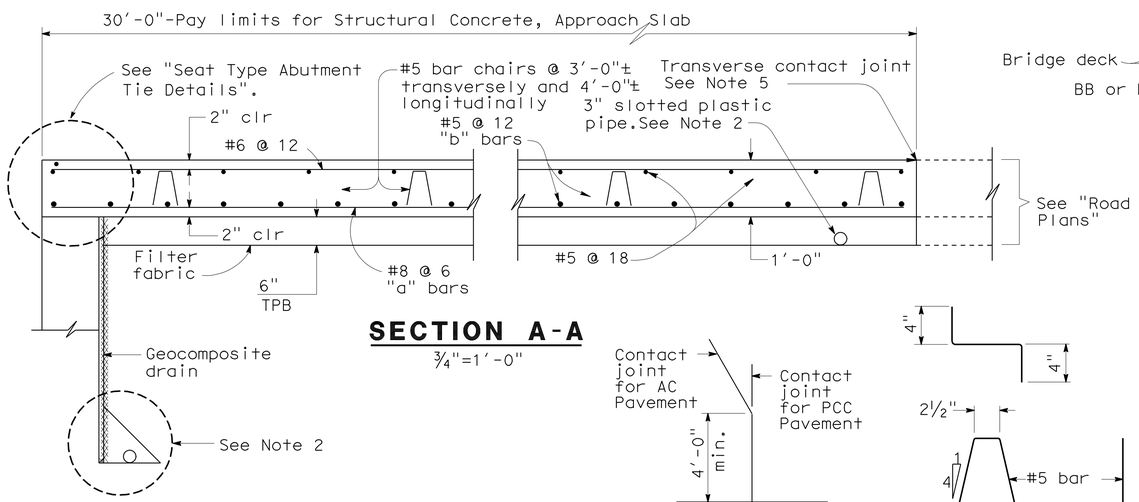

SECTION A-A
¾"=1'-0"

DETAIL A
No Scale

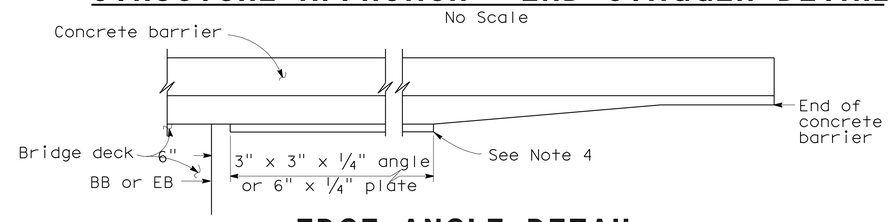

EDGE ANGLE DETAIL
½"=1'-0"

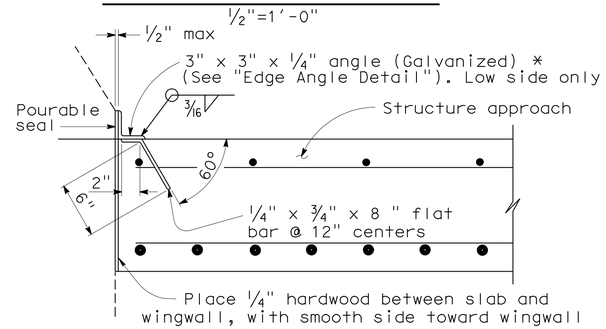

***(TO BE USED WITH TYPE 25 OR TYPE 27 CONCRETE BARRIER)**

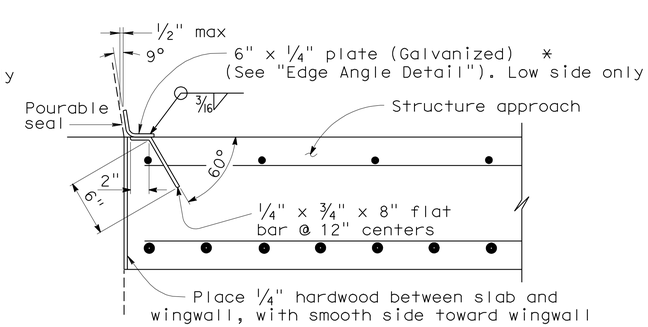

***(TO BE USED WITH TYPE 732 OR TYPE 736 CONCRETE BARRIER)**

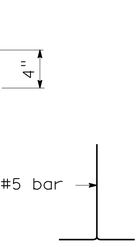

BAR CHAIR DETAIL
1½"=1'-0"

DETAIL B
1½"=1'-0"

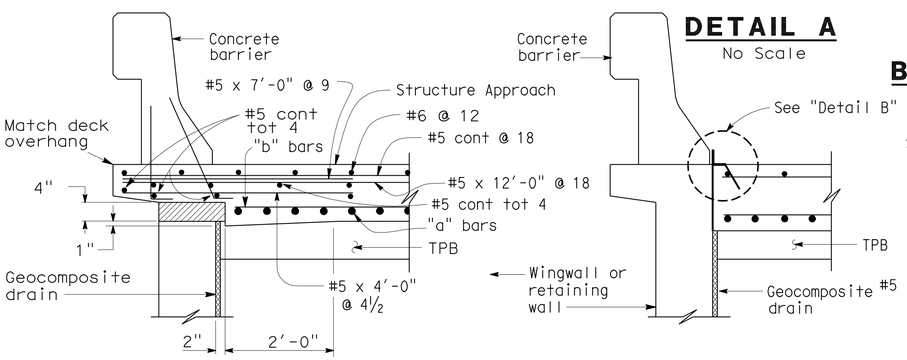

TYPE E-1 **TYPE E-2**

SECTION C-C
¾"=1'-0"

(Type E-1 to be used,unless otherwise shown on plans)

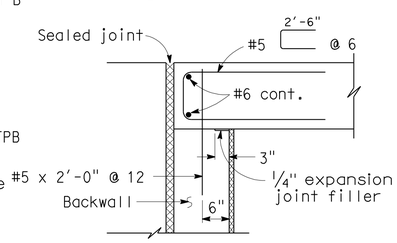

MR ≤ 2"

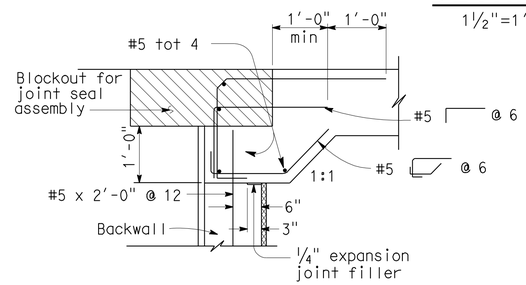

MR > 2"

SEAT TYPE ABUTMENT TIE DETAILS (SEE NOTE 1)
¾"=1'-0"

NOTES:

1. For details not shown,see Structure Plans. For MR ≤ 2",adjust bar reinforcement to clear a sawcut for sealed joint,when required.
2. For drainage details,see "Structure Approach Drainage Details" sheet.
3. Longitudinal construction joints,when permitted by the Engineer, shall be located on lane lines.
4. End angle or plate at beginning of barrier transition, end of wingwall or end of structure approach as applicable.
5. For transverse contact joint with new PCC paving, refer to Standard Plan P10.
6. At the contractor's option, approach slab transverse reinforcement may be placed parallel to paving notch. Spacing of transverse reinforcement is measured along ℄ roadway.

Remove all polystyrene.

STANDARD DRAWING
FILE NO. xs3-120e
APPROVAL DATE 3-14-05

STATE OF CALIFORNIA DEPARTMENT OF TRANSPORTATION

DIVISION OF ENGINEERING SERVICES

BRIDGE NO. 53-1155
POST MILE 25.21

FLORAL DRIVE UC (WIDEN)
STRUCTURE APPROACH TYPE N(30S)

DS OSD 2147A (ENGLISH STANDARD DRAWING "XS" BORDER REV. (02-02-11)

ORIGINAL SCALE IN INCHES FOR REDUCED PLANS 0 1 2 3

UNIT: 3623
PROJECT NUMBER & PHASE: 0700020869 & 1 CONTRACT NO.: 202111

DISREGARD PRINTS BEARING EARLIER REVISION DATES

REVISION DATES 10/01/10 11/24/10 03/01/11

SHEET 12 OF 20

FILE => 53-1155-s-1n30s.dgn

USERNAME => s6124436 DATE PLOTTED => 29-JUN-2011 TIME PLOTTED => 06:50

DIST	COUNTY	ROUTE	POST MILES TOTAL PROJECT	SHEET No.	TOTAL SHEETS
07	LA	710	17.2/26.4	1474	1507

REGISTERED CIVIL ENGINEER 03/01/11 DATE

6-27-11
PLANS APPROVAL DATE

REGISTERED PROFESSIONAL ENGINEER CHUNG-YUAN WEN No. C 50690 Exp. 09/30/11 CIVIL STATE OF CALIFORNIA

The State of California or its officers or agents shall not be responsible for the accuracy or completeness of electronic copies of this plan sheet.

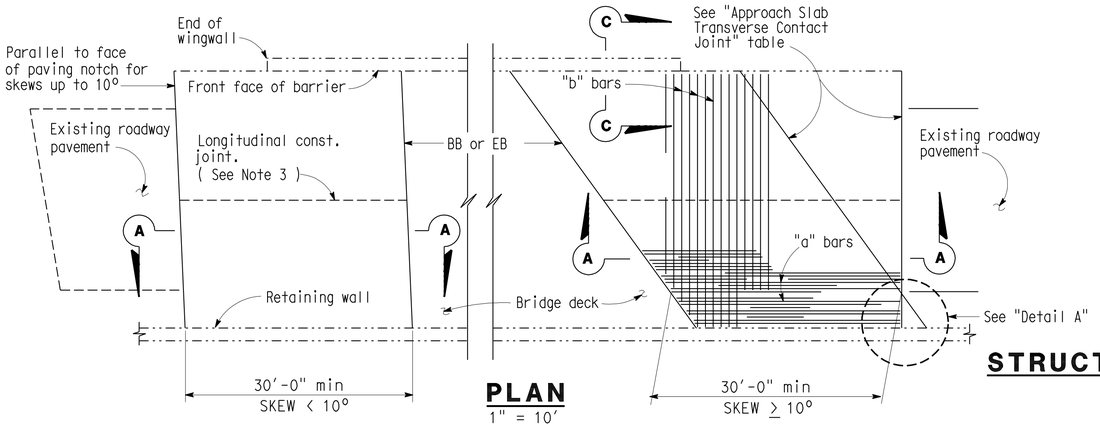

PLAN
1" = 10'

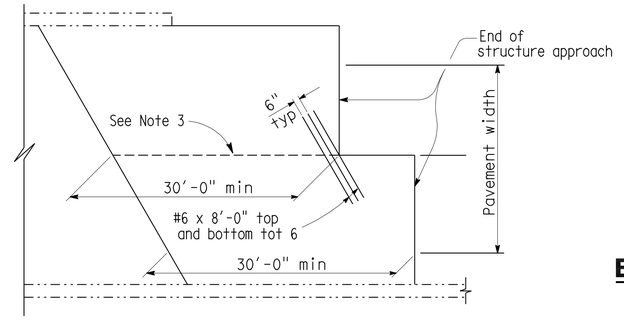

STRUCTURE APPROACH - END STAGGER DETAIL
No Scale

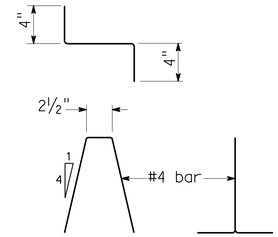

BAR CHAIR DETAIL
1½" = 1'-0"

APPROACH SLAB TRANSVERSE CONTACT JOINT		
APPROACH SKEW	WITH AC ROADWAY PAVEMENT	WITH PCC ROADWAY PAVEMENT
< 10°	Parallel to face of paving notch	Parallel to face of paving notch
10 - 45°	Parallel to face of P N use (Detail A)	Stagger lines 24' to 36' apart
> 45°	Parallel to face of P N use (Detail A)	Stagger at each lane line

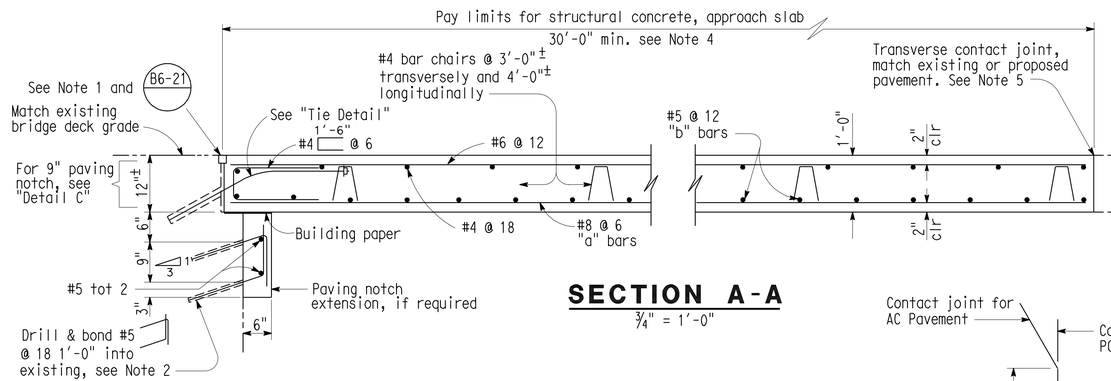

SECTION A-A
¾" = 1'-0"

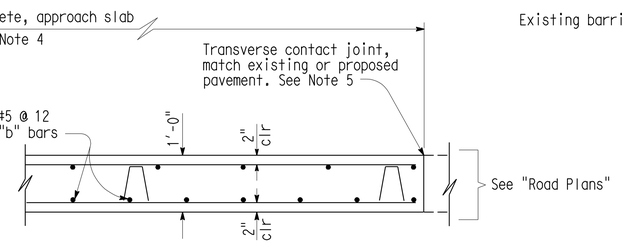

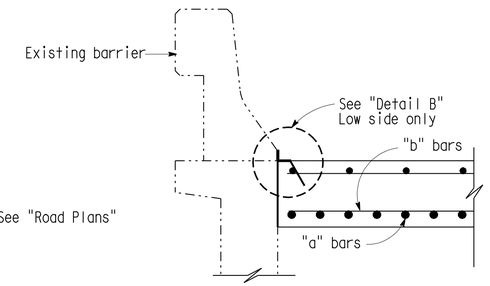

SECTION C-C
¾" = 1'-0"

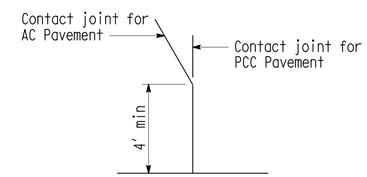

DETAIL A
No Scale

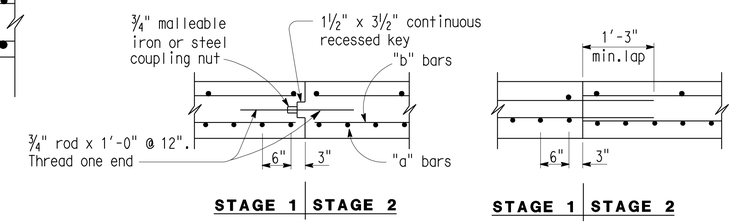

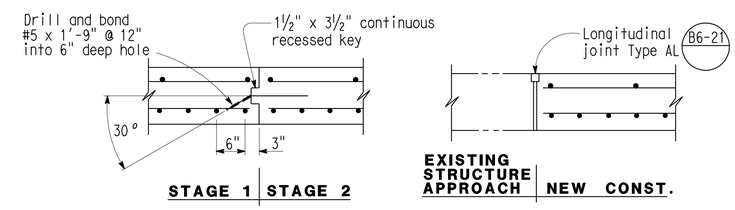

LONGITUDINAL CONSTRUCTION JOINT ALTERNATIVES
¾" = 1'-0"

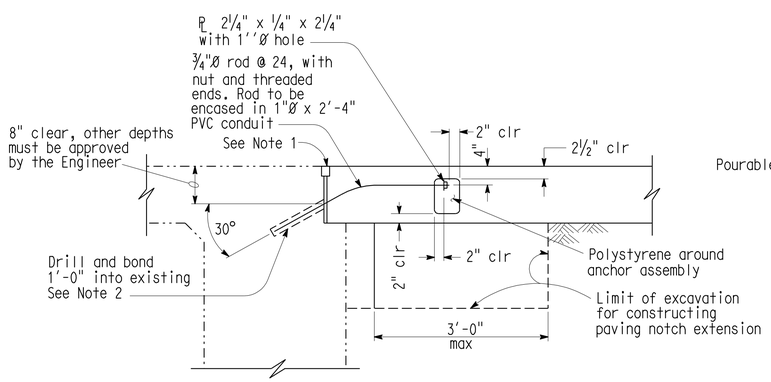

TIE DETAIL
¾" = 1'-0"

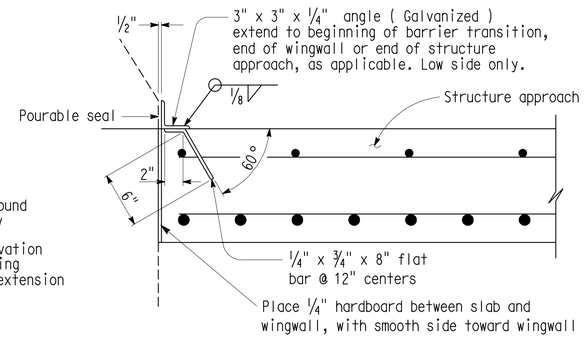

DETAIL B
1½" = 1'-0"

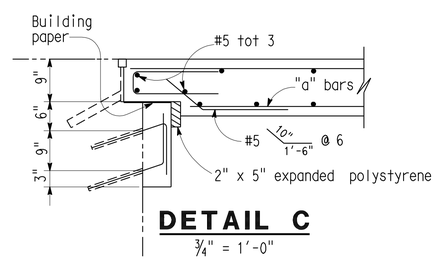

DETAIL C
¾" = 1'-0"

Note: For details not shown, see "Section A-A".

NOTE:
THE CONTRACTOR SHALL VERIFY ALL CONTROLLING FIELD DIMENSIONS BEFORE ORDERING OR FABRICATING ANY MATERIAL.

NOTES:

1. For details not shown or noted, see Structure Plans. Adjust bar reinforcement to clear a sawcut for sealed joint, when required.
2. Space to avoid existing prestress anchorages and main reinforcement.
3. Longitudinal construction joints, when permitted by the Engineer, shall be located on lane lines.
4. Transverse contact joint shall be a minimum of 5' from an existing or constructed weakened plane joint.
5. For transverse contact joint with new PCC paving refer to Standard Plan A35-A.

STANDARD DRAWING
FILE NO. xs 22-20
APPROVAL DATE 8/92

STATE OF CALIFORNIA
DEPARTMENT OF TRANSPORTATION

DIVISION OF ENGINEERING SERVICES

BRIDGE NO. 53-1155
POST MILE 25.21

FLORAL DRIVE UC (WIDEN)
STRUCTURE APPROACH TYPE R(30D)

DS OSD 2147A (ENGLISH STANDARD DRAWING "XS" BORDER REV. (02-02-11)

ORIGINAL SCALE IN INCHES FOR REDUCED PLANS 0 1 2 3

UNIT: 3623
PROJECT NUMBER & PHASE: 0700020869 & 1 CONTRACT NO.: 202111

DISREGARD PRINTS BEARING EARLIER REVISION DATES
REVISION DATES 10/01/10 11/24/10 03/01/11
SHEET 13 OF 20

FILE => 53-1155-s-2r30d.dgn

USERNAME => s124496 DATE PLOTTED => 29-JUN-2011 TIME PLOTTED => 06:50

DIST	COUNTY	ROUTE	POST MILES TOTAL PROJECT	SHEET No.	TOTAL SHEETS
07	LA	710	17.2/26.4	1475	1507

REGISTERED CIVIL ENGINEER — DATE 03/01/11

6-27-11
PLANS APPROVAL DATE

REGISTERED PROFESSIONAL ENGINEER — CHUNG-YUAN WEN — No. C 50690 — Exp. 09/30/11 — CIVIL — STATE OF CALIFORNIA

The State of California or its officers or agents shall not be responsible for the accuracy or completeness of electronic copies of this plan sheet.

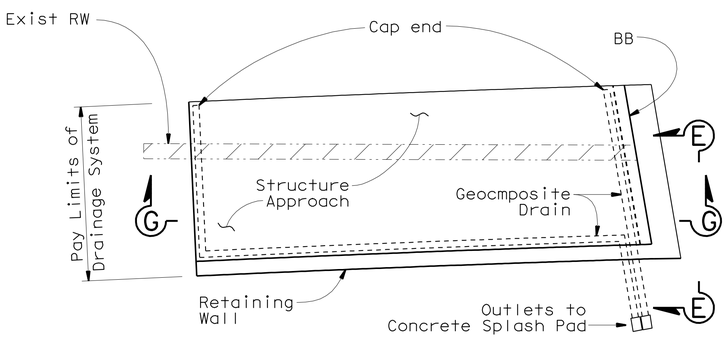

TYPICAL PLAN AT ABUTMENT 1

1" = 5'

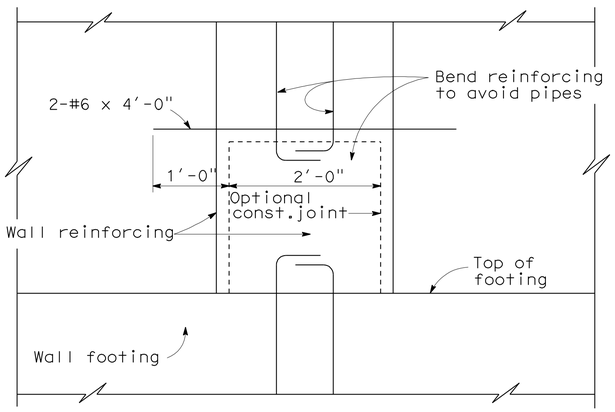

SECTION H-H

1"=1'-0"

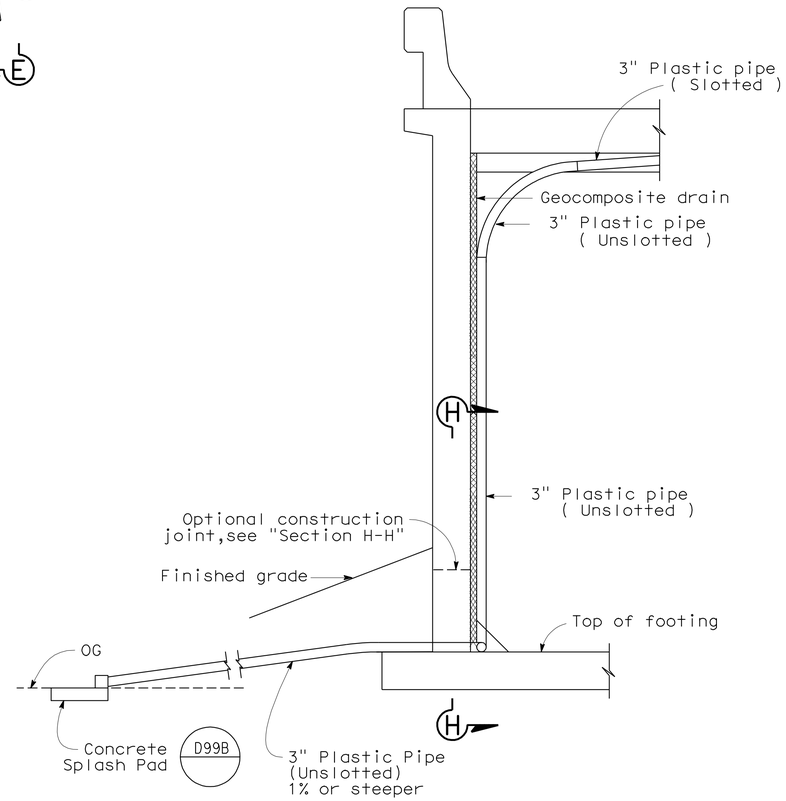

SECTION E-E

½"=1'-0"

NOTE: Bends and junctions in 3" plastic pipe are 30" radius min.

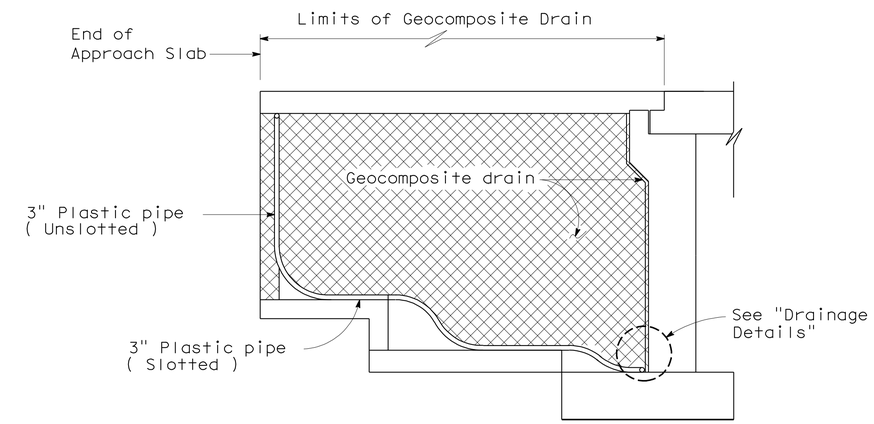

RETAINING WALL WINGWALL

SECTION G-G

¼"=1'-0"

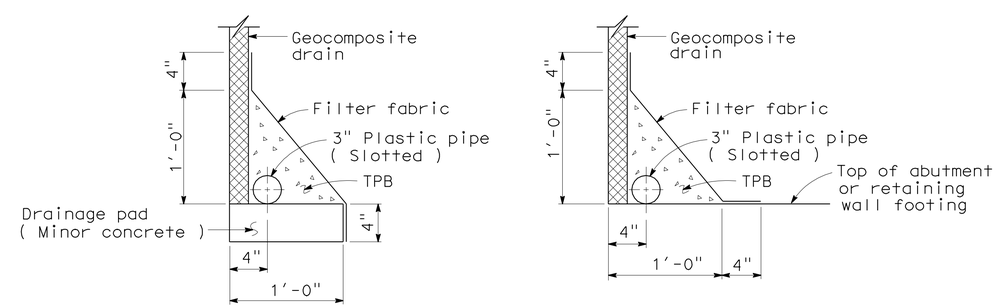

WITHOUT FOOTING **WITH FOOTING**

DRAINAGE DETAILS

1½"=1'-0"

NOTE:
THE CONTRACTOR SHALL VERIFY ALL CONTROLLING FIELD DIMENSIONS BEFORE ORDERING OR FABRICATING ANY MATERIAL.

DESIGN	BY S. Yeh	CHECKED C. Duan	
DETAILS	BY M. Kingra/P. Perez	CHECKED C. Wen	
QUANTITIES	BY S. Yeh	CHECKED L. Sanchez-Manzo	

STATE OF CALIFORNIA
DEPARTMENT OF TRANSPORTATION

DIVISION OF ENGINEERING SERVICES
STRUCTURE DESIGN
DESIGN BRANCH 21

BRIDGE NO. 53-1155R
POST MILE 25.21

FLORAL DRIVE UC (WIDEN)
STRUCTURE APPROACH DRAINAGE DETAILS

STRUCTURES DESIGN DETAIL SHEET (ENGLISH) (REV. 09-01-10)

ORIGINAL SCALE IN INCHES FOR REDUCED PLANS 0 1 2 3

UNIT: 3623
PROJECT NUMBER & PHASE: 0700020869 & 1 CONTRACT NO.: 202111

DISREGARD PRINTS BEARING EARLIER REVISION DATES

REVISION DATES: 09/07/10 10/07/10 11/24/10 03/01/11

SHEET 14 OF 20

FILE => 53-1155-s-3sadd.dgn

USERNAME => s124496 DATE PLOTTED => 29-JUN-2011 TIME PLOTTED => 06:50

DIST	COUNTY	ROUTE	POST MILES TOTAL PROJECT	SHEET No.	TOTAL SHEETS
07	LA	710	17.2/26.4	1476	1507

REGISTERED CIVIL ENGINEER — DATE 03/01/11

6-27-11
PLANS APPROVAL DATE

REGISTERED PROFESSIONAL ENGINEER — CHUNG-YUAN WEN — No. C 50690 — Exp. 09/30/11 — CIVIL — STATE OF CALIFORNIA

The State of California or its officers or agents shall not be responsible for the accuracy or completeness of electronic copies of this plan sheet.

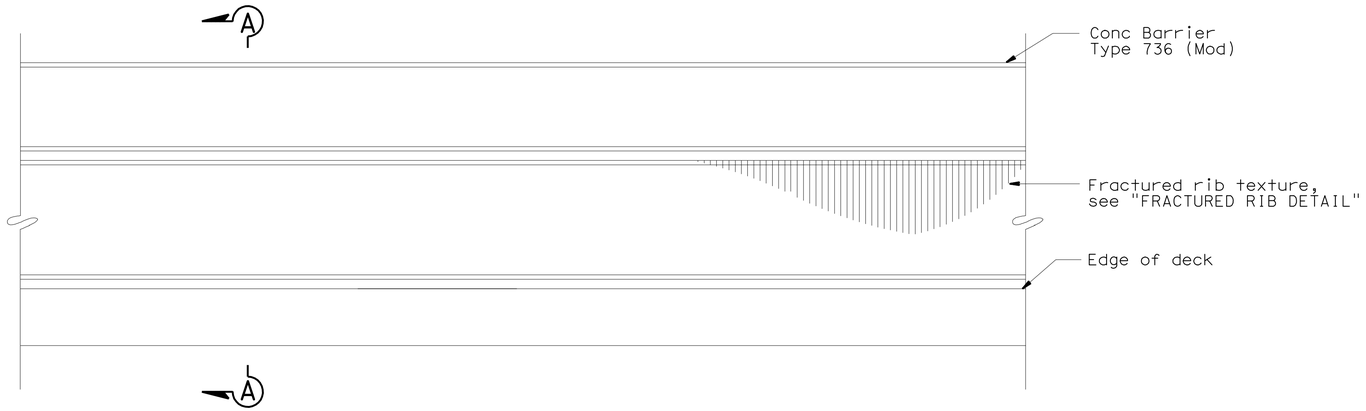

TYPE 736 (MOD) BARRIER ELEVATION - ARCHITECTURAL TREATMENT

No Scale

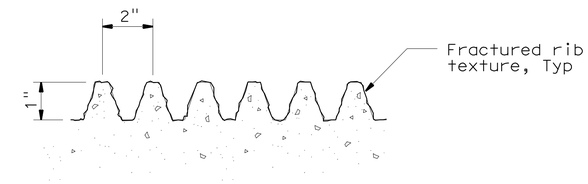

FRACTURED RIB DETAIL

No Scale

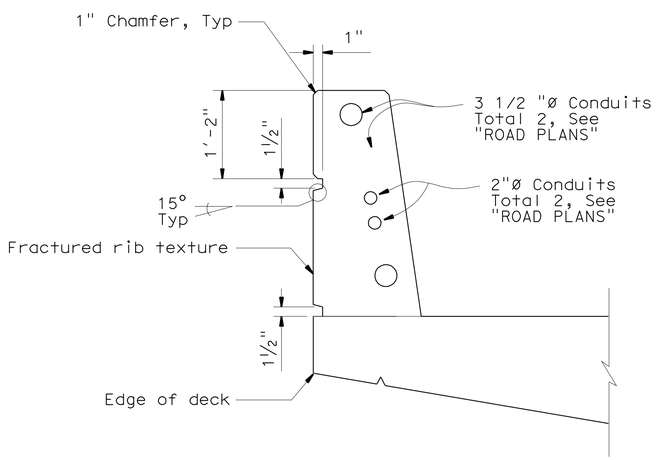

TYPE 736 (MOD) - ARCHITECTURAL AND UTILITY DETAILS

1" = 1'-0"

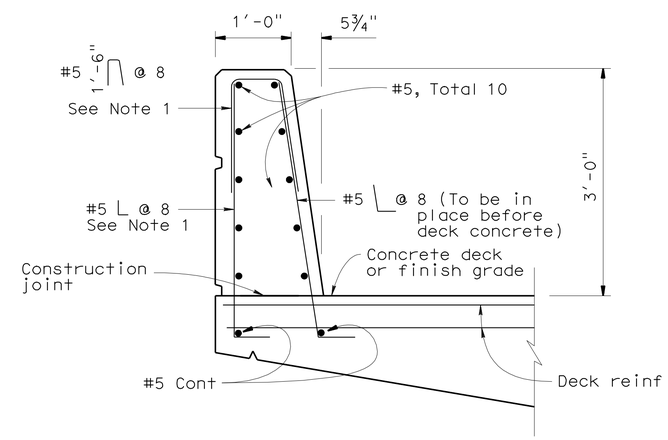

SECTION A-A

1" = 1'-0"

NOTES:

1. Rebar may be adjusted to clear utility pull boxes.
2. For details not shown, see B11-56

NOTE:
THE CONTRACTOR SHALL VERIFY ALL CONTROLLING FIELD DIMENSIONS BEFORE ORDERING OR FABRICATING ANY MATERIAL.

	BY	CHECKED
DESIGN	S. Yeh	C. Duan
DETAILS	M. Kingra/P. Perez	C. Wen
QUANTITIES	S. Yeh	L. Sanchez-Manzo

STATE OF CALIFORNIA
DEPARTMENT OF TRANSPORTATION

DIVISION OF ENGINEERING SERVICES
STRUCTURE DESIGN
DESIGN BRANCH 21

BRIDGE NO. 53-1155R
POST MILE 25.21

FLORAL DRIVE UC (WIDEN)
CONCRETE BARRIER TYPE 736 (MOD)

STRUCTURES DESIGN DETAIL SHEET (ENGLISH) (REV. 09-01-10)

ORIGINAL SCALE IN INCHES FOR REDUCED PLANS 0 1 2 3

UNIT: 3623
PROJECT NUMBER & PHASE: 0700020869 & 1 CONTRACT NO.: 202111

DISREGARD PRINTS BEARING EARLIER REVISION DATES → REVISION DATES 08/05/10 10/04/10 11/24/10 03/01/11

SHEET 15 OF 20

FILE => 53-1155-v-bar_dt.dgn

USERNAME => s124496 DATE PLOTTED => 29-JUN-2011 TIME PLOTTED => 06:50

DIST	COUNTY	ROUTE	POST MILES TOTAL PROJECT	SHEET No	TOTAL SHEETS
07	LA	710	17.2/26.4	1477	1507

PROFESSIONAL ENGINEER 12-3-10

6-27-11
PLANS APPROVAL DATE

REGISTERED PROFESSIONAL ENGINEER Gamini Weeratunga No. GE2403 Exp. 9-30-12 GEOTECHNICAL STATE OF CALIFORNIA

The State of California or its officers or agents shall not be responsible for the accuracy or completeness of electronic copies of this plan sheet.

This LOTB sheet was prepared in accordance with the Caltrans Soil & Rock Logging, Classification, & Presentation Manual (June 2007).

BENCH MARK

PRHV-5002 Elev= 333.16
FND PK On SB 710 SHDR
71.60′ Lt ℄ Rte 710
Sta 1329+95.69
N 1 838 348.17
E 6 510 074.30

PRHV-7806 Elev= 314.85
FND Fd L&T NW Corner Floral-Ford, 8′ NE/ECR
197.45′ Rt ℄ Rte 710
Sta 1332+33.27
N 1 838 537.92
E 6 510 372.65

VERT DATUM NAVD88

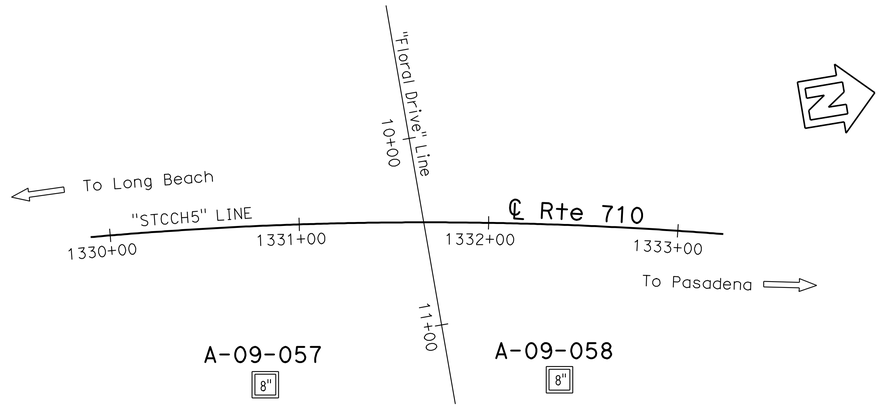

PLAN
1" = 40′

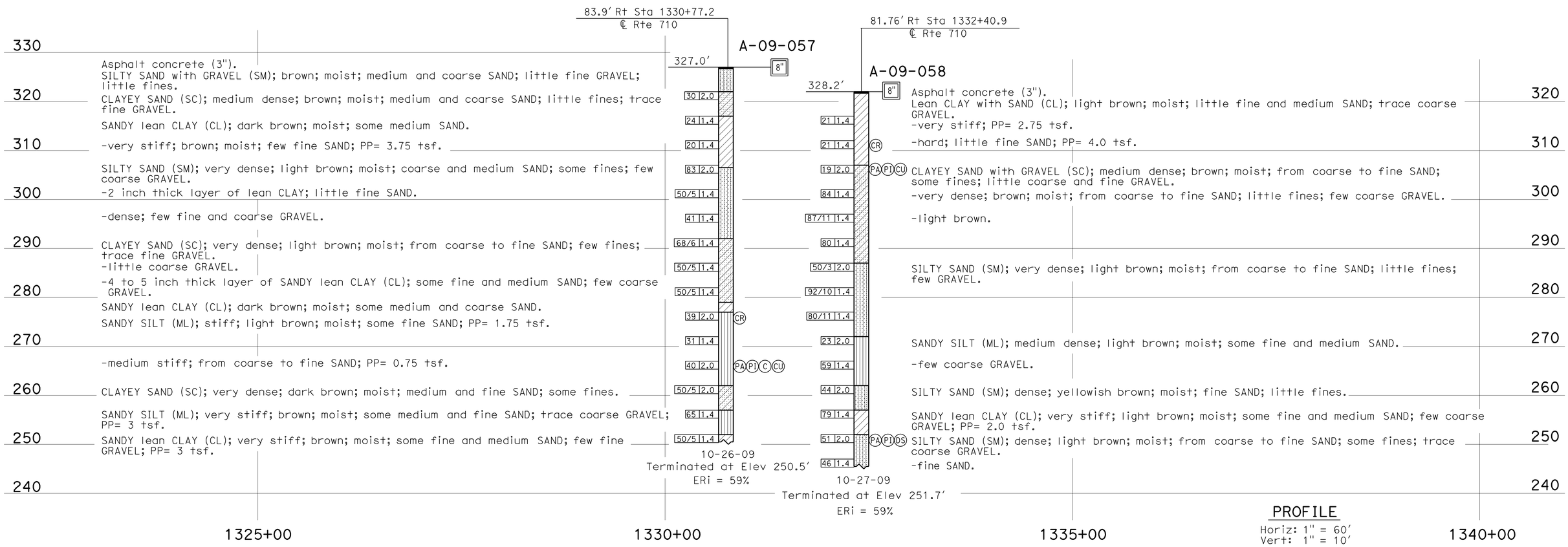

PROFILE
Horiz: 1" = 60′
Vert: 1" = 10′

ENGINEERING SERVICES	GEOTECHNICAL SERVICES	STATE OF CALIFORNIA DEPARTMENT OF TRANSPORTATION	DIVISION OF ENGINEERING SERVICES STRUCTURE DESIGN	BRIDGE NO. 53-1155R/L	FLORAL DRIVE UC (WIDEN)
FUNCTIONAL SUPERVISOR	DRAWN BY: C. Christian, F. Nguyen 10/10	FIELD INVESTIGATION BY:	DESIGN BRANCH 21	POST MILES 25.21	LOG OF TEST BORINGS 1 OF 5
NAME: S. Karimi	CHECKED BY: T. Halda	A. Mehrazar			

OGS CIVIL LOG OF TEST BORINGS SHEET

ORIGINAL SCALE IN INCHES FOR REDUCED PLANS 0 1 2 3

CU 07
EA 202111

DISREGARD PRINTS BEARING EARLIER REVISION DATES 11-01-10 12-03-10

REVISION DATES

SHEET 16 OF 20

FILE => 53-1155-z-ltb01.dgn

USERNAME => s124496 DATE PLOTTED => 29-JUN-2011 TIME PLOTTED => 06:50

DIST	COUNTY	ROUTE	POST MILES TOTAL PROJECT	SHEET No	TOTAL SHEETS
07	LA	710	17.2/26.4	1478	1507

PROFESSIONAL ENGINEER 12-3-10

6-27-11
PLANS APPROVAL DATE

REGISTERED PROFESSIONAL ENGINEER
Gamini Weeratunga
No. GE2403
Exp. 9-30-12
GEOTECHNICAL
STATE OF CALIFORNIA

The State of California or its officers or agents shall not be responsible for the accuracy or completeness of electronic copies of this plan sheet.

REFERENCE: CALTRANS SOIL & ROCK LOGGING, CLASSIFICATION, AND PRESENTATION MANUAL (2010)

CEMENTATION

Description	Criteria
Weak	Crumbles or breaks with handling or little finger pressure.
Moderate	Crumbles or breaks with considerable finger pressure.
Strong	Will not crumble or break with finger pressure.

BOREHOLE IDENTIFICATION

Symbol	Hole Type	Description
Size	A	Auger Boring (hollow or solid stem bucket)
Size	R RW RC P	Rotary drilled boring (conventional) Rotary drilled with self-casing wire-line Rotary core with continuously-sampled, self-casing wire-line Rotary percussion boring (air)
Size	R	Rotary drilled diamond core
Size	HD HA	Hand driven (1-inch soil tube) Hand Auger
●	D	Dynamic Cone Penetration Boring
▲	CPT	Cone Penetration Test (ASTM D 5778)
⬚	O	Other (note on LOTB)

Note: Size in inches.

CONSISTENCY OF COHESIVE SOILS

Description	Shear Strength (tsf)	Pocket Penetrometer Measurement, PP, (tsf)	Torvane Measurement, TV, (tsf)	Vane Shear Measurement, VS, (tsf)
Very Soft	Less than 0.12	Less than 0.25	Less than 0.12	Less than 0.12
Soft	0.12 - 0.25	0.25 - 0.5	0.12 - 0.25	0.12 - 0.25
Medium Stiff	0.25 - 0.5	0.5 - 1	0.25 - 0.5	0.25 - 0.5
Stiff	0.5 - 1	1 - 2	0.5 - 1	0.5 - 1
Very Stiff	1 - 2	2 - 4	1 - 2	1 - 2
Hard	Greater than 2	Greater than 4	Greater than 2	Greater than 2

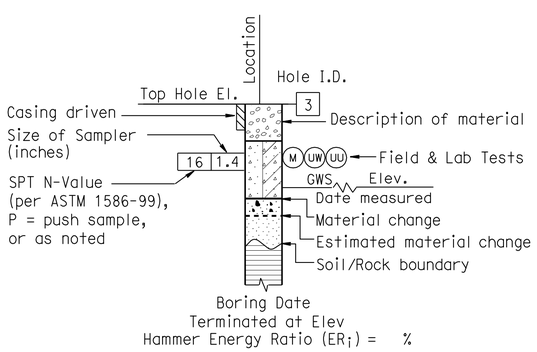

ROTARY BORING

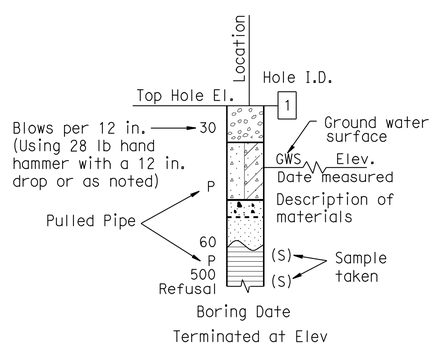

HAND BORING

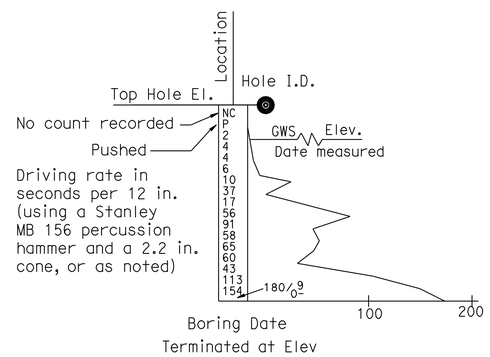

DYNAMIC CONE PENETRATION BORING

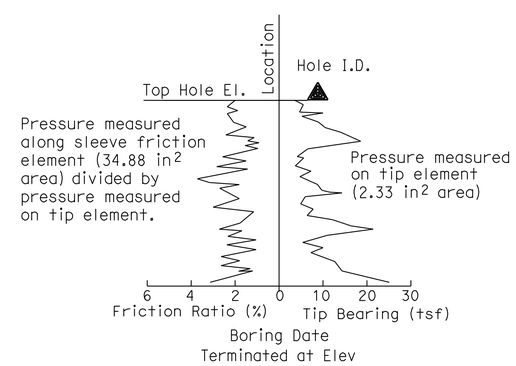

CONE PENETRATION TEST (CPT) BORING

ENGINEERING SERVICES	GEOTECHNICAL SERVICES	STATE OF CALIFORNIA DEPARTMENT OF TRANSPORTATION	DIVISION OF ENGINEERING SERVICES STRUCTURE DESIGN DESIGN BRANCH 21	BRIDGE NO. 53-1155R/L POST MILE 25.21	FLORAL DRIVE UC (WIDEN) LOG OF TEST BORINGS 2 OF 5
	PREPARED BY: F. Nguyen 10/10				

GS LOTB SOIL LEGEND

ORIGINAL SCALE IN INCHES FOR REDUCED PLANS 0 1 2 3

CU 07
EA 202111

DISREGARD PRINTS BEARING EARLIER REVISION DATES

REVISION DATES

SHEET 17 OF 20

FILE => 53-1155-z-ltb02.dgn

USERNAME => s124496 DATE PLOTTED => 29-JUN-2011 TIME PLOTTED => 06:50

REFERENCE: CALTRANS SOIL & ROCK LOGGING, CLASSIFICATION, AND PRESENTATION MANUAL (2010)

DIST	COUNTY	ROUTE	POST MILES TOTAL PROJECT	SHEET No	TOTAL SHEETS
07	LA	710	17.2/26.4	1479	1507

PROFESSIONAL ENGINEER 12-3-10

6-27-11
PLANS APPROVAL DATE

REGISTERED PROFESSIONAL ENGINEER
Gamini Weeratunga
No. GE2403
Exp. 9-30-12
GEOTECHNICAL
STATE OF CALIFORNIA

The State of California or its officers or agents shall not be responsible for the accuracy or completeness of electronic copies of this plan sheet.

GROUP SYMBOLS AND NAMES

Graphic/Symbol	Group Names
GW	Well-graded GRAVEL Well-graded GRAVEL with SAND
GP	Poorly-graded GRAVEL Poorly-graded GRAVEL with SAND
GW-GM	Well-graded GRAVEL with SILT Well-graded GRAVEL with SILT and SAND
GW-GC	Well-graded GRAVEL with CLAY (or SILTY CLAY) Well-graded GRAVEL with CLAY and SAND (or SILTY CLAY and SAND)
GP-GM	Poorly-graded GRAVEL with SILT Poorly-graded GRAVEL with SILT and SAND
GP-GC	Poorly-graded GRAVEL with CLAY (or SILTY CLAY) Poorly-graded GRAVEL with CLAY and SAND (or SILTY CLAY and SAND)
GM	SILTY GRAVEL SILTY GRAVEL with SAND
GC	CLAYEY GRAVEL CLAYEY GRAVEL with SAND
GC-GM	SILTY, CLAYEY GRAVEL SILTY, CLAYEY GRAVEL with SAND
SW	Well-graded SAND Well-graded SAND with GRAVEL
SP	Poorly-graded SAND Poorly-graded SAND with GRAVEL
SW-SM	Well-graded SAND with SILT Well-graded SAND with SILT and GRAVEL
SW-SC	Well-graded SAND with CLAY (or SILTY CLAY) Well-graded SAND with CLAY and GRAVEL (or SILTY CLAY and GRAVEL)
SP-SM	Poorly-graded SAND with SILT Poorly-graded SAND with SILT and GRAVEL
SP-SC	Poorly-graded SAND with CLAY (or SILTY CLAY) Poorly-graded SAND with CLAY and GRAVEL (or SILTY CLAY and GRAVEL)
SM	SILTY SAND SILTY SAND with GRAVEL
SC	CLAYEY SAND CLAYEY SAND with GRAVEL
SC-SM	SILTY, CLAYEY SAND SILTY, CLAYEY SAND with GRAVEL
PT	PEAT
	COBBLES COBBLES and BOULDERS BOULDERS

Graphic/Symbol	Group Names
CL	Lean CLAY Lean CLAY with SAND Lean CLAY with GRAVEL SANDY lean CLAY SANDY lean CLAY with GRAVEL GRAVELLY lean CLAY GRAVELLY lean CLAY with SAND
CL-ML	SILTY CLAY SILTY CLAY with SAND SILTY CLAY with GRAVEL SANDY SILTY CLAY SANDY SILTY CLAY with GRAVEL GRAVELLY SILTY CLAY GRAVELLY SILTY CLAY with SAND
ML	SILT SILT with SAND SILT with GRAVEL SANDY SILT SANDY SILT with GRAVEL GRAVELLY SILT GRAVELLY SILT with SAND
OL	ORGANIC lean CLAY ORGANIC lean CLAY with SAND ORGANIC lean CLAY with GRAVEL SANDY ORGANIC lean CLAY SANDY ORGANIC lean CLAY with GRAVEL GRAVELLY ORGANIC lean CLAY GRAVELLY ORGANIC lean CLAY with SAND
OL	ORGANIC SILT ORGANIC SILT with SAND ORGANIC SILT with GRAVEL SANDY ORGANIC SILT SANDY ORGANIC SILT with GRAVEL GRAVELLY ORGANIC SILT GRAVELLY ORGANIC SILT with SAND
CH	Fat CLAY Fat CLAY with SAND Fat CLAY with GRAVEL SANDY fat CLAY SANDY fat CLAY with GRAVEL GRAVELLY fat CLAY GRAVELLY fat CLAY with SAND
MH	Elastic SILT Elastic SILT with SAND Elastic SILT with GRAVEL SANDY elastic SILT SANDY elastic SILT with GRAVEL GRAVELLY elastic SILT GRAVELLY elastic SILT with SAND
OH	ORGANIC fat CLAY ORGANIC fat CLAY with SAND ORGANIC fat CLAY with GRAVEL SANDY ORGANIC fat CLAY SANDY ORGANIC fat CLAY with GRAVEL GRAVELLY ORGANIC fat CLAY GRAVELLY ORGANIC fat CLAY with SAND
OH	ORGANIC elastic SILT ORGANIC elastic SILT with SAND ORGANIC elastic SILT with GRAVEL SANDY ORGANIC elastic SILT SANDY ORGANIC elastic SILT with GRAVEL GRAVELLY ORGANIC elastic SILT GRAVELLY ORGANIC elastic SILT with SAND
OL/OH	ORGANIC SOIL ORGANIC SOIL with SAND ORGANIC SOIL with GRAVEL SANDY ORGANIC SOIL SANDY ORGANIC SOIL with GRAVEL GRAVELLY ORGANIC SOIL GRAVELLY ORGANIC SOIL with SAND

FIELD AND LABORATORY TESTING

- (C) Consolidation (ASTM D 2435)
- (CL) Collapse Potential (ASTM D 5333)
- (CP) Compaction Curve (CTM 216)
- (CR) Corrosivity Testing (CTM 643, CTM 422, CTM 417)
- (CU) Consolidated Undrained Triaxial (ASTM D 4767)
- (DS) Direct Shear (ASTM D 3080)
- (EI) Expansion Index (ASTM D 4829)
- (M) Moisture Content (ASTM D 2216)
- (OC) Organic Content-% (ASTM D 2974)
- (P) Permeability (CTM 220)
- (PA) Particle Size Analysis (ASTM D 422)
- (PI) Plasticity Index (AASHTO T 90) Liquid Limit (AASHTO T 89)
- (PL) Point Load Index (ASTM D 5731)
- (PM) Pressure Meter
- (R) R-Value (CTM 301)
- (SE) Sand Equivalent (CTM 217)
- (SG) Specific Gravity (AASHTO T 100)
- (SL) Shrinkage Limit (ASTM D 427)
- (SW) Swell Potential (ASTM D 4546)
- (UC) Unconfined Compression-Soil (ASTM D 2166) Unconfined Compression-Rock (ASTM D 2938)
- (UU) Unconsolidated Undrained Triaxial (ASTM D 2850)
- (UW) Unit Weight (ASTM D 4767)

APPARENT DENSITY OF COHESIONLESS SOILS

Description	SPT N_{60} (Blows / 12 in.)
Very Loose	0 - 5
Loose	5 - 10
Medium Dense	10 - 30
Dense	30 - 50
Very Dense	Greater than 50

MOISTURE

Description	Criteria
Dry	No discernable moisture
Moist	Moisture present, but no free water
Wet	Visible free water

PERCENT OR PROPORTION OF SOILS

Description	Criteria
Trace	Particles are present but estimated to be less than 5%
Few	5% - 10%
Little	15% - 25%
Some	30% - 45%
Mostly	50% - 100%

PARTICLE SIZE

Description		Size (in.)
Boulder		Greater than 12
Cobble		3 - 12
Gravel	Coarse	3/4 - 3
	Fine	1/5 - 3/4
Sand	Coarse	1/16 - 1/5
	Medium	1/64 - 1/16
	Fine	1/300 - 1/64
Silt and Clay		Less than 1/300

ENGINEERING SERVICES

GEOTECHNICAL SERVICES
PREPARED BY: F. Nguyen 10/10

STATE OF CALIFORNIA
DEPARTMENT OF TRANSPORTATION

DIVISION OF ENGINEERING SERVICES
STRUCTURE DESIGN
DESIGN BRANCH 21

BRIDGE NO. 53-1155R/L
POST MILE 25.21

FLORAL DRIVE UC (WIDEN)
LOG OF TEST BORINGS 3 OF 5

GS LOTB SOIL LEGEND

ORIGINAL SCALE IN INCHES FOR REDUCED PLANS 0 1 2 3

CU 07
EA 202111

DISREGARD PRINTS BEARING EARLIER REVISION DATES

REVISION DATES

SHEET 18 OF 20

FILE => 53-1155-z-ltb03.dgn

USERNAME => s124096 DATE PLOTTED => 29-JUN-2011 TIME PLOTTED => 06:51

DIST	COUNTY	ROUTE	KILOMETER POST TOTAL PROJECT	SHEET No	TOTAL SHEETS
07	LA	710			

REGISTERED ENGINEER 1-24-05

PLANS APPROVAL DATE

REGISTERED PROFESSIONAL ENGINEER GAMINI C. WEERATUNGA No. 2403 Exp. 9-30-06 GEOTECHNICAL STATE OF CALIFORNIA

The State of California or its officers or agents shall not be responsible for the accuracy or completeness of electronic copies of this plan sheet.

Caltrans Metric

TO ACCOMPANY PLANS DATED 6-27-11

DIVISION OF ENGINEERING SERVICES - GEOTECHNICAL SERVICES

As-Built Log of Test Borings sheet is considered an informational document only. As such, the State of California registration seal with signature, license number and registration certificate expiration date confirm that this is a true and accurate copy of the original document. It does not attest to the accuracy or validity of the information contained in the original document. This drawing is available and presented only for the convenience of any bidder, contractor or other interested party.

DIST.	COUNTY	ROUTE	POST MILES-TOTAL PROJECT	Sheet No.	Total Sheets
07	LA	710	17.2/26.4	1480	1507

PROFESSIONAL ENGINEER 12/03/10 DATE

REGISTERED PROFESSIONAL ENGINEER Gamini Weeratunga No. GE2403 Exp. 9-30-12 GEOTECHNICAL STATE OF CALIFORNIA

FLORAL DRIVE UC (WIDEN)

LOG OF TEST BORINGS 4 OF 5

NOTE: A COPY OF THIS LOG OF TEST BORINGS IS AVAILABLE AT OFFICE OF STRUCTURE MAINTENANCE AND INVESTIGATIONS, SACRAMENTO, CALIFORNIA

CU: 07 EA: 202111

BRIDGE No. 53-1155R/L

Sheet 19 of 20

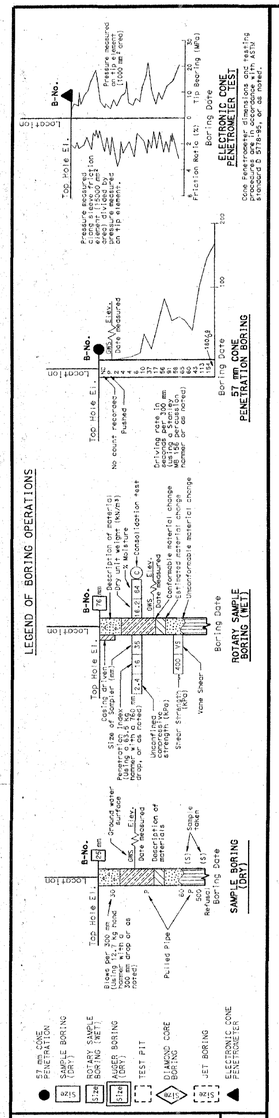

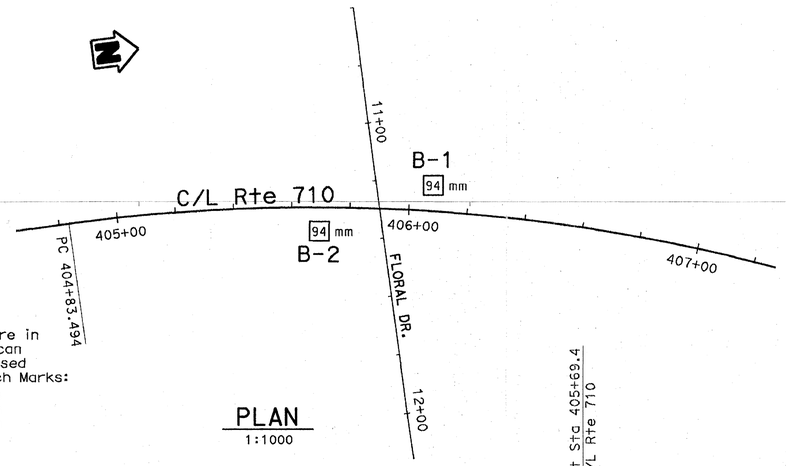

BENCH MARK

Elevations shown hereon are in terms of The North American Vertical Datum of 1998 based locally upon Caltrans Bench Marks:

PRHV6 Elev 99.430 m
PRHV7 Elev 99.160 m
PRHV8 Elev 98.499 m

PLAN

1:1000

LEGEND (SOIL)

21 51 — SA 16.4 18.3 — AL — DS — CR

= Gradation
= Atterberg limits
= Direct Shear
= Corrosion

Moisture content (%)
Dry density (kN/m3)

8.2 m Rt Sta 405+69.4 C/L Rte 710

B-2 — 94 mm — 100.60

101 m — 0.30 m Thick portland ement concrete pavement.
GRAVEL (base material).
SANDY CLAY (CL), olive gray, moist, medium plastic CLAY, medium to coarse grained SAND.

98 m — CLAY with SAND (CL), olive gray, moist, medium plastic, fine grained SAND, trace fine GRAVEL.

95 m — SANDY CLAY (CL), olive gray, moist, low plastic, fine grained SAND, trace fine GRAVEL.

92 m — SANDY CLAY (CL), stiff, reddish brown, moist, low plastic, medium to coarse grained SAND, some GRAVEL up to 25 mm size.

CLAYEY SAND (SC), dense, reddish brown, moist, medium to coarse grained SAND, low plastic CLAY, some GRAVEL up to 25 mm size.

89 m — SILTY SAND to SILTY GRAVEL (SM/GM), dense, light yellowish brown, moist, medium to coarse grained SAND and fine to coarse GRAVEL, low plastic SILT.

SAND to SILTY SAND (SP/SM), dense, light yellowish brown, moist, fine to medium grained SAND, trace SILT, some GRAVEL up to 19 mm size.

86 m

CLAYEY SAND (SC), medium dense, yellowish brown, slightly moist, fine grained SAND, low plastic CLAY.

83 m — SANDY CLAY (CL), medium stiff, yellowish brown, moist, low plastic, fine grained SAND.

CLAYEY SAND/SILTY SAND (SC/SM), medium dense, olive gray, slightly moist, fine grained SAND with low plastic CLAY and SILT.

80 m — CLAYEY SAND (SC), very dense, grayish brown, slightly moist, medium to coarse grained SAND, low plastic CLAY, some fine GRAVEL.

SAND to SILTY SAND (SP/SM), very dense, olive gray to yellowish gray, moist, fine grained SAND, some SILT.

77 m — SILTY SAND (SM), very dense, olive gray, slightly moist, medium to coarse grained SAND, some GRAVEL.

10	35	
66	35	
37	35	
43	35	SA CR
53	35	
13	35	
11	35	
26	51	DS 16.4 18.3
>100	51	DS 19.1 9.5
94	35	
>100	51	

11-18-04

Boring terminated at 23.32 m below the ground surface. No ground water encountered. Borehole was backfilled with cuttings and grout on 11-18-04.

8.9 m Lt Sta 406+08.0 C/L Rte 710

B-1 — 94 mm — 101.60

101 m — 0.30 m Thick portland cement concrete pavement.
CLAYEY SAND (SC), light brown, slightly moist, medium to coarse grained SAND, some GRAVEL.
SANDY CLAY (CL), olive gray, moist, low plastic, fine grained SAND.
Lean CLAY (CL), olive gray, moist, low to medium plastic CLAY, trace fine grained SAND.

98 m

13 51 — SANDY CLAY (CL), stiff, light brown, moist, low plastic, fine grained SAND, trace GRAVEL up to 19 mm size.

95 m — 14 51 — Brick pieces. (FILL?)

11 51 — Reddish brown, some fine GRAVEL.

92 m — 51 51 — CLAYEY SAND (SC), dense, reddish brown, moist, medium to coarse grained SAND, some fine GRAVEL.

54 35 — SILTY SAND to CLAYEY SAND (SM/SC), dense, reddish brown, moist, medium to coarse grained SAND, some GRAVEL up to 12 mm size.

89 m — >100 35 — SA CR — SAND with SILT (SP/SM), dense, grayish brown, moist, medium to coarse grained SAND, trace SILT, some GRAVEL up to 12 mm size.

>100 35 — SILTY SAND to CLAYEY SAND (SM/SC), dense, yellowish gray, moist, medium to coarse grained SAND, some GRAVEL up to 12 mm size.

86 m — 95 35 — SAND with GRAVEL (SP/SM), dense, yellowish gray, moist.

39 35 — SA CR — SILTY SAND (SM), dense, yellowish gray, slightly moist, fine grained SAND, low plastic SILT, some GRAVEL.

83 m — 29 51 — SILTY SAND to SANDY SILT (SM/ML), medium dense to stiff, yellowish gray, slightly moist, fine grained SAND with low plastic SILT.

37 35 — SA CR — SILTY SAND (SM), dense, yellowish gray, slightly moist, fine grained SAND, some GRAVEL up to 12 mm size, 102 mm thick layer of reddish brown CLAYEY SAND (SC).

80 m — 67 51

73 35

77 m — 90 35

11-17-04

Boring terminated at 24.85 m below the ground surface. No ground water encountered. Borehole was backfilled with cuttings and grout on 11-17-04.

404+50 405+50 406+50

PROFILE

HOR. 1:500
VER. 1:100

ALL DIMENSIONS ARE IN METERS UNLESS OTHERWISE SHOWN

ENGINEERING SERVICES	GEOTECHNICAL SERVICES
DRAWN BY	F. Nguyen 01/05
CHECKED BY	G. Weeratunga

FIELD INVESTIGATION BY: G. Weeratunga

STATE OF CALIFORNIA DEPARTMENT OF TRANSPORTATION

DIVISION OF STRUCTURES STRUCTURE DESIGN

BRIDGE NO. 53-1155R/L
KILOMETER POST 25.21

FLORAL DRIVE UC (MEDIAN WIDENING)

LOG OF TEST BORINGS 1 OF 2

CU 07
EA 242601

DISREGARD PRINTS BEARING EARLIER REVISION DATES

REVISION DATES (PRELIMINARY STAGE ONLY) 1-14-05 1-19-05 1-24-05

SHEET OF

ORIGINAL SCALE IN MILLIMETERS FOR REDUCED PLANS 0 10 20 30 40 50 60 70 80 90 100

OGS CIVIL LOG OF TEST BORINGS SHEET (METRIC) (REV. 4/04)

53-1155-z-ltb04.tif

U-0260(5) I-084-1(11)

FED. ROAD DIV. NO.	STATE	PROJ. NO.	FISCAL YEAR	SHEET NO.	TOTAL SHEETS
7	CAL.			264	370

DIST.	COUNTY	ROUTE	SECTION	SHEET NO.	TOTAL SHEETS
VII	LA	167	G	4-7	17-14

FOR DIRECTOR — CHIEF ENGINEER

Date Approved December 22, 1958

TO ACCOMPANY PLANS DATED 6-27-11

DIVISION OF ENGINEERING SERVICES - GEOTECHNICAL SERVICES

As-Built Log of Test Borings sheet is considered an informational document only. As such, the State of California registration seal with signature, license number and registration certificate expiration date confirm that this is a true and accurate copy of the original document. It does not attest to the accuracy or validity of the information contained in the original document. This drawing is available and presented only for the convenience of any bidder, contractor or other interested party.

DIST.	COUNTY	ROUTE	POST MILES-TOTAL PROJECT	Sheet No.	Total Sheets
07	LA	710	17.2/26.4	1481	1507

PROFESSIONAL ENGINEER — DATE 12/03/10

REGISTERED PROFESSIONAL ENGINEER — Gamini Weeratunga — No. GE2403 — Exp. 9-30-12 — GEOTECHNICAL — STATE OF CALIFORNIA

FLORAL DRIVE UC (WIDEN)

LOG OF TEST BORINGS 5 OF 5

NOTE: A COPY OF THIS LOG OF TEST BORINGS IS AVAILABLE AT OFFICE OF STRUCTURE MAINTENANCE AND INVESTIGATIONS, SACRAMENTO, CALIFORNIA

CU: 07
EA: 202111

BRIDGE No. 53-1155R/L

Sheet 20 of 20

AS BUILT PLANS
Contract No. 59-7VC57
Date Completed
Document No. 7000 2275

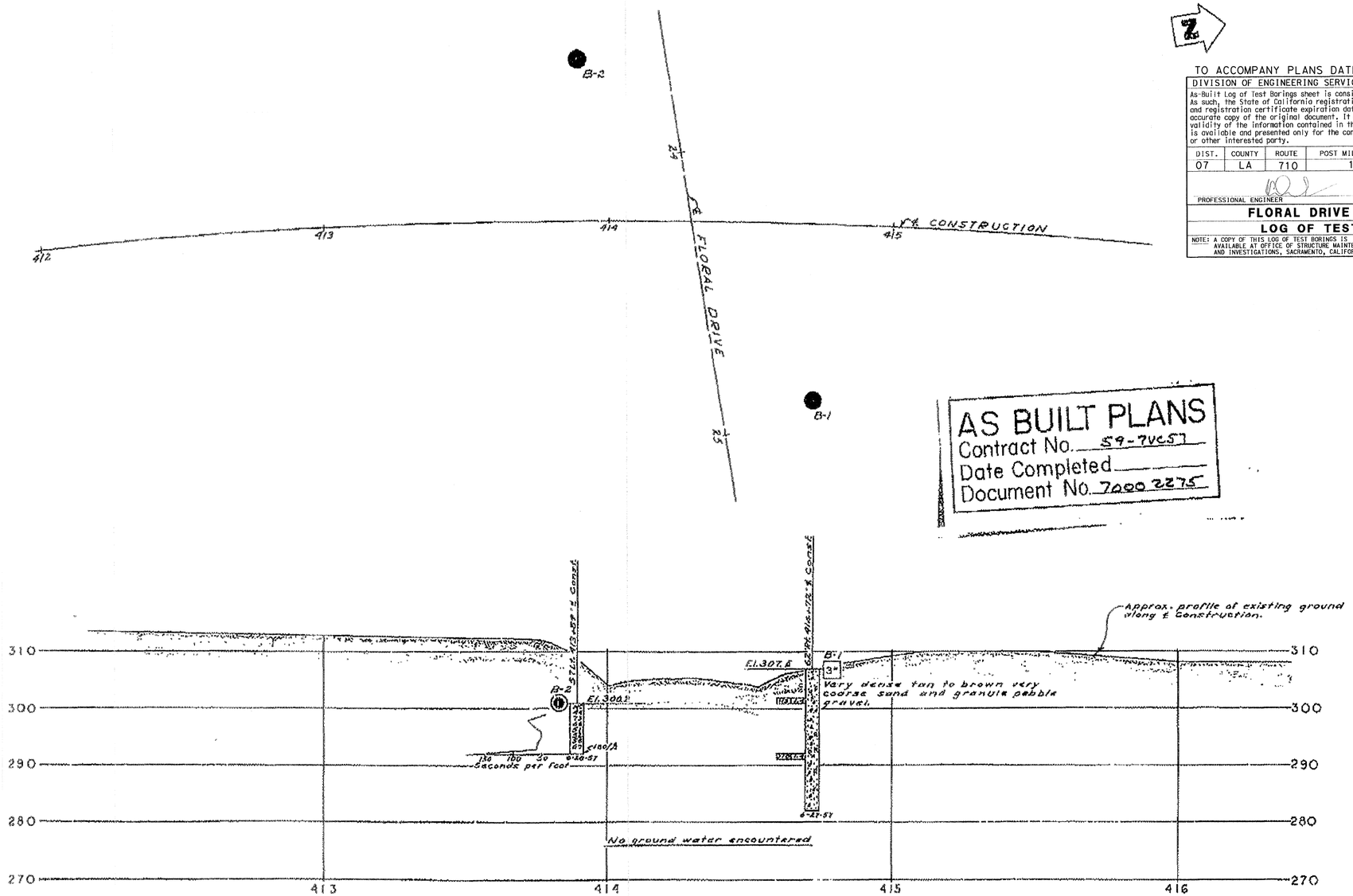

BRIDGE DEPARTMENT

FIELD STUDY: GALLAGHER 8-1-53
DRAWN: HALLAM 8-1-53
CHECKED: 8-1-53
Approved Recommended: Foundation Engineer
Chief Bridge Engineer

CLASSIFICATION OF MATERIAL BASED ON STANDARD GRADE SIZE LIMITS

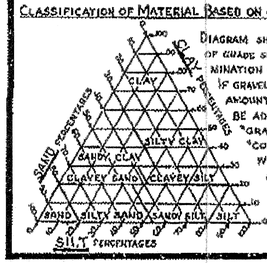

DIAGRAM SHOWING THE BASIS FOR ESTIMATES OF GRADE SIZE DISTRIBUTION USED IN DETERMINATION OF CLASS NAMES.

IF GRAVEL IS PRESENT IN APPRECIABLE AMOUNTS THE TERM "GRAVELLY" MAY BE ADDED TO THE CLASS NAME, VIZ. "GRAVELLY SAND." THE TERMS "COARSE," "MEDIUM" AND "FINE" WHEN USED TO DESCRIBE SAND, SILT AND GRAVEL REFER TO STANDARD GRADE SIZE LIMITS.

LEGEND OF EARTH MATERIALS

- GRAVEL
- SAND
- SILT
- CLAY
- SANDY CLAY OR CLAYEY SAND
- SANDY SILT OR SILTY SAND
- SILTY CLAY OR CLAYEY SILT
- PEAT AND/OR ORGANIC MATTER
- FILL MATERIAL
- IGNEOUS ROCK
- SEDIMENTARY ROCK
- METAMORPHIC ROCK

LEGEND OF BORING OPERATIONS

- PLAN OF ANY BORING
- PENETROMETER
- 2½" CONE PENETROMETER
- SAMPLER BORING (DRY)
- ROTARY BORING (WET)
- AUGER BORING (DRY)
- JET BORING
- CORE BORING
- TEST PIT

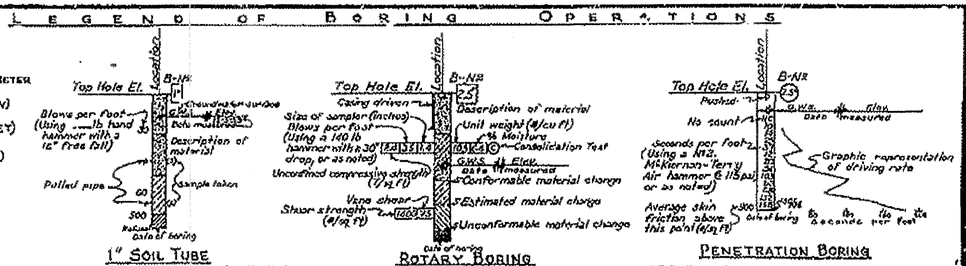

NOTES

The contractor's attention is directed to Section 2, Article (c) of the Standard Specifications and to the Special Provisions accompanying this set of plans.

Classification of earth material as shown on this sheet is based upon field inspection and is not to be construed to imply mechanical analysis.

STATE OF CALIFORNIA
DEPARTMENT OF PUBLIC WORKS
DIVISION OF HIGHWAYS

FLORAL DRIVE UNDERCROSSING

LOG OF TEST BORINGS

SCALE: Horiz. 1" = 20' Vert. 1" = 10' | BRIDGE 53-1155 R-L | FILE | DRAWING B-4049-7

146

53-1155-z-ltb05.tif

DIST	COUNTY	ROUTE	POST MILES TOTAL PROJECT	SHEET No.	TOTAL SHEETS
07	LA	710	17.2/26.4	1482	1507

REGISTERED CIVIL ENGINEER — DATE 03/01/11

6-27-11
PLANS APPROVAL DATE

REGISTERED PROFESSIONAL ENGINEER — Mina Pezeshpour — No. C 55999 — Exp. 12/31/12 — CIVIL — STATE OF CALIFORNIA

The State of California or its officers or agents shall not be responsible for the accuracy or completeness of electronic copies of this plan sheet.

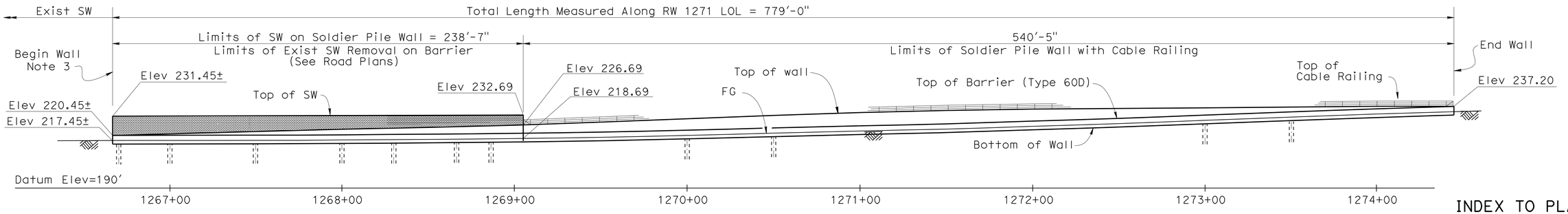

MIRRORED ELEVATION

1" = 30'

CURVE DATA

No	R	Δ	T	L
A	2000.00'	20°40'55"	364.94'	721.93'
B	1945.00'	14°33'44"	248.51'	494.34'
C	649.19'	3°58'50"	22.56'	45.10'
D	2449.19'	3°33'42"	76.15'	152.25'
E	2449.19'	12°00'21"	257.55'	513.21'

Notes:
1. All piles are not shown.
2. Contractor shall field verify location of existing utility lines prior to drilling.
3. Match Soundwall height at the beginning of RW 1271 with Exist Soundwall height.

STANDARD PLAN

DATED MAY 2006

A10A	ACRONYMNS AND ABBREVIATIONS (A-L)
A10B	ACRONYMNS AND ABBREVIATIONS (M-Z)
A10C	SYMBOLS (SHEET 1 OF 2)
A10D	SYMBOLS (SHEET 2 OF 2)
B3-9	RETAINING WALL DETAILS NO. 2
B11-47	CABLE RAILING

Standard Plan sheet number
Detail number

QUANTITIES

STRUCTURE EXCAVATION (SOLDIER PILE WALL)	390	CY
STRUCTURE EXCAVATION (TYPE Z-2)	330	CY
(AERIALLY DEPOSITED LEAD)		
STRUCTURE BACKFILL (SOLDIER PILE WALL)	190	CY
CONCRETE BACKFILL (SOLDIER PILE WALL)	370	CY
LEAN CONCRETE BACKFILL	80	CY
STEEL SOLDIER PILE (HP 14 X 117)	1,720	LF
STEEL SOLDIER PILE (HP 14 X 89)	870	LF
30" DRILLED HOLE	2,670	LF
STRUCTURAL CONCRETE, RETAINING WALL	470	CY
FRACTURED RIB TEXTURE	3,555	SQFT
SOUND WALL (MASONRY BLOCK)	2,030	SQFT
BAR REINFORCING STEEL (RETAINING WALL)	54,000	LB
TIMBER LAGGING	24	MFBM
MINOR CONCRETE (GUTTER)	26	CY
CABLE RAILING	541	LF

INDEX TO PLANS

Sheet No.	
1	General Plan No. 1
2	General Plan No. 2
3	Structure Plan No. 1
4	Structure Plan No. 2
5	Structure Plan No. 3
6	Foundation Plan No. 1
7	Foundation Plan No. 2
8	Retaining Wall Details No. 1
9	Retaining Wall Details No. 2
10	Retaining Wall Details No. 3
11	Soundwall Details No. 1
12	Soundwall Details No. 2
13	Log Of Test Borings 1 of 5
14	Log Of Test Borings 2 of 5
15	Log Of Test Borings 3 of 5
16	Log Of Test Borings 4 of 5
17	Log Of Test Borings 5 of 5

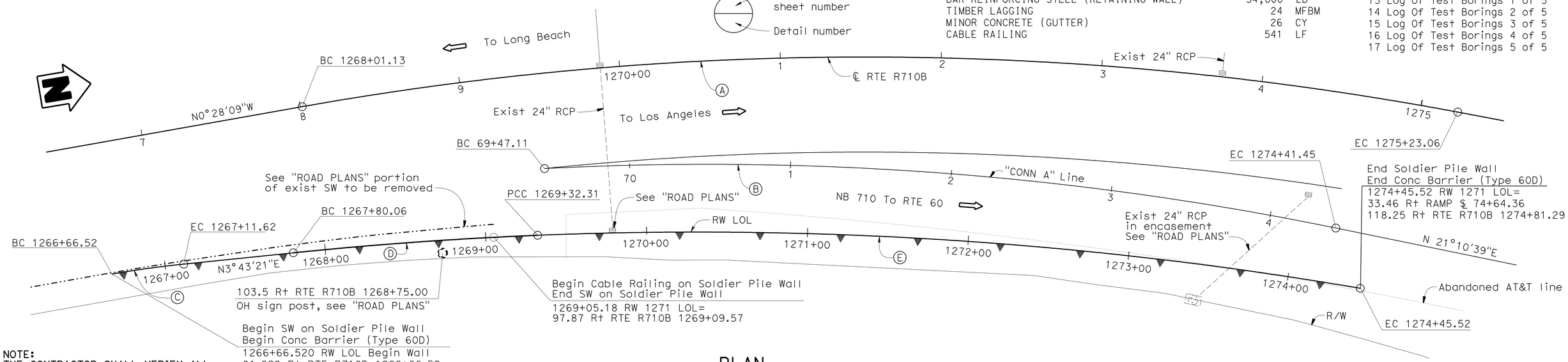

PLAN

1" = 30'

NOTE:
THE CONTRACTOR SHALL VERIFY ALL CONTROLLING FIELD DIMENSIONS BEFORE ORDERING OR FABRICATING ANY MATERIAL.

CHUNG-YUAN WEN, DESIGN ENGINEER	DESIGN	BY M. PEZESHPOUR	CHECKED H. WIN	LOAD & RESISTANCE FACTOR DESIGN — LIVE LOADING: HL93 W/"LOW-BOY"; PERMIT DESIGN VEHICLE
	DETAILS	BY B. JENKO	CHECKED M. PEZESHPOUR	LAYOUT: BY M. PEZESHPOUR — CHECKED H. WIN
	QUANTITIES	BY H. WIN	CHECKED C. LIM	SPECIFICATIONS: BY K. ELLINGSON — PLANS AND SPECS COMPARED K. ELLINGSON

ORIGINAL SCALE IN INCHES FOR REDUCED PLANS 0 1 2 3

STATE OF CALIFORNIA
DEPARTMENT OF TRANSPORTATION

DIVISION OF ENGINEERING SERVICES
STRUCTURE DESIGN
DESIGN BRANCH 21

BRIDGE NO. 53E0158
POST MILE 23.99

RETAINING WALL 1271
GENERAL PLAN NO. 1

UNIT: 3623
PROJECT NUMBER & PHASE: 0700020869 & 1 CONTRACT NO.: 202111

DISREGARD PRINTS BEARING EARLIER REVISION DATES

REVISION DATES: 8-1-10 | 3-1-11 | 1-4-11

SHEET 1 OF 17

USERNAME => s6124436 DATE PLOTTED => 29-JUN-2011 TIME PLOTTED => 06:51

STRUCTURES DESIGN GENERAL PLAN SHEET (ENGLISH) (REV.09-01-10)

FILE => 53-E0158-a-gp01.dgn

DIST	COUNTY	ROUTE	POST MILES TOTAL PROJECT	SHEET No.	TOTAL SHEETS
07	LA	710	17.2/26.4	1483	1507

REGISTERED CIVIL ENGINEER — DATE 03/01/11

6-27-11
PLANS APPROVAL DATE

REGISTERED PROFESSIONAL ENGINEER — Mina Pezeshpour — No. C 55999 — Exp. 12/31/12 — CIVIL — STATE OF CALIFORNIA

The State of California or its officers or agents shall not be responsible for the accuracy or completeness of electronic copies of this plan sheet.

GENERAL NOTES

DESIGN: AASHTO Standard Specifications for Highway Bridges dated 1996 with Interim Revisions and as supplemented by Bridge Design Specifications (CALTRANS)

LOADING: Level ground with surcharge (240psf); Max. 10ft Soundwall on top of Retaining Wall

SOIL PARAMETER: (For determination of lateral earth pressures)
$\theta = 32°$ $\gamma = 125$ pcf C = 50psf

REINFORCED CONCRETE: f_c = 3.6 Ksi (Concrete compressive strength at 28 days)
f_y = 60 Ksi (Yield strength of reinforcement)

STRUCTURAL TIMBER: Treated Douglas Fir, Grade No. 1 or better.
Lagging members shall be full sawn.

STRUCTURAL STEEL:
- Steel Piles: ASTM Designation A709/A709M, Grade 50 [345] or A572/A572M, Grade 50 [345].
- Plates: ASTM Designation A709/A709M, Grade 36 [250] or A360/A36M, Grade 36.
- Welded Pipe: ASTM Designation A53.

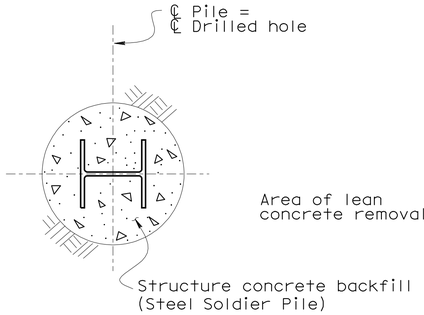

SECTION A-A
¾"=1'-0"

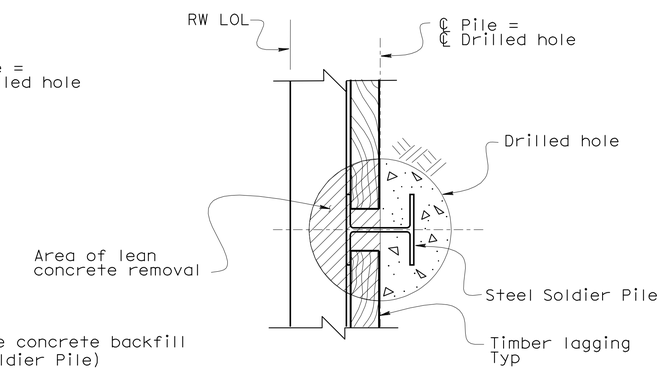

SECTION B-B
¾"=1'-0"

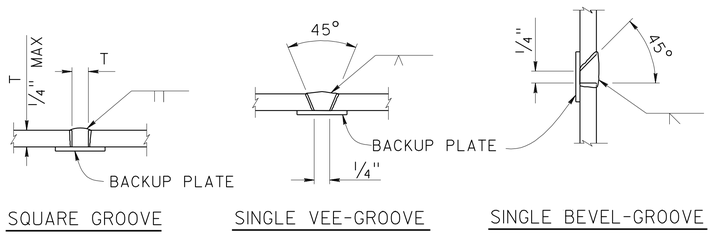

PILE WELDING DETAIL-BUTT JOINTS
NO SCALE

NOTES:
a. Single vee-groove and square groove permitted for all positions
b. Single bevel-groove permitted for horizonal joints only
c. For purposes of non-destructive testing, pile shall be considered a main tension member from top of pile to 2 meters below bottom of lagging. The remaining embedded portion of the pile shall be considered a main compression member.

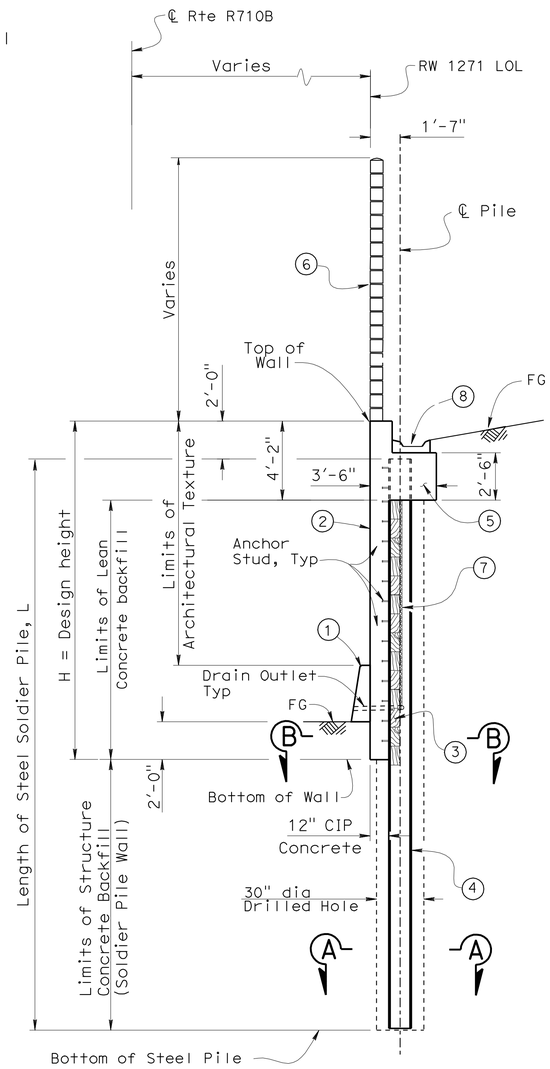

TYPICAL SECTION
AT SOLDIER PILE WALL
WITH SOUNDWALL
¼"=1'-0"
B3-9

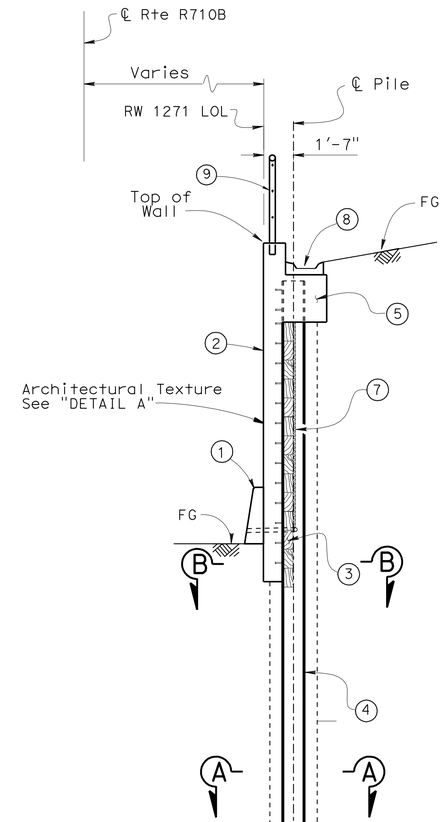

TYPICAL SECTION
AT SOLDIER PILE WALL
WITH CABLE RAILING
¼"=1'-0"
B3-9 B11-47

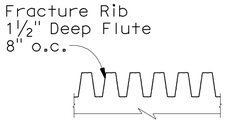

DETAIL A
NO SCALE

Notes:
1. Concrete Barrier (Type 60D) See "ROAD PLANS"
2. CIP Concrete Facing with Fracture Rib Texture
3. 6" x 12" Treated Timber Lagging
4. Steel Soldier Pile
5. Concrete Pile Cap
6. Masonry Block Soundwall
7. Geocomposite Drain
8. Gutter
9. Cable Railing

Note:
For details not shown, see "TYPICAL SECTION AT SOLDIER PILE WALL WITH SOUNDWALL"

NOTE:
THE CONTRACTOR SHALL VERIFY ALL CONTROLLING FIELD DIMENSIONS BEFORE ORDERING OR FABRICATING ANY MATERIAL.

CHUNG-YUAN WEN, DESIGN ENGINEER	DESIGN	BY M. PEZESHPOUR	CHECKED H. WIN	LOAD & RESISTANCE FACTOR DESIGN — LIVE LOADING: HL93 W/"LOW-BOY"; PERMIT DESIGN VEHICLE
	DETAILS	BY B. JENKO	CHECKED M. PEZESHPOUR	LAYOUT: BY M. PEZESHPOUR — CHECKED H. WIN
	QUANTITIES	BY H. WIN	CHECKED C. LIM	SPECIFICATIONS: BY K. ELLINGSON — PLANS AND SPECS COMPARED K. ELLINGSON

ORIGINAL SCALE IN INCHES FOR REDUCED PLANS 0 1 2 3

STATE OF CALIFORNIA
DEPARTMENT OF TRANSPORTATION

DIVISION OF ENGINEERING SERVICES
STRUCTURE DESIGN
DESIGN BRANCH 21

BRIDGE NO. 53E0158
POST MILE 23.99

RETAINING WALL 1271
GENERAL PLAN NO. 2

UNIT: 3623
PROJECT NUMBER & PHASE: 0700020869 & 1 CONTRACT NO.: 202111

DISREGARD PRINTS BEARING EARLIER REVISION DATES → REVISION DATES 8-5-10 11-15-10 3-1-11

SHEET 2 OF 17

USERNAME => s124496 DATE PLOTTED => 29-JUN-2011 TIME PLOTTED => 06:51

STRUCTURES DESIGN GENERAL PLAN SHEET (ENGLISH) (REV.09-01-10)

FILE => 53-E0158-a-gp02.dgn

DIST	COUNTY	ROUTE	POST MILES TOTAL PROJECT	SHEET No.	TOTAL SHEETS
07	LA	710	17.2/26.4	1484	1507

REGISTERED CIVIL ENGINEER — DATE 03/01/11

6-27-11
PLANS APPROVAL DATE

REGISTERED PROFESSIONAL ENGINEER — Mina Pezeshpour — No. C 55999 — Exp. 12/31/12 — CIVIL — STATE OF CALIFORNIA

The State of California or its officers or agents shall not be responsible for the accuracy or completeness of electronic copies of this plan sheet.

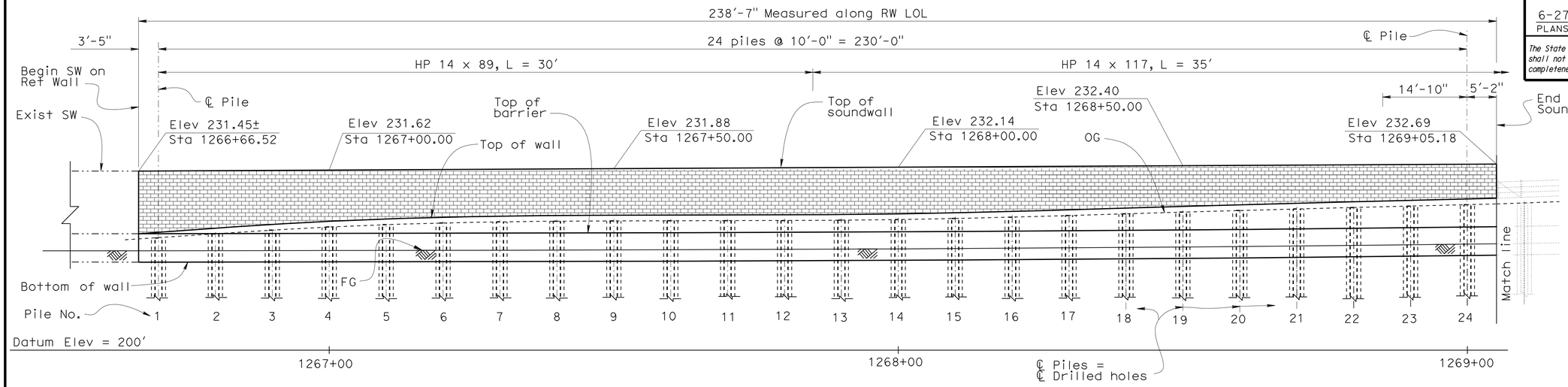

DEVELOPED MIRROR ELEVATION

1" = 10'

STATION	PILE NO.	TOP OF WALL ELEVATION	FINISHED GRADE ELEVATION
1266+66.52	---	220.45±	217.45±
1266+70.00	1	220.54	217.46
1266+80.00	2	220.80	217.47
1266+90.00	3	221.06	217.49
1267+00.00	4	221.33	217.51
1267+10.00	5	221.59	217.52
1267+20.00	6	221.85	217.54
1267+30.00	7	222.11	217.56
1267+40.00	8	222.37	217.57
1267+50.00	9	222.63	217.59
1267+60.00	10	222.89	217.60
1267+70.00	11	223.16	217.61
1267+80.00	12	223.42	217.65
1267+90.00	13	223.68	217.72
1268+00.00	14	223.94	217.78
1268+10.00	15	224.20	217.85
1268+20.00	16	224.46	217.92
1268+30.00	17	224.72	218.00
1268+40.00	18	224.99	218.07
1268+50.00	19	225.25	218.14
1268+60.00	20	225.51	218.23
1268+70.00	21	225.77	218.32
1268+80.00	22	226.03	218.41
1268+90.00	23	226.29	218.52
1269+00.00	24	226.55	218.62
1269+05.18	--	226.69	218.69

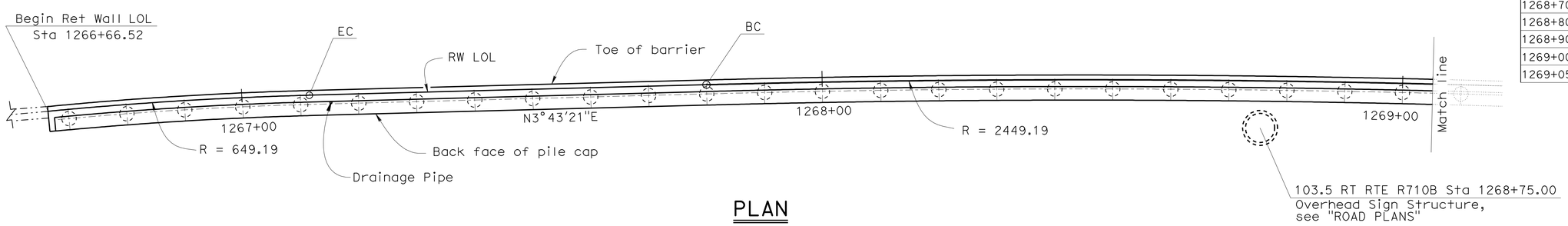

PLAN

1" = 10'

NOTES:

⊕ - denotes 30"ø drilled holes

For drainage pipe details, see "SECTION G-G" on "RETAINING WALL DETAILS NO. 3" sheet

NOTE:
THE CONTRACTOR SHALL VERIFY ALL CONTROLLING FIELD DIMENSIONS BEFORE ORDERING OR FABRICATING ANY MATERIAL.

	BY	CHECKED
DESIGN	M. PEZESHPOUR	H. WIN
DETAILS	B. JENKO	M. PEZESHPOUR
QUANTITIES	H. WIN	C. LIM

STATE OF CALIFORNIA
DEPARTMENT OF TRANSPORTATION

DIVISION OF ENGINEERING SERVICES
STRUCTURE DESIGN
DESIGN BRANCH 21

BRIDGE NO. 53E0158
POST MILE 23.99

RETAINING WALL 1271
STRUCTURE PLAN NO. 1

STRUCTURES DESIGN DETAIL SHEET (ENGLISH) (REV. 09-01-10)

ORIGINAL SCALE IN INCHES FOR REDUCED PLANS 0 1 2 3

UNIT: 3623
PROJECT NUMBER & PHASE: 0700020869 & 1 CONTRACT NO.: 202111

DISREGARD PRINTS BEARING EARLIER REVISION DATES

REVISION DATES: 8-2-10 11-16-10 3-1-11

SHEET 3 OF 17

FILE => 53-E0158-c-sp01.dgn

USERNAME => s124496 DATE PLOTTED => 29-JUN-2011 TIME PLOTTED => 06:51

DIST	COUNTY	ROUTE	POST MILES TOTAL PROJECT	SHEET No.	TOTAL SHEETS
07	LA	710	17.2/26.4	1485	1507

REGISTERED CIVIL ENGINEER — DATE 03/01/11

6-27-11
PLANS APPROVAL DATE

REGISTERED PROFESSIONAL ENGINEER — Mina Pezeshpour — No. C 55999 — Exp. 12/31/12 — CIVIL — STATE OF CALIFORNIA

The State of California or its officers or agents shall not be responsible for the accuracy or completeness of electronic copies of this plan sheet.

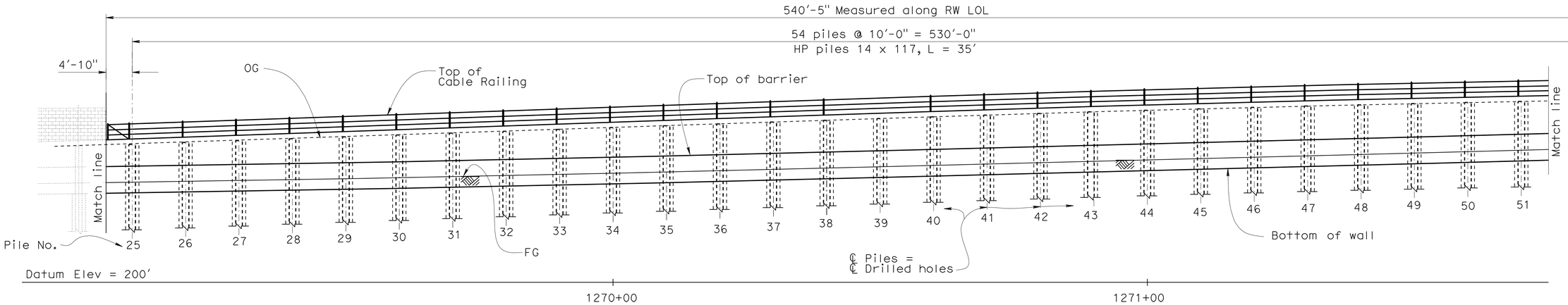

DEVELOPED MIRROR ELEVATION

1" = 10'

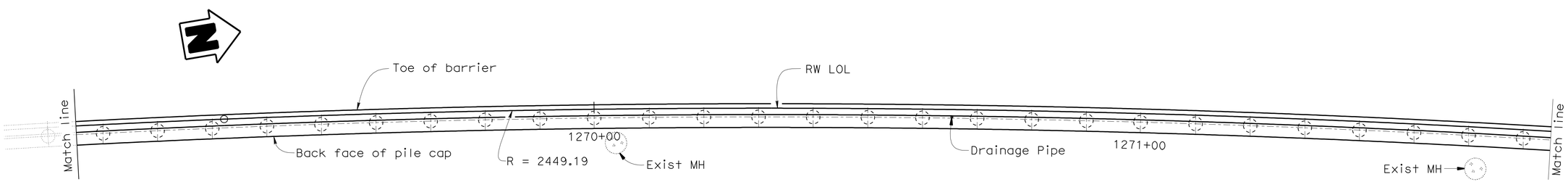

PLAN

1" = 10'

STATION	PILE NO.	TOP OF WALL ELEVATION	FINISHED GRADE ELEVATION
1269+10.00	25	226.86	218.76
1269+20.00	26	227.21	218.90
1269+30.00	27	227.56	219.05
1269+40.00	28	227.91	219.20
1269+50.00	29	228.27	219.35
1269+60.00	30	228.62	219.55
1269+70.00	31	228.97	219.75
1269+80.00	32	229.32	219.97
1269+90.00	33	229.67	220.21
1270+00.00	34	230.02	220.45
1270+10.00	35	230.38	220.70
1270+20.00	36	230.73	220.95
1270+30.00	37	231.08	221.19
1270+40.00	38	231.43	221.44

STATION	PILE NO.	TOP OF WALL ELEVATION	FINISHED GRADE ELEVATION
1270+50.00	39	231.78	221.69
1270+60.00	40	232.13	221.94
1270+70.00	41	232.49	222.19
1270+80.00	42	232.84	222.44
1270+90.00	43	233.19	222.69
1271.00.00	44	233.54	222.94
1271+10.00	45	233.89	223.16
1271+20.00	46	234.24	223.39
1271+30.00	47	234.60	223.62
1271+40.00	48	234.95	223.85
1271+50.00	49	235.30	224.08
1271+60.00	50	235.36	224.38
1271+70.00	51	235.43	224.69

NOTES:

⊕ - denotes 30"ø drilled holes

For drainage pipe details, see "SECTION G-G" on "RETAINING WALL DETAILS NO. 3" sheet

NOTE:
THE CONTRACTOR SHALL VERIFY ALL CONTROLLING FIELD DIMENSIONS BEFORE ORDERING OR FABRICATING ANY MATERIAL.

	BY	CHECKED
DESIGN	M. PEZESHPOUR	H. WIN
DETAILS	B. JENKO	M. PEZESHPOUR
QUANTITIES	H. WIN	C. LIM

STATE OF CALIFORNIA
DEPARTMENT OF TRANSPORTATION

DIVISION OF ENGINEERING SERVICES
STRUCTURE DESIGN
DESIGN BRANCH 21

BRIDGE NO. 53E0158
POST MILE 23.99

RETAINING WALL 1271
STRUCTURE PLAN NO. 2

STRUCTURES DESIGN DETAIL SHEET (ENGLISH) (REV. 09-01-10)

ORIGINAL SCALE IN INCHES FOR REDUCED PLANS 0 1 2 3

UNIT: 3623
PROJECT NUMBER & PHASE: 0700020869 & 1 CONTRACT NO.: 202111

DISREGARD PRINTS BEARING EARLIER REVISION DATES

REVISION DATES: 8-11-10 9-1-10 3-1-11

SHEET 4 OF 17

FILE => 53-E0158-c-sp02.dgn

USERNAME => s124496 DATE PLOTTED => 29-JUN-2011 TIME PLOTTED => 06:51

DIST	COUNTY	ROUTE	POST MILES TOTAL PROJECT	SHEET No.	TOTAL SHEETS
07	LA	710	17.2/26.4	1486	1507

REGISTERED CIVIL ENGINEER — DATE 03/01/11

6-27-11
PLANS APPROVAL DATE

REGISTERED PROFESSIONAL ENGINEER — Mina Pezeshpour — No. C 55999 — Exp. 12/31/12 — CIVIL — STATE OF CALIFORNIA

The State of California or its officers or agents shall not be responsible for the accuracy or completeness of electronic copies of this plan sheet.

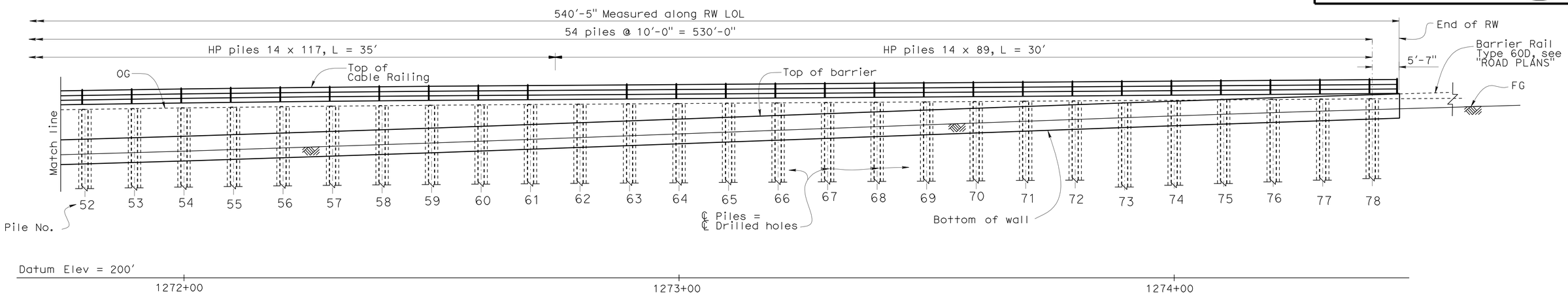

DEVELOPED MIRROR ELEVATION

1" = 10'

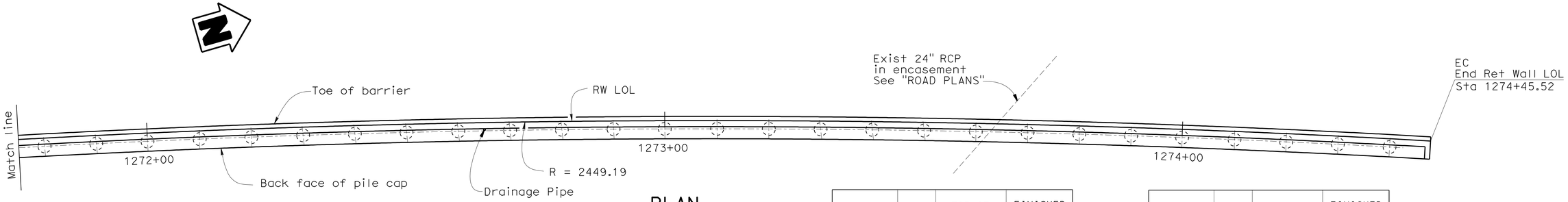

PLAN

1" = 10'

STATION	PILE NO.	TOP OF WALL ELEVATION	FINISHED GRADE ELEVATION
1271+80.00	52	235.49	225.00
1271+90.00	53	235.56	225.31
1272+00.00	54	235.62	225.63
1272+10.00	55	235.69	225.94
1272+20.00	56	235.75	226.25
1272+30.00	57	235.81	226.56
1272+40.00	58	235.88	226.89
1272+50.00	59	235.94	227.21
1272+60.00	60	236.01	227.58
1272+70.00	61	236.07	227.95
1272+80.00	62	236.14	228.33
1272+90.00	63	236.20	228.72
1273+00.00	64	236.26	229.10
1273+10.00	65	236.33	229.47

STATION	PILE NO.	TOP OF WALL ELEVATION	FINISHED GRADE ELEVATION
1273+20.00	66	236.39	229.84
1273+30.00	67	236.46	230.21
1273+40.00	68	236.52	230.58
1273+50.00	69	236.59	230.95
1273+60.00	70	236.65	231.32
1273+70.00	71	236.71	231.69
1273+80.00	72	236.78	232.05
1273+90.00	73	236.84	232.40
1274+00.00	74	236.91	232.75
1274+10.00	75	236.97	233.07
1274+20.00	76	237.04	233.39
1274+30.00	77	237.10	233.73
1274+40.00	78	237.16	234.10
1274+45.52	---	237.20	234.30

NOTES:

⊕ - denotes 30"ø drilled holes

For drainage pipe details, see "SECTION G-G" on "RETAINING WALL DETAILS NO. 3" sheet

NOTE:
THE CONTRACTOR SHALL VERIFY ALL CONTROLLING FIELD DIMENSIONS BEFORE ORDERING OR FABRICATING ANY MATERIAL.

	BY	CHECKED
DESIGN	M. PEZESHPOUR	H. WIN
DETAILS	B. JENKO	M. PEZESHPOUR
QUANTITIES	H. WIN	C. LIM

STATE OF CALIFORNIA
DEPARTMENT OF TRANSPORTATION

DIVISION OF ENGINEERING SERVICES
STRUCTURE DESIGN
DESIGN BRANCH 21

BRIDGE NO. 53E0158
POST MILE 23.99

RETAINING WALL 1271
STRUCTURE PLAN NO. 3

STRUCTURES DESIGN DETAIL SHEET (ENGLISH) (REV. 09-01-10)

ORIGINAL SCALE IN INCHES FOR REDUCED PLANS 0 1 2 3

UNIT: 3623
PROJECT NUMBER & PHASE: 0700020869 & 1 CONTRACT NO.: 202111

DISREGARD PRINTS BEARING EARLIER REVISION DATES

REVISION DATES: 8-9-10 3-1-11 1-4-11

SHEET 5 OF 17

FILE => 53-E0158-c-sp03.dgn

USERNAME => s124496 DATE PLOTTED => 29-JUN-2011 TIME PLOTTED => 06:51

DIST	COUNTY	ROUTE	POST MILES TOTAL PROJECT	SHEET No.	TOTAL SHEETS
07	LA	710	17.2/26.4	1478	1507

REGISTERED CIVIL ENGINEER — DATE 03/01/11

6-27-11
PLANS APPROVAL DATE

REGISTERED PROFESSIONAL ENGINEER — Mina Pezeshpour — No. C 55999 — Exp. 12/31/12 — CIVIL — STATE OF CALIFORNIA

The State of California or its officers or agents shall not be responsible for the accuracy or completeness of electronic copies of this plan sheet.

CURVE DATA				
No.	R	Δ	T	L
A	2000.00	20°40′55″	364.94	721.93
B	1945.00	14°33′44″	248.51	494.34
C	649.19	3°58′50″	22.56	45.10
D	2449.19	3°33′42″	76.15	152.25
E	2449.19	12°00′21″	257.55	513.21

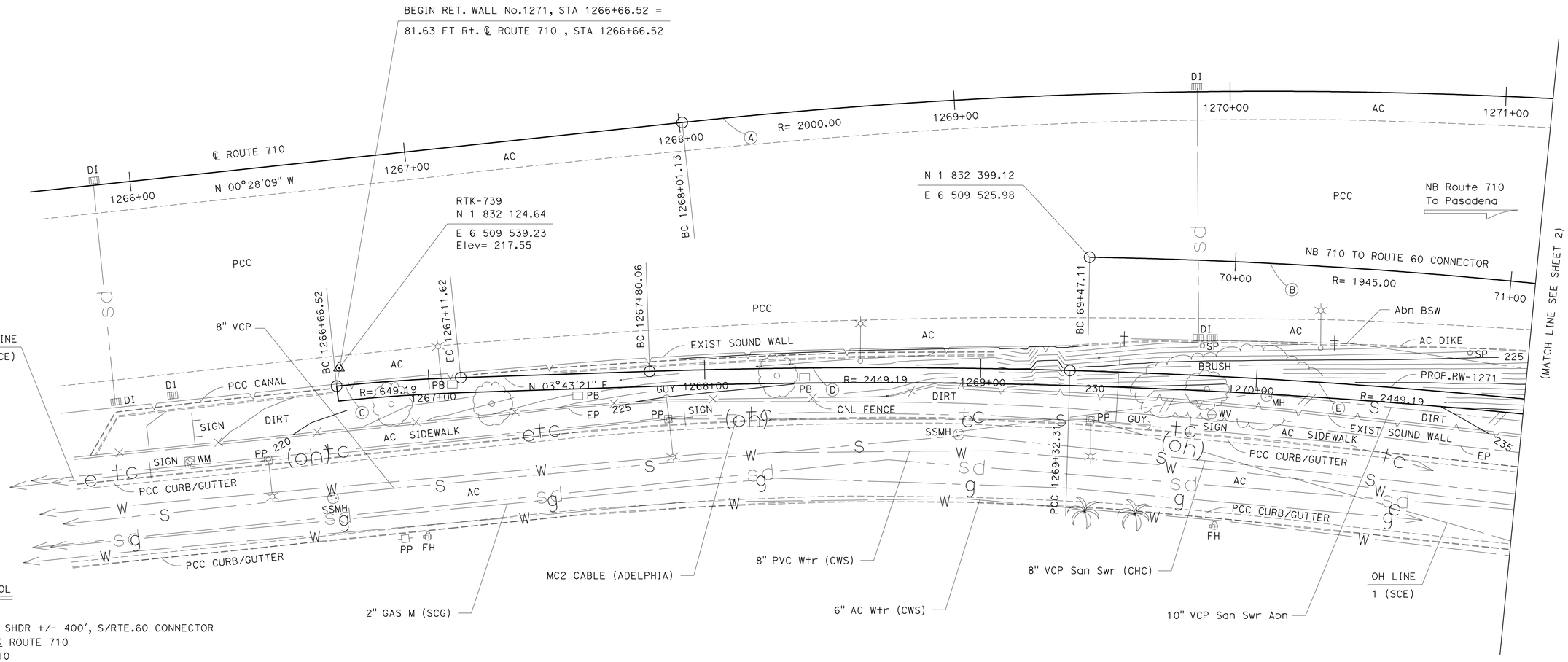

SURVEY CONTROL

RTK-739

FND PK NB710 SHDR +/- 400′, S/RTE.60 CONNECTOR
75.17 Ft Rt ℄ ROUTE 710
Sta 1266+68.10
N 1 832 124.64
E 6 509 539.23
Elev= 217.55

PRHV-740 (Shown On Sheet 2)

FND PK In NB 710 SHDR
68.57 Ft Rt ℄ ROUTE 710
Sta 1274+46.66
N 1 832 871.04
E 6 509 626.26
Elev= 235.72

NOTES:

UNDERGROUND UTILITIES AS SHOWN ARE APPROXIMATE

NOTE:
THE CONTRACTOR SHALL VERIFY ALL CONTROLLING FIELD DIMENSIONS BEFORE ORDERING OR FABRICATING ANY MATERIAL.

PRELIMINARY INVESTIGATION SECTION

SCALE	VERT.DATUM NAVD88	PHOTOGRAMMETRY AS OF: X			
1"=20′	HORZ.DATUM NAD83 (92)	SURVEYED	BY DISTRICT 07	CHECKED	BY T.PHUNG 06/2010
ALIGNMENT TIES	DIST.TRAVERSE SHEETS	DRAFTED	BY V.PHAM 07/2010	CHECKED	BY S.ALIVIO 07/2010

	BY	CHECKED
DESIGN	M. PEZESHPOUR	H. WIN
DETAILS	B. JENKO	M. PEZESHPOUR
QUANTITIES	H. WIN	C. LIM

STATE OF CALIFORNIA
DEPARTMENT OF TRANSPORTATION

DIVISION OF ENGINEERING SERVICES
STRUCTURE DESIGN
DESIGN BRANCH 21

BRIDGE NO. 53E0158
POST MILE 23.99

RETAINING WALL 1271
FOUNDATION PLAN NO. 1

STRUCTURES FOUNDATION PLAN SHEET (ENGLISH) (REV. 09-01-10)

ORIGINAL SCALE IN INCHES FOR REDUCED PLANS 0 1 2 3

UNIT: 3623
PROJECT NUMBER & PHASE: 0700020869 & 1 CONTRACT NO.: 202111

DISREGARD PRINTS BEARING EARLIER REVISION DATES → 07/27/10 08/23/10 01/03/11 03/01/11

SHEET 6 OF 17

FILE => 53-E0158-e-fdp101.dgn

DIST	COUNTY	ROUTE	POST MILES TOTAL PROJECT	SHEET No.	TOTAL SHEETS
07	LA	710	17.2/26.4	1488	1507

REGISTERED CIVIL ENGINEER — DATE 03/01/11

6-27-11
PLANS APPROVAL DATE

REGISTERED PROFESSIONAL ENGINEER — Mina Pezeshpour — No. C 55999 — Exp. 12/31/12 — CIVIL — STATE OF CALIFORNIA

The State of California or its officers or agents shall not be responsible for the accuracy or completeness of electronic copies of this plan sheet.

CURVE DATA				
No.	R	Δ	T	L
A	2000.00	20°40′55"	364.94	721.93
B	1945.00	14°33′44"	248.51	494.34
E	2449.19	12°00′21"	257.55	513.21

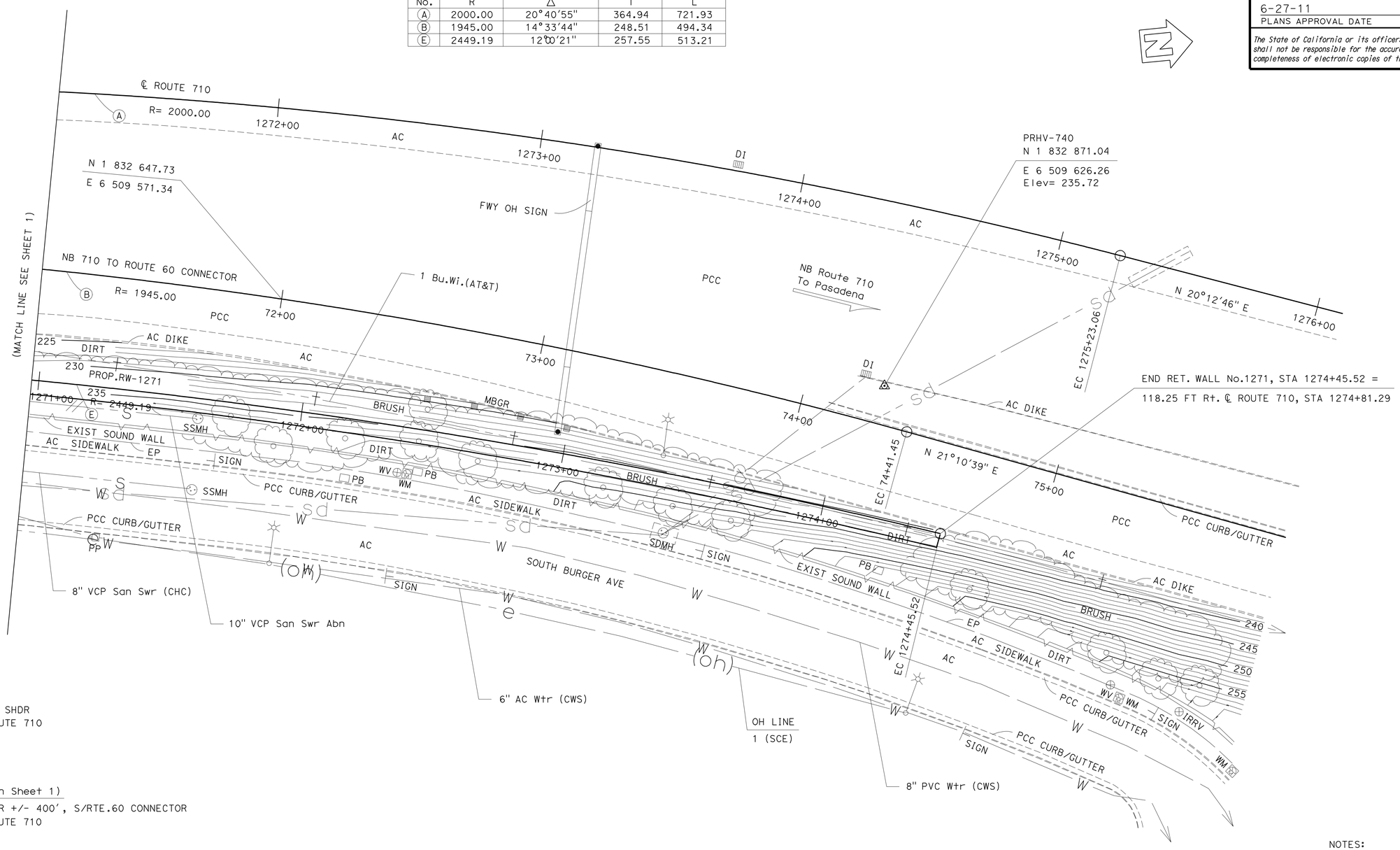

SURVEY CONTROL

PRHV-740

FND PK In NB 710 SHDR
68.57 Ft Rt ℄ ROUTE 710
Sta 1274+46.66
N 1 832 871.04
E 6 509 626.26
Elev= 235.72

RTK-739 (Shown On Sheet 1)

FND PK NB710 SHDR +/- 400′, S/RTE.60 CONNECTOR
75.17 Ft Rt ℄ ROUTE 710
Sta 1266+68.10
N 1 832 124.64
E 6 509 539.23
Elev= 217.55

NOTE:
THE CONTRACTOR SHALL VERIFY ALL CONTROLLING FIELD DIMENSIONS BEFORE ORDERING OR FABRICATING ANY MATERIAL.

NOTES:

UNDERGROUND UTILITIES AS SHOWN ARE APPROXIMATE

PRELIMINARY INVESTIGATION SECTION

SCALE	VERT.DATUM NAVD88	PHOTOGRAMMETRY AS OF: X			
1"=20′	HORZ.DATUM NAD83 (92)	SURVEYED	BY DISTRICT 07	CHECKED	BY T.PHUNG 06/2010
ALIGNMENT TIES	DIST.TRAVERSE SHEETS	DRAFTED	BY V.PHAM 07/2010	CHECKED	BY S.ALIVIO 07/2010

	BY	CHECKED
DESIGN	M. PEZESHPOUR	H. WIN
DETAILS	B. JENKO	M. PEZESHPOUR
QUANTITIES	H. WIN	C. LIM

STATE OF CALIFORNIA
DEPARTMENT OF TRANSPORTATION

DIVISION OF ENGINEERING SERVICES
STRUCTURE DESIGN
DESIGN BRANCH 21

BRIDGE NO. 53E0158
POST MILE 23.99

RETAINING WALL 1271
FOUNDATION PLAN NO. 2

STRUCTURES FOUNDATION PLAN SHEET (ENGLISH) (REV. 09-01-10)

ORIGINAL SCALE IN INCHES FOR REDUCED PLANS 0 1 2 3

UNIT: 3623
PROJECT NUMBER & PHASE: 0700020869 & 1 CONTRACT NO.: 202111

DISREGARD PRINTS BEARING EARLIER REVISION DATES → 01/21/10 08/23/10 01/03/11 03/01/11

SHEET 7 OF 17

FILE => 53-E0158-e-fdpl02.dgn

DIST	COUNTY	ROUTE	POST MILES TOTAL PROJECT	SHEET No.	TOTAL SHEETS
07	LA	710	17.2/26.4	1489	1507

REGISTERED CIVIL ENGINEER — DATE 03/01/11

6-27-11
PLANS APPROVAL DATE

REGISTERED PROFESSIONAL ENGINEER — Mina Pezeshpour — No. C 55999 — Exp. 12/31/12 — CIVIL — STATE OF CALIFORNIA

The State of California or its officers or agents shall not be responsible for the accuracy or completeness of electronic copies of this plan sheet.

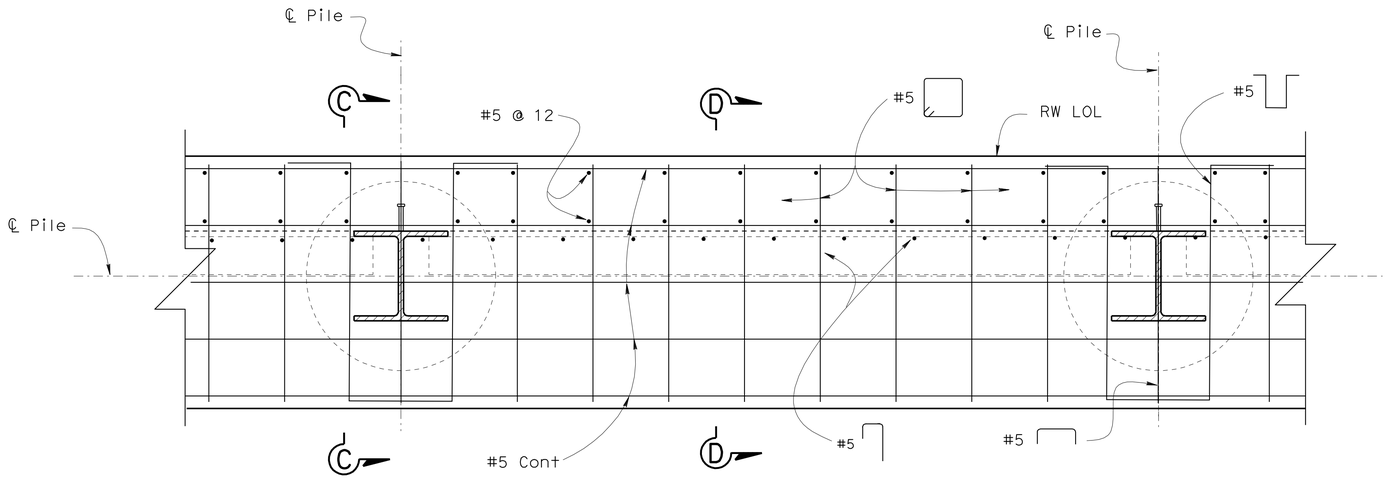

PILE CAP PART PLAN
1" = 1'-0"

Note:
SW Reinf not shown.

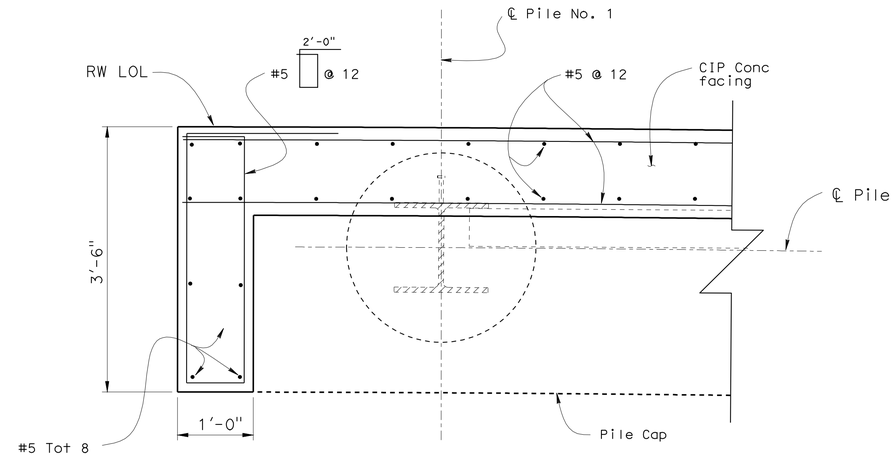

BEGIN/END WALL DETAIL
1" = 1'-0"

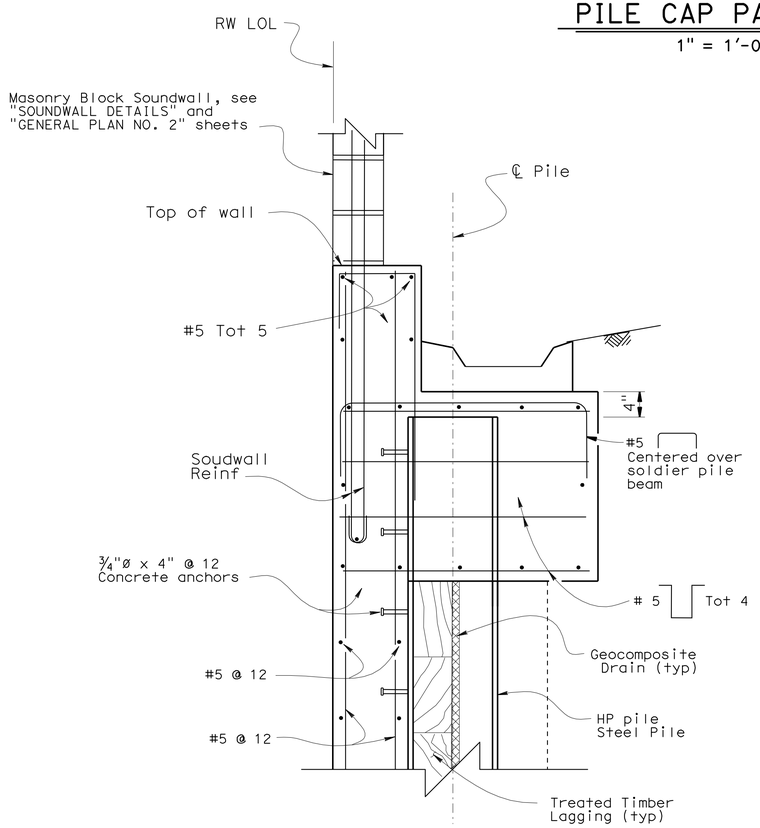

SECTION C-C
1" = 1'-0"

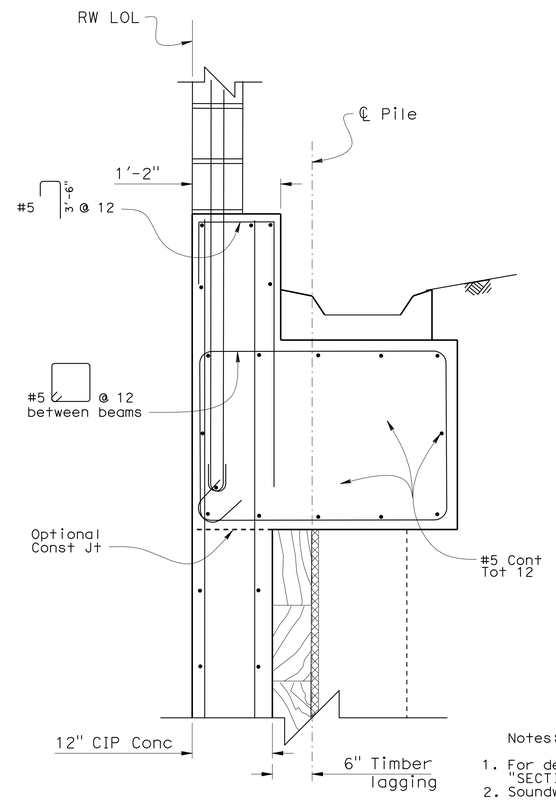

SECTION D-D
1" = 1'-0"

Notes:
1. For details not shown, see "SECTION C-C".
2. Soundwall on Ret wall shown, Cable railing on Ret wall similar.
3. Barrier Rail Type 60D, see "ROAD PLANS" for transition.

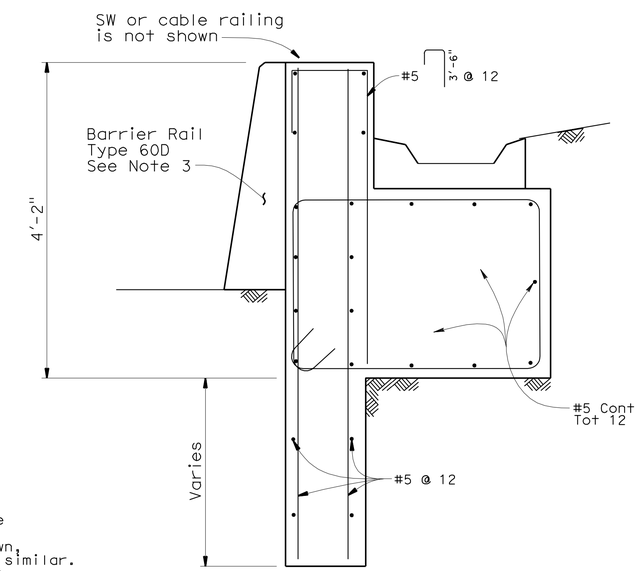

SECTION AT BEGIN-END WALL
1" = 1'-0"

NOTE:
THE CONTRACTOR SHALL VERIFY ALL CONTROLLING FIELD DIMENSIONS BEFORE ORDERING OR FABRICATING ANY MATERIAL.

	BY	CHECKED
DESIGN	M. PEZESHPOUR	H. WIN
DETAILS	B. JENKO	M. PEZESHPOUR
QUANTITIES	H. WIN	C. LIM

STATE OF CALIFORNIA
DEPARTMENT OF TRANSPORTATION

DIVISION OF ENGINEERING SERVICES
STRUCTURE DESIGN
DESIGN BRANCH 21

BRIDGE NO. 53E0158
POST MILE 23.99

RETAINING WALL 1271
RETAINING WALL DETAILS NO. 1

STRUCTURES DESIGN DETAIL SHEET (ENGLISH) (REV. 09-01-10)

ORIGINAL SCALE IN INCHES FOR REDUCED PLANS 0 1 2 3

UNIT: 3623
PROJECT NUMBER & PHASE: 0700020869 & 1 CONTRACT NO.: 202111

DISREGARD PRINTS BEARING EARLIER REVISION DATES

REVISION DATES: 8-12-10 | 1-4-11 | 3-1-11

SHEET 8 OF 17

FILE => 53-E0158-g-rwdt01.dgn

USERNAME => s124496 DATE PLOTTED => 29-JUN-2011 TIME PLOTTED => 06:51

DIST	COUNTY	ROUTE	POST MILES TOTAL PROJECT	SHEET No.	TOTAL SHEETS
07	LA	710	17.2/26.4	1490	1507

REGISTERED CIVIL ENGINEER — DATE 03/01/11

6-27-11
PLANS APPROVAL DATE

REGISTERED PROFESSIONAL ENGINEER — Mina Pezeshpour — No. C 55999 — Exp. 12/31/12 — CIVIL — STATE OF CALIFORNIA

The State of California or its officers or agents shall not be responsible for the accuracy or completeness of electronic copies of this plan sheet.

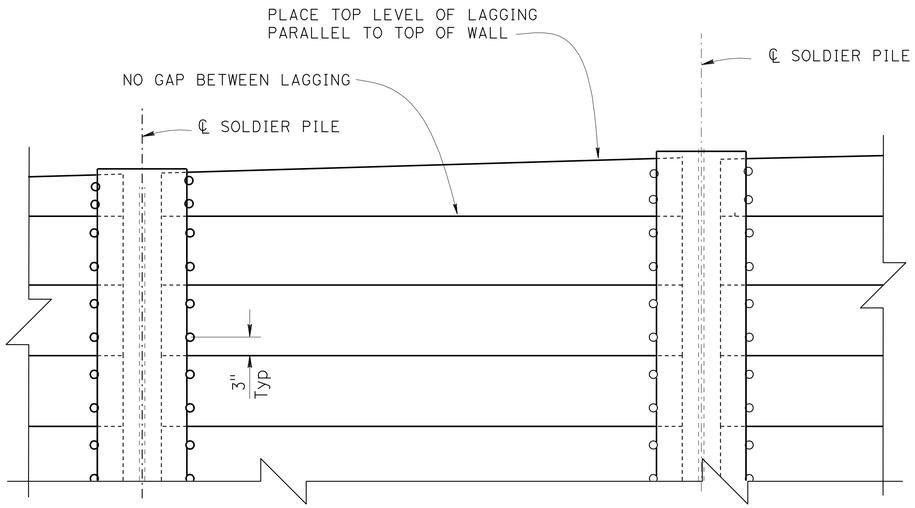

PART ELEVATION
LAGGING DETAILS

No scale

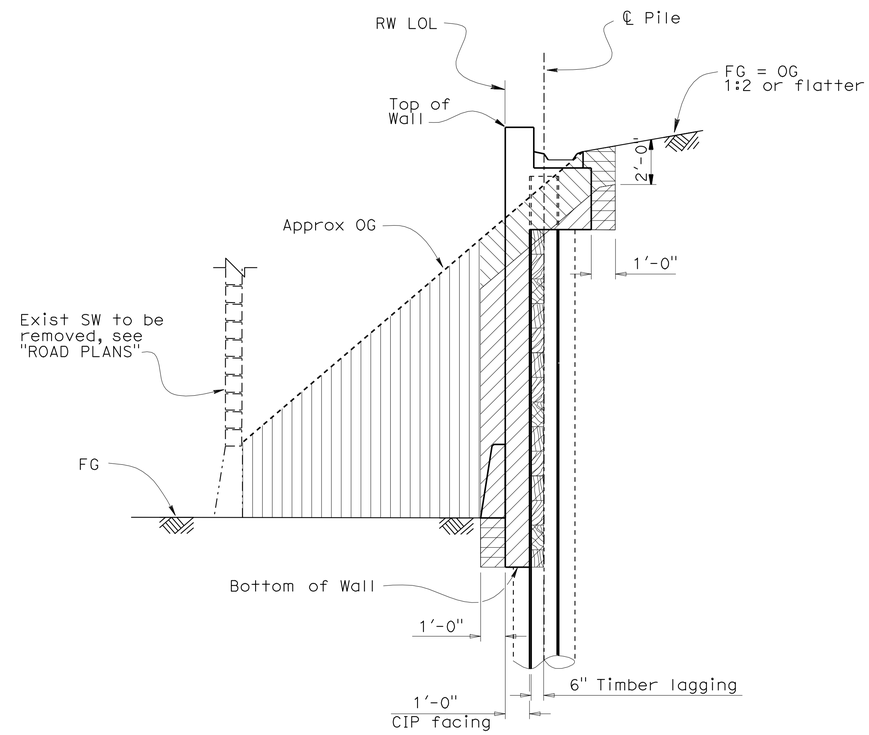

Structure Excavation, solder pile wall.

Structure Backfill, solder pile wall.

Roadway Excavation, see "ROAD PLANS".

Structure Excavation (Type Z-2)
(Aerially Deposited Load)

RETAINING WALL EXCAVATION AND BACKFILL LIMITS

No Scale

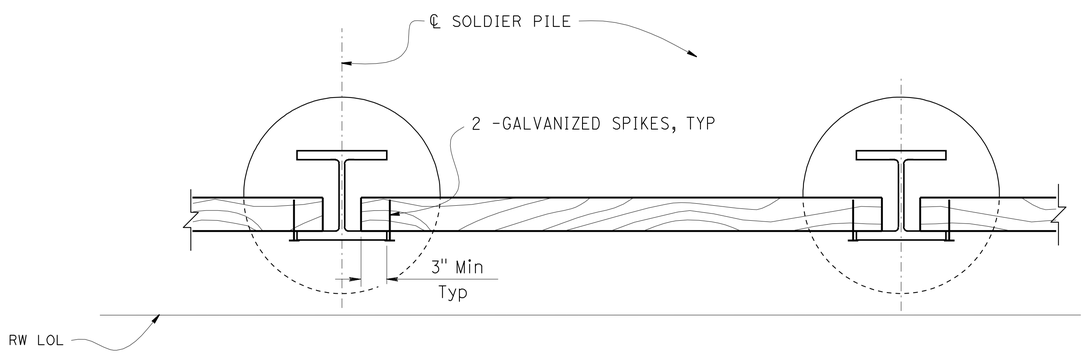

PART PLAN

No scale

NOTES:
1. No clipping of corners allowed
2. 16d, 3 Galv wire spikes for 4 x 12 lagging,
   and 40d 2 Galv wire spikes for 6 x 12 lagging

NOTE:
THE CONTRACTOR SHALL VERIFY ALL
CONTROLLING FIELD DIMENSIONS
BEFORE ORDERING OR FABRICATING
ANY MATERIAL.

	BY	CHECKED
DESIGN	M. PEZESHPOUR	H. WIN
DETAILS	B. JENKO	M. PEZESHPOUR
QUANTITIES	H. WIN	C. LIM

STATE OF CALIFORNIA
DEPARTMENT OF TRANSPORTATION

DIVISION OF ENGINEERING SERVICES
STRUCTURE DESIGN
DESIGN BRANCH 21

BRIDGE NO. 53E0158
POST MILE 23.99

RETAINING WALL 1271
RETAINING WALL DETAILS NO.2

STRUCTURES DESIGN DETAIL SHEET (ENGLISH) (REV. 09-01-10)

ORIGINAL SCALE IN INCHES FOR REDUCED PLANS 0 1 2 3

UNIT: 3623
PROJECT NUMBER & PHASE: 0700020869 & 1 CONTRACT NO.: 202111

DISREGARD PRINTS BEARING EARLIER REVISION DATES

REVISION DATES: 8-13-10 3-1-11 2-2-11

SHEET 9 OF 17

FILE => 53-E0158-g-rwdt02.dgn

USERNAME => s124496 DATE PLOTTED => 29-JUN-2011 TIME PLOTTED => 06:51

DIST	COUNTY	ROUTE	POST MILES TOTAL PROJECT	SHEET No.	TOTAL SHEETS
07	LA	710	17.2/26.4	1491	1507

REGISTERED CIVIL ENGINEER — DATE 03/01/11

6-27-11
PLANS APPROVAL DATE

REGISTERED PROFESSIONAL ENGINEER — Mina Pezeshpour — No. C 55999 — Exp. 12/31/12 — CIVIL — STATE OF CALIFORNIA

The State of California or its officers or agents shall not be responsible for the accuracy or completeness of electronic copies of this plan sheet.

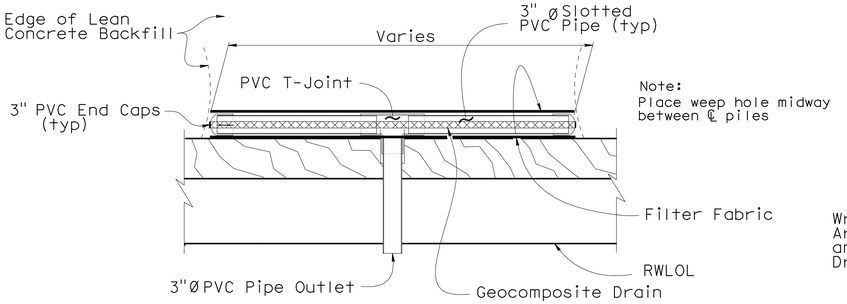

SECTION E-E

No Scale

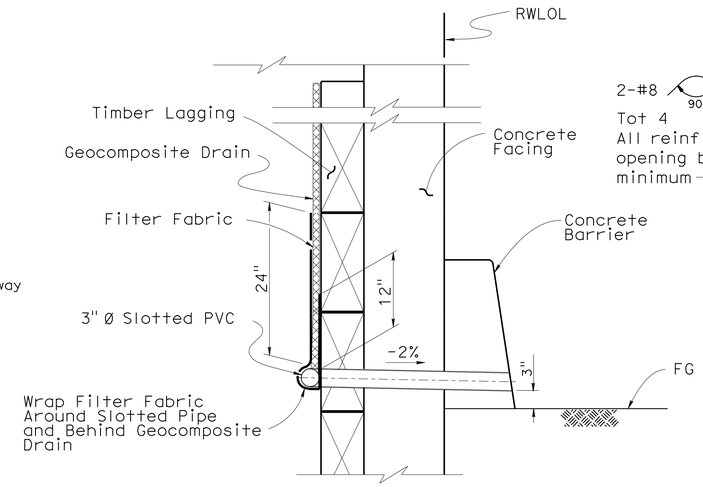

SECTION F-F

No Scale

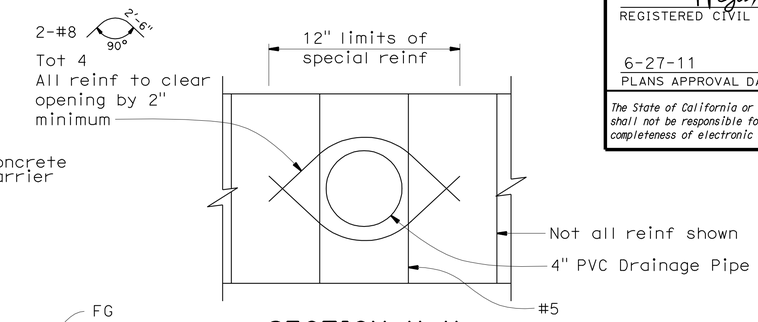

SECTION H-H

No Scale

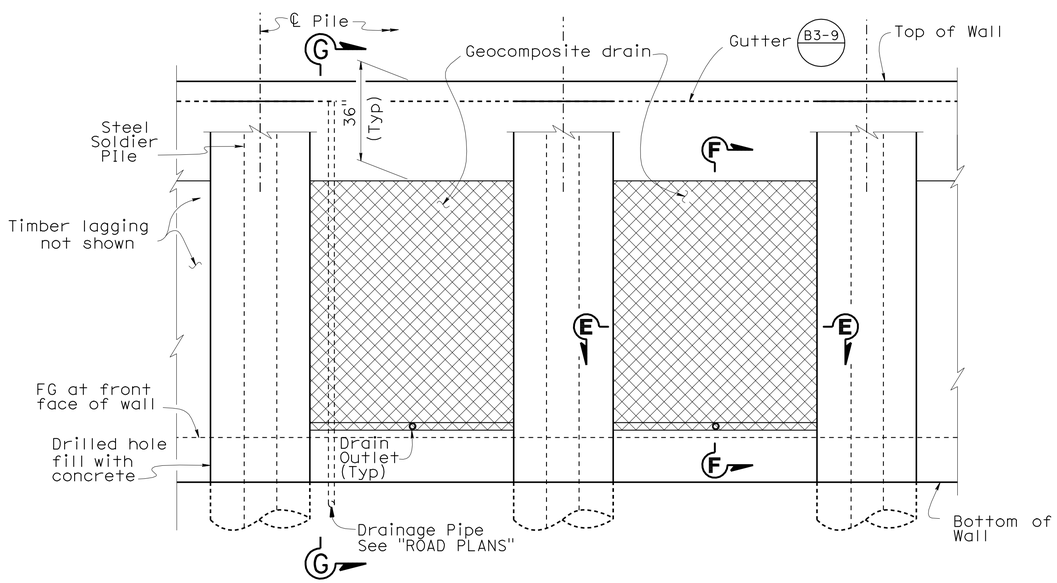

PART MIRROR ELEVATION - GEOCOMPOSITE DRAIN

No Scale

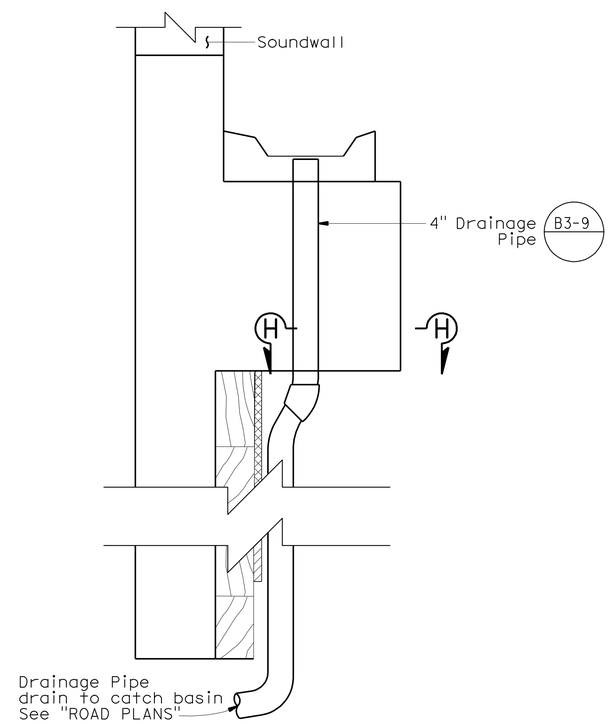

SECTION G-G

No Scale

NOTE:
THE CONTRACTOR SHALL VERIFY ALL CONTROLLING FIELD DIMENSIONS BEFORE ORDERING OR FABRICATING ANY MATERIAL.

	BY	CHECKED
DESIGN	M. PEZESHPOUR	H. WIN
DETAILS	M. KINGRA / B. JENKO	M. PEZESHPOUR
QUANTITIES	H. WIN	C. LIM

STATE OF CALIFORNIA
DEPARTMENT OF TRANSPORTATION

DIVISION OF ENGINEERING SERVICES
STRUCTURE DESIGN
DESIGN BRANCH 21

BRIDGE NO. 53E0158
POST MILE 23.99

RETAINING WALL 1271
RETAINING WALL DETAILS NO. 3

STRUCTURES DESIGN DETAIL SHEET (ENGLISH) (REV. 09-01-10)

ORIGINAL SCALE IN INCHES FOR REDUCED PLANS 0 1 2 3

UNIT: 3623
PROJECT NUMBER & PHASE: 0700020869 & 1 CONTRACT NO.: 202111

DISREGARD PRINTS BEARING EARLIER REVISION DATES → 8-1-10 3-1-11 11-16-10

SHEET 10 OF 17

FILE => 53-E0158-g-rwdt03.dgn

USERNAME => s124496 DATE PLOTTED => 29-JUN-2011 TIME PLOTTED => 06:51

DIST	COUNTY	ROUTE	POST MILES TOTAL PROJECT	SHEET No.	TOTAL SHEETS
07	LA	710	17.2/26.4	1492	1507

REGISTERED CIVIL ENGINEER — DATE 03/01/11

6-27-11
PLANS APPROVAL DATE

REGISTERED PROFESSIONAL ENGINEER — Mina Pezeshpour — No. C 55999 — Exp. 12/31/12 — CIVIL — STATE OF CALIFORNIA

The State of California or its officers or agents shall not be responsible for the accuracy or completeness of electronic copies of this plan sheet.

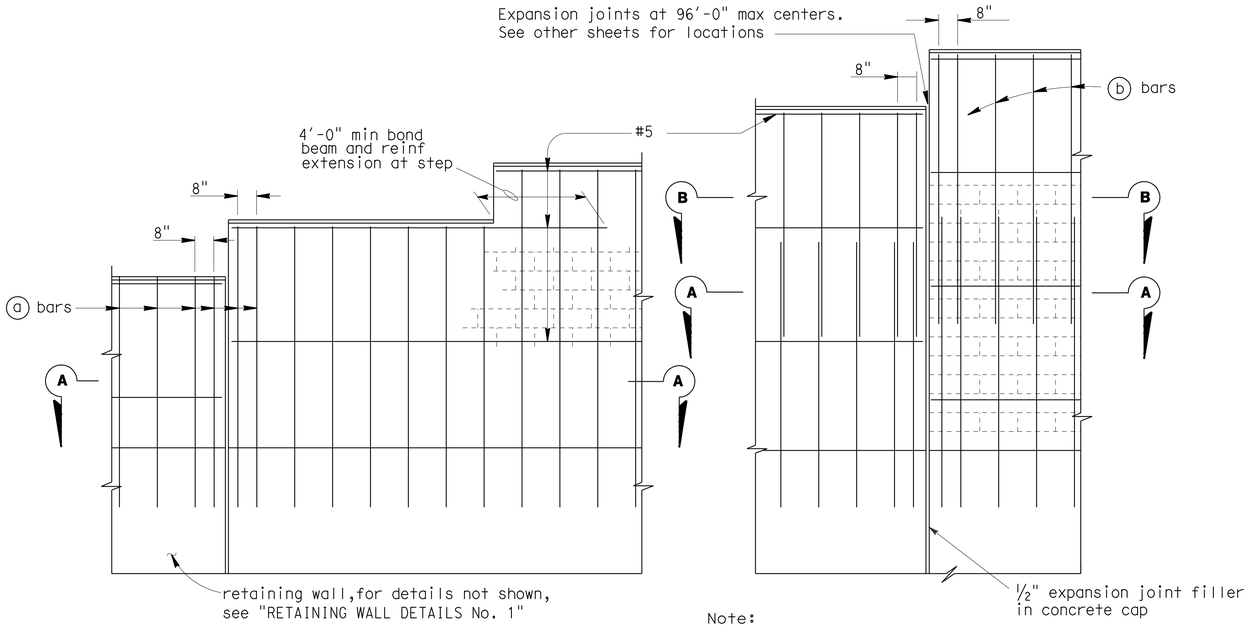

Note:
Pile Cap reinforcement not shown.

PART ELEVATIONS

No scale

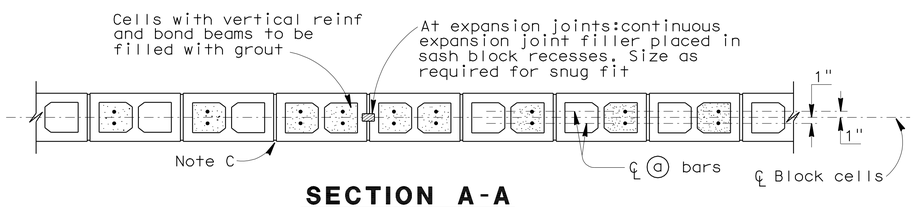

SECTION A-A

For details not shown,see other details

H=6'-4" THRU H=10'-4"

No scale

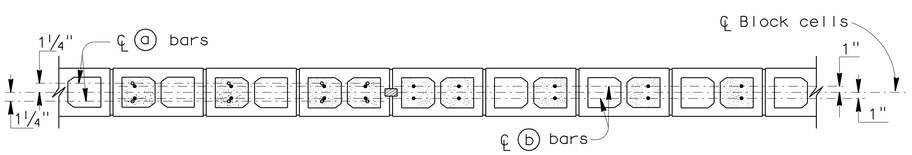

SECTION A-A SECTION B-B

For details not shown,see other details

H=12'-4" THRU H= 16'-4"

No scale

NOTE:
THE CONTRACTOR SHALL VERIFY ALL CONTROLLING FIELD DIMENSIONS BEFORE ORDERING OR FABRICATING ANY MATERIAL.

SOUNDWALL REINFORCEMENT TABLE

Maximum H	ⓐ bars @ 1'-4" max	ⓑ bars @ 1'-4" max	"y"	f'm (KSI)	Compressive Strength of CMU (KSI)	Maximum H
6'-4"	# 4	———	———	1.5	1.9	6'-4"
8'-4"	# 4	———	———	1.5	1.9	8'-4"
10'-4"	# 4	———	———	1.5	1.9	10'-4"
12'-4"	# 5	# 4	5'-0"	1.5	1.9	12'-4"
14'-4"	# 6	# 4	7'-0"	1.5	1.9	14'-4"
16'-4"	# 6	# 4	9'-0"	2.5	3.7	16'-4"

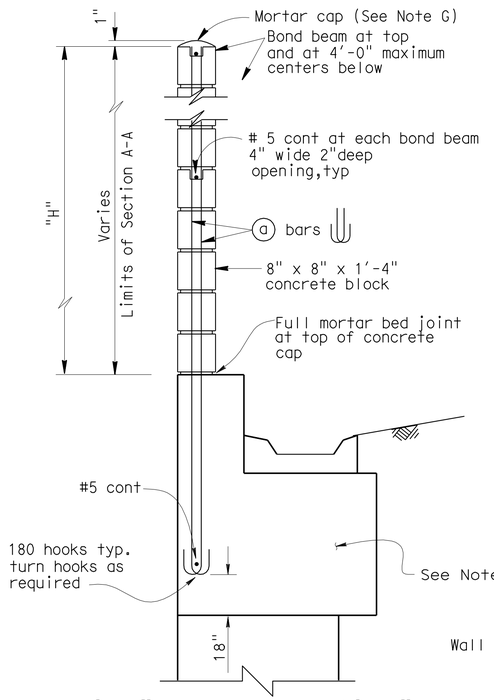

H=6'-4" THRU H=10'-4"

For details not shown,see H=12'-4" thru H=16'-4"

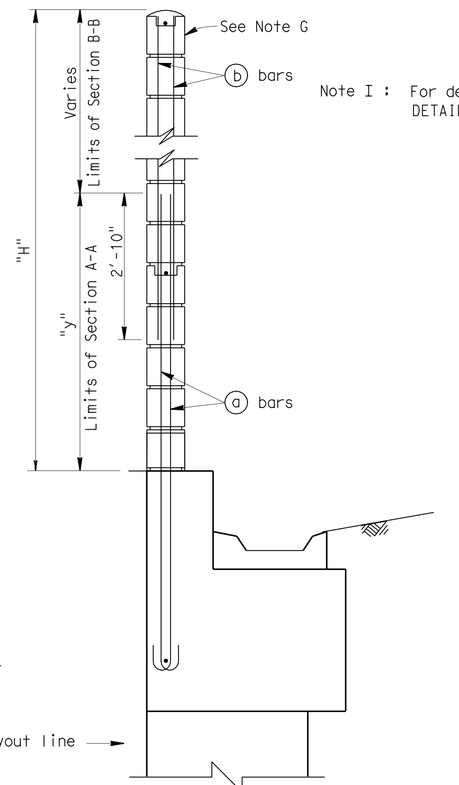

H=12'-4" THRU H=16'-4"

For details not shown,see H=6'-4" thru H=10'-4"

TYPICAL SECTIONS

No scale

Note I : For details not shown,see "SOUNDWALL DETAILS NO.2" sheet.

GENERAL NOTES

Note A: For type of block and joint finish, see other sheets.

Note B: When blocks are laid in stacked bond, ladder type, galvanized joint reinforcement shall be provided. A minimum of 0.07"-0.14" wire continuous at 4'-0" maximum to be used. Locate reinforcement in joints that are at the approximate midpoint between bond beams.

Note C: Horizontal joints shall be tooled concave or may be weathered.
Vertical joints shall be tooled concave or may be raked.

Note D: For intermediate wall heights that are between the "H's" given. Use the tabular information for the next higher "H".

Note E: Masonry strengths are listed in "SOUNDWALL REINFORCEMENT TABLE".

Note F: For pile cap rebars, see "RETAINING WALL DETAILS NO. 2" sheet.

Note G: For "SOUNDWALL AESTHETIC DETAILS", see "ROAD PLANS".

DESIGN	BY M. PEZESHPOUR	CHECKED H. WIN	
DETAILS	BY B. JENKO	CHECKED M. PEZESHPOUR	
QUANTITIES	BY H. WIN	CHECKED C. LIM	

STATE OF CALIFORNIA
DEPARTMENT OF TRANSPORTATION

DIVISION OF ENGINEERING SERVICES
STRUCTURE DESIGN
DESIGN BRANCH 21

BRIDGE NO. 53E0158
POST MILE 23.99

RETAINING WALL 1271
SOUNDWALL DETAILS NO. 1

STRUCTURES DESIGN DETAIL SHEET (ENGLISH) (REV. 09-01-10)

ORIGINAL SCALE IN INCHES FOR REDUCED PLANS 0 1 2 3

UNIT: 3623
PROJECT NUMBER & PHASE: 0700020869 & 1 CONTRACT NO.: 202111

DISREGARD PRINTS BEARING EARLIER REVISION DATES

REVISION DATES: 8-16-10 8-18-10 9-30-10 3-1-11 — SHEET 11 OF 17

FILE => 53-E0158-g-swdt01.dgn

USERNAME => s124496 DATE PLOTTED => 29-JUN-2011 TIME PLOTTED => 06:52

DIST	COUNTY	ROUTE	POST MILES TOTAL PROJECT	SHEET No.	TOTAL SHEETS
07	LA	710	17.2/26.4	1493	1507

REGISTERED CIVIL ENGINEER — DATE 03/01/11

6-27-11
PLANS APPROVAL DATE

REGISTERED PROFESSIONAL ENGINEER — Mina Pezeshpour — No. C 55999 — Exp. 12/31/12 — CIVIL — STATE OF CALIFORNIA

The State of California or its officers or agents shall not be responsible for the accuracy or completeness of electronic copies of this plan sheet.

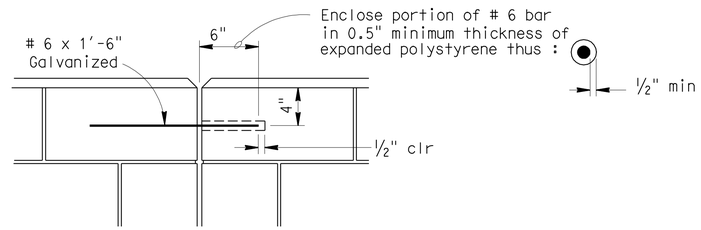

DETAIL A

No scale

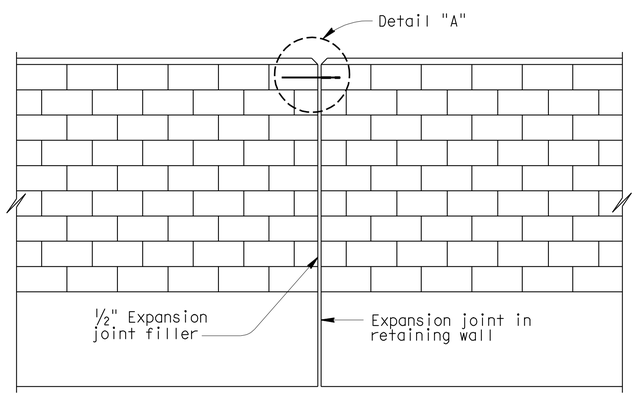

ALIGNMENT KEY DETAIL

No scale

DESIGN NOTES

DESIGN

Uniform Building Code,1997 Edition and the Bridge Design Specifications.

DESIGN WIND LOAD

33 PSF

DESIGN SEISMIC LOAD

0.57 Dead load

REINFORCED CONCRETE

f'c = 3.6 KSI
fy = 60 KSI

CONCRETE MASONRY

REGULAR STRENGTH	HIGH STRENGTH	
f'm = 1500 PSI	f'm = 2000 PSI	f'm = 2500 PSI
f_b = 495 PSI	f_b = 660 PSI	f_b = 830 PSI
fs = 24.0 KSI	fs = 24.0 KSI	fs = 24000 PSI
n = 25.8	n = 19.3	n = 15.5

LOAD FACTORS AND LOAD COMBINATIONS

Working Stress Design (WSD) — Percentage of unit stress

Group 1: D + E + SC	100%
Group 2: D + W + SC + E	100%
Group 3: D + 0.71 EQD + E	100%

Where:

D = Dead load
E = Lateral earth pressure
SC = Live load surcharge
W = Wind load
EQD = Seismic dead load

Load Factor Design (LFD)

Group A: βD +1.7 E + 1.7 SC
Group B: βD +1.7 E + 1.3 W
Group C: βD +1.3 E + 1.0 EQE
Group D: βD +1.3 E + 1.0 EQD
Group E: βD +1.1 E + 0.85 (EQE + EQD)

Where : β = 0.9 or 1.2, whichever controls in design
D = Dead load
E = Lateral earth pressure
SC = Live load surcharge
W = Wind load
EQD = Seismic dead load
EQE = Seismic earth load

STRENGTH REDUCTION FACTORS, Ø

Reinforced concrete:
For flexure ---------- Ø=0.90
For shear ---------- Ø=0.85

Concrete masonry:
For flexure ---------- Ø=0.80
For shear ---------- Ø=0.60

NOTE:
THE CONTRACTOR SHALL VERIFY ALL CONTROLLING FIELD DIMENSIONS BEFORE ORDERING OR FABRICATING ANY MATERIAL.

	BY	CHECKED
DESIGN	M. PEZESHPOUR	H. WIN
DETAILS	B. JENKO	M. PEZESHPOUR
QUANTITIES	H. WIN	C. LIM

STATE OF CALIFORNIA
DEPARTMENT OF TRANSPORTATION

DIVISION OF ENGINEERING SERVICES
STRUCTURE DESIGN
DESIGN BRANCH 21

BRIDGE NO. 53E0158
POST MILE 23.99

RETAINING WALL 1271
SOUNDWALL DETAILS NO.2

STRUCTURES DESIGN DETAIL SHEET (ENGLISH) (REV. 09-01-10)

ORIGINAL SCALE IN INCHES FOR REDUCED PLANS 0 1 2 3

UNIT: 3623
PROJECT NUMBER & PHASE: 0700020869 & 1 CONTRACT NO.: 202111

DISREGARD PRINTS BEARING EARLIER REVISION DATES

REVISION DATES: 8-16-10 | 3-1-11

SHEET 12 OF 17

FILE => 53-E0158-g-swdt02.dgn

USERNAME => s124496 DATE PLOTTED => 29-JUN-2011 TIME PLOTTED => 06:52

DIST	COUNTY	ROUTE	POST MILES TOTAL PROJECT	SHEET No	TOTAL SHEETS
07	LA	710	17.2/26.4	1494	1507

Joseph S. Pratt 3-9-11
CERTIFIED ENGINEERING GEOLOGIST DATE

REGISTERED GEOLOGIST
Joseph S. Pratt
No. 2141
Exp. 5-31-11
CERTIFIED ENGINEERING GEOLOGIST
STATE OF CALIFORNIA

6-27-11
PLANS APPROVAL DATE

The State of California or its officers or agents shall not be responsible for the accuracy or completeness of electronic copies of this plan sheet.

This LOTB sheet was prepared in accordance with the Caltrans Soil & Rock Logging, Classification, & Presentation Manual (June 2007).

BENCH MARK

RTK-739 Elev 217.55
FND PK NB710 SHDR ±400',
S/Rte 60 CONNECTOR
75.17 Ft Rt ℄ ROUTE 710
Sta 1266+68.10
N 1 832 124.64
E 6 509 539.23

PRHV-740 Elev 235.72
FND PK In NB 710 SHDR
68.57 Ft Rt ℄ ROUTE 710
Sta 1274+46.66
N 1 832 871.04
E 6 509 626.26

TBM Elev 220.851'
Fd Boring A-09-104 on NB710
shldr to Rte. 60 on-rmp,
84.59' Rt Sta 1270+00.95
℄ Rte. 710.
N 1832448.857
E 6509555.548

TBM Elev 226.801'
Fd Boring A-09-103 on NB710
shldr to Rte. 60 on-rmp,
95.23' Rt Sta 1272+32.52
℄ Rte. 710.
N 1832665.841
E 6509598.998
NAVD88

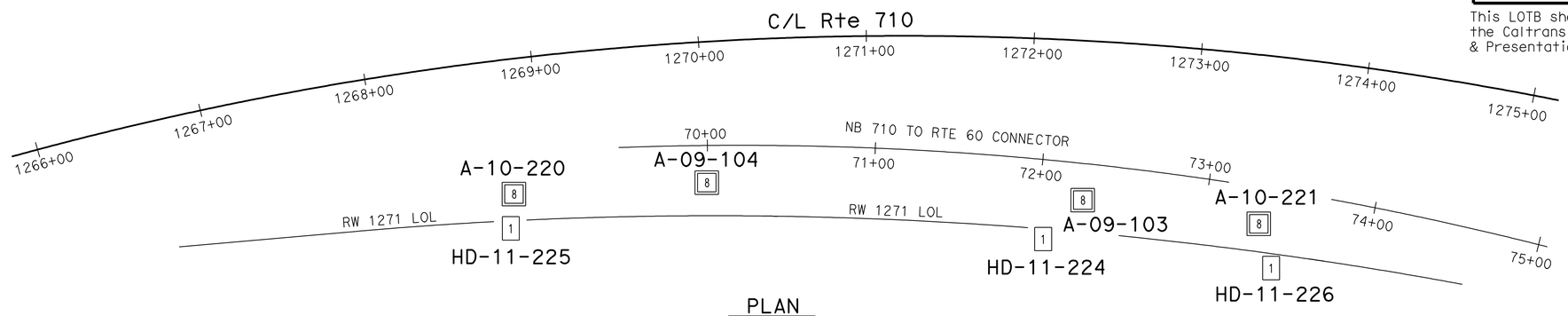

PLAN
1" = 40'

Note: No ground water encountered during field investigation.

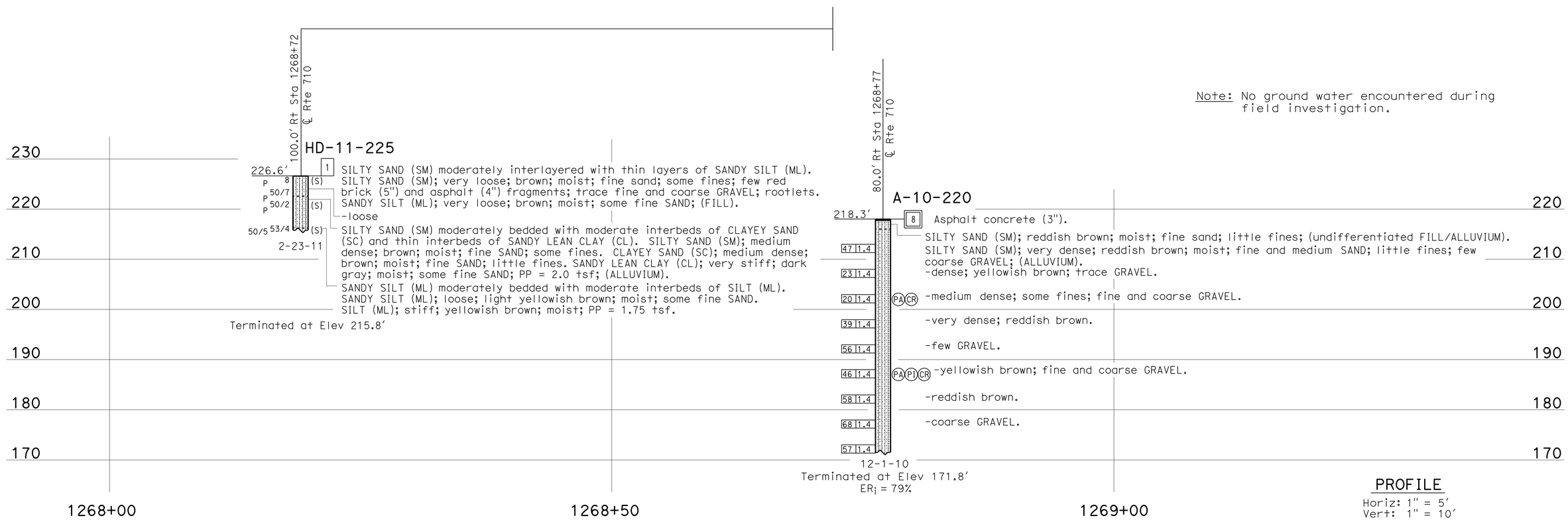

PROFILE
Horiz: 1" = 5'
Vert: 1" = 10'

ENGINEERING SERVICES	GEOTECHNICAL SERVICES	STATE OF CALIFORNIA DEPARTMENT OF TRANSPORTATION	DIVISION OF ENGINEERING SERVICES STRUCTURE DESIGN	BRIDGE NO. 53E0158	RETAINING WALL NO. 1271
FUNCTIONAL SUPERVISOR	DRAWN BY: C. Christian, W. Tang 10/10	FIELD INVESTIGATION BY:	DESIGN BRANCH	POST MILES 23.99/24.14	LOG OF TEST BORINGS 1 OF 5
NAME: S. Karimi	CHECKED BY: A. Mehrazar	Joe Pratt and kevin Lai			

OGS CIVIL LOG OF TEST BORINGS SHEET

ORIGINAL SCALE IN INCHES FOR REDUCED PLANS 0 1 2 3

CU 07
EA 202111

DISREGARD PRINTS BEARING EARLIER REVISION DATES → 10-29-10 02-28-11 03-08-11

REVISION DATES

SHEET 13 OF 17

FILE => 53-E0158-z-lotb01of5.dgn

USERNAME => s124496 DATE PLOTTED => 29-JUN-2011 TIME PLOTTED => 06:52

DIST	COUNTY	ROUTE	POST MILES TOTAL PROJECT	SHEET No	TOTAL SHEETS
07	LA	710	17.2/26.4	1495	1507

Joseph S. Pratt 3-9-11
CERTIFIED ENGINEERING GEOLOGIST DATE

REGISTERED GEOLOGIST
Joseph S. Pratt
No. 2141
Exp. 5-31-11
CERTIFIED ENGINEERING GEOLOGIST
STATE OF CALIFORNIA

6-27-11
PLANS APPROVAL DATE

The State of California or its officers or agents shall not be responsible for the accuracy or completeness of electronic copies of this plan sheet.

This LOTB sheet was prepared in accordance with the Caltrans Soil & Rock Logging, Classification, & Presentation Manual (June 2007).

FOR PLAN VIEW, SEE
"LOG OF TEST BORINGS 1 OF 5"

Note: No ground water encountered during field investigation.

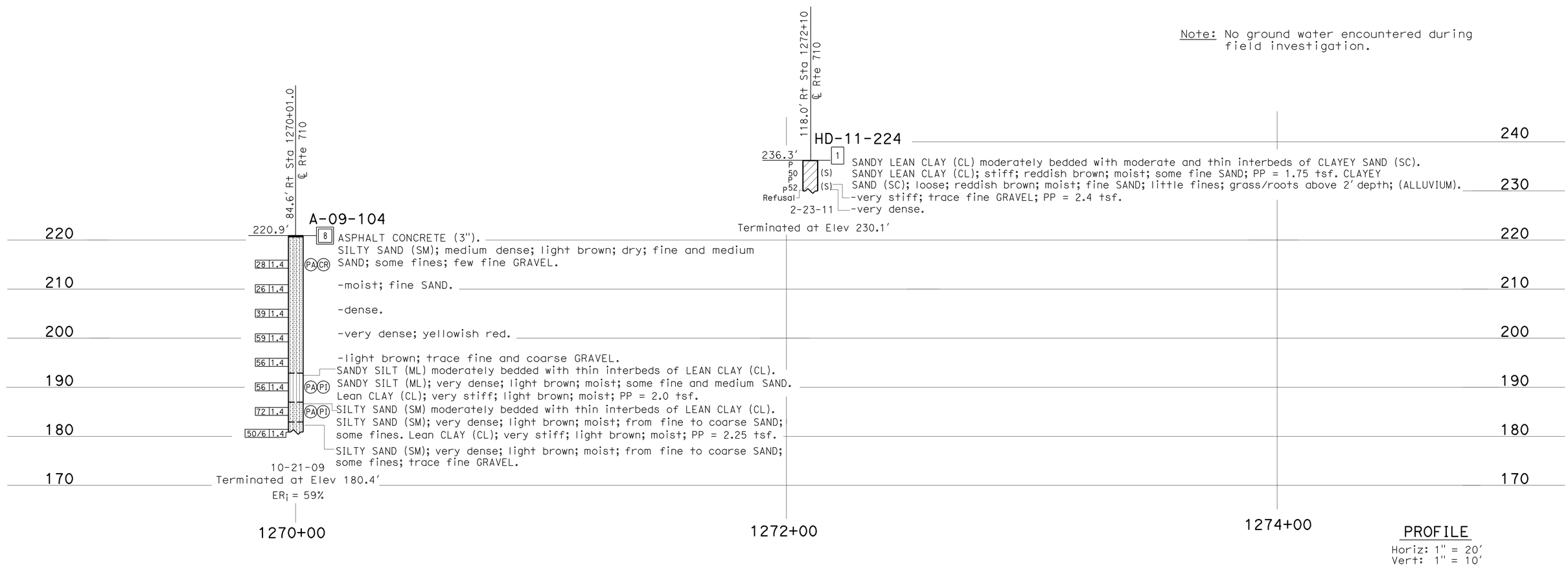

PROFILE
Horiz: 1" = 20'
Vert: 1" = 10'

ENGINEERING SERVICES	GEOTECHNICAL SERVICES	STATE OF CALIFORNIA DEPARTMENT OF TRANSPORTATION	DIVISION OF ENGINEERING SERVICES STRUCTURE DESIGN DESIGN BRANCH	BRIDGE NO. 53E0158 POST MILES 23.99/24.14	RETAINING WALL NO. 1271 LOG OF TEST BORINGS 2 OF 5
FUNCTIONAL SUPERVISOR NAME: S. Karimi	DRAWN BY: C. Christian, W. Tang 10/10 CHECKED BY: A. Mehrazar	FIELD INVESTIGATION BY: Joe Pratt and Kevin Lai			

OGS CIVIL LOG OF TEST BORINGS SHEET

ORIGINAL SCALE IN INCHES FOR REDUCED PLANS 0 1 2 3

CU 07
EA 202111

DISREGARD PRINTS BEARING EARLIER REVISION DATES → 10-29-10 02-28-11 03-08-11

REVISION DATES

SHEET 14 OF 17

FILE => 53-E0158-z-lotb02of5.dgn

USERNAME => s124496 DATE PLOTTED => 29-JUN-2011 TIME PLOTTED => 06:52

DIST	COUNTY	ROUTE	POST MILES TOTAL PROJECT	SHEET No	TOTAL SHEETS
07	LA	710	17.2/26.4	1496	1507

Joseph S. Pratt 3-9-11
CERTIFIED ENGINEERING GEOLOGIST DATE

REGISTERED GEOLOGIST
Joseph S. Pratt
No. 2141
Exp. 5-31-11
CERTIFIED ENGINEERING GEOLOGIST
STATE OF CALIFORNIA

6-27-11
PLANS APPROVAL DATE

The State of California or its officers or agents shall not be responsible for the accuracy or completeness of electronic copies of this plan sheet.

This LOTB sheet was prepared in accordance with the Caltrans Soil & Rock Logging, Classification, & Presentation Manual (June 2007).

FOR PLAN VIEW, SEE
"LOG OF TEST BORINGS 1 OF 5"

Note: No ground water encountered during field investigation.

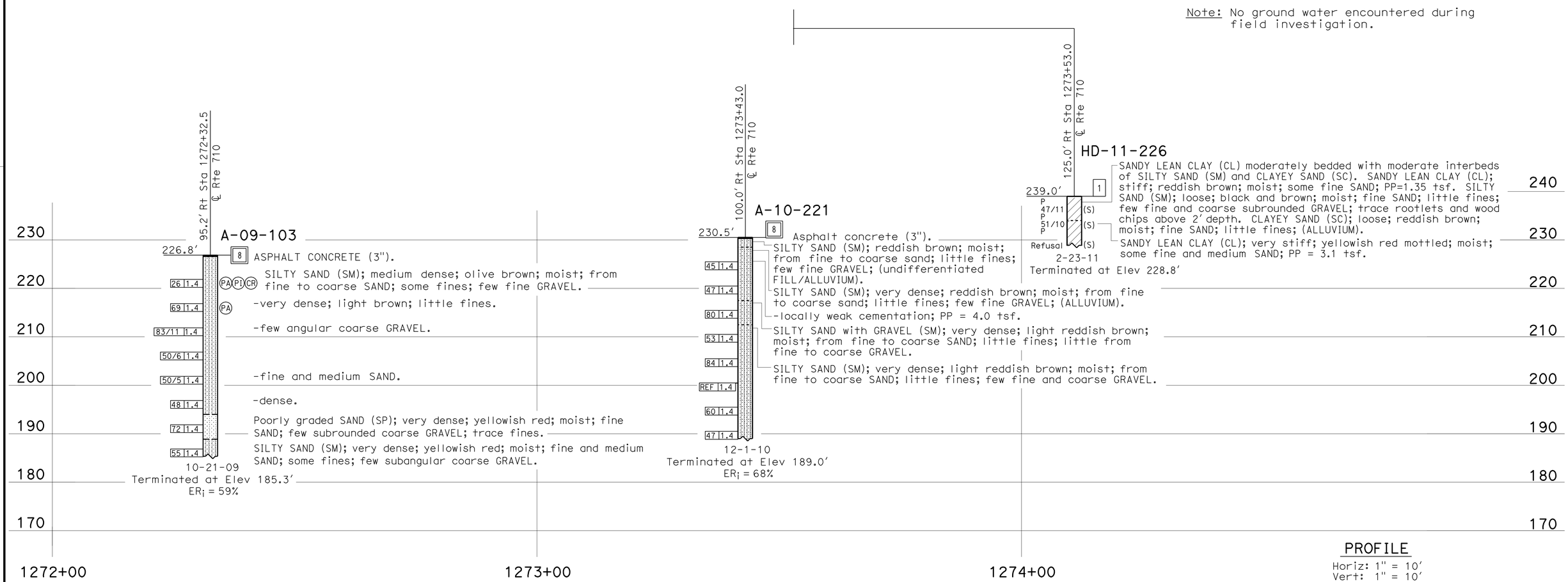

PROFILE
Horiz: 1" = 10'
Vert: 1" = 10'

ENGINEERING SERVICES	GEOTECHNICAL SERVICES	STATE OF CALIFORNIA DEPARTMENT OF TRANSPORTATION	DIVISION OF ENGINEERING SERVICES STRUCTURE DESIGN DESIGN BRANCH	BRIDGE NO. 53E0158 POST MILES 23.99/24.14	RETAINING WALL NO. 1271 LOG OF TEST BORINGS 3 OF 5
FUNCTIONAL SUPERVISOR NAME: S. Karimi	DRAWN BY: C. Christian, W. Tang 10/10 CHECKED BY: A. Mehrazar	FIELD INVESTIGATION BY: Joe Pratt and kevin Lai			

OGS CIVIL LOG OF TEST BORINGS SHEET

ORIGINAL SCALE IN INCHES FOR REDUCED PLANS 0 1 2 3

CU 07
EA 202111

DISREGARD PRINTS BEARING EARLIER REVISION DATES 10-29-10 02-28-11 03-08-11

REVISION DATES

SHEET 15 OF 17

FILE => 53-E0158-z-lotb03of5.dgn

USERNAME => s124436 DATE PLOTTED => 29-JUN-2011 TIME PLOTTED => 06:52

DIST	COUNTY	ROUTE	POST MILES TOTAL PROJECT	SHEET No	TOTAL SHEETS
07	LA	710	17.2/26.4	1497	1507

Joseph S. Pratt 3-9-11
CERTIFIED ENGINEERING GEOLOGIST DATE

6-27-11
PLANS APPROVAL DATE

REGISTERED GEOLOGIST
Joseph S. Pratt
No. 2141
Exp. 5-31-11
CERTIFIED ENGINEERING GEOLOGIST
STATE OF CALIFORNIA

The State of California or its officers or agents shall not be responsible for the accuracy or completeness of electronic copies of this plan sheet.

REFERENCE: CALTRANS SOIL & ROCK LOGGING, CLASSIFICATION, AND PRESENTATION MANUAL (2010)

CEMENTATION

Description	Criteria
Weak	Crumbles or breaks with handling or little finger pressure.
Moderate	Crumbles or breaks with considerable finger pressure.
Strong	Will not crumble or break with finger pressure.

BOREHOLE IDENTIFICATION

Symbol	Hole Type	Description
Size	A	Auger Boring (hollow or solid stem bucket)
Size	R RW RC P	Rotary drilled boring (conventional) Rotary drilled with self-casing wire-line Rotary core with continuously-sampled, self-casing wire-line Rotary percussion boring (air)
Size	R	Rotary drilled diamond core
Size	HD HA	Hand driven (1-inch soil tube) Hand Auger
●	D	Dynamic Cone Penetration Boring
▲	CPT	Cone Penetration Test (ASTM D 5778)
⬚	O	Other (note on LOTB)

Note: Size in inches.

CONSISTENCY OF COHESIVE SOILS

Description	Shear Strength (tsf)	Pocket Penetrometer Measurement, PP, (tsf)	Torvane Measurement, TV, (tsf)	Vane Shear Measurement, VS, (tsf)
Very Soft	Less than 0.12	Less than 0.25	Less than 0.12	Less than 0.12
Soft	0.12 - 0.25	0.25 - 0.5	0.12 - 0.25	0.12 - 0.25
Medium Stiff	0.25 - 0.5	0.5 - 1	0.25 - 0.5	0.25 - 0.5
Stiff	0.5 - 1	1 - 2	0.5 - 1	0.5 - 1
Very Stiff	1 - 2	2 - 4	1 - 2	1 - 2
Hard	Greater than 2	Greater than 4	Greater than 2	Greater than 2

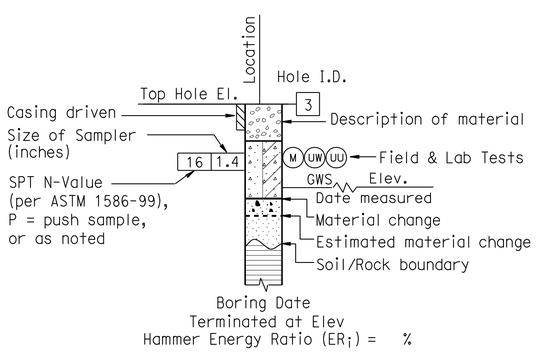

ROTARY BORING

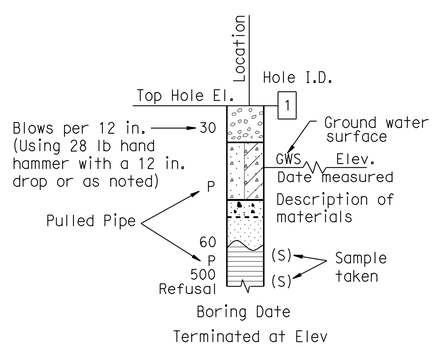

HAND BORING

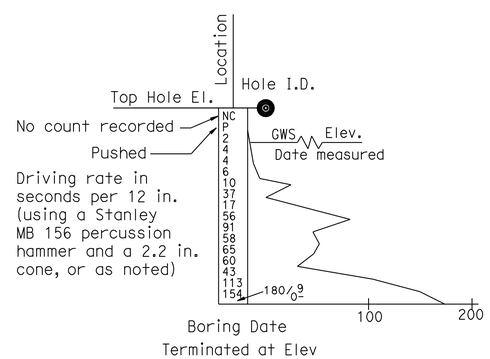

DYNAMIC CONE PENETRATION BORING

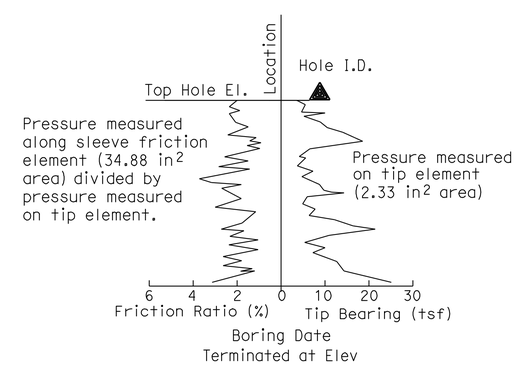

CONE PENETRATION TEST (CPT) BORING

ENGINEERING SERVICES	GEOTECHNICAL SERVICES	STATE OF CALIFORNIA DEPARTMENT OF TRANSPORTATION	DIVISION OF ENGINEERING SERVICES STRUCTURE DESIGN DESIGN BRANCH	BRIDGE NO. 53E0158 / POST MILE 23.99/24.14	RETAINING WALL NO. 1271 LOG OF TEST BORINGS 4 OF 5
	PREPARED BY: I. G-Remmen, 10/10				

GS LOTB SOIL LEGEND

ORIGINAL SCALE IN INCHES FOR REDUCED PLANS 0 1 2 3

CU 07
EA 202111

DISREGARD PRINTS BEARING EARLIER REVISION DATES

REVISION DATES

SHEET 16 OF 17

FILE => 53-E0158-z-lotb04of5.dgn

USERNAME => s124496 DATE PLOTTED => 29-JUN-2011 TIME PLOTTED => 06:52

REFERENCE: CALTRANS SOIL & ROCK LOGGING, CLASSIFICATION, AND PRESENTATION MANUAL (2010)

DIST	COUNTY	ROUTE	POST MILES TOTAL PROJECT	SHEET No	TOTAL SHEETS
07	LA	710	17.2/26.4	1498	1507

Joseph S. Pratt 3-9-11
CERTIFIED ENGINEERING GEOLOGIST DATE

REGISTERED GEOLOGIST
Joseph S. Pratt
No. 2141
Exp. 5-31-11
CERTIFIED ENGINEERING GEOLOGIST
STATE OF CALIFORNIA

6-27-11
PLANS APPROVAL DATE

The State of California or its officers or agents shall not be responsible for the accuracy or completeness of electronic copies of this plan sheet.

GROUP SYMBOLS AND NAMES

Graphic/Symbol	Group Names	Graphic/Symbol	Group Names
GW	Well-graded GRAVEL Well-graded GRAVEL with SAND	CL	Lean CLAY Lean CLAY with SAND Lean CLAY with GRAVEL SANDY lean CLAY SANDY lean CLAY with GRAVEL GRAVELLY lean CLAY GRAVELLY lean CLAY with SAND
GP	Poorly-graded GRAVEL Poorly-graded GRAVEL with SAND		
GW-GM	Well-graded GRAVEL with SILT Well-graded GRAVEL with SILT and SAND	CL-ML	SILTY CLAY SILTY CLAY with SAND SILTY CLAY with GRAVEL SANDY SILTY CLAY SANDY SILTY CLAY with GRAVEL GRAVELLY SILTY CLAY GRAVELLY SILTY CLAY with SAND
GW-GC	Well-graded GRAVEL with CLAY (or SILTY CLAY) Well-graded GRAVEL with CLAY and SAND (or SILTY CLAY and SAND)		
GP-GM	Poorly-graded GRAVEL with SILT Poorly-graded GRAVEL with SILT and SAND	ML	SILT SILT with SAND SILT with GRAVEL SANDY SILT SANDY SILT with GRAVEL GRAVELLY SILT GRAVELLY SILT with SAND
GP-GC	Poorly-graded GRAVEL with CLAY (or SILTY CLAY) Poorly-graded GRAVEL with CLAY and SAND (or SILTY CLAY and SAND)		
GM	SILTY GRAVEL SILTY GRAVEL with SAND	OL	ORGANIC lean CLAY ORGANIC lean CLAY with SAND ORGANIC lean CLAY with GRAVEL SANDY ORGANIC lean CLAY SANDY ORGANIC lean CLAY with GRAVEL GRAVELLY ORGANIC lean CLAY GRAVELLY ORGANIC lean CLAY with SAND
GC	CLAYEY GRAVEL CLAYEY GRAVEL with SAND		
GC-GM	SILTY, CLAYEY GRAVEL SILTY, CLAYEY GRAVEL with SAND	OL	ORGANIC SILT ORGANIC SILT with SAND ORGANIC SILT with GRAVEL SANDY ORGANIC SILT SANDY ORGANIC SILT with GRAVEL GRAVELLY ORGANIC SILT GRAVELLY ORGANIC SILT with SAND
SW	Well-graded SAND Well-graded SAND with GRAVEL		
SP	Poorly-graded SAND Poorly-graded SAND with GRAVEL	CH	Fat CLAY Fat CLAY with SAND Fat CLAY with GRAVEL SANDY fat CLAY SANDY fat CLAY with GRAVEL GRAVELLY fat CLAY GRAVELLY fat CLAY with SAND
SW-SM	Well-graded SAND with SILT Well-graded SAND with SILT and GRAVEL		
SW-SC	Well-graded SAND with CLAY (or SILTY CLAY) Well-graded SAND with CLAY and GRAVEL (or SILTY CLAY and GRAVEL)	MH	Elastic SILT Elastic SILT with SAND Elastic SILT with GRAVEL SANDY elastic SILT SANDY elastic SILT with GRAVEL GRAVELLY elastic SILT GRAVELLY elastic SILT with SAND
SP-SM	Poorly-graded SAND with SILT Poorly-graded SAND with SILT and GRAVEL		
SP-SC	Poorly-graded SAND with CLAY (or SILTY CLAY) Poorly-graded SAND with CLAY and GRAVEL (or SILTY CLAY and GRAVEL)	OH	ORGANIC fat CLAY ORGANIC fat CLAY with SAND ORGANIC fat CLAY with GRAVEL SANDY ORGANIC fat CLAY SANDY ORGANIC fat CLAY with GRAVEL GRAVELLY ORGANIC fat CLAY GRAVELLY ORGANIC fat CLAY with SAND
SM	SILTY SAND SILTY SAND with GRAVEL		
SC	CLAYEY SAND CLAYEY SAND with GRAVEL	OH	ORGANIC elastic SILT ORGANIC elastic SILT with SAND ORGANIC elastic SILT with GRAVEL SANDY ORGANIC elastic SILT SANDY ORGANIC elastic SILT with GRAVEL GRAVELLY ORGANIC elastic SILT GRAVELLY ORGANIC elastic SILT with SAND
SC-SM	SILTY, CLAYEY SAND SILTY, CLAYEY SAND with GRAVEL		
PT	PEAT	OL/OH	ORGANIC SOIL ORGANIC SOIL with SAND ORGANIC SOIL with GRAVEL SANDY ORGANIC SOIL SANDY ORGANIC SOIL with GRAVEL GRAVELLY ORGANIC SOIL GRAVELLY ORGANIC SOIL with SAND
	COBBLES COBBLES and BOULDERS BOULDERS		

FIELD AND LABORATORY TESTING

- (C) Consolidation (ASTM D 2435)
- (CL) Collapse Potential (ASTM D 5333)
- (CP) Compaction Curve (CTM 216)
- (CR) Corrosivity Testing (CTM 643, CTM 422, CTM 417)
- (CU) Consolidated Undrained Triaxial (ASTM D 4767)
- (DS) Direct Shear (ASTM D 3080)
- (EI) Expansion Index (ASTM D 4829)
- (M) Moisture Content (ASTM D 2216)
- (OC) Organic Content-% (ASTM D 2974)
- (P) Permeability (CTM 220)
- (PA) Particle Size Analysis (ASTM D 422)
- (PI) Plasticity Index (AASHTO T 90) Liquid Limit (AASHTO T 89)
- (PL) Point Load Index (ASTM D 5731)
- (PM) Pressure Meter
- (R) R-Value (CTM 301)
- (SE) Sand Equivalent (CTM 217)
- (SG) Specific Gravity (AASHTO T 100)
- (SL) Shrinkage Limit (ASTM D 427)
- (SW) Swell Potential (ASTM D 4546)
- (UC) Unconfined Compression-Soil (ASTM D 2166) Unconfined Compression-Rock (ASTM D 2938)
- (UU) Unconsolidated Undrained Triaxial (ASTM D 2850)
- (UW) Unit Weight (ASTM D 4767)

APPARENT DENSITY OF COHESIONLESS SOILS

Description	SPT N_{60} (Blows / 12 in.)
Very Loose	0 - 5
Loose	5 - 10
Medium Dense	10 - 30
Dense	30 - 50
Very Dense	Greater than 50

MOISTURE

Description	Criteria
Dry	No discernable moisture
Moist	Moisture present, but no free water
Wet	Visible free water

PERCENT OR PROPORTION OF SOILS

Description	Criteria
Trace	Particles are present but estimated to be less than 5%
Few	5% - 10%
Little	15% - 25%
Some	30% - 45%
Mostly	50% - 100%

PARTICLE SIZE

Description		Size (in.)
Boulder		Greater than 12
Cobble		3 - 12
Gravel	Coarse	3/4 - 3
	Fine	1/5 - 3/4
Sand	Coarse	1/16 - 1/5
	Medium	1/64 - 1/16
	Fine	1/300 - 1/64
Silt and Clay		Less than 1/300

ENGINEERING SERVICES

GEOTECHNICAL SERVICES
PREPARED BY: I. G-Remmen, 10/10

STATE OF CALIFORNIA
DEPARTMENT OF TRANSPORTATION

DIVISION OF ENGINEERING SERVICES
STRUCTURE DESIGN
DESIGN BRANCH

BRIDGE NO. 53E0158
POST MILE 23.99/24.14

RETAINING WALL NO. 1271
LOG OF TEST BORINGS 5 OF 5

GS LOTB SOIL LEGEND

ORIGINAL SCALE IN INCHES FOR REDUCED PLANS 0 1 2 3

CU 07
EA 202111

DISREGARD PRINTS BEARING EARLIER REVISION DATES

REVISION DATES

SHEET 17 OF 17

FILE => 53-E0158-z-lotb05of5.dgn

USERNAME => s124496 DATE PLOTTED => 29-JUN-2011 TIME PLOTTED => 06:52

DIST	COUNTY	ROUTE	POST MILES TOTAL PROJECT	SHEET No.	TOTAL SHEETS
07	LA	710	17.2/26.4	1499	1507

REGISTERED CIVIL ENGINEER — DATE 03/01/11

6-27-11
PLANS APPROVAL DATE

REGISTERED PROFESSIONAL ENGINEER — CHUNG-YUAN WEN — No. C 50690 — Exp. 09/30/11 — CIVIL — STATE OF CALIFORNIA

The State of California or its officers or agents shall not be responsible for the accuracy or completeness of electronic copies of this plan sheet.

QUANTITIES

STRUCTURE EXCAVATION (RETAINING WALL)	265	CY
STRUCTURE EXCAVATION (TYPE Z-2)	58	CY
(AERIALLY DEPOSITED LEAD)		
STRUCTURE BACKFILL (RETAINING WALL)	360	CY
PERVIOUS BACKFILL MATERIAL (RETAINING WALL)	7	CY
24" CAST-IN-DRILLED-HOLE CONCRETE PILING	230	LF
STRUCTURAL CONCRETE, RETAINING WALL	95	CY
BAR REINFORCING STEEL (RETAINING WALL)	16,200	LB
CABLE RAILING	65	LF
CONCRETE BARRIER (TYPE 736A)	124	LF

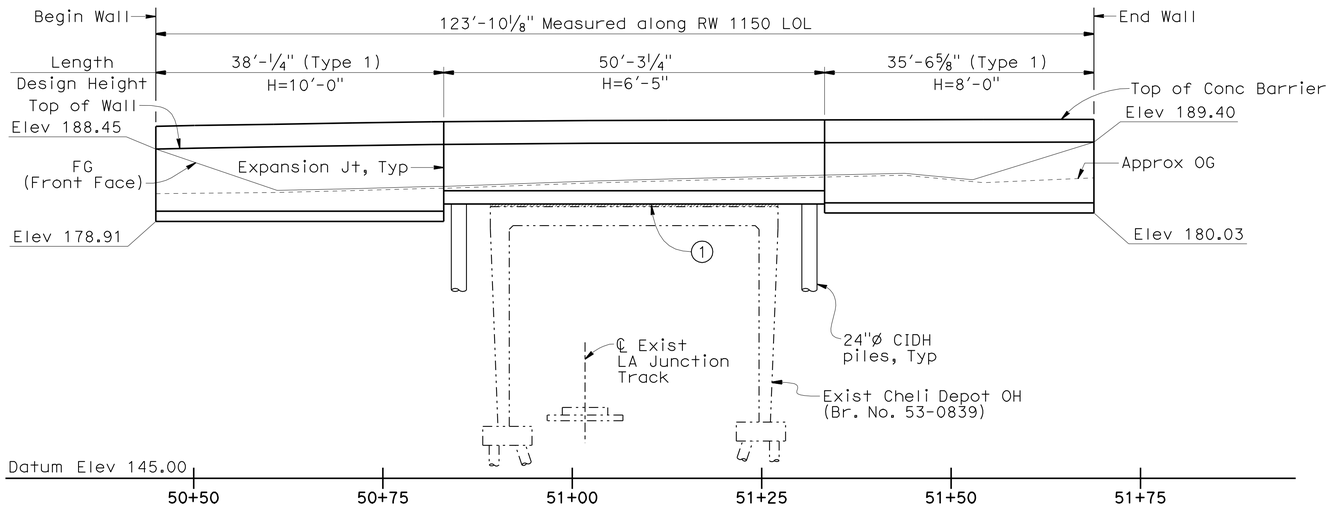

MIRROR ELEVATION

1" = 10'

CURVE DATA:

NO.	R	Δ	T	L
1	2074.500'	1°33'48"	28.302'	56.600'
2	2081.499'	1°51'04"	33.628'	67.250'
3	2060.000'	11°48'47"	213.115'	424.719'
4	2000.000'	76°26'21"	1574.952'	2668.230'
5	441.397'	39°25'34"	158.156'	303.732'

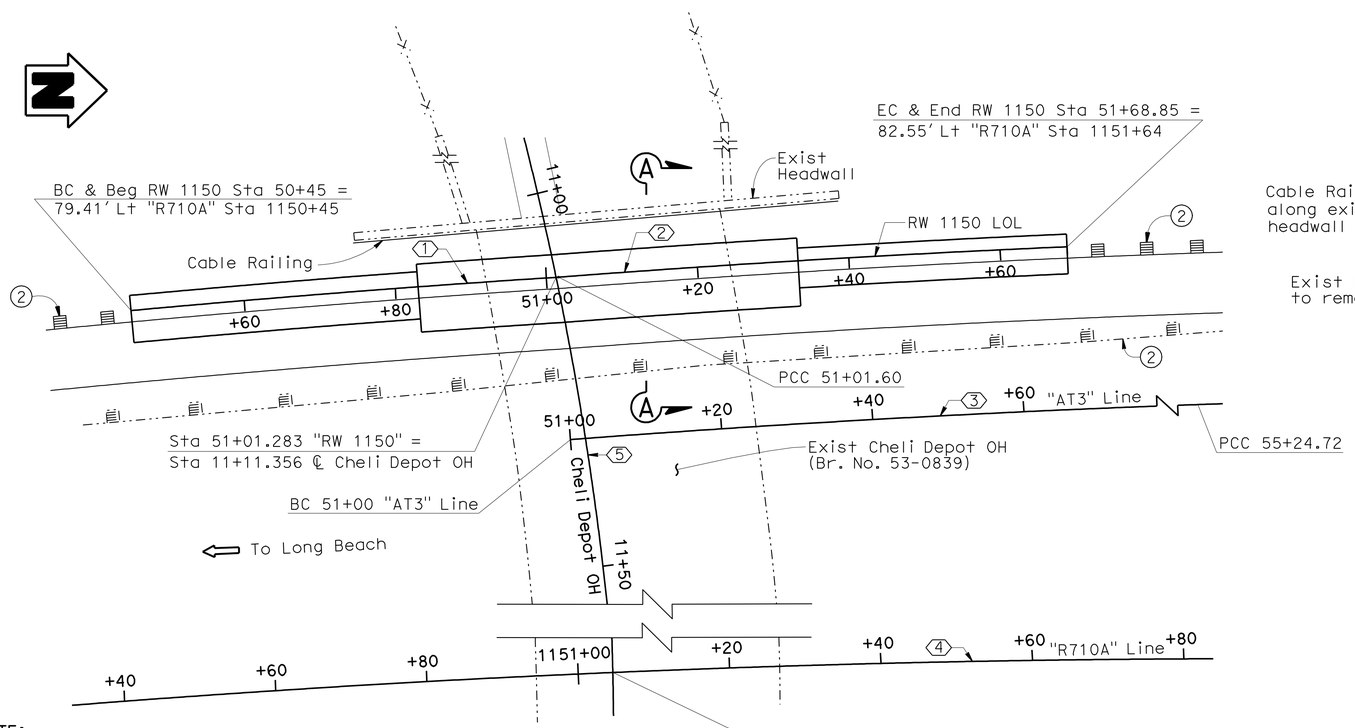

PLAN

1" = 10'

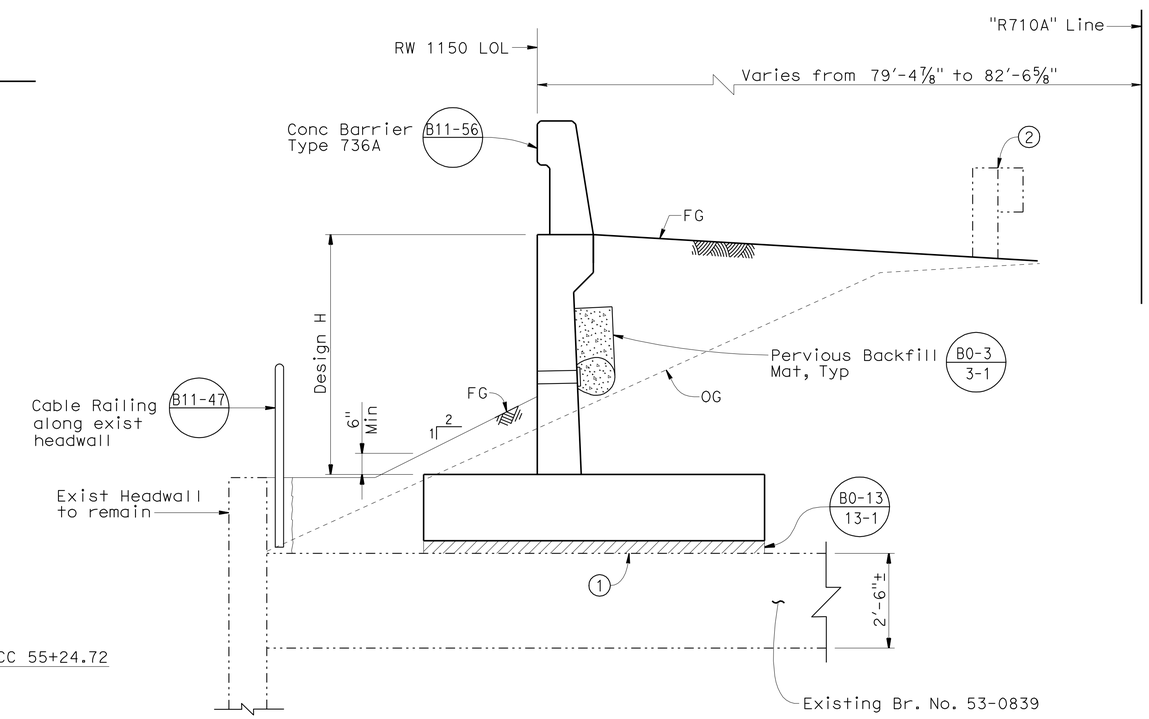

SECTION A-A

½" = 1'-0"

LEGEND:

1. 4" Polystyrene between footing and top of existing structure
2. Exist MBGR to be removed and relocate, see "Roadway Plans"

-·-·- Exist structure

—— New structure

⇦ Denotes traffic direction

NOTE:
THE CONTRACTOR SHALL VERIFY ALL CONTROLLING FIELD DIMENSIONS BEFORE ORDERING OR FABRICATING ANY MATERIAL.

CHUNG-YUAN WEN — DESIGN ENGINEER	DESIGN	BY C. LEE	CHECKED S. YEH	LOAD & RESISTANCE FACTOR DESIGN — LIVE LOADING: HL93 W/"LOW-BOY"; PERMIT DESIGN VEHICLE
	DETAILS	BY J. VALENCIA	CHECKED C. LEE	LAYOUT — BY J. VALENCIA — CHECKED C. LEE
	QUANTITIES	BY C. LEE	CHECKED S. YEH	SPECIFICATIONS — BY K. ELLINGSON — PLANS AND SPECS COMPARED K. ELLINGSON

ORIGINAL SCALE IN INCHES FOR REDUCED PLANS 0 1 2 3

STATE OF CALIFORNIA
DEPARTMENT OF TRANSPORTATION

DIVISION OF ENGINEERING SERVICES
STRUCTURE DESIGN
DESIGN BRANCH 21

BRIDGE NO. 53-E0160
POST MILE 21.80

RETAINING WALL 1150
GENERAL PLAN

UNIT: 3623
PROJECT NUMBER & PHASE: 0700020869 & 1 CONTRACT NO.: 202111

DISREGARD PRINTS BEARING EARLIER REVISION DATES → 1/14/10 3/01/11 3/14/11

SHEET 1 OF 9

STRUCTURES DESIGN GENERAL PLAN SHEET (ENGLISH) (REV.09-01-10)

FILE => 53-E0160-a-gp01.dgn

USERNAME => s124496 DATE PLOTTED => 29-JUN-2011 TIME PLOTTED => 06:52

DIST	COUNTY	ROUTE	POST MILES TOTAL PROJECT	SHEET No.	TOTAL SHEETS
07	LA	710	17.2/26.4	1500	1507

REGISTERED CIVIL ENGINEER — DATE 03/01/11

6-27-11
PLANS APPROVAL DATE

REGISTERED PROFESSIONAL ENGINEER — CHUNG-YUAN WEN — No. C 50690 — Exp. 09/30/11 — CIVIL — STATE OF CALIFORNIA

The State of California or its officers or agents shall not be responsible for the accuracy or completeness of electronic copies of this plan sheet.

GENERAL NOTES
LOAD FACTOR DESIGN (FOR SECTION A-A)

DESIGN: AASHTO LRFD Bridge Design Specifications, 4th Edition and the Caltrans Amendments, preface dated 2008; except that Earth Retaining Systems, Bridge Barrier and Structure Approach Slabs are designed using Bridge Design Specifications ('96 AASHTO w/ Revisions by Caltrans).

REINFORCED CONCRETE: f'_c = 3,600 psi (except CIDH Piles shown on Standard Plan B2-3)
f_y = 60,000 psi (Yield strength of reinforcement)

LOADING CASE: Level ground with 240 psf Live Load Surcharge

SOIL PARAMETER: ø = 33°42′, earth = 120 lb/ft^3
Equivalent fluid pressure =
36 psf/Ft maximum for determination of toe pressure.
27 psf/Ft minimum for determination of heel pressure.

STANDARD PLANS DATED MAY 2006

A10A	ACRONYMS AND ABBREVIATIONS (A-L)
A10B	ACRONYMS AND ABBREVIATIONS (M-Z)
A10C	Symbols (sheet 1 of 2)
A10D	Symbols (sheet 2 of 2)
A62B	LIMITS OF PAYMENT FOR EXCAVATION AND BACKFILL - BRIDGE SURCHARGE AND WALL
B0-3	BRIDGE DETAILS
B0-13	BRIDGE DETAILS
B2-3	16" & 24" CAST-IN-DRILLED-HOLE CONCRETE PILE
B3-1	RETAINING WALL TYPE 1 - H=4′ THROUGH H=30′
B3-8	RETAINING WALL DETAILS NO. 1
B3-9	RETAINING WALL DETAILS NO. 2
B11-47	CABLE RAILING
B11-56	CONCRETE BARRIER TYPE 736

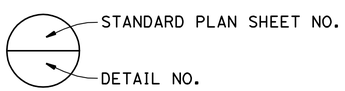

INDEX TO PLANS

Sheet No.	Title
1.	GENERAL PLAN
2.	INDEX TO PLANS
3.	FOUNDATION PLAN
4.	STRUCTURE PLAN
5.	RETAINING WALL DETAILS
6.	LOG OF TEST BORINGS 1 OF 4
7.	LOG OF TEST BORINGS 2 OF 4
8.	LOG OF TEST BORINGS 3 OF 4
9.	LOG OF TEST BORINGS 4 OF 4

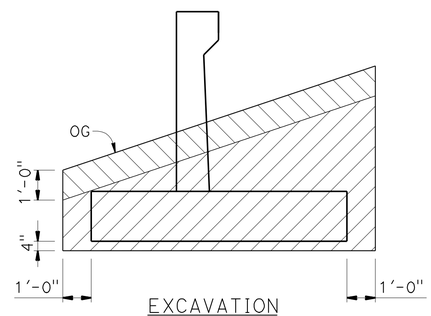

EXCAVATION
(Sta 50+83.02 to Sta 51+33.29)

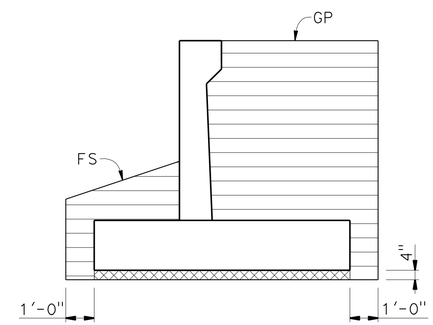

BACKFILLING
(Sta 50+83.02 to Sta 51+33.29)

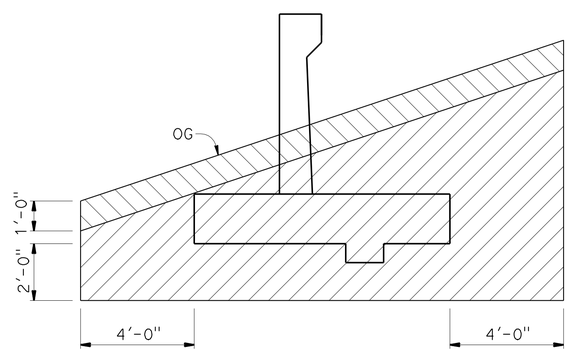

EXCAVATION

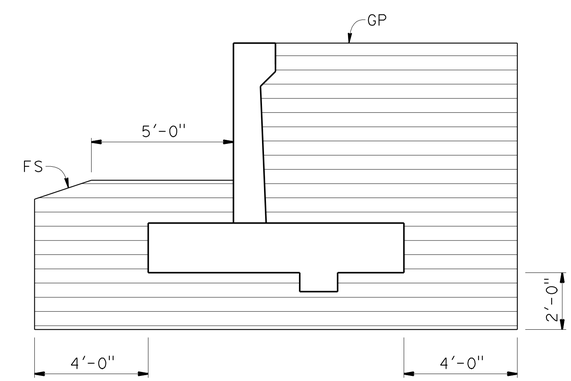

BACKFILLING

(Sta 50+45 to Sta 50+83.02 & Sta 51+33.29 to Sta 51+68.85)

LIMITS OF PAYMENT
No Scale

LEGEND:
- Polystyrene
- Structure Excavation
- Structure Backfill
- Structure Excavation (Type Z-2) (Aerially Deposited Lead)

NOTE:
THE CONTRACTOR SHALL VERIFY ALL CONTROLLING FIELD DIMENSIONS BEFORE ORDERING OR FABRICATING ANY MATERIAL.

	BY	CHECKED
DESIGN	C. LEE	S. YEH
DETAILS	J. VALENCIA	C. LEE
QUANTITIES	C. LEE	S. YEH

STATE OF CALIFORNIA
DEPARTMENT OF TRANSPORTATION

DIVISION OF ENGINEERING SERVICES
STRUCTURE DESIGN
DESIGN BRANCH 21

BRIDGE NO. 53-E0160
POST MILE 21.80

RETAINING WALL 1150
INDEX TO PLANS

STRUCTURES DESIGN DETAIL SHEET (ENGLISH) (REV. 09-01-10)

ORIGINAL SCALE IN INCHES FOR REDUCED PLANS 0 1 2 3

UNIT: 3623
PROJECT NUMBER & PHASE: 0700020869 & 1 CONTRACT NO.: 202111

DISREGARD PRINTS BEARING EARLIER REVISION DATES

REVISION DATES: 2/17/10 3/9/11 3/14/11

SHEET 2 OF 9

FILE => 53-E0160-a-ltp.dgn

USERNAME => s124496 DATE PLOTTED => 29-JUN-2011 TIME PLOTTED => 06:52

DIST	COUNTY	ROUTE	POST MILES TOTAL PROJECT	SHEET No.	TOTAL SHEETS
07	LA	710	17.2/26.4	1501	1507

REGISTERED CIVIL ENGINEER — DATE 03/01/11

6-27-11
PLANS APPROVAL DATE

REGISTERED PROFESSIONAL ENGINEER — CHUNG-YUAN WEN — No. C 50690 — Exp. 09/30/11 — CIVIL — STATE OF CALIFORNIA

The State of California or its officers or agents shall not be responsible for the accuracy or completeness of electronic copies of this plan sheet.

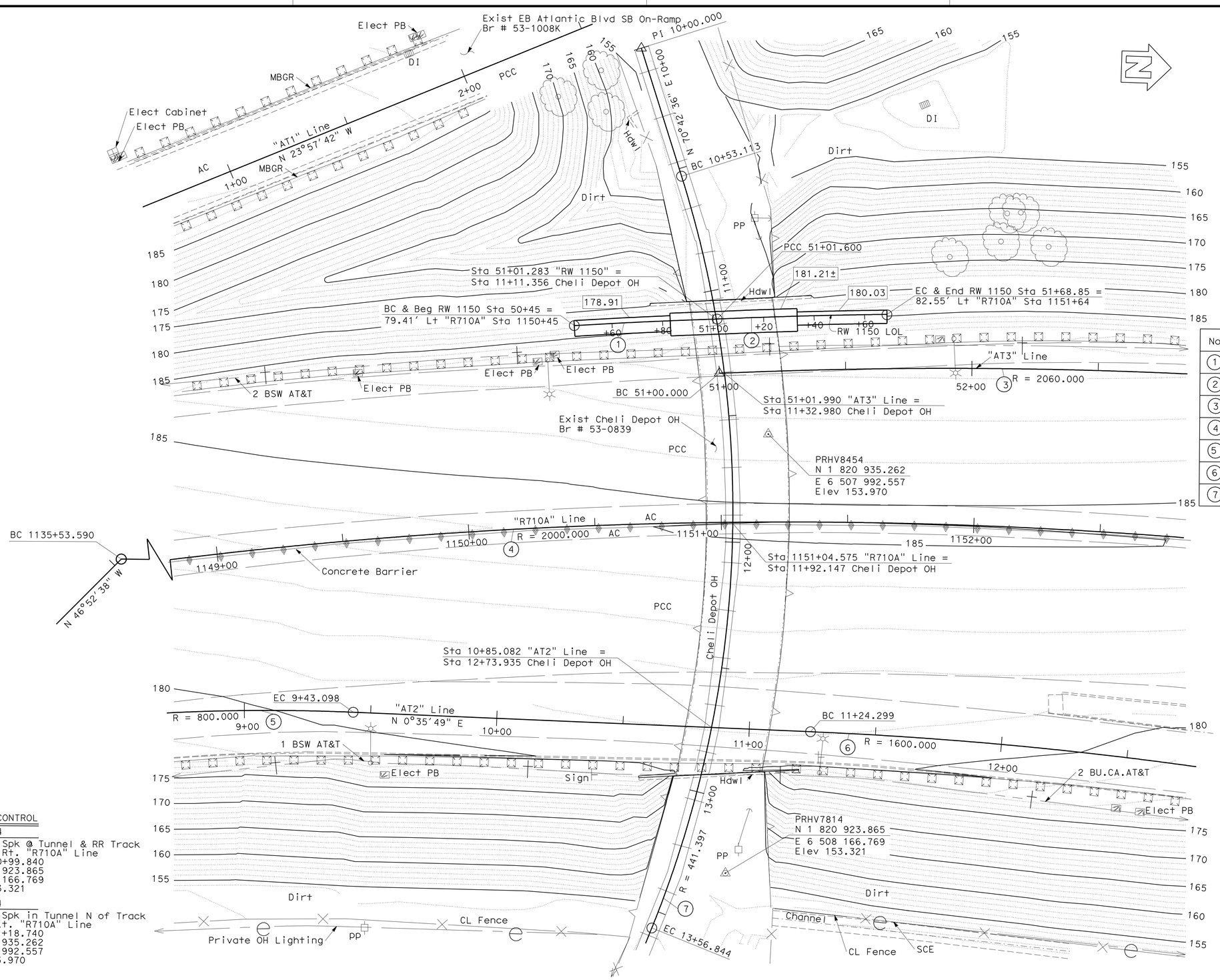

CURVE DATA:

No.	R	Δ	T	L
1	2074.500	1°33'48"	28.302	56.600
2	2081.499	1°51.04	33.628	67.250
3	2060.000	11°48'47"	213.115	424.719
4	2000.000	76°26'21"	1574.952	2668.230
5	800.000	12°46'45"	89.587	178.430
6	1600.000	17°46'23"	250.169	496.320
7	441.397	39°25'34"	158.156	303.732

SURVEY CONTROL

PRHV7814
Fd: PD Spk @ Tunnel & RR Track
138.828 Rt. "R710A" Line
Sta 1150+99.840
N 1 820 923.865
E 6 508 166.769
Elev 153.321

PRHV8454
FD: Pd Spk in Tunnel N of Track
34.785 Lt. "R710A" Line
Sta 1151+18.740
N 1 820 935.262
E 6 507 992.557
Elev 153.970

LEGEND:
Bottom Ftg Elev

NOTES:
Underground utilities as shown are approximate

PRELIMINARY INVESTIGATION SECTION

SCALE	VERT.DATUM NAVD88	PHOTOGRAMMETRY AS OF: X			
1:20	HORZ.DATUM NAD83	SURVEYED	BY D7	CHECKED	BY T. Phung/C. Stewart
ALIGNMENT TIES Dist Traverse Sheets		DRAFTED	BY C. Pham	CHECKED	BY E. Viajar

DESIGN	BY C. LEE	CHECKED	S. YEH
DETAILS	BY J. VALENCIA	CHECKED	C. LEE
QUANTITIES	BY C. LEE	CHECKED	S. YEH

STATE OF CALIFORNIA
DEPARTMENT OF TRANSPORTATION

DIVISION OF ENGINEERING SERVICES
STRUCTURE DESIGN
DESIGN BRANCH 21

BRIDGE NO. 53-E0160
POST MILE 21.80

RETAINING WALL 1150
FOUNDATION PLAN

STRUCTURES FOUNDATION PLAN SHEET (ENGLISH) (REV. 09-01-10)

ORIGINAL SCALE IN INCHES FOR REDUCED PLANS 0 1 2 3

UNIT: 3263
PROJECT NUMBER & PHASE: 0700020869 & 1 CONTRACT NO.: 202111

DISREGARD PRINTS BEARING EARLIER REVISION DATES

REVISION DATES: ~~05-26-10~~ 03-01-11 ~~02-14-11~~

SHEET 3 OF 9

FILE => 53-E0160-e-fdpl01.dgn

DIST	COUNTY	ROUTE	POST MILES TOTAL PROJECT	SHEET No.	TOTAL SHEETS
07	LA	710	17.2/26.4	1502	1507

REGISTERED CIVIL ENGINEER — DATE 03/01/11

6-27-11
PLANS APPROVAL DATE

REGISTERED PROFESSIONAL ENGINEER — CHUNG-YUAN WEN — No. C 50690 — Exp. 09/30/11 — CIVIL — STATE OF CALIFORNIA

The State of California or its officers or agents shall not be responsible for the accuracy or completeness of electronic copies of this plan sheet.

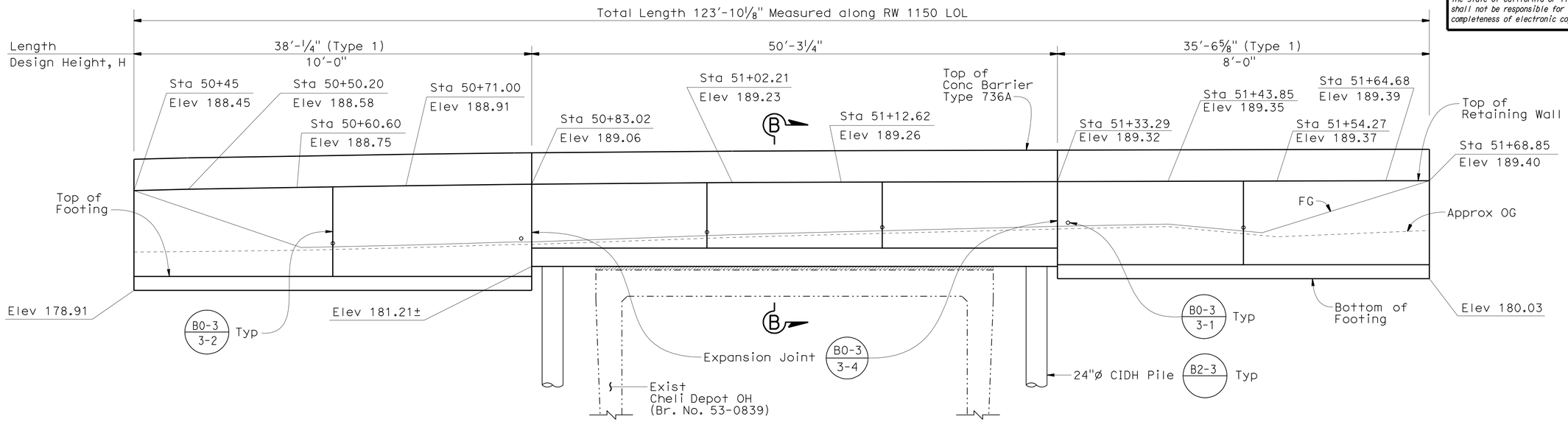

ELEVATION

3/16" = 1'-0"

Note:

1. For Section B-B, see "RETAINING WALL DETAILS" sheet.

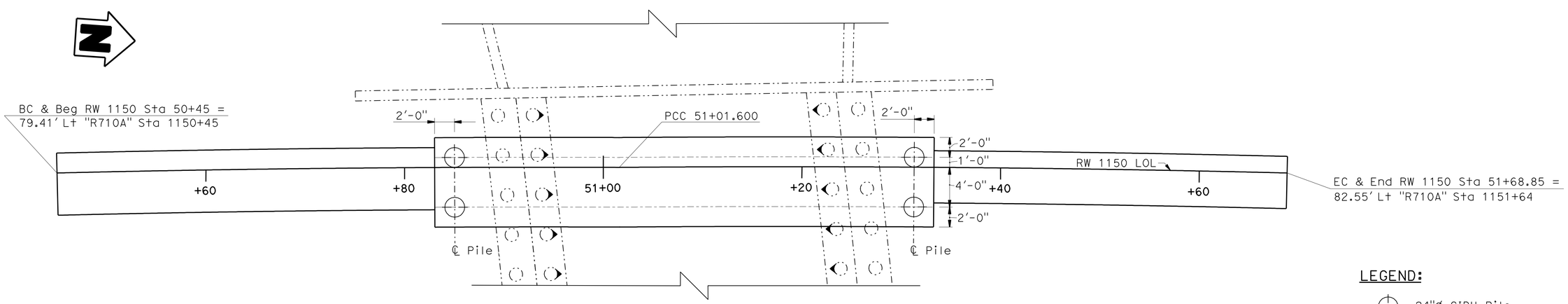

PLAN

3/16" = 1'-0"

LEGEND:

- 24"ø CIDH Pile
- Exist Battered Pile
- Exist Plumb Pile

NOTE:
THE CONTRACTOR SHALL VERIFY ALL CONTROLLING FIELD DIMENSIONS BEFORE ORDERING OR FABRICATING ANY MATERIAL.

	BY	CHECKED
DESIGN	C. LEE	S. YEH
DETAILS	J. VALENCIA	C. LEE
QUANTITIES	C. LEE	S. YEH

STATE OF CALIFORNIA
DEPARTMENT OF TRANSPORTATION

DIVISION OF ENGINEERING SERVICES
STRUCTURE DESIGN
DESIGN BRANCH 21

BRIDGE NO. 53-E0160
POST MILE 21.80

RETAINING WALL 1150
STRUCTURE PLAN

STRUCTURES DESIGN DETAIL SHEET (ENGLISH) (REV. 09-01-10)

ORIGINAL SCALE IN INCHES FOR REDUCED PLANS 0 1 2 3

UNIT: 3623
PROJECT NUMBER & PHASE: 0700020869 & 1 CONTRACT NO.: 202111

DISREGARD PRINTS BEARING EARLIER REVISION DATES

REVISION DATES: 1/28/10 3/1/11 2/10/11

SHEET 4 OF 9

FILE => 53-E0160-f-sp01.dgn

USERNAME => s124496 DATE PLOTTED => 29-JUN-2011 TIME PLOTTED => 06:53

DIST	COUNTY	ROUTE	POST MILES TOTAL PROJECT	SHEET No.	TOTAL SHEETS
07	LA	710	17.2/26.4	1503	1507

REGISTERED CIVIL ENGINEER 03/01/11 DATE

6-27-11
PLANS APPROVAL DATE

REGISTERED PROFESSIONAL ENGINEER CHUNG-YUAN WEN No. C 50690 Exp. 09/30/11 CIVIL STATE OF CALIFORNIA

The State of California or its officers or agents shall not be responsible for the accuracy or completeness of electronic copies of this plan sheet.

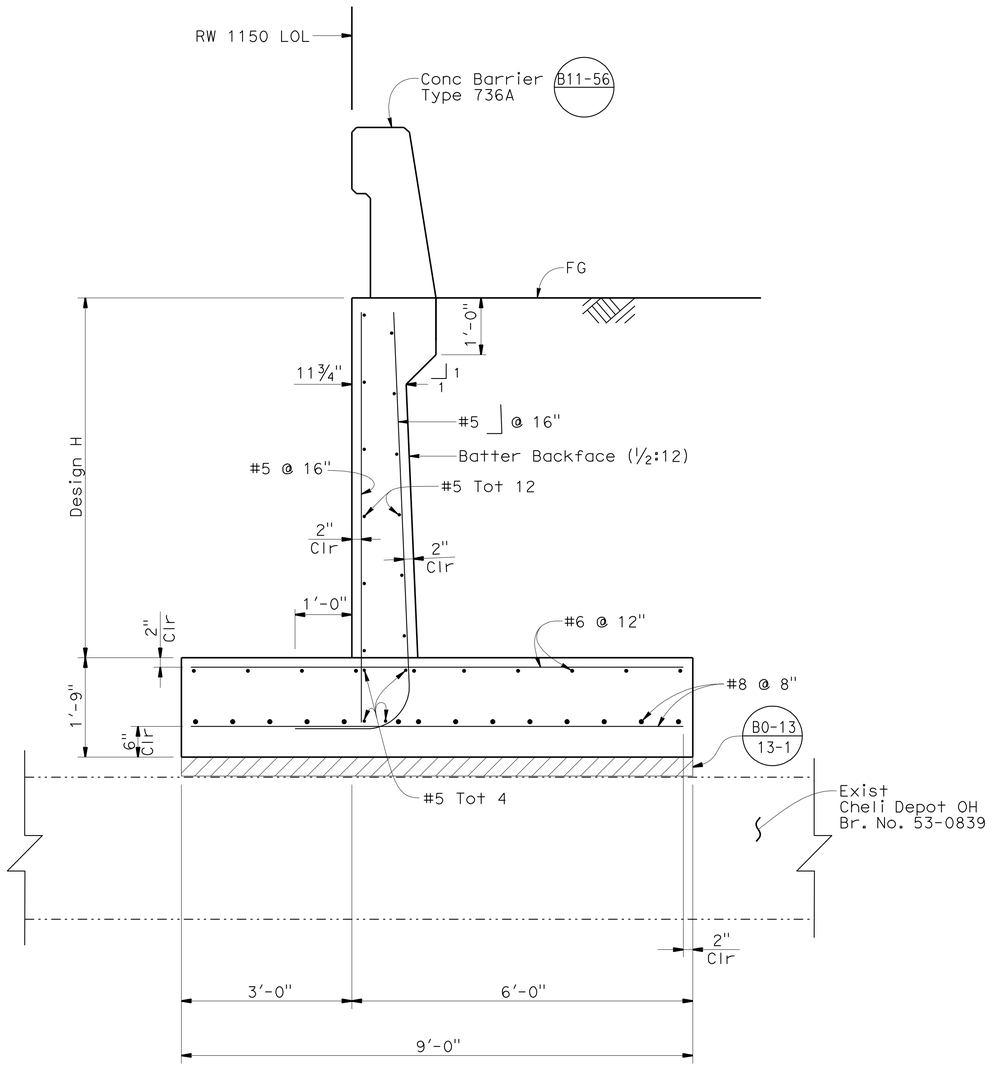

SECTION B-B

¾" = 1'-0"

(For Sta 50+83.02 to Sta 51+33.29)

PILE DATA TABLE

Location	Pile Type	Design Capacity (kips)	Nominal Resistance (kips)		Cut-off Elevation (ft)	Design Tip Elevation (ft)	Specified Tip Elevation (ft)
			Compression	Tension			
Sta 50+83.02 to 51+33.29	24" CIDH	200	290	ø	181.46±	126.2 (1) 148.2 (2) 136.2 (3)	126.2

Design Tip Elevation is controlled by the following demands:
(1) Compression, (2) Settlement, (3) Lateral Loads

LEGEND:

4" Expanded Polystyrene

NOTE:
THE CONTRACTOR SHALL VERIFY ALL CONTROLLING FIELD DIMENSIONS BEFORE ORDERING OR FABRICATING ANY MATERIAL.

	BY	CHECKED
DESIGN	C. LEE	S. YEH
DETAILS	J. VALENCIA	C. LEE
QUANTITIES	C. LEE	S. YEH

STATE OF CALIFORNIA
DEPARTMENT OF TRANSPORTATION

DIVISION OF ENGINEERING SERVICES
STRUCTURE DESIGN
DESIGN BRANCH 21

BRIDGE NO. 53-E0160
POST MILE 21.80

RETAINING WALL 1150
RETAINING WALL DETAILS

STRUCTURES DESIGN DETAIL SHEET (ENGLISH) (REV. 09-01-10)

ORIGINAL SCALE IN INCHES FOR REDUCED PLANS 0 1 2 3

UNIT: 3623
PROJECT NUMBER & PHASE: 0700020869 & 1 CONTRACT NO.: 202111

DISREGARD PRINTS BEARING EARLIER REVISION DATES

REVISION DATES: 2/18/10 3/1/11 2/8/11

SHEET 5 OF 9

FILE => 53-E0160-g-rwdt01.dgn

USERNAME => s124496 DATE PLOTTED => 29-JUN-2011 TIME PLOTTED => 06:53

DIST	COUNTY	ROUTE	POST MILES TOTAL PROJECT	SHEET No	TOTAL SHEETS
07	LA	710	17.2/26.4	1504	1507

CERTIFIED GEOTECHNICAL ENGINEER 11-1-10

6-27-11
PLANS APPROVAL DATE

REGISTERED PROFESSIONAL ENGINEER Paramananthan Piratheepan No. 2826 Exp. 9-30-12 GEOTECHNICAL STATE OF CALIFORNIA

The State of California or its officers or agents shall not be responsible for the accuracy or completeness of electronic copies of this plan sheet.

This LOTB sheet was prepared in accordance with the Caltrans Soil & Rock Logging, Classification, & Presentation Manual (2010 Edition).

BENCH MARK

PRHV8454
FD: Pd Spk in Tunnel N of Track
34.785 Lt. ℄ Rte 710
Sta 1151+18.740
N 1 820 935.262
E 6 507 992.557
Elev 153.970′

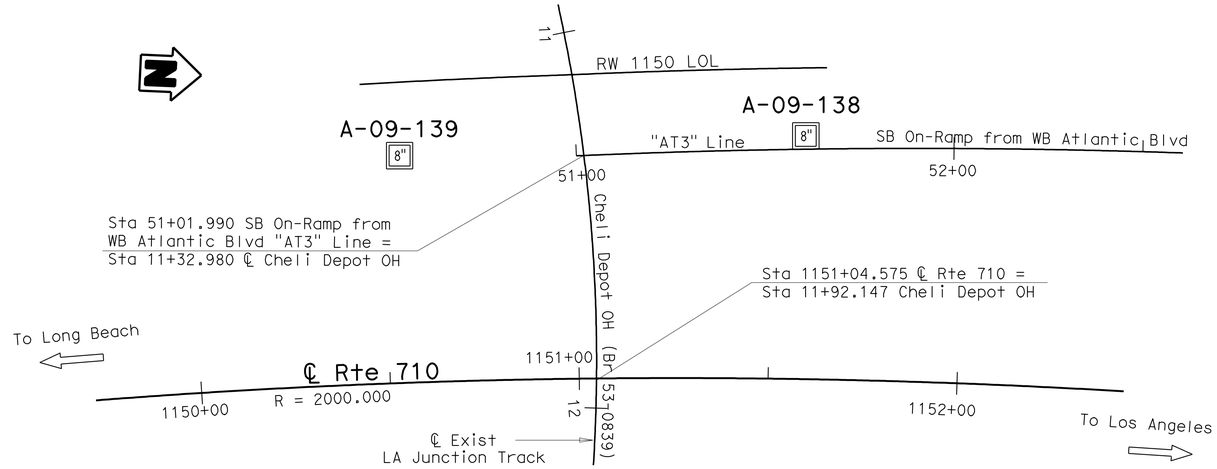

PLAN

1" = 20′

Note: No ground water encountered during field investigation.

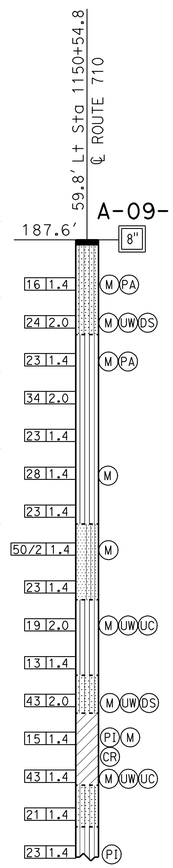

ASPHALT CONCRETE (6" to 8").

SILTY SAND (SM); medium dense; dark brown; moist; mostly fine SAND; some fines; (FILL).

-with few fine GRAVEL; crushed COBBLE/ROCK fragments.

SANDY SILT (ML); medium dense; brown; moist; few fine GRAVEL; some fine SAND; mostly nonplastic fines; crushed COBBLE/ROCK fragments.

-dense.

-medium dense.

Poorly graded SAND with SILT and GRAVEL (SP-SM); very dense; brown; moist; little fine GRAVEL; mostly fine SAND; crushed COBBLE/ROCK fragments; (ALLUVIUM).

-medium dense.

SILT (ML); very stiff; grayish brown and dark brown; moist; few fine SAND.
PP=2.0 and 3.0 tsf; UC=18.1 psi.

PP=2.0 and 2.5 tsf.

SILTY SAND (SM); grayish brown; moist; mostly fine SAND; little fines.

Lean CLAY (CL); stiff; dark grayish brown; moist; few fine SAND.
PP=1.5 and 1.75 tsf.

-dark brown; hard; PP>4.5 tsf; UC=59.3 psi.

SILTY SAND (SM); medium dense; brown; moist; mostly fine SAND; little fines.

SILT (ML); stiff and very stiff; brown; moist.
PP=1.25 and 2.0 tsf.

10-30-09
Terminated at Elev 106.1′
ER_i = 68%

190 180 170 160 150 140 130 120 110 100

1150+00 1151+00 1152+00

PROFILE

Horiz: 1" = 10′
Vert: 1" = 10′

ENGINEERING SERVICES	GEOTECHNICAL SERVICES	STATE OF CALIFORNIA DEPARTMENT OF TRANSPORTATION	DIVISION OF ENGINEERING SERVICES STRUCTURE DESIGN DESIGN BRANCH	BRIDGE NO. 53-E0160 POST MILES 21.80	RETAINING WALL 1150 LOG OF TEST BORINGS 1 OF 4
FUNCTIONAL SUPERVISOR NAME: S. Karimi	DRAWN BY: C. Christian, I.G-Remmen, 10/10 CHECKED BY: C. Bugarin	FIELD INVESTIGATION BY: P. Piratheepan			

OGS CIVIL LOG OF TEST BORINGS SHEET

ORIGINAL SCALE IN INCHES FOR REDUCED PLANS 0 1 2 3

CU 07
EA 202111

DISREGARD PRINTS BEARING EARLIER REVISION DATES 10-26-10 10-27-10 11-01-10

REVISION DATES

SHEET 6 OF 9

FILE => 53-E0160-z-ltb01of4.dgn

USERNAME => s1224496 DATE PLOTTED => 29-JUN-2011 TIME PLOTTED => 06:53

DIST	COUNTY	ROUTE	POST MILES TOTAL PROJECT	SHEET No	TOTAL SHEETS
07	LA	710	17.2/26.4	1505	1507

CERTIFIED GEOTECHNICAL ENGINNER 11-1-10

6-27-11
PLANS APPROVAL DATE

REGISTERED PROFESSIONAL ENGINEER
Paramananthan Piratheepan
No. 2826
Exp. 9-30-12
GEOTECHNICAL
STATE OF CALIFORNIA

The State of California or its officers or agents shall not be responsible for the accuracy or completeness of electronic copies of this plan sheet.

This LOTB sheet was prepared in accordance with the Caltrans Soil & Rock Logging, Classification, & Presentation Manual (2010 Edition).

FOR PLAN VIEW, SEE
"LOG OF TEST BORINGS 1 OF 4"

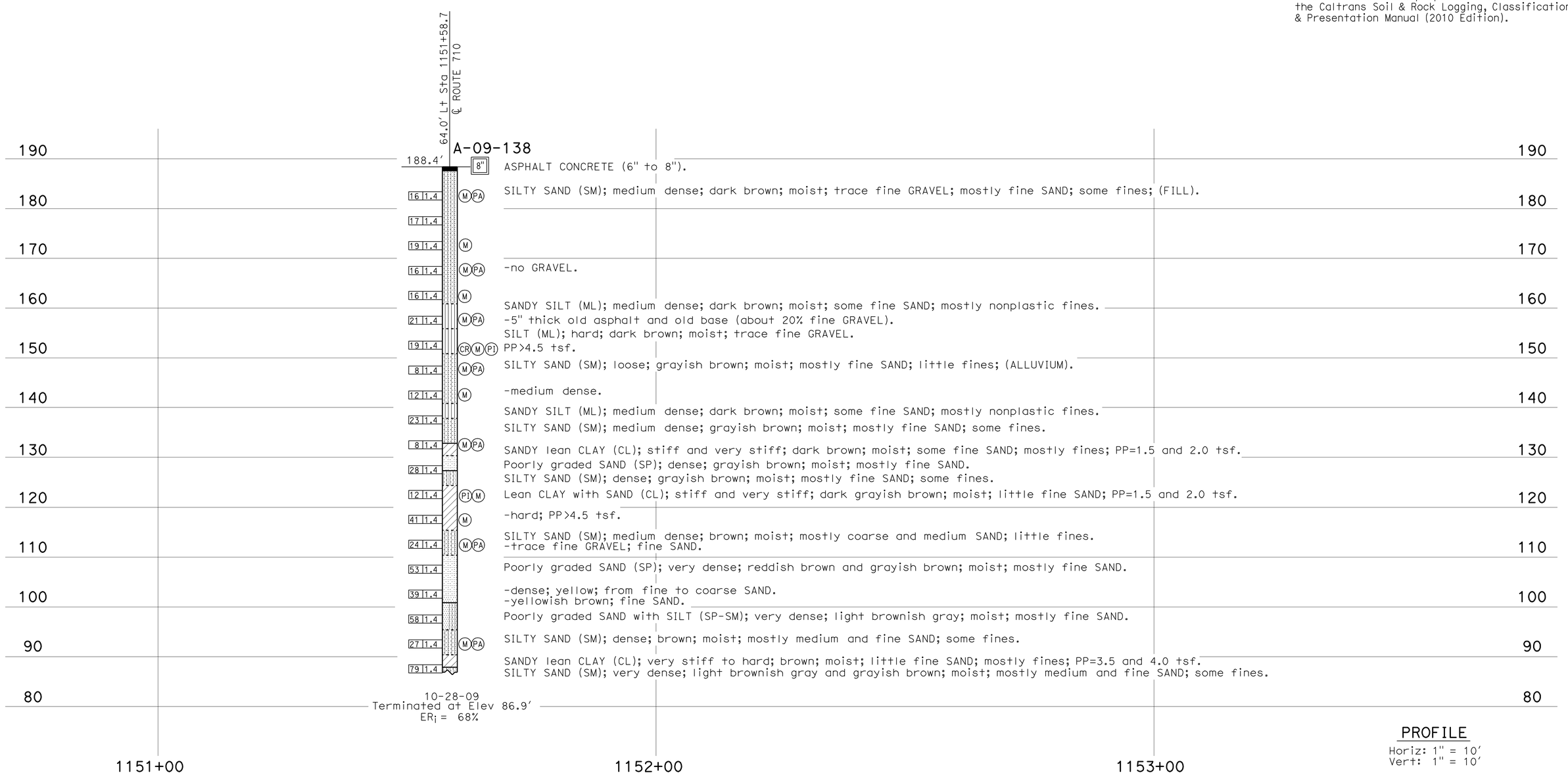

PROFILE
Horiz: 1" = 10'
Vert: 1" = 10'

ENGINEERING SERVICES	GEOTECHNICAL SERVICES	STATE OF CALIFORNIA DEPARTMENT OF TRANSPORTATION	DIVISION OF ENGINEERING SERVICES STRUCTURE DESIGN DESIGN BRANCH	BRIDGE NO. 53-E0160 POST MILES 21.80	RETAINING WALL 1150
FUNCTIONAL SUPERVISOR NAME: S. Karimi	DRAWN BY: C. Christian, I.G-Remmen, 10/10 CHECKED BY: C. Bugarin	FIELD INVESTIGATION BY: P. Piratheepan			LOG OF TEST BORINGS 2 OF 4

OGS CIVIL LOG OF TEST BORINGS SHEET

ORIGINAL SCALE IN INCHES FOR REDUCED PLANS 0 1 2 3

CU 07
EA 202111

DISREGARD PRINTS BEARING EARLIER REVISION DATES → 10-26-10 10-27-10 11-01-10

REVISION DATES

SHEET 7 OF 9

FILE => 53-E0160-z-ltb02of4.dgn

USERNAME => s124496 DATE PLOTTED => 29-JUN-2011 TIME PLOTTED => 06:53

DIST	COUNTY	ROUTE	POST MILES TOTAL PROJECT	SHEET No	TOTAL SHEETS
07	LA	710	17.2/26.4	1506	1507

CERTIFIED GEOTECHNICAL ENGINNER 11-1-10

6-27-11
PLANS APPROVAL DATE

REGISTERED PROFESSIONAL ENGINEER
Paramananthan Piratheepan
No. 2826
Exp. 9-30-12
GEOTECHNICAL
STATE OF CALIFORNIA

The State of California or its officers or agents shall not be responsible for the accuracy or completeness of electronic copies of this plan sheet.

REFERENCE: CALTRANS SOIL & ROCK LOGGING, CLASSIFICATION, AND PRESENTATION MANUAL (2010)

CEMENTATION

Description	Criteria
Weak	Crumbles or breaks with handling or little finger pressure.
Moderate	Crumbles or breaks with considerable finger pressure.
Strong	Will not crumble or break with finger pressure.

BOREHOLE IDENTIFICATION

Symbol	Hole Type	Description
Size	A	Auger Boring (hollow or solid stem bucket)
Size	R RW RC P	Rotary drilled boring (conventional) Rotary drilled with self-casing wire-line Rotary core with continuously-sampled, self-casing wire-line Rotary percussion boring (air)
Size	R	Rotary drilled diamond core
Size	HD HA	Hand driven (1-inch soil tube) Hand Auger
●	D	Dynamic Cone Penetration Boring
▲	CPT	Cone Penetration Test (ASTM D 5778)
⬚	O	Other (note on LOTB)

Note: Size in inches.

CONSISTENCY OF COHESIVE SOILS

Description	Shear Strength (tsf)	Pocket Penetrometer Measurement, PP, (tsf)	Torvane Measurement, TV, (tsf)	Vane Shear Measurement, VS, (tsf)
Very Soft	Less than 0.12	Less than 0.25	Less than 0.12	Less than 0.12
Soft	0.12 - 0.25	0.25 - 0.5	0.12 - 0.25	0.12 - 0.25
Medium Stiff	0.25 - 0.5	0.5 - 1	0.25 - 0.5	0.25 - 0.5
Stiff	0.5 - 1	1 - 2	0.5 - 1	0.5 - 1
Very Stiff	1 - 2	2 - 4	1 - 2	1 - 2
Hard	Greater than 2	Greater than 4	Greater than 2	Greater than 2

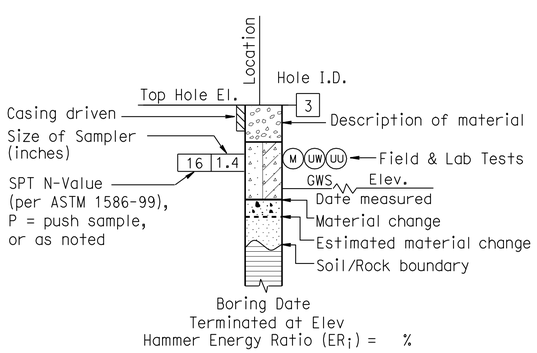

ROTARY BORING

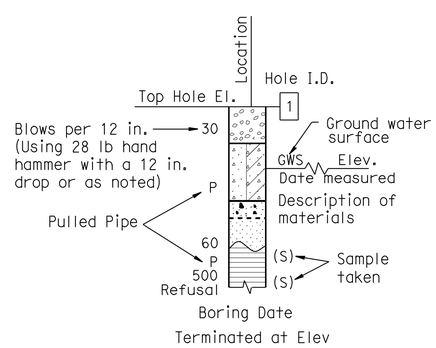

HAND BORING

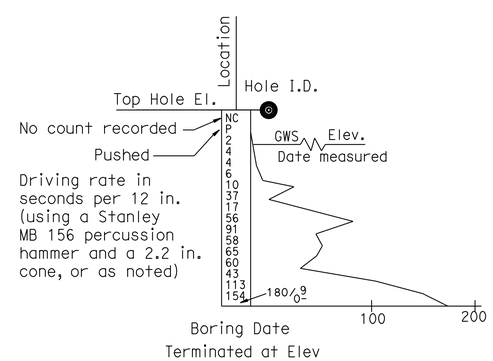

DYNAMIC CONE PENETRATION BORING

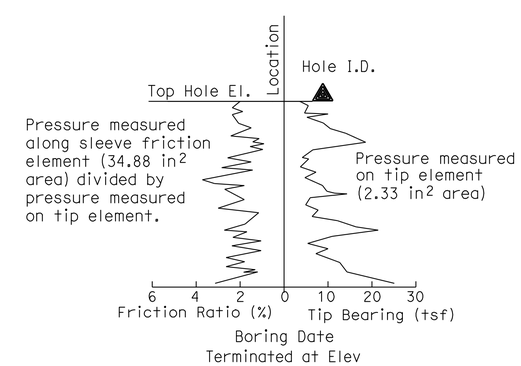

CONE PENETRATION TEST (CPT) BORING

ENGINEERING SERVICES	GEOTECHNICAL SERVICES	STATE OF CALIFORNIA DEPARTMENT OF TRANSPORTATION	DIVISION OF ENGINEERING SERVICES STRUCTURE DESIGN DESIGN BRANCH	BRIDGE NO. 53-E0160 / POST MILE 21.80	RETAINING WALL 1150 LOG OF TEST BORINGS 3 OF 4
	PREPARED BY: I. G-Remmen, 10/10				

GS LOTB SOIL LEGEND

ORIGINAL SCALE IN INCHES FOR REDUCED PLANS 0 1 2 3

CU 07
EA 202111

DISREGARD PRINTS BEARING EARLIER REVISION DATES

REVISION DATES

SHEET 8 OF 9

FILE => 53-E0160-z-ltb03of4.dgn

USERNAME => s124496 DATE PLOTTED => 29-JUN-2011 TIME PLOTTED => 06:53

REFERENCE: CALTRANS SOIL & ROCK LOGGING, CLASSIFICATION, AND PRESENTATION MANUAL (2010)

DIST	COUNTY	ROUTE	POST MILES TOTAL PROJECT	SHEET No	TOTAL SHEETS
07	LA	710	17.2/26.4	1507	1507

CERTIFIED GEOTECHNICAL ENGINEER 11-1-10

6-27-11
PLANS APPROVAL DATE

REGISTERED PROFESSIONAL ENGINEER Paramananthan Piratheepan No. 2826 Exp. 9-30-12 GEOTECHNICAL STATE OF CALIFORNIA

The State of California or its officers or agents shall not be responsible for the accuracy or completeness of electronic copies of this plan sheet.

GROUP SYMBOLS AND NAMES

Graphic/Symbol	Group Names	Graphic/Symbol	Group Names
GW	Well-graded GRAVEL Well-graded GRAVEL with SAND	CL	Lean CLAY Lean CLAY with SAND Lean CLAY with GRAVEL SANDY lean CLAY SANDY lean CLAY with GRAVEL GRAVELLY lean CLAY GRAVELLY lean CLAY with SAND
GP	Poorly-graded GRAVEL Poorly-graded GRAVEL with SAND		
GW-GM	Well-graded GRAVEL with SILT Well-graded GRAVEL with SILT and SAND	CL-ML	SILTY CLAY SILTY CLAY with SAND SILTY CLAY with GRAVEL SANDY SILTY CLAY SANDY SILTY CLAY with GRAVEL GRAVELLY SILTY CLAY GRAVELLY SILTY CLAY with SAND
GW-GC	Well-graded GRAVEL with CLAY (or SILTY CLAY) Well-graded GRAVEL with CLAY and SAND (or SILTY CLAY and SAND)		
GP-GM	Poorly-graded GRAVEL with SILT Poorly-graded GRAVEL with SILT and SAND	ML	SILT SILT with SAND SILT with GRAVEL SANDY SILT SANDY SILT with GRAVEL GRAVELLY SILT GRAVELLY SILT with SAND
GP-GC	Poorly-graded GRAVEL with CLAY (or SILTY CLAY) Poorly-graded GRAVEL with CLAY and SAND (or SILTY CLAY and SAND)		
GM	SILTY GRAVEL SILTY GRAVEL with SAND	OL	ORGANIC lean CLAY ORGANIC lean CLAY with SAND ORGANIC lean CLAY with GRAVEL SANDY ORGANIC lean CLAY SANDY ORGANIC lean CLAY with GRAVEL GRAVELLY ORGANIC lean CLAY GRAVELLY ORGANIC lean CLAY with SAND
GC	CLAYEY GRAVEL CLAYEY GRAVEL with SAND		
GC-GM	SILTY, CLAYEY GRAVEL SILTY, CLAYEY GRAVEL with SAND	OL	ORGANIC SILT ORGANIC SILT with SAND ORGANIC SILT with GRAVEL SANDY ORGANIC SILT SANDY ORGANIC SILT with GRAVEL GRAVELLY ORGANIC SILT GRAVELLY ORGANIC SILT with SAND
SW	Well-graded SAND Well-graded SAND with GRAVEL		
SP	Poorly-graded SAND Poorly-graded SAND with GRAVEL	CH	Fat CLAY Fat CLAY with SAND Fat CLAY with GRAVEL SANDY fat CLAY SANDY fat CLAY with GRAVEL GRAVELLY fat CLAY GRAVELLY fat CLAY with SAND
SW-SM	Well-graded SAND with SILT Well-graded SAND with SILT and GRAVEL		
SW-SC	Well-graded SAND with CLAY (or SILTY CLAY) Well-graded SAND with CLAY and GRAVEL (or SILTY CLAY and GRAVEL)	MH	Elastic SILT Elastic SILT with SAND Elastic SILT with GRAVEL SANDY elastic SILT SANDY elastic SILT with GRAVEL GRAVELLY elastic SILT GRAVELLY elastic SILT with SAND
SP-SM	Poorly-graded SAND with SILT Poorly-graded SAND with SILT and GRAVEL		
SP-SC	Poorly-graded SAND with CLAY (or SILTY CLAY) Poorly-graded SAND with CLAY and GRAVEL (or SILTY CLAY and GRAVEL)	OH	ORGANIC fat CLAY ORGANIC fat CLAY with SAND ORGANIC fat CLAY with GRAVEL SANDY ORGANIC fat CLAY SANDY ORGANIC fat CLAY with GRAVEL GRAVELLY ORGANIC fat CLAY GRAVELLY ORGANIC fat CLAY with SAND
SM	SILTY SAND SILTY SAND with GRAVEL		
SC	CLAYEY SAND CLAYEY SAND with GRAVEL	OH	ORGANIC elastic SILT ORGANIC elastic SILT with SAND ORGANIC elastic SILT with GRAVEL SANDY ORGANIC elastic SILT SANDY ORGANIC elastic SILT with GRAVEL GRAVELLY ORGANIC elastic SILT GRAVELLY ORGANIC elastic SILT with SAND
SC-SM	SILTY, CLAYEY SAND SILTY, CLAYEY SAND with GRAVEL		
PT	PEAT	OL/OH	ORGANIC SOIL ORGANIC SOIL with SAND ORGANIC SOIL with GRAVEL SANDY ORGANIC SOIL SANDY ORGANIC SOIL with GRAVEL GRAVELLY ORGANIC SOIL GRAVELLY ORGANIC SOIL with SAND
	COBBLES COBBLES and BOULDERS BOULDERS		

FIELD AND LABORATORY TESTING

- (C) Consolidation (ASTM D 2435)
- (CL) Collapse Potential (ASTM D 5333)
- (CP) Compaction Curve (CTM 216)
- (CR) Corrosivity Testing (CTM 643, CTM 422, CTM 417)
- (CU) Consolidated Undrained Triaxial (ASTM D 4767)
- (DS) Direct Shear (ASTM D 3080)
- (EI) Expansion Index (ASTM D 4829)
- (M) Moisture Content (ASTM D 2216)
- (OC) Organic Content-% (ASTM D 2974)
- (P) Permeability (CTM 220)
- (PA) Particle Size Analysis (ASTM D 422)
- (PI) Plasticity Index (AASHTO T 90) Liquid Limit (AASHTO T 89)
- (PL) Point Load Index (ASTM D 5731)
- (PM) Pressure Meter
- (R) R-Value (CTM 301)
- (SE) Sand Equivalent (CTM 217)
- (SG) Specific Gravity (AASHTO T 100)
- (SL) Shrinkage Limit (ASTM D 427)
- (SW) Swell Potential (ASTM D 4546)
- (UC) Unconfined Compression-Soil (ASTM D 2166) Unconfined Compression-Rock (ASTM D 2938)
- (UU) Unconsolidated Undrained Triaxial (ASTM D 2850)
- (UW) Unit Weight (ASTM D 4767)

APPARENT DENSITY OF COHESIONLESS SOILS

Description	SPT N_{60} (Blows / 12 in.)
Very Loose	0 - 5
Loose	5 - 10
Medium Dense	10 - 30
Dense	30 - 50
Very Dense	Greater than 50

MOISTURE

Description	Criteria
Dry	No discernable moisture
Moist	Moisture present, but no free water
Wet	Visible free water

PERCENT OR PROPORTION OF SOILS

Description	Criteria
Trace	Particles are present but estimated to be less than 5%
Few	5% - 10%
Little	15% - 25%
Some	30% - 45%
Mostly	50% - 100%

PARTICLE SIZE

Description		Size (in.)
Boulder		Greater than 12
Cobble		3 - 12
Gravel	Coarse	3/4 - 3
	Fine	1/5 - 3/4
Sand	Coarse	1/16 - 1/5
	Medium	1/64 - 1/16
	Fine	1/300 - 1/64
Silt and Clay		Less than 1/300

ENGINEERING SERVICES	GEOTECHNICAL SERVICES	STATE OF CALIFORNIA DEPARTMENT OF TRANSPORTATION	DIVISION OF ENGINEERING SERVICES STRUCTURE DESIGN DESIGN BRANCH	BRIDGE NO. 53-E0160 POST MILE 21.80	RETAINING WALL 1150 LOG OF TEST BORINGS 4 OF 4
	PREPARED BY: I. G-Remmen, 10/10				

GS LOTB SOIL LEGEND

ORIGINAL SCALE IN INCHES FOR REDUCED PLANS 0 1 2 3

CU 07
EA 202111

DISREGARD PRINTS BEARING EARLIER REVISION DATES

REVISION DATES

SHEET 9 OF 9

FILE => 53-E0160-z-ltb04of4.dgn

USERNAME => s124096 DATE PLOTTED => 29-JUN-2011 TIME PLOTTED => 06:53