DIST	COUNTY	ROUTE	POST MILES TOTAL PROJECT	SHEET No	TOTAL SHEETS
07	LA	710	17.2/26.4	1001	1507

Joseph S. Pratt 1-20-11
CERTIFIED ENGINEERING GEOLOGIST DATE

REGISTERED GEOLOGIST
Joseph S. Pratt
No. 2141
Exp. 5-31-11
CERTIFIED ENGINEERING GEOLOGIST
STATE OF CALIFORNIA

6-27-11
PLANS APPROVAL DATE

The State of California or its officers or agents shall not be responsible for the accuracy or completeness of electronic copies of this plan sheet.

REFERENCE: CALTRANS SOIL & ROCK LOGGING, CLASSIFICATION, AND PRESENTATION MANUAL (2010)

CEMENTATION

Description	Criteria
Weak	Crumbles or breaks with handling or little finger pressure.
Moderate	Crumbles or breaks with considerable finger pressure.
Strong	Will not crumble or break with finger pressure.

BOREHOLE IDENTIFICATION

Symbol	Hole Type	Description
Size	A	Auger Boring (hollow or solid stem bucket)
Size	R RW RC P	Rotary drilled boring (conventional) Rotary drilled with self-casing wire-line Rotary core with continuously-sampled, self-casing wire-line Rotary percussion boring (air)
Size	R	Rotary drilled diamond core
Size	HD HA	Hand driven (1-inch soil tube) Hand Auger
●	D	Dynamic Cone Penetration Boring
▲	CPT	Cone Penetration Test (ASTM D 5778)
⬚	O	Other (note on LOTB)

Note: Size in inches.

CONSISTENCY OF COHESIVE SOILS

Description	Shear Strength (tsf)	Pocket Penetrometer Measurement, PP, (tsf)	Torvane Measurement, TV, (tsf)	Vane Shear Measurement, VS, (tsf)
Very Soft	Less than 0.12	Less than 0.25	Less than 0.12	Less than 0.12
Soft	0.12 - 0.25	0.25 - 0.5	0.12 - 0.25	0.12 - 0.25
Medium Stiff	0.25 - 0.5	0.5 - 1	0.25 - 0.5	0.25 - 0.5
Stiff	0.5 - 1	1 - 2	0.5 - 1	0.5 - 1
Very Stiff	1 - 2	2 - 4	1 - 2	1 - 2
Hard	Greater than 2	Greater than 4	Greater than 2	Greater than 2

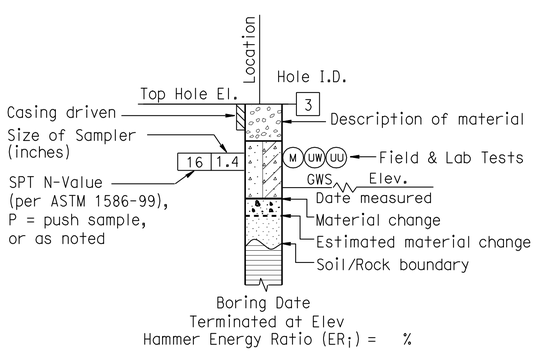

ROTARY BORING

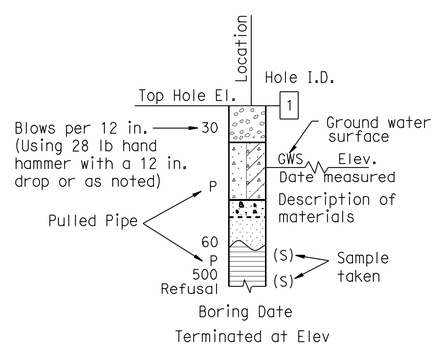

HAND BORING

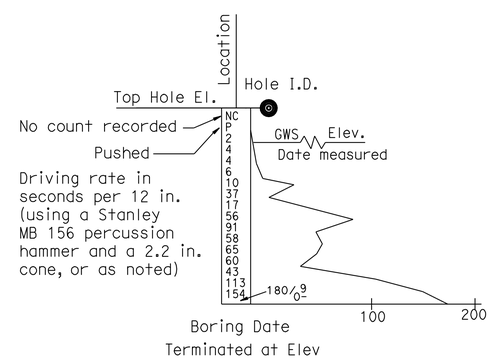

DYNAMIC CONE PENETRATION BORING

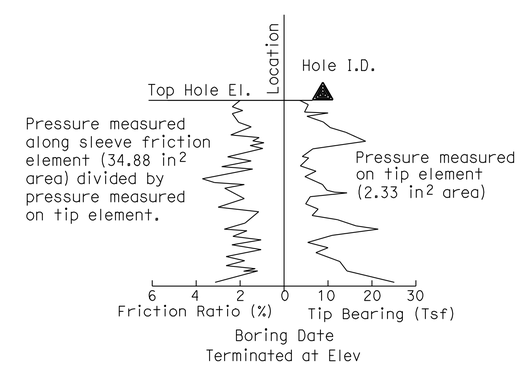

CONE PENETRATION TEST (CPT) BORING

ENGINEERING SERVICES	GEOTECHNICAL SERVICES	STATE OF CALIFORNIA DEPARTMENT OF TRANSPORTATION	DIVISION OF ENGINEERING SERVICES STRUCTURE DESIGN DESIGN BRANCH	BRIDGE NO. / POST MILE 23.31/23.36	RETAINING WALL NO. 1233 R-49 LOG OF TEST BORINGS 2 OF 3
	PREPARED BY: I.G-Remmen 1/11		CU 07 EA 202111	DISREGARD PRINTS BEARING EARLIER REVISION DATES	REVISION DATES / SHEET / OF

GS LOTB SOIL LEGEND

ORIGINAL SCALE IN INCHES FOR REDUCED PLANS 0 1 2 3

FILE => 720211qi003.dgn

USERNAME => trcarol DATE PLOTTED => 29-JUN-2011 TIME PLOTTED => 13:09

REFERENCE: CALTRANS SOIL & ROCK LOGGING, CLASSIFICATION, AND PRESENTATION MANUAL (2010)

DIST	COUNTY	ROUTE	POST MILES TOTAL PROJECT	SHEET No	TOTAL SHEETS
07	LA	710	17.2/26.4	1002	1507

Joseph S. Pratt 1-20-11
CERTIFIED ENGINEERING GEOLOGIST DATE

6-27-11
PLANS APPROVAL DATE

REGISTERED GEOLOGIST Joseph S. Pratt No. 2141 Exp. 5-31-11 CERTIFIED ENGINEERING GEOLOGIST STATE OF CALIFORNIA

The State of California or its officers or agents shall not be responsible for the accuracy or completeness of electronic copies of this plan sheet.

GROUP SYMBOLS AND NAMES

Graphic/Symbol	Group Names	Graphic/Symbol	Group Names
GW	Well-graded GRAVEL Well-graded GRAVEL with SAND	CL	Lean CLAY Lean CLAY with SAND Lean CLAY with GRAVEL SANDY lean CLAY SANDY lean CLAY with GRAVEL GRAVELLY lean CLAY GRAVELLY lean CLAY with SAND
GP	Poorly-graded GRAVEL Poorly-graded GRAVEL with SAND		
GW-GM	Well-graded GRAVEL with SILT Well-graded GRAVEL with SILT and SAND	CL-ML	SILTY CLAY SILTY CLAY with SAND SILTY CLAY with GRAVEL SANDY SILTY CLAY SANDY SILTY CLAY with GRAVEL GRAVELLY SILTY CLAY GRAVELLY SILTY CLAY with SAND
GW-GC	Well-graded GRAVEL with CLAY (or SILTY CLAY) Well-graded GRAVEL with CLAY and SAND (or SILTY CLAY and SAND)		
GP-GM	Poorly-graded GRAVEL with SILT Poorly-graded GRAVEL with SILT and SAND	ML	SILT SILT with SAND SILT with GRAVEL SANDY SILT SANDY SILT with GRAVEL GRAVELLY SILT GRAVELLY SILT with SAND
GP-GC	Poorly-graded GRAVEL with CLAY (or SILTY CLAY) Poorly-graded GRAVEL with CLAY and SAND (or SILTY CLAY and SAND)		
GM	SILTY GRAVEL SILTY GRAVEL with SAND	OL	ORGANIC lean CLAY ORGANIC lean CLAY with SAND ORGANIC lean CLAY with GRAVEL SANDY ORGANIC lean CLAY SANDY ORGANIC lean CLAY with GRAVEL GRAVELLY ORGANIC lean CLAY GRAVELLY ORGANIC lean CLAY with SAND
GC	CLAYEY GRAVEL CLAYEY GRAVEL with SAND		
GC-GM	SILTY, CLAYEY GRAVEL SILTY, CLAYEY GRAVEL with SAND	OL	ORGANIC SILT ORGANIC SILT with SAND ORGANIC SILT with GRAVEL SANDY ORGANIC SILT SANDY ORGANIC SILT with GRAVEL GRAVELLY ORGANIC SILT GRAVELLY ORGANIC SILT with SAND
SW	Well-graded SAND Well-graded SAND with GRAVEL		
SP	Poorly-graded SAND Poorly-graded SAND with GRAVEL	CH	Fat CLAY Fat CLAY with SAND Fat CLAY with GRAVEL SANDY fat CLAY SANDY fat CLAY with GRAVEL GRAVELLY fat CLAY GRAVELLY fat CLAY with SAND
SW-SM	Well-graded SAND with SILT Well-graded SAND with SILT and GRAVEL		
SW-SC	Well-graded SAND with CLAY (or SILTY CLAY) Well-graded SAND with CLAY and GRAVEL (or SILTY CLAY and GRAVEL)	MH	Elastic SILT Elastic SILT with SAND Elastic SILT with GRAVEL SANDY elastic SILT SANDY elastic SILT with GRAVEL GRAVELLY elastic SILT GRAVELLY elastic SILT with SAND
SP-SM	Poorly-graded SAND with SILT Poorly-graded SAND with SILT and GRAVEL		
SP-SC	Poorly-graded SAND with CLAY (or SILTY CLAY) Poorly-graded SAND with CLAY and GRAVEL (or SILTY CLAY and GRAVEL)	OH	ORGANIC fat CLAY ORGANIC fat CLAY with SAND ORGANIC fat CLAY with GRAVEL SANDY ORGANIC fat CLAY SANDY ORGANIC fat CLAY with GRAVEL GRAVELLY ORGANIC fat CLAY GRAVELLY ORGANIC fat CLAY with SAND
SM	SILTY SAND SILTY SAND with GRAVEL		
SC	CLAYEY SAND CLAYEY SAND with GRAVEL	OH	ORGANIC elastic SILT ORGANIC elastic SILT with SAND ORGANIC elastic SILT with GRAVEL SANDY ORGANIC elastic SILT SANDY ORGANIC elastic SILT with GRAVEL GRAVELLY ORGANIC elastic SILT GRAVELLY ORGANIC elastic SILT with SAND
SC-SM	SILTY, CLAYEY SAND SILTY, CLAYEY SAND with GRAVEL		
PT	PEAT	OL/OH	ORGANIC SOIL ORGANIC SOIL with SAND ORGANIC SOIL with GRAVEL SANDY ORGANIC SOIL SANDY ORGANIC SOIL with GRAVEL GRAVELLY ORGANIC SOIL GRAVELLY ORGANIC SOIL with SAND
	COBBLES COBBLES and BOULDERS BOULDERS		

FIELD AND LABORATORY TESTING

- (C) Consolidation (ASTM D 2435)
- (CL) Collapse Potential (ASTM D 5333)
- (CP) Compaction Curve (CTM 216)
- (CR) Corrosivity Testing (CTM 643, CTM 422, CTM 417)
- (CU) Consolidated Undrained Triaxial (ASTM D 4767)
- (DS) Direct Shear (ASTM D 3080)
- (EI) Expansion Index (ASTM D 4829)
- (M) Moisture Content (ASTM D 2216)
- (OC) Organic Content-% (ASTM D 2974)
- (P) Permeability (CTM 220)
- (PA) Particle Size Analysis (ASTM D 422)
- (PI) Plasticity Index (AASHTO T 90) Liquid Limit (AASHTO T 89)
- (PL) Point Load Index (ASTM D 5731)
- (PM) Pressure Meter
- (R) R-Value (CTM 301)
- (SE) Sand Equivalent (CTM 217)
- (SG) Specific Gravity (AASHTO T 100)
- (SL) Shrinkage Limit (ASTM D 427)
- (SW) Swell Potential (ASTM D 4546)
- (UC) Unconfined Compression-Soil (ASTM D 2166) Unconfined Compression-Rock (ASTM D 2938)
- (UU) Unconsolidated Undrained Triaxial (ASTM D 2850)
- (UW) Unit Weight (ASTM D 4767)

APPARENT DENSITY OF COHESIONLESS SOILS

Description	SPT N_{60} (Blows / 12 in.)
Very Loose	0 - 5
Loose	5 - 10
Medium Dense	10 - 30
Dense	30 - 50
Very Dense	Greater than 50

MOISTURE

Description	Criteria
Dry	No discernable moisture
Moist	Moisture present, but no free water
Wet	Visible free water

PERCENT OR PROPORTION OF SOILS

Description	Criteria
Trace	Particles are present but estimated to be less than 5%
Few	5% - 10%
Little	15% - 25%
Some	30% - 45%
Mostly	50% - 100%

PARTICLE SIZE

Description		Size (in.)
Boulder		Greater than 12
Cobble		3 - 12
Gravel	Coarse	3/4 - 3
	Fine	1/5 - 3/4
Sand	Coarse	1/16 - 1/5
	Medium	1/64 - 1/16
	Fine	1/300 - 1/64
Silt and Clay		Less than 1/300

ENGINEERING SERVICES

GEOTECHNICAL SERVICES

PREPARED BY: I. G-Remmen 1/11

STATE OF CALIFORNIA DEPARTMENT OF TRANSPORTATION

DIVISION OF ENGINEERING SERVICES STRUCTURE DESIGN

DESIGN BRANCH

BRIDGE NO.

POST MILE 23.31/23.36

RETAINING WALL NO. 1233 R-50

LOG OF TEST BORINGS 3 OF 3

GS LOTB SOIL LEGEND

ORIGINAL SCALE IN INCHES FOR REDUCED PLANS 0 1 2 3

CU 07
EA 202111

DISREGARD PRINTS BEARING EARLIER REVISION DATES

REVISION DATES

SHEET OF

FILE => 720211gi004.dgn

USERNAME => rrcarol DATE PLOTTED => 29-JUN-2011 TIME PLOTTED => 13:09

Dist	COUNTY	ROUTE	POST MILES TOTAL PROJECT	SHEET No.	TOTAL SHEETS
07	LA	710	17.2/26.4	1003	1507

Rene Yin 2-3-11
REGISTERED CIVIL ENGINEER DATE

6-27-11
PLANS APPROVAL DATE

REGISTERED PROFESSIONAL ENGINEER
RENE YIN
No. C49915
Exp. 9/30/12
CIVIL
STATE OF CALIFORNIA

THE STATE OF CALIFORNIA OR ITS OFFICERS OR AGENTS SHALL NOT BE RESPONSIBLE FOR THE ACCURACY OR COMPLETENESS OF ELECTRONIC COPIES OF THIS PLAN SHEET.

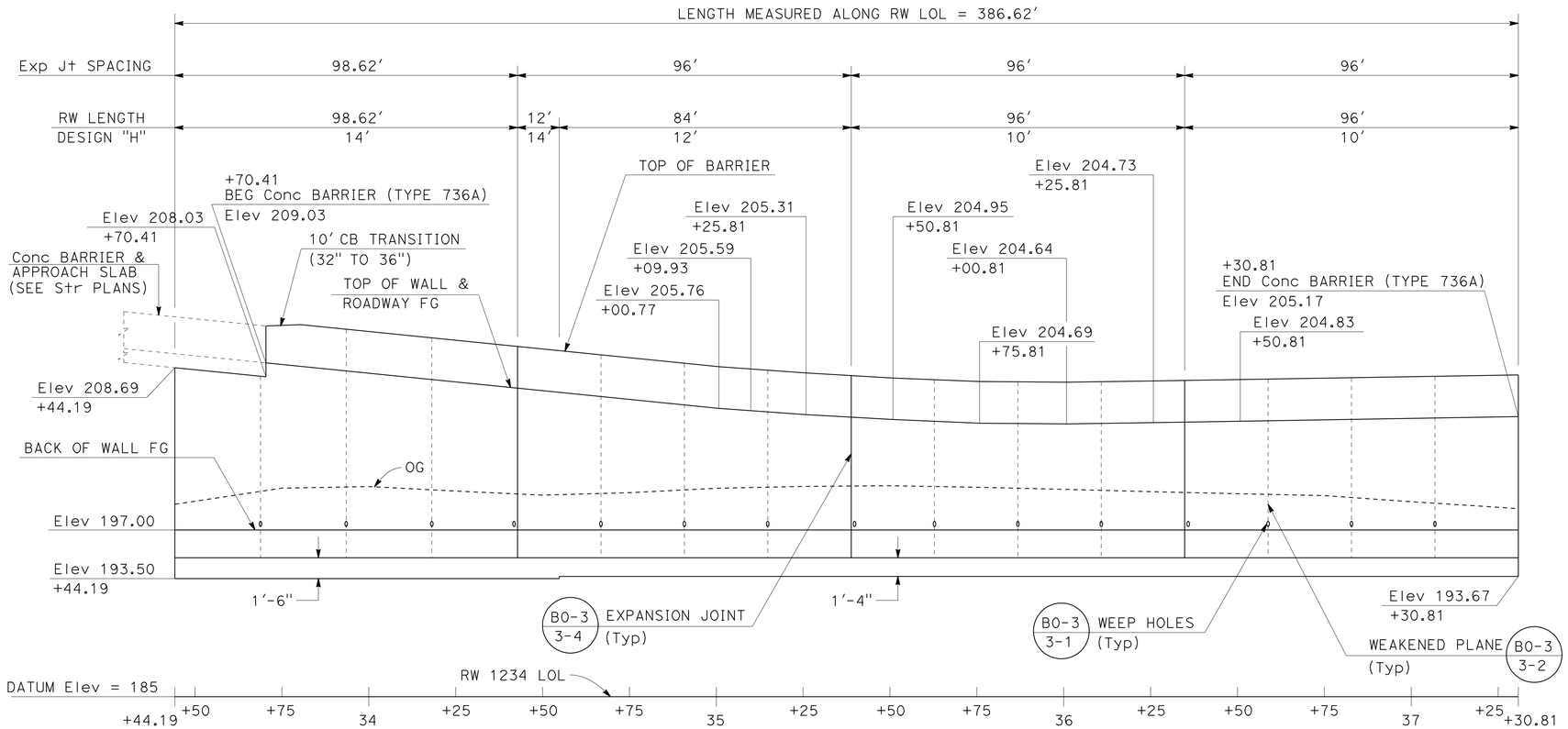

ELEVATION
SCALE Horiz: 1" = 20'
Vert: 1" = 5'

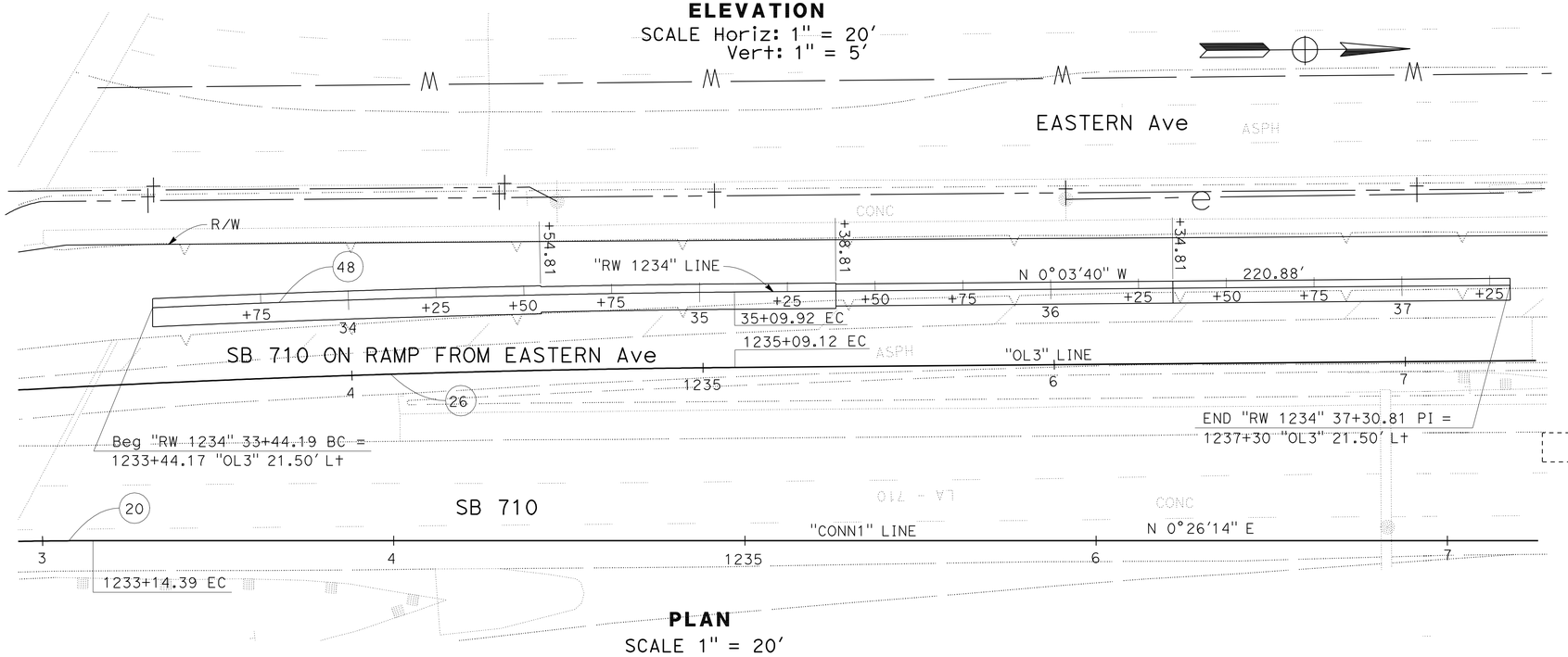

PLAN
SCALE 1" = 20'

NOTES:

1. FOR ACCURATE RIGHT OF WAY AND ACCESS DATA, CONTACT RIGHT OF WAY ENGINEERING AT THE DISTRICT OFFICE.
2. WATERSTOP IN THE EXPANSION JOINT SHALL BE EXTENDED 6" INTO CONCRETE BARRIER.

CURVE DATA

No.	R	Δ	T	L
20	1200.00'	22°40'14"	240.55'	474.81'
26	4500.00'	2°58'56"	117.14'	234.22'
48	4521.50'	2°06'01"	82.88'	165.73'

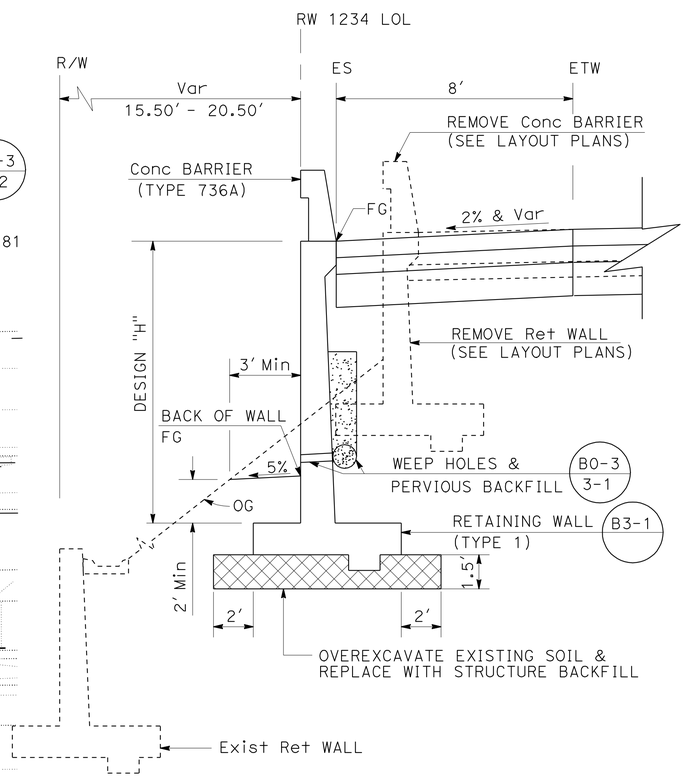

Sta 33+44.19 TO Sta 37+30.81

TYPICAL SECTION
NO SCALE

RETAINING WALL

RETAINING WALL No. 1234
SCALE AS SHOWN

R-51

THIS PLAN ACCURATE FOR RETAINING WALL WORK ONLY.

STATE OF CALIFORNIA - DEPARTMENT OF TRANSPORTATION
Caltrans
DESIGN
FUNCTIONAL SUPERVISOR: ALINE ANTARAMIAN
CALCULATED-DESIGNED BY: I. L. REYNON JR.
CHECKED BY: RENE YIN
REVISED BY
DATE REVISED

LAST REVISION 00-00-00
DATE PLOTTED => 29-JUN-2011
TIME PLOTTED => 13:09

DIST	COUNTY	ROUTE	POST MILES TOTAL PROJECT	SHEET No	TOTAL SHEETS
07	LA	710	17.2/26.4	1004	1507

PROFESSIONAL ENGINEER 2-9-11

6-27-11
PLANS APPROVAL DATE

REGISTERED PROFESSIONAL ENGINEER
Gamini Weeratunga
No. GE2403
Exp. 9-30-12
GEOTECHNICAL
STATE OF CALIFORNIA

The State of California or its officers or agents shall not be responsible for the accuracy or completeness of electronic copies of this plan sheet.

This LOTB sheet was prepared in accordance with the Caltrans Soil & Rock Logging, Classification, & Presentation Manual (June 2010).

BENCH MARK

RTK732 Elev 202.657′
Fd PK Nail and Tin 11′ NB710 shldr at gore Olympic off-rmp, 44.038′ Rt Sta 1232+24.43 "Conn 2" Line.
N 1828744.1920
E 6509278.3030

VERT DATUM NAVD88

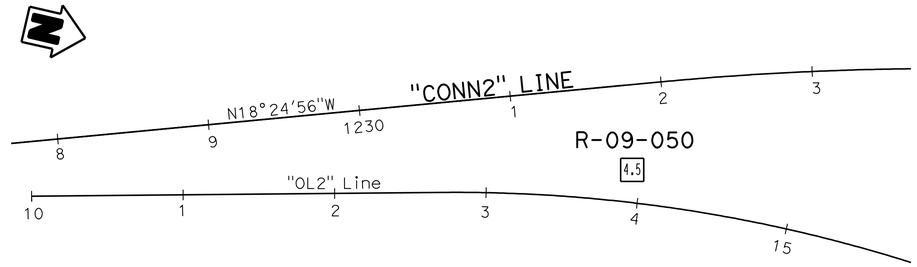

PLAN

1" = 50′

NOTE: Ground water was not encountered in Boring R-09-050.

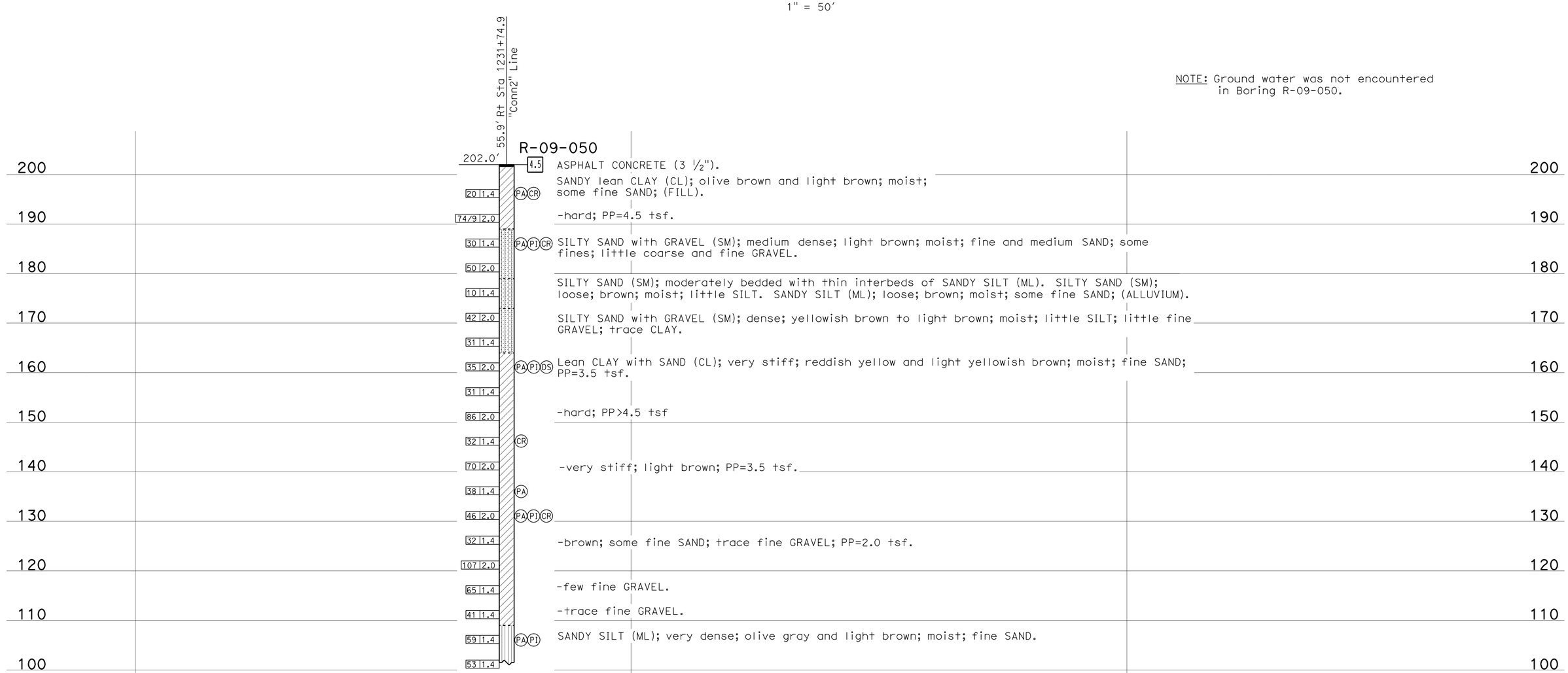

PROFILE

Horiz: 1" = 10′
Vert: 1" = 10′

ENGINEERING SERVICES	GEOTECHNICAL SERVICES	STATE OF CALIFORNIA DEPARTMENT OF TRANSPORTATION	DIVISION OF ENGINEERING SERVICES STRUCTURE DESIGN	BRIDGE NO.	RETAINING WALL NO. 1234 R-52
FUNCTIONAL SUPERVISOR	DRAWN BY: I.G-Remmen, 1/11	FIELD INVESTIGATION BY:	DESIGN BRANCH	POST MILES 23.34/23.44	LOG OF TEST BORINGS 1 OF 5
NAME: S. Karimi	CHECKED BY: J. Pratt	T. Halda			

OGS CIVIL LOG OF TEST BORINGS SHEET

ORIGINAL SCALE IN INCHES FOR REDUCED PLANS 0 1 2 3

CU 07
EA 202111

DISREGARD PRINTS BEARING EARLIER REVISION DATES → 02-09-11

REVISION DATES | SHEET | OF

FILE => 720211qj002.dgn

USERNAME => trcarol DATE PLOTTED => 29-JUN-2011 TIME PLOTTED => 13:10

DIST	COUNTY	ROUTE	POST MILES TOTAL PROJECT	SHEET No	TOTAL SHEETS
07	LA	710	17.2/26.4	1005	1507

PROFESSIONAL ENGINEER 2-9-11

6-27-11
PLANS APPROVAL DATE

REGISTERED PROFESSIONAL ENGINEER
Gamini Weeratunga
No. GE2403
Exp. 9-30-12
GEOTECHNICAL
STATE OF CALIFORNIA

The State of California or its officers or agents shall not be responsible for the accuracy or completeness of electronic copies of this plan sheet.

REFERENCE: CALTRANS SOIL & ROCK LOGGING, CLASSIFICATION, AND PRESENTATION MANUAL (2010)

CEMENTATION

Description	Criteria
Weak	Crumbles or breaks with handling or little finger pressure.
Moderate	Crumbles or breaks with considerable finger pressure.
Strong	Will not crumble or break with finger pressure.

BOREHOLE IDENTIFICATION

Symbol	Hole Type	Description
Size	A	Auger Boring (hollow or solid stem bucket)
Size	R RW RC P	Rotary drilled boring (conventional) Rotary drilled with self-casing wire-line Rotary core with continuously-sampled, self-casing wire-line Rotary percussion boring (air)
Size	R	Rotary drilled diamond core
Size	HD HA	Hand driven (1-inch soil tube) Hand Auger
●	D	Dynamic Cone Penetration Boring
▲	CPT	Cone Penetration Test (ASTM D 5778)
⬚	O	Other (note on LOTB)

Note: Size in inches.

CONSISTENCY OF COHESIVE SOILS

Description	Shear Strength (tsf)	Pocket Penetrometer Measurement, PP, (tsf)	Torvane Measurement, TV, (tsf)	Vane Shear Measurement, VS, (tsf)
Very Soft	Less than 0.12	Less than 0.25	Less than 0.12	Less than 0.12
Soft	0.12 - 0.25	0.25 - 0.5	0.12 - 0.25	0.12 - 0.25
Medium Stiff	0.25 - 0.5	0.5 - 1	0.25 - 0.5	0.25 - 0.5
Stiff	0.5 - 1	1 - 2	0.5 - 1	0.5 - 1
Very Stiff	1 - 2	2 - 4	1 - 2	1 - 2
Hard	Greater than 2	Greater than 4	Greater than 2	Greater than 2

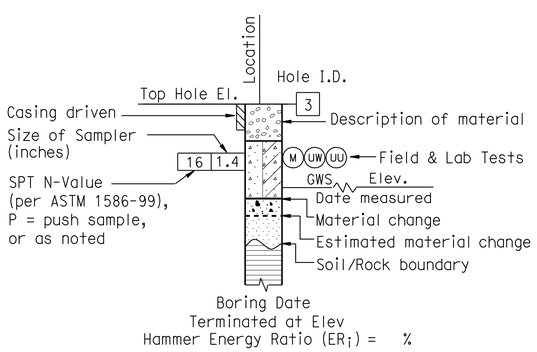

ROTARY BORING

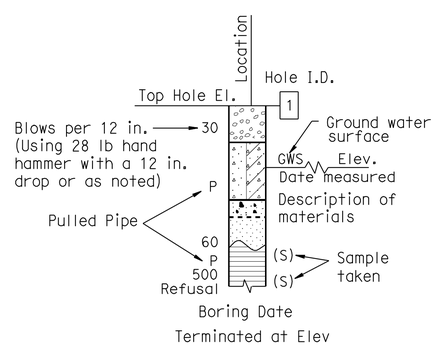

HAND BORING

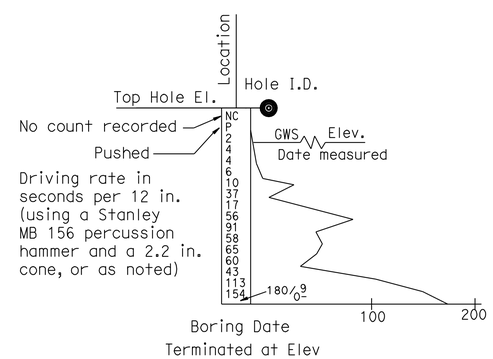

DYNAMIC CONE PENETRATION BORING

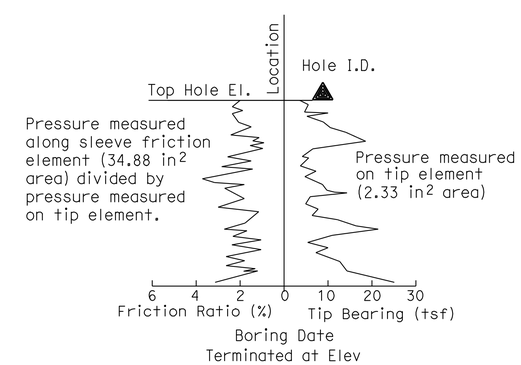

CONE PENETRATION TEST (CPT) BORING

ENGINEERING SERVICES	GEOTECHNICAL SERVICES	STATE OF CALIFORNIA DEPARTMENT OF TRANSPORTATION	DIVISION OF ENGINEERING SERVICES STRUCTURE DESIGN DESIGN BRANCH	BRIDGE NO. / POST MILE 23.34/23.44	RETAINING WALL NO. 1234 R-53 LOG OF TEST BORINGS 2 OF 5
	PREPARED BY: I.G-Remmen, 1/11				

GS LOTB SOIL LEGEND

ORIGINAL SCALE IN INCHES FOR REDUCED PLANS 0 1 2 3

CU 07
EA 202111

DISREGARD PRINTS BEARING EARLIER REVISION DATES

REVISION DATES | SHEET | OF

FILE => 720211qj003.dgn

USERNAME => trcarol DATE PLOTTED => 29-JUN-2011 TIME PLOTTED => 13:10

REFERENCE: CALTRANS SOIL & ROCK LOGGING, CLASSIFICATION, AND PRESENTATION MANUAL (2010)

DIST	COUNTY	ROUTE	POST MILES TOTAL PROJECT	SHEET No	TOTAL SHEETS
07	LA	710	17.2/26.4	1006	1507

PROFESSIONAL ENGINEER 2-9-11

6-27-11
PLANS APPROVAL DATE

REGISTERED PROFESSIONAL ENGINEER
Gamini Weeratunga
No. GE2403
Exp. 9-30-12
GEOTECHNICAL
STATE OF CALIFORNIA

The State of California or its officers or agents shall not be responsible for the accuracy or completeness of electronic copies of this plan sheet.

GROUP SYMBOLS AND NAMES

Graphic/Symbol	Group Names	Graphic/Symbol	Group Names
GW	Well-graded GRAVEL Well-graded GRAVEL with SAND	CL	Lean CLAY Lean CLAY with SAND Lean CLAY with GRAVEL SANDY lean CLAY SANDY lean CLAY with GRAVEL GRAVELLY lean CLAY GRAVELLY lean CLAY with SAND
GP	Poorly-graded GRAVEL Poorly-graded GRAVEL with SAND		
GW-GM	Well-graded GRAVEL with SILT Well-graded GRAVEL with SILT and SAND	CL-ML	SILTY CLAY SILTY CLAY with SAND SILTY CLAY with GRAVEL SANDY SILTY CLAY SANDY SILTY CLAY with GRAVEL GRAVELLY SILTY CLAY GRAVELLY SILTY CLAY with SAND
GW-GC	Well-graded GRAVEL with CLAY (or SILTY CLAY) Well-graded GRAVEL with CLAY and SAND (or SILTY CLAY and SAND)		
GP-GM	Poorly-graded GRAVEL with SILT Poorly-graded GRAVEL with SILT and SAND	ML	SILT SILT with SAND SILT with GRAVEL SANDY SILT SANDY SILT with GRAVEL GRAVELLY SILT GRAVELLY SILT with SAND
GP-GC	Poorly-graded GRAVEL with CLAY (or SILTY CLAY) Poorly-graded GRAVEL with CLAY and SAND (or SILTY CLAY and SAND)		
GM	SILTY GRAVEL SILTY GRAVEL with SAND	OL	ORGANIC lean CLAY ORGANIC lean CLAY with SAND ORGANIC lean CLAY with GRAVEL SANDY ORGANIC lean CLAY SANDY ORGANIC lean CLAY with GRAVEL GRAVELLY ORGANIC lean CLAY GRAVELLY ORGANIC lean CLAY with SAND
GC	CLAYEY GRAVEL CLAYEY GRAVEL with SAND		
GC-GM	SILTY, CLAYEY GRAVEL SILTY, CLAYEY GRAVEL with SAND	OL	ORGANIC SILT ORGANIC SILT with SAND ORGANIC SILT with GRAVEL SANDY ORGANIC SILT SANDY ORGANIC SILT with GRAVEL GRAVELLY ORGANIC SILT GRAVELLY ORGANIC SILT with SAND
SW	Well-graded SAND Well-graded SAND with GRAVEL		
SP	Poorly-graded SAND Poorly-graded SAND with GRAVEL	CH	Fat CLAY Fat CLAY with SAND Fat CLAY with GRAVEL SANDY fat CLAY SANDY fat CLAY with GRAVEL GRAVELLY fat CLAY GRAVELLY fat CLAY with SAND
SW-SM	Well-graded SAND with SILT Well-graded SAND with SILT and GRAVEL		
SW-SC	Well-graded SAND with CLAY (or SILTY CLAY) Well-graded SAND with CLAY and GRAVEL (or SILTY CLAY and GRAVEL)	MH	Elastic SILT Elastic SILT with SAND Elastic SILT with GRAVEL SANDY elastic SILT SANDY elastic SILT with GRAVEL GRAVELLY elastic SILT GRAVELLY elastic SILT with SAND
SP-SM	Poorly-graded SAND with SILT Poorly-graded SAND with SILT and GRAVEL		
SP-SC	Poorly-graded SAND with CLAY (or SILTY CLAY) Poorly-graded SAND with CLAY and GRAVEL (or SILTY CLAY and GRAVEL)	OH	ORGANIC fat CLAY ORGANIC fat CLAY with SAND ORGANIC fat CLAY with GRAVEL SANDY ORGANIC fat CLAY SANDY ORGANIC fat CLAY with GRAVEL GRAVELLY ORGANIC fat CLAY GRAVELLY ORGANIC fat CLAY with SAND
SM	SILTY SAND SILTY SAND with GRAVEL		
SC	CLAYEY SAND CLAYEY SAND with GRAVEL	OH	ORGANIC elastic SILT ORGANIC elastic SILT with SAND ORGANIC elastic SILT with GRAVEL SANDY ORGANIC elastic SILT SANDY ORGANIC elastic SILT with GRAVEL GRAVELLY ORGANIC elastic SILT GRAVELLY ORGANIC elastic SILT with SAND
SC-SM	SILTY, CLAYEY SAND SILTY, CLAYEY SAND with GRAVEL		
PT	PEAT	OL/OH	ORGANIC SOIL ORGANIC SOIL with SAND ORGANIC SOIL with GRAVEL SANDY ORGANIC SOIL SANDY ORGANIC SOIL with GRAVEL GRAVELLY ORGANIC SOIL GRAVELLY ORGANIC SOIL with SAND
	COBBLES COBBLES and BOULDERS BOULDERS		

FIELD AND LABORATORY TESTING

- (C) Consolidation (ASTM D 2435)
- (CL) Collapse Potential (ASTM D 5333)
- (CP) Compaction Curve (CTM 216)
- (CR) Corrosivity Testing (CTM 643, CTM 422, CTM 417)
- (CU) Consolidated Undrained Triaxial (ASTM D 4767)
- (DS) Direct Shear (ASTM D 3080)
- (EI) Expansion Index (ASTM D 4829)
- (M) Moisture Content (ASTM D 2216)
- (OC) Organic Content-% (ASTM D 2974)
- (P) Permeability (CTM 220)
- (PA) Particle Size Analysis (ASTM D 422)
- (PI) Plasticity Index (AASHTO T 90) Liquid Limit (AASHTO T 89)
- (PL) Point Load Index (ASTM D 5731)
- (PM) Pressure Meter
- (R) R-Value (CTM 301)
- (SE) Sand Equivalent (CTM 217)
- (SG) Specific Gravity (AASHTO T 100)
- (SL) Shrinkage Limit (ASTM D 427)
- (SW) Swell Potential (ASTM D 4546)
- (UC) Unconfined Compression-Soil (ASTM D 2166) Unconfined Compression-Rock (ASTM D 2938)
- (UU) Unconsolidated Undrained Triaxial (ASTM D 2850)
- (UW) Unit Weight (ASTM D 4767)

APPARENT DENSITY OF COHESIONLESS SOILS

Description	SPT N_{60} (Blows / 12 in.)
Very Loose	0 - 5
Loose	5 - 10
Medium Dense	10 - 30
Dense	30 - 50
Very Dense	Greater than 50

MOISTURE

Description	Criteria
Dry	No discernable moisture
Moist	Moisture present, but no free water
Wet	Visible free water

PERCENT OR PROPORTION OF SOILS

Description	Criteria
Trace	Particles are present but estimated to be less than 5%
Few	5% - 10%
Little	15% - 25%
Some	30% - 45%
Mostly	50% - 100%

PARTICLE SIZE

Description		Size (in.)
Boulder		Greater than 12
Cobble		3 - 12
Gravel	Coarse	3/4 - 3
	Fine	1/5 - 3/4
Sand	Coarse	1/16 - 1/5
	Medium	1/64 - 1/16
	Fine	1/300 - 1/64
Silt and Clay		Less than 1/300

ENGINEERING SERVICES	GEOTECHNICAL SERVICES	STATE OF CALIFORNIA DEPARTMENT OF TRANSPORTATION	DIVISION OF ENGINEERING SERVICES STRUCTURE DESIGN DESIGN BRANCH	BRIDGE NO. / POST MILE 23.34/23.44	RETAINING WALL NO. 1234 R-54
	PREPARED BY: F. Nguyen				LOG OF TEST BORINGS 3 OF 5

GS LOTB SOIL LEGEND

ORIGINAL SCALE IN INCHES FOR REDUCED PLANS 0 1 2 3

CU 07
EA 202111

DISREGARD PRINTS BEARING EARLIER REVISION DATES

REVISION DATES | SHEET | OF

FILE => 720211qj004.dgn

USERNAME => trcarol DATE PLOTTED => 29-JUN-2011 TIME PLOTTED => 13:10

DIST	COUNTY	ROUTE	KILOMETER POST TOTAL PROJECT	SHEET No	TOTAL SHEETS
07	LA	710			

REGISTERED ENGINEER 1-24-05

PLANS APPROVAL DATE

The State of California or its officers or agents shall not be responsible for the accuracy or completeness of electronic copies of this plan sheet.

REGISTERED PROFESSIONAL ENGINEER GAMINI C. WEERATUNGA No. 2403 Exp. 9-30-06 GEOTECHNICAL STATE OF CALIFORNIA

Caltrans Metric

BENCH MARK

Elevations shown hereon are in terms of The North American Vertical Datum of 1998 based locally upon Caltrans Bench Marks:

PRHV110 Elev 56.374 m
PRHV111 Elev 54.484 m
PRHV112 Elev 55.096 m

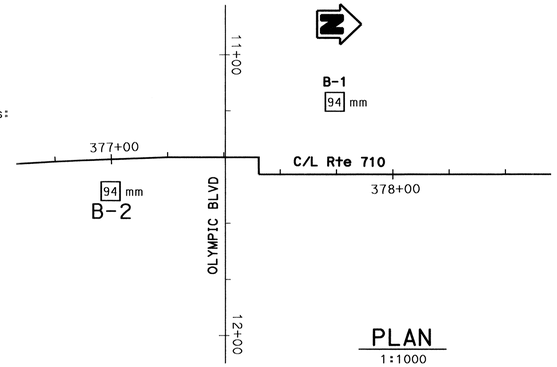

PLAN
1:1000

LEGEND (SOIL)

21 51 SA AL DS CR 17.3 17.3
Moisture content (%)
Dry density (kN/m3)

SA = Gradation
AL = Atterberg limits
DS = Direct Shear
CR = Corrosion

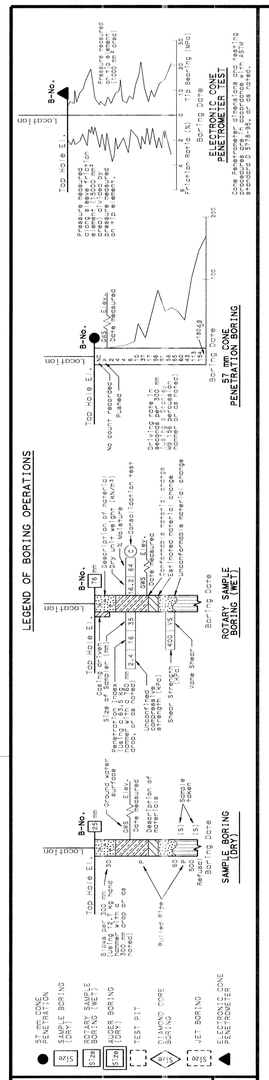

B-2

11.3 m Rt Sta 376+99.3 C/L Rte 710

Elev.	Blows	Description
62 m		61.70 — 94 mm 0.20 m Thick asphalt concrete pavement.
		SANDY CLAY (CL), light brown, slightly moist, low plastic, fine to medium grained SAND, some GRAVEL. Olive brown.
59 m		
56 m	17 51	SA AL CR SANDY SILT (ML), stiff, light brown, slightly moist, low plastic SILT with medium grained SAND.
	43 51	
53 m	23 51	SANDY CLAY (CL), very stiff, dark brown, moist, low to medium plastic, fine to medium grained SAND.
	20 51	SANDY CLAY/SANDY SILT (CL/ML), very stiff, light brown, slightly moist, low plastic SILT and CLAY, fine grained SAND.
50 m	37 51	SAND to SILTY SAND (SP/SM), medium dense, yellowish brown, moist, medium to coarse grained SAND with GRAVEL up to 51 mm.
	15 51	SANDY SILT (ML), stiff, light brown, moist, low plastic, fine grained SAND some GRAVEL up to 38 mm.
47 m	25 51	SA AL SANDY CLAY (CL), very stiff, dark brown, moist, low plastic, fine grained SAND.
	21 51	SA AL DS 17.3 17.3 Becomes more CLAYEY, stiff, dark brown
44 m	28 51	
	31 51	Very stiff.
41 m	25 51	
	40 51	
38 m	44 51	Very stiff to hard.
	31 35	
	43 51	SA AL DS 18.2 13.3 Very stiff to hard, reddish brown, moist.
35 m	31 51	
	36 35	
	40 35	
32 m		

11-16-04

Boring terminated at 27.29 m below the ground surface. No ground water encountered. Borehole was backfilled with cuttings and grout on 11-16-04.

376+90

B-1

25.8 m Lt Sta 377+79.4 C/L Rte 710

Elev.	Blows	Description
62 m		62.30 — 94 mm 0.30 m Thick asphaltt concrete pavement. 152 mm Thick base coarse GRAVEL.
		SILTY SAND (SM), dense, dark brown, slightly moist, fine grained SAND, some GRAVEL.
		SANDY SILT (ML), light brown, moist, fine grained SAND.
59 m		SILT (ML), light brown, moist, low plastic, some CLAY, trace fine grained SAND.
	24 35	SILT with SAND (ML), very stiff, light brown, moist, low plastic, some CLAY, fine grained SAND.
56 m	9 51	Lean CLAY (CL), stiff, dark brown to black, slightly moist, low plastic, some SILT, trace fine grained SAND.
	20 35	Very stiff, light brown.
53 m		SANDY CLAY (CL), dark brown, some GRAVEL up to 12 mm size.
	10 51	Lean CLAY (CL), stiff, light brown, slightly moist, low plastic, 102 to 152 mm thick layer of SANDY SILT with fine grained SAND.
	16 51	Dark brown, some SILT, some fine grained SAND.
50 m	28 35	SANDY SILT/SILTY SAND (ML/SM), very stiff to medium dense, light brown, moist, low plastic, SILT with fine grained SAND, 102 to 152 mm thick layer of SILTY SAND with GRAVEL.
	22 51	Lean CLAY (CL), stiff, dark brown to brown, slightly moist, low plastic, thin layer of SILT.
47 m	15 51	SA AL 51 to 102 mm Thick layer of SILT with SAND.
	18 51	SA AL DS 15.0 26.8 Olive brown, moist, very stiff CLAY, low plastic.
44 m	18 51	Very stiff, olive brown, moist, low plastic, trace fine grained SAND.
	26 51	SA AL CR
41 m	44 51	SILT with SAND (ML), very stiff to hard, light brown, moist, low plastic, fine grained SAND.
	28 51	Lean CLAY (CL), very stiff, brown, moist, medium plastic, some fine grained SAND, thin layers of SILT to SANDY SILT.
	29 51	SA AL DS 14.2 31.2
	8 51	
	36 35	

11-15-04

Boring terminated at 26.68 m below the ground surface. No ground water encountered. Borehole was backfilled with cuttings and grout on 11-15-04.

377+90

To Accompany Plans Dated 6-27-11

DIVISION OF ENGINEERING SERVICES - GEOTECHNICAL SERVICES

As-Built Log of Test Borings sheet is considered an informational document only. As such, the State of California registration seal with signature, license number and registration certificate expiration date confirm that this is a true and accurate copy of the original document. It does not attest to the accuracy or validity of the information contained in the original document. This drawing is available and presented only for the convenience of any bidder, contractor or other interested party.

DIST.	COUNTY	ROUTE	POST MILE-TOTAL PROJECT	Sheet No.	Total Sheets
04	Ala	84	17.2/26.4	1007	1507

REGISTERED GEOTECHNICAL ENGINEER 2/9/2011 DATE

REGISTERED PROFESSIONAL ENGINEER Gamini Weeratunga No. 2403 Exp. 9-30-12 GEOTECHNICAL STATE OF CALIFORNIA

RETAINING WALL NO. 1234

LOG OF TEST BORINGS 4 OF 5

NOTE: A COPY OF THIS LOG OF TEST BORINGS IS AVAILABLE AT OFFICE OF STRUCTURE MAINTENANCE AND INVESTIGATIONS, SACRAMENTO, CALIFORNIA

CU: 07
EA: 202111

BRIDGE No.
Sheet of

R-55

ENGINEERING SERVICES	GEOTECHNICAL SERVICES
DRAWN BY F. Nguyen 01/05	
CHECKED BY G. Weeratunga	

FIELD INVESTIGATION BY: G. Weeratunga

STATE OF CALIFORNIA DEPARTMENT OF TRANSPORTATION

DIVISION OF STRUCTURES STRUCTURE DESIGN

BRIDGE NO. 53-1044
KILOMETER POST 23.44

OLYMPIC BLVD UC (MEDIAN WIDENING)

LOG OF TEST BORINGS 1 OF 2

OGS CIVIL LOG OF TEST BORINGS SHEET (METRIC) (REV. 4/04)

ORIGINAL SCALE IN MILLIMETERS FOR REDUCED PLANS 0 10 20 30 40 50 60 70 80 90 100

CU 07
EA 242601

DISREGARD PRINTS BEARING EARLIER REVISION DATES

REVISION DATES (PRELIMINARY STAGE ONLY) 1-14-05 1-19-05 1-24-05

SHEET OF

720211qj005.tif

V-0260 (1)

FED. ROAD DIST. NO.	STATE	PROJ. NO.	FISCAL YEAR	SHEET NO.	TOTAL SHEETS
2	CAL.				

Dist.	County	Route	Post Mile	Sheet No.	Total Sheets
VII	LA	167	-B-	633	726

Bridge Engineer — Civil Engineer-License 5380

APRIL 26 1954

To accompany plans dated April 27, 1962

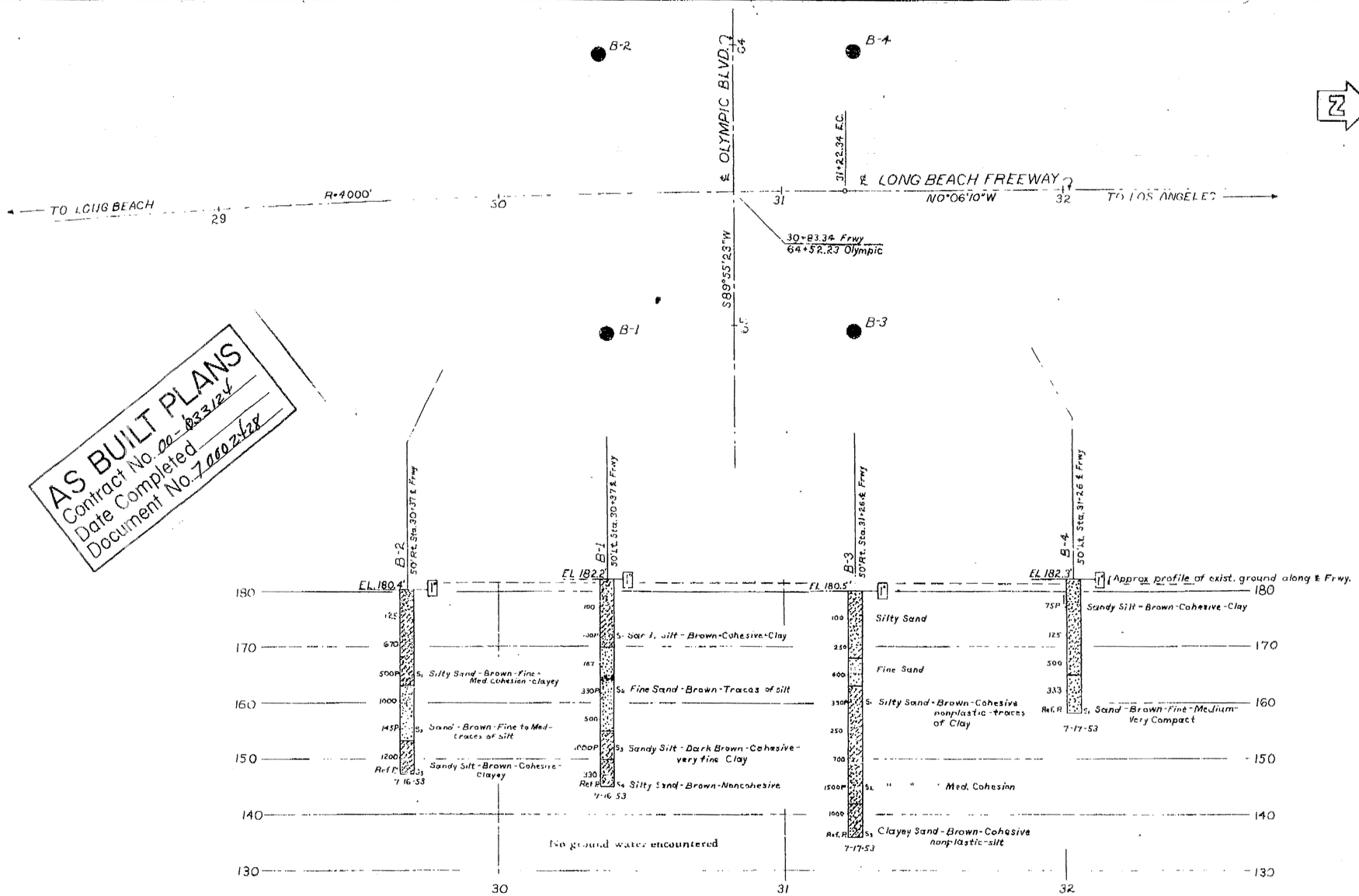

AS BUILT PLANS
Contract No. 00-183124
Date Completed
Document No. 7000212128

To Accompany Plans Dated 6-27-11

DIVISION OF ENGINEERING SERVICES - GEOTECHNICAL SERVICES

As-Built Log of Test Borings sheet is considered an informational document only. As such, the State of California registration seal with signature, license number and registration certificate expiration date confirm that this is a true and accurate copy of the original document. It does not attest to the accuracy or validity of the information contained in the original document. this drawing is available and presented only for the convenience of any bidder, contractor or other interested party.

DIST.	COUNTY	ROUTE	POST MILE-TOTAL PROJECT	Sheet No.	Total Sheets
04	Ala	84	17.2/26.4	1008	1507

REGISTERED GEOTECHNICAL ENGINEER — DATE 2/9/2011

REGISTERED PROFESSIONAL ENGINEER — Gamini Weeratunga — No. 2403 — Exp. 9-30-12 — GEOTECHNICAL — STATE OF CALIFORNIA

RETAINING WALL NO. 1234

LOG OF TEST BORINGS 5 OF 5

NOTE: A COPY OF THIS LOG OF TEST BORINGS IS AVAILABLE AT OFFICE OF STRUCTURE MAINTENANCE AND INVESTIGATIONS, SACRAMENTO, CALIFORNIA

CU: 07
EA: 202111

BRIDGE No.

Sheet of

TBM ELEV. 184.110

Chis☐ Edge of signal base, S.W. Corner of Olympic Blvd. & Eastern Ave. 25'± Lt. Sta. 29+35 ± Eastern Ave.

TBM ELEV. 178.545

Chis☐ On curb 24'± E of B.C.R., N.E. Corner of Sydney Drive & Olympic Blvd.

INFORMATION ON ACTUAL FOUNDATION CONDITIONS ENCOUNTERED IS ON FILE IN BRIDGE GEOLOGY SECTION

SHEET 9 OF 9

CLASSIFICATION OF MATERIAL BASED ON STANDARD GRADE SIZE LIMITS

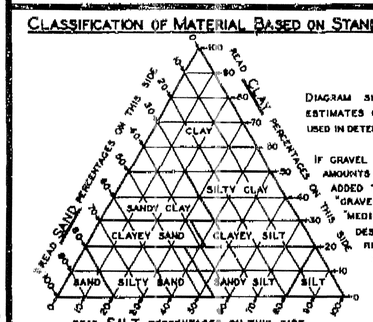

DIAGRAM SHOWING THE BASIS FOR ESTIMATES OF GRADE SIZE DISTRIBUTION USED IN DETERMINATION OF CLASS NAMES

IF GRAVEL IS PRESENT IN APPRECIABLE AMOUNTS THE TERM "GRAVELLY" MAY BE ADDED TO THE CLASS NAME, VIZ. "GRAVELLY SAND". THE TERMS "COARSE", "MEDIUM" AND "FINE" WHEN USED TO DESCRIBE GRAVEL, SAND AND SILT REFER TO STANDARD GRADE SIZE LIMITS.

LEGEND OF EARTH MATERIALS

- GRAVEL
- SAND
- SILT
- CLAY
- SANDY CLAY OR CLAYEY SAND
- SANDY SILT OR SILTY SAND
- SILTY CLAY OR CLAYEY SILT
- PEAT AND/OR ORGANIC CLAY
- FILLED MATERIAL
- IGNEOUS ROCK
- SEDIMENTARY ROCK
- METAMORPHIC ROCK

LEGEND OF BORING OPERATIONS

- PLAN OF ANY BORING
- PENETROMETER
- 2¼" CONE PENETROMETER
- SAMPLER BORING (DRY)
- ROTARY BORING (WET)
- AUGER BORING (DRY)
- JET BORING
- CORE BORING
- TEST PIT

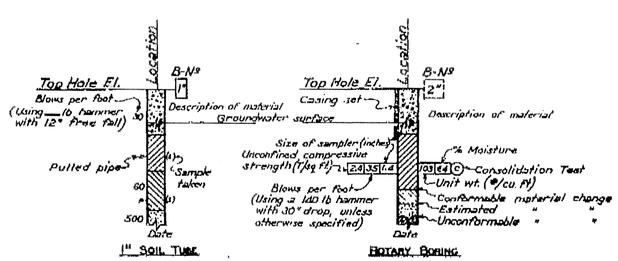

NOTES

THE CONTRACTOR'S ATTENTION IS DIRECTED TO SECTION 2, ARTICLE (c) OF THE STANDARD SPECIFICATIONS AND TO THE SPECIAL PROVISIONS ACCOMPANYING THIS SET OF PLANS. CLASSIFICATION OF EARTH MATERIAL AS SHOWN ON THIS SHEET IS BASED UPON FIELD INSPECTION AND IS NOT TO BE CONSTRUED TO IMPLY MECHANICAL ANALYSIS.

PENETROMETER BORINGS HAVING A RATE OF PENETRATION MEASURED IN SECONDS PER FOOT ARE DRIVEN WITH A Nº 2 McKIERNAN-TERRY AIR HAMMER AT 115 PSI.

STATE OF CALIFORNIA
DEPARTMENT OF PUBLIC WORKS
DIVISION OF HIGHWAYS

OLYMPIC BLVD UNDERCROSSING WIDENING

LOG OF TEST BORINGS R-56

SCALE: HORIZ. 1"=20' VERT. 1"=10' | BRIDGE 53-1044 | FILE | DRAWING 531044-9

PREL. DRAWING NO. P-3542

BRIDGE DEPARTMENT

633

720211qj006.tif

Dist	COUNTY	ROUTE	POST MILES TOTAL PROJECT	SHEET No.	TOTAL SHEETS
07	LA	710	17.2/26.4	1009	1507

REGISTERED CIVIL ENGINEER 2/3/11 DATE

6-27-11
PLANS APPROVAL DATE

REGISTERED PROFESSIONAL ENGINEER RENE YIN No. C49915 Exp. 9/30/12 CIVIL STATE OF CALIFORNIA

THE STATE OF CALIFORNIA OR ITS OFFICERS OR AGENTS SHALL NOT BE RESPONSIBLE FOR THE ACCURACY OR COMPLETENESS OF SCANNED COPIES OF THIS PLAN SHEET.

NOTE:

1. FOR ACCURATE RIGHT OF WAY DATA, CONTACT RIGHT OF WAY ENGINEER AT THE DISTRICT OFFFICE.

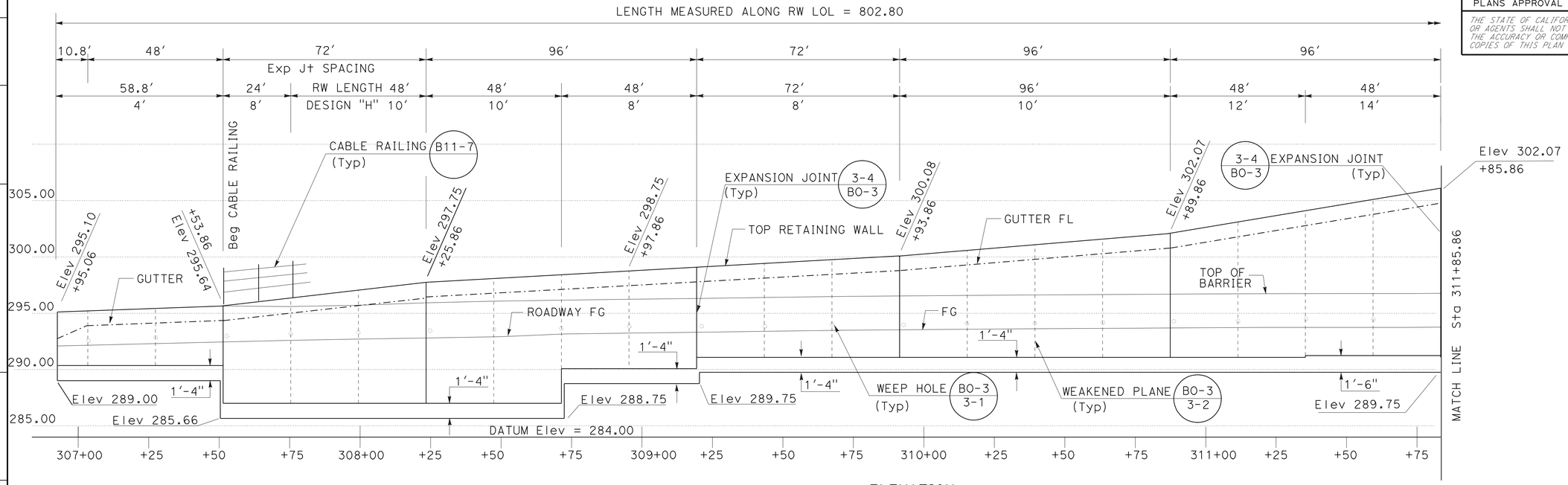

ELEVATION
SCALE HORIZ: 1″ = 20′
VERT: 1″ = 5′

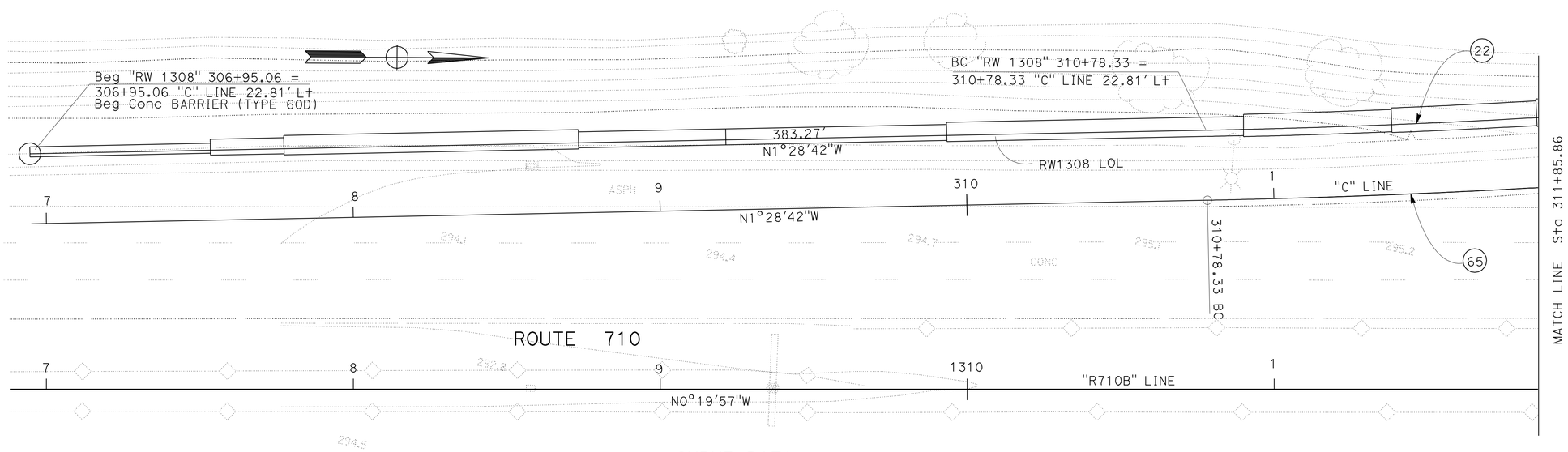

CURVE DATA

No.	R	Δ	T	L
22	2977.19′	5° 23′29″	140.18′	280.15′
65	3000.00′	5° 23′29″	141.25′	282.30′

RETAINING WALL PLAN

RETAINING WALL No. 1308

SCALE AS SHOWN **R-57**

THIS PLAN ACCURATE FOR RETAINING WALL WORK ONLY.

STATE OF CALIFORNIA - DEPARTMENT OF TRANSPORTATION
Caltrans
DESIGN

FUNCTIONAL SUPERVISOR: ALINE ANTARAMIAN
CALCULATED-DESIGNED BY: DAN TRAN
CHECKED BY: RENE YIN
REVISED BY
DATE REVISED

LAST REVISION 00-00-00
DATE PLOTTED => 29-JUN-2011
TIME PLOTTED => 13:10

Dist	COUNTY	ROUTE	POST MILES TOTAL PROJECT	SHEET No.	TOTAL SHEETS
07	LA	710	17.2/26.4	1010	1507

REGISTERED CIVIL ENGINEER 2/3/11 DATE

6-27-11
PLANS APPROVAL DATE

REGISTERED PROFESSIONAL ENGINEER RENE YIN No. C49915 Exp. 9/30/12 CIVIL STATE OF CALIFORNIA

THE STATE OF CALIFORNIA OR ITS OFFICERS OR AGENTS SHALL NOT BE RESPONSIBLE FOR THE ACCURACY OR COMPLETENESS OF SCANNED COPIES OF THIS PLAN SHEET.

NOTE:

1. FOR ACCURATE RIGHT OF WAY DATA, CONTACT RIGHT OF WAY ENGINEER AT THE DISTRICT OFFFICE.

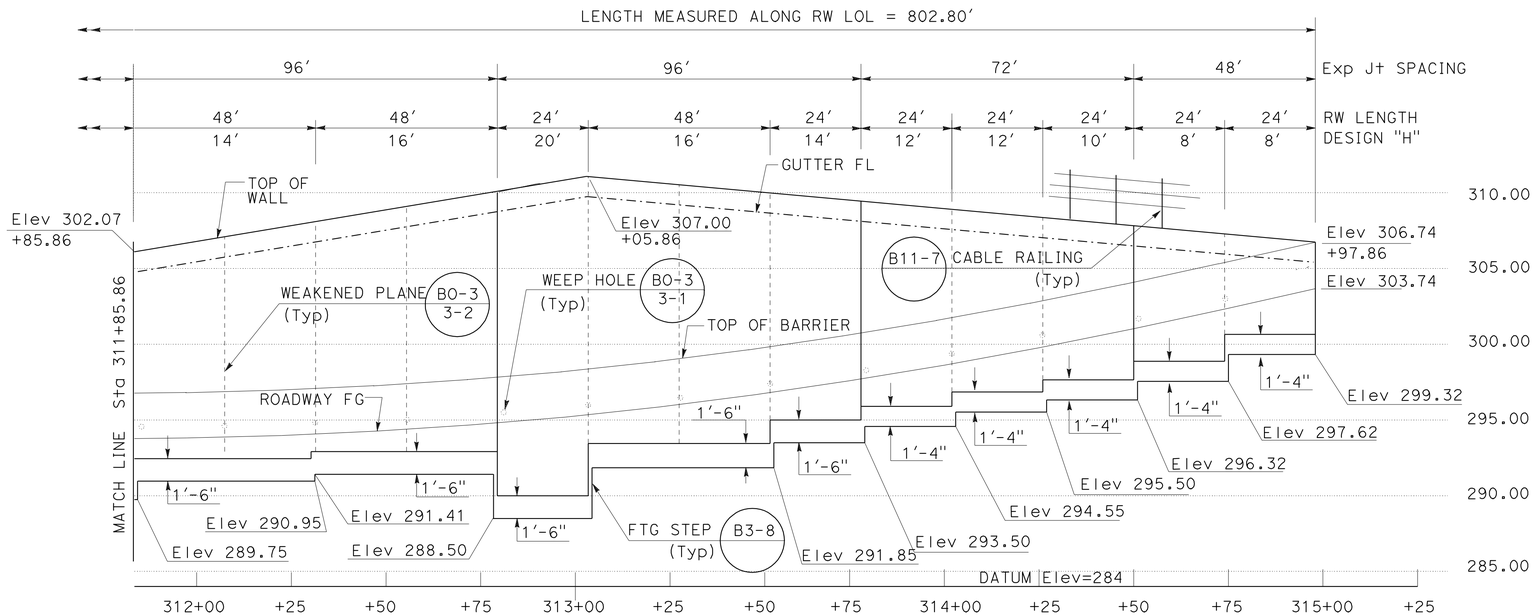

ELEVATION
SCALE HORIZ: 1" = 20'
VERT: 1" = 5'

CURVE DATA

No.	R	Δ	T	L
23	2977.19'	5° 23'29"	140.18'	280.15'
65	3000.00'	5° 23'29"	141.25'	282.30'

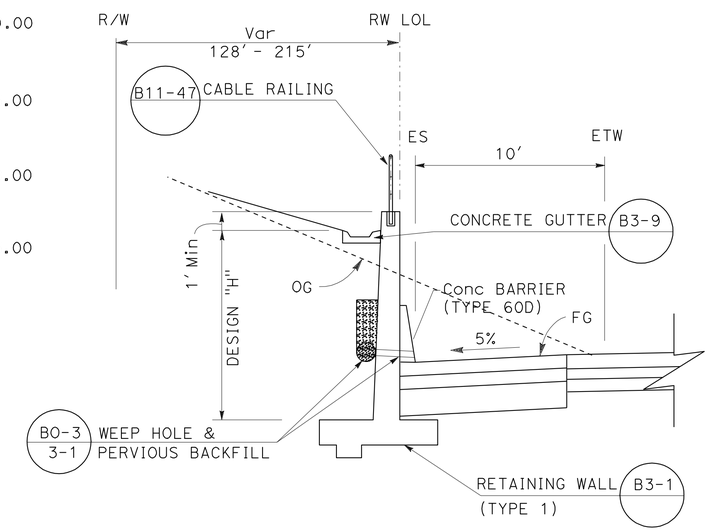

TYPICAL SECTION
NO SCALE

SOUND WALL No. 1308
Sta 306+95.06 TO 314+97.86

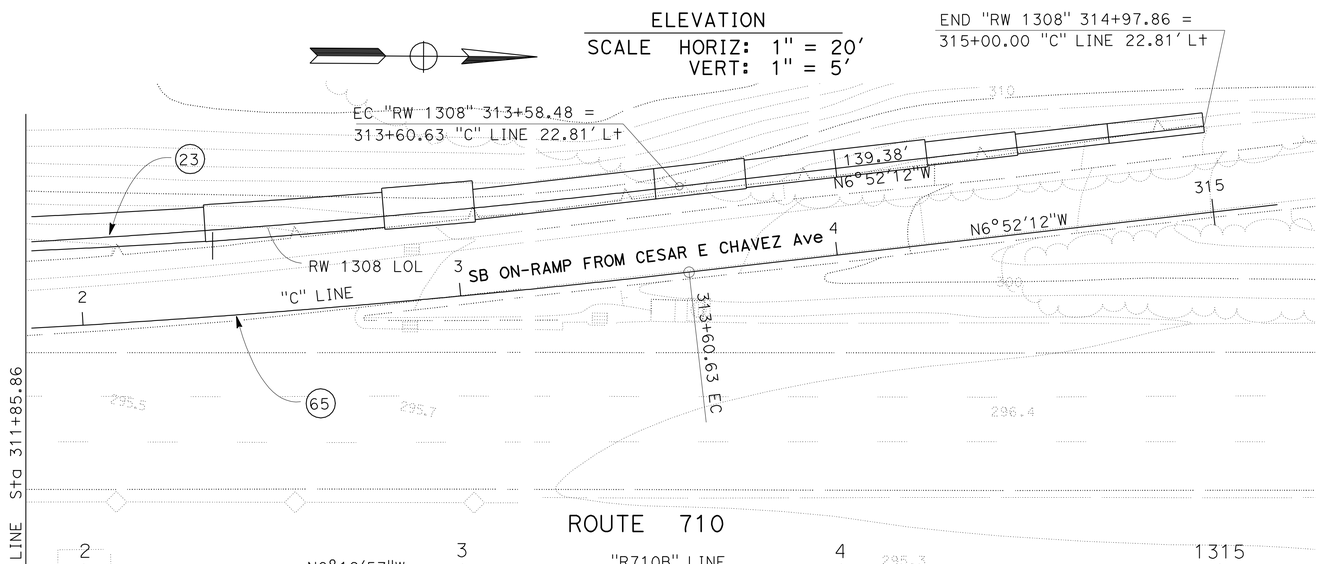

RETAINING WALL PLAN
SCALE 1":20'

THIS PLAN ACCURATE FOR RETAINING WALL WORK ONLY.

RETAINING WALL PLAN

RETAINING WALL No. 1308
SCALE AS SHOWN **R-58**

STATE OF CALIFORNIA - DEPARTMENT OF TRANSPORTATION
Caltrans® DESIGN
FUNCTIONAL SUPERVISOR: ALINE ANTARAMIAN
CALCULATED-DESIGNED BY: DAN TRAN
CHECKED BY: RENE YIN
REVISED BY
DATE REVISED

LAST REVISION 00-00-00 DATE PLOTTED => 29-JUN-2011 TIME PLOTTED => 13:10

DIST	COUNTY	ROUTE	POST MILES TOTAL PROJECT	SHEET No	TOTAL SHEETS
07	LA	710	17.2/26.4	1011	1507

Joseph S. Pratt 1-6-11
CERTIFIED ENGINEERING GEOLOGIST DATE

REGISTERED GEOLOGIST
Joseph S. Pratt
No. 2141
Exp. 5-31-11
CERTIFIED ENGINEERING GEOLOGIST
STATE OF CALIFORNIA

6-27-11
PLANS APPROVAL DATE

The State of California or its officers or agents shall not be responsible for the accuracy or completeness of electronic copies of this plan sheet.

This LOTB sheet was prepared in accordance with the Caltrans Soil & Rock Logging, Classification, & Presentation Manual (June 2010).

BENCH MARK

PRHV216 Elev 297.00′
Fd PK Nail at SB 710 Fwy shldr,
+/- 20′ S/O C. Chavez Bridge O.C.,
+/- 1′ E/O Edge of shldr, approx. 68′
Lt Sta 1317+83 C/L Rte 710.
N 1837132.950
E 6510078.859

PRHV208 Elev 293.60′
Fd PK Nail at SB 710 Fwy edge of shldr,
+/- 71′ N/O 1st Street Bridge O.C. in
East Los Angeles, approx. 64′
Lt Sta 1306+39 C/L Rte 710.
N 1835985.831
E 6510078.063

NAVD88

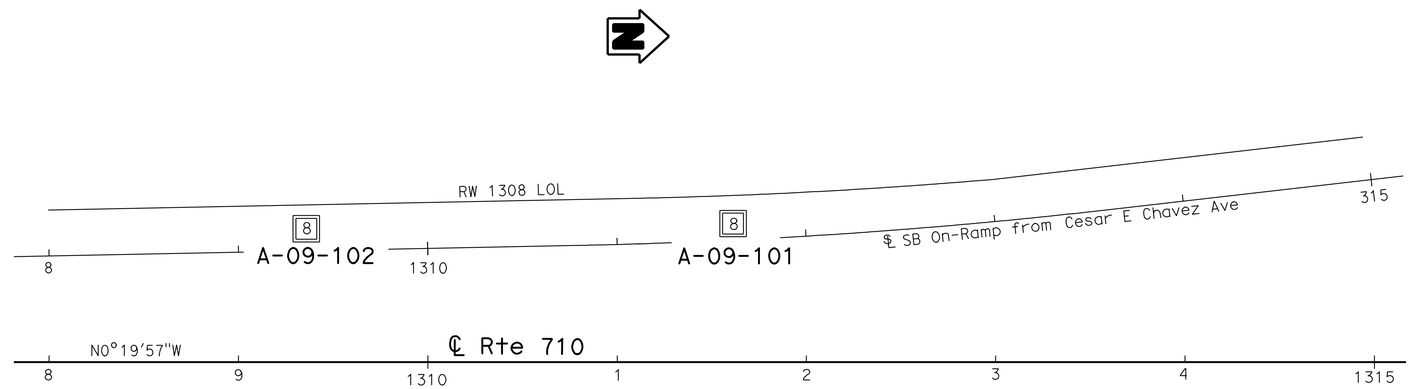

PLAN
1" = 40′

Note: No ground water encountered during field investigation.

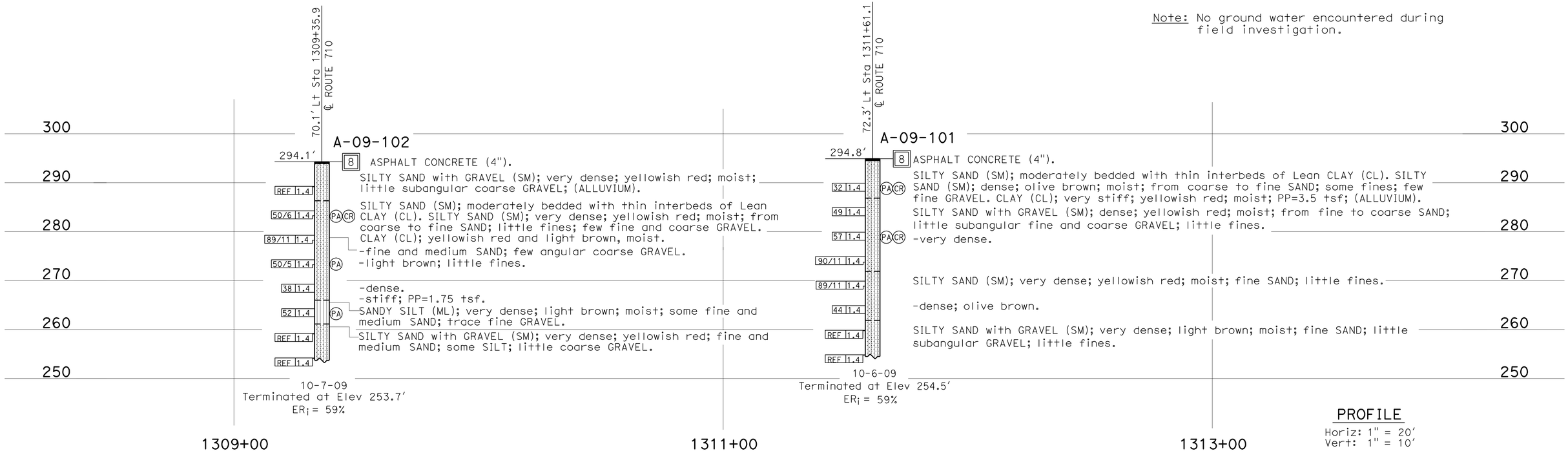

PROFILE
Horiz: 1" = 20′
Vert: 1" = 10′

ENGINEERING SERVICES	GEOTECHNICAL SERVICES	STATE OF CALIFORNIA DEPARTMENT OF TRANSPORTATION	DIVISION OF ENGINEERING SERVICES STRUCTURE DESIGN	BRIDGE NO.	RETAINING WALL No. 1308 RW-59
FUNCTIONAL SUPERVISOR	DRAWN BY: C. Christian, W. Tang 10/10	FIELD INVESTIGATION BY:	DESIGN BRANCH	POST MILES 24.78/24.91	LOG OF TEST BORINGS 1 OF 4
NAME: S. Karimi	CHECKED BY: T. Halda	Kevin Lai			

OGS CIVIL LOG OF TEST BORINGS SHEET

ORIGINAL SCALE IN INCHES FOR REDUCED PLANS 0 1 2 3

CU 07
EA 202111

DISREGARD PRINTS BEARING EARLIER REVISION DATES

REVISION DATES: 10-29-10 12-08-10 12-14-10 01-05-11

SHEET OF

FILE => 720211qk003.dgn

USERNAME => tr-sttk DATE PLOTTED => 29-JUN-2011 TIME PLOTTED => 11:17

REFERENCE: CALTRANS SOIL & ROCK LOGGING, CLASSIFICATION, AND PRESENTATION MANUAL (2010)

DIST	COUNTY	ROUTE	POST MILES TOTAL PROJECT	SHEET No	TOTAL SHEETS
07	LA	710	17.2/26.4	1012	1507

Joseph S. Pratt 1-6-11
CERTIFIED ENGINEERING GEOLOGIST DATE

REGISTERED GEOLOGIST
Joseph S. Pratt
No. 2141
Exp. 5-31-11
CERTIFIED ENGINEERING GEOLOGIST
STATE OF CALIFORNIA

6-27-11
PLANS APPROVAL DATE

The State of California or its officers or agents shall not be responsible for the accuracy or completeness of electronic copies of this plan sheet.

CEMENTATION

Description	Criteria
Weak	Crumbles or breaks with handling or little finger pressure.
Moderate	Crumbles or breaks with considerable finger pressure.
Strong	Will not crumble or break with finger pressure.

BOREHOLE IDENTIFICATION

Symbol	Hole Type	Description
Size	A	Auger Boring (hollow or solid stem bucket)
Size	R RW RC P	Rotary drilled boring (conventional) Rotary drilled with self-casing wire-line Rotary core with continuously-sampled, self-casing wire-line Rotary percussion boring (air)
Size	R	Rotary drilled diamond core
Size	HD HA	Hand driven (1-inch soil tube) Hand Auger
●	D	Dynamic Cone Penetration Boring
▲	CPT	Cone Penetration Test (ASTM D 5778)
⬚	O	Other (note on LOTB)

Note: Size in inches.

CONSISTENCY OF COHESIVE SOILS

Description	Shear Strength (tsf)	Pocket Penetrometer Measurement, PP, (tsf)	Torvane Measurement, TV, (tsf)	Vane Shear Measurement, VS, (tsf)
Very Soft	Less than 0.12	Less than 0.25	Less than 0.12	Less than 0.12
Soft	0.12 - 0.25	0.25 - 0.5	0.12 - 0.25	0.12 - 0.25
Medium Stiff	0.25 - 0.5	0.5 - 1	0.25 - 0.5	0.25 - 0.5
Stiff	0.5 - 1	1 - 2	0.5 - 1	0.5 - 1
Very Stiff	1 - 2	2 - 4	1 - 2	1 - 2
Hard	Greater than 2	Greater than 4	Greater than 2	Greater than 2

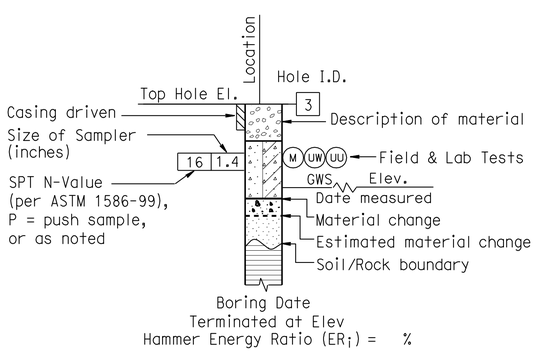

ROTARY BORING

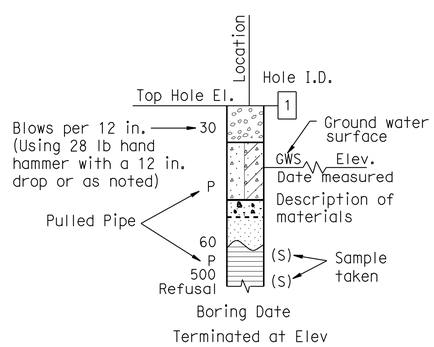

HAND BORING

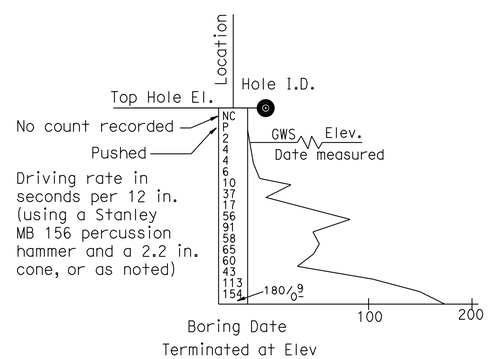

DYNAMIC CONE PENETRATION BORING

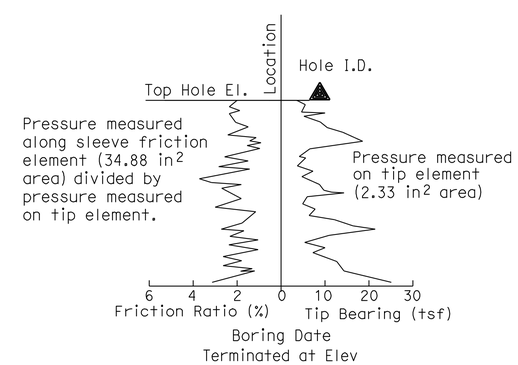

CONE PENETRATION TEST (CPT) BORING

ENGINEERING SERVICES	GEOTECHNICAL SERVICES	STATE OF CALIFORNIA DEPARTMENT OF TRANSPORTATION	DIVISION OF ENGINEERING SERVICES STRUCTURE DESIGN DESIGN BRANCH	BRIDGE NO. / POST MILE 24.78/24.91	RETAINING WALL No. 1308 RW-60 LOG OF TEST BORINGS 2 OF 4
	PREPARED BY: W. Tang 10/10				

GS LOTB SOIL LEGEND

ORIGINAL SCALE IN INCHES FOR REDUCED PLANS 0 1 2 3

CU 07
EA 202111

DISREGARD PRINTS BEARING EARLIER REVISION DATES → 01-05-11

REVISION DATES | SHEET | OF

FILE => 720211qk004.dgn

USERNAME => trstrk DATE PLOTTED => 29-JUN-2011 TIME PLOTTED => 11:17

REFERENCE: CALTRANS SOIL & ROCK LOGGING, CLASSIFICATION, AND PRESENTATION MANUAL (2010)

DIST	COUNTY	ROUTE	POST MILES TOTAL PROJECT	SHEET No	TOTAL SHEETS
07	LA	710	17.2/26.4	1013	1507

Joseph S. Pratt 1-6-11
CERTIFIED ENGINEERING GEOLOGIST DATE

6-27-11
PLANS APPROVAL DATE

REGISTERED GEOLOGIST Joseph S. Pratt No. 2141 Exp. 5-31-11 CERTIFIED ENGINEERING GEOLOGIST STATE OF CALIFORNIA

The State of California or its officers or agents shall not be responsible for the accuracy or completeness of electronic copies of this plan sheet.

GROUP SYMBOLS AND NAMES

Graphic/Symbol	Group Names	Graphic/Symbol	Group Names
GW	Well-graded GRAVEL Well-graded GRAVEL with SAND	CL	Lean CLAY Lean CLAY with SAND Lean CLAY with GRAVEL SANDY lean CLAY SANDY lean CLAY with GRAVEL GRAVELLY lean CLAY GRAVELLY lean CLAY with SAND
GP	Poorly-graded GRAVEL Poorly-graded GRAVEL with SAND		
GW-GM	Well-graded GRAVEL with SILT Well-graded GRAVEL with SILT and SAND	CL-ML	SILTY CLAY SILTY CLAY with SAND SILTY CLAY with GRAVEL SANDY SILTY CLAY SANDY SILTY CLAY with GRAVEL GRAVELLY SILTY CLAY GRAVELLY SILTY CLAY with SAND
GW-GC	Well-graded GRAVEL with CLAY (or SILTY CLAY) Well-graded GRAVEL with CLAY and SAND (or SILTY CLAY and SAND)		
GP-GM	Poorly-graded GRAVEL with SILT Poorly-graded GRAVEL with SILT and SAND	ML	SILT SILT with SAND SILT with GRAVEL SANDY SILT SANDY SILT with GRAVEL GRAVELLY SILT GRAVELLY SILT with SAND
GP-GC	Poorly-graded GRAVEL with CLAY (or SILTY CLAY) Poorly-graded GRAVEL with CLAY and SAND (or SILTY CLAY and SAND)		
GM	SILTY GRAVEL SILTY GRAVEL with SAND	OL	ORGANIC lean CLAY ORGANIC lean CLAY with SAND ORGANIC lean CLAY with GRAVEL SANDY ORGANIC lean CLAY SANDY ORGANIC lean CLAY with GRAVEL GRAVELLY ORGANIC lean CLAY GRAVELLY ORGANIC lean CLAY with SAND
GC	CLAYEY GRAVEL CLAYEY GRAVEL with SAND		
GC-GM	SILTY, CLAYEY GRAVEL SILTY, CLAYEY GRAVEL with SAND	OL	ORGANIC SILT ORGANIC SILT with SAND ORGANIC SILT with GRAVEL SANDY ORGANIC SILT SANDY ORGANIC SILT with GRAVEL GRAVELLY ORGANIC SILT GRAVELLY ORGANIC SILT with SAND
SW	Well-graded SAND Well-graded SAND with GRAVEL		
SP	Poorly-graded SAND Poorly-graded SAND with GRAVEL	CH	Fat CLAY Fat CLAY with SAND Fat CLAY with GRAVEL SANDY fat CLAY SANDY fat CLAY with GRAVEL GRAVELLY fat CLAY GRAVELLY fat CLAY with SAND
SW-SM	Well-graded SAND with SILT Well-graded SAND with SILT and GRAVEL		
SW-SC	Well-graded SAND with CLAY (or SILTY CLAY) Well-graded SAND with CLAY and GRAVEL (or SILTY CLAY and GRAVEL)	MH	Elastic SILT Elastic SILT with SAND Elastic SILT with GRAVEL SANDY elastic SILT SANDY elastic SILT with GRAVEL GRAVELLY elastic SILT GRAVELLY elastic SILT with SAND
SP-SM	Poorly-graded SAND with SILT Poorly-graded SAND with SILT and GRAVEL		
SP-SC	Poorly-graded SAND with CLAY (or SILTY CLAY) Poorly-graded SAND with CLAY and GRAVEL (or SILTY CLAY and GRAVEL)	OH	ORGANIC fat CLAY ORGANIC fat CLAY with SAND ORGANIC fat CLAY with GRAVEL SANDY ORGANIC fat CLAY SANDY ORGANIC fat CLAY with GRAVEL GRAVELLY ORGANIC fat CLAY GRAVELLY ORGANIC fat CLAY with SAND
SM	SILTY SAND SILTY SAND with GRAVEL		
SC	CLAYEY SAND CLAYEY SAND with GRAVEL	OH	ORGANIC elastic SILT ORGANIC elastic SILT with SAND ORGANIC elastic SILT with GRAVEL SANDY ORGANIC elastic SILT SANDY ORGANIC elastic SILT with GRAVEL GRAVELLY ORGANIC elastic SILT GRAVELLY ORGANIC elastic SILT with SAND
SC-SM	SILTY, CLAYEY SAND SILTY, CLAYEY SAND with GRAVEL		
PT	PEAT	OL/OH	ORGANIC SOIL ORGANIC SOIL with SAND ORGANIC SOIL with GRAVEL SANDY ORGANIC SOIL SANDY ORGANIC SOIL with GRAVEL GRAVELLY ORGANIC SOIL GRAVELLY ORGANIC SOIL with SAND
	COBBLES COBBLES and BOULDERS BOULDERS		

FIELD AND LABORATORY TESTING

- (C) Consolidation (ASTM D 2435)
- (CL) Collapse Potential (ASTM D 5333)
- (CP) Compaction Curve (CTM 216)
- (CR) Corrosivity Testing (CTM 643, CTM 422, CTM 417)
- (CU) Consolidated Undrained Triaxial (ASTM D 4767)
- (DS) Direct Shear (ASTM D 3080)
- (EI) Expansion Index (ASTM D 4829)
- (M) Moisture Content (ASTM D 2216)
- (OC) Organic Content-% (ASTM D 2974)
- (P) Permeability (CTM 220)
- (PA) Particle Size Analysis (ASTM D 422)
- (PI) Plasticity Index (AASHTO T 90) Liquid Limit (AASHTO T 89)
- (PL) Point Load Index (ASTM D 5731)
- (PM) Pressure Meter
- (R) R-Value (CTM 301)
- (SE) Sand Equivalent (CTM 217)
- (SG) Specific Gravity (AASHTO T 100)
- (SL) Shrinkage Limit (ASTM D 427)
- (SW) Swell Potential (ASTM D 4546)
- (UC) Unconfined Compression-Soil (ASTM D 2166) Unconfined Compression-Rock (ASTM D 2938)
- (UU) Unconsolidated Undrained Triaxial (ASTM D 2850)
- (UW) Unit Weight (ASTM D 4767)

APPARENT DENSITY OF COHESIONLESS SOILS

Description	SPT N_{60} (Blows / 12 in.)
Very Loose	0 - 5
Loose	5 - 10
Medium Dense	10 - 30
Dense	30 - 50
Very Dense	Greater than 50

MOISTURE

Description	Criteria
Dry	No discernable moisture
Moist	Moisture present, but no free water
Wet	Visible free water

PERCENT OR PROPORTION OF SOILS

Description	Criteria
Trace	Particles are present but estimated to be less than 5%
Few	5% - 10%
Little	15% - 25%
Some	30% - 45%
Mostly	50% - 100%

PARTICLE SIZE

Description		Size (in.)
Boulder		Greater than 12
Cobble		3 - 12
Gravel	Coarse	3/4 - 3
	Fine	1/5 - 3/4
Sand	Coarse	1/16 - 1/5
	Medium	1/64 - 1/16
	Fine	1/300 - 1/64
Silt and Clay		Less than 1/300

ENGINEERING SERVICES

GEOTECHNICAL SERVICES
PREPARED BY: W. Tang 10/10

STATE OF CALIFORNIA DEPARTMENT OF TRANSPORTATION

DIVISION OF ENGINEERING SERVICES STRUCTURE DESIGN
DESIGN BRANCH

BRIDGE NO.
POST MILE 24.78/24.91

RETAINING WALL 1308 RW-61
LOG OF TEST BORINGS 3 OF 4

GS LOTB SOIL LEGEND

ORIGINAL SCALE IN INCHES FOR REDUCED PLANS 0 1 2 3

CU 07
EA 202111

DISREGARD PRINTS BEARING EARLIER REVISION DATES 01-05-11

REVISION DATES | SHEET | OF

FILE => 720211qk005.dgn

USERNAME => rtstrk DATE PLOTTED => 29-JUN-2011 TIME PLOTTED => 11:17

U-0260(5) I-084-1(11)

FED. ROAD DIV. NO.	STATE	PROJ. No.	FISCAL YEAR	SHEET NO.	TOTAL SHEETS
7	CAL.			246	370

DIST.	COUNTY	ROUTE	SECTION	SHEET No.	TOTAL SHEETS
VII	LA	~~167~~	~~C~~	~~F-8~~	~~52~~

Bridge Engineer — Civil Engineer—Highway Bridges

Date Approved December 22, 1958

TO ACCOMPANY PLANS DATED 6-27-11

DIVISION OF ENGINEERING SERVICES - GEOTECHNICAL SERVICES

As-Built Log of Test Borings sheet is considered an informational document only. As such, the State of California registration seal with signature, license number and registration certificate expiration date confirm that this is a true and accurate copy of the original document. It does not attest to the accuracy or validity of the information contained in the original document. This drawing is available and presented only for the convenience of any bidder, contractor or other interested party.

DIST.	COUNTY	ROUTE	POST MILE-TOTAL PROJECT	Sheet No.	Total Sheets
07	LA	710	17.2/26.4	1014	1507

Joseph S. Pratt 1/6/11
CERTIFIED ENGINEERING GEOLOGIST DATE

PROFESSIONAL GEOLOGIST — Joseph S. Pratt — No. 2141 — Exp. 5-31-11 — CERTIFIED ENGINEERING GEOLOGIST — STATE OF CALIFORNIA

RETAINING WALL No. 1308

LOG OF TEST BORINGS 4 OF 4

NOTE: A COPY OF THIS LOG OF TEST BORINGS IS AVAILABLE AT OFFICE OF STRUCTURE MAINTENANCE AND INVESTIGATIONS, SACRAMENTO, CALIFORNIA

CU: 07
EA: 202111

BRIDGE No.
Sheet of

Notes:

1. Brooklyn Avenue Overcrossing has been renamed Cesar Chavez Avenue Overcrossing.
2. As-Built Vertical Datum: NGVD29 Datum Conversion: NAVD88 = NGVD29 + 2.00 ft

AS BUILT PLANS
Contract No. 59-7VC57
Date Completed
Document No. 7000 2275

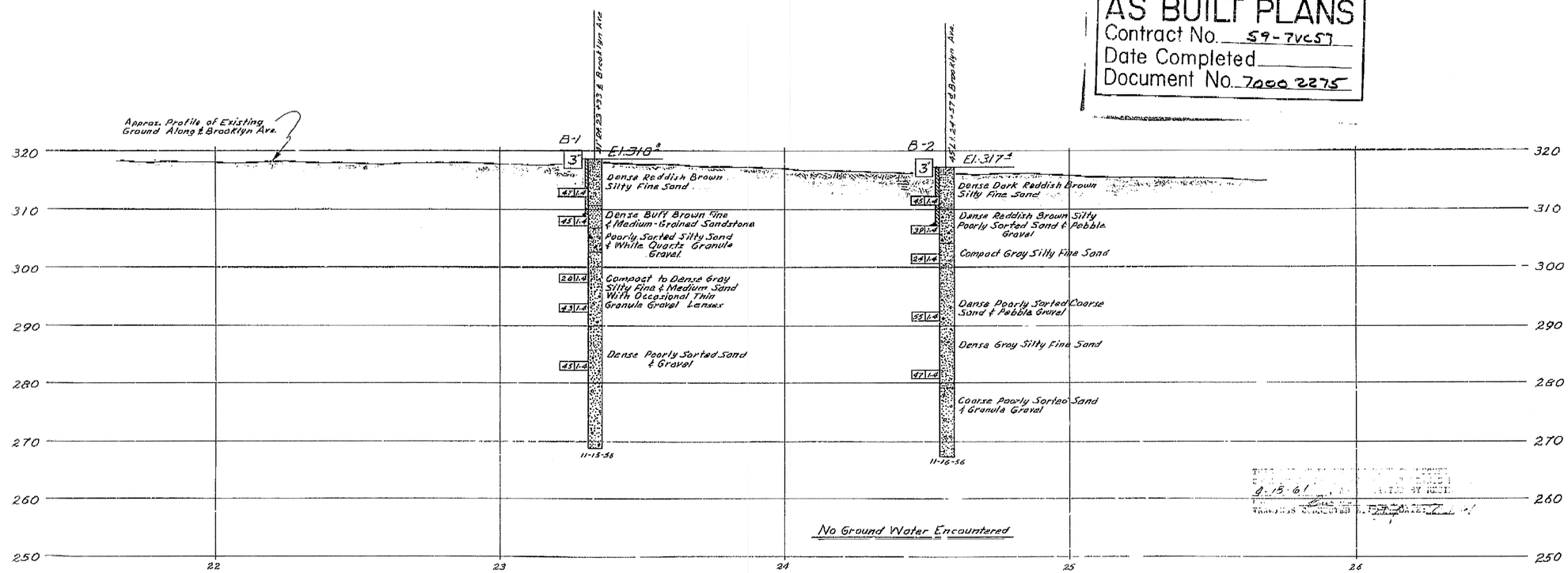

B.M. A-40-53
Fd. L.A.T. in E. curb Ford Blvd. 25' N. of E.C.R. N.E. corner Ford Blvd & New York St. El. 312.98

9-15-61

CLASSIFICATION OF MATERIAL, BASED ON STANDARD GRADE SIZE LIMITS

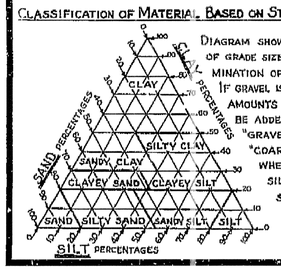

DIAGRAM SHOWING THE BASIS FOR ESTIMATES OF GRADE SIZE DISTRIBUTION USED IN DETERMINATION OF CLASS NAMES. IF GRAVEL IS PRESENT IN APPRECIABLE AMOUNTS THE TERM "GRAVELLY" MAY BE ADDED TO THE CLASS NAME, VIZ. "GRAVELLY SAND". THE TERMS "COARSE", "MEDIUM" AND "FINE" WHEN USED TO DESCRIBE SAND, SILT AND GRAVEL REFER TO STANDARD GRADE SIZE LIMITS.

LEGEND OF EARTH MATERIALS

- GRAVEL
- SAND
- SILT
- CLAY
- SANDY CLAY OR CLAYEY SAND
- SANDY SILT OR SILTY SAND
- SILTY CLAY OR CLAYEY SILT
- PEAT AND/OR ORGANIC MATTER
- FILL MATERIAL
- IGNEOUS ROCK
- SEDIMENTARY ROCK
- METAMORPHIC ROCK

LEGEND OF BORING OPERATIONS

- PLAN OF ANY BORING
- PENETROMETER
- 2¼" CONE PENETROMETER
- SAMPLER BORING (DRY)
- ROTARY BORING (WET)
- AUGER BORING (DRY)
- JET BORING
- CORE BORING
- TEST PIT

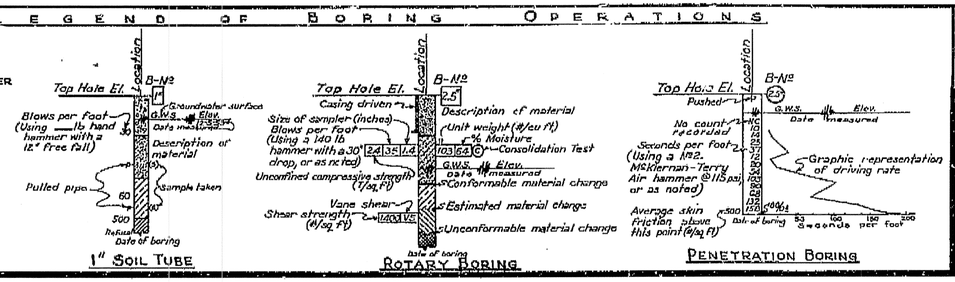

NOTES

The contractor's attention is directed to Section 2, Article (c) of the Standard Specifications and to the Special Provisions accompanying this set of plans.

Classification of earth material as shown on this sheet is based upon field inspection and is not to be construed to imply mechanical analysis.

STATE OF CALIFORNIA
DEPARTMENT OF PUBLIC WORKS
DIVISION OF HIGHWAYS

BROOKLYN AVENUE OVERCROSSING
R-62

LOG OF TEST BORINGS

SCALE Horiz. 1" = 20' Vert. 1" = 10' | BRIDGE 53-1154 | FILE | DRAWING C-4048-8

PREL. DRAWING NO. P-4048 24

BRIDGE DEPARTMENT

FIELD STUDY — DRAWN — CHECKED

Approval Recommended by: Principal Geologist, Materials & Testing Engineer

246

154

720211qk006.tif

Dist	COUNTY	ROUTE	POST MILES TOTAL PROJECT	SHEET No.	TOTAL SHEETS
07	LA	710	17.2/26.4	1015	1507

REGISTERED CIVIL ENGINEER 2/3/11 DATE

6-27-11
PLANS APPROVAL DATE

REGISTERED PROFESSIONAL ENGINEER RENE YIN No. C49915 Exp. 9/30/12 CIVIL STATE OF CALIFORNIA

THE STATE OF CALIFORNIA OR ITS OFFICERS OR AGENTS SHALL NOT BE RESPONSIBLE FOR THE ACCURACY OR COMPLETENESS OF SCANNED COPIES OF THIS PLAN SHEET.

NOTE:

1. FOR ACCURATE RIGHT OF WAY DATA, CONTACT RIGHT OF WAY ENGINEERING AT THE DISTRICT OFFFICE.

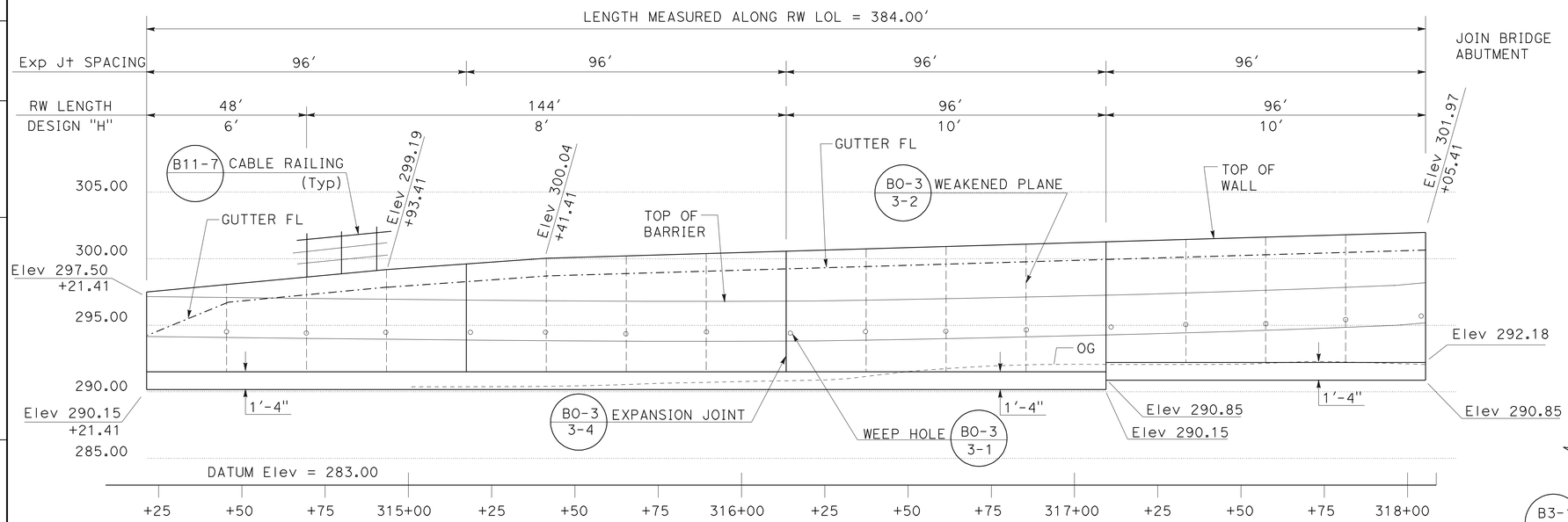

ELEVATION
SCALE Horiz: 1" = 20'
Vert: 1" = 5'

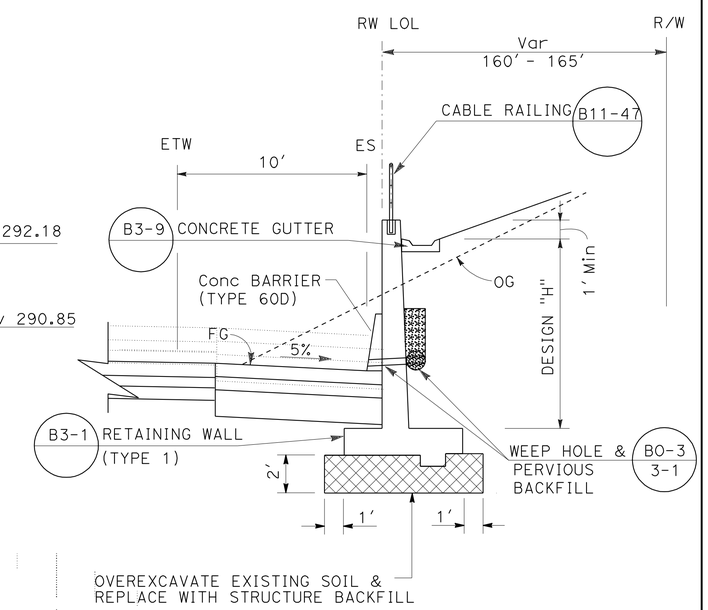

TYPICAL SECTION
NO SCALE

RETAINING WALL No. 1315
Sta 314+21.41 TO 318+05.41

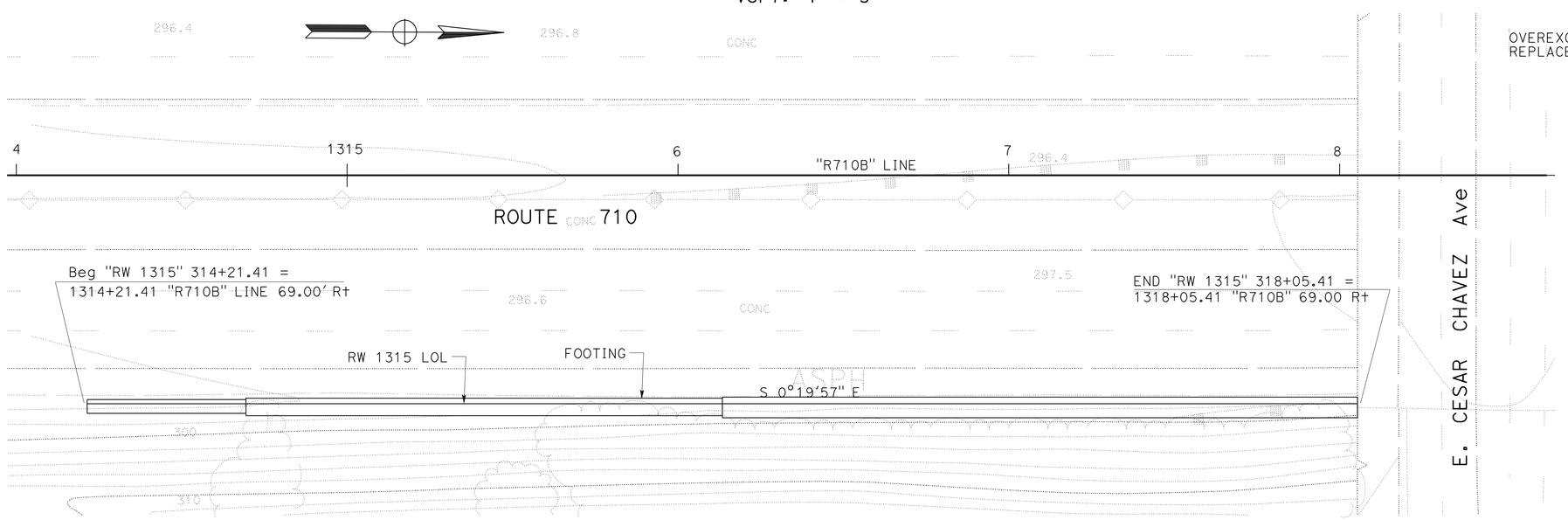

RETAINING WALL PLAN
SCALE 1" = 20'

RETAINING WALL PLAN

RETAINING WALL No. 1315
SCALE AS SHOWN

R-63

THIS PLAN ACCURATE FOR RETAINING WALL WORK ONLY.

REVISED BY | DATE REVISED
DAN TRAN | RENE YIN
CALCULATED-DESIGNED BY | CHECKED BY
FUNCTIONAL SUPERVISOR
ALINE ANTARAMIAN

STATE OF CALIFORNIA - DEPARTMENT OF TRANSPORTATION
Caltrans
DESIGN

LAST REVISION 00-00-00 | DATE PLOTTED => 29-JUN-2011 | TIME PLOTTED => 11:18

Dist	COUNTY	ROUTE	POST MILES TOTAL PROJECT	SHEET No.	TOTAL SHEETS
07	LA	710	17.2/26.4	1016	1507

REGISTERED CIVIL ENGINEER 2/3/11 DATE

6-27-11
PLANS APPROVAL DATE

REGISTERED PROFESSIONAL ENGINEER RENE YIN No. C49915 Exp. 9/30/12 CIVIL STATE OF CALIFORNIA

THE STATE OF CALIFORNIA OR ITS OFFICERS OR AGENTS SHALL NOT BE RESPONSIBLE FOR THE ACCURACY OR COMPLETENESS OF SCANNED COPIES OF THIS PLAN SHEET.

NOTE:

1. FOR ACCURATE RIGHT OF WAY DATA, CONTACT RIGHT OF WAY ENGINEERING AT THE DISTRICT OFFFICE.

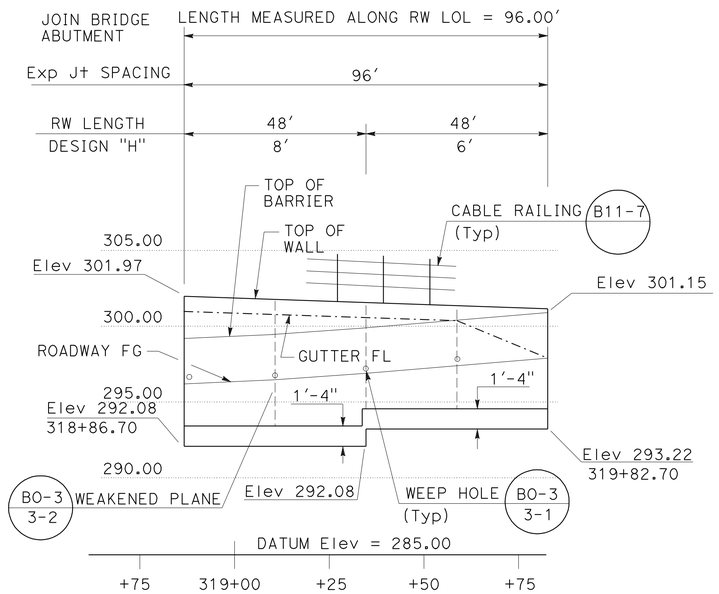

ELEVATION

SCALE: Horiz 1" = 20′
Vert 1" = 5′

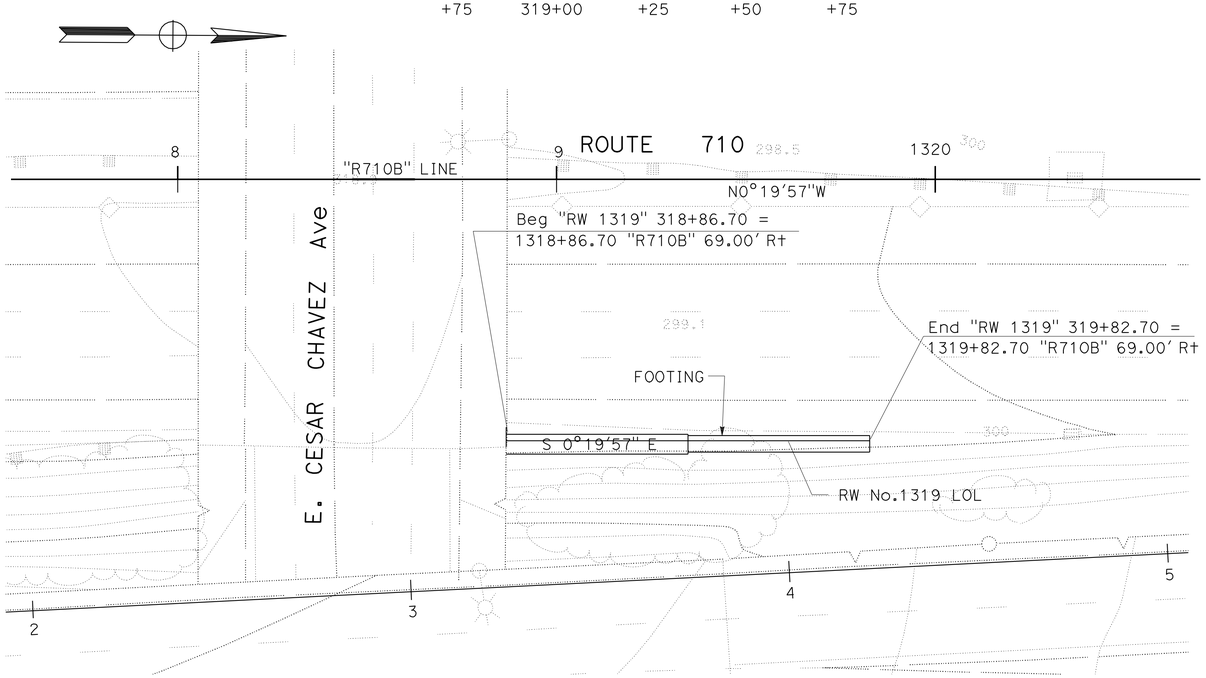

RETAINING WALL PLAN

SCALE: 1" = 20′

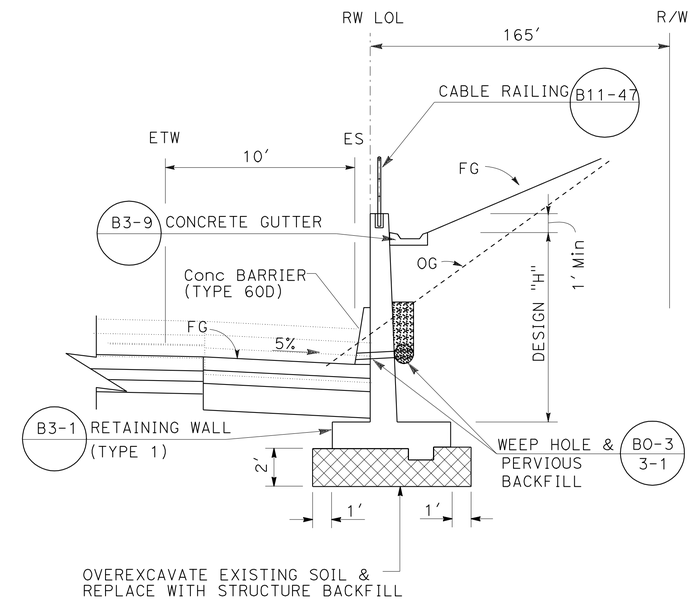

TYPICAL SECTION

NO SCALE

RETAINING WALL No. 1319
Sta 318+86.70 TO 319+82.70

THIS PLAN ACCURATE FOR RETAINING WALL WORK ONLY.

RETAINING WALL PLAN

RETAINING WALL No. 1319
SCALE AS SHOWN

R-64

REVISED BY	DATE REVISED
DAN TRAN	RENE YIN
CALCULATED-DESIGNED BY	CHECKED BY
FUNCTIONAL SUPERVISOR	ALINE ANTARAMIAN

STATE OF CALIFORNIA - DEPARTMENT OF TRANSPORTATION
Caltrans
DESIGN

LAST REVISION 00-00-00 | DATE PLOTTED => 29-JUN-2011 | TIME PLOTTED => 11:18

DIST	COUNTY	ROUTE	POST MILES TOTAL PROJECT	SHEET No	TOTAL SHEETS
07	LA	710	17.2/26.4	1017	1507

Joseph S. Pratt 5-6-11
CERTIFIED ENGINEERING GEOLOGIST

6-27-11
PLANS APPROVAL DATE

PROFESSIONAL GEOLOGIST Joseph S. Pratt No. 2141 Exp. 5-31-13 CERTIFIED ENGINEERING GEOLOGIST STATE OF CALIFORNIA

The State of California or its officers or agents shall not be responsible for the accuracy or completeness of electronic copies of this plan sheet.

This LOTB sheet was prepared in accordance with the Caltrans Soil & Rock Logging, Classification, & Presentation Manual (2010 Edition).

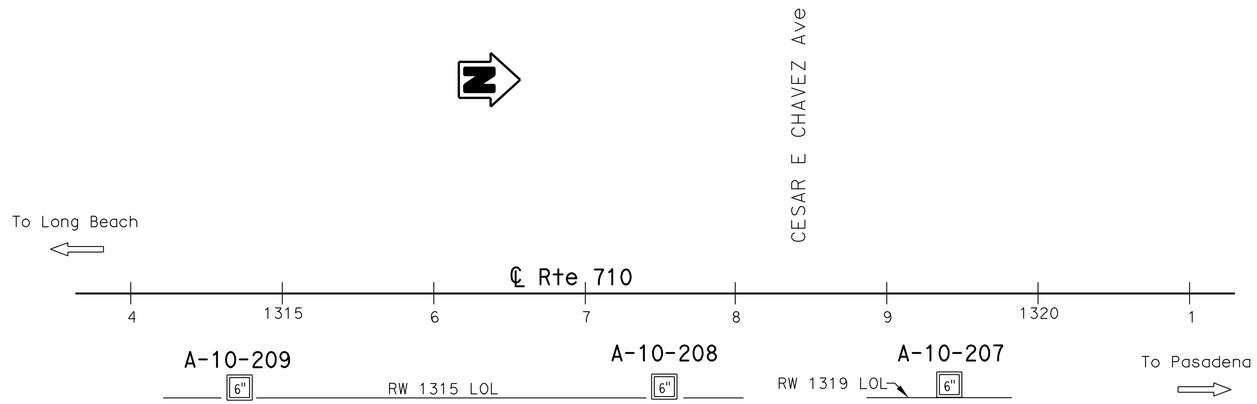

BENCH MARK

TBM Boring A-10-206 Elev 290.957′
45′ South of 1st Street Overcrossing,
1′ East of NB 710 East side ETW,
59.66′ Rt Sta 1304+45.77 ℄ Rte 710.
N 1835792.942
E 6510212.370
NAVD 88

PLAN

1" = 50′

Note: No groundwater encountered during field investigation.

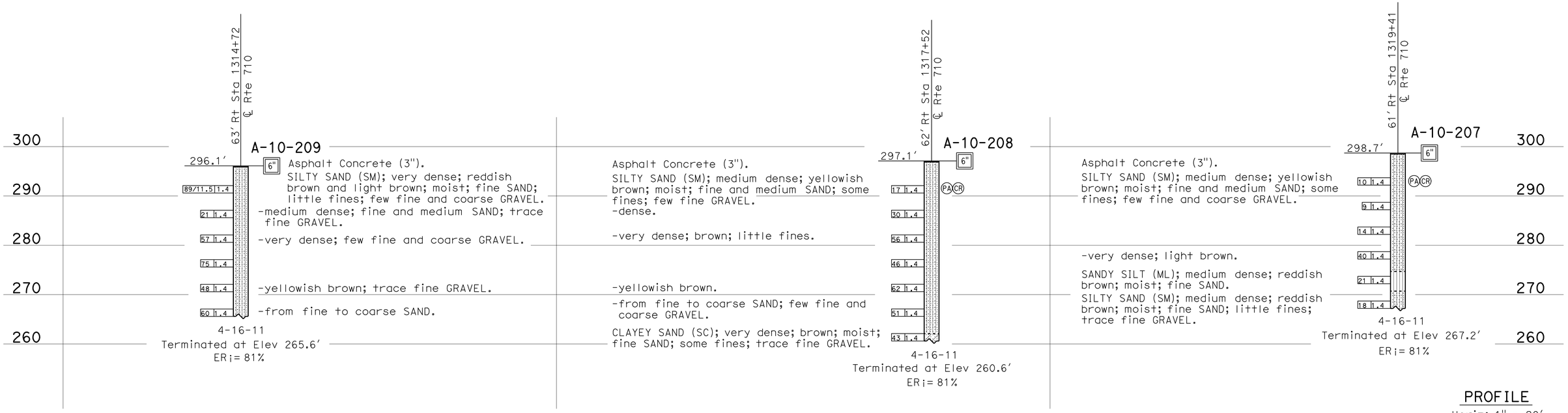

PROFILE

Horiz: 1" = 20′
Vert: 1" = 10′

R-65

ENGINEERING SERVICES	GEOTECHNICAL SERVICES	STATE OF CALIFORNIA DEPARTMENT OF TRANSPORTATION	DIVISION OF ENGINEERING SERVICES STRUCTURE DESIGN DESIGN BRANCH	BRIDGE NO. / POST MILE 24.90/25.00	RETAINING WALLS NOS. 1315 AND 1319 LOG OF TEST BORINGS 1 OF 3
FUNCTIONAL SUPERVISOR NAME: S. Karimi	DRAWN BY: I.G-Remmen CHECKED BY: A. Mehrazar	FIELD INVESTIGATION BY: K. Lai			

OGS CIVIL LOG OF TEST BORINGS SHEET

ORIGINAL SCALE IN INCHES FOR REDUCED PLANS 0 1 2 3

UNIT: 3643
PROJECT NUMBER & PHASE: 07000208691 CONTRACT NO.: 07-202111

DISREGARD PRINTS BEARING EARLIER REVISION DATES

REVISION DATES 04-27-11 05-02-11 SHEET X OF X

FILE => 720211qm002.dgn

USERNAME => trstrk DATE PLOTTED => 29-JUN-2011 TIME PLOTTED => 11:18

DIST	COUNTY	ROUTE	POST MILES TOTAL PROJECT	SHEET No	TOTAL SHEETS
07	LA	710	17.2/26.4	1018	1507

Joseph S. Pratt 5-6-11
CERTIFIED ENGINEERING GEOLOGIST DATE

REGISTERED GEOLOGIST
Joseph S. Pratt
No. 2141
Exp. 5-31-13
CERTIFIED ENGINEERING GEOLOGIST
STATE OF CALIFORNIA

6-27-11
PLANS APPROVAL DATE

The State of California or its officers or agents shall not be responsible for the accuracy or completeness of electronic copies of this plan sheet.

REFERENCE: CALTRANS SOIL & ROCK LOGGING, CLASSIFICATION, AND PRESENTATION MANUAL (2010)

CEMENTATION

Description	Criteria
Weak	Crumbles or breaks with handling or little finger pressure.
Moderate	Crumbles or breaks with considerable finger pressure.
Strong	Will not crumble or break with finger pressure.

BOREHOLE IDENTIFICATION

Symbol	Hole Type	Description
Size	A	Auger Boring (hollow or solid stem bucket)
Size	R RW RC P	Rotary drilled boring (conventional) Rotary drilled with self-casing wire-line Rotary core with continuously-sampled, self-casing wire-line Rotary percussion boring (air)
Size	R	Rotary drilled diamond core
Size	HD HA	Hand driven (1-inch soil tube) Hand Auger
●	D	Dynamic Cone Penetration Boring
▲	CPT	Cone Penetration Test (ASTM D 5778)
⬚	O	Other (note on LOTB)

Note: Size in inches.

CONSISTENCY OF COHESIVE SOILS

Description	Shear Strength (tsf)	Pocket Penetrometer Measurement, PP, (tsf)	Torvane Measurement, TV, (tsf)	Vane Shear Measurement, VS, (tsf)
Very Soft	Less than 0.12	Less than 0.25	Less than 0.12	Less than 0.12
Soft	0.12 - 0.25	0.25 - 0.5	0.12 - 0.25	0.12 - 0.25
Medium Stiff	0.25 - 0.5	0.5 - 1	0.25 - 0.5	0.25 - 0.5
Stiff	0.5 - 1	1 - 2	0.5 - 1	0.5 - 1
Very Stiff	1 - 2	2 - 4	1 - 2	1 - 2
Hard	Greater than 2	Greater than 4	Greater than 2	Greater than 2

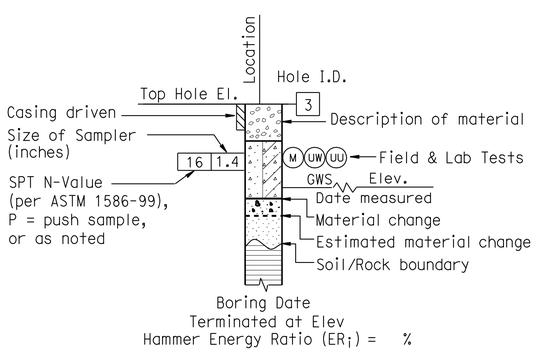

ROTARY BORING

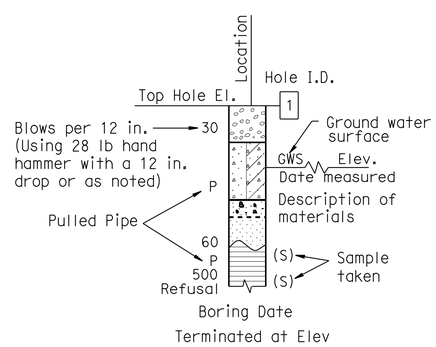

HAND BORING

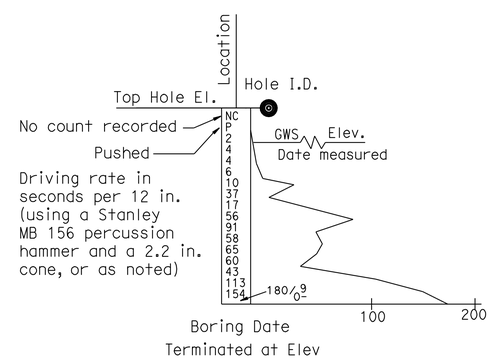

DYNAMIC CONE PENETRATION BORING

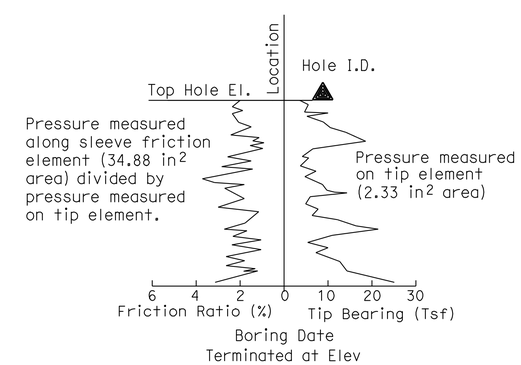

CONE PENETRATION TEST (CPT) BORING

R-66

ENGINEERING SERVICES	GEOTECHNICAL SERVICES	STATE OF CALIFORNIA DEPARTMENT OF TRANSPORTATION	DIVISION OF ENGINEERING SERVICES STRUCTURE DESIGN DESIGN BRANCH	BRIDGE NO. / POST MILE 24.90/25.00	RETAINING WALLS NOS. 1315 AND 1319 LOG OF TEST BORINGS 2 OF 3
	PREPARED BY: I.G-Remmen				

GS LOTB SOIL LEGEND

ORIGINAL SCALE IN INCHES FOR REDUCED PLANS 0 1 2 3

CU 07
EA 202111

DISREGARD PRINTS BEARING EARLIER REVISION DATES

REVISION DATES | SHEET | OF

FILE => 720211qm003.dgn

USERNAME => trstrk DATE PLOTTED => 29-JUN-2011 TIME PLOTTED => 11:18

REFERENCE: CALTRANS SOIL & ROCK LOGGING, CLASSIFICATION, AND PRESENTATION MANUAL (2010)

DIST	COUNTY	ROUTE	POST MILES TOTAL PROJECT	SHEET No	TOTAL SHEETS
07	LA	710	17.2/26.4	1019	1507

Joseph S. Pratt 5-6-11
CERTIFIED ENGINEERING GEOLOGIST DATE

6-27-11
PLANS APPROVAL DATE

REGISTERED GEOLOGIST
Joseph S. Pratt
No. 2141
Exp. 5-31-13
CERTIFIED ENGINEERING GEOLOGIST
STATE OF CALIFORNIA

The State of California or its officers or agents shall not be responsible for the accuracy or completeness of electronic copies of this plan sheet.

GROUP SYMBOLS AND NAMES

Graphic/Symbol	Group Names	Graphic/Symbol	Group Names
GW	Well-graded GRAVEL Well-graded GRAVEL with SAND	CL	Lean CLAY Lean CLAY with SAND Lean CLAY with GRAVEL SANDY lean CLAY SANDY lean CLAY with GRAVEL GRAVELLY lean CLAY GRAVELLY lean CLAY with SAND
GP	Poorly-graded GRAVEL Poorly-graded GRAVEL with SAND		
GW-GM	Well-graded GRAVEL with SILT Well-graded GRAVEL with SILT and SAND	CL-ML	SILTY CLAY SILTY CLAY with SAND SILTY CLAY with GRAVEL SANDY SILTY CLAY SANDY SILTY CLAY with GRAVEL GRAVELLY SILTY CLAY GRAVELLY SILTY CLAY with SAND
GW-GC	Well-graded GRAVEL with CLAY (or SILTY CLAY) Well-graded GRAVEL with CLAY and SAND (or SILTY CLAY and SAND)		
GP-GM	Poorly-graded GRAVEL with SILT Poorly-graded GRAVEL with SILT and SAND	ML	SILT SILT with SAND SILT with GRAVEL SANDY SILT SANDY SILT with GRAVEL GRAVELLY SILT GRAVELLY SILT with SAND
GP-GC	Poorly-graded GRAVEL with CLAY (or SILTY CLAY) Poorly-graded GRAVEL with CLAY and SAND (or SILTY CLAY and SAND)		
GM	SILTY GRAVEL SILTY GRAVEL with SAND	OL	ORGANIC lean CLAY ORGANIC lean CLAY with SAND ORGANIC lean CLAY with GRAVEL SANDY ORGANIC lean CLAY SANDY ORGANIC lean CLAY with GRAVEL GRAVELLY ORGANIC lean CLAY GRAVELLY ORGANIC lean CLAY with SAND
GC	CLAYEY GRAVEL CLAYEY GRAVEL with SAND		
GC-GM	SILTY, CLAYEY GRAVEL SILTY, CLAYEY GRAVEL with SAND	OL	ORGANIC SILT ORGANIC SILT with SAND ORGANIC SILT with GRAVEL SANDY ORGANIC SILT SANDY ORGANIC SILT with GRAVEL GRAVELLY ORGANIC SILT GRAVELLY ORGANIC SILT with SAND
SW	Well-graded SAND Well-graded SAND with GRAVEL		
SP	Poorly-graded SAND Poorly-graded SAND with GRAVEL	CH	Fat CLAY Fat CLAY with SAND Fat CLAY with GRAVEL SANDY fat CLAY SANDY fat CLAY with GRAVEL GRAVELLY fat CLAY GRAVELLY fat CLAY with SAND
SW-SM	Well-graded SAND with SILT Well-graded SAND with SILT and GRAVEL		
SW-SC	Well-graded SAND with CLAY (or SILTY CLAY) Well-graded SAND with CLAY and GRAVEL (or SILTY CLAY and GRAVEL)	MH	Elastic SILT Elastic SILT with SAND Elastic SILT with GRAVEL SANDY elastic SILT SANDY elastic SILT with GRAVEL GRAVELLY elastic SILT GRAVELLY elastic SILT with SAND
SP-SM	Poorly-graded SAND with SILT Poorly-graded SAND with SILT and GRAVEL		
SP-SC	Poorly-graded SAND with CLAY (or SILTY CLAY) Poorly-graded SAND with CLAY and GRAVEL (or SILTY CLAY and GRAVEL)	OH	ORGANIC fat CLAY ORGANIC fat CLAY with SAND ORGANIC fat CLAY with GRAVEL SANDY ORGANIC fat CLAY SANDY ORGANIC fat CLAY with GRAVEL GRAVELLY ORGANIC fat CLAY GRAVELLY ORGANIC fat CLAY with SAND
SM	SILTY SAND SILTY SAND with GRAVEL		
SC	CLAYEY SAND CLAYEY SAND with GRAVEL	OH	ORGANIC elastic SILT ORGANIC elastic SILT with SAND ORGANIC elastic SILT with GRAVEL SANDY ORGANIC elastic SILT SANDY ORGANIC elastic SILT with GRAVEL GRAVELLY ORGANIC elastic SILT GRAVELLY ORGANIC elastic SILT with SAND
SC-SM	SILTY, CLAYEY SAND SILTY, CLAYEY SAND with GRAVEL		
PT	PEAT	OL/OH	ORGANIC SOIL ORGANIC SOIL with SAND ORGANIC SOIL with GRAVEL SANDY ORGANIC SOIL SANDY ORGANIC SOIL with GRAVEL GRAVELLY ORGANIC SOIL GRAVELLY ORGANIC SOIL with SAND
	COBBLES COBBLES and BOULDERS BOULDERS		

FIELD AND LABORATORY TESTING

- (C) Consolidation (ASTM D 2435)
- (CL) Collapse Potential (ASTM D 5333)
- (CP) Compaction Curve (CTM 216)
- (CR) Corrosivity Testing (CTM 643, CTM 422, CTM 417)
- (CU) Consolidated Undrained Triaxial (ASTM D 4767)
- (DS) Direct Shear (ASTM D 3080)
- (EI) Expansion Index (ASTM D 4829)
- (M) Moisture Content (ASTM D 2216)
- (OC) Organic Content-% (ASTM D 2974)
- (P) Permeability (CTM 220)
- (PA) Particle Size Analysis (ASTM D 422)
- (PI) Plasticity Index (AASHTO T 90) Liquid Limit (AASHTO T 89)
- (PL) Point Load Index (ASTM D 5731)
- (PM) Pressure Meter
- (R) R-Value (CTM 301)
- (SE) Sand Equivalent (CTM 217)
- (SG) Specific Gravity (AASHTO T 100)
- (SL) Shrinkage Limit (ASTM D 427)
- (SW) Swell Potential (ASTM D 4546)
- (UC) Unconfined Compression-Soil (ASTM D 2166) Unconfined Compression-Rock (ASTM D 2938)
- (UU) Unconsolidated Undrained Triaxial (ASTM D 2850)
- (UW) Unit Weight (ASTM D 4767)

APPARENT DENSITY OF COHESIONLESS SOILS

Description	SPT N_{60} (Blows / 12 in.)
Very Loose	0 - 5
Loose	5 - 10
Medium Dense	10 - 30
Dense	30 - 50
Very Dense	Greater than 50

MOISTURE

Description	Criteria
Dry	No discernable moisture
Moist	Moisture present, but no free water
Wet	Visible free water

PERCENT OR PROPORTION OF SOILS

Description	Criteria
Trace	Particles are present but estimated to be less than 5%
Few	5% - 10%
Little	15% - 25%
Some	30% - 45%
Mostly	50% - 100%

PARTICLE SIZE

Description		Size (in.)
Boulder		Greater than 12
Cobble		3 - 12
Gravel	Coarse	3/4 - 3
	Fine	1/5 - 3/4
Sand	Coarse	1/16 - 1/5
	Medium	1/64 - 1/16
	Fine	1/300 - 1/64
Silt and Clay		Less than 1/300

ENGINEERING SERVICES

GEOTECHNICAL SERVICES
PREPARED BY: I. G-Remmen

STATE OF CALIFORNIA
DEPARTMENT OF TRANSPORTATION

DIVISION OF ENGINEERING SERVICES
STRUCTURE DESIGN
DESIGN BRANCH

BRIDGE NO.
POST MILE 24.90/25.00

RETAINING WALLS NOS. 1315 AND 1319
LOG OF TEST BORINGS 3 OF 3

GS LOTB SOIL LEGEND

ORIGINAL SCALE IN INCHES FOR REDUCED PLANS 0 1 2 3

CU 07
EA 202111

DISREGARD PRINTS BEARING EARLIER REVISION DATES

REVISION DATES SHEET OF

FILE => 720211qm004.dgn

USERNAME => rtrstrk DATE PLOTTED => 29-JUN-2011 TIME PLOTTED => 11:18

Dist	COUNTY	ROUTE	POST MILES TOTAL PROJECT	SHEET No.	TOTAL SHEETS
07	LA	710	17.2/26.4	1020	1507

REGISTERED CIVIL ENGINEER 2/3/11 DATE

6-27-11
PLANS APPROVAL DATE

REGISTERED PROFESSIONAL ENGINEER RENE YIN No. C49915 Exp. 9/30/12 CIVIL STATE OF CALIFORNIA

THE STATE OF CALIFORNIA OR ITS OFFICERS OR AGENTS SHALL NOT BE RESPONSIBLE FOR THE ACCURACY OR COMPLETENESS OF SCANNED COPIES OF THIS PLAN SHEET.

NOTES:

1. FOR ACCURATE RIGHT OF WAY DATA, CONTACT RIGHT OF WAY ENGINEERING AT THE DISTRICT OFFFICE.
2. WATERSTOP IN THE EXPANSION JOINT SHALL BE EXTENDED 6" INTO CONCRETE BARRIER.

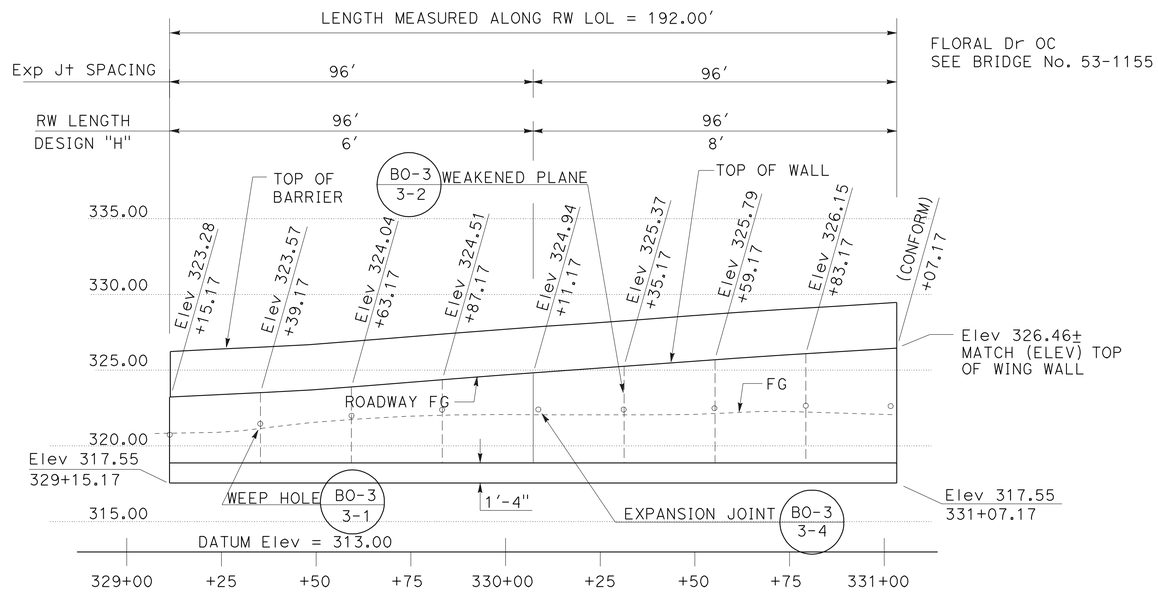

ELEVATION
SCALE Horiz: 1" = 20'
Vert: 1" = 5'

CURVE DATA

No.	R	Δ	T	L
21	2964.50'	1°20"13"	34.81'	69.61'
22	1904.50'	3°40"56"	61.22'	122.39'
66	2000.00'	36 2'16"	650.57'	1257.96'
68	3000.00'	6 30'40"	170.65'	340.92'
69	1940.00'	14°45'35"	251.27'	499.76'

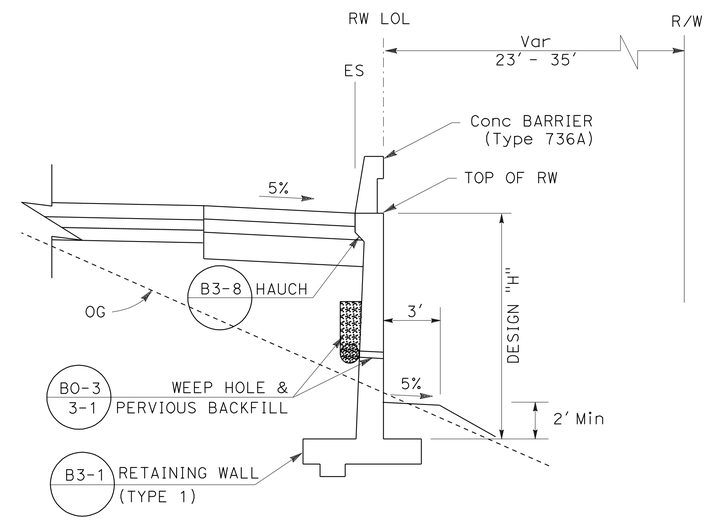

TYPICAL SECTION
NO SCALE

RETAINING WALL No. 1331
Sta 329+15.17 TO 331+07.17

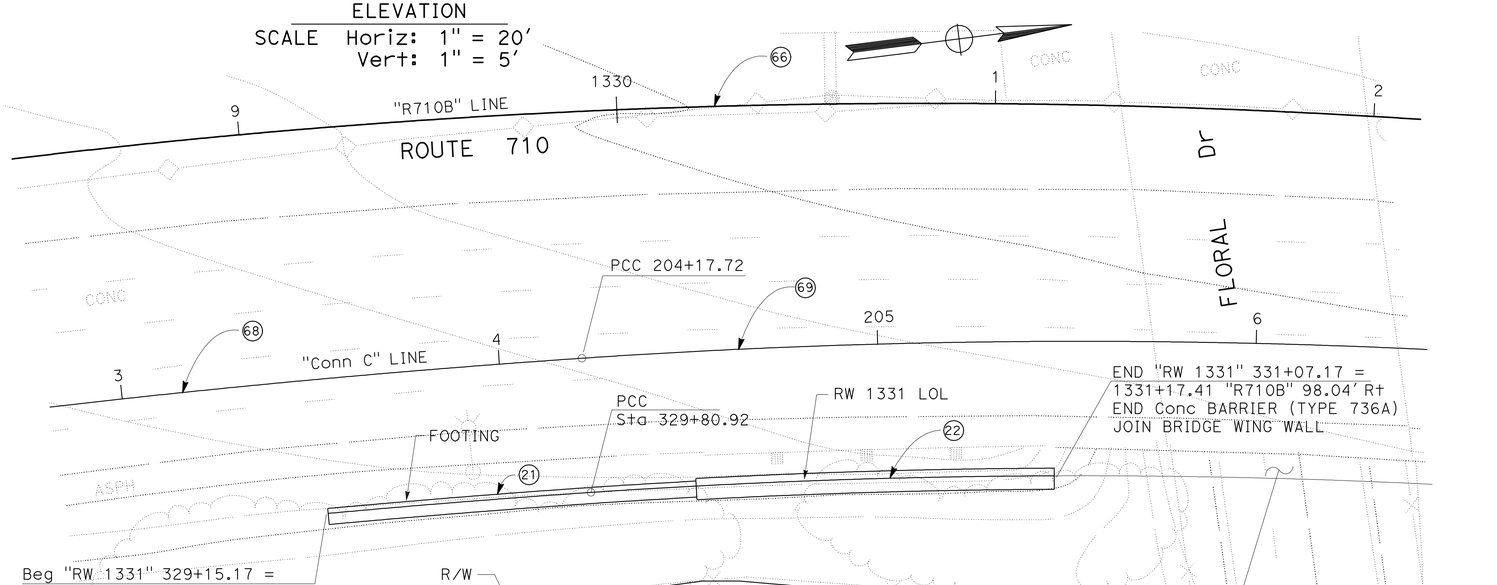

RETAINING WALL PLAN
SCALE 1" = 20'

RETAINING WALL PLAN

RETAINING WALL No. 1331
SCALE AS SHOWN

R-68

THIS PLAN ACCURATE FOR RETAINING WALL WORK ONLY.

STATE OF CALIFORNIA - DEPARTMENT OF TRANSPORTATION
Caltrans® DESIGN

FUNCTIONAL SUPERVISOR: ALINE ANTARAMIAN
CALCULATED-DESIGNED BY: DAN TRAN
CHECKED BY: RENE YIN
REVISED BY
DATE REVISED

LAST REVISION 00-00-00
DATE PLOTTED => 29-JUN-2011
TIME PLOTTED => 11:18

DIST	COUNTY	ROUTE	POST MILES TOTAL PROJECT	SHEET No	TOTAL SHEETS
07	LA	710	17.2/26.4	1021	1507

PROFESSIONAL ENGINEER 12-6-10

6-27-11
PLANS APPROVAL DATE

REGISTERED PROFESSIONAL ENGINEER Gamini Weeratunga No. GE2403 Exp. 9-30-12 GEOTECHNICAL STATE OF CALIFORNIA

The State of California or its officers or agents shall not be responsible for the accuracy or completeness of electronic copies of this plan sheet.

This LOTB sheet was prepared in accordance with the Caltrans Soil & Rock Logging, Classification, & Presentation Manual (June 2007).

BENCH MARK

PRHV-5002 Elev= 333.16
FND PK On SB 710 SHDR
71.60′ Lt ℄ Rte 710
Sta 1329+95.69
N 1 838 348.17
E 6 510 074.30

PRHV-7806 Elev= 314.85
FND Fd L&T NW Corner Floral-Ford, 8′ NE/ECR
197.45′ Rt ℄ Rte 710
Sta 1332+33.27
N 1 838 537.92
E 6 510 372.65

VERT DATUM NAVD88

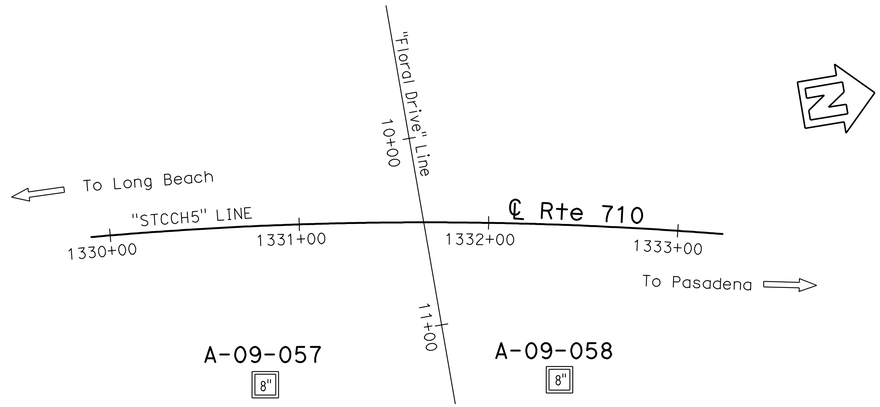

PLAN
1" = 40′

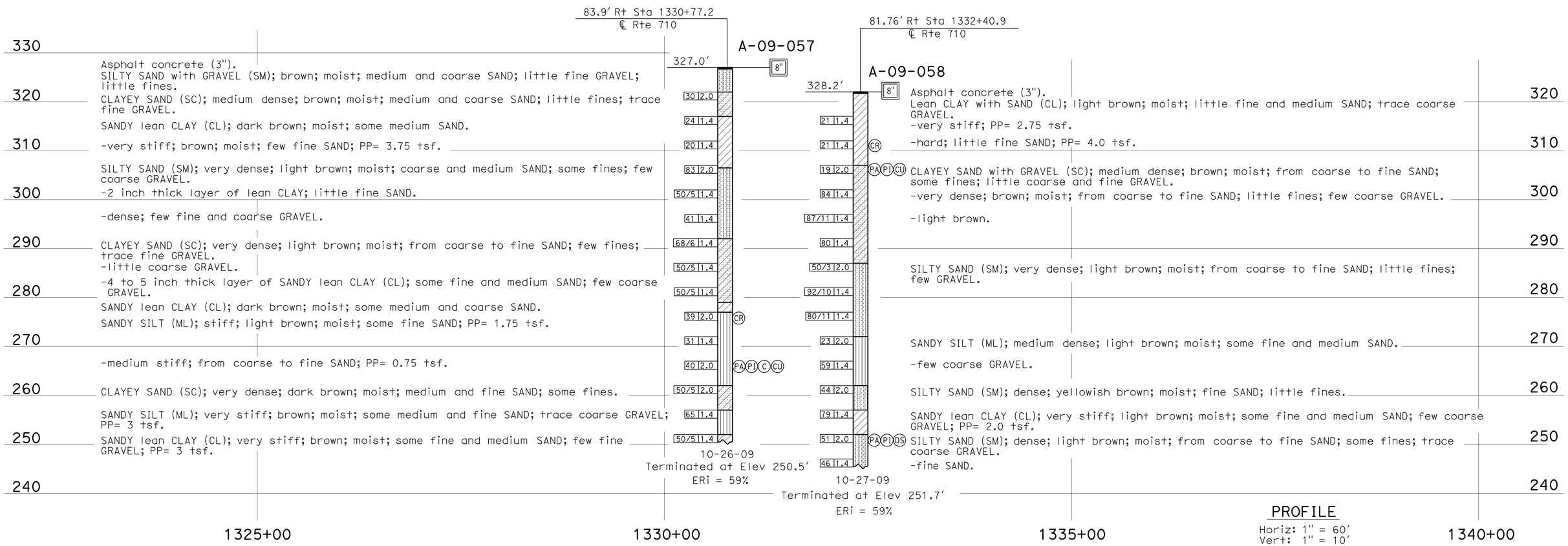

PROFILE
Horiz: 1" = 60′
Vert: 1" = 10′

ENGINEERING SERVICES	GEOTECHNICAL SERVICES	STATE OF CALIFORNIA DEPARTMENT OF TRANSPORTATION	DIVISION OF ENGINEERING SERVICES STRUCTURE DESIGN DESIGN BRANCH	BRIDGE NO. / POST MILES 25.21	RETAINING WALL 1331 RW-69 LOG OF TEST BORINGS 1 OF 5
FUNCTIONAL SUPERVISOR NAME: S. Karimi	DRAWN BY: C. Christian, F. Nguyen 10/10 CHECKED BY: T. Halda	FIELD INVESTIGATION BY: A. Mehrazar	CU 07 EA 202111		

OGS CIVIL LOG OF TEST BORINGS SHEET

ORIGINAL SCALE IN INCHES FOR REDUCED PLANS 0 1 2 3

DISREGARD PRINTS BEARING EARLIER REVISION DATES 12-06-10

REVISION DATES | SHEET | OF

FILE => 720211qn002.dgn

USERNAME => trstrk DATE PLOTTED => 29-JUN-2011 TIME PLOTTED => 11:19

REFERENCE: CALTRANS SOIL & ROCK LOGGING, CLASSIFICATION, AND PRESENTATION MANUAL (2010)

DIST	COUNTY	ROUTE	POST MILES TOTAL PROJECT	SHEET No	TOTAL SHEETS
07	LA	710	17.2/26.4	1022	1507

PROFESSIONAL ENGINEER 12-6-10

6-27-11
PLANS APPROVAL DATE

REGISTERED PROFESSIONAL ENGINEER
Gamini Weeratunga
No. GE2403
Exp. 9-30-12
GEOTECHNICAL
STATE OF CALIFORNIA

The State of California or its officers or agents shall not be responsible for the accuracy or completeness of electronic copies of this plan sheet.

CEMENTATION

Description	Criteria
Weak	Crumbles or breaks with handling or little finger pressure.
Moderate	Crumbles or breaks with considerable finger pressure.
Strong	Will not crumble or break with finger pressure.

BOREHOLE IDENTIFICATION

Symbol	Hole Type	Description
Size	A	Auger Boring (hollow or solid stem bucket)
Size	R RW RC P	Rotary drilled boring (conventional) Rotary drilled with self-casing wire-line Rotary core with continuously-sampled, self-casing wire-line Rotary percussion boring (air)
Size	R	Rotary drilled diamond core
Size	HD HA	Hand driven (1-inch soil tube) Hand Auger
●	D	Dynamic Cone Penetration Boring
▲	CPT	Cone Penetration Test (ASTM D 5778)
⬚	O	Other (note on LOTB)

Note: Size in inches.

CONSISTENCY OF COHESIVE SOILS

Description	Shear Strength (tsf)	Pocket Penetrometer Measurement, PP, (tsf)	Torvane Measurement, TV, (tsf)	Vane Shear Measurement, VS, (tsf)
Very Soft	Less than 0.12	Less than 0.25	Less than 0.12	Less than 0.12
Soft	0.12 - 0.25	0.25 - 0.5	0.12 - 0.25	0.12 - 0.25
Medium Stiff	0.25 - 0.5	0.5 - 1	0.25 - 0.5	0.25 - 0.5
Stiff	0.5 - 1	1 - 2	0.5 - 1	0.5 - 1
Very Stiff	1 - 2	2 - 4	1 - 2	1 - 2
Hard	Greater than 2	Greater than 4	Greater than 2	Greater than 2

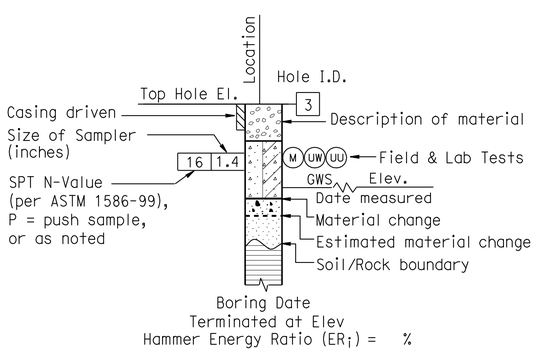

ROTARY BORING

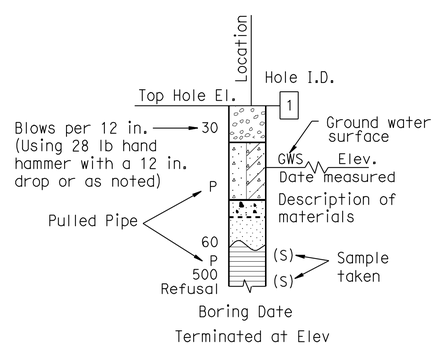

HAND BORING

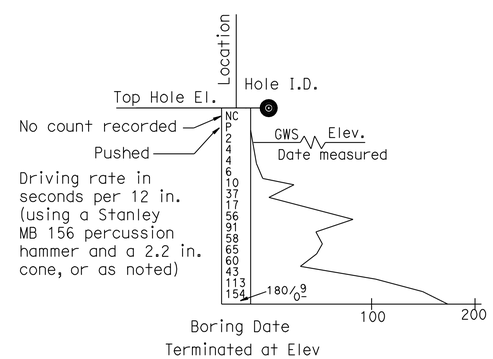

DYNAMIC CONE PENETRATION BORING

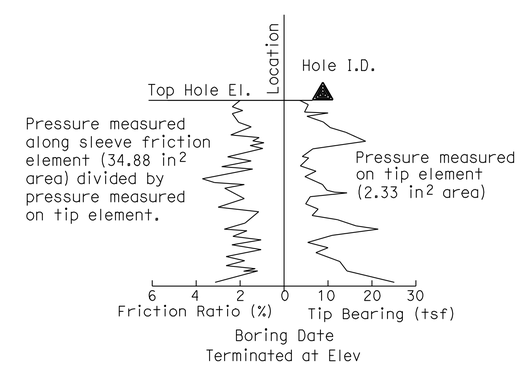

CONE PENETRATION TEST (CPT) BORING

ENGINEERING SERVICES	GEOTECHNICAL SERVICES	STATE OF CALIFORNIA DEPARTMENT OF TRANSPORTATION	DIVISION OF ENGINEERING SERVICES STRUCTURE DESIGN DESIGN BRANCH	BRIDGE NO. / POST MILE 25.21	RETAINING WALL 1331 RW-70 LOG OF TEST BORINGS 2 OF 5
	PREPARED BY: F. Nguyen 10/10				

GS LOTB SOIL LEGEND

ORIGINAL SCALE IN INCHES FOR REDUCED PLANS 0 1 2 3

CU 07
EA 202111

DISREGARD PRINTS BEARING EARLIER REVISION DATES

REVISION DATES | SHEET | OF

FILE => 720211qn003.dgn

USERNAME => trstrk DATE PLOTTED => 29-JUN-2011 TIME PLOTTED => 11:19

REFERENCE: CALTRANS SOIL & ROCK LOGGING, CLASSIFICATION, AND PRESENTATION MANUAL (2010)

DIST	COUNTY	ROUTE	POST MILES TOTAL PROJECT	SHEET No	TOTAL SHEETS
07	LA	710	17.2/26.4	1023	1507

PROFESSIONAL ENGINEER 12-6-10

6-27-11
PLANS APPROVAL DATE

REGISTERED PROFESSIONAL ENGINEER
Gamini Weeratunga
No. GE2403
Exp. 9-30-12
GEOTECHNICAL
STATE OF CALIFORNIA

The State of California or its officers or agents shall not be responsible for the accuracy or completeness of electronic copies of this plan sheet.

GROUP SYMBOLS AND NAMES

Graphic/Symbol	Group Names	Graphic/Symbol	Group Names
GW	Well-graded GRAVEL Well-graded GRAVEL with SAND	CL	Lean CLAY Lean CLAY with SAND Lean CLAY with GRAVEL SANDY lean CLAY SANDY lean CLAY with GRAVEL GRAVELLY lean CLAY GRAVELLY lean CLAY with SAND
GP	Poorly-graded GRAVEL Poorly-graded GRAVEL with SAND		
GW-GM	Well-graded GRAVEL with SILT Well-graded GRAVEL with SILT and SAND	CL-ML	SILTY CLAY SILTY CLAY with SAND SILTY CLAY with GRAVEL SANDY SILTY CLAY SANDY SILTY CLAY with GRAVEL GRAVELLY SILTY CLAY GRAVELLY SILTY CLAY with SAND
GW-GC	Well-graded GRAVEL with CLAY (or SILTY CLAY) Well-graded GRAVEL with CLAY and SAND (or SILTY CLAY and SAND)		
GP-GM	Poorly-graded GRAVEL with SILT Poorly-graded GRAVEL with SILT and SAND	ML	SILT SILT with SAND SILT with GRAVEL SANDY SILT SANDY SILT with GRAVEL GRAVELLY SILT GRAVELLY SILT with SAND
GP-GC	Poorly-graded GRAVEL with CLAY (or SILTY CLAY) Poorly-graded GRAVEL with CLAY and SAND (or SILTY CLAY and SAND)		
GM	SILTY GRAVEL SILTY GRAVEL with SAND	OL	ORGANIC lean CLAY ORGANIC lean CLAY with SAND ORGANIC lean CLAY with GRAVEL SANDY ORGANIC lean CLAY SANDY ORGANIC lean CLAY with GRAVEL GRAVELLY ORGANIC lean CLAY GRAVELLY ORGANIC lean CLAY with SAND
GC	CLAYEY GRAVEL CLAYEY GRAVEL with SAND		
GC-GM	SILTY, CLAYEY GRAVEL SILTY, CLAYEY GRAVEL with SAND	OL	ORGANIC SILT ORGANIC SILT with SAND ORGANIC SILT with GRAVEL SANDY ORGANIC SILT SANDY ORGANIC SILT with GRAVEL GRAVELLY ORGANIC SILT GRAVELLY ORGANIC SILT with SAND
SW	Well-graded SAND Well-graded SAND with GRAVEL		
SP	Poorly-graded SAND Poorly-graded SAND with GRAVEL	CH	Fat CLAY Fat CLAY with SAND Fat CLAY with GRAVEL SANDY fat CLAY SANDY fat CLAY with GRAVEL GRAVELLY fat CLAY GRAVELLY fat CLAY with SAND
SW-SM	Well-graded SAND with SILT Well-graded SAND with SILT and GRAVEL		
SW-SC	Well-graded SAND with CLAY (or SILTY CLAY) Well-graded SAND with CLAY and GRAVEL (or SILTY CLAY and GRAVEL)	MH	Elastic SILT Elastic SILT with SAND Elastic SILT with GRAVEL SANDY elastic SILT SANDY elastic SILT with GRAVEL GRAVELLY elastic SILT GRAVELLY elastic SILT with SAND
SP-SM	Poorly-graded SAND with SILT Poorly-graded SAND with SILT and GRAVEL		
SP-SC	Poorly-graded SAND with CLAY (or SILTY CLAY) Poorly-graded SAND with CLAY and GRAVEL (or SILTY CLAY and GRAVEL)	OH	ORGANIC fat CLAY ORGANIC fat CLAY with SAND ORGANIC fat CLAY with GRAVEL SANDY ORGANIC fat CLAY SANDY ORGANIC fat CLAY with GRAVEL GRAVELLY ORGANIC fat CLAY GRAVELLY ORGANIC fat CLAY with SAND
SM	SILTY SAND SILTY SAND with GRAVEL		
SC	CLAYEY SAND CLAYEY SAND with GRAVEL	OH	ORGANIC elastic SILT ORGANIC elastic SILT with SAND ORGANIC elastic SILT with GRAVEL SANDY ORGANIC elastic SILT SANDY ORGANIC elastic SILT with GRAVEL GRAVELLY ORGANIC elastic SILT GRAVELLY ORGANIC elastic SILT with SAND
SC-SM	SILTY, CLAYEY SAND SILTY, CLAYEY SAND with GRAVEL		
PT	PEAT	OL/OH	ORGANIC SOIL ORGANIC SOIL with SAND ORGANIC SOIL with GRAVEL SANDY ORGANIC SOIL SANDY ORGANIC SOIL with GRAVEL GRAVELLY ORGANIC SOIL GRAVELLY ORGANIC SOIL with SAND
	COBBLES COBBLES and BOULDERS BOULDERS		

FIELD AND LABORATORY TESTING

- (C) Consolidation (ASTM D 2435)
- (CL) Collapse Potential (ASTM D 5333)
- (CP) Compaction Curve (CTM 216)
- (CR) Corrosivity Testing (CTM 643, CTM 422, CTM 417)
- (CU) Consolidated Undrained Triaxial (ASTM D 4767)
- (DS) Direct Shear (ASTM D 3080)
- (EI) Expansion Index (ASTM D 4829)
- (M) Moisture Content (ASTM D 2216)
- (OC) Organic Content-% (ASTM D 2974)
- (P) Permeability (CTM 220)
- (PA) Particle Size Analysis (ASTM D 422)
- (PI) Plasticity Index (AASHTO T 90) Liquid Limit (AASHTO T 89)
- (PL) Point Load Index (ASTM D 5731)
- (PM) Pressure Meter
- (R) R-Value (CTM 301)
- (SE) Sand Equivalent (CTM 217)
- (SG) Specific Gravity (AASHTO T 100)
- (SL) Shrinkage Limit (ASTM D 427)
- (SW) Swell Potential (ASTM D 4546)
- (UC) Unconfined Compression-Soil (ASTM D 2166) Unconfined Compression-Rock (ASTM D 2938)
- (UU) Unconsolidated Undrained Triaxial (ASTM D 2850)
- (UW) Unit Weight (ASTM D 4767)

APPARENT DENSITY OF COHESIONLESS SOILS

Description	SPT N_{60} (Blows / 12 in.)
Very Loose	0 - 5
Loose	5 - 10
Medium Dense	10 - 30
Dense	30 - 50
Very Dense	Greater than 50

MOISTURE

Description	Criteria
Dry	No discernable moisture
Moist	Moisture present, but no free water
Wet	Visible free water

PERCENT OR PROPORTION OF SOILS

Description	Criteria
Trace	Particles are present but estimated to be less than 5%
Few	5% - 10%
Little	15% - 25%
Some	30% - 45%
Mostly	50% - 100%

PARTICLE SIZE

Description		Size (in.)
Boulder		Greater than 12
Cobble		3 - 12
Gravel	Coarse	3/4 - 3
	Fine	1/5 - 3/4
Sand	Coarse	1/16 - 1/5
	Medium	1/64 - 1/16
	Fine	1/300 - 1/64
Silt and Clay		Less than 1/300

ENGINEERING SERVICES	GEOTECHNICAL SERVICES	STATE OF CALIFORNIA DEPARTMENT OF TRANSPORTATION	DIVISION OF ENGINEERING SERVICES STRUCTURE DESIGN DESIGN BRANCH	BRIDGE NO. / POST MILE 25.21	RETAINING WALL 1331 RW-71 LOG OF TEST BORINGS 3 OF 5
	PREPARED BY: F. Nguyen 10/10				

GS LOTB SOIL LEGEND

ORIGINAL SCALE IN INCHES FOR REDUCED PLANS 0 1 2 3

CU 07
EA 202111

DISREGARD PRINTS BEARING EARLIER REVISION DATES

REVISION DATES | SHEET | OF

FILE => 720211qn004.dgn

USERNAME => trstrk DATE PLOTTED => 29-JUN-2011 TIME PLOTTED => 11:19

DIST	COUNTY	ROUTE	KILOMETER POST TOTAL PROJECT	SHEET No	TOTAL SHEETS
07	LA	710			

REGISTERED ENGINEER 1-24-05

PLANS APPROVAL DATE

REGISTERED PROFESSIONAL ENGINEER GAMINI C. WEERATUNGA No. 2403 Exp. 9-30-06 GEOTECHNICAL STATE OF CALIFORNIA

The State of California or its officers or agents shall not be responsible for the accuracy or completeness of electronic copies of this plan sheet.

Caltrans Metric

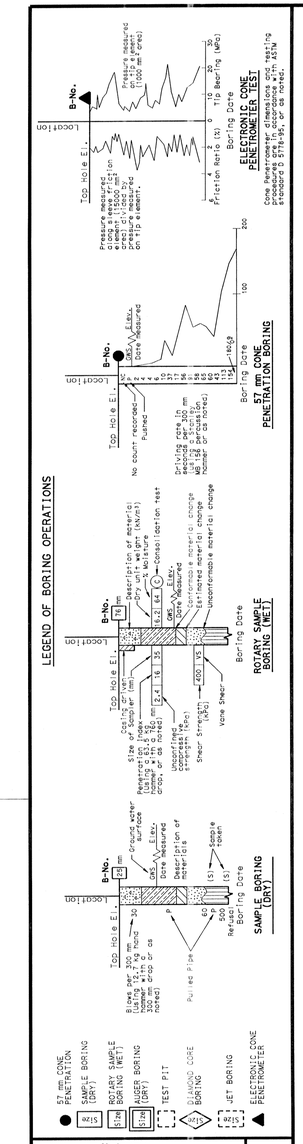

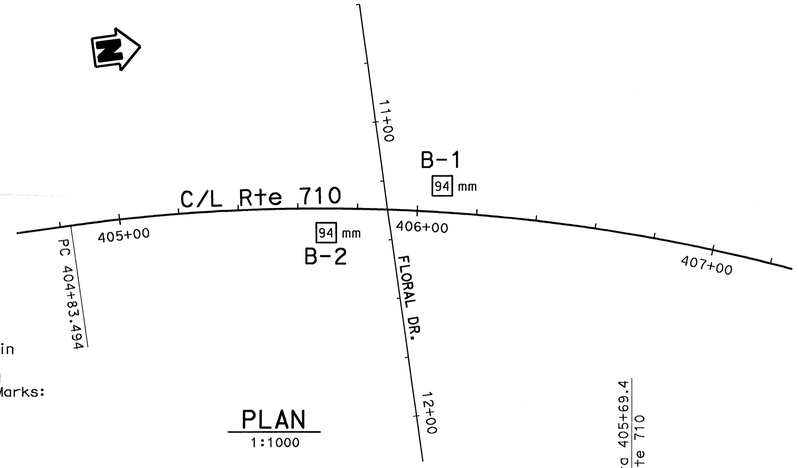

PLAN
1:1000

BENCH MARK
Elevations shown hereon are in terms of The North American Vertical Datum of 1998 based locally upon Caltrans Bench Marks:

PRHV6 Elev 99.430 m
PRHV7 Elev 99.160 m
PRHV8 Elev 98.499 m

LEGEND (SOIL)

21 51 — SA 16.4 18.3 — AL — DS — CR

Moisture content (%)
Dry density (kN/m3)

SA = Gradation
AL = Atterberg limits
DS = Direct Shear
CR = Corrosion

Revisions made to this Log of Test Borings from the original As-Built Log of Test Borings are the addition of the following table & notes:

Boring	Station	Offset from ℄ Rte 710
B-1	1332+28.07	29.2 ft Left
B-2	1331+01.43	26.9 ft Right

Notes:
1. The data are the As-Built Test Borings referenced to the proposed new structure location.
2. To convert Metric elevations to the current English unit multiply by 3.28.

REGISTERED PROFESSIONAL ENGINEER Gamini Wearatunga No. 2403 Exp. 9-30-12 GEOTECHNICAL STATE OF CALIFORNIA

DIVISION OF ENGINEERING SERVICES - GEOTECHNICAL SERVICES

As-Built Log of Test Borings sheet is considered an informational document only. As such, the State of California registration seal with signature, license number and registration certificate expiration date confirm that this is a true and accurate copy of the original document. It does not attest to the accuracy or validity of the information contained in the original document. This drawing is available and presented only for the convenience of any bidder, contractor or other interested party.

DIST.	COUNTY	ROUTE	POST MILES-TOTAL PROJECT	Sheet No.	Total Sheets
07	LA	710	17.2/26.4	1024	1507

CERTIFIED ENGINEERING GEOLOGIST 5/31/11 DATE

FLORAL DRIVE UC (WIDEN)

LOG OF TEST BORINGS 4 OF 5

NOTE: A COPY OF THIS LOG OF TEST BORINGS IS AVAILABLE AT OFFICE OF STRUCTURE MAINTENANCE AND INVESTIGATIONS, SACRAMENTO, CALIFORNIA

CU: 07 EA: 202111

BRIDGE No. 53-1155R/L Sheet of

TO ACCOMPANY PLANS DATED 6-27-11

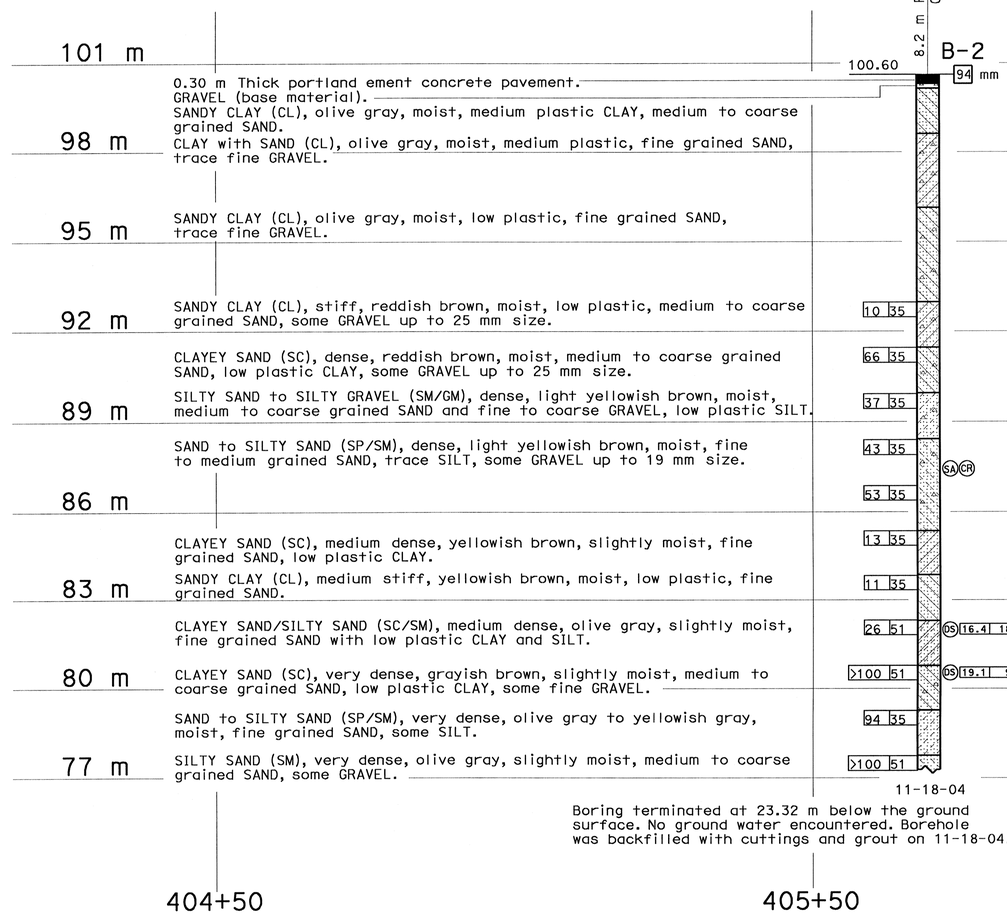

PROFILE
HOR. 1:500
VER. 1:100

ALL DIMENSIONS ARE IN METERS UNLESS OTHERWISE SHOWN **R-72**

ENGINEERING SERVICES	GEOTECHNICAL SERVICES
DRAWN BY F. Nguyen 01/05	
CHECKED BY G. Weeratunga	

FIELD INVESTIGATION BY: G. Weeratunga

STATE OF CALIFORNIA DEPARTMENT OF TRANSPORTATION

DIVISION OF STRUCTURES STRUCTURE DESIGN

BRIDGE NO. 53-1155R/L
KILOMETER POST 25.21

FLORAL DRIVE UC (MEDIAN WIDENING)

LOG OF TEST BORINGS 1 OF 2

CU 07 EA 242601

DISREGARD PRINTS BEARING EARLIER REVISION DATES

REVISION DATES (PRELIMINARY STAGE ONLY) ~~1-14-05~~ ~~1-19-05~~ 1-24-05 SHEET OF

OGS CIVIL LOG OF TEST BORINGS SHEET (METRIC) (REV. 4/04)

ORIGINAL SCALE IN MILLIMETERS FOR REDUCED PLANS 0 10 20 30 40 50 60 70 80 90 100

720211gn005.tif

U-0260(5) I-084-1(11)

DIST.	COUNTY	ROUTE	SECTION	SHEET NO.	TOTAL SHEETS
VII	LA	I-7	G	1-7	1111

DATE APPROVED December 22, 1958

FED. ROAD DIV. NO.	STATE	PROJ. NO.	FISCAL YEAR	SHEET NO.	TOTAL SHEETS
7	CAL.			264	370

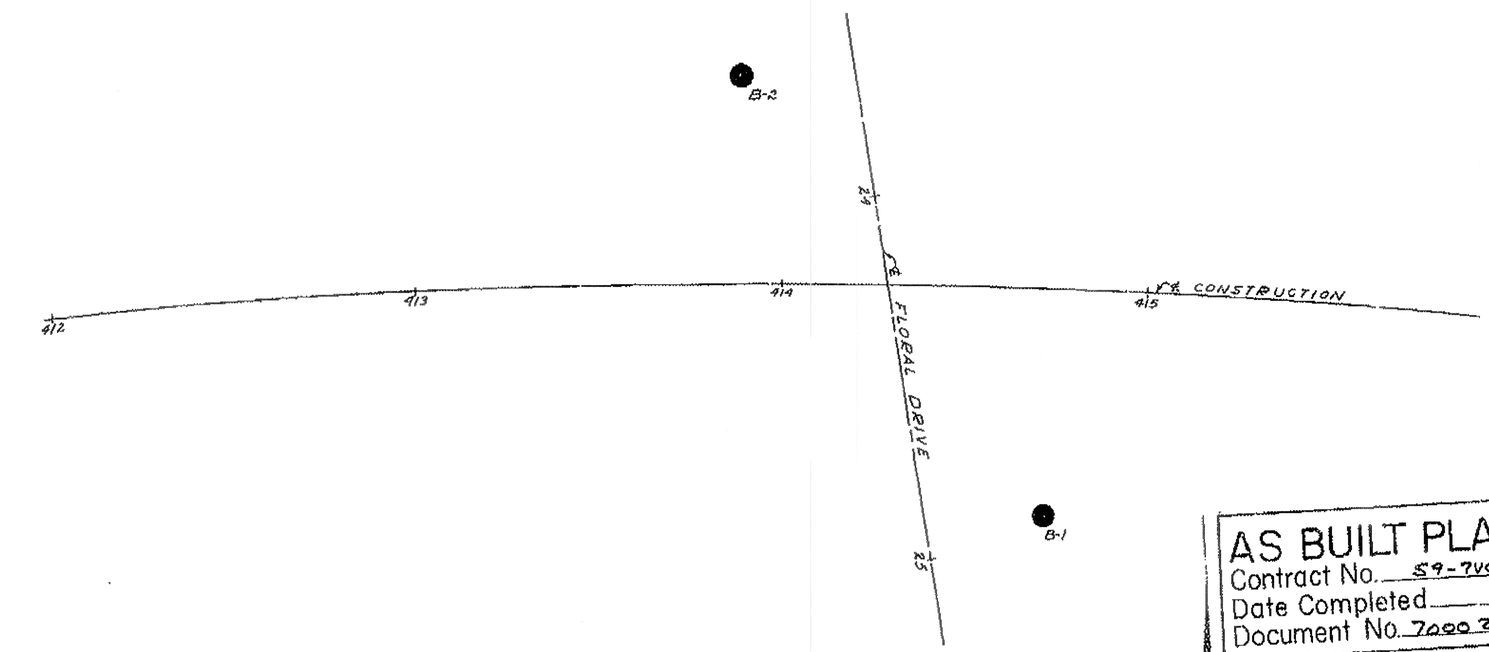

DIVISION OF ENGINEERING SERVICES - GEOTECHNICAL SERVICES

As-Built Log of Test Borings sheet is considered an informational document only. As such, the State of California registration seal with signature, license number and registration certificate expiration date confirm that this is a true and accurate copy of the original document. It does not attest to the accuracy or validity of the information contained in the original document. This drawing is available and presented only for the convenience of any bidder, contractor or other interested party.

DIST.	COUNTY	ROUTE	POST MILES-TOTAL PROJECT	Sheet No.	Total Sheets
07	LA	710	17.2/26.4	1025	1507

PROFESSIONAL ENGINEER — DATE 12/06/10

REGISTERED PROFESSIONAL ENGINEER — Gamini Weeratunga — No. GE2403 — Exp. 9-30-12 — GEOTECHNICAL — STATE OF CALIFORNIA

RETAINING WALL 1331

LOG OF TEST BORINGS 5 OF 5

NOTE: A COPY OF THIS LOG OF TEST BORINGS IS AVAILABLE AT OFFICE OF STRUCTURE MAINTENANCE AND INVESTIGATIONS, SACRAMENTO, CALIFORNIA

CU: 07 EA: 202111

BRIDGE No. Sheet of

TO ACCOMPANY PLANS DATED 6-27-11

AS BUILT PLANS
Contract No. 59-7VC57
Date Completed
Document No. 7000 2275

BRIDGE DEPARTMENT

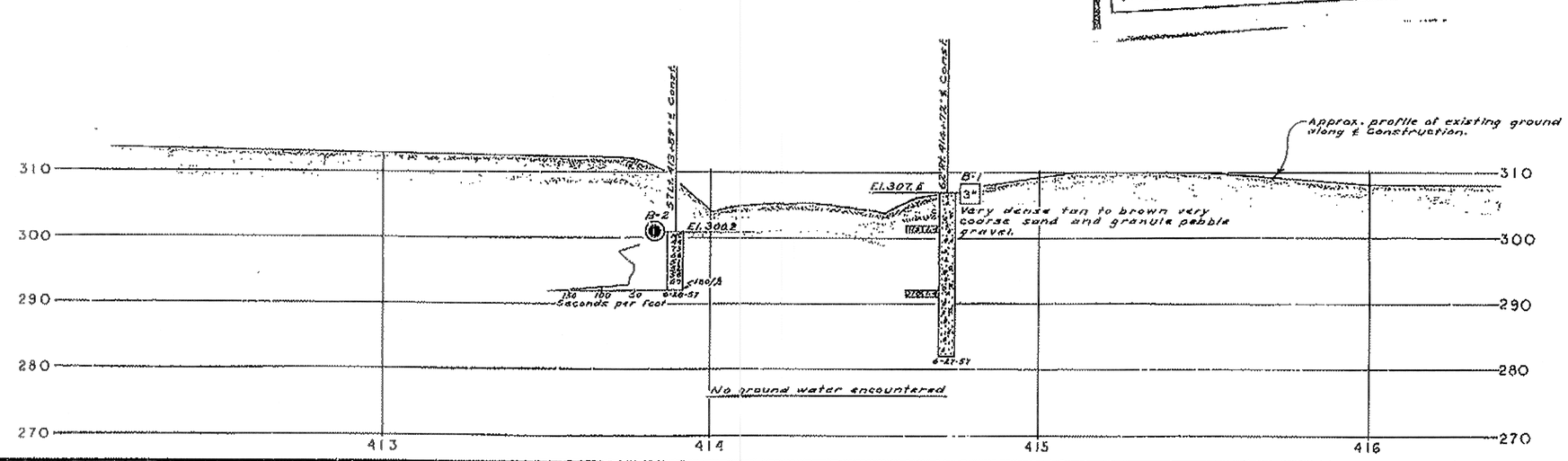

B.M. A-418-53 El. 314.22
Fd. L&T on S curb of Floral Dr. N.E. of BCR of SE corner of Floral Dr. & Ford Blvd.

FIELD STUDY H. GALDSCHMIDT 2-26-53
DRAWN L. GALLAY 8-1-53
CHECKED W. CHAMBERLAIN 8-21-53
Approval Recommended by: R. L. Brown

Classification of Material Based on Standard Grade Size Limits

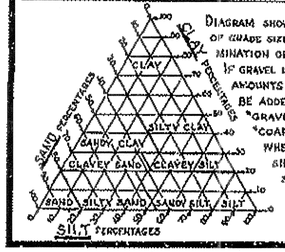

DIAGRAM SHOWING THE BASIS FOR ESTIMATES OF GRADE SIZE DISTRIBUTION USED IN DETERMINATION OF CLASS NAMES. IF GRAVEL IS PRESENT IN APPRECIABLE AMOUNTS THE TERM "GRAVELLY" MAY BE ADDED TO THE CLASS NAME, VIZ. "GRAVELLY SAND." THE TERMS "COARSE", "MEDIUM" AND "FINE" WHEN USED TO DESCRIBE SAND, SILT AND GRAVEL REFER TO STANDARD GRADE SIZE LIMITS.

Legend of Earth Materials

- Gravel
- Sand
- Silt
- Clay
- Sandy Clay or Clayey Sand
- Sandy Silt or Silty Sand
- Silty Clay or Clayey Silt
- Peat and/or Organic Matter
- Fill Material
- Igneous Rock
- Sedimentary Rock
- Metamorphic Rock

Legend of Boring Operations

- Peak of any boring
- Penetrometer
- 2¼" Cone Penetrometer
- Sampler Boring (DRV)
- Rotary Boring (WET)
- Auger Boring (DRY)
- Jet Boring
- Core Boring
- Test Pit

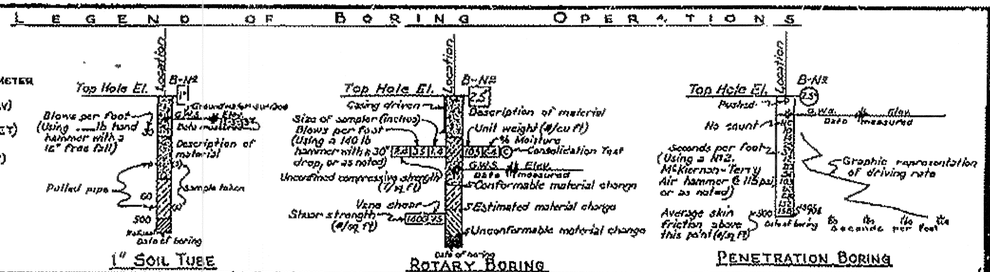

NOTES

The contractor's attention is directed to Section 2, Article (c) of the Standard Specifications and to the Special Provisions accompanying this set of plans.

Classification of earth material as shown on this sheet is based upon field inspection and is not to be construed to imply mechanical analysis.

STATE OF CALIFORNIA
DEPARTMENT OF PUBLIC WORKS
DIVISION OF HIGHWAYS

FLORAL DRIVE UNDERCROSSING R-73

LOG OF TEST BORINGS

SCALE Horiz. 1"=20' Vert. 1"=10' | BRIDGE 53-1155 R-2 | FILE | DRAWING 04049-7

146

FILENAME => 720211qn006.tif

Dist	COUNTY	ROUTE	POST MILES TOTAL PROJECT	SHEET No.	TOTAL SHEETS
07	LA	710	17.2/26.4	1026	1507

REGISTERED CIVIL ENGINEER 2/3/11 DATE

6-27-11
PLANS APPROVAL DATE

REGISTERED PROFESSIONAL ENGINEER RENE YIN No. C49915 Exp. 9/30/12 CIVIL STATE OF CALIFORNIA

THE STATE OF CALIFORNIA OR ITS OFFICERS OR AGENTS SHALL NOT BE RESPONSIBLE FOR THE ACCURACY OR COMPLETENESS OF SCANNED COPIES OF THIS PLAN SHEET.

NOTES:

1. FOR ACCURATE RIGHT OF WAY DATA, CONTACT RIGHT OF WAY ENGINEERING AT THE DISTRICT OFFFICE.
2. LAPPED SPLICED IN SPIRAL REINFORCEMENT SHALL BE LAPPED AT LEAST 80 WIRE DIAMETERS. SPIRAL REINFORCEMENT AT SPLICES AND AT ENDS SHALL BE TERMINATED WITH A 135° HOOK WITH A 6" TAIL HOOKED AROUND A LOGITUDINAL BAR.
3. FOR AESTHETIC FEATURES OF THE SOUND WALL BLOCK SEE LANDSCAPE DETAIL SHEETS.

SOUND WALL (MASONRY BLOCK) ON CONCRETE BARRIER (TYPE 732SV)
WALL LENGTH = 46'-0", He = 4'-0", PILE LENGTH = 21'-6"

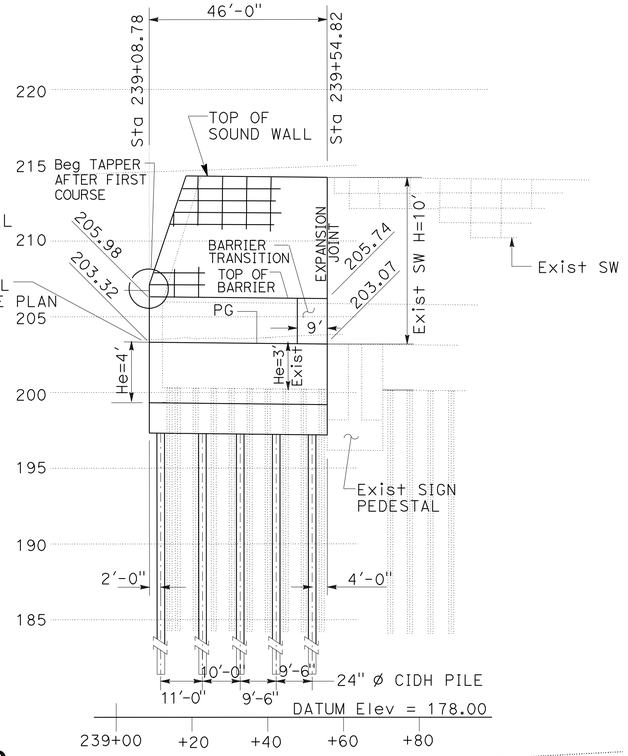

ELEVATION
SCALE: Horiz 1" : 20'
Vert 1" : 5'

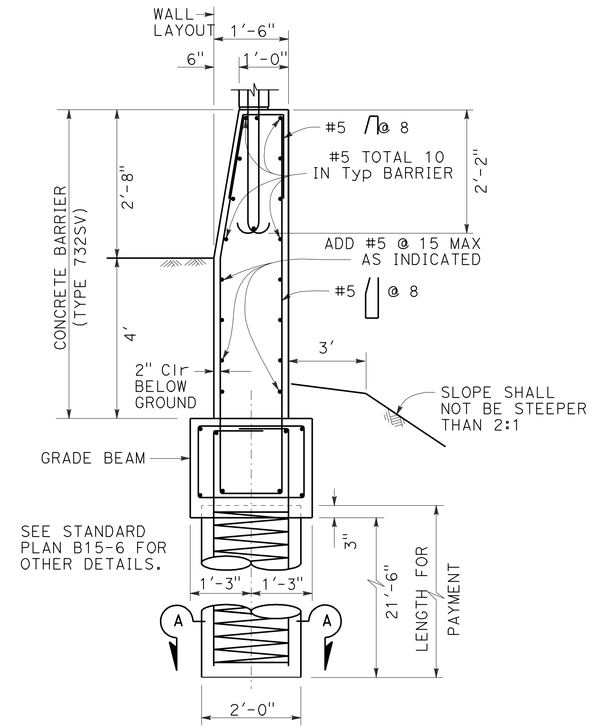

PILES DETAIL

NO SCALE

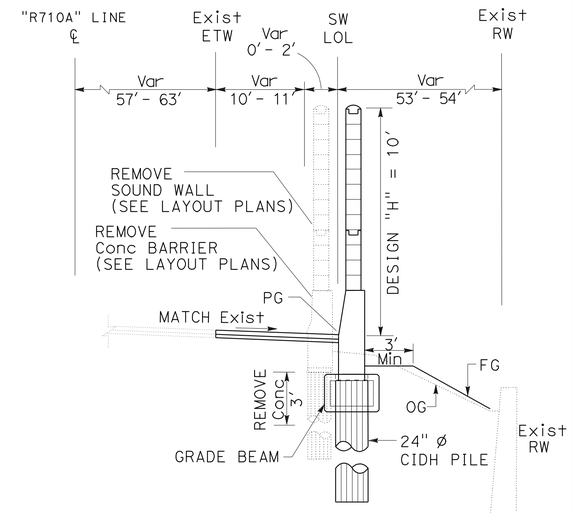

TYPICAL SECTION

SW Sta 239+08.78 TO 239+54.91
NO SCALE

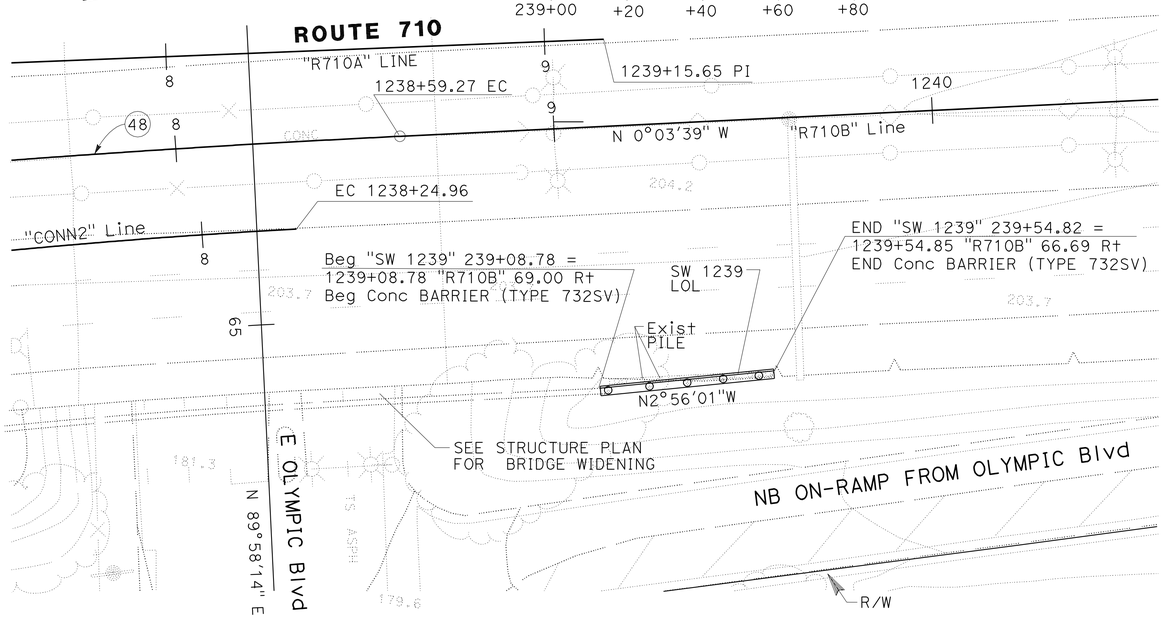

PLAN

NO SCALE

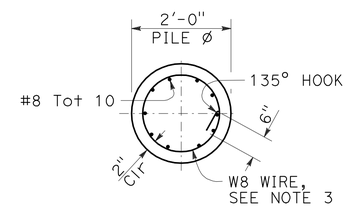

SECTION A-A

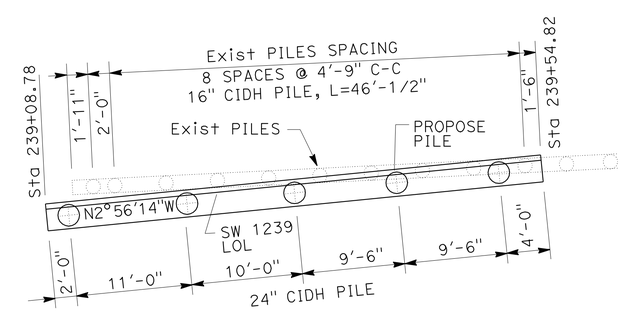

PILES LAYOUT DETAIL

NO SCALE

CURVE DATA

No.	R	Δ	T	L
48	4000.00'	3° 44'13"	130.49'	260.88'

SOUND WALL PLAN

SOUND WALL No. 1239
SCALE AS SHOWN

SW-1

THIS PLAN ACCURATE FOR SOUND WALL WORK ONLY.

STATE OF CALIFORNIA - DEPARTMENT OF TRANSPORTATION
Caltrans® OFFICE OF DESIGN B

FUNCTIONAL SUPERVISOR: ALINE ANTARAMIAN
CALCULATED-DESIGNED BY: I. L. REYNON JR.
CHECKED BY: RENE YIN
REVISED BY / DATE REVISED

LAST REVISION 00-00-00
DATE PLOTTED => 29-JUN-2011
TIME PLOTTED => 18:00

DIST	COUNTY	ROUTE	KILOMETER POST TOTAL PROJECT	SHEET No	TOTAL SHEETS
07	LA	710			

REGISTERED ENGINEER 1-24-05

PLANS APPROVAL DATE 9-30-06

The State of California or its officers or agents shall not be responsible for the accuracy or completeness of electronic copies of this plan sheet.

REGISTERED PROFESSIONAL ENGINEER GAMINI C. WEERATUNGA No. 2403 Exp. 9-30-06 GEOTECHNICAL STATE OF CALIFORNIA

BENCH MARK

Elevations shown hereon are in terms of The North American Vertical Datum of 1998 based locally upon Caltrans Bench Marks:

PRHV110 Elev 56.374 m
PRHV111 Elev 54.484 m
PRHV112 Elev 55.096 m

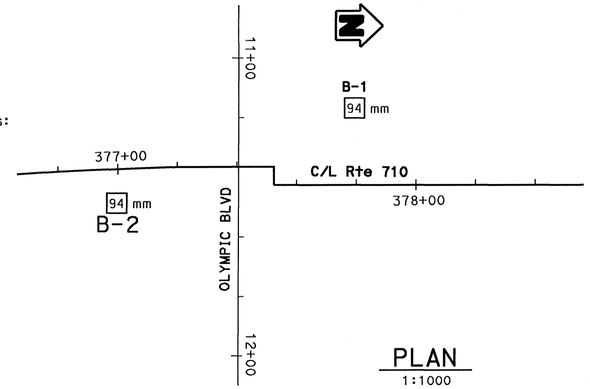

PLAN

1:1000

LEGEND (SOIL)

21 51 — Moisture content (%)
17.3 17.3 — Dry density (kN/m3)

(SA) = Gradation
(AL) = Atterberg limits
(DS) = Direct Shear
(CR) = Corrosion

Caltrans Metric

Revisions made to this Log of Test Borings from the original As-Built Log of Test Borings are the addition of the following table & notes:

Boring	Station	Offset from ℄ Rte 710
B-1	1239+47.91	84.6 ft Left
B-2	1236+85.12	37.1 ft Right

Notes:
1. The data are the As-Built Test Borings referenced to the proposed new structure location.
2. To convert Metric elevations to the current English unit multiply by 3.28.

REGISTERED PROFESSIONAL ENGINEER Gamini Wearatunga No. 2403 Exp. 9-30-12 GEOTECHNICAL STATE OF CALIFORNIA

DIVISION OF ENGINEERING SERVICES - GEOTECHNICAL SERVICES

As-Built Log of Test Borings sheet is considered an informational document only. As such, the State of California registration seal with signature, license number and registration certificate expiration date confirm that this is a true and accurate copy of the original document. It does not attest to the accuracy or validity of the information contained in the original document. This drawing is available and presented only for the convenience of any bidder, contractor or other interested party.

DIST.	COUNTY	ROUTE	POST MILES-TOTAL PROJECT	Sheet No.	Total Sheets
07	LA	710	17.2/26.4	1027	1507

CERTIFIED ENGINEERING GEOLOGIST 5/31/11 DATE

OLYMPIC BLVD UC (WIDEN)

LOG OF TEST BORINGS 1 OF 2

NOTE: A COPY OF THIS LOG OF TEST BORINGS IS AVAILABLE AT OFFICE OF STRUCTURE MAINTENANCE AND INVESTIGATIONS, SACRAMENTO, CALIFORNIA

CU: 07 EA: 202111

BRIDGE No. 53-1044

Sheet of

TO ACCOMPANY PLANS DATED 6-27-11

PROFILE

HOR. 1:250
VER. 1:100

ALL DIMENSIONS ARE IN METERS UNLESS OTHERWISE SHOWN **SW-2**

LEGEND OF BORING OPERATIONS

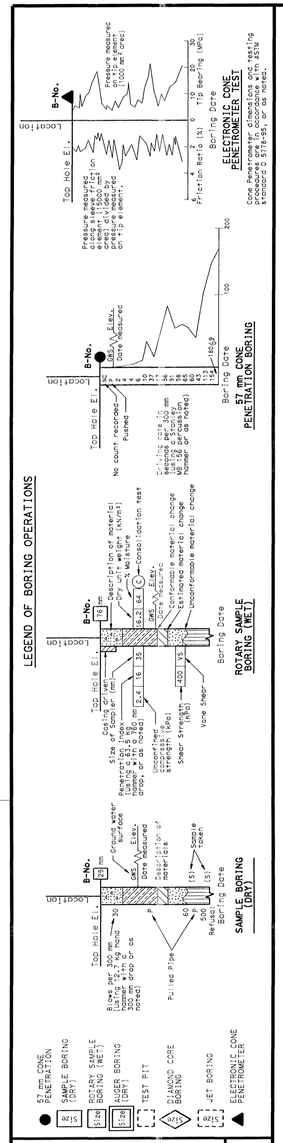

LEGEND OF EARTH MATERIALS

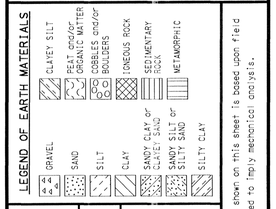

CONSISTENCY CLASSIFICATION FOR SOILS

According to the Standard Penetration Test

SPT N-Value (Blows/0.3m)	Granular	SPT N-Value (Blows/0.3m)	Cohesive
0-4	Very Loose	<2	Very Soft
5-10	Loose	2-4	Soft
11-30	Medium Dense	5-8	Firm
31-50	Dense	9-15	Stiff
>50	Very Dense	16-30	Very stiff
		>30	Hard

NOTE: Classification of earth material as shown on this sheet is based upon field inspection and is not to be construed to imply mechanical analysis.

ENGINEERING SERVICES	GEOTECHNICAL SERVICES
DRAWN BY	F. Nguyen 01/05
CHECKED BY	G. Weeratunga

FIELD INVESTIGATION BY: G. Weeratunga

STATE OF CALIFORNIA DEPARTMENT OF TRANSPORTATION

DIVISION OF STRUCTURES STRUCTURE DESIGN

CU 07 EA 242601

BRIDGE NO. 53-1044
KILOMETER POST 23.44

OLYMPIC BLVD UC (MEDIAN WIDENING)

LOG OF TEST BORINGS 1 OF 2

OGS CIVIL LOG OF TEST BORINGS SHEET (METRIC) (REV. 4/04)

ORIGINAL SCALE IN MILLIMETERS FOR REDUCED PLANS 0 10 20 30 40 50 60 70 80 90 100

DISREGARD PRINTS BEARING EARLIER REVISION DATES

REVISION DATES (PRELIMINARY STAGE ONLY) ~~1-14-05~~ ~~1-19-05~~ 1-24-05 SHEET OF

720211ra002.tif

V-0260 (1)

FED. ROAD DIST. NO.	STATE	FISCAL YEAR	TOTAL SHEETS
2	CAL.		

DIST.	COUNTY	ROUTE	SHEET NO.	TOTAL SHEETS
VII	LA	167	633	726

APRIL 26 1954

To accompany plans dated April 27, 1964

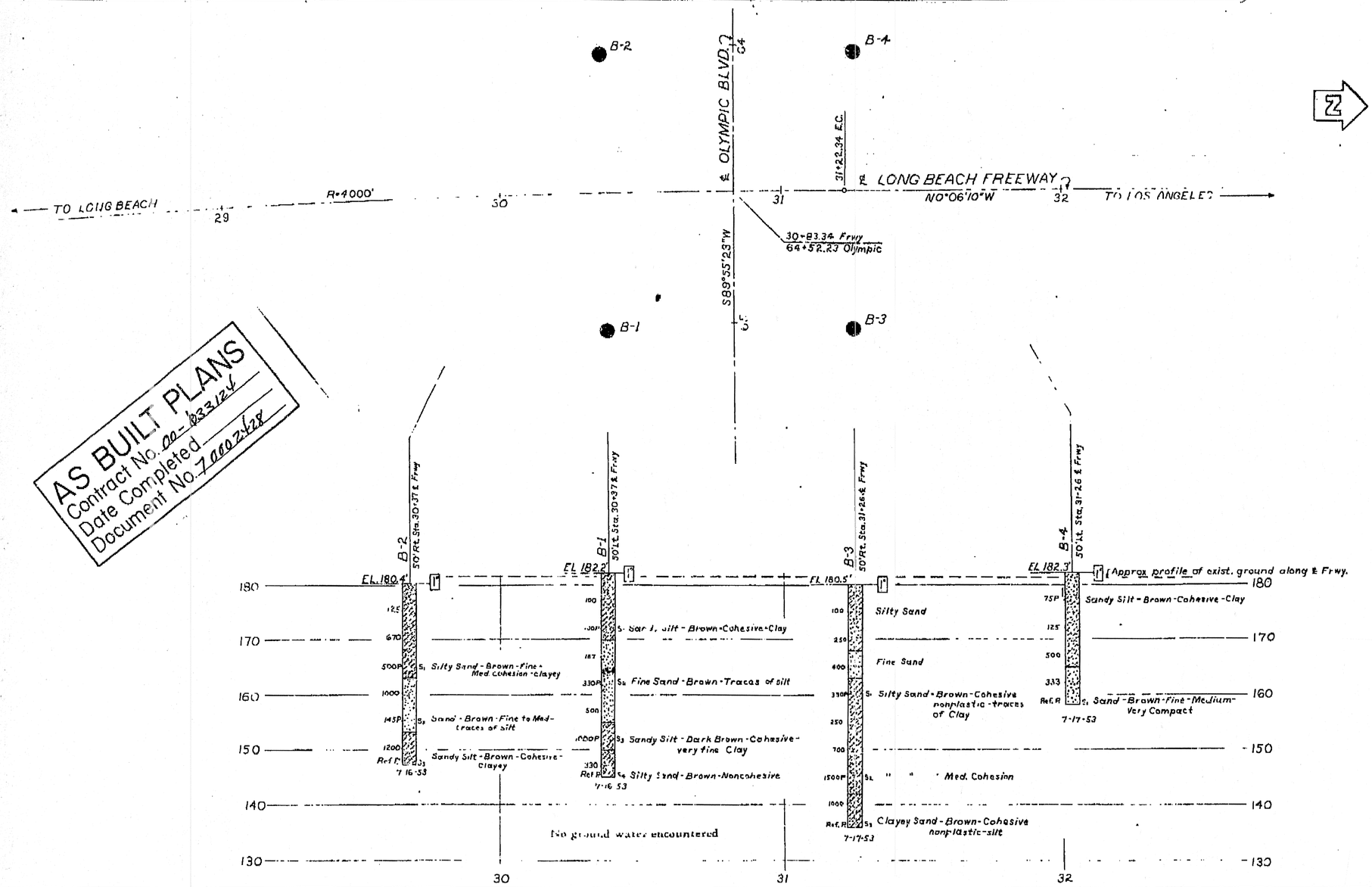

AS BUILT PLANS
Contract No. 00-183124
Date Completed
Document No. 7000212 28

TBM ELEV. 184.110

Chis☐ Edge of signal base, S.W. Corner of Olympic Blvd. & Eastern Ave, 25'± Lt, Sta. 29+35 ± Eastern Ave.

TBM ELEV. 178.545

Chis☐ On curb 24'± E of B.C.R., N.E. Corner of Sydney Drive & Olympic Blvd.

DIVISION OF ENGINEERING SERVICES - GEOTECHNICAL SERVICES

As-Built Log of Test Borings sheet is considered an informational document only. As such, the State of California registration seal with signature, license number and registration certificate expiration date confirm that this is a true and accurate copy of the original document. It does not attest to the accuracy or validity of the information contained in the original document. This drawing is available and presented only for the convenience of any bidder, contractor or other interested party.

DIST.	COUNTY	ROUTE	POST MILE-TOTAL PROJECT	Sheet No.	Total Sheets
07	LA	710	17.2/26.4	1028	1507

REGISTERED GEOTECHNICAL ENGINEER — DATE 12/17/10

REGISTERED PROFESSIONAL ENGINEER Gamini Weeratunga No. 2403 Exp. 9-30-12 GEOTECHNICAL STATE OF CALIFORNIA

OLYMPIC BLVD UC (WIDEN)

LOG OF TEST BORINGS 2 OF 2

NOTE: A COPY OF THIS LOG OF TEST BORINGS IS AVAILABLE AT OFFICE OF STRUCTURE MAINTENANCE AND INVESTIGATIONS, SACRAMENTO, CALIFORNIA

CU: 07
EA: 202111

BRIDGE No. 53-1044

Sheet of

TO ACCOMPANY PLANS DATED 6-27-11

CLASSIFICATION OF MATERIAL BASED ON STANDARD GRADE SIZE LIMITS

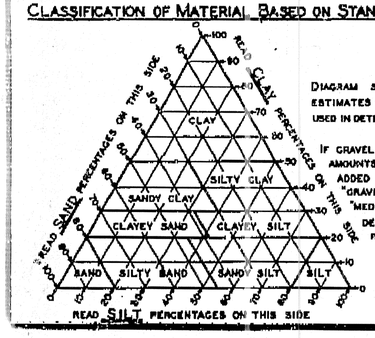

DIAGRAM SHOWING THE BASIS FOR ESTIMATES OF GRADE SIZE DISTRIBUTION USED IN DETERMINATION OF CLASS NAMES

IF GRAVEL IS PRESENT IN APPRECIABLE AMOUNTS THE TERM "GRAVELLY" MAY BE ADDED TO THE CLASS NAME, VIZ. "GRAVELLY SAND." THE TERMS "COARSE," "MEDIUM" AND "FINE" WHEN USED TO DESCRIBE GRAVEL, SAND AND SILT REFER TO STANDARD GRADE SIZE LIMITS.

LEGEND OF EARTH MATERIALS

- GRAVEL
- SAND
- SILT
- CLAY
- SANDY CLAY OR CLAYEY SAND
- SANDY SILT OR SILTY SAND
- SILTY CLAY OR CLAYEY SILT
- PEAT AND/OR ORGANIC CLAY
- FILLED MATERIAL
- IGNEOUS ROCK
- SEDIMENTARY ROCK
- METAMORPHIC ROCK

LEGEND OF BORING OPERATIONS

- PLAN OF ANY BORING
- PENETROMETER
- 2½" CONE PENETROMETER
- SAMPLER BORING (DRY)
- ROTARY BORING (WET)
- AUGER BORING (DRY)
- JET BORING
- CORE BORING
- TEST PIT

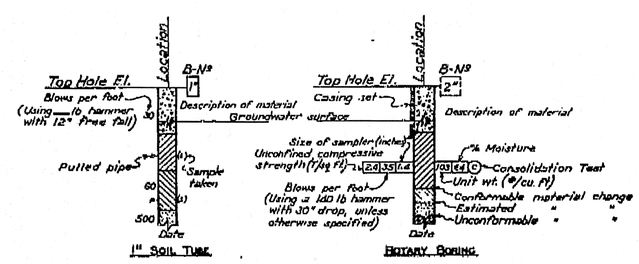

NOTES

THE CONTRACTOR'S ATTENTION IS DIRECTED TO SECTION 2, ARTICLE (C) OF THE STANDARD SPECIFICATIONS AND TO THE SPECIAL PROVISIONS ACCOMPANYING THIS SET OF PLANS. CLASSIFICATION OF EARTH MATERIAL AS SHOWN ON THIS SHEET IS BASED UPON FIELD INSPECTION AND IS NOT TO BE CONSTRUED TO IMPLY MECHANICAL ANALYSIS.

PENETROMETER BORINGS HAVING A RATE OF PENETRATION MEASURED IN SECONDS PER FOOT ARE DRIVEN WITH A Nº 2 McKIERNAN-TERRY AIR HAMMER AT 115 PSI.

STATE OF CALIFORNIA
DEPARTMENT OF PUBLIC WORKS
DIVISION OF HIGHWAYS

SW-3

OLYMPIC BLVD UNDERCROSSING WIDENING

LOG OF TEST BORINGS

SCALE: HORIZ. 1"=20' VERT. 1"=10' | BRIDGE 53-1044 | FILE | DRAWING 531044-5

PREL. DRAWING NO. P-3542

720211ra003.tif

Dist	COUNTY	ROUTE	POST MILES TOTAL PROJECT	SHEET No.	TOTAL SHEETS
07	LA	710	17.2/26.4	1029	1507

REGISTERED CIVIL ENGINEER — DATE 2-3-11

6-27-11
PLANS APPROVAL DATE

REGISTERED PROFESSIONAL ENGINEER — RENE YIN No. C49915 Exp. 9/30/12 CIVIL — STATE OF CALIFORNIA

THE STATE OF CALIFORNIA OR ITS OFFICERS OR AGENTS SHALL NOT BE RESPONSIBLE FOR THE ACCURACY OR COMPLETENESS OF SCANNED COPIES OF THIS PLAN SHEET.

NOTES:

1. FOR ACCURATE RIGHT OF WAY DATA, CONTACT RIGHT OF WAY ENGINEERING AT THE DISTRICT OFFFICE.
2. LAPPED SPLICED IN SPIRAL REINFORCEMENT SHALL BE LAPPED AT LEAST 80 WIRE DIAMETERS. SPIRAL REINFORCEMENT AT SPLICES AND AT ENDS SHALL BE TERMINATED WITH A 135° HOOK WITH A 6" TAIL HOOKED AROUND A LOGITUDINAL BAR.
3. FOR AESTHETIC FEATURES OF THE SOUND WALL BLOCK SEE LANDSCAPE DETAIL SHEETS.

WALL LENGTH = 80'-1", He = 4'-0", PILE LENGTH = 16'-0"
SOUND WALL (MASONRY BLOCK) ON CONCRETE BARRIER (TYPE 732SV)

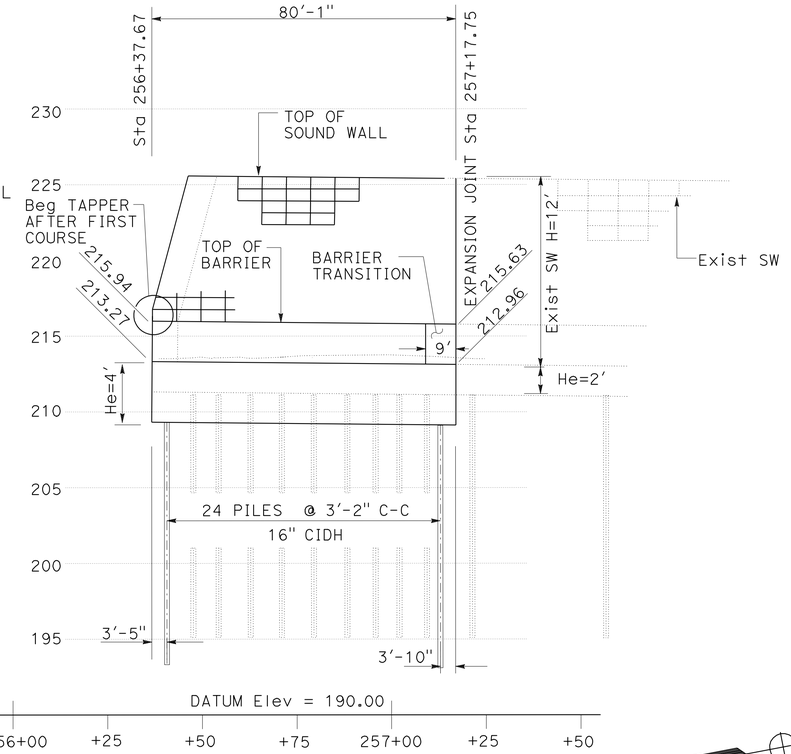

ELEVATION
SCALE: Horiz 1" : 20'
Vert 1" : 5'

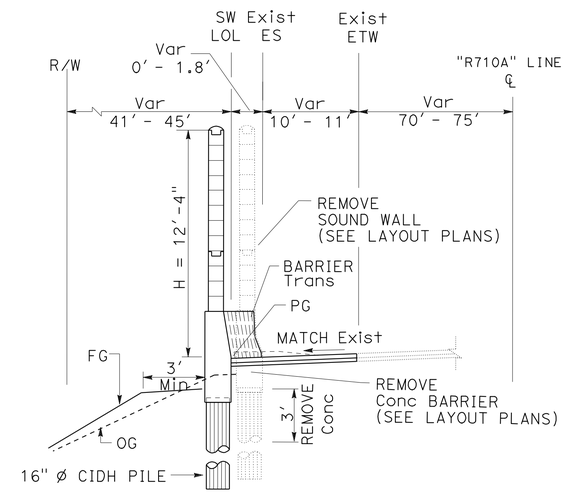

TYPICAL SECTION

SW Sta 256+37.67 TO 257+17.75
NO SCALE

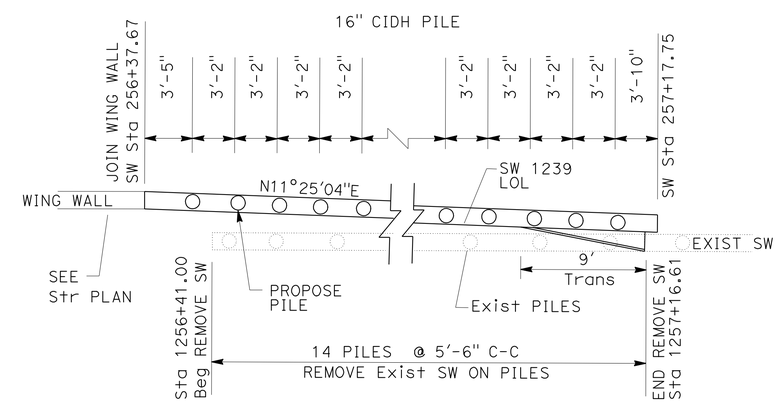

PILES LAYOUT DETAIL

NO SCALE

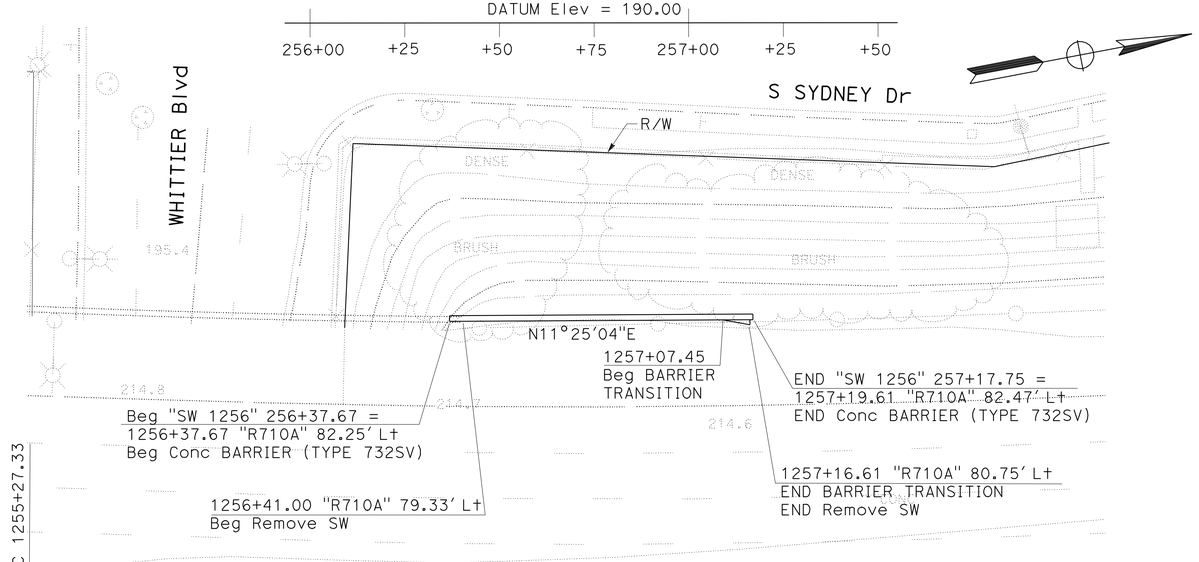

PLAN

NO SCALE

CURVE DATA

No.	R	Δ	T	L
53	3450.00'	14° 32'03"	439.94	875.16'

THIS PLAN ACCURATE FOR SOUND WALL WORK ONLY.

SOUND WALL PLAN

SOUND WALL No. 1256
SCALE AS SHOWN

SW-4

STATE OF CALIFORNIA - DEPARTMENT OF TRANSPORTATION
Caltrans® DESIGN
FUNCTIONAL SUPERVISOR: ALINE ANTARAMIAN
CALCULATED-DESIGNED BY: DAN TRAN
CHECKED BY: RENE YIN
REVISED BY / DATE REVISED

LAST REVISION 00-00-00
DATE PLOTTED => 29-JUN-2011
TIME PLOTTED => 18:00

DIST	COUNTY	ROUTE	POST MILES TOTAL PROJECT	SHEET No	TOTAL SHEETS
07	LA	710	17.2/26.4	1030	1507

Joseph S. Pratt 1-7-11
CERTIFIED ENGINEERING GEOLOGIST DATE

6-27-11
PLANS APPROVAL DATE

The State of California or its officers or agents shall not be responsible for the accuracy or completeness of electronic copies of this plan sheet.

REGISTERED GEOLOGIST — Joseph S. Pratt No. 2141 Exp. 5-31-11 — CERTIFIED ENGINEERING GEOLOGIST — STATE OF CALIFORNIA

This LOTB sheet was prepared in accordance with the Caltrans Soil & Rock Logging, Classification, & Presentation Manual (June 2010).

BENCH MARK

RTK737 Elev 218.143′
Fd PK Nail at Aerial Target HV219, NB710 shldr, 30′ north of begin Whittier Blvd UC, 76.694′ Rt Sta 1255+50.16 C/L Rte 710.
N 1830995.7570
E 6509442.9140

PRHV2138 Elev 195.030′
Fd ChsX in Swalk southside Whittier Blvd, 45′ west Whittier Blvd UC, 125.251′ Lt Sta 1255+29.30 C/L Rte 710.
N 1831024.0250
E 6509241.8890

NAVD88

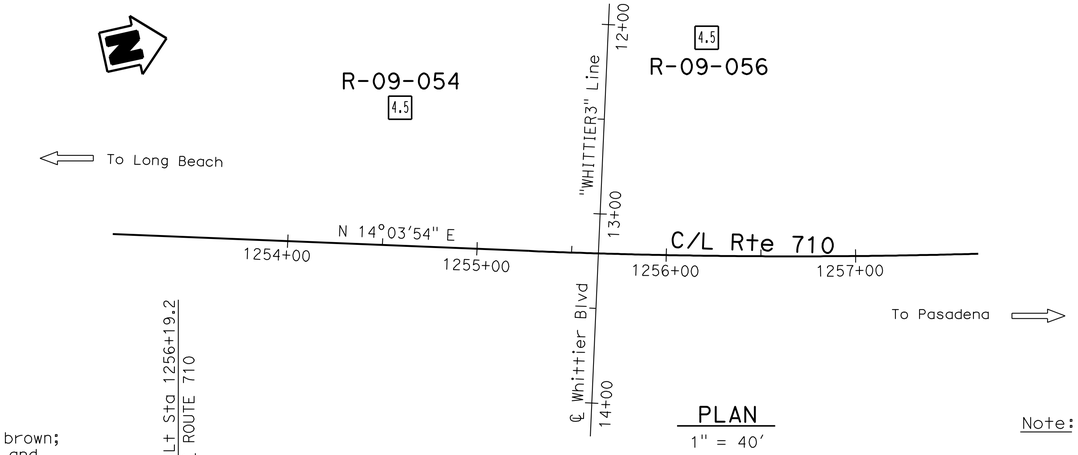

PLAN
1" = 40′

Note: No ground water encountered during field investigation.

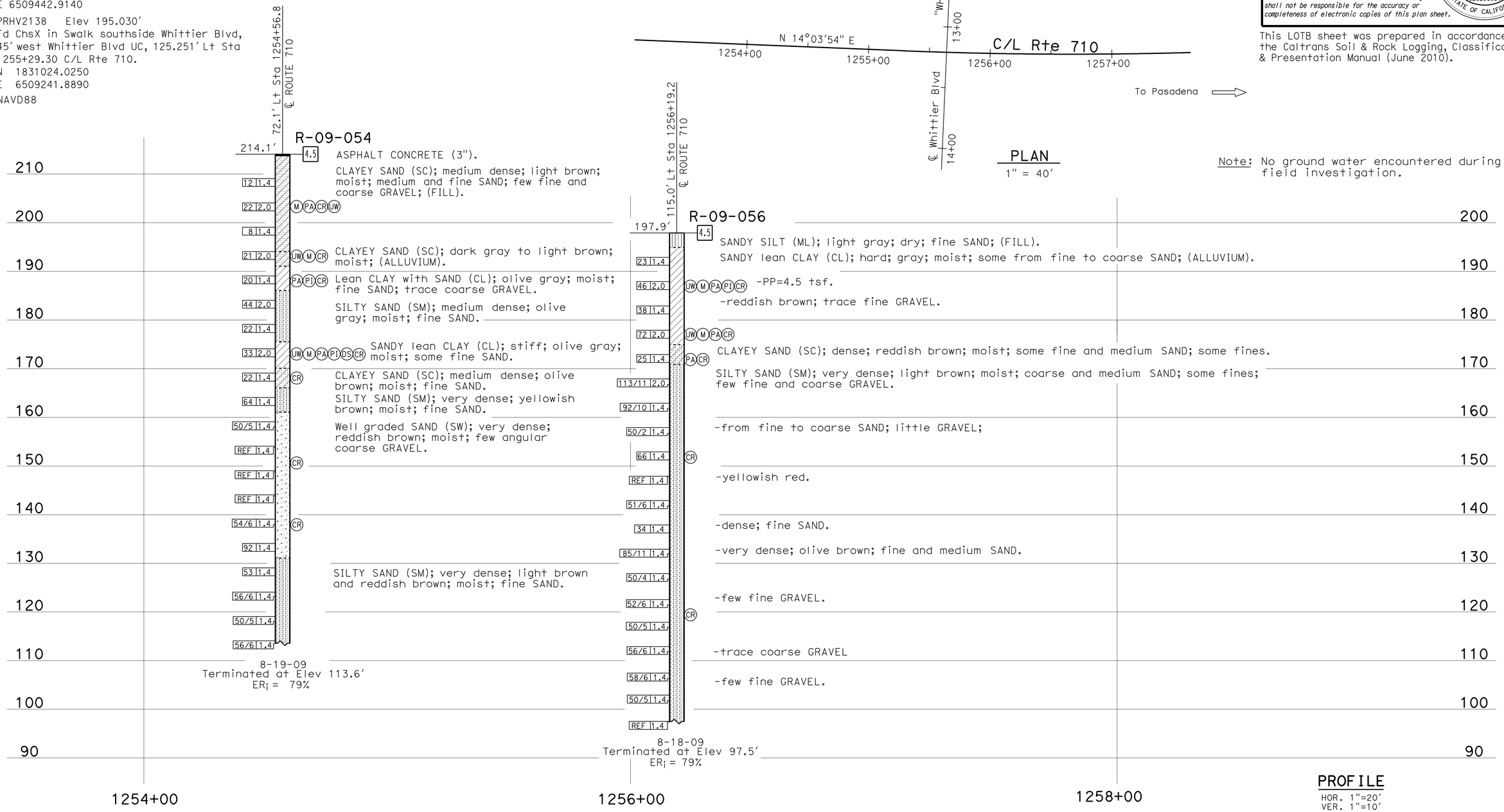

PROFILE
HOR. 1"=20′
VER. 1"=10′

ENGINEERING SERVICES	GEOTECHNICAL SERVICES	STATE OF CALIFORNIA DEPARTMENT OF TRANSPORTATION	DIVISION OF ENGINEERING SERVICES STRUCTURE DESIGN DESIGN BRANCH	BRIDGE NO. 53-1150 POST MILES 23.77	WHITTIER BLVD UC (WIDEN) SW-5 LOG OF TEST BORINGS 1 OF 5
FUNCTIONAL SUPERVISOR NAME: S. Karimi	DRAWN BY: C. Christian; W. Tang 10/10 CHECKED BY: T. Halda	FIELD INVESTIGATION BY: Kevin Lai			
OGS CIVIL LOG OF TEST BORINGS SHEET	ORIGINAL SCALE IN INCHES FOR REDUCED PLANS 0 1 2 3		CU 07 EA 202111	DISREGARD PRINTS BEARING EARLIER REVISION DATES	REVISION DATES 12-09-10 12-16-10 01-06-10 SHEET OF

FILE => 720211rb002.dgn

USERNAME => trstrk DATE PLOTTED => 29-JUN-2011 TIME PLOTTED => 11:20

DIST	COUNTY	ROUTE	POST MILES TOTAL PROJECT	SHEET No	TOTAL SHEETS
07	LA	710	17.2/26.4	1031	1507

Joseph S. Pratt 1-7-11
CERTIFIED ENGINEERING GEOLOGIST DATE

REGISTERED GEOLOGIST
Joseph S. Pratt
No. 2141
Exp. 5-31-11
CERTIFIED ENGINEERING GEOLOGIST
STATE OF CALIFORNIA

6-27-11
PLANS APPROVAL DATE

The State of California or its officers or agents shall not be responsible for the accuracy or completeness of electronic copies of this plan sheet.

REFERENCE: CALTRANS SOIL & ROCK LOGGING, CLASSIFICATION, AND PRESENTATION MANUAL (2010)

CEMENTATION

Description	Criteria
Weak	Crumbles or breaks with handling or little finger pressure.
Moderate	Crumbles or breaks with considerable finger pressure.
Strong	Will not crumble or break with finger pressure.

BOREHOLE IDENTIFICATION

Symbol	Hole Type	Description
Size	A	Auger Boring (hollow or solid stem bucket)
Size	R RW RC P	Rotary drilled boring (conventional) Rotary drilled with self-casing wire-line Rotary core with continuously-sampled, self-casing wire-line Rotary percussion boring (air)
Size	R	Rotary drilled diamond core
Size	HD HA	Hand driven (1-inch soil tube) Hand Auger
●	D	Dynamic Cone Penetration Boring
▲	CPT	Cone Penetration Test (ASTM D 5778)
⬚	O	Other (note on LOTB)

Note: Size in inches.

CONSISTENCY OF COHESIVE SOILS

Description	Shear Strength (tsf)	Pocket Penetrometer Measurement, PP, (tsf)	Torvane Measurement, TV, (tsf)	Vane Shear Measurement, VS, (tsf)
Very Soft	Less than 0.12	Less than 0.25	Less than 0.12	Less than 0.12
Soft	0.12 - 0.25	0.25 - 0.5	0.12 - 0.25	0.12 - 0.25
Medium Stiff	0.25 - 0.5	0.5 - 1	0.25 - 0.5	0.25 - 0.5
Stiff	0.5 - 1	1 - 2	0.5 - 1	0.5 - 1
Very Stiff	1 - 2	2 - 4	1 - 2	1 - 2
Hard	Greater than 2	Greater than 4	Greater than 2	Greater than 2

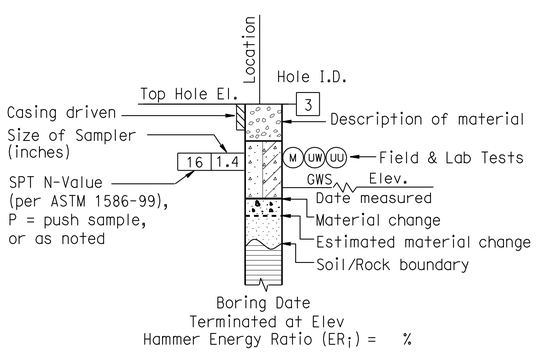

ROTARY BORING

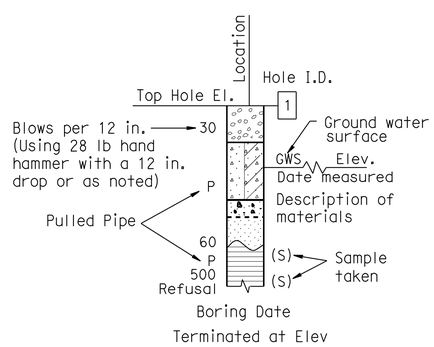

HAND BORING

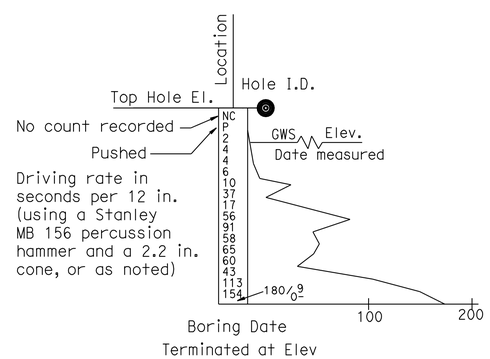

DYNAMIC CONE PENETRATION BORING

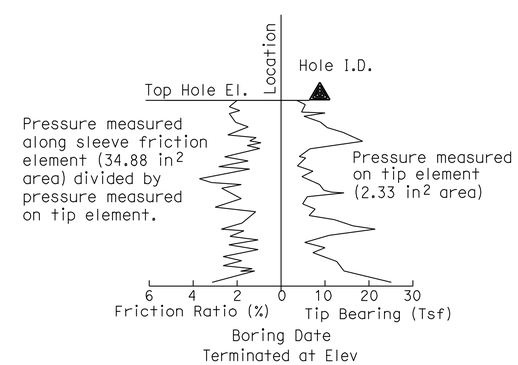

CONE PENETRATION TEST (CPT) BORING

ENGINEERING SERVICES	GEOTECHNICAL SERVICES	STATE OF CALIFORNIA DEPARTMENT OF TRANSPORTATION	DIVISION OF ENGINEERING SERVICES STRUCTURE DESIGN DESIGN BRANCH	BRIDGE NO. 53-1150 POST MILE 23.77	WHITTIER BLVD UC SW-6 LOG OF TEST BORINGS 2 OF 5
	PREPARED BY: W. Tang 10/10				

GS LOTB SOIL LEGEND

ORIGINAL SCALE IN INCHES FOR REDUCED PLANS 0 1 2 3

CU 07
EA 202101

DISREGARD PRINTS BEARING EARLIER REVISION DATES

REVISION DATES SHEET OF

FILE => 720211rb003.dgn

USERNAME => trrichf DATE PLOTTED => 29-JUN-2011 TIME PLOTTED => 11:15

REFERENCE: CALTRANS SOIL & ROCK LOGGING, CLASSIFICATION, AND PRESENTATION MANUAL (2010)

DIST	COUNTY	ROUTE	POST MILES TOTAL PROJECT	SHEET No	TOTAL SHEETS
07	LA	710	17.2/26.4	1032	1507

Joseph S. Pratt 1-7-11
CERTIFIED ENGINEERING GEOLOGIST DATE

6-27-11
PLANS APPROVAL DATE

REGISTERED GEOLOGIST Joseph S. Pratt No. 2141 Exp. 5-31-11 CERTIFIED ENGINEERING GEOLOGIST STATE OF CALIFORNIA

The State of California or its officers or agents shall not be responsible for the accuracy or completeness of electronic copies of this plan sheet.

GROUP SYMBOLS AND NAMES

Graphic/Symbol	Group Names	Graphic/Symbol	Group Names
GW	Well-graded GRAVEL Well-graded GRAVEL with SAND	CL	Lean CLAY Lean CLAY with SAND Lean CLAY with GRAVEL SANDY lean CLAY SANDY lean CLAY with GRAVEL GRAVELLY lean CLAY GRAVELLY lean CLAY with SAND
GP	Poorly-graded GRAVEL Poorly-graded GRAVEL with SAND		
GW-GM	Well-graded GRAVEL with SILT Well-graded GRAVEL with SILT and SAND	CL-ML	SILTY CLAY SILTY CLAY with SAND SILTY CLAY with GRAVEL SANDY SILTY CLAY SANDY SILTY CLAY with GRAVEL GRAVELLY SILTY CLAY GRAVELLY SILTY CLAY with SAND
GW-GC	Well-graded GRAVEL with CLAY (or SILTY CLAY) Well-graded GRAVEL with CLAY and SAND (or SILTY CLAY and SAND)		
GP-GM	Poorly-graded GRAVEL with SILT Poorly-graded GRAVEL with SILT and SAND	ML	SILT SILT with SAND SILT with GRAVEL SANDY SILT SANDY SILT with GRAVEL GRAVELLY SILT GRAVELLY SILT with SAND
GP-GC	Poorly-graded GRAVEL with CLAY (or SILTY CLAY) Poorly-graded GRAVEL with CLAY and SAND (or SILTY CLAY and SAND)		
GM	SILTY GRAVEL SILTY GRAVEL with SAND	OL	ORGANIC lean CLAY ORGANIC lean CLAY with SAND ORGANIC lean CLAY with GRAVEL SANDY ORGANIC lean CLAY SANDY ORGANIC lean CLAY with GRAVEL GRAVELLY ORGANIC lean CLAY GRAVELLY ORGANIC lean CLAY with SAND
GC	CLAYEY GRAVEL CLAYEY GRAVEL with SAND		
GC-GM	SILTY, CLAYEY GRAVEL SILTY, CLAYEY GRAVEL with SAND	OL	ORGANIC SILT ORGANIC SILT with SAND ORGANIC SILT with GRAVEL SANDY ORGANIC SILT SANDY ORGANIC SILT with GRAVEL GRAVELLY ORGANIC SILT GRAVELLY ORGANIC SILT with SAND
SW	Well-graded SAND Well-graded SAND with GRAVEL		
SP	Poorly-graded SAND Poorly-graded SAND with GRAVEL	CH	Fat CLAY Fat CLAY with SAND Fat CLAY with GRAVEL SANDY fat CLAY SANDY fat CLAY with GRAVEL GRAVELLY fat CLAY GRAVELLY fat CLAY with SAND
SW-SM	Well-graded SAND with SILT Well-graded SAND with SILT and GRAVEL		
SW-SC	Well-graded SAND with CLAY (or SILTY CLAY) Well-graded SAND with CLAY and GRAVEL (or SILTY CLAY and GRAVEL)	MH	Elastic SILT Elastic SILT with SAND Elastic SILT with GRAVEL SANDY elastic SILT SANDY elastic SILT with GRAVEL GRAVELLY elastic SILT GRAVELLY elastic SILT with SAND
SP-SM	Poorly-graded SAND with SILT Poorly-graded SAND with SILT and GRAVEL		
SP-SC	Poorly-graded SAND with CLAY (or SILTY CLAY) Poorly-graded SAND with CLAY and GRAVEL (or SILTY CLAY and GRAVEL)	OH	ORGANIC fat CLAY ORGANIC fat CLAY with SAND ORGANIC fat CLAY with GRAVEL SANDY ORGANIC fat CLAY SANDY ORGANIC fat CLAY with GRAVEL GRAVELLY ORGANIC fat CLAY GRAVELLY ORGANIC fat CLAY with SAND
SM	SILTY SAND SILTY SAND with GRAVEL		
SC	CLAYEY SAND CLAYEY SAND with GRAVEL	OH	ORGANIC elastic SILT ORGANIC elastic SILT with SAND ORGANIC elastic SILT with GRAVEL SANDY ORGANIC elastic SILT SANDY ORGANIC elastic SILT with GRAVEL GRAVELLY ORGANIC elastic SILT GRAVELLY ORGANIC elastic SILT with SAND
SC-SM	SILTY, CLAYEY SAND SILTY, CLAYEY SAND with GRAVEL		
PT	PEAT	OL/OH	ORGANIC SOIL ORGANIC SOIL with SAND ORGANIC SOIL with GRAVEL SANDY ORGANIC SOIL SANDY ORGANIC SOIL with GRAVEL GRAVELLY ORGANIC SOIL GRAVELLY ORGANIC SOIL with SAND
	COBBLES COBBLES and BOULDERS BOULDERS		

FIELD AND LABORATORY TESTING

- (C) Consolidation (ASTM D 2435)
- (CL) Collapse Potential (ASTM D 5333)
- (CP) Compaction Curve (CTM 216)
- (CR) Corrosivity Testing (CTM 643, CTM 422, CTM 417)
- (CU) Consolidated Undrained Triaxial (ASTM D 4767)
- (DS) Direct Shear (ASTM D 3080)
- (EI) Expansion Index (ASTM D 4829)
- (M) Moisture Content (ASTM D 2216)
- (OC) Organic Content-% (ASTM D 2974)
- (P) Permeability (CTM 220)
- (PA) Particle Size Analysis (ASTM D 422)
- (PI) Plasticity Index (AASHTO T 90) Liquid Limit (AASHTO T 89)
- (PL) Point Load Index (ASTM D 5731)
- (PM) Pressure Meter
- (R) R-Value (CTM 301)
- (SE) Sand Equivalent (CTM 217)
- (SG) Specific Gravity (AASHTO T 100)
- (SL) Shrinkage Limit (ASTM D 427)
- (SW) Swell Potential (ASTM D 4546)
- (UC) Unconfined Compression-Soil (ASTM D 2166) Unconfined Compression-Rock (ASTM D 2938)
- (UU) Unconsolidated Undrained Triaxial (ASTM D 2850)
- (UW) Unit Weight (ASTM D 4767)

APPARENT DENSITY OF COHESIONLESS SOILS

Description	SPT N_{60} (Blows / 12 in.)
Very Loose	0 - 5
Loose	5 - 10
Medium Dense	10 - 30
Dense	30 - 50
Very Dense	Greater than 50

MOISTURE

Description	Criteria
Dry	No discernable moisture
Moist	Moisture present, but no free water
Wet	Visible free water

PERCENT OR PROPORTION OF SOILS

Description	Criteria
Trace	Particles are present but estimated to be less than 5%
Few	5% - 10%
Little	15% - 25%
Some	30% - 45%
Mostly	50% - 100%

PARTICLE SIZE

Description		Size (in.)
Boulder		Greater than 12
Cobble		3 - 12
Gravel	Coarse	3/4 - 3
	Fine	1/5 - 3/4
Sand	Coarse	1/16 - 1/5
	Medium	1/64 - 1/16
	Fine	1/300 - 1/64
Silt and Clay		Less than 1/300

ENGINEERING SERVICES	GEOTECHNICAL SERVICES	STATE OF CALIFORNIA DEPARTMENT OF TRANSPORTATION	DIVISION OF ENGINEERING SERVICES STRUCTURE DESIGN DESIGN BRANCH	BRIDGE NO. 53-1150 POST MILE 23.77	WHITTIER BLVD UC SW-7 LOG OF TEST BORINGS 3 OF 5
	PREPARED BY: W. Tang 10/10				

GS LOTB SOIL LEGEND

ORIGINAL SCALE IN INCHES FOR REDUCED PLANS 0 1 2 3

CU 07
EA 202101

DISREGARD PRINTS BEARING EARLIER REVISION DATES

REVISION DATES SHEET OF

FILE => 720211rb004.dgn

USERNAME => trrright DATE PLOTTED => 29-JUN-2011 TIME PLOTTED => 11:15

FED. ROAD DIV. No.	STATE	PROJ. No.	FISCAL YEAR	SHEET No.	TOTAL SHEETS
7	CAL.				

DIST.	COUNTY	ROUTE	SECTION	SHEET No.	TOTAL SHEETS
VII	LA	107	"C"	641	726

BRIDGE DESIGNER — CIVIL ENGINEER—LICENSE 5085

DATE APPROVED April 27, 1964

BENCH MARK #A-34-53

Set L & T in So. curb Whittier Blvd. 99.0' E of ℄ Iord Blvd in front of Hot Dog Stand.

ELEV. 91.80

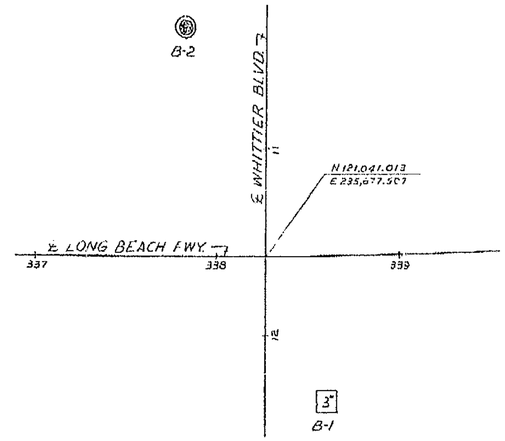

PLAN

Scale: 1"=40'

TO ACCOMPANY PLANS DATED 6-27-11

DIVISION OF ENGINEERING SERVICES - GEOTECHNICAL SERVICES

As-Built Log of Test Borings sheet is considered an informational document only. As such, the State of California registration seal with signature, license number and registration certificate expiration date confirm that this is a true and accurate copy of the original document. It does not attest to the accuracy or validity of the information contained in the original document. This drawing is available and presented only for the convenience of any bidder, contractor or other interested party.

DIST.	COUNTY	ROUTE	POST MILE-TOTAL PROJECT	Sheet No.	Total Sheets
07	LA	710	17.2/26.4	1033	1507

Joseph S. Pratt — CERTIFIED ENGINEERING GEOLOGIST — DATE 1/7/11

PROFESSIONAL GEOLOGIST — Joseph S. Pratt — No. 2141 — Exp. 5-31-11 — CERTIFIED ENGINEERING GEOLOGIST — STATE OF CALIFORNIA

WHITTIER BLVD UC (WIDEN)

LOG OF TEST BORINGS 4 OF 5

NOTE: A COPY OF THIS LOG OF TEST BORINGS IS AVAILABLE AT OFFICE OF STRUCTURE MAINTENANCE AND INVESTIGATIONS, SACRAMENTO, CALIFORNIA

CU: 07 EA: 202111

BRIDGE No. 53-1150

Sheet of

Note: As-Built Vertical Datum
NGVD29 Datum Conversion
NAVD88 = NGVD29 + 1.83'

AS BUILT PLANS
Contract No. 00-033124
Date Completed
Document No. 7000227128

BRIDGE DEPARTMENT

Approximate existing ground line along ℄ Long Beach Fwy.

INFORMATION ON ACTUAL FOUNDATION CONDITIONS ENCOUNTERED IS ON FILE IN BRIDGE GEOLOGY SECTION

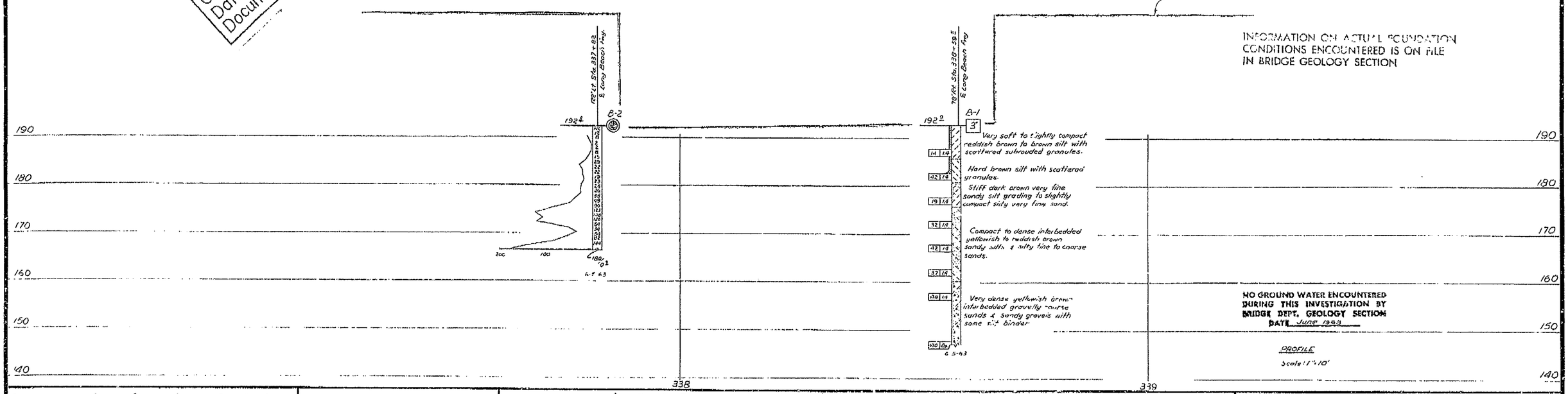

NO GROUND WATER ENCOUNTERED DURING THIS INVESTIGATION BY BRIDGE DEPT. GEOLOGY SECTION
DATE June 1963

PROFILE

Scale: 1"=10'

CLASSIFICATION OF MATERIAL BASED ON STANDARD GRADE SIZE LIMITS

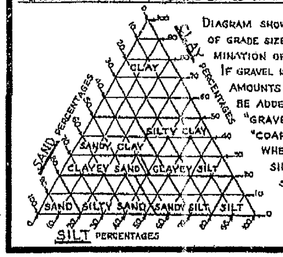

DIAGRAM SHOWING THE BASIS FOR ESTIMATES OF GRADE SIZE DISTRIBUTION USED IN DETERMINATION OF CLASS NAMES.

IF GRAVEL IS PRESENT IN APPRECIABLE AMOUNTS THE TERM "GRAVELLY" MAY BE ADDED TO THE CLASS NAME, VIZ. "GRAVELLY SAND." THE TERMS "COARSE", "MEDIUM" AND "FINE" WHEN USED TO DESCRIBE SAND, SILT AND GRAVEL REFER TO STANDARD GRADE SIZE LIMITS.

LEGEND OF EARTH MATERIALS

- GRAVEL
- SAND
- SILT
- CLAY
- SANDY CLAY OR CLAYEY SAND
- SANDY SILT OR SILTY SAND
- SILTY CLAY OR CLAYEY SILT
- PEAT AND/OR ORGANIC MATTER
- FILL MATERIAL
- IGNEOUS ROCK
- SEDIMENTARY ROCK
- METAMORPHIC ROCK

LEGEND OF BORING OPERATIONS

- PENETROMETER
- 2½" CONE PENETROMETER
- SAMPLER BORING (DRY)
- ROTARY BORING (WET)
- AUGER BORING (DRY)
- JET BORING
- CORE BORING
- TEST PIT

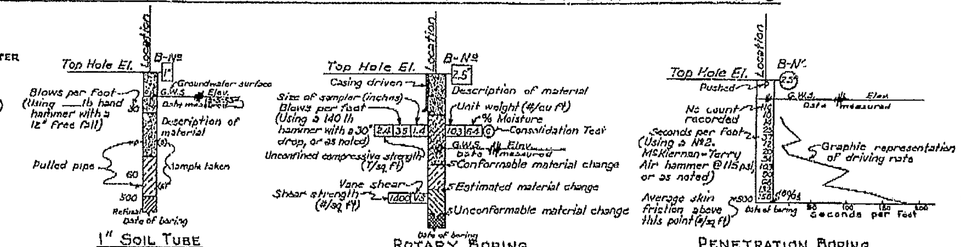

NOTE

Classification of earth material as shown on this sheet is based upon field inspection and is not to be construed to imply mechanical analysis. 7/72

STATE OF CALIFORNIA
DEPARTMENT OF PUBLIC WORKS
DIVISION OF HIGHWAYS

SHEET	OF
8	8

ROUTE ~~167/2~~ SEPARATION (WIDEN) **SW-8**

LOG OF TEST BORINGS

SCALE As Noted | BRIDGE 53-1150 | FILE | DRAWING 531150-8

FIELD STUDY — S. Champlin 6-5-63
DRAWN — R. Torchio 6-10-63
CHECKED — J. F. Bannister 6-18-63
Approval Recommended — Engineer-in-Charge

641

162

FILENAME => 720211rb005.tif

PREL. DRAWING NO. P-

U-0260(5) I-084-1(11)

FED. ROAD DIV. NO	STATE	PROJ. NO.	FISCAL YEAR	SHEET NO	TOTAL SHEETS
7	CAL.			213	370

DIST.	COUNTY	ROUTE	SECTION	SHEET NO.	TOTAL SHEETS
VII	LA	~~167~~	G	A-3-52	

BRIDGE ENGINEER — CIVIL AND STRUCTURAL ENGINEER—LICENSE DEPT.

DATE APPROVED December 22, 1958

TO ACCOMPANY PLANS DATED 6-27-11

DIVISION OF ENGINEERING SERVICES - GEOTECHNICAL SERVICES

As-Built Log of Test Borings sheet is considered an informational document only. As such, the State of California registration seal with signature, license number and registration certificate expiration date confirm that this is a true and accurate copy of the original document. It does not attest to the accuracy or validity of the information contained in the original document. This drawing is available and presented only for the convenience of any bidder, contractor or other interested party.

DIST.	COUNTY	ROUTE	POST MILE-TOTAL PROJECT	Sheet No.	Total Sheets
07	LA	710	17.2/26.4	1034	1507

Joseph S. Pratt — CERTIFIED ENGINEERING GEOLOGIST — DATE 1/7/11

PROFESSIONAL GEOLOGIST — Joseph S. Pratt — No. 2141 — Exp. 5-31-11 — CERTIFIED ENGINEERING GEOLOGIST — STATE OF CALIFORNIA

WHITTIER BLVD UC (WIDEN)

LOG OF TEST BORINGS 5 OF 5

NOTE: A COPY OF THIS LOG OF TEST BORINGS IS AVAILABLE AT OFFICE OF STRUCTURE MAINTENANCE AND INVESTIGATIONS, SACRAMENTO, CALIFORNIA

CU: 07
EA: 202111

BRIDGE No. 53-1150

Sheet of

Note: As-Built Vertical Datum
NGVD29 Datum Conversion
NAVD88 = NGVD29 + 1.83'

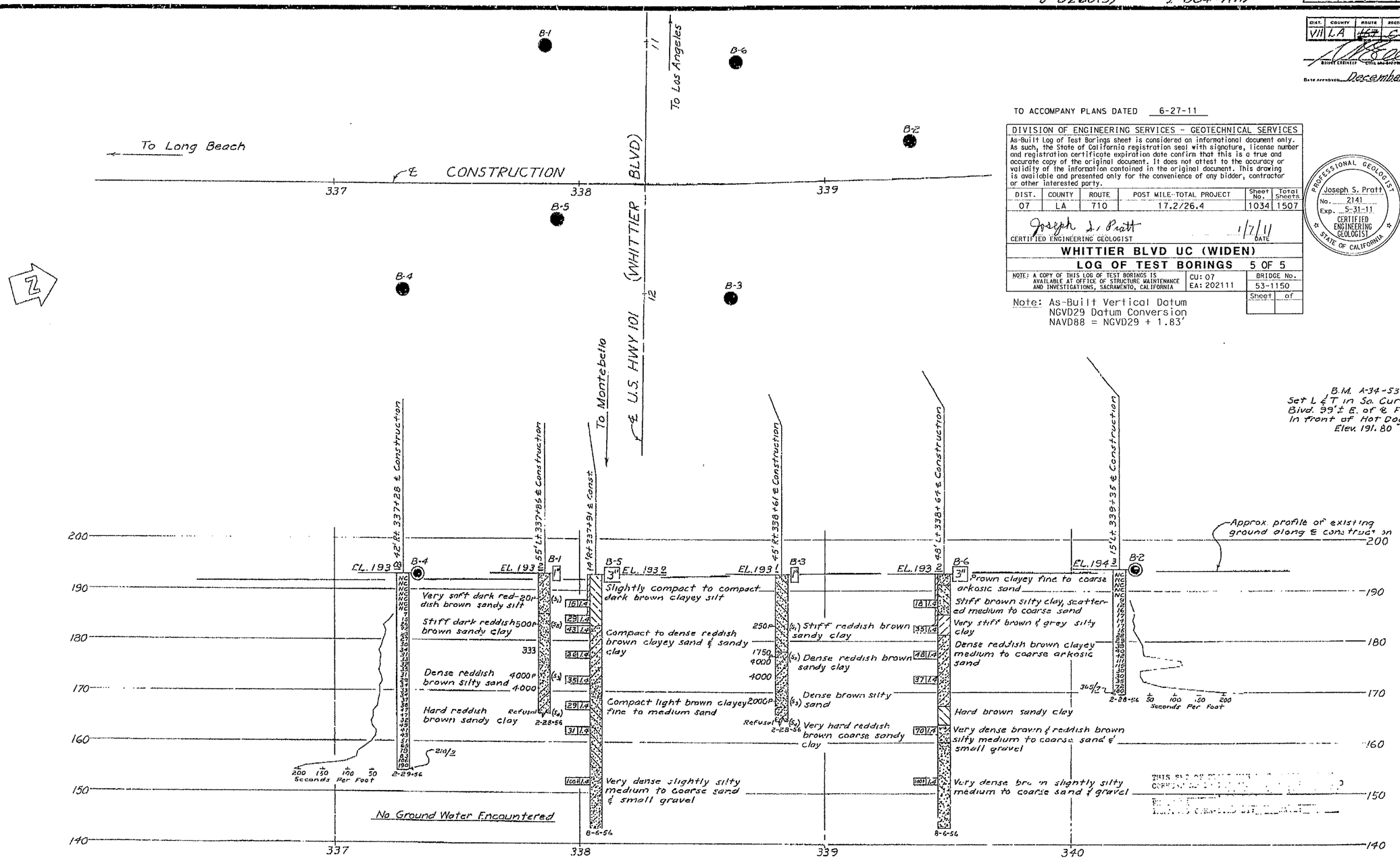

BRIDGE DEPARTMENT

DRAWN L. Pratt 9-15-56
CHECKED J. Lederbrand 9-16-56
Approval Recommended by: Engineering Geologist
Bridge Maintenance Engineer

CLASSIFICATION OF MATERIAL BASED ON STANDARD GRADE SIZE LIMITS

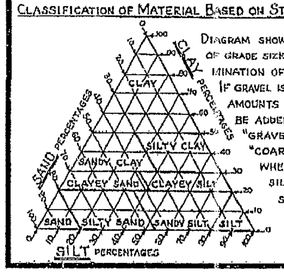

DIAGRAM SHOWING THE BASIS FOR ESTIMATES OF GRADE SIZE DISTRIBUTION USED IN DETERMINATION OF CLASS NAMES. IF GRAVEL IS PRESENT IN APPRECIABLE AMOUNTS THE TERM "GRAVELLY" MAY BE ADDED TO THE CLASS NAME, VIZ. "GRAVELLY SAND". THE TERMS "COARSE", "MEDIUM" AND "FINE" WHEN USED TO DESCRIBE SAND, SILT AND GRAVEL REFER TO STANDARD GRADE SIZE LIMITS.

LEGEND OF EARTH MATERIALS

- GRAVEL
- SAND
- SILT
- CLAY
- SANDY CLAY OR CLAYEY SAND
- SANDY SILT OR SILTY SAND
- SILTY CLAY OR CLAYEY SILT
- PEAT AND/OR ORGANIC MATTER
- FILL MATERIAL
- IGNEOUS ROCK
- SEDIMENTARY ROCK
- METAMORPHIC ROCK

LEGEND OF BORING OPERATIONS

- PLAN OF ANY BORING
- PENETROMETER
- 2¼" CONE PENETROMETER
- SAMPLER BORING (DRY)
- ROTARY BORING (WET)
- AUGER BORING (DRY)
- JET BORING
- CORE BORING
- TEST PIT

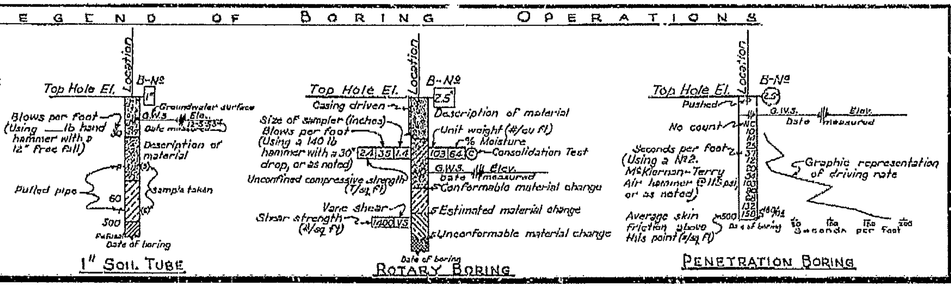

NOTES

The contractor's attention is directed to Section 2, Article (c) of the Standard Specifications and to the Special Provisions accompanying this set of plans.

Classification of earth material as shown on this sheet is based upon field inspection and is not to be construed to imply mechanical analysis.

STATE OF CALIFORNIA
DEPARTMENT OF PUBLIC WORKS
DIVISION OF HIGHWAYS

ROUTE ~~167/2~~ SEPARATION

SW-9

LOG OF TEST BORINGS

SCALE Horiz. 1"=20' Vert. 1"=10' | BRIDGE 53-1150 | FILE | DRAWING C-4043-8

PREL. DRAWING NO. P-4043 C1

FILENAME => 720211rb006.tif

213

192

Dist	COUNTY	ROUTE	POST MILES TOTAL PROJECT	SHEET No.	TOTAL SHEETS
07	LA	710	17.2/26.4	1035	1507

LICENSED LANDSCAPE ARCHITECT

6-27-11
PLANS APPROVAL DATE

LICENSED LANDSCAPE ARCHITECT JENNIFER TAIRA No. 4625 STATUS 08/31/11 RENEWAL DATE 02/24/11 DATE STATE OF CALIFORNIA

THE STATE OF CALIFORNIA OR ITS OFFICERS OR AGENTS SHALL NOT BE RESPONSIBLE FOR THE ACCURACY OR COMPLETENESS OF SCANNED COPIES OF THIS PLAN SHEET.

PLANT LIST AND PLANTING SPECIFICATIONS

PLANT GROUP	PLANT No	BOTANICAL NAME	COMMON NAME	SIZE	QUANTITY EACH	HOLE SIZE (inch) DIA	HOLE SIZE (inch) DEPTH	BASIN TYPE	COMMERCIAL FERTILIZER ① PLANTING	COMMERCIAL FERTILIZER ① PLT ESTB	PLANTING LIMITS MINIMUM DISTANCE (ft) FROM GSRD Fdn					PLANTING LIMITS ON CENTER (ft)	REMARKS
B	1	PLUMBAGO AURICULATA 'IMPERIAL BLUE'	CAPE PLUMBAGO	No. 5	45	⑤		1	8 Oz.	———	10	—	—	—	—	10	SHRUB

LEGEND

- MULCH
- MINOR CONCRETE (STAMPED CONCRETE)
- EROSION CONTROL (HYDROSEED)
- ROCK BLANKET

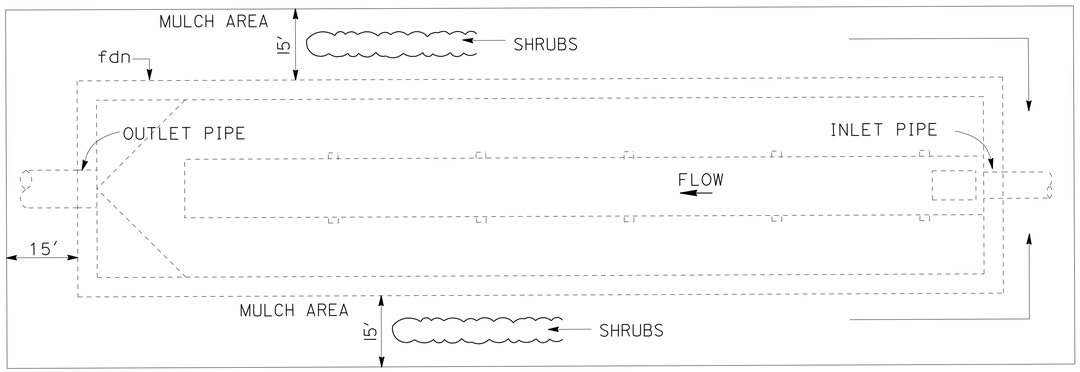

PLAN
GSRD
LINEAR RADIAL(LR)

PLANTING PLAN

GSRD PLANTING LOCATION

LOCATION ROUTE	DIRECTION	STATION	GSRD (TYPE)	PLANT No	QUANTITY EACH	② MULCH CY
710	NB	949+0.5	LR	1	15	3
710	NB	951+0.5	LR	1	15	3
710	SB	951+0.7	LR	1	15	3

PLANTING NOTES:

1. PLAN IS DIAGRAMMATIC AND ACTUAL SITE CONDITIONS MAY VARY.
2. PLANTING FOR EACH GSRD LOCATION IS SUMMARIZED IN "PLANTING SCHEDULE."
3. PLACE MULCH 1' AWAY FROM GSRD FOUNDATION AND EXTEND 15' BEYOND.
4. PLACE MULCH OVER DISTURBED PORTION OF INLET AND OUTLET PIPE SEGMENTS.
5. FOR EXACT DIMENSIONS OF GSRD'S SEE CONSTRUCTION DETAIL PLANS.

ABBREVIATION

GSRD - GROSS SOLIDS REMOVAL DEVICE

APPLICABLE WHEN CIRCLED:

1 – Quantities shown are "per plant."
② – Quantities shown include basin and mulch areas.
3 – See Special Provisions.
4 – See detail.
⑤ – Sufficient to receive root ball.

PLANT LIST
PL-1

REVISED BY | DATE REVISED
GLEN LEVSTIK | RICH KESTER
CALCULATED-DESIGNED BY | CHECKED BY
SENIOR LANDSCAPE ARCHITECT | JENNIFER TAIRA
STATE OF CALIFORNIA - DEPARTMENT OF TRANSPORTATION
Caltrans® LANDSCAPE ARCHITECTURE

LAST REVISION 00-00-00 | DATE PLOTTED => 29-JUN-2011 | TIME PLOTTED => 17:23

Dist	COUNTY	ROUTE	POST MILES TOTAL PROJECT	SHEET No.	TOTAL SHEETS
07	LA	710	17.2/26.4	1036	1507

LICENSED LANDSCAPE ARCHITECT

6-27-11
PLANS APPROVAL DATE

THE STATE OF CALIFORNIA OR ITS OFFICERS OR AGENTS SHALL NOT BE RESPONSIBLE FOR THE ACCURACY OR COMPLETENESS OF SCANNED COPIES OF THIS PLAN SHEET.

LICENSED LANDSCAPE ARCHITECT
JENNIFER TAIRA
NO. 4625
Signature
08/31/11
Renewal Date
02/24/11
Date
STATE OF CALIFORNIA

NOTE:

1. FOR ACCURATE RIGHT OF WAY DATA, CONTACT RIGHT OF WAY ENGINEERING AT DISTRICT OFFICE.

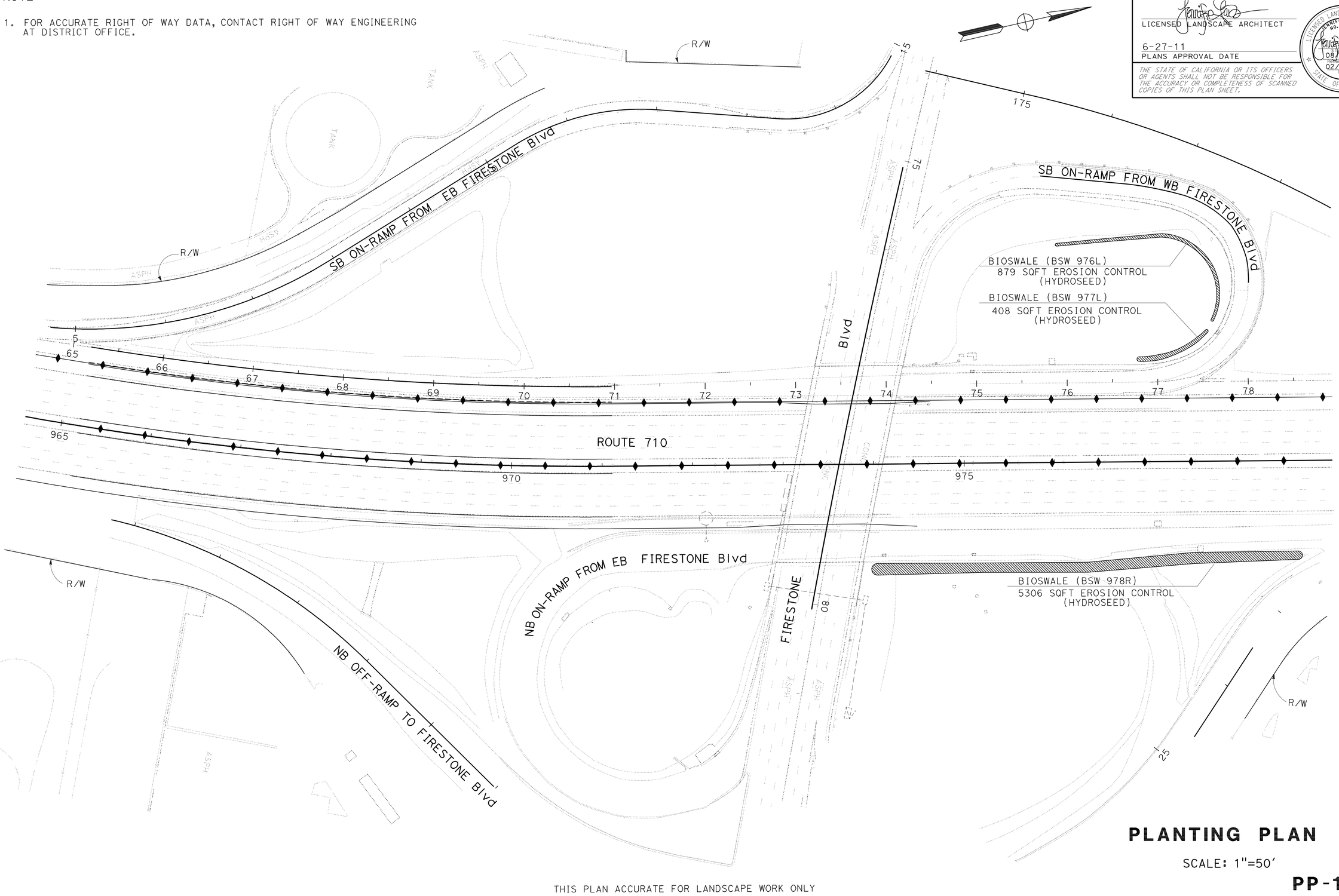

PLANTING PLAN

SCALE: 1"=50'

PP-1

THIS PLAN ACCURATE FOR LANDSCAPE WORK ONLY

STATE OF CALIFORNIA - DEPARTMENT OF TRANSPORTATION
Caltrans LANDSCAPE ARCHITECTURE

SENIOR LANDSCAPE ARCHITECT: JENNIFER TAIRA
CALCULATED-DESIGNED BY: GLEN LEVSTIK
CHECKED BY: RICH KESTER
REVISED BY
DATE REVISED

LAST REVISION 00-00-00
DATE PLOTTED => 29-JUN-2011
TIME PLOTTED => 17:23

Dist	COUNTY	ROUTE	POST MILES TOTAL PROJECT	SHEET No.	TOTAL SHEETS
07	LA	710	17.2/26.4	1037	1507

LICENSED LANDSCAPE ARCHITECT

6-27-11
PLANS APPROVAL DATE

LICENSED LANDSCAPE ARCHITECT
JENNIFER TAIRA
No. 4625
08/31/11
Renewal Date
02/24/11
Date
STATE OF CALIFORNIA

THE STATE OF CALIFORNIA OR ITS OFFICERS OR AGENTS SHALL NOT BE RESPONSIBLE FOR THE ACCURACY OR COMPLETENESS OF SCANNED COPIES OF THIS PLAN SHEET.

NOTE:

1. FOR ACCURATE RIGHT OF WAY DATA, CONTACT RIGHT OF WAY ENGINEERING AT DISTRICT OFFICE.

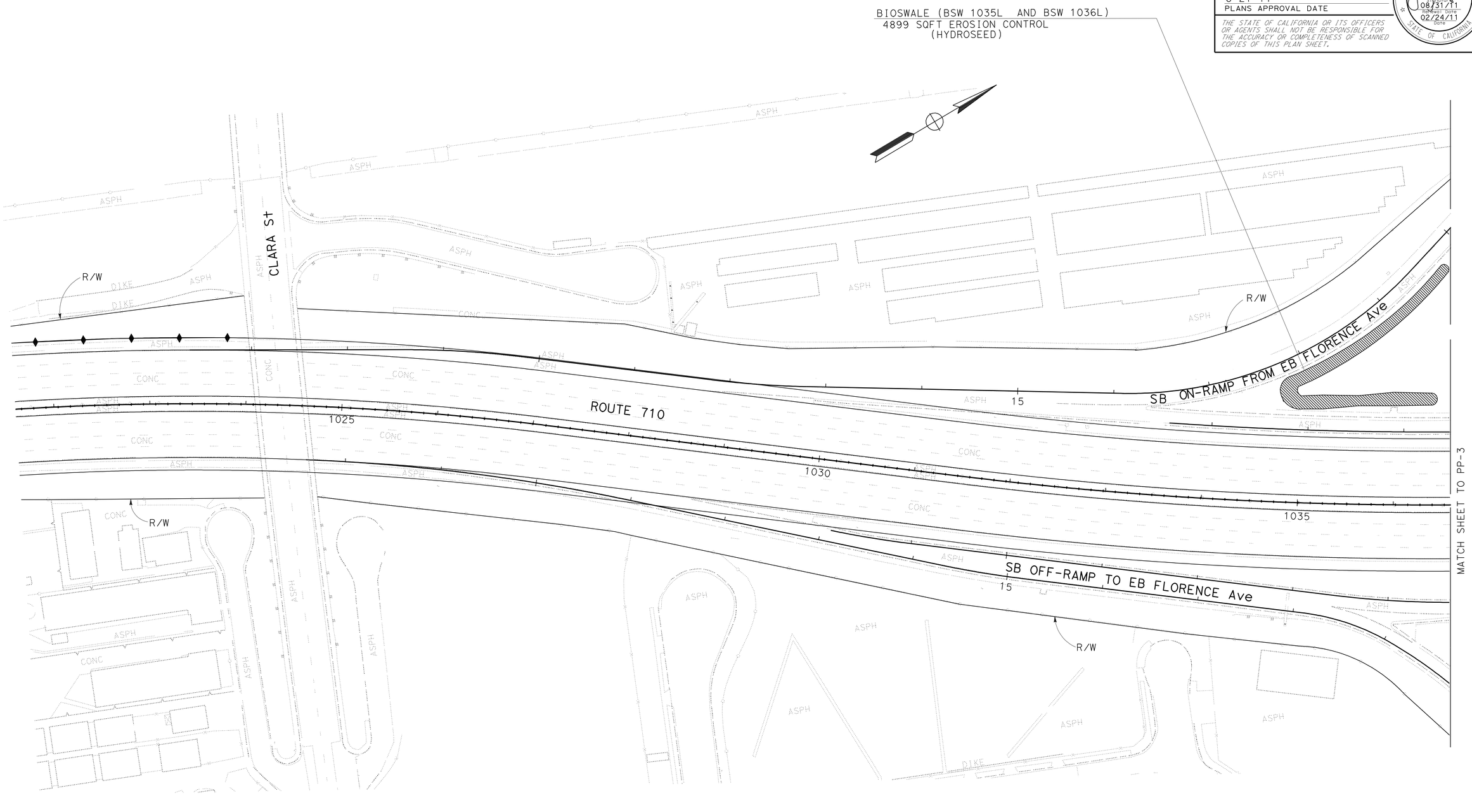

THIS PLAN ACCURATE FOR LANDSCAPE WORK ONLY

PLANTING PLAN

SCALE: 1"=50'

PP-2

STATE OF CALIFORNIA - DEPARTMENT OF TRANSPORTATION
Caltrans® LANDSCAPE ARCHITECTURE

SENIOR LANDSCAPE ARCHITECT: JENNIFER TAIRA

CALCULATED-DESIGNED BY: GLEN LEVSTIK
CHECKED BY: RICH KESTER

REVISED BY
DATE REVISED

LAST REVISION 00-00-00
DATE PLOTTED => 29-JUN-2011
TIME PLOTTED => 17:23

NOTE:

1. FOR ACCURATE RIGHT OF WAY DATA, CONTACT RIGHT OF WAY ENGINEERING AT DISTRICT OFFICE.

Dist	COUNTY	ROUTE	POST MILES TOTAL PROJECT	SHEET No.	TOTAL SHEETS
07	LA	710	17.2/26.4	1038	1507

LICENSED LANDSCAPE ARCHITECT

6-27-11
PLANS APPROVAL DATE

LICENSED LANDSCAPE ARCHITECT
JENNIFER TAIRA
No. 4622
Signature
08/31/11
Renewal Date
01/26/11
Date
STATE OF CALIFORNIA

THE STATE OF CALIFORNIA OR ITS OFFICERS OR AGENTS SHALL NOT BE RESPONSIBLE FOR THE ACCURACY OR COMPLETENESS OF SCANNED COPIES OF THIS PLAN SHEET.

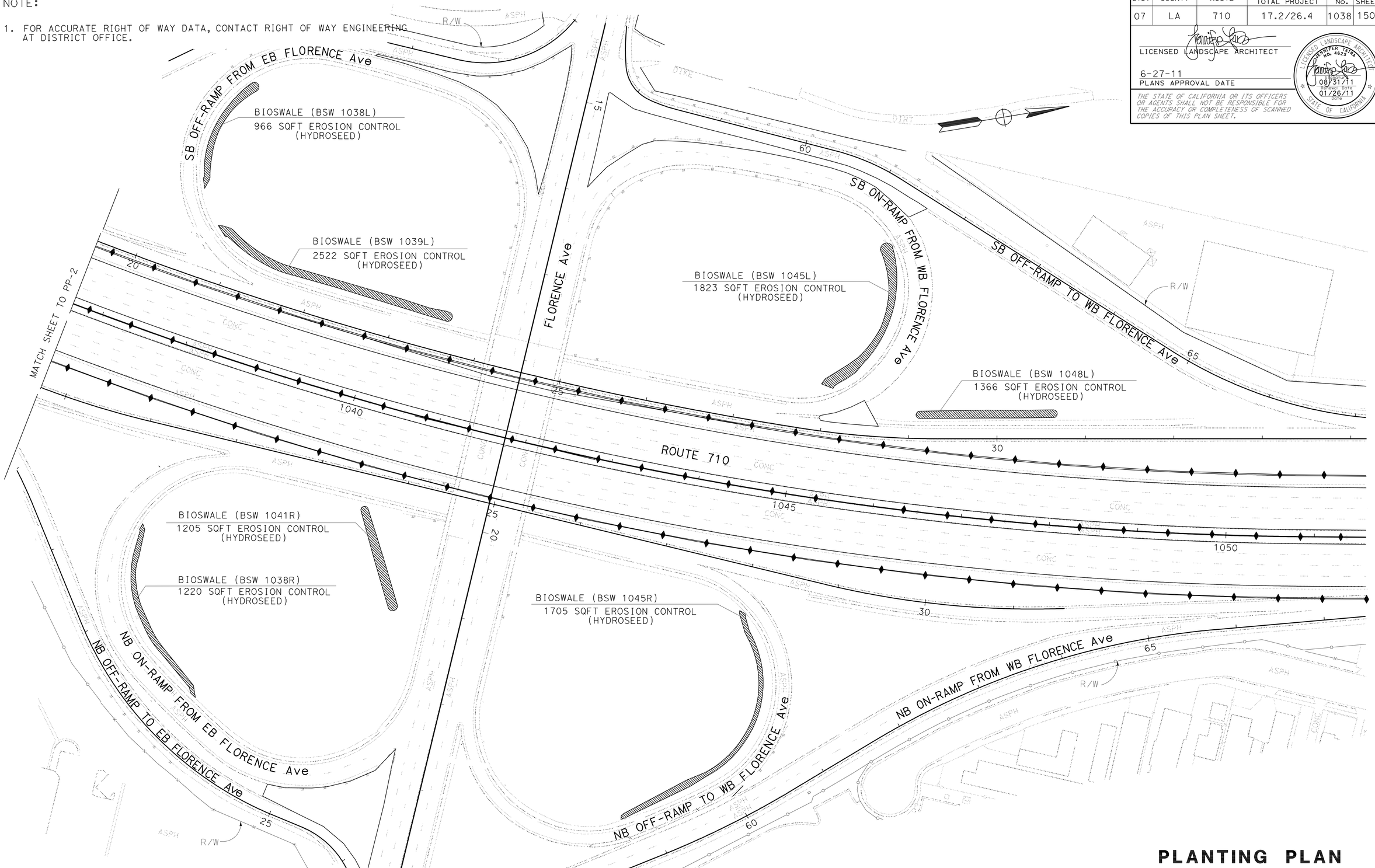

PLANTING PLAN

SCALE: 1"=50'

PP-3

THIS PLAN ACCURATE FOR LANDSCAPE WORK ONLY

STATE OF CALIFORNIA - DEPARTMENT OF TRANSPORTATION
Caltrans® LANDSCAPE ARCHITECTURE

SENIOR LANDSCAPE ARCHITECT: JENNIFER TAIRA
CALCULATED-DESIGNED BY: GLEN LEVSTIK
CHECKED BY: RICH KESTER
REVISED BY
DATE REVISED

LAST REVISION 00-00-00
DATE PLOTTED => 29-JUN-2011
TIME PLOTTED => 17:23

Dist	COUNTY	ROUTE	POST MILES TOTAL PROJECT	SHEET No.	TOTAL SHEETS
07	LA	710	17.2/26.4	1039	1507

LICENSED LANDSCAPE ARCHITECT

6-27-11
PLANS APPROVAL DATE

THE STATE OF CALIFORNIA OR ITS OFFICERS OR AGENTS SHALL NOT BE RESPONSIBLE FOR THE ACCURACY OR COMPLETENESS OF SCANNED COPIES OF THIS PLAN SHEET.

LICENSED LANDSCAPE ARCHITECT
JENNIFER TAIRA
No. 4622
SIGNATURE
08/31/11
RENEWAL DATE
02/24/11
DATE
STATE OF CALIFORNIA

NOTES:

1. FOR ACCURATE RIGHT OF WAY DATA, CONTACT RIGHT OF WAY ENGINEERING AT DISTRICT OFFICE.
2. EXISTING UTILITIES HAVE NOT BEEN PLOTTED ON THE PLANS.

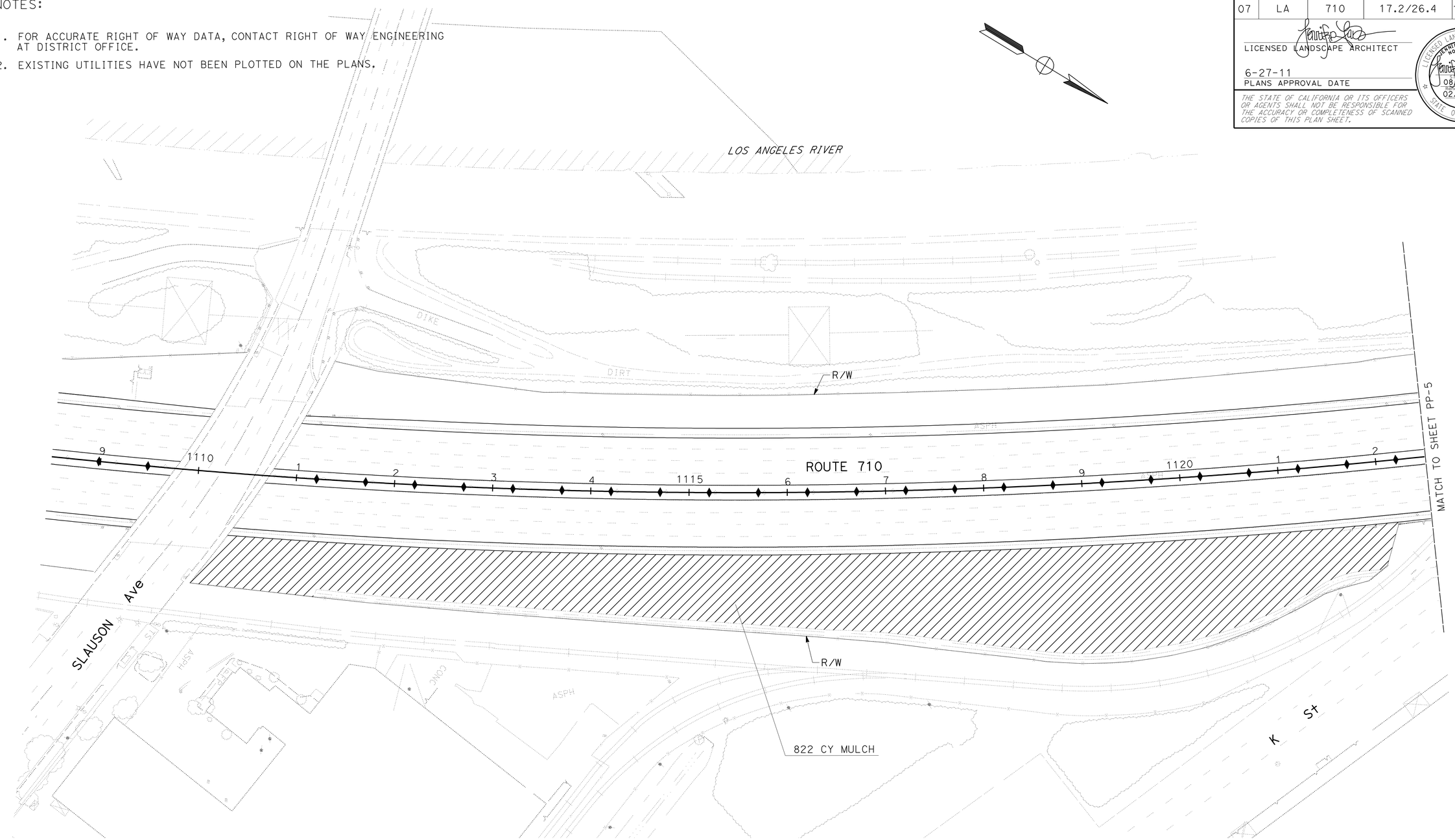

THIS PLAN ACCURATE FOR LANDSCAPE WORK ONLY.

PLANTING PLAN

SCALE: 1" = 50'

PP-4

STATE OF CALIFORNIA - DEPARTMENT OF TRANSPORTATION
Caltrans® LANDSCAPE ARCHITECTURE

SENIOR LANDSCAPE ARCHITECT: JENNIFER TAIRA
CALCULATED-DESIGNED BY: GLEN LEVSTIK
CHECKED BY: RICH KESTER
REVISED BY
DATE REVISED

LAST REVISION 00-00-00
DATE PLOTTED => 29-JUN-2011
TIME PLOTTED => 17:23

Dist	COUNTY	ROUTE	POST MILES TOTAL PROJECT	SHEET No.	TOTAL SHEETS
07	LA	710	17.2/26.4	1040	1507

LICENSED LANDSCAPE ARCHITECT

6-27-11
PLANS APPROVAL DATE

LICENSED LANDSCAPE ARCHITECT
JENNIFER TAIRA
No. 4622
STATUS
08/31/11
RENEWAL DATE
02/24/11
DATE
STATE OF CALIFORNIA

THE STATE OF CALIFORNIA OR ITS OFFICERS OR AGENTS SHALL NOT BE RESPONSIBLE FOR THE ACCURACY OR COMPLETENESS OF SCANNED COPIES OF THIS PLAN SHEET.

NOTES:

1. FOR ACCURATE RIGHT OF WAY DATA, CONTACT RIGHT OF WAY ENGINEERING AT DISTRICT OFFICE.
2. EXISTING UTILITIES HAVE NOT BEEN PLOTTED ON THE PLANS.

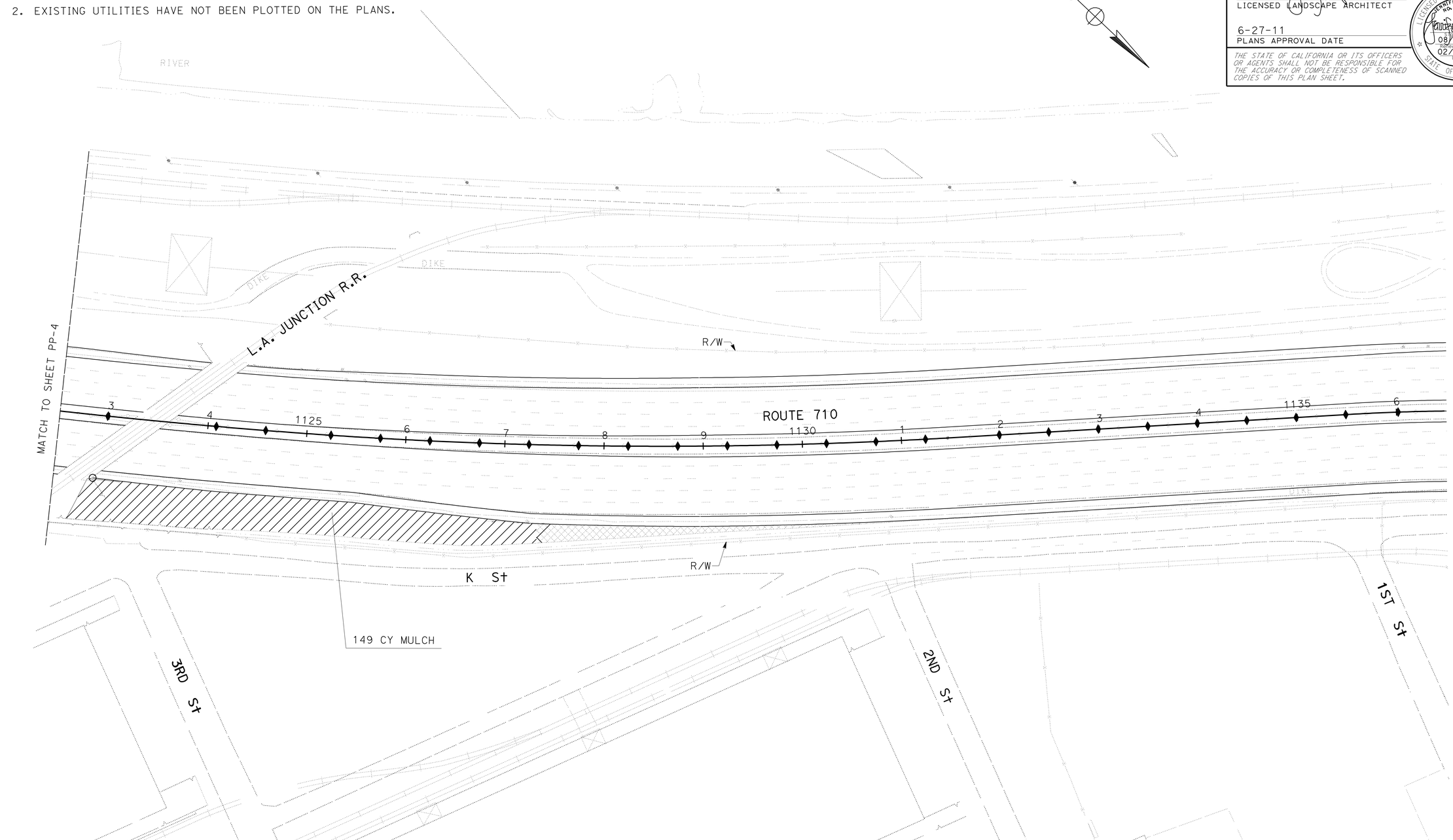

THIS PLAN ACCURATE FOR LANDSCAPE WORK ONLY.

PLANTING PLAN

SCALE: 1" = 50'

PP-5

STATE OF CALIFORNIA - DEPARTMENT OF TRANSPORTATION
Caltrans® LANDSCAPE ARCHITECTURE

SENIOR LANDSCAPE ARCHITECT: JENNIFER TAIRA
CALCULATED-DESIGNED BY: GLEN LEVSTIK
CHECKED BY: RICH KESTER
REVISED BY
DATE REVISED

LAST REVISION 00-00-00
DATE PLOTTED => 29-JUN-2011
TIME PLOTTED => 17:23

Dist	COUNTY	ROUTE	POST MILES TOTAL PROJECT	SHEET No.	TOTAL SHEETS
07	LA	710	17.2/26.4	1041	1507

LICENSED LANDSCAPE ARCHITECT

6-27-11
PLANS APPROVAL DATE

LICENSED LANDSCAPE ARCHITECT
JENNIFER TAIRA
No. 4622
08/31/11
RENEWAL DATE
02/24/11
DATE
STATE OF CALIFORNIA

THE STATE OF CALIFORNIA OR ITS OFFICERS OR AGENTS SHALL NOT BE RESPONSIBLE FOR THE ACCURACY OR COMPLETENESS OF SCANNED COPIES OF THIS PLAN SHEET.

NOTES:

1. FOR ACCURATE RIGHT OF WAY DATA, CONTACT RIGHT OF WAY ENGINEERING AT DISTRICT OFFICE.
2. EXISTING UTILITIES HAVE NOT BEEN PLOTTED ON THE PLANS.

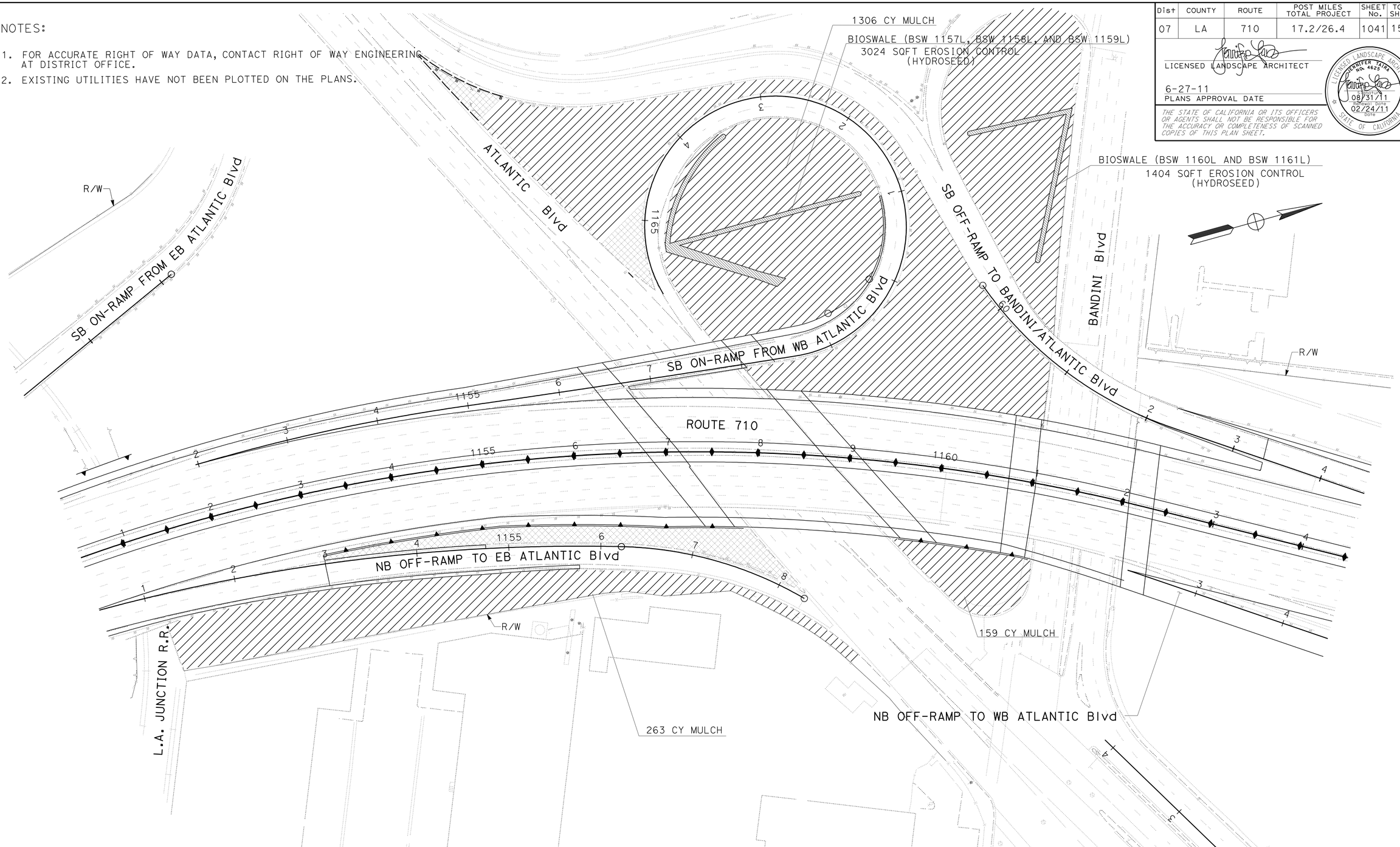

THIS PLAN ACCURATE FOR LANDSCAPE WORK ONLY.

PLANTING PLAN

SCALE: 1" = 50'

PP-6

STATE OF CALIFORNIA - DEPARTMENT OF TRANSPORTATION
Caltrans® LANDSCAPE ARCHITECTURE

SENIOR LANDSCAPE ARCHITECT: JENNIFER TAIRA
CALCULATED-DESIGNED BY: GLEN LEVSTIK
CHECKED BY: RICH KESTER
REVISED BY
DATE REVISED

LAST REVISION 00-00-00
DATE PLOTTED => 07-JUL-2011
TIME PLOTTED => 10:59

NOTES:

1. FOR ACCURATE RIGHT OF WAY DATA, CONTACT RIGHT OF WAY ENGINEERING AT DISTRICT OFFICE.
2. EXISTING UTILITIES HAVE NOT BEEN PLOTTED ON THE PLANS.

Dist	COUNTY	ROUTE	POST MILES TOTAL PROJECT	SHEET No.	TOTAL SHEETS
07	LA	710	17.2/26.4	1042	1507

LICENSED LANDSCAPE ARCHITECT

6-27-11
PLANS APPROVAL DATE

LICENSED LANDSCAPE ARCHITECT JENNIFER TAIRA No. 4625 Signature 08/31/11 Renewal Date 02/24/11 Date STATE OF CALIFORNIA

THE STATE OF CALIFORNIA OR ITS OFFICERS OR AGENTS SHALL NOT BE RESPONSIBLE FOR THE ACCURACY OR COMPLETENESS OF SCANNED COPIES OF THIS PLAN SHEET.

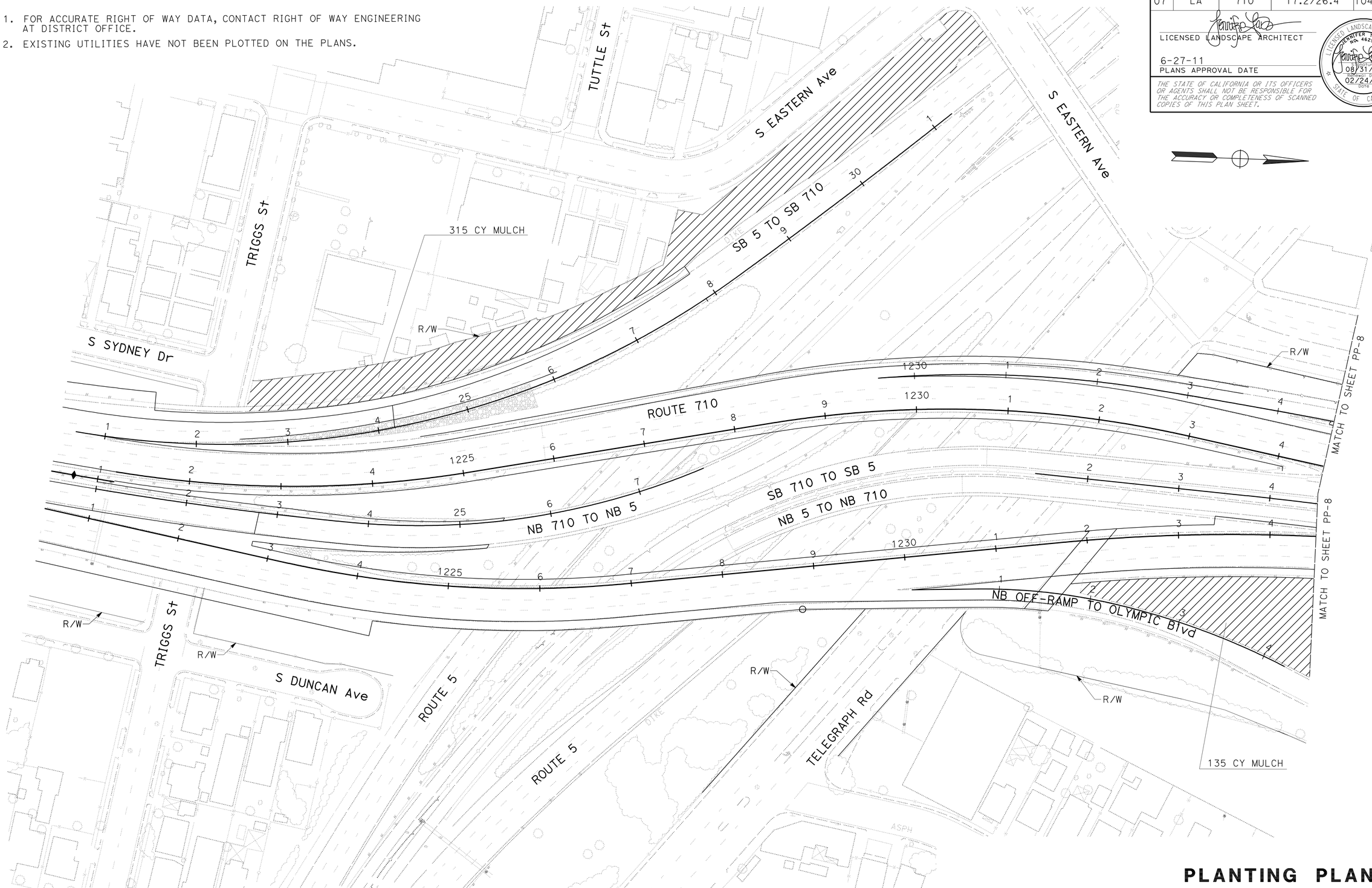

PLANTING PLAN

SCALE: 1" = 50'

PP-7

THIS PLAN ACCURATE FOR PLANTING WORK ONLY.

STATE OF CALIFORNIA - DEPARTMENT OF TRANSPORTATION
Caltrans LANDSCAPE ARCHITECTURE

SENIOR LANDSCAPE ARCHITECT: JENNIFER TAIRA
CALCULATED-DESIGNED BY: GLEN LEVSTIK
CHECKED BY: RICH KESTER
REVISED BY
DATE REVISED

LAST REVISION 00-00-00
DATE PLOTTED => 29-JUN-2011
TIME PLOTTED => 17:23

NOTES:

1. FOR ACCURATE RIGHT OF WAY DATA, CONTACT RIGHT OF WAY ENGINEERING AT DISTRICT OFFICE.
2. EXISTING UTILITIES HAVE NOT BEEN PLOTTED ON THE PLANS.

Dist	COUNTY	ROUTE	POST MILES TOTAL PROJECT	SHEET No.	TOTAL SHEETS
07	LA	710	17.2/26.4	1043	1507

LICENSED LANDSCAPE ARCHITECT

6-27-11
PLANS APPROVAL DATE

LICENSED LANDSCAPE ARCHITECT
JENNIFER TAIRA
No. 4625
STATE OF CALIFORNIA
08/31/11
Renewal Date
02/24/11
Date

THE STATE OF CALIFORNIA OR ITS OFFICERS OR AGENTS SHALL NOT BE RESPONSIBLE FOR THE ACCURACY OR COMPLETENESS OF SCANNED COPIES OF THIS PLAN SHEET.

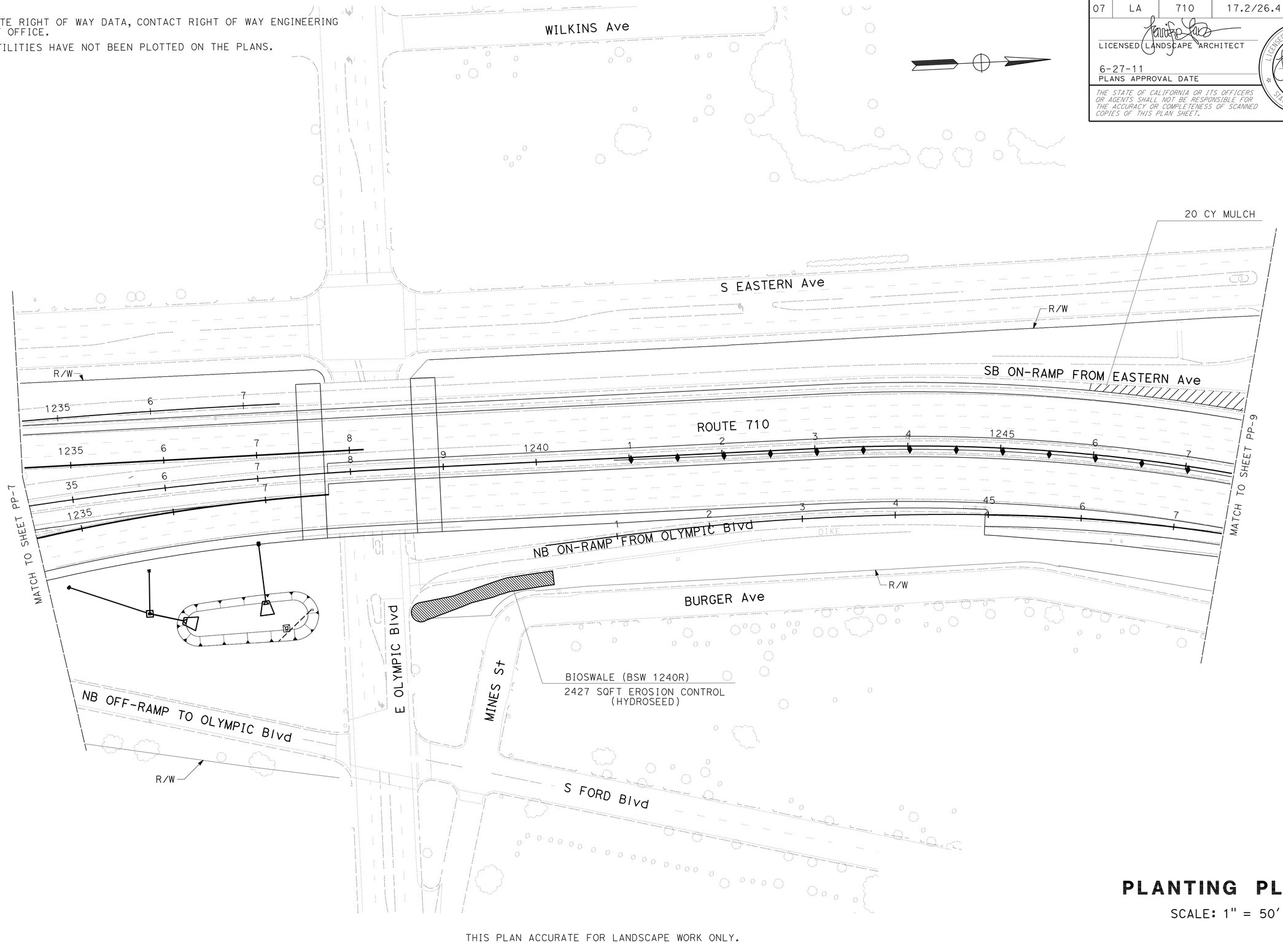

THIS PLAN ACCURATE FOR LANDSCAPE WORK ONLY.

PLANTING PLAN

SCALE: 1" = 50'

PP-8

STATE OF CALIFORNIA - DEPARTMENT OF TRANSPORTATION
Caltrans® LANDSCAPE ARCHITECTURE

SENIOR LANDSCAPE ARCHITECT: JENNIFER TAIRA

CALCULATED-DESIGNED BY: GLEN LEVSTIK
CHECKED BY: RICH KESTER

REVISED BY
DATE REVISED

LAST REVISION 00-00-00
DATE PLOTTED => 29-JUN-2011
TIME PLOTTED => 17:23

Dist	COUNTY	ROUTE	POST MILES TOTAL PROJECT	SHEET No.	TOTAL SHEETS
07	LA	710	17.2/26.4	1044	1507

LICENSED LANDSCAPE ARCHITECT

6-27-11
PLANS APPROVAL DATE

LICENSED LANDSCAPE ARCHITECT
JENNIFER TAIRA
No. 4625
STATE OF CALIFORNIA
SIGNATURE
08/31/11
Renewal date
02/24/11
DATE

THE STATE OF CALIFORNIA OR ITS OFFICERS OR AGENTS SHALL NOT BE RESPONSIBLE FOR THE ACCURACY OR COMPLETENESS OF SCANNED COPIES OF THIS PLAN SHEET.

NOTES:

1. FOR ACCURATE RIGHT OF WAY DATA, CONTACT RIGHT OF WAY ENGINEERING AT DISTRICT OFFICE.
2. EXISTING UTILITIES HAVE NOT BEEN PLOTTED ON THE PLANS.

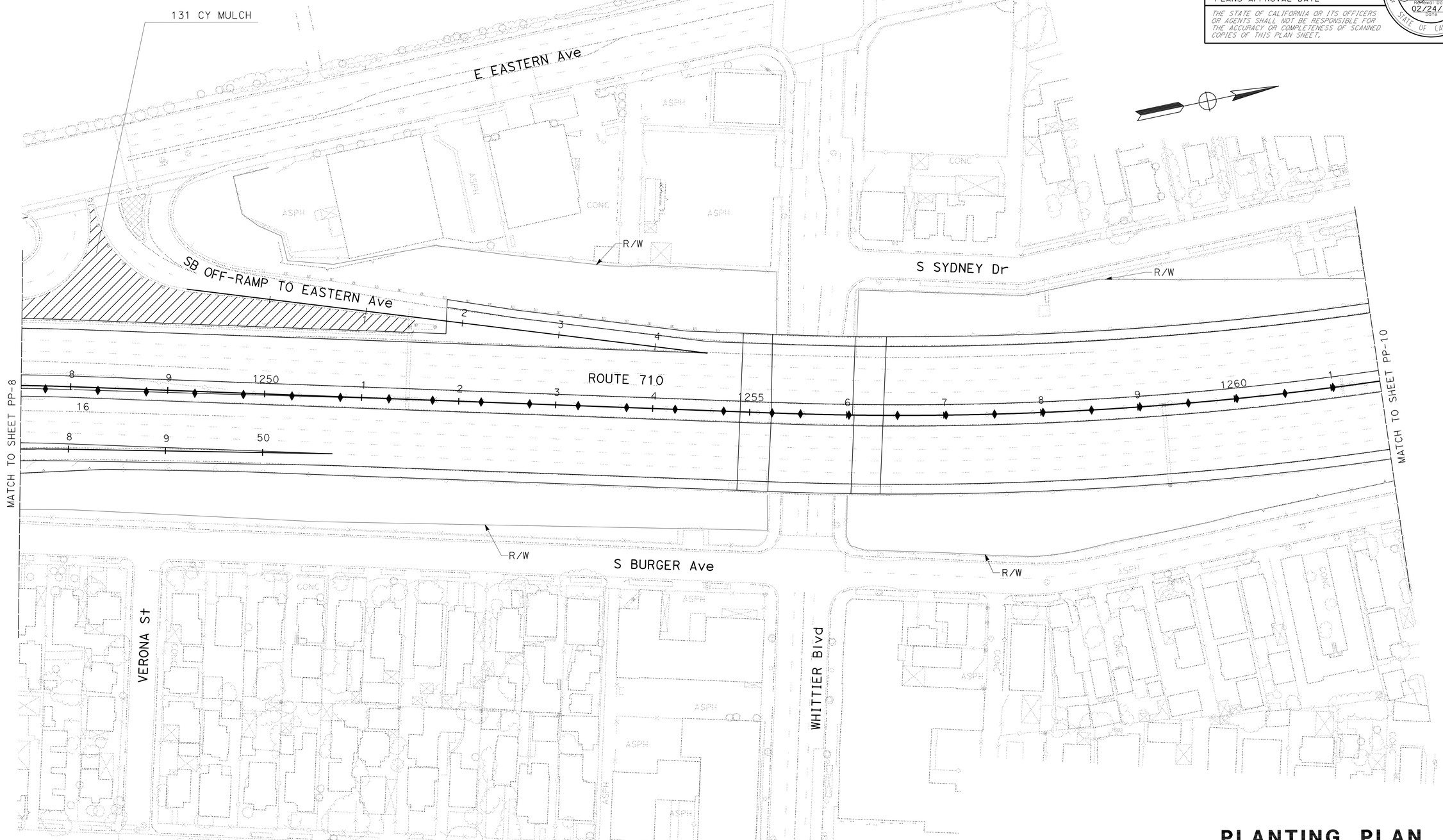

PLANTING PLAN

SCALE: 1" = 50'

PP-9

THIS PLAN ACCURATE FOR LANDSCAPE WORK ONLY.

STATE OF CALIFORNIA - DEPARTMENT OF TRANSPORTATION
Caltrans® LANDSCAPE ARCHITECTURE

SENIOR LANDSCAPE ARCHITECT: JENNIFER TAIRA
CALCULATED-DESIGNED BY: GLEN LEVSTIK
CHECKED BY: RICH KESTER
REVISED BY
DATE REVISED

LAST REVISION 00-00-00
DATE PLOTTED => 29-JUN-2011
TIME PLOTTED => 17:24

Dist	COUNTY	ROUTE	POST MILES TOTAL PROJECT	SHEET No.	TOTAL SHEETS
07	LA	710	17.2/26.4	1045	1507

LICENSED LANDSCAPE ARCHITECT

6-27-11
PLANS APPROVAL DATE

LICENSED LANDSCAPE ARCHITECT
JENNIFER TAIRA
No. 4622
08/31/11
RENEWAL DATE
02/24/11
DATE
STATE OF CALIFORNIA

THE STATE OF CALIFORNIA OR ITS OFFICERS OR AGENTS SHALL NOT BE RESPONSIBLE FOR THE ACCURACY OR COMPLETENESS OF SCANNED COPIES OF THIS PLAN SHEET.

NOTES:

1. FOR ACCURATE RIGHT OF WAY DATA, CONTACT RIGHT OF WAY ENGINEERING AT DISTRICT OFFICE.
2. EXISTING UTILITIES HAVE NOT BEEN PLOTTED ON THE PLANS.

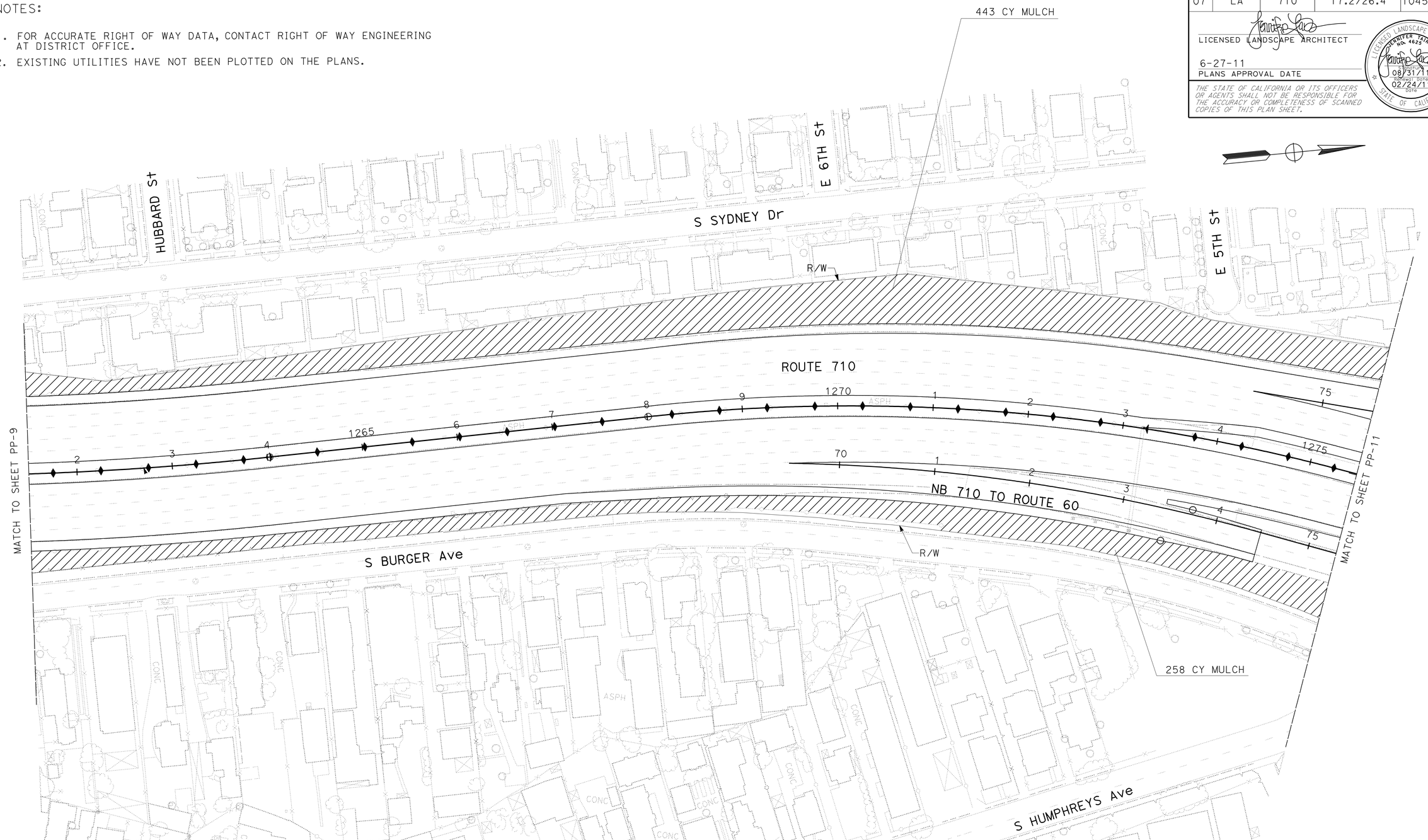

PLANTING PLAN

SCALE: 1" = 50'

PP-10

THIS PLAN ACCURATE FOR LANDSCAPE WORK ONLY.

STATE OF CALIFORNIA - DEPARTMENT OF TRANSPORTATION
Caltrans® LANDSCAPE ARCHITECTURE

SENIOR LANDSCAPE ARCHITECT: JENNIFER TAIRA
CALCULATED-DESIGNED BY: GLEN LEVSTIK
CHECKED BY: RICH KESTER
REVISED BY
DATE REVISED

LAST REVISION 00-00-00
DATE PLOTTED => 29-JUN-2011
TIME PLOTTED => 17:24

Dist	COUNTY	ROUTE	POST MILES TOTAL PROJECT	SHEET No.	TOTAL SHEETS
07	LA	710	17.2/26.4	1046	1507

LICENSED LANDSCAPE ARCHITECT

6-27-11
PLANS APPROVAL DATE

THE STATE OF CALIFORNIA OR ITS OFFICERS OR AGENTS SHALL NOT BE RESPONSIBLE FOR THE ACCURACY OR COMPLETENESS OF SCANNED COPIES OF THIS PLAN SHEET.

LICENSED LANDSCAPE ARCHITECT
JENNIFER TAIRA
No. 4622
08/31/11
Renewal Date
02/24/11
Date
STATE OF CALIFORNIA

NOTES:

1. FOR ACCURATE RIGHT OF WAY DATA, CONTACT RIGHT OF WAY ENGINEERING AT DISTRICT OFFICE.
2. EXISTING UTILITIES HAVE NOT BEEN PLOTTED ON THE PLANS.

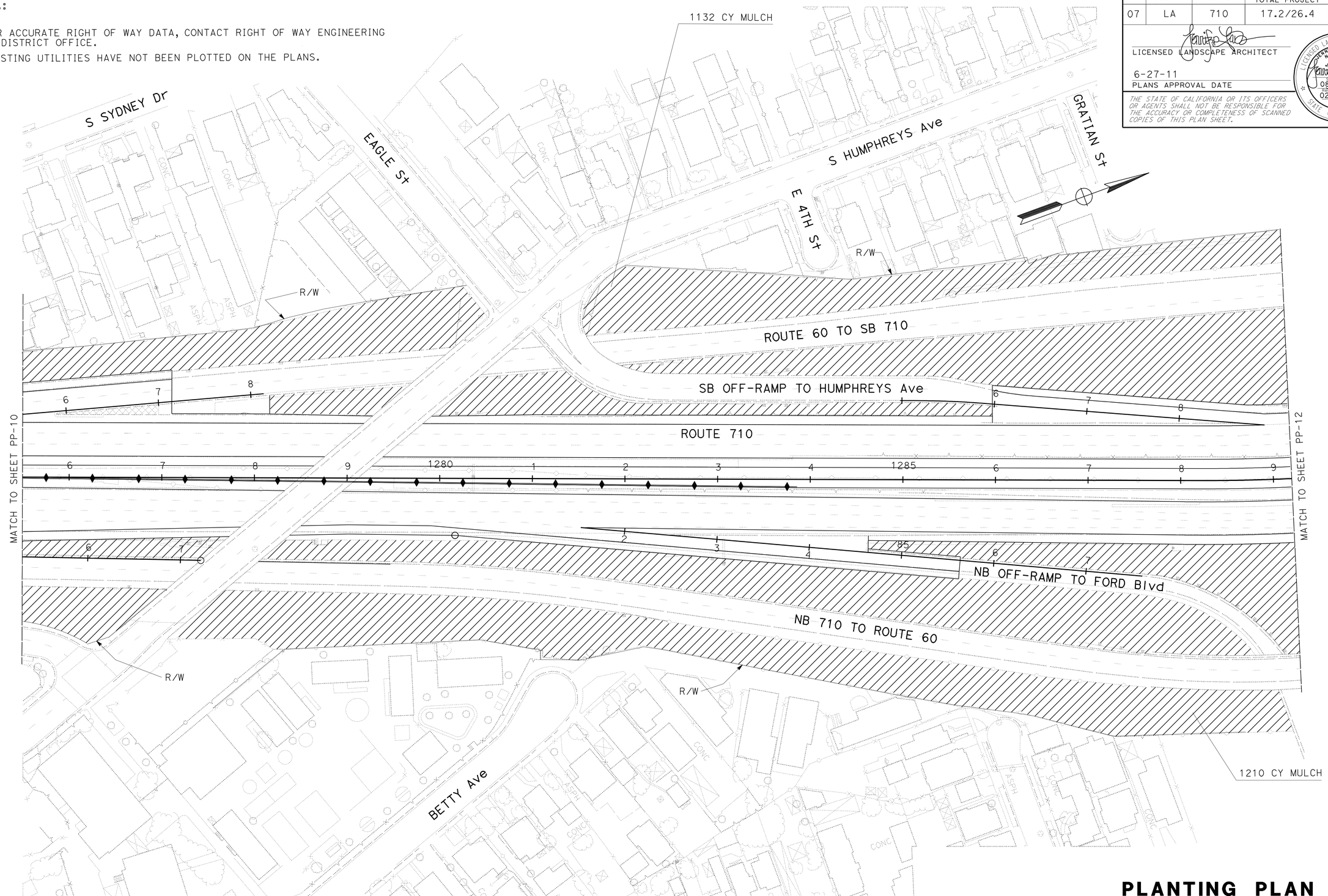

THIS PLAN ACCURATE FOR LANDSCAPE WORK ONLY.

PLANTING PLAN

SCALE: 1" = 50'

PP-11

STATE OF CALIFORNIA - DEPARTMENT OF TRANSPORTATION
Caltrans® LANDSCAPE ARCHITECTURE

SENIOR LANDSCAPE ARCHITECT: JENNIFER TAIRA
CALCULATED-DESIGNED BY: GLEN LEVSTIK
CHECKED BY: RICH KESTER
REVISED BY
DATE REVISED

LAST REVISION 00-00-00
DATE PLOTTED => 29-JUN-2011
TIME PLOTTED => 17:24

Dist	COUNTY	ROUTE	POST MILES TOTAL PROJECT	SHEET No.	TOTAL SHEETS
07	LA	710	17.2/26.4	1047	1507

LICENSED LANDSCAPE ARCHITECT

6-27-11
PLANS APPROVAL DATE

LICENSED LANDSCAPE ARCHITECT
JENNIFER TAIRA
No. 4628
STATE OF CALIFORNIA
Signature
08/31/11
Renewal Date
02/24/11
Date

THE STATE OF CALIFORNIA OR ITS OFFICERS OR AGENTS SHALL NOT BE RESPONSIBLE FOR THE ACCURACY OR COMPLETENESS OF SCANNED COPIES OF THIS PLAN SHEET.

NOTES:

1. FOR ACCURATE RIGHT OF WAY DATA, CONTACT RIGHT OF WAY ENGINEERING AT DISTRICT OFFICE.
2. EXISTING UTILITIES HAVE NOT BEEN PLOTTED ON THE PLANS.

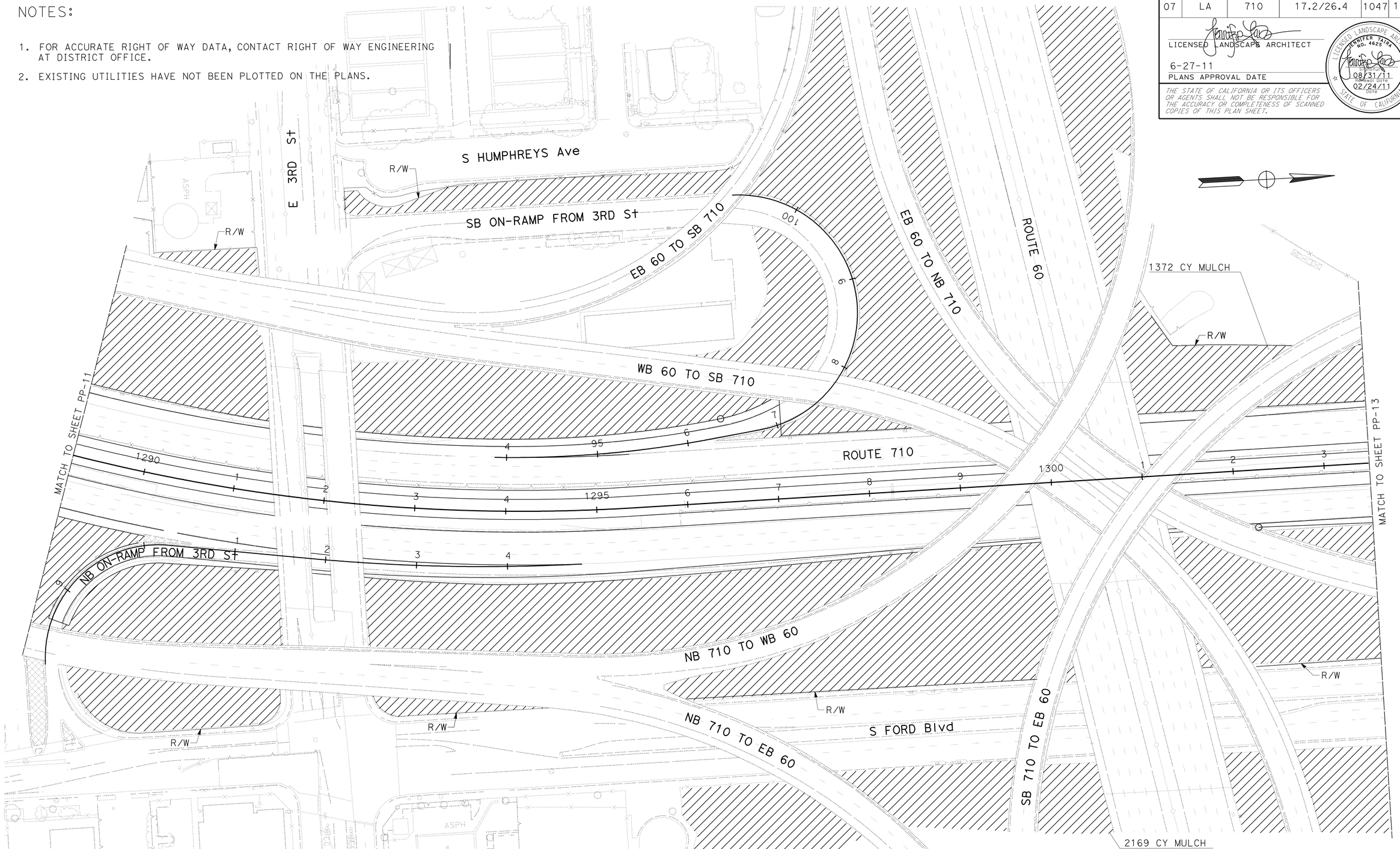

PLANTING PLAN

SCALE: 1" = 50'

THIS PLAN ACCURATE FOR LANDSCAPE WORK ONLY.

PP-12

STATE OF CALIFORNIA - DEPARTMENT OF TRANSPORTATION
Caltrans® LANDSCAPE ARCHITECTURE

SENIOR LANDSCAPE ARCHITECT: JENNIFER TAIRA

CALCULATED-DESIGNED BY: GLEN LEVSTIK
CHECKED BY: RICH KESTER

REVISED BY
DATE REVISED

LAST REVISION 00-00-00
DATE PLOTTED => 06-JUL-2011
TIME PLOTTED => 11:48

Dist	COUNTY	ROUTE	POST MILES TOTAL PROJECT	SHEET No.	TOTAL SHEETS
07	LA	710	17.2/26.4	1048	1507

LICENSED LANDSCAPE ARCHITECT

6-27-11
PLANS APPROVAL DATE

LICENSED LANDSCAPE ARCHITECT
JENNIFER TAIRA
No. 4622
08/31/11
RENEWAL DATE
02/24/11
DATE
STATE OF CALIFORNIA

THE STATE OF CALIFORNIA OR ITS OFFICERS OR AGENTS SHALL NOT BE RESPONSIBLE FOR THE ACCURACY OR COMPLETENESS OF SCANNED COPIES OF THIS PLAN SHEET.

NOTES:

1. FOR ACCURATE RIGHT OF WAY DATA, CONTACT RIGHT OF WAY ENGINEERING AT DISTRICT OFFICE.
2. EXISTING UTILITIES HAVE NOT BEEN PLOTTED ON THE PLANS.

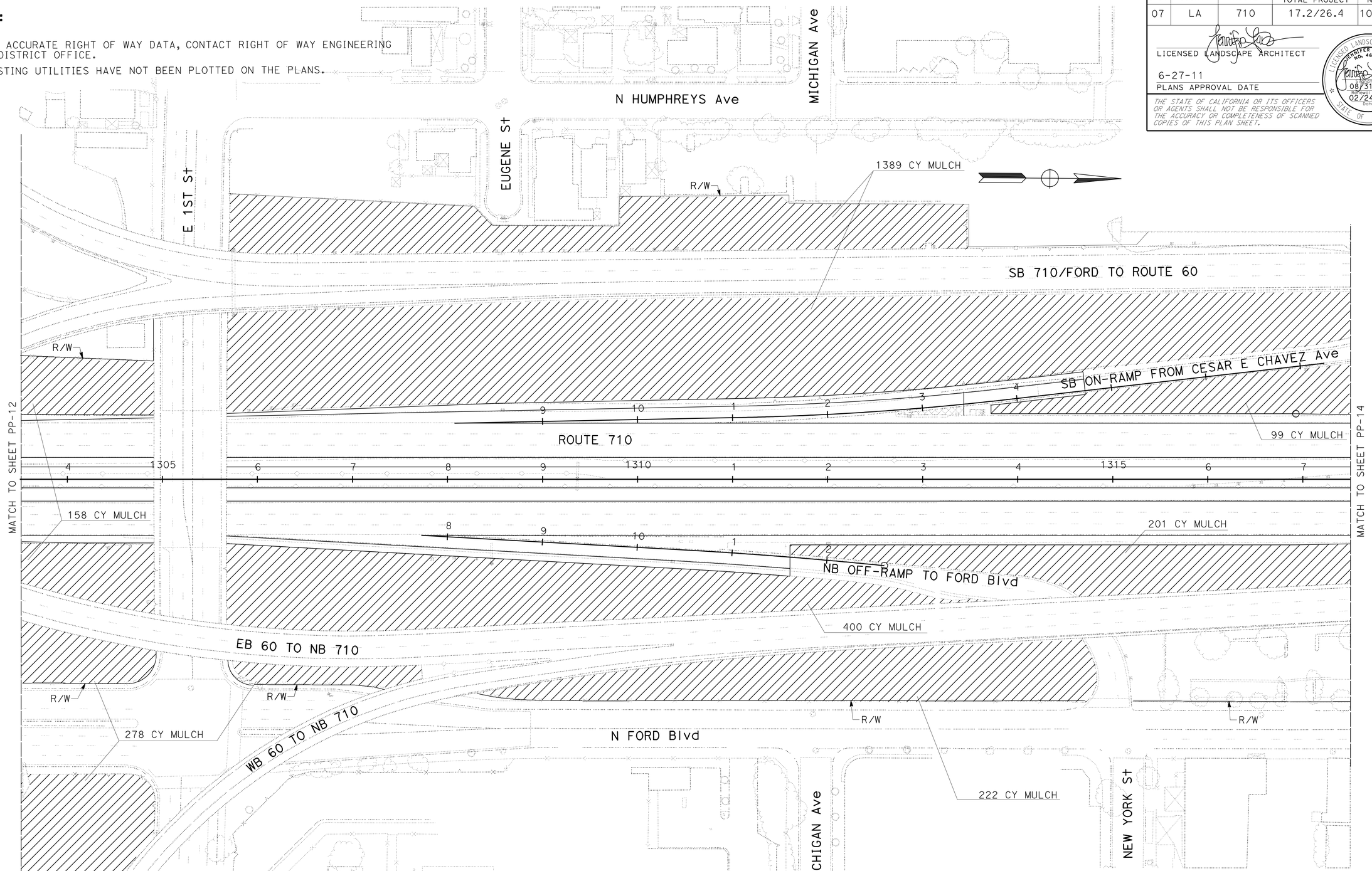

PLANTING PLAN

SCALE: 1" = 50'

PP-13

THIS PLAN ACCURATE FOR LANDSCAPE WORK ONLY.

STATE OF CALIFORNIA - DEPARTMENT OF TRANSPORTATION
Caltrans® LANDSCAPE ARCHITECTURE

SENIOR LANDSCAPE ARCHITECT: JENNIFER TAIRA
CALCULATED-DESIGNED BY: GLEN LEVSTIK
CHECKED BY: RICH KESTER
REVISED BY
DATE REVISED

LAST REVISION 00-00-00
DATE PLOTTED => 29-JUN-2011
TIME PLOTTED => 17:24

Dist	COUNTY	ROUTE	POST MILES TOTAL PROJECT	SHEET No.	TOTAL SHEETS
07	LA	710	17.2/26.4	1049	1507

LICENSED LANDSCAPE ARCHITECT

6-27-11
PLANS APPROVAL DATE

LICENSED LANDSCAPE ARCHITECT
JENNIFER TAIRA
NO. 4625
SIGNATURE
08/31/11
RENEWAL DATE
02/24/11
DATE
STATE OF CALIFORNIA

THE STATE OF CALIFORNIA OR ITS OFFICERS OR AGENTS SHALL NOT BE RESPONSIBLE FOR THE ACCURACY OR COMPLETENESS OF SCANNED COPIES OF THIS PLAN SHEET.

NOTES:

1. FOR ACCURATE RIGHT OF WAY DATA, CONTACT RIGHT OF WAY ENGINEERING AT DISTRICT OFFICE.
2. EXISTING UTILITIES HAVE NOT BEEN PLOTTED ON THE PLANS.

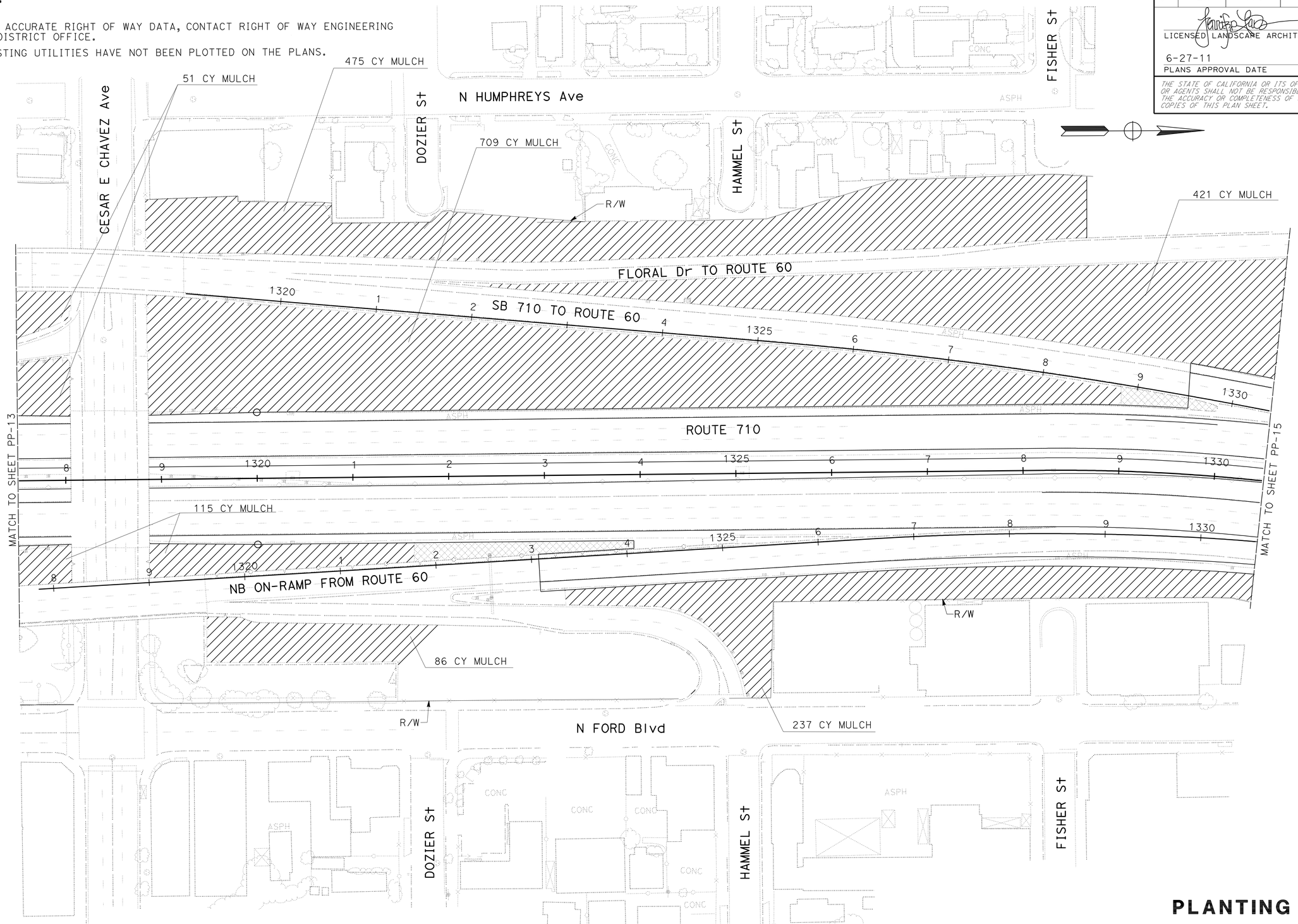

PLANTING PLAN

SCALE: 1" = 50'

PP-14

THIS PLAN ACCURATE FOR LANDSCAPE WORK ONLY.

STATE OF CALIFORNIA - DEPARTMENT OF TRANSPORTATION
Caltrans® LANDSCAPE ARCHITECTURE

SENIOR LANDSCAPE ARCHITECT: JENNIFER TAIRA
CALCULATED-DESIGNED BY: GLEN LEVSTIK
CHECKED BY: RICH KESTER
REVISED BY
DATE REVISED

LAST REVISION 00-00-00
DATE PLOTTED => 07-JUL-2011
TIME PLOTTED => 10:59

Dist	COUNTY	ROUTE	POST MILES TOTAL PROJECT	SHEET No.	TOTAL SHEETS
07	LA	710	17.2/26.4	1050	1507

LICENSED LANDSCAPE ARCHITECT

6-27-11
PLANS APPROVAL DATE

LICENSED LANDSCAPE ARCHITECT
JENNIFER TAIRA
No. 4625
STATE OF CALIFORNIA
Signature
08/31/11
Renewal Date
02/24/11
Date

THE STATE OF CALIFORNIA OR ITS OFFICERS OR AGENTS SHALL NOT BE RESPONSIBLE FOR THE ACCURACY OR COMPLETENESS OF SCANNED COPIES OF THIS PLAN SHEET.

NOTES:

1. FOR ACCURATE RIGHT OF WAY DATA, CONTACT RIGHT OF WAY ENGINEERING AT DISTRICT OFFICE.
2. EXISTING UTILITIES HAVE NOT BEEN PLOTTED ON THE PLANS.

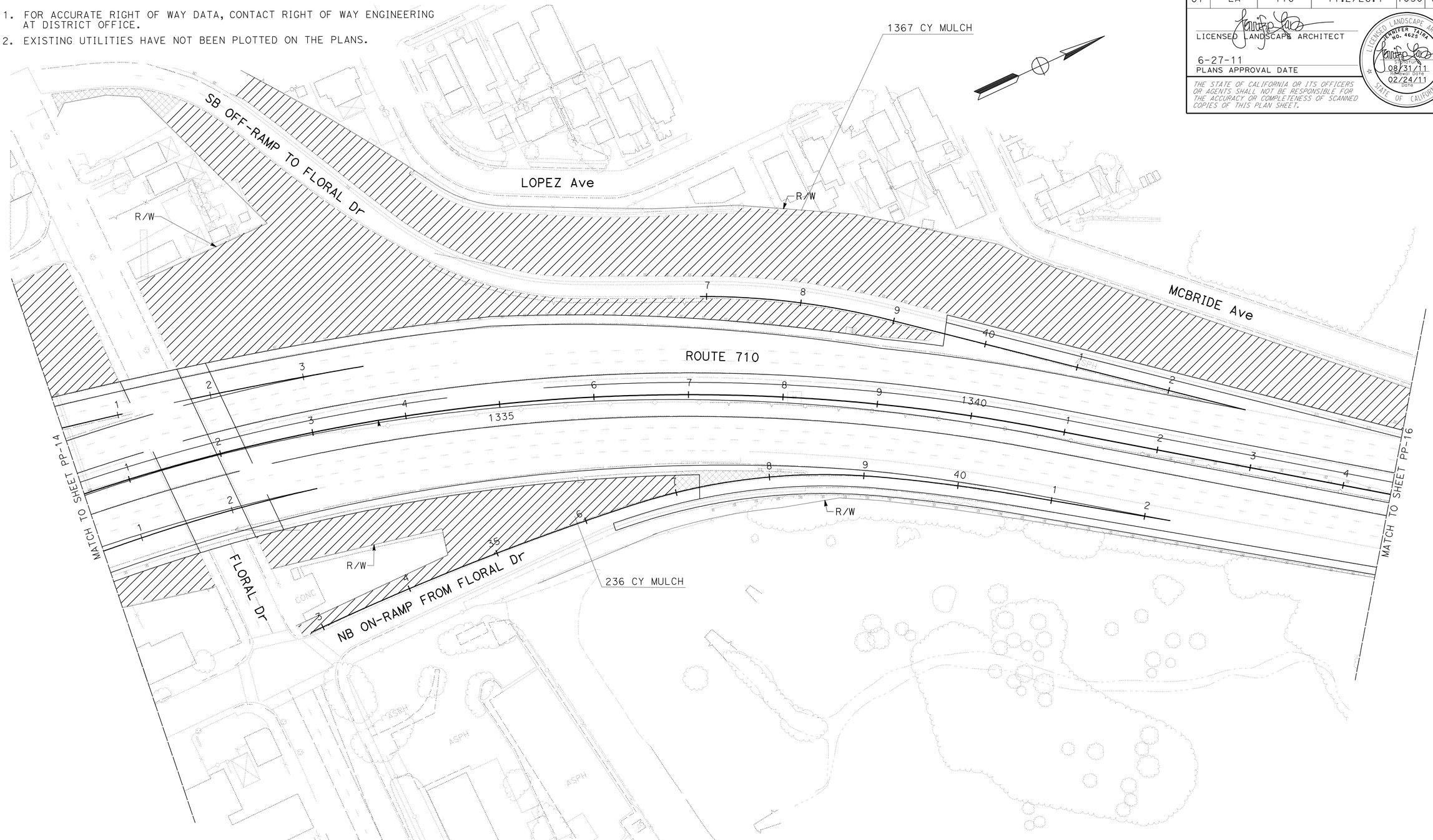

PLANTING PLAN

SCALE: 1" = 50'

PP-15

THIS PLAN ACCURATE FOR LANDSCAPE WORK ONLY.

STATE OF CALIFORNIA - DEPARTMENT OF TRANSPORTATION
Caltrans® LANDSCAPE ARCHITECTURE

SENIOR LANDSCAPE ARCHITECT: JENNIFER TAIRA

CALCULATED-DESIGNED BY: GLEN LEVSTIK
CHECKED BY: RICH KESTER

REVISED BY
DATE REVISED

LAST REVISION 00-00-00
DATE PLOTTED => 29-JUN-2011
TIME PLOTTED => 17:24

Dist	COUNTY	ROUTE	POST MILES TOTAL PROJECT	SHEET No.	TOTAL SHEETS
07	LA	710	17.2/26.4	1051	1507

LICENSED LANDSCAPE ARCHITECT

6-27-11
PLANS APPROVAL DATE

LICENSED LANDSCAPE ARCHITECT
JENNIFER TAIRA
No. 4622
STATUS
08/31/11
RENEWAL DATE
02/24/11
DATE
STATE OF CALIFORNIA

THE STATE OF CALIFORNIA OR ITS OFFICERS OR AGENTS SHALL NOT BE RESPONSIBLE FOR THE ACCURACY OR COMPLETENESS OF SCANNED COPIES OF THIS PLAN SHEET.

NOTES:

1. FOR ACCURATE RIGHT OF WAY DATA, CONTACT RIGHT OF WAY ENGINEERING AT DISTRICT OFFICE.
2. EXISTING UTILITIES HAVE NOT BEEN PLOTTED ON THE PLANS.

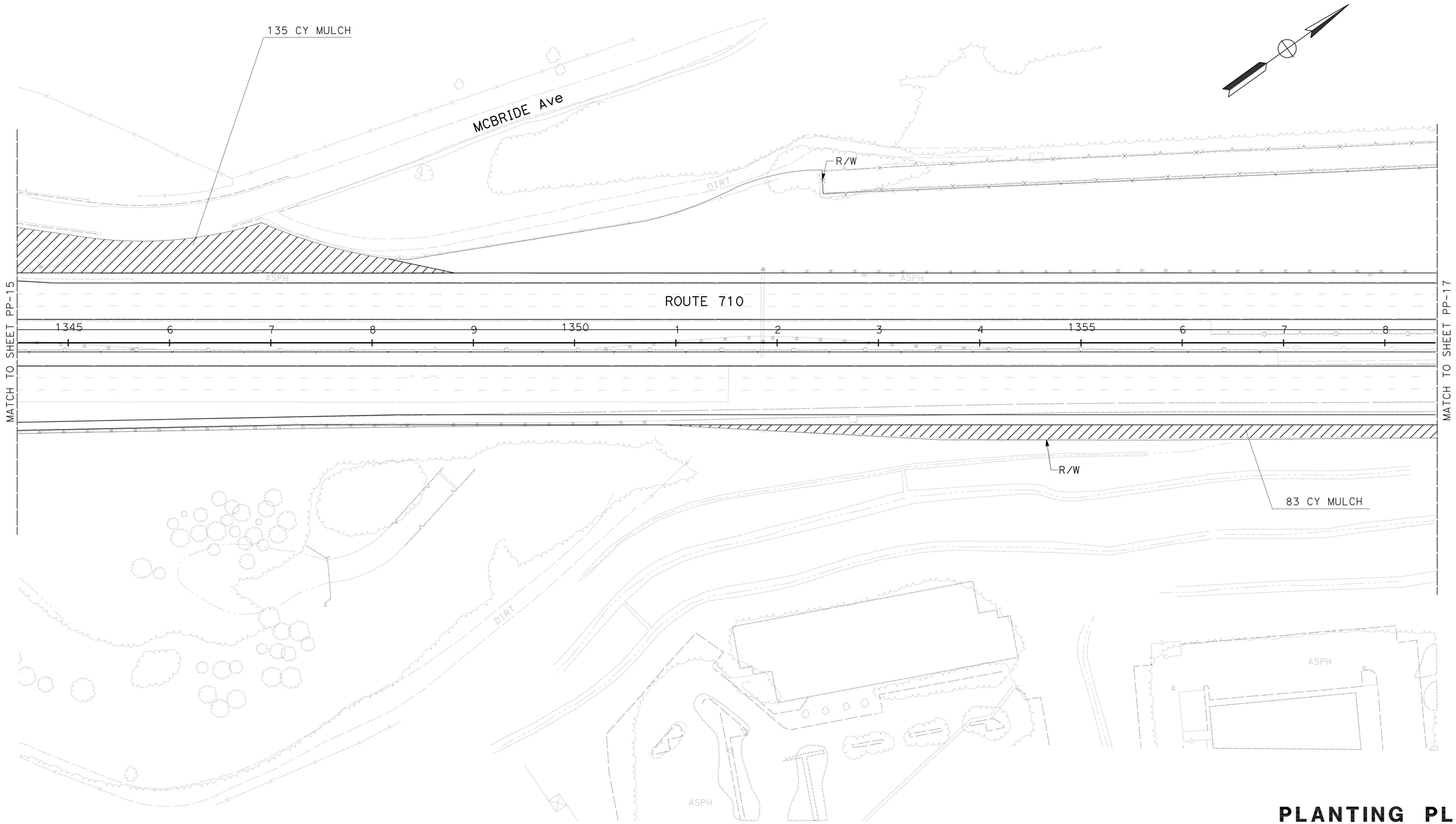

THIS PLAN ACCURATE FOR LANDSCAPE WORK ONLY.

PLANTING PLAN

SCALE: 1" = 50'

PP-16

STATE OF CALIFORNIA - DEPARTMENT OF TRANSPORTATION
Caltrans® LANDSCAPE ARCHITECTURE

SENIOR LANDSCAPE ARCHITECT: JENNIFER TAIRA

CALCULATED-DESIGNED BY: GLEN LEVSTIK
CHECKED BY: RICH KESTER
REVISED BY
DATE REVISED

LAST REVISION 00-00-00
DATE PLOTTED => 29-JUN-2011
TIME PLOTTED => 17:24

Dist	COUNTY	ROUTE	POST MILES TOTAL PROJECT	SHEET No.	TOTAL SHEETS
07	LA	710	17.2/26.4	1052	1507

LICENSED LANDSCAPE ARCHITECT

6-27-11
PLANS APPROVAL DATE

LICENSED LANDSCAPE ARCHITECT
JENNIFER TAIRA
No. 4623
STATUS
08/31/11
RENEWAL DATE
02/24/11
DATE
STATE OF CALIFORNIA

THE STATE OF CALIFORNIA OR ITS OFFICERS OR AGENTS SHALL NOT BE RESPONSIBLE FOR THE ACCURACY OR COMPLETENESS OF SCANNED COPIES OF THIS PLAN SHEET.

NOTES:

1. FOR ACCURATE RIGHT OF WAY DATA, CONTACT RIGHT OF WAY ENGINEERING AT DISTRICT OFFICE.
2. EXISTING UTILITIES HAVE NOT BEEN PLOTTED ON THE PLANS.

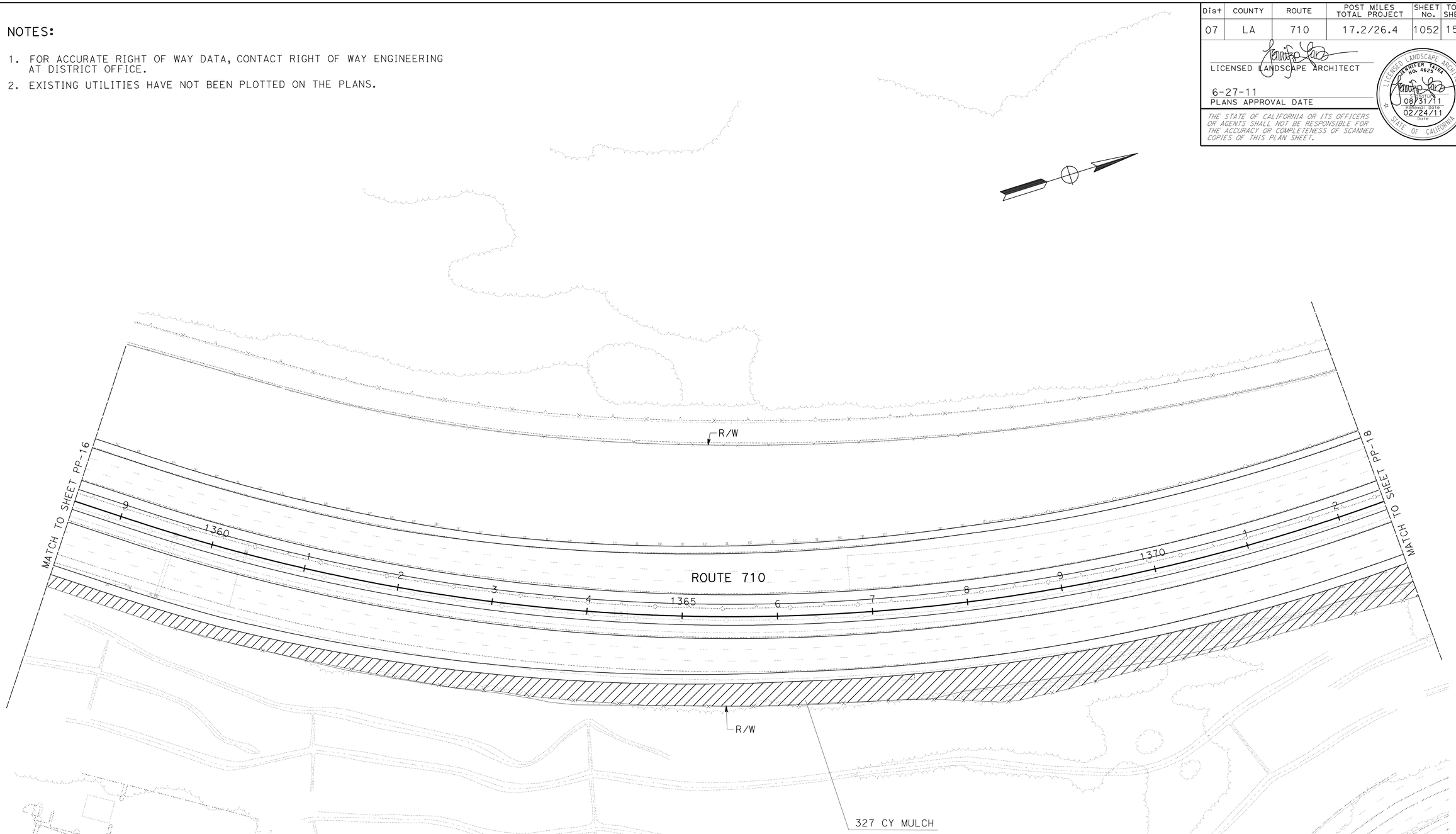

PLANTING PLAN

SCALE: 1" = 50'

PP-17

THIS PLAN ACCURATE FOR LANDSCAPE WORK ONLY.

STATE OF CALIFORNIA - DEPARTMENT OF TRANSPORTATION
Caltrans® LANDSCAPE ARCHITECTURE

SENIOR LANDSCAPE ARCHITECT: JENNIFER TAIRA
CALCULATED-DESIGNED BY: GLEN LEVSTIK
CHECKED BY: RICH KESTER
REVISED BY
DATE REVISED

LAST REVISION 00-00-00
DATE PLOTTED => 29-JUN-2011
TIME PLOTTED => 17:24

Dist	COUNTY	ROUTE	POST MILES TOTAL PROJECT	SHEET No.	TOTAL SHEETS
07	LA	710	17.2/26.4	1053	1507

LICENSED LANDSCAPE ARCHITECT

6-27-11
PLANS APPROVAL DATE

THE STATE OF CALIFORNIA OR ITS OFFICERS OR AGENTS SHALL NOT BE RESPONSIBLE FOR THE ACCURACY OR COMPLETENESS OF SCANNED COPIES OF THIS PLAN SHEET.

LICENSED LANDSCAPE ARCHITECT
JENNIFER TAIRA
No. 4623
STATUS 08/31/11
RENEWAL DATE 02/24/11
DATE
STATE OF CALIFORNIA

NOTES:

1. FOR ACCURATE RIGHT OF WAY DATA, CONTACT RIGHT OF WAY ENGINEERING AT DISTRICT OFFICE.
2. EXISTING UTILITIES HAVE NOT BEEN PLOTTED ON THE PLANS.

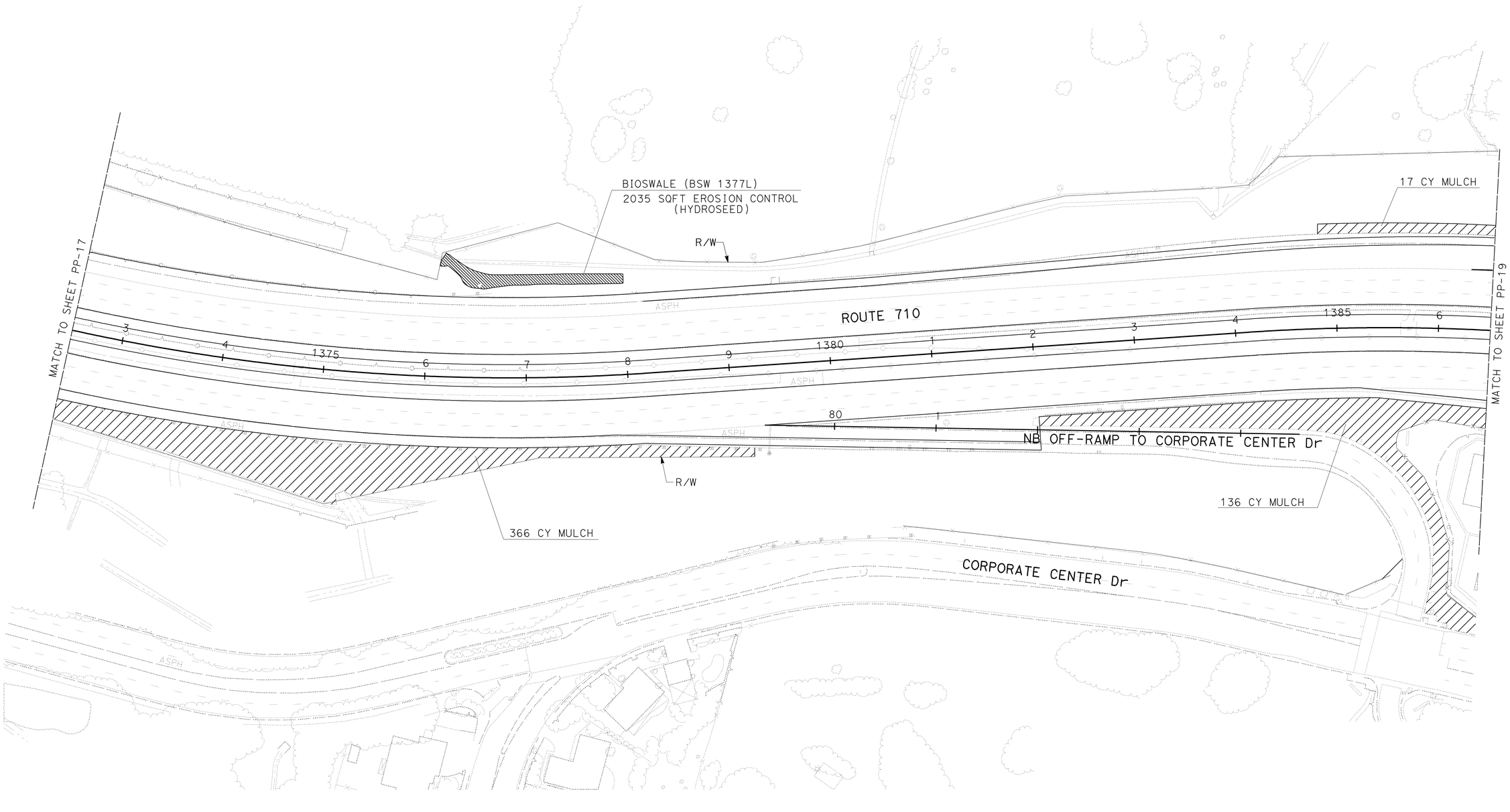

THIS PLAN ACCURATE FOR LANDSCAPE WORK ONLY.

PLANTING PLAN

SCALE: 1" = 50'

PP-18

STATE OF CALIFORNIA - DEPARTMENT OF TRANSPORTATION
Caltrans® LANDSCAPE ARCHITECTURE

SENIOR LANDSCAPE ARCHITECT: JENNIFER TAIRA
CALCULATED-DESIGNED BY: GLEN LEVSTIK
CHECKED BY: RICH KESTER
REVISED BY
DATE REVISED

LAST REVISION 00-00-00
DATE PLOTTED => 29-JUN-2011
TIME PLOTTED => 17:24

Dist	COUNTY	ROUTE	POST MILES TOTAL PROJECT	SHEET No.	TOTAL SHEETS
07	LA	710	17.2/26.4	1054	1507

LICENSED LANDSCAPE ARCHITECT

6-27-11
PLANS APPROVAL DATE

LICENSED LANDSCAPE ARCHITECT
JENNIFER TAIRA
No. 4622
SIGNATURE
08/31/11
RENEWAL DATE
02/24/11
DATE
STATE OF CALIFORNIA

THE STATE OF CALIFORNIA OR ITS OFFICERS OR AGENTS SHALL NOT BE RESPONSIBLE FOR THE ACCURACY OR COMPLETENESS OF SCANNED COPIES OF THIS PLAN SHEET.

NOTES:

1. FOR ACCURATE RIGHT OF WAY DATA, CONTACT RIGHT OF WAY ENGINEERING AT DISTRICT OFFICE.
2. EXISTING UTILITIES HAVE NOT BEEN PLOTTED ON THE PLANS.

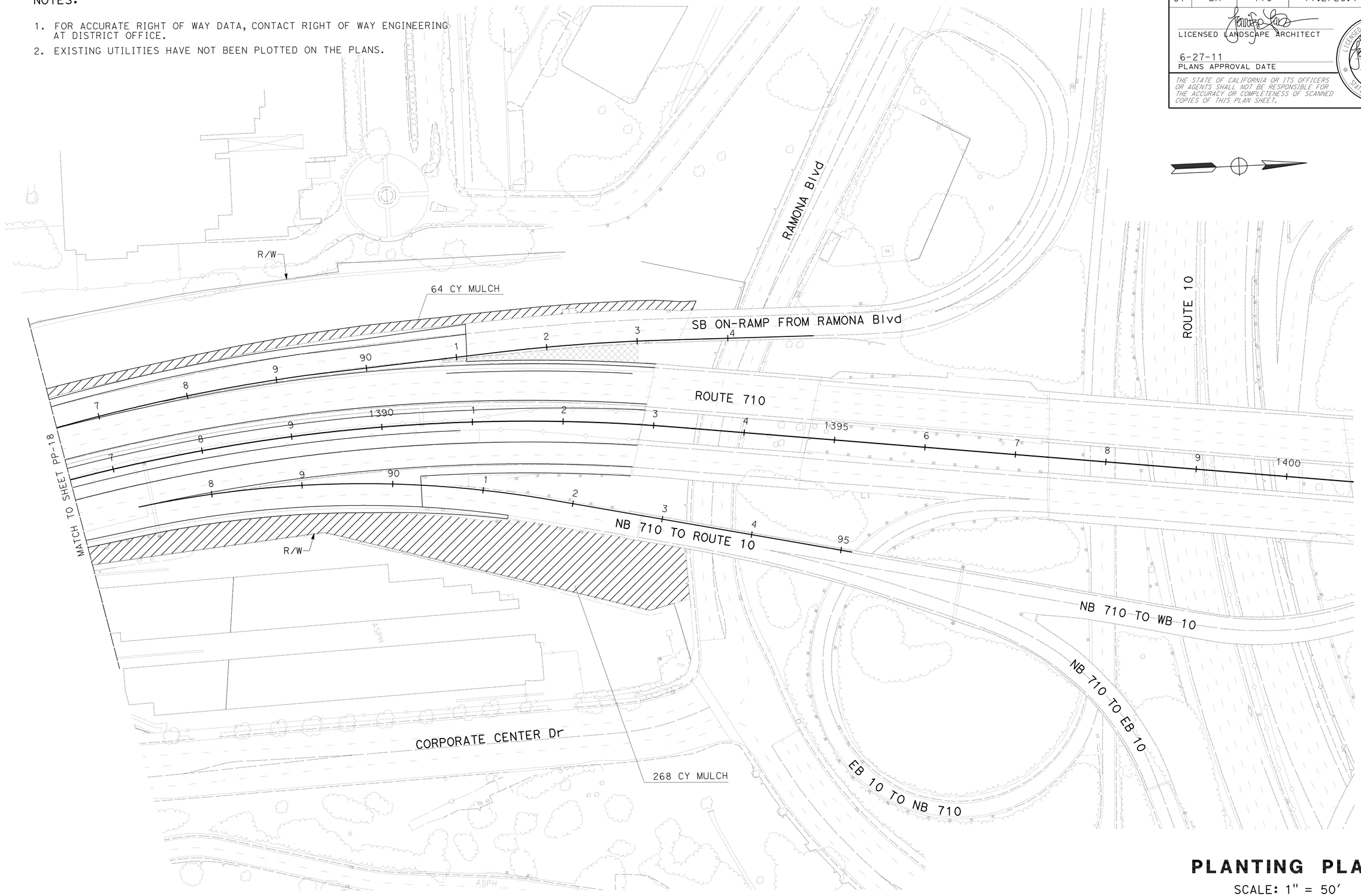

PLANTING PLAN

SCALE: 1" = 50'

PP-19

THIS PLAN ACCURATE FOR LANDSCAPE WORK ONLY.

STATE OF CALIFORNIA - DEPARTMENT OF TRANSPORTATION
Caltrans® LANDSCAPE ARCHITECTURE

SENIOR LANDSCAPE ARCHITECT: JENNIFER TAIRA
CALCULATED-DESIGNED BY: GLEN LEVSTIK
CHECKED BY: RICH KESTER
REVISED BY
DATE REVISED

LAST REVISION 00-00-00
DATE PLOTTED => 29-JUN-2011
TIME PLOTTED => 17:24

Dist	COUNTY	ROUTE	POST MILES TOTAL PROJECT	SHEET No.	TOTAL SHEETS
07	LA	710	17.2/26.4	1055	1507

LICENSED LANDSCAPE ARCHITECT

6-27-11
PLANS APPROVAL DATE

LICENSED LANDSCAPE ARCHITECT
JENNIFER TAIRA
NO. 4625
SIGNATURE
08/31/11
Renewal Date
02/24/11
Date
STATE OF CALIFORNIA

THE STATE OF CALIFORNIA OR ITS OFFICERS OR AGENTS SHALL NOT BE RESPONSIBLE FOR THE ACCURACY OR COMPLETENESS OF SCANNED COPIES OF THIS PLAN SHEET.

NOTES:

1. DIAMOND IMPRINT TO BE 32" WIDE BY 48" LONG.
2. LAYOUT CURVILINEAR LINES 60" PARALLEL TO EACH OTHER THEN STAMP DIAMOND SHAPES CENTERED ON CURVILINEAR LINES.
3. INTEGRAL COLOR FOR ALL MINOR CONCRETE (STAMPED CONCRETE) SHALL BE FEDERAL STANDARD COLOR NUMBER 33564. ALL DIAMOND SHAPES SHALL BE STAINED WITH FEDERAL STANDARD COLOR NUMBER 30266.

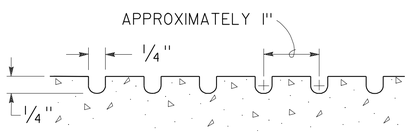

SECTION

GROOVE DETAIL

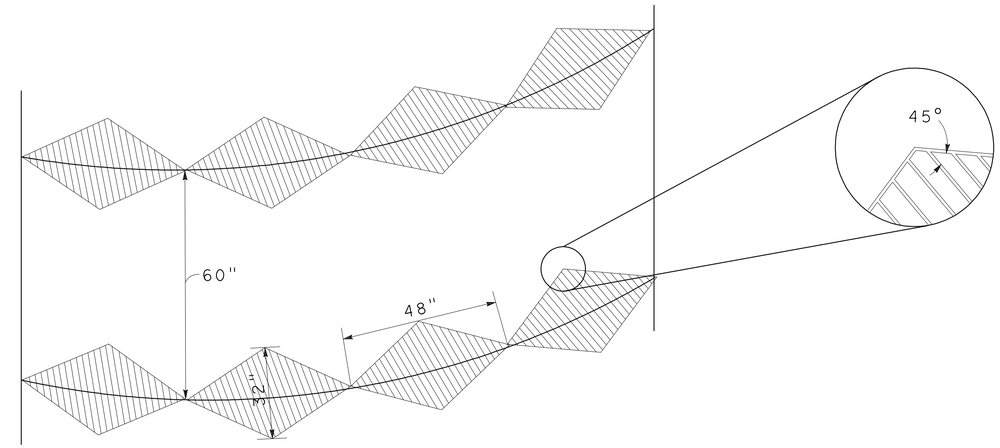

PLAN

TYPICAL LAYOUT

DIAMOND IMPRINT

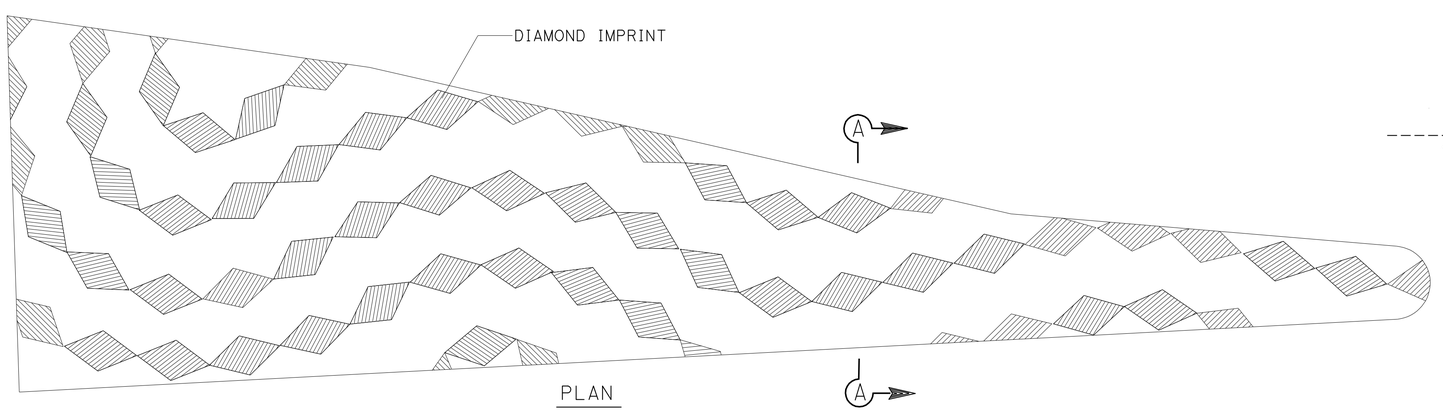

PLAN

EXAMPLE LAYOUT

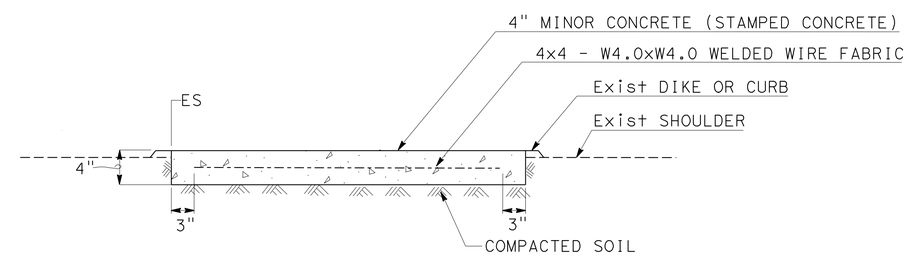

SECTION A-A

MINOR CONCRETE (STAMPED CONCRETE)

LANDSCAPE DETAILS

NO SCALE

LD-1

STATE OF CALIFORNIA - DEPARTMENT OF TRANSPORTATION
Caltrans® LANDSCAPE ARCHITECTURE

SENIOR LANDSCAPE ARCHITECT: JENNIFER TAIRA
CALCULATED-DESIGNED BY: GLEN LEVSTIK
CHECKED BY: RICH KESTER
REVISED BY
DATE REVISED

LAST REVISION 00-00-00
DATE PLOTTED => 07-JUL-2011
TIME PLOTTED => 10:59

Dist	COUNTY	ROUTE	POST MILES TOTAL PROJECT	SHEET No.	TOTAL SHEETS
07	LA	710	17.2/26.4	1056	1507

LICENSED LANDSCAPE ARCHITECT

6-27-11
PLANS APPROVAL DATE

LICENSED LANDSCAPE ARCHITECT
JENNIFER TAIRA
No. 4625
STATE OF CALIFORNIA
signature
08/31/11
Renewal date
02/24/11
Date

THE STATE OF CALIFORNIA OR ITS OFFICERS OR AGENTS SHALL NOT BE RESPONSIBLE FOR THE ACCURACY OR COMPLETENESS OF SCANNED COPIES OF THIS PLAN SHEET.

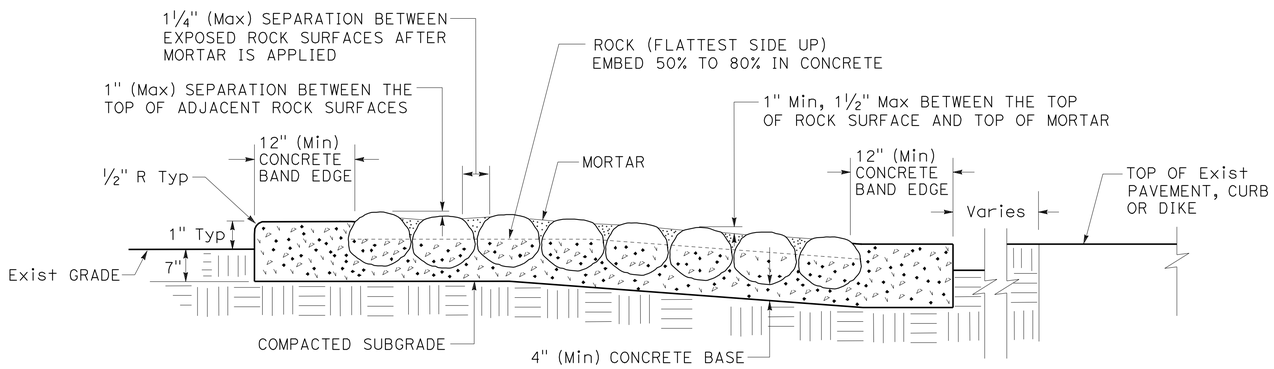

TYPICAL SECTION

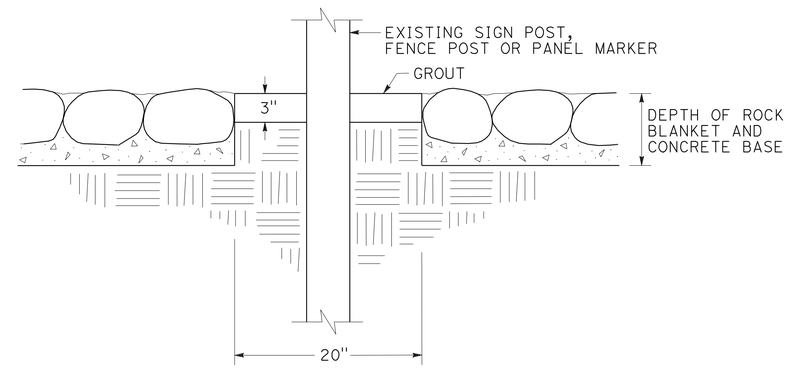

SECTION A-A

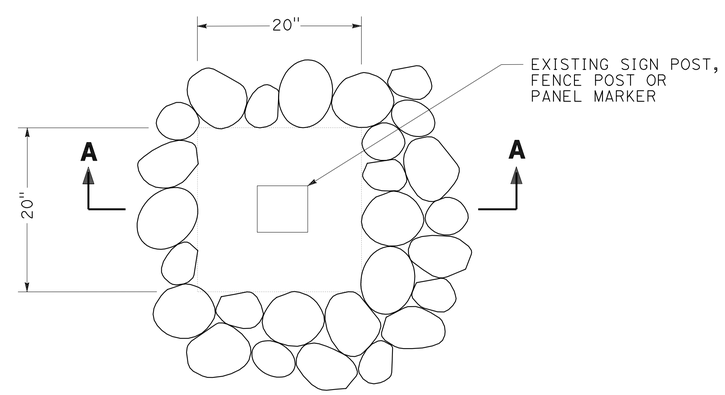

PLAN

POST TREATMENT

ROCK BLANKET

LANDSCAPE DETAILS

LD-2

STATE OF CALIFORNIA - DEPARTMENT OF TRANSPORTATION
Caltrans® LANDSCAPE ARCHITECTURE

SENIOR LANDSCAPE ARCHITECT: JENNIFER TAIRA
CALCULATED-DESIGNED BY: GLEN LEVSTIK
CHECKED BY: RICH KESTER
REVISED BY
DATE REVISED

LAST REVISION 00-00-00
DATE PLOTTED => 29-JUN-2011
TIME PLOTTED => 17:25

Dist	COUNTY	ROUTE	POST MILES TOTAL PROJECT	SHEET No.	TOTAL SHEETS
07	LA	710	17.2/26.4	1057	1507

LICENSED LANDSCAPE ARCHITECT

6-27-11
PLANS APPROVAL DATE

LICENSED LANDSCAPE ARCHITECT
JENNIFER TAIRA
NO. 4625
SIGNATURE
08/31/11
Renewal Date
2/24/11
Date
STATE OF CALIFORNIA

THE STATE OF CALIFORNIA OR ITS OFFICERS OR AGENTS SHALL NOT BE RESPONSIBLE FOR THE ACCURACY OR COMPLETENESS OF SCANNED COPIES OF THIS PLAN SHEET.

NOTE:

ARCHITECTURAL SURFACE (TEXTURED CONCRETE) TO BE ON BOTH SIDES OF ALL CONCRETE BARRIER: (TYPE 60), (TYPE 60W MOD), (TYPE 60G), (TYPE 60R), (TYPE 60GC), (TYPE 60GCR), (TYPE 60S), (TYPE 60 SW MOD), (TYPE 60 SC), AND (TYPE 60SE)

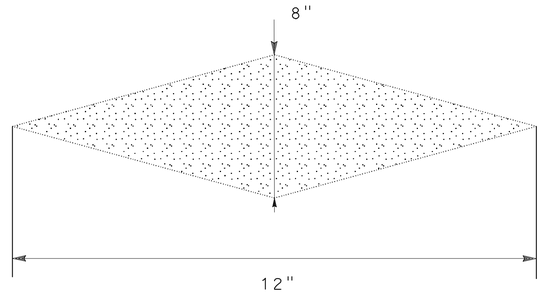

DIAMOND DETAIL

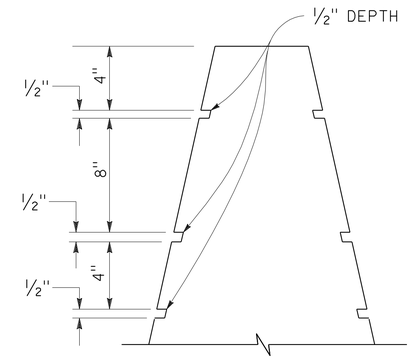

SECTION A-A

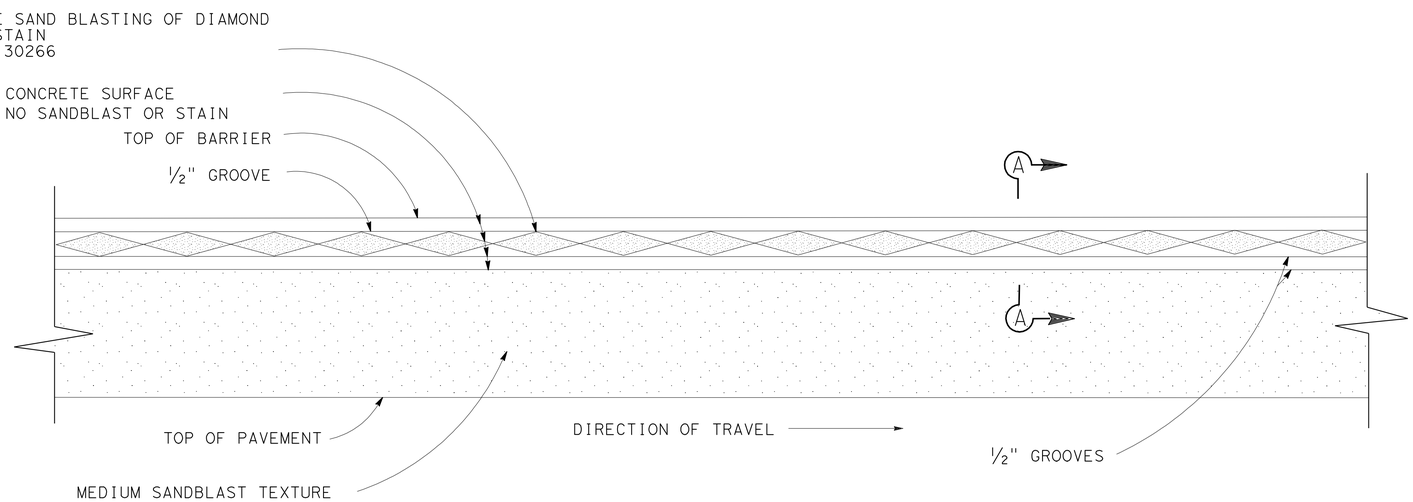

ARCHITECTURAL SURFACE (TEXTURED CONCRETE)

LANDSCAPE DETAILS

NO SCALE

LD-3

STATE OF CALIFORNIA - DEPARTMENT OF TRANSPORTATION
Caltrans® LANDSCAPE ARCHITECTURE

SENIOR LANDSCAPE ARCHITECT: JENNIFER TAIRA

CALCULATED-DESIGNED BY: GLEN LEVSTIK
CHECKED BY: RICH KESTER
REVISED BY
DATE REVISED

LAST REVISION 00-00-00
DATE PLOTTED => 07-JUL-2011
TIME PLOTTED => 10:59

Dist	COUNTY	ROUTE	POST MILES TOTAL PROJECT	SHEET No.	TOTAL SHEETS
07	LA	710	17.2/26.4	1058	1507

LICENSED LANDSCAPE ARCHITECT

6-27-11
PLANS APPROVAL DATE

LICENSED LANDSCAPE ARCHITECT JENNIFER TAIRA No. 4625 STATE OF CALIFORNIA
Signature
08/31/11
Renewal Date
2/24/11
Date

THE STATE OF CALIFORNIA OR ITS OFFICERS OR AGENTS SHALL NOT BE RESPONSIBLE FOR THE ACCURACY OR COMPLETENESS OF SCANNED COPIES OF THIS PLAN SHEET.

LEGEND

	SYMBOL	NOMINAL SIZE	TEXTURE	COLOR
A		8" x 8" x 16"	SPLIT FACE	BOTH SIDES TAN
B		8" x 8" x 16"	SPLIT FACE 4 SCORE	BOTH SIDES TAN

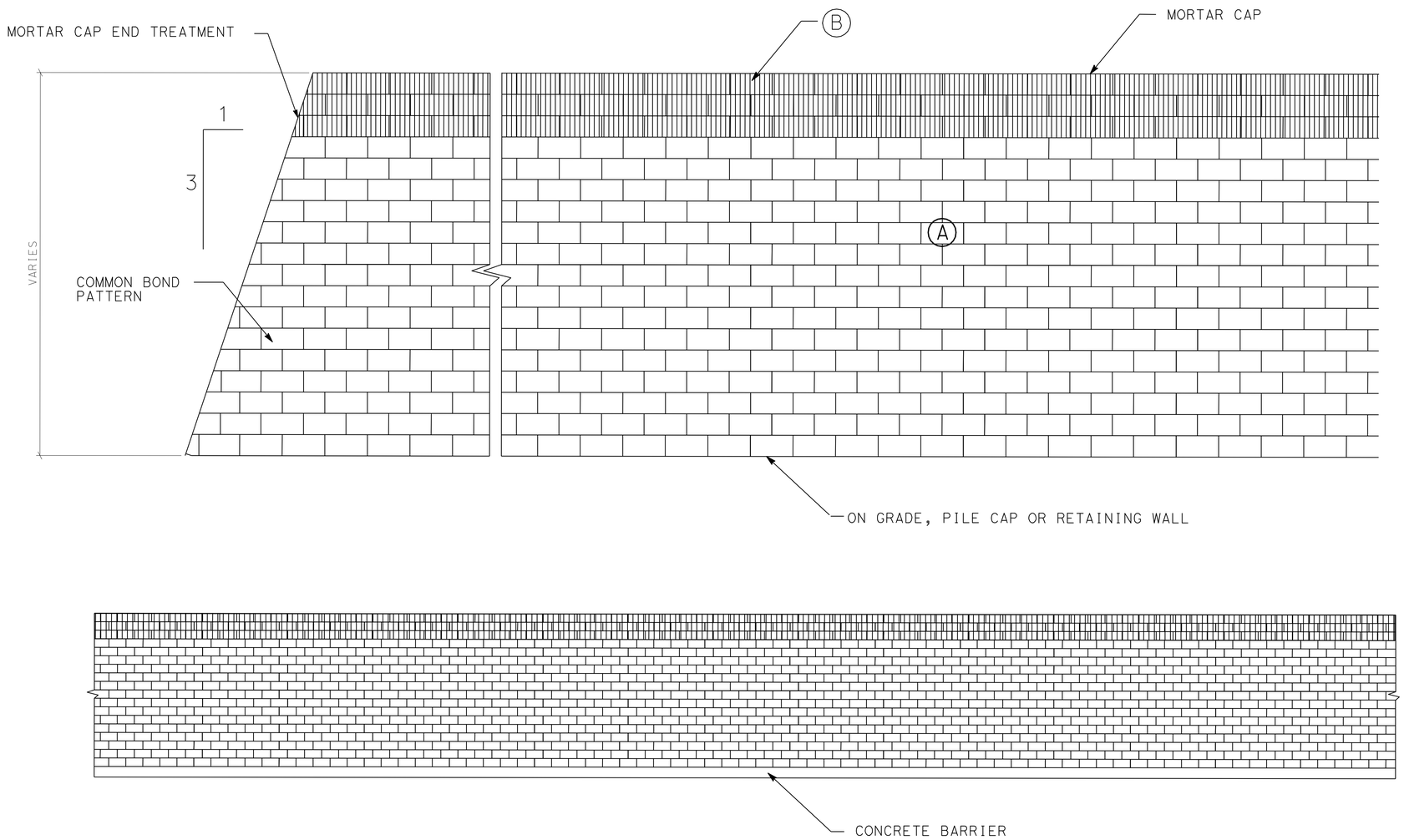

SOUND WALL AESTHETICS

SOUND WALL No. 1239

ACCURATE FOR SOUNDWALL AESTHETIC FEATURES ONLY

SECTION

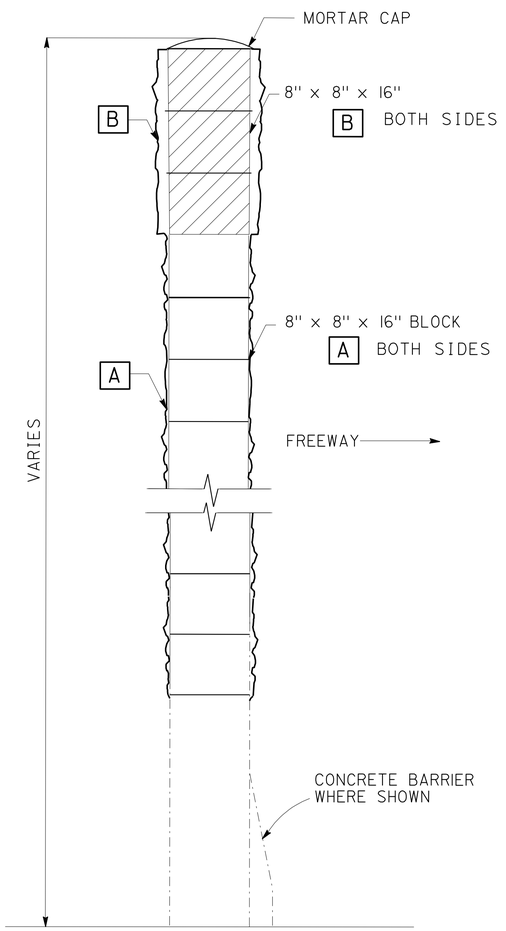

SOUND WALL

LANDSCAPE DETAILS

LD-4

STATE OF CALIFORNIA - DEPARTMENT OF TRANSPORTATION
Caltrans® LANDSCAPE ARCHITECTURE

SENIOR LANDSCAPE ARCHITECT: JENNIFER TAIRA
CALCULATED-DESIGNED BY: GLEN LEVSTIK
CHECKED BY: RICH KESTER
REVISED BY
DATE REVISED

LAST REVISION 00-00-00
DATE PLOTTED => 29-JUN-2011
TIME PLOTTED => 17:25

Dist	COUNTY	ROUTE	POST MILES TOTAL PROJECT	SHEET No.	TOTAL SHEETS
07	LA	710	17.2/26.4	1059	1507

LICENSED LANDSCAPE ARCHITECT

6-27-11
PLANS APPROVAL DATE

LICENSED LANDSCAPE ARCHITECT JENNIFER TAIRA No. 4623 STATUS 08/31/11 RENEWAL DATE 02/24/11 DATE STATE OF CALIFORNIA

THE STATE OF CALIFORNIA OR ITS OFFICERS OR AGENTS SHALL NOT BE RESPONSIBLE FOR THE ACCURACY OR COMPLETENESS OF SCANNED COPIES OF THIS PLAN SHEET.

LEGEND

	SYMBOL	NOMINAL SIZE	TEXTURE	COLOR
A		8" x 8" x 16"	STANDARD CONCRETE BLOCK	BOTH SIDES GRAY
B		8" x 8" x 16"	SPLIT FACE	BOTH SIDES LT.TAN

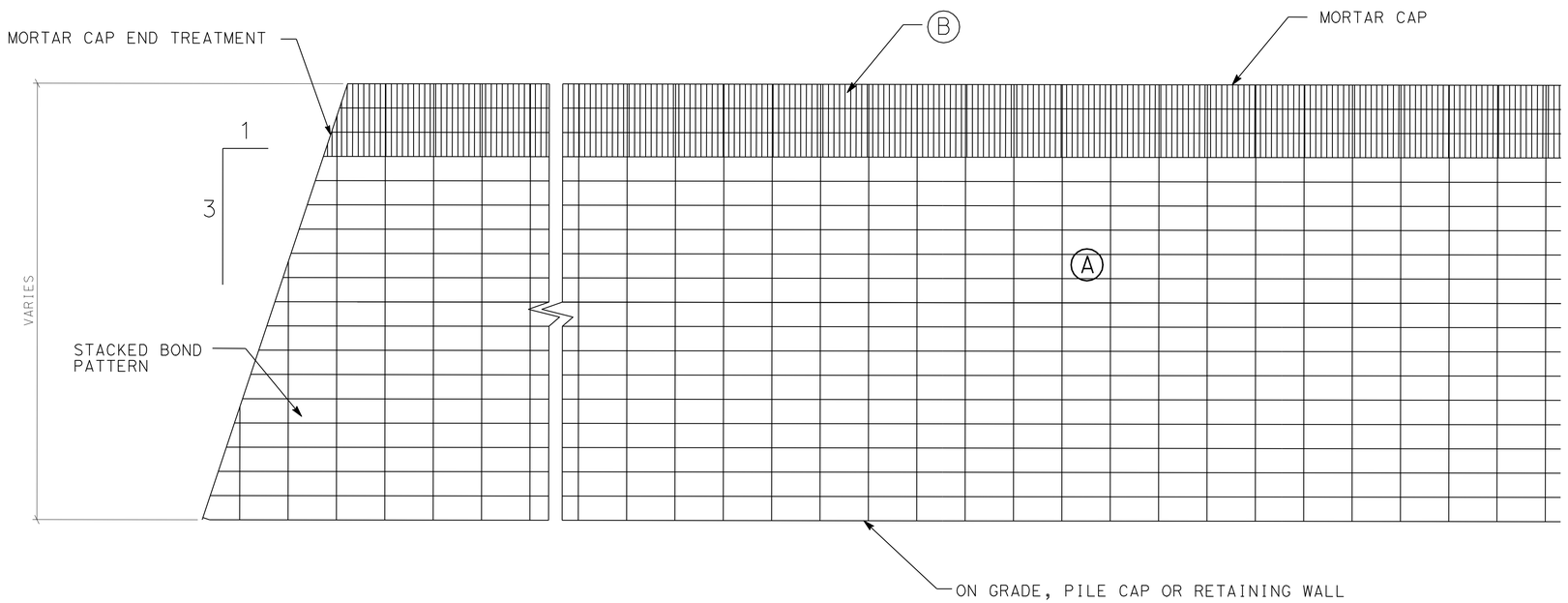

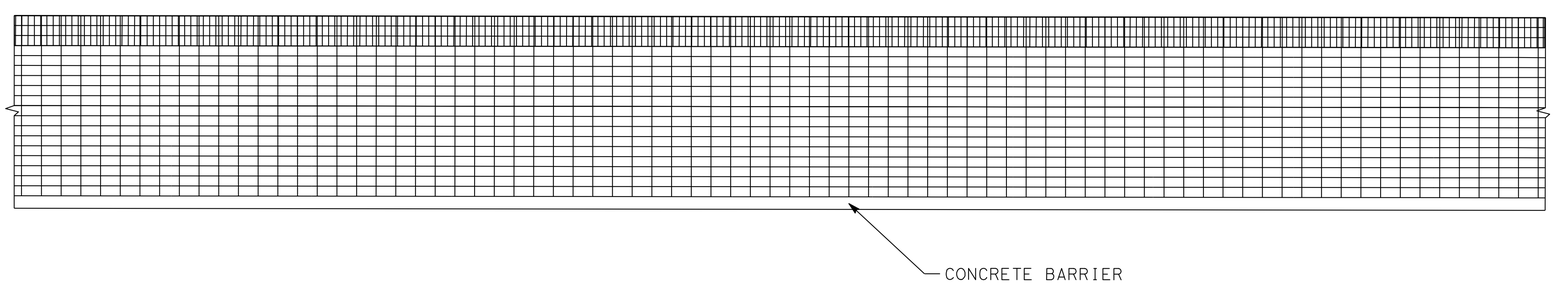

SOUNDWALL AESTHETIC

SOUND WALL No. 1256

ACCURATE FOR SOUNDWALL AESTHETIC FEATURES ONLY

SECTION

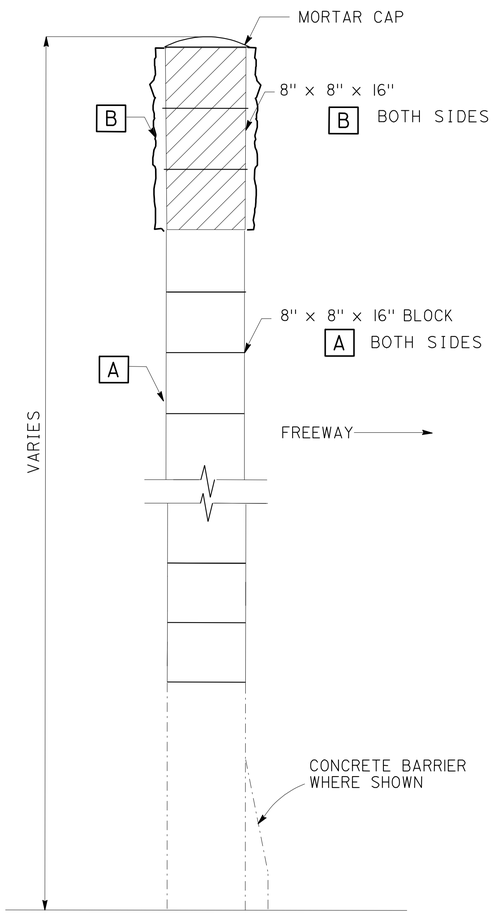

SOUND WALL

LANDSCAPE DETAILS

LD-5

STATE OF CALIFORNIA - DEPARTMENT OF TRANSPORTATION
Caltrans® LANDSCAPE ARCHITECTURE

SENIOR LANDSCAPE ARCHITECT: JENNIFER TAIRA
CALCULATED-DESIGNED BY: GLEN LEVSTIK
CHECKED BY: RICH KESTER
REVISED BY
DATE REVISED

LAST REVISION 00-00-00
DATE PLOTTED => 29-JUN-2011
TIME PLOTTED => 17:25

Dist	COUNTY	ROUTE	POST MILES TOTAL PROJECT	SHEET No.	TOTAL SHEETS
07	LA	710	17.2/26.4	1060	1507

REGISTERED ELECTRICAL ENGINEER 4/4/11 DATE

6-27-11
PLANS APPROVAL DATE

REGISTERED PROFESSIONAL ENGINEER STANLEY L. JOHNSON No. E 16761 Exp. 09/30/12 ELECTRICAL STATE OF CALIFORNIA

THE STATE OF CALIFORNIA OR ITS OFFICERS OR AGENTS SHALL NOT BE RESPONSIBLE FOR THE ACCURACY OR COMPLETENESS OF SCANNED COPIES OF THIS PLAN SHEET.

GENERAL NOTES: (SHEETS E-2 TO E-22)

1. POLE REFERENCE NUMBERS ARE POST MILES LOCATIONS WITH RESPECT TO MAINLINE CENTER LINE.
2. INSTALL 150 W, 240 V LAMPS FOR PENDANT SOFFIT LUMINAIRES.
3. COUNTY OF LOS ANGELES WILL FURNISH AND CONNECT PENDANT SOFFIT LIGHTING ELECTRIC SERVICE IN FUTURE AT LOS ANGELES RIVER (Br No. 53-0828)
4. PENDANT SOFFIT SUSPENSION CONDUIT LENGTH WILL BE DETERMINED BY THE ENGINEER.
5. RS TYPE HM 80 ELECTROLIERS DURING TEMPORARY LIGHTING REMOVAL.

LEGEND: (FOR SHEETS E-2 TO E-5 AND E-22)

G — LUM ON WOOD POLE WITH PORTABLE GENERATOR FOR TEMPORARY LIGHTING

G — TYPE HM 80 ELECTROLIER WITH PORTABLE GENERATOR FOR TEMPORARY LIGHTING

P# PENDANT SOFFIT LUM No.

ID IDENTIFICATION

PROJECT NOTES: (SHEETS E-2 TO E-22)

1. 2"C, 2#8 (SOFFIT LIGHTING), 1#8G.
2. RC mv SIGN LIGHTING EQUIPMENT.
3. RC SOFFIT LAMP AND BALLAST. INSTALL SOFFIT LAMP AND BALLAST.
4. INSTALL TYPE 4 CONDUIT BETWEEN No. 5 PULL BOX AND No. 9 PULL BOX AT THE END OF CONCRETE BARRIER.
5. RC ELECTROLIER. INSTALL ELECTROLIER WITH 235 W LED LUM.
6. RC ELECTROLIER. INSTALL ELECTROLIER WITH 165 W LED LUM.
7. RC SOFFIT lum. INSTALL 100 W, 240 V SOFFIT LUM.
8. 2"C, 2#8, 1#8G. (CONDUIT INSIDE DECK)
9. ¾"C, 2#8, 1#8G. SUSPENSION CONDUIT BETWEEN SOFFIT LUM AND No. 8 PB.
10. Exist TYPE III-BF SERVICE EQUIPMENT ENCLOSURE (CITY OF VERNON) WITH:
    100 A, 240 V, 2P, CB (MAIN)
    20 A, 240 V, 2P, CB (SOFFIT LIGHTING)
    15 A, 120 V, 1P, CB (PEC)
11. Exist TYPE III-BF SERVICE EQUIPMENT ENCLOSURE (CITY OF BELL) WITH:
    100 A, 240 V, 2P, CB (MAIN)
    20 A, 240 V, 2P, CB (SOFFIT LIGHTING)
    15 A, 120 V, 1P, CB (PEC)
12. Exist SERVICE EQUIPMENT ENCLOSURE (COUNTY OF LOS ANGELES) WITH:
    100 A, 240 V, 2P, CB (MAIN)
    20 A, 240 V, 2P, CB (SOFFIT LIGHTING)
    15 A, 120 V, 1P, CB (PEC)

WIRING DIAGRAM LEGEND: (SHEETS E-22 TO E-33)

- INSTALL 235 W LED LAMP
- INSTALL 165 W LED LAMP
- INSTALL 85 W ISL LAMP AND BALLAST
- INSTALL CONDUCTOR
- COUNTY OF LOS ANGELES-INSTALLED CONDUCTOR AND SPLICE (FUTURE)
- RC LAMP AND BALLAST
- Exist LAMP AND BALLAST
- RC SIGN LAMP AND BALLAST
- Exist SIGN LAMP AND BALLAST
- INSTALL SOFFIT LAMP AND BALLAST
- RC SOFFIT LAMP AND BALLAST
- Exist SOFFIT LAMP AND BALLAST
- RC CONDUCTOR
- Exist CONDUCTOR
- SPLICE CONDUCTOR
- Exist SPLICE
- F Exist FLOURESCENT LAMP AND BALLAST

THIS PLAN IS ACCURATE FOR ELECTRICAL WORK ONLY.

LIGHTING (TEMPORARY)
MODIFY LIGHTING
AND SIGN ILLUMINATION
LIGHTING (BIKEWAY)

(LEGENDS AND NOTES)

E-1

STATE OF CALIFORNIA - DEPARTMENT OF TRANSPORTATION
Caltrans® TRAFFIC DESIGN

FUNCTIONAL SUPERVISOR: HASSAN MANNAA
CALCULATED-DESIGNED BY: STANLEY L. JOHNSON
CHECKED BY: HASSAN MANNAA
REVISED BY
DATE REVISED

LAST REVISION 00-00-00
DATE PLOTTED => 29-JUN-2011
TIME PLOTTED => 11:15

Dist	COUNTY	ROUTE	POST MILES TOTAL PROJECT	SHEET No.	TOTAL SHEETS
07	LA	710	17.2/26.4	1061	1507

REGISTERED ELECTRICAL ENGINEER 4/4/11 DATE

6-27-11
PLANS APPROVAL DATE

REGISTERED PROFESSIONAL ENGINEER STANLEY L. JOHNSON No. E 16761 Exp. 09/30/12 ELECTRICAL STATE OF CALIFORNIA

THE STATE OF CALIFORNIA OR ITS OFFICERS OR AGENTS SHALL NOT BE RESPONSIBLE FOR THE ACCURACY OR COMPLETENESS OF SCANNED COPIES OF THIS PLAN SHEET.

FOR ACCURATE RIGHT OF WAY DATA, CONTACT
RIGHT OF WAY ENGINEERING AT THE DISTRICT OFFICE.

Exist 100 A, 120/240 V TYPE III-BF SERVICE
EQUIPMENT ENCLOSURE WITH:
100 A, 240 V, 2P, CB (MAIN)
40 A, 240 V, 2P, CB (LIGHTING)
20 A, 240 V, 2P, CB (SIGN ILLUMINATION)
ADDRESS: 4491 1/2 UNION PACIFIC Ave
ID No. 07-53-0050-013.915

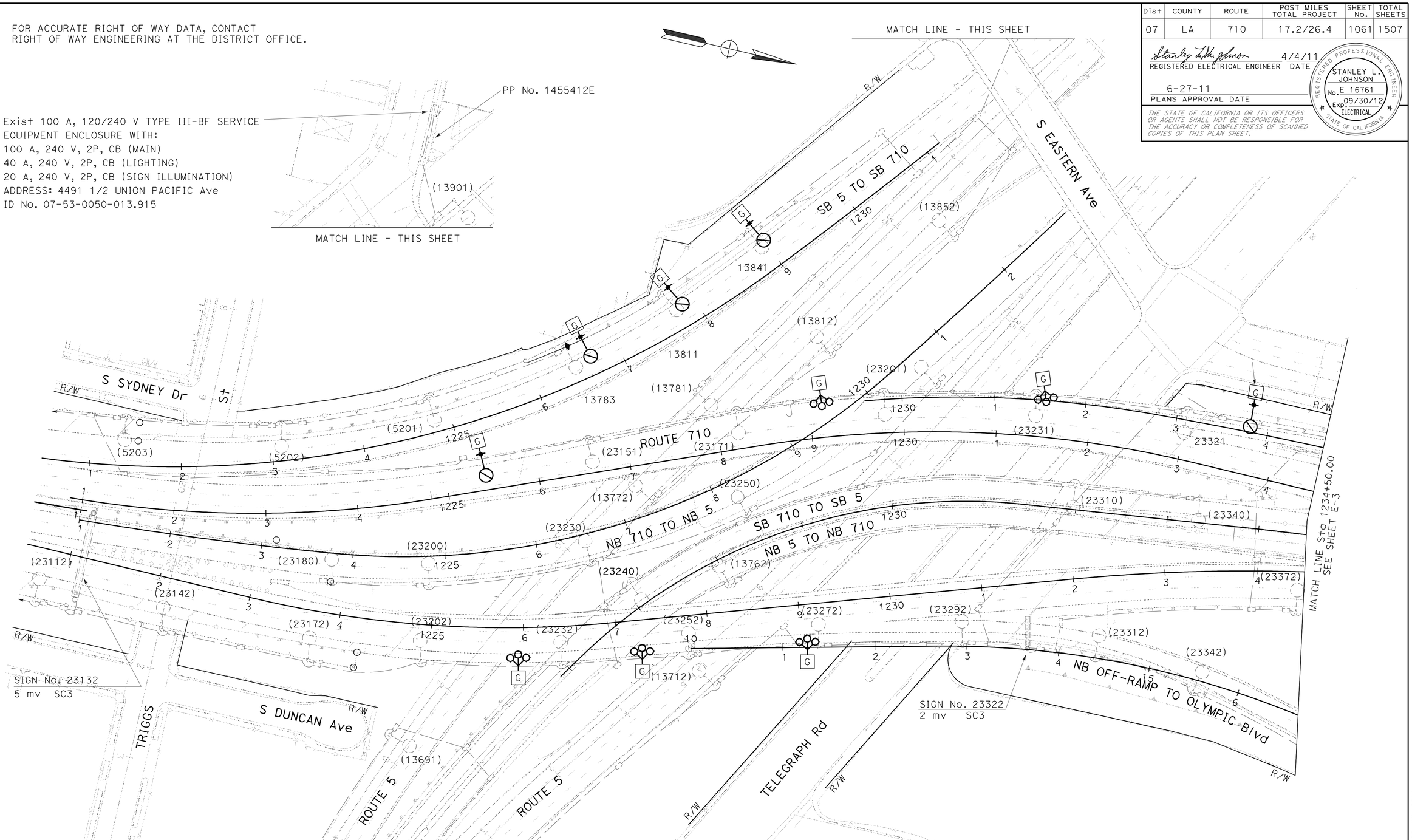

FOR PROJECT NOTES, SEE SHEET E-1.
FOR TEMPORARY LIGHTING WOOD POLE DETAILS, SEE SHEET E-34.
THIS PLAN IS ACCURATE FOR ELECTRICAL WORK ONLY.

LIGHTING (TEMPORARY)

SCALE: 1" = 50'

E-2

STATE OF CALIFORNIA - DEPARTMENT OF TRANSPORTATION
Caltrans® TRAFFIC DESIGN

FUNCTIONAL SUPERVISOR: HASSAN MANNAA
CALCULATED-DESIGNED BY: STANLEY L. JOHNSON
CHECKED BY: HASSAN MANNAA
REVISED BY
DATE REVISED

LAST REVISION 00-00-00 | DATE PLOTTED => 29-JUN-2011 | TIME PLOTTED => 11:15

Dist	COUNTY	ROUTE	POST MILES TOTAL PROJECT	SHEET No.	TOTAL SHEETS
07	LA	710	17.2/26.4	1062	1507

Stanley L. Johnson 4/4/11
REGISTERED ELECTRICAL ENGINEER DATE

6-27-11
PLANS APPROVAL DATE

REGISTERED PROFESSIONAL ENGINEER
STANLEY L. JOHNSON
No. E 16761
Exp. 09/30/12
ELECTRICAL
STATE OF CALIFORNIA

THE STATE OF CALIFORNIA OR ITS OFFICERS OR AGENTS SHALL NOT BE RESPONSIBLE FOR THE ACCURACY OR COMPLETENESS OF SCANNED COPIES OF THIS PLAN SHEET.

FOR ACCURATE RIGHT OF WAY DATA, CONTACT
RIGHT OF WAY ENGINEERING AT THE DISTRICT OFFICE.

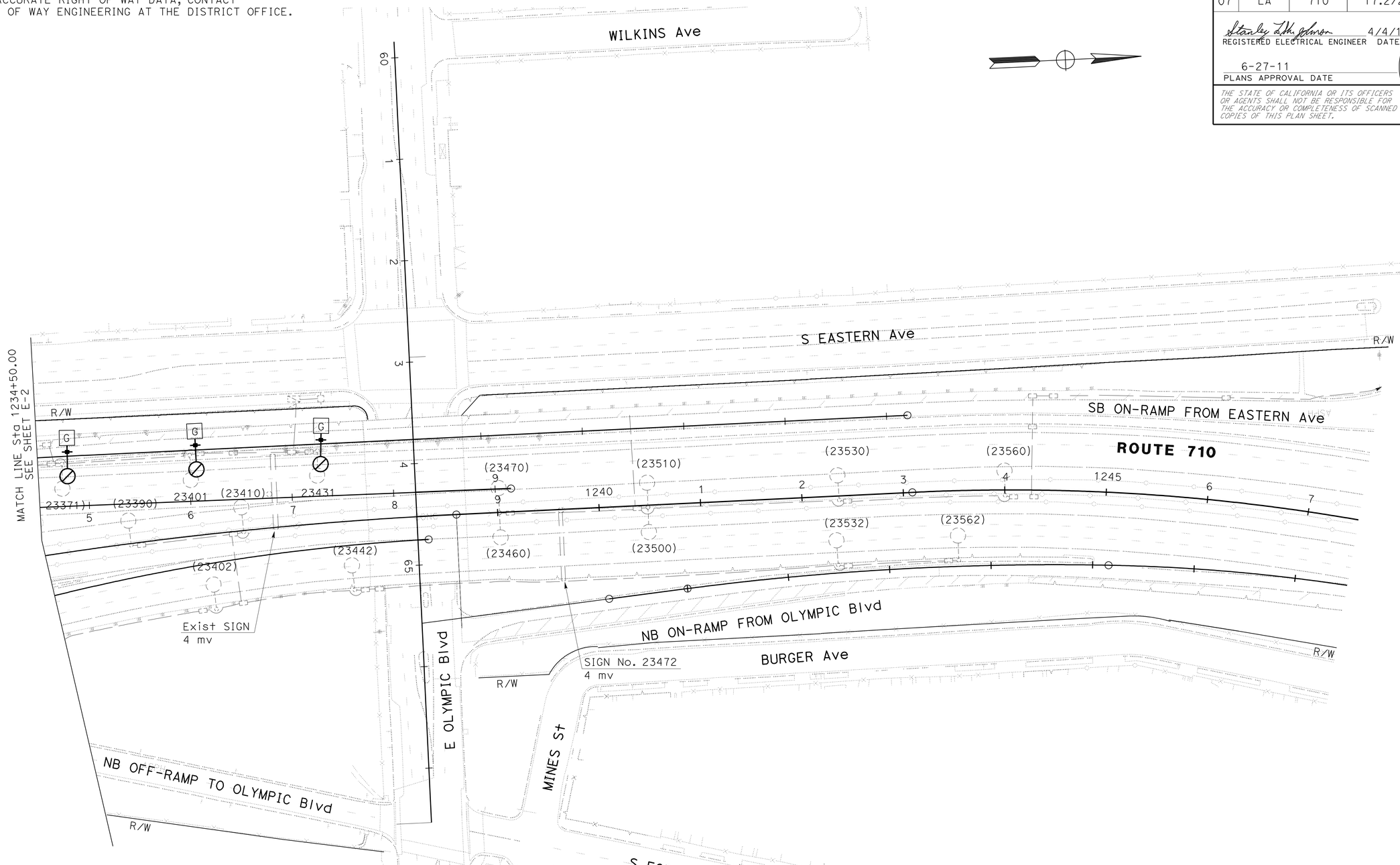

FOR PROJECT NOTES, SEE SHEET E-1.
FOR TEMPORARY LIGHTING WOOD POLE DETAILS, SEE SHEETS E-34.
THIS PLAN IS ACCURATE FOR ELECTRICAL WORK ONLY.

LIGHTING (TEMPORARY)

SCALE: 1" = 50'

E-3

STATE OF CALIFORNIA - DEPARTMENT OF TRANSPORTATION
Caltrans® **TRAFFIC DESIGN**

FUNCTIONAL SUPERVISOR: HASSAN MANNAA
CALCULATED-DESIGNED BY: STANLEY L. JOHNSON
CHECKED BY: HASSAN MANNAA
REVISED BY
DATE REVISED

LAST REVISION 00-00-00
DATE PLOTTED => 29-JUN-2011
TIME PLOTTED => 11:16

Dist	COUNTY	ROUTE	POST MILES TOTAL PROJECT	SHEET No.	TOTAL SHEETS
07	LA	710	17.2/26.4	1063	1507

REGISTERED ELECTRICAL ENGINEER 4/4/11 DATE

6-27-11
PLANS APPROVAL DATE

REGISTERED PROFESSIONAL ENGINEER STANLEY L. JOHNSON No. E 16761 Exp. 09/30/12 ELECTRICAL STATE OF CALIFORNIA

THE STATE OF CALIFORNIA OR ITS OFFICERS OR AGENTS SHALL NOT BE RESPONSIBLE FOR THE ACCURACY OR COMPLETENESS OF SCANNED COPIES OF THIS PLAN SHEET.

FOR ACCURATE RIGHT OF WAY DATA, CONTACT
RIGHT OF WAY ENGINEERING AT THE DISTRICT OFFICE.

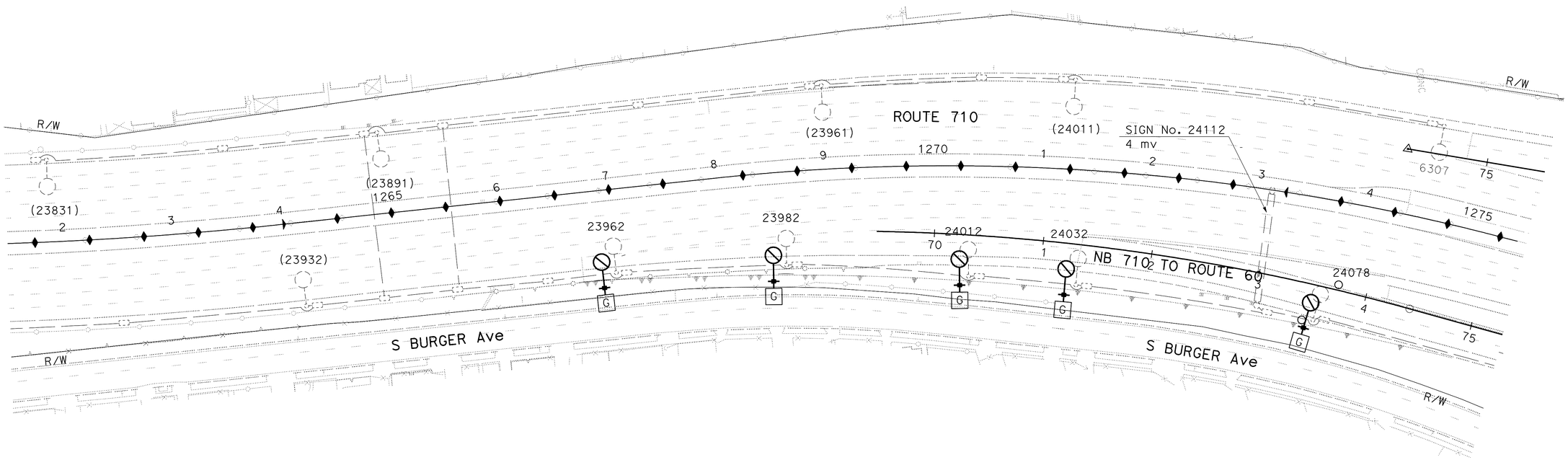

FOR PROJECT NOTES, SEE SHEET E-1.

FOR TEMPORARY LIGHTING WOOD POLE DETAILS, SEE SHEET E-34.

THIS PLAN IS ACCURATE FOR ELECTRICAL WORK ONLY.

LIGHTING (TEMPORARY)

SCALE: 1" = 50'

E-4

STATE OF CALIFORNIA - DEPARTMENT OF TRANSPORTATION
Caltrans® **TRAFFIC DESIGN**

FUNCTIONAL SUPERVISOR: HASSAN MANNAA

CALCULATED-DESIGNED BY: MARTY MORTAZEVI
CHECKED BY: STANLEY L. JOHNSON

REVISED BY
DATE REVISED

LAST REVISION 00-00-00
DATE PLOTTED => 29-JUN-2011
TIME PLOTTED => 19:50

Dist	COUNTY	ROUTE	POST MILES TOTAL PROJECT	SHEET No.	TOTAL SHEETS
07	LA	710	17.2/26.4	1064	1507

REGISTERED ELECTRICAL ENGINEER 4/4/11 DATE

6-27-11
PLANS APPROVAL DATE

REGISTERED PROFESSIONAL ENGINEER STANLEY L. JOHNSON No. E 16761 Exp. 09/30/12 ELECTRICAL STATE OF CALIFORNIA

THE STATE OF CALIFORNIA OR ITS OFFICERS OR AGENTS SHALL NOT BE RESPONSIBLE FOR THE ACCURACY OR COMPLETENESS OF SCANNED COPIES OF THIS PLAN SHEET.

FOR ACCURATE RIGHT OF WAY DATA, CONTACT
RIGHT OF WAY ENGINEERING AT THE DISTRICT OFFICE.

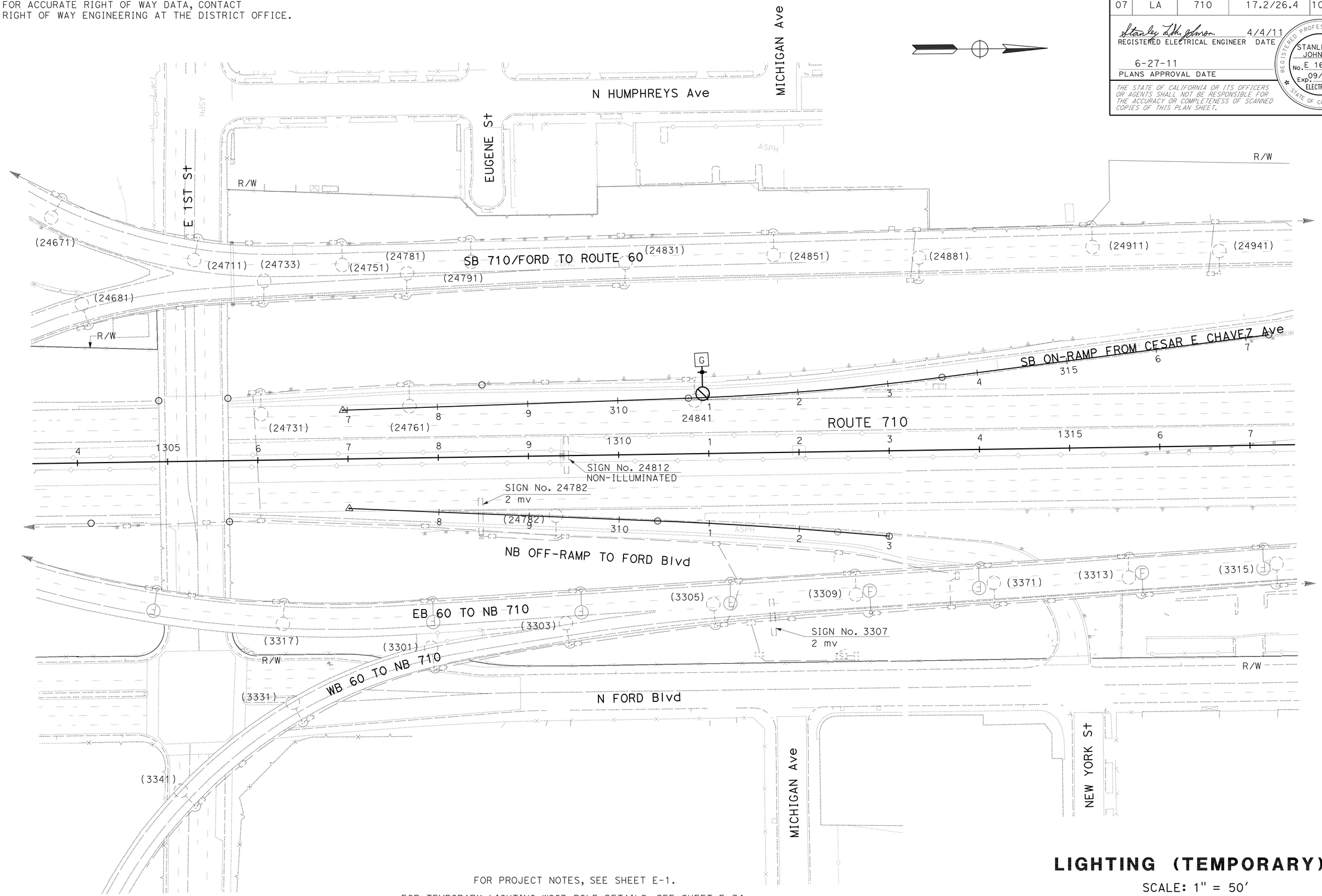

FOR PROJECT NOTES, SEE SHEET E-1.

FOR TEMPORARY LIGHTING WOOD POLE DETAILS, SEE SHEET E-34.

THIS PLAN IS ACCURATE FOR ELECTRICAL WORK ONLY.

LIGHTING (TEMPORARY)

SCALE: 1" = 50'

E-5

STATE OF CALIFORNIA - DEPARTMENT OF TRANSPORTATION
Caltrans TRAFFIC DESIGN

FUNCTIONAL SUPERVISOR: HASSAN MANNAA
CALCULATED-DESIGNED BY: STANLEY L. JOHNSON
CHECKED BY: HASSAN MANNAA
REVISED BY
DATE REVISED

LAST REVISION 00-00-00 | DATE PLOTTED => 29-JUN-2011 | TIME PLOTTED => 19:50

Dist	COUNTY	ROUTE	POST MILES TOTAL PROJECT	SHEET No.	TOTAL SHEETS
07	LA	710	17.2/26.4	1065	1507

REGISTERED ELECTRICAL ENGINEER 4/4/11 DATE

6-27-11
PLANS APPROVAL DATE

REGISTERED PROFESSIONAL ENGINEER STANLEY L. JOHNSON No. E 16761 Exp. 09/30/12 ELECTRICAL STATE OF CALIFORNIA

THE STATE OF CALIFORNIA OR ITS OFFICERS OR AGENTS SHALL NOT BE RESPONSIBLE FOR THE ACCURACY OR COMPLETENESS OF SCANNED COPIES OF THIS PLAN SHEET.

FOR ACCURATE RIGHT OF WAY DATA, CONTACT
RIGHT OF WAY ENGINEERING AT THE DISTRICT OFFICE.

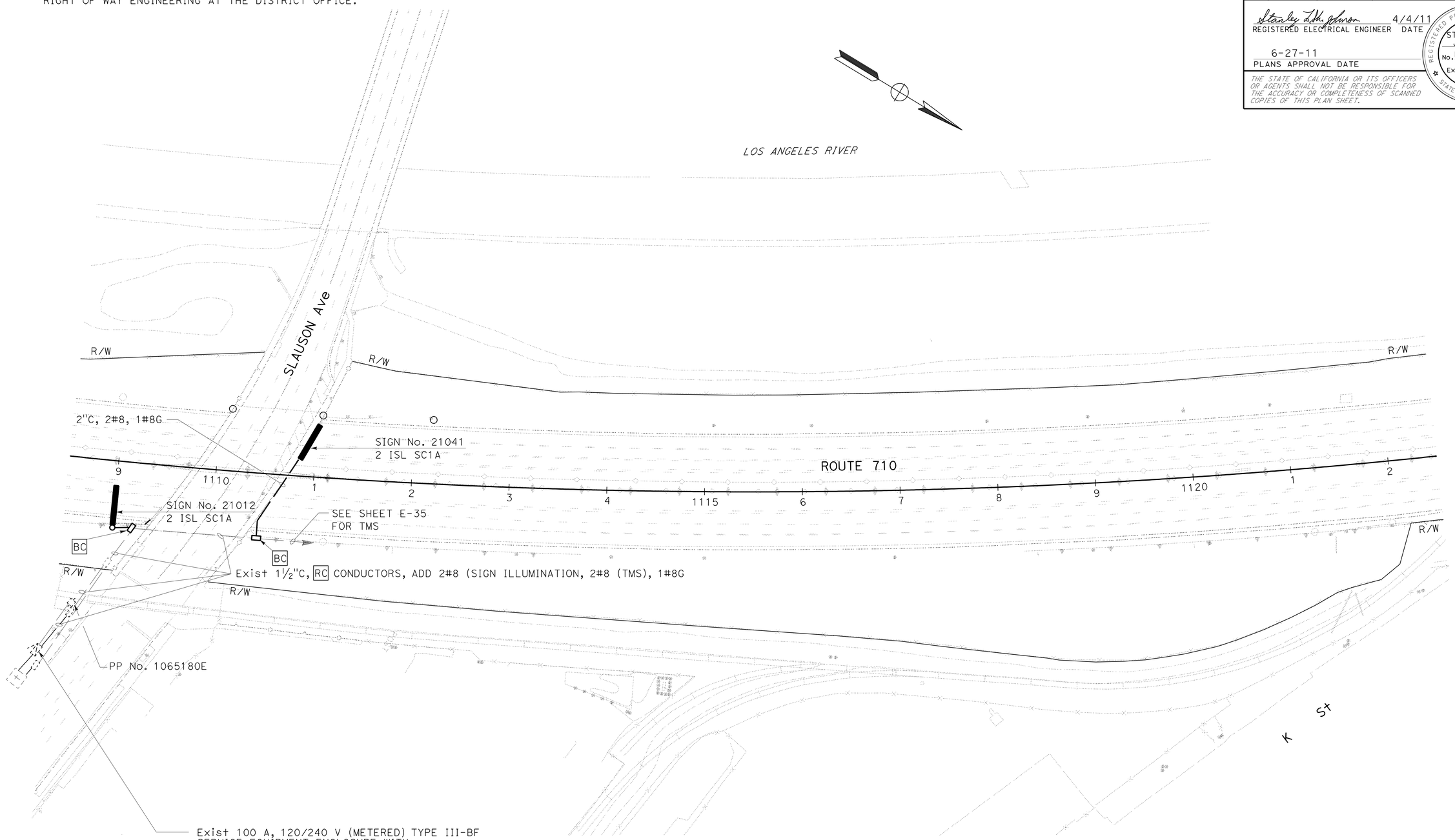

Exist 100 A, 120/240 V (METERED) TYPE III-BF
SERVICE EQUIPMENT ENCLOSURE WITH:
100 A, 240 V, 2P, CB - MAIN BREAKER
30 A, 120 V, 1P, CB - TRAFFIC MONITORING STATION
20 A, 120 V, 1P, CB - TDC
ADD 30 A, 240 V, 2P, CB - SIGN ILLUMINATION
ADD 30 A, 120 V, 1P, CB - CCTV
ADDRESS: 5322 1/2 E. SLAUSON Ave

FOR PROJECT NOTES, SEE SHEET E-1.

FOR WIRING DIAGRAMS, SEE SHEET E-23.

THIS PLAN IS ACCURATE FOR ELECTRICAL WORK ONLY.

MODIFY LIGHTING AND SIGN ILLUMINATION

SCALE: 1" = 50'

E-6

STATE OF CALIFORNIA - DEPARTMENT OF TRANSPORTATION
Caltrans® TRAFFIC DESIGN

FUNCTIONAL SUPERVISOR: HASSAN MANNAA
CALCULATED-DESIGNED BY: STANLEY L. JOHNSON
CHECKED BY: HASSAN MANNAA
REVISED BY
DATE REVISED

LAST REVISION 00-00-00
DATE PLOTTED => 29-JUN-2011
TIME PLOTTED => 20:28

Dist	COUNTY	ROUTE	POST MILES TOTAL PROJECT	SHEET No.	TOTAL SHEETS
07	LA	710	17.2/26.4	1066	1507

REGISTERED ELECTRICAL ENGINEER 4/4/11 DATE

6-27-11
PLANS APPROVAL DATE

REGISTERED PROFESSIONAL ENGINEER
STANLEY L. JOHNSON
No. E 16761
Exp. 09/30/12
ELECTRICAL
STATE OF CALIFORNIA

THE STATE OF CALIFORNIA OR ITS OFFICERS OR AGENTS SHALL NOT BE RESPONSIBLE FOR THE ACCURACY OR COMPLETENESS OF SCANNED COPIES OF THIS PLAN SHEET.

FOR ACCURATE RIGHT OF WAY DATA, CONTACT
RIGHT OF WAY ENGINEERING AT THE DISTRICT OFFICE.

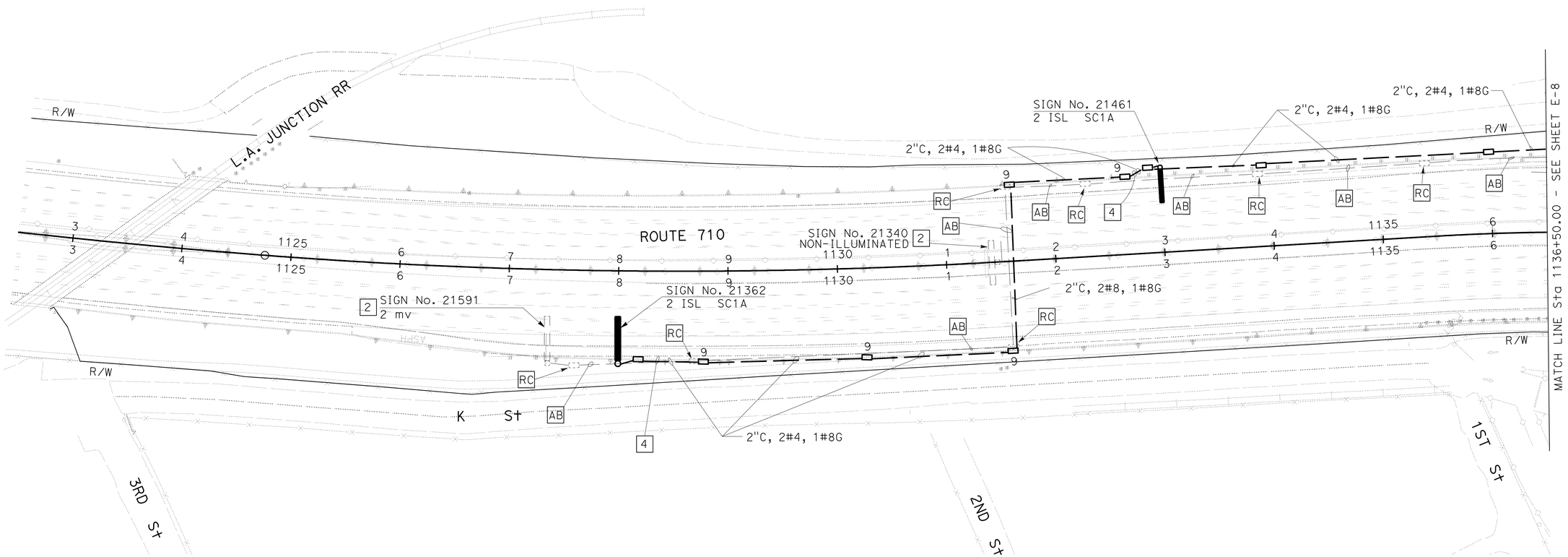

FOR PROJECT NOTES, SEE SHEET E-1.

FOR WIRING DIAGRAMS, SEE SHEETS E-24 AND E-25.

THIS PLAN IS ACCURATE FOR ELECTRICAL WORK ONLY.

MODIFY LIGHTING AND SIGN ILLUMINATION

SCALE: 1" = 50'

E-7

STATE OF CALIFORNIA - DEPARTMENT OF TRANSPORTATION
Caltrans® **TRAFFIC DESIGN**

FUNCTIONAL SUPERVISOR: HASSAN MANNAA
CALCULATED-DESIGNED BY: STANLEY L. JOHNSON
CHECKED BY: HASSAN MANNAA
REVISED BY
DATE REVISED

LAST REVISION 00-00-00 | DATE PLOTTED => 29-JUN-2011 | TIME PLOTTED => 19:50

Dist	COUNTY	ROUTE	POST MILES TOTAL PROJECT	SHEET No.	TOTAL SHEETS
07	LA	710	17.2/26.4	1067	1507

REGISTERED ELECTRICAL ENGINEER 4/4/11 DATE

6-27-11
PLANS APPROVAL DATE

REGISTERED PROFESSIONAL ENGINEER STANLEY L. JOHNSON No. E 16761 Exp. 09/30/12 ELECTRICAL STATE OF CALIFORNIA

THE STATE OF CALIFORNIA OR ITS OFFICERS OR AGENTS SHALL NOT BE RESPONSIBLE FOR THE ACCURACY OR COMPLETENESS OF SCANNED COPIES OF THIS PLAN SHEET.

FOR ACCURATE RIGHT OF WAY DATA, CONTACT
RIGHT OF WAY ENGINEERING AT THE DISTRICT OFFICE.

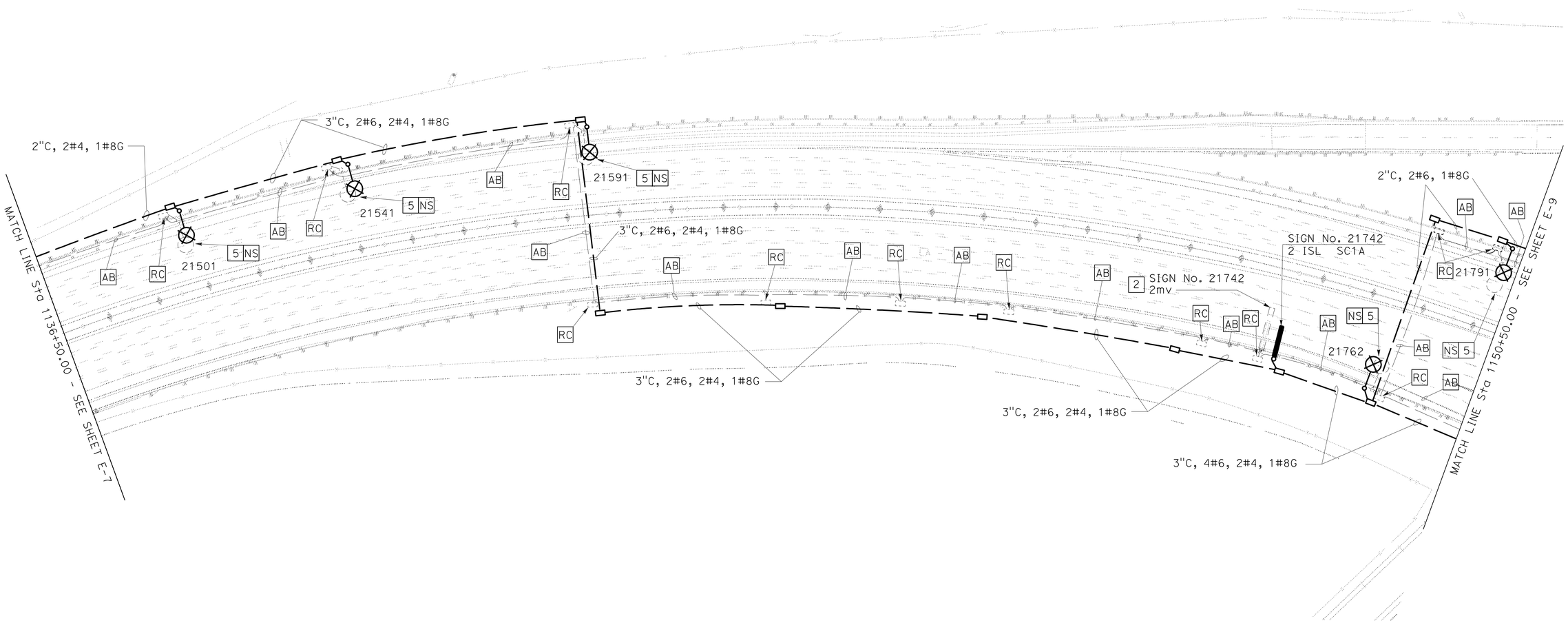

MODIFY LIGHTING AND SIGN ILLUMINATION

SCALE: 1" = 50'

FOR PROJECT NOTES, SEE SHEET E-1.
FOR WIRING DIAGRAMS, SEE SHEETS E-24 AND E-25.
THIS PLAN IS ACCURATE FOR ELECTRICAL WORK ONLY.

E-8

STATE OF CALIFORNIA - DEPARTMENT OF TRANSPORTATION
Caltrans® **TRAFFIC DESIGN**

FUNCTIONAL SUPERVISOR: HASSAN MANNAA
CALCULATED-DESIGNED BY: STANLEY L. JOHNSON
CHECKED BY: HASSAN MANNAA
REVISED BY
DATE REVISED

LAST REVISION 00-00-00 | DATE PLOTTED => 06-JUL-2011 | TIME PLOTTED => 10:35

Dist	COUNTY	ROUTE	POST MILES TOTAL PROJECT	SHEET No.	TOTAL SHEETS
07	LA	710	17.2/26.4	1068	1507

REGISTERED ELECTRICAL ENGINEER — 4/4/11 DATE

6-27-11
PLANS APPROVAL DATE

REGISTERED PROFESSIONAL ENGINEER — STANLEY L. JOHNSON — No. E 16761 — Exp. 09/30/12 — ELECTRICAL — STATE OF CALIFORNIA

THE STATE OF CALIFORNIA OR ITS OFFICERS OR AGENTS SHALL NOT BE RESPONSIBLE FOR THE ACCURACY OR COMPLETENESS OF SCANNED COPIES OF THIS PLAN SHEET.

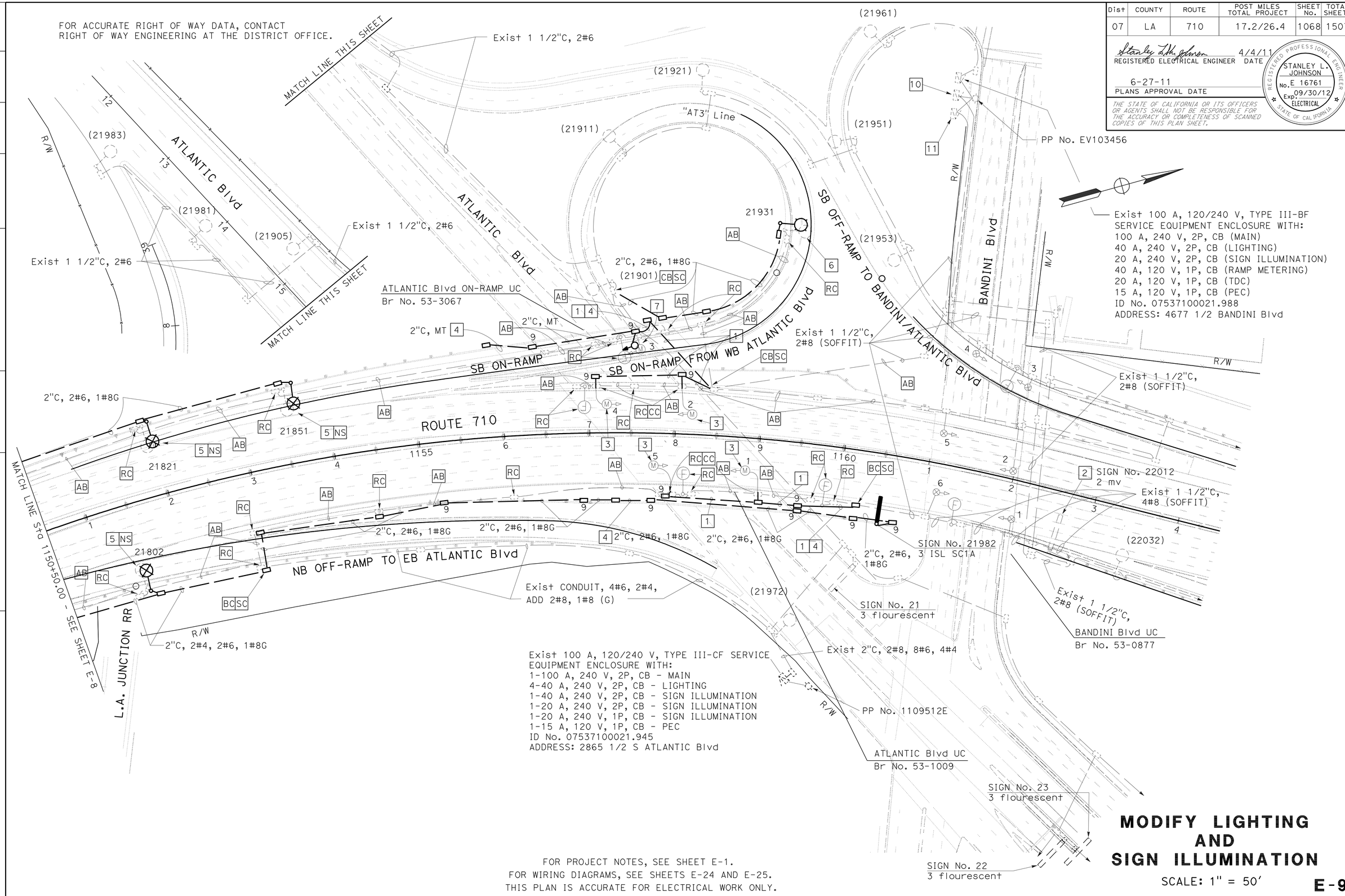

FOR PROJECT NOTES, SEE SHEET E-1.
FOR WIRING DIAGRAMS, SEE SHEETS E-24 AND E-25.
THIS PLAN IS ACCURATE FOR ELECTRICAL WORK ONLY.

MODIFY LIGHTING AND SIGN ILLUMINATION

SCALE: 1" = 50'

E-9

STATE OF CALIFORNIA - DEPARTMENT OF TRANSPORTATION
Caltrans® TRAFFIC DESIGN

FUNCTIONAL SUPERVISOR: HASSAN MANNAA
CALCULATED-DESIGNED BY: STANLEY L. JOHNSON
CHECKED BY: HASSAN MANNAA
REVISED BY
DATE REVISED

LAST REVISION 00-00-00
DATE PLOTTED => 06-JUL-2011
TIME PLOTTED => 10:43

Dist	COUNTY	ROUTE	POST MILES TOTAL PROJECT	SHEET No.	TOTAL SHEETS
07	LA	710	17.2/26.4	1069	1507

REGISTERED ELECTRICAL ENGINEER 4/4/11 DATE

6-27-11
PLANS APPROVAL DATE

REGISTERED PROFESSIONAL ENGINEER STANLEY L. JOHNSON No. E 16761 Exp. 09/30/12 ELECTRICAL STATE OF CALIFORNIA

THE STATE OF CALIFORNIA OR ITS OFFICERS OR AGENTS SHALL NOT BE RESPONSIBLE FOR THE ACCURACY OR COMPLETENESS OF SCANNED COPIES OF THIS PLAN SHEET.

FOR ACCURATE RIGHT OF WAY DATA, CONTACT
RIGHT OF WAY ENGINEERING AT THE DISTRICT OFFICE.

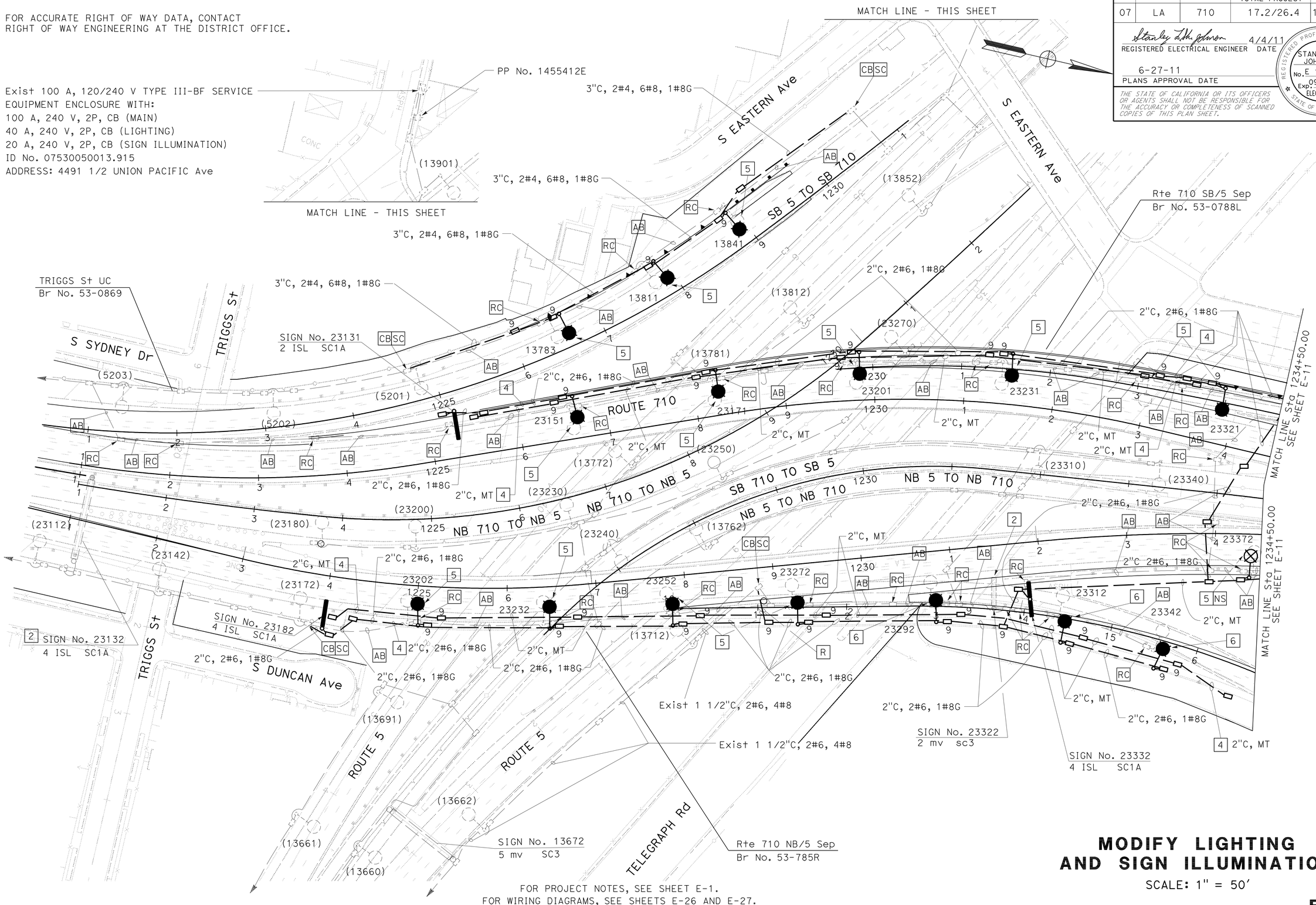

FOR PROJECT NOTES, SEE SHEET E-1.
FOR WIRING DIAGRAMS, SEE SHEETS E-26 AND E-27.
THIS PLAN IS ACCURATE FOR ELECTRICAL WORK ONLY.

MODIFY LIGHTING AND SIGN ILLUMINATION

SCALE: 1" = 50'

E-10

STATE OF CALIFORNIA - DEPARTMENT OF TRANSPORTATION
Caltrans® TRAFFIC DESIGN

FUNCTIONAL SUPERVISOR: HASSAN MANNAA
CALCULATED-DESIGNED BY: STANLEY L. JOHNSON
CHECKED BY: HASSAN MANNAA
REVISED BY
DATE REVISED

LAST REVISION 00-00-00
DATE PLOTTED => 29-JUN-2011
TIME PLOTTED => 19:50

Dist	COUNTY	ROUTE	POST MILES TOTAL PROJECT	SHEET No.	TOTAL SHEETS
07	LA	710	17.2/26.4	1070	1507

REGISTERED ELECTRICAL ENGINEER 4/4/11 DATE

6-27-11
PLANS APPROVAL DATE

REGISTERED PROFESSIONAL ENGINEER STANLEY L. JOHNSON No. E 16761 Exp. 09/30/12 ELECTRICAL STATE OF CALIFORNIA

THE STATE OF CALIFORNIA OR ITS OFFICERS OR AGENTS SHALL NOT BE RESPONSIBLE FOR THE ACCURACY OR COMPLETENESS OF SCANNED COPIES OF THIS PLAN SHEET.

FOR ACCURATE RIGHT OF WAY DATA, CONTACT
RIGHT OF WAY ENGINEERING AT THE DISTRICT OFFICE.

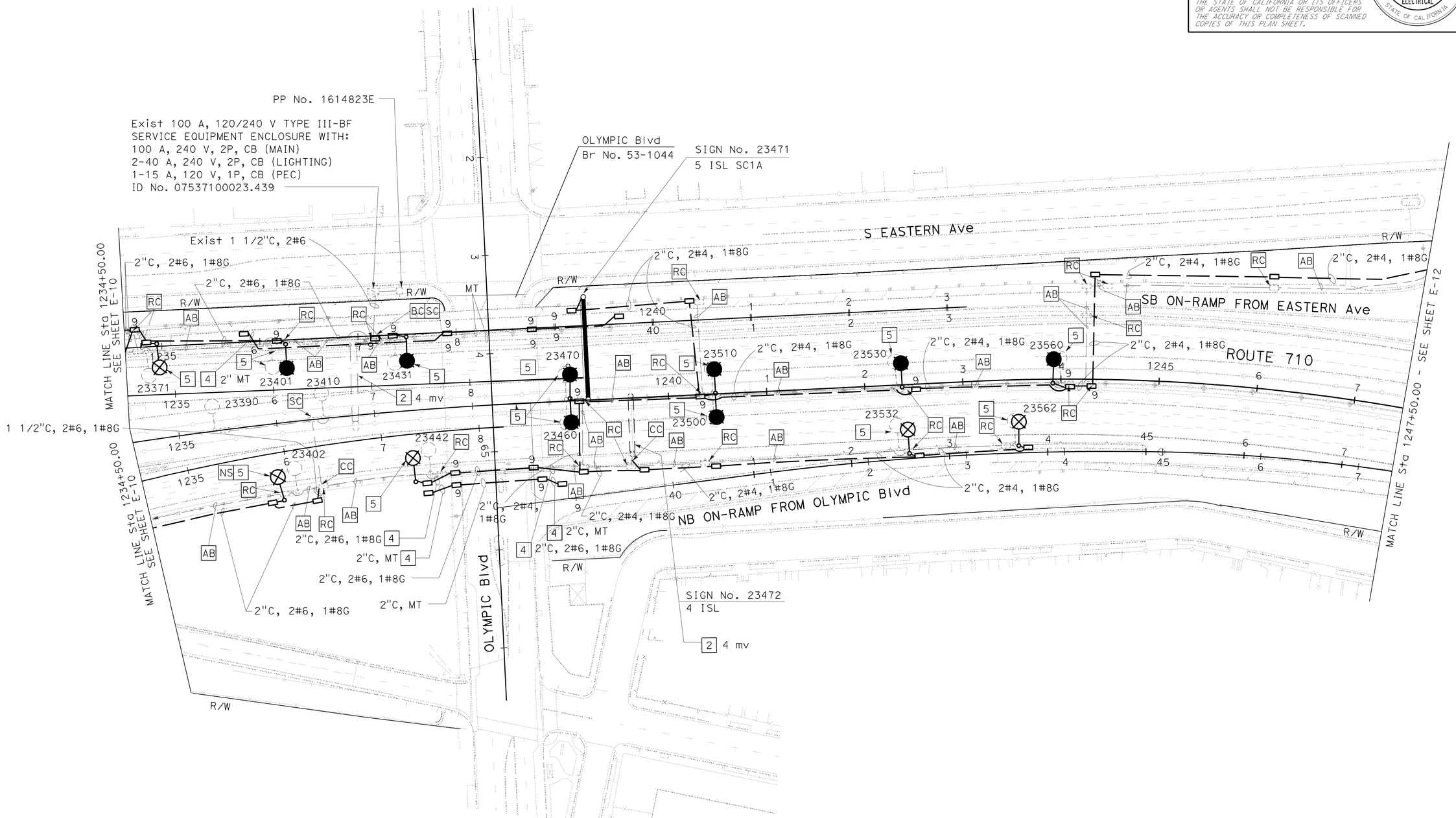

FOR PROJECT NOTES, SEE SHEET E-1.
FOR WIRING DIAGRAMS SEE SHEETS E-26, E-27, E-28 AND E-29.
THIS PLAN IS ACCURATE FOR ELECTRICAL WORK ONLY.

MODIFY LIGHTING AND SIGN ILLUMINATION

SCALE: 1" = 50'

E-11

STATE OF CALIFORNIA - DEPARTMENT OF TRANSPORTATION
Caltrans® **TRAFFIC DESIGN**

FUNCTIONAL SUPERVISOR: HASSAN MANNAA
CALCULATED-DESIGNED BY: MARTY MORTAZEVI
CHECKED BY: STANLEY L. JOHNSON
REVISED BY
DATE REVISED

LAST REVISION 00-00-00 | DATE PLOTTED => 06-JUL-2011 | TIME PLOTTED => 10:35

Dist	COUNTY	ROUTE	POST MILES TOTAL PROJECT	SHEET No.	TOTAL SHEETS
07	LA	710	17.2/26.4	1071	1507

REGISTERED ELECTRICAL ENGINEER 4/4/11 DATE

6-27-11
PLANS APPROVAL DATE

REGISTERED PROFESSIONAL ENGINEER STANLEY L. JOHNSON No. E 16761 Exp. 09/30/12 ELECTRICAL STATE OF CALIFORNIA

THE STATE OF CALIFORNIA OR ITS OFFICERS OR AGENTS SHALL NOT BE RESPONSIBLE FOR THE ACCURACY OR COMPLETENESS OF SCANNED COPIES OF THIS PLAN SHEET.

FOR ACCURATE RIGHT OF WAY DATA, CONTACT
RIGHT OF WAY ENGINEERING AT THE DISTRICT OFFICE.

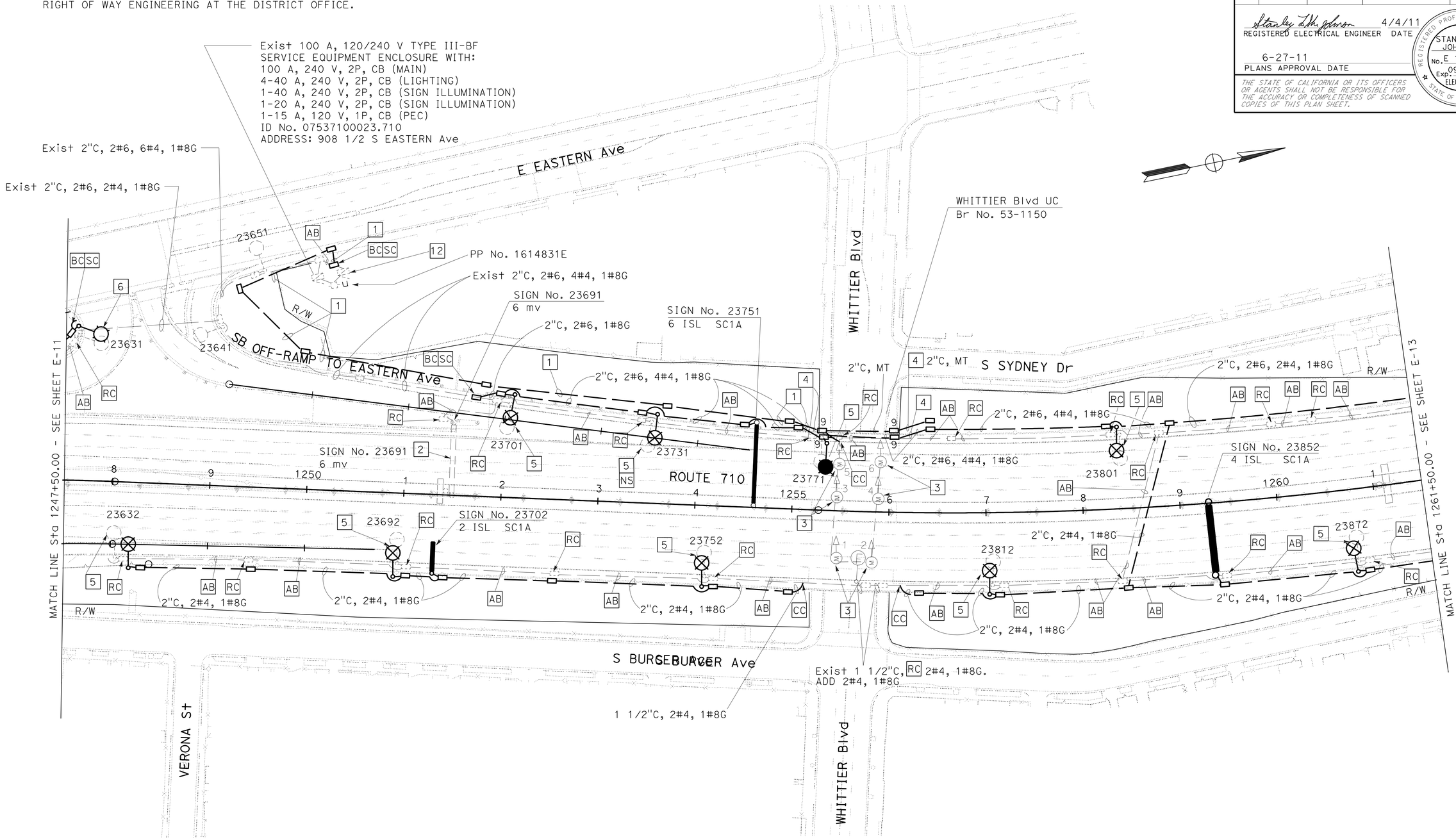

FOR PROJECT NOTES, SEE SHEET E-1.
FOR WIRING DIAGRAMS SEE SHEETS E-28 AND E-29.
THIS PLAN IS ACCURATE FOR ELECTRICAL WORK ONLY.

MODIFY LIGHTING AND SIGN ILLUMINATION

SCALE: 1" = 50'

E-12

STATE OF CALIFORNIA - DEPARTMENT OF TRANSPORTATION
Caltrans® TRAFFIC DESIGN

FUNCTIONAL SUPERVISOR: HASSAN MANNAA
CALCULATED-DESIGNED BY: MARTY MORTAZEVI
CHECKED BY: STANLEY L. JOHNSON
REVISED BY
DATE REVISED

LAST REVISION 00-00-00
DATE PLOTTED => 06-JUL-2011
TIME PLOTTED => 10:35

Dist	COUNTY	ROUTE	POST MILES TOTAL PROJECT	SHEET No.	TOTAL SHEETS
07	LA	710	17.2/26.4	1072	1507

REGISTERED ELECTRICAL ENGINEER — DATE 4/4/11

6-27-11
PLANS APPROVAL DATE

REGISTERED PROFESSIONAL ENGINEER — STANLEY L. JOHNSON — No. E 16761 — Exp. 09/30/12 — ELECTRICAL — STATE OF CALIFORNIA

THE STATE OF CALIFORNIA OR ITS OFFICERS OR AGENTS SHALL NOT BE RESPONSIBLE FOR THE ACCURACY OR COMPLETENESS OF SCANNED COPIES OF THIS PLAN SHEET.

FOR ACCURATE RIGHT OF WAY DATA, CONTACT
RIGHT OF WAY ENGINEERING AT THE DISTRICT OFFICE.

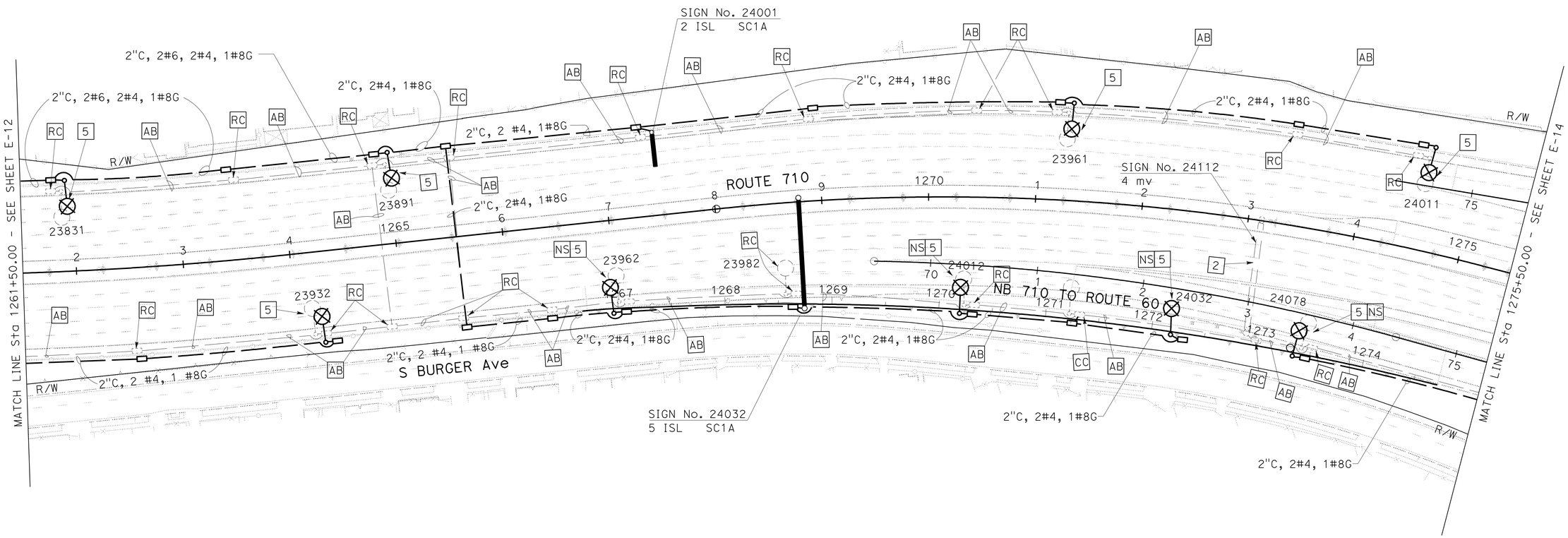
SIGN No. 24001
2 ISL SC1A
2"C, 2#6, 2#4, 1#8G
2"C, 2#4, 1#8G
2"C, 2 #4, 1#8G
2"C, 2#4, 1#8G
2"C, 2#4, 1#8G
2"C, 2#

Dist	COUNTY	ROUTE	POST MILES TOTAL PROJECT	SHEET No.	TOTAL SHEETS
07	LA	710	17.2/26.4	1073	1507

REGISTERED ELECTRICAL ENGINEER 4/4/11 DATE

6-27-11
PLANS APPROVAL DATE

REGISTERED PROFESSIONAL ENGINEER STANLEY L. JOHNSON No. E 16761 Exp. 09/30/12 ELECTRICAL STATE OF CALIFORNIA

THE STATE OF CALIFORNIA OR ITS OFFICERS OR AGENTS SHALL NOT BE RESPONSIBLE FOR THE ACCURACY OR COMPLETENESS OF SCANNED COPIES OF THIS PLAN SHEET.

FOR ACCURATE RIGHT OF WAY DATA, CONTACT
RIGHT OF WAY ENGINEERING AT THE DISTRICT OFFICE.

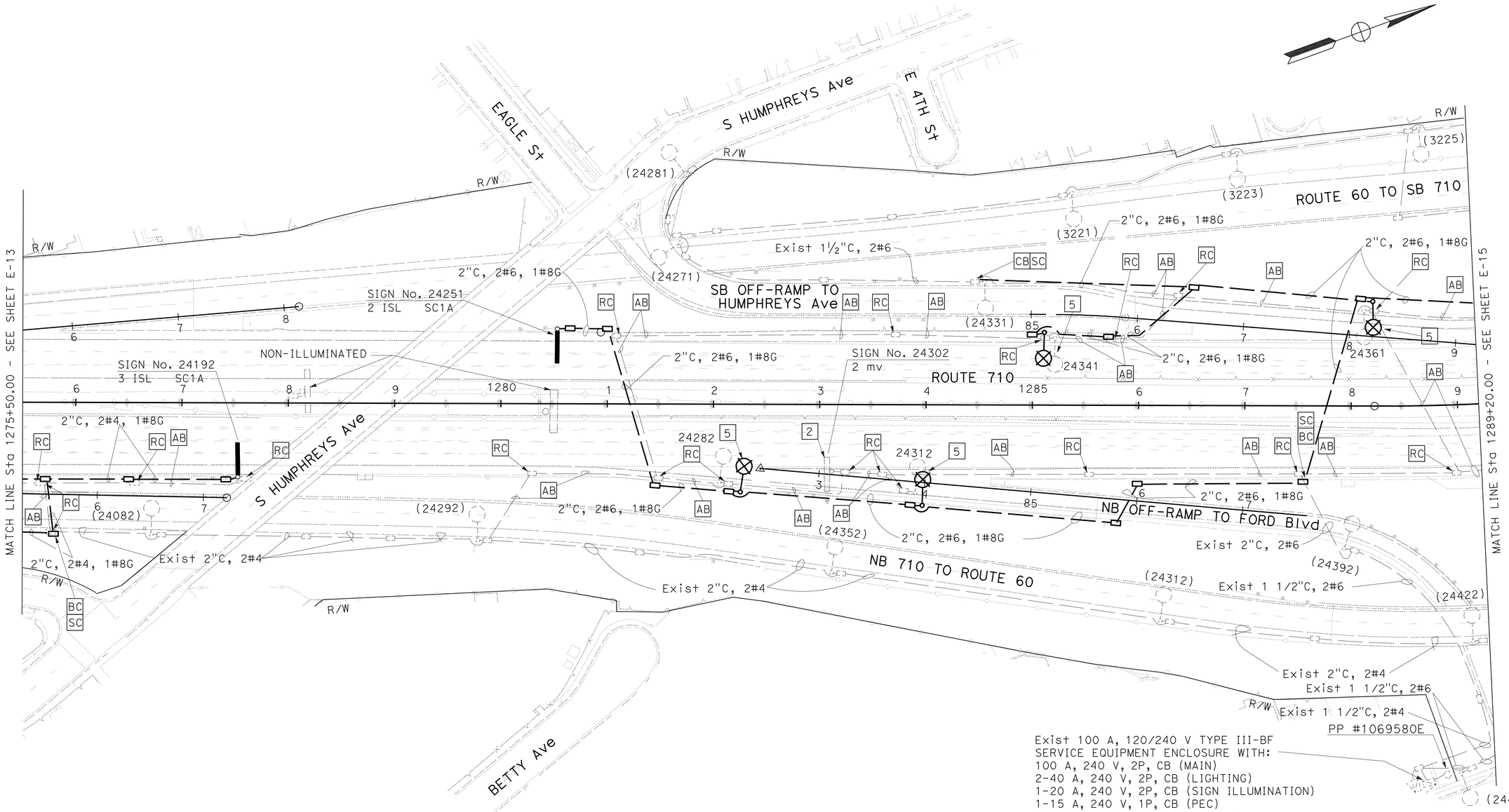

Exist 100 A, 120/240 V TYPE III-BF
SERVICE EQUIPMENT ENCLOSURE WITH:
100 A, 240 V, 2P, CB (MAIN)
2-40 A, 240 V, 2P, CB (LIGHTING)
1-20 A, 240 V, 2P, CB (SIGN ILLUMINATION)
1-15 A, 240 V, 1P, CB (PEC)
ADDRESS: 345 1/2 S FORD Blvd
ID No. 0753710024.310

MODIFY LIGHTING AND SIGN ILLUMINATION

SCALE: 1" = 50'

FOR PROJECT NOTES SEE SHEET E-1.
FOR WIRING DIAGRAMS SEE SHEETS E-28, E-29, E-30 AND E-31.
THIS PLAN IS ACCURATE FOR ELECTRICAL WORK ONLY.

E-14

STATE OF CALIFORNIA - DEPARTMENT OF TRANSPORTATION
Caltrans® TRAFFIC DESIGN

FUNCTIONAL SUPERVISOR: HASSAN MANNAA
CALCULATED-DESIGNED BY: MM STANLEY L. JOHNSON
CHECKED BY
REVISED BY
DATE REVISED

LAST REVISION 00-00-00 | DATE PLOTTED => 06-JUL-2011 | TIME PLOTTED => 10:35

Dist	COUNTY	ROUTE	POST MILES TOTAL PROJECT	SHEET No.	TOTAL SHEETS
07	LA	710	17.2/26.4	1074	1507

REGISTERED ELECTRICAL ENGINEER 4/4/11 DATE

6-27-11
PLANS APPROVAL DATE

REGISTERED PROFESSIONAL ENGINEER STANLEY L. JOHNSON No. E 16761 Exp. 09/30/12 ELECTRICAL STATE OF CALIFORNIA

THE STATE OF CALIFORNIA OR ITS OFFICERS OR AGENTS SHALL NOT BE RESPONSIBLE FOR THE ACCURACY OR COMPLETENESS OF SCANNED COPIES OF THIS PLAN SHEET.

FOR ACCURATE RIGHT OF WAY DATA, CONTACT
RIGHT OF WAY ENGINEERING AT THE DISTRICT OFFICE.

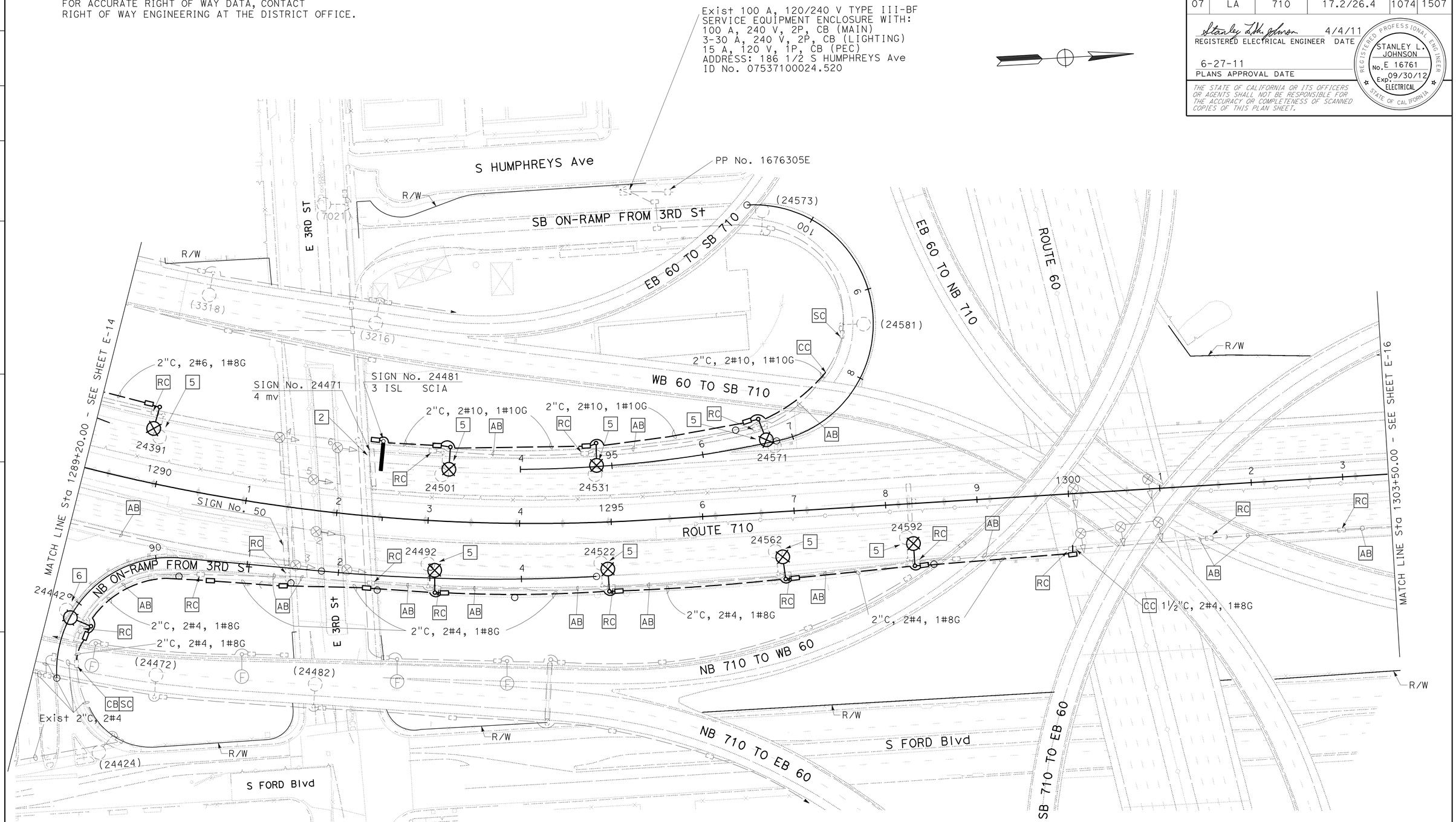

MODIFY LIGHTING AND SIGN ILLUMINATION

SCALE: 1" = 50'

FOR PROJECT NOTES SEE SHEET E-1.
FOR WIRING DIAGRAMS SEE SHEETS E-30 AND E-31.
THIS PLAN IS ACCURATE FOR ELECTRICAL WORK ONLY.

E-15

STATE OF CALIFORNIA - DEPARTMENT OF TRANSPORTATION
Caltrans® TRAFFIC DESIGN

FUNCTIONAL SUPERVISOR: HASSAN MANNAA
CALCULATED-DESIGNED BY: MM
CHECKED BY: STANLEY L. JOHNSON
REVISED BY
DATE REVISED

LAST REVISION 00-00-00
DATE PLOTTED => 06-JUL-2011
TIME PLOTTED => 10:35

Dist	COUNTY	ROUTE	POST MILES TOTAL PROJECT	SHEET No.	TOTAL SHEETS
07	LA	710	17.2/26.4	1075	1507

REGISTERED ELECTRICAL ENGINEER — DATE 4/4/11

6-27-11
PLANS APPROVAL DATE

REGISTERED PROFESSIONAL ENGINEER — STANLEY L. JOHNSON — No. E 16761 — Exp. 09/30/12 — ELECTRICAL — STATE OF CALIFORNIA

THE STATE OF CALIFORNIA OR ITS OFFICERS OR AGENTS SHALL NOT BE RESPONSIBLE FOR THE ACCURACY OR COMPLETENESS OF SCANNED COPIES OF THIS PLAN SHEET.

FOR ACCURATE RIGHT OF WAY DATA, CONTACT
RIGHT OF WAY ENGINEERING AT THE DISTRICT OFFICE.

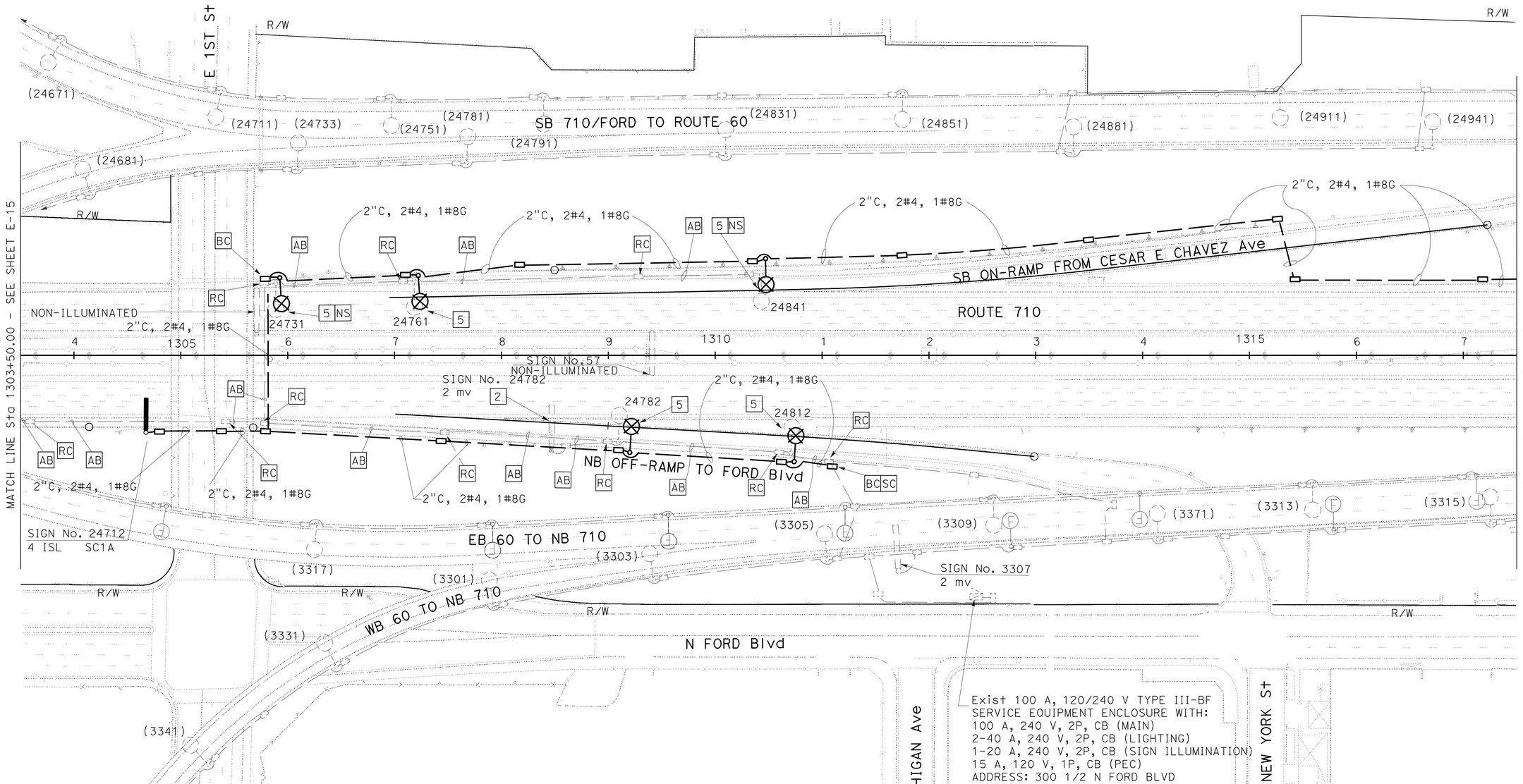

Exist 100 A, 120/240 V TYPE III-BF
SERVICE EQUIPMENT ENCLOSURE WITH:
100 A, 240 V, 2P, CB (MAIN)
2-40 A, 240 V, 2P, CB (LIGHTING)
1-20 A, 240 V, 2P, CB (SIGN ILLUMINATION)
15 A, 120 V, 1P, CB (PEC)
ADDRESS: 300 1/2 N FORD BLVD
ID No. 0753700024.820

MODIFY LIGHTING AND SIGN ILLUMINATION

SCALE: 1" = 50'

FOR PROJECT NOTES SEE SHEET E-1.
FOR WIRING DIAGRAMS SEE SHEETS E-30 AND E-31.
THIS PLAN IS ACCURATE FOR ELECTRICAL WORK ONLY.

E-16

REVISED BY | DATE REVISED
MM | STANLEY L. JOHNSON
CALCULATED-DESIGNED BY | CHECKED BY
FUNCTIONAL SUPERVISOR: HASSAN MANNAA

STATE OF CALIFORNIA - DEPARTMENT OF TRANSPORTATION
Caltrans® TRAFFIC DESIGN

LAST REVISION 00-00-00 | DATE PLOTTED => 29-JUN-2011 | TIME PLOTTED => 14:15

Dist	COUNTY	ROUTE	POST MILES TOTAL PROJECT	SHEET No.	TOTAL SHEETS
07	LA	710	17.2/26.4	1076	1507

REGISTERED ELECTRICAL ENGINEER 4/4/11 DATE

6-27-11
PLANS APPROVAL DATE

REGISTERED PROFESSIONAL ENGINEER STANLEY L. JOHNSON No. E 16761 Exp. 09/30/12 ELECTRICAL STATE OF CALIFORNIA

THE STATE OF CALIFORNIA OR ITS OFFICERS OR AGENTS SHALL NOT BE RESPONSIBLE FOR THE ACCURACY OR COMPLETENESS OF SCANNED COPIES OF THIS PLAN SHEET.

FOR ACCURATE RIGHT OF WAY DATA, CONTACT
RIGHT OF WAY ENGINEERING AT THE DISTRICT OFFICE.

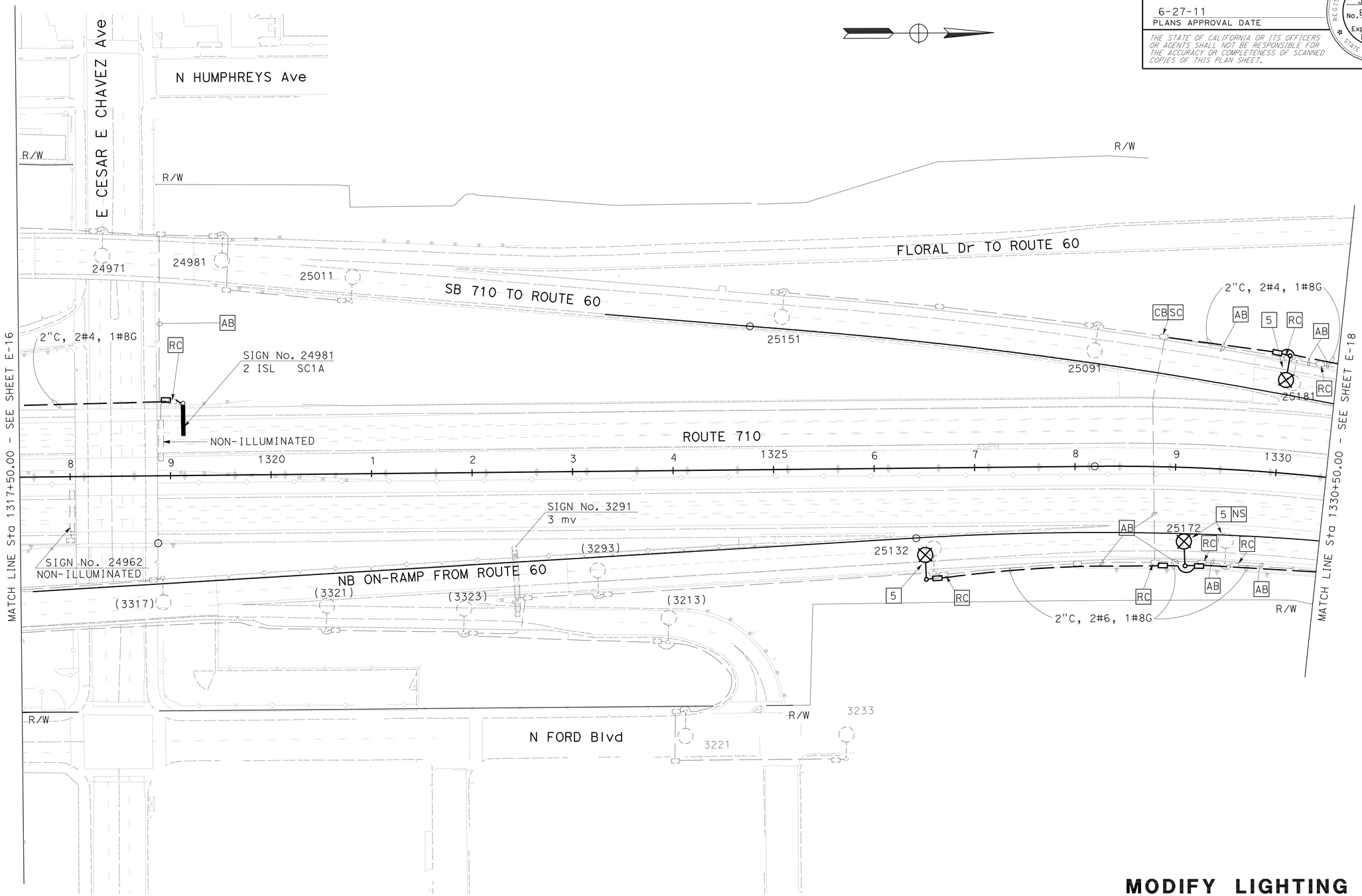

FOR PROJECT NOTES SEE SHEET E-1.
FOR WIRING DIAGRAMS SEE SHEETS E-30, E-31, E-32 AND E-33.
THIS PLAN IS ACCURATE FOR ELECTRICAL WORK ONLY.

MODIFY LIGHTING AND SIGN ILLUMINATION

SCALE: 1" = 50'

E-17

STATE OF CALIFORNIA - DEPARTMENT OF TRANSPORTATION
Caltrans® TRAFFIC DESIGN

FUNCTIONAL SUPERVISOR: HASSAN MANNAA
CALCULATED-DESIGNED BY: MM
CHECKED BY: STANLEY L. JOHNSON
REVISED BY
DATE REVISED

LAST REVISION 00-00-00
DATE PLOTTED => 06-JUL-2011
TIME PLOTTED => 10:35

Dist	COUNTY	ROUTE	POST MILES TOTAL PROJECT	SHEET No.	TOTAL SHEETS
07	LA	710	17.2/26.4	1077	1507

REGISTERED ELECTRICAL ENGINEER — DATE 4/4/11

6-27-11
PLANS APPROVAL DATE

REGISTERED PROFESSIONAL ENGINEER — STANLEY L. JOHNSON — No. E 16761 — Exp. 09/30/12 — ELECTRICAL — STATE OF CALIFORNIA

THE STATE OF CALIFORNIA OR ITS OFFICERS OR AGENTS SHALL NOT BE RESPONSIBLE FOR THE ACCURACY OR COMPLETENESS OF SCANNED COPIES OF THIS PLAN SHEET.

FOR ACCURATE RIGHT OF WAY DATA, CONTACT
RIGHT OF WAY ENGINEERING AT THE DISTRICT OFFICE.

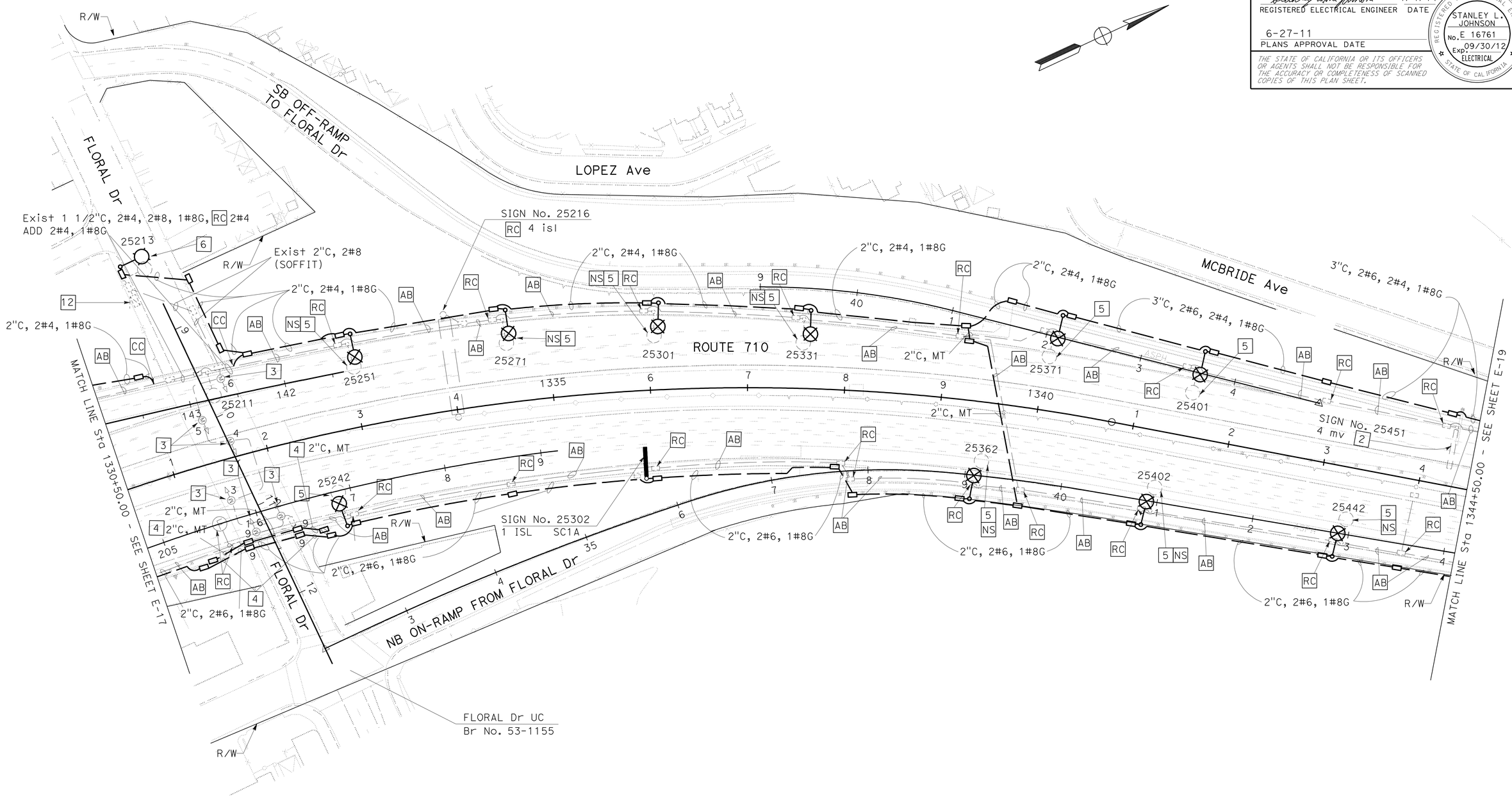

FOR PROJECT NOTES SEE SHEET E-1.
FOR WIRING DIAGRAMS SEE SHEETS E-32 AND E-33.
THIS PLAN IS ACCURATE FOR ELECTRICAL WORK ONLY.

MODIFY LIGHTING AND SIGN ILLUMINATION

SCALE: 1" = 50'

E-18

STATE OF CALIFORNIA - DEPARTMENT OF TRANSPORTATION
Caltrans® TRAFFIC DESIGN

FUNCTIONAL SUPERVISOR: HASSAN MANNAA
CALCULATED-DESIGNED BY: MM — STANLEY L. JOHNSON
CHECKED BY
REVISED BY
DATE REVISED

LAST REVISION 00-00-00 — DATE PLOTTED => 29-JUN-2011 — TIME PLOTTED => 14:15

Dist	COUNTY	ROUTE	POST MILES TOTAL PROJECT	SHEET No.	TOTAL SHEETS
07	LA	710	17.2/26.4	1078	1507

REGISTERED ELECTRICAL ENGINEER 4/4/11 DATE

6-27-11
PLANS APPROVAL DATE

REGISTERED PROFESSIONAL ENGINEER STANLEY L. JOHNSON No. E 16761 Exp. 09/30/12 ELECTRICAL STATE OF CALIFORNIA

THE STATE OF CALIFORNIA OR ITS OFFICERS OR AGENTS SHALL NOT BE RESPONSIBLE FOR THE ACCURACY OR COMPLETENESS OF SCANNED COPIES OF THIS PLAN SHEET.

FOR ACCURATE RIGHT OF WAY DATA, CONTACT
RIGHT OF WAY ENGINEERING AT THE DISTRICT OFFICE.

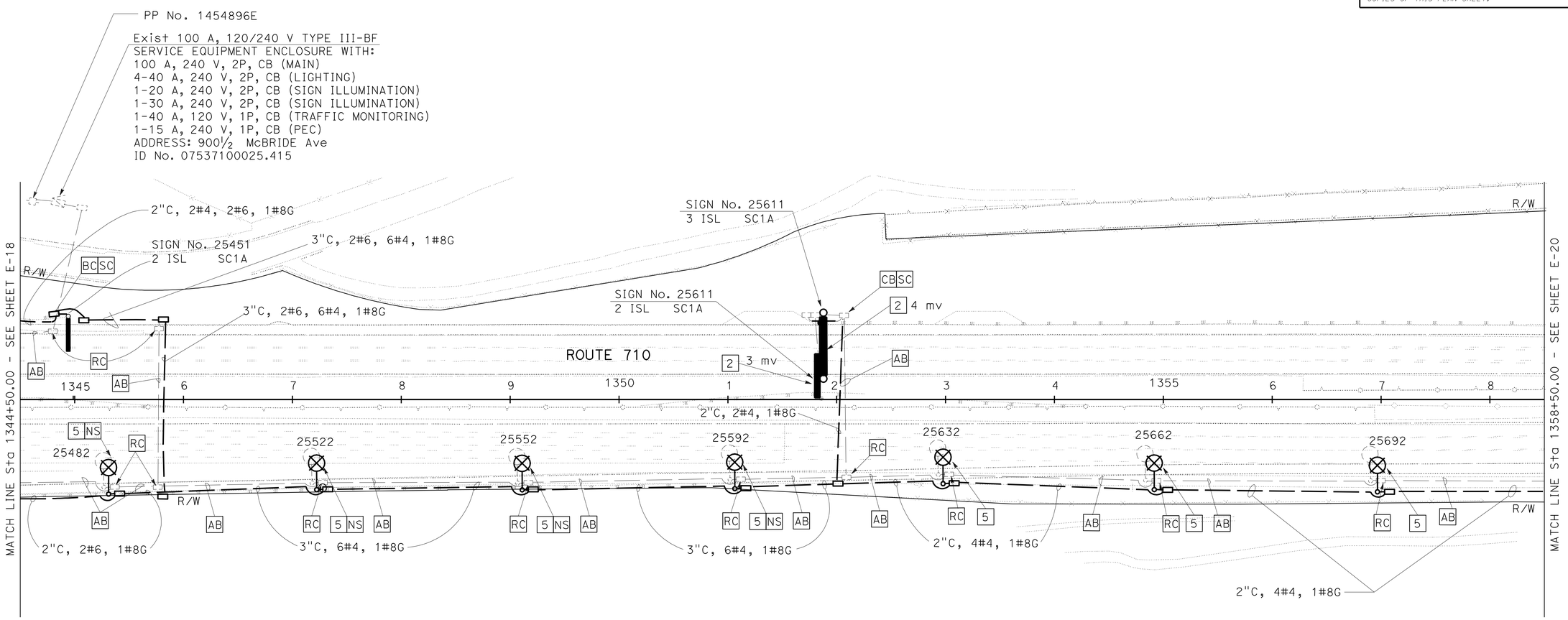

FOR PROJECT NOTES, SEE SHEET E-1.
FOR WIRING DIAGRAMS SEE SHEETS E-32 AND E-33.
THIS PLAN IS ACCURATE FOR ELECTRICAL WORK ONLY.

MODIFY LIGHTING AND SIGN ILLUMINATION

SCALE: 1" = 50'

E-19

STATE OF CALIFORNIA - DEPARTMENT OF TRANSPORTATION
Caltrans® **TRAFFIC DESIGN**
FUNCTIONAL SUPERVISOR: HASSAN MANNAA
CALCULATED-DESIGNED BY: MM
CHECKED BY: STANLEY L. JOHNSON
REVISED BY
DATE REVISED

LAST REVISION 00-00-00
DATE PLOTTED => 29-JUN-2011
TIME PLOTTED => 18:21

Dist	COUNTY	ROUTE	POST MILES TOTAL PROJECT	SHEET No.	TOTAL SHEETS
07	LA	710	17.2/26.4	1079	1507

REGISTERED ELECTRICAL ENGINEER 4/4/11 DATE

6-27-11
PLANS APPROVAL DATE

REGISTERED PROFESSIONAL ENGINEER STANLEY L. JOHNSON No. E 16761 Exp. 09/30/12 ELECTRICAL STATE OF CALIFORNIA

THE STATE OF CALIFORNIA OR ITS OFFICERS OR AGENTS SHALL NOT BE RESPONSIBLE FOR THE ACCURACY OR COMPLETENESS OF SCANNED COPIES OF THIS PLAN SHEET.

FOR ACCURATE RIGHT OF WAY DATA, CONTACT
RIGHT OF WAY ENGINEERING AT THE DISTRICT OFFICE.

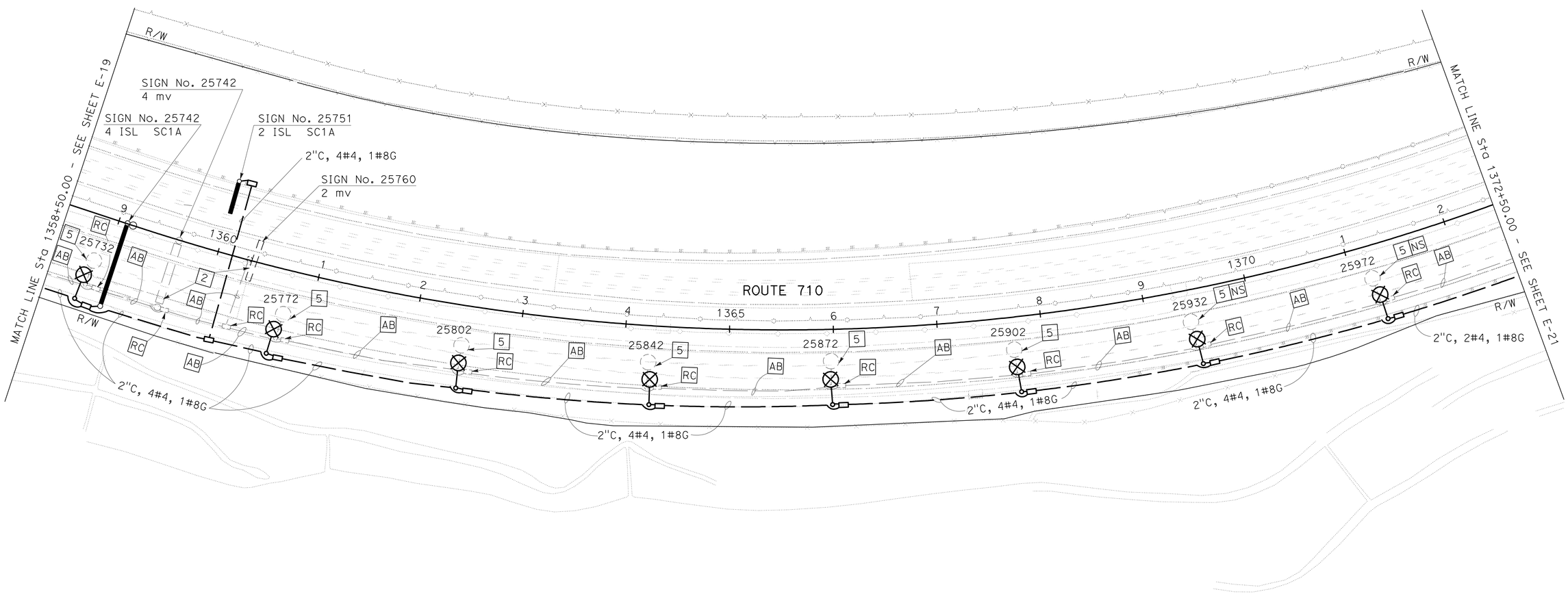

FOR PROJECT NOTES, SEE SHEET E-1.
FOR WIRING DIAGRAMS SEE SHEETS E-32 AND E-33.
THIS PLAN IS ACCURATE FOR ELECTRICAL WORK ONLY.

MODIFY LIGHTING AND SIGN ILLUMINATION

SCALE: 1" = 50'

E-20

STATE OF CALIFORNIA - DEPARTMENT OF TRANSPORTATION
Caltrans® TRAFFIC DESIGN

FUNCTIONAL SUPERVISOR: HASSAN MANNAA
CALCULATED-DESIGNED BY: MM
CHECKED BY: STANLEY L. JOHNSON
REVISED BY
DATE REVISED

LAST REVISION 00-00-00 | DATE PLOTTED => 29-JUN-2011 | TIME PLOTTED => 18:22

Dist	COUNTY	ROUTE	POST MILES TOTAL PROJECT	SHEET No.	TOTAL SHEETS
07	LA	710	17.2/26.4	1080	1507

REGISTERED ELECTRICAL ENGINEER 4/4/11 DATE

6-27-11
PLANS APPROVAL DATE

REGISTERED PROFESSIONAL ENGINEER
STANLEY L. JOHNSON
No. E 16761
Exp. 09/30/12
ELECTRICAL
STATE OF CALIFORNIA

THE STATE OF CALIFORNIA OR ITS OFFICERS OR AGENTS SHALL NOT BE RESPONSIBLE FOR THE ACCURACY OR COMPLETENESS OF SCANNED COPIES OF THIS PLAN SHEET.

FOR ACCURATE RIGHT OF WAY DATA, CONTACT
RIGHT OF WAY ENGINEERING AT THE DISTRICT OFFICE.

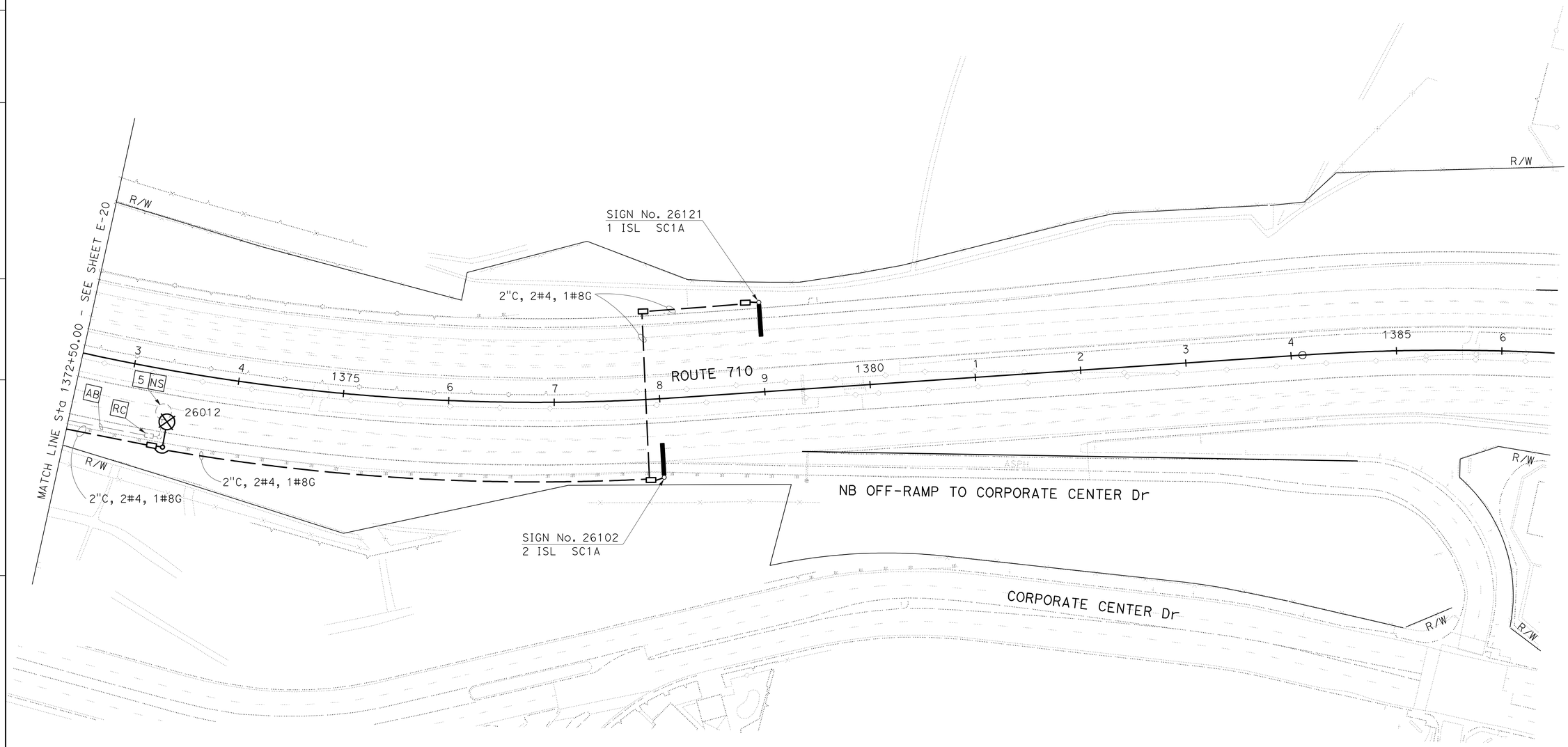

MODIFY LIGHTING AND SIGN ILLUMINATION

SCALE: 1" = 50'

FOR PROJECT NOTES, SEE SHEET E-1.
FOR WIRING DIAGRAMS SEE SHEETS E-32 AND E-33.
THIS PLAN IS ACCURATE FOR ELECTRICAL WORK ONLY.

E-21

STATE OF CALIFORNIA - DEPARTMENT OF TRANSPORTATION
Caltrans® **TRAFFIC DESIGN**

FUNCTIONAL SUPERVISOR: HASSAN MANNAA

CALCULATED-DESIGNED BY: MM
CHECKED BY: STANLEY L. JOHNSON

REVISED BY
DATE REVISED

LAST REVISION 00-00-00
DATE PLOTTED => 29-JUN-2011
TIME PLOTTED => 18:22

Dist	COUNTY	ROUTE	POST MILES TOTAL PROJECT	SHEET No.	TOTAL SHEETS
07	LA	710	17.2/26.4	1081	1507

Stanley L. Johnson 4/4/11
REGISTERED ELECTRICAL ENGINEER DATE

6-27-11
PLANS APPROVAL DATE

REGISTERED PROFESSIONAL ENGINEER
STANLEY L. JOHNSON
No. E 16761
Exp. 09/30/12
ELECTRICAL
STATE OF CALIFORNIA

THE STATE OF CALIFORNIA OR ITS OFFICERS OR AGENTS SHALL NOT BE RESPONSIBLE FOR THE ACCURACY OR COMPLETENESS OF SCANNED COPIES OF THIS PLAN SHEET.

FOR ACCURATE RIGHT OF WAY DATA, CONTACT
RIGHT OF WAY ENGINEERING AT THE DISTRICT OFFICE.

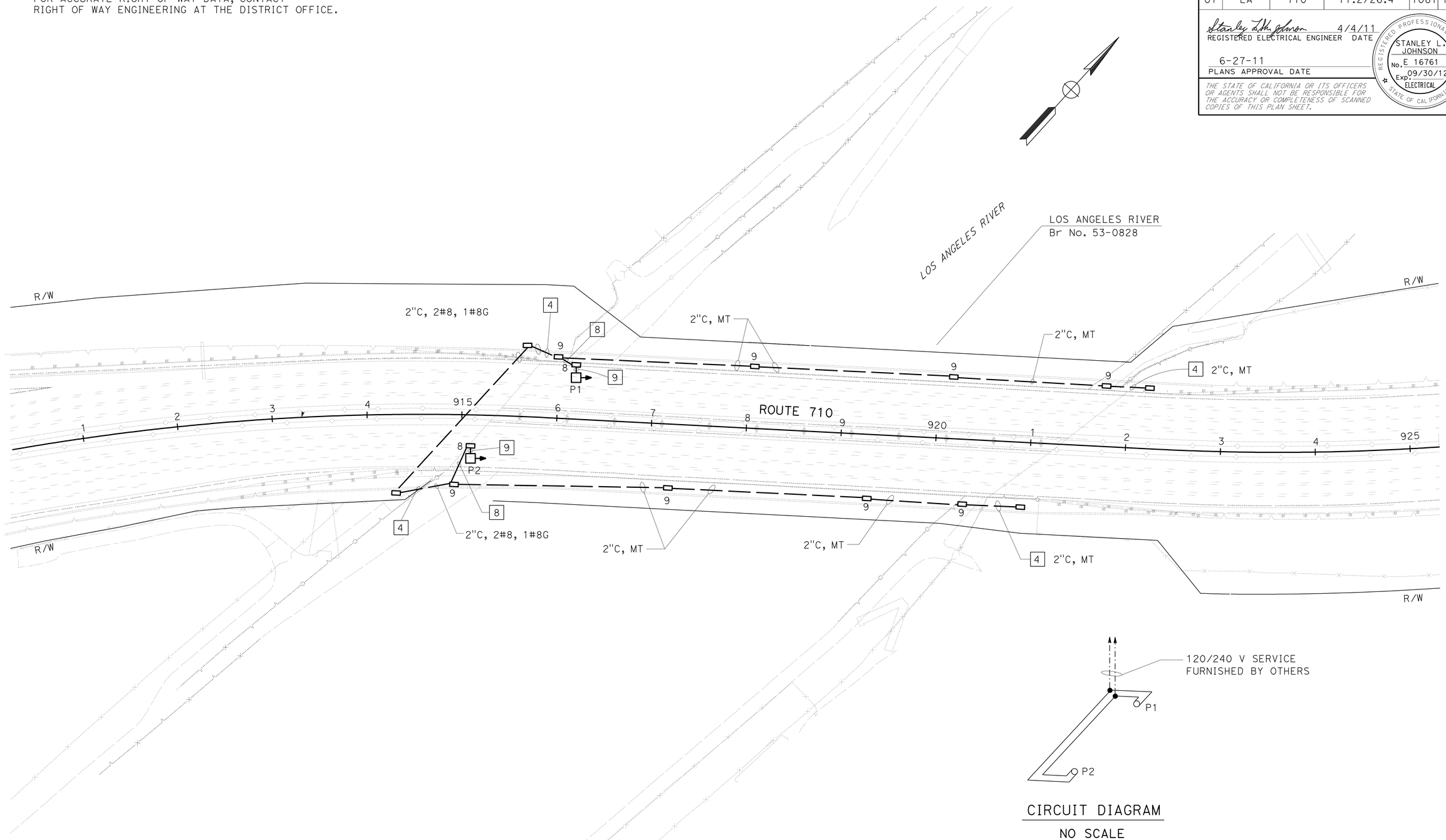

CIRCUIT DIAGRAM
NO SCALE

LIGHTING (BIKEWAY)

SCALE: 1" = 50'

E-22

FOR PROJECT NOTES, SEE SHEET E-1.
THIS PLAN IS ACCURATE FOR ELECTRICAL WORK ONLY.

STATE OF CALIFORNIA - DEPARTMENT OF TRANSPORTATION
Caltrans® **TRAFFIC DESIGN**

FUNCTIONAL SUPERVISOR: HASSAN MANNAA
CALCULATED-DESIGNED BY: STANLEY L. JOHNSON
CHECKED BY: HASSAN MANNAA
REVISED BY
DATE REVISED

LAST REVISION 00-00-00
DATE PLOTTED => 29-JUN-2011
TIME PLOTTED => 18:22

FOR ACCURATE RIGHT OF WAY DATA, CONTACT
RIGHT OF WAY ENGINEERING AT THE DISTRICT OFFICE.

Dist	COUNTY	ROUTE	POST MILES TOTAL PROJECT	SHEET No.	TOTAL SHEETS
07	LA	710	17.2/26.4	1082	1507

Stanley L. Johnson 4/4/11
REGISTERED ELECTRICAL ENGINEER DATE

6-27-11
PLANS APPROVAL DATE

REGISTERED PROFESSIONAL ENGINEER
STANLEY L. JOHNSON
No. E 16761
Exp. 09/30/12
ELECTRICAL
STATE OF CALIFORNIA

THE STATE OF CALIFORNIA OR ITS OFFICERS OR AGENTS SHALL NOT BE RESPONSIBLE FOR THE ACCURACY OR COMPLETENESS OF SCANNED COPIES OF THIS PLAN SHEET.

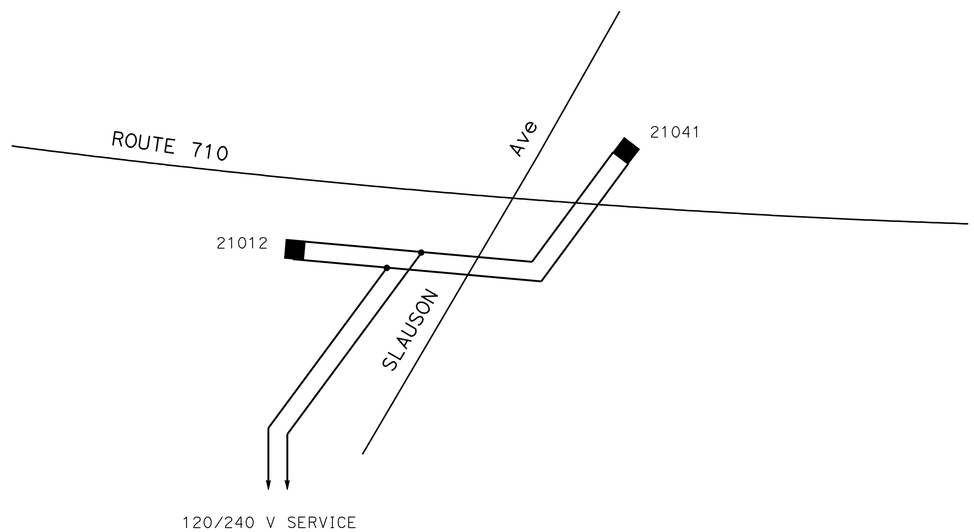

MODIFY LIGHTING AND SIGN ILLUMINATION

(WIRING DIAGRAM)

NO SCALE

FOR LEGEND, SEE SHEET E-1.
THIS PLAN IS ACCURATE FOR ELECTRICAL WORK ONLY.

E-23

STATE OF CALIFORNIA - DEPARTMENT OF TRANSPORTATION
Caltrans® TRAFFIC DESIGN

FUNCTIONAL SUPERVISOR: HASSAN MANNAA
CALCULATED-DESIGNED BY: STANLEY L. JOHNSON
CHECKED BY: HASSAN MANNAA
REVISED BY
DATE REVISED

LAST REVISION 00-00-00
DATE PLOTTED => 29-JUN-2011
TIME PLOTTED => 18:22

FOR ACCURATE RIGHT OF WAY DATA, CONTACT
RIGHT OF WAY ENGINEERING AT THE DISTRICT OFFICE.

Dist	COUNTY	ROUTE	POST MILES TOTAL PROJECT	SHEET No.	TOTAL SHEETS
07	LA	710	17.2/26.4	1083	1507

REGISTERED ELECTRICAL ENGINEER 4/4/11 DATE

6-27-11
PLANS APPROVAL DATE

REGISTERED PROFESSIONAL ENGINEER
STANLEY L. JOHNSON
No. E 16761
Exp. 09/30/12
ELECTRICAL
STATE OF CALIFORNIA

THE STATE OF CALIFORNIA OR ITS OFFICERS OR AGENTS SHALL NOT BE RESPONSIBLE FOR THE ACCURACY OR COMPLETENESS OF SCANNED COPIES OF THIS PLAN SHEET.

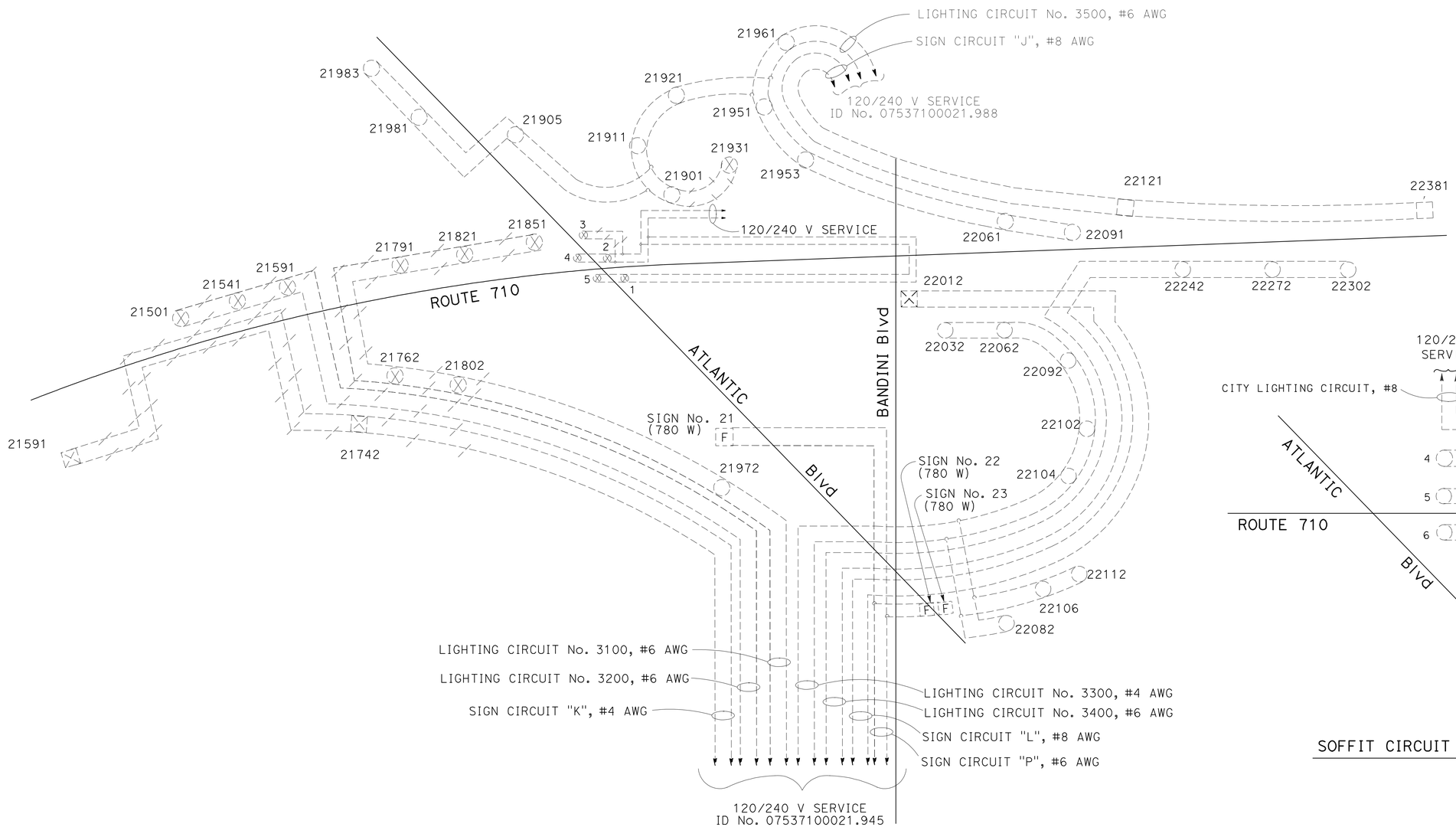

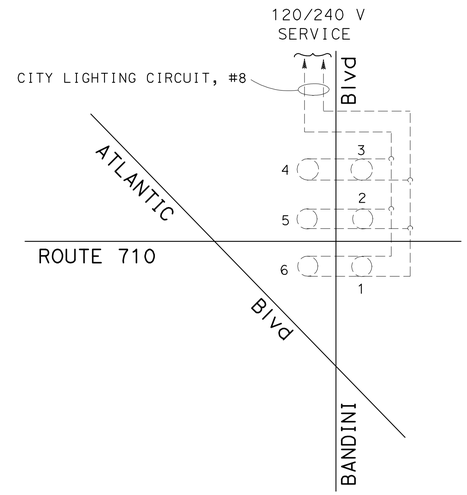

SOFFIT CIRCUIT DIAGRAM No. 2

MODIFY LIGHTING AND SIGN ILLUMINATION (EXISTING WIRING DIAGRAM)

NO SCALE

FOR LEGEND, SEE SHEET E-1.
THIS PLAN IS ACCURATE FOR ELECTRICAL WORK ONLY.

E-24

STATE OF CALIFORNIA - DEPARTMENT OF TRANSPORTATION
Caltrans TRAFFIC DESIGN
FUNCTIONAL SUPERVISOR: HASSAN MANNAA
CALCULATED-DESIGNED BY: STANLEY L. JOHNSON
CHECKED BY: HASSAN MANNAA
REVISED BY
DATE REVISED

LAST REVISION 00-00-00 DATE PLOTTED => 29-JUN-2011 TIME PLOTTED => 18:22

Dist	COUNTY	ROUTE	POST MILES TOTAL PROJECT	SHEET No.	TOTAL SHEETS
07	LA	710	17.2/26.4	1084	1507

REGISTERED ELECTRICAL ENGINEER 4/4/11 DATE

6-27-11
PLANS APPROVAL DATE

REGISTERED PROFESSIONAL ENGINEER STANLEY L. JOHNSON No. E 16761 Exp. 09/30/12 ELECTRICAL STATE OF CALIFORNIA

THE STATE OF CALIFORNIA OR ITS OFFICERS OR AGENTS SHALL NOT BE RESPONSIBLE FOR THE ACCURACY OR COMPLETENESS OF SCANNED COPIES OF THIS PLAN SHEET.

FOR ACCURATE RIGHT OF WAY DATA, CONTACT
RIGHT OF WAY ENGINEERING AT THE DISTRICT OFFICE.

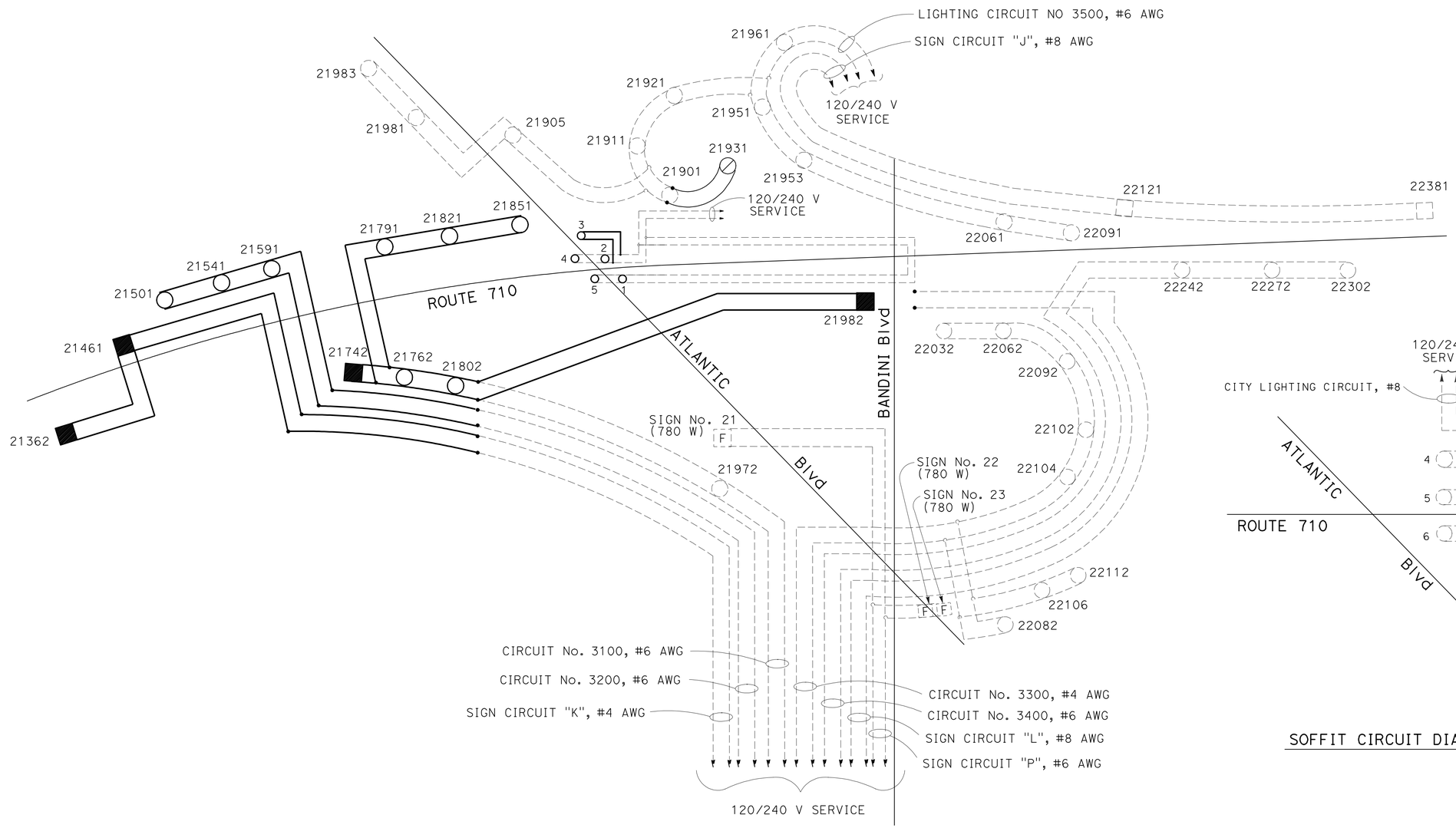

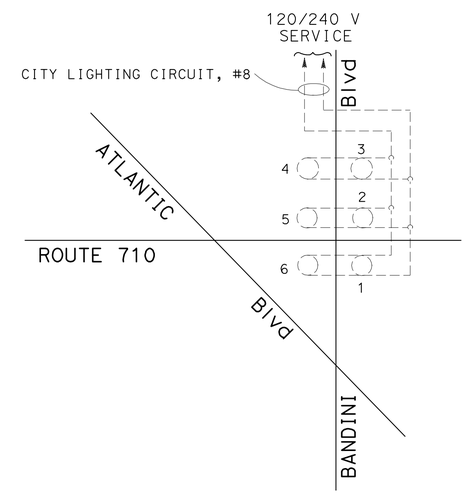

SOFFIT CIRCUIT DIAGRAM No. 2

MODIFY LIGHTING AND SIGN ILLUMINATION (NEW WIRING DIAGRAM)

NO SCALE

FOR LEGEND, SEE SHEET E-1.
THIS PLAN IS ACCURATE FOR ELECTRICAL WORK ONLY.

E-25

STATE OF CALIFORNIA - DEPARTMENT OF TRANSPORTATION
Caltrans® TRAFFIC DESIGN

FUNCTIONAL SUPERVISOR: HASSAN MANNAA
CALCULATED-DESIGNED BY: STANLEY L. JOHNSON
CHECKED BY: HASSAN MANNAA
REVISED BY
DATE REVISED

LAST REVISION 00-00-00
DATE PLOTTED => 29-JUN-2011
TIME PLOTTED => 18:22

Dist	COUNTY	ROUTE	POST MILES TOTAL PROJECT	SHEET No.	TOTAL SHEETS
07	LA	710	17.2/26.4	1085	1507

REGISTERED ELECTRICAL ENGINEER 4/4/11 DATE

6-27-11
PLANS APPROVAL DATE

REGISTERED PROFESSIONAL ENGINEER STANLEY L. JOHNSON No. E 16761 Exp. 09/30/12 ELECTRICAL STATE OF CALIFORNIA

THE STATE OF CALIFORNIA OR ITS OFFICERS OR AGENTS SHALL NOT BE RESPONSIBLE FOR THE ACCURACY OR COMPLETENESS OF SCANNED COPIES OF THIS PLAN SHEET.

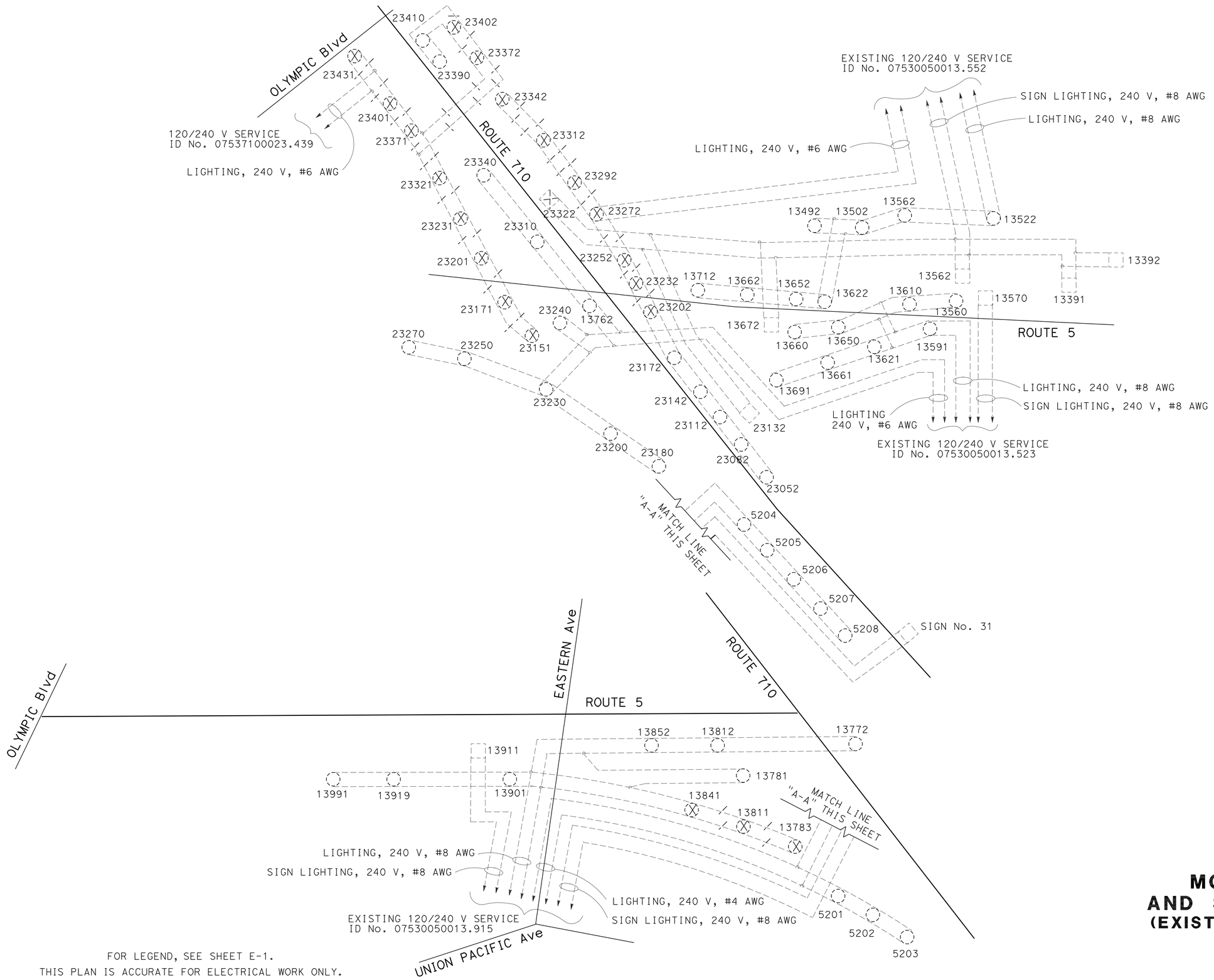

FOR LEGEND, SEE SHEET E-1.
THIS PLAN IS ACCURATE FOR ELECTRICAL WORK ONLY.

MODIFY LIGHTING AND SIGN ILLUMINATION
(EXISTING WIRING DIAGRAM)
NO SCALE

E-26

STATE OF CALIFORNIA - DEPARTMENT OF TRANSPORTATION
Caltrans® TRAFFIC DESIGN

FUNCTIONAL SUPERVISOR: HASSAN MANNAA
CALCULATED-DESIGNED BY: STANLEY L. JOHNSON
CHECKED BY: HASSAN MANNAA
REVISED BY
DATE REVISED

LAST REVISION 00-00-00 | DATE PLOTTED => 06-JUL-2011 | TIME PLOTTED => 10:36

BORDER LAST REVISED 7/2/2010 | USERNAME => trmikesi | DGN FILE => 720211ua026.dgn | RELATIVE BORDER SCALE IS IN INCHES 0 1 2 3 | UNIT 1879 | PROJECT NUMBER & PHASE 07000208691

Dist	COUNTY	ROUTE	POST MILES TOTAL PROJECT	SHEET No.	TOTAL SHEETS
07	LA	710	17.2/26.4	1086	1507

REGISTERED ELECTRICAL ENGINEER 4/4/11 DATE

6-27-11
PLANS APPROVAL DATE

REGISTERED PROFESSIONAL ENGINEER STANLEY L. JOHNSON No. E 16761 Exp. 09/30/12 ELECTRICAL STATE OF CALIFORNIA

THE STATE OF CALIFORNIA OR ITS OFFICERS OR AGENTS SHALL NOT BE RESPONSIBLE FOR THE ACCURACY OR COMPLETENESS OF SCANNED COPIES OF THIS PLAN SHEET.

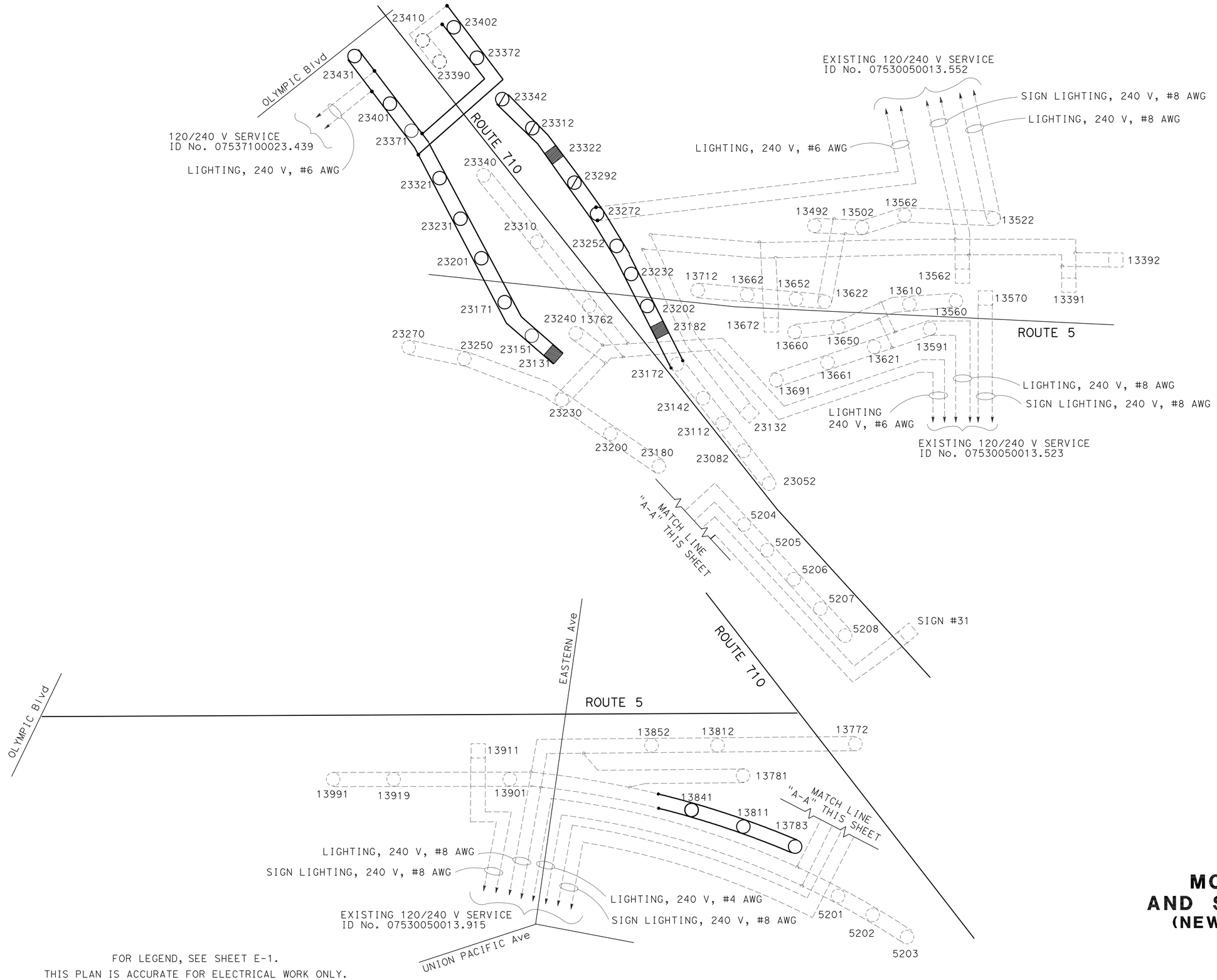

FOR LEGEND, SEE SHEET E-1.
THIS PLAN IS ACCURATE FOR ELECTRICAL WORK ONLY.

MODIFY LIGHTING AND SIGN ILLUMINATION (NEW WIRING DIAGRAM)

NO SCALE

E-27

STATE OF CALIFORNIA - DEPARTMENT OF TRANSPORTATION
Caltrans® TRAFFIC DESIGN

FUNCTIONAL SUPERVISOR: HASSAN MANNAA
CALCULATED-DESIGNED BY: STANLEY L. JOHNSON
CHECKED BY: HASSAN MANNAA
REVISED BY
DATE REVISED

LAST REVISION 00-00-00
DATE PLOTTED => 06-JUL-2011
TIME PLOTTED => 10:36

Dist	COUNTY	ROUTE	POST MILES TOTAL PROJECT	SHEET No.	TOTAL SHEETS
07	LA	710	17.2/26.4	1087	1507

REGISTERED ELECTRICAL ENGINEER 4/4/11 DATE

6-27-11
PLANS APPROVAL DATE

REGISTERED PROFESSIONAL ENGINEER STANLEY L. JOHNSON No. E 16761 Exp. 09/30/12 ELECTRICAL STATE OF CALIFORNIA

THE STATE OF CALIFORNIA OR ITS OFFICERS OR AGENTS SHALL NOT BE RESPONSIBLE FOR THE ACCURACY OR COMPLETENESS OF SCANNED COPIES OF THIS PLAN SHEET.

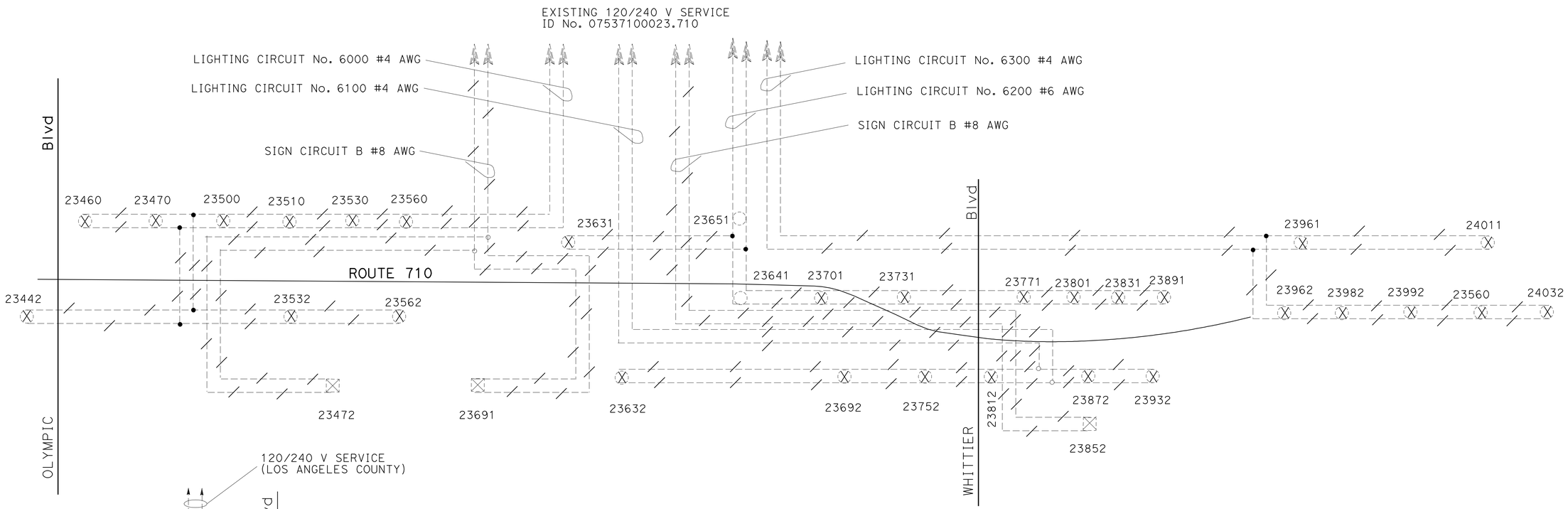

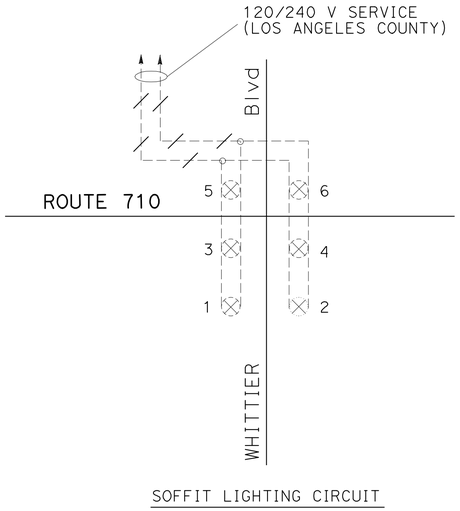

SOFFIT LIGHTING CIRCUIT

MODIFY LIGHTING AND SIGN ILLUMINATION

(EXISTING WIRING DIAGRAM)

NO SCALE

FOR LEGEND, SEE SHEET E-1.
THIS PLAN IS ACCURATE FOR ELECTRICAL WORK ONLY.

E-28

STATE OF CALIFORNIA - DEPARTMENT OF TRANSPORTATION
Caltrans® TRAFFIC DESIGN

FUNCTIONAL SUPERVISOR: HASSAN MANNAA
CALCULATED-DESIGNED BY: STANLEY L. JOHNSON
CHECKED BY: HASSAN MANNAA
REVISED BY
DATE REVISED

LAST REVISION 00-00-00
DATE PLOTTED => 29-JUN-2011
TIME PLOTTED => 18:22

Dist	COUNTY	ROUTE	POST MILES TOTAL PROJECT	SHEET No.	TOTAL SHEETS
07	LA	710	17.2/26.4	1088	1507

REGISTERED ELECTRICAL ENGINEER 4/4/11 DATE

6-27-11
PLANS APPROVAL DATE

REGISTERED PROFESSIONAL ENGINEER STANLEY L. JOHNSON No. E 16761 Exp. 09/30/12 ELECTRICAL STATE OF CALIFORNIA

THE STATE OF CALIFORNIA OR ITS OFFICERS OR AGENTS SHALL NOT BE RESPONSIBLE FOR THE ACCURACY OR COMPLETENESS OF SCANNED COPIES OF THIS PLAN SHEET.

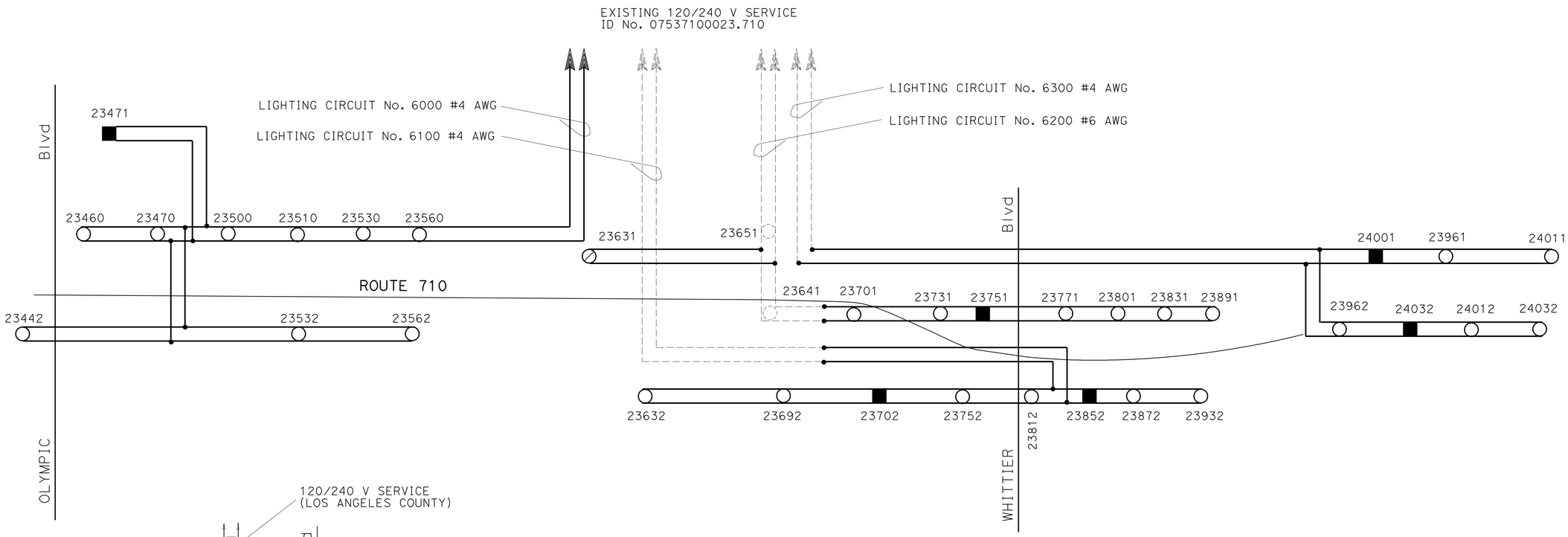

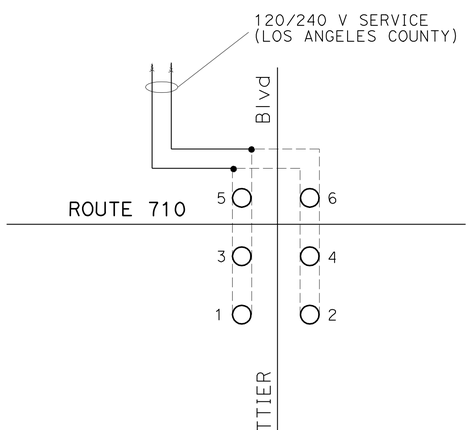

SOFFIT LIGHTING CIRCUIT

FOR LEGEND, SEE SHEET E-1.
THIS PLAN IS ACCURATE FOR ELECTRICAL WORK ONLY.

MODIFY LIGHTING AND SIGN ILLUMINATION
(NEW WIRING DIAGRAM)
NO SCALE

E-29

STATE OF CALIFORNIA - DEPARTMENT OF TRANSPORTATION
Caltrans TRAFFIC DESIGN

FUNCTIONAL SUPERVISOR: HASSAN MANNAA
CALCULATED-DESIGNED BY: STANLEY L. JOHNSON
CHECKED BY: HASSAN MANNAA
REVISED BY
DATE REVISED

LAST REVISION 00-00-00 | DATE PLOTTED => 06-JUL-2011 | TIME PLOTTED => 10:36

Dist	COUNTY	ROUTE	POST MILES TOTAL PROJECT	SHEET No.	TOTAL SHEETS
07	LA	710	17.2/26.4	1089	1507

REGISTERED ELECTRICAL ENGINEER 4/4/11 DATE

6-27-11
PLANS APPROVAL DATE

REGISTERED PROFESSIONAL ENGINEER STANLEY L. JOHNSON No. E 16761 Exp. 09/30/12 ELECTRICAL STATE OF CALIFORNIA

THE STATE OF CALIFORNIA OR ITS OFFICERS OR AGENTS SHALL NOT BE RESPONSIBLE FOR THE ACCURACY OR COMPLETENESS OF SCANNED COPIES OF THIS PLAN SHEET.

FOR ACCURATE RIGHT OF WAY DATA, CONTACT
RIGHT OF WAY ENGINEERING AT THE DISTRICT OFFICE.

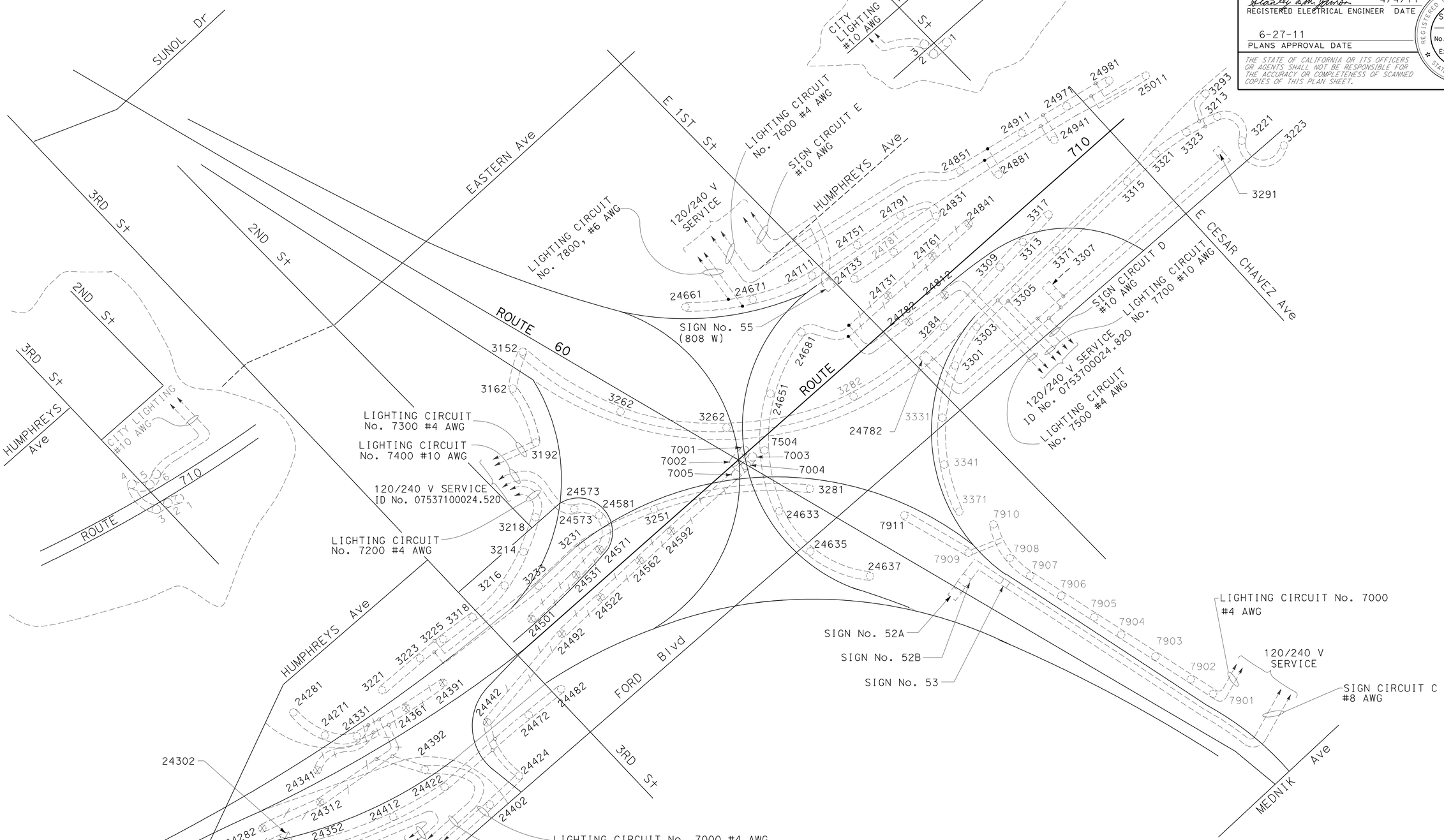

MODIFY LIGHTING AND SIGN ILLUMINATION
(EXISTING WIRING DIAGRAM)
NO SCALE

FOR LEGEND, SEE SHEET E-1.
THIS PLAN IS ACCURATE FOR ELECTRICAL WORK ONLY.

E-30

STATE OF CALIFORNIA - DEPARTMENT OF TRANSPORTATION
Caltrans TRAFFIC DESIGN

FUNCTIONAL SUPERVISOR: HASSAN MANNAA
CALCULATED-DESIGNED BY: STANLEY L. JOHNSON
CHECKED BY: HASSAN MANNAA
REVISED BY
DATE REVISED

LAST REVISION 00-00-00
DATE PLOTTED => 29-JUN-2011
TIME PLOTTED => 18:23

DIST	COUNTY	ROUTE	POST MILES TOTAL PROJECT	SHEET No.	TOTAL SHEETS
07	LA	710	17.2/26.4	1090	1507

REGISTERED ELECTRICAL ENGINEER — DATE: 4/4/11

6-27-11
PLANS APPROVAL DATE

REGISTERED PROFESSIONAL ENGINEER — STANLEY L. JOHNSON — No. E 16761 — Exp. 09/30/12 — ELECTRICAL — STATE OF CALIFORNIA

THE STATE OF CALIFORNIA OR ITS OFFICERS OR AGENTS SHALL NOT BE RESPONSIBLE FOR THE ACCURACY OR COMPLETENESS OF SCANNED COPIES OF THIS PLAN SHEET.

FOR ACCURATE RIGHT OF WAY DATA, CONTACT
RIGHT OF WAY ENGINEERING AT THE DISTRICT OFFICE.

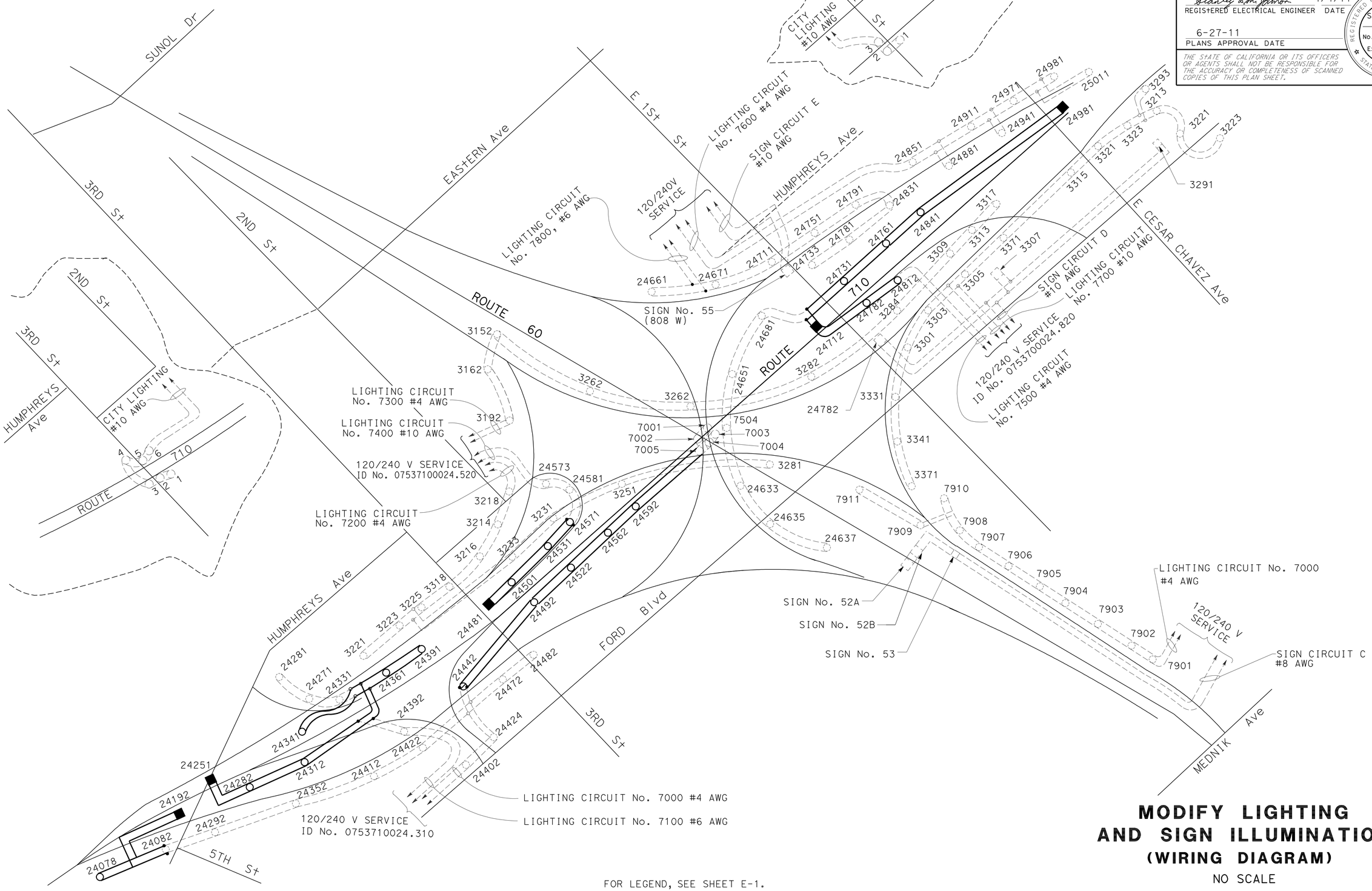

MODIFY LIGHTING AND SIGN ILLUMINATION
(WIRING DIAGRAM)

NO SCALE

FOR LEGEND, SEE SHEET E-1.
THIS PLAN IS ACCURATE FOR ELECTRICAL WORK ONLY.

E-31

STATE OF CALIFORNIA - DEPARTMENT OF TRANSPORTATION
Caltrans® TRAFFIC DESIGN

FUNCTIONAL SUPERVISOR: HASSAN MANNAA
CALCULATED-DESIGNED BY: STANLEY L. JOHNSON
CHECKED BY: HASSAN MANNAA
REVISED BY
DATE REVISED

LAST REVISION 00-00-00
DATE PLOTTED => 29-JUN-2011
TIME PLOTTED => 18:23

Dist	COUNTY	ROUTE	POST MILES TOTAL PROJECT	SHEET No.	TOTAL SHEETS
07	LA	710	17.2/26.4	1091	1507

REGISTERED ELECTRICAL ENGINEER 4/4/11 DATE

6-27-11
PLANS APPROVAL DATE

REGISTERED PROFESSIONAL ENGINEER STANLEY L. JOHNSON No. E 16761 Exp. 09/30/12 ELECTRICAL STATE OF CALIFORNIA

THE STATE OF CALIFORNIA OR ITS OFFICERS OR AGENTS SHALL NOT BE RESPONSIBLE FOR THE ACCURACY OR COMPLETENESS OF SCANNED COPIES OF THIS PLAN SHEET.

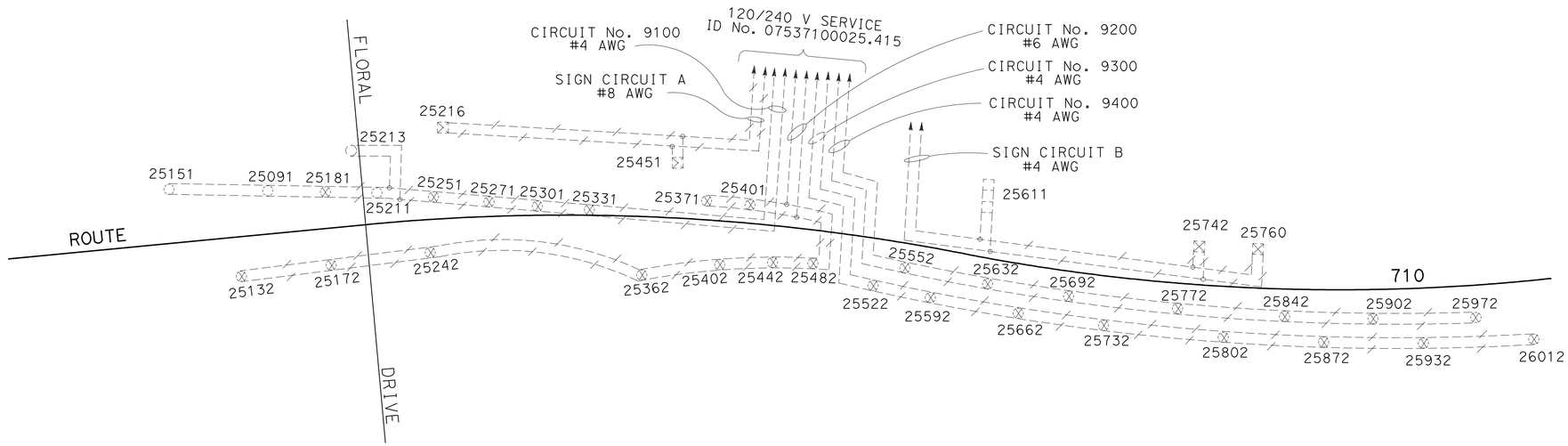

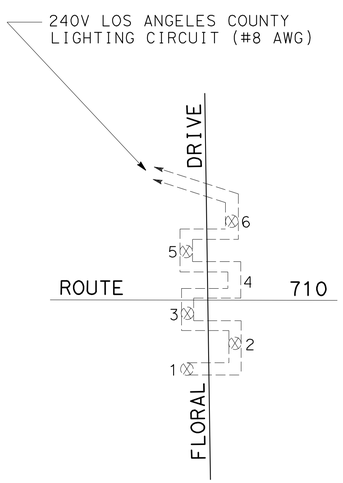

SOFFIT CIRCUIT

MODIFY LIGHTING AND SIGN ILLUMINATION
(EXISTING WIRING DIAGRAM)

NO SCALE

FOR LEGEND, SEE SHEET E-1.
THIS PLAN IS ACCURATE FOR ELECTRICAL WORK ONLY.

E-32

STATE OF CALIFORNIA - DEPARTMENT OF TRANSPORTATION
Caltrans® TRAFFIC DESIGN

FUNCTIONAL SUPERVISOR: HASSAN MANNAA
CALCULATED-DESIGNED BY: STANLEY L. JOHNSON
CHECKED BY: HASSAN MANNAA
REVISED BY
DATE REVISED

LAST REVISION 00-00-00
DATE PLOTTED => 29-JUN-2011
TIME PLOTTED => 18:23

Dist	COUNTY	ROUTE	POST MILES TOTAL PROJECT	SHEET No.	TOTAL SHEETS
07	LA	710	17.2/26.4	1092	1507

REGISTERED ELECTRICAL ENGINEER 4/4/11 DATE

6-27-11
PLANS APPROVAL DATE

REGISTERED PROFESSIONAL ENGINEER STANLEY L. JOHNSON No. E 16761 Exp. 09/30/12 ELECTRICAL STATE OF CALIFORNIA

THE STATE OF CALIFORNIA OR ITS OFFICERS OR AGENTS SHALL NOT BE RESPONSIBLE FOR THE ACCURACY OR COMPLETENESS OF SCANNED COPIES OF THIS PLAN SHEET.

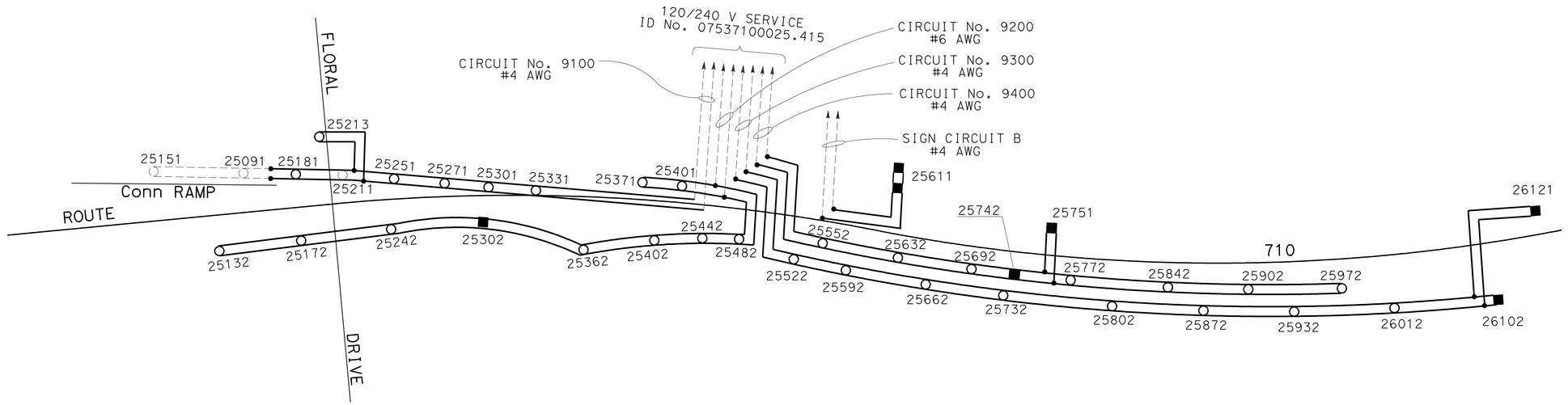

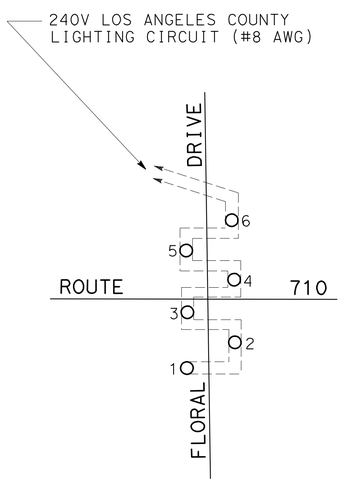

MODIFIED SOFFIT LIGHTING CIRCUIT

MODIFY LIGHTING AND SIGN ILLUMINATION (NEW WIRING DIAGRAM)

NO SCALE

FOR LEGEND, SEE SHEET E-1.
THIS PLAN IS ACCURATE FOR ELECTRICAL WORK ONLY.

E-33

STATE OF CALIFORNIA - DEPARTMENT OF TRANSPORTATION
Caltrans TRAFFIC DESIGN

FUNCTIONAL SUPERVISOR: HASSAN MANNAA
CALCULATED-DESIGNED BY: STANLEY L. JOHNSON
CHECKED BY: HASSAN MANNAA
REVISED BY
DATE REVISED

LAST REVISION 00-00-00
DATE PLOTTED => 29-JUN-2011
TIME PLOTTED => 18:23

Dist	COUNTY	ROUTE	POST MILES TOTAL PROJECT	SHEET No.	TOTAL SHEETS
07	LA	710	17.2/26.4	1093	1507

REGISTERED ELECTRICAL ENGINEER 4/4/11 DATE

6-27-11
PLANS APPROVAL DATE

THE STATE OF CALIFORNIA OR ITS OFFICERS OR AGENTS SHALL NOT BE RESPONSIBLE FOR THE ACCURACY OR COMPLETENESS OF SCANNED COPIES OF THIS PLAN SHEET.

REGISTERED PROFESSIONAL ENGINEER
STANLEY L. JOHNSON
No. E 16761
Exp. 09/30/12
ELECTRICAL
STATE OF CALIFORNIA

NOTES: (THIS SHEET)

1. ALL OVERHEAD CABLE SHALL BE SLACK SPANNED WITH 20′ MINIMUM OVERHEAD CLEARANCE.
2. POLES SHALL BE GUYED OR RAKED WHERE NECESSARY.
3. COLOR CODING ON MULTI-CONDUCTOR CABLE NEED NOT CONFORM TO THE STANDARD SPECIFICATIONS REQUIREMENT.
4. LUMINAIRE SHALL HAVE INTEGRAL BALLAST.

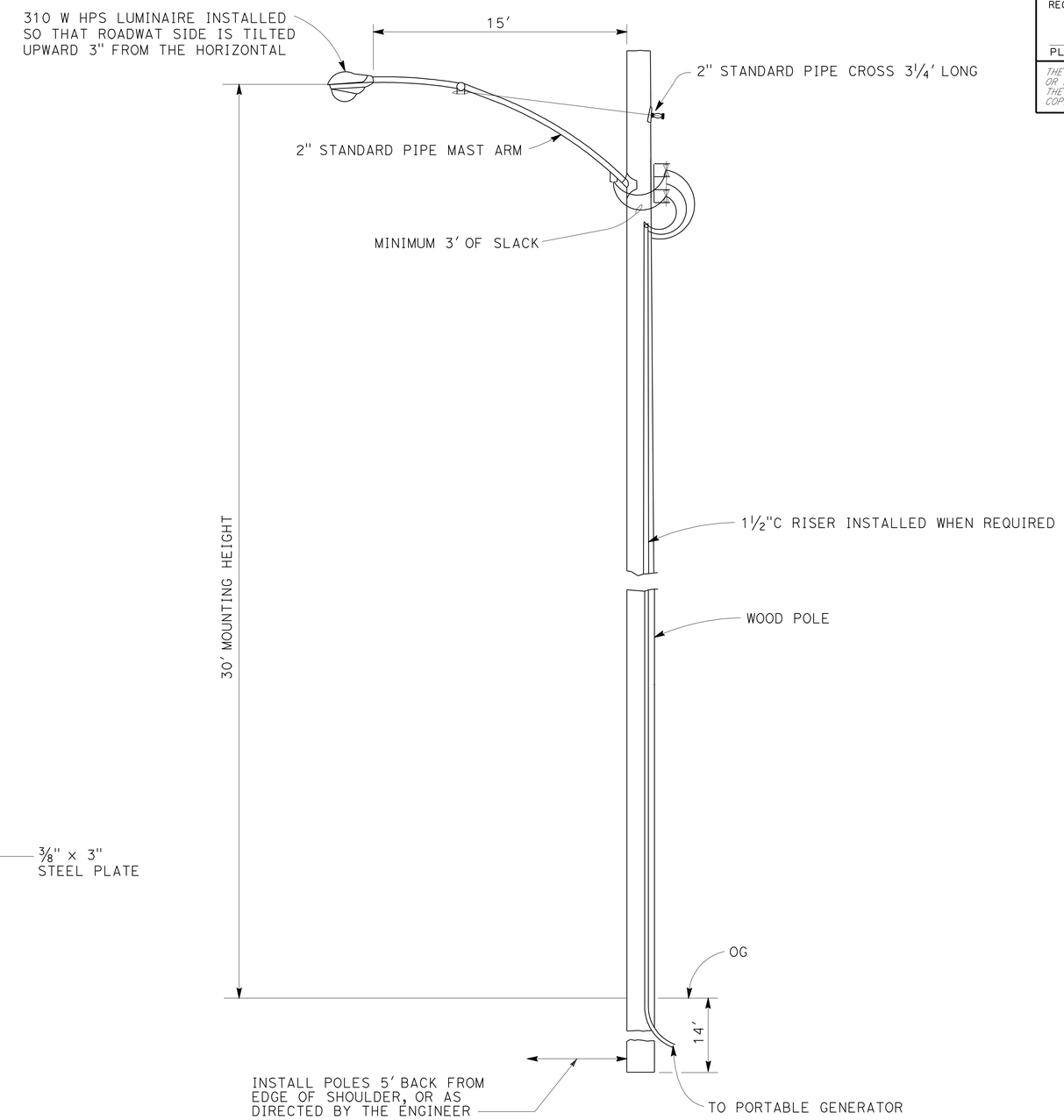

TYPICAL MOUNTING DETAILS

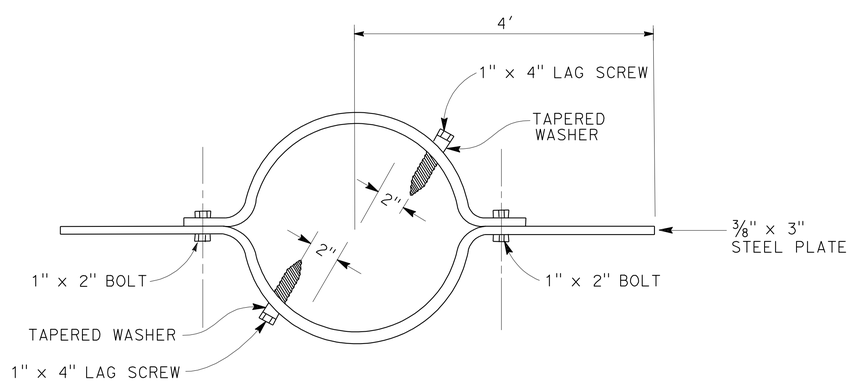

WIND ANCHOR

INSTALL PERPENDICULAR TO MAST ARMS AND 2′ Min BELOW GRADE

LIGHTING (TEMPORARY)
(WOOD POLE INSTALLATION DETAILS)

NO SCALE

E-34

THIS PLAN IS ACCURATE FOR ELECTRICAL WORK ONLY.

STATE OF CALIFORNIA - DEPARTMENT OF TRANSPORTATION
Caltrans® TRAFFIC DESIGN

FUNCTIONAL SUPERVISOR: HASSAN MANNAA
CALCULATED-DESIGNED BY: STANLEY L. JOHNSON
CHECKED BY: HASSAN MANNAA
REVISED BY
DATE REVISED

LAST REVISION 00-00-00
DATE PLOTTED => 29-JUN-2011
TIME PLOTTED => 18:23

Dist	COUNTY	ROUTE	POST MILES TOTAL PROJECT	SHEET No.	TOTAL SHEETS
07	LA	710	17.2/26.4	1094	1507

REGISTERED ELECTRICAL ENGINEER 4/4/11 DATE

6-27-11
PLANS APPROVAL DATE

REGISTERED PROFESSIONAL ENGINEER
STANLEY L. JOHNSON
No. E 16761
Exp. 09/30/12
ELECTRICAL
STATE OF CALIFORNIA

THE STATE OF CALIFORNIA OR ITS OFFICERS OR AGENTS SHALL NOT BE RESPONSIBLE FOR THE ACCURACY OR COMPLETENESS OF SCANNED COPIES OF THIS PLAN SHEET.

FOR ACCURATE RIGHT OF WAY DATA, CONTACT
RIGHT OF WAY ENGINEERING AT THE DISTRICT OFFICE.

PROJECT NOTES: (THIS SHEET)

1. RS MODEL 170 CONTROLLER ASSEMBLY
2. INSTALL STATE-FURNISHED MODEL 170 CONTROLLER ASSEMBLY AND MODEL 400 MODEM.
3. FOR REFERENCE ONLY, SEE SHEET E-6 FOR DETAILS.
4. Exist 1 1/2"C, RC 2#8, ADD 2#8, 1#8G.
5. 2-3"C, 2#8, 1#8G, 8 DLC.

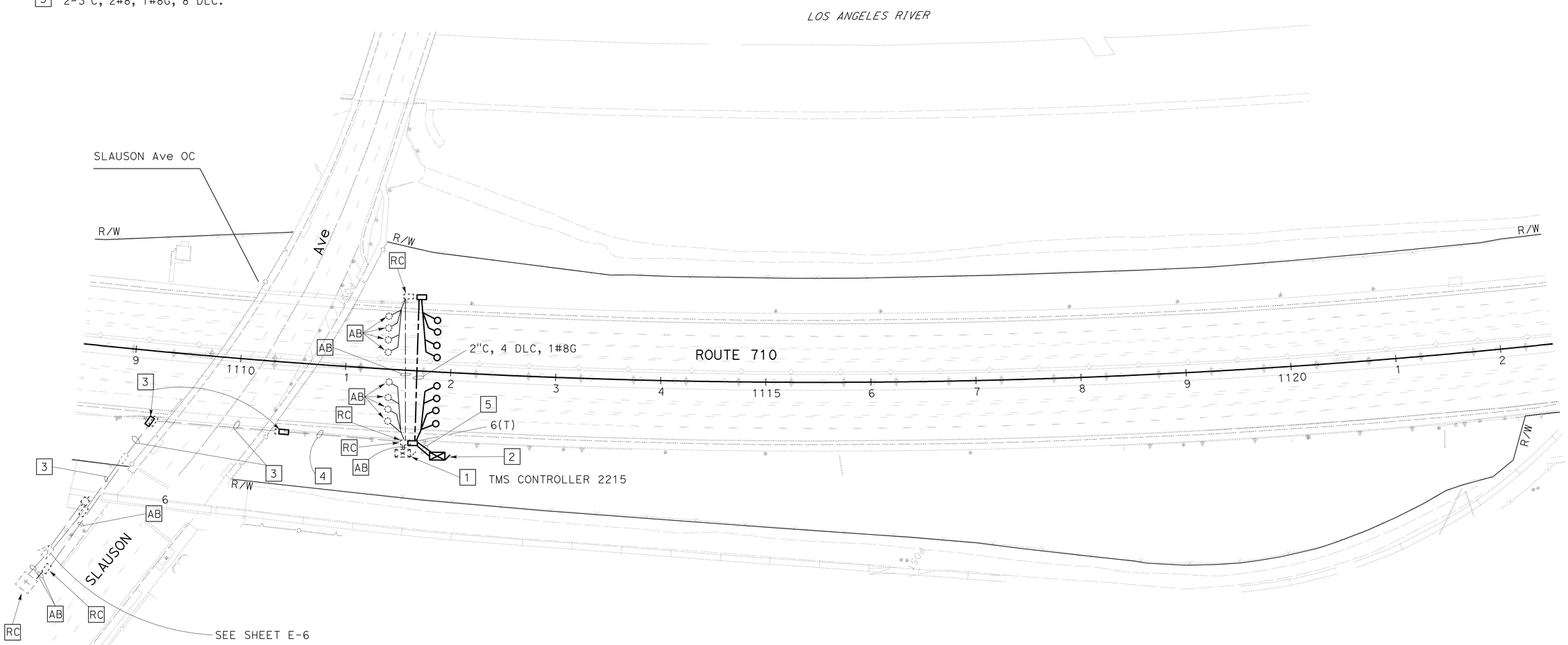

THIS PLAN IS ACCURATE FOR ELECTRICAL WORK ONLY.

MODIFY TRAFFIC MONITORING STATION

SCALE: 1" = 50'

E-35

STATE OF CALIFORNIA - DEPARTMENT OF TRANSPORTATION
Caltrans TRAFFIC DESIGN

FUNCTIONAL SUPERVISOR: HASSAN MANNAA
CALCULATED-DESIGNED BY: STANLEY L. JOHNSON
CHECKED BY: HASSAN MANNAA
REVISED BY / DATE REVISED

LAST REVISION 00-00-00 | DATE PLOTTED => 29-JUN-2011 | TIME PLOTTED => 17:44

BORDER LAST REVISED 7/2/2010 | USERNAME => trpierce | DGN FILE => 720211ua036.dgn | RELATIVE BORDER SCALE IS IN INCHES 0 1 2 3 | UNIT 1879 | PROJECT NUMBER & PHASE 07000208691

Dist	COUNTY	ROUTE	POST MILES TOTAL PROJECT	SHEET No.	TOTAL SHEETS
07	LA	710	17.2/26.4	1095	1507

REGISTERED ELECTRICAL ENGINEER 4/4/11 DATE

6-27-11
PLANS APPROVAL DATE

REGISTERED PROFESSIONAL ENGINEER STANLEY L. JOHNSON No. E 16761 Exp. 09/30/12 ELECTRICAL STATE OF CALIFORNIA

THE STATE OF CALIFORNIA OR ITS OFFICERS OR AGENTS SHALL NOT BE RESPONSIBLE FOR THE ACCURACY OR COMPLETENESS OF SCANNED COPIES OF THIS PLAN SHEET.

FOR ACCURATE RIGHT OF WAY DATA, CONTACT
RIGHT OF WAY ENGINEERING AT THE DISTRICT OFFICE.

PROJECT NOTES: (THIS SHEET)

1. RC TYPE 1-A STANDARD AND SIGNAL HEADS.
2. Exist 2-3"C, 4 dlc, 2#6, 2#8, RC 18 dlc, 6#14, 1#10, TELEPHONE CABLE, ADD 18 DLC, 2-5CSC, 1#8G.
3. Exist MODEL 170 CONTROLLER ASSEMBLY.
4. Exist 2½"C, RC CONDUCTORS, ADD 9 DLC, 1#8G.
5. 2"C, 2 DLC, 1-5CSC, 1#8G.
6. RS TYPE G CABINET, EQUIPMENT.
7. 2"C, 18 DLC, 2-5CSC, 1#8G.

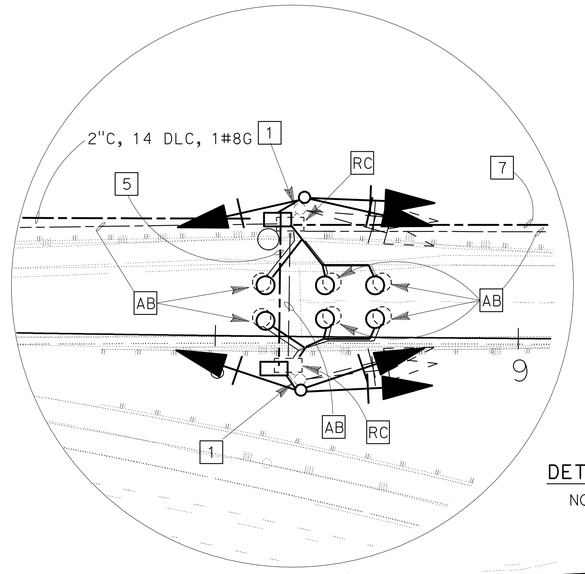

DETAIL "A"
NO SCALE

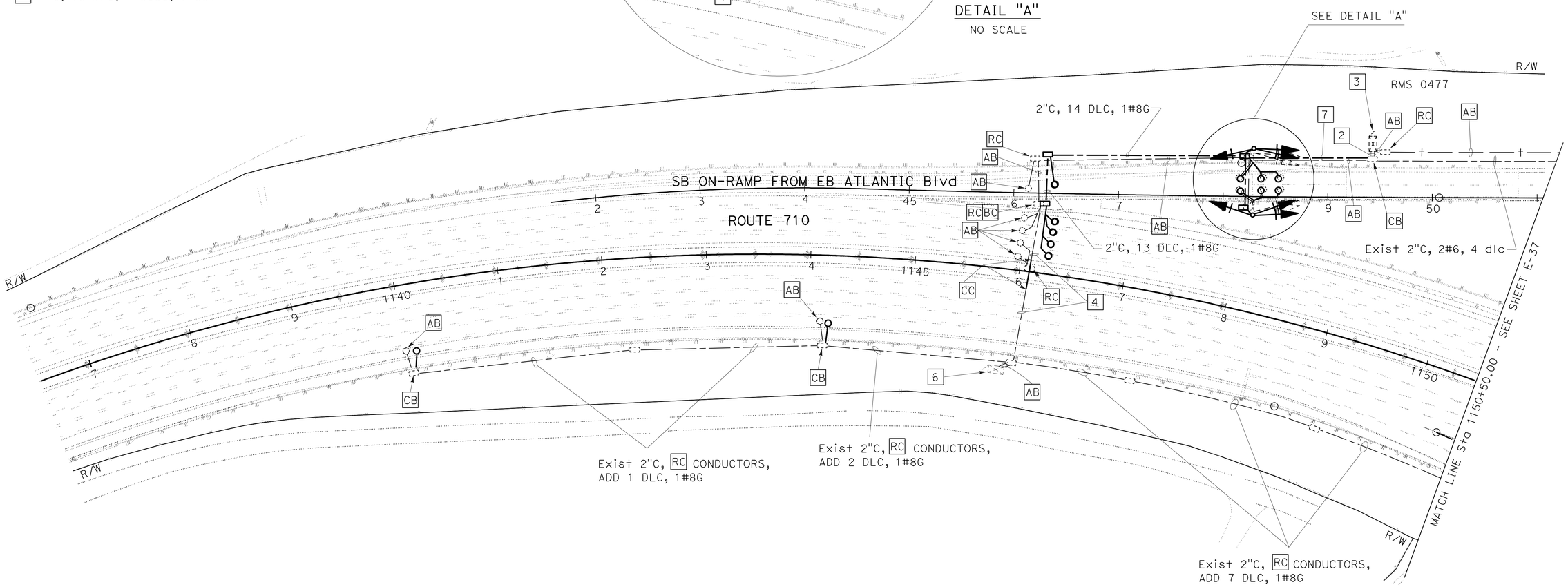

SEE SHEET E-47 FOR MODIFY RAMP METERING SYSTEM DETAILS.

THIS PLAN IS ACCURATE FOR ELECTRICAL WORK ONLY.

MODIFY RAMP METERING SYSTEM

SCALE: 1" = 50'

E-36

STATE OF CALIFORNIA - DEPARTMENT OF TRANSPORTATION
Caltrans TRAFFIC DESIGN

FUNCTIONAL SUPERVISOR: HASSAN MANNAA
CALCULATED-DESIGNED BY: STANLEY L. JOHNSON
CHECKED BY: HASSAN MANNAA
REVISED BY
DATE REVISED

LAST REVISION 00-00-00
DATE PLOTTED => 06-JUL-2011
TIME PLOTTED => 10:36

FOR ACCURATE RIGHT OF WAY DATA, CONTACT
RIGHT OF WAY ENGINEERING AT THE DISTRICT OFFICE.

Dist	COUNTY	ROUTE	POST MILES TOTAL PROJECT	SHEET No.	TOTAL SHEETS
07	LA	710	17.2/26.4	1096	1507

Stanley L. Johnson 4/4/11
REGISTERED ELECTRICAL ENGINEER DATE

6-27-11
PLANS APPROVAL DATE

REGISTERED PROFESSIONAL ENGINEER
STANLEY L. JOHNSON
No. E 16761
Exp. 09/30/12
ELECTRICAL
STATE OF CALIFORNIA

THE STATE OF CALIFORNIA OR ITS OFFICERS OR AGENTS SHALL NOT BE RESPONSIBLE FOR THE ACCURACY OR COMPLETENESS OF SCANNED COPIES OF THIS PLAN SHEET.

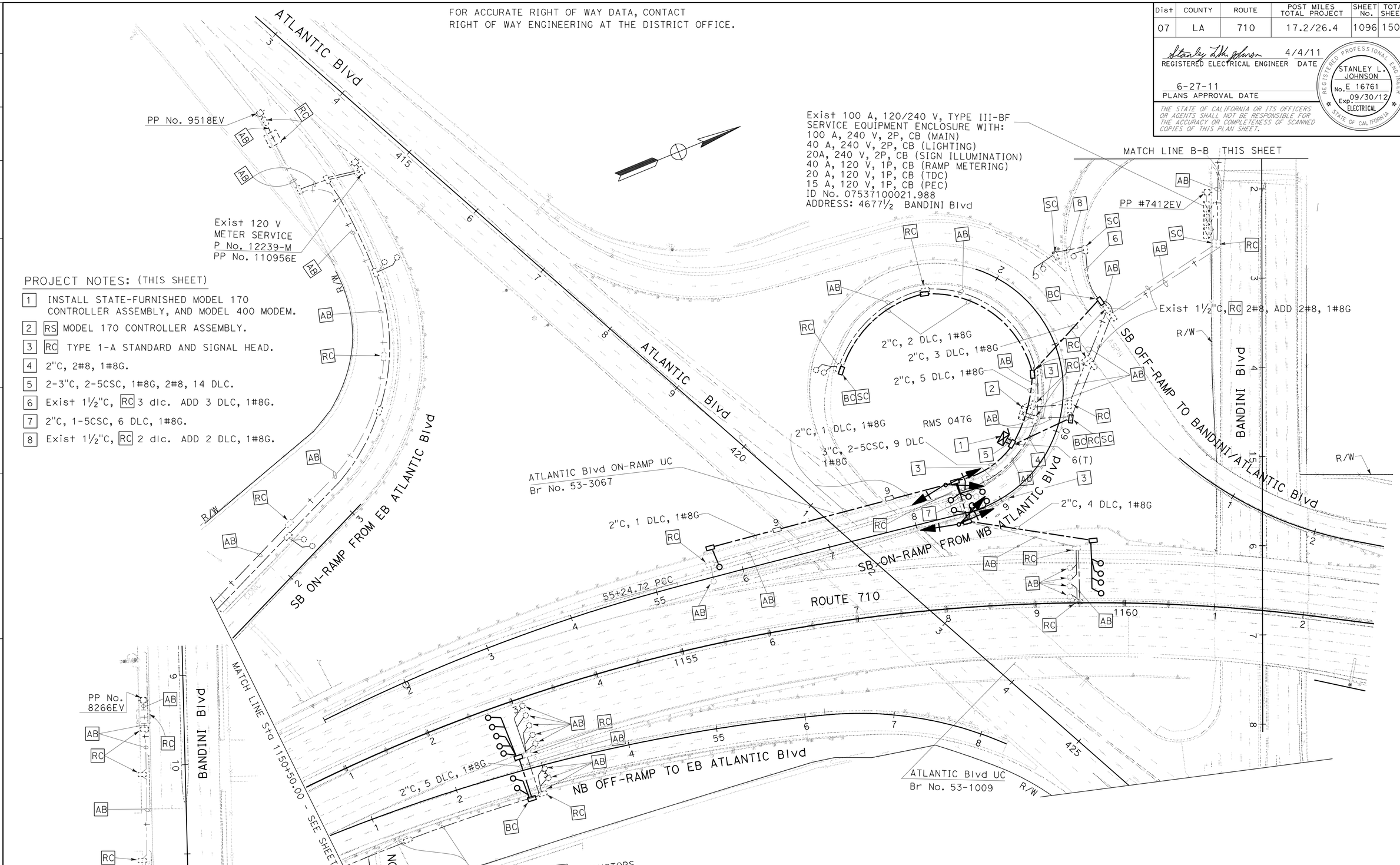

PROJECT NOTES: (THIS SHEET)

1. INSTALL STATE-FURNISHED MODEL 170 CONTROLLER ASSEMBLY, AND MODEL 400 MODEM.
2. RS MODEL 170 CONTROLLER ASSEMBLY.
3. RC TYPE 1-A STANDARD AND SIGNAL HEAD.
4. 2"C, 2#8, 1#8G.
5. 2-3"C, 2-5CSC, 1#8G, 2#8, 14 DLC.
6. Exist 1½"C, RC 3 dlc. ADD 3 DLC, 1#8G.
7. 2"C, 1-5CSC, 6 DLC, 1#8G.
8. Exist 1½"C, RC 2 dlc. ADD 2 DLC, 1#8G.

SEE SHEET E-47 FOR MODIFY RAMP METERING SYSTEM DETAILS.
THIS PLAN IS ACCURATE FOR ELECTRICAL WORK ONLY.

MODIFY RAMP METERING SYSTEM

SCALE: 1" = 50'

E-37

STATE OF CALIFORNIA - DEPARTMENT OF TRANSPORTATION
Caltrans TRAFFIC DESIGN

FUNCTIONAL SUPERVISOR: HASSAN MANNAA
CALCULATED-DESIGNED BY: STANLEY L. JOHNSON
CHECKED BY: HASSAN MANNAA
REVISED BY
DATE REVISED

LAST REVISION 00-00-00
DATE PLOTTED => 06-JUL-2011
TIME PLOTTED => 10:36

Dist	COUNTY	ROUTE	POST MILES TOTAL PROJECT	SHEET No.	TOTAL SHEETS
07	LA	710	17.2/26.4	1097	1507

REGISTERED ELECTRICAL ENGINEER 4/4/11 DATE

6-27-11
PLANS APPROVAL DATE

REGISTERED PROFESSIONAL ENGINEER STANLEY L. JOHNSON No. E 16761 Exp. 09/30/12 ELECTRICAL STATE OF CALIFORNIA

THE STATE OF CALIFORNIA OR ITS OFFICERS OR AGENTS SHALL NOT BE RESPONSIBLE FOR THE ACCURACY OR COMPLETENESS OF SCANNED COPIES OF THIS PLAN SHEET.

FOR ACCURATE RIGHT OF WAY DATA, CONTACT
RIGHT OF WAY ENGINEERING AT THE DISTRICT OFFICE.

PROJECT NOTES: (THIS SHEET)

1. Exist 1 1/2"C, 2#8, RC TELEPHONE CABLE, ADD 1#8G.
2. Exist 2-3"C, 2#8, RC 11 dlc, TELEPHONE CABLE, ADD 10 DLC, 1#8G

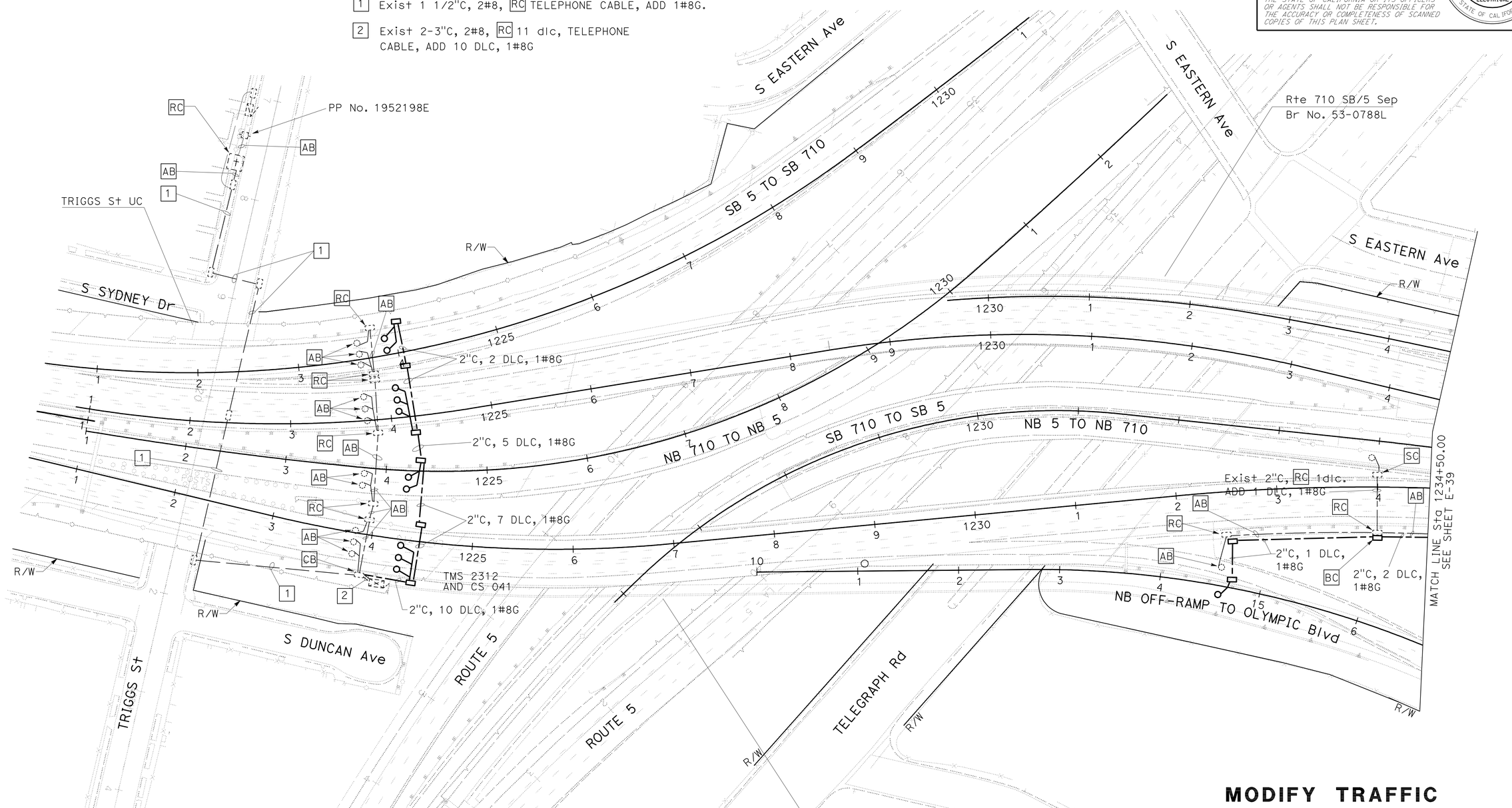

MODIFY TRAFFIC MONITORING STATION

MODIFY RAMP METERING SYSTEM

SCALE: 1" = 50'

THIS PLAN IS ACCURATE FOR ELECTRICAL WORK ONLY.

E-38

STATE OF CALIFORNIA - DEPARTMENT OF TRANSPORTATION
Caltrans® **TRAFFIC DESIGN**

FUNCTIONAL SUPERVISOR: HASSAN MANNAA
CALCULATED-DESIGNED BY: STANLEY L. JOHNSON
CHECKED BY: HASSAN MANNAA
REVISED BY
DATE REVISED

LAST REVISION 00-00-00 | DATE PLOTTED => 29-JUN-2011 | TIME PLOTTED => 17:44

Dist	COUNTY	ROUTE	POST MILES TOTAL PROJECT	SHEET No.	TOTAL SHEETS
07	LA	710	17.2/26.4	1098	1507

REGISTERED ELECTRICAL ENGINEER — DATE 4/4/11

6-27-11
PLANS APPROVAL DATE

REGISTERED PROFESSIONAL ENGINEER — STANLEY L. JOHNSON — No. E 16761 — Exp. 09/30/12 — ELECTRICAL — STATE OF CALIFORNIA

THE STATE OF CALIFORNIA OR ITS OFFICERS OR AGENTS SHALL NOT BE RESPONSIBLE FOR THE ACCURACY OR COMPLETENESS OF SCANNED COPIES OF THIS PLAN SHEET.

FOR ACCURATE RIGHT OF WAY DATA, CONTACT
RIGHT OF WAY ENGINEERING AT THE DISTRICT OFFICE.

PROJECT NOTES: (THIS SHEET)

1. RS TYPE 1-A STANDARD AND SIGNAL HEADS.
2. Exist 1 1/2"C, RC 9#14, 1#10, 6 dlc, ADD 1-5CSC, 6 DLC, 1#8G.
3. Exist 1 1/2"C, RC 9#14, 1#10, 8 dlc, ADD 1-5CSC, 8 DLC, 1#8G.
4. Exist 2-3"C, 12 dlc, RC 9#14, 1#10, 12 dlc, ADD 1-5CSC, 12 DLC, 1#8G.
5. Exist 2-3"C, 1 dlc, RC 9#14, 1#10, TELEPHONE CABLE, 6 dlc, ADD 1-5CSC, 6 DLC, 1#8G.
6. Exist 2"C, ADD 1-5CSC 6 DLC, 1#8G.

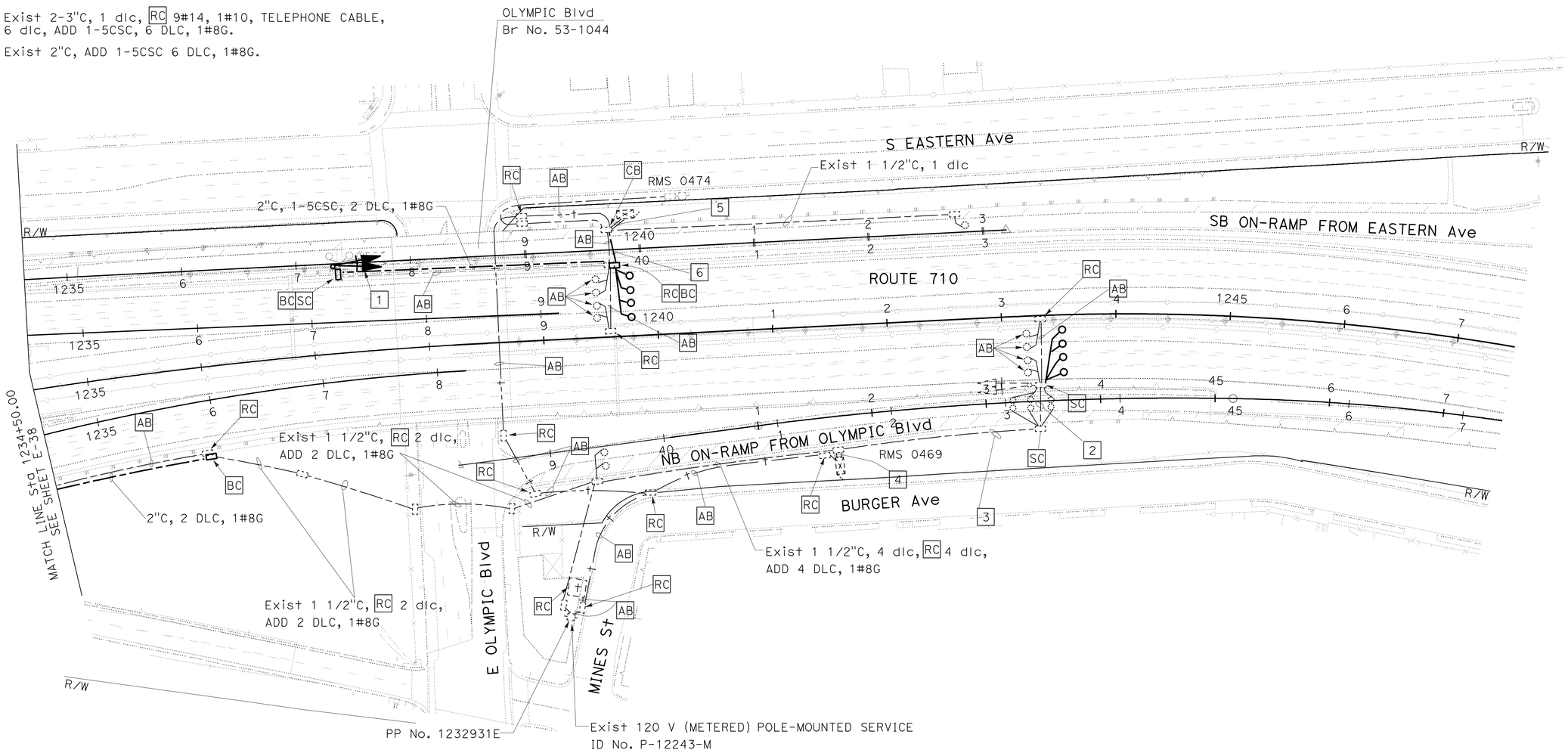

MODIFY RAMP METERING SYSTEM

SCALE: 1" = 50'

THIS PLAN IS ACCURATE FOR ELECTRICAL WORK ONLY.

E-39

STATE OF CALIFORNIA - DEPARTMENT OF TRANSPORTATION
Caltrans TRAFFIC DESIGN

FUNCTIONAL SUPERVISOR: HASSAN MANNAA
CALCULATED-DESIGNED BY: STANLEY L. JOHNSON
CHECKED BY: HASSAN MANNAA
REVISED BY / DATE REVISED

LAST REVISION 00-00-00 | DATE PLOTTED => 06-JUL-2011 | TIME PLOTTED => 10:36

BORDER LAST REVISED 7/1/2010 | USERNAME => trmikesl | DGN FILE => 720211ua040.dgn | RELATIVE BORDER SCALE IS IN INCHES 0 1 2 3 | UNIT 1879 | PROJECT NUMBER & PHASE 07000208691

Dist	COUNTY	ROUTE	POST MILES TOTAL PROJECT	SHEET No.	TOTAL SHEETS
07	LA	710	17.2/26.4	1099	1507

REGISTERED ELECTRICAL ENGINEER 4/4/11 DATE

6-27-11
PLANS APPROVAL DATE

REGISTERED PROFESSIONAL ENGINEER STANLEY L. JOHNSON No. E 16761 Exp. 09/30/12 ELECTRICAL STATE OF CALIFORNIA

THE STATE OF CALIFORNIA OR ITS OFFICERS OR AGENTS SHALL NOT BE RESPONSIBLE FOR THE ACCURACY OR COMPLETENESS OF SCANNED COPIES OF THIS PLAN SHEET.

FOR ACCURATE RIGHT OF WAY DATA, CONTACT
RIGHT OF WAY ENGINEERING AT THE DISTRICT OFFICE.

PROJECT NOTES: (THIS SHEET)

1 Exist 2-3"C, 2#8, RC 10 dlc, TELEPHONE CABLE, ADD 10 DLC, 1#8G.

2 Exist 1 1/2"C, 2#8, RC TELEPHONE CABLE, ADD 1#8G.

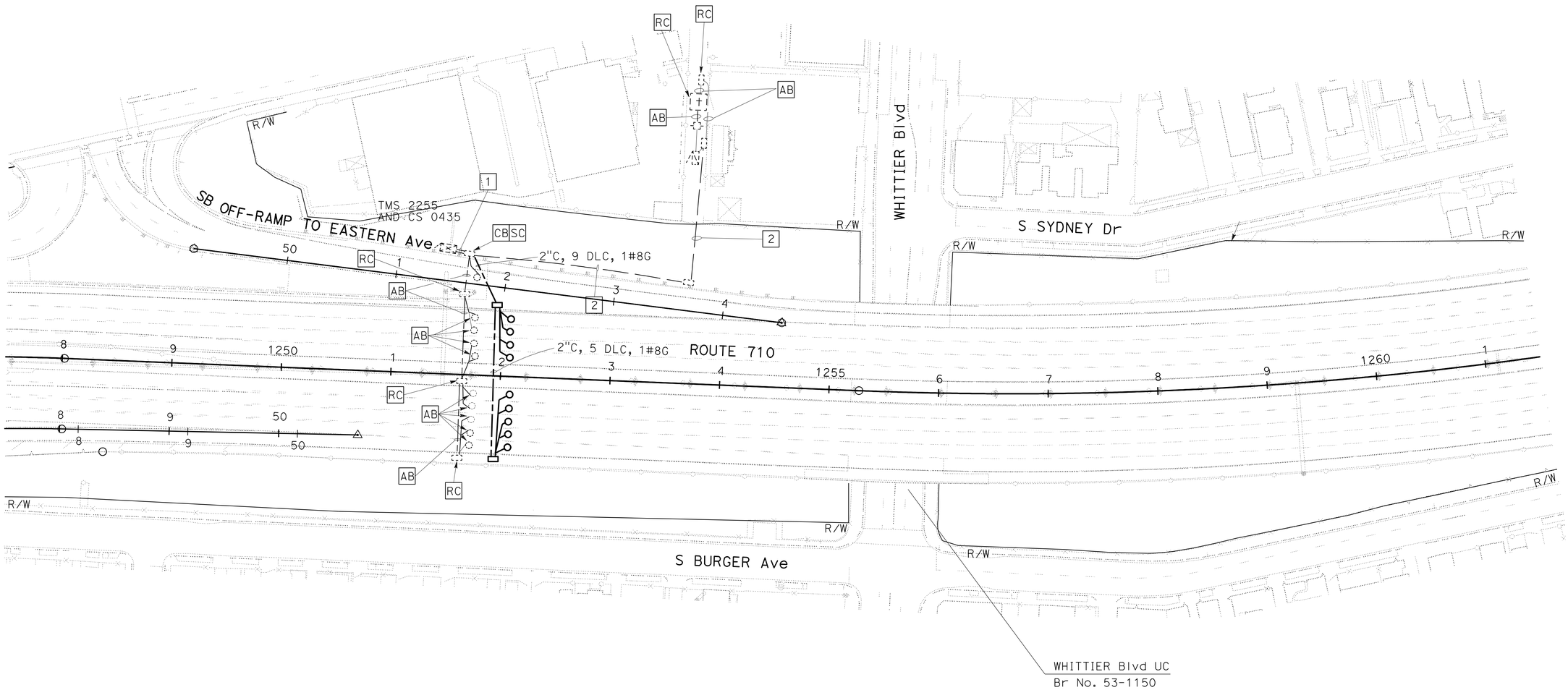

MODIFY TRAFFIC MONITORING STATION

SCALE: 1" = 50'

THIS PLAN IS ACCURATE FOR ELECTRICAL WORK ONLY.

E-40

STATE OF CALIFORNIA - DEPARTMENT OF TRANSPORTATION
Caltrans® **TRAFFIC DESIGN**

FUNCTIONAL SUPERVISOR: HASSAN MANNAA
CALCULATED-DESIGNED BY: STANLEY L. JOHNSON
CHECKED BY: HASSAN MANNAA
REVISED BY
DATE REVISED

LAST REVISION 00-00-00
DATE PLOTTED => 29-JUN-2011
TIME PLOTTED => 17:45

Dist	COUNTY	ROUTE	POST MILES TOTAL PROJECT	SHEET No.	TOTAL SHEETS
07	LA	710	17.2/26.4	1100	1507

REGISTERED ELECTRICAL ENGINEER — DATE 4/4/11

6-27-11
PLANS APPROVAL DATE

REGISTERED PROFESSIONAL ENGINEER — STANLEY L. JOHNSON — No. E 16761 — Exp. 09/30/12 — ELECTRICAL — STATE OF CALIFORNIA

THE STATE OF CALIFORNIA OR ITS OFFICERS OR AGENTS SHALL NOT BE RESPONSIBLE FOR THE ACCURACY OR COMPLETENESS OF SCANNED COPIES OF THIS PLAN SHEET.

FOR ACCURATE RIGHT OF WAY DATA, CONTACT
RIGHT OF WAY ENGINEERING AT THE DISTRICT OFFICE.

PROJECT NOTES: (THIS SHEET)

1. Exist 2-2 1/2"C, 2 dlc, 2#8, RC 6 dlc, TELEPHONE CABLE, ADD 6 DLC, 1#8G
2. Exist 1 1/2"C, 2#8, RC 2 dlc, TELEPHONE CABLE, ADD 1#8G.
3. 2"C, 2 DLC, 1#8G.
4. Exist 1 1/2"C, 2#8, RC TELEPHONE CABLE, ADD 1#8G.

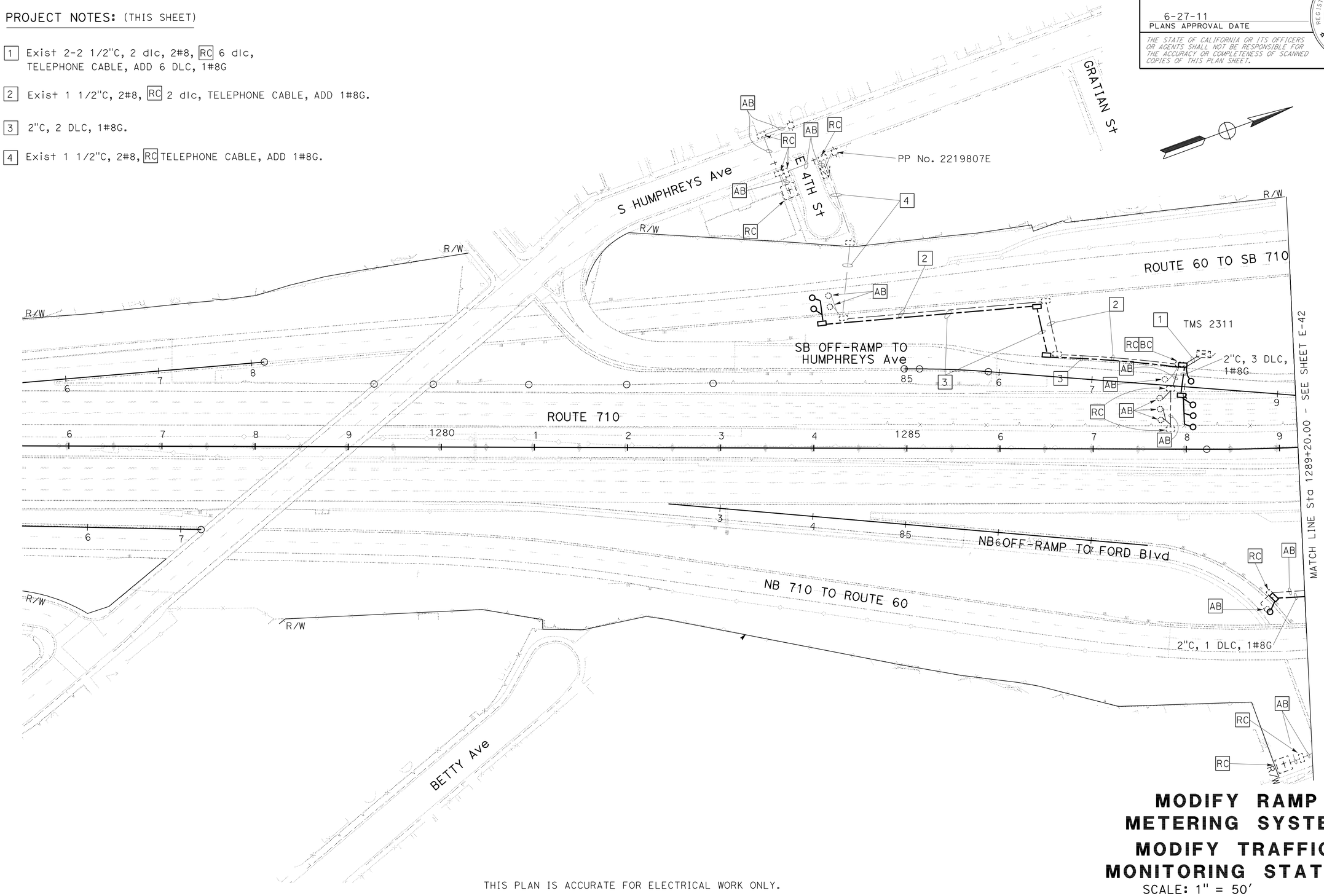

THIS PLAN IS ACCURATE FOR ELECTRICAL WORK ONLY.

MODIFY RAMP METERING SYSTEM
MODIFY TRAFFIC MONITORING STATION

SCALE: 1" = 50'

E-41

STATE OF CALIFORNIA - DEPARTMENT OF TRANSPORTATION
Caltrans® TRAFFIC DESIGN

FUNCTIONAL SUPERVISOR: HASSAN MANNAA
CALCULATED-DESIGNED BY: STANLEY L. JOHNSON
CHECKED BY: HASSAN MANNAA
REVISED BY
DATE REVISED

LAST REVISION 00-00-00 | DATE PLOTTED => 29-JUN-2011 | TIME PLOTTED => 17:51