Dist	COUNTY	ROUTE	POST MILES TOTAL PROJECT	SHEET No.	TOTAL SHEETS
07	LA	710	17.2/26.4	501	1507

REGISTERED CIVIL ENGINEER 03/30/11 DATE

6-27-11
PLANS APPROVAL DATE

REGISTERED PROFESSIONAL ENGINEER ROBERT M. HENDERSON No. C66736 Exp 09/30/12 CIVIL STATE OF CALIFORNIA

THE STATE OF CALIFORNIA OR ITS OFFICERS OR AGENTS SHALL NOT BE RESPONSIBLE FOR THE ACCURACY OR COMPLETENESS OF SCANNED COPIES OF THIS PLAN SHEET.

CALTRANS DISTRICT 7
100 S. MAIN STREET
LOS ANGELES, CA 90012

CH2M HILL
1000 WILSHIRE BLVD
LOS ANGELES, CA 90017

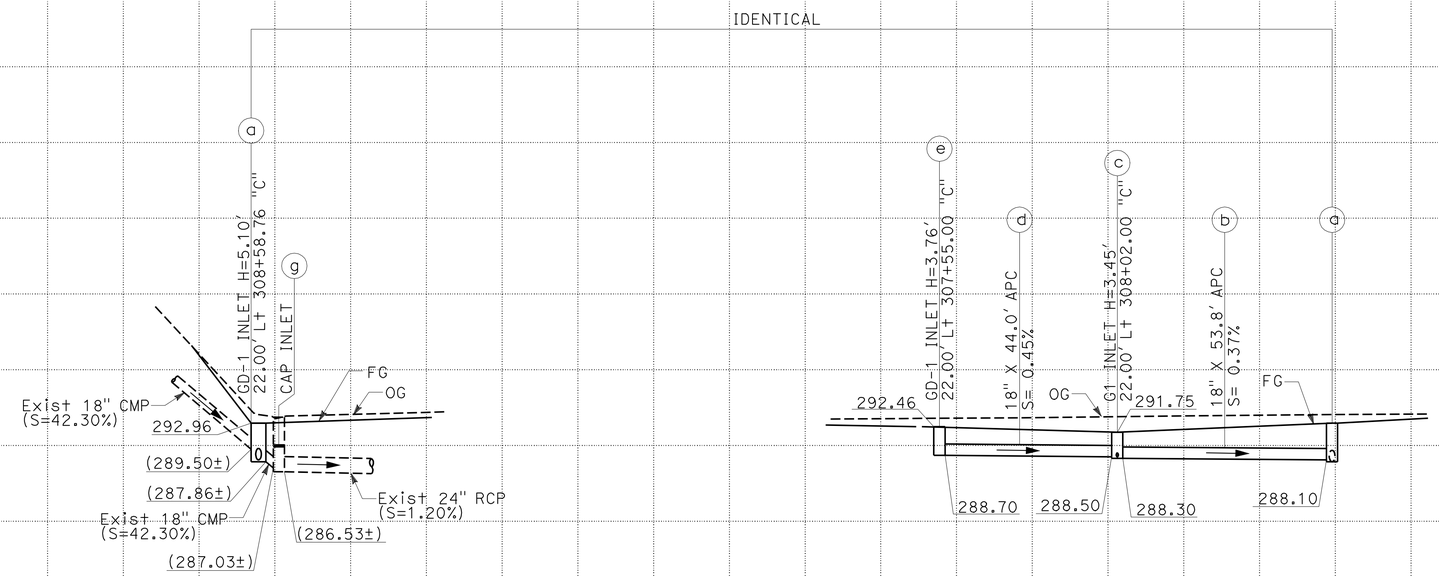

DRAINAGE SYSTEM No. 108

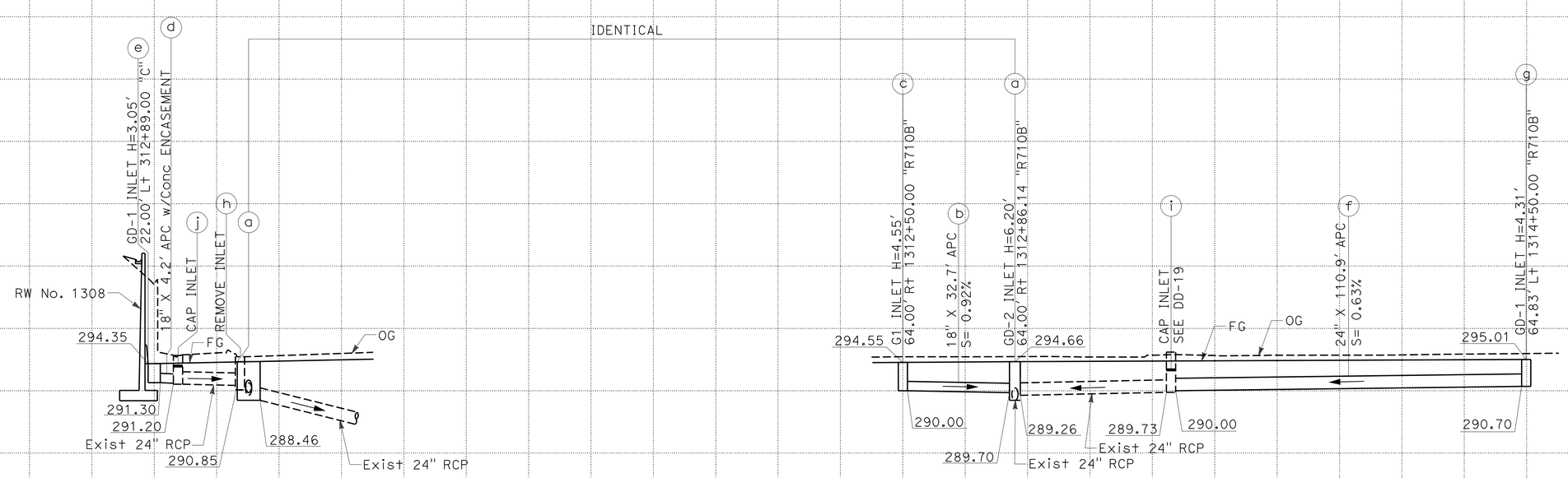

DRAINAGE SYSTEM No. 109

DRAINAGE PROFILE

SCALE: Horiz: 1" = 20'
Vert: 1" = 10'

DP-20

REVISED BY | DATE REVISED
I. MATAGI | R. HENDERSON
CALCULATED-DESIGNED BY | CHECKED BY
CONSULTANT FUNCTIONAL SUPERVISOR: MELISSA DE LA PENA

STATE OF CALIFORNIA - DEPARTMENT OF TRANSPORTATION
Caltrans

LAST REVISION 00-00-00 | DATE PLOTTED => 28-JUN-2011 | TIME PLOTTED => 20:01

Dist	COUNTY	ROUTE	POST MILES TOTAL PROJECT	SHEET No.	TOTAL SHEETS
07	LA	710	17.2/26.4	502	1507

REGISTERED CIVIL ENGINEER 03/30/11 DATE

6-27-11
PLANS APPROVAL DATE

REGISTERED PROFESSIONAL ENGINEER ROBERT M. HENDERSON No. C66736 Exp. 09/30/12 CIVIL STATE OF CALIFORNIA

THE STATE OF CALIFORNIA OR ITS OFFICERS OR AGENTS SHALL NOT BE RESPONSIBLE FOR THE ACCURACY OR COMPLETENESS OF SCANNED COPIES OF THIS PLAN SHEET.

CALTRANS DISTRICT 7
100 S. MAIN STREET
LOS ANGELES, CA 90012

CH2M HILL
1000 WILSHIRE BLVD
LOS ANGELES, CA 90017

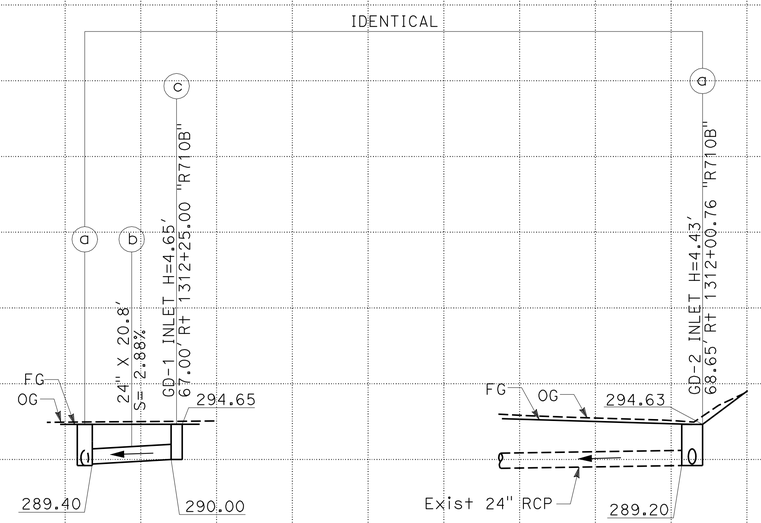

DRAINAGE SYSTEM No. 110

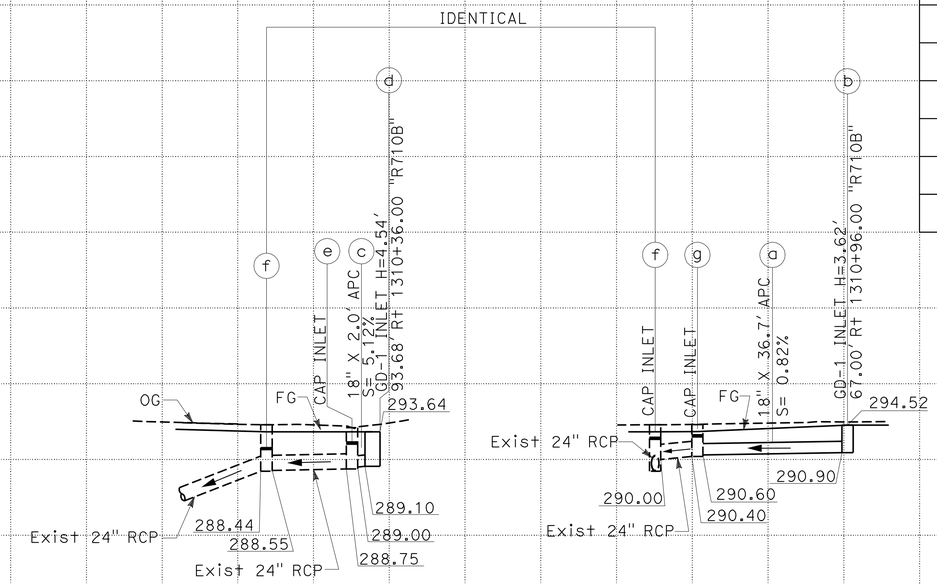

DRAINAGE SYSTEM No. 111

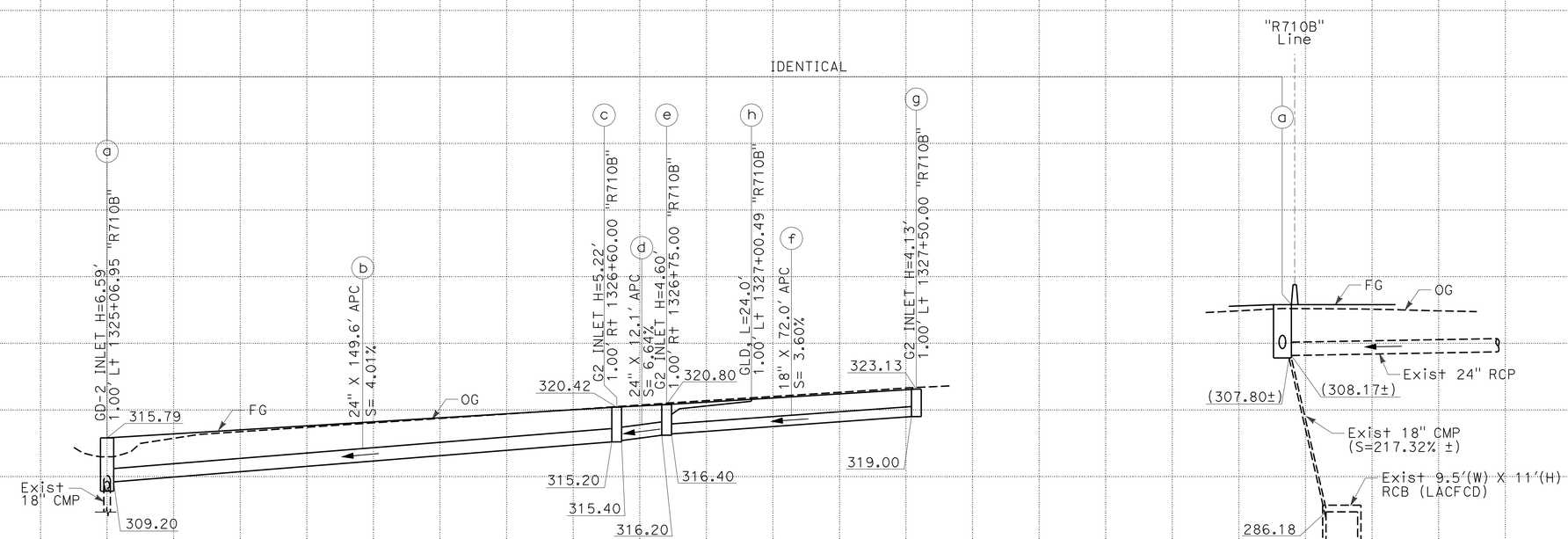

DRAINAGE SYSTEM No. 118

DRAINAGE PROFILE

SCALE: Horiz: 1" = 20'
Vert: 1" = 10'

DP-21

STATE OF CALIFORNIA - DEPARTMENT OF TRANSPORTATION

Caltrans

CONSULTANT FUNCTIONAL SUPERVISOR: MELISSA DE LA PENA

CALCULATED-DESIGNED BY: R. HENDERSON

CHECKED BY: I. MATAGI

REVISED BY / DATE REVISED

LAST REVISION 00-00-00 | DATE PLOTTED => 28-JUN-2011 | TIME PLOTTED => 20:01

Dist	COUNTY	ROUTE	POST MILES TOTAL PROJECT	SHEET No.	TOTAL SHEETS
07	LA	710	17.2/26.4	503	1507

REGISTERED CIVIL ENGINEER 03/30/11 DATE

6-27-11
PLANS APPROVAL DATE

REGISTERED PROFESSIONAL ENGINEER ROBERT M. HENDERSON No. C66736 Exp. 09/30/12 CIVIL STATE OF CALIFORNIA

THE STATE OF CALIFORNIA OR ITS OFFICERS OR AGENTS SHALL NOT BE RESPONSIBLE FOR THE ACCURACY OR COMPLETENESS OF SCANNED COPIES OF THIS PLAN SHEET.

CALTRANS DISTRICT 7
100 S. MAIN STREET
LOS ANGELES, CA 90012

CH2M HILL
1000 WILSHIRE BLVD
LOS ANGELES, CA 90017

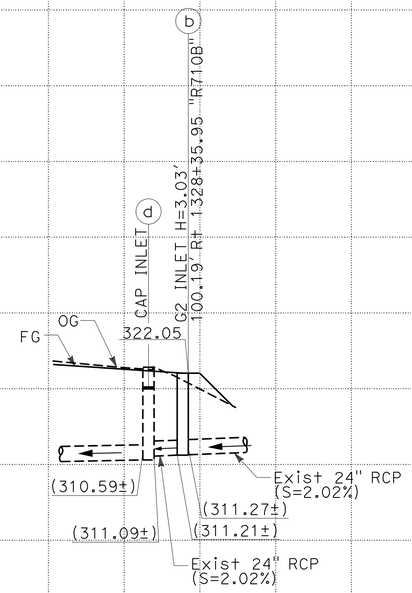

DRAINAGE SYSTEM No. 119

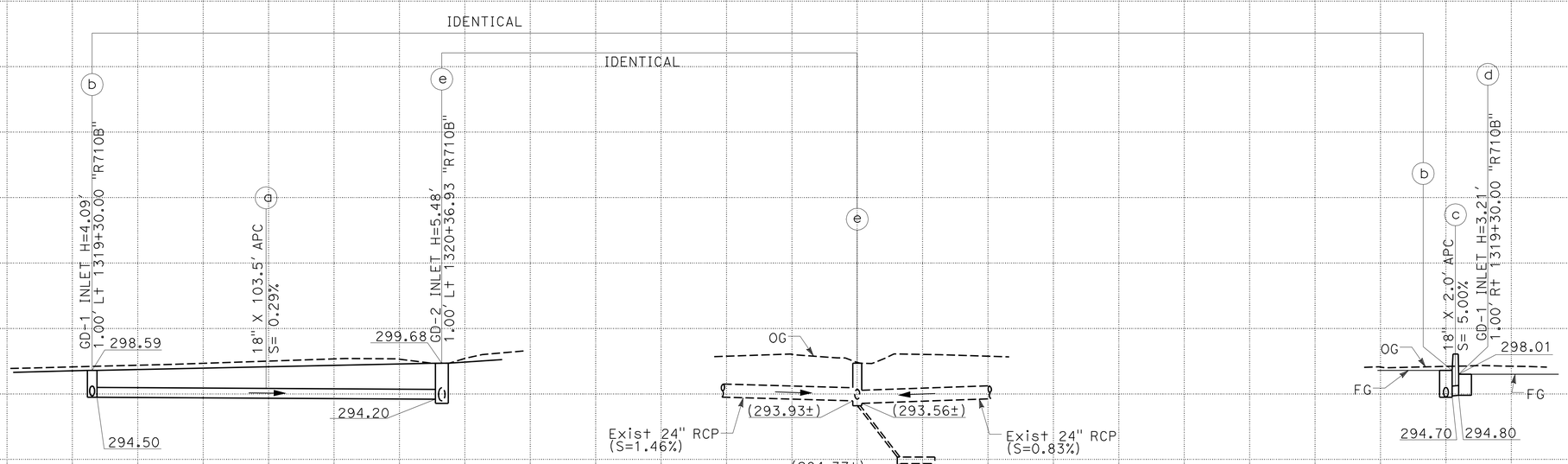

DRAINAGE SYSTEM No. 120

DRAINAGE PROFILE

SCALE: Horiz: 1" = 20'
Vert: 1" = 10'

DP-22

STATE OF CALIFORNIA - DEPARTMENT OF TRANSPORTATION
Caltrans

CONSULTANT FUNCTIONAL SUPERVISOR: MELISSA DE LA PENA

CALCULATED-DESIGNED BY: I. MATAGI
CHECKED BY: R. HENDERSON

REVISED BY
DATE REVISED

LAST REVISION 00-00-00
DATE PLOTTED => 28-JUN-2011
TIME PLOTTED => 20:02

Dist	COUNTY	ROUTE	POST MILES TOTAL PROJECT	SHEET No.	TOTAL SHEETS
07	LA	710	17.2/26.4	504	1507

REGISTERED CIVIL ENGINEER 03/30/11 DATE

6-27-11
PLANS APPROVAL DATE

REGISTERED PROFESSIONAL ENGINEER ROBERT M. HENDERSON No. C66736 Exp 09/30/12 CIVIL STATE OF CALIFORNIA

THE STATE OF CALIFORNIA OR ITS OFFICERS OR AGENTS SHALL NOT BE RESPONSIBLE FOR THE ACCURACY OR COMPLETENESS OF SCANNED COPIES OF THIS PLAN SHEET.

CALTRANS DISTRICT 7
100 S. MAIN STREET
LOS ANGELES, CA 90012

CH2M HILL
1000 WILSHIRE BLVD
LOS ANGELES, CA 90017

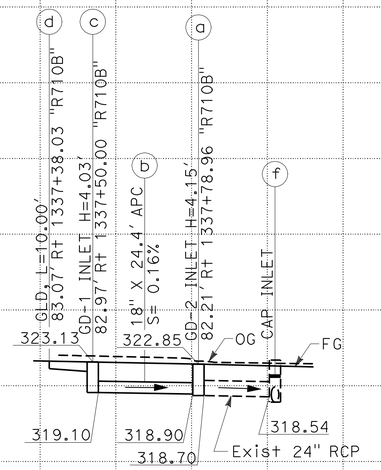

DRAINAGE SYSTEM No. 123

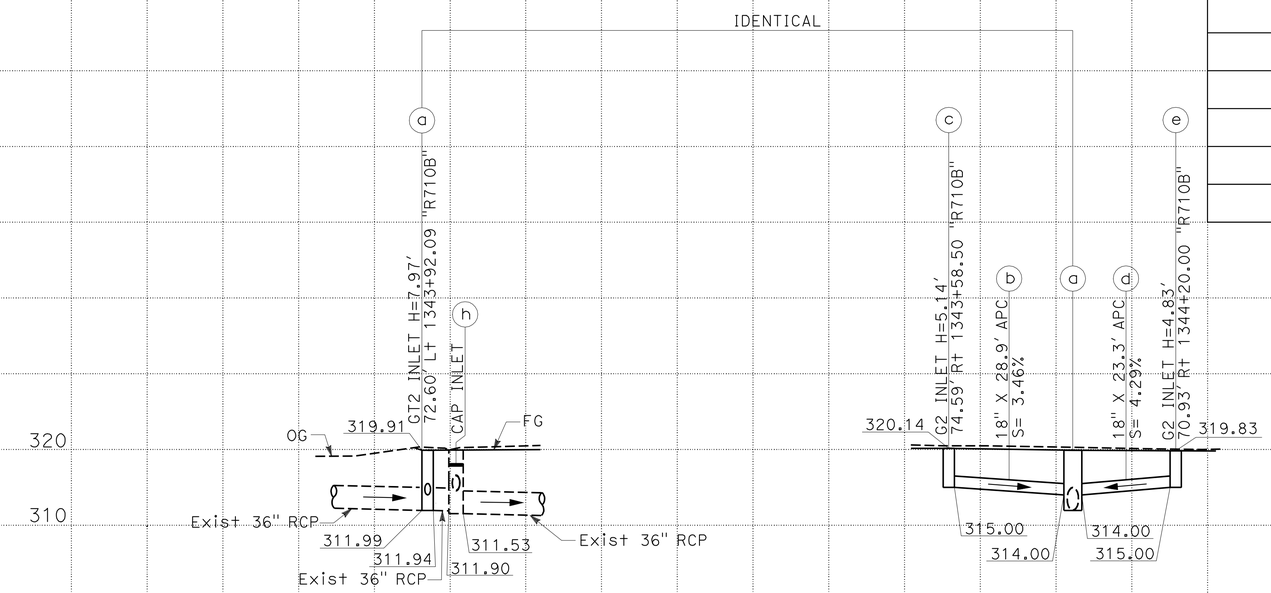

DRAINAGE SYSTEM No. 124

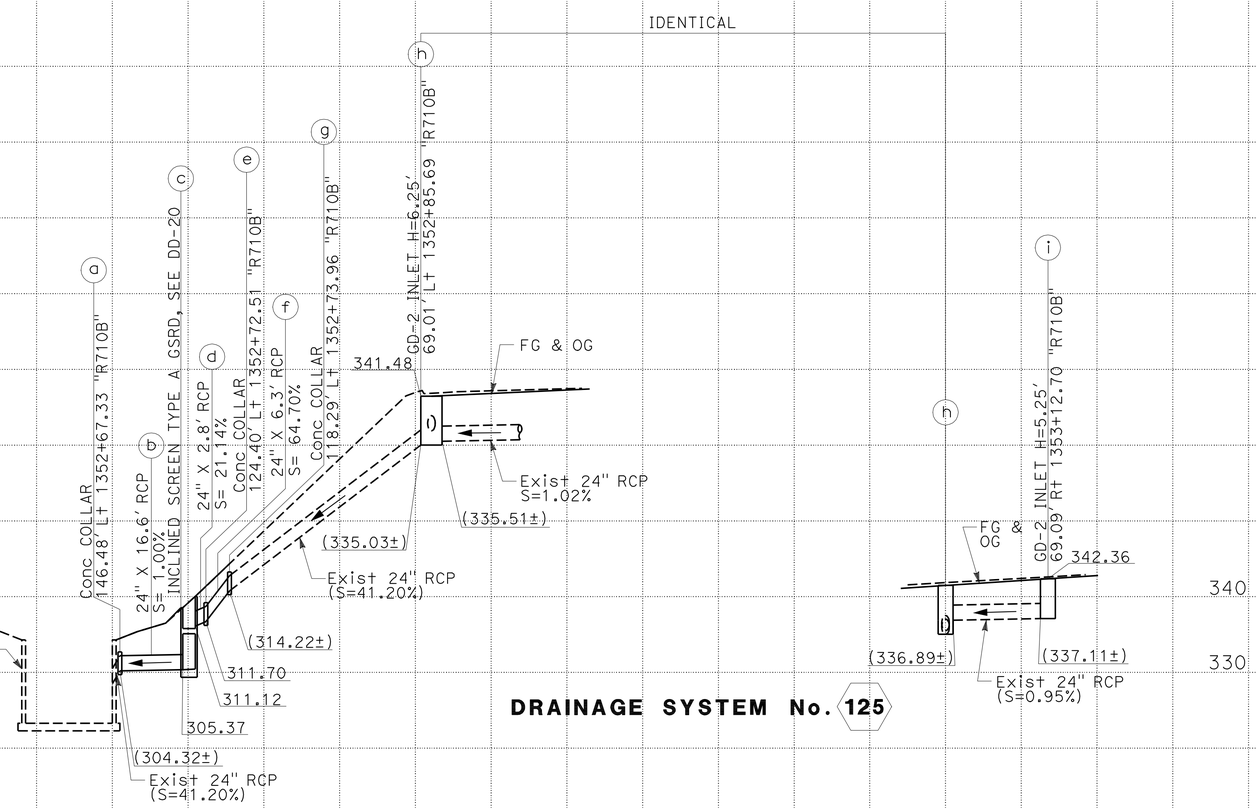

DRAINAGE SYSTEM No. 125

DRAINAGE PROFILE

SCALE: Horiz: 1" = 20'
Vert: 1" = 10'

DP-23

REVISED BY | DATE REVISED
I. MATAGI | R. HENDERSON
CALCULATED-DESIGNED BY | CHECKED BY
CONSULTANT FUNCTIONAL SUPERVISOR
MELISSA DE LA PENA
STATE OF CALIFORNIA - DEPARTMENT OF TRANSPORTATION
Caltrans

LAST REVISION 00-00-00
DATE PLOTTED => 28-JUN-2011
TIME PLOTTED => 20:02

Dist	COUNTY	ROUTE	POST MILES TOTAL PROJECT	SHEET No.	TOTAL SHEETS
07	LA	710	17.2/26.4	505	1507

REGISTERED CIVIL ENGINEER 03/30/11 DATE

6-27-11
PLANS APPROVAL DATE

REGISTERED PROFESSIONAL ENGINEER ROBERT M. HENDERSON No. C66736 Exp. 09/30/12 CIVIL STATE OF CALIFORNIA

THE STATE OF CALIFORNIA OR ITS OFFICERS OR AGENTS SHALL NOT BE RESPONSIBLE FOR THE ACCURACY OR COMPLETENESS OF SCANNED COPIES OF THIS PLAN SHEET.

CALTRANS DISTRICT 7
100 S. MAIN STREET
LOS ANGELES, CA 90012

CH2M HILL
1000 WILSHIRE BLVD
LOS ANGELES, CA 90017

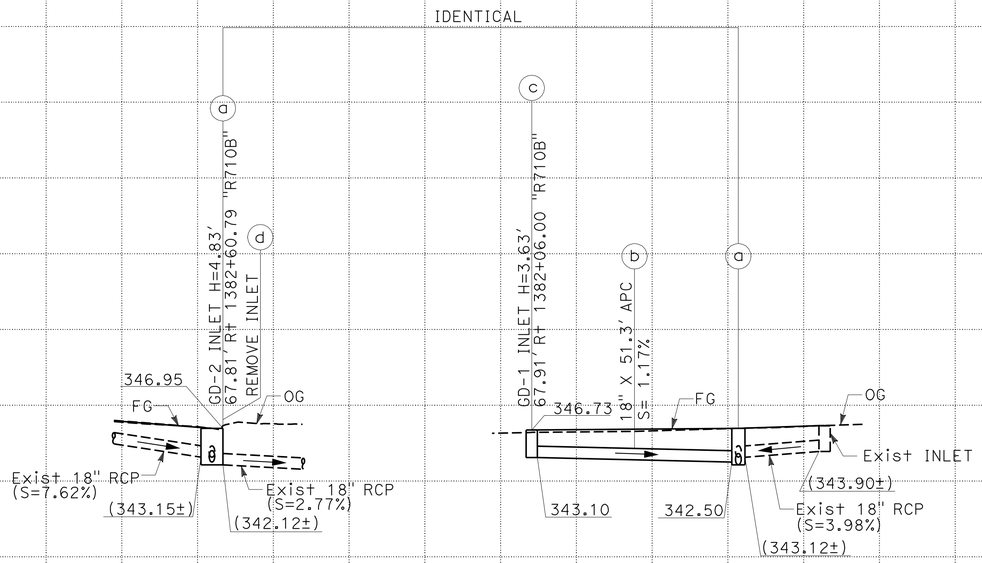

DRAINAGE SYSTEM No. 129

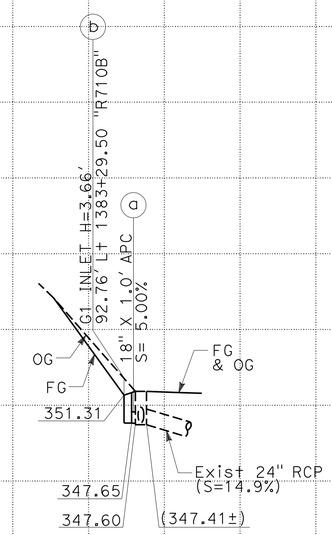

DRAINAGE SYSTEM No. 130

DRAINAGE PROFILE

SCALE: Horiz: 1" = 20'
Vert: 1" = 10'

DP-24

STATE OF CALIFORNIA - DEPARTMENT OF TRANSPORTATION
Caltrans

CONSULTANT FUNCTIONAL SUPERVISOR: MELISSA DE LA PENA

CALCULATED-DESIGNED BY: I. MATAGI
CHECKED BY: R. HENDERSON

REVISED BY
DATE REVISED

LAST REVISION DATE PLOTTED => 28-JUN-2011
TIME PLOTTED => 20:02

Dist	COUNTY	ROUTE	POST MILES TOTAL PROJECT	SHEET No.	TOTAL SHEETS
07	LA	710	17.2/26.4	506	1507

REGISTERED CIVIL ENGINEER 03/30/11 DATE

6-27-11
PLANS APPROVAL DATE

REGISTERED PROFESSIONAL ENGINEER JOSEPH W. SAWTELLE No. C60110 Exp. 06/30/12 CIVIL STATE OF CALIFORNIA

THE STATE OF CALIFORNIA OR ITS OFFICERS OR AGENTS SHALL NOT BE RESPONSIBLE FOR THE ACCURACY OR COMPLETENESS OF SCANNED COPIES OF THIS PLAN SHEET.

CALTRANS DISTRICT 7
100 S. MAIN STREET
LOS ANGELES, CA 90012

TRANSYSTEMS
6 HUTTON CENTRE DRIVE
SUITE 1250
SANTA ANA, CA 92707

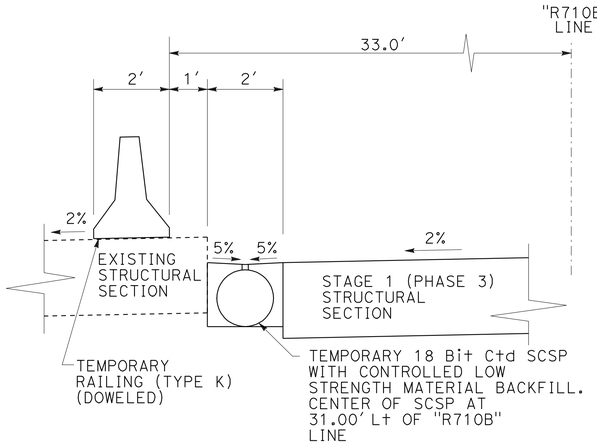

TYPICAL SECTION SB SIDE OF DIGOUT

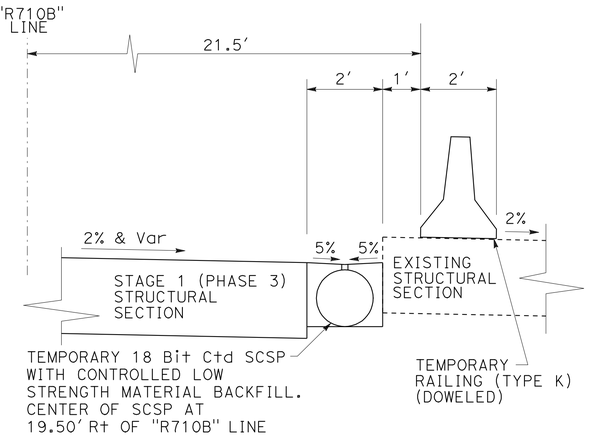

TYPICAL SECTION NB SIDE OF DIGOUT

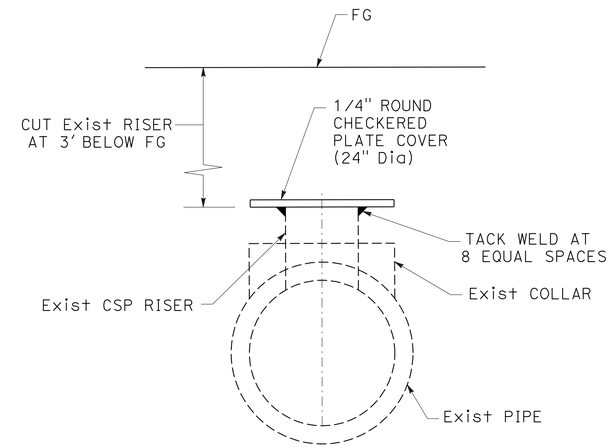

CAP RISER DETAIL

T03 T05 T06 T07 T09 T10 T11 T12 T13 T14

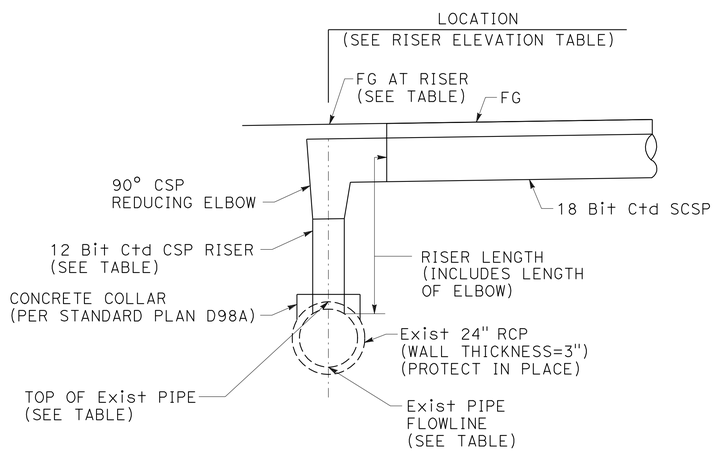

TYPICAL RISER CONNECTION DETAIL

T03 T05 T06 T07 T09 T10 T11 T12 T13 T14

RISER ELEVATION TABLE

DRAINAGE SYSTEM No.	LOCATION Lt OR Rt "R710B" LINE	RISER LENGTH	TOP OF Exist PIPE ELEVATION	FG AT RISER	Exist PIPE FLOWLINE
T03	29.0' Lt 1298+43	8'	274.9	280.95	272.6
T05	31.0' Lt 1301+96	8'	280.7	286.96	278.4
T06	19.5' Rt 1296+38	6'	274.7	278.37	272.4
T07	19.5' Rt 1302+03	12'	276.7	287.41	274.4
T09	31.0' Lt 1312+86	11'	286.5	295.49	284.2
T10	31.0' Lt 1308+58	7'	288.9	294.20	286.6
T11	19.5' Rt 1310+45	15'	282.4	295.00	280.1
T12	19.5' Rt 1312+00	6'	291.7	295.46	289.4
T13	19.5' Rt 1320+37	6'	296.9	300.79	294.6
T14	31.0' Lt 1320+37	6'	297.0	300.62	294.7

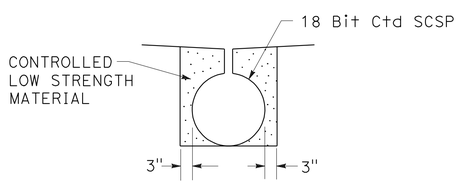

CONTROLLED LOW STRENGTH MATERIAL BACKFILL DETAIL

AT 31.0' Lt AND 19.5' Rt "R710B" LINE

T03 T05 T06 T07 T09 T10 T11 T12 T13 T14

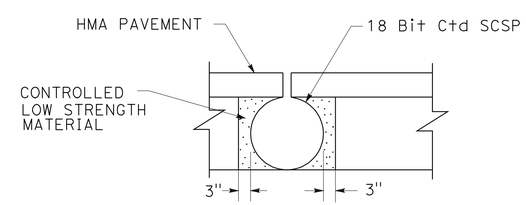

CONTROLLED LOW STRENGTH MATERIAL BACKFILL DETAIL

ALONG SB EDGE OF SHOULDER

T01 T02 T04 T08 T15

THIS PLAN ACCURATE FOR TEMPORARY DRAINAGE WORK ONLY.

TEMPORARY DRAINAGE FOR CESAR CHAVEZ DIGOUT

DRAINAGE DETAILS

NO SCALE

DD-1

REVISED BY | DATE REVISED
C. SOSA | J. SAWTELLE
CALCULATED-DESIGNED BY | CHECKED BY
CONSULTANT FUNCTIONAL SUPERVISOR
MELISSA DE LA PENA
STATE OF CALIFORNIA - DEPARTMENT OF TRANSPORTATION
Caltrans

LAST REVISION 00-00-00 | DATE PLOTTED => 06-JUL-2011 | TIME PLOTTED => 13:05

Dist	COUNTY	ROUTE	POST MILES TOTAL PROJECT	SHEET No.	TOTAL SHEETS
07	LA	710	17.2/26.4	507	1507

REGISTERED CIVIL ENGINEER 03/30/11 DATE

6-27-11
PLANS APPROVAL DATE

REGISTERED PROFESSIONAL ENGINEER ROBERT M. HENDERSON No. C66736 Exp. 09/30/12 CIVIL STATE OF CALIFORNIA

THE STATE OF CALIFORNIA OR ITS OFFICERS OR AGENTS SHALL NOT BE RESPONSIBLE FOR THE ACCURACY OR COMPLETENESS OF SCANNED COPIES OF THIS PLAN SHEET.

CALTRANS DISTRICT 7
100 S. MAIN STREET
LOS ANGELES, CA 90012

CH2M HILL
1000 WILSHIRE BLVD
LOS ANGELES, CA 90017

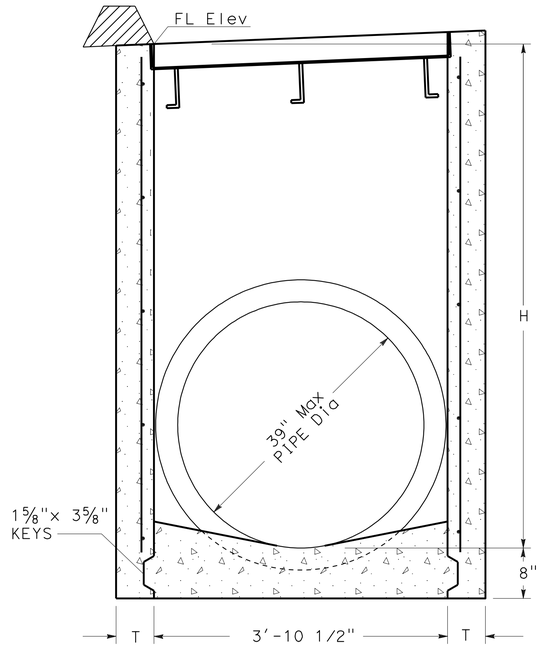

SECTION A-A

(FOR PIPE DIAMETERS 39" OR LESS)

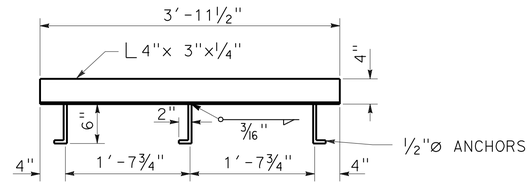

ANCHOR PLACEMENT DETAIL

MISCELLANEOUS IRON & STEEL

INLET TYPE	GRATE TYPE	WEIGHT
GD-1	24 - 12	634 #
GD-2	24 - 12	634 #

H	T
8' OR LESS	6"
8'-1/8" TO 20'	8"

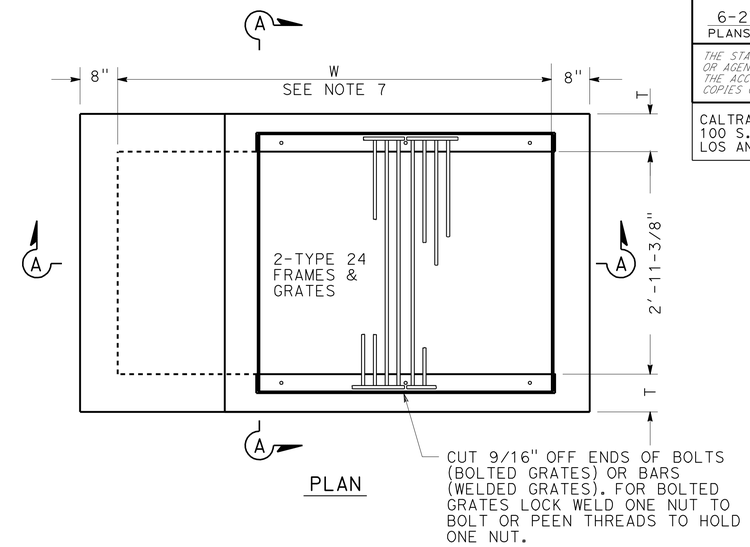

PLAN

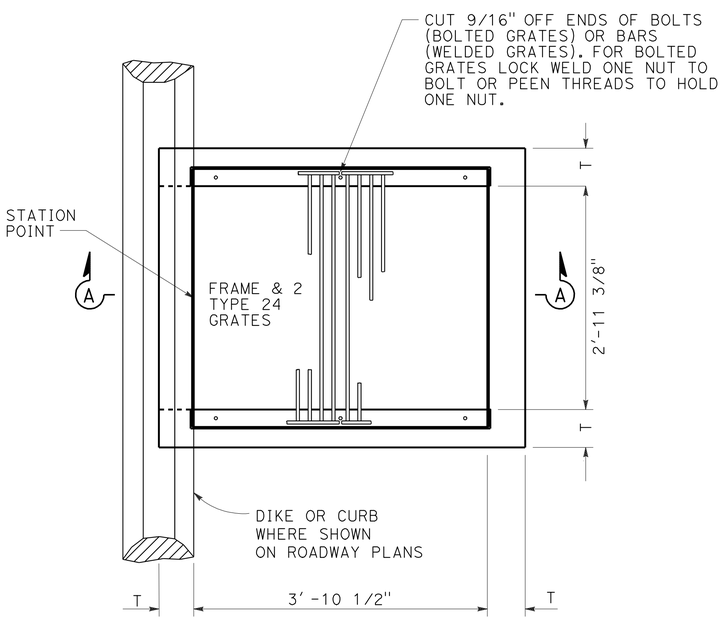

PLAN

GD-1 INLET

NOTES:

1. SEE STANDARD PLAN D77A AND D77B FOR FRAME AND GRATE DETAILS.
2. WHEN TYPE 24-10S, 24-12X, OR 24-13 GRATES ARE USED, A 1/2" x 3-1/2" x 41" STEEL BAR SHALL BE WELDED ACROSS THE CENTER OF THE INLET FRAME TO SEPARATE THE INDIVIDUAL GRATES.
3. "H" IS THE DIFFERENCE IN ELEVATION BETWEEN THE OUTLET PIPE FLOW LINE AND THE FLOW LINE OF THE GRATES.
4. STEPS - NONE REQUIRED WHEN "H" IS 3'-6" OR LESS. INSTALL ONE STEP 1'-4"± ABOVE FLOOR WHEN "H" IS MORE THAN 3'-6" AND LESS THAN 4'-11". WHERE "H" IS MORE THAN 4'-11" STEPS SHALL BE EVENLY SPACED @ 1'-0"± INTERVALS FROM 1'-4"± ABOVE FLOOR TO WITHIN 1'-0"± OF THE TOP OF THE BOX. PLACE STEPS IN WALL WITHOUT PIPE OPENINGS. SEE STANDARD PLAN D74C FOR STEP DETAIL.
5. REINFORCING STEEL IN WALLS SHALL BE #5 @ 12" CENTERS PLACED 1-1/2" CLEAR TO INSIDE OF BOX FOR GD-2 INLET.
6. FOR ALL OTHER INLETS, WHEN H IS GREATER THAN 6'-0", REINFORCING STEEL IN WALLS SHALL BE #4 @ 1'-6" CENTERS PLACED 1-1/2" CLEAR TO INSIDE OF BOX.
7. 'W' SHALL BE 5'-6" Min TO 7'-4" Max UNLESS OTHERWISE SPECIFIED IN PLANS OR PROFILES.

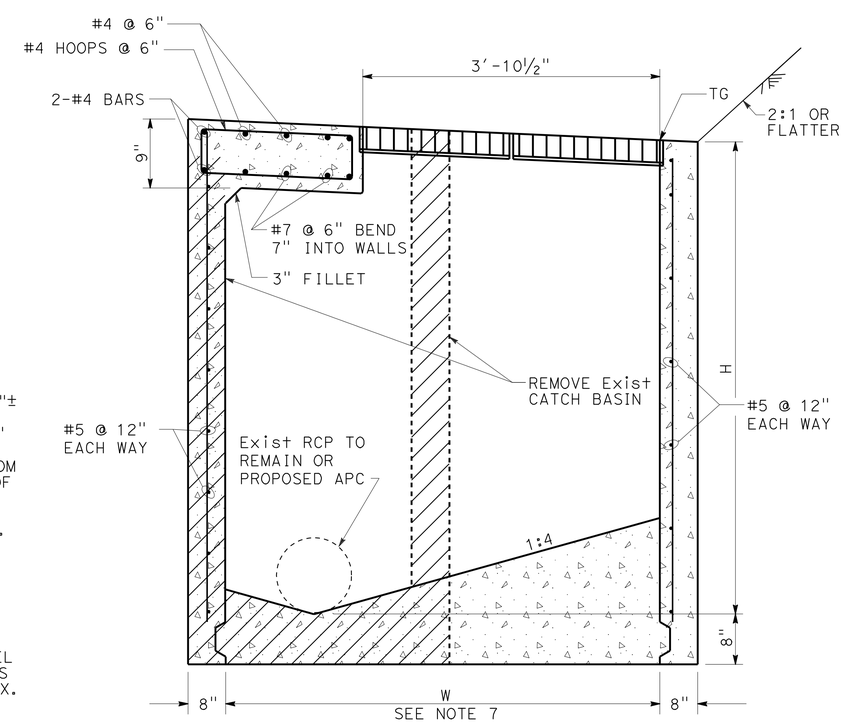

SECTION A-A

GD-2 INLET

DRAINAGE DETAIL

NO SCALE

DD-2

STATE OF CALIFORNIA - DEPARTMENT OF TRANSPORTATION
Caltrans

CONSULTANT FUNCTIONAL SUPERVISOR: MELISSA DE LA PENA

CALCULATED-DESIGNED BY: I. MATAGI
CHECKED BY: R. HENDERSON
REVISED BY
DATE REVISED

LAST REVISION 00-00-00
DATE PLOTTED => 29-JUN-2011
TIME PLOTTED => 06:09

Dist	COUNTY	ROUTE	POST MILES TOTAL PROJECT	SHEET No.	TOTAL SHEETS
07	LA	710	17.2/26.4	508	1507

REGISTERED CIVIL ENGINEER 03/30/11 DATE

6-27-11
PLANS APPROVAL DATE

REGISTERED PROFESSIONAL ENGINEER ROBERT M. HENDERSON No. C66736 Exp. 09/30/12 CIVIL STATE OF CALIFORNIA

THE STATE OF CALIFORNIA OR ITS OFFICERS OR AGENTS SHALL NOT BE RESPONSIBLE FOR THE ACCURACY OR COMPLETENESS OF SCANNED COPIES OF THIS PLAN SHEET.

CALTRANS DISTRICT 7
100 S. MAIN STREET
LOS ANGELES, CA 90012

CH2M HILL
1000 WILSHIRE BLVD
LOS ANGELES, CA 90017

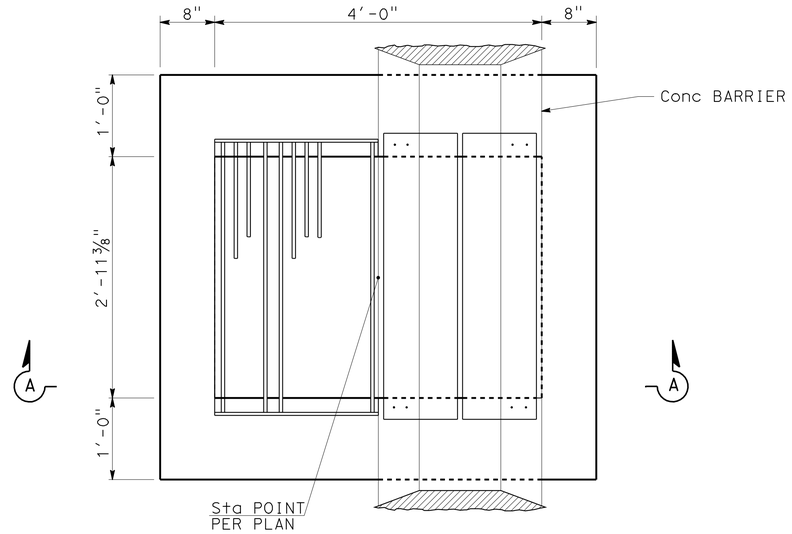

PLAN

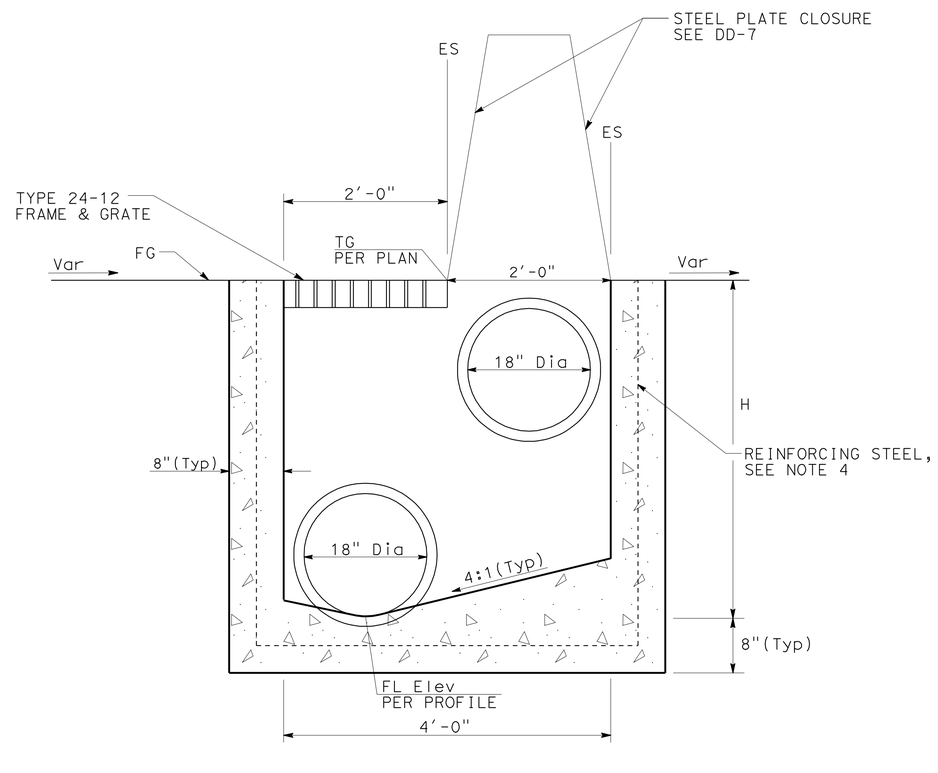

SECTION A-A

Mod G2 INLET

NOTES:

1. 'H' IS THE DIFFERENCE IN ELEVATION BETWEEN THE OUTLET PIPE FLOW LINE & THE FLOW LINE OF THE GRATES.
2. STEPS-NONE REQ. WHERE 'H' IS LESS THAN 2'-6". WHERE 'H' IS 2'-6" OR MORE, INSTALL STEPS WITH LOWEST RUNG 1'-0" ABOVE THE FLOOR & HIGHEST RUNG NOT MORE THAN 6" BELOW TOP OF INLET. THE DISTANCE BETWEEN STEPS SHALL NOT EXCEED 1'-0" & SHALL BE UNIFORM THROUGHOUT THE LENGTH OF THE WALL. PLACE STEPS IN THE WALL WITHOUT AN OPENING. STEPS INSERTS MAY BE SUBSTITUTED FOR THE BAR STEPS. STEP INSERTS SHALL COMPLY WITH STATE INDUSTRIAL SAFETY REQ. SEE STANDARD PLAN D74C FOR STEP DETAILS.
3. PIPE(S) CAN BE PLACED IN ANY WALL.
4. REINFORCING STEEL SHALL BE PER CALTRANS Std PLAN D73, FOR G2 INLET.
5. FOR INFORMATION NOT SHOWN HERE, SEE G2 INLET ON Std PLAN D73.

DRAINAGE DETAIL

NO SCALE

DD-3

STATE OF CALIFORNIA - DEPARTMENT OF TRANSPORTATION
Caltrans

CONSULTANT FUNCTIONAL SUPERVISOR: MELISSA DE LA PENA
CALCULATED-DESIGNED BY: I. MATAGI
CHECKED BY: R. HENDERSON
REVISED BY
DATE REVISED

LAST REVISION 00-00-00
DATE PLOTTED => 29-JUN-2011
TIME PLOTTED => 06:09

Dist	COUNTY	ROUTE	POST MILES TOTAL PROJECT	SHEET No.	TOTAL SHEETS
07	LA	710	17.2/26.4	509	1507

REGISTERED CIVIL ENGINEER 04/14/11 DATE

6-27-11
PLANS APPROVAL DATE

REGISTERED PROFESSIONAL ENGINEER ROBERT M. HENDERSON No. C66736 Exp. 09/30/12 CIVIL STATE OF CALIFORNIA

THE STATE OF CALIFORNIA OR ITS OFFICERS OR AGENTS SHALL NOT BE RESPONSIBLE FOR THE ACCURACY OR COMPLETENESS OF SCANNED COPIES OF THIS PLAN SHEET.

CALTRANS DISTRICT 7
100 S. MAIN STREET
LOS ANGELES, CA 90012

CH2M HILL
1000 WILSHIRE BLVD
LOS ANGELES, CA 90017

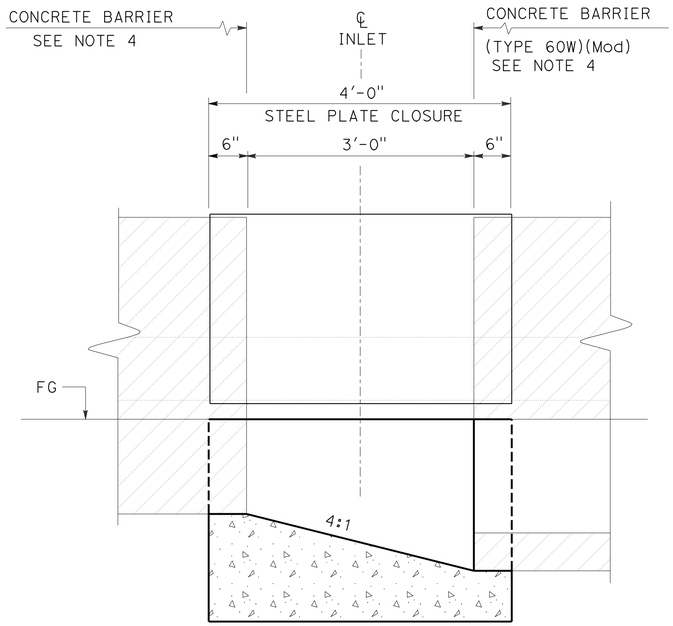

SECTION B-B

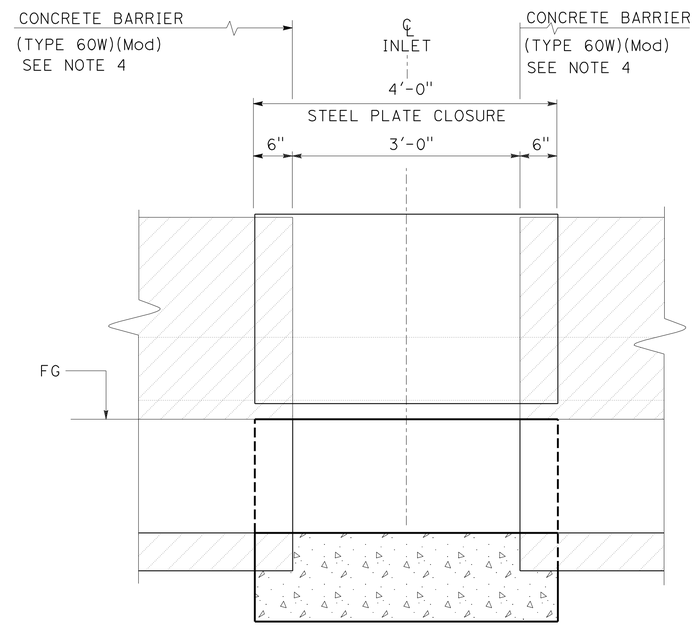

SECTION C-C

NOTES:

1. FOR STEEL PLATE CLOSURE DETAILS. REFER TO SHEET DD-7.
2. ELEVATIONS OF PAVEMENT ON OPPOSITE SIDES OF CONCRETE BARRIER MAY VARY.
3. FOR FRAME AND GRATE INSTALLATION, REFER TO TYPE GO INLET ON STANDARD PLAN RSP D74B.
4. FOR CONCRETE BARRIER END ANCHOR DETAIL, REFER TO SHEET DD-7 & DD-8.
5. FOR DETAILS AND INFORMATION NOT SHOWN REFER TO TYPE G1 INLET ON STANDARD PLAN D73.

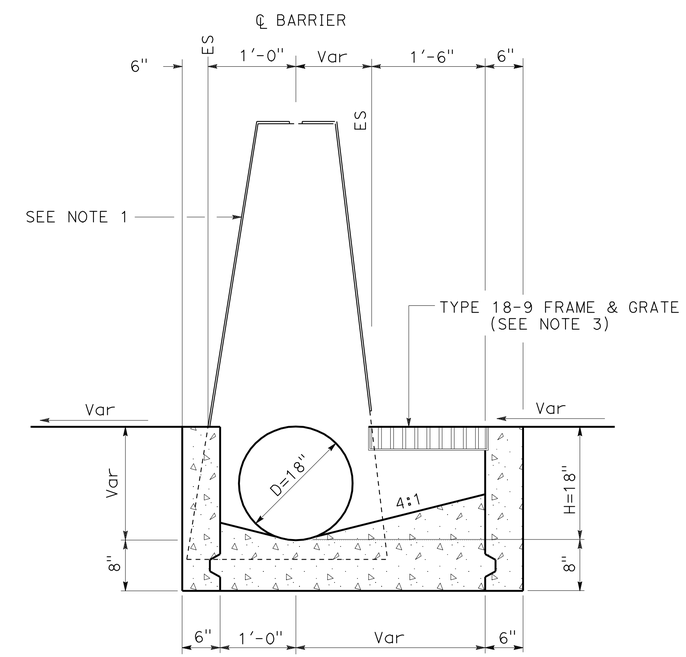

SECTION A-A

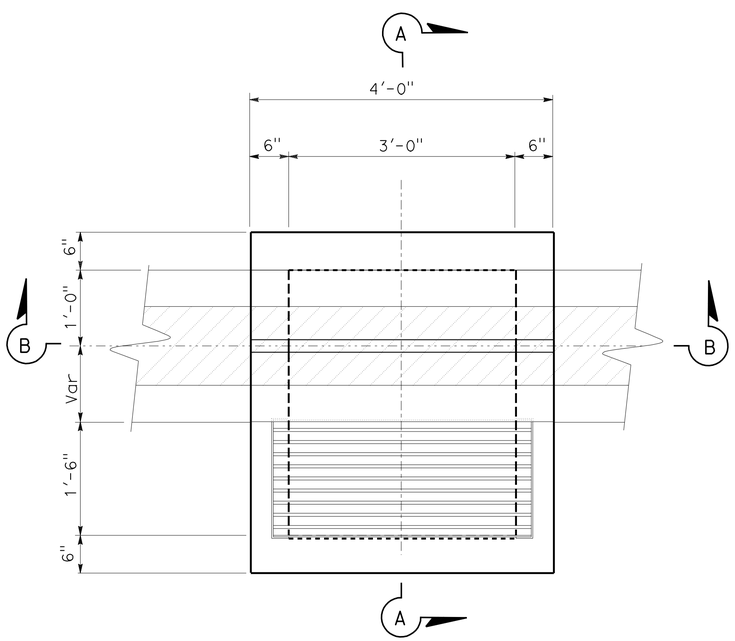

BEGINNING / ENDING CLEANOUT

CASE 1

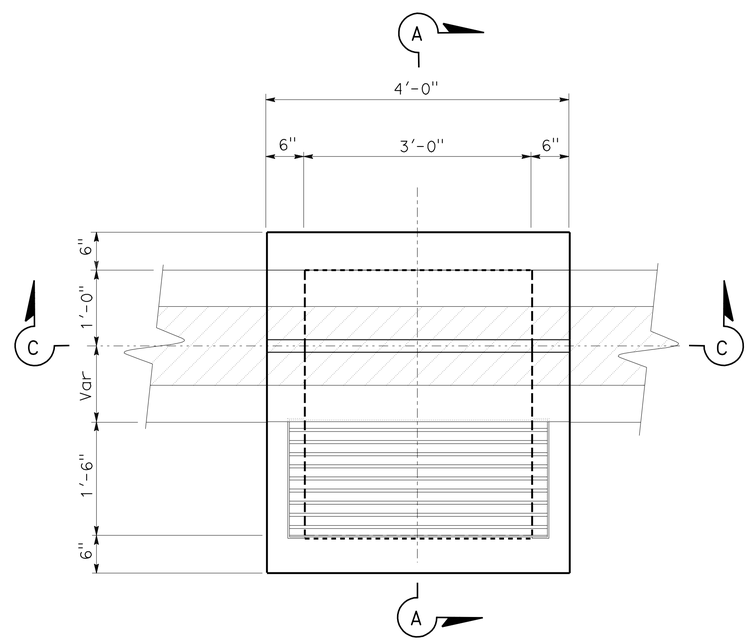

INTERMEDIATE CLEANOUT

CASE 2

PLAN

TYPE CL2 INLET

DRAINAGE DETAIL

NO SCALE

DD-4

STATE OF CALIFORNIA - DEPARTMENT OF TRANSPORTATION

Caltrans

CONSULTANT FUNCTIONAL SUPERVISOR: MELISSA DE LA PENA

CALCULATED-DESIGNED BY: I. MATAGI

CHECKED BY: R. HENDERSON

REVISED BY

DATE REVISED

LAST REVISION 00-00-00

DATE PLOTTED => 06-JUL-2011
TIME PLOTTED => 13:05

Dist	COUNTY	ROUTE	POST MILES TOTAL PROJECT	SHEET No.	TOTAL SHEETS
07	LA	710	17.2/26.4	510	1507

REGISTERED CIVIL ENGINEER 03/30/11 DATE

6-27-11
PLANS APPROVAL DATE

REGISTERED PROFESSIONAL ENGINEER ROBERT M. HENDERSON No. C66736 Exp. 09/30/12 CIVIL STATE OF CALIFORNIA

THE STATE OF CALIFORNIA OR ITS OFFICERS OR AGENTS SHALL NOT BE RESPONSIBLE FOR THE ACCURACY OR COMPLETENESS OF SCANNED COPIES OF THIS PLAN SHEET.

CALTRANS DISTRICT 7
100 S. MAIN STREET
LOS ANGELES, CA 90012

CH2M HILL
1000 WILSHIRE BLVD
LOS ANGELES, CA 90017

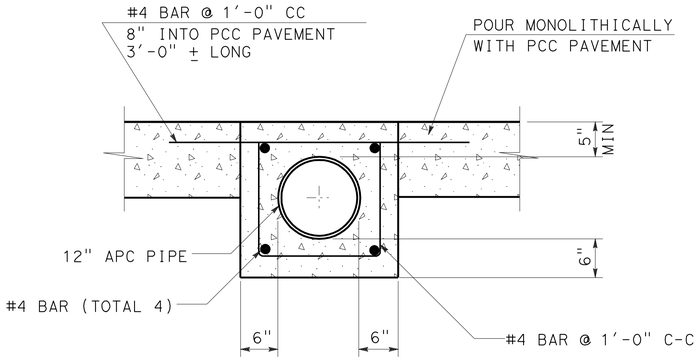

SECTION A-A

REINFORCED PIPE ENCASEMENT DETAIL

NOTES:

1. ELEVATIONS OF PAVEMENT ON OPPOSITE SIDES OF CONCRETE BARRIER MAY VARY.
2. FOR CONCRETE BARRIER END ANCHOR DETAIL REFER TO STANDARD PLAN A76H.

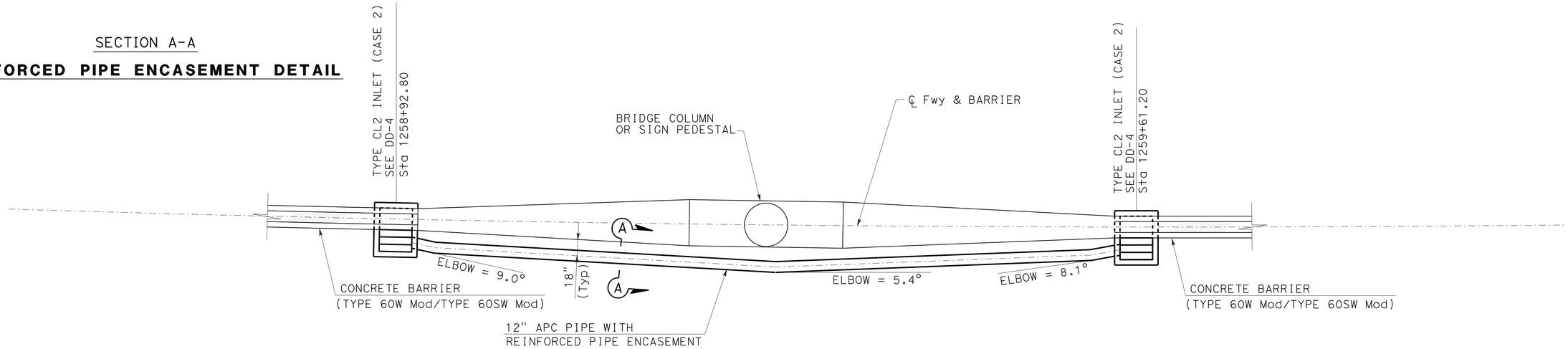

DRAINAGE SYSTEM No. 79 DETAILS

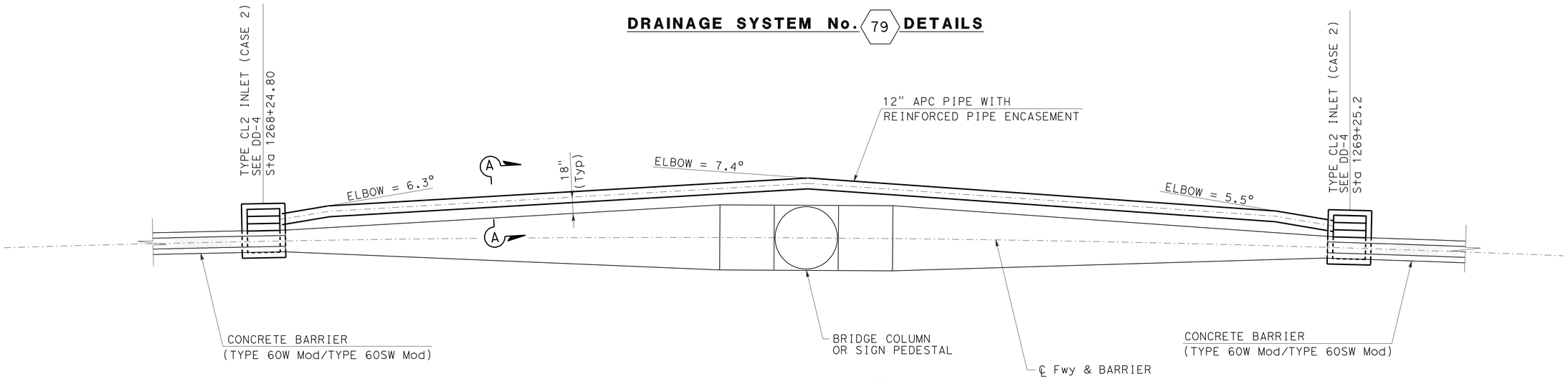

DRAINAGE SYSTEM No. 82 DETAILS

DRAINAGE DETAIL

NO SCALE

DD-5

STATE OF CALIFORNIA - DEPARTMENT OF TRANSPORTATION
Caltrans®

CONSULTANT FUNCTIONAL SUPERVISOR: MELISSA DE LA PENA
CALCULATED-DESIGNED BY: I. MATAGI
CHECKED BY: R. HENDERSON
REVISED BY
DATE REVISED

LAST REVISION 00-00-00
DATE PLOTTED => 29-JUN-2011
TIME PLOTTED => 06:09

Dist	COUNTY	ROUTE	POST MILES TOTAL PROJECT	SHEET No.	TOTAL SHEETS
07	LA	710	17.2/26.4	511	1507

REGISTERED CIVIL ENGINEER 03/30/11 DATE

6-27-11
PLANS APPROVAL DATE

REGISTERED PROFESSIONAL ENGINEER ROBERT M. HENDERSON No. C66736 Exp. 09/30/12 CIVIL STATE OF CALIFORNIA

THE STATE OF CALIFORNIA OR ITS OFFICERS OR AGENTS SHALL NOT BE RESPONSIBLE FOR THE ACCURACY OR COMPLETENESS OF SCANNED COPIES OF THIS PLAN SHEET.

CALTRANS DISTRICT 7
100 S. MAIN STREET
LOS ANGELES, CA 90012

CH2M HILL
1000 WILSHIRE BLVD
LOS ANGELES, CA 90017

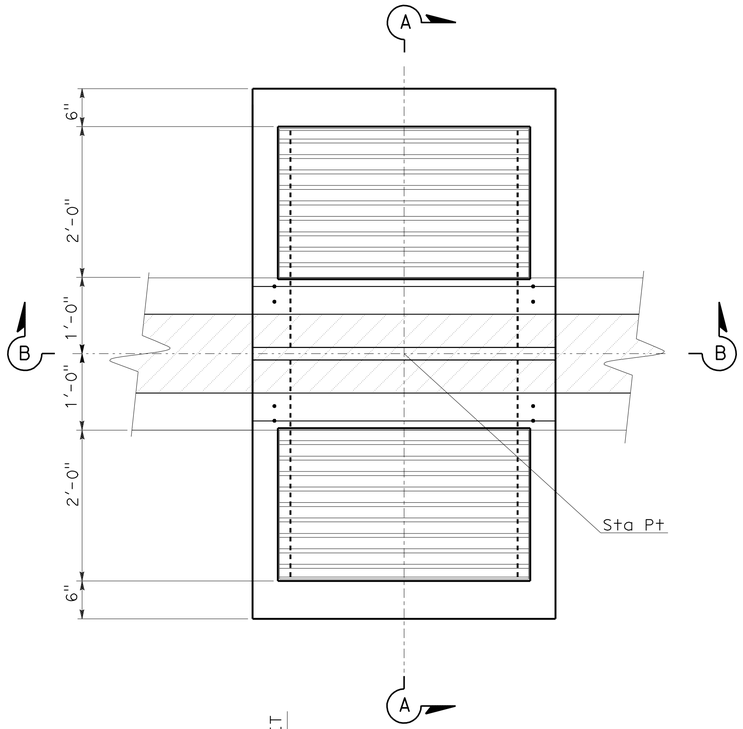

PLAN

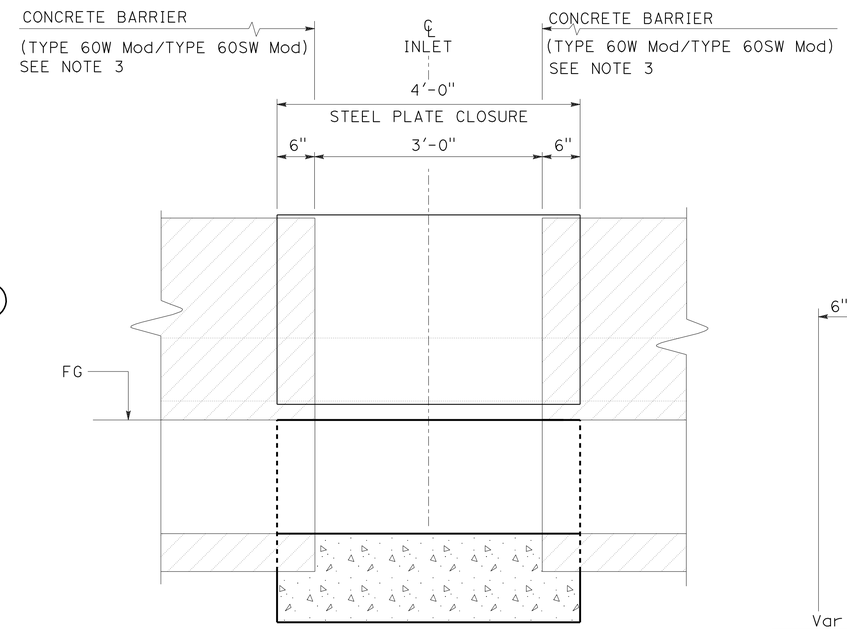

SECTION B-B

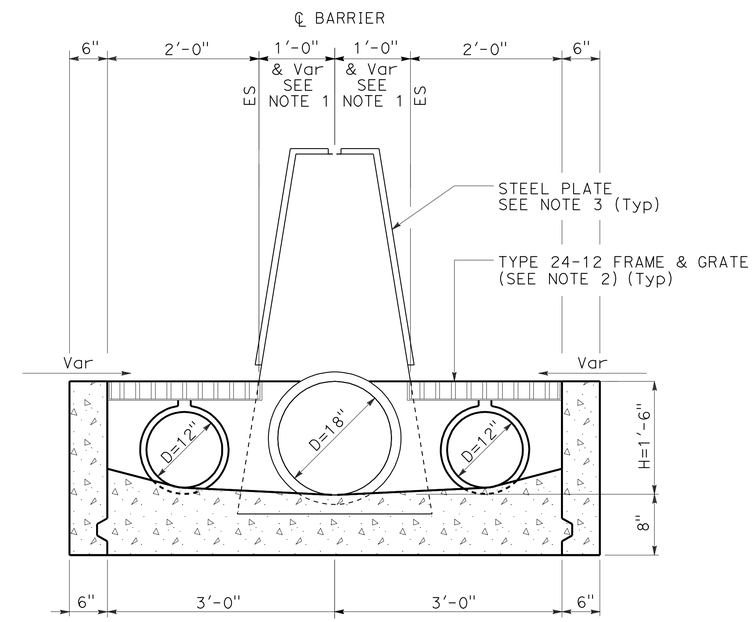

SECTION A-A

TYPE CL2 INLET

INTERMEDIATE CLEANOUT
CASE 3

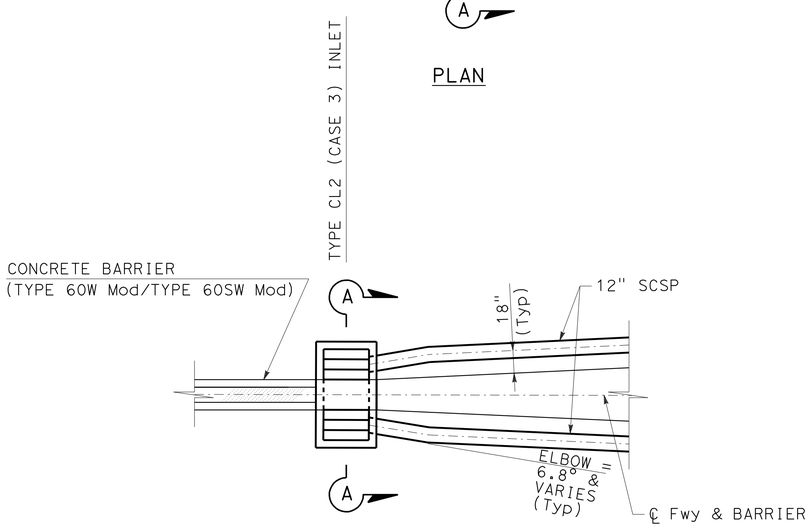

DRAINAGE SYSTEM DETAILS

SYSTEM No. 98 d 1298+58.60

SYSTEM No. 116 a 1304+44.80

SYSTEM No. 122 a 1317+62.70

NOTES:

1. ELEVATIONS OF PAVEMENT ON OPPOSITE SIDES OF CONCRETE BARRIER MAY VARY.
2. FOR FRAME AND GRATE INSTALLATION, REFER TO TYPE GO INLET ON STANDARD PLAN RSP D74B.
3. FOR STEEL PLATE CLOSURE DETAILS, REFER TO SHEET DD-7.
4. FOR DETAILS AND INFORMATION NOT SHOWN REFER TO TYPE G1 INLET ON STANDARD PLAN D73.

DRAINAGE DETAIL

NO SCALE

DD-6

STATE OF CALIFORNIA - DEPARTMENT OF TRANSPORTATION
Caltrans

CONSULTANT FUNCTIONAL SUPERVISOR: MELISSA DE LA PENA
CALCULATED-DESIGNED BY: I. MATAGI
CHECKED BY: R. HENDERSON
REVISED BY
DATE REVISED

LAST REVISION 00-00-00
DATE PLOTTED => 06-JUL-2011
TIME PLOTTED => 13:05

Dist	COUNTY	ROUTE	POST MILES TOTAL PROJECT	SHEET No.	TOTAL SHEETS
07	LA	710	17.2/26.4	512	1507

REGISTERED CIVIL ENGINEER 03/30/11 DATE

6-27-11
PLANS APPROVAL DATE

REGISTERED PROFESSIONAL ENGINEER ROBERT M. HENDERSON No. C66736 Exp. 09/30/12 CIVIL STATE OF CALIFORNIA

THE STATE OF CALIFORNIA OR ITS OFFICERS OR AGENTS SHALL NOT BE RESPONSIBLE FOR THE ACCURACY OR COMPLETENESS OF SCANNED COPIES OF THIS PLAN SHEET.

CALTRANS DISTRICT 7
100 S. MAIN STREET
LOS ANGELES, CA 90012

CH2M HILL
1000 WILSHIRE BLVD
LOS ANGELES, CA 90017

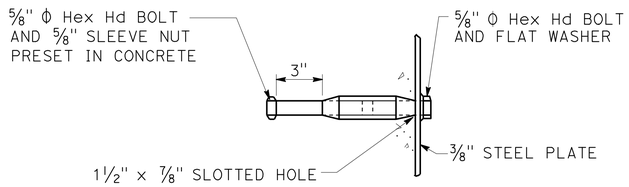

DETAIL "F"

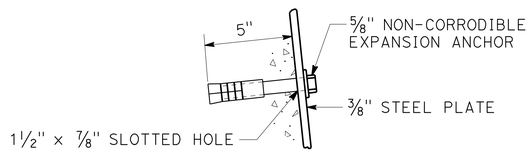

ALTERNATE DETAIL "F"

ANCHOR BOLT DETAILS

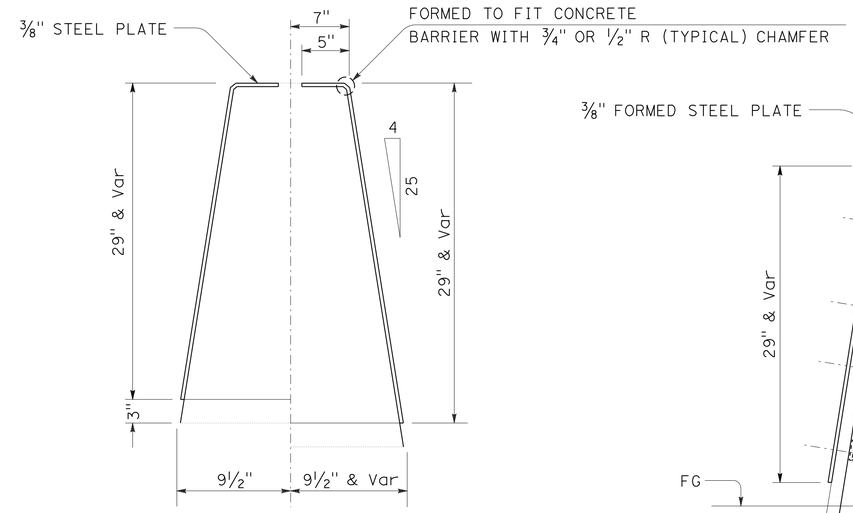

DETAIL "G"

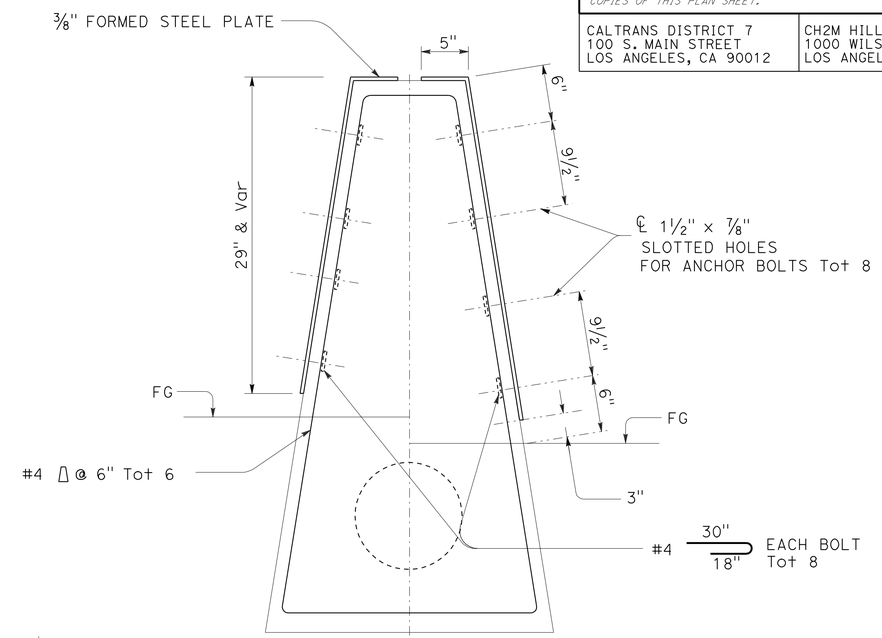

DETAIL M-M

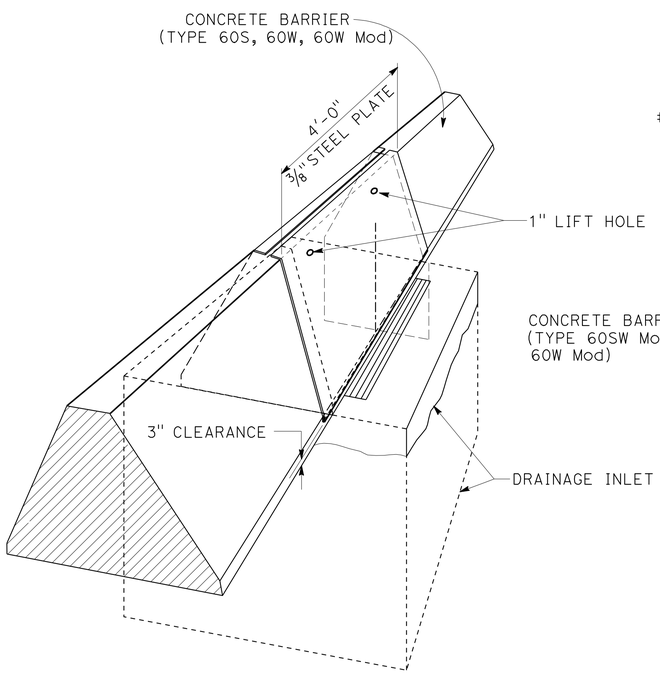

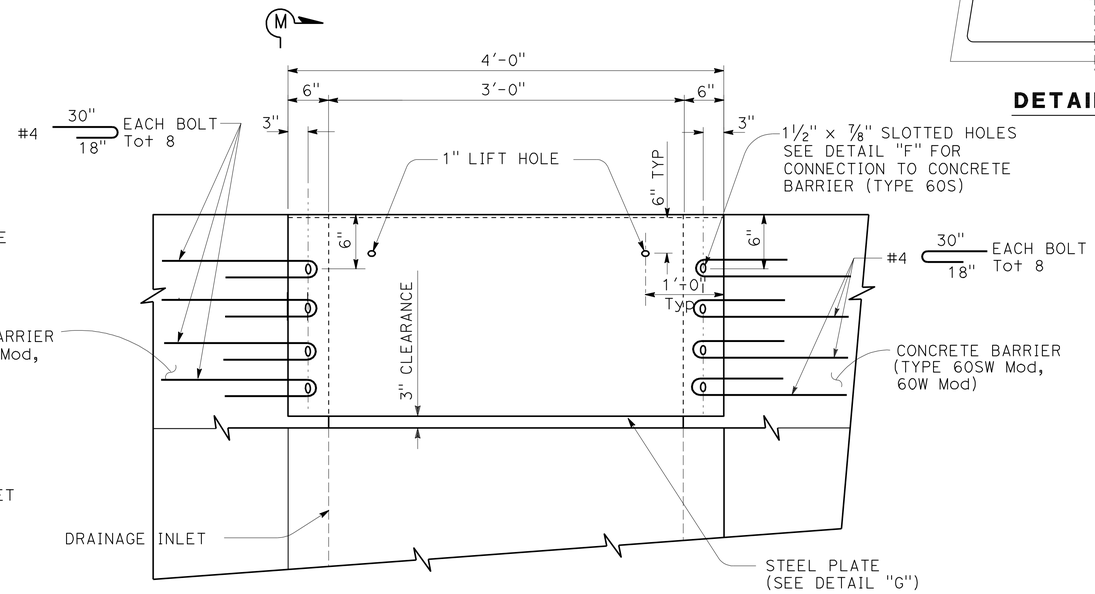

ELEVATION

STEEL PLATE CLOSURE DETAIL
(TYPE 60SW Mod, 60W, 60W Mod) OVER INLET

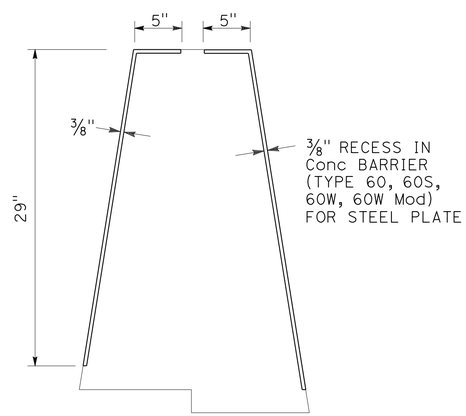

RECESS DETAIL

DRAINAGE DETAIL

NO SCALE

DD-7

REVISED BY	DATE REVISED
I. MATAGI	R. HENDERSON

CALCULATED-DESIGNED BY / CHECKED BY

CONSULTANT FUNCTIONAL SUPERVISOR: MELISSA DE LA PENA

STATE OF CALIFORNIA - DEPARTMENT OF TRANSPORTATION

Caltrans

LAST REVISION 00-00-00 | DATE PLOTTED => 29-JUN-2011 | TIME PLOTTED => 06:09

Dist	COUNTY	ROUTE	POST MILES TOTAL PROJECT	SHEET No.	TOTAL SHEETS
07	LA	710	17.2/26.4	513	1507

REGISTERED CIVIL ENGINEER 03/30/11 DATE

6-27-11
PLANS APPROVAL DATE

REGISTERED PROFESSIONAL ENGINEER ROBERT M. HENDERSON No. C66736 Exp. 09/30/12 CIVIL STATE OF CALIFORNIA

THE STATE OF CALIFORNIA OR ITS OFFICERS OR AGENTS SHALL NOT BE RESPONSIBLE FOR THE ACCURACY OR COMPLETENESS OF SCANNED COPIES OF THIS PLAN SHEET.

CALTRANS DISTRICT 7
100 S. MAIN STREET
LOS ANGELES, CA 90012

CH2M HILL
1000 WILSHIRE BLVD
LOS ANGELES, CA 90017

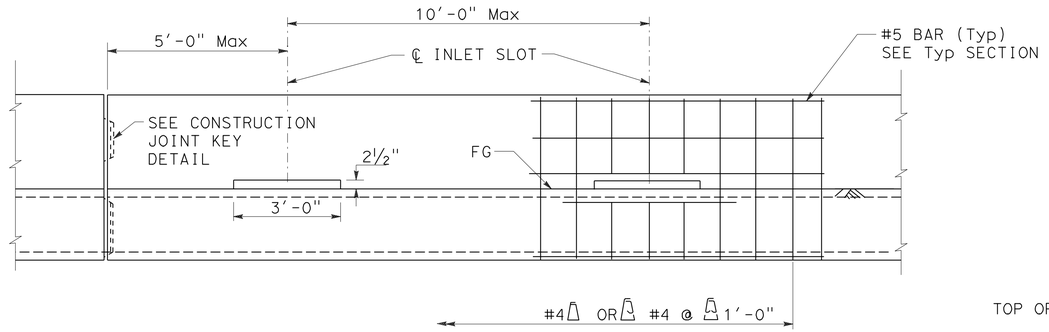

ELEVATION

NOTES:

1. FOR DETAILS AND DIMENSIONS NOT SHOWN, SEE CONCRETE BARRIER TYPE 60/TYPE 60C/TYPE 60SC.
2. PLACE INLET SLOTS ONLY ON THAT BARRIER SIDE WHERE FINISHED GRADE CROSS-SLOPE IS DOWNWARD TOWARD BARRIER.
3. DRAIN PIPE SHALL EXTEND A Min OF 6" FROM BARRIER CONSTRUCTION JOINTS TO PROVIDE PROPER CONNECTION BETWEEN PIPE SECTIONS.

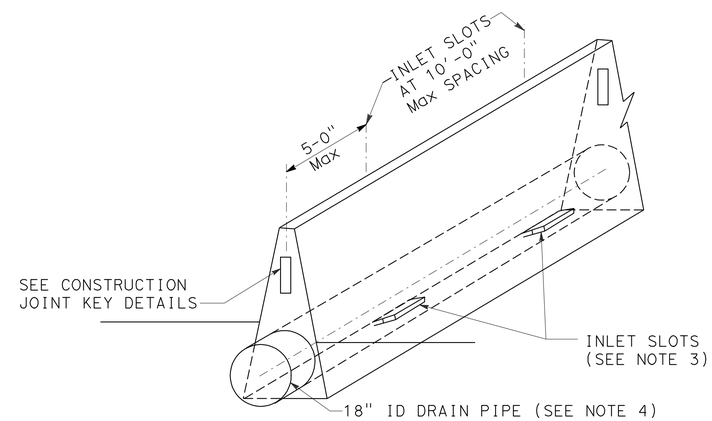

ISOMETRIC VIEW

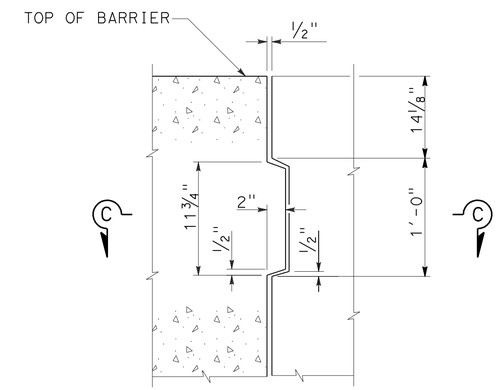

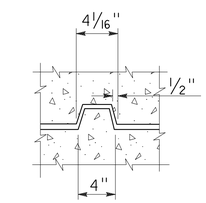

SECTION C-C

CONSTRUCTION JOINT KEY DETAIL

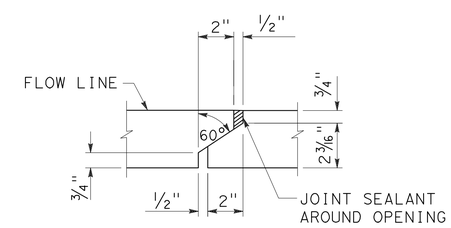

DETAIL A

(AT ℄ BARRIER)

CONCRETE BARRIER (TYPE 60W Mod/TYPE 60SW Mod)

DRAINAGE DETAIL

NO SCALE

DD-8

REVISED BY	DATE REVISED

CALCULATED-DESIGNED BY: I. MATAGI
CHECKED BY: R. HENDERSON
CONSULTANT FUNCTIONAL SUPERVISOR: MELISSA DE LA PENA

STATE OF CALIFORNIA - DEPARTMENT OF TRANSPORTATION
Caltrans

LAST REVISION 00-00-00
DATE PLOTTED => 29-JUN-2011
TIME PLOTTED => 06:10

Dist	COUNTY	ROUTE	POST MILES TOTAL PROJECT	SHEET No.	TOTAL SHEETS
07	LA	710	17.2/26.4	514	1507

REGISTERED CIVIL ENGINEER 03/30/11 DATE

6-27-11
PLANS APPROVAL DATE

REGISTERED PROFESSIONAL ENGINEER ROBERT M. HENDERSON No. C66736 Exp. 09/30/12 CIVIL STATE OF CALIFORNIA

THE STATE OF CALIFORNIA OR ITS OFFICERS OR AGENTS SHALL NOT BE RESPONSIBLE FOR THE ACCURACY OR COMPLETENESS OF SCANNED COPIES OF THIS PLAN SHEET.

CALTRANS DISTRICT 7
100 S. MAIN STREET
LOS ANGELES, CA 90012

CH2M HILL
1000 WILSHIRE BLVD
LOS ANGELES, CA 90017

NOTE:

1. WHERE NECESSARY SLOPE PAVEMENT TO MATCH INLET SLOT FLOW LINE.

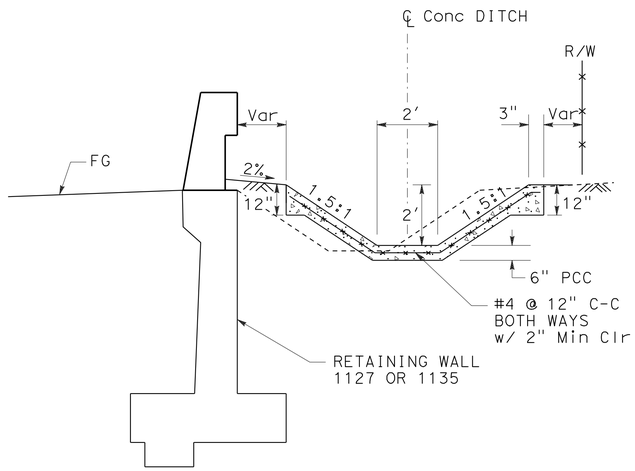

CONCRETE DITCH

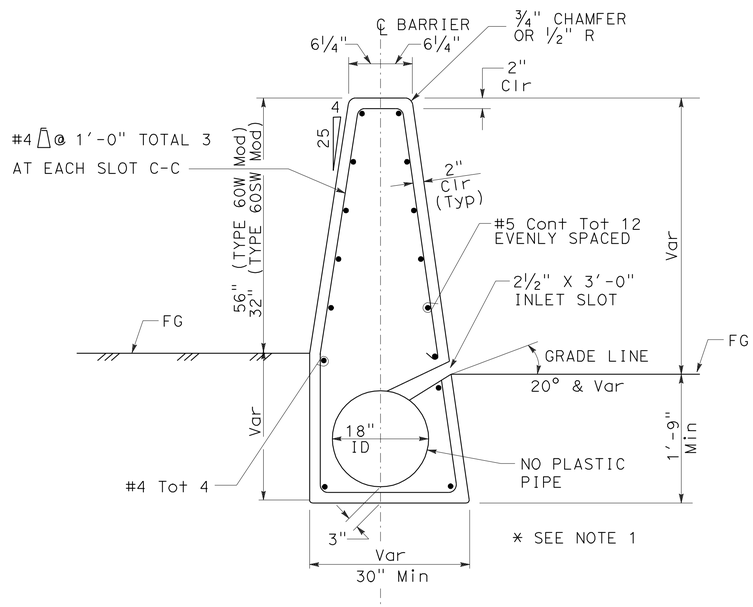

TYPICAL SECTION

CONCRETE BARRIER
(TYPE 60W Mod/TYPE 60SW Mod)

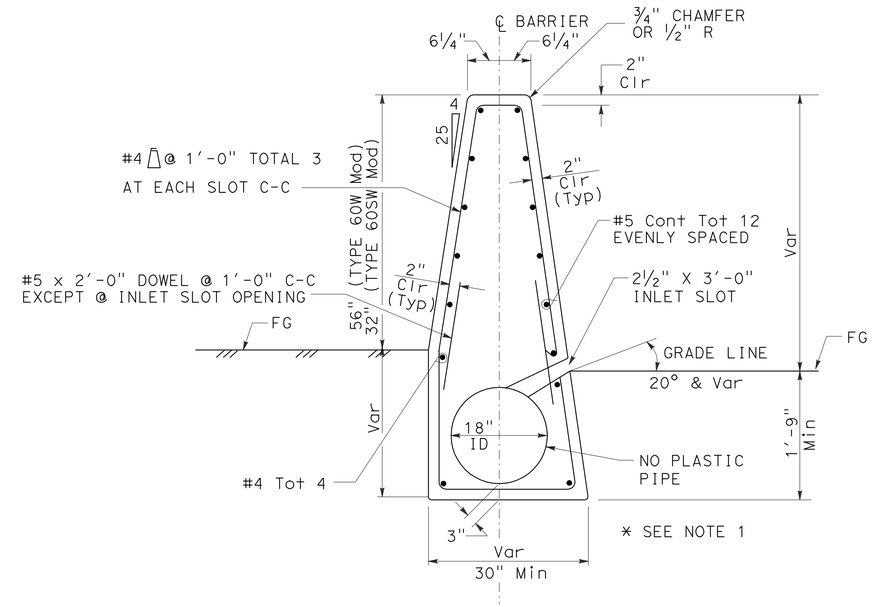

TYPICAL SECTION

OPTIONAL CONCRETE BARRIER
(TYPE 60W Mod/TYPE 60SW Mod)

DRAINAGE DETAIL

NO SCALE

DD-9

STATE OF CALIFORNIA - DEPARTMENT OF TRANSPORTATION
Caltrans

CONSULTANT FUNCTIONAL SUPERVISOR: MELISSA DE LA PENA
CALCULATED-DESIGNED BY: I. MATAGI
CHECKED BY: R. HENDERSON
REVISED BY
DATE REVISED

LAST REVISION 00-00-00
DATE PLOTTED => 29-JUN-2011
TIME PLOTTED => 06:10

Dist	COUNTY	ROUTE	POST MILES TOTAL PROJECT	SHEET No.	TOTAL SHEETS
07	LA	710	17.2/26.4	515	1507

REGISTERED CIVIL ENGINEER 03/30/11 DATE

6-27-11
PLANS APPROVAL DATE

REGISTERED PROFESSIONAL ENGINEER ROBERT M. HENDERSON No. C66736 Exp. 09/30/12 CIVIL STATE OF CALIFORNIA

THE STATE OF CALIFORNIA OR ITS OFFICERS OR AGENTS SHALL NOT BE RESPONSIBLE FOR THE ACCURACY OR COMPLETENESS OF SCANNED COPIES OF THIS PLAN SHEET.

CALTRANS DISTRICT 7
100 S. MAIN STREET
LOS ANGELES, CA 90012

CH2M HILL
1000 WILSHIRE BLVD
LOS ANGELES, CA 90017

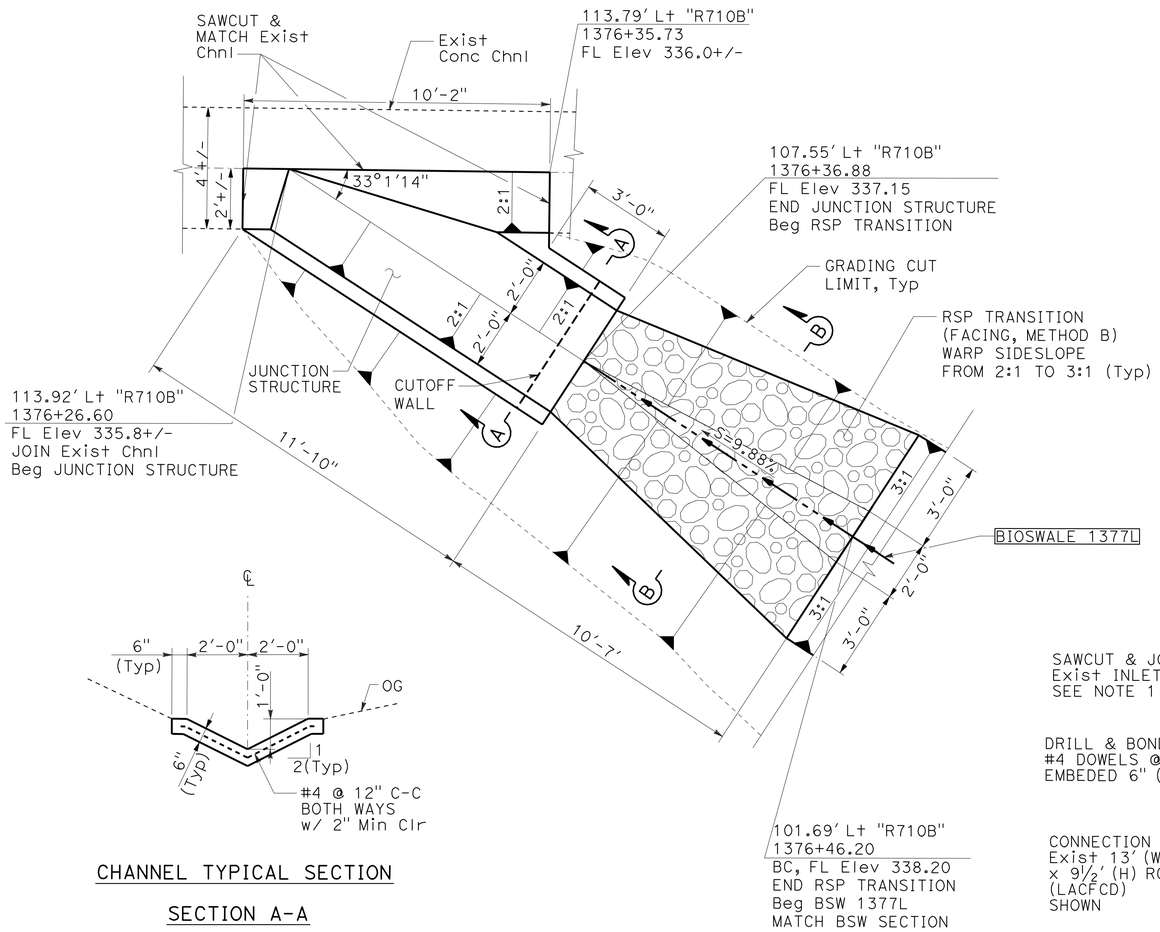

CHANNEL TYPICAL SECTION

SECTION A-A

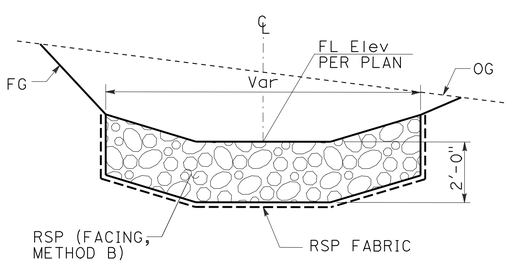

RSP TYPICAL SECTION

SECTION B-B

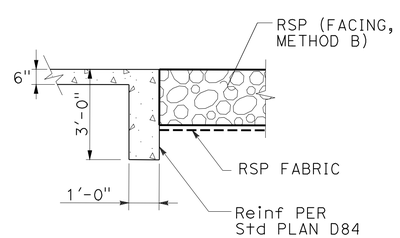

CUTOFF WALL

JUNCTION STRUCTURE No. 1

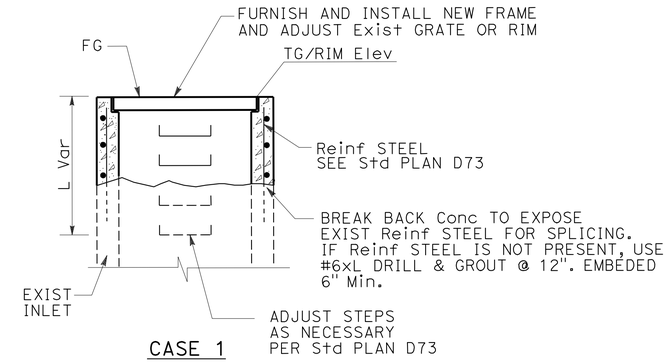

CASE 1

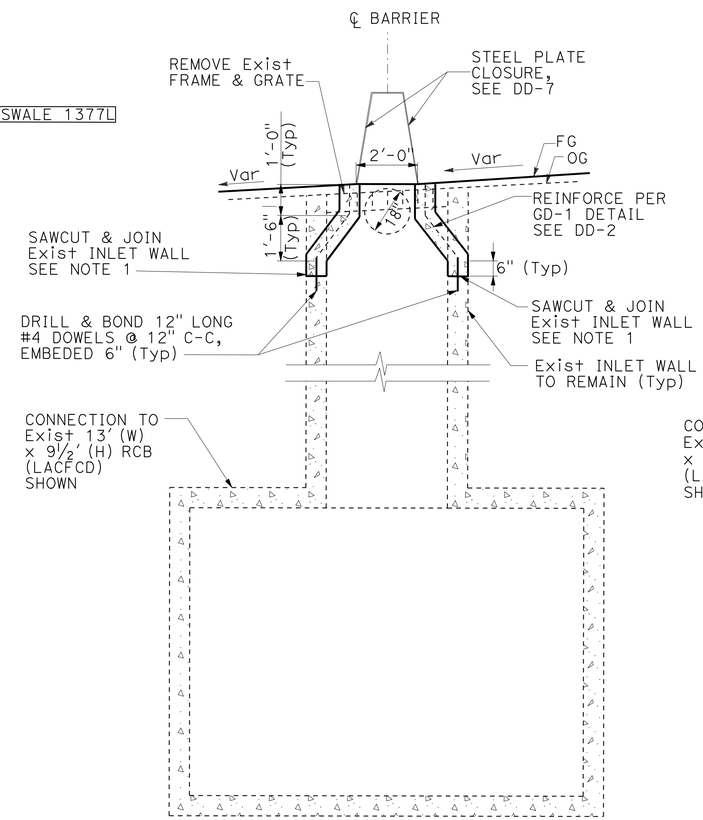

CASE 2

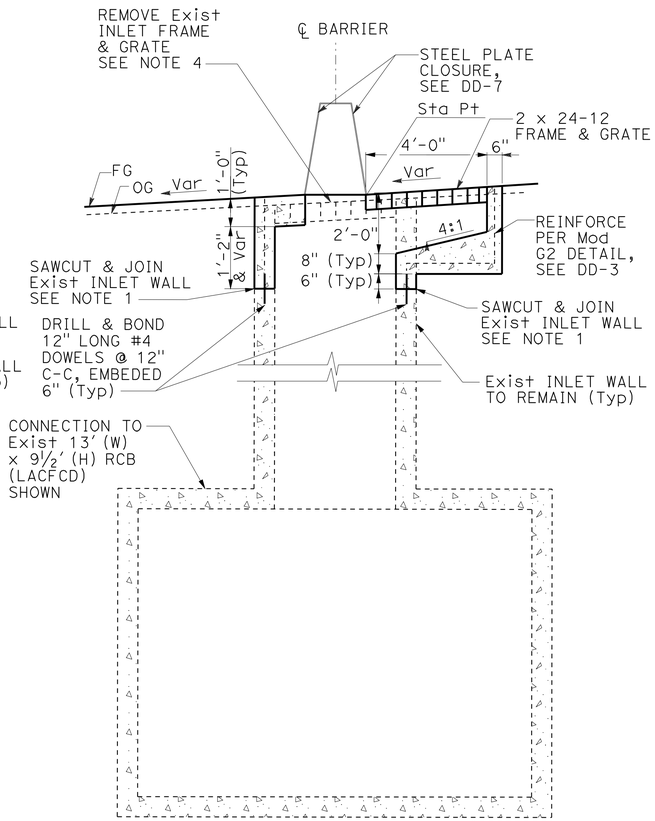

CASE 3

ADJUST INLET/MANHOLE

ADJUST INLET/MANHOLE NOTES:

1. JOIN Exist INLET WALLS AND MATCH WALL THICKNESS.
2. GRATE SHALL BE INSTALLED FLUSH w/ SURROUNDING SHOULDER.
3. CONNECTIONS TO Exist STORM DRAINS MAY BE VERY DEEP.
4. Exist FRAME & GRATE MAY BE SALVAGED AT CONTRACTOR'S OPTION.

DRAINAGE DETAIL

NO SCALE

DD-10

STATE OF CALIFORNIA - DEPARTMENT OF TRANSPORTATION
Caltrans

CONSULTANT FUNCTIONAL SUPERVISOR: MELISSA DE LA PENA
CALCULATED-DESIGNED BY: I. MATAGI
CHECKED BY: R. HENDERSON
REVISED BY
DATE REVISED

LAST REVISION 00-00-00
DATE PLOTTED => 29-JUN-2011
TIME PLOTTED => 06:10

Dist	COUNTY	ROUTE	POST MILES TOTAL PROJECT	SHEET No.	TOTAL SHEETS
07	LA	710	17.2/26.4	516	1507

REGISTERED CIVIL ENGINEER 03/30/11 DATE

6-27-11
PLANS APPROVAL DATE

REGISTERED PROFESSIONAL ENGINEER ROBERT M. HENDERSON No. C66736 Exp. 09/30/12 CIVIL STATE OF CALIFORNIA

THE STATE OF CALIFORNIA OR ITS OFFICERS OR AGENTS SHALL NOT BE RESPONSIBLE FOR THE ACCURACY OR COMPLETENESS OF SCANNED COPIES OF THIS PLAN SHEET.

CALTRANS DISTRICT 7
100 S. MAIN STREET
LOS ANGELES, CA 90012

CH2M HILL
1000 WILSHIRE BLVD
LOS ANGELES, CA 90017

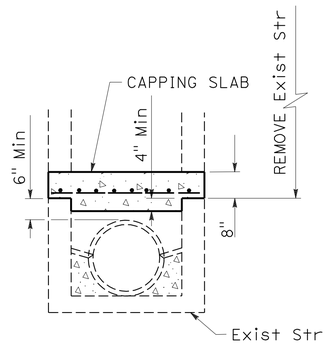

SECTION B-B

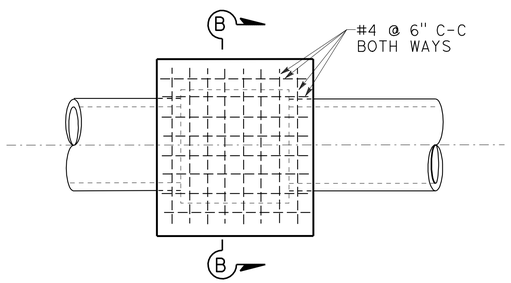

PLAN

CAP INLET DETAIL

CORNER CONNECTION NOTES:

1. ROUND EDGE OF OUTLET TO 3" RADIUS.
2. REINFORCEMENT SHALL BE 1-1/2" CLEAR FROM THE FACE OF CONCRETE.
3. IN CONNECTING TO AN EXISTING STRUCTURE, BREAK OUT PORTIONS OF THE EXISTING STRUCTURE 12" OUTSIDE ITS INTERSECTION WITH THE NEW CONNECTION. BEND ENDS OF #4 BARS OVER CONNECTION OPENING AS REQUIRED.

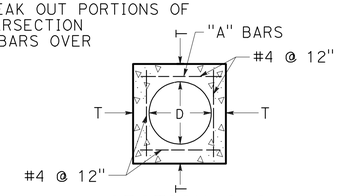

SECTION C-C

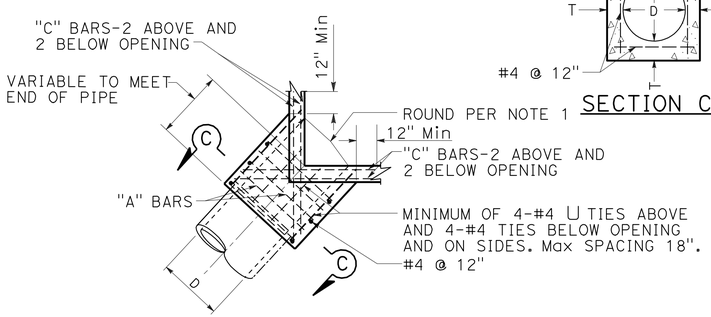

PLAN

CORNER CONNECTION

D (in)	T (in)	"A"	"C"
12	4.5	#4 @ 6"	#5
15	4.5		
18	5.0		
20	5.5		
24	6.0		
27	6.5		
30	7.0		
33	7.0		
36	7.5		
40	8.0		
42	8.0		
45	8.0	#5 @ 6"	#6
48	8.0		
50	8.0		
54	8.0		
56	10.0		
60	10.0		
64	10.0		
66	11.0		
70	11.0		
72	11.0		

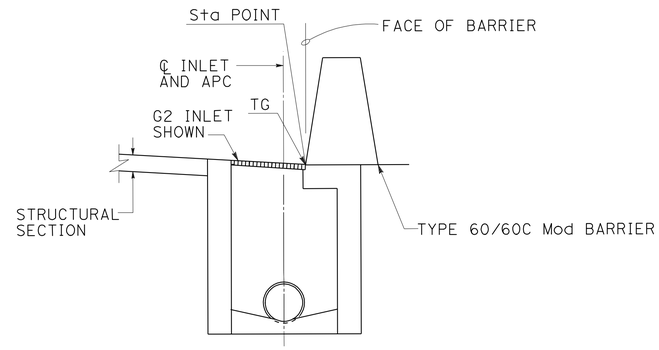

TYPE 60/60C BARRIER

39	b e	91	c e
65	a c	100	b d f h
67	b	112	a
75	a c e g	113	a
76	c	118	a c e g
77	a d	120	b

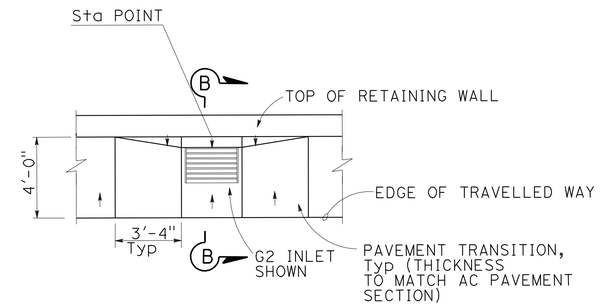

RETAINING WALL WITH BARRIER

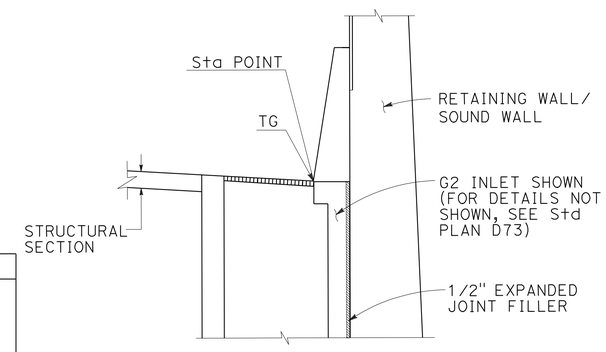

RETAINING WALL/SOUND WALL WITH BARRIER

20	g	48	b
27	a	53	a
39	i	69	b
40	c	83	b
41	c	108	a c e
42	c f	109	e

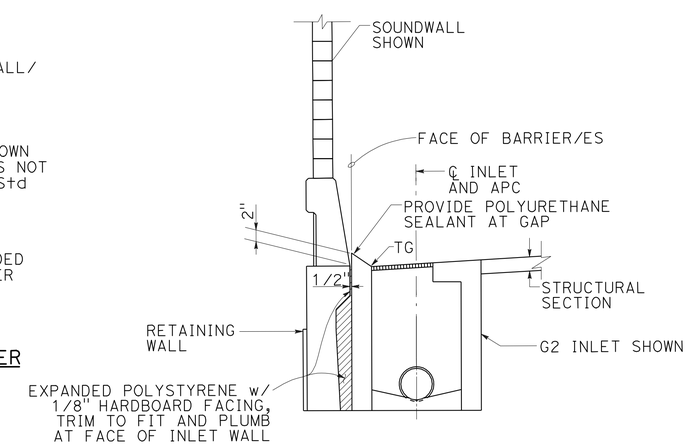

SECTION B-B

119	b

INLET TYPICAL PLACEMENT AGAINST BARRIER

DRAINAGE DETAIL

NO SCALE

DD-11

STATE OF CALIFORNIA - DEPARTMENT OF TRANSPORTATION
Caltrans

CONSULTANT FUNCTIONAL SUPERVISOR: MELISSA DE LA PENA
CALCULATED-DESIGNED BY: I. MATAGI
CHECKED BY: R. HENDERSON
REVISED BY
DATE REVISED

LAST REVISION 00-00-00
DATE PLOTTED => 29-JUN-2011
TIME PLOTTED => 06:10

Dist	COUNTY	ROUTE	POST MILES TOTAL PROJECT	SHEET No.	TOTAL SHEETS
07	LA	710	17.2/26.4	517	1507

REGISTERED CIVIL ENGINEER 03/30/11 DATE

6-27-11
PLANS APPROVAL DATE

REGISTERED PROFESSIONAL ENGINEER ROBERT M. HENDERSON No. C66736 Exp. 09/30/12 CIVIL STATE OF CALIFORNIA

THE STATE OF CALIFORNIA OR ITS OFFICERS OR AGENTS SHALL NOT BE RESPONSIBLE FOR THE ACCURACY OR COMPLETENESS OF SCANNED COPIES OF THIS PLAN SHEET.

CALTRANS DISTRICT 7
100 S. MAIN STREET
LOS ANGELES, CA 90012

CH2M HILL
1000 WILSHIRE BLVD
LOS ANGELES, CA 90017

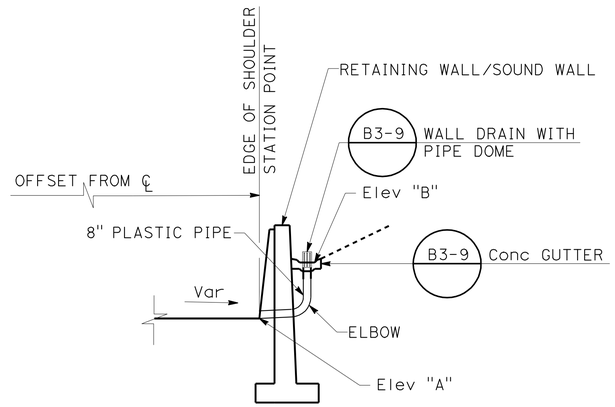

CASE 1

WALL DRAIN

DRAINAGE SYSTEM No.	UNIT No.	OFFSET	ALIGNMENT	STATION	Elev A	Elev B
40	f	64.07′ L+	"R710A"	1125+03.31	130.46	134.65
114	a	22.81′ L+	"C"	314+98.17	303.21	305.41
115	a	67.81′ L+	"R710B"	1314+24.60	294.40	295.83
121	a	67.81′ L+	"R710B"	1319+79.69	298.10	299.46

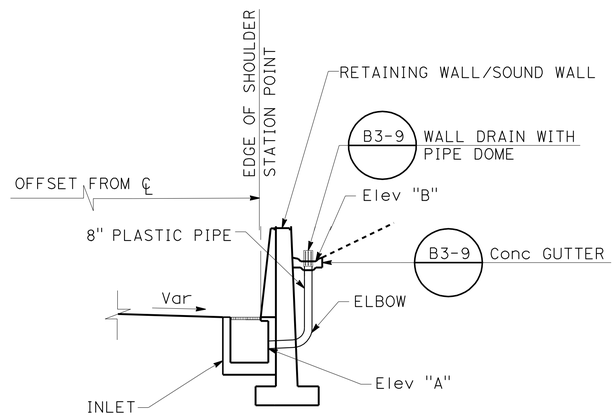

CASE 2

WALL DRAIN

DRAINAGE SYSTEM No.	UNIT No.	OFFSET	ALIGNMENT	STATION	Elev A	Elev B
20	h	65.50′ R+	"R710A"	1105+73.50	130.00	134.48
27	b	64.90′ R+	"R710A"	1108+96.33	125.00	131.29
39	j	64.50′ R+	"R710A"	1123+50.00	128.50	133.34
40	e	65.18′ L+	"R710A"	1125+36.39	127.50	134.10
41	d	68.40′ R+	"R710A"	1126+00.00	129.00	135.15
108	f	24.25′ L+	"C"	308+02.00	288.30	295.75

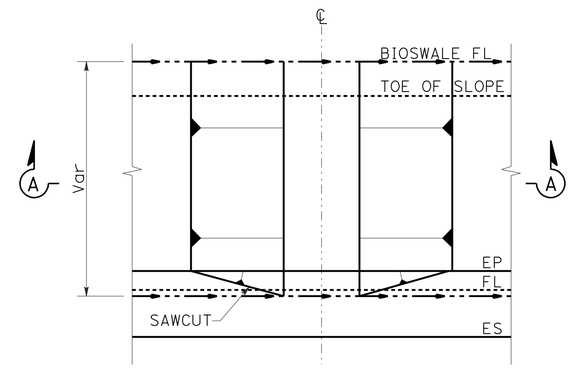

PLAN

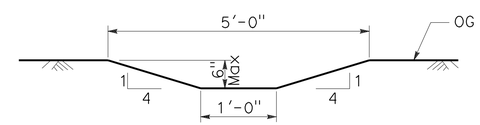

SECTION A-A

OVERSIDE DRAIN (OSD) A

DRAINAGE DETAIL

NO SCALE

DD-12

STATE OF CALIFORNIA - DEPARTMENT OF TRANSPORTATION
Caltrans

CONSULTANT FUNCTIONAL SUPERVISOR: MELISSA DE LA PENA
CALCULATED-DESIGNED BY: G. NGUYEN
CHECKED BY: R. HENDERSON
REVISED BY
DATE REVISED

LAST REVISION 00-00-00
DATE PLOTTED => 29-JUN-2011
TIME PLOTTED => 06:10

Dist	COUNTY	ROUTE	POST MILES TOTAL PROJECT	SHEET No.	TOTAL SHEETS
07	LA	710	17.2/26.4	518	1507

REGISTERED CIVIL ENGINEER 03/30/11 DATE

6-27-11
PLANS APPROVAL DATE

REGISTERED PROFESSIONAL ENGINEER ROBERT M. HENDERSON No. C66736 Exp. 09/30/12 CIVIL STATE OF CALIFORNIA

THE STATE OF CALIFORNIA OR ITS OFFICERS OR AGENTS SHALL NOT BE RESPONSIBLE FOR THE ACCURACY OR COMPLETENESS OF SCANNED COPIES OF THIS PLAN SHEET.

CALTRANS DISTRICT 7
100 S. MAIN STREET
LOS ANGELES, CA 90012

CH2M HILL
1000 WILSHIRE BLVD
LOS ANGELES, CA 90017

BASIN	DRAINAGE SYSTEM No.	UNIT No.	PIPE RISER Dia	PIPE MATERIAL	OPENING AT Elev A NUMBER x SIZE	Elev A	OVERFLOW Elev	CSP THICKNESS
1236 R	72	a	36"	Bit Ctd CSP	4 x 7/8"	176.00	177.70	0.079"

NOTES:

1. SLOPE APRON TO MATCH GRADE OF BERM WHEN APRON IS ON BERM
2. CORRUGATED STEEL PIPE RISER SHALL BE PROTECTED WITH BITUMINOUS COATING.
3. TRASH SCREEN SHALL BE COVERED WITH 6 x 6 STAINLESS STEEL WIRE MESH AT SCREEN ELEVATION.
4. Min Clr FOR REINFORCING STEEL SHALL BE 1-1/2".

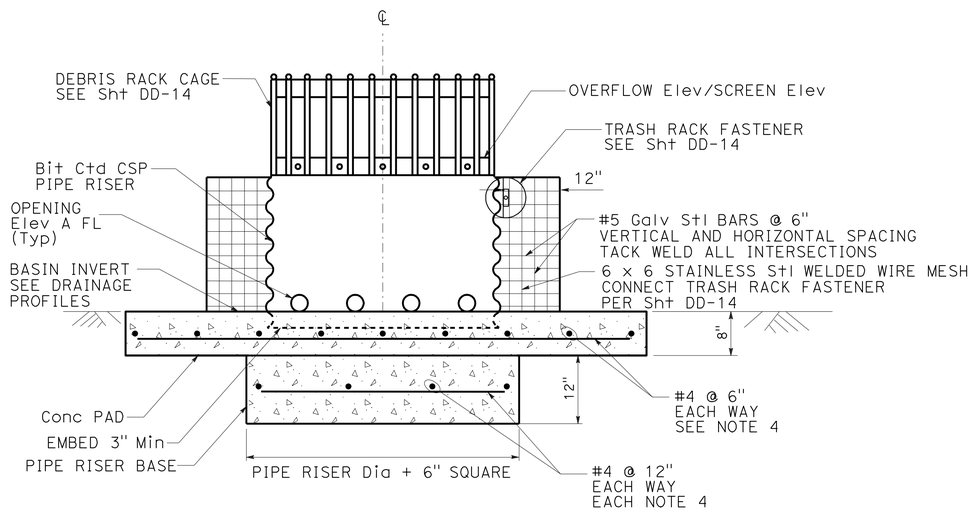

SECTION A-A

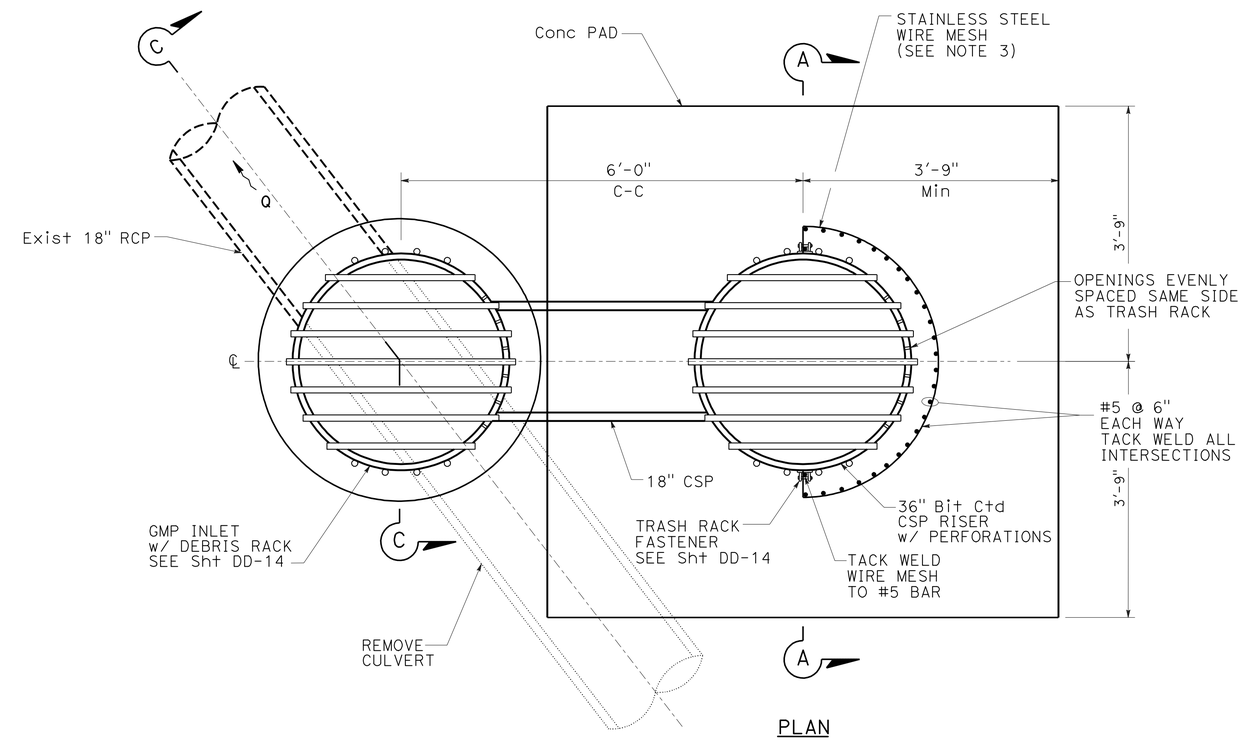

PLAN

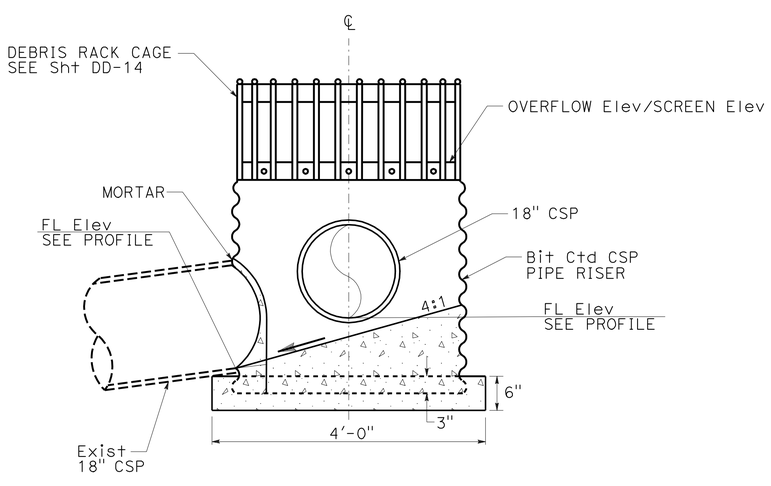

SECTION C-C
(NO ORIFICES INSTALLED)

DUAL WATER QUALITY RISER

DRAINAGE SYSTEM No. 72 a

DRAINAGE DETAIL

NO SCALE

DD-13

STATE OF CALIFORNIA - DEPARTMENT OF TRANSPORTATION
Caltrans®

CONSULTANT FUNCTIONAL SUPERVISOR: MELISSA DE LA PENA
CALCULATED-DESIGNED BY: I. MATAGI
CHECKED BY: R. HENDERSON
REVISED BY
DATE REVISED

LAST REVISION 00-00-00
DATE PLOTTED => 29-JUN-2011
TIME PLOTTED => 06:27

Dist	COUNTY	ROUTE	POST MILES TOTAL PROJECT	SHEET No.	TOTAL SHEETS
07	LA	710	17.2/26.4	519	1507

REGISTERED CIVIL ENGINEER 03/30/11 DATE

6-27-11
PLANS APPROVAL DATE

REGISTERED PROFESSIONAL ENGINEER ROBERT M. HENDERSON No. C66736 Exp. 09/30/12 CIVIL STATE OF CALIFORNIA

THE STATE OF CALIFORNIA OR ITS OFFICERS OR AGENTS SHALL NOT BE RESPONSIBLE FOR THE ACCURACY OR COMPLETENESS OF SCANNED COPIES OF THIS PLAN SHEET.

CALTRANS DISTRICT 7
100 S. MAIN STREET
LOS ANGELES, CA 90012

CH2M HILL
1000 WILSHIRE BLVD
LOS ANGELES, CA 90017

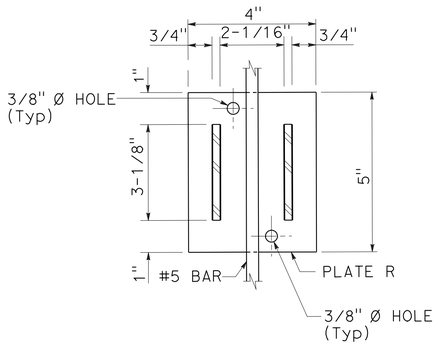

SECTION D-D

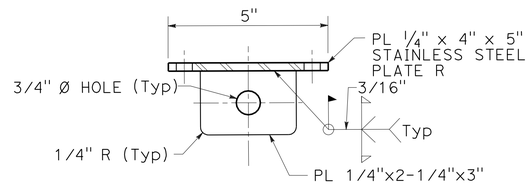

SECTION B-B

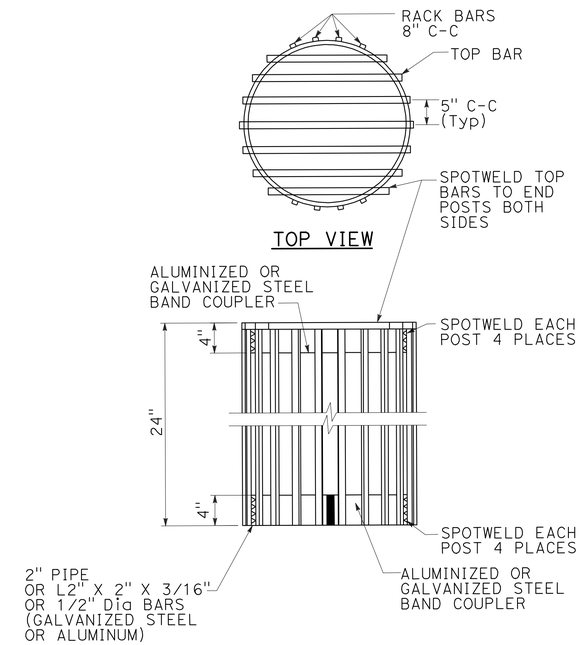

DEBRIS RACK CAGE

DEBRIS RACK CAGE NOTES:

1. ALL REINFORCING STEEL SHALL BE #4 BARS.
2. TOP BARS: TYPE SAME AS RACK EXCEPT USE 1" Dia BARS WHEN RACK BARS ARE 1/2" Dia.
3. RACK: USE 2" GALVANIZED STEEL OR ALUMINUM PIPE L2" X 2" X 3/16" OR 1/2" Dia BARS, 1" Dia BARS ON TOP (GALVANIZED STEEL OR ALUMINUM).
4. WHEN USED WITH MODIFIED GCP INLET GALVANIZED STEEL L2" x 2" x 3/16" RACK BARS SHALL BE USED.
5. FOR MODIFIED GCP INLET BAND COUPLER SHALL BE GALVANIZED STEEL WITH OUTSIDE DIAMETER OF 3'-0".

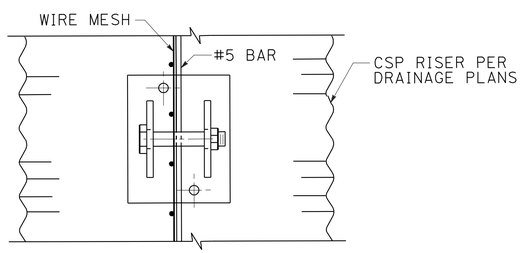

ELEVATION

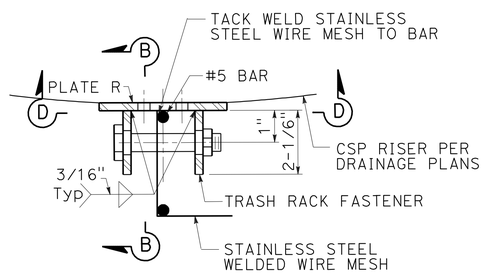

PLAN

TRASH RACK FASTENER

DRAINAGE DETAIL

NO SCALE

DD-14

STATE OF CALIFORNIA - DEPARTMENT OF TRANSPORTATION
Caltrans

CONSULTANT FUNCTIONAL SUPERVISOR: MELISSA DE LA PENA
CALCULATED-DESIGNED BY: I. MATAGI
CHECKED BY: R. HENDERSON
REVISED BY
DATE REVISED

LAST REVISION 00-00-00
DATE PLOTTED => 29-JUN-2011
TIME PLOTTED => 06:10

Dist	COUNTY	ROUTE	POST MILES TOTAL PROJECT	SHEET No.	TOTAL SHEETS
07	LA	710	17.2/26.4	520	1507

REGISTERED CIVIL ENGINEER 03/30/11 DATE

6-27-11
PLANS APPROVAL DATE

REGISTERED PROFESSIONAL ENGINEER ROBERT M. HENDERSON No. C66736 Exp. 09/30/12 CIVIL STATE OF CALIFORNIA

THE STATE OF CALIFORNIA OR ITS OFFICERS OR AGENTS SHALL NOT BE RESPONSIBLE FOR THE ACCURACY OR COMPLETENESS OF SCANNED COPIES OF THIS PLAN SHEET.

CALTRANS DISTRICT 7
100 S. MAIN STREET
LOS ANGELES, CA 90012

CH2M HILL
1000 WILSHIRE BLVD
LOS ANGELES, CA 90017

D	L	T
12"	1.0'	4"
18"	1.0'	5"
24"	1.0'	6"
36"	1.5'	8"
48"	1.5'	10"
54"	1.5'	10"
60"	1.75'	11"
66"	1.75'	11"
72"	2.0'	12"
78"	2.0'	14"
84"	2.0'	14"
90"	2.0'	14"
108"	2.9'	18"

USE TABLE UNLESS OTHERWISE NOTED ON PLANS

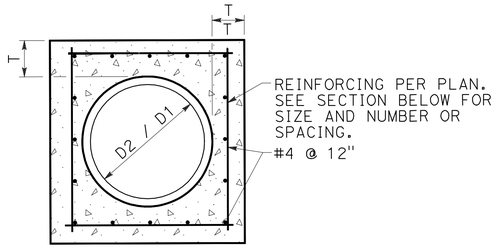

SECTION A-A

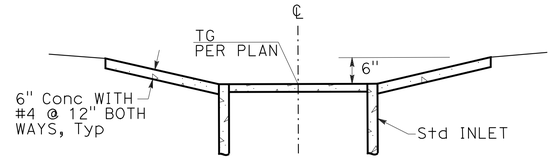

SECTION B-B

Conc COLLAR NOTES:

1. WHERE PIPES OF DIFFERENT DIAMETERS ARE JOINED WITH A CONCRETE COLLAR, "L" AND "T" SHALL BE THOSE OF THE LARGER PIPE. D=D1 OR D2, WHICHEVER IS GREATER.
2. FOR PIPE SIZE NOT LISTED USE NEXT SIZE LARGER.
3. OMIT REINFORCING ON PIPES 24" AND LESS IN DIAMETER AND ON ALL PIPES UP TO 72" DIAMETER WHERE ANGLE "A" IS LESS THAN 10°.
4. JOIN PIPES AT INVERTS WHERE THE SLOPE OF UPSTREAM PIPE IS LESS THAN THE SLOPE OF THE DOWNSTREAM PIPE, AND JOIN PIPES AT SOFFIT WITH A MITER JOINT WHERE THE SLOPE OF THE UPSTREAM PIPE IS GREATER THAN THE SLOPE OF THE DOWNSTREAM PIPE.
5. REINFORCEMENT SHALL BE PLACED 1-1/2" CLEAR FROM OUTSIDE DIAMETER OF PIPE.
6. 10' Max COVER FOR 108" Dia PIPE COLLAR.

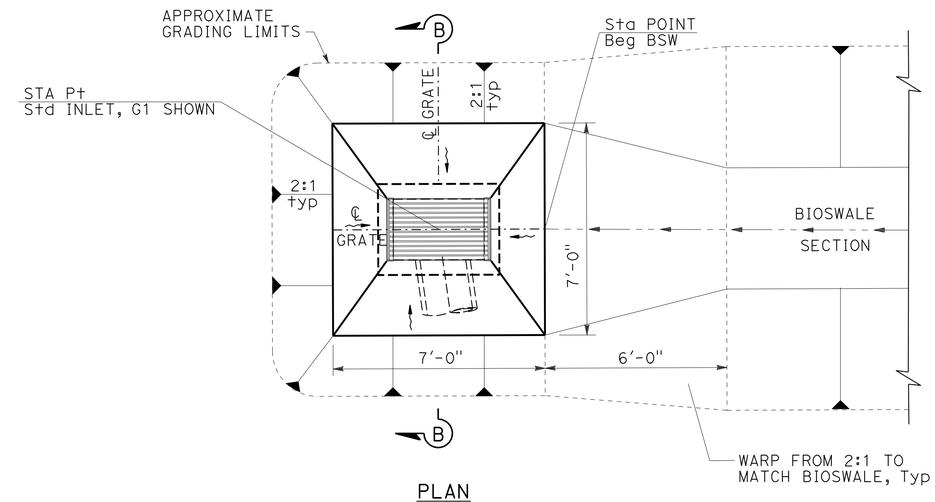

PLAN

TYPICAL PLACEMENT

CONCRETE APRON

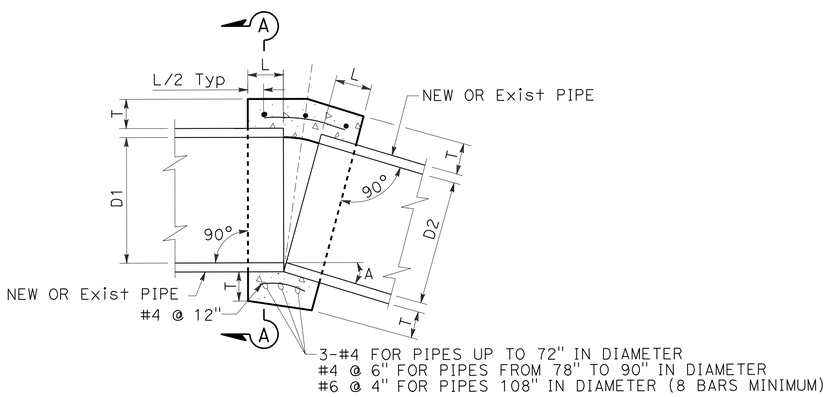

IDENTICAL PIPE DIAMETER

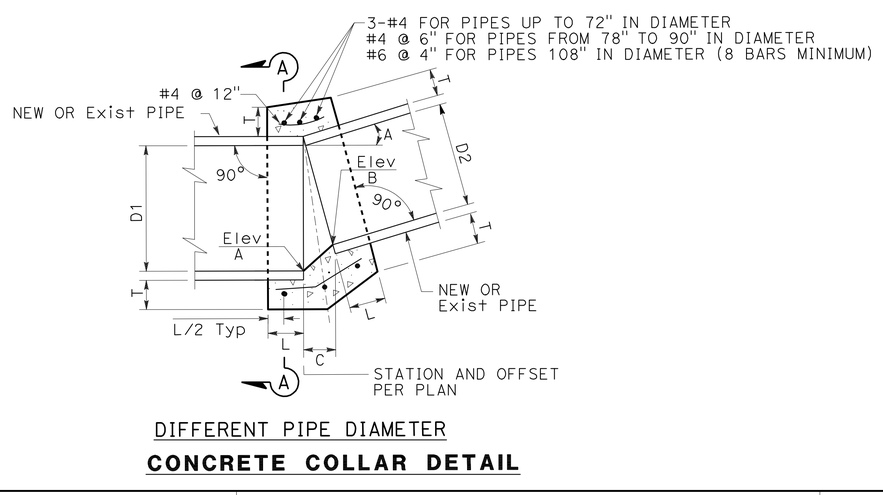

DIFFERENT PIPE DIAMETER

CONCRETE COLLAR DETAIL

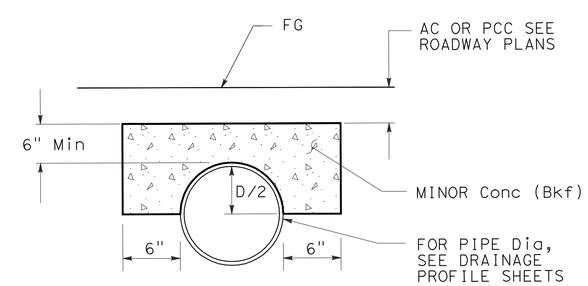

CONCRETE ENCASEMENT

DRAINAGE DETAIL

NO SCALE

DD-15

REVISED BY | DATE REVISED
I. MATAGI | R. HENDERSON
CALCULATED- DESIGNED BY | CHECKED BY
CONSULTANT FUNCTIONAL SUPERVISOR: MELISSA DE LA PENA
STATE OF CALIFORNIA - DEPARTMENT OF TRANSPORTATION
Caltrans

LAST REVISION 00-00-00 | DATE PLOTTED => 29-JUN-2011 | TIME PLOTTED => 06:10

Dist	COUNTY	ROUTE	POST MILES TOTAL PROJECT	SHEET No.	TOTAL SHEETS
07	LA	710	17.2/26.4	521	1507

REGISTERED CIVIL ENGINEER 03/30/11 DATE

6-27-11
PLANS APPROVAL DATE

REGISTERED PROFESSIONAL ENGINEER ROBERT M. HENDERSON No. C66736 Exp. 09/30/12 CIVIL STATE OF CALIFORNIA

THE STATE OF CALIFORNIA OR ITS OFFICERS OR AGENTS SHALL NOT BE RESPONSIBLE FOR THE ACCURACY OR COMPLETENESS OF SCANNED COPIES OF THIS PLAN SHEET.

CALTRANS DISTRICT 7
100 S. MAIN STREET
LOS ANGELES, CA 90012

CH2M HILL
1000 WILSHIRE BLVD
LOS ANGELES, CA 90017

RSP NOTES:

1. RSP SHALL BE CONSTRUCTED IN LAYERS AS SHOWN IN THE TYPICAL SECTION. PLACEMENT SHALL BE METHOD B. DEPTHS SHOWN ARE Min.
2. FG SHALL BE FLUSH WITH OG.
3. RSP FABRIC SHALL BE PROVIDED AT ALL SOIL INTERFACES.
4. FOR DRAINAGE SYSTEM DESIGN SEE DRAINAGE PLANS AND PROFILES.

DRAINAGE SYSTEM No.	UNIT	TYPE OF RSP	W_{sp}	W_c	L_{sp}	Thk
1	ⓐ	FACING, METHOD B	10′	10′	10′	2.0′
3	ⓐ	FACING, METHOD B	10′	10′	2′	2.0′
4	ⓐ	FACING, METHOD B	10′	10′	2′	2.0′
5	ⓐ	FACING, METHOD B	10′	10′	5′	2.0′
13	ⓑ	FACING, METHOD B	10′	10′	10′	2.0′
16	ⓓ	FACING, METHOD B	10′	10′	10′	2.0′
54	ⓐ	FACING, METHOD B	10′	10′	10′	2.0′
62	ⓐ	FACING, METHOD B	15′	7′	15′	2.0′
63	ⓐ	FACING, METHOD B	15′	7′	15′	2.0′
66	ⓒ	FACING, METHOD B	10′	10′	10′	2.0′
128(*)	ⓑ	FACING, METHOD B	10′	10′	10′	2.0′

(*) SEE THIS SHEET FOR EARTHEN BERM DETAILS

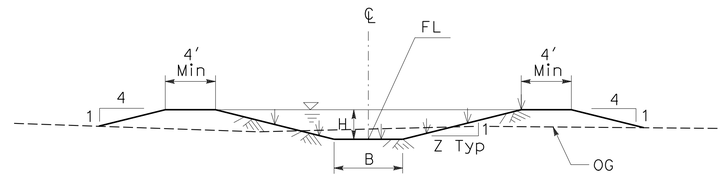

DETAIL B

BIO-SWALE FILL SECTION

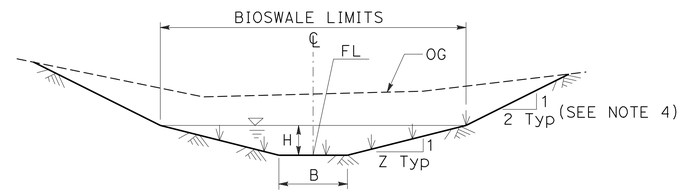

DETAIL A

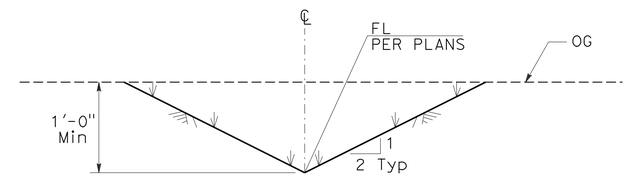

EARTHEN 'V' DITCH

BIO-SWALE NOTES:

1. "B", "H", "Z", AND "FL" PER PLANS.
2. BIO-SWALE SEED MIX PER LANSDCAPE PLANS.
3. IN CASE OF FILL SECTION, USE DETAIL B.
4. 2:1 SLOPE ONLY APPLIES TO BSW978R & BSW1377L.

BIO-SWALE SECTION DETAILS

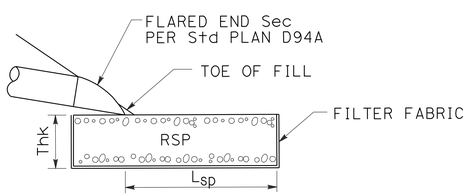

SECTION A-A

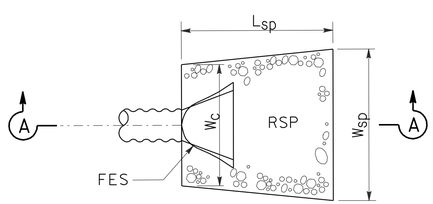

PLAN

ROCK SLOPE PROTECTION AT PIPE OUTLET

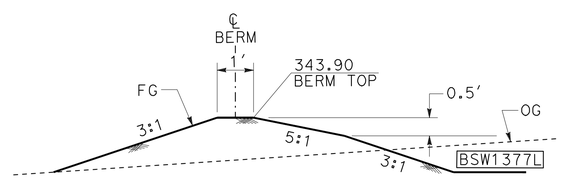

SECTION B-B

SECTION C-C

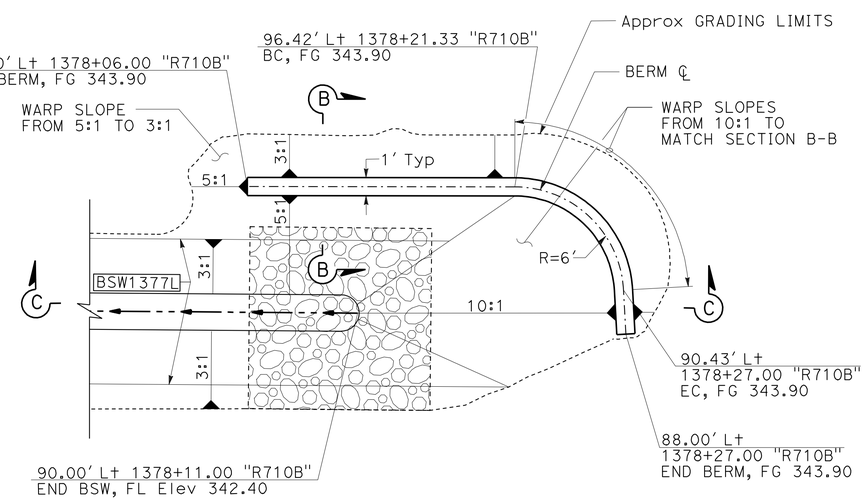

EARTHERN BERM

DRAINAGE DETAIL

NO SCALE

DD-16

STATE OF CALIFORNIA - DEPARTMENT OF TRANSPORTATION
Caltrans®

CONSULTANT FUNCTIONAL SUPERVISOR: MELISSA DE LA PENA

CALCULATED-DESIGNED BY: I. MATAGI | CHECKED BY: R. HENDERSON

REVISED BY | DATE REVISED

LAST REVISION 00-00-00 | DATE PLOTTED => 29-JUN-2011 | TIME PLOTTED => 06:10

Dist	COUNTY	ROUTE	POST MILES TOTAL PROJECT	SHEET No.	TOTAL SHEETS
07	LA	710	17.2/26.4	522	1507

REGISTERED CIVIL ENGINEER 03/30/11 DATE

6-27-11
PLANS APPROVAL DATE

REGISTERED PROFESSIONAL ENGINEER GINO V. NGUYEN No. C62140 Exp. 09/30/11 CIVIL STATE OF CALIFORNIA

THE STATE OF CALIFORNIA OR ITS OFFICERS OR AGENTS SHALL NOT BE RESPONSIBLE FOR THE ACCURACY OR COMPLETENESS OF SCANNED COPIES OF THIS PLAN SHEET.

CALTRANS DISTRICT 7
100 S. MAIN STREET
LOS ANGELES, CA 90012

CH2M HILL
1000 WILSHIRE BLVD
LOS ANGELES, CA 90017

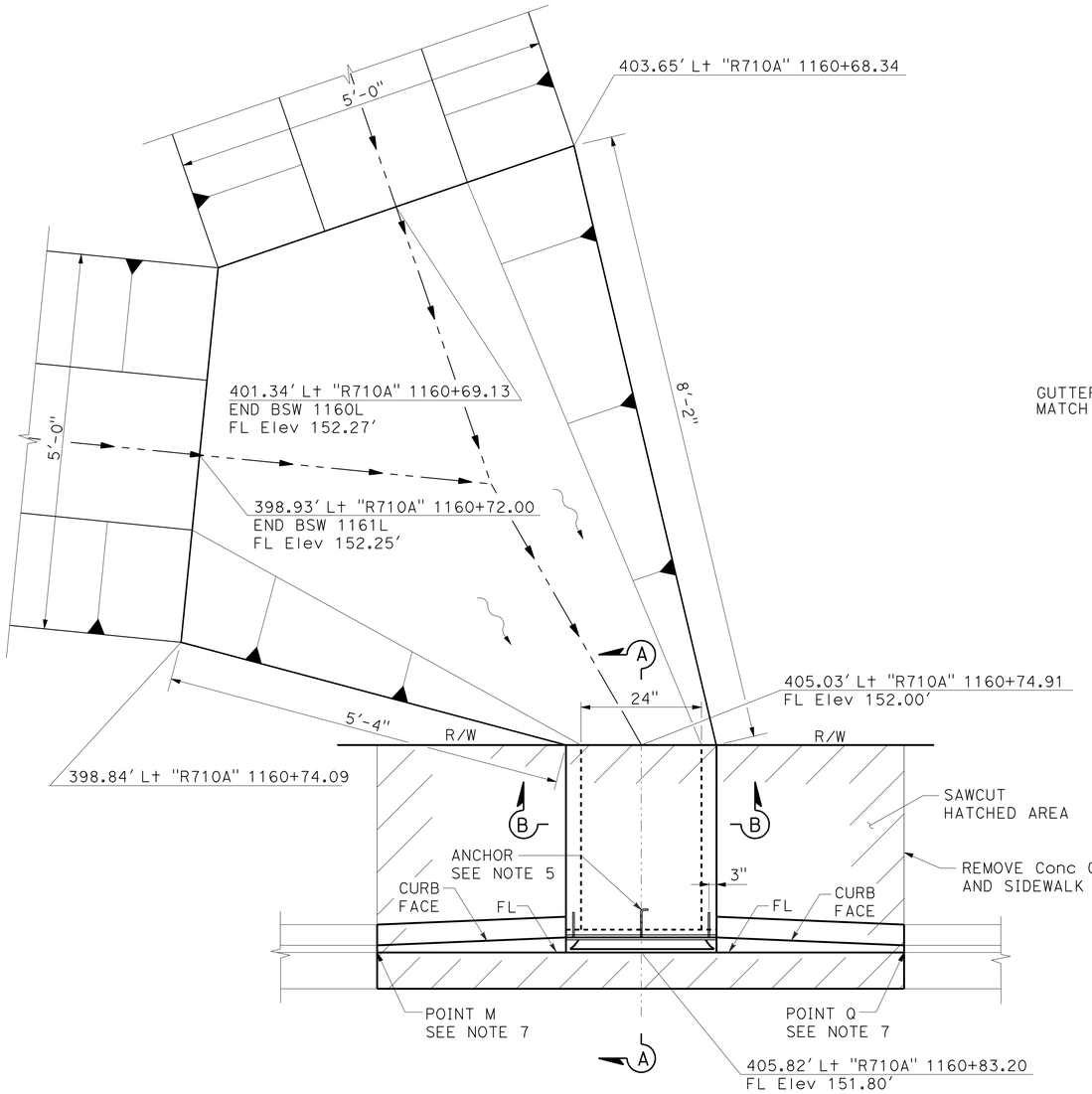

PLAN

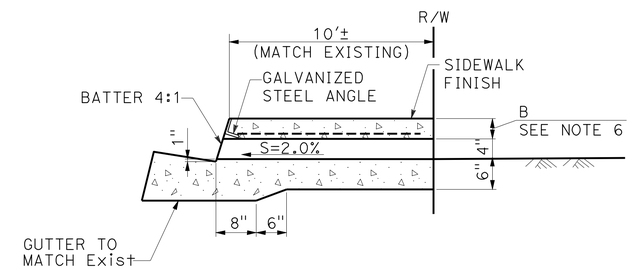

SECTION A-A

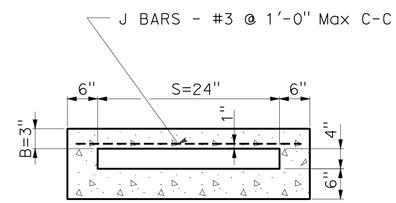

SECTION B-B

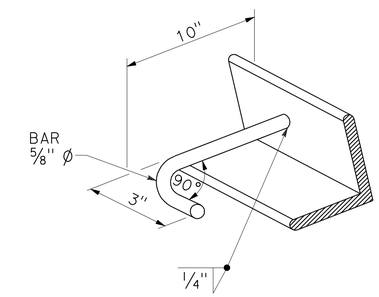

DETAIL OF ANCHOR

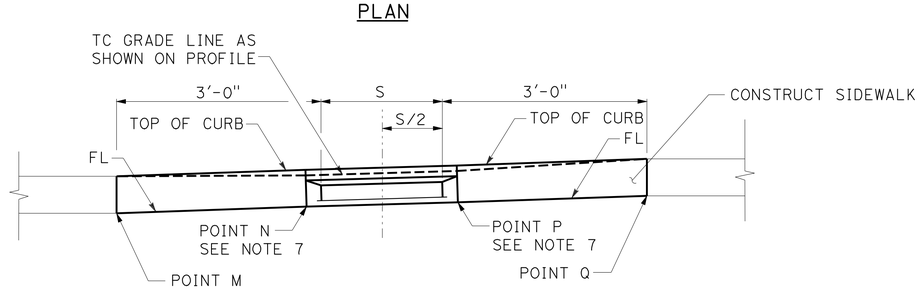

PROFILE

INLET TYPE 2

SIDEWALK CULVERT

(MINOR CONCRETE/MINOR STRUCTURE)

NOTES:

1. FLOOR OF BOX SHALL BE TROWELED SMOOTH.
2. FOR OPEN DITCH, THE 24" EXTENSION BEYOND THE R/W LINE IS NOT REQUIRED WHEN BACK OF WALK IS 24" OR MORE FROM THE R/W LINE; HOWEVER, THE PIPE SHALL EXTEND TO THE R/W LINE IN ANY EVENT.
3. TOP OF INLET STRUCTURE SHALL BE FLUSH WITH ADJACENT SURFACE WHERE PRACTICAL.
4. A HEADED STEEL STUD 5/8" X 6-3/8" WITH A 1" HEAD ATTACHED BY A FULL PENETRATION BUTT WELD MAY BE USED AS AN ALTERNATE ANCHOR.
5. FOR S=30" AND LESS USE 2 ANCHORS. OTHERWISE, USE 3 ANCHORS.
6. FOR S=48" AND LESS, B=3", USE 2-1/2" X 2" X 3/8" GALVANIZED STEEL ANGLE. OTHERWISE, B-4", USE 3-1/2" X 3" X 1/2" GALVANIZED STEEL ANGLE.
7. NORMAL CURB FACE AT POINT M AND Q. CURB FACE IS B + 5" AT POINT N AND P.
8. THE 3" LEG OF THE 5/8" Dia SHALL BE PARALLEL TO THE TOP OF THE SIDEWALK.

DRAINAGE DETAIL

NO SCALE

DD-17

STATE OF CALIFORNIA - DEPARTMENT OF TRANSPORTATION
Caltrans
CONSULTANT FUNCTIONAL SUPERVISOR: MELISSA DE LA PENA
CALCULATED-DESIGNED BY: G. NGUYEN
CHECKED BY: G. HSU
REVISED BY
DATE REVISED

LAST REVISION 00-00-00
DATE PLOTTED => 29-JUN-2011
TIME PLOTTED => 06:10

Dist	COUNTY	ROUTE	POST MILES TOTAL PROJECT	SHEET No.	TOTAL SHEETS
07	LA	710	17.2/26.4	523	1507

REGISTERED CIVIL ENGINEER 03/30/11 DATE

6-27-11
PLANS APPROVAL DATE

REGISTERED PROFESSIONAL ENGINEER GINO V. NGUYEN No. C62140 Exp. 09/30/11 CIVIL STATE OF CALIFORNIA

THE STATE OF CALIFORNIA OR ITS OFFICERS OR AGENTS SHALL NOT BE RESPONSIBLE FOR THE ACCURACY OR COMPLETENESS OF SCANNED COPIES OF THIS PLAN SHEET.

CALTRANS DISTRICT 7
100 S. MAIN STREET
LOS ANGELES, CA 90012

CH2M HILL
1000 WILSHIRE BLVD
LOS ANGELES, CA 90017

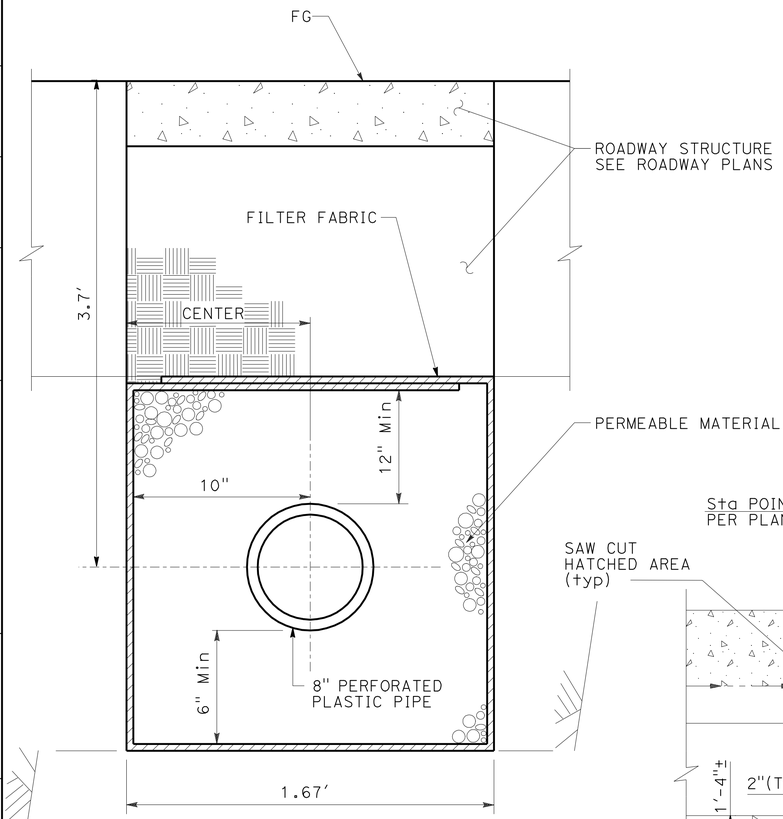

UNDERDRAIN DETAILS

NOTE:

1. UNDERDRAIN INSTALLATION AND MATERIALS SHALL CONFORM TO SECTION 68, "SUBSURFACE DRAINS" OF THE STANDARD SPECIFICATIONS.

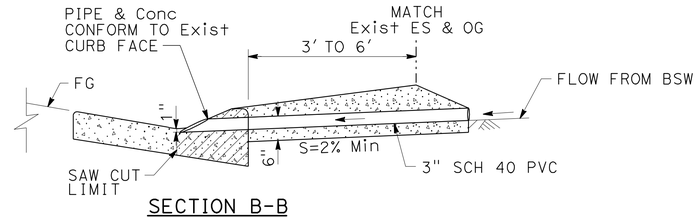

SECTION B-B
(CASE B)

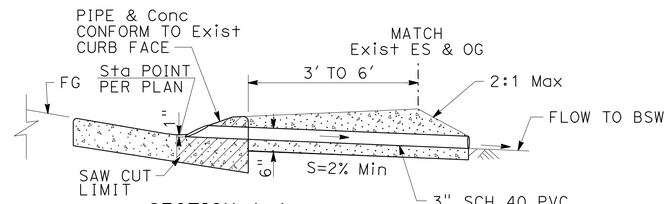

SECTION A-A
(CASE A) (CASE C)

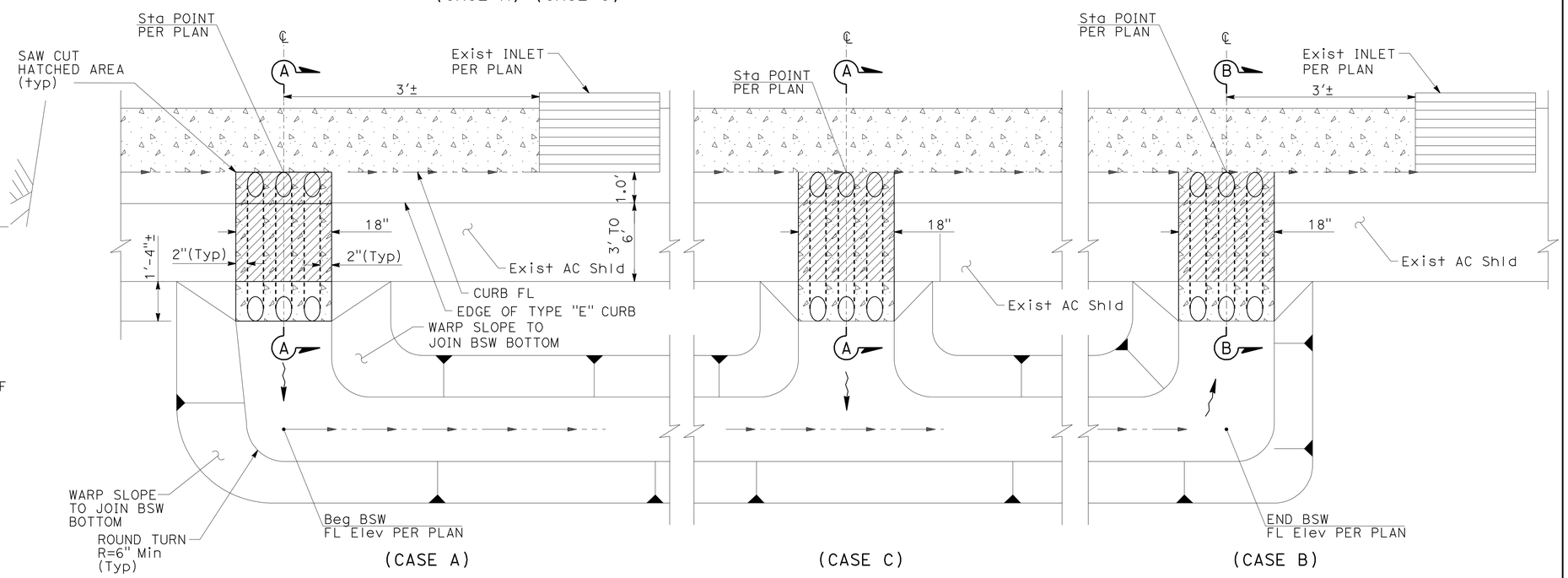

PLAN

WATER QUALITY CULVERT

DRAINAGE DETAIL

NO SCALE

DD-18

STATE OF CALIFORNIA - DEPARTMENT OF TRANSPORTATION
Caltrans

CONSULTANT FUNCTIONAL SUPERVISOR: MELISSA DE LA PENA
CALCULATED-DESIGNED BY: G. NGUYEN
CHECKED BY: G. HSU
REVISED BY
DATE REVISED

LAST REVISION 00-00-00
DATE PLOTTED => 29-JUN-2011
TIME PLOTTED => 06:11

Dist	COUNTY	ROUTE	POST MILES TOTAL PROJECT	SHEET No.	TOTAL SHEETS
07	LA	710	17.2/26.4	524	1507

REGISTERED CIVIL ENGINEER 03/30/11 DATE

6-27-11
PLANS APPROVAL DATE

REGISTERED PROFESSIONAL ENGINEER ROBERT M. HENDERSON No. C66736 Exp. 09/30/12 CIVIL STATE OF CALIFORNIA

THE STATE OF CALIFORNIA OR ITS OFFICERS OR AGENTS SHALL NOT BE RESPONSIBLE FOR THE ACCURACY OR COMPLETENESS OF SCANNED COPIES OF THIS PLAN SHEET.

CALTRANS DISTRICT 7
100 S. MAIN STREET
LOS ANGELES, CA 90012

CH2M HILL
1000 WILSHIRE BLVD
LOS ANGELES, CA 90017

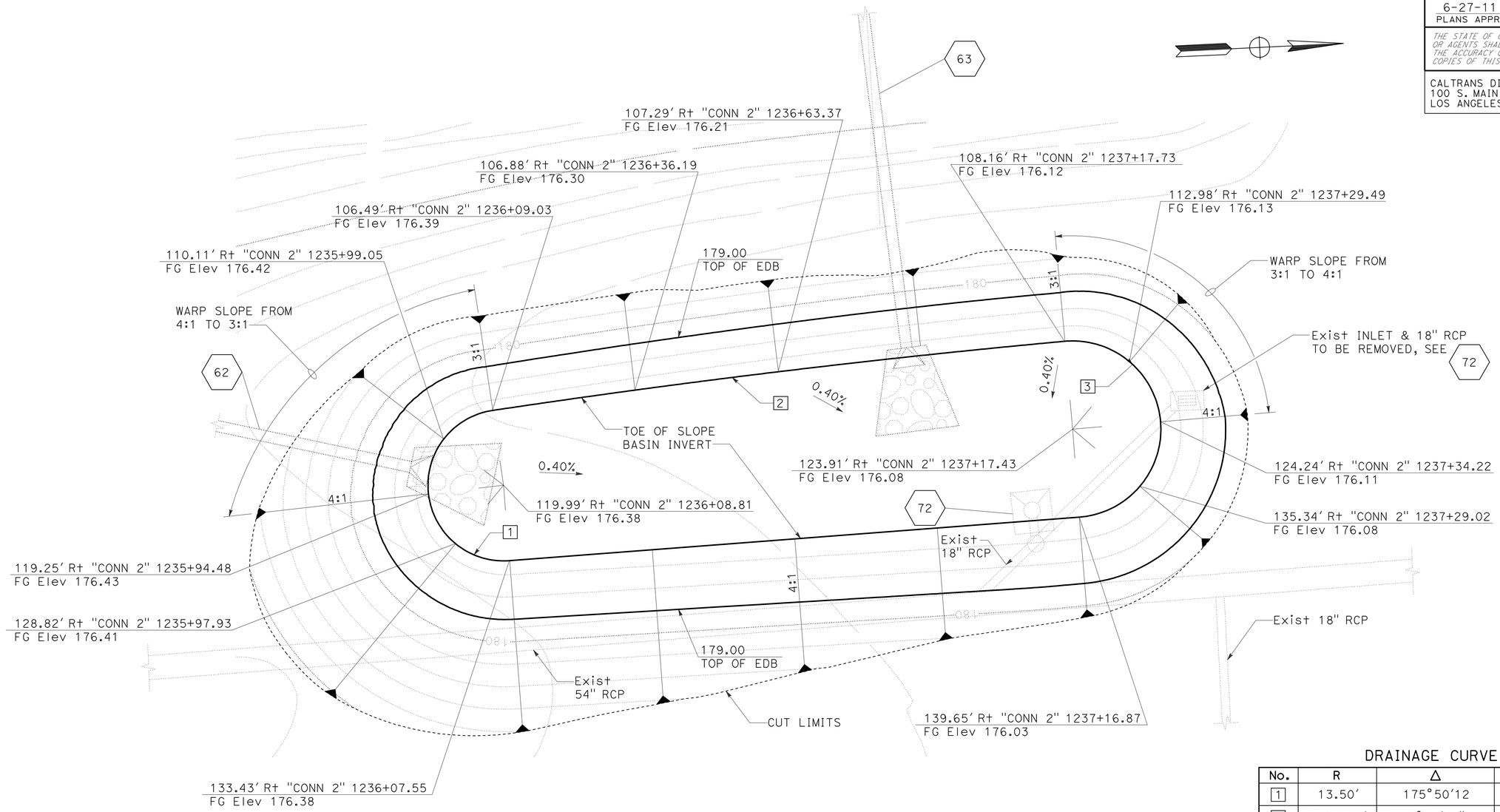

DRAINAGE CURVE DATA

No.	R	Δ	T	L
1	13.50'	175°50'12	371.40'	41.43'
2	1800.00'	3°16'29"	51.45'	102.88'
3	15.75'	180°53'19"	-2030.88'	49.72'

NOTE:

1. GRADE BASIN INVERT TO DRAIN TOWARD OUTLET FROM ALL DIRECTIONS AT S=0.40%.

EDB 1236R
SCALE: 1"=10'

DRAINAGE DETAIL

DD-19

STATE OF CALIFORNIA - DEPARTMENT OF TRANSPORTATION
Caltrans

CONSULTANT FUNCTIONAL SUPERVISOR: MELISSA DE LA PENA
CALCULATED-DESIGNED BY: I. MATAGI
CHECKED BY: R. HENDERSON
REVISED BY
DATE REVISED

LAST REVISION 00-00-00
DATE PLOTTED => 29-JUN-2011
TIME PLOTTED => 06:11

Dist	COUNTY	ROUTE	POST MILES TOTAL PROJECT	SHEET No.	TOTAL SHEETS
07	LA	710	17.2/26.4	525	1507

REGISTERED CIVIL ENGINEER 6-19-09 DATE

6-27-11
PLANS APPROVAL DATE

REGISTERED PROFESSIONAL ENGINEER TIMOTHY B. SOBELMAN No. 59249 Exp. 6-30-11 CIVIL STATE OF CALIFORNIA

THE STATE OF CALIFORNIA OR ITS OFFICERS OR AGENTS SHALL NOT BE RESPONSIBLE FOR THE ACCURACY OR COMPLETENESS OF SCANNED COPIES OF THIS PLAN SHEET.

GENERAL NOTES

Designation:
Types of Gross Solids Removal Devices (GSRDs) are Linear Radial (LR) and Inclined Screen. The Linear Radial has either a standard or high velocity configuration noted as Linear Radial or Linear Radial (HV). All GSRD BMP Detail Drawings are applicable for velocities up to 20 fps.

Special Reinforcement Coverage:
GSRD BMP Detail Drawings are not to be used in a corrosive environment or where there is a severe abrasive flow condition or in freeze-thaw locations.

Special Design:
Required for ground water conditions above bottom of GSRD, surcharge loads exceeding HS20 truck load, design bearing pressures or sizes greater than those on this plan.

Traffic Loading:
No traffic load is allowed over GSRDs. As determined by the Engineer, barriers or MBGR shall be provided between GSRDs and traffic lanes.

DESIGN FLOW

LINEAR RADIAL ✳			
GSRD Type	Total Screen Length	Flow Rate (cfs)	Debris Area (acres)
LR-1	5′-0"	3.54	0.79
LR-2	10′-0"	7.07	1.58
LR-3	15′-0"	10.96	2.25
LR-4	20′-0"	14.49	3.16
LR-5	25′-0"	18.38	3.95
LR-6	30′-0"	21.91	4.74

✳ When maximum inlet velocity exceeds 8.2 ft/sec, High Velocity (HV) details, are required.

INCLINED SCREEN			
GSRD Type	Total Screen Length	Flow Rate (cfs)	Debris Area (acres)
A	3′-4"	5.83	2.21
B	5′-0"	8.74	3.31
C	6′-8"	11.65	4.41
D	8′-4"	14.57	5.52
E	10′-0"	17.48	6.63
F	11′-8"	20.39	7.74

DESIGN NOTES

Specifications:
Design:
Bridge Design Specification April 2000 (LFD)
(1996 AASHTO) with interims and revisions by Caltrans

Wall (LFD) : 1.5 D + 1.5 E and 1.5D + W
Footing (LFD): 1.5 D + 1.5 E
Where D = Dead Load
E = Earth Load

Capacity reduction factor is included.

Earth Load:
125 lb/ft vertical,

Water Load:
62.4 lb/ft horizontal,

Equivalent Fluid Pressure =
100 lb/ft horizontal (Case I).

Earth pressure for 2:1 unlimited slope determined from Rankine's formula with ø = 33°42′ (Case II).

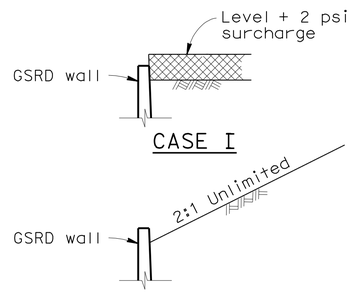

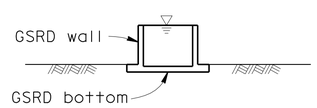

DETAIL OF DESIGN LOADING CASES

CASE I Level + 2′-0" surcharge, GSRD empty
CASE II 2:1 Unlimited slope, GSRD empty
CASE III GSRD full of water, no soil pressure

Grating (LL) Load :
0.5 psi

Unit Stresses:
f'_c = 3.6 ksi, and 4.0 ksi for Inclined Screen
f_y = 60 ksi (bar reinforcing)

Design Soil Bearing Pressure (Service Load) = 20 psi

CONSTRUCTION NOTES

Expansion joints:
Inverts - No expansion joints shall be permitted.
Walls - Place ½" expansion joint filler vertically at 26′-0" centers with strip water stop.

Construction Joints:
Temporary joints may be permitted if normal (or radial) to ℄ of GSRD. Otherwise, the contractor is to submit a proposal for consideration.

Backfill:
See Standard Specifications, except the difference in backfill shall not exceed 4 ft between side walls and shall not exceed the lesser of wall height "H" or 4 ft between inlet and outlet walls.

Earthwork:
Excavation and Backfill with Cut and Exposed conditions -

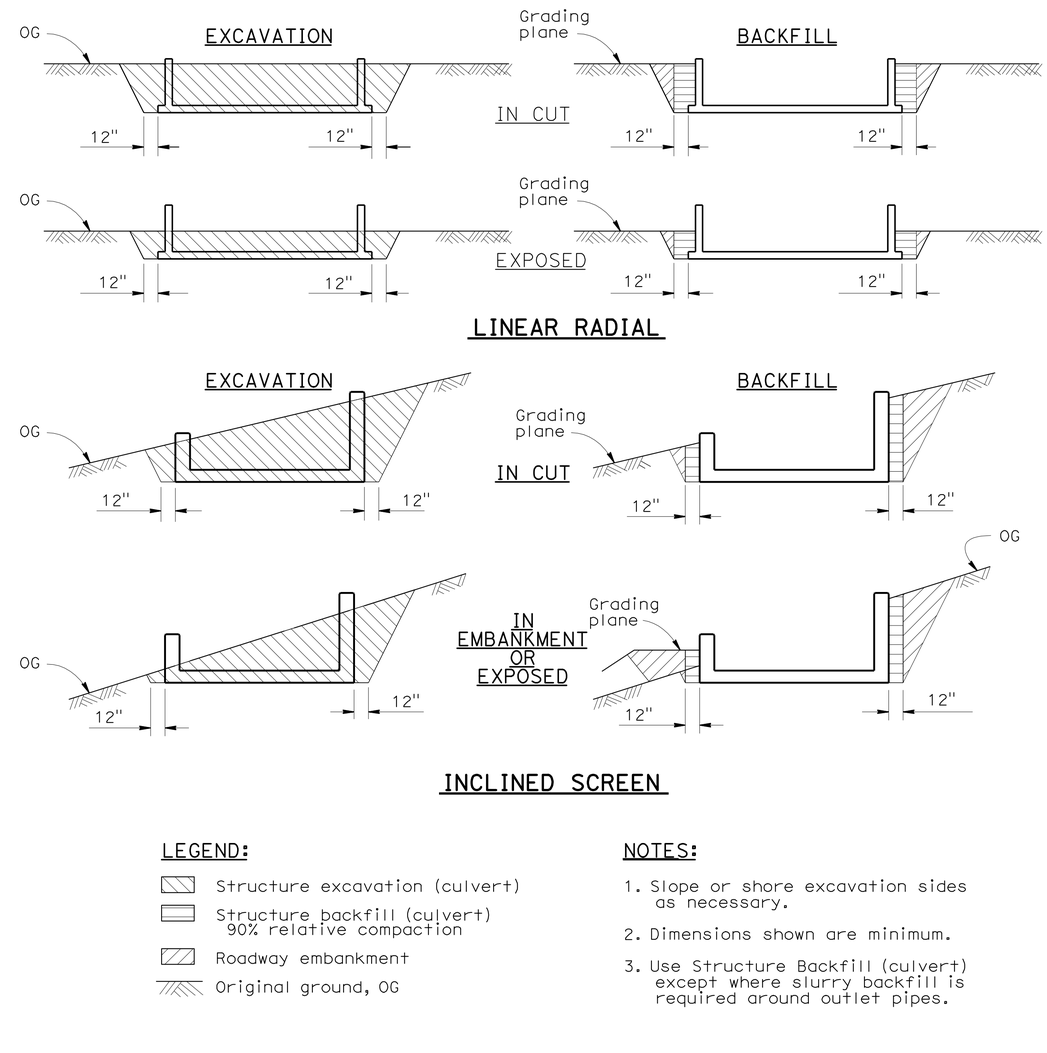

LEGEND:

- Structure excavation (culvert)
- Structure backfill (culvert) 90% relative compaction
- Roadway embankment
- Original ground, OG

NOTES:

1. Slope or shore excavation sides as necessary.
2. Dimensions shown are minimum.
3. Use Structure Backfill (culvert) except where slurry backfill is required around outlet pipes.

DRAINAGE DETAIL
GROSS SOLIDS REMOVAL DEVICE
GENERAL NOTES

NO SCALE

DD-20

REVISED BY | DATE REVISED
D. WANG | L. HE
CALCULATED-DESIGNED BY | CHECKED BY
FUNCTIONAL SUPERVISOR
TIMOTHY B. SOBELMAN

STATE OF CALIFORNIA - DEPARTMENT OF TRANSPORTATION
Caltrans
DIVISION OF DESIGN
OFFICE OF STORM WATER MANAGEMENT

06:11 29-JUN-2011 trmikesl S:\projects\20211\Y20211ic020.dgn

LAST REVISION 00-00-00 | DATE PLOTTED => 29-JUN-2011 | TIME PLOTTED => 06:11

Dist	COUNTY	ROUTE	POST MILES TOTAL PROJECT	SHEET No.	TOTAL SHEETS
07	LA	710	17.2/26.4	526	1507

REGISTERED CIVIL ENGINEER 6-19-09 DATE

6-27-11
PLANS APPROVAL DATE

REGISTERED PROFESSIONAL ENGINEER TIMOTHY B. SOBELMAN No. 59249 Exp. 6-30-11 CIVIL STATE OF CALIFORNIA

THE STATE OF CALIFORNIA OR ITS OFFICERS OR AGENTS SHALL NOT BE RESPONSIBLE FOR THE ACCURACY OR COMPLETENESS OF SCANNED COPIES OF THIS PLAN SHEET.

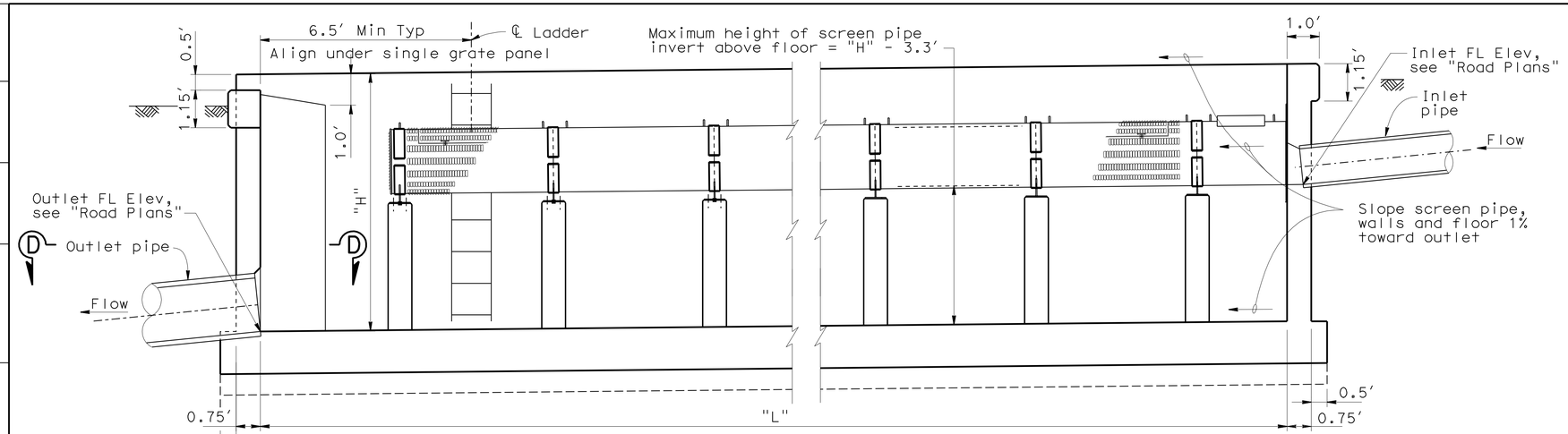

LONGITUDINAL SECTION - MAXIMUM SCREEN HEIGHT

No Scale

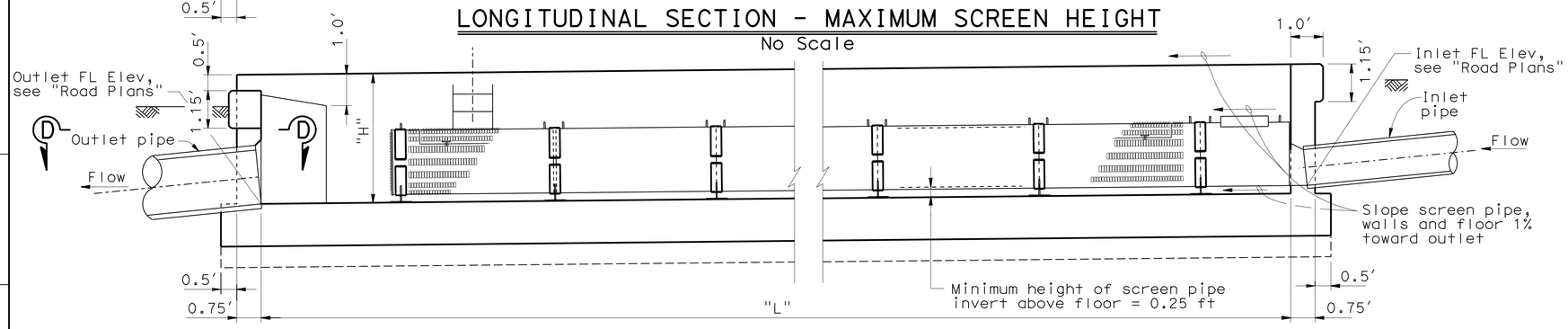

LONGITUDINAL SECTION - MINIMUM SCREEN HEIGHT

No Scale

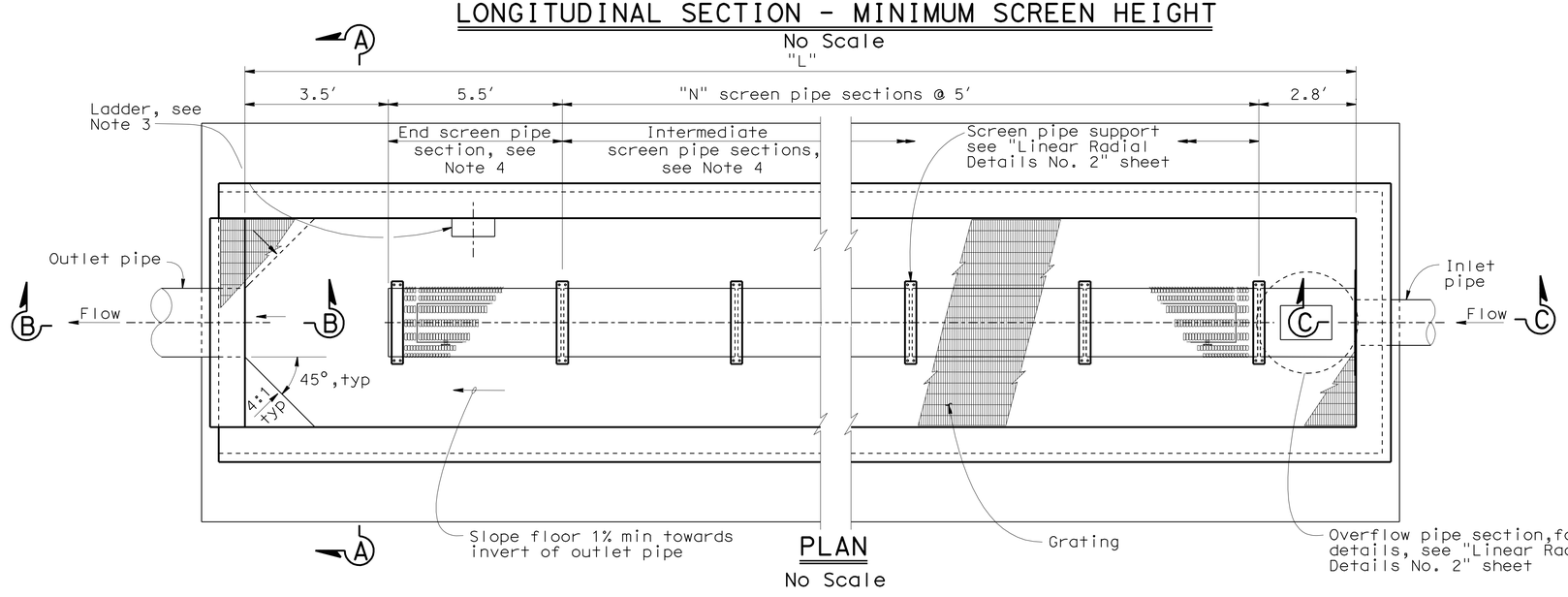

PLAN

No Scale

NOTES:

1. For typical section, see "Linear Radial - Details No. 1" sheet.
2. For Section B-B, C-C and D-D, see "Linear Radial - Details No. 1" sheet.
3. For ladder details see "Miscellaneous Details" sheet.
4. For end screen and intermediate screen pipe details, see "Linear Radial - Details No. 3" sheet.
5. For "N", "H" and other design data, see "Road Plans".
6. For High Velocity details, see "Linear Radial (HV) - Layout" sheet.
7. For Grating details, see "Linear Radial Details No. 4" sheet.
8. For inlet and outlet pipe details not shown, see "Road Plans"

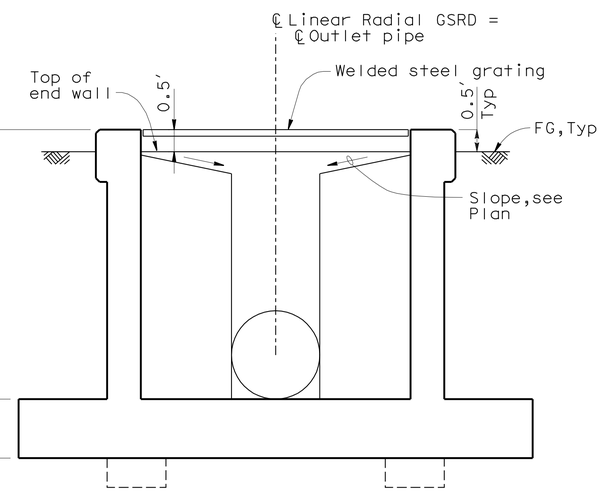

SECTION A-A

No Scale

DRAINAGE DETAIL
GROSS SOLIDS REMOVAL DEVICE
LINEAR RADIAL - LAYOUT

NO SCALE

DD-21

REVISED BY	DATE REVISED

CALCULATED-DESIGNED BY	CHECKED BY
D. WANG	L. HE

FUNCTIONAL SUPERVISOR: TIMOTHY B. SOBELMAN

STATE OF CALIFORNIA - DEPARTMENT OF TRANSPORTATION
DIVISION OF DESIGN
OFFICE OF STORM WATER MANAGEMENT
Caltrans

13:05 06-JUL-2011 trmikesl S:\projects\202111\720211ic021.dgn

LAST REVISION 00-00-00 | DATE PLOTTED => 06-JUL-2011 | TIME PLOTTED => 13:05

Dist	COUNTY	ROUTE	POST MILES TOTAL PROJECT	SHEET No.	TOTAL SHEETS
07	LA	710	17.2/26.4	527	1507

REGISTERED CIVIL ENGINEER 6-19-09 DATE

6-27-11
PLANS APPROVAL DATE

REGISTERED PROFESSIONAL ENGINEER TIMOTHY B. SOBELMAN No. 59249 Exp. 6-30-11 CIVIL STATE OF CALIFORNIA

THE STATE OF CALIFORNIA OR ITS OFFICERS OR AGENTS SHALL NOT BE RESPONSIBLE FOR THE ACCURACY OR COMPLETENESS OF SCANNED COPIES OF THIS PLAN SHEET.

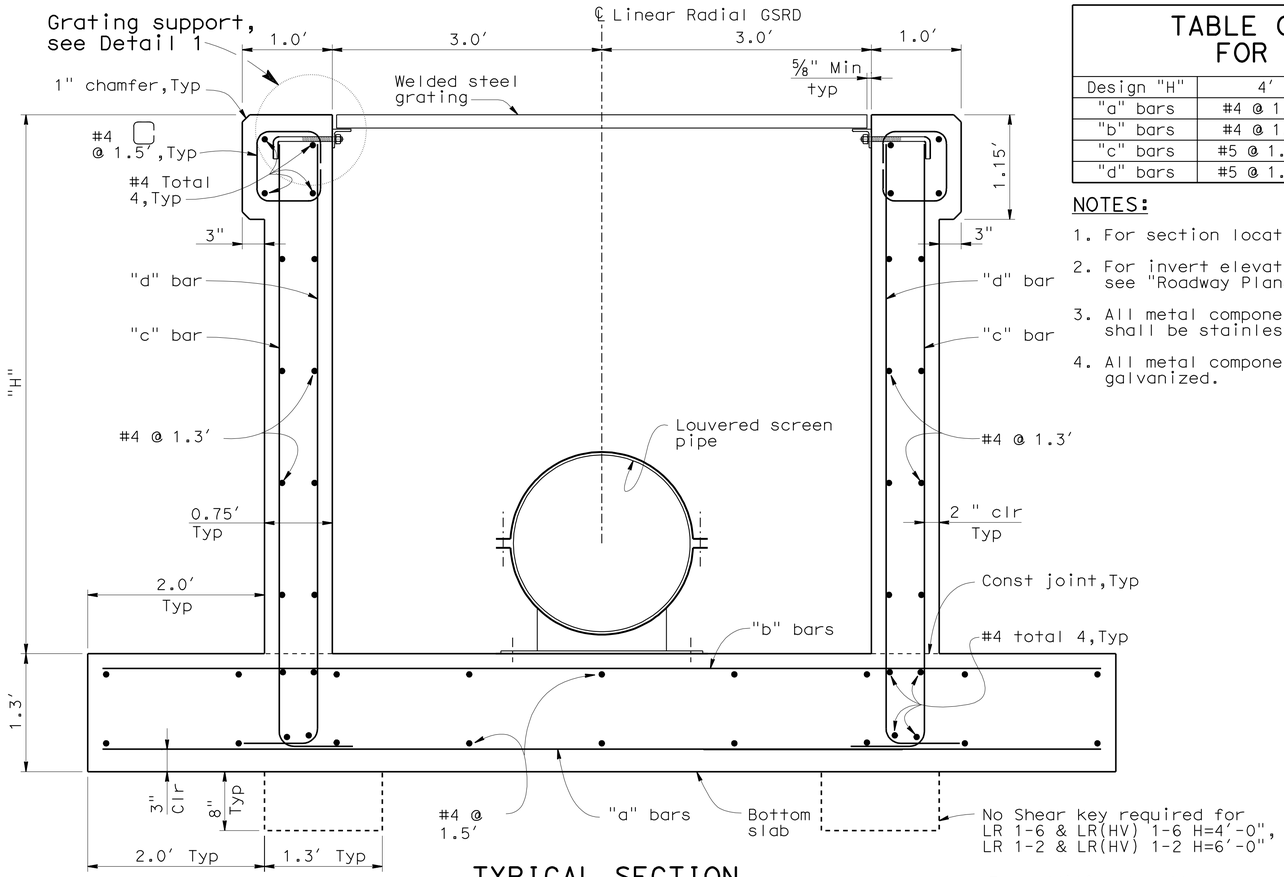

TYPICAL SECTION

No Scale

TABLE OF REINFORCING STEEL FOR LINEAR RADIAL GSRD

Design "H"	4′	6′	8′
"a" bars	#4 @ 1.5′	#5 @ 1.0′	#5 @ 0.65′
"b" bars	#4 @ 1.5′	#4 @ 1.5′	#5 @ 1.3′
"c" bars	#5 @ 1.15′	#5 @ 0.75	#5 @ 0.3′
"d" bars	#5 @ 1.15′	#5 @ 1.15′	#5 @ 1.0′

NOTES:

1. For section locations, see "Linear Radial - Layout" sheet.
2. For invert elevation differential between inlet and outlet, see "Roadway Plans".
3. All metal components of screen pipe including connections to concrete shall be stainless steel.
4. All metal components of grating including connections to wall shall be galvanized.

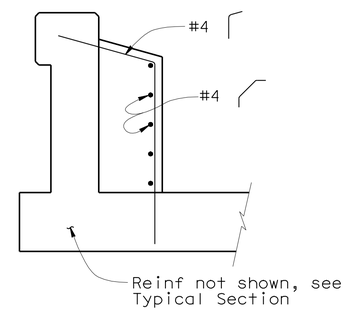

VIEW E-E

No Scale
(Outlet end only)

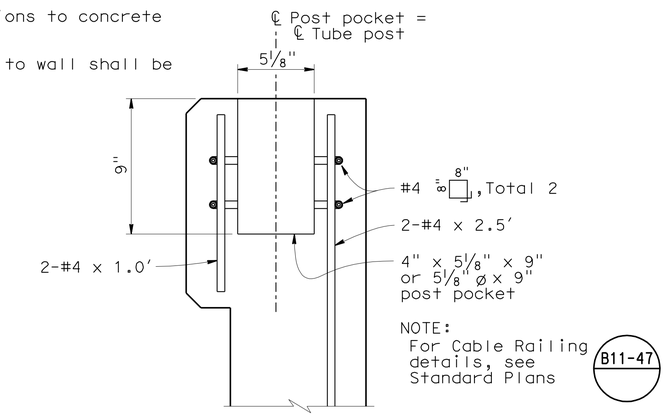

POST ANCHORAGE DETAIL (OPTIONAL)

No Scale

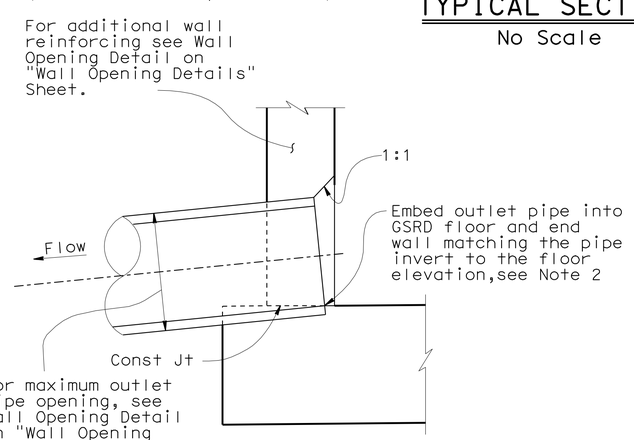

SECTION B-B

No Scale

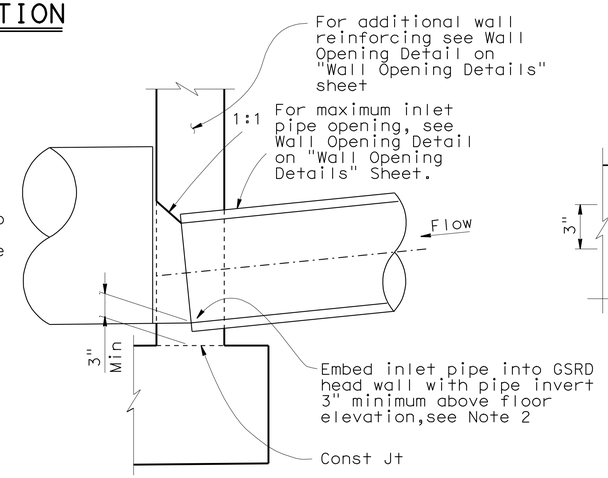

SECTION C-C

No Scale

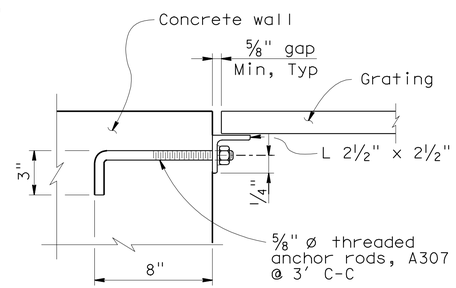

DETAIL 1

No Scale

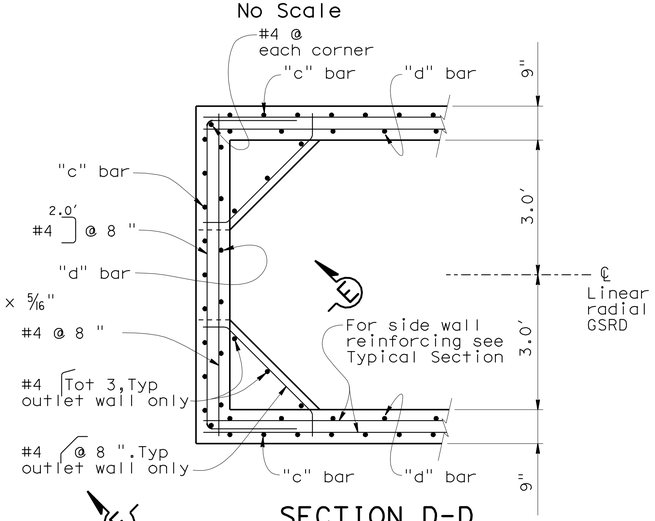

SECTION D-D

No Scale

NOTE: Outlet wall shown, inlet wall similar.

DRAINAGE DETAIL
GROSS SOLIDS REMOVAL DEVICE
LINEAR RADIAL - DETAILS No. 1

NO SCALE

DD-22

STATE OF CALIFORNIA - DEPARTMENT OF TRANSPORTATION
DIVISION OF DESIGN
OFFICE OF STORM WATER MANAGEMENT

FUNCTIONAL SUPERVISOR: TIMOTHY B. SOBELMAN
CALCULATED-DESIGNED BY: D. WANG
CHECKED BY: L. HE
REVISED BY / DATE REVISED

06:11 29-JUN-2011 trmikesl S:\projects\202111\7202111c022.dgn

LAST REVISION 00-00-00 | DATE PLOTTED => 29-JUN-2011 | TIME PLOTTED => 06:11

Dist	COUNTY	ROUTE	POST MILES TOTAL PROJECT	SHEET No.	TOTAL SHEETS
07	LA	710	17.2/26.4	528	1507

REGISTERED CIVIL ENGINEER — DATE: 6-19-09

6-27-11
PLANS APPROVAL DATE

REGISTERED PROFESSIONAL ENGINEER — TIMOTHY B. SOBELMAN No. 59249 Exp. 6-30-11 CIVIL — STATE OF CALIFORNIA

THE STATE OF CALIFORNIA OR ITS OFFICERS OR AGENTS SHALL NOT BE RESPONSIBLE FOR THE ACCURACY OR COMPLETENESS OF SCANNED COPIES OF THIS PLAN SHEET.

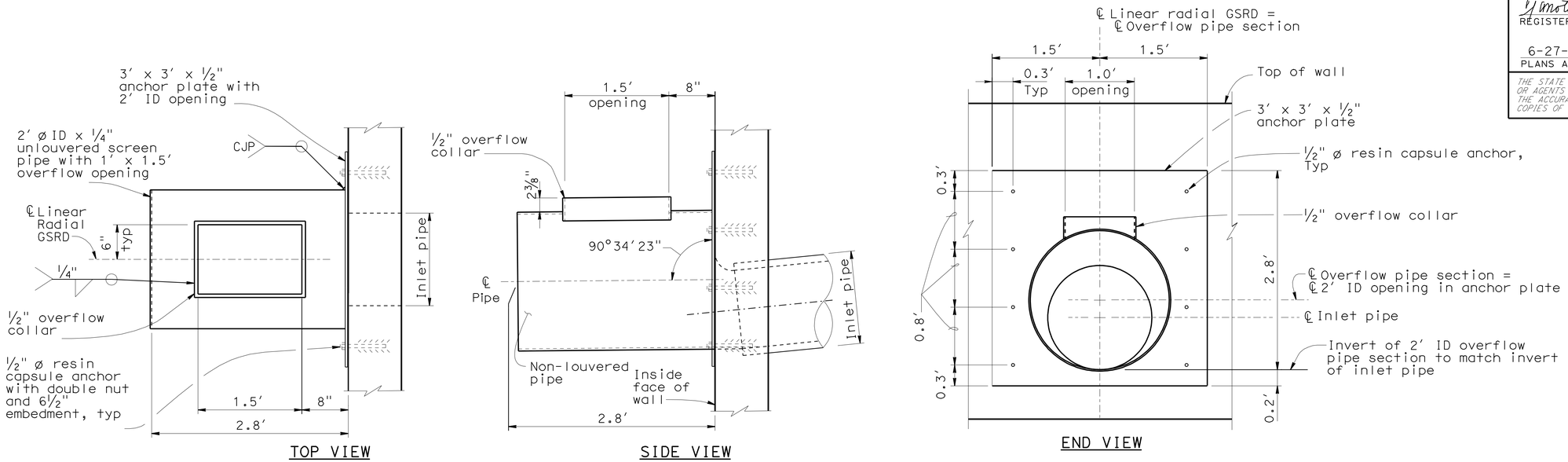

OVERFLOW PIPE SECTION DETAILS

NO SCALE

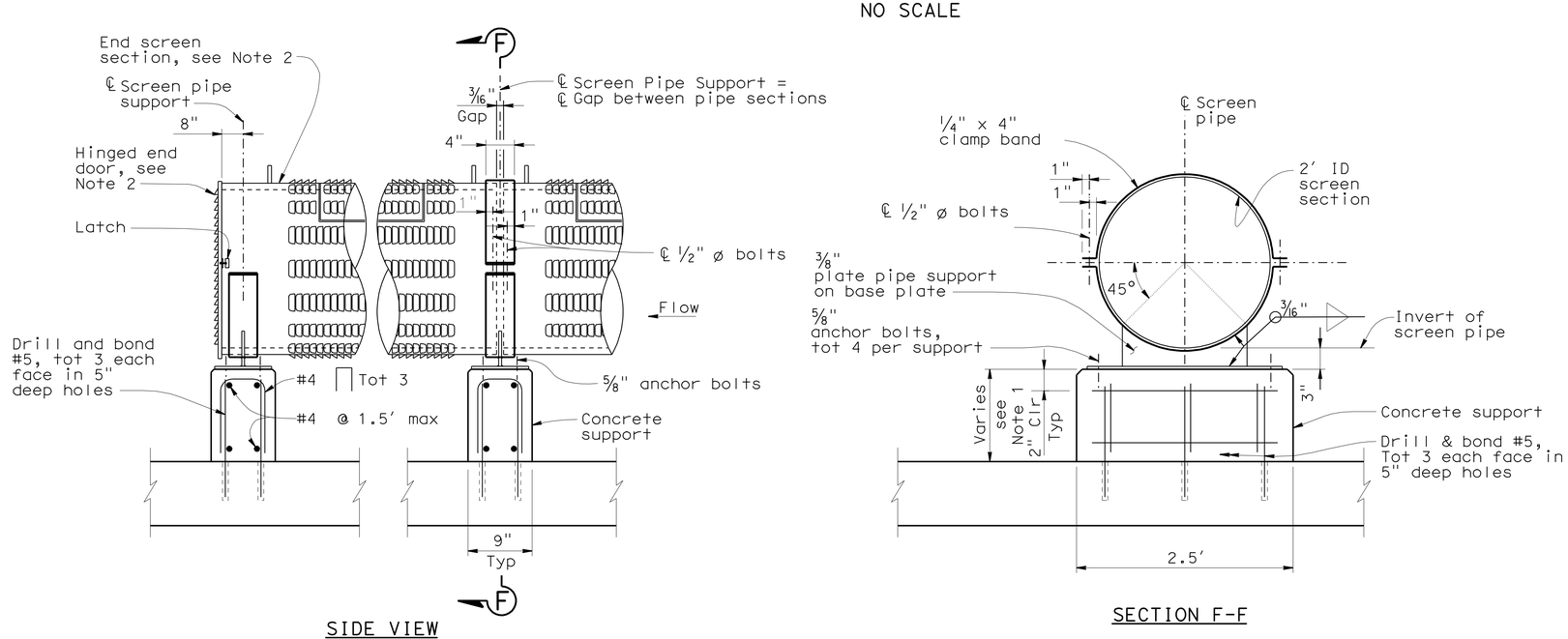

SCREEN PIPE SUPPORT

NO SCALE

NOTES:

1. If inlet invert height above floor is at the minimum 3 inch height, use anchor bolts to mount the pipe support base plate to the floor. Otherwise, construct concrete support as shown.
2. For End Screen and Intermediate Screen pipe details, see "Linear Radial - Details No. 3" sheet.
3. All metal components of screen pipe including connections to concrete shall be stainless steel.

DRAINAGE DETAIL
GROSS SOLIDS REMOVAL DEVICE
LINEAR RADIAL - DETAIL No. 2

NO SCALE

DD-23

REVISED BY | DATE REVISED
D. WANG | L. HE
CALCULATED-DESIGNED BY | CHECKED BY
FUNCTIONAL SUPERVISOR: TIMOTHY B. SOBELMAN

STATE OF CALIFORNIA - DEPARTMENT OF TRANSPORTATION
DIVISION OF DESIGN
OFFICE OF STORM WATER MANAGEMENT

06:11 29-JUN-2011 trmikesl S:\projects\202111\7202111c023.dgn

LAST REVISION 00-00-00 | DATE PLOTTED => 29-JUN-2011 | TIME PLOTTED => 06:11

Dist	COUNTY	ROUTE	POST MILES TOTAL PROJECT	SHEET No.	TOTAL SHEETS
07	LA	710	17.2/26.4	529	1507

REGISTERED CIVIL ENGINEER 6-19-09 DATE

6-27-11
PLANS APPROVAL DATE

REGISTERED PROFESSIONAL ENGINEER TIMOTHY B. SOBELMAN No. 59249 Exp. 6-30-11 CIVIL STATE OF CALIFORNIA

THE STATE OF CALIFORNIA OR ITS OFFICERS OR AGENTS SHALL NOT BE RESPONSIBLE FOR THE ACCURACY OR COMPLETENESS OF SCANNED COPIES OF THIS PLAN SHEET.

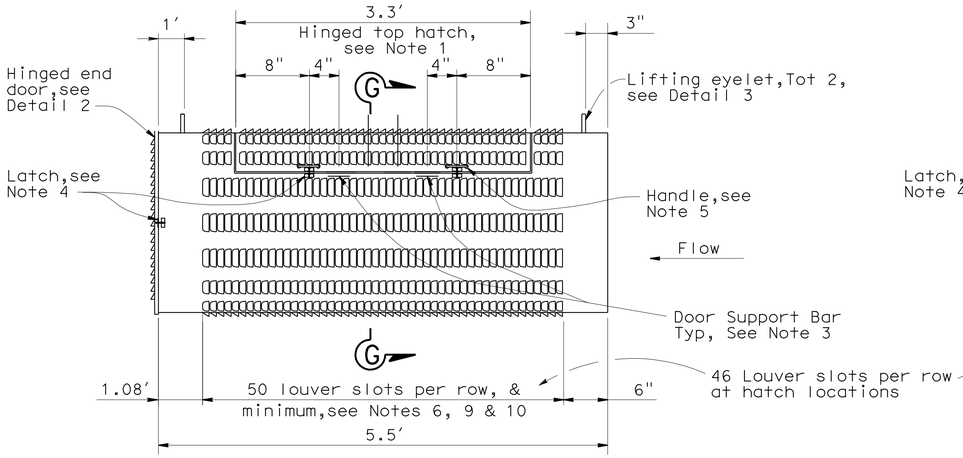

END SCREEN DETAIL

No Scale

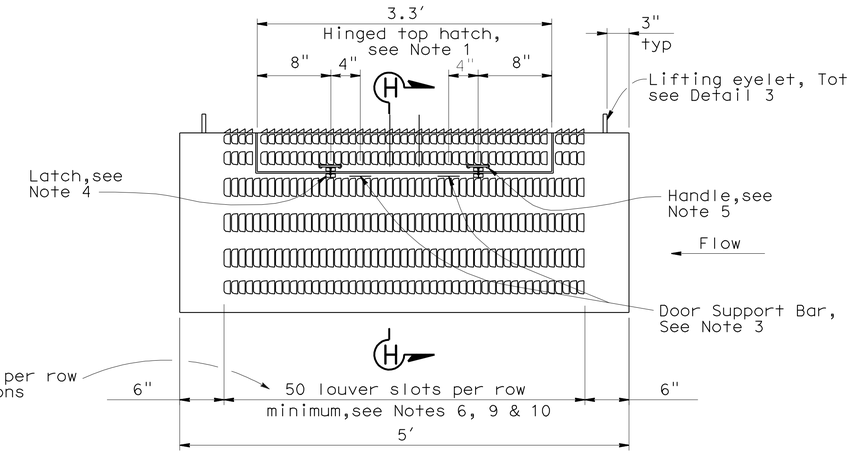

INTERMEDIATE SCREEN DETAIL

No Scale

NOTES:

1. Provide 1"x3/16" stainless steel bar at all cut edges to provide a seat and support for all doors when closed.
2. Provide stainless steel 1/4" thick heavy duty hinges 4"x4" thick with 5/8" Dia pin. Use fillet weld at cover and frame. Total two each door, evenly spaced.
3. Attach 2- 1"x1"x3" stainless steel bars (or fabricator equivalent design) to support doors when in an open position. Mechanical Stops can be welded on hinges.
4. Provide latch. Latch shall have threaded U-bolt for adjustment. Latch to have 3/8" total adjustability and 1 3/16" drawing movement and be rated at 360 LB.
5. Provide stainless steel handles at locations indicated.
6. The aperature size of each louver slot shall be 3/16" wide x 2 1/2" long.
7. End door to secured to end screen with 3/8" Dia x 10 " continuous bolt with lock nut through flat bars.
8. All metal components of screen pipe shall be stainless steel.
9. Louver slot apertures shall meet the following requirements:

Width (in)			% of Total
0.189	-	0.209	90
0.181	-	0.209	95
0.169	-	0.209	100

Length (in)			% of Total
2.250	-	2.750	90
2.000	-	3.000	100

10. A Certificate of Compliance conforming to the provisions in Section 6-1.07, "Certificate of Compliance," shall be furnished to the Engineer, prior to installing Linear Radial GSRD device, certifying that louver slot apertures being furnished conforms to above requirements

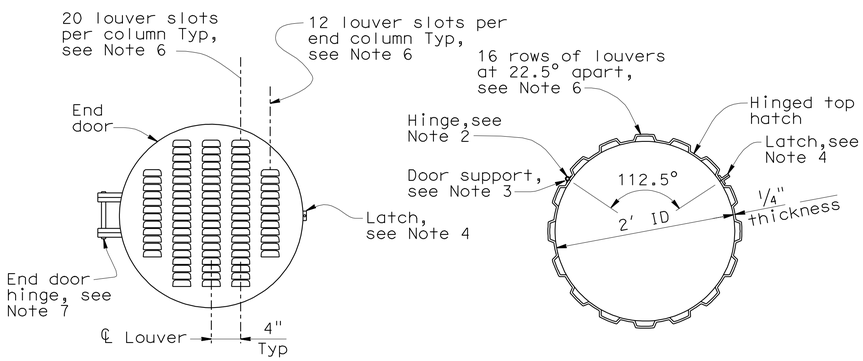

DETAIL 2

NO SCALE

SECTION G-G

NO SCALE

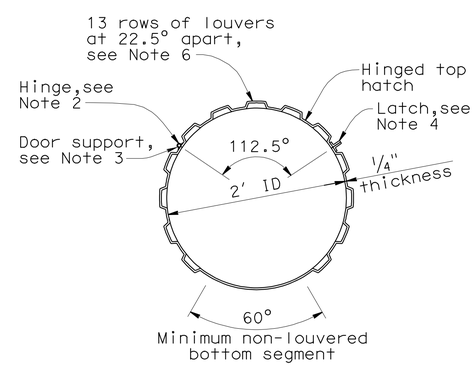

SECTION H-H

NO SCALE

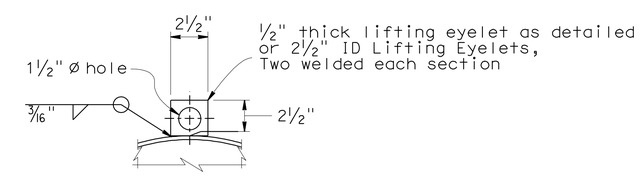

DETAIL 3

NO SCALE

DRAINAGE DETAIL
GROSS SOLIDS REMOVAL DEVICE
LINEAR RADIAL - DETAILS No.3

NO SCALE

DD-24

REVISED BY | DATE REVISED
D. WANG | L. HE
CALCULATED-DESIGNED BY | CHECKED BY
FUNCTIONAL SUPERVISOR
TIMOTHY B. SOBELMAN

STATE OF CALIFORNIA - DEPARTMENT OF TRANSPORTATION
Caltrans
DIVISION OF DESIGN
OFFICE OF STORM WATER MANAGEMENT

06111 29-JUN-2011 trmikesl S:\projects\202111\720211ic024.dgn

LAST REVISION 00-00-00 | DATE PLOTTED => 29-JUN-2011 | TIME PLOTTED => 06:11

Dist	COUNTY	ROUTE	POST MILES TOTAL PROJECT	SHEET No.	TOTAL SHEETS
07	LA	710	17.2/26.4	530	1507

Timothy B. Sobelman 6-19-09
REGISTERED CIVIL ENGINEER DATE

6-27-11
PLANS APPROVAL DATE

REGISTERED PROFESSIONAL ENGINEER
TIMOTHY B. SOBELMAN
No. 59249
Exp. 6-30-11
CIVIL
STATE OF CALIFORNIA

THE STATE OF CALIFORNIA OR ITS OFFICERS OR AGENTS SHALL NOT BE RESPONSIBLE FOR THE ACCURACY OR COMPLETENESS OF SCANNED COPIES OF THIS PLAN SHEET.

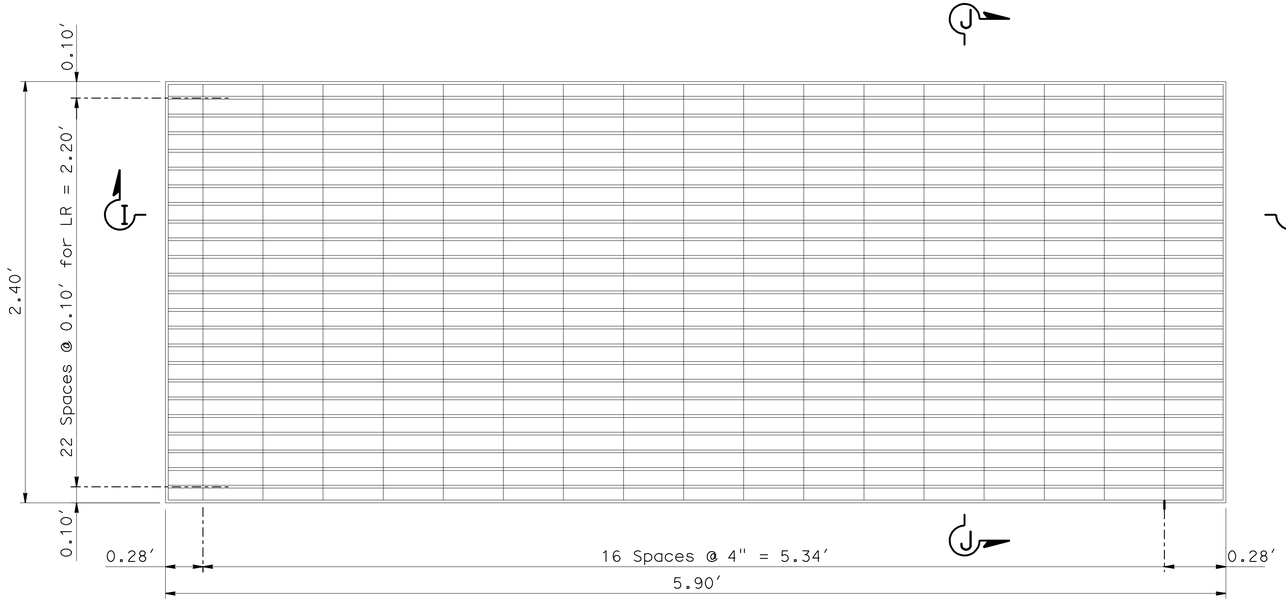

GRATE PANEL
No Scale

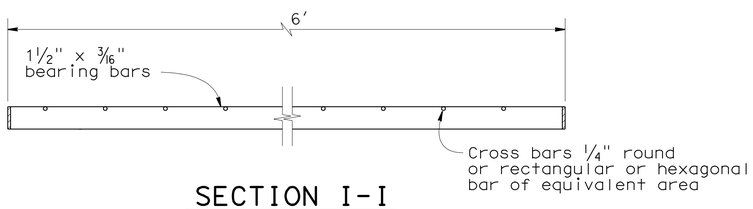

SECTION I-I
No Scale

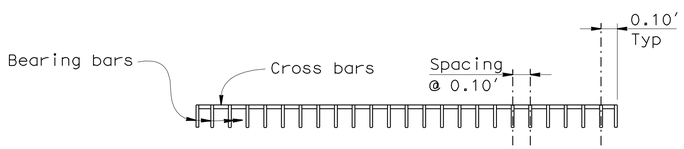

SECTION J-J
No Scale

SCREEN PIPE SECTIONS	LR # OF GRATES (N)	LR(HV) # OF GRATES (N)
1	7	8
2	9	10
3	11	12
4	13	14
5	15	16
6	17	18

(N) NOT A SEPARATE PAY ITEM,
FOR INFORMATION ONLY

NOTES:

1. Gap between grate panels shall be equal, 7/8" Min, 9/16" Max. (Average = 0.10′)
2. All metal components of grating shall be galvanized.

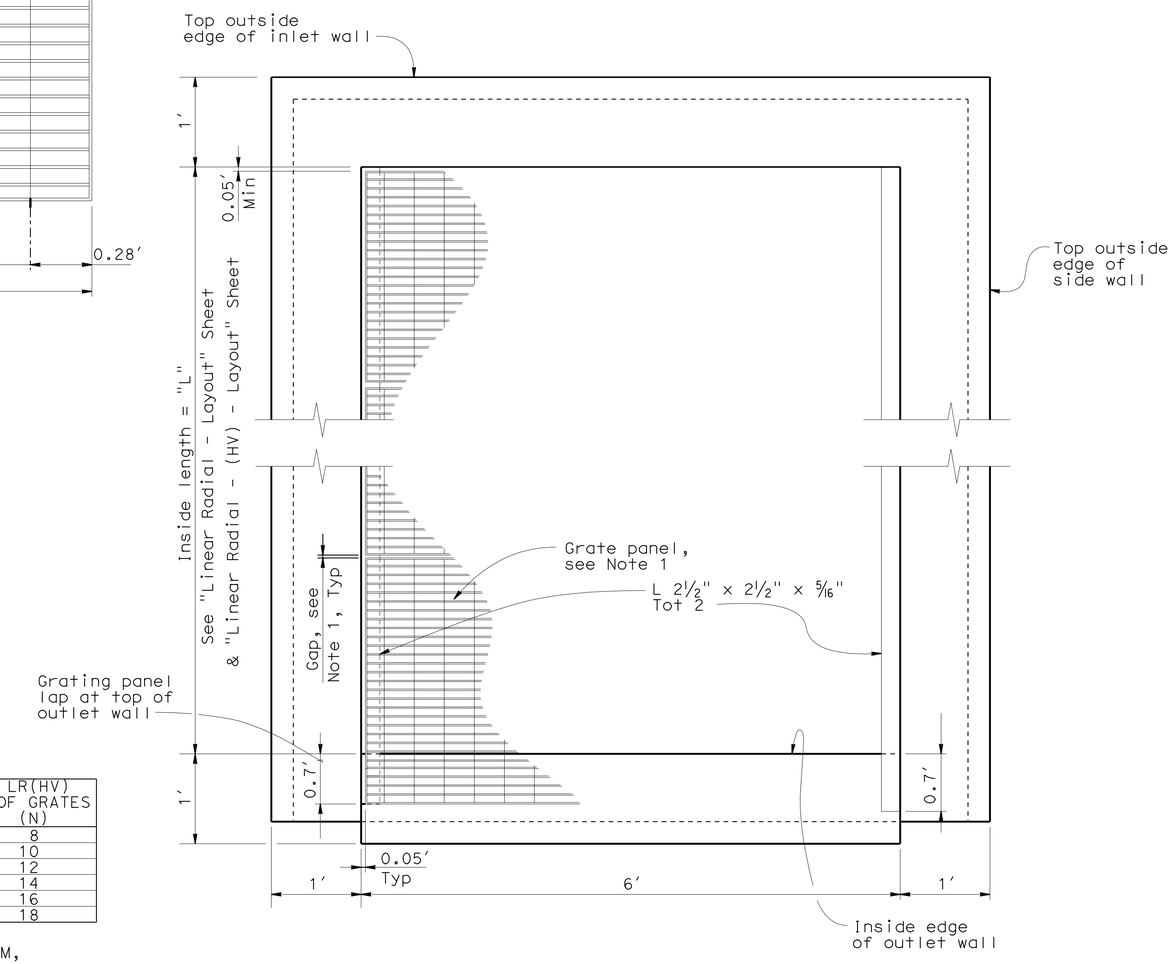

GRATE LAYOUT
(see Note 1)
No Scale

DRAINAGE DETAIL
GROSS SOLIDS REMOVAL DEVICE
LINEAR RADIAL - DETAIL No.4

NO SCALE

DD-25

STATE OF CALIFORNIA - DEPARTMENT OF TRANSPORTATION
DIVISION OF DESIGN
OFFICE OF STORM WATER MANAGEMENT

FUNCTIONAL SUPERVISOR: TIMOTHY B. SOBELMAN
CALCULATED-DESIGNED BY: D. WANG
CHECKED BY: L. HE
REVISED BY
DATE REVISED

06:12 29-JUN-2011 trmikesl S:\projects\202111\720211ic025.dgn

LAST REVISION 00-00-00 | DATE PLOTTED => 29-JUN-2011 | TIME PLOTTED => 06:12

Dist	COUNTY	ROUTE	POST MILES TOTAL PROJECT	SHEET No.	TOTAL SHEETS
07	LA	710	17.2/26.4	531	1507

REGISTERED CIVIL ENGINEER 6-19-09 DATE

6-27-11
PLANS APPROVAL DATE

REGISTERED PROFESSIONAL ENGINEER TIMOTHY B. SOBELMAN No. 59249 Exp. 6-30-11 CIVIL STATE OF CALIFORNIA

THE STATE OF CALIFORNIA OR ITS OFFICERS OR AGENTS SHALL NOT BE RESPONSIBLE FOR THE ACCURACY OR COMPLETENESS OF SCANNED COPIES OF THIS PLAN SHEET.

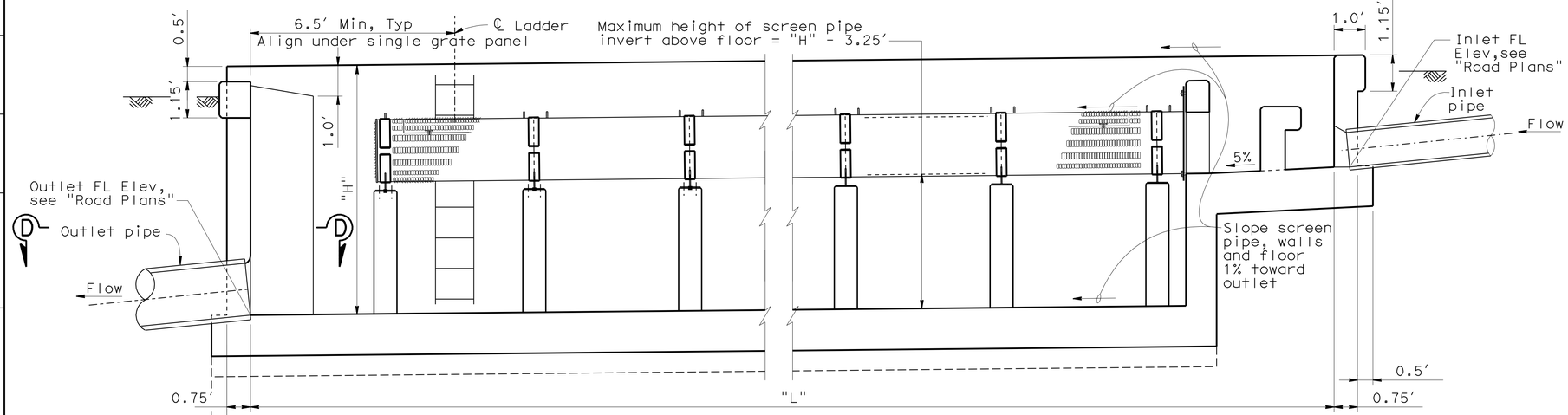

LONGITUDINAL SECTION - MAXIMUM SCREEN HEIGHT

NO SCALE

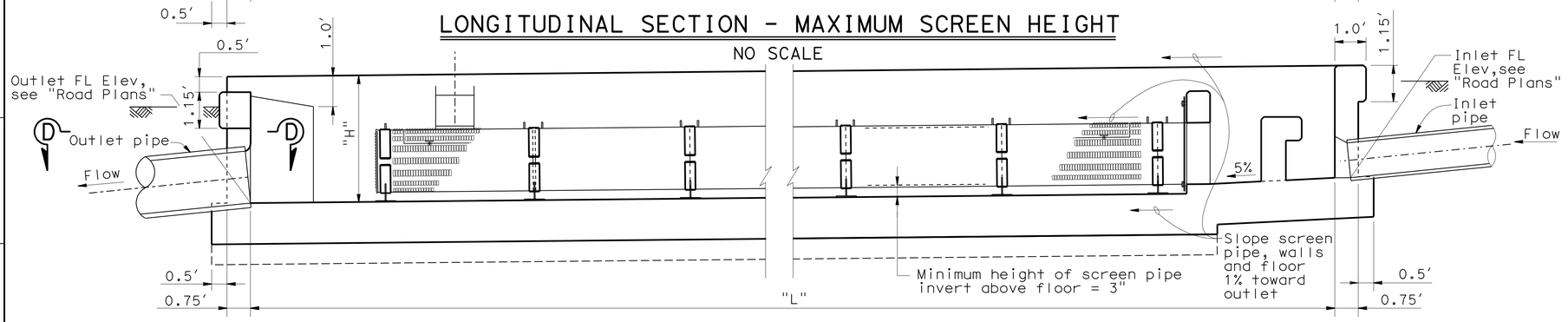

LONGITUDINAL SECTION - MINIMUM SCREEN HEIGHT

NO SCALE

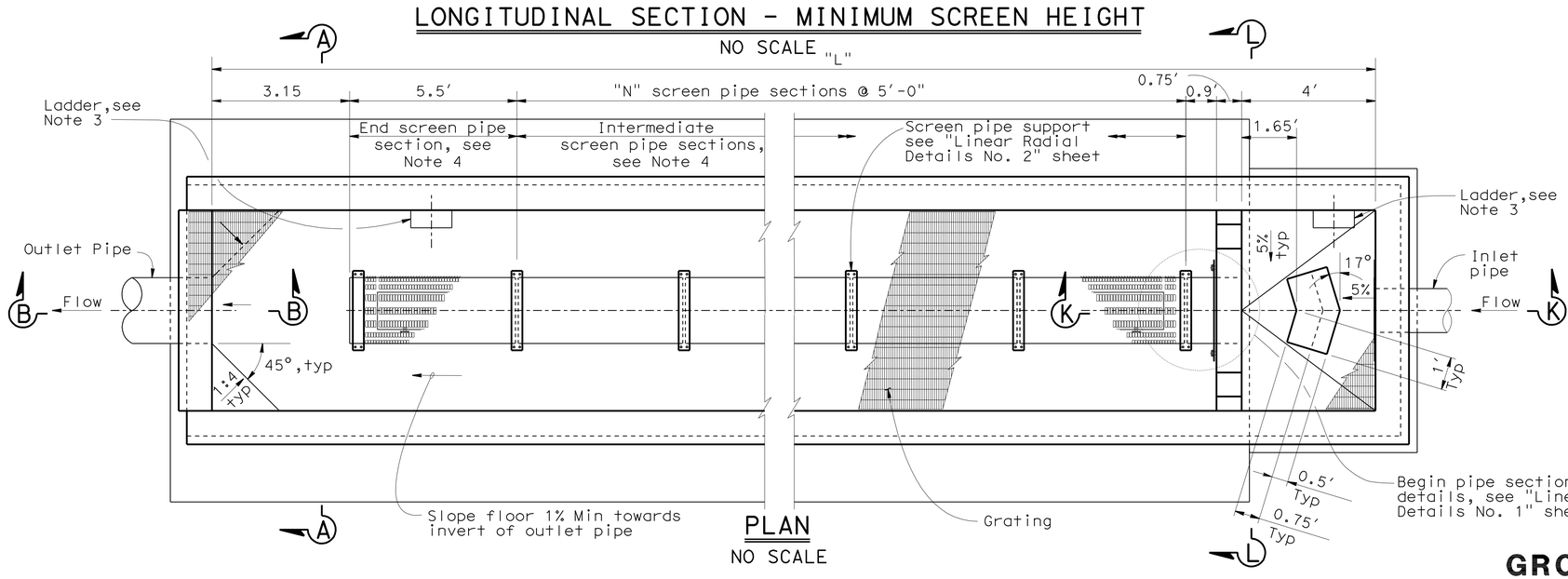

PLAN

NO SCALE

NOTES:

1. For Typical Section, see "Linear Radial - Details No. 1" sheet.
2. For Section B-B and D-D, see "Linear Radial - Details No. 1" sheet.
3. For ladder details see "Miscellaneous Details" sheet.
4. For end screen and intermediate screen pipe details, see "Linear Radial - Details No. 3" sheet.
5. For "N", "H" and other design data, see "Roadway Plans".
6. For Section K-K and L-L, see "Linear Radial (HV) - Details No. 1" sheet.
7. For Grating details, see "Linear Radial Details No. 4" sheet.
8. For inlet and outlet pipe details not shown, see "Road Plans".

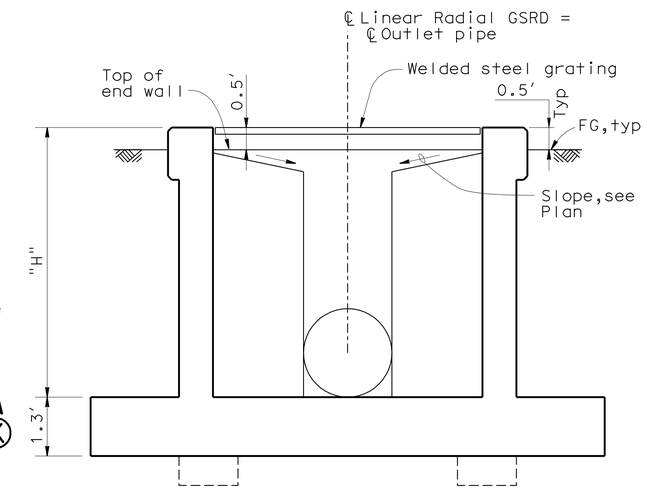

SECTION A-A

NO SCALE

DRAINAGE DETAIL
GROSS SOLIDS REMOVAL DEVICE
LINEAR RADIAL - (HV) - LAYOUT

NO SCALE

DD-26

STATE OF CALIFORNIA - DEPARTMENT OF TRANSPORTATION
DIVISION OF DESIGN
OFFICE OF STORM WATER MANAGEMENT

FUNCTIONAL SUPERVISOR: TIMOTHY B. SOBELMAN
CALCULATED-DESIGNED BY: D. WANG
CHECKED BY: L. HE
REVISED BY
DATE REVISED

06:12 29-JUN-2011 trmikesl S:\projects\720211\720211ic026.dgn

LAST REVISION 00-00-00
DATE PLOTTED => 29-JUN-2011
TIME PLOTTED => 06:12

Dist	COUNTY	ROUTE	POST MILES TOTAL PROJECT	SHEET No.	TOTAL SHEETS
07	LA	710	17.2/26.4	532	1507

REGISTERED CIVIL ENGINEER 6-19-09 DATE

6-27-11
PLANS APPROVAL DATE

REGISTERED PROFESSIONAL ENGINEER TIMOTHY B. SOBELMAN No. 59249 Exp. 6-30-11 CIVIL STATE OF CALIFORNIA

THE STATE OF CALIFORNIA OR ITS OFFICERS OR AGENTS SHALL NOT BE RESPONSIBLE FOR THE ACCURACY OR COMPLETENESS OF SCANNED COPIES OF THIS PLAN SHEET.

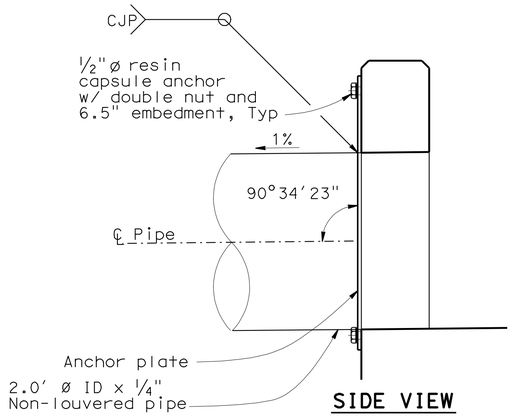

SIDE VIEW

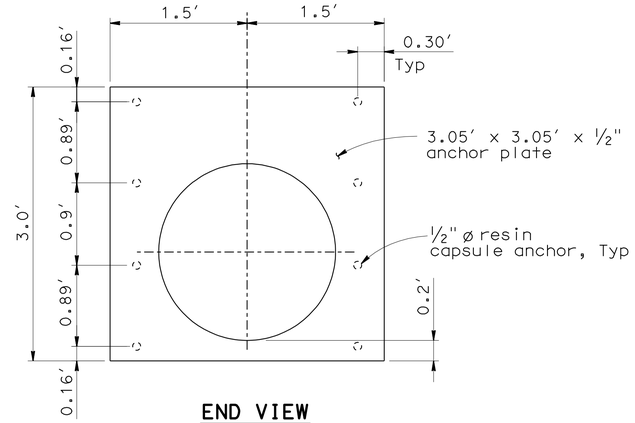

END VIEW
(Anchor Plate only)

ANCHOR PLATE DETAILS
NO SCALE

NOTES:

1. For location of sections K-K and L-L, see "Linear Radial (HV) - Layout" sheet.
2. For bottom slab details and grating support not shown, see Typical Section on "Linear Radial Details No. 1" sheet.
3. All metal components of screen pipe including connections to concrete shall be stainless steel.
4. All metal components of grating including connections to wall shall be galvanized.

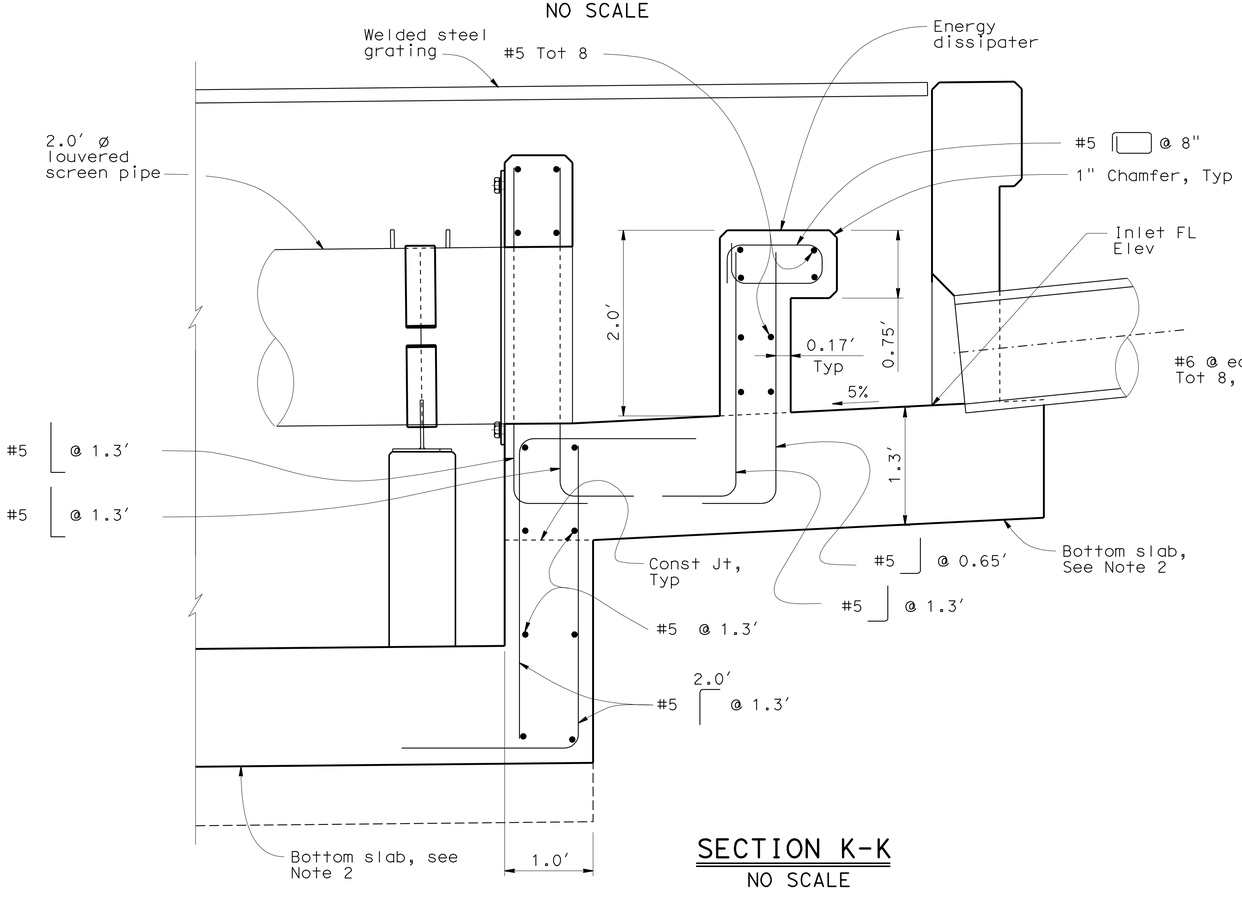

SECTION K-K
NO SCALE

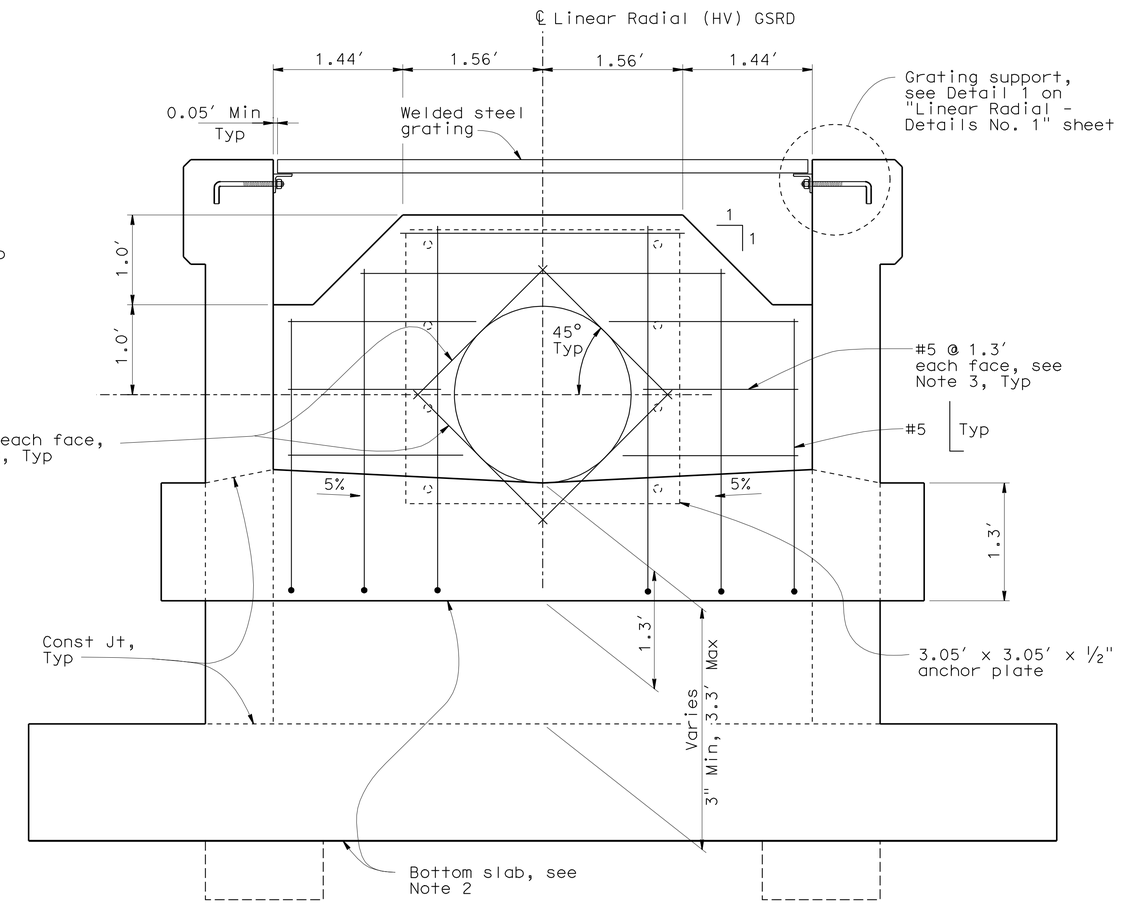

SECTION L-L
NO SCALE

DRAINAGE DETAIL
GROSS SOLIDS REMOVAL DEVICE
LINEAR RADIAL (HV)- DETAILS No.1

NO SCALE

DD-27

STATE OF CALIFORNIA - DEPARTMENT OF TRANSPORTATION
DIVISION OF DESIGN
OFFICE OF STORM WATER MANAGEMENT
Caltrans

FUNCTIONAL SUPERVISOR: TIMOTHY B. SOBELMAN
CALCULATED-DESIGNED BY: D. WANG
CHECKED BY: L. HE
REVISED BY
DATE REVISED

06:12 29-JUN-2011 trmikesl S:\projects\720211\720211ic027.dgn

LAST REVISION 00-00-00
DATE PLOTTED => 29-JUN-2011
TIME PLOTTED => 06:12

Dist	COUNTY	ROUTE	POST MILES TOTAL PROJECT	SHEET No.	TOTAL SHEETS
07	LA	710	17.2/26.4	533	1507

Timothy B Sobelman 6-19-09
REGISTERED CIVIL ENGINEER DATE

6-27-11
PLANS APPROVAL DATE

REGISTERED PROFESSIONAL ENGINEER TIMOTHY B. SOBELMAN No. 59249 Exp. 6-30-11 CIVIL STATE OF CALIFORNIA

THE STATE OF CALIFORNIA OR ITS OFFICERS OR AGENTS SHALL NOT BE RESPONSIBLE FOR THE ACCURACY OR COMPLETENESS OF SCANNED COPIES OF THIS PLAN SHEET.

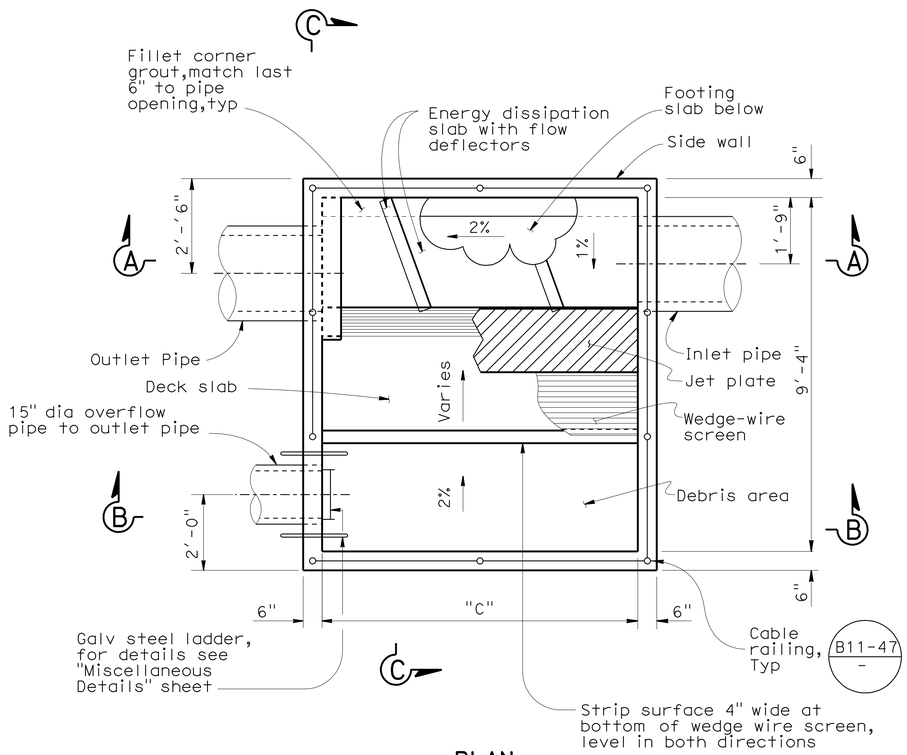

PLAN
NO SCALE

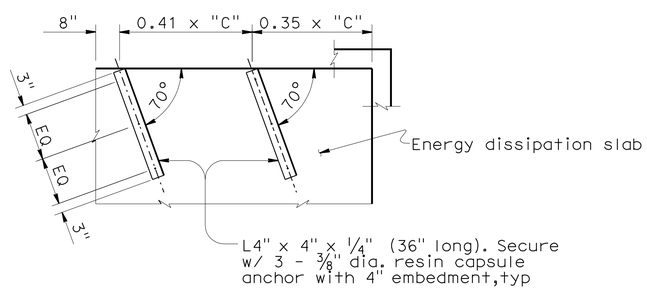

DEFLECTOR PLAN
NO SCALE

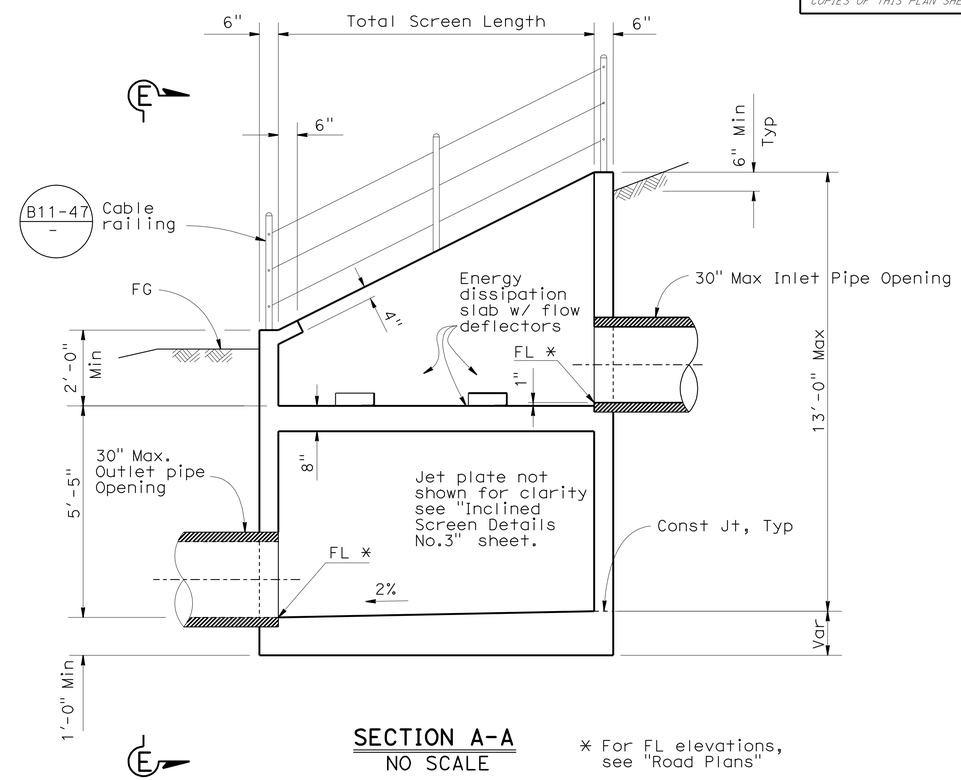

SECTION A-A
NO SCALE

* For FL elevations, see "Road Plans"

NOTES:

1. See "Road Plans" for additional details.
2. Inlet and outlet pipe opening sizes are shown on "Road Plans." The overflow and outlet piping shall be connected via standard elbows and tees.
3. For Sections B-B & C-C see "Inclined Screen - Details No. 1" sheet.
4. For reinforcing details see "Inclined Screen - Details No. 3" sheet.
5. For inlet and outlet pipe details not shown, see "Road Plans."

DRAINAGE DETAIL
GROSS SOLIDS REMOVAL DEVICE
INCLINED SCREEN - LAYOUT

NO SCALE

DD-28

REVISED BY	DATE REVISED
D. WANG	L. HE
CALCULATED-DESIGNED BY	CHECKED BY
FUNCTIONAL SUPERVISOR	TIMOTHY B. SOBELMAN

STATE OF CALIFORNIA - DEPARTMENT OF TRANSPORTATION
Caltrans
DIVISION OF DESIGN
OFFICE OF STORM WATER MANAGEMENT

06:12 29-JUN-2011 trmikesl S:\projects\20211\Y20211ic028.dgn

LAST REVISION 00-00-00 DATE PLOTTED => 29-JUN-2011 TIME PLOTTED => 06:12

Dist	COUNTY	ROUTE	POST MILES TOTAL PROJECT	SHEET No.	TOTAL SHEETS
07	LA	710	17.2/26.4	534	1507

Timothy B Sobelman 6-19-09
REGISTERED CIVIL ENGINEER DATE

6-27-11
PLANS APPROVAL DATE

REGISTERED PROFESSIONAL ENGINEER TIMOTHY B. SOBELMAN No. 59249 Exp. 6-30-11 CIVIL STATE OF CALIFORNIA

THE STATE OF CALIFORNIA OR ITS OFFICERS OR AGENTS SHALL NOT BE RESPONSIBLE FOR THE ACCURACY OR COMPLETENESS OF SCANNED COPIES OF THIS PLAN SHEET.

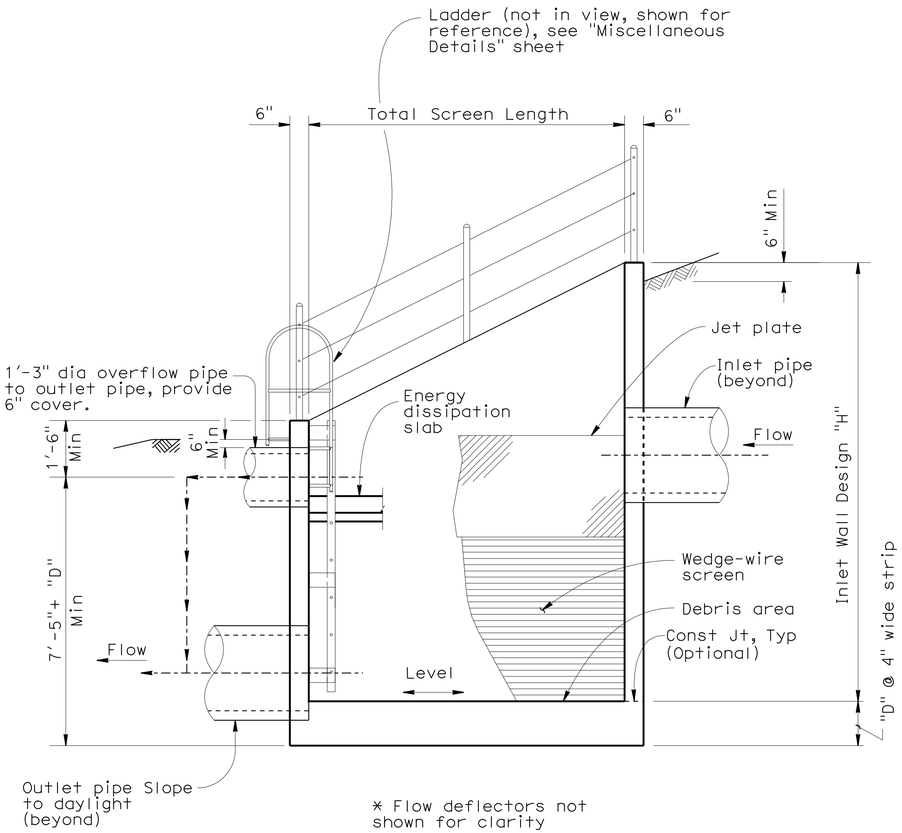

* Flow deflectors not shown for clarity

SECTION B-B

NOT TO SCALE

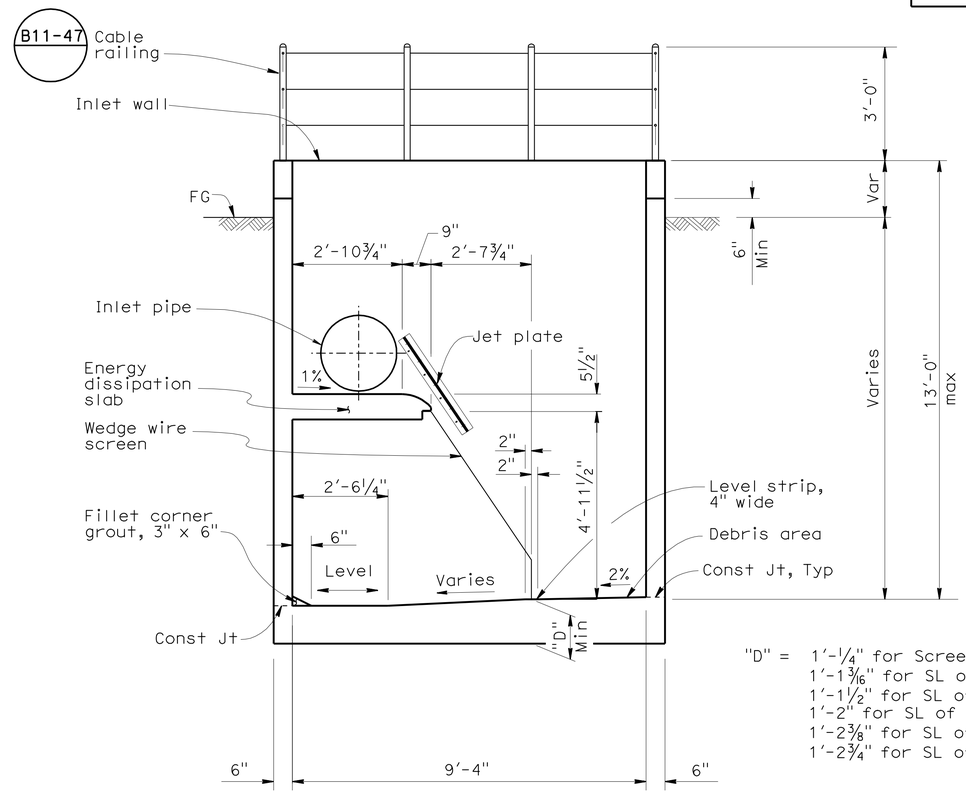

"D" = 1'-¼" for Screen Length (SL) of 3'-4⅛".
1'-1 3/16" for SL of 5'-0"
1'-1½" for SL of 6'-8"
1'-2" for SL of 8'-4"
1'-2⅜" for SL of 10'-0"
1'-2¾" for SL of 11'-8⅛"

* Flow deflectors not shown for clarity

SECTION C-C

NOT TO SCALE

NOTES:

1. See "Road Plans" for additional details.
2. For Section B-B & C-C locations, see "Inclined Screen - Layout" sheet.
3. Inlet and outlet piping opening sizes are shown on the "Road Plans." The overflow and outlet piping shall be connected via standard elbows and tees.
4. For inlet and outlet pipe details not shown, see "Road Plans".

DRAINAGE DETAIL
GROSS SOLIDS REMOVAL DEVICE
INCLINED SCREEN - DETAILS No. 1

NO SCALE

DD-29

REVISED BY	DATE REVISED
D. WANG	L. HE

CALCULATED-DESIGNED BY	CHECKED BY

FUNCTIONAL SUPERVISOR: TIMOTHY B. SOBELMAN

STATE OF CALIFORNIA - DEPARTMENT OF TRANSPORTATION
DIVISION OF DESIGN
OFFICE OF STORM WATER MANAGEMENT
Caltrans

06:12 29-JUN-2011 trmikesl S:\projects\20211\720211ic029.dgn

LAST REVISION 00-00-00 | DATE PLOTTED => 29-JUN-2011 | TIME PLOTTED => 06:12

Dist	COUNTY	ROUTE	POST MILES TOTAL PROJECT	SHEET No.	TOTAL SHEETS
07	LA	710	17.2/26.4	535	1507

Timothy B Sobelman 6-19-09
REGISTERED CIVIL ENGINEER DATE

6-27-11
PLANS APPROVAL DATE

REGISTERED PROFESSIONAL ENGINEER TIMOTHY B. SOBELMAN No. 59249 Exp. 6-30-11 CIVIL STATE OF CALIFORNIA

THE STATE OF CALIFORNIA OR ITS OFFICERS OR AGENTS SHALL NOT BE RESPONSIBLE FOR THE ACCURACY OR COMPLETENESS OF SCANNED COPIES OF THIS PLAN SHEET.

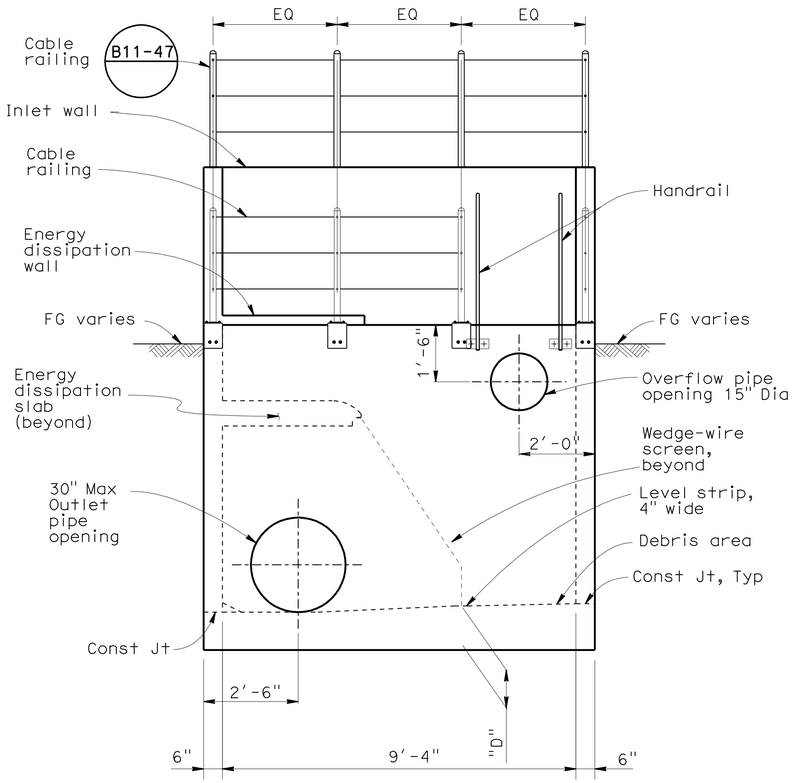

* Jet plate and flow deflectors not shown for clarity

VIEW E-E
NO SCALE

NOTE:

For Section D-D & View E-E locations, see "Inclined Screen - Layout" sheet.

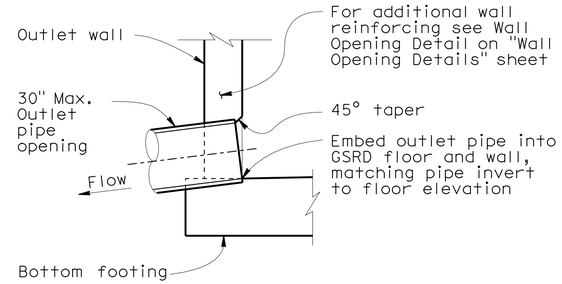

OUTLET DETAIL
PIPE EXIT AT WALL - INCLINED SCREEN
NO SCALE

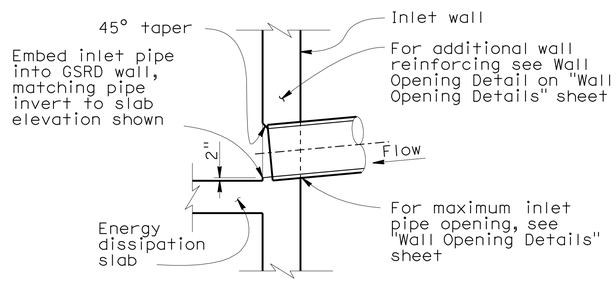

INLET DETAIL
PIPE ENTRANCE AT WALL - INCLINED SCREEN
NO SCALE

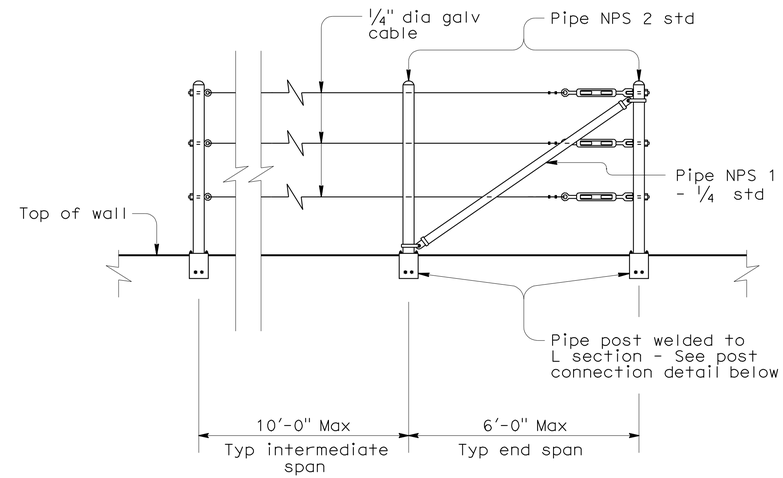

CABLE RAILING
NO SCALE

*** Refer to Standard Plan B11-47 for additional information

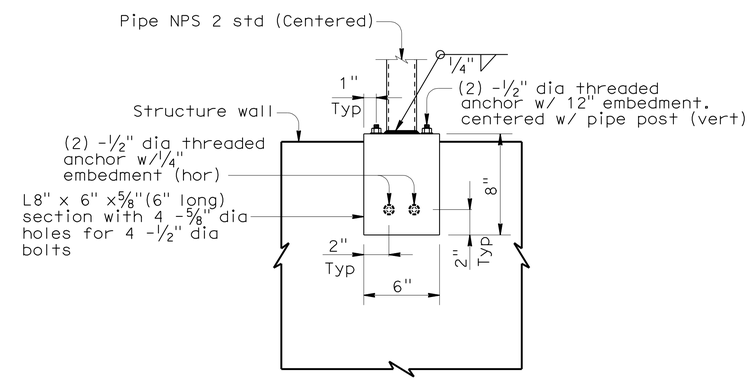

POST ANCHORAGE
NO SCALE

DRAINAGE DETAIL
GROSS SOLIDS REMOVAL DEVICE
INCLINED SCREEN - DETAILS No.2
NO SCALE

DD-30

REVISED BY	DATE REVISED
D. WANG	L. HE

CALCULATED-DESIGNED BY / CHECKED BY

FUNCTIONAL SUPERVISOR: TIMOTHY B. SOBELMAN

STATE OF CALIFORNIA - DEPARTMENT OF TRANSPORTATION
DIVISION OF DESIGN
OFFICE OF STORM WATER MANAGEMENT
Caltrans

06:12 29-JUN-2011 trmikesl S:\projects\20211\720211ic030.dgn

LAST REVISION 00-00-00 | DATE PLOTTED => 29-JUN-2011 | TIME PLOTTED => 06:12

Dist	COUNTY	ROUTE	POST MILES TOTAL PROJECT	SHEET No.	TOTAL SHEETS
07	LA	710	17.2/26.4	536	1507

REGISTERED CIVIL ENGINEER 6-19-09 DATE

6-27-11
PLANS APPROVAL DATE

REGISTERED PROFESSIONAL ENGINEER TIMOTHY B. SOBELMAN No. 59249 Exp. 6-30-11 CIVIL STATE OF CALIFORNIA

THE STATE OF CALIFORNIA OR ITS OFFICERS OR AGENTS SHALL NOT BE RESPONSIBLE FOR THE ACCURACY OR COMPLETENESS OF SCANNED COPIES OF THIS PLAN SHEET.

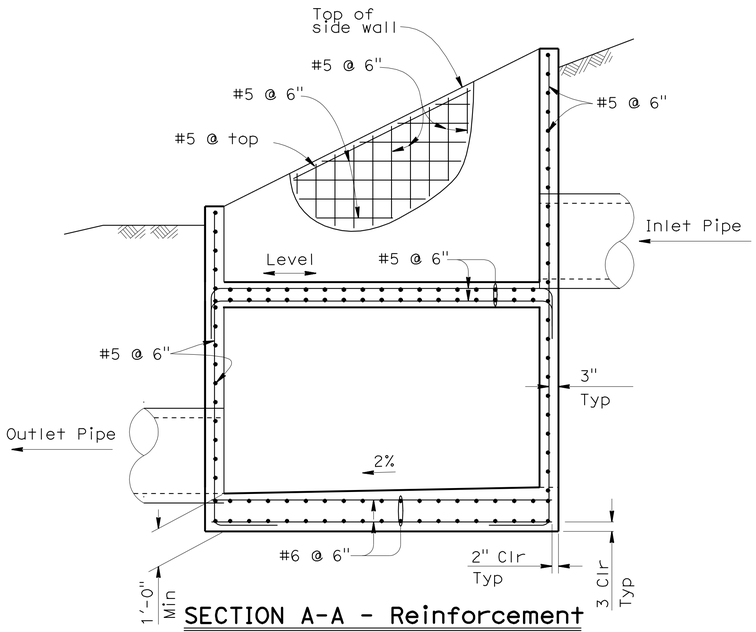

SECTION A-A - Reinforcement
NO SCALE

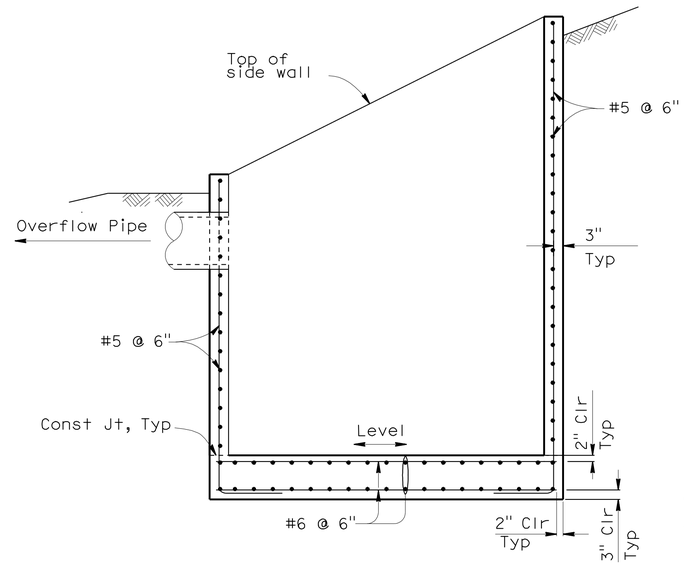

SECTION B-B - Reinforcement
NO SCALE

NOTES:

1. For additional reinforcing at openings, see "Wall Opening Details" sheet.
2. For section locations, see "Inclined Screen - Layout" sheet.

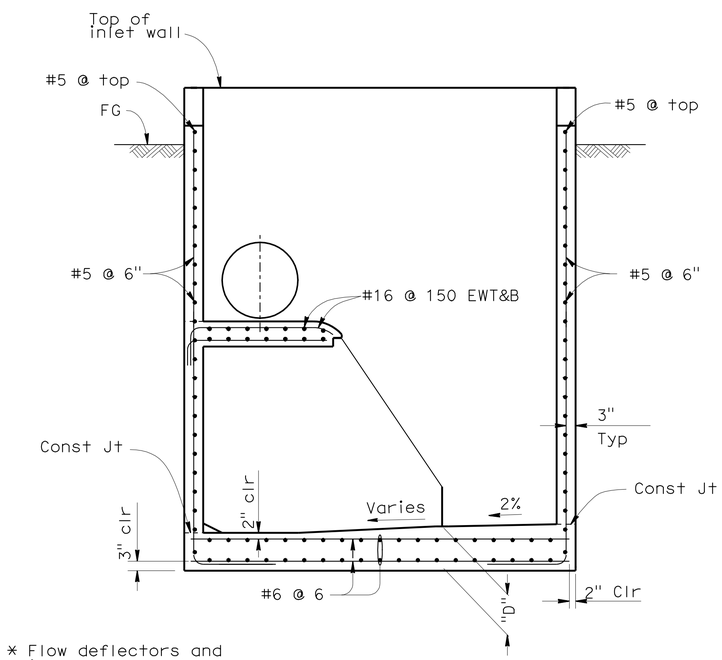

* Flow deflectors and jet plate not shown for clarity

SECTION C-C - REINF
NO SCALE

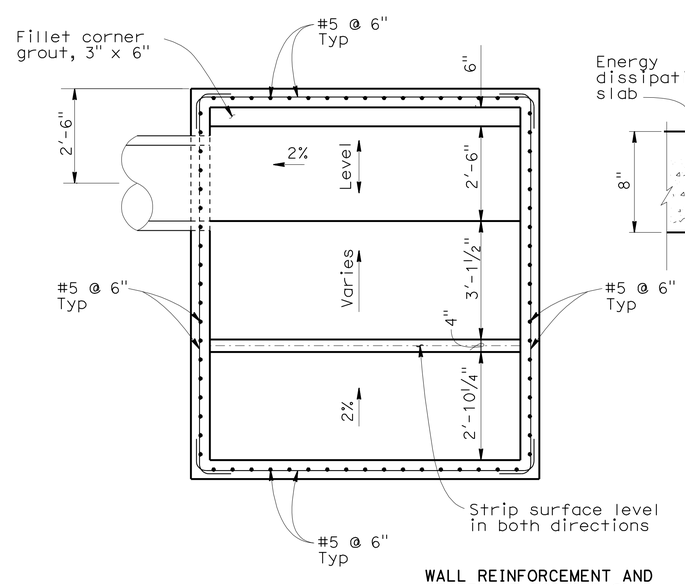

WALL REINFORCEMENT AND GRADES AT FOOTING SLAB

VIEW F-F
NO SCALE

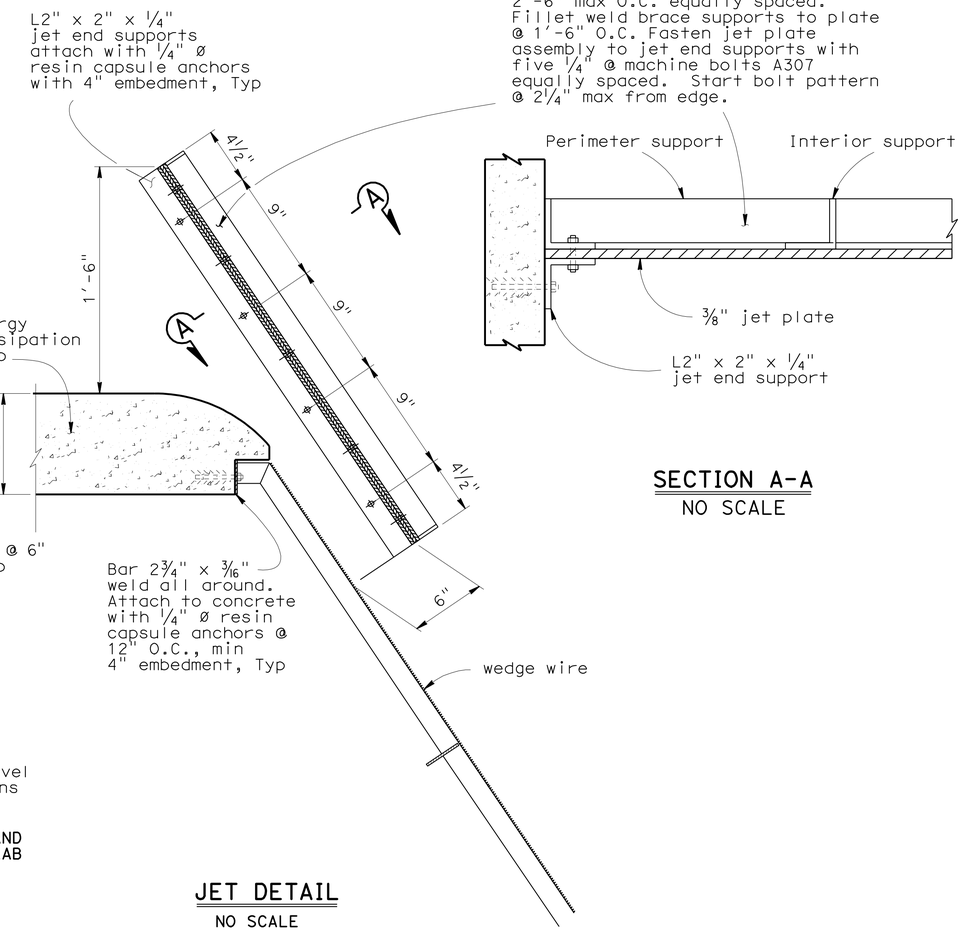

SECTION A-A
NO SCALE

JET DETAIL
NO SCALE

DRAINAGE DETAIL
GROSS SOLIDS REMOVAL DEVICE
INCLINED SCREEN - DETAILS No. 3
NO SCALE

DD-31

REVISED BY	DATE REVISED	CALCULATED-DESIGNED BY	CHECKED BY	FUNCTIONAL SUPERVISOR
D. WANG	L. HE			TIMOTHY B. SOBELMAN

STATE OF CALIFORNIA - DEPARTMENT OF TRANSPORTATION
Caltrans
DIVISION OF DESIGN
OFFICE OF STORM WATER MANAGEMENT

06:12 29-JUN-2011 trmikesl S:\projects\202111\720211ic031.dgn

LAST REVISION 00-00-00 | DATE PLOTTED => 29-JUN-2011 | TIME PLOTTED => 06:12

Dist	COUNTY	ROUTE	POST MILES TOTAL PROJECT	SHEET No.	TOTAL SHEETS
07	LA	710	17.2/26.4	537	1507

Timothy B Sobelman 6-19-09
REGISTERED CIVIL ENGINEER DATE

6-27-11
PLANS APPROVAL DATE

REGISTERED PROFESSIONAL ENGINEER TIMOTHY B. SOBELMAN No. 59249 Exp. 6-30-11 CIVIL STATE OF CALIFORNIA

THE STATE OF CALIFORNIA OR ITS OFFICERS OR AGENTS SHALL NOT BE RESPONSIBLE FOR THE ACCURACY OR COMPLETENESS OF SCANNED COPIES OF THIS PLAN SHEET.

NOTE:

All metal components of screen, including all connections shall be stainless steel unless otherwise noted.

Reference "Inclined Screen Details Sheet No. 3" for Jet and Deflectors

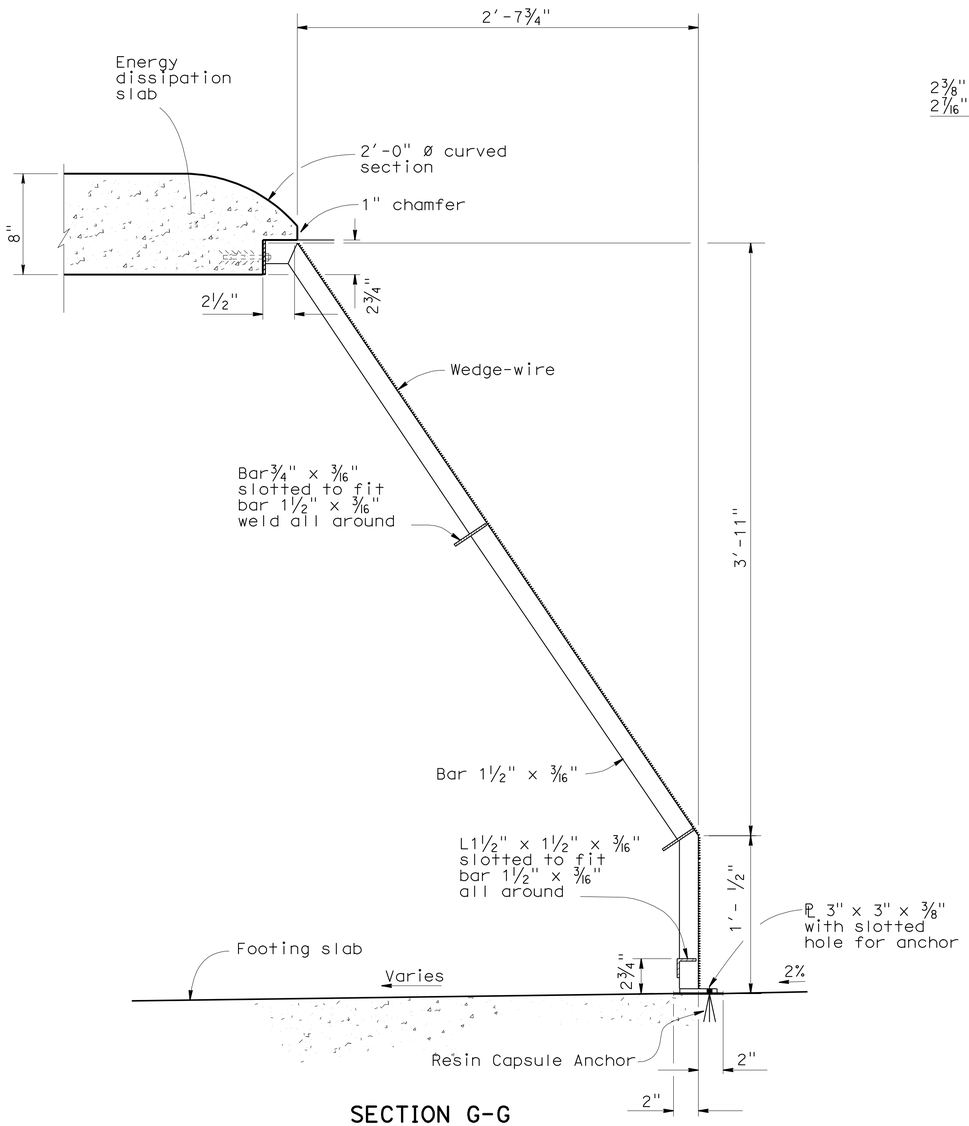

SECTION G-G
NO SCALE

For additional information see
INCLINED SCREEN - DETAILS No.3 /JET DETAIL

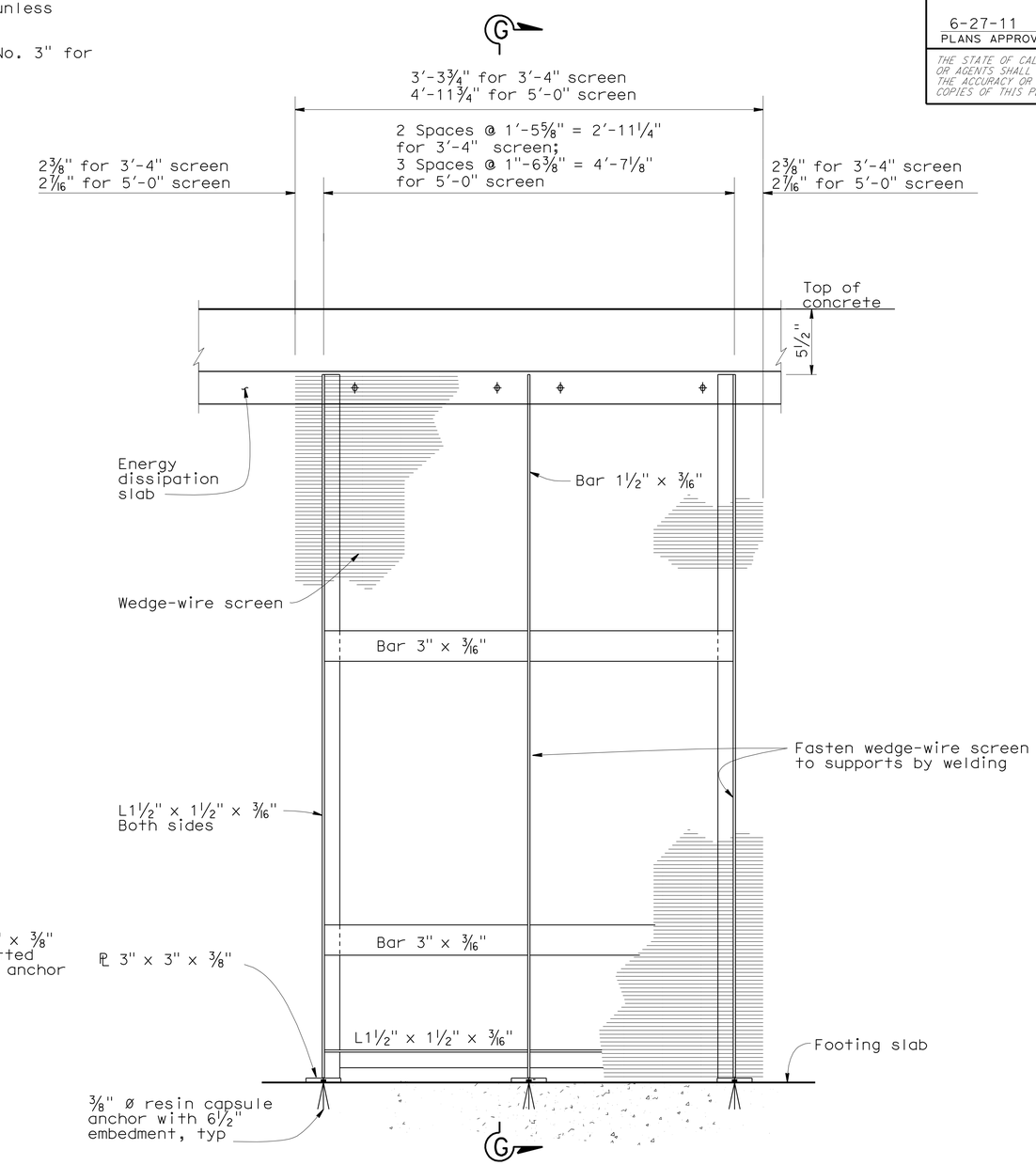

ELEVATION
NO SCALE

DRAINAGE DETAIL
GROSS SOLIDS REMOVAL DEVICE
INCLINED SCEEN DETAILS

NO SCALE

DD-32

REVISED BY	DATE REVISED

CALCULATED-DESIGNED BY: D. WANG
CHECKED BY: L. HE
FUNCTIONAL SUPERVISOR: TIMOTHY B. SOBELMAN

STATE OF CALIFORNIA - DEPARTMENT OF TRANSPORTATION
DIVISION OF DESIGN
OFFICE OF STORM WATER MANAGEMENT
Caltrans

06:13 29-JUN-2011 trmikesl S:\projects\20211\720211ic032.dgn

LAST REVISION 00-00-00
DATE PLOTTED => 29-JUN-2011
TIME PLOTTED => 06:13

Dist	COUNTY	ROUTE	POST MILES TOTAL PROJECT	SHEET No.	TOTAL SHEETS
07	LA	710	17.2/26.4	538	1507

Timothy B Sobelman 6-19-09
REGISTERED CIVIL ENGINEER DATE

6-27-11
PLANS APPROVAL DATE

REGISTERED PROFESSIONAL ENGINEER TIMOTHY B. SOBELMAN No. 59249 Exp. 6-30-11 CIVIL STATE OF CALIFORNIA

THE STATE OF CALIFORNIA OR ITS OFFICERS OR AGENTS SHALL NOT BE RESPONSIBLE FOR THE ACCURACY OR COMPLETENESS OF SCANNED COPIES OF THIS PLAN SHEET.

NOTES:

1. The distance between rungs shall not exceed 12" and shall be uniform throughout the length of wall.
2. The ladder may be constructed in one length at the Contractor's option on concrete walls.
3. All metal components of ladder and handrail including connections shall be galvanized after fabrication. See Standard Specifications or Special Provisions.
4. When ladder rails need to be spliced, see Standard Plan D75C for Ladder Splice Plate details.
5. Grind exposed corners 3/16" radius.

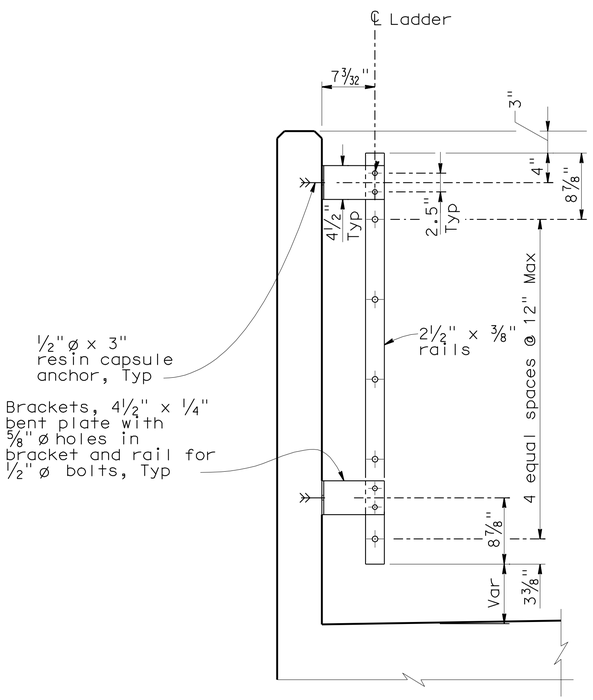

LADDER SECTION

NO SCALE

NOTE: Handrail not shown for clarity.

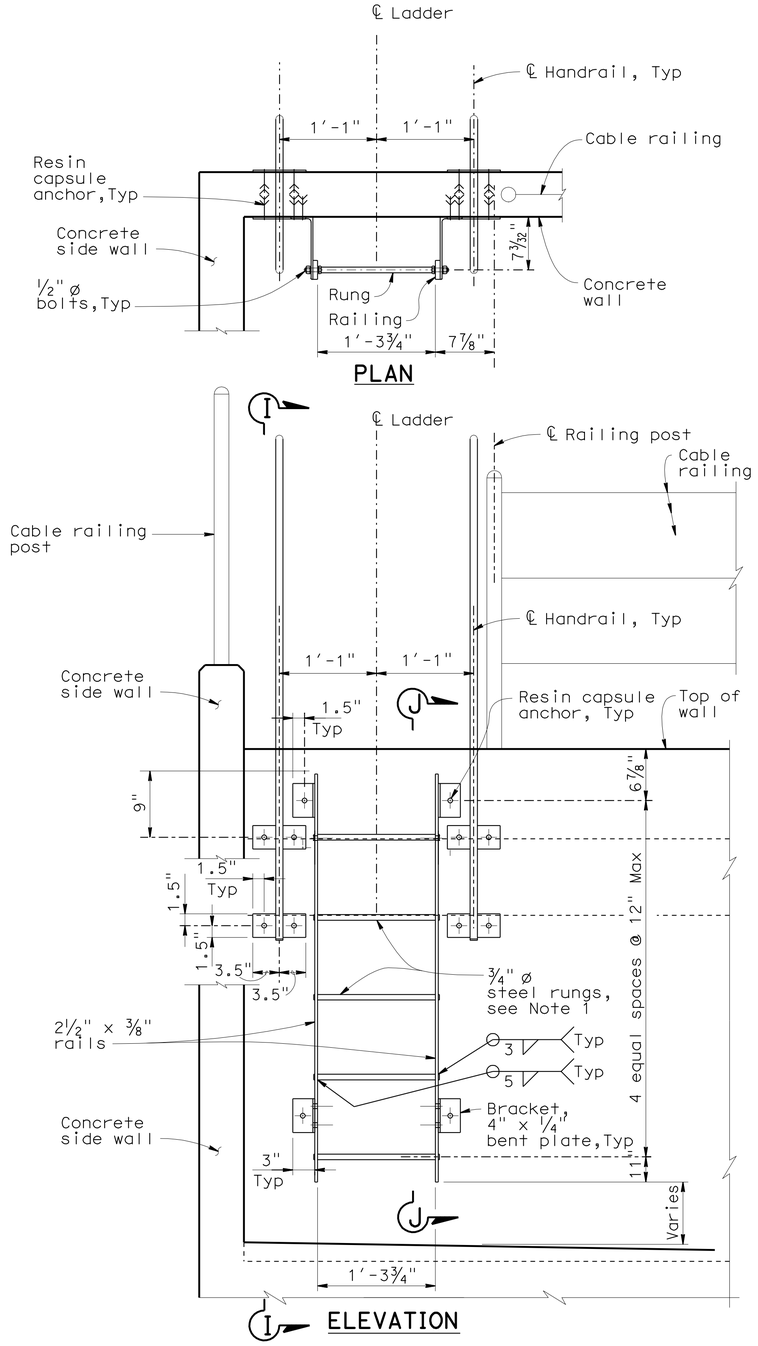

LADDER - INCLINED SCREEN GSRD

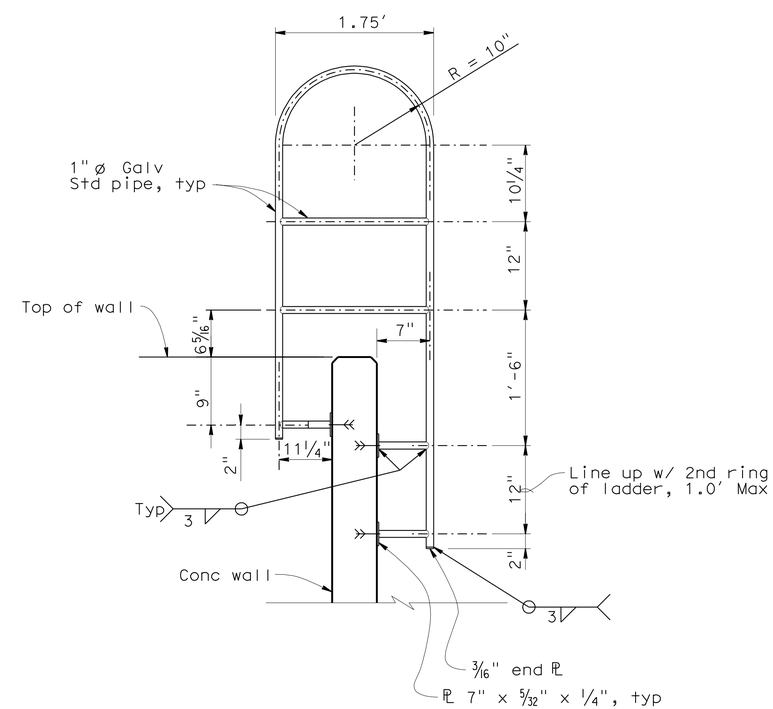

SECTION I-I

NO SCALE

DRAINAGE DETAIL
GROSS SOLIDS REMOVAL DEVICE
MISCELLANEOUS DETAILS

NO SCALE

DD-33

REVISED BY	DATE REVISED

CALCULATED-DESIGNED BY: D. WANG
CHECKED BY: L. HE
FUNCTIONAL SUPERVISOR: TIMOTHY B. SOBELMAN

STATE OF CALIFORNIA - DEPARTMENT OF TRANSPORTATION
DIVISION OF DESIGN
OFFICE OF STORM WATER MANAGEMENT
Caltrans

06:13 29-JUN-2011 trmikesl S:\projects\202111\720211ic033.dgn

LAST REVISION 00-00-00 | DATE PLOTTED => 29-JUN-2011 | TIME PLOTTED => 06:13

Dist	COUNTY	ROUTE	POST MILES TOTAL PROJECT	SHEET No.	TOTAL SHEETS
07	LA	710	17.2/26.4	539	1507

REGISTERED CIVIL ENGINEER 6-19-09 DATE

6-27-11
PLANS APPROVAL DATE

REGISTERED PROFESSIONAL ENGINEER TIMOTHY B. SOBELMAN No. 59249 Exp. 6-30-11 CIVIL STATE OF CALIFORNIA

THE STATE OF CALIFORNIA OR ITS OFFICERS OR AGENTS SHALL NOT BE RESPONSIBLE FOR THE ACCURACY OR COMPLETENESS OF SCANNED COPIES OF THIS PLAN SHEET.

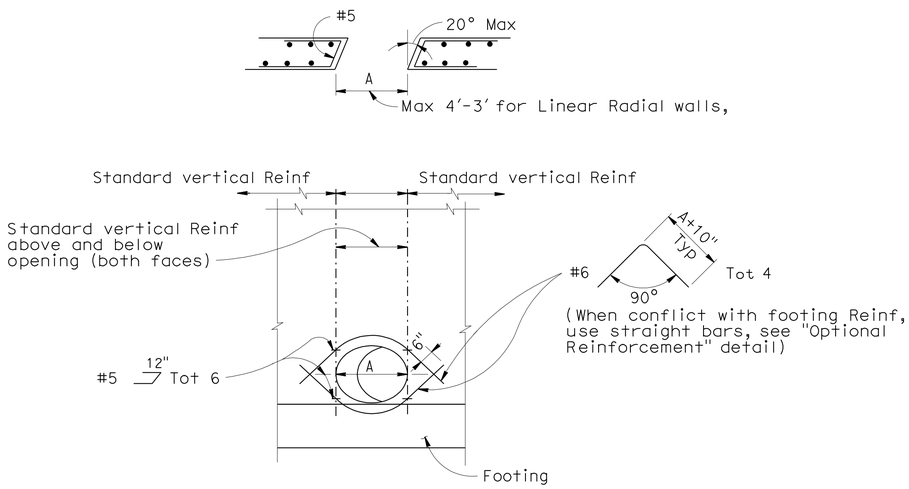

LINEAR RADIAL WALL OPENING

To be used at Linear Radial inlet and outlet pipe locations

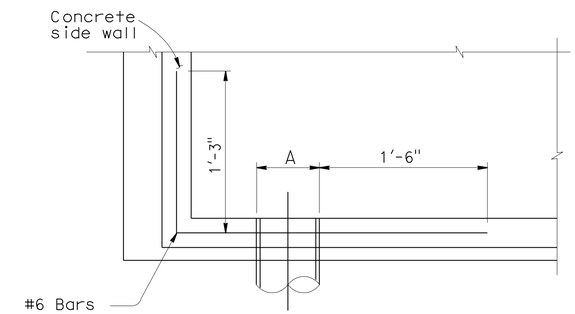

SECTION L-L

No Scale

(Only specified horizontal bars are shown)

NOTES:

1. In all opening locations, horizontal reinforcement to be standard except as shown.
2. All reinforcement to clear opening by 2" minimum.

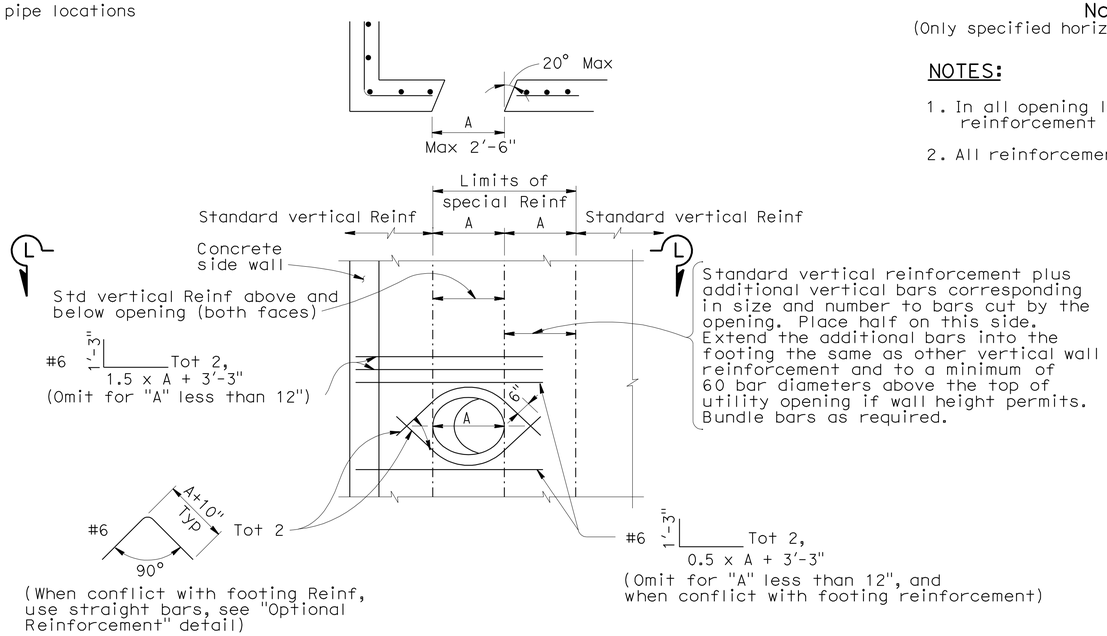

INCLINED SCREEN WALL OPENING

No Scale

To be used at inlet and outlet pipe locations

DRAINAGE DETAIL
GROSS SOLIDS REMOVAL DEVICE
WALL OPENING DETAILS

NO SCALE

DD-34

REVISED BY	DATE REVISED

CALCULATED-DESIGNED BY	CHECKED BY
D. WANG	L. HE

FUNCTIONAL SUPERVISOR: TIMOTHY B. SOBELMAN

STATE OF CALIFORNIA - DEPARTMENT OF TRANSPORTATION
Caltrans
DIVISION OF DESIGN
OFFICE OF STORM WATER MANAGEMENT

06:13 29-JUN-2011 trmikesl S:\projects\202111\720211ic034.dgn

LAST REVISION 00-00-00 | DATE PLOTTED => 29-JUN-2011 | TIME PLOTTED => 06:13

Dist	COUNTY	ROUTE	POST MILES TOTAL PROJECT	SHEET No.	TOTAL SHEETS
07	LA	710	17.2/26.4	540	1507

REGISTERED CIVIL ENGINEER 03/30/11 DATE

6-27-11
PLANS APPROVAL DATE

REGISTERED PROFESSIONAL ENGINEER ROBERT M. HENDERSON No. C66736 Exp.09/30/12 CIVIL STATE OF CALIFORNIA

THE STATE OF CALIFORNIA OR ITS OFFICERS OR AGENTS SHALL NOT BE RESPONSIBLE FOR THE ACCURACY OR COMPLETENESS OF SCANNED COPIES OF THIS PLAN SHEET.

CALTRANS DISTRICT 7
100 S. MAIN STREET
LOS ANGELES, CA 90012

CH2M HILL
1000 WILSHIRE BLVD
LOS ANGELES, CA 90017

ALLOWABLE ALTERNATIVE PIPE CULVERT AND ALTERNATIVE FLARED END SECTION

RCP	SSRP			HDPEP
SIZE (in)	SIZE (in)	THICKNESS (in)	BITUMINOUS COATING	SIZE (in)
18	18	.079	YES	18
24	24	.079	YES	24
36	36	.079	YES	36
48	48	.079	YES	48

ABBREVIATIONS:

D DOWNDRAIN JOINT TYPE
HDPEP RIBBED PROFILE WALL POLYETHYLENE PIPE, TYPE S
S STANDARD JOINT TYPE
SCH SCHEDULE
(N) NOT A SEPARATE PAY ITEM, FOR INFORMATION ONLY

NOTES:

1. FOR QUANTITIES OF DRAINAGE SYSTEMS/UNITS TO BE REMOVED OR ABANDONED, SEE SHEETS DQ-30 TO DQ-34.
2. TEMPORARY DRAINAGE ITEMS ARE PRESENTED ON SHEETS D-26 TO D-28. TEMPORARY DRAINAGE QUANTITIES ARE SHOWN ON DQ-35 TO DQ-37.

DRAINAGE PLAN SHEET No.	DRAINAGE SYSTEM No. ⬡	DRAINAGE UNIT ◯	ADJUST INLET	ADJUST MANHOLE TO GRADE	CAP INLET	DITCH EXCAVATION (TYPE Z-2) AERIALLY DEPOSITED LEAD	HOT MIX ASPHALT (TYPE A)	PLACE HOT MIX ASPHALT (MISC AREAS)	MINOR CONCRETE (MINOR STRUCTURE)	MINOR CONCRETE (BACKFILL)	APC 12"	APC 18"	APC 24"	CSP 18" Bit Ctd CSP (.079" THICK)	CSP 24" Bit Ctd CSP (.079" THICK)	12" Bit Ctd SCSP (.079" THICK)	18" Bit Ctd SCSP (.079" THICK)	12" Bit Ctd CSP RISER (.079" THICK)	36" Bit Ctd CSP RISER (.079" THICK)	3" PLASTIC PIPE (SCH 40 PVC)	GRATED LINE DRAIN	(N) WALL DRAIN	18" ALTERNATIVE FLARED END SECTION	24" ALTERNATIVE FLARED END SECTION	ROCK SLOPE PROTECTION (FACING, METHOD B)	ROCK SLOPE PROTECTION FABRIC	8" PERFORATED PLASTIC PIPE UNDERDRAIN	GSRD (LR-1)	GSRD (LR-2)	GSRD (INCLINED SCREEN TYPE A)	MISCELLANEOUS IRON AND STEEL	(N) FRAME & GRATE (24-12)	(N) ELBOW	(N) CONCRETE COLLAR	(N) "H" OR "V"	(N) PIPE JOINT CLASSIFICATION	(N) MAXIMUM COVER	DESCRIPTION	STATION	DRAINAGE PLAN SHEET No.	DRAINAGE SYSTEM No. ⬡	DRAINAGE UNIT ◯
			EA	EA	EA	CY	TON	SQYD	CY	CY	LF	LF	LF	LF	LF	LF	LF	LF	LF	LF	LF	LF	EA	EA	CY	SQYD	LF	EA	EA	EA	LB	EA	EA	EA	FT	LF	FT					
D-1	1	a																							7.41	20.00												RSP (FACING, METHOD B)		D-1	1	a
		b																					1															18" AFES	86.57′ R† "R710A" 913+42+00			b
		c												7.2																						S	4.2	18" CSP				c
		d							1.56																						326	1			5.74			G1 INLET	78.00′ R† "R710A" 913+42.00			d
		e										72.0																								S	5.6	18" APC				e
		f							2.35																						326	1			7.06			G2 INLET	77.63′ R† "R710A" 914+20.00			f
D-1	2	a																																				REMOVE CULVERT		D-1	2	a
		b																																1				Conc COLLAR	79.32′ L† "R710A" 923+41.31			b
		c										16.4																								S	4.3	18" APC				c
		d							4.38																						326	1			10.45			G2 INLET	65.23′ L† "R710A" 923+42.00			d
		e										106.1																								S	13.2	18" APC				e
		f							3.83																						326	1			8.90			G2 INLET	69.00′ L† "R710A" 922+30.25			f
		g																																				REMOVE INLET	65.23′ L† "R710A" 923+42.00			g
D-2	3	a																							1.48	9.33												RSP (FACING, METHOD B)		D-2	3	a
		b																											1									LR-2-(4′-0") GSRD	91.50′ R† "R710A" 949+50.00			b
		c																				64.0																GLD				c
		d																																				REMOVE HW				d
		e																																				REMOVE 18" RCP				e
		f												135.0																								18" APC	69.00′ R† "R710A" 948+15.00			f
		g							0.97																						326	1			3.11			G1 INLET	68.00′ R† "R710A" 947+00.00			g
D-2	4	a																							1.48	9.33												RSP (FACING, METHOD B)		D-2	4	a
		b																											1									LR-2-(4′-0") GSRD	91.50′ L† "R710A" 951+20.00			b
		c							1.38																						326	1			3.29			G2 INLET				c
		d																																				REMOVE HW				d
		e																																				REMOVE 18" RCP				e
SHEET TOTAL		DQ-1							14.47			194.5		142.2								64.0		1		10.37	38.66			2		1956							SHEET TOTAL				

DRAINAGE QUANTITIES

DQ-1

STATE OF CALIFORNIA - DEPARTMENT OF TRANSPORTATION
Caltrans

CONSULTANT FUNCTIONAL SUPERVISOR: MELISSA DE LA PENA
CALCULATED-DESIGNED BY: I. MATAGI
CHECKED BY: R. HENDERSON
REVISED BY
DATE REVISED

LAST REVISION 00-00-00
DATE PLOTTED => 29-JUN-2011
TIME PLOTTED => 07:51

Dist	COUNTY	ROUTE	POST MILES TOTAL PROJECT	SHEET No.	TOTAL SHEETS
07	LA	710	17.2/26.4	541	1507

REGISTERED CIVIL ENGINEER 03/30/11 DATE

6-27-11
PLANS APPROVAL DATE

REGISTERED PROFESSIONAL ENGINEER ROBERT M. HENDERSON No. C66736 Exp.09/30/12 CIVIL STATE OF CALIFORNIA

THE STATE OF CALIFORNIA OR ITS OFFICERS OR AGENTS SHALL NOT BE RESPONSIBLE FOR THE ACCURACY OR COMPLETENESS OF SCANNED COPIES OF THIS PLAN SHEET.

CALTRANS DISTRICT 7
100 S. MAIN STREET
LOS ANGELES, CA 90012

CH2M HILL
1000 WILSHIRE BLVD
LOS ANGELES, CA 90017

NOTE:

1. FOR QUANTITIES OF DRAINAGE SYSTEMS/UNITS TO BE REMOVED OR ABANDONED, SEE SHEETS DQ-30 TO DQ-34.

DRAINAGE PLAN SHEET No.	DRAINAGE SYSTEM No. ⬡	DRAINAGE UNIT ◯	ADJUST INLET	ADJUST MANHOLE TO GRADE	CAP INLET	DITCH EXCAVATION (TYPE Z-2) AERIALLY DEPOSITED LEAD	HOT MIX ASPHALT (TYPE A)	PLACE HOT MIX ASPHALT (MISC AREAS)	MINOR CONCRETE (MINOR STRUCTURE)	MINOR CONCRETE (BACKFILL)	APC 12"	APC 18"	APC 24"	CSP 18" Bit Ctd CSP (.079" THICK)	CSP 24" Bit Ctd CSP (.079" THICK)	12" Bit Ctd SCSP (.079" THICK)	18" Bit Ctd SCSP (.079" THICK)	12" Bit Ctd CSP RISER (.079" THICK)	36" Bit Ctd CSP RISER (.079" THICK)	3" PLASTIC PIPE (SCH 40 PVC)	GRATED LINE DRAIN	(N) WALL DRAIN	18" ALTERNATIVE FLARED END SECTION	24" ALTERNATIVE FLARED END SECTION	ROCK SLOPE PROTECTION (FACING, METHOD B)	ROCK SLOPE PROTECTION FABRIC	8" PERFORATED PLASTIC PIPE UNDERDRAIN	GSRD (LR-1)	GSRD (LR-2)	GSRD (INCLINED SCREEN TYPE A)	MISCELLANEOUS IRON AND STEEL	(N) FRAME & GRATE (24-12)	(N) ELBOW	(N) CONCRETE COLLAR	(N) "H" OR "V"	(N) PIPE JOINT CLASSIFICATION	(N) MAXIMUM COVER	DESCRIPTION	STATION	DRAINAGE PLAN SHEET No.	DRAINAGE SYSTEM No. ⬡	DRAINAGE UNIT ◯
			EA	EA	EA	CY	TON	SQYD	CY	CY	LF	LF	LF	LF	LF	LF	LF	LF	LF	LF	LF	LF	EA	EA	CY	SQYD	LF	EA	EA	EA	LB	EA	EA	EA	FT	LF	FT					
D-2	5	a																							3.70	14.00												RSP (FACING, METHOD B)		D-2	5	a
		b																										1										LR-1-(4'-0") GSRD	88.50' Lt "R710A" 951+45.00			b
		c																																				REMOVE 18" RCP				c
		d																																				REMOVE HW				d
D-3	6	a										23.0																								S	5.4	18" APC		D-3	6	a
		b							1.00																						326	1			3.20			G1 INLET w/ Conc APRON	102.53' Rt "R710A" 978+72.21			b
		c				0.30																																OSD A				c
		d				0.38																																OSD A				d
D-3	7	a										8.2																								S	1.1	18" APC		D-3	7	a
		b							0.93																						326	1			2.92			G1 INLET w/ Conc APRON	148.89' Lt "R710A" 977+72.57			b
		c							0.14												24.0																	WQ CULVERT (CASE A)				c
D-4	8	a							0.14												24.0																	WQ CULVERT (CASE A)		D-4	8	a
		b							0.14												24.0																	WQ CULVERT (CASE C)				b
D-4	9	a										13.9																								S	1.7	18" APC		D-4	9	a
		b							0.99																						326	1			3.15			G1 INLET w/ Conc APRON	97.39' Lt "R710A" 1034+54.00			b
		c							0.14												24.0																	WQ CULVERT (CASE A)				c
D-4	10	a							0.14												24.0																	WQ CULVERT (CASE B)		D-4	10	a
		b							0.14												24.0																	WQ CULVERT (CASE A)				b
		c							0.14												24.0																	WQ CULVERT (CASE A)				c
D-4	11	a							0.14												24.0																	WQ CULVERT (CASE B)		D-4	11	a
		b							0.14												24.0																	WQ CULVERT (CASE A)				b
		c							0.14												24.0																	WQ CULVERT (CASE A)				c
SHEET TOTAL		DQ-2				0.68			4.32			45.1									240.0				3.70	14.00		1			978							SHEET TOTAL				

DRAINAGE QUANTITIES

DQ-2

STATE OF CALIFORNIA - DEPARTMENT OF TRANSPORTATION
Caltrans

CONSULTANT FUNCTIONAL SUPERVISOR: MELISSA DE LA PENA

CALCULATED-DESIGNED BY: I. MATAGI
CHECKED BY: R. HENDERSON

REVISED BY
DATE REVISED

LAST REVISION 00-00-00
DATE PLOTTED => 29-JUN-2011
TIME PLOTTED => 07:51

Dist	COUNTY	ROUTE	POST MILES TOTAL PROJECT	SHEET No.	TOTAL SHEETS
07	LA	710	17.2/26.4	542	1507

REGISTERED CIVIL ENGINEER 03/30/11 DATE

6-27-11
PLANS APPROVAL DATE

REGISTERED PROFESSIONAL ENGINEER ROBERT M. HENDERSON No. C66736 Exp. 09/30/12 CIVIL STATE OF CALIFORNIA

THE STATE OF CALIFORNIA OR ITS OFFICERS OR AGENTS SHALL NOT BE RESPONSIBLE FOR THE ACCURACY OR COMPLETENESS OF SCANNED COPIES OF THIS PLAN SHEET.

CALTRANS DISTRICT 7
100 S. MAIN STREET
LOS ANGELES, CA 90012

CH2M HILL
1000 WILSHIRE BLVD
LOS ANGELES, CA 90017

NOTE:

1. FOR QUANTITIES OF DRAINAGE SYSTEMS/UNITS TO BE REMOVED OR ABANDONED, SEE SHEETS DQ-30 TO DQ-34.

DRAINAGE PLAN SHEET No.	DRAINAGE SYSTEM No. ⬡	DRAINAGE UNIT ◯	ADJUST INLET	ADJUST MANHOLE TO GRADE	CAP INLET	DITCH EXCAVATION (TYPE Z-2) AERIALLY DEPOSITED LEAD	HOT MIX ASPHALT (TYPE A)	PLACE HOT MIX ASPHALT (MISC AREAS)	MINOR CONCRETE (MINOR STRUCTURE)	MINOR CONCRETE (BACKFILL)	APC 12"	APC 18"	APC 24"	CSP 18" Bit Ctd CSP (.079" THICK)	CSP 24" Bit Ctd CSP (.079" THICK)	12" Bit Ctd SCSP (.079" THICK)	18" Bit Ctd SCSP (.079" THICK)	12" Bit Ctd CSP RISER (.079" THICK)	36" Bit Ctd CSP RISER (.079" THICK)	3" PLASTIC PIPE (SCH 40 PVC)	GRATED LINE DRAIN	(N) WALL DRAIN	18" ALTERNATIVE FLARED END SECTION	24" ALTERNATIVE FLARED END SECTION	ROCK SLOPE PROTECTION (FACING, METHOD B)	ROCK SLOPE PROTECTION FABRIC	8" PERFORATED PLASTIC PIPE UNDERDRAIN	GSRD (LR-1)	GSRD (LR-2)	GSRD (INCLINED SCREEN TYPE A)	MISCELLANEOUS IRON AND STEEL	(N) FRAME & GRATE (24-12)	(N) ELBOW	(N) CONCRETE COLLAR	(N) "H" OR "V"	(N) PIPE JOINT CLASSIFICATION	(N) MAXIMUM COVER	DESCRIPTION	STATION	DRAINAGE PLAN SHEET No.	DRAINAGE SYSTEM No. ⬡	DRAINAGE UNIT ◯
			EA	EA	EA	CY	TON	SQYD	CY	CY	LF	LF	LF	LF	LF	LF	LF	LF	LF	LF	LF	LF	EA	EA	CY	SQYD	LF	EA	EA	EA	LB	EA	EA	EA	FT	LF	FT					
D-4	11	d							0.14											24.0																		WQ CULVERT (CASE A)		D-4	11	d
		e							0.14											24.0																		WQ CULVERT (CASE A)				e
D-4	12	a							0.14											24.0																		WQ CULVERT (CASE B)		D-4	12	a
D-6		b							0.14											24.0																		WQ CULVERT (CASE A)		D-6		b
		c							0.14											24.0																		WQ CULVERT (CASE A)				c
		d							0.14											24.0																		WQ CULVERT (CASE A)				d
D-4	13	a							1.00																						326	1			3.19			G1 INLET w/ Conc APRON	115.97' Lt "R710A" 1040+43.07	D-4	13	a
D-6		b																							7.41	20.00												RSP (FACING, METHOD B)		D-6		b
		c																						1														24" AFES	222.85' Rt "R710A" 1041+05.85			c
		d													72.8																					S	3.8	24" CSP				d
		e																																				REMOVE CULVERT				e
D-4	14	a							0.14											24.0																		WQ CULVERT (CASE B)		D-4	14	a
		b							0.14											24.0																		WQ CULVERT (CASE C)				b
D-6		c							0.14											24.0																		WQ CULVERT (CASE A)		D-6		c
		d							0.14											24.0																		WQ CULVERT (CASE A)				d
D-5	15	a							0.14											24.0																		WQ CULVERT (CASE B)		D-5	15	a
		b							0.14											24.0																		WQ CULVERT (CASE A)				b
		c							0.14											24.0																		WQ CULVERT (CASE A)				c
D-5	16	a										7.5																								S	0.4	18" APC		D-5	16	a
		b							0.59																										1.85			G1 INLET w/ Conc APRON	126.24' Lt "R710A" 1045+31.64			b
		c					0.41		6.66																													OSD				c
		d																							7.41	20.00												RSP (FACING, METHOD B)				d
SHEET TOTAL		DQ-3					0.41		10.07			7.5			72.8					312.0				1	14.82	40.00					326							SHEET TOTAL				

DRAINAGE QUANTITIES

DQ-3

STATE OF CALIFORNIA - DEPARTMENT OF TRANSPORTATION
Caltrans

CONSULTANT FUNCTIONAL SUPERVISOR: MELISSA DE LA PENA
CALCULATED-DESIGNED BY: I. MATAGI
CHECKED BY: R. HENDERSON
REVISED BY
DATE REVISED

LAST REVISION 00-00-00
DATE PLOTTED => 29-JUN-2011
TIME PLOTTED => 07:51

Dist	COUNTY	ROUTE	POST MILES TOTAL PROJECT	SHEET No.	TOTAL SHEETS
07	LA	710	17.2/26.4	543	1507

REGISTERED CIVIL ENGINEER 03/30/11 DATE

6-27-11
PLANS APPROVAL DATE

REGISTERED PROFESSIONAL ENGINEER ROBERT M. HENDERSON No. C66736 Exp. 09/30/12 CIVIL STATE OF CALIFORNIA

THE STATE OF CALIFORNIA OR ITS OFFICERS OR AGENTS SHALL NOT BE RESPONSIBLE FOR THE ACCURACY OR COMPLETENESS OF SCANNED COPIES OF THIS PLAN SHEET.

CALTRANS DISTRICT 7
100 S. MAIN STREET
LOS ANGELES, CA 90012

CH2M HILL
1000 WILSHIRE BLVD
LOS ANGELES, CA 90017

NOTE:

1. FOR QUANTITIES OF DRAINAGE SYSTEMS/UNITS TO BE REMOVED OR ABANDONED, SEE SHEETS DQ-30 TO DQ-34.

DRAINAGE PLAN SHEET No.	DRAINAGE SYSTEM No. ⬡	DRAINAGE UNIT ◯	ADJUST INLET	ADJUST MANHOLE TO GRADE	CAP INLET	DITCH EXCAVATION (TYPE Z-2) AERIALLY DEPOSITED LEAD	HOT MIX ASPHALT (TYPE A)	PLACE HOT MIX ASPHALT (MISC AREAS)	MINOR CONCRETE (MINOR STRUCTURE)	MINOR CONCRETE (BACKFILL)	APC 12"	APC 18"	APC 24"	CSP 18" Bit Ctd CSP (.079" THICK)	CSP 24" Bit Ctd CSP (.079" THICK)	12" Bit Ctd SCSP (.079" THICK)	18" Bit Ctd SCSP (.079" THICK)	12" Bit Ctd CSP RISER (.079" THICK)	36" Bit Ctd CSP RISER (.079" THICK)	3" PLASTIC PIPE (SCH 40 PVC)	GRATED LINE DRAIN	(N) WALL DRAIN	18" ALTERNATIVE FLARED END SECTION	24" ALTERNATIVE FLARED END SECTION	ROCK SLOPE PROTECTION (FACING, METHOD B)	ROCK SLOPE PROTECTION FABRIC	8" PERFORATED PLASTIC PIPE UNDERDRAIN	GSRD (LR-1)	GSRD (LR-2)	GSRD (INCLINED SCREEN TYPE A)	MISCELLANEOUS IRON AND STEEL	(N) FRAME & GRATE (24-12)	(N) ELBOW	(N) CONCRETE COLLAR	(N) "H" OR "V"	(N) PIPE JOINT CLASSIFICATION	(N) MAXIMUM COVER	DESCRIPTION	STATION	DRAINAGE PLAN SHEET No.	DRAINAGE SYSTEM No. ⬡	DRAINAGE UNIT ◯
			EA	EA	EA	CY	TON	SQYD	CY	CY	LF	LF	LF	LF	LF	LF	LF	LF	LF	LF	LF	LF	EA	EA	CY	SQYD	LF	EA	EA	EA	LB	EA	EA	EA	FT	LF	FT					
D-7	17	a							0.48																						326	1			1.50			TYPE CL2 INLET (CASE 2)	0.00′ R+ "R710A" 1091+00.00	D-7	17	a
		b							0.48																						326	1			1.50			TYPE CL2 INLET (CASE 2)	0.00′ R+ "R710A" 1092+00.00			b
		c							0.48																						326	1			1.50			TYPE CL2 INLET (CASE 2)	0.00′ R+ "R710A" 1094+00.00			c
D-7	18	a																																				REMOVE CLEANOUT	0.44′ R+ "R710A" 1087+26.90	D-7	18	a
		b																																				REMOVE CLEANOUT	0.06′ R+ "R710A" 1090+44.73			b
		c																																				REMOVE CLEANOUT	0.04′ L+ "R710A" 1091+25.97			c
		d																																				REMOVE CLEANOUT	0.50′ L+ "R710A" 1092+07.44			d
		e																																				REMOVE CLEANOUT	0.32′ L+ "R710A" 1093+87.21			e
D-7	19	a	1																																			Adj INLET (CASE 2)	0.07′ R+ "R710A" 1085+58.78	D-7	19	a
		b	1																																			Adj INLET (CASE 2)	0.05′ L+ "R710A" 1087+91.08			b
		c	1																																			Adj INLET (CASE 2)	0.37′ L+ "R710A" 1089+63.55			c
		d	1																																			Adj INLET (CASE 2)	0.04′ L+ "R710A" 1092+88.31			d
D-8	20	a			1																																	CAP INLET	58.13′ L+ "R710A" 1105+18.99	D-8	20	a
		b			1																																	CAP INLET	58.13′ L+ "R710A" 1105+37.85			b
		c										4.7																								S	3.0	18" APC				c
		d							1.07																						326	1			3.52			G1 INLET	65.50′ L+ "R710A" 1105+38.00			d
		e	1																																			Adj INLET (CASE 1)	56.98′ R+ "R710A" 1105+38.08			e
		f										34.1																								S	1.6	18" APC				f
		g							0.97																						326	1			3.05			G1 INLET	65.49′ R+ "R710A" 1105+73.63			g
		h																				4.5																WALL DRAIN (CASE 2)	65.50′ R+ "R710A" 1105+73.50			h
		i	1																																			Adj INLET (CASE 2)	0.06′ R+ "R710A" 1105+38.35			i
D-8	21	a			1																																	CAP INLET	57.27′ L+ "R710A" 1107+86.27	D-8	21	a
		b										5.2																								S	2.6	18" APC				b
		c							1.12																						326	1			3.76			G1 INLET	65.74′ L+ "R710A" 1107+87.00			c
SHEET TOTAL		DQ-4	6		3				4.60			44.0																			1956							SHEET TOTAL				

DRAINAGE QUANTITIES

DQ-4

STATE OF CALIFORNIA - DEPARTMENT OF TRANSPORTATION

CONSULTANT FUNCTIONAL SUPERVISOR: MELISSA DE LA PENA

CALCULATED-DESIGNED BY: I. MATAGI

CHECKED BY: R. HENDERSON

REVISED BY

DATE REVISED

LAST REVISION 00-00-00

DATE PLOTTED => 29-JUN-2011
TIME PLOTTED => 07:51

Dist	COUNTY	ROUTE	POST MILES TOTAL PROJECT	SHEET No.	TOTAL SHEETS
07	LA	710	17.2/26.4	544	1507

REGISTERED CIVIL ENGINEER 03/30/11 DATE

6-27-11
PLANS APPROVAL DATE

REGISTERED PROFESSIONAL ENGINEER ROBERT M. HENDERSON No. C66736 Exp.09/30/12 CIVIL STATE OF CALIFORNIA

THE STATE OF CALIFORNIA OR ITS OFFICERS OR AGENTS SHALL NOT BE RESPONSIBLE FOR THE ACCURACY OR COMPLETENESS OF SCANNED COPIES OF THIS PLAN SHEET.

CALTRANS DISTRICT 7
100 S. MAIN STREET
LOS ANGELES, CA 90012

CH2M HILL
1000 WILSHIRE BLVD
LOS ANGELES, CA 90017

NOTE:

1. FOR QUANTITIES OF DRAINAGE SYSTEMS/UNITS TO BE REMOVED OR ABANDONED, SEE SHEETS DQ-30 TO DQ-34.

DRAINAGE PLAN SHEET No.	DRAINAGE SYSTEM No. ⬡	DRAINAGE UNIT ◯	ADJUST INLET	ADJUST MANHOLE TO GRADE	CAP INLET	DITCH EXCAVATION (TYPE Z-2) AERIALLY DEPOSITED LEAD	HOT MIX ASPHALT (TYPE A)	PLACE HOT MIX ASPHALT (MISC AREAS)	MINOR CONCRETE (MINOR STRUCTURE)	MINOR CONCRETE (BACKFILL)	APC 12"	APC 18"	APC 24"	CSP 18" Bit Ctd CSP (.079" THICK)	CSP 24" Bit Ctd CSP (.079" THICK)	12" Bit Ctd SCSP (.079" THICK)	18" Bit Ctd SCSP (.079" THICK)	12" Bit Ctd CSP RISER (.079" THICK)	36" Bit Ctd CSP RISER (.079" THICK)	3" PLASTIC PIPE (SCH 40 PVC)	GRATED LINE DRAIN	(N) WALL DRAIN	18" ALTERNATIVE FLARED END SECTION	24" ALTERNATIVE FLARED END SECTION	ROCK SLOPE PROTECTION (FACING, METHOD B)	ROCK SLOPE PROTECTION FABRIC	8" PERFORATED PLASTIC PIPE UNDERDRAIN	GSRD (LR-1)	GSRD (LR-2)	GSRD (INCLINED SCREEN TYPE A)	MISCELLANEOUS IRON AND STEEL	(N) FRAME & GRATE (24-12)	(N) ELBOW	(N) CONCRETE COLLAR	(N) "H" OR "V"	(N) PIPE JOINT CLASSIFICATION	(N) MAXIMUM COVER	DESCRIPTION	STATION	DRAINAGE PLAN SHEET No.	DRAINAGE SYSTEM No. ⬡	DRAINAGE UNIT ◯
			EA	EA	EA	CY	TON	SQYD	CY	CY	LF	LF	LF	LF	LF	LF	LF	LF	LF	LF	LF	LF	EA	EA	CY	SQYD	LF	EA	EA	EA	LB	EA	EA	EA	FT	LF	FT					
D-8	21	d	1																																			Adj INLET (CASE 1)	56.91' Rt "R710A" 1107+86.83	D-8	21	d
D-8	22	a							0.48																						326	1			1.50			TYPE CL2 INLET (CASE 2)	0.00' Rt "R710A" 1095+00.00	D-8	22	a
		b							0.48																						326	1			1.50			TYPE CL2 INLET (CASE 2)	0.00' Rt "R710A" 1097+00.00			b
		c							0.48																						326	1			1.50			TYPE CL2 INLET (CASE 2)	0.00' Rt "R710A" 1098+00.00			c
		d							0.48																						326	1			1.50			TYPE CL2 INLET (CASE 2)	0.00' Rt "R710A" 1099+00.00			d
		e							0.48																						326	1			1.50			TYPE CL2 INLET (CASE 2)	0.00' Rt "R710A" 1100+00.00			e
		f							0.48																						326	1			1.50			TYPE CL2 INLET (CASE 2)	0.00' Rt "R710A" 1101+00.00			f
		g							0.48																						326	1			1.50			TYPE CL2 INLET (CASE 2)	0.00' Rt "R710A" 1102+00.00			g
		h							0.48																						326	1			1.50			TYPE CL2 INLET (CASE 2)	0.00' Rt "R710A" 1103+00.00			h
		i							0.48																						326	1			1.50			TYPE CL2 INLET (CASE 2)	0.00' Rt "R710A" 1104+00.00			i
		j							0.48																						326	1			1.50			TYPE CL2 INLET (CASE 2)	0.00' Rt "R710A" 1105+00.00			j
		k							0.48																						326	1			1.50			TYPE CL2 INLET (CASE 2)	0.00' Rt "R710A" 1106+00.00			k
		l							0.48																						326	1			1.50			TYPE CL2 INLET (CASE 2)	0.00' Rt "R710A" 1107+00.00			l
		m							0.48																						326	1			1.50			TYPE CL2 INLET (CASE 2)	0.00' Rt "R710A" 1108+00.00			m
D-8	23	a																																				REMOVE CLEANOUT	0.17' Rt "R710A" 1094+87.03	D-8	23	a
		b																																				REMOVE CLEANOUT	0.13' Lt "R710A" 1095+00.00			b
		c																																				REMOVE CLEANOUT	0.20' Lt "R710A" 1097+60.49			c
		d																																				REMOVE CLEANOUT	0.24' Rt "R710A" 1098+75.11			d
		e																																				REMOVE CLEANOUT	0.29' Rt "R710A" 1099+78.66			e
		f																																				REMOVE CLEANOUT	0.24' Lt "R710A" 1100+78.31			f
		g																																				REMOVE CLEANOUT	0.06' Lt "R710A" 1101+70.32			g
		h																																				REMOVE CLEANOUT	0.03' Lt "R710A" 1102+62.14			h
		i																																				REMOVE CLEANOUT	0.81' Rt "R710A" 1103+54.69			i
		j																																				REMOVE CLEANOUT	0.23' Rt "R710A" 1104+46.57			j
		k																																				REMOVE CLEANOUT	0.08' Rt "R710A" 1106+32.05			k
		l																																				REMOVE CLEANOUT	0.05' Lt "R710A" 1107+26.27			l
SHEET TOTAL		DQ-5	1						6.24																						4238							SHEET TOTAL				

DRAINAGE QUANTITIES

DQ-5

STATE OF CALIFORNIA - DEPARTMENT OF TRANSPORTATION
Caltrans

CONSULTANT FUNCTIONAL SUPERVISOR: MELISSA DE LA PENA
CALCULATED-DESIGNED BY: I. MATAGI
CHECKED BY: R. HENDERSON
REVISED BY
DATE REVISED

LAST REVISION 00-00-00
DATE PLOTTED => 29-JUN-2011
TIME PLOTTED => 07:51

Dist	COUNTY	ROUTE	POST MILES TOTAL PROJECT	SHEET No.	TOTAL SHEETS
07	LA	710	17.2/26.4	545	1507

REGISTERED CIVIL ENGINEER 03/30/11 DATE

6-27-11
PLANS APPROVAL DATE

REGISTERED PROFESSIONAL ENGINEER ROBERT M. HENDERSON No. C66736 Exp.09/30/12 CIVIL STATE OF CALIFORNIA

THE STATE OF CALIFORNIA OR ITS OFFICERS OR AGENTS SHALL NOT BE RESPONSIBLE FOR THE ACCURACY OR COMPLETENESS OF SCANNED COPIES OF THIS PLAN SHEET.

CALTRANS DISTRICT 7
100 S. MAIN STREET
LOS ANGELES, CA 90012

CH2M HILL
1000 WILSHIRE BLVD
LOS ANGELES, CA 90017

NOTE:

1. FOR QUANTITIES OF DRAINAGE SYSTEMS/UNITS TO BE REMOVED OR ABANDONED, SEE SHEETS DQ-30 TO DQ-34.

DRAINAGE PLAN SHEET No.	DRAINAGE SYSTEM No. ⬡	DRAINAGE UNIT ◯	ADJUST INLET	ADJUST MANHOLE TO GRADE	CAP INLET	DITCH EXCAVATION (TYPE Z-2) AERIALLY DEPOSITED LEAD	HOT MIX ASPHALT (TYPE A)	PLACE HOT MIX ASPHALT (MISC AREAS)	MINOR CONCRETE (MINOR STRUCTURE)	MINOR CONCRETE (BACKFILL)	APC 12"	APC 18"	APC 24"	CSP 18" Bit Ctd CSP (.079" THICK)	CSP 24" Bit Ctd CSP (.079" THICK)	12" Bit Ctd SCSP (.079" THICK)	18" Bit Ctd SCSP (.079" THICK)	12" Bit Ctd CSP RISER (.079" THICK)	36" Bit Ctd CSP RISER (.079" THICK)	3" PLASTIC PIPE (SCH 40 PVC)	GRATED LINE DRAIN	(N) WALL DRAIN	18" ALTERNATIVE FLARED END SECTION	24" ALTERNATIVE FLARED END SECTION	ROCK SLOPE PROTECTION (FACING, METHOD B)	ROCK SLOPE PROTECTION FABRIC	8" PERFORATED PLASTIC PIPE UNDERDRAIN	GSRD (LR-1)	GSRD (LR-2)	GSRD (INCLINED SCREEN TYPE A)	MISCELLANEOUS IRON AND STEEL	(N) FRAME & GRATE (24-12)	(N) ELBOW	(N) CONCRETE COLLAR	(N) "H" OR "V"	(N) PIPE JOINT CLASSIFICATION	(N) MAXIMUM COVER	DESCRIPTION	STATION	DRAINAGE PLAN SHEET No.	DRAINAGE SYSTEM No. ⬡	DRAINAGE UNIT ◯
			EA	EA	EA	CY	TON	SQYD	CY	CY	LF	LF	LF	LF	LF	LF	LF	LF	LF	LF	LF	LF	EA	EA	CY	SQYD	LF	EA	EA	EA	LB	EA	EA	EA	FT	LF	FT					
D-8	23	m																																				REMOVE CLEANOUT	0.27' Lt "R710A" 1108+20.65	D-8	23	m
D-8	24	a																									237.0											8" PVC UNDERDRAIN		D-8	24	a
		b																									244.0											8" PVC UNDERDRAIN				b
		c																									121.0											8" PVC UNDERDRAIN				c
		d																									372.0											8" PVC UNDERDRAIN				d
		e																									237.0											8" PVC UNDERDRAIN				e
		f																									122.0											8" PVC UNDERDRAIN				f
D-8	25	a																																				REMOVE 8" UNDERDRAIN		D-8	25	a
		b																																				REMOVE 8" UNDERDRAIN				b
		c																																				REMOVE 8" UNDERDRAIN				c
		d																																				REMOVE 8" UNDERDRAIN				d
D-9	26	a			1																																	CAP INLET	57.95' Lt "R710A" 1109+13.10	D-9	26	a
		b											4.0																							S	3.9	24" APC				b
		c							1.04																						326	1			3.37			G1 INLET	65.68' Lt "R710A" 1108+93.00			c
		d										16.9																								S	3.6	18" APC				d
		e							1.14																						326	1			3.86			G1 INLET	65.22' Lt "R710A" 1109+13.00			e
		f										8.1																								S	3.6	18" APC				f
		g							1.50																						652	2			3.46			GD-1 INLET	65.01' Lt "R710A" 1109+24.17			g
		h										16.4																								S	3.4	18" APC				h
		i							1.04																						326	1			3.37			G1 INLET	64.65' Lt "R710A" 1109+43.74			i
D-9	27	a							1.03																						326	1			3.32			G1 INLET	64.16' Rt "R710A" 1109+05.85	D-9	27	a
		b																				6.3																WALL DRAIN (CASE 2)	64.90' Rt "R710A" 1108+96.33			b
		c										28.5																								S	3.3	18" APC				c
		d	1																																			Adj INLET (CASE 1)	56.78' Rt "R710A" 1109+36.65			d
SHEET TOTAL		DQ-6	1		1				5.75			69.9	4.0														1333.0				1956							SHEET TOTAL				

DRAINAGE QUANTITIES

DQ-6

STATE OF CALIFORNIA - DEPARTMENT OF TRANSPORTATION

Caltrans

CONSULTANT FUNCTIONAL SUPERVISOR: MELISSA DE LA PENA

CALCULATED-DESIGNED BY: I. MATAGI

CHECKED BY: R. HENDERSON

REVISED BY

DATE REVISED

LAST REVISION 00-00-00

DATE PLOTTED => 29-JUN-2011
TIME PLOTTED => 07:51

Dist	COUNTY	ROUTE	POST MILES TOTAL PROJECT	SHEET No.	TOTAL SHEETS
07	LA	710	17.2/26.4	546	1507

REGISTERED CIVIL ENGINEER 03/30/11 DATE

6-27-11
PLANS APPROVAL DATE

REGISTERED PROFESSIONAL ENGINEER ROBERT M. HENDERSON No. C66736 Exp.09/30/12 CIVIL STATE OF CALIFORNIA

THE STATE OF CALIFORNIA OR ITS OFFICERS OR AGENTS SHALL NOT BE RESPONSIBLE FOR THE ACCURACY OR COMPLETENESS OF SCANNED COPIES OF THIS PLAN SHEET.

CALTRANS DISTRICT 7
100 S. MAIN STREET
LOS ANGELES, CA 90012

CH2M HILL
1000 WILSHIRE BLVD
LOS ANGELES, CA 90017

DRAINAGE PLAN SHEET No.	DRAINAGE SYSTEM No. ⬡	DRAINAGE UNIT ◯	ADJUST INLET	ADJUST MANHOLE TO GRADE	CAP INLET	DITCH EXCAVATION (TYPE Z-2) AERIALLY DEPOSITED LEAD	HOT MIX ASPHALT (TYPE A)	PLACE HOT MIX ASPHALT (MISC AREAS)	MINOR CONCRETE (MINOR STRUCTURE)	MINOR CONCRETE (BACKFILL)	APC 12"	APC 18"	APC 24"	CSP 18" Bit Ctd CSP (.079" THICK)	CSP 24" Bit Ctd CSP (.079" THICK)	12" Bit Ctd SCSP (.079" THICK)	18" Bit Ctd SCSP (.079" THICK)	12" Bit Ctd CSP RISER (.079" THICK)	36" Bit Ctd CSP RISER (.079" THICK)	3" PLASTIC PIPE (SCH 40 PVC)	GRATED LINE DRAIN	(N) WALL DRAIN	18" ALTERNATIVE FLARED END SECTION	24" ALTERNATIVE FLARED END SECTION	ROCK SLOPE PROTECTION (FACING, METHOD B)	ROCK SLOPE PROTECTION FABRIC	8" PERFORATED PLASTIC PIPE UNDERDRAIN	GSRD (LR-1)	GSRD (LR-2)	GSRD (INCLINED SCREEN TYPE A)	MISCELLANEOUS IRON AND STEEL	(N) FRAME & GRATE (24-12)	(N) ELBOW	(N) CONCRETE COLLAR	(N) "H" OR "V"	(N) PIPE JOINT CLASSIFICATION	(N) MAXIMUM COVER	DESCRIPTION	STATION	DRAINAGE PLAN SHEET No.	DRAINAGE SYSTEM No. ⬡	DRAINAGE UNIT ◯
			EA	EA	EA	CY	TON	SQYD	CY	CY	LF	LF	LF	LF	LF	LF	LF	LF	LF	LF	LF	LF	EA	EA	CY	SQYD	LF	EA	EA	EA	LB	EA	EA	EA	FT	LF	FT					
D-9	27	e	1																																			Adj INLET (CASE 1)	0.10′ L+ "R710A" 1109+11.98	D-9	27	e
		f	1																																			Adj INLET (CASE 1)	0.04′ R+ "R710A" 1109+32.11			f
		g																			54.0																	GLD	3.96′ R+ "R710A" 1109+86.07			g
D-9	28	a	1																																			Adj INLET (CASE 1)	56.94′ L+ "R710A" 1109+87.77	D-9	28	a
D-9	29	a							1.07																						326	1			3.51			G1 INLET	63.27′ L+ "R710A" 1111+21.00	D-9	29	a
		b										3.0																								S	2.0	18" APC				b
		c			1																																	CAP INLET	57.08′ L+ "R710A" 1114+11.26			c
		d	1																																			Adj INLET (CASE 1)	56.82′ R+ "R710A" 1111+21.35			d
		e							1.07																						326	1			2.44			G2 INLET	67.51′ R+ "R710A" 1110+99.76			e
		f	1																																			Adj INLET (CASE 2)	0.22′ R+ "R710A" 111+20.70			f
D-9	30	a							1.08																						326	1			3.56			G1 INLET	65.50′ L+ "R710A" 1114+11.00	D-9	30	a
		b										5.1																								S	2.1	18" APC				b
		c			1																																	CAP INLET	57.89′ L+ "R710A" 1114+11.26			c
		d			1																																	CAP INLET	57.77′ R+ "R710A" 1114+11.43			d
		e										8.1																								S	2.2	18" APC				e
		f							0.85																						326	1			2.67			G1 INLET	68.50′ R+ "R710A" 1114+11.28			f
		g																																				Adj INLET (CASE 2)	0.15′ R+ "R710A" 1114+11.37			g
D-9	31	a			1																																	CAP INLET	58.16′ L+ "R710A" 1116+86.09	D-9	31	a
		b										4.4																								S	2.8	18" APC				b
		c							1.14																						326	1			3.85			G1 INLET	65.50′ L+ "R710A" 1116+86.00			c
D-9	32	a			1																																	CAP INLET	57.38′ L+ "R710A" 1119+36.29	D-9	32	a
		b										5.2																								S	2.3	18" APC				b
		c							1.12																						326	1			3.77			G1 INLET	65.50′ L+ "R710A" 1119+36.00			c
SHEET TOTAL		DQ-7	5		5				6.33			25.8									54.0										1956							SHEET TOTAL				

DRAINAGE QUANTITIES

DQ-7

STATE OF CALIFORNIA - DEPARTMENT OF TRANSPORTATION

Caltrans

CONSULTANT FUNCTIONAL SUPERVISOR: MELISSA DE LA PENA

CALCULATED-DESIGNED BY: I. MATAGI

CHECKED BY: R. HENDERSON

REVISED BY

DATE REVISED

LAST REVISION 00-00-00

DATE PLOTTED => 29-JUN-2011
TIME PLOTTED => 07:51

Dist	COUNTY	ROUTE	POST MILES TOTAL PROJECT	SHEET No.	TOTAL SHEETS
07	LA	710	17.2/26.4	547	1507

REGISTERED CIVIL ENGINEER 03/30/11 DATE

6-27-11
PLANS APPROVAL DATE

REGISTERED PROFESSIONAL ENGINEER ROBERT M. HENDERSON No. C66736 Exp. 09/30/12 CIVIL STATE OF CALIFORNIA

THE STATE OF CALIFORNIA OR ITS OFFICERS OR AGENTS SHALL NOT BE RESPONSIBLE FOR THE ACCURACY OR COMPLETENESS OF SCANNED COPIES OF THIS PLAN SHEET.

CALTRANS DISTRICT 7
100 S. MAIN STREET
LOS ANGELES, CA 90012

CH2M HILL
1000 WILSHIRE BLVD
LOS ANGELES, CA 90017

NOTE:

1. FOR QUANTITIES OF DRAINAGE SYSTEMS/UNITS TO BE REMOVED OR ABANDONED, SEE SHEETS DQ-30 TO DQ-34.

DRAINAGE PLAN SHEET No.	DRAINAGE SYSTEM No. ⬡	DRAINAGE UNIT ◯	ADJUST INLET	ADJUST MANHOLE TO GRADE	CAP INLET	DITCH EXCAVATION (TYPE Z-2) AERIALLY DEPOSITED LEAD	HOT MIX ASPHALT (TYPE A)	PLACE HOT MIX ASPHALT (MISC AREAS)	MINOR CONCRETE (MINOR STRUCTURE)	MINOR CONCRETE (BACKFILL)	APC 12"	APC 18"	APC 24"	CSP 18" Bit Ctd CSP (.079" THICK)	CSP 24" Bit Ctd CSP (.079" THICK)	12" Bit Ctd SCSP (.079" THICK)	18" Bit Ctd SCSP (.079" THICK)	12" Bit Ctd CSP RISER (.079" THICK)	36" Bit Ctd CSP RISER (.079" THICK)	3" PLASTIC PIPE (SCH 40 PVC)	GRATED LINE DRAIN	(N) WALL DRAIN	18" ALTERNATIVE FLARED END SECTION	24" ALTERNATIVE FLARED END SECTION	ROCK SLOPE PROTECTION (FACING, METHOD B)	ROCK SLOPE PROTECTION FABRIC	8" PERFORATED PLASTIC PIPE UNDERDRAIN	GSRD (LR-1)	GSRD (LR-2)	GSRD (INCLINED SCREEN TYPE A)	MISCELLANEOUS IRON AND STEEL	(N) FRAME & GRATE (24-12)	(N) ELBOW	(N) CONCRETE COLLAR	(N) "H" OR "V"	(N) PIPE JOINT CLASSIFICATION	(N) MAXIMUM COVER	DESCRIPTION	STATION	DRAINAGE PLAN SHEET No.	DRAINAGE SYSTEM No. ⬡	DRAINAGE UNIT ◯
			EA	EA	EA	CY	TON	SQYD	CY	CY	LF	LF	LF	LF	LF	LF	LF	LF	LF	LF	LF	LF	EA	EA	CY	SQYD	LF	EA	EA	EA	LB	EA	EA	EA	FT	LF	FT					
D-9	33	a							1.12																						326	1			3.76			G1 INLET	65.50′ Lt "R710A" 1122+36.00	D-9	33	a
		b										5.3																								S	2.3	18" APC				b
		c			1																																	CAP INLET	57.62′ Lt "R710A" 1122+17.47			c
		d			1																																	CAP INLET	57.62 Lt "R710A" 1122+36.06			d
		e	1																																			Adj INLET (CASE 1)	0.10′ Rt "R710A" 1122+35.77			e
		f										115.8																								S	3.0	18" APC				f
		g							1.29																						326	1			4.54			G1 INLET	68.50′ Rt "R710A" 1121+19.00			g
		h																																				Adj INLET (CASE 2)	0.10′ Lt "R710A" 1122+35.77			h
D-9	34	a							0.48																						326	1			1.50			TYPE CL2 INLET (CASE 2)	0.00′ Rt "R710A" 1109+00.00	D-9	34	a
		b							0.48																						326	1			1.50			TYPE CL2 INLET (CASE 2)	0.00′ Rt "R710A" 1112+00.00			b
		c							0.48																						326	1			1.50			TYPE CL2 INLET (CASE 2)	0.00′ Rt "R710A" 1113+00.00			c
		d							0.48																						326	1			1.50			TYPE CL2 INLET (CASE 2)	0.00′ Rt "R710A" 1114+00.00			d
		e							0.48																						326	1			1.50			TYPE CL2 INLET (CASE 2)	0.00′ Rt "R710A" 1115+00.00			e
		f							0.48																						326	1			1.50			TYPE CL2 INLET (CASE 2)	0.00′ Rt "R710A" 1116+00.00			f
		g							0.48																						326	1			1.50			TYPE CL2 INLET (CASE 2)	0.00′ Rt "R710A" 1117+00.00			g
		h							0.48																						326	1			1.50			TYPE CL2 INLET (CASE 2)	0.00′ Rt "R710A" 1118+00.00			h
		i							0.48																						326	1			1.50			TYPE CL2 INLET (CASE 2)	0.00′ Rt "R710A" 1119+00.00			i
		j							0.48																						326	1			1.50			TYPE CL2 INLET (CASE 2)	0.00′ Rt "R710A" 1120+00.00			j
		k							0.48																						326	1			1.50			TYPE CL2 INLET (CASE 2)	0.00′ Rt "R710A" 1121+00.00			k
D-9	35	a																																				REMOVE CLEANOUT	0.10′ Lt "R710A" 1112+21.15	D-9	35	a
		b																																				REMOVE CLEANOUT	0.02′ Lt "R710A" 1113+18.97			b
		c																																				REMOVE CLEANOUT	0.15′ Rt "R710A" 1114+11.37			c
		d																																				REMOVE CLEANOUT	0.09′ Rt "R710A" 1115+16.42			d
		e																																				REMOVE CLEANOUT	0.24′ Rt "R710A" 1116+13.91			e
		f																																				REMOVE CLEANOUT	0.24′ Lt "R710A" 1117+14.84			f
		g																																				REMOVE CLEANOUT	0.19′ Rt "R710A" 1119+12.16			g
SHEET TOTAL		DQ-8	1		2				7.69			121.1																			4238							SHEET TOTAL				

DRAINAGE QUANTITIES

DQ-8

STATE OF CALIFORNIA - DEPARTMENT OF TRANSPORTATION

Caltrans

CONSULTANT FUNCTIONAL SUPERVISOR: MELISSA DE LA PENA

CALCULATED-DESIGNED BY: I. MATAGI

CHECKED BY: R. HENDERSON

REVISED BY

DATE REVISED

LAST REVISION 00-00-00

DATE PLOTTED => 29-JUN-2011
TIME PLOTTED => 07:51

Dist	COUNTY	ROUTE	POST MILES TOTAL PROJECT	SHEET No.	TOTAL SHEETS
07	LA	710	17.2/26.4	548	1507

REGISTERED CIVIL ENGINEER 03/30/11 DATE

6-27-11
PLANS APPROVAL DATE

REGISTERED PROFESSIONAL ENGINEER ROBERT M. HENDERSON No. C66736 Exp.09/30/12 CIVIL STATE OF CALIFORNIA

THE STATE OF CALIFORNIA OR ITS OFFICERS OR AGENTS SHALL NOT BE RESPONSIBLE FOR THE ACCURACY OR COMPLETENESS OF SCANNED COPIES OF THIS PLAN SHEET.

CALTRANS DISTRICT 7
100 S. MAIN STREET
LOS ANGELES, CA 90012

CH2M HILL
1000 WILSHIRE BLVD
LOS ANGELES, CA 90017

NOTE:

1. FOR QUANTITIES OF DRAINAGE SYSTEMS/UNITS TO BE REMOVED OR ABANDONED, SEE SHEETS DQ-30 TO DQ-34.

DRAINAGE PLAN SHEET No.	DRAINAGE SYSTEM No. ⬡	DRAINAGE UNIT ◯	ADJUST INLET	ADJUST MANHOLE TO GRADE	CAP INLET	DITCH EXCAVATION (TYPE Z-2) AERIALLY DEPOSITED LEAD	HOT MIX ASPHALT (TYPE A)	PLACE HOT MIX ASPHALT (MISC AREAS)	MINOR CONCRETE (MINOR STRUCTURE)	MINOR CONCRETE (BACKFILL)	APC 12"	APC 18"	APC 24"	CSP 18" Bit Ctd CSP (.079" THICK)	CSP 24" Bit Ctd CSP (.079" THICK)	12" Bit Ctd SCSP (.079" THICK)	18" Bit Ctd SCSP (.079" THICK)	12" Bit Ctd CSP RISER (.079" THICK)	36" Bit Ctd CSP RISER (.079" THICK)	3" PLASTIC PIPE (SCH 40 PVC)	GRATED LINE DRAIN	(N) WALL DRAIN	18" ALTERNATIVE FLARED END SECTION	24" ALTERNATIVE FLARED END SECTION	ROCK SLOPE PROTECTION (FACING, METHOD B)	ROCK SLOPE PROTECTION FABRIC	8" PERFORATED PLASTIC PIPE UNDERDRAIN	GSRD (LR-1)	GSRD (LR-2)	GSRD (INCLINED SCREEN TYPE A)	MISCELLANEOUS IRON AND STEEL	(N) FRAME & GRATE (24-12)	(N) ELBOW	(N) CONCRETE COLLAR	(N) "H" OR "V"	(N) PIPE JOINT CLASSIFICATION	(N) MAXIMUM COVER	DESCRIPTION	STATION	DRAINAGE PLAN SHEET No.	DRAINAGE SYSTEM No. ⬡	DRAINAGE UNIT ◯
			EA	EA	EA	CY	TON	SQYD	CY	CY	LF	LF	LF	LF	LF	LF	LF	LF	LF	LF	LF	LF	EA	EA	CY	SQYD	LF	EA	EA	EA	LB	EA	EA	EA	FT	LF	FT					
D-9	35	h																																				REMOVE CLEANOUT	0.09′ Rt "R710A" 1120+07.63	D-9	35	h
		i																																				REMOVE CLEANOUT	0.15′ Rt "R710A" 1121+07.71			i
D-9	36	a																									180.0											8" PVC UNDERDRAIN		D-9	36	a
		b																									283.0											8" PVC UNDERDRAIN				b
		c																									217.0											8" PVC UNDERDRAIN				c
		d																									354.0											8" PVC UNDERDRAIN				d
		e																									204.0											8" PVC UNDERDRAIN				e
		f																									286.0											8" PVC UNDERDRAIN				f
		g																									218.0											8" PVC UNDERDRAIN				g
		h																									55.0											8" PVC UNDERDRAIN				h
		i																									294.0											8" PVC UNDERDRAIN				i
		j																									135.0											8" PVC UNDERDRAIN				j
		k																									122.0											8" PVC UNDERDRAIN				k
D-9	37	a																																				REMOVE 8" UNDERDRAIN		D-9	37	a
		b																																				REMOVE 8" UNDERDRAIN				b
		c																																				REMOVE 8" UNDERDRAIN				c
		d																																				REMOVE 8" UNDERDRAIN				d
		e																																				REMOVE 8" UNDERDRAIN				e
		f																																				REMOVE 8" UNDERDRAIN				f
		g																																				REMOVE 8" UNDERDRAIN				g
		h																																				REMOVE 8" UNDERDRAIN				h
		i																																				REMOVE 8" UNDERDRAIN				i
D-10	38	a							1.05																						326	1			3.41			G1 INLET	64.23′ Lt "R710A" 1123+47.00	D-10	38	a
		b										17.4																								S	2.0	18" APC				b
		c							1.54																						652	2			3.62			GD-1 INLET	63.87′ Lt "R710A" 1123+67.50			c
SHEET TOTAL		DQ-9							2.59			17.4															2348.0				978							SHEET TOTAL				

DRAINAGE QUANTITIES

DQ-9

STATE OF CALIFORNIA - DEPARTMENT OF TRANSPORTATION
Caltrans

CONSULTANT FUNCTIONAL SUPERVISOR: MELISSA DE LA PENA
CALCULATED-DESIGNED BY: I. MATAGI
CHECKED BY: R. HENDERSON
REVISED BY
DATE REVISED

LAST REVISION 00-00-00
DATE PLOTTED => 29-JUN-2011
TIME PLOTTED => 07:51

Dist	COUNTY	ROUTE	POST MILES TOTAL PROJECT	SHEET No.	TOTAL SHEETS
07	LA	710	17.2/26.4	549	1507

REGISTERED CIVIL ENGINEER 03/30/11 DATE

6-27-11
PLANS APPROVAL DATE

REGISTERED PROFESSIONAL ENGINEER ROBERT M. HENDERSON No. C66736 Exp.09/30/12 CIVIL STATE OF CALIFORNIA

THE STATE OF CALIFORNIA OR ITS OFFICERS OR AGENTS SHALL NOT BE RESPONSIBLE FOR THE ACCURACY OR COMPLETENESS OF SCANNED COPIES OF THIS PLAN SHEET.

CALTRANS DISTRICT 7
100 S. MAIN STREET
LOS ANGELES, CA 90012

CH2M HILL
1000 WILSHIRE BLVD
LOS ANGELES, CA 90017

DRAINAGE PLAN SHEET No.	DRAINAGE SYSTEM No. ⬡	DRAINAGE UNIT ◯	ADJUST INLET	ADJUST MANHOLE TO GRADE	CAP INLET	DITCH EXCAVATION (TYPE Z-2) AERIALLY DEPOSITED LEAD	HOT MIX ASPHALT (TYPE A)	PLACE HOT MIX ASPHALT (MISC AREAS)	MINOR CONCRETE (MINOR STRUCTURE)	MINOR CONCRETE (BACKFILL)	APC 12"	APC 18"	APC 24"	CSP 18" Bit Ctd CSP (.079" THICK)	CSP 24" Bit Ctd CSP (.079" THICK)	12" Bit Ctd SCSP (.079" THICK)	18" Bit Ctd SCSP (.079" THICK)	12" Bit Ctd CSP RISER (.079" THICK)	36" Bit Ctd CSP RISER (.079" THICK)	3" PLASTIC PIPE (SCH 40 PVC)	GRATED LINE DRAIN	(N) WALL DRAIN	18" ALTERNATIVE FLARED END SECTION	24" ALTERNATIVE FLARED END SECTION	ROCK SLOPE PROTECTION (FACING, METHOD B)	ROCK SLOPE PROTECTION FABRIC	8" PERFORATED PLASTIC PIPE UNDERDRAIN	GSRD (LR-1)	GSRD (LR-2)	GSRD (INCLINED SCREEN TYPE A)	MISCELLANEOUS IRON AND STEEL	(N) FRAME & GRATE (24-12)	(N) ELBOW	(N) CONCRETE COLLAR	(N) "H" OR "V"	(N) PIPE JOINT CLASSIFICATION	(N) MAXIMUM COVER	DESCRIPTION	STATION	DRAINAGE PLAN SHEET No.	DRAINAGE SYSTEM No. ⬡	DRAINAGE UNIT ◯
			EA	EA	EA	CY	TON	SQYD	CY	CY	LF	LF	LF	LF	LF	LF	LF	LF	LF	LF	LF	LF	EA	EA	CY	SQYD	LF	EA	EA	EA	LB	EA	EA	EA	FT	LF	FT					
D-10	38	d											6.5																							S	1.6	24" APC		D-10	38	d
		e							1.13																						326	1			3.78			G1 INLET	63.70′ L† "R710A" 1123+77.00			e
		f											17.9																							S	1.6	24" APC				f
		g							1.08																						326	1			3.58			G1 INLET	63.32′ L† "R710A" 1123+98.00			g
		h											2.1																							S	1.8	24" APC				h
		i			1																																	CAP INLET	57.79′ L† "R710A" 1123+76.44			i
D-10	39	a																				61.0																GLD	2.24′ R† "R710A" 1124+35.08	D-10	39	a
		b							1.30																						326	1			4.56			G1 INLET	3.99′ R† "R710A" 1123.76.47			b
		c										5.6																								S	3.1	18" APC				c
		d																				4.0																GLD	5.37′ R† "R710A" 1123.73.10			d
		e							1.23																						326	1			4.27			G1 INLET	4.47′ R† "R710A" 1123+68.00			e
		f																				42.0																GLD	5.15′ R† "R710A" 1123+26.03			f
		g	1																																			Adj INLET (CASE 1)	56.99′ R† "R710A" 1123+76.61			g
		h										24.2																								S	1.8	18" APC				h
		i							1.40																						326	1			3.34			G1 INLET	64.49′ R† "R710A" 1123+50.59			i
		j																					4.8															WALL DRAIN (CASE 2)	64.50′ R† "R710A" 1123+50.00			j
D-10	40	a			1																																	CAP INLET	56.33′ L† "R710A" 1125+36.48	D-10	40	a
		b										3.0																								S	2.6	18" APC				b
		c							1.68																						652	2			4.08			GD-1 INLET	65.15′ L† "R710A" 1125+36.00			c
		d			1																																	CAP INLET	57.49′ L† "R710A" 1125+55.49			d
		e																					6.6															WALL DRAIN (CASE 2)	65.18′ L† "R710A" 1125+36.39			e
		f																					4.2															WALL DRAIN (CASE 1)	64.07′ L† "R710A" 1125+03.31			f
D-10	41	a	1																																			Adj INLET (CASE 2)	57.14′ R† "R710A" 1125+36.29	D-10	41	a
		b										42.2																								S	4.0	18" APC				b
		c							1.29																						326	1			4.53			G1 INLET	68.41′ R† "R710A" 1125+79.97			c
SHEET TOTAL		DQ-10	2		3				9.11			75.0	26.5									107.0									2608							SHEET TOTAL				

DRAINAGE QUANTITIES

DQ-10

STATE OF CALIFORNIA - DEPARTMENT OF TRANSPORTATION
Caltrans

CONSULTANT FUNCTIONAL SUPERVISOR: MELISSA DE LA PENA
CALCULATED-DESIGNED BY: I. MATAGI
CHECKED BY: R. HENDERSON
REVISED BY
DATE REVISED

LAST REVISION 00-00-00
DATE PLOTTED => 29-JUN-2011
TIME PLOTTED => 07:51

Dist	COUNTY	ROUTE	POST MILES TOTAL PROJECT	SHEET No.	TOTAL SHEETS
07	LA	710	17.2/26.4	550	1507

REGISTERED CIVIL ENGINEER 03/30/11 DATE

6-27-11
PLANS APPROVAL DATE

REGISTERED PROFESSIONAL ENGINEER ROBERT M. HENDERSON No. C66736 Exp.09/30/12 CIVIL STATE OF CALIFORNIA

THE STATE OF CALIFORNIA OR ITS OFFICERS OR AGENTS SHALL NOT BE RESPONSIBLE FOR THE ACCURACY OR COMPLETENESS OF SCANNED COPIES OF THIS PLAN SHEET.

CALTRANS DISTRICT 7
100 S. MAIN STREET
LOS ANGELES, CA 90012

CH2M HILL
1000 WILSHIRE BLVD
LOS ANGELES, CA 90017

NOTE:

1. FOR QUANTITIES OF DRAINAGE SYSTEMS/UNITS TO BE REMOVED OR ABANDONED, SEE SHEETS DQ-30 TO DQ-34.

DRAINAGE PLAN SHEET No.	DRAINAGE SYSTEM No. ⬡	DRAINAGE UNIT ◯	ADJUST INLET	ADJUST MANHOLE TO GRADE	CAP INLET	DITCH EXCAVATION (TYPE Z-2) AERIALLY DEPOSITED LEAD	HOT MIX ASPHALT (TYPE A)	PLACE HOT MIX ASPHALT (MISC AREAS)	MINOR CONCRETE (MINOR STRUCTURE)	MINOR CONCRETE (BACKFILL)	APC 12"	APC 18"	APC 24"	CSP 18" Bit Ctd CSP (.079" THICK)	CSP 24" Bit Ctd CSP (.079" THICK)	12" Bit Ctd SCSP (.079" THICK)	18" Bit Ctd SCSP (.079" THICK)	12" Bit Ctd CSP RISER (.079" THICK)	36" Bit Ctd CSP RISER (.079" THICK)	3" PLASTIC PIPE (SCH 40 PVC)	GRATED LINE DRAIN	(N) WALL DRAIN	18" ALTERNATIVE FLARED END SECTION	24" ALTERNATIVE FLARED END SECTION	ROCK SLOPE PROTECTION (FACING, METHOD B)	ROCK SLOPE PROTECTION FABRIC	8" PERFORATED PLASTIC PIPE UNDERDRAIN	GSRD (LR-1)	GSRD (LR-2)	GSRD (INCLINED SCREEN TYPE A)	MISCELLANEOUS IRON AND STEEL	(N) FRAME & GRATE (24-12)	(N) ELBOW	(N) CONCRETE COLLAR	(N) "H" OR "V"	(N) PIPE JOINT CLASSIFICATION	(N) MAXIMUM COVER	DESCRIPTION	STATION	DRAINAGE PLAN SHEET No.	DRAINAGE SYSTEM No. ⬡	DRAINAGE UNIT ◯
			EA	EA	EA	CY	TON	SQYD	CY	CY	LF	LF	LF	LF	LF	LF	LF	LF	LF	LF	LF	LF	EA	EA	CY	SQYD	LF	EA	EA	EA	LB	EA	EA	EA	FT	LF	FT					
D-10	41	d																				6.2																WALL DRAIN (CASE 2)	68.40′ Rt "R710A" 1126+00.00	D-10	41	d
		e	1																																			Adj INLET (CASE 2)	0.20′ Rt "R710A" 1125+36.77			e
D-10	42	a	1																																			Adj INLET (CASE 1)	76.73′ Rt "R710A" 1130+86.12	D-10	42	a
		b											182.0																						S	3.3	24" APC				b
		c							1.82																						326	1			4.99			G2 INLET	80.99′ Rt "R710A" 1132+70.00			c
		d																			75.0																	GLD	79.31′ Rt "R710A" 1133+44.99			d
		e											141.6																						S	3.3	24" APC				e
		f							1.78																						652	2			4.42			GD-2 INLET	81.00′ Rt "R710A" 1134+15.00			f
		g	1																																			Adj INLET (CASE 2)	0.13′ Rt "R710A" 1130+86.07			g
D-10	43	a							0.48																						326	1			1.50			TYPE CL2 INLET (CASE 2)	0.00′ Rt "R710A" 1125+00.00	D-10	43	a
		b							0.48																						326	1			1.50			TYPE CL2 INLET (CASE 2)	0.00′ Rt "R710A" 1126+00.00			b
		c							0.48																						326	1			1.50			TYPE CL2 INLET (CASE 2)	0.00′ Rt "R710A" 1127+00.00			c
		d							0.48																						326	1			1.50			TYPE CL2 INLET (CASE 2)	0.00′ Rt "R710A" 1128+00.00			d
		e							0.48																						326	1			1.50			TYPE CL2 INLET (CASE 2)	0.00′ Rt "R710A" 1129+00.00			e
		f							0.48																						326	1			1.50			TYPE CL2 INLET (CASE 2)	0.00′ Rt "R710A" 1130+00.00			f
		g							0.48																						326	1			1.50			TYPE CL2 INLET (CASE 2)	0.00′ Rt "R710A" 1132+00.00			g
		h							0.48																						326	1			1.50			TYPE CL2 INLET (CASE 2)	0.00′ Rt "R710A" 1133+00.00			h
		i							0.48																						326	1			1.50			TYPE CL2 INLET (CASE 2)	0.00′ Rt "R710A" 1134+00.00			i
		j							0.48																						326	1			1.50			TYPE CL2 INLET (CASE 2)	0.00′ Rt "R710A" 1135+00.00			j
		k							0.48																						326	1			1.50			TYPE CL2 INLET (CASE 2)	0.00′ Rt "R710A" 1136+00.00			k
D-10	44	a																																				REMOVE CLEANOUT	0.27′ Lt "R710A" 1126+32.67	D-10	44	a
		b																																				REMOVE CLEANOUT	0.06′ Lt "R710A" 1127+14.47			b
		c																																				REMOVE CLEANOUT	0.04′ Rt "R710A" 1128+07.26			c
		d																																				REMOVE CLEANOUT	0.05′ Rt "R710A" 1129+00.35			d
		e																																				REMOVE CLEANOUT	0.32′ Lt "R710A" 1129+93.34			e
SHEET TOTAL		DQ-11	3						8.88				323.6								75.0										4564							SHEET TOTAL				

DRAINAGE QUANTITIES

DQ-11

I. MATAGI — R. HENDERSON — REVISED BY — DATE REVISED — CALCULATED-DESIGNED BY — CHECKED BY — CONSULTANT FUNCTIONAL SUPERVISOR: MELISSA DE LA PENA

STATE OF CALIFORNIA - DEPARTMENT OF TRANSPORTATION — Caltrans

LAST REVISION 00-00-00 — DATE PLOTTED => 29-JUN-2011 — TIME PLOTTED => 07:52

Dist	COUNTY	ROUTE	POST MILES TOTAL PROJECT	SHEET No.	TOTAL SHEETS
07	LA	710	17.2/26.4	551	1507

REGISTERED CIVIL ENGINEER 03/30/11 DATE

6-27-11
PLANS APPROVAL DATE

REGISTERED PROFESSIONAL ENGINEER ROBERT M. HENDERSON No. C66736 Exp. 09/30/12 CIVIL STATE OF CALIFORNIA

THE STATE OF CALIFORNIA OR ITS OFFICERS OR AGENTS SHALL NOT BE RESPONSIBLE FOR THE ACCURACY OR COMPLETENESS OF SCANNED COPIES OF THIS PLAN SHEET.

CALTRANS DISTRICT 7
100 S. MAIN STREET
LOS ANGELES, CA 90012

CH2M HILL
1000 WILSHIRE BLVD
LOS ANGELES, CA 90017

NOTE:

1. FOR QUANTITIES OF DRAINAGE SYSTEMS/UNITS TO BE REMOVED OR ABANDONED, SEE SHEETS DQ-30 TO DQ-34.

DRAINAGE PLAN SHEET No.	DRAINAGE SYSTEM No. ⬡	DRAINAGE UNIT ◯	ADJUST INLET	ADJUST MANHOLE TO GRADE	CAP INLET	DITCH EXCAVATION (TYPE Z-2) AERIALLY DEPOSITED LEAD	HOT MIX ASPHALT (TYPE A)	PLACE HOT MIX ASPHALT (MISC AREAS)	MINOR CONCRETE (MINOR STRUCTURE)	MINOR CONCRETE (BACKFILL)	APC 12"	APC 18"	APC 24"	CSP 18" Bit Ctd CSP (.079" THICK)	CSP 24" Bit Ctd CSP (.079" THICK)	12" Bit Ctd SCSP (.079" THICK)	18" Bit Ctd SCSP (.079" THICK)	12" Bit Ctd CSP RISER (.079" THICK)	36" Bit Ctd CSP RISER (.079" THICK)	3" PLASTIC PIPE (SCH 40 PVC)	GRATED LINE DRAIN	(N) WALL DRAIN	18" ALTERNATIVE FLARED END SECTION	24" ALTERNATIVE FLARED END SECTION	ROCK SLOPE PROTECTION (FACING, METHOD B)	ROCK SLOPE PROTECTION FABRIC	8" PERFORATED PLASTIC PIPE UNDERDRAIN	GSRD (LR-1)	GSRD (LR-2)	GSRD (INCLINED SCREEN TYPE A)	MISCELLANEOUS IRON AND STEEL	(N) FRAME & GRATE (24-12)	(N) ELBOW	(N) CONCRETE COLLAR	(N) "H" OR "V"	(N) PIPE JOINT CLASSIFICATION	(N) MAXIMUM COVER	DESCRIPTION	STATION	DRAINAGE PLAN SHEET No.	DRAINAGE SYSTEM No. ⬡	DRAINAGE UNIT ◯
			EA	EA	EA	CY	TON	SQYD	CY	CY	LF	LF	LF	LF	LF	LF	LF	LF	LF	LF	LF	LF	EA	EA	CY	SQYD	LF	EA	EA	EA	LB	EA	EA	EA	FT	LF	FT					
D-10	44	f																																				REMOVE CLEANOUT	0.13′ Rt "R710A" 1131+83.06	D-10	44	f
		g																																				REMOVE CLEANOUT	0.01′ Rt "R710A" 1132+88.53			g
		h																																				REMOVE CLEANOUT	0.04′ Lt "R710A" 1133+85.65			h
		i																																				REMOVE CLEANOUT	0.07′ Lt "R710A" 1134+86.02			i
		j																																				REMOVE CLEANOUT	0.34′ Rt "R710A" 1135+82.30			j
D-10	45	a																																				REMOVE 8" UNDERDRAIN		D-10	45	a
		b																																				REMOVE 8" UNDERDRAIN				b
		c																																				REMOVE 8" UNDERDRAIN				c
		d																																				REMOVE 8" UNDERDRAIN				d
		e																																				REMOVE 8" UNDERDRAIN				e
		f																																				REMOVE 8" UNDERDRAIN				f
		g																																				REMOVE 8" UNDERDRAIN				g
D-10	46	a																									156.0											8" PVC UNDERDRAIN		D-10	46	a
		b																									792.0											8" PVC UNDERDRAIN				b
		c																									152.0											8" PVC UNDERDRAIN				c
		d																									542.0											8" PVC UNDERDRAIN				d
		e																									162.0											8" PVC UNDERDRAIN				e
D-10	47	a							117.02																													Conc DITCH		D-10	47	a
		b																																				REMOVE Conc DITCH				b
D-11	48	a							1.20																						75							HW	105.18′ Lt "R710A" 1138.00.00	D-11	48	a
		b											66.6																						S	0.8	24" APC				b
		c																																				REMOVE HW				c
		d							1.50																									3.74				G2 INLET w/ Conc Apron	94.45′ Lt "R710A" 1137+36.00			d
		e																																				REMOVE INLET	77.45′ Rt "R710A" 1137+36.32			e
SHEET TOTAL		DQ-12							119.72				66.6														1804.0				75							SHEET TOTAL				

DRAINAGE QUANTITIES

DQ-12

STATE OF CALIFORNIA - DEPARTMENT OF TRANSPORTATION
Caltrans

CONSULTANT FUNCTIONAL SUPERVISOR: MELISSA DE LA PENA
CALCULATED-DESIGNED BY: I. MATAGI
CHECKED BY: R. HENDERSON
REVISED BY
DATE REVISED

LAST REVISION 00-00-00
DATE PLOTTED => 29-JUN-2011
TIME PLOTTED => 07:52

Dist	COUNTY	ROUTE	POST MILES TOTAL PROJECT	SHEET No.	TOTAL SHEETS
07	LA	710	17.2/26.4	552	1507

REGISTERED CIVIL ENGINEER 03/30/11 DATE

6-27-11
PLANS APPROVAL DATE

REGISTERED PROFESSIONAL ENGINEER ROBERT M. HENDERSON No. C66736 Exp.09/30/12 CIVIL STATE OF CALIFORNIA

THE STATE OF CALIFORNIA OR ITS OFFICERS OR AGENTS SHALL NOT BE RESPONSIBLE FOR THE ACCURACY OR COMPLETENESS OF SCANNED COPIES OF THIS PLAN SHEET.

CALTRANS DISTRICT 7
100 S. MAIN STREET
LOS ANGELES, CA 90012

CH2M HILL
1000 WILSHIRE BLVD
LOS ANGELES, CA 90017

NOTE:

1. FOR QUANTITIES OF DRAINAGE SYSTEMS/UNITS TO BE REMOVED OR ABANDONED, SEE SHEETS DQ-30 TO DQ-34.

DRAINAGE PLAN SHEET No.	DRAINAGE SYSTEM No. ⬡	DRAINAGE UNIT ◯	ADJUST INLET	ADJUST MANHOLE TO GRADE	CAP INLET	DITCH EXCAVATION (TYPE Z-2) AERIALLY DEPOSITED LEAD	HOT MIX ASPHALT (TYPE A)	PLACE HOT MIX ASPHALT (MISC AREAS)	MINOR CONCRETE (MINOR STRUCTURE)	MINOR CONCRETE (BACKFILL)	APC 12"	APC 18"	APC 24"	CSP 18" Bit Ctd CSP (.079" THICK)	CSP 24" Bit Ctd CSP (.079" THICK)	12" Bit Ctd SCSP (.079" THICK)	18" Bit Ctd SCSP (.079" THICK)	12" Bit Ctd CSP RISER (.079" THICK)	36" Bit Ctd CSP RISER (.079" THICK)	3" PLASTIC PIPE (SCH 40 PVC)	GRATED LINE DRAIN	(N) WALL DRAIN	18" ALTERNATIVE FLARED END SECTION	24" ALTERNATIVE FLARED END SECTION	ROCK SLOPE PROTECTION (FACING, METHOD B)	ROCK SLOPE PROTECTION FABRIC	8" PERFORATED PLASTIC PIPE UNDERDRAIN	GSRD (LR-1)	GSRD (LR-2)	GSRD (INCLINED SCREEN TYPE A)	MISCELLANEOUS IRON AND STEEL	(N) FRAME & GRATE (24-12)	(N) ELBOW	(N) CONCRETE COLLAR	(N) "H" OR "V"	(N) PIPE JOINT CLASSIFICATION	(N) MAXIMUM COVER	DESCRIPTION	STATION	DRAINAGE PLAN SHEET No.	DRAINAGE SYSTEM No. ⬡	DRAINAGE UNIT ◯
			EA	EA	EA	CY	TON	SQYD	CY	CY	LF	LF	LF	LF	LF	LF	LF	LF	LF	LF	LF	LF	EA	EA	CY	SQYD	LF	EA	EA	EA	LB	EA	EA	EA	FT	LF	FT					
D-11	48	f							1.30																						652	2			2.78			Mod GD-2 INLET	81.00′ R+ "R710A" 1137+36.34	D-11	48	f
D-11	49	a																																				REMOVE INLET	77.26′ R+ "R710A" 1140+86.17	D-11	49	a
		b							1.33																						652	2			2.87			Mod GD-2 INLET	81.00′ R+ "R710A" 1140+86.21			b
D-11	50	a			1																																	CAP INLET	65.50′ L+ "R710A" 1138+96.32	D-11	50	a
		b																																				Abn CULVERT				b
D-11	51	a																																				REMOVE INLET	77.34′ R+ "R710A" 1144+36.11	D-11	51	a
		b							1.55																						652	2			3.64			Mod GD-2 INLET	81.00′ R+ "R710A" 1144+36.11			b
		c	1																																			Adj INLET (CASE 1)	70.74′ L+ "R710A" 1144+36.49			c
		d	1																																			Adj INLET (CASE 1)	60.96′ L+ "R710A" 1145+11.75			d
		e			1																																	CAP INLET	92.69′ L+ "R710A" 1146+24.64			e
		f										8.3																								S	1.8	18" APC				f
		g							1.02																						326	1			3.28			G1 INLET	103.69′ L+ "R710A" 1146+23.00			g
		h																			42.0																	GLD	109.57′ L+ "R710A" 1146+63.94			h
D-11	52	a																																				REMOVE INLET	77.10′ R+ "R710A" 1147+86.17	D-11	52	a
		b							1.81																						652	2			4.54			Mod GD-2 INLET	81.00′ L+ "R710A" 1147+86.28			b
D-12	53	a							5.66																						652	2			12.56			GD-1 INLET	82.11′ R+ "R710A" 1157+16.22	D-12	53	a
		b			1																																	CAP INLET	58.43′ R+ "R710A" 1156+96.55			b
		c																																				Abn CULVERT				c
		d																																				Abn INLET	80.67′ L+ "R710A" 1155+34.73			d
D-12	54	a																							7.41	20.00												RSP (FACING, METHOD B)		D-12	54	a
		b							1.20																						75							HW	175.94′ L+ "R710A" 1158+11.42			b
		c													12.0																					S	4.1	24" CSP				c
		d																																				REMOVE HW				d
SHEET TOTAL		DQ-13	2		3				13.87			8.3			12.0						42.0				7.41	20.00					3661							SHEET TOTAL				

DRAINAGE QUANTITIES

DQ-13

I. MATAGI — R. HENDERSON — REVISED BY — DATE REVISED — CALCULATED-DESIGNED BY — CHECKED BY — CONSULTANT FUNCTIONAL SUPERVISOR — MELISSA DE LA PENA

STATE OF CALIFORNIA - DEPARTMENT OF TRANSPORTATION

LAST REVISION 00-00-00 — DATE PLOTTED => 29-JUN-2011 — TIME PLOTTED => 07:52

Dist	COUNTY	ROUTE	POST MILES TOTAL PROJECT	SHEET No.	TOTAL SHEETS
07	LA	710	17.2/26.4	553	1507

REGISTERED CIVIL ENGINEER 03/30/11 DATE

6-27-11
PLANS APPROVAL DATE

REGISTERED PROFESSIONAL ENGINEER ROBERT M. HENDERSON No. C66736 Exp.09/30/12 CIVIL STATE OF CALIFORNIA

THE STATE OF CALIFORNIA OR ITS OFFICERS OR AGENTS SHALL NOT BE RESPONSIBLE FOR THE ACCURACY OR COMPLETENESS OF SCANNED COPIES OF THIS PLAN SHEET.

CALTRANS DISTRICT 7
100 S. MAIN STREET
LOS ANGELES, CA 90012

CH2M HILL
1000 WILSHIRE BLVD
LOS ANGELES, CA 90017

NOTE:

1. FOR QUANTITIES OF DRAINAGE SYSTEMS/UNITS TO BE REMOVED OR ABANDONED, SEE SHEETS DQ-30 TO DQ-34.

DRAINAGE PLAN SHEET No.	DRAINAGE SYSTEM No. ⬡	DRAINAGE UNIT ◯	ADJUST INLET	ADJUST MANHOLE TO GRADE	CAP INLET	DITCH EXCAVATION (TYPE Z-2) AERIALLY DEPOSITED LEAD	HOT MIX ASPHALT (TYPE A)	PLACE HOT MIX ASPHALT (MISC AREAS)	MINOR CONCRETE (MINOR STRUCTURE)	MINOR CONCRETE (BACKFILL)	APC 12"	APC 18"	APC 24"	CSP 18" Bit Ctd CSP (.079" THICK)	CSP 24" Bit Ctd CSP (.079" THICK)	12" Bit Ctd SCSP (.079" THICK)	18" Bit Ctd SCSP (.079" THICK)	12" Bit Ctd CSP RISER (.079" THICK)	36" Bit Ctd CSP RISER (.079" THICK)	3" PLASTIC PIPE (SCH 40 PVC)	GRATED LINE DRAIN	(N) WALL DRAIN	18" ALTERNATIVE FLARED END SECTION	24" ALTERNATIVE FLARED END SECTION	ROCK SLOPE PROTECTION (FACING, METHOD B)	ROCK SLOPE PROTECTION FABRIC	8" PERFORATED PLASTIC PIPE UNDERDRAIN	GSRD (LR-1)	GSRD (LR-2)	GSRD (INCLINED SCREEN TYPE A)	MISCELLANEOUS IRON AND STEEL	(N) FRAME & GRATE (24-12)	(N) ELBOW	(N) CONCRETE COLLAR	(N) "H" OR "V"	(N) PIPE JOINT CLASSIFICATION	(N) MAXIMUM COVER	DESCRIPTION	STATION	DRAINAGE PLAN SHEET No.	DRAINAGE SYSTEM No. ⬡	DRAINAGE UNIT ◯
			EA	EA	EA	CY	TON	SQYD	CY	CY	LF	LF	LF	LF	LF	LF	LF	LF	LF	LF	LF	LF	EA	EA	CY	SQYD	LF	EA	EA	EA	LB	EA	EA	EA	FT	LF	FT					
D-12	54	e																																1				Conc COLLAR	171.88' Lt "R710A" 1158+21.81	D-12	54	e
		f							5.63																						326	1			13.95			G2 INLET	139.43' Lt "R710A" 1158+32.92			f
		g																																				Abn CULVERT				g
		h																																				Abn INLET	129.43' Lt "R710A" 1158+36.36			h
D-12	55	a																																				REMOVE INLET	296.04' Lt "R710A" 1159+03.48	D-12	55	a
		b							1.78																						652	2			4.42			Mod GD-2 INLET	294.72' Lt "R710A" 1159+00.46			b
D-12	56	a							5.96																						652	2			13.30			GD-1 INLET	81.00' Rt "R710A" 1160+13.16	D-12	56	a
		b			1																																	CAP INLET	58.46' Rt "R710A" 1160+36.77			b
		c																																				Abn CULVERT				c
		d																																				Abn INLET	56.94' Lt "R710A" 1160+56.99			d
D-12	57	a			1																																	CAP INLET	347.07' Lt "R710A" 1157+53.65	D-12	57	a
		b					0.39																															OSD A				b
		c							0.82																						326	1			2.58			G1 INLET w/ Conc APRON	222.90' Lt "R710A" 1157+05.06			c
		d										9.6																							S	2.5	18" APC				d
D-12	58	a							2.46																													SIDEWALK CULVERT		D-12	58	a
		b																																				REMOVE Conc CURB AND SIDEWALK				b
D-13	59	a											53.6																							S	2.2	24" APC		D-13	59	a
		b							1.82																						326	1			5.00			G2 INLET	37.03' Lt "CONN3" 1230+92.50			b
		c											84.5																							S	2.9	24" APC				c
		d							1.80																						326	1			4.90			G2 INLET	37.27' Lt "CONN3" 1230+05.00			d
		e											57.7																							S	2.8	24" APC				e
		f							1.89																						652	2			4.80			GD-1 INLET	43.00' Lt "CONN3" 1230+44.26			f
D-13	60	a																																1				Conc COLLAR	43.00' Lt "CONN1" 1223+35.30	D-13	60	a
SHEET TOTAL		DQ-14			2		0.39		22.16			9.6	195.8																		3260							SHEET TOTAL				

DRAINAGE QUANTITIES

DQ-14

STATE OF CALIFORNIA - DEPARTMENT OF TRANSPORTATION
Caltrans

CONSULTANT FUNCTIONAL SUPERVISOR: MELISSA DE LA PENA

CALCULATED-DESIGNED BY: I. MATAGI
CHECKED BY: R. HENDERSON

REVISED BY
DATE REVISED

LAST REVISION 00-00-00
DATE PLOTTED => 29-JUN-2011
TIME PLOTTED => 07:52

Dist	COUNTY	ROUTE	POST MILES TOTAL PROJECT	SHEET No.	TOTAL SHEETS
07	LA	710	17.2/26.4	554	1507

REGISTERED CIVIL ENGINEER 03/30/11 DATE

6-27-11
PLANS APPROVAL DATE

REGISTERED PROFESSIONAL ENGINEER ROBERT M. HENDERSON No. C66736 Exp.09/30/12 CIVIL STATE OF CALIFORNIA

THE STATE OF CALIFORNIA OR ITS OFFICERS OR AGENTS SHALL NOT BE RESPONSIBLE FOR THE ACCURACY OR COMPLETENESS OF SCANNED COPIES OF THIS PLAN SHEET.

CALTRANS DISTRICT 7
100 S. MAIN STREET
LOS ANGELES, CA 90012

CH2M HILL
1000 WILSHIRE BLVD
LOS ANGELES, CA 90017

NOTE:

1. FOR QUANTITIES OF DRAINAGE SYSTEMS/UNITS TO BE REMOVED OR ABANDONED, SEE SHEETS DQ-30 TO DQ-34.

DRAINAGE PLAN SHEET No.	DRAINAGE SYSTEM No. ⬡	DRAINAGE UNIT ◯	ADJUST INLET	ADJUST MANHOLE TO GRADE	CAP INLET	DITCH EXCAVATION (TYPE Z-2) AERIALLY DEPOSITED LEAD	HOT MIX ASPHALT (TYPE A)	PLACE HOT MIX ASPHALT (MISC AREAS)	MINOR CONCRETE (MINOR STRUCTURE)	MINOR CONCRETE (BACKFILL)	APC 12"	APC 18"	APC 24"	CSP 18" Bit Ctd CSP (.079" THICK)	CSP 24" Bit Ctd CSP (.079" THICK)	12" Bit Ctd SCSP (.079" THICK)	18" Bit Ctd SCSP (.079" THICK)	12" Bit Ctd CSP RISER (.079" THICK)	36" Bit Ctd CSP RISER (.079" THICK)	3" PLASTIC PIPE (SCH 40 PVC)	GRATED LINE DRAIN	(N) WALL DRAIN	18" ALTERNATIVE FLARED END SECTION	24" ALTERNATIVE FLARED END SECTION	ROCK SLOPE PROTECTION (FACING, METHOD B)	ROCK SLOPE PROTECTION FABRIC	8" PERFORATED PLASTIC PIPE UNDERDRAIN	GSRD (LR-1)	GSRD (LR-2)	GSRD (INCLINED SCREEN TYPE A)	MISCELLANEOUS IRON AND STEEL	(N) FRAME & GRATE (24-12)	(N) ELBOW	(N) CONCRETE COLLAR	(N) "H" OR "V"	(N) PIPE JOINT CLASSIFICATION	(N) MAXIMUM COVER	DESCRIPTION	STATION	DRAINAGE PLAN SHEET No.	DRAINAGE SYSTEM No. ⬡	DRAINAGE UNIT ◯
			EA	EA	EA	CY	TON	SQYD	CY	CY	LF	LF	LF	LF	LF	LF	LF	LF	LF	LF	LF	LF	EA	EA	CY	SQYD	LF	EA	EA	EA	LB	EA	EA	EA	FT	LF	FT					
D-13	60	b										30.8																									2.5	18" APC		D-13	60	b
		c							1.21																						326	1			4.15			G1 INLET	44.00′ L+ "CONN1" 1223+02.00			c
		d										16.2																									2.0	18" APC				d
		e							1.10																						326	1			3.64			G1 ILET	44.00′ L+ "CONN1" 1222+82.00			e
		f																																				REMOVE CULVERT				f
		g																																				Abn INLET	38.50′ L+ "CONN1" 1223+01.60			g
		h																																				Abn CULVERT				h
		i																																				Abn INLET	38.90′ L+ "CONN1" 1222+81.80			i
D-13	61	a			1																																	CAP INLET	25.00′ L+ "CONN3" 1225+41.00	D-13	61	a
		b							1.56																													G1 INLET w/ CORNER CONNECTIONS	4.75′ L+ "CONN3" 1225+86.00			b
		c																																				Abn CULVERT				c
		d																																				Abn INLET	11.40′ L+ "CONN3" 1225+95.00			d
		e			1																																	CAP INLET	15.50′ L+ "CONN3" 1225+06.00			e
D-14	62	a																							12.23	29.89												RSP (FACING, METHOD B)		D-14	62	a
		b																						1														24" AFES	114.00′ R+ "CONN2" 1235+92.00			b
		c													35.4																					S	5.8	24" CSP				c
		d							1.70																						326	1			4.50			G2 INLET w/ Conc Apron	100.00′ R+ "CONN2" 1235+56.00			d
		e													34.9																					S	4.8	24" CSP				e
		f																															1					CSP ELBOW	82.07′ R+ "CONN2" 1235+22.78			f
		g													55.0																					S	9.5	24" CSP				g
		h																																1				Conc COLLAR	54.02′ R+ "CONN2" 1234+73.80			h
		i							2.31																						652	2			6.26			GD-1 INLET w/ CORNER CONNECTION	46.00′ R+ "CONN2" 1234+68.32			i
		j													36.8																					S	4.8	24" CSP				j
		k																															1					CSP ELBOW	62.33′ R+ "CONN2" 1235+62.86			k
		l													8.0																					S	7.0	24" CSP				l
		m																																1				Conc COLLAR	54.45′ R+ "CONN2" 1235+64.26			m
SHEET TOTAL		DQ-15			2				7.88			47.0			170.1									1	12.23	29.89					1630							SHEET TOTAL				

DRAINAGE QUANTITIES

DQ-15

STATE OF CALIFORNIA - DEPARTMENT OF TRANSPORTATION
Caltrans

CONSULTANT FUNCTIONAL SUPERVISOR: MELISSA DE LA PENA
CALCULATED-DESIGNED BY: I. MATAGI
CHECKED BY: R. HENDERSON
REVISED BY
DATE REVISED

LAST REVISION 00-00-00
DATE PLOTTED => 29-JUN-2011
TIME PLOTTED => 07:52

Dist	COUNTY	ROUTE	POST MILES TOTAL PROJECT	SHEET No.	TOTAL SHEETS
07	LA	710	17.2/26.4	555	1507

REGISTERED CIVIL ENGINEER 03/30/11 DATE

6-27-11
PLANS APPROVAL DATE

REGISTERED PROFESSIONAL ENGINEER ROBERT M. HENDERSON No. C66736 Exp.09/30/12 CIVIL STATE OF CALIFORNIA

THE STATE OF CALIFORNIA OR ITS OFFICERS OR AGENTS SHALL NOT BE RESPONSIBLE FOR THE ACCURACY OR COMPLETENESS OF SCANNED COPIES OF THIS PLAN SHEET.

CALTRANS DISTRICT 7
100 S. MAIN STREET
LOS ANGELES, CA 90012

CH2M HILL
1000 WILSHIRE BLVD
LOS ANGELES, CA 90017

NOTE:

1. FOR QUANTITIES OF DRAINAGE SYSTEMS/UNITS TO BE REMOVED OR ABANDONED, SEE SHEETS DQ-30 TO DQ-34.

DRAINAGE PLAN SHEET No.	DRAINAGE SYSTEM No. ⬡	DRAINAGE UNIT ◯	ADJUST INLET	ADJUST MANHOLE TO GRADE	CAP INLET	DITCH EXCAVATION (TYPE Z-2) AERIALLY DEPOSITED LEAD	HOT MIX ASPHALT (TYPE A)	PLACE HOT MIX ASPHALT (MISC AREAS)	MINOR CONCRETE (MINOR STRUCTURE)	MINOR CONCRETE (BACKFILL)	APC 12"	APC 18"	APC 24"	CSP 18" Bit Ctd CSP (.079" THICK)	CSP 24" Bit Ctd CSP (.079" THICK)	12" Bit Ctd SCSP (.079" THICK)	18" Bit Ctd SCSP (.079" THICK)	12" Bit Ctd CSP RISER (.079" THICK)	36" Bit Ctd CSP RISER (.079" THICK)	3" PLASTIC PIPE (SCH 40 PVC)	GRATED LINE DRAIN	(N) WALL DRAIN	18" ALTERNATIVE FLARED END SECTION	24" ALTERNATIVE FLARED END SECTION	ROCK SLOPE PROTECTION (FACING, METHOD B)	ROCK SLOPE PROTECTION FABRIC	8" PERFORATED PLASTIC PIPE UNDERDRAIN	GSRD (LR-1)	GSRD (LR-2)	GSRD (INCLINED SCREEN TYPE A)	MISCELLANEOUS IRON AND STEEL	(N) FRAME & GRATE (24-12)	(N) ELBOW	(N) CONCRETE COLLAR	(N) "H" OR "V"	(N) PIPE JOINT CLASSIFICATION	(N) MAXIMUM COVER	DESCRIPTION	STATION	DRAINAGE PLAN SHEET No.	DRAINAGE SYSTEM No. ⬡	DRAINAGE UNIT ◯
			EA	EA	EA	CY	TON	SQYD	CY	CY	LF	LF	LF	LF	LF	LF	LF	LF	LF	LF	LF	LF	EA	EA	CY	SQYD	LF	EA	EA	EA	LB	EA	EA	EA	FT	LF	FT					
D-14	62	n			1																																	CAP INLET	37.04′ Rt "CONN2" 1234+63.95	D-14	62	n
		o																																				REMOVE Conc				o
		p																																				REMOVE HW	67.00′ Rt "CONN2" 1234+82.00			p
		q																																				REMOVE HW	69.00′ Rt "CONN2" 1235+63.00			q
		r																																				REMOVE CULVERT				r
		s																																				REMOVE CULVERT				s
D-14	63	a																							12.23	29.89												RSP (FACING, METHOD B)		D-14	63	a
		b																						1														24" AFES	106.00′ Rt "CONN2" 1236+88.00			b
		c													15.0																			S	2.0			24" CSP				c
		d																															1					CSP ELBOW	91.00′ Rt "CONN2" 1236+88.00			d
		e													48.5																			S	5.1			24" CSP				e
		f							2.55																						652	2			7.07			GD-1 INLET	46.00′ Rt "CONN2" 1236+88.00			f
		g																																				REMOVE CULVERT				g
D-14	64	a											1.8																					S	2.2			24" APC		D-14	64	a
		b							1.76																						652	2			4.36			GD-1 INLET	31.25′ Rt "OL2" 235+48.00			b
		c																				10.0																GLD				c
		d			1																																	CAP INLET	26.40′ Rt "OL2" 235+47.90			d
D-14	65	a							1.55																						326	1			5.71			G1 INLET	69.00′ Lt "R710B" 1240+62.00	D-14	65	a
		b										72.1																						S	4.0		18" APC				b
		c							1.36																						326	1			4.85			G1 INLET	69.00′ Lt "R710B" 1239+87.00			c
		d										48.5																						S	3.2		18" APC				d
		e							1.83																						652	2			4.60			GD-1 INLET	69.00′ Lt "R710B" 1239+35.50			e
		f			1																																	CAP INLET	64.00′ Lt "R710B" 1240+62.00			f
		g																																				Abn CULVERT				g
		h			1																																	CAP INLET	64.00′ Lt "R710B" 1239+87.00			h
SHEET TOTAL		DQ-16			4				9.05			120.6	1.8		63.5							10.0			1	12.23	29.89					2608							SHEET TOTAL				

DRAINAGE QUANTITIES

DQ-16

STATE OF CALIFORNIA - DEPARTMENT OF TRANSPORTATION
Caltrans

CONSULTANT FUNCTIONAL SUPERVISOR: MELISSA DE LA PENA
CALCULATED-DESIGNED BY: I. MATAGI
CHECKED BY: R. HENDERSON
REVISED BY
DATE REVISED

LAST REVISION 00-00-00
DATE PLOTTED => 29-JUN-2011
TIME PLOTTED => 07:52

Dist	COUNTY	ROUTE	POST MILES TOTAL PROJECT	SHEET No.	TOTAL SHEETS
07	LA	710	17.2/26.4	556	1507

REGISTERED CIVIL ENGINEER 03/30/11 DATE

6-27-11
PLANS APPROVAL DATE

REGISTERED PROFESSIONAL ENGINEER ROBERT M. HENDERSON No. C66736 Exp.09/30/12 CIVIL STATE OF CALIFORNIA

THE STATE OF CALIFORNIA OR ITS OFFICERS OR AGENTS SHALL NOT BE RESPONSIBLE FOR THE ACCURACY OR COMPLETENESS OF SCANNED COPIES OF THIS PLAN SHEET.

CALTRANS DISTRICT 7
100 S. MAIN STREET
LOS ANGELES, CA 90012

CH2M HILL
1000 WILSHIRE BLVD
LOS ANGELES, CA 90017

NOTE:

1. FOR QUANTITIES OF DRAINAGE SYSTEMS/UNITS TO BE REMOVED OR ABANDONED, SEE SHEETS DQ-30 TO DQ-34.

DRAINAGE PLAN SHEET No.	DRAINAGE SYSTEM No. ⬡	DRAINAGE UNIT ◯	ADJUST INLET	ADJUST MANHOLE TO GRADE	CAP INLET	DITCH EXCAVATION (TYPE Z-2) AERIALLY DEPOSITED LEAD	HOT MIX ASPHALT (TYPE A)	PLACE HOT MIX ASPHALT (MISC AREAS)	MINOR CONCRETE (MINOR STRUCTURE)	MINOR CONCRETE (BACKFILL)	APC 12"	APC 18"	APC 24"	CSP 18" Bit Ctd CSP (.079" THICK)	CSP 24" Bit Ctd CSP (.079" THICK)	12" Bit Ctd SCSP (.079" THICK)	18" Bit Ctd SCSP (.079" THICK)	12" Bit Ctd CSP RISER (.079" THICK)	36" Bit Ctd CSP RISER (.079" THICK)	3" PLASTIC PIPE (SCH 40 PVC)	GRATED LINE DRAIN	(N) WALL DRAIN	18" ALTERNATIVE FLARED END SECTION	24" ALTERNATIVE FLARED END SECTION	ROCK SLOPE PROTECTION (FACING, METHOD B)	ROCK SLOPE PROTECTION FABRIC	8" PERFORATED PLASTIC PIPE UNDERDRAIN	GSRD (LR-1)	GSRD (LR-2)	GSRD (INCLINED SCREEN TYPE A)	MISCELLANEOUS IRON AND STEEL	(N) FRAME & GRATE (24-12)	(N) ELBOW	(N) CONCRETE COLLAR	(N) "H" OR "V"	(N) PIPE JOINT CLASSIFICATION	(N) MAXIMUM COVER	DESCRIPTION	STATION	DRAINAGE PLAN SHEET No.	DRAINAGE SYSTEM No. ⬡	DRAINAGE UNIT ◯
			EA	EA	EA	CY	TON	SQYD	CY	CY	LF	LF	LF	LF	LF	LF	LF	LF	LF	LF	LF	LF	EA	EA	CY	SQYD	LF	EA	EA	EA	LB	EA	EA	EA	FT	LF	FT					
D-14	66	a										18.4																								S	1.5	18" APC		D-14	66	a
		b																					1															18" AFES	153.00′ R† "R710B" 1238+73.00			b
		c																							7.41	20.00												RSP (FACING, METHOD B)				c
		d					0.23	4.26																														HMA OSD	126.00 R† "R710B" 1240+18.00			d
		e																																				REMOVE CURB	126.00 R† "R710B" 1240+18.00			e
D-14	67	a								0.27		2.8																								S	0.7	18" APC w/ Conc ENCASEMENT		D-14	67	a
		b							0.89																						326	1			2.78			G1 INLET	46.00′ L† "CONN1" 1236+58.20			b
		c							1.34																						652	2			4.75			GD-1 INLET	46.00′ L† "CONN1" 1237+08.10			c
		d																				6.0																GLD	46.00′ L† "CONN1" 1237+00.60			d
		e			1																																	CAP INLET	39.27′ R† "CONN1" 1236+58.26			e
		f																																				Abn CULVERT				f
		g			1																																	CAP INLET	45.77′ R† "CONN1" 1234+87.85			g
D-14	68	a							2.05																						652	2			5.35			GD-2 INLET	1.00′ L† "R710B" 1235+66.00	D-14	68	a
		b										48.3																								S	3.5	18" APC				b
		c							1.34																						326	1			4.75			G1 INLET	1.00′ L† "R710B" 1235+14.00			c
D-14	69	a											31.6																							S	2.0	24" APC		D-14	69	a
		b							1.17																						326	1			4.00			G1 INLET	62.45′ R† "R710B" 1243+50.00			b
		c															82.0																			S	0.5	18" SCSP				c
		d							0.63																						326	1			2.02			G1 INLET	61.90′ RT "R710B" 1243+50.00			d
		e															97.0																			S	0.5	18" SCSP				e
		f							0.63																						326	1			2.02			G1 INLET	62.58′ RT "R710B" 1242+50.00			f
		g															97.0																			S	0.5	18" SCSP				g
		h							0.63																						326	1			2.01			G1 INLET	64.61′ RT "R710B" 1241+50.00			h
D-14	70	a																				66.0																GLD	20.00′ R† "OL3" 1236+63.12	D-14	70	a
SHEET TOTAL		DQ-17			2		0.23	4.26	8.68	0.27		69.5	31.6				276.0				72.0		1		7.41	20.00					3260							SHEET TOTAL				

DRAINAGE QUANTITIES

DQ-17

STATE OF CALIFORNIA - DEPARTMENT OF TRANSPORTATION
Caltrans

CONSULTANT FUNCTIONAL SUPERVISOR: MELISSA DE LA PENA

CALCULATED-DESIGNED BY: I. MATAGI
CHECKED BY: R. HENDERSON
REVISED BY
DATE REVISED

LAST REVISION 00-00-00
DATE PLOTTED => 29-JUN-2011
TIME PLOTTED => 07:52

Dist	COUNTY	ROUTE	POST MILES TOTAL PROJECT	SHEET No.	TOTAL SHEETS
07	LA	710	17.2/26.4	557	1507

REGISTERED CIVIL ENGINEER 03/30/11 DATE

6-27-11
PLANS APPROVAL DATE

REGISTERED PROFESSIONAL ENGINEER ROBERT M. HENDERSON No. C66736 Exp. 09/30/12 CIVIL STATE OF CALIFORNIA

THE STATE OF CALIFORNIA OR ITS OFFICERS OR AGENTS SHALL NOT BE RESPONSIBLE FOR THE ACCURACY OR COMPLETENESS OF SCANNED COPIES OF THIS PLAN SHEET.

CALTRANS DISTRICT 7
100 S. MAIN STREET
LOS ANGELES, CA 90012

CH2M HILL
1000 WILSHIRE BLVD
LOS ANGELES, CA 90017

NOTE:

1. FOR QUANTITIES OF DRAINAGE SYSTEMS/UNITS TO BE REMOVED OR ABANDONED, SEE SHEETS DQ-30 TO DQ-34.

DRAINAGE PLAN SHEET No.	DRAINAGE SYSTEM No. ⬡	DRAINAGE UNIT ◯	ADJUST INLET	ADJUST MANHOLE TO GRADE	CAP INLET	DITCH EXCAVATION (TYPE Z-2) AERIALLY DEPOSITED LEAD	HOT MIX ASPHALT (TYPE A)	PLACE HOT MIX ASPHALT (MISC AREAS)	MINOR CONCRETE (MINOR STRUCTURE)	MINOR CONCRETE (BACKFILL)	APC 12"	APC 18"	APC 24"	CSP 18" Bit Ctd CSP (.079" THICK)	CSP 24" Bit Ctd CSP (.079" THICK)	12" Bit Ctd SCSP (.079" THICK)	18" Bit Ctd SCSP (.079" THICK)	12" Bit Ctd CSP RISER (.079" THICK)	36" Bit Ctd CSP RISER (.079" THICK)	3" PLASTIC PIPE (SCH 40 PVC)	GRATED LINE DRAIN	(N) WALL DRAIN	18" ALTERNATIVE FLARED END SECTION	24" ALTERNATIVE FLARED END SECTION	ROCK SLOPE PROTECTION (FACING, METHOD B)	ROCK SLOPE PROTECTION FABRIC	8" PERFORATED PLASTIC PIPE UNDERDRAIN	GSRD (LR-1)	GSRD (LR-2)	GSRD (INCLINED SCREEN TYPE A)	MISCELLANEOUS IRON AND STEEL	(N) FRAME & GRATE (24-12)	(N) ELBOW	(N) CONCRETE COLLAR	(N) "H" OR "V"	(N) PIPE JOINT CLASSIFICATION	(N) MAXIMUM COVER	DESCRIPTION	STATION	DRAINAGE PLAN SHEET No.	DRAINAGE SYSTEM No. ⬡	DRAINAGE UNIT ◯
			EA	EA	EA	CY	TON	SQYD	CY	CY	LF	LF	LF	LF	LF	LF	LF	LF	LF	LF	LF	LF	EA	EA	CY	SQYD	LF	EA	EA	EA	LB	EA	EA	EA	FT	LF	FT					
D-14	71	a							0.48																										1.50			TYPE CL2 INLET (CASE 2)	3.03′ Lt "R710B" 1247+45.80	D-14	71	a
D-14	72	a							0.91					3.0					4.5												158							DUAL WATER QUALITY RISER	137.50 Rt "CONN2" 1237+08.00	D-14	72	a
		b																																				REMOVE CULVERT				b
		c																																				REMOVE INLET	121′.00 Rt "CONN2" 1237+40.00			c
D-14	73	a							0.48																										1.50			TYPE CL2 INLET (CASE 1)	0.24′ Rt "R710B" 1240+11.40	D-14	73	a
D-15	74	a	1																																			Adj INLET (CASE 1)	79.88′ Rt "R710B" 1258+08.30	D-15	74	a
D-15	75	a							1.99																						652	2			5.16			GD-2 INLET	1.00′ Rt "R710B" 1253+62.89	D-15	75	a
		b										33.6																								S	3.6	18" APC				b
		c							1.34																						326	1			4.74			G1 INLET	1.03′ Rt "R710B" 1254+00.00			c
		d										65.2																								S	3.1	18" APC				d
		e							1.28																						326	1			4.48			G1 INLET	3.77′ Rt "R710B" 1254+68.00			e
		f										17.0																								S	2.6	18" APC				f
		g							1.21																						326	1			4.18			G1 INLET	2.72′ Rt "R710B" 1254+88.00			g
		h																				35.0																GLD				h
		i																																				REMOVE INLET	0.61′ Rt "R710B" 1253+64.79			i
		j																																				REMOVE CULVERT				j
		k																																				REMOVE INLET	0.67′ Rt "R710B" 1254+19.39			k
		l																																				REMOVE CULVERT				l
		m																																				REMOVE INLET	1.61′ Rt "R710B" 1254+55.66			m
D-15	76	a	1																																			Adj INLET (CASE 3)	1.00′ Rt "R710B" 1258+08.31	D-15	76	a
		b											161.5																							S	2.0	24" APC				b
		c							1.62																						652	2			4.19			GD-1 INLET	1.00′ Rt "R710B" 1256+44.00			c
D-15	77	a							2.15																						652	2			5.71			GD-1 INLET	69.00′ Lt "R710B" 1250+97.24	D-15	77	a
SHEET TOTAL		DQ-18	2						11.46			115.8	161.5	3.0					4.5		35.0										3092							SHEET TOTAL				

DRAINAGE QUANTITIES

DQ-18

STATE OF CALIFORNIA - DEPARTMENT OF TRANSPORTATION
Caltrans

CONSULTANT FUNCTIONAL SUPERVISOR: MELISSA DE LA PENA

CALCULATED-DESIGNED BY: I. MATAGI
CHECKED BY: R. HENDERSON

REVISED BY
DATE REVISED

LAST REVISION 00-00-00
DATE PLOTTED => 29-JUN-2011
TIME PLOTTED => 07:52

Dist	COUNTY	ROUTE	POST MILES TOTAL PROJECT	SHEET No.	TOTAL SHEETS
07	LA	710	17.2/26.4	558	1507

REGISTERED CIVIL ENGINEER 03/30/11 DATE

6-27-11
PLANS APPROVAL DATE

REGISTERED PROFESSIONAL ENGINEER ROBERT M. HENDERSON No. C66736 Exp.09/30/12 CIVIL STATE OF CALIFORNIA

THE STATE OF CALIFORNIA OR ITS OFFICERS OR AGENTS SHALL NOT BE RESPONSIBLE FOR THE ACCURACY OR COMPLETENESS OF SCANNED COPIES OF THIS PLAN SHEET.

CALTRANS DISTRICT 7
100 S. MAIN STREET
LOS ANGELES, CA 90012

CH2M HILL
1000 WILSHIRE BLVD
LOS ANGELES, CA 90017

NOTE:

1. FOR QUANTITIES OF DRAINAGE SYSTEMS/UNITS TO BE REMOVED OR ABANDONED, SEE SHEETS DQ-30 TO DQ-34.

DRAINAGE PLAN SHEET No.	DRAINAGE SYSTEM No. ⬡	DRAINAGE UNIT ◯	ADJUST INLET	ADJUST MANHOLE TO GRADE	CAP INLET	DITCH EXCAVATION (TYPE Z-2) AERIALLY DEPOSITED LEAD	HOT MIX ASPHALT (TYPE A)	PLACE HOT MIX ASPHALT (MISC AREAS)	MINOR CONCRETE (MINOR STRUCTURE)	MINOR CONCRETE (BACKFILL)	APC 12"	APC 18"	APC 24"	CSP 18" Bit Ctd CSP (.079" THICK)	CSP 24" Bit Ctd CSP (.079" THICK)	12" Bit Ctd SCSP (.079" THICK)	18" Bit Ctd SCSP (.079" THICK)	12" Bit Ctd CSP RISER (.079" THICK)	36" Bit Ctd CSP RISER (.079" THICK)	3" PLASTIC PIPE (SCH 40 PVC)	GRATED LINE DRAIN	(N) WALL DRAIN	18" ALTERNATIVE FLARED END SECTION	24" ALTERNATIVE FLARED END SECTION	ROCK SLOPE PROTECTION (FACING, METHOD B)	ROCK SLOPE PROTECTION FABRIC	8" PERFORATED PLASTIC PIPE UNDERDRAIN	GSRD (LR-1)	GSRD (LR-2)	GSRD (INCLINED SCREEN TYPE A)	MISCELLANEOUS IRON AND STEEL	(N) FRAME & GRATE (24-12)	(N) ELBOW	(N) CONCRETE COLLAR	(N) "H" OR "V"	(N) PIPE JOINT CLASSIFICATION	(N) MAXIMUM COVER	DESCRIPTION	STATION	DRAINAGE PLAN SHEET No.	DRAINAGE SYSTEM No. ⬡	DRAINAGE UNIT ◯
			EA	EA	EA	CY	TON	SQYD	CY	CY	LF	LF	LF	LF	LF	LF	LF	LF	LF	LF	LF	LF	EA	EA	CY	SQYD	LF	EA	EA	EA	LB	EA	EA	EA	FT	LF	FT					
D-15	77	b																19.3																				12" CSP RISER w/ CONNECTIONS	69.00' Lt "R710B" 1250+97.24	D-15	77	b
		c										19.3																							S	4.1	18" APC				c
		d							1.95																						652	2			5.00			GD-1 INLET	69.00' Lt "R710B" 1250+75.00			d
D-15	78	a																																				TYPE CL2 INLET (CASE 1)	1.85' Rt "R710B" 1248+20.00	D-15	78	a
		b	1																																		Adj INLET (CASE 2)	1.75' Rt "R710B" 1248+31.80			b
		c							0.48																					326	1			1.50			TYPE CL2 INLET (CASE 2)	0.88' Rt "R710B" 1249+32.00			c
		d							0.48																					326	1			1.50			TYPE CL2 INLET (CASE 2)	0.00' Rt "R710B" 1250+32.00			d
		e							0.48																					326	1			1.50			TYPE CL2 INLET (CASE 1)	0.59' Lt "R710B" 1251+00.50			e
D-15	79	a							0.48																						326	1			1.50			TYPE CL2 INLET (CASE 2)	1.00' Rt "R710B" 1258+92.80	D-15	79	a
		b							7.90		65.3																								S	0.5	12" APC w/ Conc ENCASEMENT				b
		c							0.48																						326	1			1.50			TYPE CL2 INLET (CASE 2)	1.00' Rt "R710B" 1259+61.20			c
		d							0.48																						326	1			1.50			TYPE CL2 INLET (CASE 2)	1.00' Rt "R710B" 1260+69.00			d
		e							0.48																					326	1			1.50			TYPE CL2 INLET (CASE 1)	1.00' Rt "R710B" 1261+20.00			e
D-15	80	a	1																																			Adj INLET (CASE 3)	1.00' Rt "R710B" 1261+41.35	D-15	80	a
		b																																				REMOVE INLET	1.00' Rt "R710B" 1261+41.35			b
D-16	81	a								3.34		34.1																									S	1.9	18" APC w/ Conc ENCASEMENT		D-16	81	a
		b							1.49																						652	2			3.42			GD-1 INLET	81.00' Rt "R710B" 1265+50.00			b
		c								2.65		27.0																							S	2.0	18" APC w/ Conc ENCASEMENT				c
		d							1.52																						652	2			3.52			GD-1 INLET	81.00' Rt "R710B" 1265+20.00			d
D-16	82	a	1																																			Adj INLET (CASE 2)	1.00' Rt "R710B" 1265+86.80	D-16	82	a
		b							0.48																										1.50			TYPE CL2 INLET (CASE 2)	1.00' Rt "R710B" 1267+00.00			b
		c							1.52																					326	1			1.50			TYPE CL2 INLET (CASE 2)	1.00' Lt "R710B" 1268+24.80			c
		d							8.17		97.3																								S	0.5	12" APC w/ Conc ENCASEMENT				d
SHEET TOTAL		DQ-19	3						26.39	5.99	162.6	80.4						19.3													4564							SHEET TOTAL				

DRAINAGE QUANTITIES

DQ-19

STATE OF CALIFORNIA - DEPARTMENT OF TRANSPORTATION
Caltrans

CONSULTANT FUNCTIONAL SUPERVISOR: MELISSA DE LA PENA
CALCULATED-DESIGNED BY: I. MATAGI
CHECKED BY: R. HENDERSON
REVISED BY
DATE REVISED

LAST REVISION 00-00-00
DATE PLOTTED => 29-JUN-2011
TIME PLOTTED => 07:52

Dist	COUNTY	ROUTE	POST MILES TOTAL PROJECT	SHEET No.	TOTAL SHEETS
07	LA	710	17.2/26.4	559	1507

REGISTERED CIVIL ENGINEER 03/30/11 DATE

6-27-11
PLANS APPROVAL DATE

REGISTERED PROFESSIONAL ENGINEER ROBERT M. HENDERSON No. C66736 Exp.09/30/12 CIVIL STATE OF CALIFORNIA

THE STATE OF CALIFORNIA OR ITS OFFICERS OR AGENTS SHALL NOT BE RESPONSIBLE FOR THE ACCURACY OR COMPLETENESS OF SCANNED COPIES OF THIS PLAN SHEET.

CALTRANS DISTRICT 7
100 S. MAIN STREET
LOS ANGELES, CA 90012

CH2M HILL
1000 WILSHIRE BLVD
LOS ANGELES, CA 90017

NOTE:

1. FOR QUANTITIES OF DRAINAGE SYSTEMS/UNITS TO BE REMOVED OR ABANDONED, SEE SHEETS DQ-30 TO DQ-34.

DRAINAGE PLAN SHEET No.	DRAINAGE SYSTEM No. ⬡	DRAINAGE UNIT ◯	ADJUST INLET	ADJUST MANHOLE TO GRADE	CAP INLET	DITCH EXCAVATION (TYPE Z-2) AERIALLY DEPOSITED LEAD	HOT MIX ASPHALT (TYPE A)	PLACE HOT MIX ASPHALT (MISC AREAS)	MINOR CONCRETE (MINOR STRUCTURE)	MINOR CONCRETE (BACKFILL)	APC 12"	APC 18"	APC 24"	CSP 18" Bit Ctd CSP (.079" THICK)	CSP 24" Bit Ctd CSP (.079" THICK)	12" Bit Ctd SCSP (.079" THICK)	18" Bit Ctd SCSP (.079" THICK)	12" Bit Ctd CSP RISER (.079" THICK)	36" Bit Ctd CSP RISER (.079" THICK)	3" PLASTIC PIPE (SCH 40 PVC)	GRATED LINE DRAIN	(N) WALL DRAIN	18" ALTERNATIVE FLARED END SECTION	24" ALTERNATIVE FLARED END SECTION	ROCK SLOPE PROTECTION (FACING, METHOD B)	ROCK SLOPE PROTECTION FABRIC	8" PERFORATED PLASTIC PIPE UNDERDRAIN	GSRD (LR-1)	GSRD (LR-2)	GSRD (INCLINED SCREEN TYPE A)	MISCELLANEOUS IRON AND STEEL	(N) FRAME & GRATE (24-12)	(N) ELBOW	(N) CONCRETE COLLAR	(N) "H" OR "V"	(N) PIPE JOINT CLASSIFICATION	(N) MAXIMUM COVER	DESCRIPTION	STATION	DRAINAGE PLAN SHEET No.	DRAINAGE SYSTEM No. ⬡	DRAINAGE UNIT ◯
			EA	EA	EA	CY	TON	SQYD	CY	CY	LF	LF	LF	LF	LF	LF	LF	LF	LF	LF	LF	LF	EA	EA	CY	SQYD	LF	EA	EA	EA	LB	EA	EA	EA	FT	LF	FT					
D-16	82	e							0.48																						326	1			1.50			TYPE CL2 INLET (CASE 2)	1.00′ Lt "R710B" 1269+25.20	D-16	82	e
		f							0.48																						326	1			1.50			TYPE CL2 INLET (CASE 1)	1.00′ Lt "R710B" 1269+65.00			f
D-16	83	a								0.83		8.5																								S	1.0	18" APC w/ Conc ENCASEMENT		D-16	83	a
		b							1.26																						652	2			2.64		1.0	GD-1 INLET	101.93′ Lt "R710B" 1269+87.50			b
		c			1																																	CAP INLET	27.68′ Rt "CONNA" 69+87.53			c
D-16	84	a							2.27																						652	2			6.10			GD-1 INLET	69.00′ Rt "R710B" 1274+38.41	D-16	84	a
		b										70.0																								S	4.4	18" APC				b
		c							1.05																						652	2			3.41			G1 INLET	69.00′ Rt "R710B" 1273+63.00			c
		d																																				REMOVE INLET	17.10′ Lt "CONNA" 74+20.89			d
D-16	85	a							0.84																						326	1			2.65			G1 INLET	94.56′ Lt "R710B" 1273+74.20	D-16	85	a
		b			1																																	CAP INLET	89.15′ Lt "R710B" 1273+73.70			b
D-16	86	a										1.8																								S	1.5	18" APC		D-16	86	a
		b							1.12																						326	1			3.74			G1 INLET	88.16′ Lt "R710B" 1269+88.29			b
		c			1																																	CAP INLET	82.57′ Lt "R710B" 1269+88.23			c
D-16	87	a							0.48																						326	1			1.50			TYPE CL2 INLET (CASE 2)	1.00′ Rt "R710B" 1262+42.00	D-16	87	a
		b							0.48																						326	1			1.50			TYPE CL2 INLET (CASE 2)	1.00′ Rt "R710B" 1263+42.00			b
		c							0.48																						326	1			1.50			TYPE CL2 INLET (CASE 2)	1.00′ Rt "R710B" 1264+54.00			c
		d							0.48																						326	1			1.50			TYPE CL2 INLET (CASE 1)	1.00′ Rt "R710B" 1265+66.00			d
D-16	88	a	1																																			Adj INLET (CASE 2)	1.00′ Lt "R710B" 1273+75.00	D-16	88	a
		b							0.48																						326	1			1.50			TYPE CL2 INLET (CASE 2)	1.00′ Lt "R710B" 1274+75.00			b
		c																																				REMOVE INLET	2.89′ Lt "R710B" 1273+74.91			c
SHEET TOTAL		DQ-20	1		3				9.90	0.83		80.3																			4890							SHEET TOTAL				

DRAINAGE QUANTITIES

DQ-20

STATE OF CALIFORNIA - DEPARTMENT OF TRANSPORTATION

Caltrans

CONSULTANT FUNCTIONAL SUPERVISOR: MELISSA DE LA PENA

CALCULATED-DESIGNED BY: I. MATAGI

CHECKED BY: R. HENDERSON

REVISED BY

DATE REVISED

LAST REVISION 00-00-00

DATE PLOTTED => 29-JUN-2011
TIME PLOTTED => 07:53

Dist	COUNTY	ROUTE	POST MILES TOTAL PROJECT	SHEET No.	TOTAL SHEETS
07	LA	710	17.2/26.4	560	1507

REGISTERED CIVIL ENGINEER 03/30/11 DATE

6-27-11
PLANS APPROVAL DATE

REGISTERED PROFESSIONAL ENGINEER ROBERT M. HENDERSON No. C66736 Exp.09/30/12 CIVIL STATE OF CALIFORNIA

THE STATE OF CALIFORNIA OR ITS OFFICERS OR AGENTS SHALL NOT BE RESPONSIBLE FOR THE ACCURACY OR COMPLETENESS OF SCANNED COPIES OF THIS PLAN SHEET.

CALTRANS DISTRICT 7
100 S. MAIN STREET
LOS ANGELES, CA 90012

CH2M HILL
1000 WILSHIRE BLVD
LOS ANGELES, CA 90017

NOTE:

1. FOR QUANTITIES OF DRAINAGE SYSTEMS/UNITS TO BE REMOVED OR ABANDONED, SEE SHEETS DQ-30 TO DQ-34.

DRAINAGE PLAN SHEET No.	DRAINAGE SYSTEM No. ⬡	DRAINAGE UNIT ◯	ADJUST INLET	ADJUST MANHOLE TO GRADE	CAP INLET	DITCH EXCAVATION (TYPE Z-2) AERIALLY DEPOSITED LEAD	HOT MIX ASPHALT (TYPE A)	PLACE HOT MIX ASPHALT (MISC AREAS)	MINOR CONCRETE (MINOR STRUCTURE)	MINOR CONCRETE (BACKFILL)	APC 12"	APC 18"	APC 24"	CSP 18" Bit Ctd CSP (.079" THICK)	CSP 24" Bit Ctd CSP (.079" THICK)	12" Bit Ctd SCSP (.079" THICK)	18" Bit Ctd SCSP (.079" THICK)	12" Bit Ctd CSP RISER (.079" THICK)	36" Bit Ctd CSP RISER (.079" THICK)	3" PLASTIC PIPE (SCH 40 PVC)	GRATED LINE DRAIN	(N) WALL DRAIN	18" ALTERNATIVE FLARED END SECTION	24" ALTERNATIVE FLARED END SECTION	ROCK SLOPE PROTECTION (FACING, METHOD B)	ROCK SLOPE PROTECTION FABRIC	8" PERFORATED PLASTIC PIPE UNDERDRAIN	GSRD (LR-1)	GSRD (LR-2)	GSRD (INCLINED SCREEN TYPE A)	MISCELLANEOUS IRON AND STEEL	(N) FRAME & GRATE (24-12)	(N) ELBOW	(N) CONCRETE COLLAR	(N) "H" OR "V"	(N) PIPE JOINT CLASSIFICATION	(N) MAXIMUM COVER	DESCRIPTION	STATION	DRAINAGE PLAN SHEET No.	DRAINAGE SYSTEM No. ⬡	DRAINAGE UNIT ◯
			EA	EA	EA	CY	TON	SQYD	CY	CY	LF	LF	LF	LF	LF	LF	LF	LF	LF	LF	LF	LF	EA	EA	CY	SQYD	LF	EA	EA	EA	LB	EA	EA	EA	FT	LF	FT					
D-16	89	a	1																																			Adj INLET (CASE 2)	1.00′ Lt "R710B" 1269+87.79	D-16	89	a
		b							0.48																						326	1			1.50			TYPE CL2 INLET (CASE 2)	1.00′ Lt "R710B" 1270+88.00			b
		c							0.48																						326	1			1.50			TYPE CL2 INLET (CASE 2)	1.00′ Lt "R710B" 1271+88.00			c
		d							0.48																						326	1			1.50			TYPE CL2 INLET (CASE 2)	1.00′ Lt "R710B" 1272+88.00			d
		e							0.48																						326	1			1.50			TYPE CL2 INLET (CASE 1)	1.00′ Lt "R710B" 1273+55.00			e
		f																																				REMOVE INLET	2.34′ Lt "R710B" 1269+87.90			f
D-17	90	a											108.5																							S	4.4	24" APC		D-17	90	a
		b							1.76																						652	2			4.35			GD-1 INLET	67.82′ Lt "R710B" 1279+00.00			b
		c																				36.0																GLD				c
D-17	91	a	1																																			Adj INLET (CASE 3)	1.00′ Rt "R710B" 1284+35.90	D-17	91	a
		b								8.86			160.7																						S	2.5	24" APC w/ Conc ENCASEMENT				b
		c							1.75																						326	1			4.72			G2 INLET	1.00′ Rt "R710B" 1286+00.00			c
		d										97.1																							S	2.7	18" APC				d
		e							1.37																						326	1			4.90			G1 INLET	1.00′ Rt "R710B" 1287+00.00			e
		f																				40.0																GLD				f
		g																																				REMOVE INLET	1.15′ Lt "R710B" 2395+35.78			g
D-17	92	a							1.79																						652	2			4.47			GD-1 INLET	67.77′ Rt "R710B" 1277+40.98	D-17	92	a
		b											26.2																							S	2.3	24" APC				b
		c																																1				Conc COLLAR	65.00′ Rt "R710B" 1277+68.64			c
		d											63.7																							S	4.0	24" APC				d
		e																																1				Conc COLLAR	65.00′ Rt "R710B" 1278+32.31			e
		f											66.2																							S	5.3	24" APC				f
		g							1.80																						652	2			4.49			GD-1 INLET	69.00′ Rt "R710B" 1279+00.00			g
		h											19.0																								2.2	24" APC				h
		i							1.63																						326	1			4.22			G2 INLET	2.62′ Rt "CONN A" 77+20.35			i
SHEET TOTAL		DQ-21	2						12.02	8.86		97.1	444.3									76.0									4238							SHEET TOTAL				

DRAINAGE QUANTITIES

DQ-21

STATE OF CALIFORNIA - DEPARTMENT OF TRANSPORTATION
Caltrans

CONSULTANT FUNCTIONAL SUPERVISOR: MELISSA DE LA PENA
CALCULATED-DESIGNED BY: I. MATAGI
CHECKED BY: R. HENDERSON
REVISED BY
DATE REVISED

LAST REVISION 00-00-00
DATE PLOTTED => 29-JUN-2011
TIME PLOTTED => 07:53

Dist	COUNTY	ROUTE	POST MILES TOTAL PROJECT	SHEET No.	TOTAL SHEETS
07	LA	710	17.2/26.4	561	1507

REGISTERED CIVIL ENGINEER 03/30/11 DATE

6-27-11
PLANS APPROVAL DATE

REGISTERED PROFESSIONAL ENGINEER ROBERT M. HENDERSON No. C66736 Exp.09/30/12 CIVIL STATE OF CALIFORNIA

THE STATE OF CALIFORNIA OR ITS OFFICERS OR AGENTS SHALL NOT BE RESPONSIBLE FOR THE ACCURACY OR COMPLETENESS OF SCANNED COPIES OF THIS PLAN SHEET.

CALTRANS DISTRICT 7
100 S. MAIN STREET
LOS ANGELES, CA 90012

CH2M HILL
1000 WILSHIRE BLVD
LOS ANGELES, CA 90017

NOTE:

1. FOR QUANTITIES OF DRAINAGE SYSTEMS/UNITS TO BE REMOVED OR ABANDONED, SEE SHEETS DQ-30 TO DQ-34.

DRAINAGE PLAN SHEET No.	DRAINAGE SYSTEM No. ⬡	DRAINAGE UNIT ◯	ADJUST INLET	ADJUST MANHOLE TO GRADE	CAP INLET	DITCH EXCAVATION (TYPE Z-2) AERIALLY DEPOSITED LEAD	HOT MIX ASPHALT (TYPE A)	PLACE HOT MIX ASPHALT (MISC AREAS)	MINOR CONCRETE (MINOR STRUCTURE)	MINOR CONCRETE (BACKFILL)	APC 12"	APC 18"	APC 24"	CSP 18" Bit Ctd CSP (.079" THICK)	CSP 24" Bit Ctd CSP (.079" THICK)	12" Bit Ctd SCSP (.079" THICK)	18" Bit Ctd SCSP (.079" THICK)	12" Bit Ctd CSP RISER (.079" THICK)	36" Bit Ctd CSP RISER (.079" THICK)	3" PLASTIC PIPE (SCH 40 PVC)	GRATED LINE DRAIN	(N) WALL DRAIN	18" ALTERNATIVE FLARED END SECTION	24" ALTERNATIVE FLARED END SECTION	ROCK SLOPE PROTECTION (FACING, METHOD B)	ROCK SLOPE PROTECTION FABRIC	8" PERFORATED PLASTIC PIPE UNDERDRAIN	GSRD (LR-1)	GSRD (LR-2)	GSRD (INCLINED SCREEN TYPE A)	MISCELLANEOUS IRON AND STEEL	(N) FRAME & GRATE (24-12)	(N) ELBOW	(N) CONCRETE COLLAR	(N) "H" OR "V"	(N) PIPE JOINT CLASSIFICATION	(N) MAXIMUM COVER	DESCRIPTION	STATION	DRAINAGE PLAN SHEET No.	DRAINAGE SYSTEM No. ⬡	DRAINAGE UNIT ◯
			EA	EA	EA	CY	TON	SQYD	CY	CY	LF	LF	LF	LF	LF	LF	LF	LF	LF	LF	LF	LF	EA	EA	CY	SQYD	LF	EA	EA	EA	LB	EA	EA	EA	FT	LF	FT					
D-17	92	j											21.6																								3.0	24" APC		D-17	92	j
		k							1.87																						326	1			5.16			G2 INLET w/ CORNER CONNECTIONS	2.70′ R+ "CONN A" 77+45.00			k
		l																																				REMOVE INLET	68.00 R+ "R710B" 1277+41.00			l
		m																																				Abn CULVERT				m
D-17	93	a											64.6																							S	1.3	24" APC		D-17	93	a
		b							2.15																						652	2			5.68			GD-1 INLET	69.90′ R+ "R710B" 1284+64.00			b
		c							1.82																						652	2			4.57			GD-2 INLET	94.24′ R+ "R710B" 1284+08.22			c
		d			1																																	CAP INLET	59.00′ R+ "R710B" 1283+97.00			d
		e																																				REMOVE INLET	92.00′ R+ "R710B" 1284+08.00			e
D-17	94	a							5.91																						326	1			14.73			G2 INLET w/ CORNER CONNECTIONS	2.00′ L+ "CONNB" 76+24.00	D-17	94	a
		b																				18.0																GLD				b
D-17	95	a										22.2																								S	2.2	18" APC		D-17	95	a
		b							1.66																						652	2			4.02			GD-1 INLET	79.83′ R+ "R710B" 1288+89.78			b
		c										159.9																							S	2.1	18" APC				c
		d							1.58																						652	2			3.75			GD-1 INLET	92.53′ R+ "R710B" 1287+24.85			d
D-17	96	a							0.48																						326	1			1.50			TYPE CL2 INLET (CASE 2)	1.00′ R+ "R710B" 1275+75.00	D-17	96	a
		b							0.48																						326	1			1.50			TYPE CL2 INLET (CASE 2)	1.00′ R+ "R710B" 1276+75.00			b
		c							0.48																						326	1			1.50			TYPE CL2 INLET (CASE 1)	1.00′ R+ "R710B" 1277+31.00			c
D-17	97	a	1																																			Adj INLET (CASE 2)	1.00′ L+ "R710B" 1277+41.29	D-17	97	a
		b							0.48																						326	1			1.50			TYPE CL2 INLET (CASE 1)	1.00′ L+ "R710B" 1277+92.00			b
		c																																				REMOVE INLET	1.00′ L+ "R710B" 1277+41.29			c
D-18	98	a	1																																			Adj INLET (CASE 3)	1.00′ R+ "R710B" 1296+36.45	D-18	98	a
SHEET TOTAL		DQ-22	2		1				16.91			182.1	86.2									18.0									4564							SHEET TOTAL				

DRAINAGE QUANTITIES

DQ-22

STATE OF CALIFORNIA - DEPARTMENT OF TRANSPORTATION
Caltrans

CONSULTANT FUNCTIONAL SUPERVISOR: MELISSA DE LA PENA
CALCULATED-DESIGNED BY: I. MATAGI
CHECKED BY: R. HENDERSON
REVISED BY
DATE REVISED

LAST REVISION 00-00-00
DATE PLOTTED => 29-JUN-2011
TIME PLOTTED => 07:53

Dist	COUNTY	ROUTE	POST MILES TOTAL PROJECT	SHEET No.	TOTAL SHEETS
07	LA	710	17.2/26.4	562	1507

REGISTERED CIVIL ENGINEER 03/30/11 DATE

6-27-11
PLANS APPROVAL DATE

REGISTERED PROFESSIONAL ENGINEER ROBERT M. HENDERSON No. C66736 Exp.09/30/12 CIVIL STATE OF CALIFORNIA

THE STATE OF CALIFORNIA OR ITS OFFICERS OR AGENTS SHALL NOT BE RESPONSIBLE FOR THE ACCURACY OR COMPLETENESS OF SCANNED COPIES OF THIS PLAN SHEET.

CALTRANS DISTRICT 7
100 S. MAIN STREET
LOS ANGELES, CA 90012

CH2M HILL
1000 WILSHIRE BLVD
LOS ANGELES, CA 90017

NOTE:

1. FOR QUANTITIES OF DRAINAGE SYSTEMS/UNITS TO BE REMOVED OR ABANDONED, SEE SHEETS DQ-30 TO DQ-34.

DRAINAGE PLAN SHEET No.	DRAINAGE SYSTEM No. ⬡	DRAINAGE UNIT ◯	ADJUST INLET	ADJUST MANHOLE TO GRADE	CAP INLET	DITCH EXCAVATION (TYPE Z-2) AERIALLY DEPOSITED LEAD	HOT MIX ASPHALT (TYPE A)	PLACE HOT MIX ASPHALT (MISC AREAS)	MINOR CONCRETE (MINOR STRUCTURE)	MINOR CONCRETE (BACKFILL)	APC 12"	APC 18"	APC 24"	CSP 18" Bit Ctd CSP (.079" THICK)	CSP 24" Bit Ctd CSP (.079" THICK)	12" Bit Ctd SCSP (.079" THICK)	18" Bit Ctd SCSP (.079" THICK)	12" Bit Ctd CSP RISER (.079" THICK)	36" Bit Ctd CSP RISER (.079" THICK)	3" PLASTIC PIPE (SCH 40 PVC)	GRATED LINE DRAIN	(N) WALL DRAIN	18" ALTERNATIVE FLARED END SECTION	24" ALTERNATIVE FLARED END SECTION	ROCK SLOPE PROTECTION (FACING, METHOD B)	ROCK SLOPE PROTECTION FABRIC	8" PERFORATED PLASTIC PIPE UNDERDRAIN	GSRD (LR-1)	GSRD (LR-2)	GSRD (INCLINED SCREEN TYPE A)	MISCELLANEOUS IRON AND STEEL	(N) FRAME & GRATE (24-12)	(N) ELBOW	(N) CONCRETE COLLAR	(N) "H" OR "V"	(N) PIPE JOINT CLASSIFICATION	(N) MAXIMUM COVER	DESCRIPTION	STATION	DRAINAGE PLAN SHEET No.	DRAINAGE SYSTEM No. ⬡	DRAINAGE UNIT ◯
			EA	EA	EA	CY	TON	SQYD	CY	CY	LF	LF	LF	LF	LF	LF	LF	LF	LF	LF	LF	LF	EA	EA	CY	SQYD	LF	EA	EA	EA	LB	EA	EA	EA	FT	LF	FT					
D-18	98	b																																				REMOVE INLET	1.00′ R+ "R710B" 1296+36.45	D-18	98	b
		c							0.48																						326	1			1.50			TYPE CL2 INLET (CASE 1)	1.00′ R+ "R710B" 1297+48.00			c
		d							0.48																						652	2			1.50			TYPE CL2 INLET (CASE 3)	1.00′ R+ "R710B" 1298+58.60			d
		e															87.0																					18" SCSP				e
		f															87.0																					18" SCSP				f
D-18	99	a	1																																			Adj INLET (CASE 1)	67.30′ R+ "R710B" 1302+12.20	D-18	99	a
		b	1																																			Adj INLET (CASE 1)				b
D-18	100	a										68.0																								S	5.3	18" APC		D-18	100	a
		b							1.73																						652	2			4.27			GD-1 INLET	5.81′ R+ "R710B" 1301+25.00			b
		c										10.9																								S	2.7	18" APC				c
		d							1.56																						652	2			3.66			GD-1 INLET	5.11′ R+ "R710B" 1301+25.00			d
		e										27.5																								S	7.7	18" APC				e
		f							1.95																						326	1			5.01			Mod G2 INLET	1.00′ R+ "R710B" 1302+26.00			f
		g							0.48																						326	1			1.50			TYPE CL2 INLET (CASE 1)	0.00′ R+ "R710B" 1303+26.00			g
		h							3.97																						326	1			9.31			G2 INLET	2.41′ R+ "R710B" 1301+95.75			h
		i			1																																	CAP INLET	0.00′ R+ "R710B" 1301+96.00			i
D-18	101	a	1																																			Adj INLET (CASE 1)	65.28′ R+ "R710B" 1301+90.30	D-18	101	a
		b	1																																			Adj INLET (CASE 1)	65.17′ R+ "R710B" 1301+70.00			b
D-18	102	a										3.5																								S	2.2	18" APC		D-18	102	a
		b							1.60																						652	2			3.80			GD-1 INLET	20.00′ R+ "T1" 89+95.00			b
		c			1																																	CAP INLET	11.00 R+ "T1" 91+01.00			c
D-18	103	a								6.66		67.9																								S	1.1	18" APC w/ Conc ENCASEMENT		D-18	103	a
		b							0.87																						326	1			2.74			G1 INLET	68.00′ R+ "R710B" 1296+46.00			b
SHEET TOTAL		DQ-23	4		2				13.12	6.66		177.8					174.0														4238							SHEET TOTAL				

DRAINAGE QUANTITIES

DQ-23

STATE OF CALIFORNIA - DEPARTMENT OF TRANSPORTATION
Caltrans

CONSULTANT FUNCTIONAL SUPERVISOR: MELISSA DE LA PENA
CALCULATED-DESIGNED BY: I. MATAGI
CHECKED BY: R. HENDERSON
REVISED BY
DATE REVISED

LAST REVISION 00-00-00
DATE PLOTTED => 29-JUN-2011
TIME PLOTTED => 07:53

Dist	COUNTY	ROUTE	POST MILES TOTAL PROJECT	SHEET No.	TOTAL SHEETS
07	LA	710	17.2/26.4	563	1507

REGISTERED CIVIL ENGINEER 03/30/11 DATE

6-27-11
PLANS APPROVAL DATE

REGISTERED PROFESSIONAL ENGINEER ROBERT M. HENDERSON No. C66736 Exp.09/30/12 CIVIL STATE OF CALIFORNIA

THE STATE OF CALIFORNIA OR ITS OFFICERS OR AGENTS SHALL NOT BE RESPONSIBLE FOR THE ACCURACY OR COMPLETENESS OF SCANNED COPIES OF THIS PLAN SHEET.

CALTRANS DISTRICT 7
100 S. MAIN STREET
LOS ANGELES, CA 90012

CH2M HILL
1000 WILSHIRE BLVD
LOS ANGELES, CA 90017

DRAINAGE PLAN SHEET No.	DRAINAGE SYSTEM No. ⬡	DRAINAGE UNIT ◯	ADJUST INLET	ADJUST MANHOLE TO GRADE	CAP INLET	DITCH EXCAVATION (TYPE Z-2) AERIALLY DEPOSITED LEAD	HOT MIX ASPHALT (TYPE A)	PLACE HOT MIX ASPHALT (MISC AREAS)	MINOR CONCRETE (MINOR STRUCTURE)	MINOR CONCRETE (BACKFILL)	APC 12"	APC 18"	APC 24"	CSP 18" Bit Ctd CSP (.079" THICK)	CSP 24" Bit Ctd CSP (.079" THICK)	12" Bit Ctd SCSP (.079" THICK)	18" Bit Ctd SCSP (.079" THICK)	12" Bit Ctd CSP RISER (.079" THICK)	36" Bit Ctd CSP RISER (.079" THICK)	3" PLASTIC PIPE (SCH 40 PVC)	GRATED LINE DRAIN	(N) WALL DRAIN	18" ALTERNATIVE FLARED END SECTION	24" ALTERNATIVE FLARED END SECTION	ROCK SLOPE PROTECTION (FACING, METHOD B)	ROCK SLOPE PROTECTION FABRIC	8" PERFORATED PLASTIC PIPE UNDERDRAIN	GSRD (LR-1)	GSRD (LR-2)	GSRD (INCLINED SCREEN TYPE A)	MISCELLANEOUS IRON AND STEEL	(N) FRAME & GRATE (24-12)	(N) ELBOW	(N) CONCRETE COLLAR	(N) "H" OR "V"	(N) PIPE JOINT CLASSIFICATION	(N) MAXIMUM COVER	DESCRIPTION	STATION	DRAINAGE PLAN SHEET No.	DRAINAGE SYSTEM No. ⬡	DRAINAGE UNIT ◯
			EA	EA	EA	CY	TON	SQYD	CY	CY	LF	LF	LF	LF	LF	LF	LF	LF	LF	LF	LF	LF	EA	EA	CY	SQYD	LF	EA	EA	EA	LB	EA	EA	EA	FT	LF	FT					
D-18	103	c	1																																			Adj INLET (CASE 1)	67.00′ Lt "R710B" 1297+17.00	D-18	103	c
D-18	104	a										2.9																								S	2.3	18" APC		D-18	104	a
		b							1.17																						326	1			3.96			G1 INLET	19.47′ Rt "T1" 91+06.00			b
		c										86.1																								S	2.3	18" APC				c
		d							1.09																						326	1			3.60			G1 INLET	20.23′ Rt "T1" 91+95.00			d
		e										78.3																								S	2.5	18" APC				e
		f							2.61																						652	2			4.10			GT4 INLET	82.96′ Rt "R710B" 1292+78.00			f
		g																				4.0																GLD				g
		h			1																																	CAP INLET	79.00′ Rt "R710B" 1291+13.00			h
D-18	105	a	1																																			Adj INLET (CASE 3)	1.00′ Rt "R710B" 1289+36.19	D-18	105	a
D-18	106	a	1																																			Adj INLET (CASE 3)	0.00′ Rt "R710B" 1293+23.38	D-18	106	a
D-18	107	a										5.3																									6.1	18" APC		D-18	107	a
		b							4.00																						652	2			7.72			GT3 INLET	79.87′ Rt "R710B" 1296+38.00			b
		c										124.6																									6.1	18" APC				c
		d							2.76																						652	2			5.94			GT3 INLET	74.13′ Rt "R710B" 1297+69.00			d
		e										26.6																									4.3	18" APC				e
		f							2.19																						652	2			5.83			GD-1 INLET	69.71′ Rt "R710B" 1298+00.00			f
		g										37.1																									4.4	18" APC				g
		h							2.16																						652	2			5.73			GD-1 INLET	67.90′ Rt "R710B" 1298+40.00			h
		i																				20.0																GLD	67.37′ Rt "R710B" 1298+62.50			i
		j			1																																	CAP INLET	71.00′ Rt "R710B" 1296+38.00			j
D-19	108	a							1.98																						652	2			5.10			GD-1 INLET	22.00′ Rt "C" 308+58.76	D-19	108	a
		b										53.8																								S	3.4	18" APC				b
SHEET TOTAL		DQ-24	3		2				17.96			414.7										24.0									4564							SHEET TOTAL				

DRAINAGE QUANTITIES

DQ-24

STATE OF CALIFORNIA - DEPARTMENT OF TRANSPORTATION

Caltrans

CONSULTANT FUNCTIONAL SUPERVISOR: MELISSA DE LA PENA

CALCULATED-DESIGNED BY: I. MATAGI

CHECKED BY: R. HENDERSON

REVISED BY

DATE REVISED

LAST REVISION 00-00-00

DATE PLOTTED => 29-JUN-2011
TIME PLOTTED => 07:53

Dist	COUNTY	ROUTE	POST MILES TOTAL PROJECT	SHEET No.	TOTAL SHEETS
07	LA	710	17.2/26.4	564	1507

REGISTERED CIVIL ENGINEER 03/30/11 DATE

6-27-11
PLANS APPROVAL DATE

REGISTERED PROFESSIONAL ENGINEER ROBERT M. HENDERSON No. C66736 Exp.09/30/12 CIVIL STATE OF CALIFORNIA

THE STATE OF CALIFORNIA OR ITS OFFICERS OR AGENTS SHALL NOT BE RESPONSIBLE FOR THE ACCURACY OR COMPLETENESS OF SCANNED COPIES OF THIS PLAN SHEET.

CALTRANS DISTRICT 7
100 S. MAIN STREET
LOS ANGELES, CA 90012

CH2M HILL
1000 WILSHIRE BLVD
LOS ANGELES, CA 90017

NOTE:

1. FOR QUANTITIES OF DRAINAGE SYSTEMS/UNITS TO BE REMOVED OR ABANDONED, SEE SHEETS DQ-30 TO DQ-34.

DRAINAGE PLAN SHEET No.	DRAINAGE SYSTEM No. ⬡	DRAINAGE UNIT ◯	ADJUST INLET	ADJUST MANHOLE TO GRADE	CAP INLET	DITCH EXCAVATION (TYPE Z-2) AERIALLY DEPOSITED LEAD	HOT MIX ASPHALT (TYPE A)	PLACE HOT MIX ASPHALT (MISC AREAS)	MINOR CONCRETE (MINOR STRUCTURE)	MINOR CONCRETE (BACKFILL)	APC 12"	APC 18"	APC 24"	CSP 18" Bit Ctd CSP (.079" THICK)	CSP 24" Bit Ctd CSP (.079" THICK)	12" Bit Ctd SCSP (.079" THICK)	18" Bit Ctd SCSP (.079" THICK)	12" Bit Ctd CSP RISER (.079" THICK)	36" Bit Ctd CSP RISER (.079" THICK)	3" PLASTIC PIPE (SCH 40 PVC)	GRATED LINE DRAIN	(N) WALL DRAIN	18" ALTERNATIVE FLARED END SECTION	24" ALTERNATIVE FLARED END SECTION	ROCK SLOPE PROTECTION (FACING, METHOD B)	ROCK SLOPE PROTECTION FABRIC	8" PERFORATED PLASTIC PIPE UNDERDRAIN	GSRD (LR-1)	GSRD (LR-2)	GSRD (INCLINED SCREEN TYPE A)	MISCELLANEOUS IRON AND STEEL	(N) FRAME & GRATE (24-12)	(N) ELBOW	(N) CONCRETE COLLAR	(N) "H" OR "V"	(N) PIPE JOINT CLASSIFICATION	(N) MAXIMUM COVER	DESCRIPTION	STATION	DRAINAGE PLAN SHEET No.	DRAINAGE SYSTEM No. ⬡	DRAINAGE UNIT ◯
			EA	EA	EA	CY	TON	SQYD	CY	CY	LF	LF	LF	LF	LF	LF	LF	LF	LF	LF	LF	LF	EA	EA	CY	SQYD	LF	EA	EA	EA	LB	EA	EA	EA	FT	LF	FT					
D-19	108	c							1.05																						326	1			3.45			G1 INLET	22.00' Rt "C" 308+02.00	D-19	108	c
		d										44.0																								S	2.3	18" APC				d
		e							1.59																						652	2			3.76			GD-1 INLET	22.00' Rt "C" 307+55.00			e
		f																																				WALL DRAIN (CASE 2)	24.00' Rt "C" 308+02.00			f
		g			1																																	CAP INLET	16.00 Rt "C" 308+59.00			g
D-19	109	a							2.30																						652	2			6.20			GD-2 INLET	64.00' Rt "R710B" 1312+86.14	D-19	109	a
		b										32.7																								S	3.8	18" APC				b
		c							1.30																						326	1			4.55			G1 INLET	64.00' Rt "R710B" 1312+50.00			c
		d								0.41		4.2																								S	1.4	18" APC w/ Conc ENCASEMENT				d
		e							1.38																						652	2			3.05			GD-1 INLET	22.00' Rt "C" 312+89.00			e
		f											110.9																							S	2.7	24" APC				f
		g							1.75																						652	2			4.31			GD-1 INLET	64.83' Rt "R710B" 1314+50.00			g
		h																																				REMOVE INLET	66.00 Rt "R710B" 1312+86.00			h
		i			1																																	CAP INLET	69.00 Rt "R710B" 1313+37.00			i
		j			1																																	CAP INLET	87.00 Rt "R710B" 1312+87.00			j
D-19	110	a							2.07																						652	2			5.43			GD-2 INLET	68.65' Rt "R710B" 1312+00.76	D-19	110	a
		b											20.8																							S	3.2	24" APC				b
		c							1.85																						652	2			4.65			GD-1 INLET	67.00' Rt "R710B" 1312+25.00			c
		d																																				REMOVE INLET	67.00' Rt "R710B" 1312+81.00			d
D-19	111	a										36.7																								S	1.5	18" APC		D-19	111	a
		b							1.54																						652	2			3.62			GD-1 INLET	67.00' Rt "R710B" 1310+96.00			b
		c										2.0																								S	2.0	18" APC				c
		d							1.81																						652	2			4.54			GD-1 INLET	93.68' Rt "R710B" 1310+36.00			d
		e			1																																	CAP INLET	87.00' Rt "R710B" 1310+37.00			e
		f			1																																	CAP INLET	66.00' Rt "R710B" 1310+45.00			f
SHEET TOTAL		DQ-25			5				16.64	0.41		119.6	131.7																		5868							SHEET TOTAL				

DRAINAGE QUANTITIES

DQ-25

STATE OF CALIFORNIA - DEPARTMENT OF TRANSPORTATION
Caltrans

CONSULTANT FUNCTIONAL SUPERVISOR: MELISSA DE LA PENA

CALCULATED-DESIGNED BY: I. MATAGI
CHECKED BY: R. HENDERSON

REVISED BY
DATE REVISED

LAST REVISION 00-00-00
DATE PLOTTED => 29-JUN-2011
TIME PLOTTED => 07:53

Dist	COUNTY	ROUTE	POST MILES TOTAL PROJECT	SHEET No.	TOTAL SHEETS
07	LA	710	17.2/26.4	565	1507

REGISTERED CIVIL ENGINEER 03/30/11 DATE

6-27-11
PLANS APPROVAL DATE

REGISTERED PROFESSIONAL ENGINEER ROBERT M. HENDERSON No. C66736 Exp.09/30/12 CIVIL STATE OF CALIFORNIA

THE STATE OF CALIFORNIA OR ITS OFFICERS OR AGENTS SHALL NOT BE RESPONSIBLE FOR THE ACCURACY OR COMPLETENESS OF SCANNED COPIES OF THIS PLAN SHEET.

CALTRANS DISTRICT 7
100 S. MAIN STREET
LOS ANGELES, CA 90012

CH2M HILL
1000 WILSHIRE BLVD
LOS ANGELES, CA 90017

NOTE:

1. FOR QUANTITIES OF DRAINAGE SYSTEMS/UNITS TO BE REMOVED OR ABANDONED, SEE SHEETS DQ-30 TO DQ-34.

DRAINAGE PLAN SHEET No.	DRAINAGE SYSTEM No. ⬡	DRAINAGE UNIT ◯	ADJUST INLET	ADJUST MANHOLE TO GRADE	CAP INLET	DITCH EXCAVATION (TYPE Z-2) AERIALLY DEPOSITED LEAD	HOT MIX ASPHALT (TYPE A)	PLACE HOT MIX ASPHALT (MISC AREAS)	MINOR CONCRETE (MINOR STRUCTURE)	MINOR CONCRETE (BACKFILL)	APC 12"	APC 18"	APC 24"	CSP 18" Bit Ctd CSP (.079" THICK)	CSP 24" Bit Ctd CSP (.079" THICK)	12" Bit Ctd SCSP (.079" THICK)	18" Bit Ctd SCSP (.079" THICK)	12" Bit Ctd CSP RISER (.079" THICK)	36" Bit Ctd CSP RISER (.079" THICK)	3" PLASTIC PIPE (SCH 40 PVC)	GRATED LINE DRAIN	(N) WALL DRAIN	18" ALTERNATIVE FLARED END SECTION	24" ALTERNATIVE FLARED END SECTION	ROCK SLOPE PROTECTION (FACING, METHOD B)	ROCK SLOPE PROTECTION FABRIC	8" PERFORATED PLASTIC PIPE UNDERDRAIN	GSRD (LR-1)	GSRD (LR-2)	GSRD (INCLINED SCREEN TYPE A)	MISCELLANEOUS IRON AND STEEL	(N) FRAME & GRATE (24-12)	(N) ELBOW	(N) CONCRETE COLLAR	(N) "H" OR "V"	(N) PIPE JOINT CLASSIFICATION	(N) MAXIMUM COVER	DESCRIPTION	STATION	DRAINAGE PLAN SHEET No.	DRAINAGE SYSTEM No. ⬡	DRAINAGE UNIT ◯
			EA	EA	EA	CY	TON	SQYD	CY	CY	LF	LF	LF	LF	LF	LF	LF	LF	LF	LF	LF	LF	EA	EA	CY	SQYD	LF	EA	EA	EA	LB	EA	EA	EA	FT	LF	FT					
D-19	111	g			1																																	CAP INLET	67.00' Rt "R710B" 1310+56.00	D-19	111	g
D-19	112	a	1																																			Adj INLET (CASE 2)	1.00' Lt "R710B" 1308+57.80	D-19	112	a
D-19	113	a	1																																			Adj INLET (CASE 2)	1.00' Lt "R710B" 1312+00.00	D-19	113	a
D-19	114	a																				1.0																WALL DRAIN (CASE 1)	24.00' Lt "C" 314+97.50	D-19	114	a
D-19	115	a																				1.0																WALL DRAIN (CASE 1)	69.00' Rt "R710B" 1314+26.60	D-19	115	a
D-19	116	a							0.48																						326	1			1.50			TYPE CL2 INLET (CASE 3)	0.00' Lt "R710B" 1304+44.80	D-19	116	a
		b														153.8																						12" SCSP				b
		c														153.8																						12" SCSP				c
D-19	117	a							0.48																						326	1			1.50			TYPE CL2 INLET (CASE 2)	1.00' Lt "R710B" 1313+00.00	D-19	117	a
		b							0.48																						326	1			1.50			TYPE CL2 INLET (CASE 2)	1.00' Lt "R710B" 1314+00.00			b
		c							0.48																						326	1			1.50			TYPE CL2 INLET (CASE 2)	1.00' Lt "R710B" 1315+00.00			c
		d							0.48																						326	1			1.50			TYPE CL2 INLET (CASE 2)	1.00' Lt "R710B" 1316+00.00			d
		e							0.48																						326	1			1.50			TYPE CL2 INLET (CASE 2)	1.00' Lt "R710B" 1317+00.00			e
D-20	118	a							2.41																						652	2			6.59			GD-2 INLET	1.00' Lt "R710B" 1325+06.95	D-20	118	a
		b											149.6																							S	4.4	24" APC				b
		c							1.88																						326	1			5.22			G2 INLET	1.00' Rt "R710B" 1326+60.00			c
		d											12.1																							S	3.0	24" APC				d
		e							1.72																						326	1			4.60			G2 INLET	1.00' Rt "R710B" 1326+75.00			e
		f										72.0																								S	2.4	18" APC				f
		g							1.20																						326	1			4.13			G1 INLET	1.00' Rt "R710B" 1327+50.00			g
		h																			24.0																	GLD				h
SHEET TOTAL		DQ-26	2		1				10.09			72.0	161.7			307.6					24.0										3586							SHEET TOTAL				

DRAINAGE QUANTITIES

DQ-26

STATE OF CALIFORNIA - DEPARTMENT OF TRANSPORTATION
Caltrans

CONSULTANT FUNCTIONAL SUPERVISOR: MELISSA DE LA PENA
CALCULATED-DESIGNED BY: I. MATAGI
CHECKED BY: R. HENDERSON
REVISED BY
DATE REVISED

LAST REVISION 00-00-00
DATE PLOTTED => 29-JUN-2011
TIME PLOTTED => 07:53

Dist	COUNTY	ROUTE	POST MILES TOTAL PROJECT	SHEET No.	TOTAL SHEETS
07	LA	710	17.2/26.4	566	1507

REGISTERED CIVIL ENGINEER 03/30/11 DATE

6-27-11
PLANS APPROVAL DATE

REGISTERED PROFESSIONAL ENGINEER ROBERT M. HENDERSON No. C66736 Exp.09/30/12 CIVIL STATE OF CALIFORNIA

THE STATE OF CALIFORNIA OR ITS OFFICERS OR AGENTS SHALL NOT BE RESPONSIBLE FOR THE ACCURACY OR COMPLETENESS OF SCANNED COPIES OF THIS PLAN SHEET.

CALTRANS DISTRICT 7
100 S. MAIN STREET
LOS ANGELES, CA 90012

CH2M HILL
1000 WILSHIRE BLVD
LOS ANGELES, CA 90017

NOTE:

1. FOR QUANTITIES OF DRAINAGE SYSTEMS/UNITS TO BE REMOVED OR ABANDONED, SEE SHEETS DQ-30 TO DQ-34.

DRAINAGE PLAN SHEET No.	DRAINAGE SYSTEM No. ⬡	DRAINAGE UNIT ◯	ADJUST INLET	ADJUST MANHOLE TO GRADE	CAP INLET	DITCH EXCAVATION (TYPE Z-2) AERIALLY DEPOSITED LEAD	HOT MIX ASPHALT (TYPE A)	PLACE HOT MIX ASPHALT (MISC AREAS)	MINOR CONCRETE (MINOR STRUCTURE)	MINOR CONCRETE (BACKFILL)	APC 12"	APC 18"	APC 24"	CSP 18" Bit Ctd CSP (.079" THICK)	CSP 24" Bit Ctd CSP (.079" THICK)	12" Bit Ctd SCSP (.079" THICK)	18" Bit Ctd SCSP (.079" THICK)	12" Bit Ctd CSP RISER (.079" THICK)	36" Bit Ctd CSP RISER (.079" THICK)	3" PLASTIC PIPE (SCH 40 PVC)	GRATED LINE DRAIN	(N) WALL DRAIN	18" ALTERNATIVE FLARED END SECTION	24" ALTERNATIVE FLARED END SECTION	ROCK SLOPE PROTECTION (FACING, METHOD B)	ROCK SLOPE PROTECTION FABRIC	8" PERFORATED PLASTIC PIPE UNDERDRAIN	GSRD (LR-1)	GSRD (LR-2)	GSRD (INCLINED SCREEN TYPE A)	MISCELLANEOUS IRON AND STEEL	(N) FRAME & GRATE (24-12)	(N) ELBOW	(N) CONCRETE COLLAR	(N) "H" OR "V"	(N) PIPE JOINT CLASSIFICATION	(N) MAXIMUM COVER	DESCRIPTION	STATION	DRAINAGE PLAN SHEET No.	DRAINAGE SYSTEM No. ⬡	DRAINAGE UNIT ◯
			EA	EA	EA	CY	TON	SQYD	CY	CY	LF	LF	LF	LF	LF	LF	LF	LF	LF	LF	LF	LF	EA	EA	CY	SQYD	LF	EA	EA	EA	LB	EA	EA	EA	FT	LF	FT					
D-20	118	i																																				REMOVE INLET	1.00′ R+ "R710B" 1325+07.00	D-20	118	i
D-20	119	a	1																																			Adj INLET (CASE 3)	1.00′ L+ "R710B" 1328+32.59	D-20	119	a
		b							4.52																						326	1			10.84			G2 INLET	100.19′ L+ "R710B" 1328+35.95			b
		c																																				REMOVE INLET	1.00′ L+ "R710B" 1328+33.00			c
		d			1																																	CAP INLET	91.00′ L+ "R710B" 1328+36.00			d
D-20	120	a										103.5																								S	2.5	18" APC		D-20	120	a
		b							1.68																						652	2			4.09			GD-1 INLET	1.00′ R+ "R710B" 1319+30.00			b
		c										2.0																								S	2.5	18" APC				c
		d							1.43																						652	2			3.21			GD-1 INLET	1.00′ L+ "R710B" 1319+20.00			d
		e							2.09																						652	2			5.48			GD-2 INLET	1.00′ L+ "R710B" 1320+36.93			e
		f																																				REMOVE INLET	2.00′ L+ "R710B" 1320+37.00			f
D-20	121	a																				1.0																WALL DRAIN (CASE 1)	68.00′ R+ "R710B" 1319+77.20	D-20	121	a
D-20	122	a							0.48																						652	2			1.50			TYPE CL2 INLET (CASE 3)	0.00′ R+ "R710B" 1317+62.70	D-20	122	a
		b														163.9																						12" SCSP				b
		c														163.9																						12" SCSP				c
D-21	123	a							1.70																						652	2			4.15			GD-2 INLET	82.21′ R+ "R710B" 1337+78.96	D-21	123	a
		b										24.4																								S	2.5	18" APC				b
		c							1.66																						652	2			4.03			GD-1 INLET	82.97′ R+ "R710B" 1337+50.00			c
		d																			10.0																	GLD				d
		e																																				REMOVE INLET	78.00′ R+ "R710B" 1337+79.00			e
		f			1																																	CAP INLET	78.00′ R+ "R710B" 1338+00.00			f
D-21	124	a							4.03																						652	2			7.97			GT2 INLET w/ CONNER CONNECTION	72.60′ L+ "R710B" 1343+92.09	D-21	124	a
SHEET TOTAL		DQ-27	1		2				17.59			129.9				327.8					10.0										4890							SHEET TOTAL				

DRAINAGE QUANTITIES

DQ-27

STATE OF CALIFORNIA - DEPARTMENT OF TRANSPORTATION
Caltrans

CONSULTANT FUNCTIONAL SUPERVISOR: MELISSA DE LA PENA
CALCULATED-DESIGNED BY: I. MATAGI
CHECKED BY: R. HENDERSON
REVISED BY
DATE REVISED

LAST REVISION 00-00-00
DATE PLOTTED => 29-JUN-2011
TIME PLOTTED => 07:53

Dist	COUNTY	ROUTE	POST MILES TOTAL PROJECT	SHEET No.	TOTAL SHEETS
07	LA	710	17.2/26.4	567	1507

REGISTERED CIVIL ENGINEER 03/30/11 DATE

6-27-11
PLANS APPROVAL DATE

REGISTERED PROFESSIONAL ENGINEER ROBERT M. HENDERSON No. C66736 Exp.09/30/12 CIVIL STATE OF CALIFORNIA

THE STATE OF CALIFORNIA OR ITS OFFICERS OR AGENTS SHALL NOT BE RESPONSIBLE FOR THE ACCURACY OR COMPLETENESS OF SCANNED COPIES OF THIS PLAN SHEET.

CALTRANS DISTRICT 7
100 S. MAIN STREET
LOS ANGELES, CA 90012

CH2M HILL
1000 WILSHIRE BLVD
LOS ANGELES, CA 90017

NOTE:

1. FOR QUANTITIES OF DRAINAGE SYSTEMS/UNITS TO BE REMOVED OR ABANDONED, SEE SHEETS DQ-30 TO DQ-34.

DRAINAGE PLAN SHEET No.	DRAINAGE SYSTEM No. ⬡	DRAINAGE UNIT ◯	ADJUST INLET	ADJUST MANHOLE TO GRADE	CAP INLET	DITCH EXCAVATION (TYPE Z-2) AERIALLY DEPOSITED LEAD	HOT MIX ASPHALT (TYPE A)	PLACE HOT MIX ASPHALT (MISC AREAS)	MINOR CONCRETE (MINOR STRUCTURE)	MINOR CONCRETE (BACKFILL)	APC 12"	APC 18"	APC 24"	CSP 18" Bit Ctd CSP (.079" THICK)	CSP 24" Bit Ctd CSP (.079" THICK)	12" Bit Ctd SCSP (.079" THICK)	18" Bit Ctd SCSP (.079" THICK)	12" Bit Ctd CSP RISER (.079" THICK)	36" Bit Ctd CSP RISER (.079" THICK)	3" PLASTIC PIPE (SCH 40 PVC)	GRATED LINE DRAIN	(N) WALL DRAIN	18" ALTERNATIVE FLARED END SECTION	24" ALTERNATIVE FLARED END SECTION	ROCK SLOPE PROTECTION (FACING, METHOD B)	ROCK SLOPE PROTECTION FABRIC	8" PERFORATED PLASTIC PIPE UNDERDRAIN	GSRD (LR-1)	GSRD (LR-2)	GSRD (INCLINED SCREEN TYPE A)	MISCELLANEOUS IRON AND STEEL	(N) FRAME & GRATE (24-12)	(N) ELBOW	(N) CONCRETE COLLAR	(N) "H" OR "V"	(N) PIPE JOINT CLASSIFICATION	(N) MAXIMUM COVER	DESCRIPTION	STATION	DRAINAGE PLAN SHEET No.	DRAINAGE SYSTEM No. ⬡	DRAINAGE UNIT ◯
			EA	EA	EA	CY	TON	SQYD	CY	CY	LF	LF	LF	LF	LF	LF	LF	LF	LF	LF	LF	LF	EA	EA	CY	SQYD	LF	EA	EA	EA	LB	EA	EA	EA	FT	LF	FT					
D-21	124	b										28.9																								S	3.7	18" APC		D-21	124	b
		c							1.86																						326	1			5.14			G2 INLET	74.59′ Lt "R710B" 1343+58.50			c
		d										23.3																								S	4.0	18" APC				d
		e							1.78																						326	1			4.83			G2 INLET	70.93′ Lt "R710B" 1344+20.00			e
		f			1																																	CAP INLET	65.00′ Lt "R710B" 1344+15.00			f
		g																																				Abn CULVERT				g
		h			1																																	CAP INLET	67.00′ Rt "R710B" 1343+86.00			h
		i																																				Abn CULVERT				i
		j			1																																	CAP INLET	68.00′ Rt "R710B" 1343+59.00			j
D-22	125	a																																1				Conc COLLAR	146.48′ Lt "R710B" 1352+67.33	D-22	125	a
		b											16.6																							P	2.7	24" APC				b
		c																												1								INCLINED SCREEN TYPE A GSRD	127.09′ Rt "R710B" 1352+71.87			c
		d											2.8																							S	2.0	24" APC				d
		e																																1				Conc COLLAR	124.40′ Rt "R710B" 1352+72.51			e
		f											6.3																							P	2.0	24" APC				f
		g																																1				Conc COLLAR	118.29′ Lt "R710B" 1352+73.96			g
		h							2.37																						652	2			6.45			GD-2 INLET	69.00′ Rt "R710B" 1352+85.69			h
		i							2.02																						652	2			5.25			GD-2 INLET	69.00′ Rt "R710B" 1353+12.70			i
		j																																				REMOVE INLET	68.00′ Rt "R710B" 1352+86.00			j
		k																																				REMOVE INLET	67.00′ Rt "R710B" 1353+13.00			k
D-22	126	a	1																																			Adj INLET (CASE 1)	69.00′ Rt "R710B" 1346+85.00	D-22	126	a
D-23	127	a		1																																		Adj MH	71.00′ Rt "R710B" 1364+32.00	D-23	127	a
D-24	128	a							1.15																22.86	55.37												JUNCTION STRUCTURE No. 1	113.77′ Rt "R710B" 1376+26.84	D-24	128	a
		b																							7.41	20.00												RSP (FACING, METHOD B), w/BERM				b
SHEET TOTAL		DQ-28	1	1	3				9.18			52.2	25.7												30.27	75.37				1	1956							SHEET TOTAL				

DRAINAGE QUANTITIES

DQ-28

STATE OF CALIFORNIA - DEPARTMENT OF TRANSPORTATION

Caltrans

CONSULTANT FUNCTIONAL SUPERVISOR: MELISSA DE LA PENA

CALCULATED-DESIGNED BY: I. MATAGI

CHECKED BY: R. HENDERSON

REVISED BY

DATE REVISED

LAST REVISION 00-00-00

DATE PLOTTED => 29-JUN-2011
TIME PLOTTED => 07:53

Dist	COUNTY	ROUTE	POST MILES TOTAL PROJECT	SHEET No.	TOTAL SHEETS
07	LA	710	17.2/26.4	568	1507

REGISTERED CIVIL ENGINEER 03/30/11 DATE

6-27-11
PLANS APPROVAL DATE

REGISTERED PROFESSIONAL ENGINEER ROBERT M. HENDERSON No. C66736 Exp.09/30/12 CIVIL STATE OF CALIFORNIA

THE STATE OF CALIFORNIA OR ITS OFFICERS OR AGENTS SHALL NOT BE RESPONSIBLE FOR THE ACCURACY OR COMPLETENESS OF SCANNED COPIES OF THIS PLAN SHEET.

CALTRANS DISTRICT 7
100 S. MAIN STREET
LOS ANGELES, CA 90012

CH2M HILL
1000 WILSHIRE BLVD
LOS ANGELES, CA 90017

NOTE:

1. FOR QUANTITIES OF DRAINAGE SYSTEMS/UNITS TO BE REMOVED OR ABANDONED, SEE SHEETS DQ-30 TO DQ-34.

DRAINAGE PLAN SHEET No.	DRAINAGE SYSTEM No. ⬡	DRAINAGE UNIT ◯	ADJUST INLET	ADJUST MANHOLE TO GRADE	CAP INLET	DITCH EXCAVATION (TYPE Z-2) AERIALLY DEPOSITED LEAD	HOT MIX ASPHALT (TYPE A)	PLACE HOT MIX ASPHALT (MISC AREAS)	MINOR CONCRETE (MINOR STRUCTURE)	MINOR CONCRETE (BACKFILL)	APC 12"	APC 18"	APC 24"	CSP 18" Bit Ctd CSP (.079" THICK)	CSP 24" Bit Ctd CSP (.079" THICK)	12" Bit Ctd SCSP (.079" THICK)	18" Bit Ctd SCSP (.079" THICK)	12" Bit Ctd CSP RISER (.079" THICK)	36" Bit Ctd CSP RISER (.079" THICK)	3" PLASTIC PIPE (SCH 40 PVC)	GRATED LINE DRAIN	(N) WALL DRAIN	18" ALTERNATIVE FLARED END SECTION	24" ALTERNATIVE FLARED END SECTION	ROCK SLOPE PROTECTION (FACING, METHOD B)	ROCK SLOPE PROTECTION FABRIC	8" PERFORATED PLASTIC PIPE UNDERDRAIN	GSRD (LR-1)	GSRD (LR-2)	GSRD (INCLINED SCREEN TYPE A)	MISCELLANEOUS IRON AND STEEL	(N) FRAME & GRATE (24-12)	(N) ELBOW	(N) CONCRETE COLLAR	(N) "H" OR "V"	(N) PIPE JOINT CLASSIFICATION	(N) MAXIMUM COVER	DESCRIPTION	STATION	DRAINAGE PLAN SHEET No.	DRAINAGE SYSTEM No. ⬡	DRAINAGE UNIT ◯
			EA	EA	EA	CY	TON	SQYD	CY	CY	LF	LF	LF	LF	LF	LF	LF	LF	LF	LF	LF	LF	EA	EA	CY	SQYD	LF	EA	EA	EA	LB	EA	EA	EA	FT	LF	FT					
D-24	128	c					0.49	6.70																														HMA OSD	79.00′ Rt "R710B" 1378+11.00	D-24	128	c
		d																																				REMOVE OSD	79.00′ Rt "R710B" 1378+11.00			d
D-24	129	a							1.90																						652	2			4.83			GD-2 INLET	67.81′ Rt "R710B" 1382+60.79	D-24	129	a
		b										51.3																								S	2.0	18" APC				b
		c							1.55																						652	2			3.63			GD-1 INLET	67.91′ Rt "R710B" 1382+06.00			c
		d																																				REMOVE INLET	67.81′ Rt "R710B" 1382+60.79			d
D-24	130	a										1.0																								S	2.0	18" APC		D-24	130	a
		b							1.10																						326	1						G1 INLET	92.76′ Lt "R710B" 1383+29.50			b
SHEET TOTAL		DQ-29					0.49	6.70	4.55			52.3																			1630							SHEET TOTAL				
DITCH TOTAL						967																																DITCH TOTAL				
GRAND TOTAL		TOTALS	42	1	46	967.7	1.52	10.96	427.2	23.0	162.6	2429.5	1661.0	145.2	318.4	635.4	450.0	19.3	4.5	552.0	611.0		2	3	98.4	267.8	5485.0	1	2	1	88,328							GRAND TOTAL				

DRAINAGE DITCH EARTHWORK QUANTITIES

SHEET No.	BIOSWALE No.	DITCH EXCAVATION (TYPE Z-2) (AERIALLY DEPOSITED LEAD) CY	(N) DITCH BACKFILL CY	SHEET No.	BIOSWALE No.	DITCH EXCAVATION (TYPE Z-2) (AERIALLY DEPOSITED LEAD) CY	(N) DITCH BACKFILL CY
D-3	BSW976L	115	1	D-6	BSW1038R	40	
D-3	BSW977L	20		D-6	BSW1045R	45	1
D-3	BSW978R	200	20	D-12	BSW1157L	30	
D-4	BSW1035L	10	55	D-12	BSW1158L	30	25
D-4	BSW1036L	10	10	D-12	BSW1159L	35	5
D-4	BSW1038L	45		D-12	BSW1160L	6	8
D-4	BSW1039L	95	5	D-12	BSW1161L	12	12
D-5	BSW1041R	40		D-14	BSW1240R	78	1
D-5	BSW1045L	40	5	D-24	BSW1377L	96	10
D-5	BSW1048L	20	2	DITCH TOTAL		967	160

CONSTRUCTION SITE BMP QUANTITIES

TEMPORARY FIBER ROLL	TEMPORARY CONSTRUCTION ENTRANCE	TEMPORARY CHECK DAM	TEMPORARY DRAINAGE INLET PROTECTION	TEMPORARY HYDRAULIC MULCH (BONDED FIBER MATRIX)	MOVE-IN/MOVE OUT (TEMPORARY EROSION CONTROL)	TEMPORARY CONCRETE WASHOUT BIN
LF	EA	LF	EA	SQYD	EA	EA
84,019	8	1,084	237	78,861	8	8

DRAINAGE QUANTITIES

DQ-29

REVISED BY: I. MATAGI
DATE REVISED:
CALCULATED-DESIGNED BY: R. HENDERSON
CHECKED BY:
CONSULTANT FUNCTIONAL SUPERVISOR: MELISSA DE LA PENA

STATE OF CALIFORNIA - DEPARTMENT OF TRANSPORTATION
Caltrans

LAST REVISION 00-00-00
DATE PLOTTED => 29-JUN-2011
TIME PLOTTED => 07:54

Dist	COUNTY	ROUTE	POST MILES TOTAL PROJECT	SHEET No.	TOTAL SHEETS
07	LA	710	17.2/26.4	569	1507

REGISTERED CIVIL ENGINEER 03/30/11 DATE

6-27-11
PLANS APPROVAL DATE

REGISTERED PROFESSIONAL ENGINEER ROBERT M. HENDERSON No. C66736 Exp. 09/30/12 CIVIL STATE OF CALIFORNIA

THE STATE OF CALIFORNIA OR ITS OFFICERS OR AGENTS SHALL NOT BE RESPONSIBLE FOR THE ACCURACY OR COMPLETENESS OF SCANNED COPIES OF THIS PLAN SHEET.

CALTRANS DISTRICT 7
100 S. MAIN STREET
LOS ANGELES, CA 90012

CH2M HILL
1000 WILSHIRE BLVD
LOS ANGELES, CA 90017

DRAINAGE PLAN SHEET No.	DRAINAGE SYSTEM No. ⬡	DRAINAGE UNIT ◯		ABANDON CULVERT	ABANDON INLET	SAND BACKFILL	REMOVE OVERSIDE DRAIN	REMOVE CULVERT	REMOVE INLET	REMOVE HEADWALL	REMOVE CONCRETE	MAXIMUM COVER	DESCRIPTION	STATION	DRAINAGE PLAN SHEET No.	DRAINAGE SYSTEM No. ⬡	DRAINAGE UNIT ◯
				LF	EA	CY	EA	LF	EA	EA	CY	FT					
D-1	2	a				0.72		11.0				3.7	REMOVE CULVERT		D-1	2	a
		g							1				REMOVE INLET				g
D-2	3	d								1			REMOVE HW		D-2	3	d
		e				0.46		7.0				1.5	REMOVE CULVERT				e
D-2	4	d								1			REMOVE HW		D-2	4	d
		e				0.39		6.0				1.5	REMOVE CULVERT				e
D-2	5	c						9.0				1.5	REMOVE CULVERT		D-2	5	c
		d				0.46				1			REMOVE HW				d
D-4	13	e				9.31		80.0				1.2	REMOVE CULVERT		D-4	13	e
D-7	18	a							1				REMOVE CLEANOUT	0.44′ R+ "R710A" 1087+26.90	D-7	18	a
		b							1				REMOVE CLEANOUT	0.06′ R+ "R710A" 1090+44.73			b
		c							1				REMOVE CLEANOUT	0.04′ L+ "R710A" 1091+25.97			c
		d							1				REMOVE CLEANOUT	0.50′ L+ "R710A" 1092+07.44			d
		e							1				REMOVE CLEANOUT	0.32′ L+ "R710A" 1093+87.21			e
D-8	23	a							1				REMOVE CLEANOUT	0.17′ R+ "R710A" 1094+87.03	D-8	23	a
		b							1				REMOVE CLEANOUT	0.13′ L+ "R710A" 1095+00.00			b
		c							1				REMOVE CLEANOUT	0.20′ L+ "R710A" 1097+60.49			c
		d							1				REMOVE CLEANOUT	0.24′ R+ "R710A" 1098+75.11			d
		e							1				REMOVE CLEANOUT	0.29′ R+ "R710A" 1099+78.66			e
		f							1				REMOVE CLEANOUT	0.24′ L+ "R710A" 1100+78.31			f
		g							1				REMOVE CLEANOUT	0.06′ L+ "R710A" 1101+70.32			g
		h							1				REMOVE CLEANOUT	0.03′ L+ "R710A" 1102+62.14			h
		i							1				REMOVE CLEANOUT	0.81′ R+ "R710A" 1103+54.69			i
		j							1				REMOVE CLEANOUT	0.23′ R+ "R710A" 1104+46.57			j
		k							1				REMOVE CLEANOUT	0.08′ R+ "R710A" 1106+32.05			k
		l							1				REMOVE CLEANOUT	0.05′ L+ "R710A" 1107+26.27			l
		m							1				REMOVE CLEANOUT	0.27′ L+ "R710A" 1108+20.65			m
D-8	25	a						522.0					REMOVE 8" UNDERDRAIN		D-8	25	a
		b						268.0					REMOVE 8" UNDERDRAIN				b
SHEET TOTAL		DQ-30				11.34		903.0	19	3			SHEET TOTAL				

DRAINAGE QUANTITIES

DQ-30

STATE OF CALIFORNIA - DEPARTMENT OF TRANSPORTATION
Caltrans

CONSULTANT FUNCTIONAL SUPERVISOR: MELISSA DE LA PENA

CALCULATED-DESIGNED BY: I. MATAGI
CHECKED BY: R. HENDERSON

REVISED BY
DATE REVISED

LAST REVISION 00-00-00
DATE PLOTTED => 29-JUN-2011
TIME PLOTTED => 07:54

Dist	COUNTY	ROUTE	POST MILES TOTAL PROJECT	SHEET No.	TOTAL SHEETS
07	LA	710	17.2/26.4	570	1507

REGISTERED CIVIL ENGINEER 03/30/11 DATE

6-27-11
PLANS APPROVAL DATE

REGISTERED PROFESSIONAL ENGINEER ROBERT M. HENDERSON No. C66736 Exp. 09/30/12 CIVIL STATE OF CALIFORNIA

THE STATE OF CALIFORNIA OR ITS OFFICERS OR AGENTS SHALL NOT BE RESPONSIBLE FOR THE ACCURACY OR COMPLETENESS OF SCANNED COPIES OF THIS PLAN SHEET.

CALTRANS DISTRICT 7
100 S. MAIN STREET
LOS ANGELES, CA 90012

CH2M HILL
1000 WILSHIRE BLVD
LOS ANGELES, CA 90017

DRAINAGE PLAN SHEET No.	DRAINAGE SYSTEM No. ⬡	DRAINAGE UNIT ◯		ABANDON CULVERT	ABANDON INLET	SAND BACKFILL	REMOVE OVERSIDE DRAIN	REMOVE CULVERT	REMOVE INLET	REMOVE HEADWALL	REMOVE CONCRETE	MAXIMUM COVER	DESCRIPTION	STATION	DRAINAGE PLAN SHEET No.	DRAINAGE SYSTEM No. ⬡	DRAINAGE UNIT ◯
				LF	EA	CY	EA	LF	EA	EA	CY	FT					
D-8	25	c						501.0					REMOVE 8" UNDERDRAIN		D-8	25	c
		d						243.0					REMOVE 8" UNDERDRAIN				d
D-9	35	a							1				REMOVE CLEANOUT	0.10′ Lt "R710A" 1112+21.15	D-9	35	a
		b							1				REMOVE CLEANOUT	0.02′ Lt "R710A" 1113+18.97			b
		c							1				REMOVE CLEANOUT	0.15′ Rt "R710A" 1114+11.37			c
		d							1				REMOVE CLEANOUT	0.09′ Rt "R710A" 1115+16.42			d
		e							1				REMOVE CLEANOUT	0.24′ Rt "R710A" 1116+13.91			e
		f							1				REMOVE CLEANOUT	0.24′ Lt "R710A" 1117+14.84			f
		g							1				REMOVE CLEANOUT	0.19′ Rt "R710A" 1119+12.16			g
		h							1				REMOVE CLEANOUT	0.09′ Rt "R710A" 1120+07.63			h
		i							1				REMOVE CLEANOUT	0.15′ Rt "R710A" 1121+07.71			i
D-9	37	a						146.0					REMOVE 8" UNDERDRAIN		D-9	37	a
		b						189.0					REMOVE 8" UNDERDRAIN				b
		c						297.0					REMOVE 8" UNDERDRAIN				c
		d						367.0					REMOVE 8" UNDERDRAIN				d
		e						284.0					REMOVE 8" UNDERDRAIN				e
		f						197.0					REMOVE 8" UNDERDRAIN				f
		g						334.0					REMOVE 8" UNDERDRAIN				g
		h						56.0					REMOVE 8" UNDERDRAIN				h
		i						277.0					REMOVE 8" UNDERDRAIN				i
D-10	44	a							1				REMOVE CLEANOUT	0.27′ Lt "R710A" 1126+32.67	D-10	44	a
		b							1				REMOVE CLEANOUT	0.06′ Lt "R710A" 1127+14.47			b
		c							1				REMOVE CLEANOUT	0.04′ Rt "R710A" 1128+07.26			c
		d							1				REMOVE CLEANOUT	0.05′ Rt "R710A" 1129+00.35			d
		e							1				REMOVE CLEANOUT	0.32′ Lt "R710A" 1129+93.34			e
		f							1				REMOVE CLEANOUT	0.13′ Rt "R710A" 1131+83.06			f
		g							1				REMOVE CLEANOUT	0.01′ Rt "R710A" 1132+88.53			g
		h							1				REMOVE CLEANOUT	0.04′ Lt "R710A" 1133+85.65			h
		i							1				REMOVE CLEANOUT	0.07′ Lt "R710A" 1134+86.02			i
		j							1				REMOVE CLEANOUT	0.34′ Rt "R710A" 1135+82.30			j
D-10	45	a						146.0					REMOVE 8" UNDERDRAIN		D-10	45	a
		b						170.0					REMOVE 8" UNDERDRAIN				b
SHEET TOTAL		DQ-31						3207.0	19				SHEET TOTAL				

DRAINAGE QUANTITIES

DQ-31

STATE OF CALIFORNIA - DEPARTMENT OF TRANSPORTATION
Caltrans

CONSULTANT FUNCTIONAL SUPERVISOR: MELISSA DE LA PENA
CALCULATED-DESIGNED BY: I. MATAGI
CHECKED BY: R. HENDERSON
REVISED BY
DATE REVISED

LAST REVISION 00-00-00
DATE PLOTTED => 29-JUN-2011
TIME PLOTTED => 07:54

Dist	COUNTY	ROUTE	POST MILES TOTAL PROJECT	SHEET No.	TOTAL SHEETS
07	LA	710	17.2/26.4	571	1507

REGISTERED CIVIL ENGINEER 03/30/11 DATE

6-27-11
PLANS APPROVAL DATE

REGISTERED PROFESSIONAL ENGINEER ROBERT M. HENDERSON No. C66736 Exp. 09/30/12 CIVIL STATE OF CALIFORNIA

THE STATE OF CALIFORNIA OR ITS OFFICERS OR AGENTS SHALL NOT BE RESPONSIBLE FOR THE ACCURACY OR COMPLETENESS OF SCANNED COPIES OF THIS PLAN SHEET.

CALTRANS DISTRICT 7
100 S. MAIN STREET
LOS ANGELES, CA 90012

CH2M HILL
1000 WILSHIRE BLVD
LOS ANGELES, CA 90017

DRAINAGE PLAN SHEET No.	DRAINAGE SYSTEM No. ⬡	DRAINAGE UNIT ◯		ABANDON CULVERT	ABANDON INLET	SAND BACKFILL	REMOVE OVERSIDE DRAIN	REMOVE CULVERT	REMOVE INLET	REMOVE HEADWALL	REMOVE CONCRETE	MAXIMUM COVER	DESCRIPTION	STATION	DRAINAGE PLAN SHEET No.	DRAINAGE SYSTEM No. ⬡	DRAINAGE UNIT ◯
				LF	EA	CY	EA	LF	EA	EA	CY	FT					
D-10	45	c						570.0					REMOVE 8" UNDERDRAIN		D-10	45	c
		d						156.0					REMOVE 8" UNDERDRAIN				d
		e						156.0					REMOVE 8" UNDERDRAIN				e
		f						706.0					REMOVE 8" UNDERDRAIN				f
		g						175.0					REMOVE 8" UNDERDRAIN				g
D-11	48	a							1				REMOVE INLET	77.45' Rt "R710A" 1137+36.32	D-11	48	a
D-11	49	a							1				REMOVE INLET	77.26' Rt "R710A" 1140+86.17	D-11	49	a
D-11	50	b		30.0		3.49							Abn CULVERT	77.34' Rt "R710A" 1144+36.11	D-11	50	b
D-11	51	a							1				REMOVE INLET	77.34' Rt "R710A" 1144+36.11	D-11	51	a
D-11	52	a							1				REMOVE INLET	77.10' Rt "R710A" 1147+86.17	D-11	52	a
D-12	53	c		151.0		17.57							Abn CULVERT		D-12	53	c
		d			1	0.83							Abn INLET	80.67' Lt "R710A" 1155+34.73			d
D-12	54	g		10.0		1.16							Abn CULVERT	21.55' Rt "AT3" 58+61.70	D-12	54	g
		h			1	0.83							Abn INLET				h
D-12	55	a							1				REMOVE INLET	23.00' Lt "R710A" 60+85.83	D-12	55	a
D-12	56	c		59.0		6.86							Abn CULVERT		D-12	56	c
		d					1.0						Abn INLET	56.94' Lt "R710A" 1160+56.99			
D-12	58	b									2.66		REMOVE Conc CURB AND SIDEWALK	405.82' Lt "R710A" 1160+83.20	D-12	58	b
D-13	60	f						29.2				4.0	REMOVE CULVERT		D-13	60	f
		g			1	0.83							Abn INLET	38.50' Lt "CONN1" 1223+01.60			g
		h		16.0		1.86							Abn CULVERT				h
		i			1	0.83							Abn INLET	38.90' Lt "CONN1" 1222+81.80			i
D-13	61	c		10.0		1.16							Abn CULVERT		D-13	61	c
		d			1								Abn INLET	11.40' Lt "CONN3" 1225+95.00			d
SHEET TOTAL		DQ-32		276.0	5	35.43	1.0	1792.2	5		2.7		SHEET TOTAL				

DRAINAGE QUANTITIES

DQ-32

STATE OF CALIFORNIA - DEPARTMENT OF TRANSPORTATION
Caltrans

CONSULTANT FUNCTIONAL SUPERVISOR: MELISSA DE LA PENA
CALCULATED-DESIGNED BY: I. MATAGI
CHECKED BY: R. HENDERSON
REVISED BY
DATE REVISED

LAST REVISION 00-00-00
DATE PLOTTED => 29-JUN-2011
TIME PLOTTED => 07:54

Dist	COUNTY	ROUTE	POST MILES TOTAL PROJECT	SHEET No.	TOTAL SHEETS
07	LA	710	17.2/26.4	572	1507

REGISTERED CIVIL ENGINEER 03/30/11 DATE

6-27-11
PLANS APPROVAL DATE

REGISTERED PROFESSIONAL ENGINEER ROBERT M. HENDERSON No. C66736 Exp. 09/30/12 CIVIL STATE OF CALIFORNIA

THE STATE OF CALIFORNIA OR ITS OFFICERS OR AGENTS SHALL NOT BE RESPONSIBLE FOR THE ACCURACY OR COMPLETENESS OF SCANNED COPIES OF THIS PLAN SHEET.

CALTRANS DISTRICT 7
100 S. MAIN STREET
LOS ANGELES, CA 90012

CH2M HILL
1000 WILSHIRE BLVD
LOS ANGELES, CA 90017

DRAINAGE PLAN SHEET No.	DRAINAGE SYSTEM No. ⬡	DRAINAGE UNIT ○		ABANDON CULVERT	ABANDON INLET	SAND BACKFILL	REMOVE OVERSIDE DRAIN	REMOVE CULVERT	REMOVE INLET	REMOVE HEADWALL	REMOVE CONCRETE	MAXIMUM COVER	DESCRIPTION	STATION	DRAINAGE PLAN SHEET No.	DRAINAGE SYSTEM No. ⬡	DRAINAGE UNIT ○
				LF	EA	CY	EA	LF	EA	EA	CY	FT					
D-14	62	o									3.10		REMOVE Conc		D-14	62	o
		p								1			REMOVE HW	67.00′ Rt "CONN2" 1234+82.00			p
		q								1			REMOVE HW	69.00′ Rt "CONN2" 1235+63.00			q
		r						15.0				4.0	REMOVE CULVERT				r
		s						15.0				5.0	REMOVE CULVERT				s
D-14	63	g						40.0				4.0	REMOVE CULVERT		D-14	63	g
D-14	65	g		72.0		8.38							Abn CULVERT		D-14	65	g
D-14	66	e									0.77		REMOVE CURB	126.00 Rt "R710B" 1240+18.00	D-14	66	e
D-14	67	f		167.2		19.45							Abn CULVERT		D-14	67	f
D-14	72	b						32.3				3.5	REMOVE CULVERT		D-14	72	b
		c							1				REMOVE INLET	121′.00 Rt "CONN2" 1237+40.00			c
D-15	75	i							1				REMOVE INLET	0.61′ Rt "R710B" 1253+64.79	D-15	75	i
		j						53.0				3.4	REMOVE CULVERT				j
		k							1				REMOVE INLET	0.67′ Rt "R710B" 1254+19.39			k
		l						32.0				3.2	REMOVE CULVERT				l
		m							1				REMOVE INLET	1.61′ Rt "R710B" 1254+55.66			m
D-15	80	b							1				REMOVE INLET	1.00′ Rt "R710B" 1261+41.35	D-15	80	b
D-16	84	d							1				REMOVE INLET	17.10′ Lt "CONNA" 74+20.89	D-16	84	d
D-16	88	c							1				REMOVE INLET	2.89′ Lt "R710B" 1273+74.91	D-16	88	c
D-16	89	f							1				REMOVE INLET	2.34′ Lt "R710B" 1269+87.90	D-16	89	f
D-17	91	g							1				REMOVE INLET	1.15′ Lt "R710B" 2395+35.78	D-17	91	g
D-17	92	l							1				REMOVE INLET	68.00 Rt "R710B" 1277+41.00	D-17	92	l
		m		30.0		3.49							Abn CULVERT				m
SHEET TOTAL		DQ-33		269.2		31.32		187.3	10	2	3.9		SHEET TOTAL				

DRAINAGE QUANTITIES

DQ-33

STATE OF CALIFORNIA - DEPARTMENT OF TRANSPORTATION
Caltrans

CONSULTANT FUNCTIONAL SUPERVISOR: MELISSA DE LA PENA
CALCULATED-DESIGNED BY: I. MATAGI
CHECKED BY: R. HENDERSON
REVISED BY
DATE REVISED

LAST REVISION 00-00-00
DATE PLOTTED => 29-JUN-2011
TIME PLOTTED => 07:54

Dist	COUNTY	ROUTE	POST MILES TOTAL PROJECT	SHEET No.	TOTAL SHEETS
07	LA	710	17.2/26.4	573	1507

REGISTERED CIVIL ENGINEER 03/30/11 DATE

6-27-11
PLANS APPROVAL DATE

REGISTERED PROFESSIONAL ENGINEER
ROBERT M. HENDERSON
No. C66736
Exp. 09/30/12
CIVIL
STATE OF CALIFORNIA

THE STATE OF CALIFORNIA OR ITS OFFICERS OR AGENTS SHALL NOT BE RESPONSIBLE FOR THE ACCURACY OR COMPLETENESS OF SCANNED COPIES OF THIS PLAN SHEET.

CALTRANS DISTRICT 7
100 S. MAIN STREET
LOS ANGELES, CA 90012

CH2M HILL
1000 WILSHIRE BLVD
LOS ANGELES, CA 90017

DRAINAGE PLAN SHEET No.	DRAINAGE SYSTEM No. ⬡	DRAINAGE UNIT ◯		ABANDON CULVERT	ABANDON INLET	SAND BACKFILL	REMOVE OVERSIDE DRAIN	REMOVE CULVERT	REMOVE INLET	REMOVE HEADWALL	REMOVE CONCRETE	MAXIMUM COVER	DESCRIPTION	STATION	DRAINAGE PLAN SHEET No.	DRAINAGE SYSTEM No. ⬡	DRAINAGE UNIT ◯
				LF	EA	CY	EA	LF	EA	EA	CY	FT					
D-17	93	e							1				REMOVE INLET	92.00′ R† "R710B" 1284+08.00	D-17	93	e
D-17	97	c							1				REMOVE INLET	1.00′ L† "R710B" 1277+41.29	D-17	97	c
D-18	98	b							1				REMOVE INLET	1.00′ R† "R710B" 1296+36.45	D-18	98	b
D-19	109	h							1				REMOVE INLET	66.00 R† "R710B" 1312+86.00	D-19	109	h
D-19	110	d							1				REMOVE INLET	67.00′ R† "R710B" 1312+81.00	D-19	110	d
D-20	118	i							1				REMOVE INLET	1.00′ R† "R710B" 1325+07.00	D-20	118	i
D-20	119	c							1				REMOVE INLET	1.00′ L† "R710B" 1328+33.00	D-20	119	c
D-20	120	f							1				REMOVE INLET	2.00′ L† "R710B" 1320+37.00	D-20	120	f
D-21	123	e							1				REMOVE INLET	78.00′ R† "R710B" 1337+79.00	D-21	123	e
D-21	124	g		22.8		2.65							Abn CULVERT		D-21	124	g
		i		24.2		2.82							Abn CULVERT				i
D-22	125	j							1				REMOVE INLET	68.00′ R† "R710B" 1352+86.00	D-22	125	j
		k							1				REMOVE INLET	67.00′ R† "R710B" 1353+13.00			k
D-24	128	d					1.0						REMOVE OSD	79.00′ R† "R710B" 1378+11.00	D-24	128	d
D-24	129	d							1				REMOVE INLET	67.81′ R† "R710B" 1382+60.79	D-24	129	d
SHEET TOTAL		DQ-34		47.0		5.47	1.0		12				SHEET TOTAL				
GRAND TOTAL		TOTALS		592.2	5	83.6	2.0	6089.5	65	5	6.5		GRAND TOTAL				

DRAINAGE QUANTITIES

DQ-34

STATE OF CALIFORNIA - DEPARTMENT OF TRANSPORTATION
Caltrans

CONSULTANT FUNCTIONAL SUPERVISOR: MELISSA DE LA PENA
CALCULATED-DESIGNED BY: I. MATAGI
CHECKED BY: R. HENDERSON
REVISED BY
DATE REVISED

LAST REVISION 00-00-00
DATE PLOTTED => 29-JUN-2011
TIME PLOTTED => 07:54

Dist	COUNTY	ROUTE	POST MILES TOTAL PROJECT	SHEET No.	TOTAL SHEETS
07	LA	710	17.2/26.4	574	1507

REGISTERED CIVIL ENGINEER DATE 03/30/11

6-27-11
PLANS APPROVAL DATE

REGISTERED PROFESSIONAL ENGINEER JOSEPH W. SAWTELLE No. C60110 Exp. 06/30/12 CIVIL STATE OF CALIFORNIA

THE STATE OF CALIFORNIA OR ITS OFFICERS OR AGENTS SHALL NOT BE RESPONSIBLE FOR THE ACCURACY OR COMPLETENESS OF SCANNED COPIES OF THIS PLAN SHEET.

CALTRANS DISTRICT 7
100 S. MAIN STREET
LOS ANGELES, CA 90012

TRANSYSTEMS
6 HUTTON CENTRE DRIVE
SUITE 1250
SANTA ANA, CA 92707

NOTES:

1. (N) NOT A SEPARATE PAY ITEM. FOR INFORMATION ONLY.
2. DRAINAGE SYSTEMS T01, T02, T04, T08, AND T15 TO BE INSTALLED IN STAGE 1 (PHASE 2) AND REMOVED IN STAGE 1 (PHASE 4).
3. DRAINAGE SYSTEMS T03, T05, T09, T10, AND T14 TO BE INSTALLED IN STAGE 1 (PHASE 3) AND REMOVED IN STAGE 1 (PHASE 4).
4. DRAINAGE SYSTEMS T07, T11, T12, AND T13 TO BE INSTALLED IN STAGE 1 (PHASE 3) AND REMOVED IN STAGE 1 (PHASE 5).
5. DRAINAGE SYSTEM T06 TO BE INSTALLED IN STAGE 1 (PHASE 2) AND IN STAGE 1 (PHASE 3). THE ENTIRE DRAINAGE SYSTEM T06 TO BE REMOVED IN STAGE 1 (PHASE 5).

DRAINAGE PLAN SHEET No.	DRAINAGE SYSTEM No. ⬡	DRAINAGE UNIT No. ○	TEMPORARY 12" Bit Ctd CSP RISER (0.079" THICK) LF	TEMPORARY 18" Bit Ctd SCSP (0.079" THICK) LF	CAP RISER EA	REMOVE SLOTTED CORRUGATED STEEL PIPE (N) LF	REMOVE PIPE RISER (N) LF	MINOR CONCRETE (COLLAR) (N) CY	CONTROLLED LOW STRENGTH MATERIAL (N) CY	Misc IRON & STEEL (N) LB	1/4" ROUND CHECKERED PLATE COVER (24" Dia) (N) EA	90° CSP REDUCING ELBOW (N) EA	CSP ELBOW (N) EA	DESCRIPTION	STATION (ALL STATION OFFSETS ARE FROM "R710B" LINE)	DRAINAGE PLAN SHEET No.	DRAINAGE SYSTEM No. ⬡	DRAINAGE UNIT No. ○
														STAGE 1 (PHASE 2)				
D-25	T01	a		114				0.5	5.7				1	18" SCSP		D-25	T01	a
D-25	T02	a		314				0.5	15.7				1	18" SCSP		D-25	T02	a
D-25	T04	a		604				0.5	30.2				1	18" SCSP		D-25	T04	a
D-25	T06	a	6					0.2				1		12" CSP RISER	19.5′ Rt 1296+38	D-25	T06	a
		b		35					2.8					18" SCSP				b
D-26	T08	a		684				0.5	34.2				1	18" SCSP		D-26	T08	a
D-27	T15	a		234				0.5	11.7				1	18" SCSP		D-27	T15	a
														STAGE 1 (PHASE 3)				
D-25	T03	a	8					0.2				1		12" CSP RISER	29.0′ Lt 1298+43	D-25	T03	a
		b		340					27.2					18" SCSP				b
D-25	T05	a	8					0.2				1		12" CSP RISER	31.0′ Lt 1301+96	D-25	T05	a
		b		640					51.2					18" SCSP				b
D-25	T06	b		235					18.8					18" SCSP		D-25	T06	b
D-25	T07	a	12					0.2				1		12" CSP RISER	19.5′ Rt 1302+03	D-25	T07	a
		b		830					66.4					18" SCSP				b
D-26	T09	a	11					0.2				1		12" CSP RISER	31.0′ Lt 1312+86	D-26	T09	a
		b		740					59.2					18" SCSP				b
D-26	T10	a	7					0.2				1		12" CSP RISER	31.0′ Lt 1308+58	D-26	T10	a
		b		410					32.8					18" SCSP				b
SHEET TOTAL			52	5180				3.7	355.9			6	5					

DRAINAGE QUANTITIES
TEMPORARY DRAINAGE
FOR CESAR CHAVEZ DIGOUT

DQ-35

STATE OF CALIFORNIA - DEPARTMENT OF TRANSPORTATION
Caltrans

CONSULTANT FUNCTIONAL SUPERVISOR: MELISSA DE LA PENA
CALCULATED-DESIGNED BY: J. SAWTELLE
CHECKED BY: C. SOSA
REVISED BY
DATE REVISED

LAST REVISION 00-00-00
DATE PLOTTED => 29-JUN-2011
TIME PLOTTED => 07:54

Dist	COUNTY	ROUTE	POST MILES TOTAL PROJECT	SHEET No.	TOTAL SHEETS
07	LA	710	17.2/26.4	575	1507

REGISTERED CIVIL ENGINEER 03/30/11 DATE

6-27-11
PLANS APPROVAL DATE

REGISTERED PROFESSIONAL ENGINEER JOSEPH W. SAWTELLE No. C60110 Exp. 06/30/12 CIVIL STATE OF CALIFORNIA

THE STATE OF CALIFORNIA OR ITS OFFICERS OR AGENTS SHALL NOT BE RESPONSIBLE FOR THE ACCURACY OR COMPLETENESS OF SCANNED COPIES OF THIS PLAN SHEET.

CALTRANS DISTRICT 7
100 S. MAIN STREET
LOS ANGELES, CA 90012

TRANSYSTEMS
6 HUTTON CENTRE DRIVE
SUITE 1250
SANTA ANA, CA 92707

NOTES:

1. (N) NOT A SEPARATE PAY ITEM. FOR INFORMATION ONLY.
2. DRAINAGE SYSTEMS T01, T02, T04, T08, AND T15 TO BE INSTALLED IN STAGE 1 (PHASE 2) AND REMOVED IN STAGE 1 (PHASE 4).
3. DRAINAGE SYSTEMS T03, T05, T09, T10, AND T14 TO BE INSTALLED IN STAGE 1 (PHASE 3) AND REMOVED IN STAGE 1 (PHASE 4).
4. DRAINAGE SYSTEMS T07, T11, T12, AND T13 TO BE INSTALLED IN STAGE 1 (PHASE 3) AND REMOVED IN STAGE 1 (PHASE 5).
5. DRAINAGE SYSTEM T06 TO BE INSTALLED IN STAGE 1 (PHASE 2) AND IN STAGE 1 (PHASE 3). THE ENTIRE DRAINAGE SYSTEM T06 TO BE REMOVED IN STAGE 1 (PHASE 5).

DRAINAGE PLAN SHEET No.	DRAINAGE SYSTEM No. ⬡	DRAINAGE UNIT No. ○	TEMPORARY 12" Bit Ctd CSP RISER (0.079" THICK)	TEMPORARY 18" Bit Ctd SCSP (0.079" THICK)	CAP RISER	REMOVE SLOTTED CORRUGATED STEEL PIPE (N)	REMOVE PIPE RISER (N)	MINOR CONCRETE (COLLAR) (N)	CONTROLLED LOW STRENGTH MATERIAL (N)	Misc IRON & STEEL (N)	1/4" ROUND CHECKERED PLATE COVER (24" Dia) (N)	90° CSP REDUCING ELBOW (N)	CSP ELBOW (N)	DESCRIPTION	STATION (ALL STATION OFFSETS ARE FROM "R710B" LINE)	DRAINAGE PLAN SHEET No.	DRAINAGE SYSTEM No. ⬡	DRAINAGE UNIT No. ○
			LF	LF	EA	LF	LF	CY	CY	LB	EA	EA	EA					
														STAGE 1 (PHASE 3)				
D-26	T11	a	15					0.2				1		12" CSP RISER	19.5′ R+ 1310+45	D-26	T11	a
		b		150					12.0					18" SCSP				b
D-26	T12	a	6					0.2				1		12" CSP RISER	19.5′ R+ 1312+00	D-26	T12	a
		b		510					40.8					18" SCSP				b
D-27	T13	a	6					0.2				1		12" CSP RISER	19.5′ R+ 1320+37	D-27	T13	a
		b		410					32.8					18" SCSP				b
D-27	T14	a	6					0.2				1		12" CSP RISER	31.0′ L+ 1320+37	D-27	T14	a
		b		360					28.8					18" SCSP				b
														REMOVALS STAGE 1 (PHASE 4)				
D-25	T01	b				114								REMOVE SCSP		D-25	T01	b
D-25	T02	b				314								REMOVE SCSP		D-25	T02	b
D-25	T03	a			1		4			31	1			REMOVE AND CAP PIPE RISER	29.0′ L+ 1298+43	D-25	T03	a
		b				340								REMOVE SCSP				b
D-25	T04	b				604								REMOVE SCSP		D-25	T04	b
D-25	T05	a			1		4			31	1			REMOVE AND CAP PIPE RISER	31.0′ L+ 1301+96	D-25	T05	a
		b				640								REMOVE SCSP				b
D-26	T08	b				684								REMOVE SCSP		D-26	T08	b
SHEET TOTAL			33	1430	2	2696	8	0.8	114.4	62	2	4						

DRAINAGE QUANTITIES
TEMPORARY DRAINAGE
FOR CESAR CHAVEZ DIGOUT

DQ-36

REVISED BY | DATE REVISED
C. SOSA | J. SAWTELLE
CALCULATED-DESIGNED BY | CHECKED BY
CONSULTANT FUNCTIONAL SUPERVISOR
MELISSA DE LA PENA
STATE OF CALIFORNIA - DEPARTMENT OF TRANSPORTATION
Caltrans

LAST REVISION 00-00-00 | DATE PLOTTED => 29-JUN-2011 | TIME PLOTTED => 07:54

Dist	COUNTY	ROUTE	POST MILES TOTAL PROJECT	SHEET No.	TOTAL SHEETS
07	LA	710	17.2/26.4	576	1507

REGISTERED CIVIL ENGINEER DATE 03/30/11

6-27-11
PLANS APPROVAL DATE

REGISTERED PROFESSIONAL ENGINEER JOSEPH W. SAWTELLE No. C60110 Exp. 06/30/12 CIVIL STATE OF CALIFORNIA

THE STATE OF CALIFORNIA OR ITS OFFICERS OR AGENTS SHALL NOT BE RESPONSIBLE FOR THE ACCURACY OR COMPLETENESS OF SCANNED COPIES OF THIS PLAN SHEET.

CALTRANS DISTRICT 7
100 S. MAIN STREET
LOS ANGELES, CA 90012

TRANSYSTEMS
6 HUTTON CENTRE DRIVE
SUITE 1250
SANTA ANA, CA 92707

NOTES:

1. (N) NOT A SEPARATE PAY ITEM. FOR INFORMATION ONLY.
2. DRAINAGE SYSTEMS T01, T02, T04, T08, AND T15 TO BE INSTALLED IN STAGE 1 (PHASE 2) AND REMOVED IN STAGE 1 (PHASE 4).
3. DRAINAGE SYSTEMS T03, T05, T09, T10, AND T14 TO BE INSTALLED IN STAGE 1 (PHASE 3) AND REMOVED IN STAGE 1 (PHASE 4).
4. DRAINAGE SYSTEMS T07, T11, T12, AND T13 TO BE INSTALLED IN STAGE 1 (PHASE 3) AND REMOVED IN STAGE 1 (PHASE 5).
5. DRAINAGE SYSTEM T06 TO BE INSTALLED IN STAGE 1 (PHASE 2) AND IN STAGE 1 (PHASE 3). THE ENTIRE DRAINAGE SYSTEM T06 TO BE REMOVED IN STAGE 1 (PHASE 5).

DRAINAGE PLAN SHEET No.	DRAINAGE SYSTEM No. ⬡	DRAINAGE UNIT No. ○	TEMPORARY 12" Bit Ctd CSP RISER (0.079" THICK)	TEMPORARY 18" Bit Ctd SCSP (0.079" THICK)	CAP RISER	REMOVE SLOTTED CORRUGATED STEEL PIPE (N)	REMOVE PIPE RISER (N)	MINOR CONCRETE (COLLAR) (N)	CONTROLLED LOW STRENGTH MATERIAL (N)	Misc IRON & STEEL (N)	1/4" ROUND CHECKERED PLATE COVER (24" Dia) (N)	90° CSP REDUCING ELBOW (N)	CSP ELBOW (N)	DESCRIPTION	STATION (ALL STATION OFFSETS ARE FROM "R710B" LINE)	DRAINAGE PLAN SHEET No.	DRAINAGE SYSTEM No. ⬡	DRAINAGE UNIT No. ○
			LF	LF	EA	LF	LF	CY	CY	LB	EA	EA	EA					
REMOVALS STAGE 1 (PHASE 4)																		
D-26	T09	a			1		4			31	1			REMOVE AND CAP PIPE RISER	31.0' L+ 1312+86	D-26	T09	a
		b				740								REMOVE SCSP				b
D-26	T10	a			1		4			31	1			REMOVE AND CAP PIPE RISER	31.0' L+ 1308+58	D-26	T10	a
		b				410								REMOVE SCSP				b
D-27	T14	a			1		4			31	1			REMOVE AND CAP PIPE RISER	31.0' L+ 1320+37	D-27	T14	a
		b				360								REMOVE SCSP				b
D-27	T15	b				234								REMOVE SCSP		D-27	T15	b
REMOVALS STAGE 1 (PHASE 5)																		
D-25	T06	a			1		4			31	1			REMOVE AND CAP PIPE RISER	19.5' R+ 1296+38	D-25	T06	a
		b				270								REMOVE SCSP				b
D-25	T07	a			1		4			31	1			REMOVE AND CAP PIPE RISER	19.5' R+ 1302+03	D-25	T07	a
		b				830								REMOVE SCSP				b
D-26	T11	a			1		4			31	1			REMOVE AND CAP PIPE RISER	19.5' R+ 1310+45	D-26	T11	a
		b				150								REMOVE SCSP				b
D-26	T12	a			1		4			31	1			REMOVE AND CAP PIPE RISER	19.5' R+ 1312+00	D-26	T12	a
		b				510								REMOVE SCSP				b
D-27	T13	a			1		4			31	1			REMOVE AND CAP PIPE RISER	19.5' R+ 1320+37	D-27	T13	a
		b				410								REMOVE SCSP				b
SHEET TOTAL					8	3914	32			248	8							
SHEET DQ-35 TOTAL			52	5180				3.7	355.9			6	5					
SHEET DQ-36 TOTAL			33	1430	2	2696	8	0.8	114.4	62	2	4						
GRAND TOTAL			85	6610	10	6610	40	4.5	470.3	310	10	10	5					

DRAINAGE QUANTITIES
TEMPORARY DRAINAGE
FOR CESAR CHAVEZ DIGOUT

DQ-37

REVISED BY | DATE REVISED
C. SOSA | J. SAWTELLE
CALCULATED-DESIGNED BY | CHECKED BY
CONSULTANT FUNCTIONAL SUPERVISOR
MELISSA DE LA PENA
STATE OF CALIFORNIA - DEPARTMENT OF TRANSPORTATION
Caltrans

LAST REVISION 00-00-00 | DATE PLOTTED => 29-JUN-2011 | TIME PLOTTED => 07:54

Dist	COUNTY	ROUTE	POST MILES TOTAL PROJECT	SHEET No.	TOTAL SHEETS
07	LA	710	17.2/26.4	577	1507

Matt Reifer 3-28-2011
REGISTERED CIVIL ENGINEER DATE

6-27-11
PLANS APPROVAL DATE

REGISTERED PROFESSIONAL ENGINEER MATT REIFER No. C48523 Exp. 06/30/12 CIVIL STATE OF CALIFORNIA

THE STATE OF CALIFORNIA OR ITS OFFICERS OR AGENTS SHALL NOT BE RESPONSIBLE FOR THE ACCURACY OR COMPLETENESS OF SCANNED COPIES OF THIS PLAN SHEET.

CH2M HILL
6 HUTTON CENTRE DRIVE,
SUITE 700
SANTA ANA, CA 92707

CALTRANS DISTRICT 7
100 S. MAIN STREET
LOS ANGELES, CA 90012

NOTE:

1. FOR ACCURATE RIGHT OF WAY DATA, CONTACT RIGHT OF WAY ENGINEERING AT THE DISTRICT OFFICE.
2. ELEVATIONS SHOWN REFER TO THE TOP OF PIPE OR CONDUIT, UNLESS OTHERWISE STATED.
3. LOCATIONS OF UTILITY FACILITIES SHOWN ON THESE PLANS ARE APPROXIMATE AND SHALL BE VERIFIED BY THE CONTRACTOR PRIOR TO CONSTRUCTION.
4. LOCATION OF UTILITY FACILITIES SHOWN ON THESE PLANS WERE OBTAINED EITHER FROM OWNER'S RECORDS OR FROM PUBLIC AGENCIES.
5. UTILITY OWNERSHIP ON THIS PROJECT ARE AS SHOWN:

GAS	- SOUTHERN CALIFORNIA GAS COMPANY
	- CITY OF VERNON
WATER	- MAYWOOD MUNICIPAL WATER
	- LAGUNA MAYWOOD MUNICIPAL WATER
	- CENTRAL BASIN MUNICIPAL WATER DISTRICT
	- METROPOLITAN WATER DISTRICT
	- CALIFORNIA WATER SERVICE
	- CITY OF MONTEREY PARK WATER DIVISION
ELECTRIC	- SOUTHERN CALIFORNIA EDISON
TELEPHONE	- AT&T (PACIFIC BELL) COMPANY
TELECOMMUNICATION	- CHARTER COMMUNICATION, ADELPHIA, SPRINT
	- TIME WARNER
	- VERIZON/MCI
SEWER	- CITY OF SOUTH GATE
	- CITY OF VERNON
	- LACSD
	- LOS ANGELES COUNTY
	- MONTEREY PARK
OIL	- STANDARD OIL COMPANY
	- CHEVRON
	- UNION OIL COMPANY
	- PACIFIC PIPELINE SYSTEM LLC

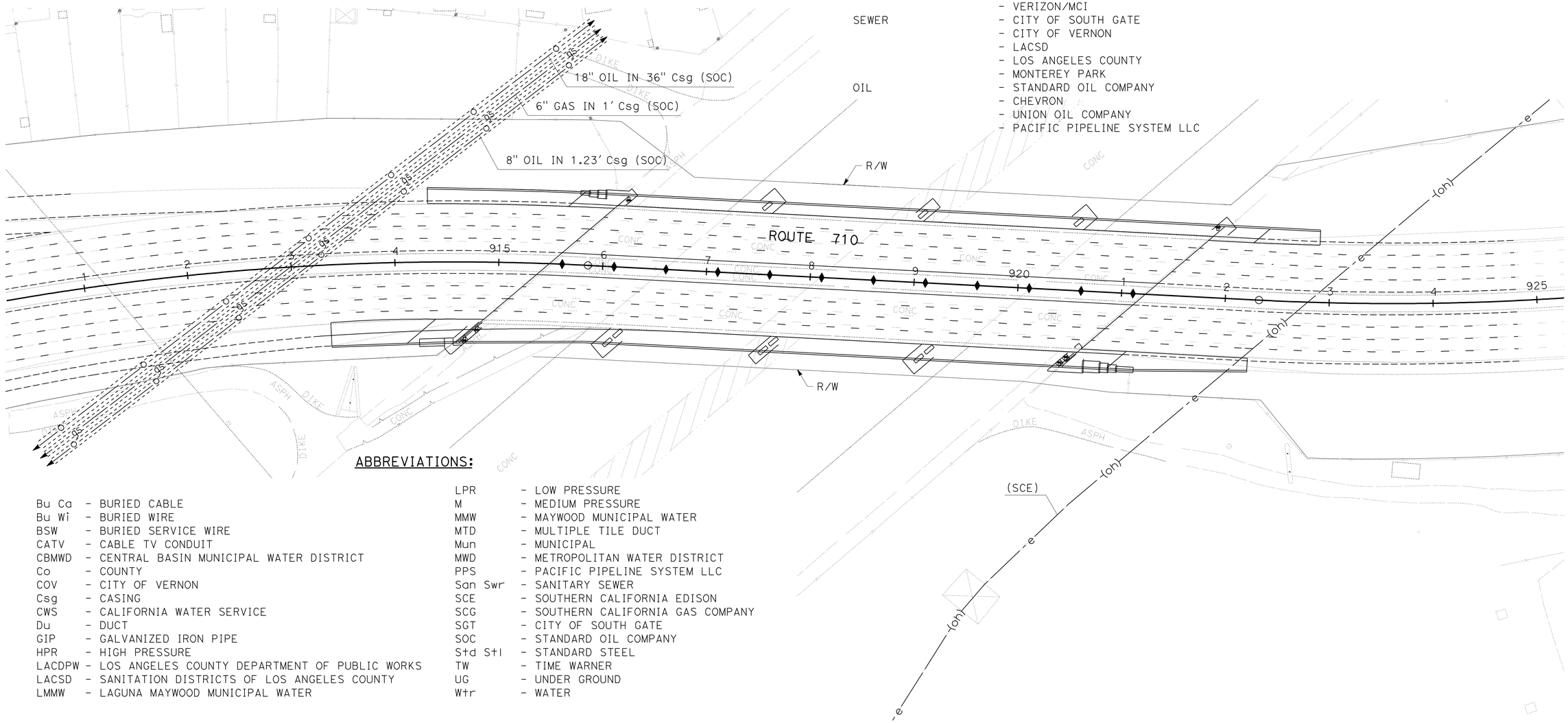

ABBREVIATIONS:

Bu Ca	- BURIED CABLE
Bu Wi	- BURIED WIRE
BSW	- BURIED SERVICE WIRE
CATV	- CABLE TV CONDUIT
CBMWD	- CENTRAL BASIN MUNICIPAL WATER DISTRICT
Co	- COUNTY
COV	- CITY OF VERNON
Csg	- CASING
CWS	- CALIFORNIA WATER SERVICE
Du	- DUCT
GIP	- GALVANIZED IRON PIPE
HPR	- HIGH PRESSURE
LACDPW	- LOS ANGELES COUNTY DEPARTMENT OF PUBLIC WORKS
LACSD	- SANITATION DISTRICTS OF LOS ANGELES COUNTY
LMMW	- LAGUNA MAYWOOD MUNICIPAL WATER
LPR	- LOW PRESSURE
M	- MEDIUM PRESSURE
MMW	- MAYWOOD MUNICIPAL WATER
MTD	- MULTIPLE TILE DUCT
Mun	- MUNICIPAL
MWD	- METROPOLITAN WATER DISTRICT
PPS	- PACIFIC PIPELINE SYSTEM LLC
San Swr	- SANITARY SEWER
SCE	- SOUTHERN CALIFORNIA EDISON
SCG	- SOUTHERN CALIFORNIA GAS COMPANY
SGT	- CITY OF SOUTH GATE
SOC	- STANDARD OIL COMPANY
Std Stl	- STANDARD STEEL
TW	- TIME WARNER
UG	- UNDER GROUND
Wtr	- WATER

THIS PLAN ACCURATE FOR UTILITY INFORMATION ONLY

UTILITY PLAN

SCALE: 1" = 50'

U-1

STATE OF CALIFORNIA - DEPARTMENT OF TRANSPORTATION
Caltrans

CONSULTANT FUNCTIONAL SUPERVISOR: MELISSA DE LA PENA
CALCULATED-DESIGNED BY: M. REIFER
CHECKED BY: M. REIFER
REVISED BY
DATE REVISED

LAST REVISION 00-00-00
DATE PLOTTED => 29-JUN-2011
TIME PLOTTED => 06:23

Dist	COUNTY	ROUTE	POST MILES TOTAL PROJECT	SHEET No.	TOTAL SHEETS
07	LA	710	17.2/26.4	578	1507

REGISTERED CIVIL ENGINEER — DATE: 3-28-2011

6-27-11
PLANS APPROVAL DATE

REGISTERED PROFESSIONAL ENGINEER — MATT REIFER — No. C48523 — Exp. 06/30/12 — CIVIL — STATE OF CALIFORNIA

THE STATE OF CALIFORNIA OR ITS OFFICERS OR AGENTS SHALL NOT BE RESPONSIBLE FOR THE ACCURACY OR COMPLETENESS OF SCANNED COPIES OF THIS PLAN SHEET.

CH2M HILL
6 HUTTON CENTRE DRIVE,
SUITE 700
SANTA ANA, CA 92707

CALTRANS DISTRICT 7
100 S. MAIN STREET
LOS ANGELES, CA 90012

NOTE:

FOR ACCURATE RIGHT OF WAY DATA, CONTACT RIGHT OF WAY ENGINEERING AT THE DISTRICT OFFICE.

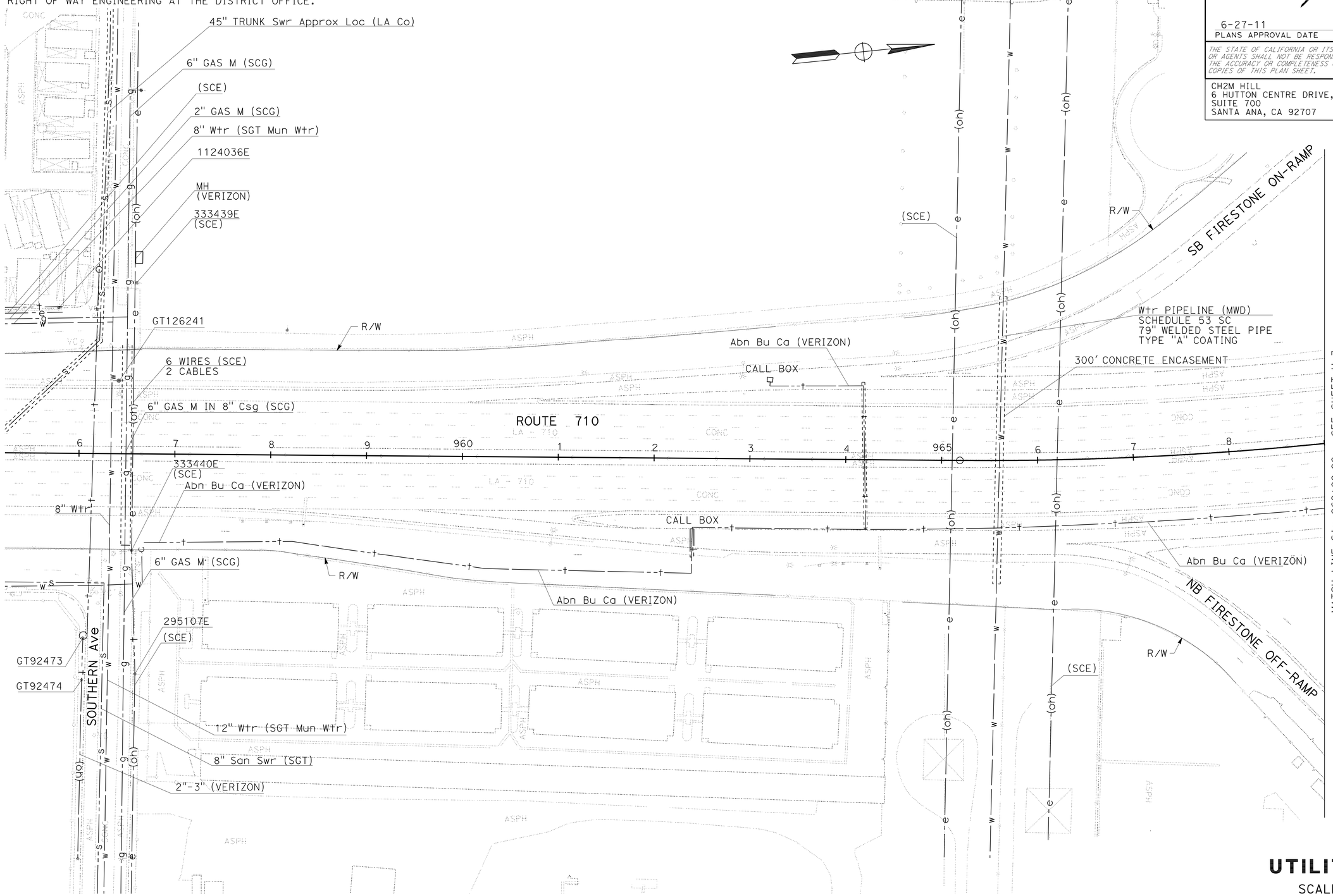

THIS PLAN ACCURATE FOR UTILITY INFORMATION ONLY

UTILITY PLAN

SCALE: 1" = 50'

U-2

STATE OF CALIFORNIA - DEPARTMENT OF TRANSPORTATION

Caltrans

CONSULTANT FUNCTIONAL SUPERVISOR: MELISSA DE LA PENA

CALCULATED-DESIGNED BY: M. REIFER

CHECKED BY: M. REIFER

REVISED BY

DATE REVISED

LAST REVISION 00-00-00

DATE PLOTTED => 29-JUN-2011
TIME PLOTTED => 06:23

Dist	COUNTY	ROUTE	POST MILES TOTAL PROJECT	SHEET No.	TOTAL SHEETS
07	LA	710	17.2/26.4	579	1507

Matt Reifer 3-28-2011
REGISTERED CIVIL ENGINEER DATE

6-27-11
PLANS APPROVAL DATE

REGISTERED PROFESSIONAL ENGINEER
MATT REIFER
No. C48523
Exp. 06/30/12
CIVIL
STATE OF CALIFORNIA

THE STATE OF CALIFORNIA OR ITS OFFICERS OR AGENTS SHALL NOT BE RESPONSIBLE FOR THE ACCURACY OR COMPLETENESS OF SCANNED COPIES OF THIS PLAN SHEET.

CH2M HILL
6 HUTTON CENTRE DRIVE,
SUITE 700
SANTA ANA, CA 92707

CALTRANS DISTRICT 7
100 S. MAIN STREET
LOS ANGELES, CA 90012

NOTE:

FOR ACCURATE RIGHT OF WAY DATA, CONTACT
RIGHT OF WAY ENGINEERING AT THE DISTRICT OFFICE.

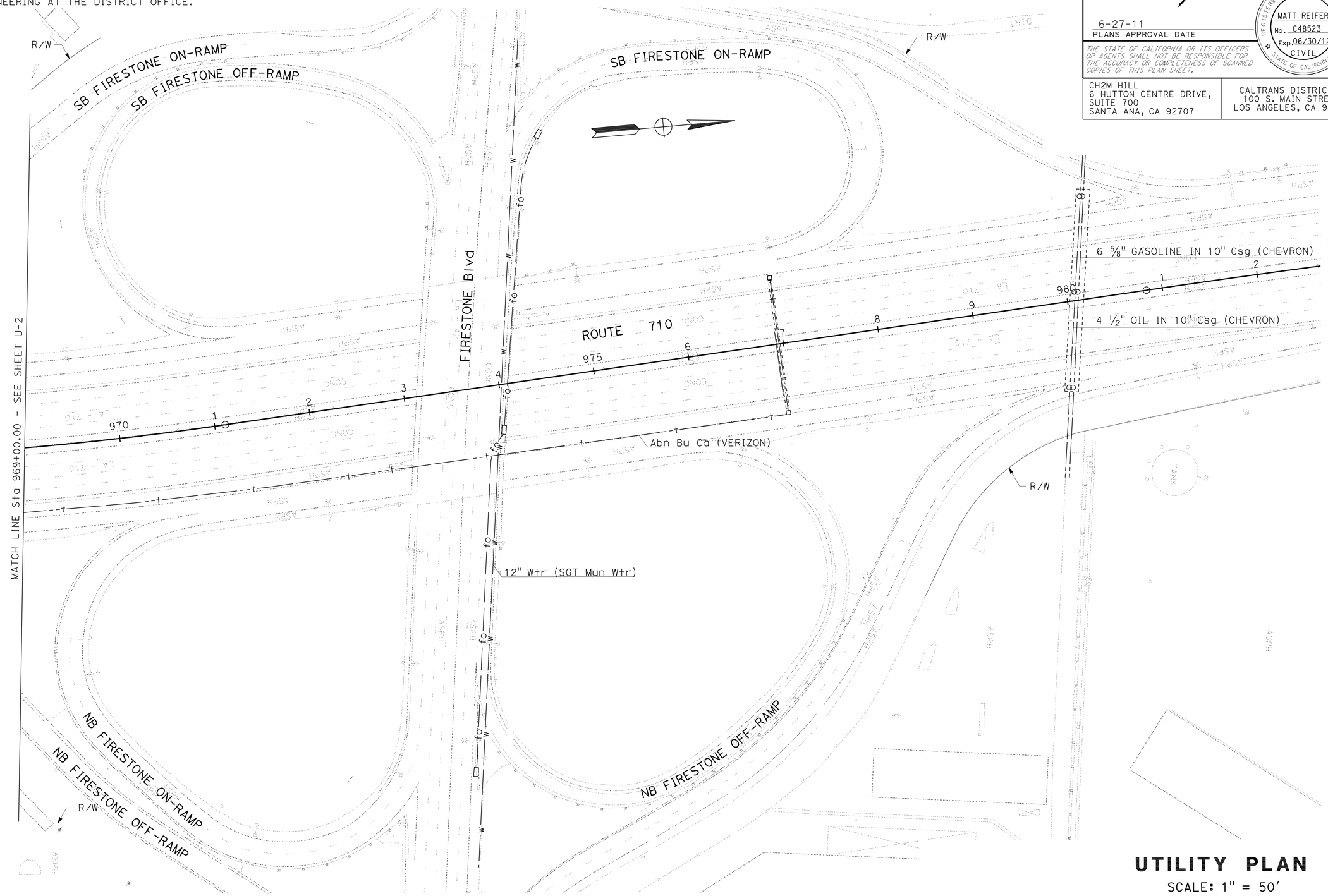

THIS PLAN ACCURATE FOR UTILITY INFORMATION ONLY

UTILITY PLAN

SCALE: 1" = 50'

U-3

REVISED BY	DATE REVISED
M. REIFER	M. REIFER

CALCULATED-DESIGNED BY / CHECKED BY

CONSULTANT FUNCTIONAL SUPERVISOR: MELISSA DE LA PENA

STATE OF CALIFORNIA - DEPARTMENT OF TRANSPORTATION

Caltrans

LAST REVISION 00-00-00 | DATE PLOTTED => 29-JUN-2011 | TIME PLOTTED => 06:23

Dist	COUNTY	ROUTE	POST MILES TOTAL PROJECT	SHEET No.	TOTAL SHEETS
07	LA	710	17.2/26.4	580	1507

REGISTERED CIVIL ENGINEER 3-28-2011 DATE

6-27-11
PLANS APPROVAL DATE

REGISTERED PROFESSIONAL ENGINEER MATT REIFER No. C48523 Exp. 06/30/12 CIVIL STATE OF CALIFORNIA

THE STATE OF CALIFORNIA OR ITS OFFICERS OR AGENTS SHALL NOT BE RESPONSIBLE FOR THE ACCURACY OR COMPLETENESS OF SCANNED COPIES OF THIS PLAN SHEET.

CH2M HILL
6 HUTTON CENTRE DRIVE,
SUITE 700
SANTA ANA, CA 92707

CALTRANS DISTRICT 7
100 S. MAIN STREET
LOS ANGELES, CA 90012

NOTE:

FOR ACCURATE RIGHT OF WAY DATA, CONTACT
RIGHT OF WAY ENGINEERING AT THE DISTRICT OFFICE.

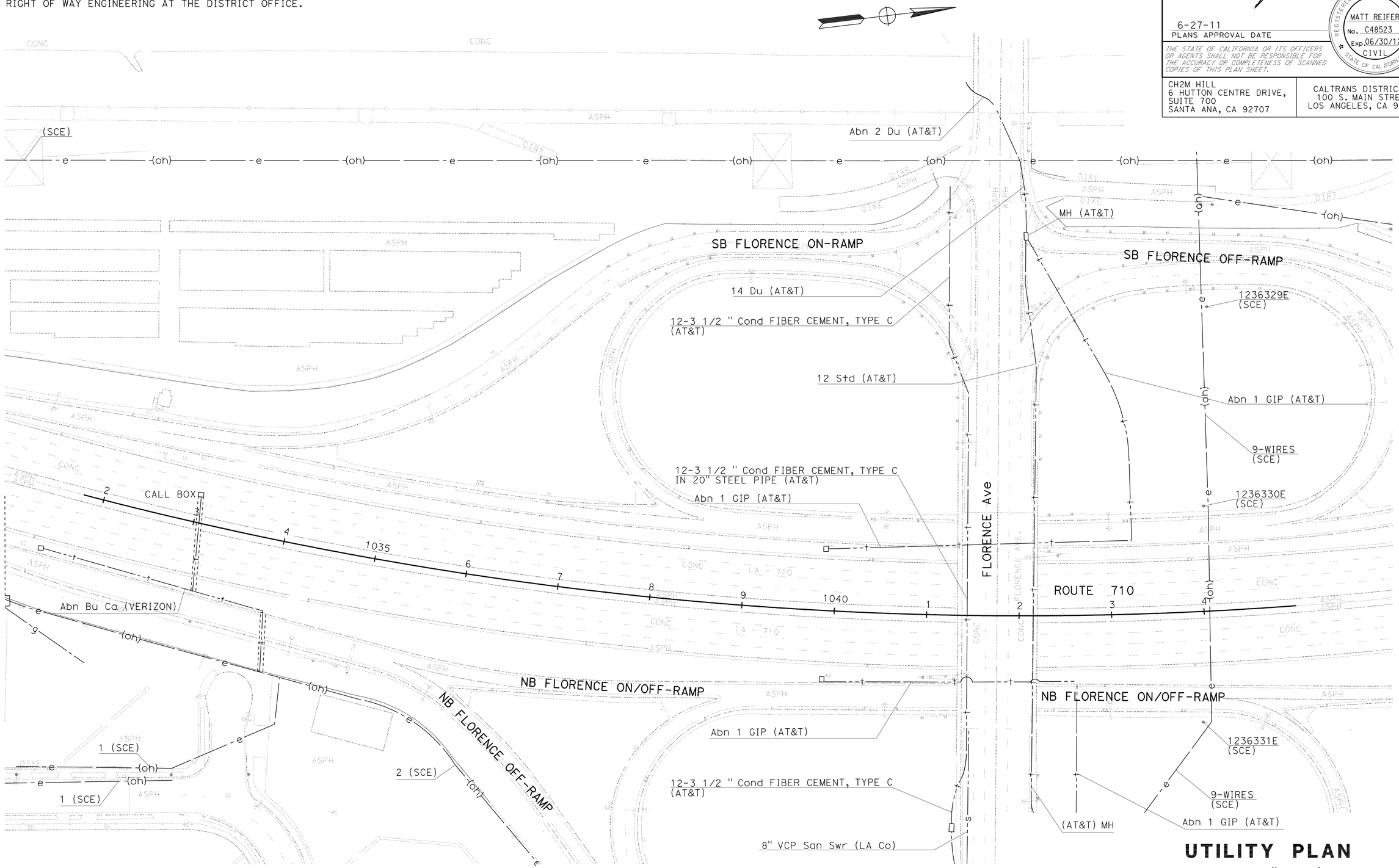

UTILITY PLAN

SCALE: 1" = 50'

THIS PLAN ACCURATE FOR UTILITY INFORMATION ONLY

U-4

STATE OF CALIFORNIA - DEPARTMENT OF TRANSPORTATION

Caltrans

CONSULTANT FUNCTIONAL SUPERVISOR: MELISSA DE LA PENA

CALCULATED-DESIGNED BY: M. REIFER

CHECKED BY: M. REIFER

REVISED BY

DATE REVISED

LAST REVISION 00-00-00

DATE PLOTTED => 29-JUN-2011
TIME PLOTTED => 06:23

Dist	COUNTY	ROUTE	POST MILES TOTAL PROJECT	SHEET No.	TOTAL SHEETS
07	LA	710	17.2/26.4	581	1507

Matt Reifer 3-28-2011
REGISTERED CIVIL ENGINEER DATE

6-27-11
PLANS APPROVAL DATE

REGISTERED PROFESSIONAL ENGINEER MATT REIFER No. C48523 Exp. 06/30/12 CIVIL STATE OF CALIFORNIA

THE STATE OF CALIFORNIA OR ITS OFFICERS OR AGENTS SHALL NOT BE RESPONSIBLE FOR THE ACCURACY OR COMPLETENESS OF SCANNED COPIES OF THIS PLAN SHEET.

CH2M HILL
6 HUTTON CENTRE DRIVE,
SUITE 700
SANTA ANA, CA 92707

CALTRANS DISTRICT 7
100 S. MAIN STREET
LOS ANGELES, CA 90012

NOTE:

FOR ACCURATE RIGHT OF WAY DATA, CONTACT
RIGHT OF WAY ENGINEERING AT THE DISTRICT OFFICE.

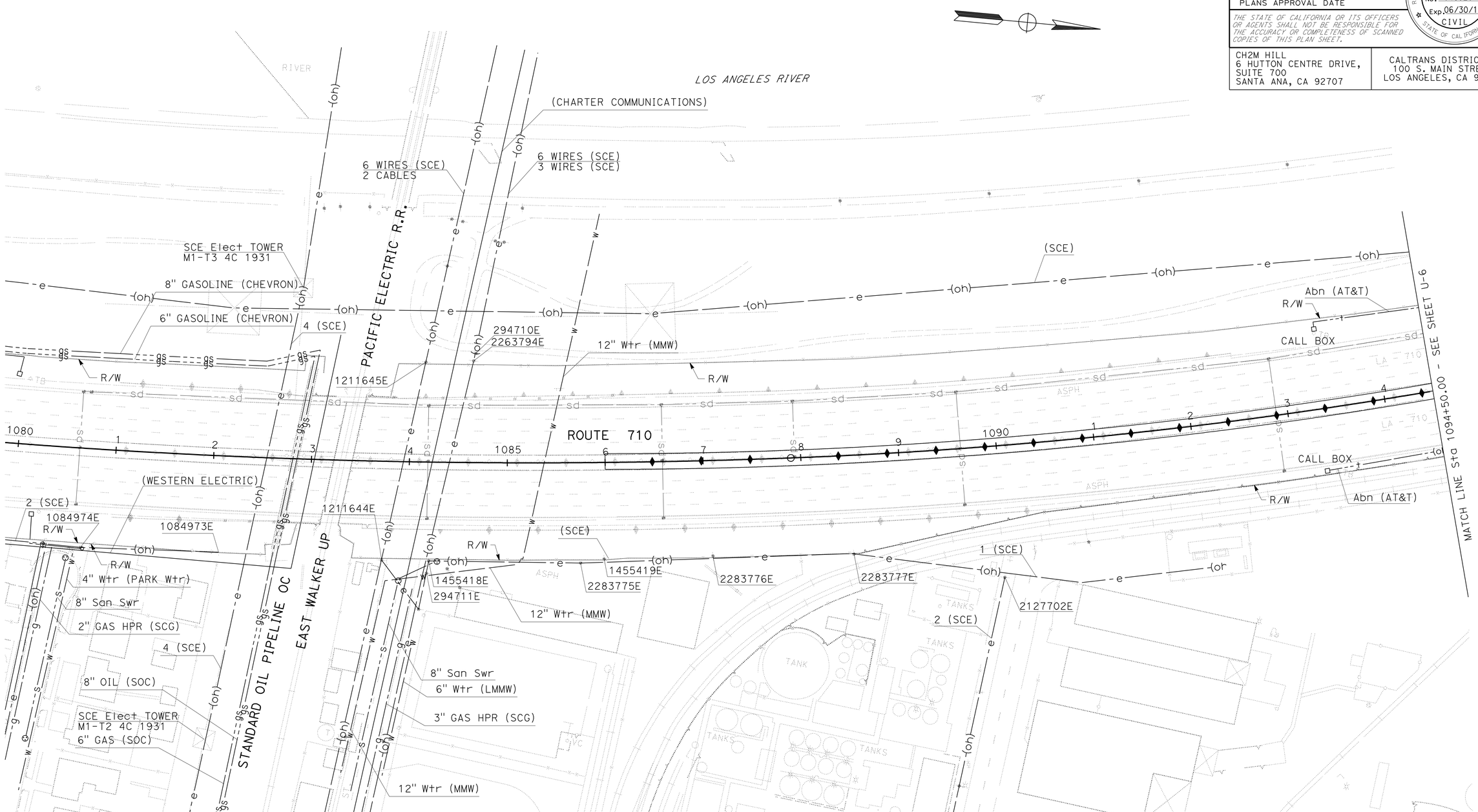

UTILITY PLAN

SCALE: 1" = 50'

THIS PLAN ACCURATE FOR UTILITY INFORMATION ONLY

U-5

STATE OF CALIFORNIA - DEPARTMENT OF TRANSPORTATION
Caltrans

CONSULTANT FUNCTIONAL SUPERVISOR: MELISSA DE LA PENA

CALCULATED-DESIGNED BY: M. REIFER
CHECKED BY: M. REIFER
REVISED BY
DATE REVISED

LAST REVISION 00-00-00
DATE PLOTTED => 29-JUN-2011
TIME PLOTTED => 06:23

Dist	COUNTY	ROUTE	POST MILES TOTAL PROJECT	SHEET No.	TOTAL SHEETS
07	LA	710	17.2/26.4	582	1507

Matt Reifer 3-28-2011
REGISTERED CIVIL ENGINEER DATE

6-27-11
PLANS APPROVAL DATE

REGISTERED PROFESSIONAL ENGINEER
MATT REIFER
No. C48523
Exp. 06/30/12
CIVIL
STATE OF CALIFORNIA

THE STATE OF CALIFORNIA OR ITS OFFICERS OR AGENTS SHALL NOT BE RESPONSIBLE FOR THE ACCURACY OR COMPLETENESS OF SCANNED COPIES OF THIS PLAN SHEET.

CH2M HILL
6 HUTTON CENTRE DRIVE,
SUITE 700
SANTA ANA, CA 92707

CALTRANS DISTRICT 7
100 S. MAIN STREET
LOS ANGELES, CA 90012

NOTE:

FOR ACCURATE RIGHT OF WAY DATA, CONTACT
RIGHT OF WAY ENGINEERING AT THE DISTRICT OFFICE.

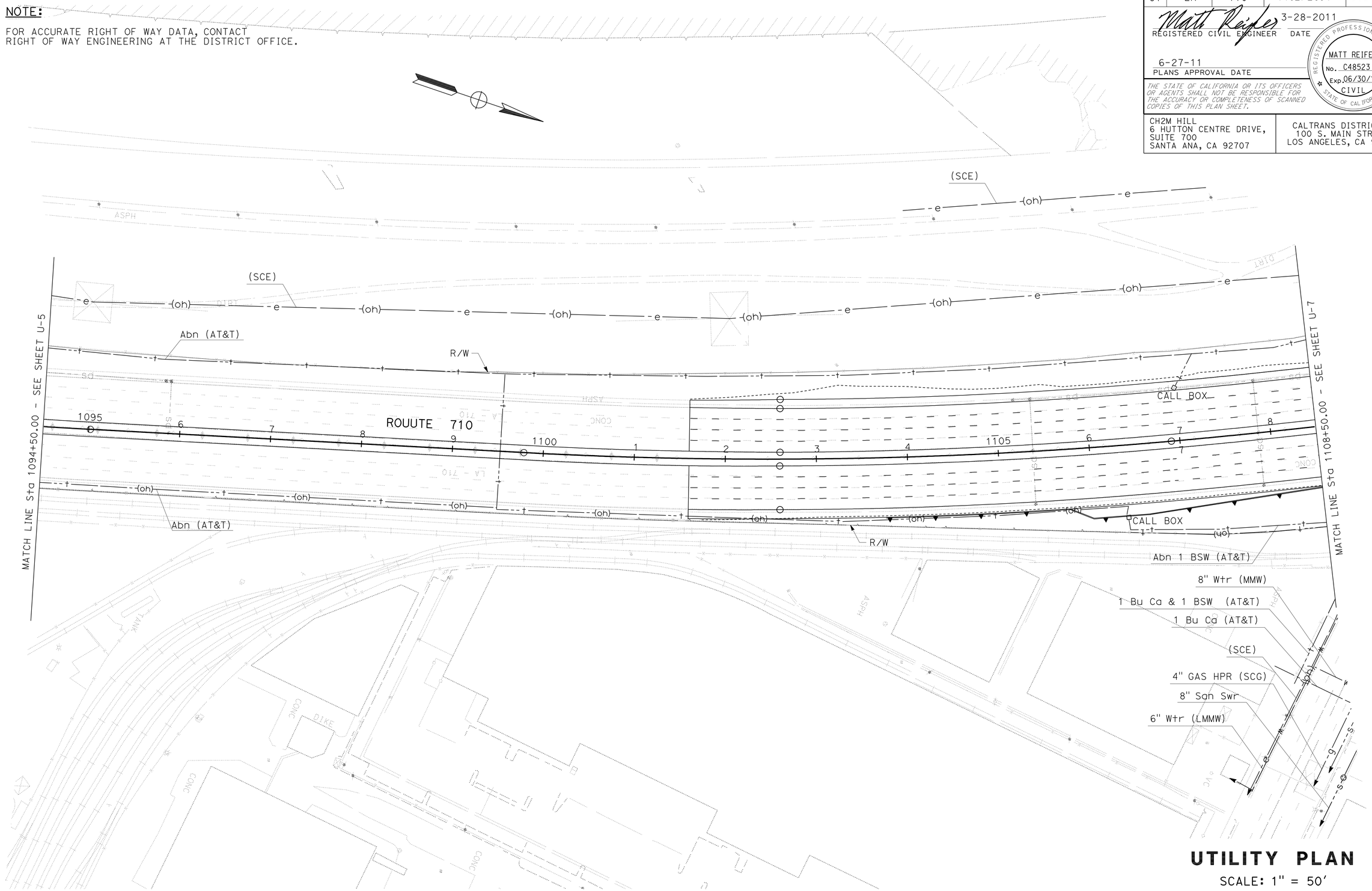

UTILITY PLAN

SCALE: 1" = 50'

THIS PLAN ACCURATE FOR UTILITY INFORMATION ONLY

U-6

REVISED BY	DATE REVISED
M. REIFER	M. REIFER

CALCULATED-DESIGNED BY / CHECKED BY

CONSULTANT FUNCTIONAL SUPERVISOR: MELISSA DE LA PENA

STATE OF CALIFORNIA - DEPARTMENT OF TRANSPORTATION

Caltrans

LAST REVISION 00-00-00

DATE PLOTTED => 29-JUN-2011
TIME PLOTTED => 06:24

Dist	COUNTY	ROUTE	POST MILES TOTAL PROJECT	SHEET No.	TOTAL SHEETS
07	LA	710	17.2/26.4	583	1507

Matt Reifer 3-28-2011
REGISTERED CIVIL ENGINEER DATE

6-27-11
PLANS APPROVAL DATE

REGISTERED PROFESSIONAL ENGINEER
MATT REIFER
No. C48523
Exp. 06/30/12
CIVIL
STATE OF CALIFORNIA

THE STATE OF CALIFORNIA OR ITS OFFICERS OR AGENTS SHALL NOT BE RESPONSIBLE FOR THE ACCURACY OR COMPLETENESS OF SCANNED COPIES OF THIS PLAN SHEET.

CH2M HILL
6 HUTTON CENTRE DRIVE,
SUITE 700
SANTA ANA, CA 92707

CALTRANS DISTRICT 7
100 S. MAIN STREET
LOS ANGELES, CA 90012

NOTE:

FOR ACCURATE RIGHT OF WAY DATA, CONTACT
RIGHT OF WAY ENGINEERING AT THE DISTRICT OFFICE.

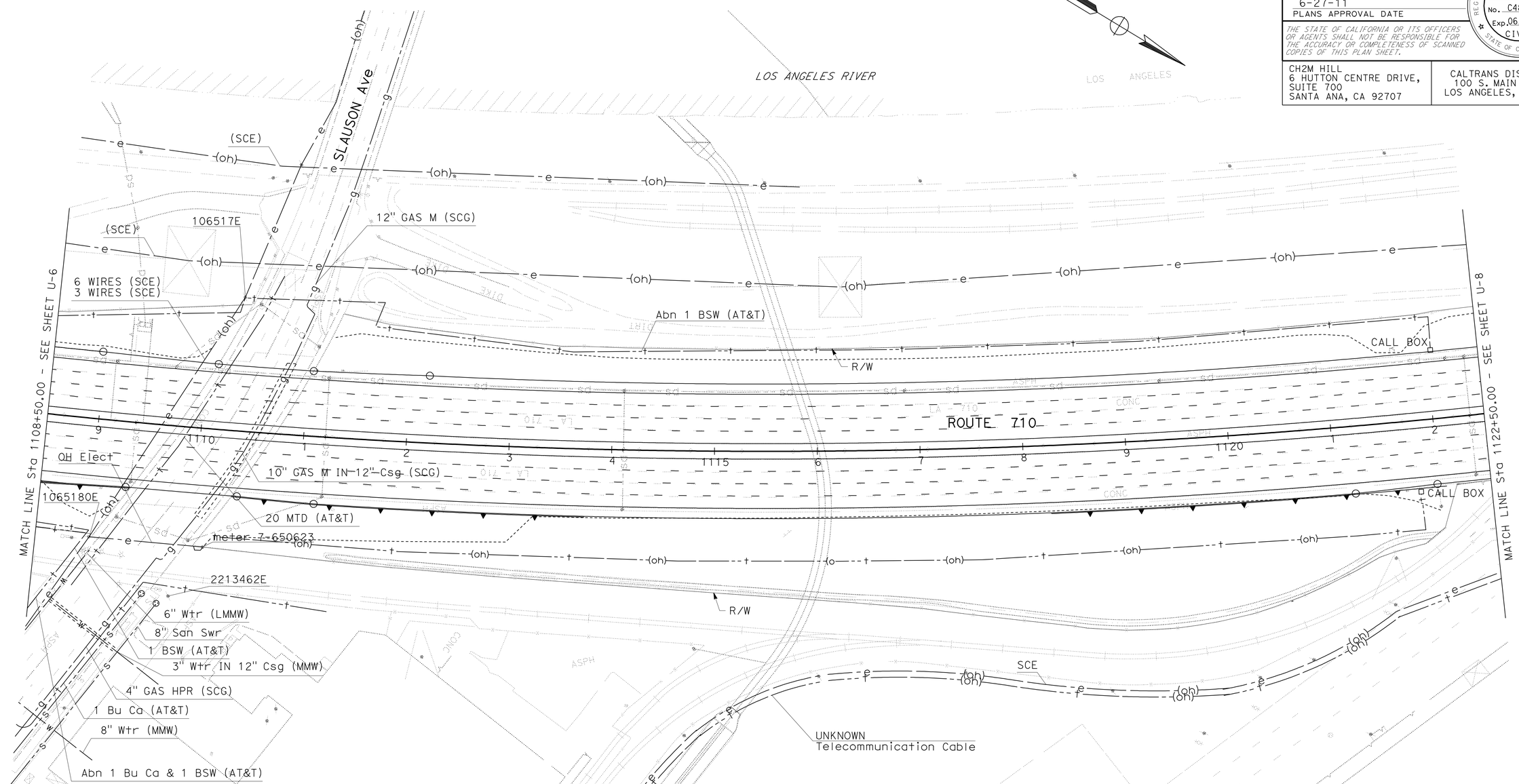

UTILITY PLAN

SCALE: 1" = 50'

THIS PLAN ACCURATE FOR UTILITY INFORMATION ONLY

U-7

REVISED BY	DATE REVISED
M. REIFER	M. REIFER

CALCULATED-DESIGNED BY
CHECKED BY

CONSULTANT FUNCTIONAL SUPERVISOR
MELISSA DE LA PENA

STATE OF CALIFORNIA - DEPARTMENT OF TRANSPORTATION
Caltrans

LAST REVISION 00-00-00
DATE PLOTTED => 29-JUN-2011
TIME PLOTTED => 06:24

Dist	COUNTY	ROUTE	POST MILES TOTAL PROJECT	SHEET No.	TOTAL SHEETS
07	LA	710	17.2/26.4	584	1507

Matt Reifer 3-28-2011
REGISTERED CIVIL ENGINEER DATE

6-27-11
PLANS APPROVAL DATE

REGISTERED PROFESSIONAL ENGINEER
MATT REIFER
No. C48523
Exp. 06/30/12
CIVIL
STATE OF CALIFORNIA

THE STATE OF CALIFORNIA OR ITS OFFICERS OR AGENTS SHALL NOT BE RESPONSIBLE FOR THE ACCURACY OR COMPLETENESS OF SCANNED COPIES OF THIS PLAN SHEET.

CH2M HILL
6 HUTTON CENTRE DRIVE,
SUITE 700
SANTA ANA, CA 92707

CALTRANS DISTRICT 7
100 S. MAIN STREET
LOS ANGELES, CA 90012

NOTE:

FOR ACCURATE RIGHT OF WAY DATA, CONTACT
RIGHT OF WAY ENGINEERING AT THE DISTRICT OFFICE.

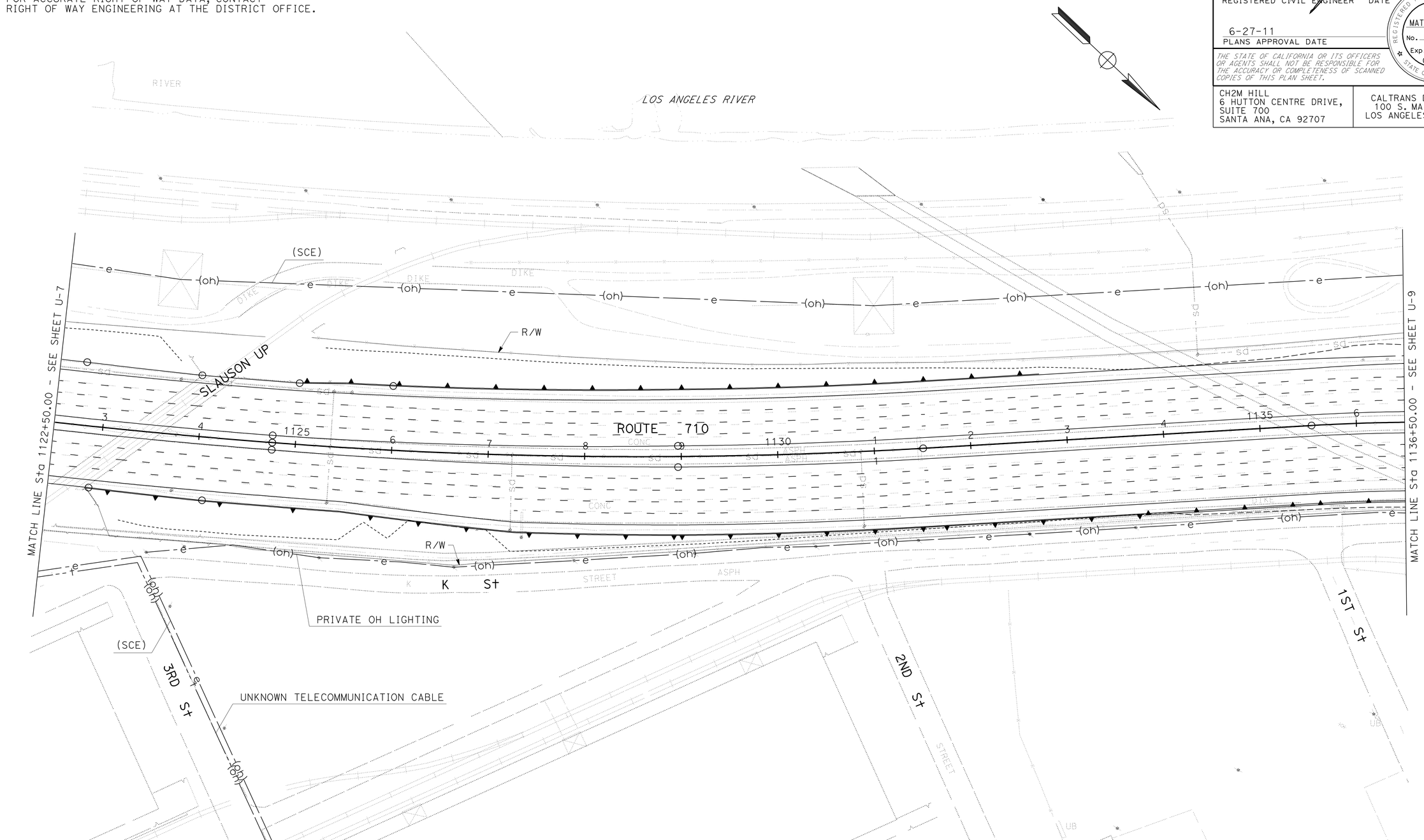

UTILITY PLAN

SCALE: 1" = 50'

THIS PLAN ACCURATE FOR UTILITY INFORMATION ONLY

U-8

STATE OF CALIFORNIA - DEPARTMENT OF TRANSPORTATION
Caltrans

CONSULTANT FUNCTIONAL SUPERVISOR: MELISSA DE LA PENA

CALCULATED-DESIGNED BY: M. REIFER
CHECKED BY:

REVISED BY:
DATE REVISED:

LAST REVISION 00-00-00
DATE PLOTTED => 29-JUN-2011
TIME PLOTTED => 06:24

Dist	COUNTY	ROUTE	POST MILES TOTAL PROJECT	SHEET No.	TOTAL SHEETS
07	LA	710	17.2/26.4	585	1507

Matt Reifer 3-28-2011
REGISTERED CIVIL ENGINEER DATE

6-27-11
PLANS APPROVAL DATE

REGISTERED PROFESSIONAL ENGINEER
MATT REIFER
No. C48523
Exp. 06/30/12
CIVIL
STATE OF CALIFORNIA

THE STATE OF CALIFORNIA OR ITS OFFICERS OR AGENTS SHALL NOT BE RESPONSIBLE FOR THE ACCURACY OR COMPLETENESS OF SCANNED COPIES OF THIS PLAN SHEET.

CH2M HILL
6 HUTTON CENTRE DRIVE,
SUITE 700
SANTA ANA, CA 92707

CALTRANS DISTRICT 7
100 S. MAIN STREET
LOS ANGELES, CA 90012

NOTE:

FOR ACCURATE RIGHT OF WAY DATA, CONTACT
RIGHT OF WAY ENGINEERING AT THE DISTRICT OFFICE.

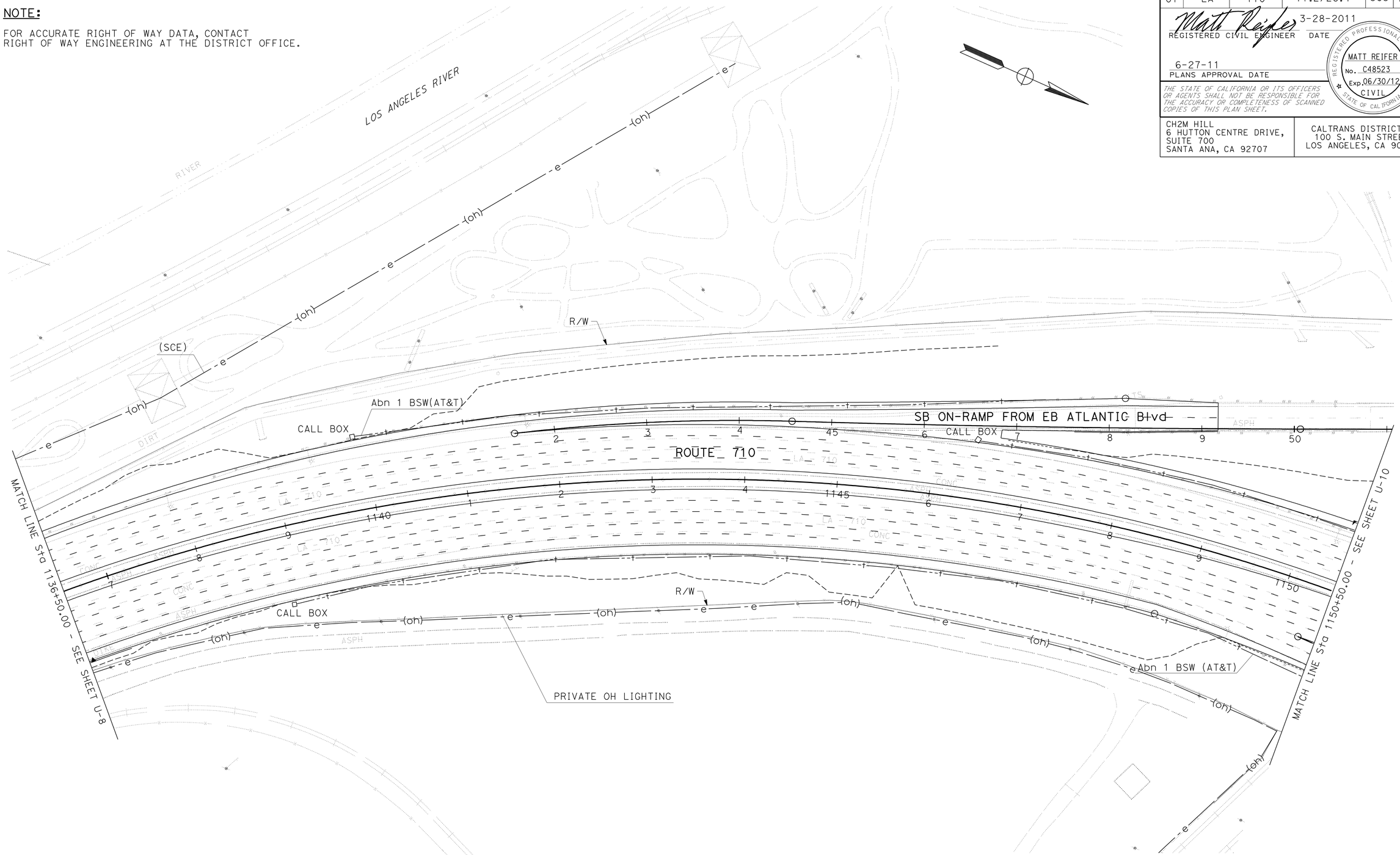

UTILITY PLAN

SCALE: 1" = 50'

THIS PLAN ACCURATE FOR UTILITY INFORMATION ONLY

U-9

STATE OF CALIFORNIA - DEPARTMENT OF TRANSPORTATION

Caltrans

CONSULTANT FUNCTIONAL SUPERVISOR: MELISSA DE LA PENA

CALCULATED-DESIGNED BY: M. REIFER

CHECKED BY: M. REIFER

REVISED BY

DATE REVISED

LAST REVISION 00-00-00

DATE PLOTTED => 29-JUN-2011
TIME PLOTTED => 06:24

Dist	COUNTY	ROUTE	POST MILES TOTAL PROJECT	SHEET No.	TOTAL SHEETS
07	LA	710	17.2/26.4	586	1507

REGISTERED CIVIL ENGINEER 3-28-2011 DATE

6-27-11
PLANS APPROVAL DATE

REGISTERED PROFESSIONAL ENGINEER MATT REIFER No. C48523 Exp. 06/30/12 CIVIL STATE OF CALIFORNIA

THE STATE OF CALIFORNIA OR ITS OFFICERS OR AGENTS SHALL NOT BE RESPONSIBLE FOR THE ACCURACY OR COMPLETENESS OF SCANNED COPIES OF THIS PLAN SHEET.

CH2M HILL
6 HUTTON CENTRE DRIVE,
SUITE 700
SANTA ANA, CA 92707

CALTRANS DISTRICT 7
100 S. MAIN STREET
LOS ANGELES, CA 90012

NOTE:

FOR ACCURATE RIGHT OF WAY DATA, CONTACT RIGHT OF WAY ENGINEERING AT THE DISTRICT OFFICE.

POTHOLE LOCATION TABLE

⬠	UTILITY	STATION	OFFSET DISTANCE	GROUND ELEVATION	TOP OF PIPE ELEVATION	NORTHING	EASTING
42	AT&T	1156+78.14	51.33' Lt	152.66	150.08	1821503.46	6508035.54
43	AT&T	1156+32.57	108.57' Lt	153.17	150.00	1821470.55	6507968.92
44	SCG 8" GAS	1156+51.97	103.34' Lt	152.40	149.82	1821489.28	6507978.60
45	AT&T	1156+31.45	113.63' Lt	152.92	148.59	1821470.50	6507963.72
46	SCG 4" GAS	1156+56.01	103.96' Lt	152.49	148.57	1821493.56	6507978.97
47	COV 6" GAS	1156+67.57	112.98' Lt	153.07	150.90	1821507.52	6507973.05
48	AT&T	1156+81.14	49.49' Lt	152.52	150.02	1821506.00	6508038.07
49	AT&T	1157+20.01	2.69' Rt	152.40	150.15	1821530.87	6508098.49
49A	AT&T	1157+84.24	80.53' Rt	152.37	149.20	1821569.70	6508190.71
50	AT&T	1157+99.47	101.99' Rt	152.71	149.38	1821577.22	6508215.52

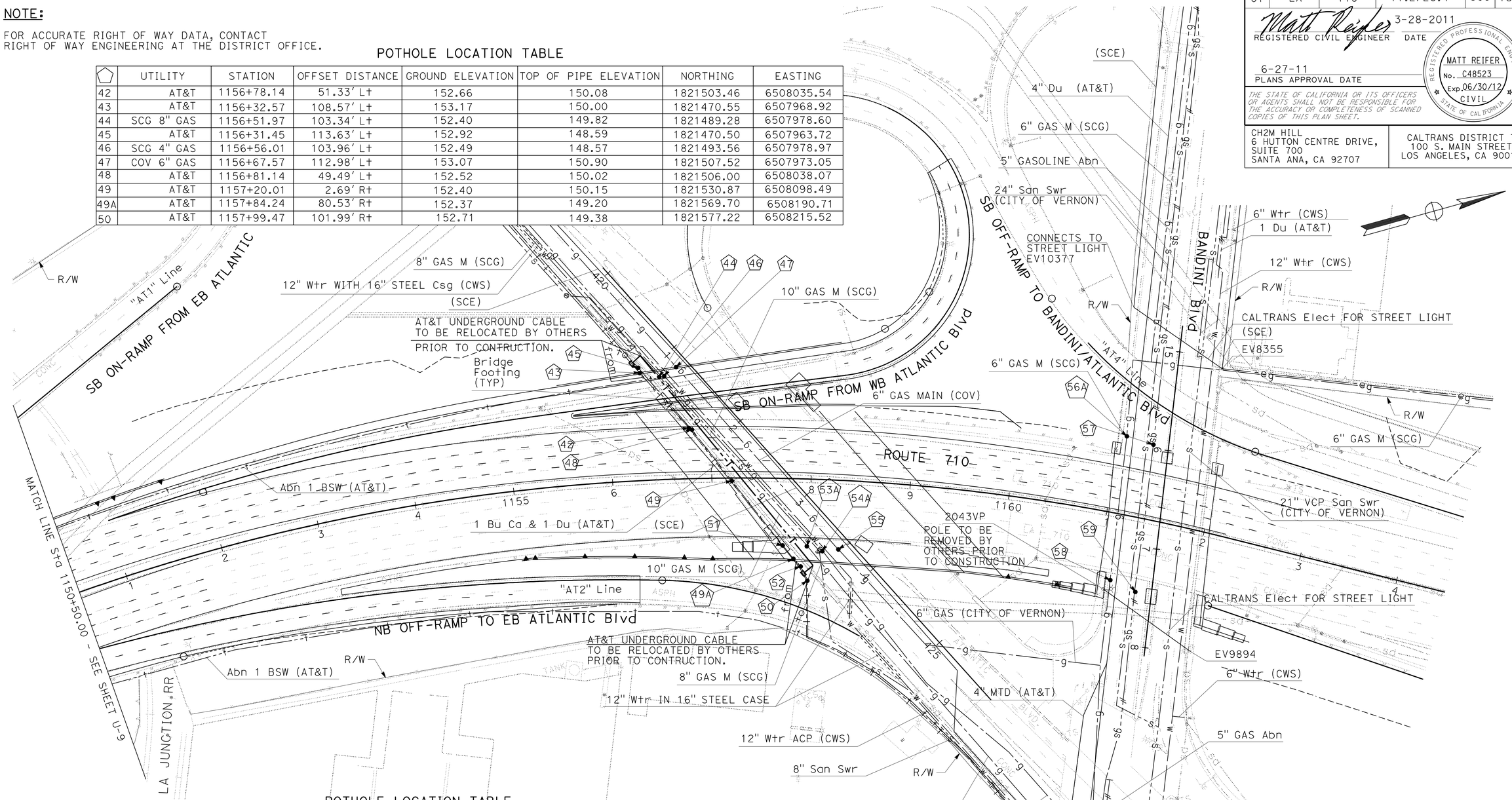

POTHOLE LOCATION TABLE

⬠	UTILITY	STATION	OFFSET DISTANCE	GROUND ELEVATION	TOP OF PIPE ELEVATION	NORTHING	EASTING
51	AT&T	1157+72.62	67.26	152.39	149.64	1821562.84	6508174.77
52	AT&T	1157+92.09	88.23	152.26	149.26	1821574.62	6508200.29
53A	SCG 8" GAS	1157+97.92	67.67	151.89	148.47	1821586.09	6508182.33
54A	SCG 4" GAS	1158+14.22	71.95	152.07	-	1821599.78	6508191.18
55	COV 6" GAS	1158+30.86	69.39	152.41	148.91	1821615.83	6508193.74
56A	SCG 6" GAS	1161+05.58	-78.35	151.20	143.70	1821926.31	6508161.75
57	5" GASOLINE	1161+32.30	-75.38	152.24	149.24	1821949.78	6508176.83
58	SCG 6" GAS	1161+16.38	67.14	150.86	143.36	1821871.35	6508296.89
59	5" GASOLINE	1161+44.23	73.57	151.71	145.04	1821892.39	6508314.80

UTILITY PLAN

SCALE: 1" = 50'

U-10

THIS PLAN ACCURATE FOR UTILITY WORK ONLY

STATE OF CALIFORNIA - DEPARTMENT OF TRANSPORTATION

Caltrans

CONSULTANT FUNCTIONAL SUPERVISOR: MELISSA DE LA PENA

CALCULATED-DESIGNED BY: M. REIFER

CHECKED BY: M. REIFER

REVISED BY | DATE REVISED

LAST REVISION 00-00-00 | DATE PLOTTED => 29-JUN-2011 | TIME PLOTTED => 06:24

Dist	COUNTY	ROUTE	POST MILES TOTAL PROJECT	SHEET No.	TOTAL SHEETS
07	LA	710	17.2/26.4	587	1507

REGISTERED CIVIL ENGINEER — DATE: 3-28-2011

PLANS APPROVAL DATE: 6-27-11

REGISTERED PROFESSIONAL ENGINEER — MATT REIFER No. C48523 Exp. 06/30/12 CIVIL — STATE OF CALIFORNIA

THE STATE OF CALIFORNIA OR ITS OFFICERS OR AGENTS SHALL NOT BE RESPONSIBLE FOR THE ACCURACY OR COMPLETENESS OF SCANNED COPIES OF THIS PLAN SHEET.

CH2M HILL
6 HUTTON CENTRE DRIVE,
SUITE 700
SANTA ANA, CA 92707

CALTRANS DISTRICT 7
100 S. MAIN STREET
LOS ANGELES, CA 90012

NOTE:

FOR ACCURATE RIGHT OF WAY DATA, CONTACT RIGHT OF WAY ENGINEERING AT THE DISTRICT OFFICE.

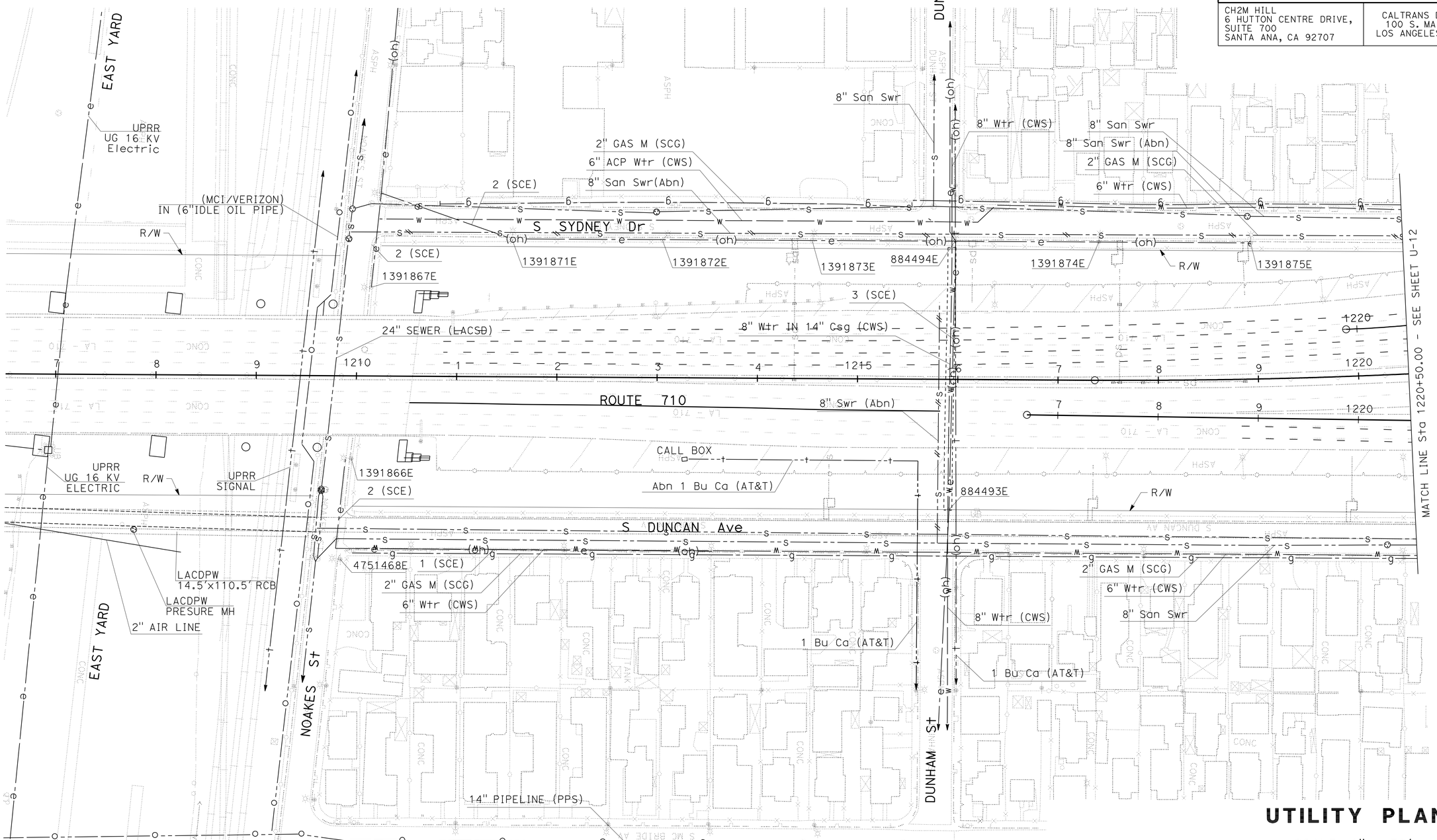

UTILITY PLAN

SCALE: 1" = 50'

THIS PLAN ACCURATE FOR UTILITY INFORMATION ONLY

U-11

STATE OF CALIFORNIA - DEPARTMENT OF TRANSPORTATION

Caltrans

CONSULTANT FUNCTIONAL SUPERVISOR: MELISSA DE LA PENA

CALCULATED-DESIGNED BY: M. REIFER

CHECKED BY: M. REIFER

REVISED BY

DATE REVISED

LAST REVISION: 00-00-00

DATE PLOTTED => 29-JUN-2011

TIME PLOTTED => 06:24

BORDER LAST REVISED 7/2/2010

USERNAME => trmikesl

DGN FILE => 720211ka011.dgn

RELATIVE BORDER SCALE IS IN INCHES 0 1 2 3

UNIT 1843

PROJECT NUMBER & PHASE 07000208691

Dist	COUNTY	ROUTE	POST MILES TOTAL PROJECT	SHEET No.	TOTAL SHEETS
07	LA	710	17.2/26.4	588	1507

Matt Reifer 3-28-2011
REGISTERED CIVIL ENGINEER DATE

6-27-11
PLANS APPROVAL DATE

REGISTERED PROFESSIONAL ENGINEER MATT REIFER No. C48523 Exp. 06/30/12 CIVIL STATE OF CALIFORNIA

THE STATE OF CALIFORNIA OR ITS OFFICERS OR AGENTS SHALL NOT BE RESPONSIBLE FOR THE ACCURACY OR COMPLETENESS OF SCANNED COPIES OF THIS PLAN SHEET.

CH2M HILL
6 HUTTON CENTRE DRIVE,
SUITE 700
SANTA ANA, CA 92707

CALTRANS DISTRICT 7
100 S. MAIN STREET
LOS ANGELES, CA 90012

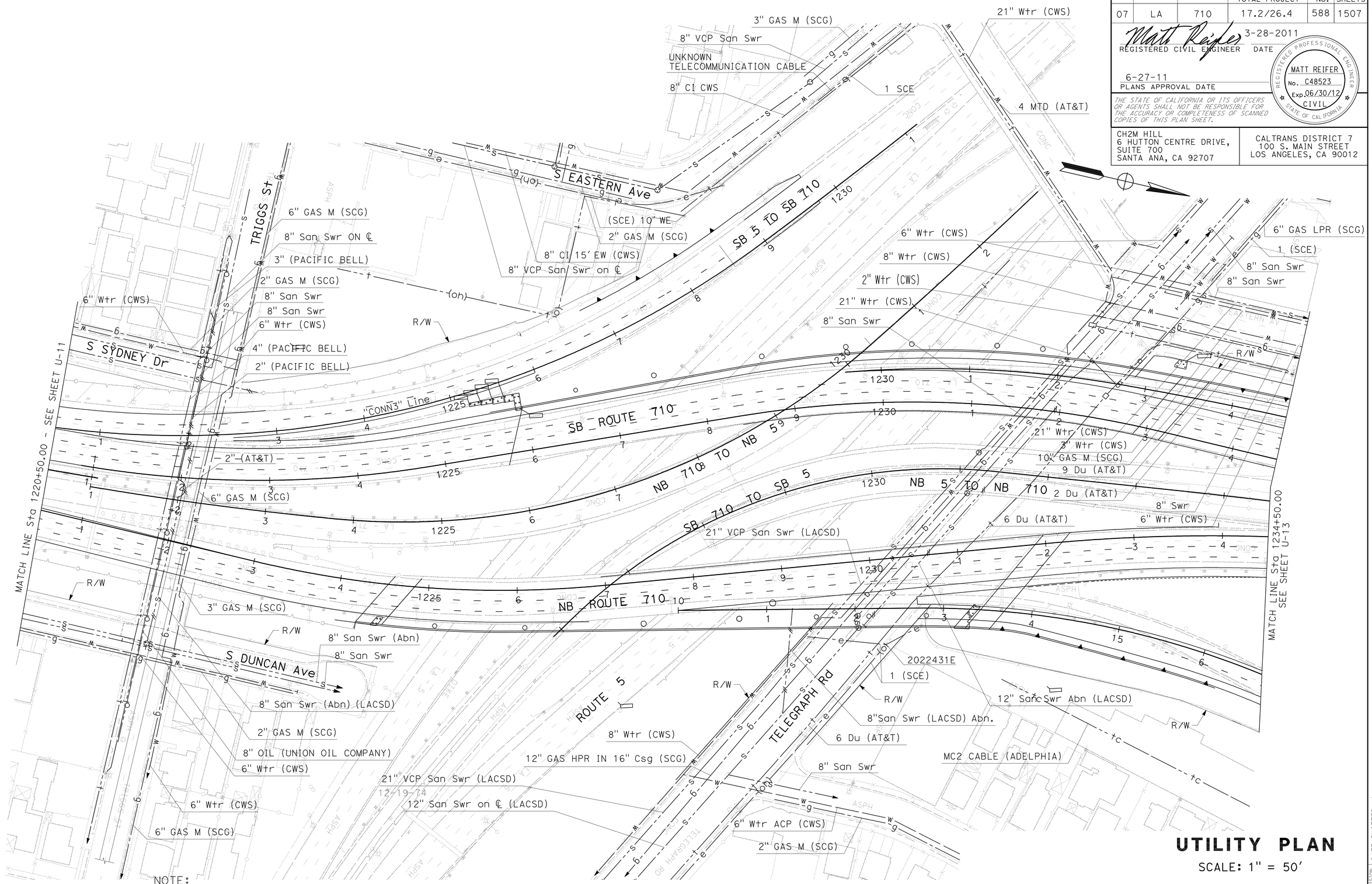

UTILITY PLAN

SCALE: 1" = 50'

NOTE:

FOR ACCURATE RIGHT OF WAY DATA, CONTACT RIGHT OF WAY ENGINEERING AT THE DISTRICT OFFICE.

THIS PLAN ACCURATE FOR UTILITY INFORMATION ONLY

U-12

REVISED BY	DATE REVISED
M. REIFER	M. REIFER

CALCULATED-DESIGNED BY
CHECKED BY

CONSULTANT FUNCTIONAL SUPERVISOR
MELISSA DE LA PENA

STATE OF CALIFORNIA - DEPARTMENT OF TRANSPORTATION
Caltrans

LAST REVISION 00-00-00
DATE PLOTTED => 29-JUN-2011
TIME PLOTTED => 06:24

Dist	COUNTY	ROUTE	POST MILES TOTAL PROJECT	SHEET No.	TOTAL SHEETS
07	LA	710	17.2/26.4	589	1507

Matt Reifer 3-28-2011
REGISTERED CIVIL ENGINEER DATE

6-27-11
PLANS APPROVAL DATE

REGISTERED PROFESSIONAL ENGINEER MATT REIFER No. C48523 Exp. 06/30/12 CIVIL STATE OF CALIFORNIA

THE STATE OF CALIFORNIA OR ITS OFFICERS OR AGENTS SHALL NOT BE RESPONSIBLE FOR THE ACCURACY OR COMPLETENESS OF SCANNED COPIES OF THIS PLAN SHEET.

CH2M HILL
6 HUTTON CENTRE DRIVE,
SUITE 700
SANTA ANA, CA 92707

CALTRANS DISTRICT 7
100 S. MAIN STREET
LOS ANGELES, CA 90012

NOTE:

FOR ACCURATE RIGHT OF WAY DATA, CONTACT RIGHT OF WAY ENGINEERING AT THE DISTRICT OFFICE.

POTHOLE LOCATION TABLE

	UTILITY	*STATION	OFFSET DISTANCE	GROUND ELEVATION	TOP OF PIPE ELEVATION	NORTHING	EASTING
98	SCG 2" Gas	1238+72.12	144.04' Rt	180.91	177.74	1829350.39	6509195.22
99	AT&T 18"x24" DUCT BANK	1240+04.89	195.86' Rt	182.07	178.07	1829483.21	6509246.90
96A	CWS 12" WATER	152+35.49	123.60' Rt	181.26	176.76	1829270.54	6509182.30
97A	CWS 12" WATER	152+33.69	144.47' Rt	180.92	176.50	1829268.88	6509203.19

* STATION/OFFSET BASED ON ALIGNMENT "OL3"Line

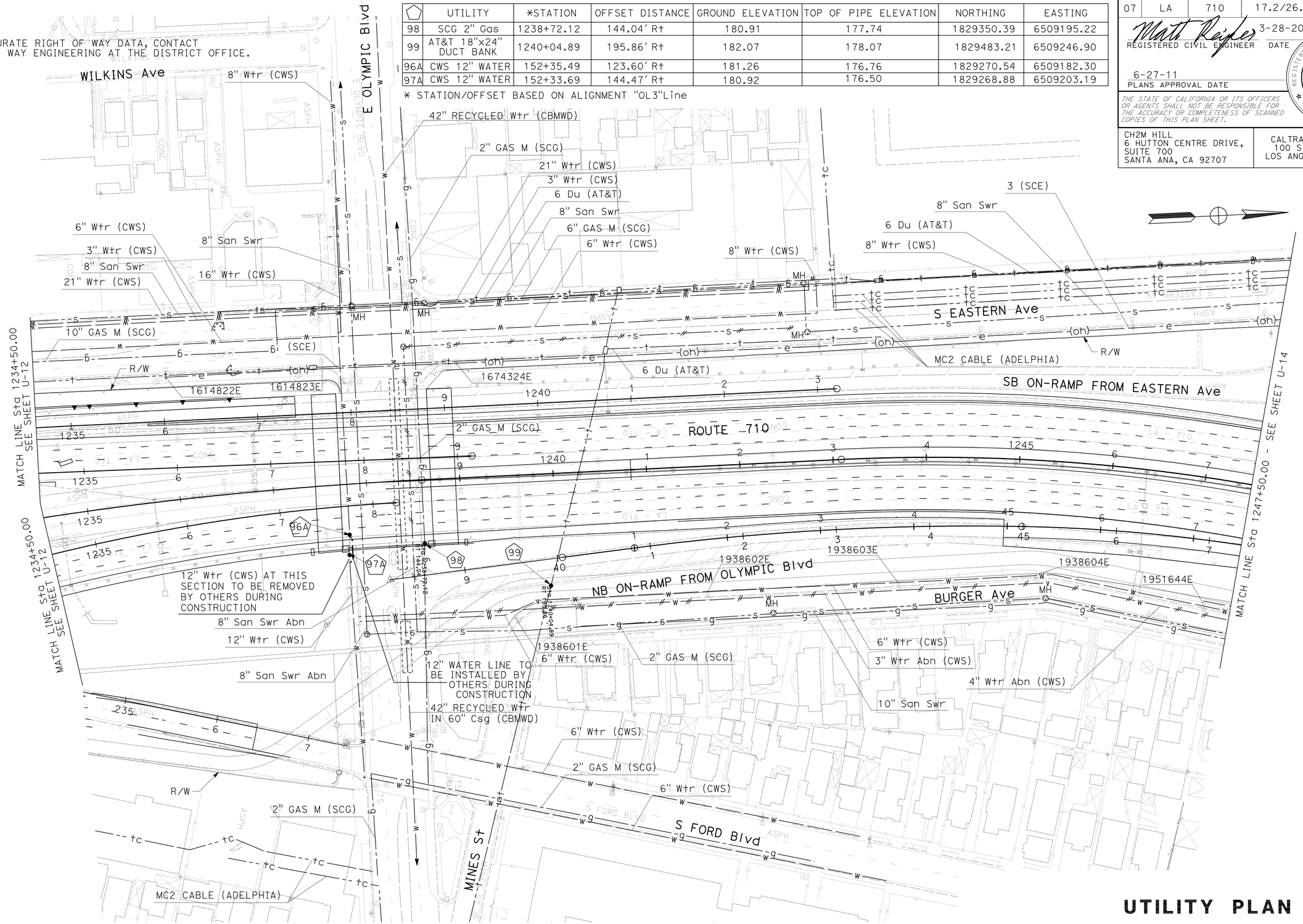

UTILITY PLAN

SCALE: 1" = 50'

U-13

THIS PLAN ACCURATE FOR UTILITY WORK ONLY

STATE OF CALIFORNIA - DEPARTMENT OF TRANSPORTATION
Caltrans

CONSULTANT FUNCTIONAL SUPERVISOR: MELISSA DE LA PENA
CALCULATED-DESIGNED BY: M. REIFER
CHECKED BY: M. REIFER
REVISED BY
DATE REVISED

LAST REVISION 00-00-00
DATE PLOTTED => 29-JUN-2011
TIME PLOTTED => 06:24

Dist	COUNTY	ROUTE	POST MILES TOTAL PROJECT	SHEET No.	TOTAL SHEETS
07	LA	710	17.2/26.4	590	1507

REGISTERED CIVIL ENGINEER 3-28-2011 DATE

6-27-11
PLANS APPROVAL DATE

REGISTERED PROFESSIONAL ENGINEER MATT REIFER No. C48523 Exp. 06/30/12 CIVIL STATE OF CALIFORNIA

THE STATE OF CALIFORNIA OR ITS OFFICERS OR AGENTS SHALL NOT BE RESPONSIBLE FOR THE ACCURACY OR COMPLETENESS OF SCANNED COPIES OF THIS PLAN SHEET.

CH2M HILL
6 HUTTON CENTRE DRIVE,
SUITE 700
SANTA ANA, CA 92707

CALTRANS DISTRICT 7
100 S. MAIN STREET
LOS ANGELES, CA 90012

POTHOLE LOCATION TABLE

⬠	UTILITY	STATION	OFFSET DISTANCE	GROUND ELEVATION	TOP OF PIPE ELEVATION	NORTHING	EASTING
101	PPS 14" OIL	1248+81.44	73.23' L+	205.29	195.29	1830383.01	6509134.92
102	PPS 14" OIL	1248+80.18	114.24' R+	187.65	182.40	1830336.23	6509316.47
103	CWS 8" WATER	1253+67.44	120.17' R+	194.21	187.96	1830807.44	6509440.63
104	CWS 8" WATER	1253+65.47	143.84' L+	191.48	188.81	1830869.69	6509184.06
105	12"X12" DUCT (AT&T)	1255+29.42	88.33' L+	194.85	190.18	1831015.18	6509277.73
106	CWS 6" WATER	1256+00.34	87.42' L+	195.27	191.85	1831082.19	6509294.69

UTILITY PLAN

SCALE: 1" = 50'

NOTE:

FOR ACCURATE RIGHT OF WAY DATA, CONTACT RIGHT OF WAY ENGINEERING AT THE DISTRICT OFFICE.

THIS PLAN ACCURATE FOR UTILITY INFORMATION ONLY

U-14

STATE OF CALIFORNIA - DEPARTMENT OF TRANSPORTATION

Caltrans

CONSULTANT FUNCTIONAL SUPERVISOR: MELISSA DE LA PENA

CALCULATED-DESIGNED BY: M. REIFER

CHECKED BY: M. REIFER

REVISED BY / DATE REVISED

LAST REVISION 00-00-00 | DATE PLOTTED => 29-JUN-2011 | TIME PLOTTED => 06:25

Dist	COUNTY	ROUTE	POST MILES TOTAL PROJECT	SHEET No.	TOTAL SHEETS
07	LA	710	17.2/26.4	591	1507

Matt Reifer 3-28-2011
REGISTERED CIVIL ENGINEER DATE

6-27-11
PLANS APPROVAL DATE

REGISTERED PROFESSIONAL ENGINEER MATT REIFER No. C48523 Exp. 06/30/12 CIVIL STATE OF CALIFORNIA

THE STATE OF CALIFORNIA OR ITS OFFICERS OR AGENTS SHALL NOT BE RESPONSIBLE FOR THE ACCURACY OR COMPLETENESS OF SCANNED COPIES OF THIS PLAN SHEET.

CH2M HILL
6 HUTTON CENTRE DRIVE,
SUITE 700
SANTA ANA, CA 92707

CALTRANS DISTRICT 7
100 S. MAIN STREET
LOS ANGELES, CA 90012

NOTE:

FOR ACCURATE RIGHT OF WAY DATA, CONTACT
RIGHT OF WAY ENGINEERING AT THE DISTRICT OFFICE.

POTHOLE LOCATION TABLE

	UTILITY	STATION	OFFSET DISTANCE	GROUND ELEVATION	TOP OF PIPE ELEVATION	NORTHING	EASTING
107	ADELPHIA CABLE	1269+44.06	118.32' Rt	230.15	227.48	1832392.41	6509584.99

UTILITY PLAN

SCALE: 1" = 50'

THIS PLAN ACCURATE FOR UTILITY INFORMATION ONLY

U-15

STATE OF CALIFORNIA - DEPARTMENT OF TRANSPORTATION
Caltrans

CONSULTANT FUNCTIONAL SUPERVISOR: MELISSA DE LA PENA
CALCULATED-DESIGNED BY: M. REIFER
CHECKED BY: M. REIFER
REVISED BY
DATE REVISED

LAST REVISION 00-00-00
DATE PLOTTED => 29-JUN-2011
TIME PLOTTED => 06:25

Dist	COUNTY	ROUTE	POST MILES TOTAL PROJECT	SHEET No.	TOTAL SHEETS
07	LA	710	17.2/26.4	592	1507

Matt Reifer 3-28-2011
REGISTERED CIVIL ENGINEER DATE

6-27-11
PLANS APPROVAL DATE

REGISTERED PROFESSIONAL ENGINEER MATT REIFER No. C48523 Exp. 06/30/12 CIVIL STATE OF CALIFORNIA

THE STATE OF CALIFORNIA OR ITS OFFICERS OR AGENTS SHALL NOT BE RESPONSIBLE FOR THE ACCURACY OR COMPLETENESS OF SCANNED COPIES OF THIS PLAN SHEET.

CH2M HILL
6 HUTTON CENTRE DRIVE,
SUITE 700
SANTA ANA, CA 92707

CALTRANS DISTRICT 7
100 S. MAIN STREET
LOS ANGELES, CA 90012

NOTE:
FOR ACCURATE RIGHT OF WAY DATA, CONTACT RIGHT OF WAY ENGINEERING AT THE DISTRICT OFFICE.

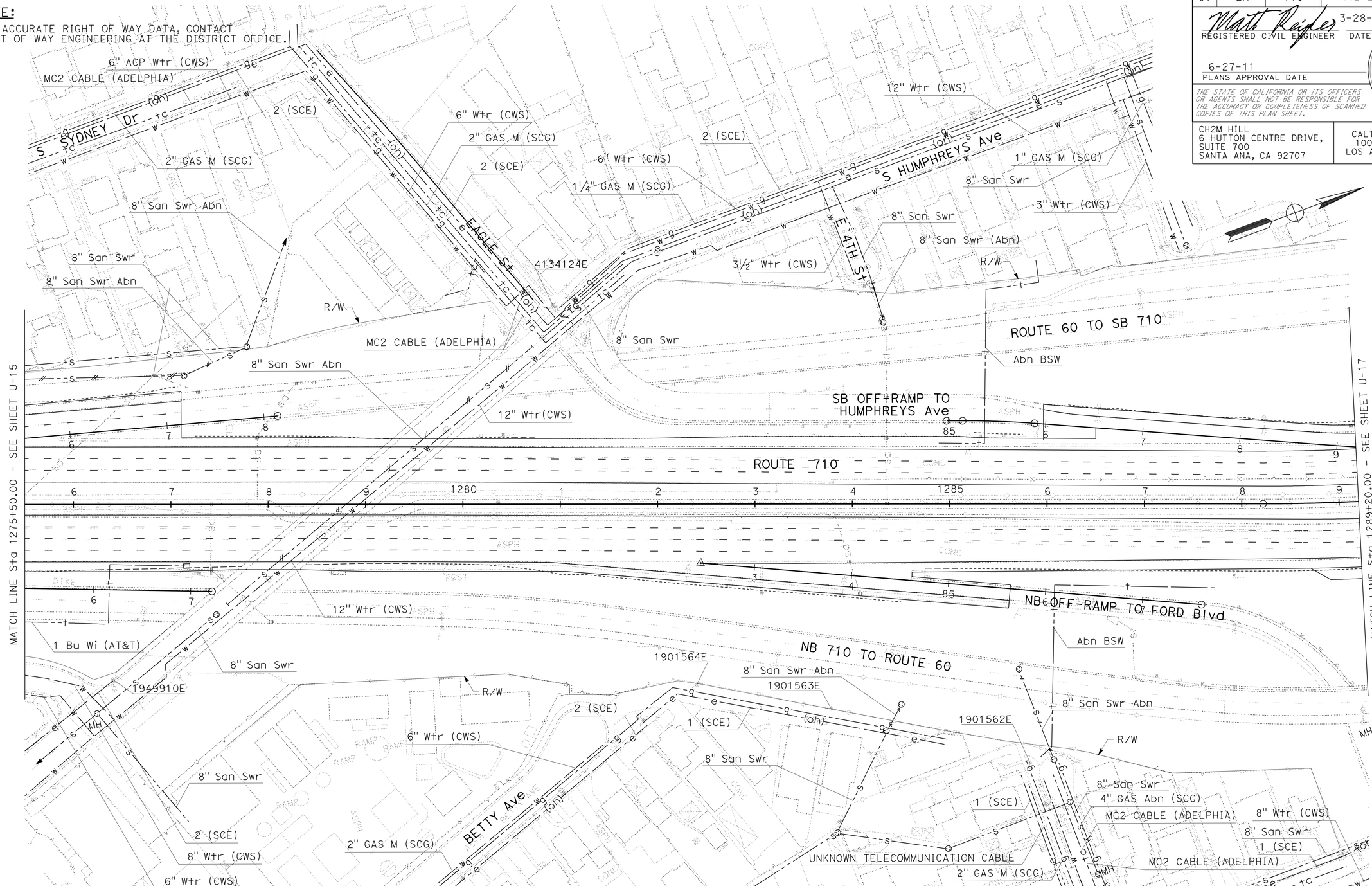

UTILITY PLAN

SCALE: 1" = 50'

THIS PLAN ACCURATE FOR UTILITY INFORMATION ONLY

U-16

STATE OF CALIFORNIA - DEPARTMENT OF TRANSPORTATION
Caltrans

CONSULTANT FUNCTIONAL SUPERVISOR: MELISSA DE LA PENA
CALCULATED-DESIGNED BY: M. REIFER
CHECKED BY: M. REIFER
REVISED BY
DATE REVISED

LAST REVISION 00-00-00
DATE PLOTTED => 29-JUN-2011
TIME PLOTTED => 06:25

NOTE:

FOR ACCURATE RIGHT OF WAY DATA, CONTACT RIGHT OF WAY ENGINEERING AT THE DISTRICT OFFICE.

Dist	COUNTY	ROUTE	POST MILES TOTAL PROJECT	SHEET No.	TOTAL SHEETS
07	LA	710	17.2/26.4	593	1507

Matt Reifer 3-28-2011
REGISTERED CIVIL ENGINEER DATE

6-27-11
PLANS APPROVAL DATE

REGISTERED PROFESSIONAL ENGINEER MATT REIFER No. C48523 Exp. 06/30/12 CIVIL STATE OF CALIFORNIA

THE STATE OF CALIFORNIA OR ITS OFFICERS OR AGENTS SHALL NOT BE RESPONSIBLE FOR THE ACCURACY OR COMPLETENESS OF SCANNED COPIES OF THIS PLAN SHEET.

CH2M HILL
6 HUTTON CENTRE DRIVE,
SUITE 700
SANTA ANA, CA 92707

CALTRANS DISTRICT 7
100 S. MAIN STREET
LOS ANGELES, CA 90012

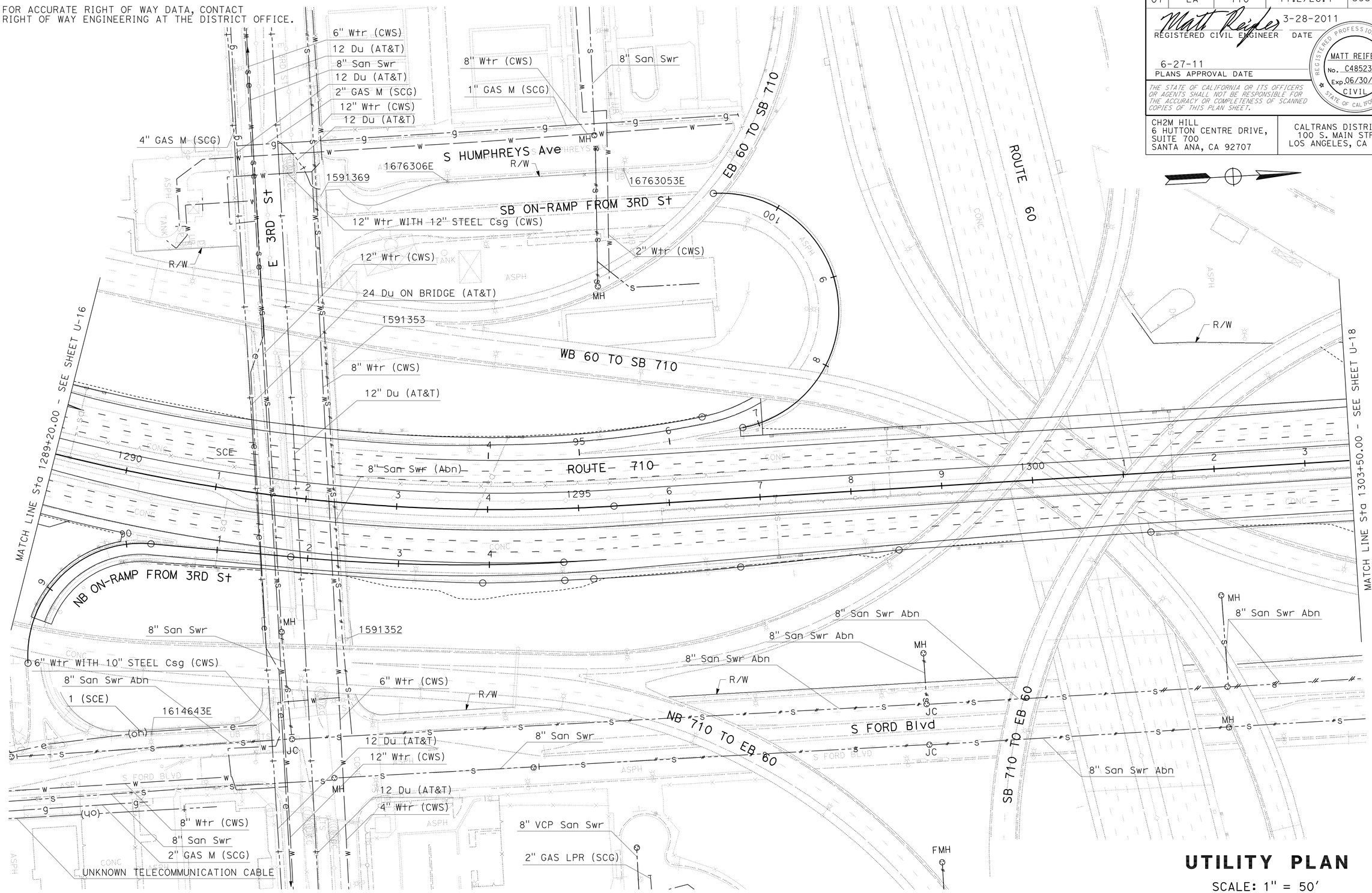

UTILITY PLAN

SCALE: 1" = 50'

THIS PLAN ACCURATE FOR UTILITY INFORMATION ONLY

U-17

REVISED BY	DATE REVISED
M. REIFER	M. REIFER

CALCULATED-DESIGNED BY / CHECKED BY

CONSULTANT FUNCTIONAL SUPERVISOR: MELISSA DE LA PENA

STATE OF CALIFORNIA - DEPARTMENT OF TRANSPORTATION

Caltrans

LAST REVISION 00-00-00 | DATE PLOTTED => 29-JUN-2011 | TIME PLOTTED => 06:25

Dist	COUNTY	ROUTE	POST MILES TOTAL PROJECT	SHEET No.	TOTAL SHEETS
07	LA	710	17.2/26.4	594	1507

REGISTERED CIVIL ENGINEER — DATE: 3-28-2011

6-27-11
PLANS APPROVAL DATE

REGISTERED PROFESSIONAL ENGINEER — MATT REIFER — No. C48523 — Exp. 06/30/12 — CIVIL — STATE OF CALIFORNIA

THE STATE OF CALIFORNIA OR ITS OFFICERS OR AGENTS SHALL NOT BE RESPONSIBLE FOR THE ACCURACY OR COMPLETENESS OF SCANNED COPIES OF THIS PLAN SHEET.

CH2M HILL
6 HUTTON CENTRE DRIVE,
SUITE 700
SANTA ANA, CA 92707

CALTRANS DISTRICT 7
100 S. MAIN STREET
LOS ANGELES, CA 90012

NOTE:

FOR ACCURATE RIGHT OF WAY DATA, CONTACT RIGHT OF WAY ENGINEERING AT THE DISTRICT OFFICE.

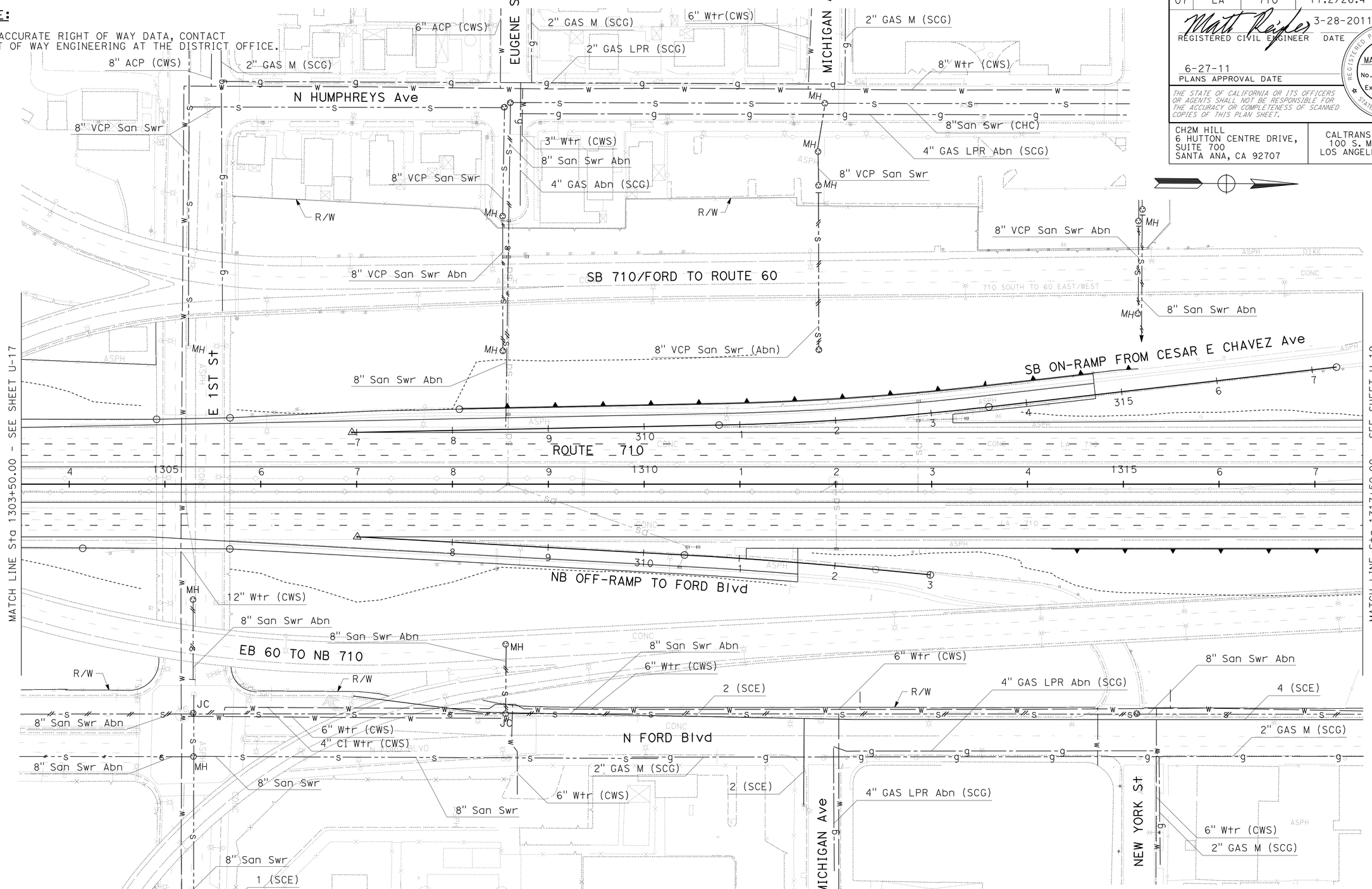

UTILITY PLAN

SCALE: 1" = 50'

THIS PLAN ACCURATE FOR UTILITY INFORMATION ONLY

U-18

STATE OF CALIFORNIA - DEPARTMENT OF TRANSPORTATION — Caltrans

CONSULTANT FUNCTIONAL SUPERVISOR: MELISSA DE LA PENA

CALCULATED-DESIGNED BY: M. REIFER — CHECKED BY: M. REIFER

REVISED BY — DATE REVISED

LAST REVISION 00-00-00 — DATE PLOTTED => 29-JUN-2011 — TIME PLOTTED => 06:25

NOTE:

FOR ACCURATE RIGHT OF WAY DATA, CONTACT RIGHT OF WAY ENGINEERING AT THE DISTRICT OFFICE.

POTHOLE LOCATION TABLE

⬠	UTILITY	STATION	OFFSET DISTANCE	GROUND ELEVATION	TOP OF PIPE ELEVATION	NORTHING	EASTING
111	SCG 12" GAS	1328+53.32	132' Rt	316.75	-	1838198.62	6510273.29
11A	SCG 12" GAS	1328+54.60	101.52' Rt	321.69	311.19	1838200.19	6510240.56

Dist	COUNTY	ROUTE	POST MILES TOTAL PROJECT	SHEET No.	TOTAL SHEETS
07	LA	710	17.2/26.4	595	1507

Matt Reifer 3-28-2011
REGISTERED CIVIL ENGINEER DATE

6-27-11
PLANS APPROVAL DATE

REGISTERED PROFESSIONAL ENGINEER MATT REIFER No. C48523 Exp. 06/30/12 CIVIL STATE OF CALIFORNIA

THE STATE OF CALIFORNIA OR ITS OFFICERS OR AGENTS SHALL NOT BE RESPONSIBLE FOR THE ACCURACY OR COMPLETENESS OF SCANNED COPIES OF THIS PLAN SHEET.

CH2M HILL
6 HUTTON CENTRE DRIVE,
SUITE 700
SANTA ANA, CA 92707

CALTRANS DISTRICT 7
100 S. MAIN STREET
LOS ANGELES, CA 90012

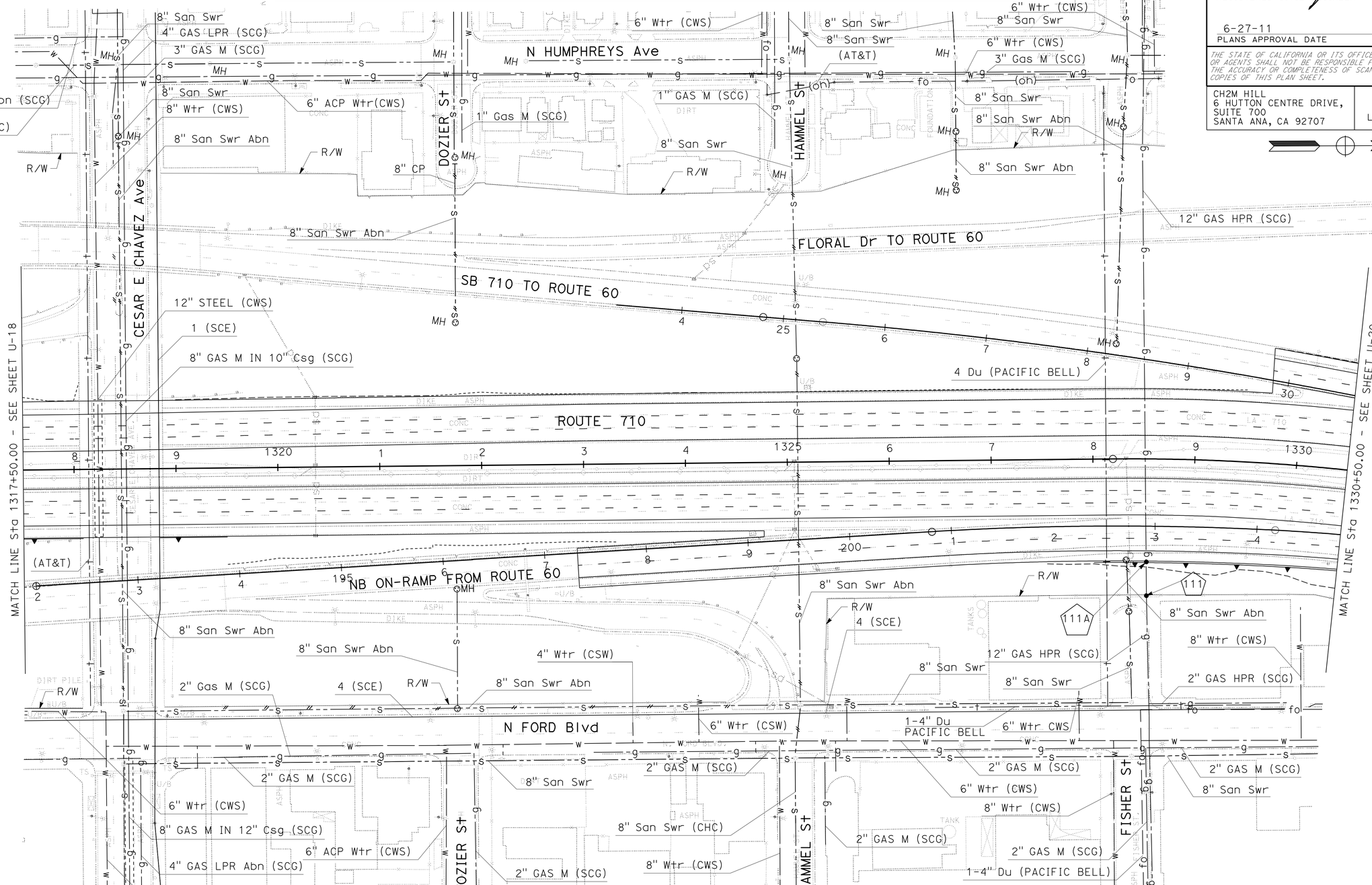

UTILITY PLAN

SCALE: 1" = 50'

THIS PLAN ACCURATE FOR UTILITY INFORMATION ONLY

U-19

REVISED BY	DATE REVISED
M. REIFER	M. REIFER

CALCULATED-DESIGNED BY / CHECKED BY

CONSULTANT FUNCTIONAL SUPERVISOR: MELISSA DE LA PENA

STATE OF CALIFORNIA - DEPARTMENT OF TRANSPORTATION

Caltrans

LAST REVISION 00-00-00 | DATE PLOTTED => 29-JUN-2011 | TIME PLOTTED => 06:25

Dist	COUNTY	ROUTE	POST MILES TOTAL PROJECT	SHEET No.	TOTAL SHEETS
07	LA	710	17.2/26.4	596	1507

Matt Reifer 3-28-2011
REGISTERED CIVIL ENGINEER DATE

6-27-11
PLANS APPROVAL DATE

REGISTERED PROFESSIONAL ENGINEER MATT REIFER No. C48523 Exp. 06/30/12 CIVIL STATE OF CALIFORNIA

THE STATE OF CALIFORNIA OR ITS OFFICERS OR AGENTS SHALL NOT BE RESPONSIBLE FOR THE ACCURACY OR COMPLETENESS OF SCANNED COPIES OF THIS PLAN SHEET.

CH2M HILL
6 HUTTON CENTRE DRIVE,
SUITE 700
SANTA ANA, CA 92707

CALTRANS DISTRICT 7
100 S. MAIN STREET
LOS ANGELES, CA 90012

NOTE:

FOR ACCURATE RIGHT OF WAY DATA, CONTACT RIGHT OF WAY ENGINEERING AT THE DISTRICT OFFICE.

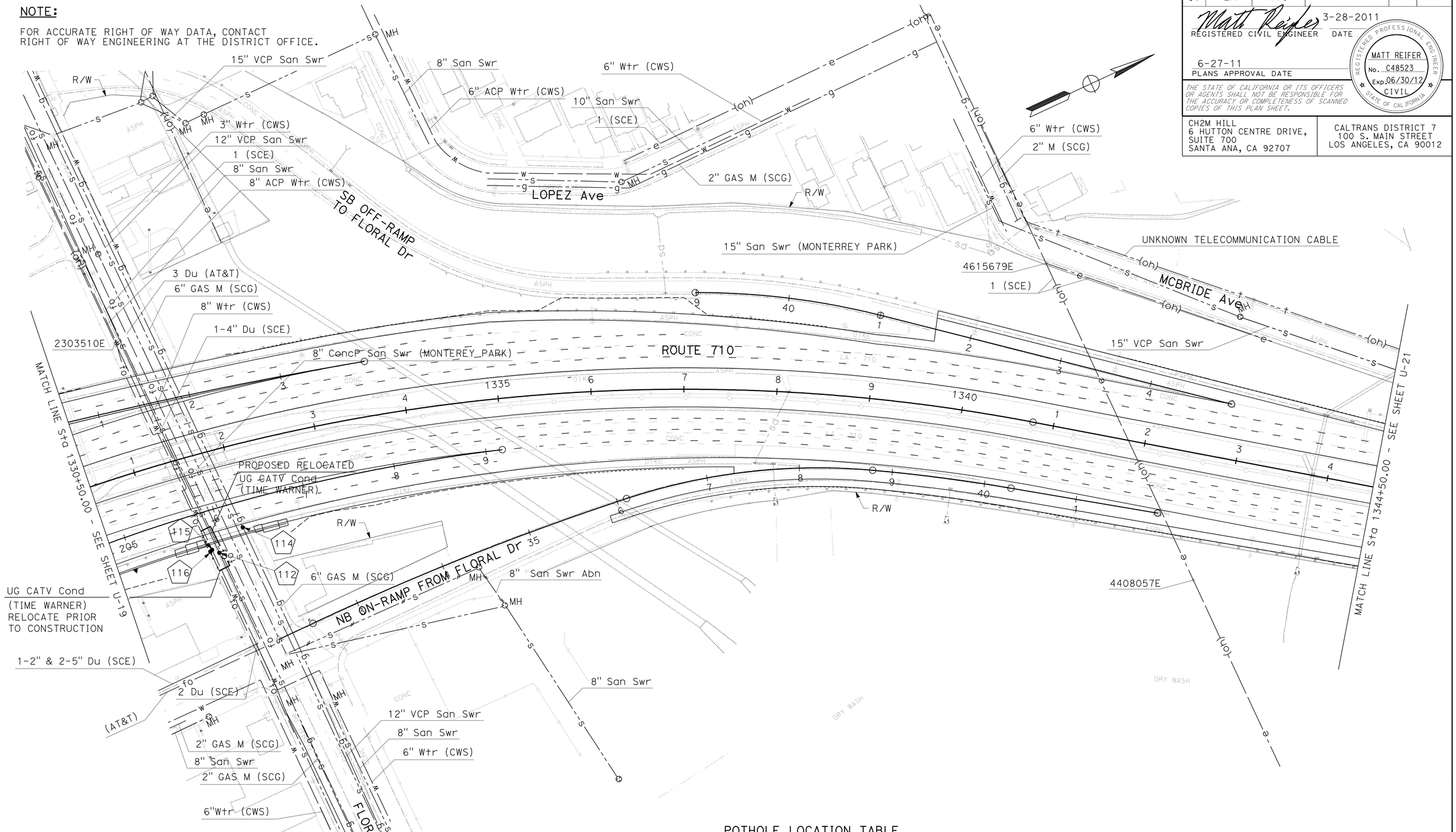

POTHOLE LOCATION TABLE

⬠	UTILITY	STATION	OFFSET DISTANCE	GROUND ELEVATION	TOP OF PIPE ELEVATION	NORTHING	EASTING
112	SCE 2'x2' Conc CASING	1331+65.58	108.35' Rt	309.95	305.95	1838492.78	6510273.63
114	SCG 6" GAS	1331+98.44	88.25' Rt	309.31	305.98	1838526.95	6510259.35
115	CWS 8" WATER	1331+58.36	103.15' Rt	310.30	306.30	1838486.58	6510267.38
116	TW CATV Cond	1331+55.75	104.75' Rt	310.39	309.22	1838484.36	6510268.26

THIS PLAN ACCURATE FOR UTILITY WORK ONLY

UTILITY PLAN

SCALE: 1" = 50'

U-20

REVISED BY	DATE REVISED
M. REIFER	M. REIFER

CALCULATED-DESIGNED BY
CHECKED BY

CONSULTANT FUNCTIONAL SUPERVISOR
MELISSA DE LA PENA

STATE OF CALIFORNIA - DEPARTMENT OF TRANSPORTATION
Caltrans

LAST REVISION 00-00-00
DATE PLOTTED => 29-JUN-2011
TIME PLOTTED => 06:26

Dist	COUNTY	ROUTE	POST MILES TOTAL PROJECT	SHEET No.	TOTAL SHEETS
07	LA	710	17.2/26.4	597	1507

Matt Reifer 3-28-2011
REGISTERED CIVIL ENGINEER DATE

6-27-11
PLANS APPROVAL DATE

REGISTERED PROFESSIONAL ENGINEER
MATT REIFER
No. C48523
Exp. 06/30/12
CIVIL
STATE OF CALIFORNIA

THE STATE OF CALIFORNIA OR ITS OFFICERS OR AGENTS SHALL NOT BE RESPONSIBLE FOR THE ACCURACY OR COMPLETENESS OF SCANNED COPIES OF THIS PLAN SHEET.

CH2M HILL
6 HUTTON CENTRE DRIVE,
SUITE 700
SANTA ANA, CA 92707

CALTRANS DISTRICT 7
100 S. MAIN STREET
LOS ANGELES, CA 90012

NOTE:

FOR ACCURATE RIGHT OF WAY DATA, CONTACT
RIGHT OF WAY ENGINEERING AT THE DISTRICT OFFICE.

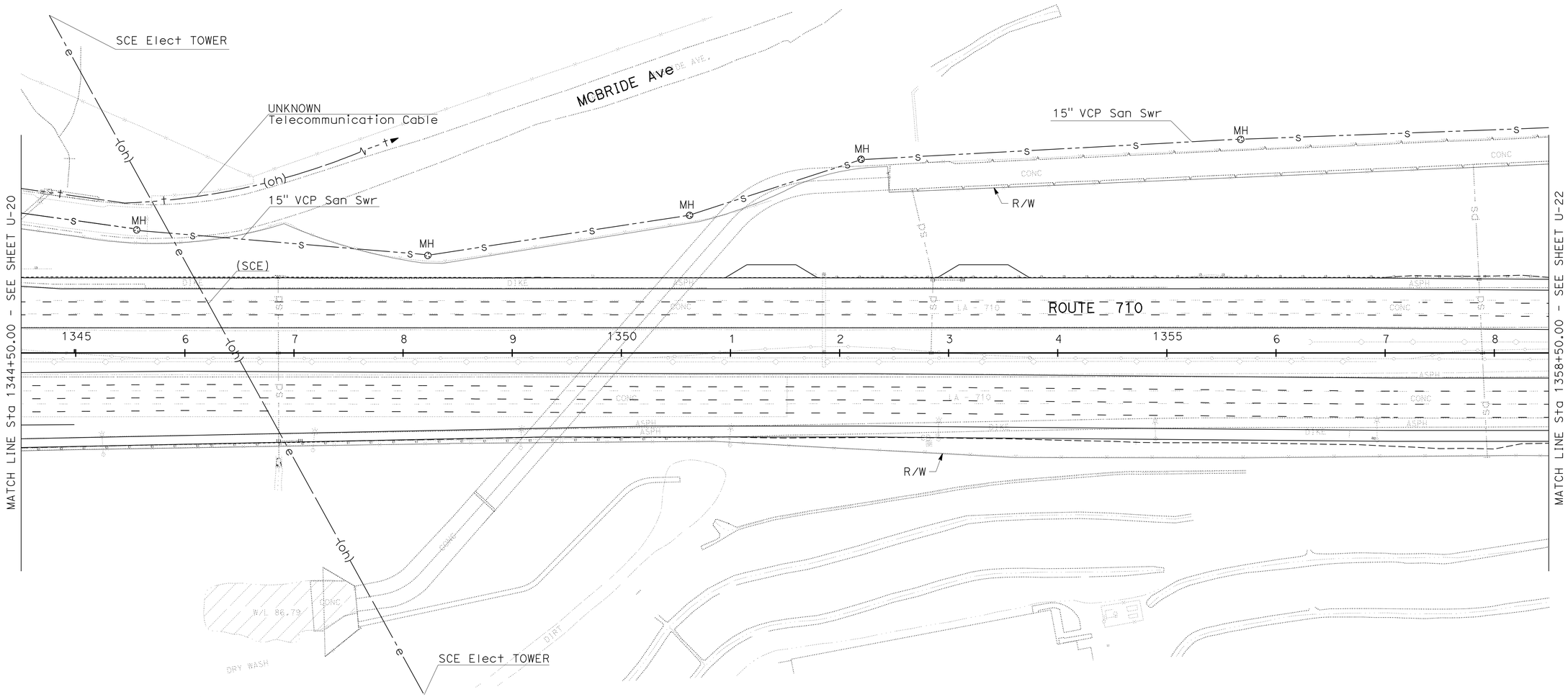

UTILITY PLAN

SCALE: 1" = 50'

THIS PLAN ACCURATE FOR UTILITY INFORMATION ONLY

U-21

STATE OF CALIFORNIA - DEPARTMENT OF TRANSPORTATION
Caltrans

CONSULTANT FUNCTIONAL SUPERVISOR: MELISSA DE LA PENA
CALCULATED-DESIGNED BY: M. REIFER
CHECKED BY: M. REIFER
REVISED BY
DATE REVISED

LAST REVISION 00-00-00
DATE PLOTTED => 29-JUN-2011
TIME PLOTTED => 06:26

Dist	COUNTY	ROUTE	POST MILES TOTAL PROJECT	SHEET No.	TOTAL SHEETS
07	LA	710	17.2/26.4	598	1507

Matt Reifer 3-28-2011
REGISTERED CIVIL ENGINEER DATE

6-27-11
PLANS APPROVAL DATE

REGISTERED PROFESSIONAL ENGINEER
MATT REIFER
No. C48523
Exp. 06/30/12
CIVIL
STATE OF CALIFORNIA

THE STATE OF CALIFORNIA OR ITS OFFICERS OR AGENTS SHALL NOT BE RESPONSIBLE FOR THE ACCURACY OR COMPLETENESS OF SCANNED COPIES OF THIS PLAN SHEET.

CH2M HILL
6 HUTTON CENTRE DRIVE,
SUITE 700
SANTA ANA, CA 92707

CALTRANS DISTRICT 7
100 S. MAIN STREET
LOS ANGELES, CA 90012

NOTE:

FOR ACCURATE RIGHT OF WAY DATA, CONTACT
RIGHT OF WAY ENGINEERING AT THE DISTRICT OFFICE.

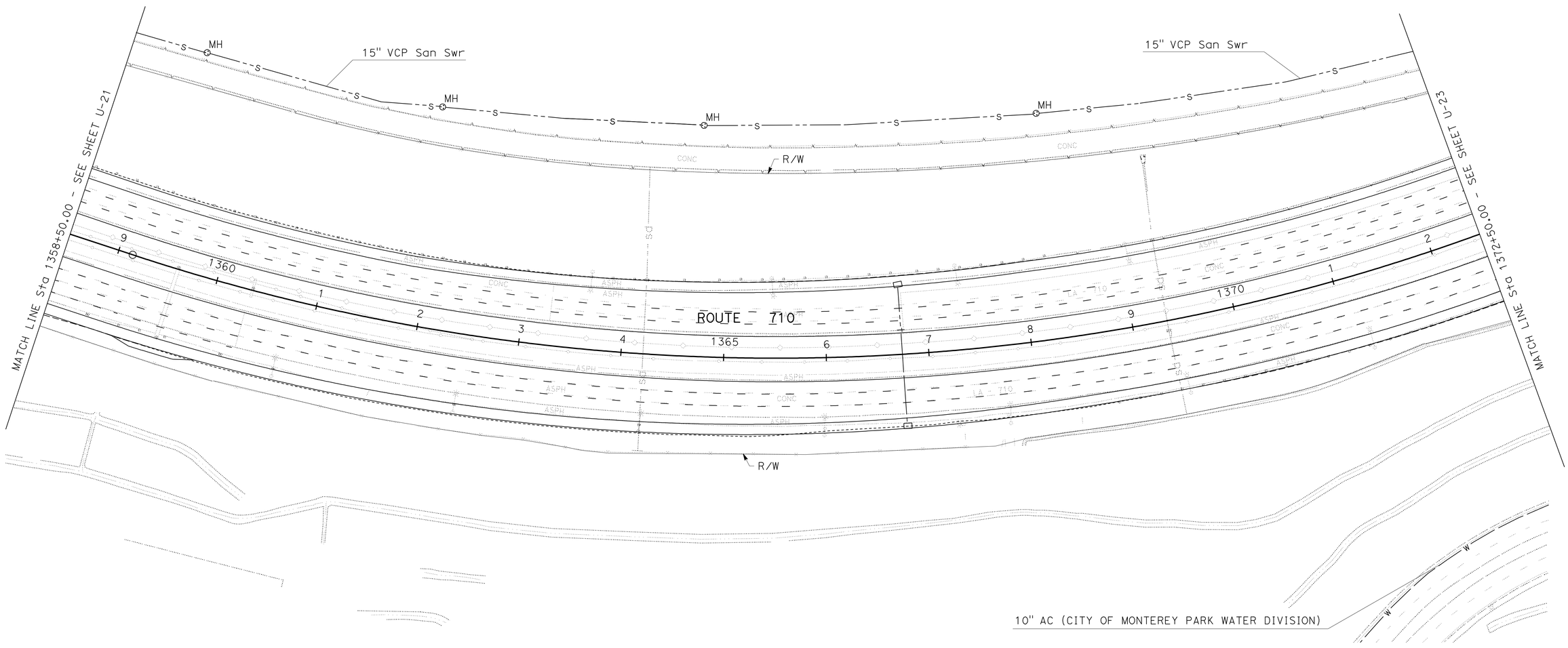

UTILITY PLAN

SCALE: 1" = 50'

THIS PLAN ACCURATE FOR UTILITY INFORMATION ONLY

U-22

STATE OF CALIFORNIA - DEPARTMENT OF TRANSPORTATION
Caltrans

CONSULTANT FUNCTIONAL SUPERVISOR: MELISSA DE LA PENA
CALCULATED-DESIGNED BY: M. REIFER
CHECKED BY: M. REIFER
REVISED BY
DATE REVISED

LAST REVISION 00-00-00
DATE PLOTTED => 29-JUN-2011
TIME PLOTTED => 06:26

Dist	COUNTY	ROUTE	POST MILES TOTAL PROJECT	SHEET No.	TOTAL SHEETS
07	LA	710	17.2/26.4	599	1507

Matt Reifer 3-28-2011
REGISTERED CIVIL ENGINEER DATE

6-27-11
PLANS APPROVAL DATE

REGISTERED PROFESSIONAL ENGINEER
MATT REIFER
No. C48523
Exp. 06/30/12
CIVIL
STATE OF CALIFORNIA

THE STATE OF CALIFORNIA OR ITS OFFICERS OR AGENTS SHALL NOT BE RESPONSIBLE FOR THE ACCURACY OR COMPLETENESS OF SCANNED COPIES OF THIS PLAN SHEET.

CH2M HILL
6 HUTTON CENTRE DRIVE,
SUITE 700
SANTA ANA, CA 92707

CALTRANS DISTRICT 7
100 S. MAIN STREET
LOS ANGELES, CA 90012

NOTE:

FOR ACCURATE RIGHT OF WAY DATA, CONTACT
RIGHT OF WAY ENGINEERING AT THE DISTRICT OFFICE.

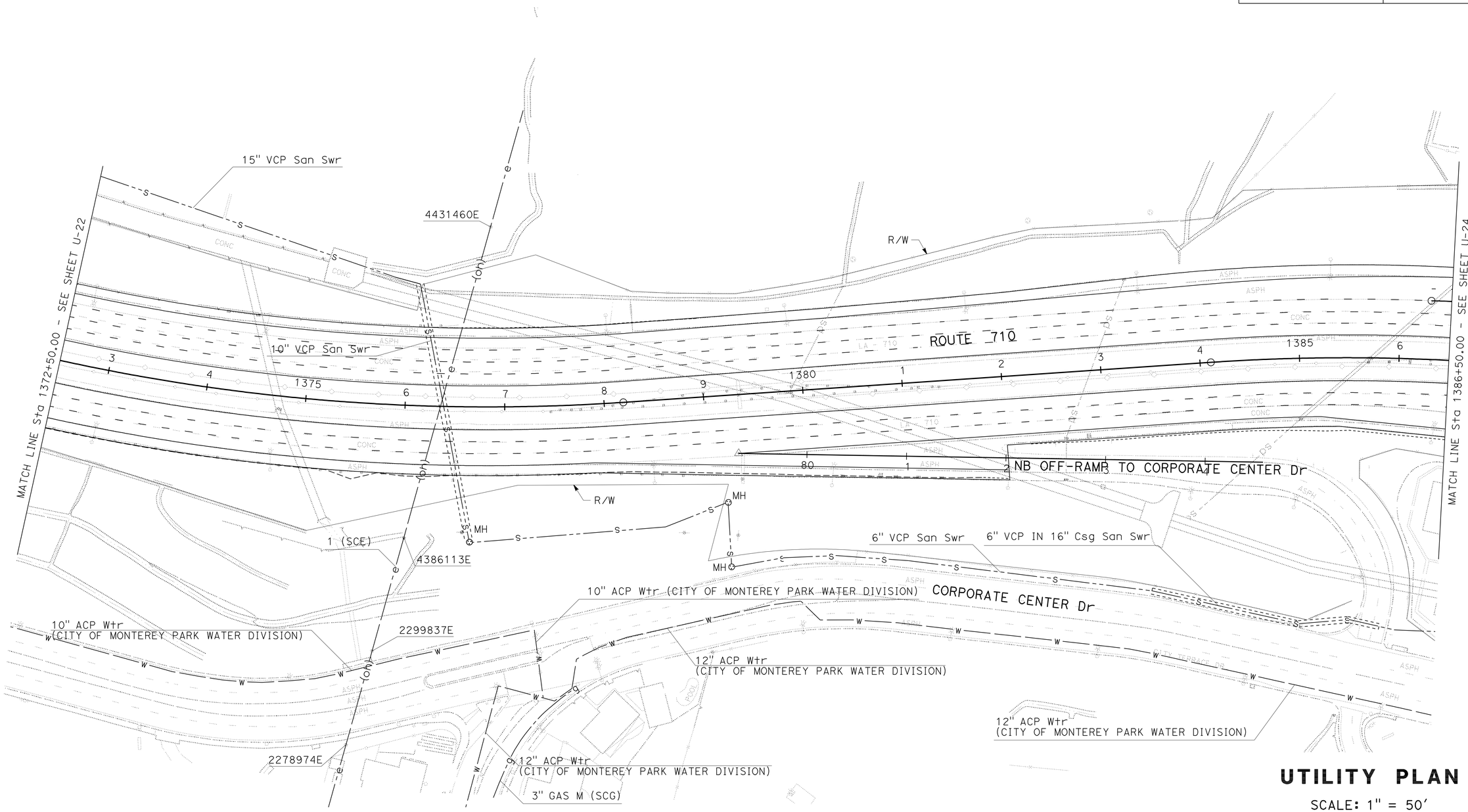

UTILITY PLAN

SCALE: 1" = 50'

THIS PLAN ACCURATE FOR UTILITY INFORMATION ONLY

U-23

REVISED BY	DATE REVISED
M. REIFER	M. REIFER

CALCULATED-DESIGNED BY / CHECKED BY

CONSULTANT FUNCTIONAL SUPERVISOR: MELISSA DE LA PENA

STATE OF CALIFORNIA - DEPARTMENT OF TRANSPORTATION

Caltrans

LAST REVISION 00-00-00 | DATE PLOTTED => 29-JUN-2011 | TIME PLOTTED => 06:26

Dist	COUNTY	ROUTE	POST MILES TOTAL PROJECT	SHEET No.	TOTAL SHEETS
07	LA	710	17.2/26.4	600	1507

Matt Reifer 3-28-2011
REGISTERED CIVIL ENGINEER DATE

6-27-11
PLANS APPROVAL DATE

REGISTERED PROFESSIONAL ENGINEER
MATT REIFER
No. C48523
Exp. 06/30/12
CIVIL
STATE OF CALIFORNIA

THE STATE OF CALIFORNIA OR ITS OFFICERS OR AGENTS SHALL NOT BE RESPONSIBLE FOR THE ACCURACY OR COMPLETENESS OF SCANNED COPIES OF THIS PLAN SHEET.

CH2M HILL
6 HUTTON CENTRE DRIVE,
SUITE 700
SANTA ANA, CA 92707

CALTRANS DISTRICT 7
100 S. MAIN STREET
LOS ANGELES, CA 90012

NOTE:

FOR ACCURATE RIGHT OF WAY DATA, CONTACT
RIGHT OF WAY ENGINEERING AT THE DISTRICT OFFICE.

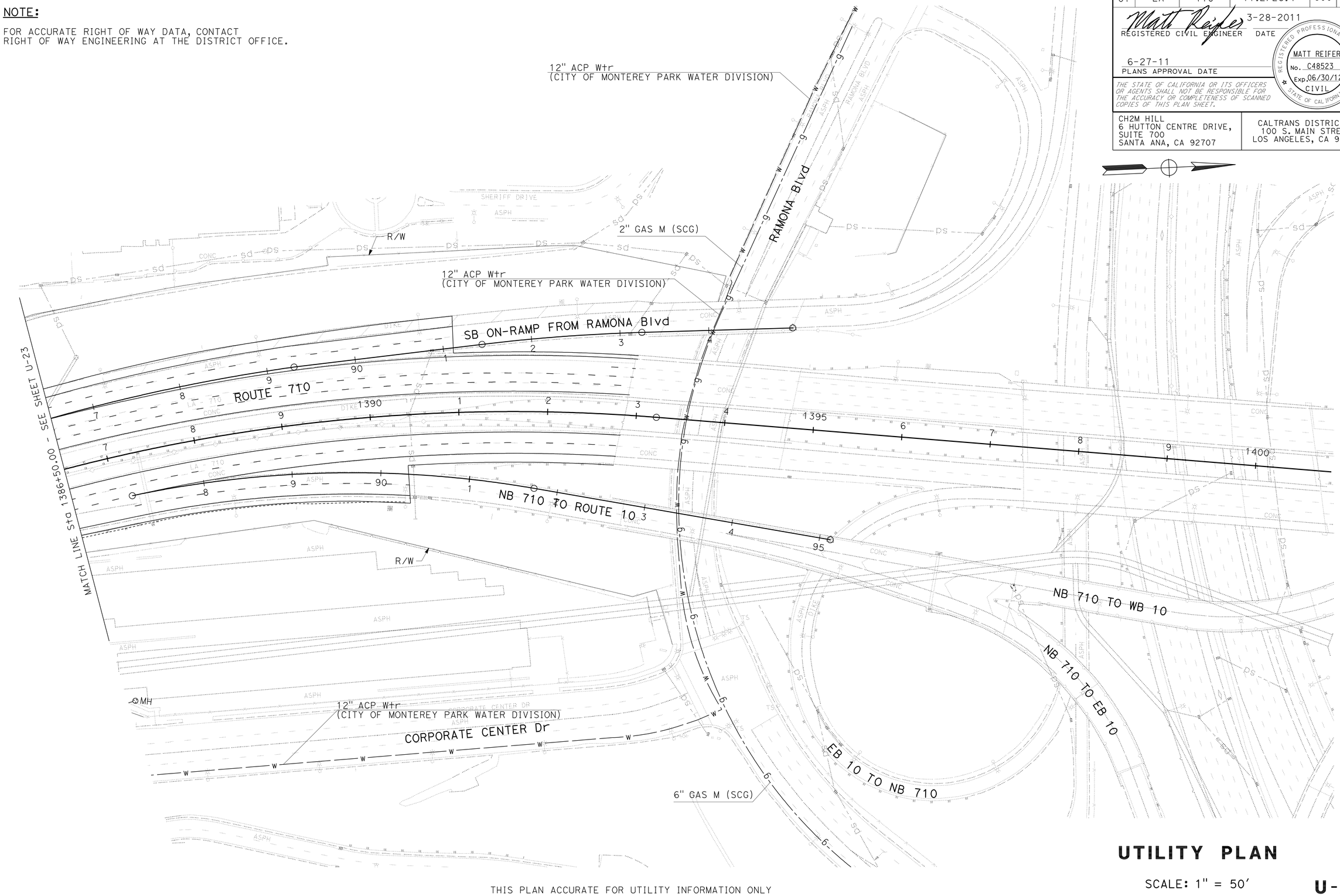

THIS PLAN ACCURATE FOR UTILITY INFORMATION ONLY

UTILITY PLAN

SCALE: 1" = 50'

U-24

STATE OF CALIFORNIA - DEPARTMENT OF TRANSPORTATION
Caltrans

CONSULTANT FUNCTIONAL SUPERVISOR: MELISSA DE LA PENA

CALCULATED-DESIGNED BY: M. REIFER
CHECKED BY: M. REIFER
REVISED BY
DATE REVISED

LAST REVISION 00-00-00
DATE PLOTTED => 29-JUN-2011
TIME PLOTTED => 06:26