| Dist | COUNTY | ROUTE | POST MILES TOTAL PROJECT | SHEET No. | TOTAL SHEETS |
|---|---|---|---|---|---|
| 07 | LA | 710 | 17.2/26.4 | 401 | 1507 |

Rene Yin 2-3-11
REGISTERED CIVIL ENGINEER DATE

6-27-11
PLANS APPROVAL DATE

REGISTERED PROFESSIONAL ENGINEER RENE YIN No. C49915 Exp. 9/30/12 CIVIL STATE OF CALIFORNIA

*THE STATE OF CALIFORNIA OR ITS OFFICERS OR AGENTS SHALL NOT BE RESPONSIBLE FOR THE ACCURACY OR COMPLETENESS OF SCANNED COPIES OF THIS PLAN SHEET.*

LEGEND:

- EXCAVATION (TYPE Z-2) AERIALLY DEPOSITED LEAD

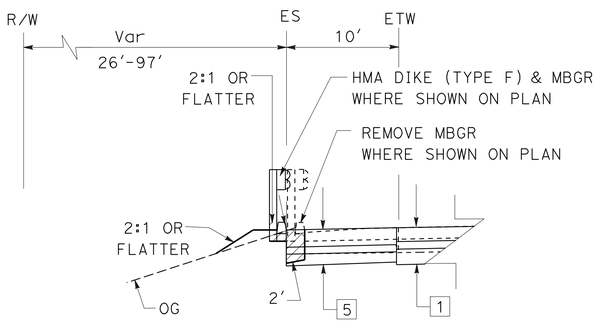


SOUTHBOUND
Sta "R710B" 1376+00 TO 1383+00
NO SCALE

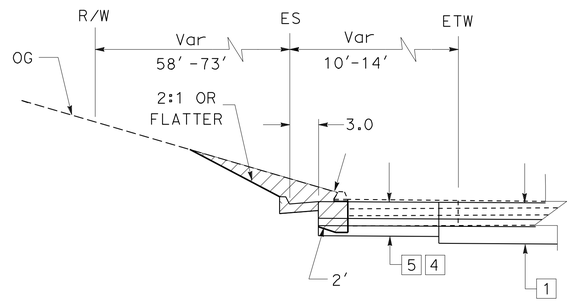


SOUTHBOUND
Sta "R710B" 1383+00 TO 1386+50
NO SCALE

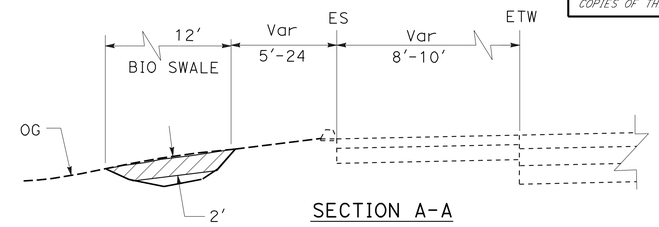


SECTION A-A
BIO SWALE 1377L
Sta "R710B" 1376+30 TO 1378+32
NO SCALE

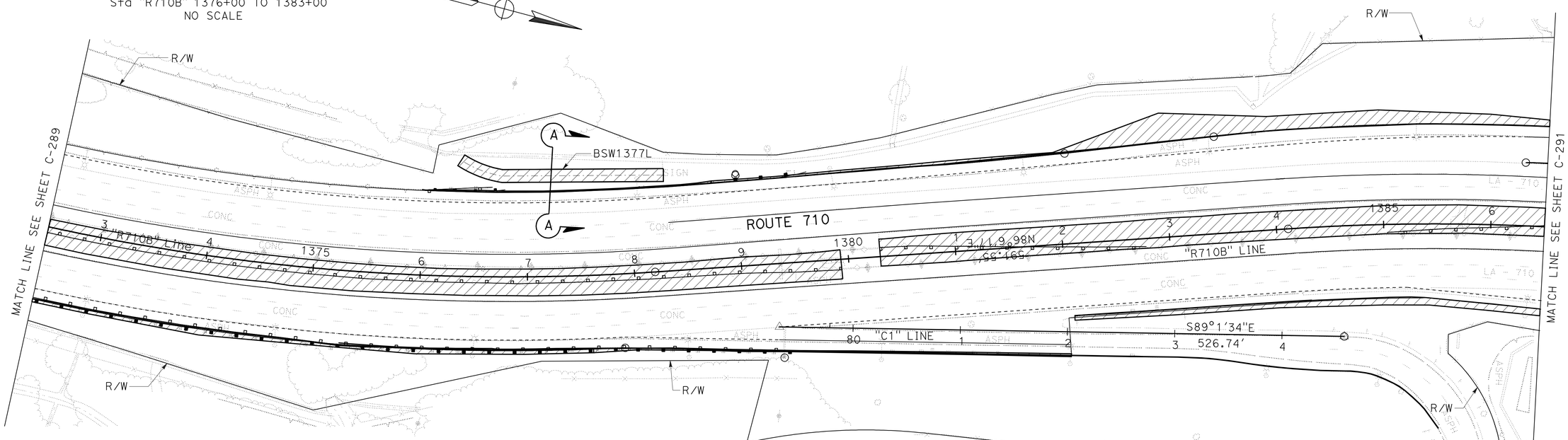


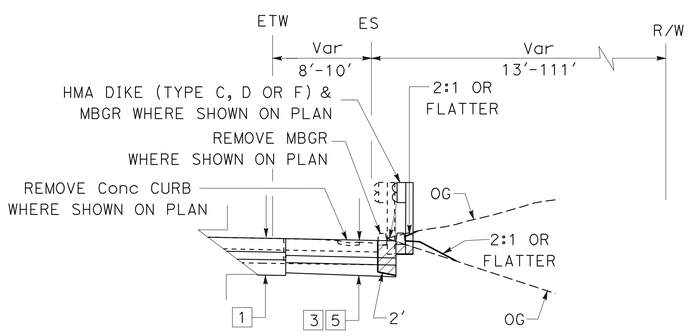


NORTHBOUND
Sta "R710B" 1372+50 TO 1386+50
NO SCALE

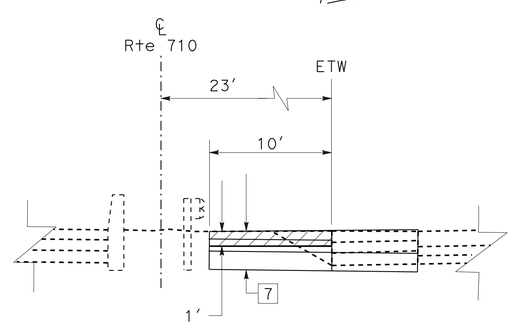


Sta "R710B" 1372+50 TO 1379+92
NO SCALE

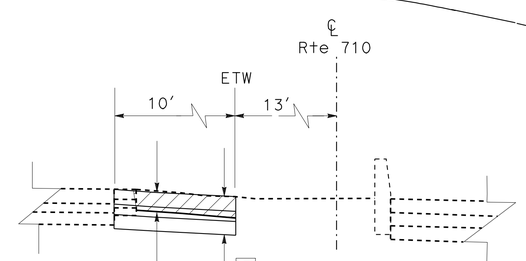


Sta "R710B" 1380+29 TO 1386+50
NO SCALE

FOR COMPLETE RIGHT OF WAY AND ACCURATE ACCESS DATA, SEE RIGHT OF WAY RECORD MAPS AT DISTRICT OFFICE.

# CONSTRUCTION DETAILS
## (MATERIALS WITH AERIALLY DEPOSITED LEAD)

SCALE: 1" = 50'

C-290

STATE OF CALIFORNIA - DEPARTMENT OF TRANSPORTATION
DESIGN
Caltrans

FUNCTIONAL SUPERVISOR: ALINE ANTARAMIAN
CALCULATED-DESIGNED BY: MOE MIRZA
CHECKED BY: RENE YIN
REVISED BY
DATE REVISED

LAST REVISION 01-28-11
DATE PLOTTED => 28-JUN-2011
TIME PLOTTED => 20:25

| Dist | COUNTY | ROUTE | POST MILES TOTAL PROJECT | SHEET No. | TOTAL SHEETS |
|---|---|---|---|---|---|
| 07 | LA | 710 | 17.2/26.4 | 402 | 1507 |

REGISTERED CIVIL ENGINEER — DATE: 2-3-11

PLANS APPROVAL DATE: 6-27-11

REGISTERED PROFESSIONAL ENGINEER — RENE YIN — No. C49915 — Exp. 9/30/12 — CIVIL — STATE OF CALIFORNIA

*THE STATE OF CALIFORNIA OR ITS OFFICERS OR AGENTS SHALL NOT BE RESPONSIBLE FOR THE ACCURACY OR COMPLETENESS OF SCANNED COPIES OF THIS PLAN SHEET.*

LEGEND:

- EXCAVATION (TYPE Z-2) AERIALLY DEPOSITED LEAD

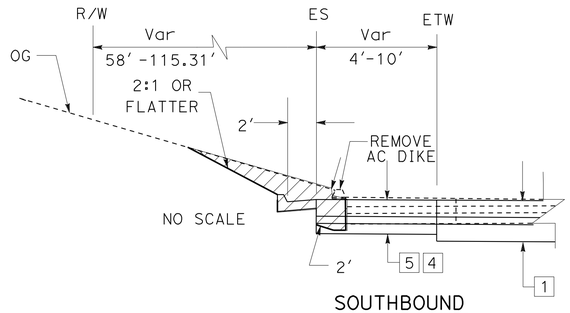


SOUTHBOUND

Sta "R710B" 1386+50 TO 1392+88.78

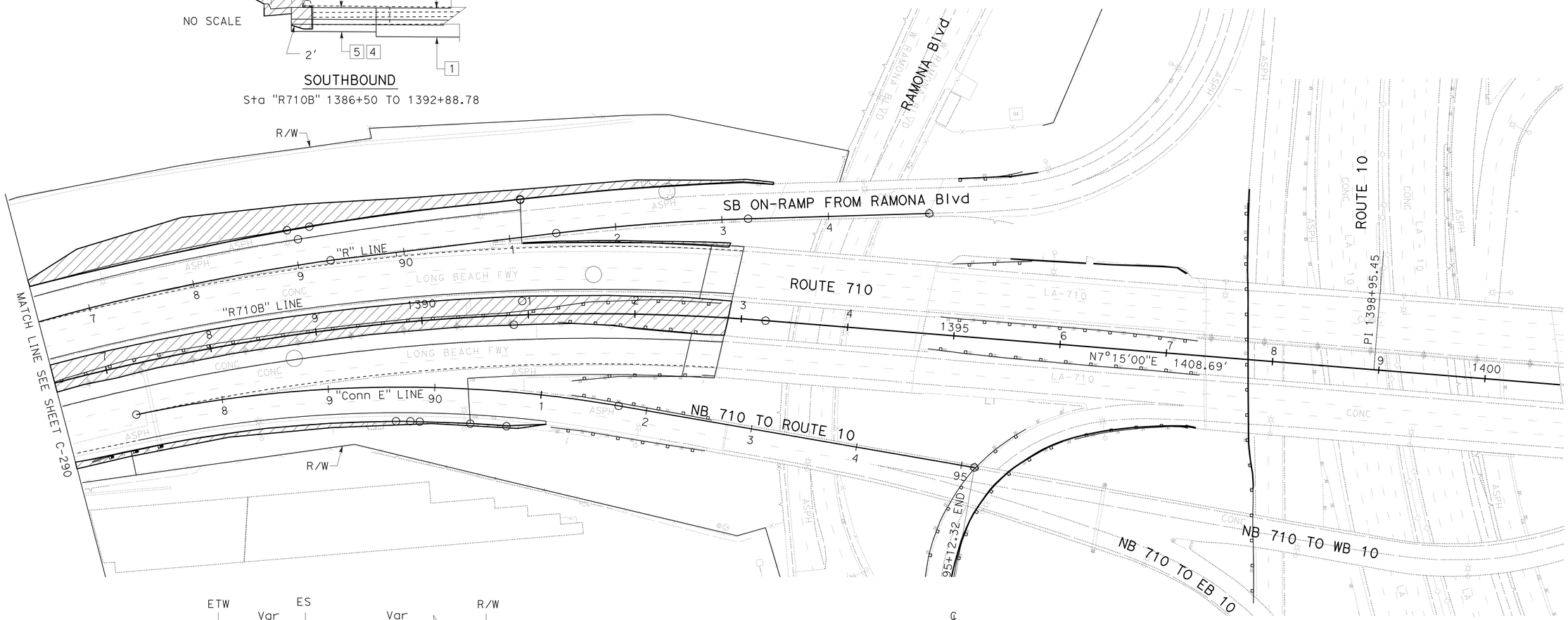


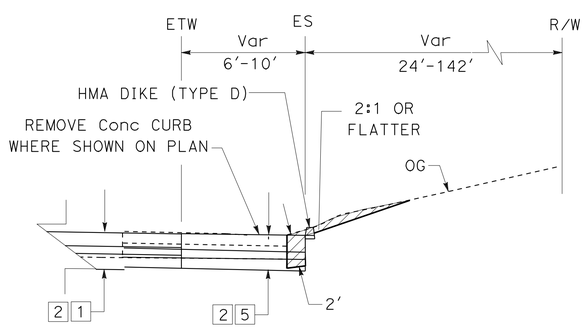


NORTHBOUND

Sta "R710B" 1386+50 TO 1391+07.58

NO SCALE

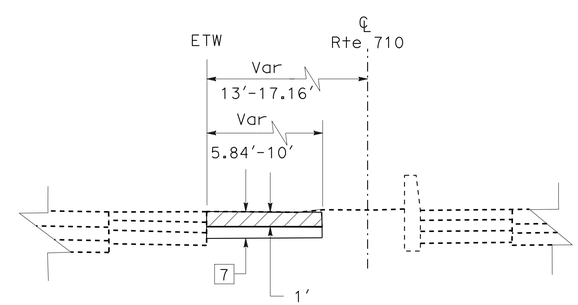


Sta "R710B" 1386+50 TO 1392+82

NO SCALE

FOR COMPLETE RIGHT OF WAY AND ACCURATE ACCESS DATA, SEE RIGHT OF WAY RECORD MAPS AT DISTRICT OFFICE.

# CONSTRUCTION DETAILS

## (MATERIALS WITH AERIALLY DEPOSITED LEAD)

SCALE: 1" = 50'

C-291

STATE OF CALIFORNIA - DEPARTMENT OF TRANSPORTATION

Caltrans® DESIGN

FUNCTIONAL SUPERVISOR: ALINE ANTARAMIAN

CALCULATED-DESIGNED BY: MOE MIRZA

CHECKED BY: RENE YIN

REVISED BY

DATE REVISED

LAST REVISION 01-28-11

DATE PLOTTED => 28-JUN-2011

TIME PLOTTED => 20:25

| Dist | COUNTY | ROUTE | POST MILES TOTAL PROJECT | SHEET No. | TOTAL SHEETS |
|---|---|---|---|---|---|
| 07 | LA | 710 | 17.2/26.4 | 403 | 1507 |

REGISTERED CIVIL ENGINEER 2-3-11 DATE

6-27-11
PLANS APPROVAL DATE

REGISTERED PROFESSIONAL ENGINEER RENE YIN No. C49915 Exp. 9/30/12 CIVIL STATE OF CALIFORNIA

*THE STATE OF CALIFORNIA OR ITS OFFICERS OR AGENTS SHALL NOT BE RESPONSIBLE FOR THE ACCURACY OR COMPLETENESS OF SCANNED COPIES OF THIS PLAN SHEET.*

LEGEND:

- EXCAVATED (TYPE Y-1) AERIALLY DEPOSITED LEAD TO BE REUSED.
- CLEAN SOIL COVER

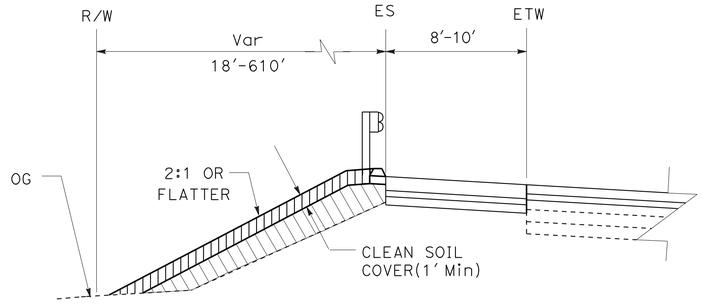


**SOUTHBOUND**

Sta "R710A" 1136+50 TO 1141+56.72
Sta "R710A" 1147+25 TO 1150+45
Sta "AT1" 41+56.72 TO 49+20
NO SCALE

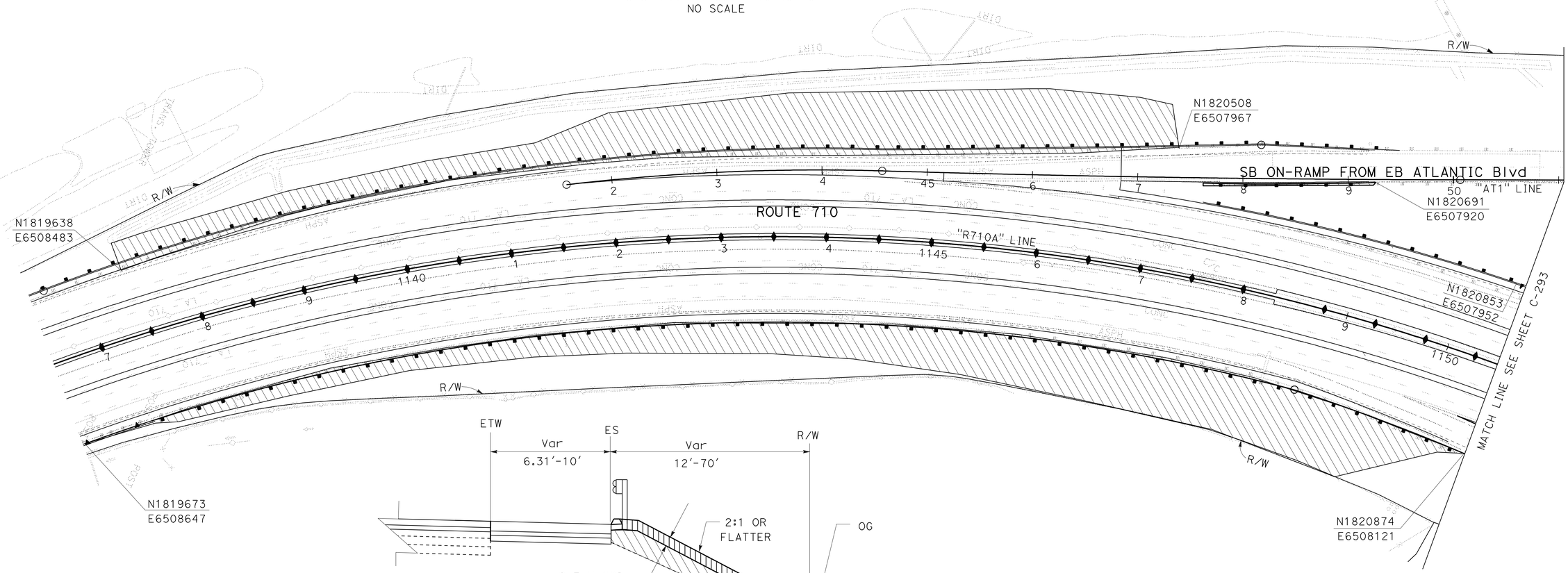


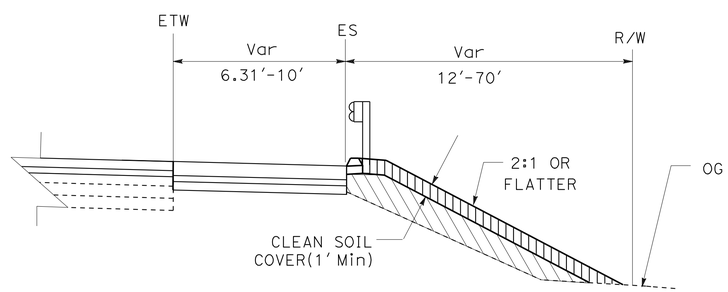


**NORTHBOUND**

Sta "R710A" 1137+25 TO 1149+75
NO SCALE

FOR COMPLETE RIGHT OF WAY AND ACCURATE ACCESS DATA, SEE RIGHT OF WAY RECORD MAPS AT DISTRICT OFFICE.

# CONSTRUCTION DETAILS
## (MATERIALS WITH AERIALLY DEPOSITED LEAD)

SCALE: 1" = 50'

**C-292**

STATE OF CALIFORNIA - DEPARTMENT OF TRANSPORTATION
Caltrans® DESIGN

FUNCTIONAL SUPERVISOR: ALINE ANTARAMIAN
CALCULATED-DESIGNED BY: MOE MIRZA
CHECKED BY: RENE YIN
REVISED BY
DATE REVISED

LAST REVISION 01-28-11
DATE PLOTTED => 28-JUN-2011
TIME PLOTTED => 20:25

| Dist | COUNTY | ROUTE | POST MILES TOTAL PROJECT | SHEET No. | TOTAL SHEETS |
|---|---|---|---|---|---|
| 07 | LA | 710 | 17.2/26.4 | 404 | 1507 |

REGISTERED CIVIL ENGINEER — DATE: 2-3-11

PLANS APPROVAL DATE: 6-27-11

REGISTERED PROFESSIONAL ENGINEER — RENE YIN — No. C49915 — Exp. 9/30/12 — CIVIL — STATE OF CALIFORNIA

*THE STATE OF CALIFORNIA OR ITS OFFICERS OR AGENTS SHALL NOT BE RESPONSIBLE FOR THE ACCURACY OR COMPLETENESS OF SCANNED COPIES OF THIS PLAN SHEET.*

LEGEND:

- EXCAVATED (TYPE Y-1) AERIALLY DEPOSITED LEAD TO BE REUSED.
- CLEAN SOIL COVER




SOUTHBOUND
Sta "AT3" 58+15 TO 61+80
SB 710/ATLANTIC Blvd ON-RAMP
NO SCALE

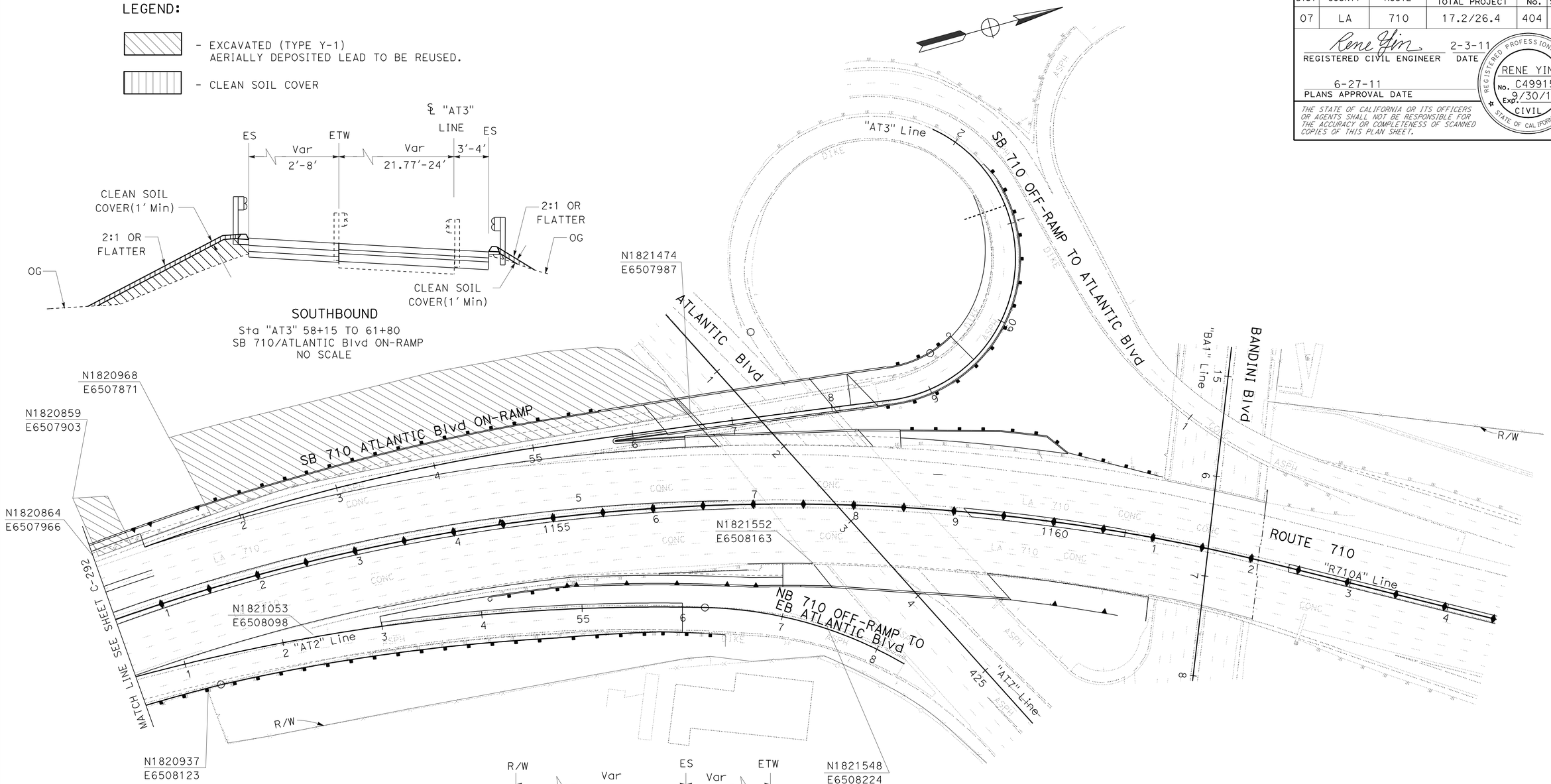


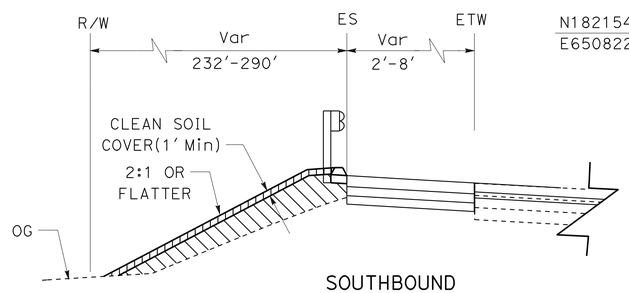


SOUTHBOUND
Sta "AT3" 51+66 TO 56+22
Sta "R710A" 1158+01 TO 1161+00

FOR COMPLETE RIGHT OF WAY AND ACCURATE ACCESS DATA, SEE RIGHT OF WAY RECORD MAPS AT DISTRICT OFFICE.

# CONSTRUCTION DETAILS
## (MATERIALS WITH AERIALLY DEPOSITED LEAD)

SCALE: 1" = 50'

C-293

STATE OF CALIFORNIA - DEPARTMENT OF TRANSPORTATION
DESIGN
FUNCTIONAL SUPERVISOR: ALINE ANTARAMIAN
CALCULATED-DESIGNED BY: MOE MIRZA
CHECKED BY: RENE YIN
REVISED BY
DATE REVISED

LAST REVISION 01-28-11
DATE PLOTTED => 28-JUN-2011
TIME PLOTTED => 20:25

| Dist | COUNTY | ROUTE | POST MILES TOTAL PROJECT | SHEET No. | TOTAL SHEETS |
|---|---|---|---|---|---|
| 07 | LA | 710 | 17.2/26.4 | 405 | 1507 |

REGISTERED CIVIL ENGINEER 2-3-11 DATE

6-27-11
PLANS APPROVAL DATE

REGISTERED PROFESSIONAL ENGINEER RENE YIN No. C49915 Exp. 9/30/12 CIVIL STATE OF CALIFORNIA

*THE STATE OF CALIFORNIA OR ITS OFFICERS OR AGENTS SHALL NOT BE RESPONSIBLE FOR THE ACCURACY OR COMPLETENESS OF SCANNED COPIES OF THIS PLAN SHEET.*

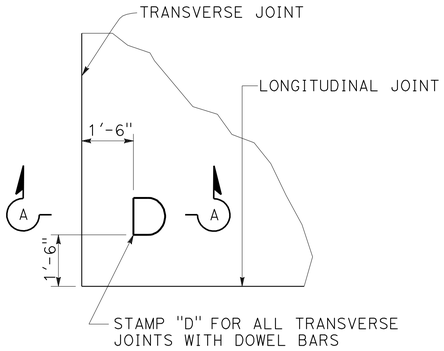


## DOWEL STAMP DETAIL

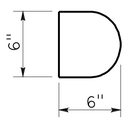


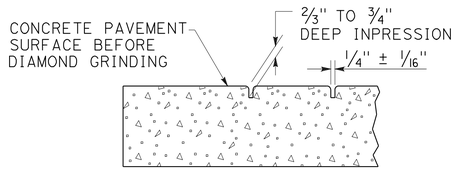


## SECTION A-A

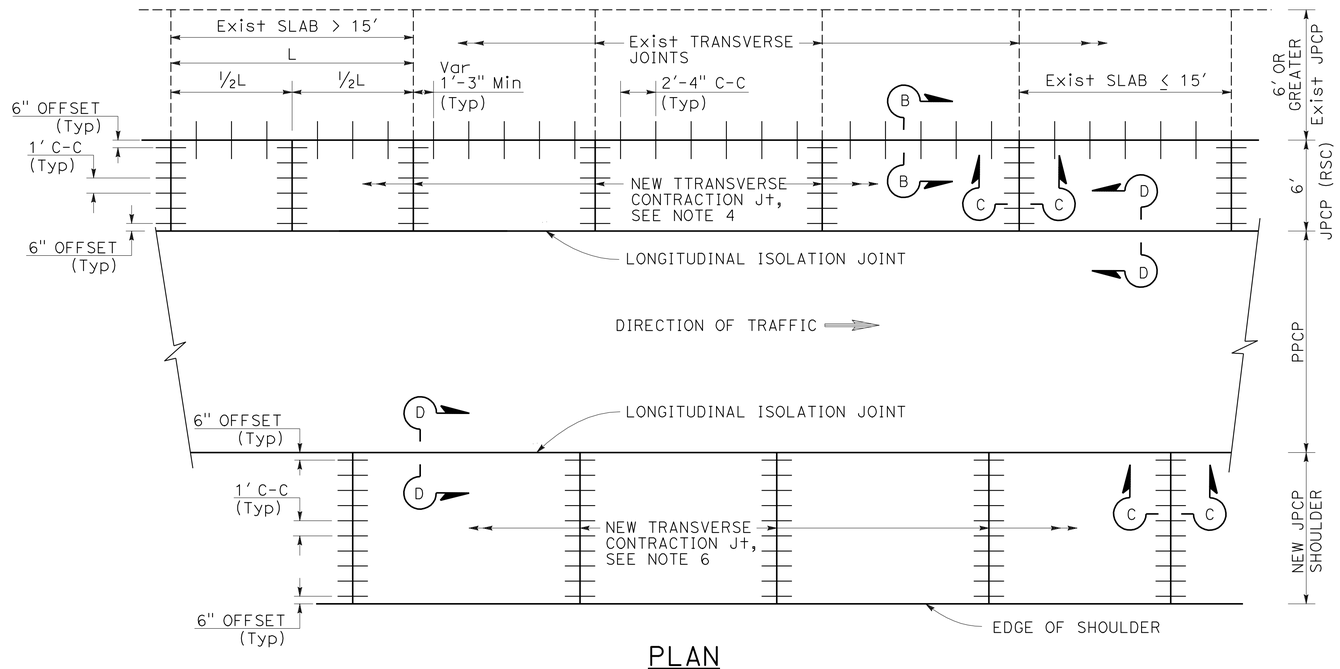


## PLAN

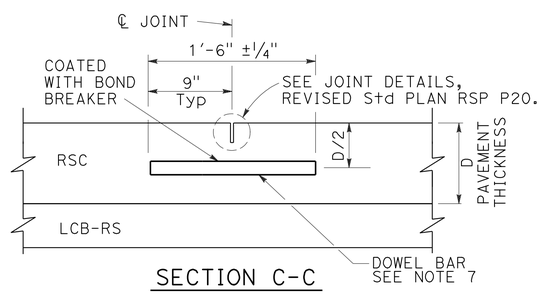


## SECTION C-C

## TRANSVERSE CONTRACTION JOINT

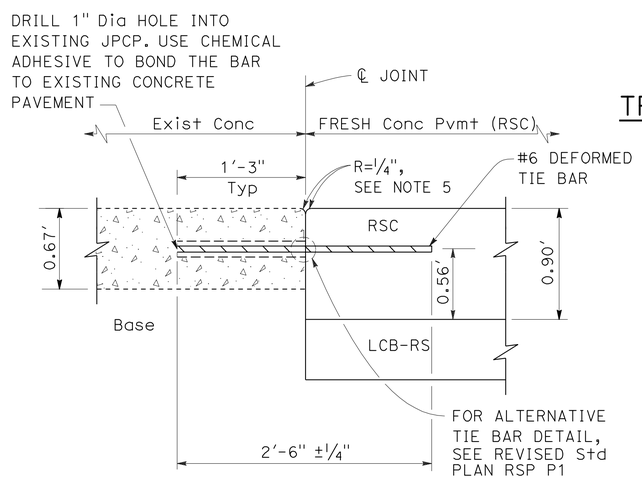


## SECTION B-B

## LONGITUDINAL CONSTRUCTION JOINT TIE BAR DETAILS

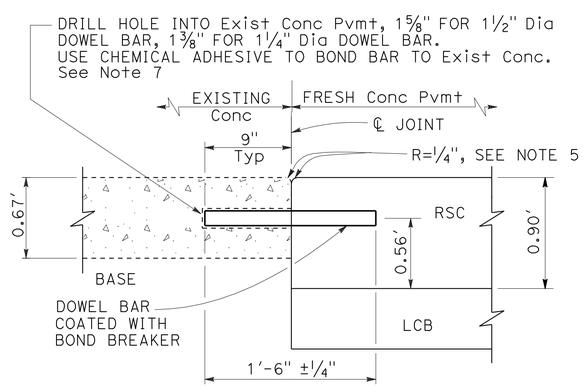


## TRANSVERSE CONSTRUCTION JOINT FOR EXISTING CONCRETE PAVEMENT

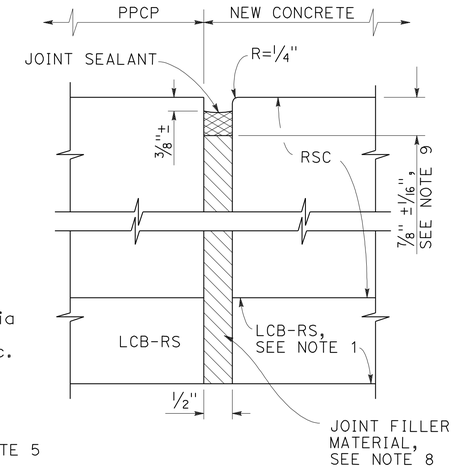


## SECTION D-D

## ISOLATION JOINT

## NOTES:

1. FOR WIDTHS NOT SHOWN, SEE PROJECT PLANS.
2. FOR DETAILS NOT SHOWN, SEE REVISED STANDARD PLAN RSP P10.
3. FOR TRANSVERSE JOINT AND DOWEL BAR DETAILS NOT SHOWN, SEE REVISED STANDARD PLAN RSP P10.
4. TRANSVERSE JOINT TO MATCH EXISTING JOINT.
5. IF FRESH CONCRETE PAVEMENT IS PLACED ADJACENT TO EXISTING CONCRETE PAVEMENT, THE TOP CORNER OF THE EXISTING CONCRETE PAVEMENT DOES NOT NEED TO BE ROUNDED TO THE 1/4" RADIUS, AS SHOWN.
6. TRANSVERSE JOINTS SHALL BE CONSTRUCTED AT RIGHT ANGLES TO THE LONGITUDINAL PAVEMENT JOINTS IN NEW CONCRETE PAVEMENT AND SPACED AT SUCCESSIVE REPEATED INTERVALS OF 12', 15', 13' AND 14'.
7. 1 1/2" Dia SMOOTH DOWEL BARS ARE TO BE USED WITH A PAVEMENT THICKNESS, D, EQUAL TO OR GREATER THAN 0.70 FEET. FOR PAVEMENT THICKNESS, D, LESS THAN 0.70 FEET, USE 1 1/4" Dia SMOOTH DOWEL BARS.
8. WHERE LEAN CONCRETE BASE IS NOT USED AS BASE MATERIAL, THE JOINT FILLER MATERIAL USED FOR THE LONGITUDINAL ISOLATION JOINT SHALL ONLY EXTEND TO THE BOTTOM OF THE NEW CONCRETE SLAB.
9. USE 5/8" ±1/16" DIMENSION FOR SILICONE SEALANT.

# CONSTRUCTION DETAILS

**CONCRETE PAVEMENT**

**(DOWELED TRANSVERSE JOINTS, LONGITUDINAL CONSTRUCTION JOINT TIE BAR DETAILS AND LONGITUDINAL ISOLATION JOINTS)**

NO SCALE

**C-294**

REVISED BY | DATE REVISED
I. L. REYNON JR. | RENE YIN
CALCULATED-DESIGNED BY | CHECKED BY
FUNCTIONAL SUPERVISOR | ALINE ANTARAMIAN
STATE OF CALIFORNIA - DEPARTMENT OF TRANSPORTATION
Caltrans
DESIGN

LAST REVISION 00-00-00 | DATE PLOTTED => 28-JUN-2011 | TIME PLOTTED => 20:25

| Dist | COUNTY | ROUTE | POST MILES TOTAL PROJECT | SHEET No. | TOTAL SHEETS |
|---|---|---|---|---|---|
| 07 | LA | 710 | 17.2/26.4 | 406 | 1507 |

REGISTERED CIVIL ENGINEER 2-3-11 DATE

6-27-11
PLANS APPROVAL DATE

REGISTERED PROFESSIONAL ENGINEER KIRSTEN R. STAHL No. C46857 Exp. 6-30-11 CIVIL STATE OF CALIFORNIA

*THE STATE OF CALIFORNIA OR ITS OFFICERS OR AGENTS SHALL NOT BE RESPONSIBLE FOR THE ACCURACY OR COMPLETENESS OF SCANNED COPIES OF THIS PLAN SHEET.*

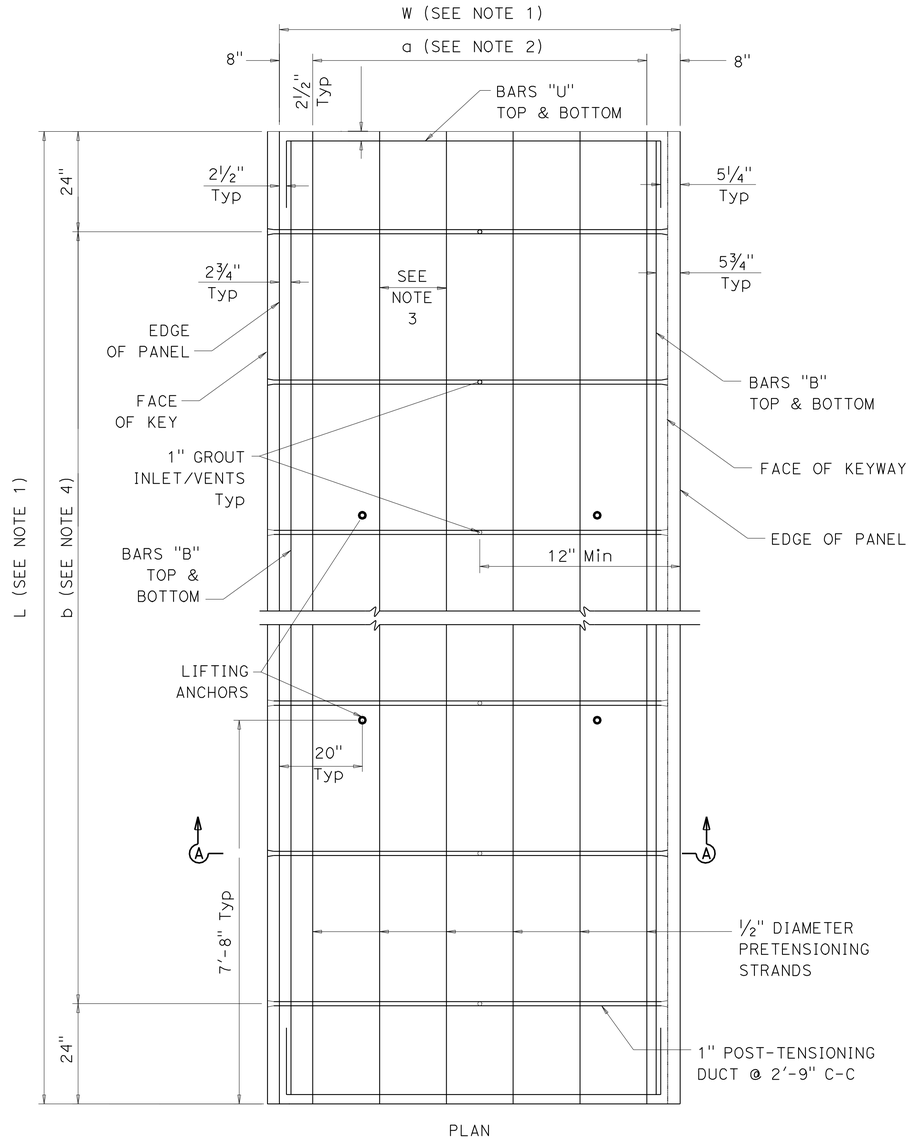


PLAN

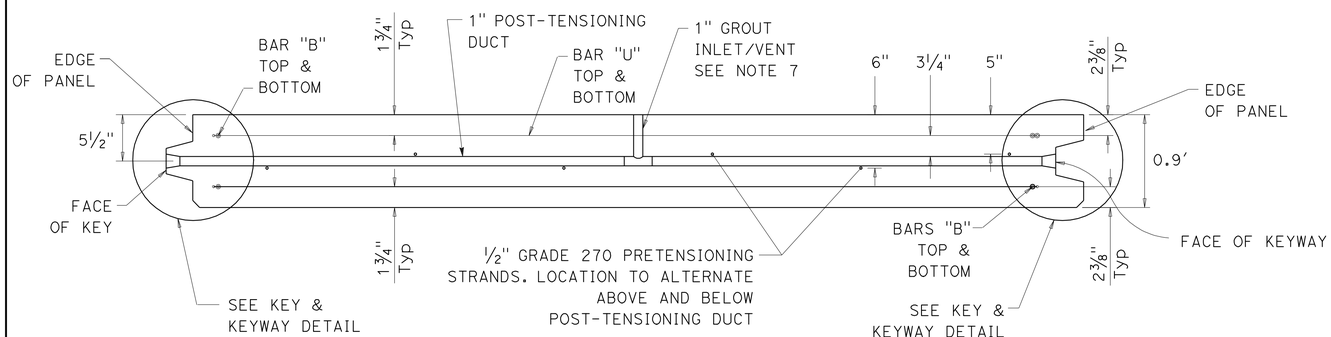


SECTION A-A

## BASE PANEL

NOTES:

1. SEE TABLES A AND B FOR WIDTH (W) OR LENGTH (L) FOR BASE PANELS.
2. FOR "a" DIMENSION, SEE TABLE A FOR BASE PANELS.
3. THE SPACING BETWEEN PRETENSIONING STRANDS IS 16" C-C.
4. FOR "b" DIMENSION, SEE TABLE B FOR BASE PANELS.
5. SEE MISCELLANEOUS PANEL DETAILS FOR KEY & KEYWAY DETAIL.
6. FOR BAR "U" LENGTH, SEE TABLE A FOR BASE PANELS.
7. SEE MISCELLANEOUS PANEL DETAILS FOR GROUT INLET/VENT.
8. IN THE PANEL TYPE TABLES SHOWN ON CONSTRUCTION DETAILS C-26 THROUGH C-245, THE PANELS WITH A RADIUS (TYPE "B" AND "C") WITH ARC DIMENSIONS "w1" AND "w2"ARE CONSIDERED AS TANGENTS.
9. ALL REINFORCEMENT DIMENSIONS ARE TO BE VERIFIED BY THE MANUFACTURER BEFORE PANEL FABRICATION.

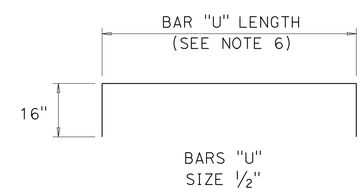


PLAN

# CONSTRUCTION DETAILS
# PRECAST PRESTRESSED CONCRETE PAVEMENT

NO SCALE

C-295

STATE OF CALIFORNIA - DEPARTMENT OF TRANSPORTATION
Caltrans DESIGN

FUNCTIONAL SUPERVISOR: KIRSTEN STAHL
CALCULATED-DESIGNED BY: WINNIE DEGUZMAN
CHECKED BY: KIRSTEN STAHL
REVISED BY
DATE REVISED

LAST REVISION 00-00-00
DATE PLOTTED => 29-JUN-2011
TIME PLOTTED => 07:56

| Dist | COUNTY | ROUTE | POST MILES TOTAL PROJECT | SHEET No. | TOTAL SHEETS |
|---|---|---|---|---|---|
| 07 | LA | 710 | 17.2/26.4 | 407 | 1507 |

REGISTERED CIVIL ENGINEER 2-3-11 DATE

6-27-11
PLANS APPROVAL DATE

REGISTERED PROFESSIONAL ENGINEER KIRSTEN R. STAHL No. C46857 Exp. 6-30-11 CIVIL STATE OF CALIFORNIA

*THE STATE OF CALIFORNIA OR ITS OFFICERS OR AGENTS SHALL NOT BE RESPONSIBLE FOR THE ACCURACY OR COMPLETENESS OF SCANNED COPIES OF THIS PLAN SHEET.*

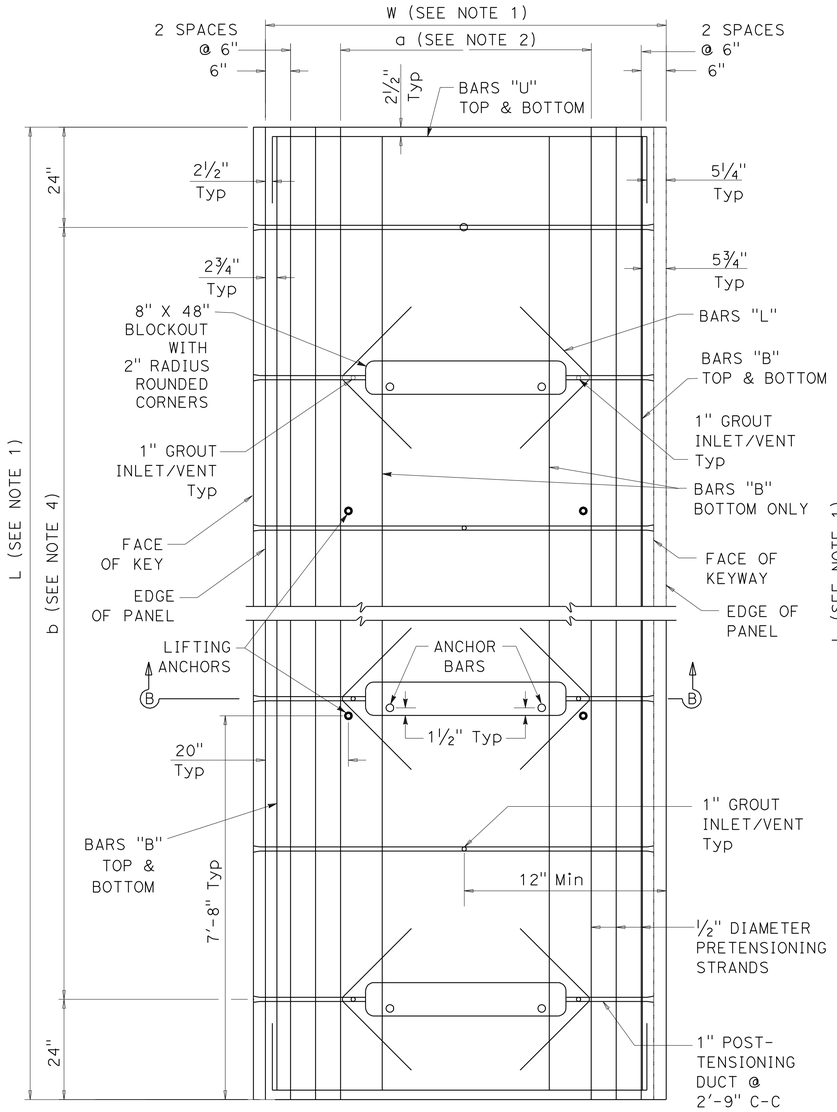


PLAN
TYPE A1

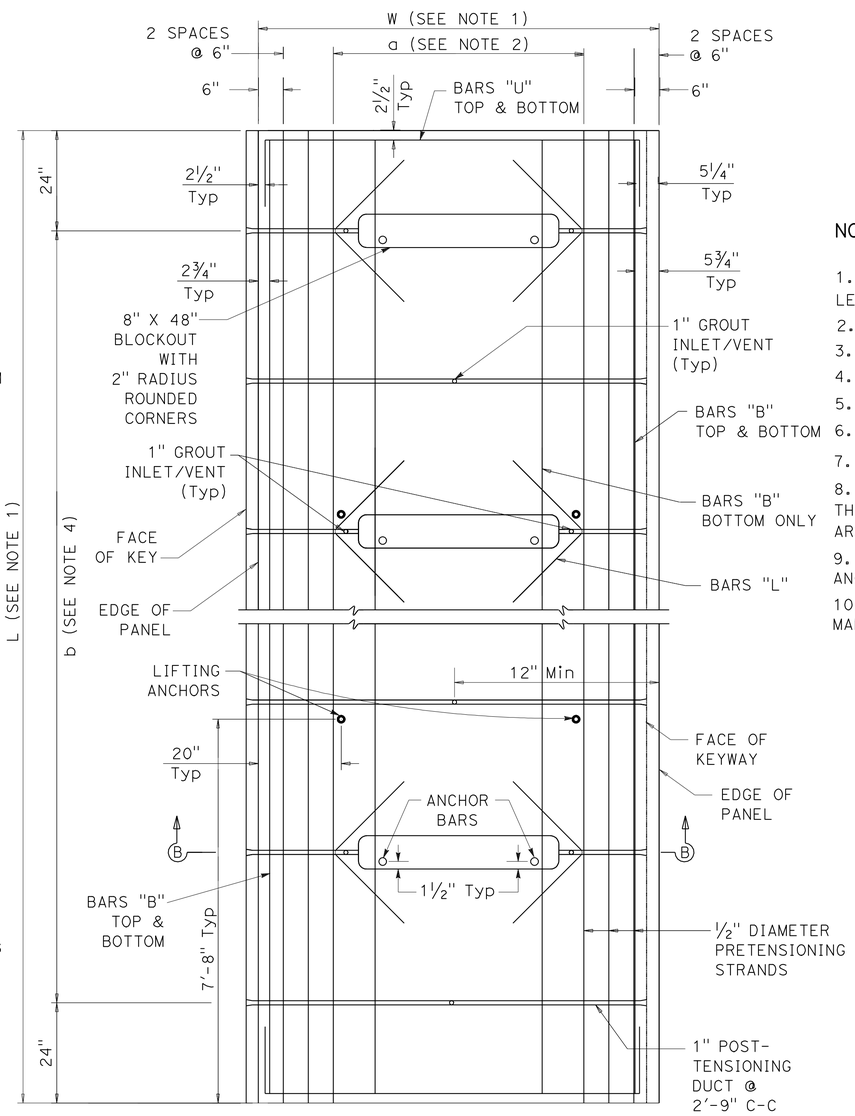


PLAN
TYPE A2

## NOTES:

1. SEE TABLES A AND B FOR WIDTH (W) OR LENGTH (L) FOR CENTRAL STRESSING PANELS.
2. FOR "a" DIMENSION, SEE TABLE A FOR CENTRAL STRESSING PANELS.
3. THE SPACING BETWEEN PRETENSIONING STRANDS IS 6" C-C.
4. FOR "b" DIMENSION, SEE TABLE B FOR CENTRAL STRESSING PANELS.
5. SEE MISCELLANEOUS PANEL DETAILS FOR KEY & KEYWAY DETAIL.
6. FOR BAR "U" LENGTH, SEE TABLE A FOR CENTRAL STRESSING PANELS.
7. SEE MISCELLANEOUS PANEL DETAILS FOR GROUT INLET/VENT.
8. IN THE PANEL TYPE TABLES SHOWN ON CONSTRUCTION DETAILS C-26 THROUGH C-245, THE PANELS WITH A RADIUS (TYPE "B" AND "C") WITH ARC DIMENSIONS "w1" AND "w2"ARE CONSIDERED AS TANGENTS.
9. SEE CENTRAL STRESSING BLOCKOUT DETAIL AND ANCHOR BAR DETAIL IN MISCELLANEOUS PANEL DETAILS.
10. ALL REINFORCEMENT DIMENSIONS ARE TO BE VERIFIED BY THE MANUFACTURER BEFORE PANEL FABRICATION.

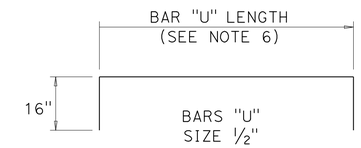


PLAN

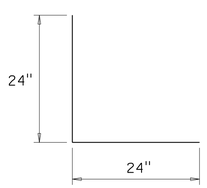


BARS "L"
PLAN

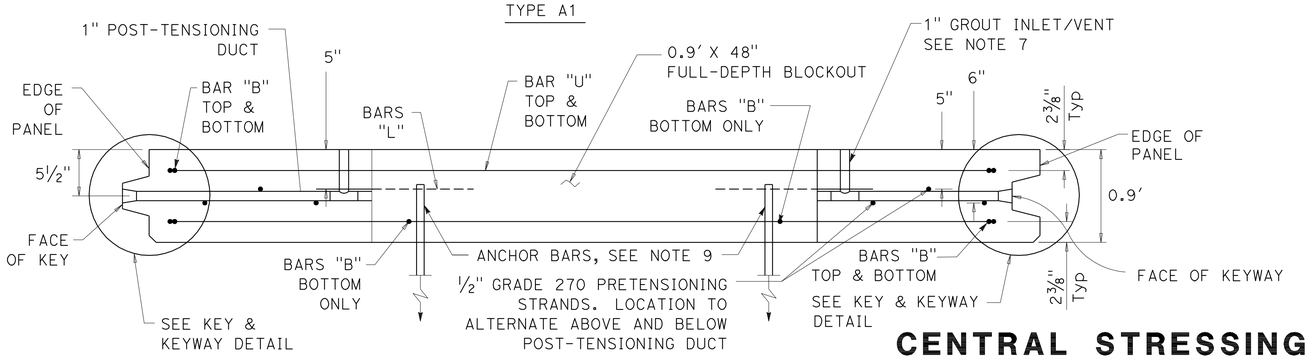


SECTION B-B

# CENTRAL STRESSING PANELS (TYPE A1 & A2)

# CONSTRUCTION DETAILS
# PRECAST PRESTRESSED CONCRETE PAVEMENT

NO SCALE

**C-296**

STATE OF CALIFORNIA - DEPARTMENT OF TRANSPORTATION
Caltrans® DESIGN

FUNCTIONAL SUPERVISOR: KRISTEN STAHL
CALCULATED-DESIGNED BY: WINNIE DEGUZMAN
CHECKED BY: KRISTEN STAHL
REVISED BY
DATE REVISED

LAST REVISION 00-00-00 | DATE PLOTTED => 28-JUN-2011 | TIME PLOTTED => 20:25

| Dist | COUNTY | ROUTE | POST MILES TOTAL PROJECT | SHEET No. | TOTAL SHEETS |
|---|---|---|---|---|---|
| 07 | LA | 710 | 17.2/26.4 | 408 | 1507 |

REGISTERED CIVIL ENGINEER 2-3-11 DATE

6-27-11
PLANS APPROVAL DATE

REGISTERED PROFESSIONAL ENGINEER KIRSTEN R. STAHL No. C46857 Exp. 6-30-11 CIVIL STATE OF CALIFORNIA

*THE STATE OF CALIFORNIA OR ITS OFFICERS OR AGENTS SHALL NOT BE RESPONSIBLE FOR THE ACCURACY OR COMPLETENESS OF SCANNED COPIES OF THIS PLAN SHEET.*

## NOTES:

1. SEE TABLES A AND B FOR WIDTH (W) OR LENGTH (L) FOR JOINT PANEL C1.
2. FOR "b" DIMENSIONS, SEE TABLE B FOR JOINT PANEL C1.
3. SEE MISCELLANEOUS PANEL DETAILS FOR KEY & KEYWAY DETAIL.
4. SEE MISCELLANEOUS PANEL DETAILS FOR GROUT INLET/VENT.
5. FOR BAR "U1" AND "U2" LENGTHS, SEE TABLE A FOR JOINT PANEL TYPE C1.
6. IN THE PANEL TYPE TABLES SHOWN ON CONSTRUCTION DETAILS C-26 THROUGH C-245, THE PANELS WITH A RADIUS (TYPE "B" AND "C") WITH ARC DIMENSIONS "w1" AND "w2"ARE CONSIDERED AS TANGENTS.
7. THE SECTION OF DOWEL EXTENDING INTO THE EXPANSION SLEEVE SHALL BE GREASED PRIOR TO BEING INSERTED INTO THE EXPANSION SLEEVE PRIOR TO CASTING.
8. ALL REINFORCEMENT DIMENSIONS ARE TO BE VERIFIED BY THE MANUFACTURER BEFORE PANEL FABRICATION.

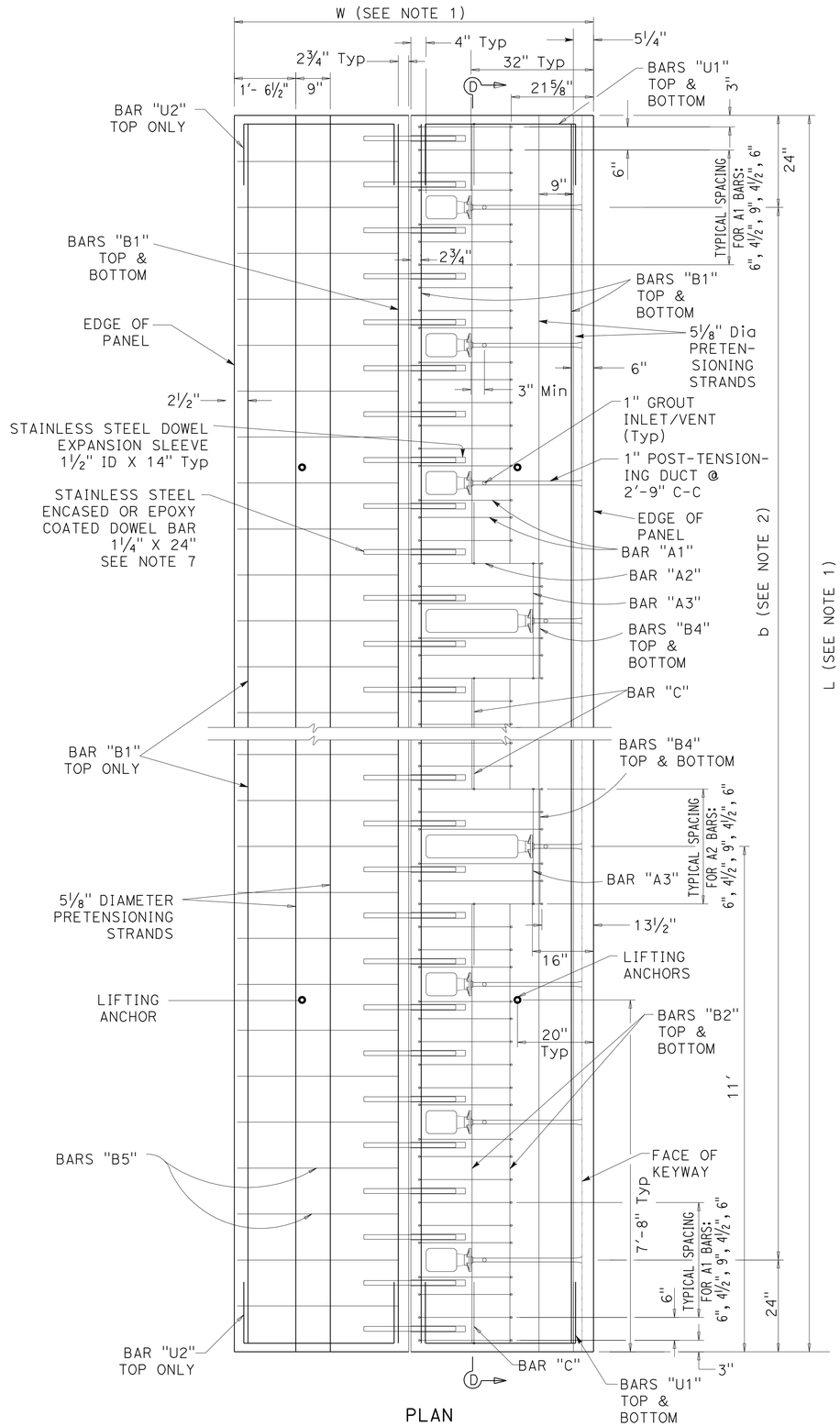


PLAN

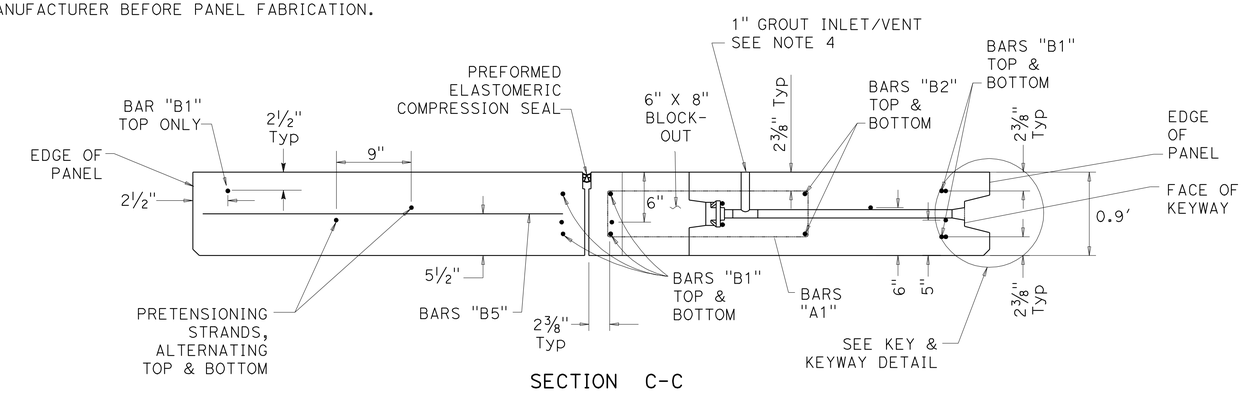


SECTION C-C

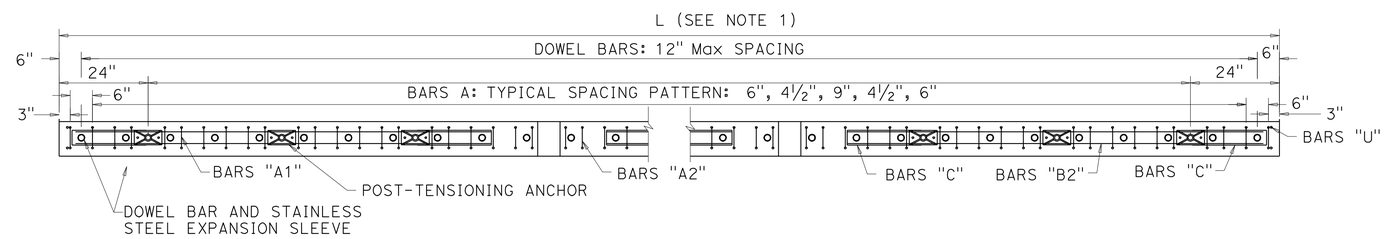


SECTION D-D

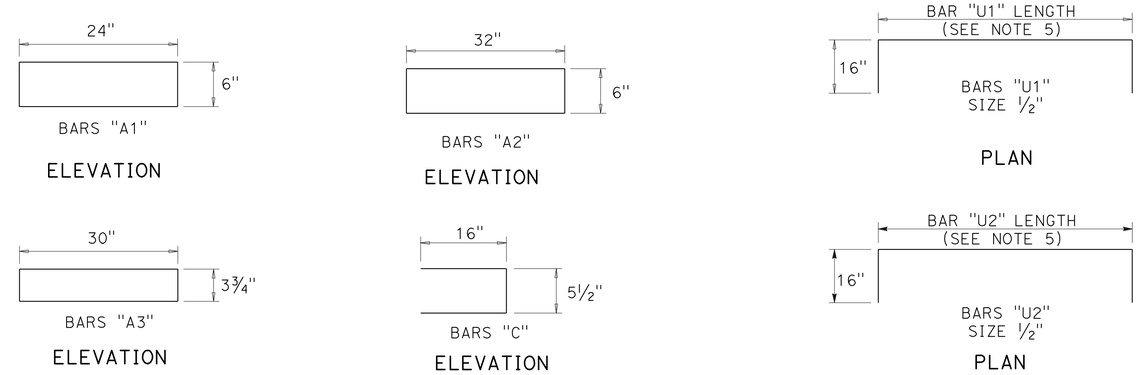


## JOINT PANEL TYPE C1

# CONSTRUCTION DETAILS
# PRECAST PRESTRESSED CONCRETE PAVEMENT

NO SCALE

**C-297**

STATE OF CALIFORNIA - DEPARTMENT OF TRANSPORTATION
Caltrans DESIGN

FUNCTIONAL SUPERVISOR: KRISTEN STAHL
CALCULATED-DESIGNED BY: WINNIE DEGUZMAN
CHECKED BY: KRISTEN STAHL
REVISED BY
DATE REVISED

LAST REVISION 00-00-00
DATE PLOTTED => 28-JUN-2011
TIME PLOTTED => 20:25

| Dist | COUNTY | ROUTE | POST MILES TOTAL PROJECT | SHEET No. | TOTAL SHEETS |
|---|---|---|---|---|---|
| 07 | LA | 710 | 17.2/26.4 | 409 | 1507 |

REGISTERED CIVIL ENGINEER 2-3-11 DATE

6-27-11
PLANS APPROVAL DATE

REGISTERED PROFESSIONAL ENGINEER KIRSTEN R. STAHL No. C46857 Exp. 6-30-11 CIVIL STATE OF CALIFORNIA

*THE STATE OF CALIFORNIA OR ITS OFFICERS OR AGENTS SHALL NOT BE RESPONSIBLE FOR THE ACCURACY OR COMPLETENESS OF SCANNED COPIES OF THIS PLAN SHEET.*

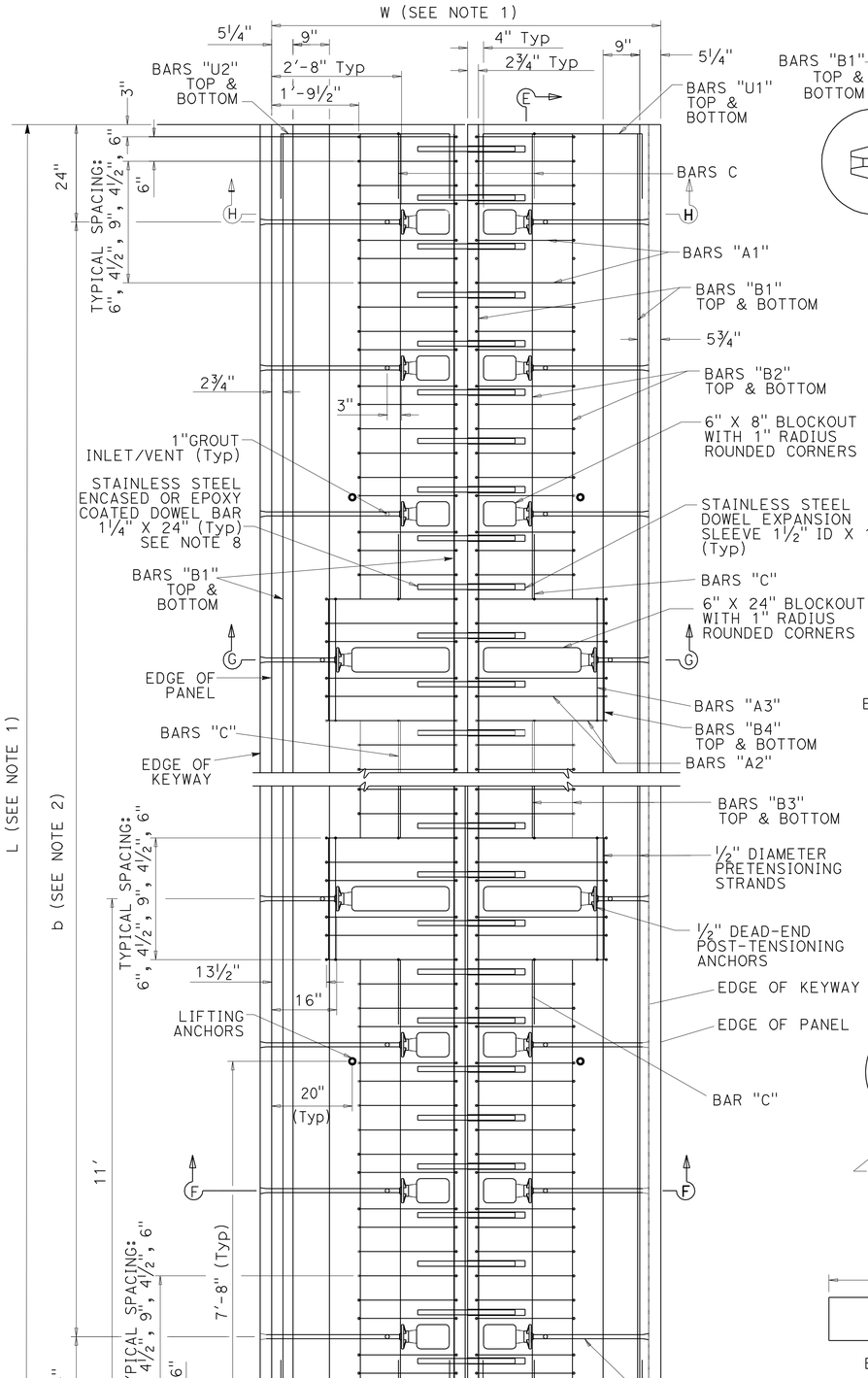


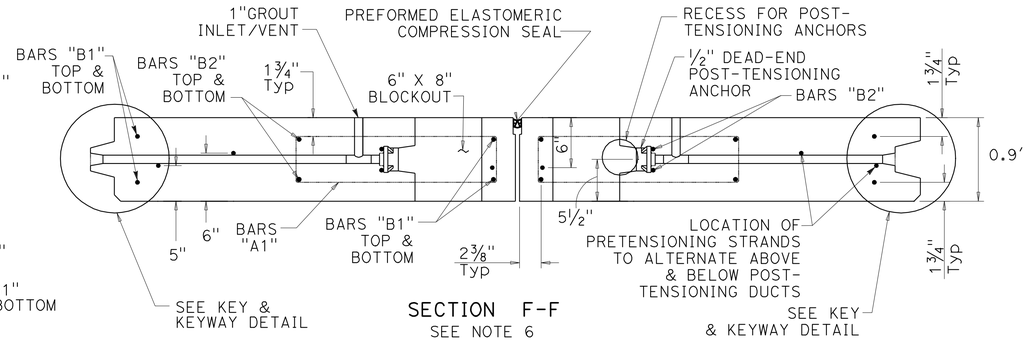


SECTION F-F
SEE NOTE 6

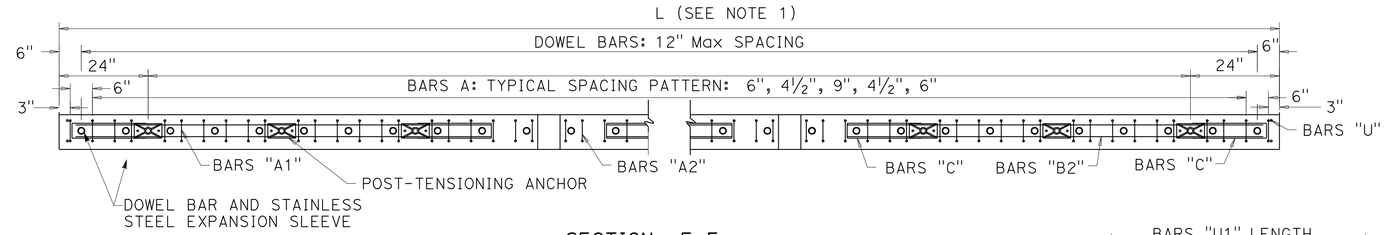


SECTION E-E

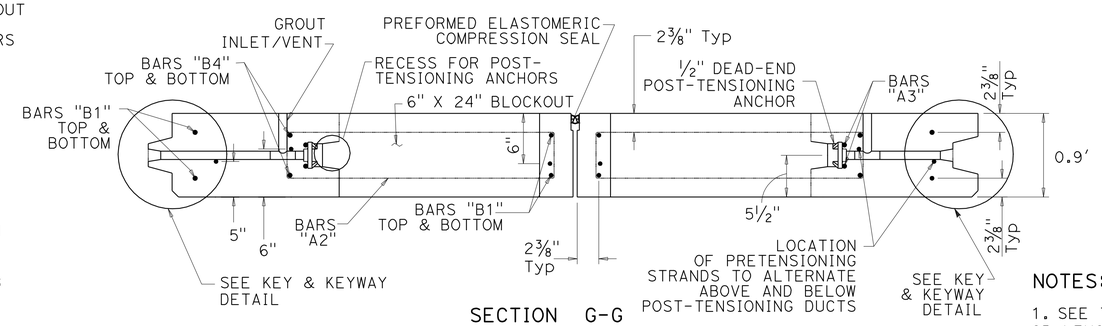


SECTION G-G
SEE NOTE 6

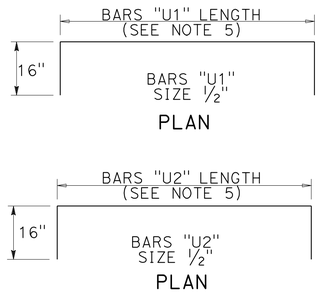


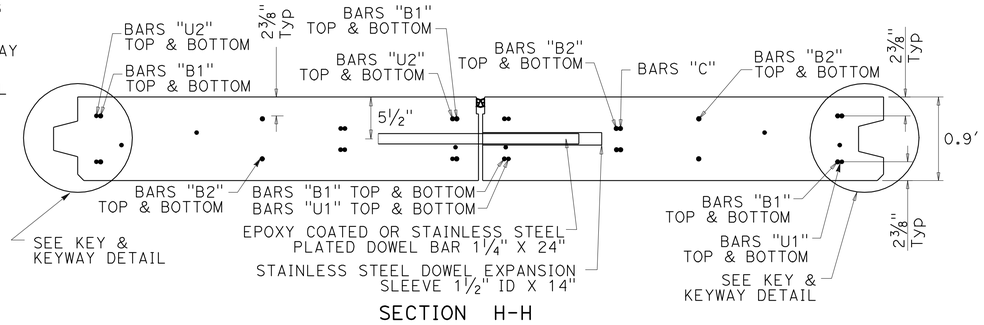


SECTION H-H

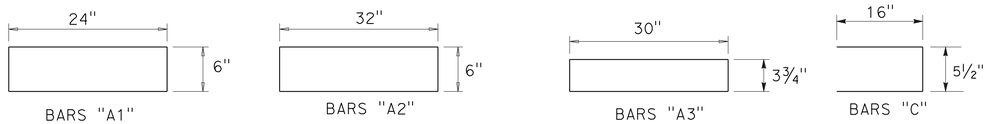


ELEVATION ELEVATION ELEVATION ELEVATION

## NOTES:

1. SEE TABLES A AND B FOR WIDTH (W) OR LENGTH (L) FOR JOINT PANEL TYPE C2 FOR EACH PANEL.
2. FOR "b" DIMENSIONS, SEE TABLE B FOR JOINT PANEL TYPE C2.
3. SEE MISCELLANEOUS PANEL DETAILS FOR KEY & KEYWAY DETAIL.
4. SEE MISCELLANEOUS PANEL DETAILS FOR GROUT INLET/VENT.
5. FOR BAR "U1" AND "U2" LENGTHS, SEE TABLE A FOR JOINT PANEL TYPE C2.
6. SEE MISCELLANEOUS PANEL DETAILS FOR EXPANSION JOINT/ANCHOR DETAIL.
7. IN THE PANEL TYPE TABLES SHOWN ON CONSTRUCTION DETAILS C-26 THROUGH C-245, THE PANELS WITH A RADIUS (TYPE "B" AND "C") WITH ARC DIMENSIONS "w1" AND "w2"ARE CONSIDERED AS TANGENTS.
8. THE SECTION OF DOWEL EXTENDING INTO THE EXPANSION SLEEVE SHALL BE GREASED PRIOR TO BEING INSERTED INTO THE EXPANSION SLEEVE PRIOR TO CASTING.
9. ALL REINFORCEMENT DIMENSIONS ARE TO BE VERIFIED BY THE MANUFACTURER BEFORE PANEL FABRICATION.

# JOINT PANEL TYPE C2

# CONSTRUCTION DETAILS
# PRECAST PRESTRESSED CONCRETE PAVEMENT

NO SCALE

C-298

STATE OF CALIFORNIA - DEPARTMENT OF TRANSPORTATION
Caltrans DESIGN

FUNCTIONAL SUPERVISOR: KRISTEN STAHL
CALCULATED-DESIGNED BY: WINNIE DEGUZMAN
CHECKED BY: KRISTEN STAHL
REVISED BY
DATE REVISED

LAST REVISION 00-00-00
DATE PLOTTED => 28-JUN-2011
TIME PLOTTED => 20:25

| Dist | COUNTY | ROUTE | POST MILES TOTAL PROJECT | SHEET No. | TOTAL SHEETS |
|---|---|---|---|---|---|
| 07 | LA | 710 | 17.2/26.4 | 410 | 1507 |

REGISTERED CIVIL ENGINEER 2-3-11 DATE

6-27-11
PLANS APPROVAL DATE

REGISTERED PROFESSIONAL ENGINEER KIRSTEN R. STAHL No. C46857 Exp. 6-30-11 CIVIL STATE OF CALIFORNIA

*THE STATE OF CALIFORNIA OR ITS OFFICERS OR AGENTS SHALL NOT BE RESPONSIBLE FOR THE ACCURACY OR COMPLETENESS OF SCANNED COPIES OF THIS PLAN SHEET.*

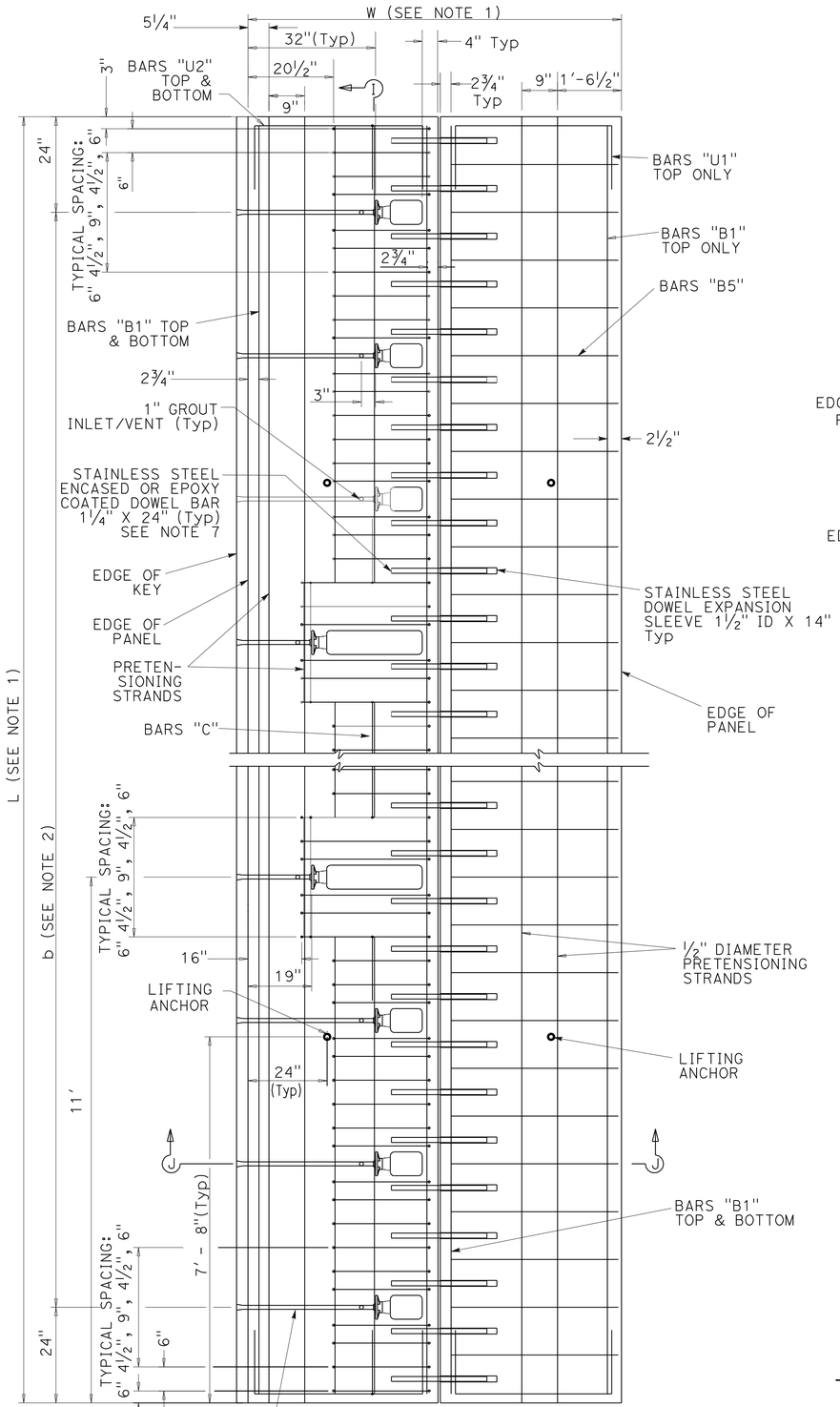


## NOTES:

1. SEE TABLES A AND B FOR WIDTH (W) OR LENGTH (L) FOR JOINT PANEL C3.
2. FOR "B" DIMENSIONS, SEE TABLE B FOR JOINT PANEL C3.
3. SEE MISCELLANEOUS PANEL DETAILS FOR KEY & KEYWAY DETAIL.
4. SEE MISCELLANEOUS PANEL DETAILS FOR GROUT INLET/VENT.
5. FOR BAR "U1" AND "U2" LENGTHS, SEE TABLE A FOR JOINT PANEL TYPE C3.
6. IN THE PANEL TYPE TABLES SHOWN ON CONSTRUCTION DETAILS C-26 THROUGH C-245, THE PANELS WITH A RADIUS (TYPE "B" AND "C") WITH ARC DIMENSIONS "w1" AND "w2"ARE CONSIDERED AS TANGENTS.
7. THE SECTION OF DOWEL EXTENDING INTO THE EXPANSION SLEEVE SHALL BE GREASED PRIOR TO BEING INSERTED INTO THE EXPANSION SLEEVE PRIOR TO CASTING.
8. ALL REINFORCEMENT DIMENSIONS ARE TO BE VERIFIED BY THE MANUFACTURER BEFORE PANEL FABRICATION.

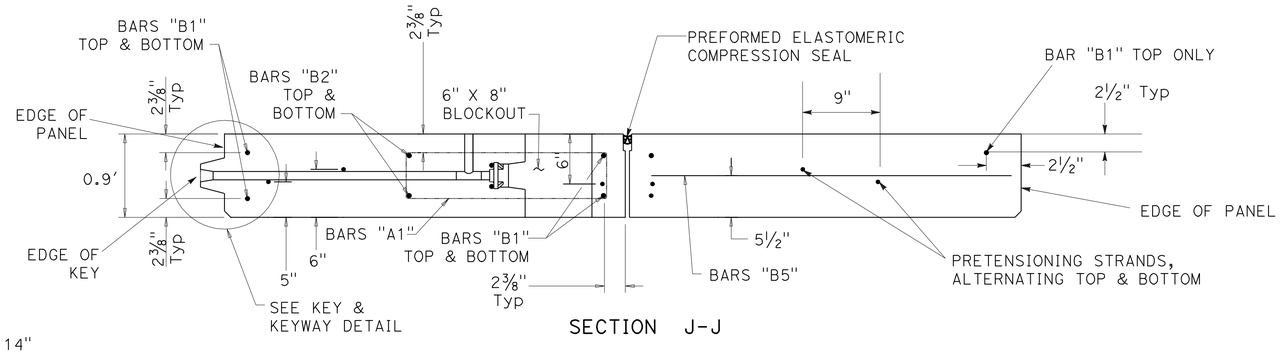


SECTION J-J

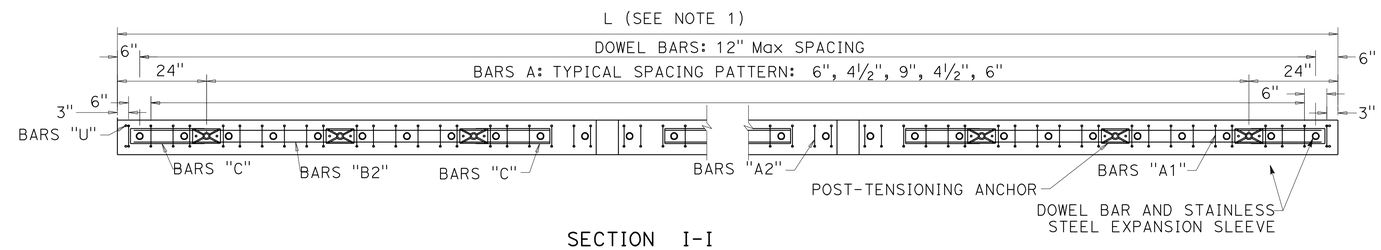


SECTION I-I

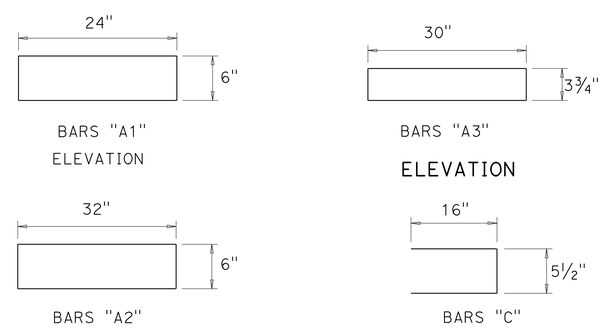


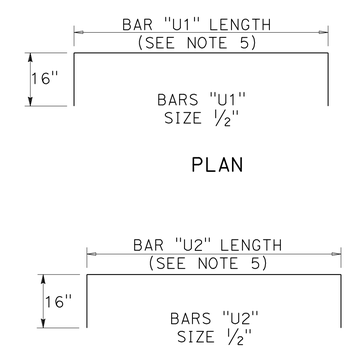


# JOINT PANEL TYPE C3

# CONSTRUCTION DETAILS
# PRECAST PRESTRESSED CONCRETE PAVEMENT

NO SCALE

C-299

STATE OF CALIFORNIA - DEPARTMENT OF TRANSPORTATION
Caltrans® DESIGN

FUNCTIONAL SUPERVISOR: KRISTEN STAHL
CALCULATED-DESIGNED BY: WINNIE DEGUZMAN
CHECKED BY: KRISTEN STAHL
REVISED BY
DATE REVISED

LAST REVISION 00-00-00
DATE PLOTTED => 28-JUN-2011
TIME PLOTTED => 20:26

| Dist | COUNTY | ROUTE | POST MILES TOTAL PROJECT | SHEET No. | TOTAL SHEETS |
|---|---|---|---|---|---|
| 07 | LA | 710 | 17.2/26.4 | 411 | 1507 |

REGISTERED CIVIL ENGINEER 2-3-11 DATE

6-27-11
PLANS APPROVAL DATE

REGISTERED PROFESSIONAL ENGINEER KIRSTEN R. STAHL No. C46857 Exp. 6-30-11 CIVIL STATE OF CALIFORNIA

*THE STATE OF CALIFORNIA OR ITS OFFICERS OR AGENTS SHALL NOT BE RESPONSIBLE FOR THE ACCURACY OR COMPLETENESS OF SCANNED COPIES OF THIS PLAN SHEET.*

NOTES:

1. SEE TABLES A AND B FOR WIDTH (W) OR LENGTH (L) FOR JOINT PANEL TYPE C2 FOR EACH PANEL.
2. FOR "b" DIMENSIONS, SEE TABLE B FOR JOINT PANEL TYPE C2.
3. SEE MISCELLANEOUS PANEL DETAILS FOR KEY & KEYWAY DETAIL.
4. SEE MISCELLANEOUS PANEL DETAILS FOR GROUT INLET/VENT.
5. FOR BAR "U1" AND "U2" LENGTHS, SEE TABLE A FOR JOINT PANEL TYPE C2.
6. SEE MISCELLANEOUS PANEL DETAILS FOR EXPANSION JOINT/ANCHOR DETAIL.
7. IN THE PANEL TYPE TABLES SHOWN ON CONSTRUCTION DETAILS C-26 THROUGH C-245, THE PANELS WITH A RADIUS (TYPE "B" AND "C") WITH ARC DIMENSIONS "W1" AND "W2" ARE CONSIDERED AS TANGENTS.
8. THE SECTION OF DOWEL EXTENDING INTO THE EXPANSION SLEEVE SHALL BE GREASED PRIOR TO BEING INSERTED INTO THE EXPANSION SLEEVE PRIOR TO CASTING.

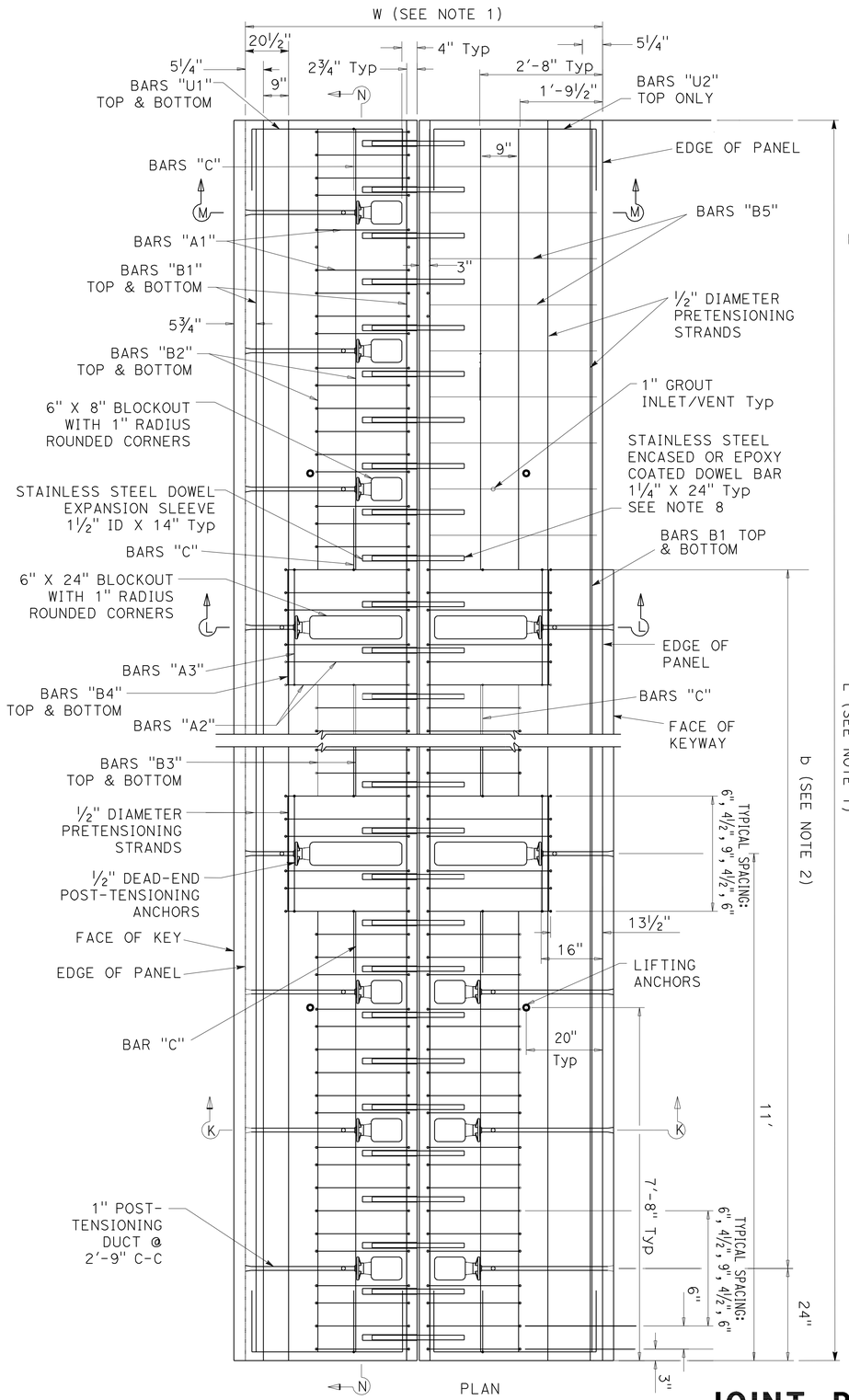


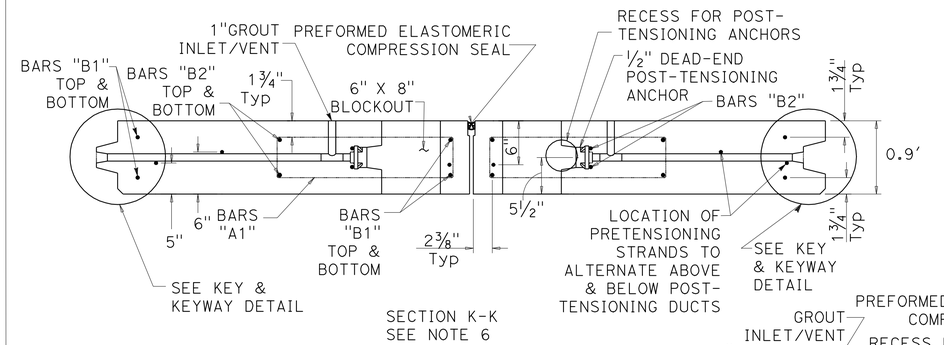


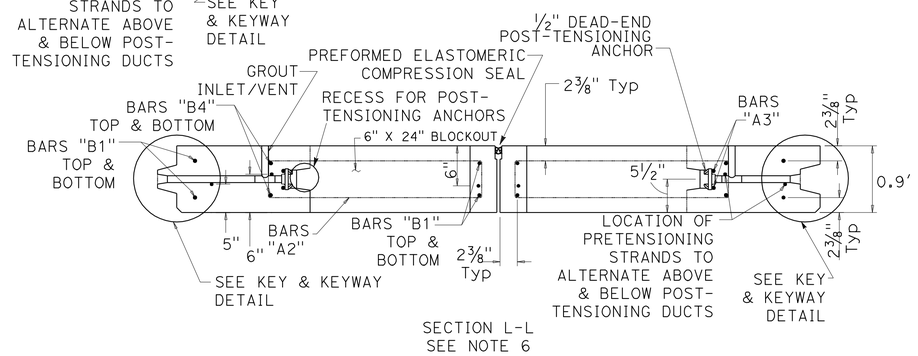


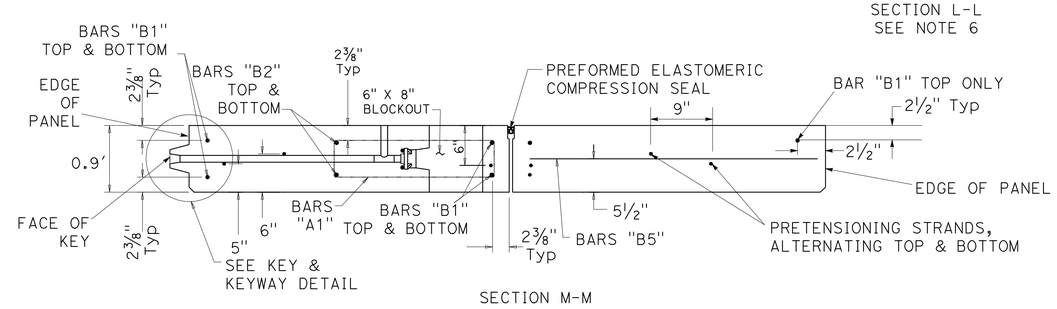


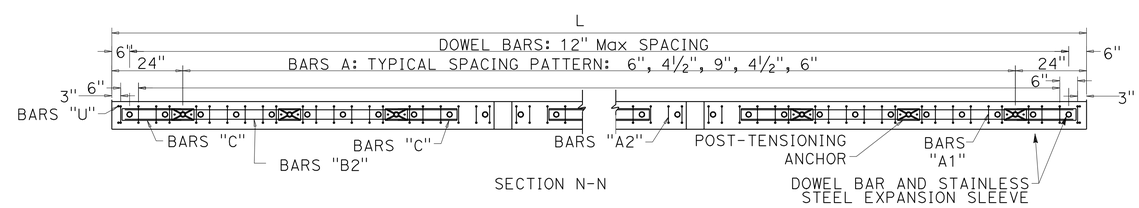


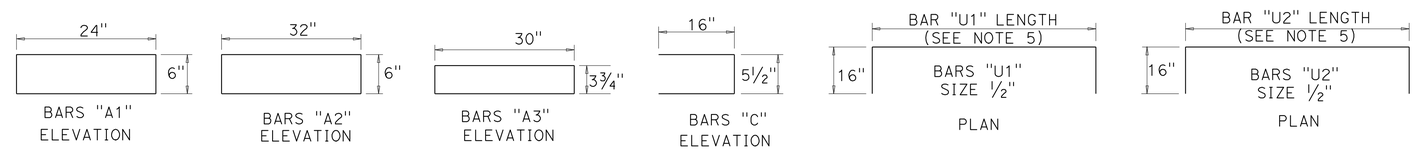


# CONSTRUCTION DETAILS
# PRECAST PRESTRESSED CONCRETE PAVEMENT

## JOINT PANEL (MODIFIED) TYPICAL

NO SCALE

C-300

STATE OF CALIFORNIA - DEPARTMENT OF TRANSPORTATION
Caltrans DESIGN

FUNCTIONAL SUPERVISOR: KIRSTEN STAHL
CALCULATED-DESIGNED BY: WINNIE DEGUZMAN
CHECKED BY: KIRSTEN STAHL
REVISED BY
DATE REVISED

LAST REVISION 00-00-00
DATE PLOTTED => 28-JUN-2011
TIME PLOTTED => 20:26

| Dist | COUNTY | ROUTE | POST MILES TOTAL PROJECT | SHEET No. | TOTAL SHEETS |
|---|---|---|---|---|---|
| 07 | LA | 710 | 17.2/26.4 | 412 | 1507 |

REGISTERED CIVIL ENGINEER 2-3-11 DATE

6-27-11
PLANS APPROVAL DATE

REGISTERED PROFESSIONAL ENGINEER KIRSTEN R. STAHL No. C46857 Exp. 6-30-11 CIVIL STATE OF CALIFORNIA

*THE STATE OF CALIFORNIA OR ITS OFFICERS OR AGENTS SHALL NOT BE RESPONSIBLE FOR THE ACCURACY OR COMPLETENESS OF SCANNED COPIES OF THIS PLAN SHEET.*

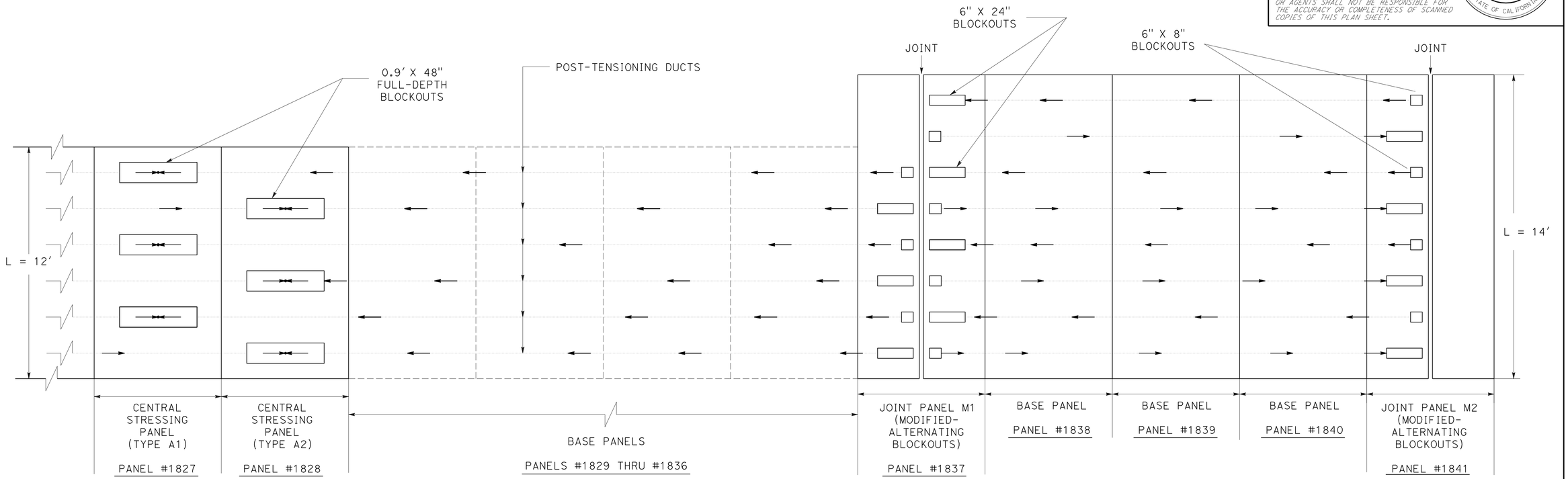


## LAYOUT OF PANELS #1837 THROUGH #1841

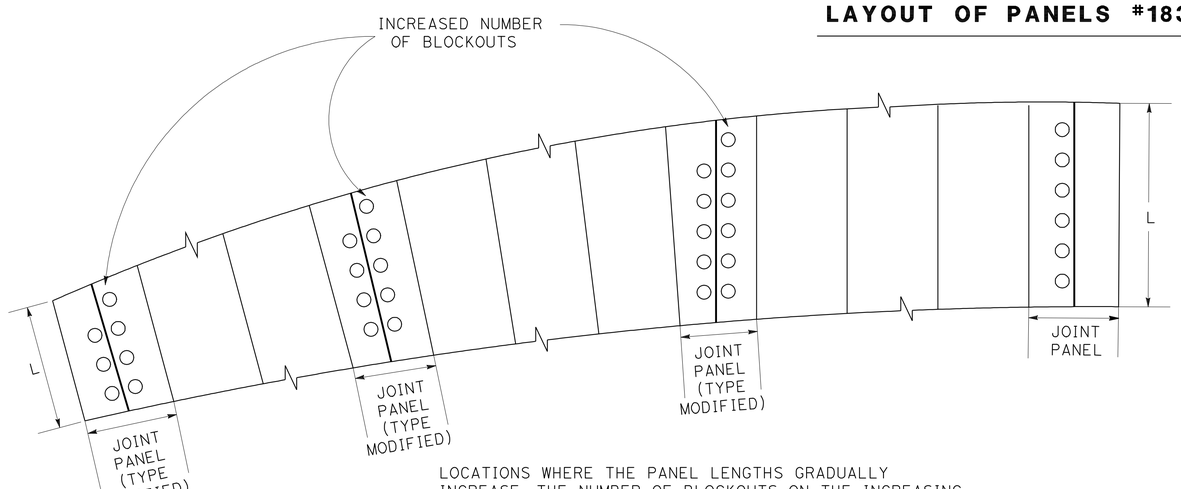


LOCATIONS WHERE THE PANEL LENGTHS GRADUALLY INCREASE, THE NUMBER OF BLOCKOUTS ON THE INCREASING SIDE OF THE JOINT PANEL SHALL HAVE THE SAME NUMBER OF BLOCKOUTS AS THE NEXT LONGER JOINT PANEL.

## NUMBER OF BLOCKOUTS

SYMBOLS:

← DIRECTION OF PULL FOR POST-TENSIONING

○ REPRESENTATION OF BLOCKOUTS (SMALL: 6"X8" OR LARGE: 6"X24")

# CONSTRUCTION DETAILS
# JOINT PANELS M1 & M2 LAYOUT
# PRECAST PRESTRESSED CONCRETE PAVEMENT

NO SCALE

**C-301**

STATE OF CALIFORNIA - DEPARTMENT OF TRANSPORTATION
Caltrans®
DESIGN

FUNCTIONAL SUPERVISOR: KIRSTEN STAHL
CALCULATED-DESIGNED BY: WINNIE DEGUZMAN
CHECKED BY: KIRSTEN STAHL
REVISED BY
DATE REVISED

LAST REVISION 00-00-00
DATE PLOTTED => 28-JUN-2011
TIME PLOTTED => 20:26

| Dist | COUNTY | ROUTE | POST MILES TOTAL PROJECT | SHEET No. | TOTAL SHEETS |
|---|---|---|---|---|---|
| 07 | LA | 710 | 17.2/26.4 | 413 | 1507 |

REGISTERED CIVIL ENGINEER 2-3-11 DATE

6-27-11
PLANS APPROVAL DATE

REGISTERED PROFESSIONAL ENGINEER KIRSTEN R. STAHL No. C46857 Exp. 6-30-11 CIVIL STATE OF CALIFORNIA

*THE STATE OF CALIFORNIA OR ITS OFFICERS OR AGENTS SHALL NOT BE RESPONSIBLE FOR THE ACCURACY OR COMPLETENESS OF SCANNED COPIES OF THIS PLAN SHEET.*

## NOTES:

1. SEE MISCELLANEOUS PANEL DETAILS FOR KEY & KEYWAY DETAIL.
2. SEE MISCELLANEOUS PANELS DETAILS FOR GROUT INLET/VENT.
3. FOR BAR "U1" AND "U2" LENGTHS, SEE TABLE A FOR JOINT PANEL TYPE C2.
4. SEE MISCELLANEOUS PANEL DETAILS FOR EXPANSION JOINT/ANCHOR DETAIL.
5. IN THE PANEL TYPE TABLES SHOWN ON CONSTRUCTION DETAILS C-26 THROUGH C-245, THE PANELS WITH A RADIUS (TYPE "B" AND "C") WITH ARC DIMENSIONS "w1" AND "w2" ARE CONSIDERED AS TANGENTS.
6. THE SECTION OF DOWEL EXTENDING INTO THE EXPANSION SLEEVE SHALL BE GREASED PRIOR TO BEING INSERTED INTO THE EXPANSION SLEEVE PRIOR TO CASTING.

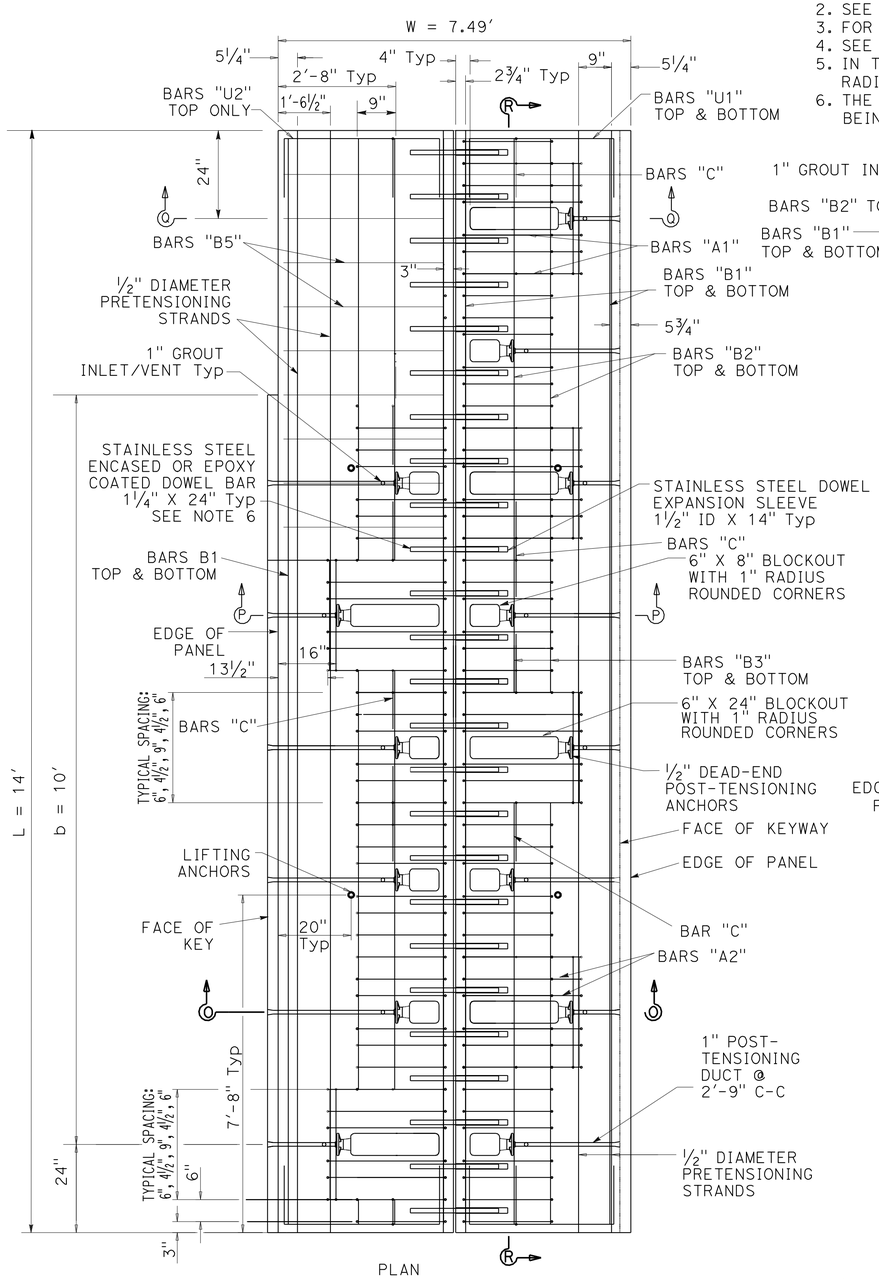


JOINT PANEL M1
FOR PANEL #1837

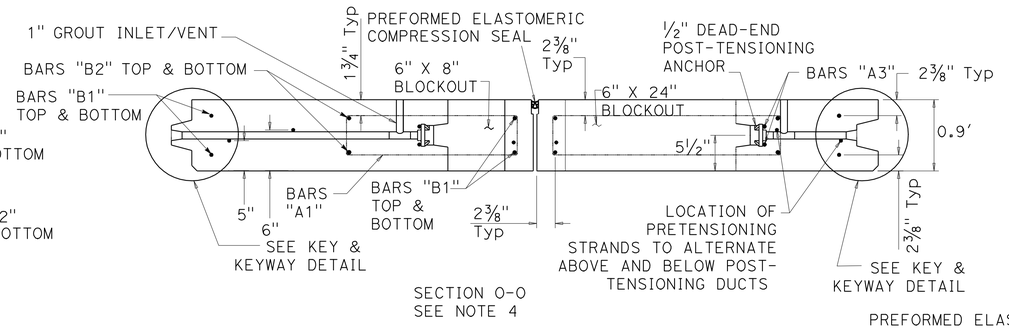


SECTION O-O
SEE NOTE 4

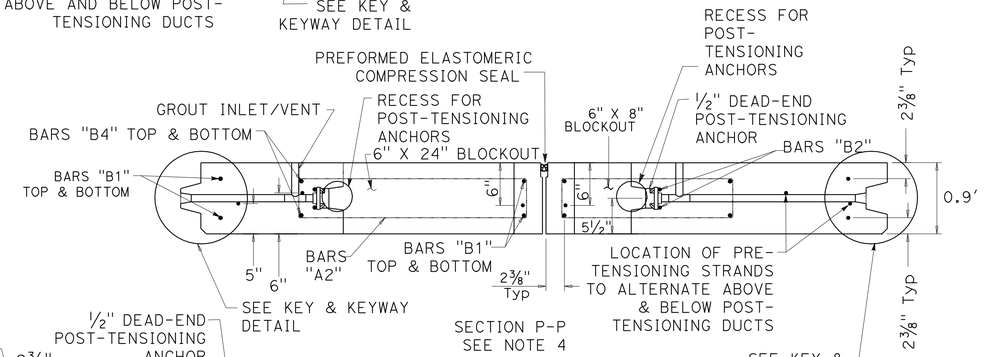


SECTION P-P
SEE NOTE 4

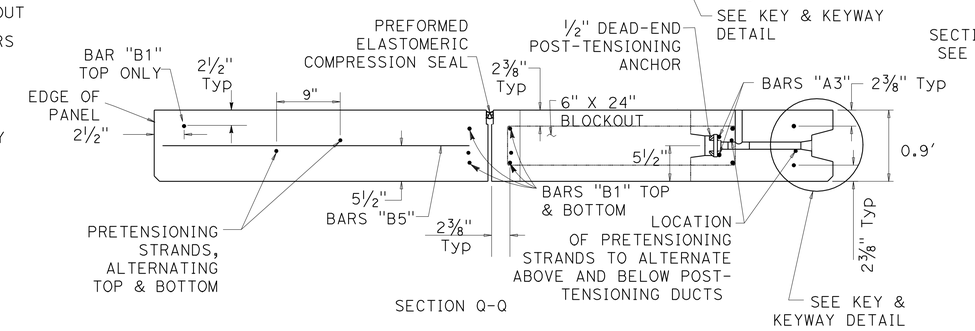


SECTION Q-Q

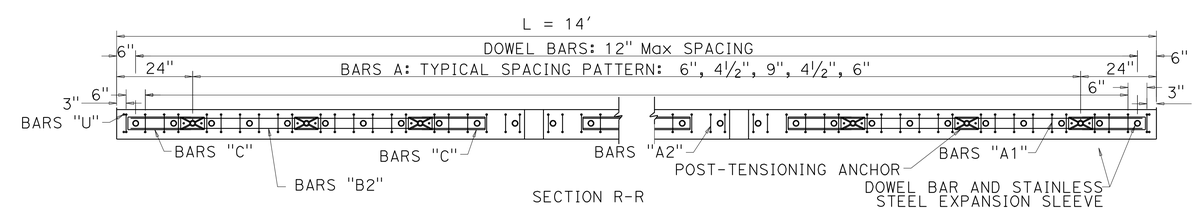


SECTION R-R

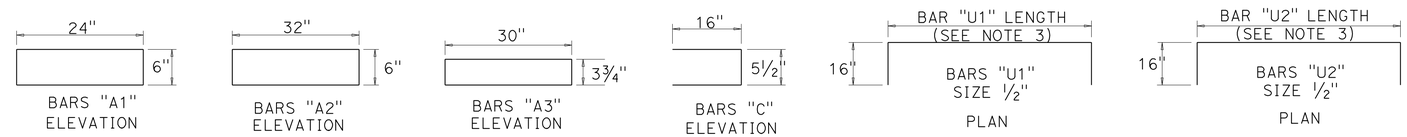


# JOINT PANELS M1 (MODIFIED-ALTERNATING BLOCKOUTS)

# CONSTRUCTION DETAILS
# PRECAST PRESTRESSED CONCRETE PAVEMENT

NO SCALE

**C-302**

STATE OF CALIFORNIA - DEPARTMENT OF TRANSPORTATION
Caltrans® DESIGN

FUNCTIONAL SUPERVISOR: KIRSTEN STAHL
CALCULATED-DESIGNED BY: WINNIE DEGUZMAN
CHECKED BY: KIRSTEN STAHL
REVISED BY / DATE REVISED

LAST REVISION 00-00-00
DATE PLOTTED => 28-JUN-2011
TIME PLOTTED => 20:26

| Dist | COUNTY | ROUTE | POST MILES TOTAL PROJECT | SHEET No. | TOTAL SHEETS |
|---|---|---|---|---|---|
| 07 | LA | 710 | 17.2/26.4 | 414 | 1507 |

REGISTERED CIVIL ENGINEER 2-3-11 DATE

6-27-11
PLANS APPROVAL DATE

REGISTERED PROFESSIONAL ENGINEER KIRSTEN R. STAHL No. C46857 Exp. 6-30-11 CIVIL STATE OF CALIFORNIA

*THE STATE OF CALIFORNIA OR ITS OFFICERS OR AGENTS SHALL NOT BE RESPONSIBLE FOR THE ACCURACY OR COMPLETENESS OF SCANNED COPIES OF THIS PLAN SHEET.*

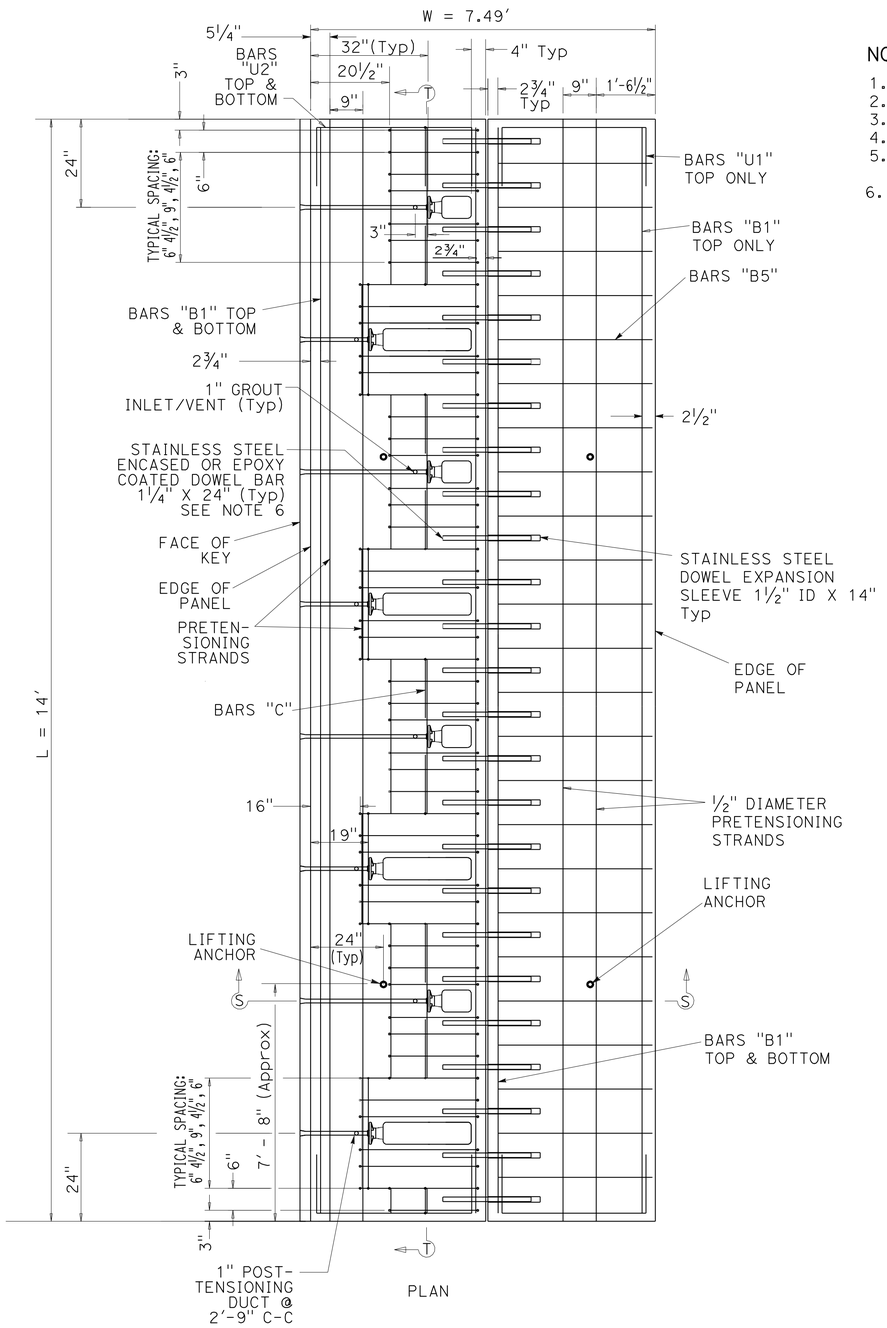


JOINT PANEL M2
FOR PANEL #1841

## NOTES:

1. SEE MISCELLEANEOUS PANEL DETAILS FOR KEY & KEYWAY DETAIL.
2. SEE MISCELLANEOUS PANEL DETAILS FOR GROUT INLET/VENT.
3. FOR BAR "U1" AND "U2" LENGTHS, SEE TABLE A FOR JOINT PANEL TYPE C2.
4. SEE MISCELLANEOUS PANEL DETAILS FOR EXPANSION JOINT/ANCHOR DETAIL.
5. IN THE PANEL TYPE TABLES SHOWN ON CONSTRUCTION DETAILS C-26 THROUGH C-245, THE PANELS WITH A RADIUS (TYPE "B" AND "C") WITH ARC DIMENSIONS "w1" AND "w2" ARE CONSIDERED AS TANGENTS.
6. THE SECTION OF DOWEL EXTENDING INTO THE EXPANSION SLEEVE SHALL BE GREASED PRIOR TO BEING INSERTED INTO THE EXPANSION SLEEVE PRIOR TO CASTING.

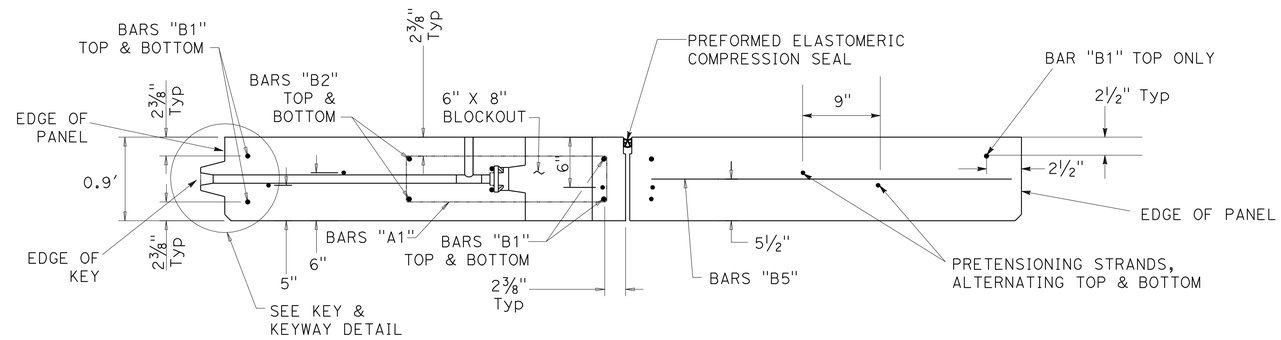


SECTION S-S

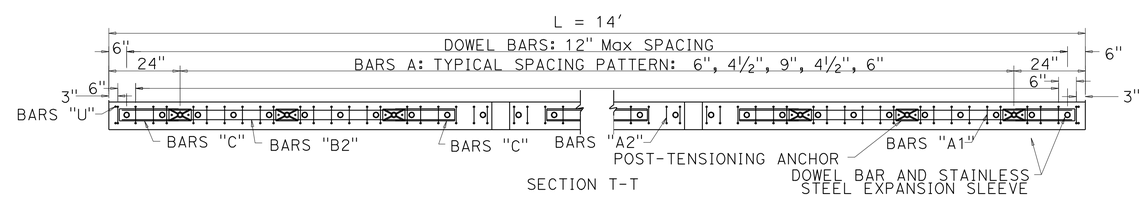


SECTION T-T

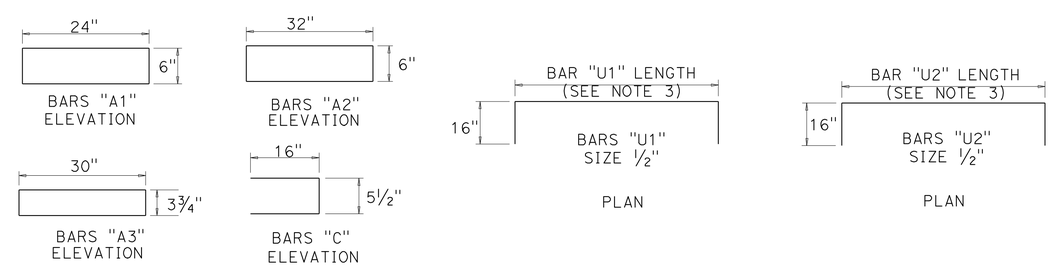


# JOINT PANEL M2 (MODIFIED-ALTERNATING BLOCKOUTS)

# CONSTRUCTION DETAILS
# PRECAST PRESTRESSED CONCRETE PAVEMENT

NO SCALE

C-303

STATE OF CALIFORNIA - DEPARTMENT OF TRANSPORTATION
Caltrans® DESIGN

FUNCTIONAL SUPERVISOR: KIRSTEN STAHL
CALCULATED-DESIGNED BY: WINNIE DEGUZMAN
CHECKED BY: KIRSTEN STAHL
REVISED BY
DATE REVISED

LAST REVISION 00-00-00
DATE PLOTTED => 28-JUN-2011
TIME PLOTTED => 20:26

| Dist | COUNTY | ROUTE | POST MILES TOTAL PROJECT | SHEET No. | TOTAL SHEETS |
|---|---|---|---|---|---|
| 07 | LA | 710 | 17.2/26.4 | 415 | 1507 |

REGISTERED CIVIL ENGINEER 2-3-11 DATE

6-27-11
PLANS APPROVAL DATE

REGISTERED PROFESSIONAL ENGINEER KIRSTEN R. STAHL No. C46857 Exp. 6-30-11 CIVIL STATE OF CALIFORNIA

*THE STATE OF CALIFORNIA OR ITS OFFICERS OR AGENTS SHALL NOT BE RESPONSIBLE FOR THE ACCURACY OR COMPLETENESS OF SCANNED COPIES OF THIS PLAN SHEET.*

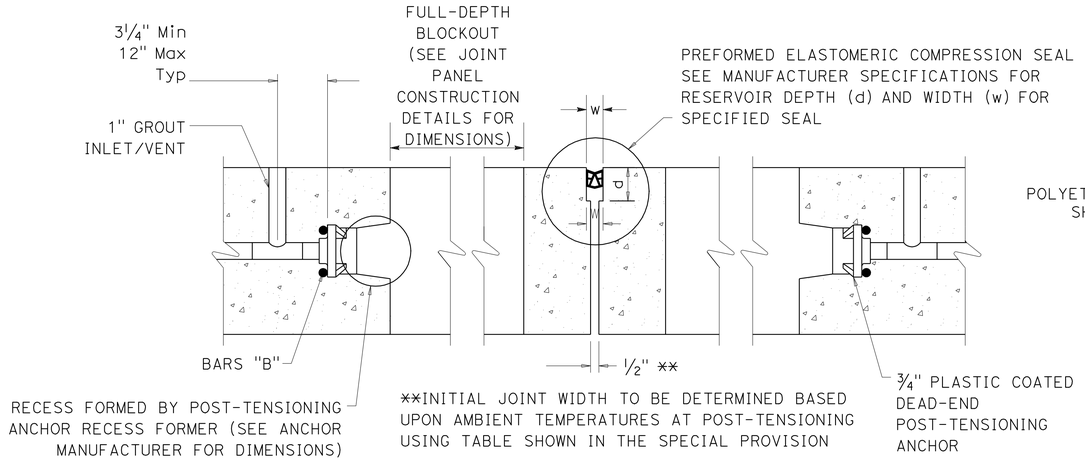


## EXPANSION JOINT/ANCHOR DETAIL

FOR TYPE C2 JOINT PANELS AND ALL MODIFIED JOINT PANELS

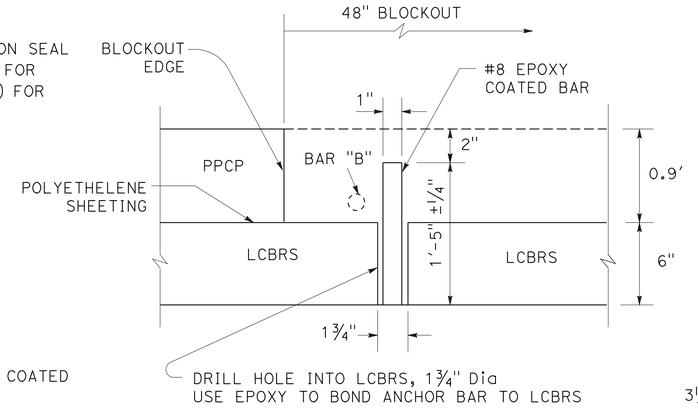


## ANCHOR BAR DETAIL AT FULL-DEPTH BLOCKOUTS FOR CENTRAL STRESSING PANELS

ABBREVIATIONS:

LCBRS = LEAN CONCRETE BASE RAPID SETTING
PPCP = PRECAST PRESTRESSED CONCRETE PAVEMENT
P-T = POST TENSIONING

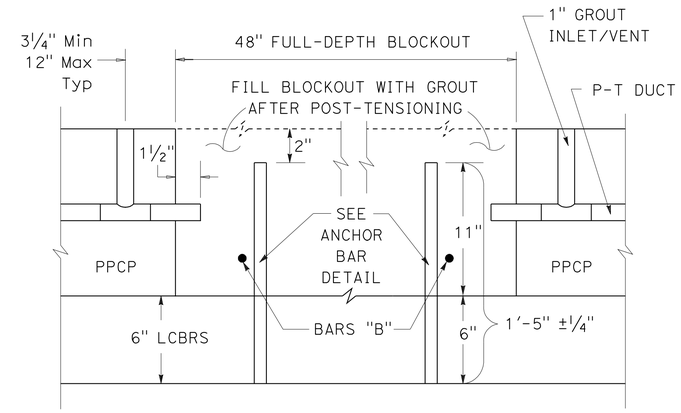


## CENTRAL STRESSING BLOCKOUT DETAIL

FOR TYPE A1 AND TYPE A2 CENTRAL STRESSING PANELS

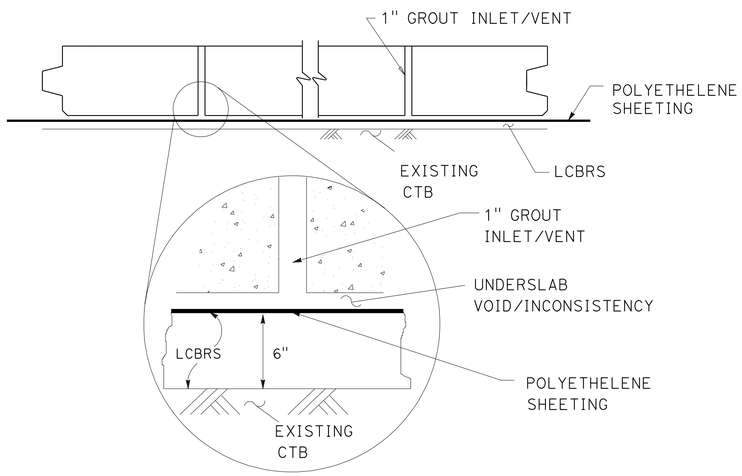


## UNDERSLAB GROUT INLET/VENT AND POLYETHELENE SHEETING

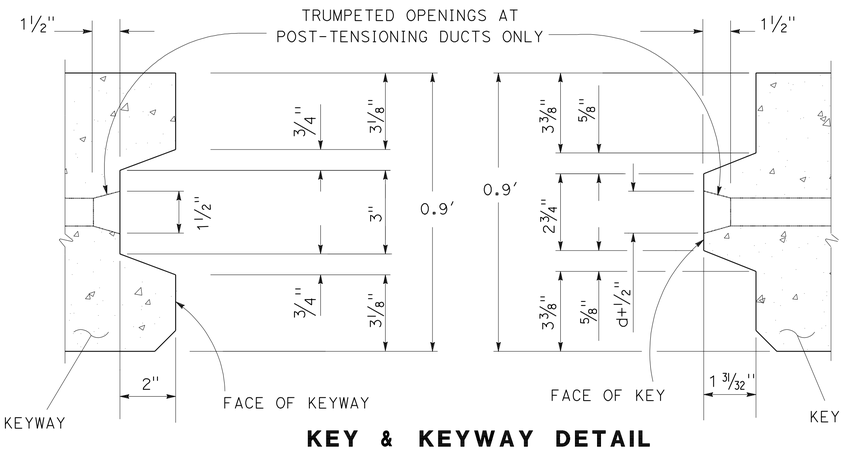


## KEY & KEYWAY DETAIL

d = DIAMETER OF THE POST-TENSIONING DUCT = 1"

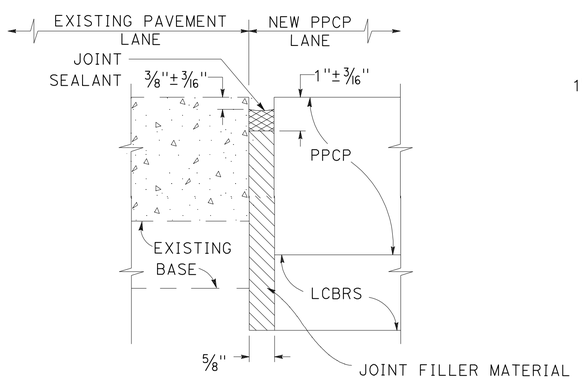


## ISOLATION JOINT DETAIL

FOR LONGITUDINAL JOINTS ADJACENT TO EXISTING PAVEMENT, JPCP, RSC, AND PPCP

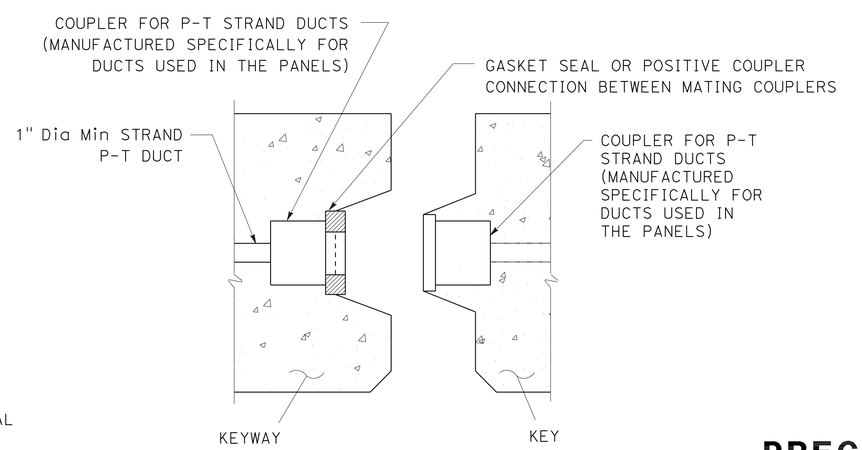


## COUPLER ALTERNATIVE FOR STRAND POST-TENSIONING DUCT SEAL

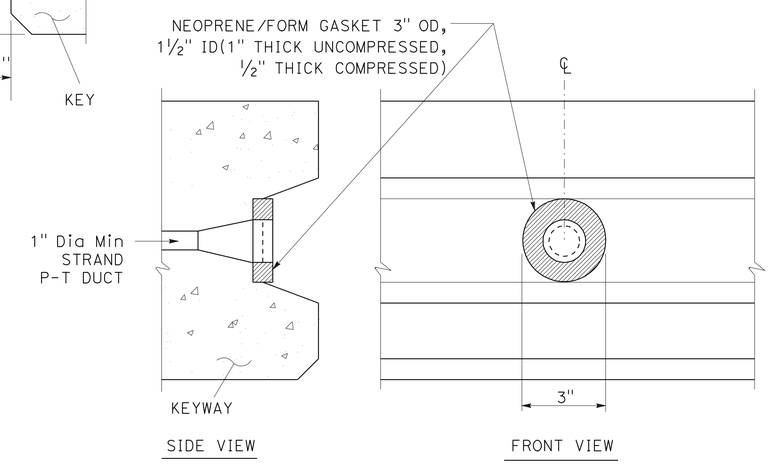


## STRAND POST-TENSIONING DUCT SEAL DETAIL

# CONSTRUCTION DETAILS
# MISCELLANEOUS PANEL DETAILS
# PRECAST PRESTRESSED CONCRETE PAVEMENT

NO SCALE

C-304

STATE OF CALIFORNIA - DEPARTMENT OF TRANSPORTATION
Caltrans® DESIGN
FUNCTIONAL SUPERVISOR KIRSTEN STAHL
CALCULATED-DESIGNED BY WINNIE DEGUZMAN CHECKED BY KIRSTEN STAHL
REVISED BY DATE REVISED

LAST REVISION 00-00-00
DATE PLOTTED => 28-JUN-2011
TIME PLOTTED => 20:26

| Dist | COUNTY | ROUTE | POST MILES TOTAL PROJECT | SHEET No. | TOTAL SHEETS |
|---|---|---|---|---|---|
| 07 | LA | 710 | 17.2/26.4 | 416 | 1507 |

REGISTERED CIVIL ENGINEER 2-3-11 DATE

6-27-11
PLANS APPROVAL DATE

REGISTERED PROFESSIONAL ENGINEER KIRSTEN R. STAHL No. C46857 Exp. 6-30-11 CIVIL STATE OF CALIFORNIA

*THE STATE OF CALIFORNIA OR ITS OFFICERS OR AGENTS SHALL NOT BE RESPONSIBLE FOR THE ACCURACY OR COMPLETENESS OF SCANNED COPIES OF THIS PLAN SHEET.*

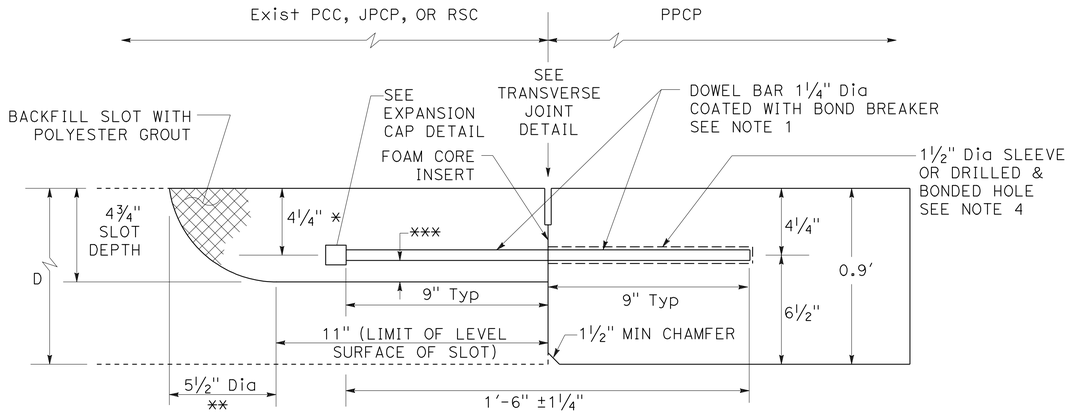


ELEVATION

D = EXISTING THICKNESS OF PCC, JPCP, OR RSC
* D/2 ±¼"
** D/2 +1½"
*** Min Clr ½" BETWEEN BAR AND BOTTOM OF SLOT

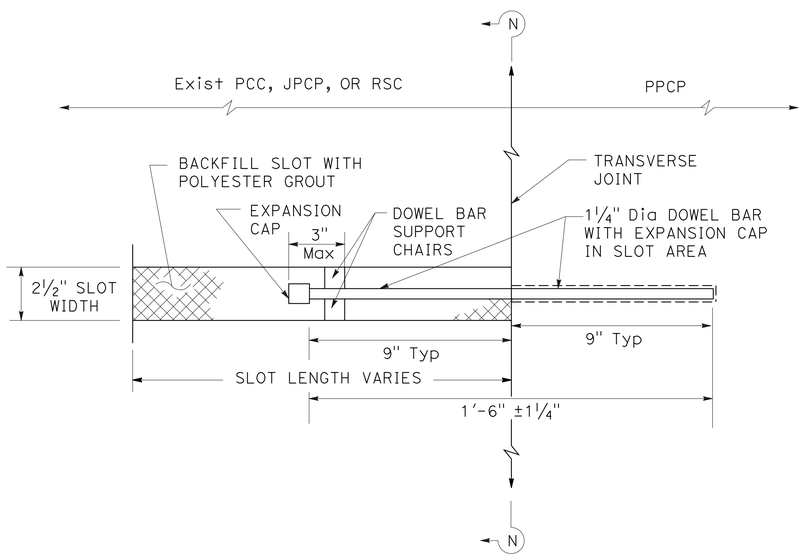


PLAN

## DOWEL SLOT & DOWEL BAR PLACEMENT AT THE TRANSVERSE CONTACT JOINT WITH PCC, JPCP, OR RSC

## ABBREVIATIONS:

LCBRS = LEAN CONCRETE BASE RAPID SETTING
P-T = POST-TENSIONING
RSC = RAPID STRENGTH CONCRETE
PPCP = PRECAST PRESTRESSED CONCRETE PAVEMENT

## NOTES:

1. 1 1/2 " DIAMETER DOWEL BARS 1'-6" ± 1/4 " LENGTH ARE TO BE USED WHEN THE EXISTING PAVEMENT THICKNESS, D, IS EQUAL TO OR GREATER THAN 0.70'. FOR A PAVEMENT THICKNESS, D, LESS THAN 0.70', USE 1 1/4 " DIAMETER DOWEL BAR 1'-6" ± 1/4 " IN LENGTH.
2. SEAL EXISTING TRANSVERSE JOINT AT BOTTOM AND SIDES OF THE DOWEL BAR SLOT WITH CAULKING FILLER PRIOR TO PLACING DOWEL BAR AND FOAM CORE INSERT.
3. SEE STANDARD PLAN P7 FOR FOAM CORE INSERT DETAIL.
4. CAST SLEEVES EVERY 1' C-C DURING PANEL FABRICATION OR DRILL AND BOND HOLE EVERY 1' C-C. SLEEVES OR DRILLED HOLES ARE 1/8 " LARGER THAN THE DOWEL DIAMETER.

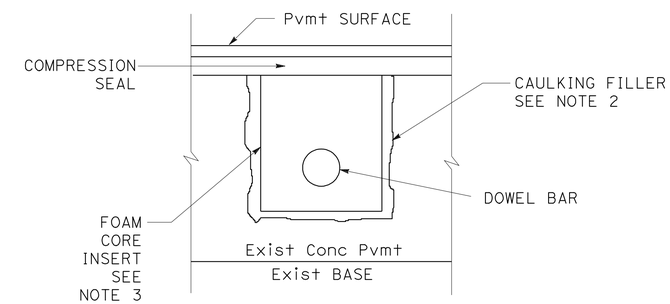


SECTION N-N

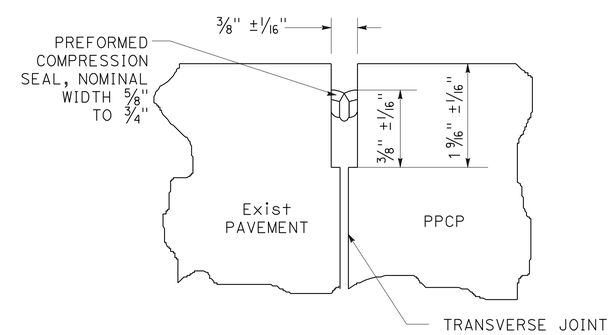


## TRANSVERSE JOINT DETAIL (COMPRESSION SEAL)

# CONSTRUCTION DETAILS
# DOWEL BAR RETROFIT
# PRECAST PRESTRESSED CONCRETE PAVEMENT

NO SCALE

C-305

STATE OF CALIFORNIA - DEPARTMENT OF TRANSPORTATION
Caltrans DESIGN
FUNCTIONAL SUPERVISOR KIRSTEN STAHL
CALCULATED-DESIGNED BY WINNIE DEGUZMAN
CHECKED BY KIRSTEN STAHL
REVISED BY
DATE REVISED

LAST REVISION 00-00-00
DATE PLOTTED => 28-JUN-2011
TIME PLOTTED => 20:27

| Dist | COUNTY | ROUTE | POST MILES TOTAL PROJECT | SHEET No. | TOTAL SHEETS |
|---|---|---|---|---|---|
| 07 | LA | 710 | 17.2/26.4 | 417 | 1507 |

REGISTERED CIVIL ENGINEER 2-3-11 DATE

6-27-11
PLANS APPROVAL DATE

REGISTERED PROFESSIONAL ENGINEER KIRSTEN R. STAHL No. C46857 Exp. 6-30-11 CIVIL STATE OF CALIFORNIA

*THE STATE OF CALIFORNIA OR ITS OFFICERS OR AGENTS SHALL NOT BE RESPONSIBLE FOR THE ACCURACY OR COMPLETENESS OF SCANNED COPIES OF THIS PLAN SHEET.*

NOTES:

1. FOR PANELS WITH A RADIUS (WEDGE PANELS), THE DIMENSIONS AND QUANTITIES OF THE REINFORCEMENT ARE CONSIDERED THE SAME AND VARY MINIMALLY WITH RESPECT TO THE LENGTH (L) AND IN WIDTH (W).
2. FOR TABLE A, REINFORCEMENT IS PLACED OR MEASURED IN THE LONGITUDINAL DIRECTION, UNLESS INDICATED OTHERWISE.
3. FOR TABLE B, REINFORCEMENT IS PLACED OR MEASURED IN THE TRANSVERSE DIRECTION, UNLESS INDICATED OTHERWISE.
4. ALL REINFORCEMENT DIMENSIONS ARE TO BE VERIFIED BY THE MANUFACTURER BEFORE PANEL FABRICATION.

ABBREVIATION:

P-T POST-TENSIONING

## TABLE A

| W | a | COUNT OF PRETENSIONING STRANDS (7-WIRE 1/2") (1) PLACED TRANSVERSELY | LENGTH OF EACH P-T DUCT (2) | COUNT OF BAR "U" | LENGTH OF EACH BAR "U" | COUNT OF LIFTING ANCHORS |
|---|---|---|---|---|---|---|
| FT | FT-IN | EA | FT | EA | FT-IN | EA |
| 7 | 5'-8" | 6 | 7 | 4 | 9'-0" | 4 |
| 8 | 6'-8" | 6 | 8 | 4 | 10'-0" | 4 |
| 9 | 7'-8" | 8 | 9 | 4 | 11'-0" | 4 |
| 10 | 8'-8" | 8 | 10 | 4 | 12'-0" | 4 |

(1) SEE TABLE B FOR LENGTH OF EACH PRETENSIONING STRAND.
(2) SEE TABLE B FOR COUNT OF P-T DUCTS.

## TABLE B

| L | b | COUNT OF P-T DUCTS PLACED (1) LONGITUDINALLY | COUNT OF BAR "B" | LENGTH OF EACH BAR "B" | LENGTH OF EACH PRETENSIONING STRAND (7-WIRE 1/2") (2) | COUNT OF GROUT INLET VENT |
|---|---|---|---|---|---|---|
| FT | FT | EA | EA | FT-IN | FT | EA |
| 12 | 8 | 6 | 4 | 11'-7" | 12 | 6 |
| 12.5 | 8.5 | 6 | 4 | 12'-1" | 12.5 | 6 |
| 13 | 9 | 6 | 4 | 12'-7" | 13 | 6 |
| 13.5 | 9.5 | 8 | 4 | 13'-1" | 13.5 | 8 |
| 14 | 10 | 8 | 4 | 13'-7" | 14 | 8 |
| 14.5 | 10.5 | 8 | 4 | 14'-1" | 14.5 | 8 |
| 15 | 11 | 8 | 4 | 14'-7" | 15 | 8 |
| 15.5 | 11.5 | 8 | 4 | 15'-1" | 15.5 | 8 |
| 16 | 12 | 8 | 4 | 15'-7" | 16 | 8 |
| 16.5 | 12.5 | 8 | 4 | 16'-1" | 16.5 | 8 |

(1) SEE TABLE A FOR LENGTH OF EACH P-T DUCT.
(2) SEE TABLE A FOR COUNT OF PRETENSIONING STRANDS.

# FOR BASE PANELS

# CONSTRUCTION DETAILS
# REINFORCEMENT DIMENSIONS AND QUANTITIES
# PRECAST PRESTRESSED CONCRETE PAVEMENT

NO SCALE

**C-306**

REVISED BY | DATE REVISED
WINNIE DEGUZMAN | KIRSTEN STAHL
CALCULATED-DESIGNED BY | CHECKED BY
FUNCTIONAL SUPERVISOR
KIRSTEN STAHL

STATE OF CALIFORNIA - DEPARTMENT OF TRANSPORTATION
Caltrans
DESIGN

LAST REVISION 00-00-00 | DATE PLOTTED => 28-JUN-2011 | TIME PLOTTED => 20:27

| Dist | COUNTY | ROUTE | POST MILES TOTAL PROJECT | SHEET No. | TOTAL SHEETS |
|---|---|---|---|---|---|
| 07 | LA | 710 | 17.2/26.4 | 418 | 1507 |

REGISTERED CIVIL ENGINEER 2-3-11 DATE

6-27-11
PLANS APPROVAL DATE

REGISTERED PROFESSIONAL ENGINEER KIRSTEN R. STAHL No. C46857 Exp. 6-30-11 CIVIL STATE OF CALIFORNIA

*THE STATE OF CALIFORNIA OR ITS OFFICERS OR AGENTS SHALL NOT BE RESPONSIBLE FOR THE ACCURACY OR COMPLETENESS OF SCANNED COPIES OF THIS PLAN SHEET.*

NOTES:

1. FOR PANELS WITH A RADIUS (WEDGE PANELS), THE DIMENSIONS AND QUANTITIES OF THE REINFORCEMENT ARE CONSIDERED THE SAME AND VARY MINIMALLY WITH RESPECT TO THE LENGTH (L) AND IN WIDTH (W).
2. FOR TABLE A, REINFORCEMENT IS PLACED OR MEASURED IN THE LONGITUDINAL DIRECTION, UNLESS INDICATED OTHERWISE.
3. FOR TABLE B, REINFORCEMENT IS PLACED OR MEASURED IN THE TRANSVERSE DIRECTION, UNLESS INDICATED OTHERWISE.
4. ALL REINFORCEMENT DIMENSIONS ARE TO BE VERIFIED BY THE MANUFACTURER BEFORE PANEL FABRICATION.

ABBREVIATION:

P-T POST-TENSIONING

## TABLE B

| L | b | COUNT OF P-T DUCTS PLACED LONGITUDINALLY (1) | COUNT OF BAR "B" | LENGTH OF EACH BAR "B" | LENGTH OF EACH PRETENSIONING STRAND (7-WIRE 1/2") (2) | COUNT OF GROUT INLET VENT |
|---|---|---|---|---|---|---|
| FT | FT | EA | EA | FT-IN | FT | EA |
| 17 | 13 | 10 | 4 | 16'-7" | 17 | 10 |
| 17.5 | 13.5 | 10 | 4 | 17'-1" | 17.5 | 10 |
| 18 | 14 | 10 | 4 | 17'-7" | 18 | 10 |
| 18.5 | 14.5 | 10 | 4 | 18'-1" | 18.5 | 10 |
| 19 | 15 | 10 | 4 | 18'-7" | 19 | 10 |
| 19.5 | 15.5 | 10 | 4 | 19'-1" | 19.5 | 10 |
| 20 | 16 | 10 | 4 | 19'-7" | 20 | 10 |
| 20.5 | 16.5 | 12 | 4 | 20'-1" | 20.5 | 12 |
| 21 | 17 | 12 | 4 | 20'-7" | 21 | 12 |
| 21.5 | 17.5 | 12 | 4 | 21'-1" | 21.5 | 12 |
| 22 | 18 | 12 | 4 | 21'-7" | 22 | 12 |
| 22.5 | 18.5 | 12 | 4 | 22'-1" | 22.5 | 12 |
| 23 | 19 | 12 | 4 | 22'-7" | 23 | 12 |
| 23.5 | 19.5 | 14 | 4 | 23'-1" | 23.5 | 14 |
| 24 | 20 | 14 | 4 | 23'-7" | 24 | 14 |
| 24.5 | 20.5 | 14 | 4 | 24'-1" | 24.5 | 14 |
| 25 | 21 | 14 | 4 | 24'-7" | 25 | 14 |
| 25.5 | 21.5 | 14 | 4 | 25'-1" | 25.5 | 14 |
| 26 | 22 | 14 | 4 | 25'-7" | 26 | 14 |
| 26.5 | 22.5 | 14 | 4 | 26'-1" | 26.5 | 14 |

(1) SEE TABLE A FOR LENGTH OF EACH P-T DUCT.
(2) SEE TABLE A FOR COUNT OF PRETENSIONING STRANDS.

## TABLE B

| L | b | COUNT OF P-T DUCTS PLACED LONGITUDINALLY (1) | COUNT OF BAR "B" | LENGTH OF EACH BAR "B" | LENGTH OF EACH PRETENSIONING STRAND (7-WIRE 1/2") (2) | COUNT OF GROUT INLET VENT |
|---|---|---|---|---|---|---|
| FT | FT | EA | EA | FT-IN | FT | EA |
| 27 | 23 | 14 | 4 | 26'-7" | 27 | 14 |
| 27.5 | 23.5 | 16 | 4 | 27'-1" | 27.5 | 16 |
| 28 | 24 | 16 | 4 | 27'-7" | 28 | 16 |
| 28.5 | 24.5 | 16 | 4 | 28'-1" | 28.5 | 16 |
| 29 | 25 | 16 | 4 | 28'-7" | 29 | 16 |
| 29.5 | 25.5 | 16 | 4 | 29'-1" | 29.5 | 16 |
| 30 | 26 | 16 | 4 | 29'-7" | 30 | 16 |
| 30.5 | 26.5 | 16 | 4 | 30'-1" | 30.5 | 16 |
| 31 | 27 | 18 | 4 | 30'-7" | 31 | 18 |
| 31.5 | 27.5 | 18 | 4 | 31'-1" | 31.5 | 18 |
| 32 | 28 | 18 | 4 | 31'-7" | 32 | 18 |
| 32.5 | 28.5 | 18 | 4 | 32'-1" | 32.5 | 18 |
| 33 | 29 | 18 | 4 | 32'-7" | 33 | 18 |
| 33.5 | 29.5 | 20 | 4 | 33'-1" | 33.5 | 20 |
| 34 | 30 | 20 | 4 | 33'-7" | 34 | 20 |
| 34.5 | 30.5 | 20 | 4 | 34'-1" | 34.5 | 20 |
| 35 | 31 | 20 | 4 | 34'-7" | 35 | 20 |
| 35.5 | 31.5 | 20 | 4 | 35'-1" | 35.5 | 20 |
| 36 | 32 | 20 | 4 | 35'-7" | 36 | 20 |
| 36.5 | 32.5 | 20 | 4 | 36'-1" | 36.5 | 20 |

(1) SEE TABLE A FOR LENGTH OF EACH P-T DUCT.
(2) SEE TABLE A FOR COUNT OF PRETENSIONING STRANDS.

# FOR BASE PANELS

# CONSTRUCTION DETAILS
# REINFORCEMENT DIMENSIONS AND QUANTITIES
# PRECAST PRESTRESSED CONCRETE PAVEMENT

NO SCALE

C-307

STATE OF CALIFORNIA - DEPARTMENT OF TRANSPORTATION
Caltrans®
DESIGN

FUNCTIONAL SUPERVISOR: KIRSTEN STAHL
CALCULATED-DESIGNED BY: WINNIE DEGUZMAN
CHECKED BY: KIRSTEN STAHL
REVISED BY
DATE REVISED

LAST REVISION 00-00-00
DATE PLOTTED => 29-JUN-2011
TIME PLOTTED => 08:31

| Dist | COUNTY | ROUTE | POST MILES TOTAL PROJECT | SHEET No. | TOTAL SHEETS |
|---|---|---|---|---|---|
| 07 | LA | 710 | 17.2/26.4 | 419 | 1507 |

REGISTERED CIVIL ENGINEER 2-3-11 DATE

6-27-11
PLANS APPROVAL DATE

REGISTERED PROFESSIONAL ENGINEER KIRSTEN R. STAHL No. C46857 Exp. 6-30-11 CIVIL STATE OF CALIFORNIA

*THE STATE OF CALIFORNIA OR ITS OFFICERS OR AGENTS SHALL NOT BE RESPONSIBLE FOR THE ACCURACY OR COMPLETENESS OF SCANNED COPIES OF THIS PLAN SHEET.*

NOTES:

1. FOR PANELS WITH A RADIUS (WEDGE PANELS), THE DIMENSIONS AND QUANTITIES OF THE REINFORCEMENT ARE CONSIDERED THE SAME AND VARY MINIMALLY WITH RESPECT TO THE LENGTH (L) AND IN WIDTH (W).
2. FOR TABLE A, REINFORCEMENT IS PLACED OR MEASURED IN THE LONGITUDINAL DIRECTION, UNLESS INDICATED OTHERWISE.
3. FOR TABLE B, REINFORCEMENT IS PLACED OR MEASURED IN THE TRANSVERSE DIRECTION, UNLESS INDICATED OTHERWISE.
4. ALL REINFORCEMENT DIMENSIONS ARE TO BE VERIFIED BY THE MANUFACTURER BEFORE PANEL FABRICATION.

ABBREVIATION:

P-T POST-TENSIONING

## TABLE B

| L | b | COUNT OF P-T DUCTS PLACED LONGITUDINALLY (1) | COUNT OF BAR "B" | LENGTH OF EACH BAR "B" | LENGTH OF EACH PRETENSIONING STRAND (7-WIRE 1/2") (2) | COUNT OF GROUT INLET VENT |
|---|---|---|---|---|---|---|
| FT | FT | | EA | FT-IN | FT | EA |
| 37 | 33 | 22 | 4 | 36'-7" | 37 | 22 |
| 37.5 | 33.5 | 22 | 4 | 37'-1" | 37.5 | 22 |
| 38 | 34 | 22 | 4 | 37'-7" | 38 | 22 |
| 38.5 | 34.5 | 22 | 4 | 38'-1" | 38.5 | 22 |
| 39 | 35 | 22 | 4 | 38'-7" | 39 | 22 |
| 39.5 | 35.5 | 22 | 4 | 39'-1" | 39.5 | 22 |
| 40 | 36 | 22 | 4 | 39'-7" | 40 | 22 |
| 40.5 | 36.5 | 24 | 4 | 40'-1" | 40.5 | 24 |
| 41 | 37 | 24 | 4 | 40'-7" | 41 | 24 |
| 41.5 | 37.5 | 24 | 4 | 41'-1" | 41.5 | 24 |
| 42 | 38 | 24 | 4 | 41'-7" | 42 | 24 |
| 42.5 | 38.5 | 24 | 4 | 42'-1" | 42.5 | 24 |
| 43 | 39 | 24 | 4 | 42'-7" | 43 | 24 |
| 43.5 | 39.5 | 26 | 4 | 43'-1" | 43.5 | 26 |
| 44 | 40 | 26 | 4 | 43'-7" | 44 | 26 |
| 44.5 | 40.5 | 26 | 4 | 44'-1" | 44.5 | 26 |
| 45 | 41 | 26 | 4 | 44'-7" | 45 | 26 |
| 45.5 | 41.5 | 26 | 4 | 45'-1" | 45.5 | 26 |
| 46 | 42 | 26 | 4 | 46'-1" | 46 | 26 |
| 46.5 | 42.5 | 26 | 4 | 46'-1" | 46.5 | 26 |

(1) SEE TABLE A FOR LENGTH OF EACH P-T DUCT.
(2) SEE TABLE A FOR COUNT OF PRETENSIONING STRANDS.

## TABLE B

| L | b | COUNT OF P-T DUCTS PLACED LONGITUDINALLY (1) | COUNT OF BAR "B" | LENGTH OF EACH BAR "B" | LENGTH OF EACH PRETENSIONING STRAND (7-WIRE 1/2") (2) | COUNT OF GROUT INLET VENT |
|---|---|---|---|---|---|---|
| FT | FT | EA | EA | FT-IN | FT | EA |
| 47 | 43 | 28 | 4 | 46'-7" | 47 | 28 |
| 47.5 | 43.5 | 28 | 4 | 47'-1" | 47.5 | 28 |
| 48 | 44 | 28 | 4 | 47'-7" | 48 | 28 |
| 48.5 | 44.5 | 28 | 4 | 48'-1" | 48.5 | 28 |
| 49 | 45 | 28 | 4 | 48'-7" | 49 | 28 |
| 49.5 | 45.5 | 28 | 4 | 49'-1" | 49.5 | 28 |
| 50 | 46 | 28 | 4 | 49'-7" | 50 | 28 |

(1) SEE TABLE A FOR LENGTH OF EACH P-T DUCT.
(2) SEE TABLE A FOR COUNT OF PRETENSIONING STRANDS.

# CONSTRUCTION DETAILS
# REINFORCEMENT DIMENSIONS AND QUANTITIES
# PRECAST PRESTRESSED CONCRETE PAVEMENT

## FOR BASE PANELS

NO SCALE

C-308

STATE OF CALIFORNIA - DEPARTMENT OF TRANSPORTATION
Caltrans DESIGN

FUNCTIONAL SUPERVISOR: KIRSTEN STAHL
CALCULATED-DESIGNED BY: WINNIE DEGUZMAN
CHECKED BY: KIRSTEN STAHL
REVISED BY
DATE REVISED

LAST REVISION 00-00-00
DATE PLOTTED => 29-JUN-2011
TIME PLOTTED => 08:32

| Dist | COUNTY | ROUTE | POST MILES TOTAL PROJECT | SHEET No. | TOTAL SHEETS |
|---|---|---|---|---|---|
| 07 | LA | 710 | 17.2/26.4 | 420 | 1507 |

REGISTERED CIVIL ENGINEER 2-3-11 DATE

6-27-11
PLANS APPROVAL DATE

REGISTERED PROFESSIONAL ENGINEER KIRSTEN R. STAHL No. C46857 Exp. 6-30-11 CIVIL STATE OF CALIFORNIA

*THE STATE OF CALIFORNIA OR ITS OFFICERS OR AGENTS SHALL NOT BE RESPONSIBLE FOR THE ACCURACY OR COMPLETENESS OF SCANNED COPIES OF THIS PLAN SHEET.*

NOTES:

1. FOR PANELS WITH A RADIUS (WEDGE PANELS), THE DIMENSIONS AND QUANTITIES OF THE REINFORCEMENT ARE CONSIDERED THE SAME AND VARY MINIMALLY WITH RESPECT TO THE LENGTH (L) AND IN WIDTH (W).
2. FOR TABLE A, REINFORCEMENT IS PLACED OR MEASURED IN THE LONGITUDINAL DIRECTION, UNLESS INDICATED OTHERWISE.
3. FOR TABLE B, REINFORCEMENT IS PLACED OR MEASURED IN THE TRANSVERSE DIRECTION, UNLESS INDICATED OTHERWISE.
4. ALL REINFORCEMENT DIMENSIONS ARE TO BE VERIFIED BY THE MANUFACTURER BEFORE PANEL FABRICATION.

ABBREVIATION:

P-T POST-TENSIONING

## TABLE A

| W | a | COUNT OF PRETENSIONING STRANDS (7-WIRE 1/2") (1) PLACED TRANSVERSELY | COUNT OF BAR "U" | LENGTH OF EACH BAR "U" | COUNT OF LIFTING ANCHORS | LENGTH OF EACH P-T DUCT (2) |
|---|---|---|---|---|---|---|
| FT | FT | EA | EA | FT-IN | EA | FT |
| 7 | 4 | 6 | 4 | 9'-0" | 4 | 7 |
| 8 | 4 | 8 | 4 | 10'-0" | 4 | 8 |
| 9 | 4 | 10 | 4 | 11'-0" | 4 | 9 |
| 10 | 4 | 12 | 4 | 12'-0" | 4 | 10 |

(1) SEE TABLE B FOR LENGTH OF EACH PRETENSIONING STRAND.
(2) SEE TABLE B FOR COUNT OF P-T DUCTS.

## TABLE B

| L | b | COUNT OF P-T DUCTS PLACED (1) LONGITUDINALLY | COUNT OF BLOCKOUTS (8" X 48") | COUNT OF BAR "L" | LENGTH OF EACH BAR "L" | COUNT OF BAR "B" | LENGTH OF EACH BAR "B" | LENGTH OF EACH PRETENSIONING STRAND (7-WIRE 1/2") (2) | COUNT OF GROUT INLET VENT |
|---|---|---|---|---|---|---|---|---|---|
| FT | FT | EA | EA | EA | FT | EA | FT-IN | FT | EA |
| 12 | 8 | 6 | 3 | 6 | 4 | 6 | 11'-7" | 12 | 3 |
| 12.5 | 8.5 | 6 | 3 | 6 | 4 | 6 | 12'-1" | 12.5 | 3 |
| 13 | 9 | 6 | 3 | 6 | 4 | 6 | 12'-7" | 13 | 3 |
| 13.5 | 9.5 | 8 | 4 | 8 | 4 | 6 | 13'-1" | 13.5 | 4 |
| 14 | 10 | 8 | 4 | 8 | 4 | 6 | 13'-7" | 14 | 4 |
| 14.5 | 10.5 | 8 | 4 | 8 | 4 | 6 | 14'-1" | 14.5 | 4 |
| 15 | 11 | 8 | 4 | 8 | 4 | 6 | 14'-7" | 15 | 4 |
| 15.5 | 11.5 | 8 | 4 | 8 | 4 | 6 | 15'-1" | 15.5 | 4 |
| 16 | 12 | 8 | 4 | 8 | 4 | 6 | 15'-7" | 16 | 4 |
| 16.5 | 12.5 | 8 | 4 | 8 | 4 | 6 | 16'-1" | 16.5 | 4 |

(1) SEE TABLE A FOR LENGTH OF EACH P-T DUCT.
(2) SEE TABLE A FOR COUNT OF PRETENSIONING STRANDS.

# FOR CENTRAL STRESSING PANELS TYPE A1 OR TYPE A2

# CONSTRUCTION DETAILS REINFORCEMENT DIMENSIONS AND QUANTITIES PRECAST PRESTRESSED CONCRETE PAVEMENT

NO SCALE

C-309

STATE OF CALIFORNIA - DEPARTMENT OF TRANSPORTATION
Caltrans DESIGN

FUNCTIONAL SUPERVISOR: KIRSTEN STAHL
CALCULATED-DESIGNED BY: WINNIE DEGUZMAN
CHECKED BY: KIRSTEN STAHL
REVISED BY
DATE REVISED

LAST REVISION 00-00-00
DATE PLOTTED => 29-JUN-2011
TIME PLOTTED => 08:32

| Dist | COUNTY | ROUTE | POST MILES TOTAL PROJECT | SHEET No. | TOTAL SHEETS |
|---|---|---|---|---|---|
| 07 | LA | 710 | 17.2/26.4 | 421 | 1507 |

REGISTERED CIVIL ENGINEER 2-3-11 DATE

6-27-11
PLANS APPROVAL DATE

REGISTERED PROFESSIONAL ENGINEER KIRSTEN R. STAHL No. C46857 Exp. 6-30-11 CIVIL STATE OF CALIFORNIA

*THE STATE OF CALIFORNIA OR ITS OFFICERS OR AGENTS SHALL NOT BE RESPONSIBLE FOR THE ACCURACY OR COMPLETENESS OF SCANNED COPIES OF THIS PLAN SHEET.*

NOTES:

1. FOR PANELS WITH A RADIUS (WEDGE PANELS), THE DIMENSIONS AND QUANTITIES OF THE REINFORCEMENT ARE CONSIDERED THE SAME AND VARY MINIMALLY WITH RESPECT TO THE LENGTH (L) AND IN WIDTH (W).
2. FOR TABLE A, REINFORCEMENT IS PLACED OR MEASURED IN THE LONGITUDINAL DIRECTION, UNLESS INDICATED OTHERWISE.
3. FOR TABLE B, REINFORCEMENT IS PLACED OR MEASURED IN THE TRANSVERSE DIRECTION, UNLESS INDICATED OTHERWISE.
4. ALL REINFORCEMENT DIMENSIONS ARE TO BE VERIFIED BY THE MANUFACTURER BEFORE PANEL FABRICATION.

ABBREVIATIONS:

P-T POST-TENSIONING

# TABLE B

| L | b | COUNT OF P-T DUCTS PLACED LONGITUDINALLY(1) | COUNT OF BLOCKOUTS (8" X 48") | COUNT OF BAR "L" | LENGTH OF EACH BAR "L" | COUNT OF BAR "B" | LENGTH OF EACH BAR "B" | LENGTH OF EACH PRETENSIONING STRAND (7-WIRE 1/2")(2) | COUNT OF GROUT INLET VENT |
|---|---|---|---|---|---|---|---|---|---|
| FT | FT | EA | EA | EA | FT | EA | FT-IN | FT | EA |
| 17 | 13 | 10 | 5 | 10 | 4 | 6 | 16'-7" | 17 | 5 |
| 17.5 | 13.5 | 10 | 5 | 10 | 4 | 6 | 17'-1" | 17.5 | 5 |
| 18 | 14 | 10 | 5 | 10 | 4 | 6 | 17'-7" | 18 | 5 |
| 18.5 | 14.5 | 10 | 5 | 10 | 4 | 6 | 18'-1" | 18.5 | 5 |
| 19 | 15 | 10 | 5 | 10 | 4 | 6 | 18'-7" | 19 | 5 |
| 19.5 | 15.5 | 10 | 5 | 10 | 4 | 6 | 19'-1" | 19.5 | 5 |
| 20 | 16 | 10 | 5 | 10 | 4 | 6 | 19'-7" | 20 | 5 |
| 20.5 | 16.5 | 12 | 6 | 12 | 4 | 6 | 20'-1" | 20.5 | 6 |
| 21 | 17 | 12 | 6 | 12 | 4 | 6 | 20'-7" | 21 | 6 |
| 21.5 | 17.5 | 12 | 6 | 12 | 4 | 6 | 21'-1" | 21.5 | 6 |
| 22 | 18 | 12 | 6 | 12 | 4 | 6 | 21'-7" | 22 | 6 |
| 22.5 | 18.5 | 12 | 6 | 12 | 4 | 6 | 22'-1" | 22.5 | 6 |
| 23 | 19 | 12 | 6 | 12 | 4 | 6 | 22'-7" | 23 | 6 |
| 23.5 | 19.5 | 14 | 7 | 14 | 4 | 6 | 23'-1" | 23.5 | 7 |
| 24 | 20 | 14 | 7 | 14 | 4 | 6 | 23'-7" | 24 | 7 |
| 24.5 | 20.5 | 14 | 7 | 14 | 4 | 6 | 24'-1" | 24.5 | 7 |
| 25 | 21 | 14 | 7 | 14 | 4 | 6 | 24'-7" | 25 | 7 |
| 25.5 | 21.5 | 14 | 7 | 14 | 4 | 6 | 25'-1" | 25.5 | 7 |
| 26 | 22 | 14 | 7 | 14 | 4 | 6 | 25'-7" | 26 | 7 |
| 26.5 | 22.5 | 14 | 7 | 14 | 4 | 6 | 26'-1" | 26.5 | 7 |

(1) SEE TABLE A FOR LENGTH OF EACH P-T DUCT.

(2) SEE TABLE A FOR COUNT OF PRETENSIONING STRANDS.

## FOR CENTRAL STRESSING PANELS TYPE A1 OR TYPE A2

## CONSTRUCTION DETAILS REINFORCEMENT DIMENSIONS AND QUANTITIES PRECAST PRESTRESSED CONCRETE PAVEMENT

NO SCALE

C-310

STATE OF CALIFORNIA - DEPARTMENT OF TRANSPORTATION
Caltrans DESIGN

FUNCTIONAL SUPERVISOR: KIRSTEN STAHL
CALCULATED-DESIGNED BY: WINNIE DEGUZMAN
CHECKED BY: KIRSTEN STAHL
REVISED BY
DATE REVISED

LAST REVISION 00-00-00 | DATE PLOTTED => 28-JUN-2011 | TIME PLOTTED => 19:59

| Dist | COUNTY | ROUTE | POST MILES TOTAL PROJECT | SHEET No. | TOTAL SHEETS |
|---|---|---|---|---|---|
| 07 | LA | 710 | 17.2/26.4 | 422 | 1507 |

REGISTERED CIVIL ENGINEER 2-3-11 DATE

6-27-11
PLANS APPROVAL DATE

REGISTERED PROFESSIONAL ENGINEER KIRSTEN R. STAHL No. C46857 Exp. 6-30-11 CIVIL STATE OF CALIFORNIA

*THE STATE OF CALIFORNIA OR ITS OFFICERS OR AGENTS SHALL NOT BE RESPONSIBLE FOR THE ACCURACY OR COMPLETENESS OF SCANNED COPIES OF THIS PLAN SHEET.*

## NOTES:

1. FOR PANELS WITH A RADIUS (WEDGE PANELS), THE DIMENSIONS AND QUANTITIES OF THE REINFORCEMENT ARE CONSIDERED THE SAME AND VARY MINIMALLY WITH RESPECT TO THE LENGTH (L) AND IN WIDTH (W).
2. FOR TABLE A, REINFORCEMENT IS PLACED OR MEASURED IN THE LONGITUDINAL DIRECTION, UNLESS INDICATED OTHERWISE.
3. FOR TABLE B, REINFORCEMENT IS PLACED OR MEASURED IN THE TRANSVERSE DIRECTION, UNLESS INDICATED OTHERWISE.
4. ALL REINFORCEMENT DIMENSIONS ARE TO BE VERIFIED BY THE MANUFACTURER BEFOARE PANEL FABRICATION.

## ABBREVIATIONS

P-T POST-TENSIONING

# TABLE B

| L | b | COUNT OF P-T DUCTS PLACED LONGITUDINALLY (1) | COUNT OF BLOCKOUTS (8" X 48") | COUNT OF BAR "L" | LENGTH OF EACH BAR "L" | COUNT OF BAR "B" | LENGTH OF EACH BAR "B" | LENGTH OF EACH PRETENSIONING STRAND (7-WIRE 1/2") (2) | COUNT OF GROUT INLET VENT |
|---|---|---|---|---|---|---|---|---|---|
| FT | FT | EA | EA | EA | FT | EA | FT-IN | FT | EA |
| 27 | 23 | 14 | 7 | 14 | 4 | 6 | 26'-7" | 27 | 7 |
| 27.5 | 23.5 | 16 | 8 | 16 | 4 | 6 | 27'-1" | 27.5 | 8 |
| 28 | 24 | 16 | 8 | 16 | 4 | 6 | 27'-7" | 28 | 8 |
| 28.5 | 24.5 | 16 | 8 | 16 | 4 | 6 | 28'-1" | 28.5 | 8 |
| 29 | 25 | 16 | 8 | 16 | 4 | 6 | 28'-7" | 29 | 8 |
| 29.5 | 25.5 | 16 | 8 | 16 | 4 | 6 | 29'-1" | 29.5 | 8 |
| 30 | 26 | 16 | 8 | 16 | 4 | 6 | 29'-7" | 30 | 8 |
| 30.5 | 26.5 | 16 | 8 | 16 | 4 | 6 | 30'-1" | 30.5 | 8 |
| 31 | 27 | 18 | 9 | 18 | 4 | 6 | 30'-7" | 31 | 9 |
| 31.5 | 27.5 | 18 | 9 | 18 | 4 | 6 | 31'-1" | 31.5 | 9 |
| 32 | 28 | 18 | 9 | 18 | 4 | 6 | 31'-7" | 32 | 9 |
| 32.5 | 28.5 | 18 | 9 | 18 | 4 | 6 | 32'-1" | 32.5 | 9 |
| 33 | 29 | 18 | 9 | 18 | 4 | 6 | 32'-7" | 33 | 9 |
| 33.5 | 29.5 | 20 | 10 | 20 | 4 | 6 | 33'-1" | 33.5 | 10 |
| 34 | 30 | 20 | 10 | 20 | 4 | 6 | 33'-7" | 34 | 10 |
| 34.5 | 30.5 | 20 | 10 | 20 | 4 | 6 | 34'-1" | 34.5 | 10 |
| 35 | 31 | 20 | 10 | 20 | 4 | 6 | 34'-7" | 35 | 10 |
| 35.5 | 31.5 | 20 | 10 | 20 | 4 | 6 | 35'-1" | 35.5 | 10 |
| 36 | 32 | 20 | 10 | 20 | 4 | 6 | 35'-7" | 36 | 10 |
| 36.5 | 32.5 | 20 | 10 | 20 | 4 | 6 | 36'-1" | 36.5 | 10 |

(1) SEE TABLE A FOR LENGTH OF EACH P-T DUCT.
(2) SEE TABLE A FOR COUNT OF PRETENSIONING STRANDS.

## FOR CENTRAL STRESSING PANELS
## TYPE A1 OR TYPE A2

## CONSTRUCTION DETAILS
## REINFORCEMENT DIMENSIONS AND QUANTITIES
## PRECAST PRESTRESSED CONCRETE PAVEMENT

NO SCALE

C-311

REVISED BY | DATE REVISED
WINNIE DEGUZMAN | KIRSTEN STAHL
CALCULATED-DESIGNED BY | CHECKED BY
FUNCTIONAL SUPERVISOR: KIRSTEN STAHL
STATE OF CALIFORNIA - DEPARTMENT OF TRANSPORTATION
Caltrans DESIGN

LAST REVISION 00-00-00 | DATE PLOTTED => 28-JUN-2011 | TIME PLOTTED => 20:00

| Dist | COUNTY | ROUTE | POST MILES TOTAL PROJECT | SHEET No. | TOTAL SHEETS |
|---|---|---|---|---|---|
| 07 | LA | 710 | 17.2/26.4 | 423 | 1507 |

REGISTERED CIVIL ENGINEER 2-3-11 DATE

6-27-11
PLANS APPROVAL DATE

REGISTERED PROFESSIONAL ENGINEER KIRSTEN R. STAHL No. C46857 Exp. 6-30-11 CIVIL STATE OF CALIFORNIA

*THE STATE OF CALIFORNIA OR ITS OFFICERS OR AGENTS SHALL NOT BE RESPONSIBLE FOR THE ACCURACY OR COMPLETENESS OF SCANNED COPIES OF THIS PLAN SHEET.*

NOTES:

1. FOR PANELS WITH A RADIUS (WEDGE PANELS), THE DIMENSIONS AND QUANTITIES OF THE REINFORCEMENT ARE CONSIDERED THE SAME AND VARY MINIMALLY WITH RESPECT TO THE LENGTH (L) AND IN WIDTH (W).
2. FOR TABLE A, REINFORCEMENT IS PLACED OR MEASURED IN THE LONGITUDINAL DIRECTION, UNLESS INDICATED OTHERWISE.
3. FOR TABLE B, REINFORCEMENT IS PLACED OR MEASURED IN THE TRANSVERSE DIRECTION, UNLESS INDICATED OTHERWISE.
4. ALL REINFORCEMENT DIMENSIONS ARE TO BE VERIFIED BY THE MANUFACTURER BEFORE PANEL FABRICATION.

ABBREVIATIONS:

P-T POST-TENSIONING

# TABLE B

| L | b | COUNT OF P-T DUCTS PLACED LONGITUDINALLY (1) | COUNT OF BLOCKOUTS (8" X 48") | COUNT OF BAR "L" | LENGTH OF EACH BAR "L" | COUNT OF BAR "B" | LENGTH OF EACH BAR "B" | LENGTH OF EACH PRETENSIONING STRAND (7-WIRE 1/2") (2) | COUNT OF GROUT INLET VENT |
|---|---|---|---|---|---|---|---|---|---|
| FT | FT | EA | EA | EA | FT | EA | FT-IN | FT | EA |
| 37 | 33 | 22 | 11 | 22 | 4 | 6 | 36'-7" | 37 | 11 |
| 37.5 | 33.5 | 22 | 11 | 22 | 4 | 6 | 37'-1" | 37.5 | 11 |
| 38 | 34 | 22 | 11 | 22 | 4 | 6 | 37'-7" | 38 | 11 |
| 38.5 | 34.5 | 22 | 11 | 22 | 4 | 6 | 38'-1" | 38.5 | 11 |
| 39 | 35 | 22 | 11 | 22 | 4 | 6 | 38'-7" | 39 | 11 |
| 39.5 | 35.5 | 22 | 11 | 22 | 4 | 6 | 39'-1" | 39.5 | 11 |
| 40 | 36 | 22 | 11 | 22 | 4 | 6 | 39'-7" | 40 | 11 |
| 40.5 | 36.5 | 24 | 12 | 24 | 4 | 6 | 40'-1" | 40.5 | 12 |
| 41 | 37 | 24 | 12 | 24 | 4 | 6 | 40'-7" | 41 | 12 |
| 41.5 | 37.5 | 24 | 12 | 24 | 4 | 6 | 41'-1" | 41.5 | 12 |
| 42 | 38 | 24 | 12 | 24 | 4 | 6 | 41'-7" | 42 | 12 |
| 42.5 | 38.5 | 24 | 12 | 24 | 4 | 6 | 42'-1" | 42.5 | 12 |
| 43 | 39 | 24 | 12 | 24 | 4 | 6 | 42'-7" | 43 | 12 |
| 43.5 | 39.5 | 26 | 13 | 26 | 4 | 6 | 43'-1" | 43.5 | 13 |
| 44 | 40 | 26 | 13 | 26 | 4 | 6 | 43'-7" | 44 | 13 |
| 44.5 | 40.5 | 26 | 13 | 26 | 4 | 6 | 44'-1" | 44.5 | 13 |
| 45 | 41 | 26 | 13 | 26 | 4 | 6 | 44'-7" | 45 | 13 |
| 45.5 | 41.5 | 26 | 13 | 26 | 4 | 6 | 45'-1" | 45.5 | 13 |
| 46 | 42 | 26 | 13 | 26 | 4 | 6 | 45'-7" | 46 | 13 |
| 46.5 | 42.5 | 26 | 13 | 26 | 4 | 6 | 46'-1" | 46.5 | 13 |

(1) SEE TABLE A FOR LENGTH OF EACH P-T DUCT.
(2) SEE TABLE A FOR COUNT OF PRETENSIONING STRANDS.

## FOR CENTRAL STRESSING PANELS
## TYPE A1 OR TYPE A2

## CONSTRUCTION DETAILS
## REINFORCEMENT DIMENSIONS AND QUANTITIES
## PRECAST PRESTRESSED CONCRETE PAVEMENT

NO SCALE

**C-312**

STATE OF CALIFORNIA - DEPARTMENT OF TRANSPORTATION
Caltrans® DESIGN

FUNCTIONAL SUPERVISOR: KIRSTEN STAHL
CALCULATED-DESIGNED BY: WINNIE DEGUZMAN
CHECKED BY: KIRSTEN STAHL
REVISED BY
DATE REVISED

LAST REVISION 00-00-00
DATE PLOTTED => 28-JUN-2011
TIME PLOTTED => 20:00

| Dist | COUNTY | ROUTE | POST MILES TOTAL PROJECT | SHEET No. | TOTAL SHEETS |
|---|---|---|---|---|---|
| 07 | LA | 710 | 17.2/26.4 | 424 | 1507 |

REGISTERED CIVIL ENGINEER 2-3-11 DATE

6-27-11
PLANS APPROVAL DATE

REGISTERED PROFESSIONAL ENGINEER KIRSTEN R. STAHL No. C46857 Exp. 6-30-11 CIVIL STATE OF CALIFORNIA

THE STATE OF CALIFORNIA OR ITS OFFICERS OR AGENTS SHALL NOT BE RESPONSIBLE FOR THE ACCURACY OR COMPLETENESS OF SCANNED COPIES OF THIS PLAN SHEET.

## NOTES:

1. FOR PANELS WITH A RADIUS (WEDGE PANELS), THE DIMENSIONS AND QUANTITIES OF THE REINFORCEMENT ARE CONSIDERED THE SAME AND VARY MINIMALLY WITH RESPECT TO THE LENGTH (L) AND IN WIDTH (W).
2. FOR TABLE A, REINFORCEMENT IS PLACED OR MEASURED IN THE LONGITUDINAL DIRECTION, UNLESS INDICATED OTHERWISE.
3. FOR TABLE B, REINFORCEMENT IS PLACED OR MEASURED IN THE TRANSVERSE DIRECTION, UNLESS INDICATED OTHERWISE.
4. ALL REINFORCEMENT DIMENSIONS ARE TO BE VERIFIED BY THE MANUFACTURER BEFORE PANEL FABRICATION.

## ABBREVIATIONS:

P-T POST-TENSIONING

# TABLE B

| L | b | COUNT OF P-T DUCTS PLACED LONGITUDINALLY (1) | COUNT OF BLOCKOUTS | COUNT OF BAR "L" | LENGTH OF EACH BAR "L" | COUNT OF BAR "B" | LENGTH OF EACH BAR "B" | LENGTH OF EACH PRETENSIONING STRAND (7-WIRE 1/2") (2) | COUNT OF GROUT INLET VENT |
|---|---|---|---|---|---|---|---|---|---|
| FT | FT | EA | EA | EA | FT | EA | FT-IN | FT | EA |
| 47 | 43 | 28 | 14 | 28 | 4 | 6 | 46'-7" | 47 | 14 |
| 47.5 | 43.5 | 28 | 14 | 28 | 4 | 6 | 47'-1" | 47.5 | 14 |
| 48 | 44 | 28 | 14 | 28 | 4 | 6 | 47'-7" | 48 | 14 |
| 48.5 | 44.5 | 28 | 14 | 28 | 4 | 6 | 48'-1" | 48.5 | 14 |
| 49 | 45 | 28 | 14 | 28 | 4 | 6 | 48'-7" | 49 | 14 |
| 49.5 | 45.5 | 28 | 14 | 28 | 4 | 6 | 49'-1" | 49.5 | 14 |
| 50 | 46 | 28 | 14 | 28 | 4 | 6 | 49'-7" | 50 | 14 |

(1) SEE TABLE A FOR LENGTH OF EACH P-T DUCT.
(2) SEE TABLE A FOR COUNT OF PRETENSIONING STRANDS.

## FOR CENTRAL STRESSING PANELS TYPE A1 OR TYPE A2

## CONSTRUCTION DETAILS
## REINFORCEMENT DIMENSIONS AND QUANTITIES
## PRECAST PRESTRESSED CONCRETE PAVEMENT

NO SCALE

C-313

STATE OF CALIFORNIA - DEPARTMENT OF TRANSPORTATION
Caltrans DESIGN

FUNCTIONAL SUPERVISOR: KIRSTEN STAHL
CALCULATED-DESIGNED BY: WINNIE DEGUZMAN
CHECKED BY: KIRSTEN STAHL
REVISED BY
DATE REVISED

LAST REVISION 00-00-00
DATE PLOTTED => 28-JUN-2011
TIME PLOTTED => 20:00

| Dist | COUNTY | ROUTE | POST MILES TOTAL PROJECT | SHEET No. | TOTAL SHEETS |
|---|---|---|---|---|---|
| 07 | LA | 710 | 17.2/26.4 | 425 | 1507 |

REGISTERED CIVIL ENGINEER 2-3-11 DATE

6-27-11
PLANS APPROVAL DATE

REGISTERED PROFESSIONAL ENGINEER KIRSTEN R. STAHL No. C46857 Exp. 6-30-11 CIVIL STATE OF CALIFORNIA

*THE STATE OF CALIFORNIA OR ITS OFFICERS OR AGENTS SHALL NOT BE RESPONSIBLE FOR THE ACCURACY OR COMPLETENESS OF SCANNED COPIES OF THIS PLAN SHEET.*

NOTES:

1. FOR PANELS WITH A RADIUS (WEDGE PANELS), THE DIMENSIONS AND QUANTITIES OF THE REINFORCEMENT ARE CONSIDERED THE SAME AND VARY MINIMALLY WITH RESPECT TO THE LENGTH (L) AND IN WIDTH (W).
2. FOR TABLE A, REINFORCEMENT IS PLACED OR MEASURED IN THE LONGITUDINAL DIRECTION, UNLESS INDICATED OTHERWISE.
3. FOR TABLE B, REINFORCEMENT IS PLACED OR MEASURED IN THE TRANSVERSE DIRECTION, UNLESS INDICATED OTHERWISE.
4. ALL REINFORCEMENT DIMENSIONS ARE TO BE VERIFIED BY THE MANUFACTURER BEFORE PANEL FABRICATION.

ABBREVIATIONS:

P-T POST-TENSIONING

## TABLE A

| W | COUNT OF PRETENSIONING STRANDS (7-WIRE 1/2") PLACED TRANSVERSELY (1) | LENGTH OF EACH P-T DUCT (2) | COUNT OF BAR "U1" | LENGTH OF EACH BAR "U1" | COUNT OF BAR "U2" | LENGTH OF EACH BAR "U2" | LENGTH OF EACH BAR "B5" (3) | COUNT OF LIFTING ANCHORS |
|---|---|---|---|---|---|---|---|---|
| FT | EA | FT | EA | FT-IN | EA | FT-IN | FT-IN | EA |
| 7 | 4 | 3.5 | 4 | 5'-4 1/2" | 2 | 5'-8 3/4" | 3'-1" | 4 |
| 8 | 4 | 4 | 4 | 5'-10 1/2" | 2 | 6'-2 3/4" | 3'-7" | 4 |
| 9 | 4 | 4.5 | 4 | 6'-4 1/2" | 2 | 6'-8 3/4" | 4'-1" | 4 |
| 10 | 5 | 5 | 4 | 6'-10 1/2" | 2 | 7'-2 3/4" | 4'-7" | 4 |

(1) SEE TABLE B FOR LENGTH OF EACH PRETENSIONING STRAND.
(2) SEE TABLE B FOR COUNT OF P-T DUCTS.
(3) SEE TABLE B FOR COUNT OF BAR "B5".

## TABLE B

| L | b | COUNT OF P-T DUCTS PLACED LONGITUDINALLY (1) | COUNT OF ALL BLOCK-OUTS | COUNT OF LARGER (6"x24") BLOCK-OUTS | COUNT OF SMALLER (6"x8") BLOCK-OUTS | COUNT OF BAR "A2" | LENGTH OF EACH BAR "A2" | COUNT OF BAR "A1" | LENGTH OF EACH BAR "A1" | COUNT OF BAR "A3" | LENGTH OF EACH BAR "A3" | COUNT OF BAR "C" | LENGTH OF EACH BAR "C" | COUNT OF BAR "B1" | LENGTH OF EACH BAR "B1" | COUNT OF BAR "B2" | LENGTH OF EACH BAR "B2" | COUNT OF BAR "B4" | LENGTH OF EACH BAR "B4" | COUNT OF BAR "B5" (2) | COUNT OF DOWELS | LENGTH OF EACH DOWEL | LENGTH OF EACH PRETEN-SIONING STRAND (3) (7-WIRE 1/2") |
|---|---|---|---|---|---|---|---|---|---|---|---|---|---|---|---|---|---|---|---|---|---|---|---|
| FT | FT | EA | EA | EA | EA | EA | FT | EA | FT-IN | EA | FT-IN | EA | FT | EA | FT | EA | FT | EA | FT | EA | EA | FT | FT |
| 12 | 8 | 6 | 6 | 2 | 4 | 12 | 6 | 26 | 4'-6" | 2 | 5'-7" | 6 | 3 | 5 | 11.5 | 16 | 3.5 | 4 | 2.5 | 6 | 18 | 2 | 12 |
| 12.5 | 8.5 | 6 | 6 | 2 | 4 | 12 | 6 | 26 | 4'-6" | 2 | 5'-7" | 6 | 3 | 5 | 12 | 16 | 3.5 | 4 | 2.5 | 6 | 18 | 2 | 12.5 |
| 13 | 9 | 6 | 6 | 2 | 4 | 12 | 6 | 26 | 4'-6" | 2 | 5'-7" | 6 | 3 | 5 | 12.5 | 16 | 3.5 | 4 | 2.5 | 6 | 18 | 2 | 13 |
| 13.5 | 9.5 | 8 | 8 | 2 | 6 | 12 | 6 | 38 | 4'-6" | 2 | 5'-7" | 6 | 3 | 5 | 13 | 24 | 3.5 | 4 | 2.5 | 9 | 24 | 2 | 13.5 |
| 14 | 10 | 8 | 8 | 2 | 6 | 12 | 6 | 38 | 4'-6" | 2 | 5'-7" | 6 | 3 | 5 | 13.5 | 24 | 3.5 | 4 | 2.5 | 9 | 24 | 2 | 14 |
| 14.5 | 10.5 | 8 | 8 | 2 | 6 | 12 | 6 | 38 | 4'-6" | 2 | 5'-7" | 6 | 3 | 5 | 14 | 24 | 3.5 | 4 | 2.5 | 9 | 24 | 2 | 14.5 |
| 15 | 11 | 8 | 8 | 2 | 6 | 12 | 6 | 38 | 4'-6" | 2 | 5'-7" | 6 | 3 | 5 | 14.5 | 24 | 3.5 | 4 | 2.5 | 9 | 24 | 2 | 15 |
| 15.5 | 11.5 | 8 | 8 | 2 | 6 | 12 | 6 | 38 | 4'-6" | 2 | 5'-7" | 6 | 3 | 5 | 15 | 24 | 3.5 | 4 | 2.5 | 9 | 24 | 2 | 15.5 |
| 16 | 12 | 8 | 8 | 2 | 6 | 12 | 6 | 38 | 4'-6" | 2 | 5'-7" | 6 | 3 | 5 | 15.5 | 24 | 3.5 | 4 | 2.5 | 9 | 24 | 2 | 16 |
| 16.5 | 12.5 | 8 | 8 | 2 | 6 | 12 | 6 | 38 | 4'-6" | 2 | 5'-7" | 6 | 3 | 5 | 16 | 24 | 3.5 | 4 | 2.5 | 9 | 24 | 2 | 16.5 |

(1) SEE TABLE A FOR LENGTH OF EACH P-T DUCT.
(2) SEE TABLE A FOR LENGTH OF EACH BAR "B5".
(3) SEE TABLE A FOR COUNT OF PRETENSIONING STRANDS.

**FOR JOINT PANEL TYPE C1 OR TYPE C3**

# CONSTRUCTION DETAILS
# REINFORCEMENT DIMENSIONS AND QUANTITIES
# PRECAST PRESTRESSED CONCRETE PAVEMENT

NO SCALE

**C-314**

STATE OF CALIFORNIA - DEPARTMENT OF TRANSPORTATION
Caltrans®
DESIGN

FUNCTIONAL SUPERVISOR: KIRSTEN STAHL
CALCULATED-DESIGNED BY: WINNIE DEGUZMAN
CHECKED BY: KIRSTEN STAHL
REVISED BY
DATE REVISED

LAST REVISION 00-00-00
DATE PLOTTED => 28-JUN-2011
TIME PLOTTED => 20:00

| Dist | COUNTY | ROUTE | POST MILES TOTAL PROJECT | SHEET No. | TOTAL SHEETS |
|---|---|---|---|---|---|
| 07 | LA | 710 | 17.2/26.4 | 426 | 1507 |

REGISTERED CIVIL ENGINEER 2-3-11 DATE

6-27-11
PLANS APPROVAL DATE

REGISTERED PROFESSIONAL ENGINEER KIRSTEN R. STAHL No. C46857 Exp. 6-30-11 CIVIL STATE OF CALIFORNIA

*THE STATE OF CALIFORNIA OR ITS OFFICERS OR AGENTS SHALL NOT BE RESPONSIBLE FOR THE ACCURACY OR COMPLETENESS OF SCANNED COPIES OF THIS PLAN SHEET.*

NOTES:

1. FOR PANELS WITH A RADIUS (WEDGE PANELS), THE DIMENSIONS AND QUANTITIES OF THE REINFORCEMENT ARE CONSIDERED THE SAME AND VARY MINIMALLY WITH RESPECT TO THE LENGTH (L) AND IN WIDTH (W).
2. FOR TABLE A, REINFORCEMENT IS PLACED OR MEASURED IN THE LONGITUDINAL DIRECTION, UNLESS INDICATED OTHERWISE.
3. FOR TABLE B, REINFORCEMENT IS PLACED OR MEASURED IN THE TRANSVERSE DIRECTION, UNLESS INDICATED OTHERWISE.
4. ALL REINFORCEMENT DIMENSIONS ARE TO BE VERIFIED BY THE MANUFACTURER BEFORE PANEL FABRICATION.

ABBREVIATIONS;

P-T POST-TENSIONING

# TABLE B

| L | b | COUNT OF P-T DUCTS PLACED LONGITUDINALLY (1) | COUNT OF ALL BLOCK-OUTS | COUNT OF LARGER (6"x24") BLOCK-OUTS | COUNT OF SMALLER (6"x8") BLOCK-OUTS | COUNT OF BAR "A2" | LENGTH OF EACH BAR "A2" | COUNT OF BAR "A1" | LENGTH OF EACH BAR "A1" | COUNT OF BAR "A3" | LENGTH OF EACH BAR "A3" | COUNT OF BAR "C" | LENGTH OF EACH BAR "C" | COUNT OF BAR "B1" | LENGTH OF EACH BAR "B1" | COUNT OF BAR "B2" | LENGTH OF EACH BAR "B2" | COUNT OF BAR "B4" | LENGTH OF EACH BAR "B4" | COUNT OF BAR "B5" (2) | COUNT OF DOWELS | LENGTH OF EACH DOWEL | LENGTH OF EACH PRETEN-SIONING STRAND (7-WIRE 1/2") (3) |
|---|---|---|---|---|---|---|---|---|---|---|---|---|---|---|---|---|---|---|---|---|---|---|---|
| FT | FT | EA | EA | EA | EA | EA | FT | EA | FT-IN | EA | FT-IN | EA | FT | EA | FT | EA | FT | EA | FT | EA | EA | FT | FT |
| 17 | 13 | 10 | 10 | 2 | 8 | 12 | 6 | 50 | 4'-6" | 2 | 5'-7" | 6 | 3 | 5 | 16.5 | 32 | 3.5 | 4 | 2.5 | 9 | 30 | 2 | 17 |
| 17.5 | 13.5 | 10 | 10 | 2 | 8 | 12 | 6 | 50 | 4'-6" | 2 | 5'-7" | 6 | 3 | 5 | 17 | 32 | 3.5 | 4 | 2.5 | 9 | 30 | 2 | 17.5 |
| 18 | 14 | 10 | 10 | 2 | 8 | 12 | 6 | 50 | 4'-6" | 2 | 5'-7" | 6 | 3 | 5 | 17.5 | 32 | 3.5 | 4 | 2.5 | 9 | 30 | 2 | 18 |
| 18.5 | 14.5 | 10 | 10 | 2 | 8 | 12 | 6 | 50 | 4'-6" | 2 | 5'-7" | 6 | 3 | 5 | 18 | 32 | 3.5 | 4 | 2.5 | 9 | 30 | 2 | 18.5 |
| 19 | 15 | 10 | 10 | 2 | 8 | 12 | 6 | 50 | 4'-6" | 2 | 5'-7" | 6 | 3 | 5 | 18.5 | 32 | 3.5 | 4 | 2.5 | 9 | 30 | 2 | 19 |
| 19.5 | 15.5 | 10 | 10 | 2 | 8 | 12 | 6 | 50 | 4'-6" | 2 | 5'-7" | 6 | 3 | 5 | 19 | 32 | 3.5 | 4 | 2.5 | 9 | 30 | 2 | 19.5 |
| 20 | 16 | 10 | 10 | 2 | 8 | 12 | 6 | 50 | 4'-6" | 2 | 5'-7" | 6 | 3 | 5 | 19.5 | 32 | 3.5 | 4 | 2.5 | 9 | 30 | 2 | 20 |
| 20.5 | 16.5 | 12 | 12 | 4 | 8 | 24 | 6 | 50 | 4'-6" | 4 | 5'-7" | 10 | 3 | 5 | 20 | 32 | 3.5 | 8 | 2.5 | 12 | 36 | 2 | 20.5 |
| 21 | 17 | 12 | 12 | 4 | 8 | 24 | 6 | 50 | 4'-6" | 4 | 5'-7" | 10 | 3 | 5 | 20.5 | 32 | 3.5 | 8 | 2.5 | 12 | 36 | 2 | 21 |
| 21.5 | 17.5 | 12 | 12 | 4 | 8 | 24 | 6 | 50 | 4'-6" | 4 | 5'-7" | 10 | 3 | 5 | 21 | 32 | 3.5 | 8 | 2.5 | 12 | 36 | 2 | 21.5 |
| 22 | 18 | 12 | 12 | 4 | 8 | 24 | 6 | 50 | 4'-6" | 4 | 5'-7" | 10 | 3 | 5 | 21.5 | 32 | 3.5 | 8 | 2.5 | 12 | 36 | 2 | 22 |
| 22.5 | 18.5 | 12 | 12 | 4 | 8 | 24 | 6 | 50 | 4'-6" | 4 | 5'-7" | 10 | 3 | 5 | 22 | 32 | 3.5 | 8 | 2.5 | 12 | 36 | 2 | 22.5 |
| 23 | 19 | 12 | 12 | 4 | 8 | 24 | 6 | 50 | 4'-6" | 4 | 5'-7" | 10 | 3 | 5 | 22.5 | 32 | 3.5 | 8 | 2.5 | 12 | 36 | 2 | 23 |
| 23.5 | 19.5 | 14 | 14 | 4 | 10 | 24 | 6 | 62 | 4'-6" | 4 | 5'-7" | 10 | 3 | 5 | 23 | 40 | 3.5 | 8 | 2.5 | 15 | 42 | 2 | 23.5 |
| 24 | 20 | 14 | 14 | 4 | 10 | 24 | 6 | 62 | 4'-6" | 4 | 5'-7" | 10 | 3 | 5 | 23.5 | 40 | 3.5 | 8 | 2.5 | 15 | 42 | 2 | 24 |
| 24.5 | 20.5 | 14 | 14 | 4 | 10 | 24 | 6 | 62 | 4'-6" | 4 | 5'-7" | 10 | 3 | 5 | 24 | 40 | 3.5 | 8 | 2.5 | 15 | 42 | 2 | 24.5 |
| 25 | 21 | 14 | 14 | 4 | 10 | 24 | 6 | 62 | 4'-6" | 4 | 5'-7" | 10 | 3 | 5 | 24.5 | 40 | 3.5 | 8 | 2.5 | 15 | 42 | 2 | 25 |
| 25.5 | 21.5 | 14 | 14 | 4 | 10 | 24 | 6 | 62 | 4'-6" | 4 | 5'-7" | 10 | 3 | 5 | 25 | 40 | 3.5 | 8 | 2.5 | 15 | 42 | 2 | 25.5 |
| 26 | 22 | 14 | 14 | 4 | 10 | 24 | 6 | 62 | 4'-6" | 4 | 5'-7" | 10 | 3 | 5 | 25.5 | 40 | 3.5 | 8 | 2.5 | 15 | 42 | 2 | 26 |
| 26.5 | 22.5 | 14 | 14 | 4 | 10 | 24 | 6 | 62 | 4'-6" | 4 | 5'-7" | 10 | 3 | 5 | 26 | 40 | 3.5 | 8 | 2.5 | 15 | 42 | 2 | 26.5 |

(1) SEE TABLE A FOR LENGTH OF EACH P-T DUCT.
(2) SEE TABLE A FOR LENGTH OF EACH BAR "B5".
(3) SEE TABLE A FOR COUNT OF PRETENSIONING STRANDS.

**FOR JOINT PANEL TYPE C1 OR TYPE C3**

**CONSTRUCTION DETAILS**
**REINFORCEMENT DIMENSIONS AND QUANTITIES**
**PRECAST PRESTRESSED CONCRETE PAVEMENT**

NO SCALE

**C-315**

STATE OF CALIFORNIA - DEPARTMENT OF TRANSPORTATION
Caltrans® DESIGN

FUNCTIONAL SUPERVISOR: KIRSTEN STAHL
CALCULATED-DESIGNED BY: WINNIE DEGUZMAN
CHECKED BY: KIRSTEN STAHL
REVISED BY / DATE REVISED

LAST REVISION 00-00-00
DATE PLOTTED => 28-JUN-2011
TIME PLOTTED => 20:00

| Dist | COUNTY | ROUTE | POST MILES TOTAL PROJECT | SHEET No. | TOTAL SHEETS |
|---|---|---|---|---|---|
| 07 | LA | 710 | 17.2/26.4 | 427 | 1507 |

REGISTERED CIVIL ENGINEER 2-3-11 DATE

6-27-11
PLANS APPROVAL DATE

REGISTERED PROFESSIONAL ENGINEER KIRSTEN R. STAHL No. C46857 Exp. 6-30-11 CIVIL STATE OF CALIFORNIA

*THE STATE OF CALIFORNIA OR ITS OFFICERS OR AGENTS SHALL NOT BE RESPONSIBLE FOR THE ACCURACY OR COMPLETENESS OF SCANNED COPIES OF THIS PLAN SHEET.*

NOTES:

1. FOR PANELS WITH A RADIUS (WEDGE PANELS), THE DIMENSIONS AND QUANTITIES OF THE REINFORCEMENT ARE CONSIDERED THE SAME AND VARY MINIMALLY WITH RESPECT TO THE LENGTH (L) AND IN WIDTH (W).
2. FOR TABLE A, REINFORCEMENT IS PLACED OR MEASURED IN THE LONGITUDINAL DIRECTION, UNLESS INDICATED OTHERWISE.
3. FOR TABLE B, REINFORCEMENT IS PLACED OR MEASURED IN THE TRANSVERSE DIRECTION, UNLESS INDICATED OTHERWISE.
4. ALL REINFORCEMENT DIMENSIONS ARE TO BE VERIFIED BY THE MANUFACTURER BEFORE PANEL FABRICATION.

ABBREVIATIONS:

P-T POST-TENSIONING

# TABLE B

| L | b | COUNT OF P-T DUCTS PLACED LONGITUDINALLY (1) | COUNT OF ALL BLOCK-OUTS | COUNT OF LARGER (6"x24") BLOCK-OUTS | COUNT OF SMALLER (6"x8") BLOCK-OUTS | COUNT OF BAR "A2" | LENGTH OF EACH BAR "A2" | COUNT OF BAR "A1" | LENGTH OF EACH BAR "A1" | COUNT OF BAR "A3" | LENGTH OF EACH BAR "A3" | COUNT OF BAR "C" | LENGTH OF EACH BAR "C" | COUNT OF BAR "B1" | LENGTH OF EACH BAR "B1" | COUNT OF BAR "B2" | LENGTH OF EACH BAR "B2" | COUNT OF BAR "B4" | LENGTH OF EACH BAR "B4" | COUNT OF BAR "B5" (2) | COUNT OF DOWELS | LENGTH OF EACH DOWEL | LENGTH OF EACH PRETEN-SIONING STRAND (3) (7-WIRE 1/2") |
|---|---|---|---|---|---|---|---|---|---|---|---|---|---|---|---|---|---|---|---|---|---|---|---|
| FT | FT | EA | EA | EA | EA | EA | FT | EA | FT-IN | EA | FT-IN | EA | FT | EA | FT | EA | FT | EA | FT | EA | EA | FT | FT |
| 27 | 23 | 14 | 14 | 4 | 10 | 24 | 6 | 62 | 4'-6" | 4 | 5'-7" | 10 | 3 | 5 | 26.5 | 40 | 3.5 | 8 | 2.5 | 15 | 42 | 2 | 27 |
| 27.5 | 23.5 | 16 | 16 | 4 | 12 | 24 | 6 | 74 | 4'-6" | 4 | 5'-7" | 10 | 3 | 5 | 27 | 48 | 3,5 | 8 | 2.5 | 15 | 48 | 2 | 27.5 |
| 28 | 24 | 16 | 16 | 4 | 12 | 24 | 6 | 74 | 4'-6" | 4 | 5'-7" | 10 | 3 | 5 | 27.5 | 48 | 3,5 | 8 | 2.5 | 15 | 48 | 2 | 28 |
| 28.5 | 24.5 | 16 | 16 | 4 | 12 | 24 | 6 | 74 | 4'-6" | 4 | 5'-7" | 10 | 3 | 5 | 28 | 48 | 3,5 | 8 | 2.5 | 15 | 48 | 2 | 28.5 |
| 29 | 25 | 16 | 16 | 4 | 12 | 24 | 6 | 74 | 4'-6" | 4 | 5'-7" | 10 | 3 | 5 | 28.5 | 48 | 3,5 | 8 | 2.5 | 15 | 48 | 2 | 29 |
| 29.5 | 25.5 | 16 | 16 | 4 | 12 | 24 | 6 | 74 | 4'-6" | 4 | 5'-7" | 10 | 3 | 5 | 29 | 48 | 3,5 | 8 | 2.5 | 15 | 48 | 2 | 29.5 |
| 30 | 26 | 16 | 16 | 4 | 12 | 24 | 6 | 74 | 4'-6" | 4 | 5'-7" | 10 | 3 | 5 | 29.5 | 48 | 3,5 | 8 | 2.5 | 15 | 48 | 2 | 30 |
| 30.5 | 26.5 | 16 | 16 | 4 | 12 | 24 | 6 | 74 | 4'-6" | 4 | 5'-7" | 10 | 3 | 5 | 30 | 48 | 3,5 | 8 | 2.5 | 15 | 48 | 2 | 30.5 |
| 31 | 27 | 18 | 18 | 6 | 12 | 36 | 6 | 74 | 4'-6" | 6 | 5'-7" | 14 | 3 | 5 | 30.5 | 48 | 3,5 | 12 | 2.5 | 18 | 54 | 2 | 31 |
| 31.5 | 27.5 | 18 | 18 | 6 | 12 | 36 | 6 | 74 | 4'-6" | 6 | 5'-7" | 14 | 3 | 5 | 31 | 48 | 3,5 | 12 | 2.5 | 18 | 54 | 2 | 31.5 |
| 32 | 28 | 18 | 18 | 6 | 12 | 36 | 6 | 74 | 4'-6" | 6 | 5'-7" | 14 | 3 | 5 | 31.5 | 48 | 3,5 | 12 | 2.5 | 18 | 54 | 2 | 32 |
| 32.5 | 28.5 | 18 | 18 | 6 | 12 | 36 | 6 | 74 | 4'-6" | 6 | 5'-7" | 14 | 3 | 5 | 32 | 48 | 3,5 | 12 | 2.5 | 18 | 54 | 2 | 32.5 |
| 33 | 29 | 18 | 18 | 6 | 12 | 36 | 6 | 74 | 4'-6" | 6 | 5'-7" | 14 | 3 | 5 | 32.5 | 48 | 3,5 | 12 | 2.5 | 18 | 54 | 2 | 33 |
| 33.5 | 29.5 | 20 | 20 | 6 | 14 | 36 | 6 | 86 | 4'-6" | 6 | 5'-7" | 14 | 3 | 5 | 33 | 56 | 3,5 | 12 | 2.5 | 21 | 60 | 2 | 33.5 |
| 34 | 30 | 20 | 20 | 6 | 14 | 36 | 6 | 86 | 4'-6" | 6 | 5'-7" | 14 | 3 | 5 | 33.5 | 56 | 3,5 | 12 | 2.5 | 21 | 60 | 2 | 34 |
| 34.5 | 30.5 | 20 | 20 | 6 | 14 | 36 | 6 | 86 | 4'-6" | 6 | 5'-7" | 14 | 3 | 5 | 34 | 56 | 3,5 | 12 | 2.5 | 21 | 60 | 2 | 34.5 |
| 35 | 31 | 20 | 20 | 6 | 14 | 36 | 6 | 86 | 4'-6" | 6 | 5'-7" | 14 | 3 | 5 | 34.5 | 56 | 3,5 | 12 | 2.5 | 21 | 60 | 2 | 35 |
| 35.5 | 31.5 | 20 | 20 | 6 | 14 | 36 | 6 | 86 | 4'-6" | 6 | 5'-7" | 14 | 3 | 5 | 35 | 56 | 3,5 | 12 | 2.5 | 21 | 60 | 2 | 35.5 |
| 36 | 32 | 20 | 20 | 6 | 14 | 36 | 6 | 86 | 4'-6" | 6 | 5'-7" | 14 | 3 | 5 | 35.5 | 56 | 3,5 | 12 | 2.5 | 21 | 60 | 2 | 36 |
| 36.5 | 32.5 | 20 | 20 | 6 | 14 | 36 | 6 | 86 | 4'-6" | 6 | 5'-7" | 14 | 3 | 5 | 36 | 56 | 3,5 | 12 | 2.5 | 21 | 60 | 2 | 36.5 |

(1) SEE TABLE A FOR LENGTH OF EACH P-T DUCT.
(2) SEE TABLE A FOR LENGTH OF EACH BAR "B5".
(3) SEE TABLE A FOR COUNT OF PRETENSIONING STRANDS.

## FOR JOINT PANEL TYPE C1 OR TYPE C3

## CONSTRUCTION DETAILS
## REINFORCEMENT DIMENSIONS AND QUANTITIES
## PRECAST PRESTRESSED CONCRETE PAVEMENT

NO SCALE

C-316

STATE OF CALIFORNIA - DEPARTMENT OF TRANSPORTATION
Caltrans DESIGN

FUNCTIONAL SUPERVISOR: KIRSTEN STAHL
CALCULATED-DESIGNED BY: WINNIE DEGUZMAN
CHECKED BY: KIRSTEN STAHL
REVISED BY
DATE REVISED

LAST REVISION 00-00-00
DATE PLOTTED => 28-JUN-2011
TIME PLOTTED => 20:00

| Dist | COUNTY | ROUTE | POST MILES TOTAL PROJECT | SHEET No. | TOTAL SHEETS |
|---|---|---|---|---|---|
| 07 | LA | 710 | 17.2/26.4 | 428 | 1507 |

REGISTERED CIVIL ENGINEER 2-3-11 DATE

6-27-11
PLANS APPROVAL DATE

REGISTERED PROFESSIONAL ENGINEER KIRSTEN R. STAHL No. C46857 Exp. 6-30-11 CIVIL STATE OF CALIFORNIA

*THE STATE OF CALIFORNIA OR ITS OFFICERS OR AGENTS SHALL NOT BE RESPONSIBLE FOR THE ACCURACY OR COMPLETENESS OF SCANNED COPIES OF THIS PLAN SHEET.*

NOTES:

1. FOR PANELS WITH A RADIUS (WEDGE PANELS), THE DIMENSIONS AND QUANTITIES OF THE REINFORCEMENT ARE CONSIDERED THE SAME AND VARY MINIMALLY WITH RESPECT TO THE LENGTH (L) AND IN WIDTH (W).
2. FOR TABLE A, REINFORCEMENT IS PLACED OR MEASURED IN THE LONGITUDINAL DIRECTION, UNLESS INDICATED OTHERWISE.
3. FOR TABLE B, REINFORCEMENT IS PLACED OR MEASURED IN THE TRANSVERSE DIRECTION, UNLESS INDICATED OTHERWISE.
4. ALL REINFORCEMENT DIMENSIONS ARE TO BE VERIFIED BY THE MANUFACTURER BEFORE PANEL FABRICATION.

ABBREVIATIONS:

P-T POST-TENSIONING

# TABLE B

| L | b | COUNT OF P-T DUCTS PLACED LONGITUDINALLY (1) | COUNT OF ALL BLOCK-OUTS | COUNT OF LARGER (6"x24") BLOCK-OUTS | COUNT OF SMALLER (6"x8") BLOCK-OUTS | COUNT OF BAR "A2" | LENGTH OF EACH BAR "A2" | COUNT OF BAR "A1" | LENGTH OF EACH BAR "A1" | COUNT OF BAR "A3" | LENGTH OF EACH BAR "A3" | COUNT OF BAR "C" | LENGTH OF EACH BAR "C" | COUNT OF BAR "B1" | LENGTH OF EACH BAR "B1" | COUNT OF BAR "B2" | LENGTH OF EACH BAR "B2" | COUNT OF BAR "B4" | LENGTH OF EACH BAR "B4" | COUNT OF BAR "B5" (2) | COUNT OF DOWELS | LENGTH OF EACH DOWEL | LENGTH OF EACH PRETEN-SIONING STRAND (3) (7-WIRE 1/2") |
|---|---|---|---|---|---|---|---|---|---|---|---|---|---|---|---|---|---|---|---|---|---|---|---|
| FT | FT | EA | EA | EA | EA | EA | FT | EA | FT-IN | EA | FT-IN | EA | FT | EA | FT | EA | FT | EA | FT | EA | EA | FT | FT |
| 37 | 33 | 22 | 22 | 6 | 16 | 36 | 6 | 98 | 4'-6" | 6 | 5'-7" | 14 | 3 | 5 | 36.5 | 64 | 3.5 | 12 | 2.5 | 21 | 66 | 2 | 37 |
| 37.5 | 33.5 | 22 | 22 | 6 | 16 | 36 | 6 | 98 | 4'-6" | 6 | 5'-7" | 14 | 3 | 5 | 37 | 64 | 3.5 | 12 | 2.5 | 21 | 66 | 2 | 37.5 |
| 38 | 34 | 22 | 22 | 6 | 16 | 36 | 6 | 98 | 4'-6" | 6 | 5'-7" | 14 | 3 | 5 | 37.5 | 64 | 3.5 | 12 | 2.5 | 21 | 66 | 2 | 38 |
| 38.5 | 34.5 | 22 | 22 | 6 | 16 | 36 | 6 | 98 | 4'-6" | 6 | 5'-7" | 14 | 3 | 5 | 38 | 64 | 3.5 | 12 | 2.5 | 21 | 66 | 2 | 38.5 |
| 39 | 35 | 22 | 22 | 6 | 16 | 36 | 6 | 98 | 4'-6" | 6 | 5'-7" | 14 | 3 | 5 | 38.5 | 64 | 3.5 | 12 | 2.5 | 21 | 66 | 2 | 39 |
| 39.5 | 35.5 | 22 | 22 | 6 | 16 | 36 | 6 | 98 | 4'-6" | 6 | 5'-7" | 14 | 3 | 5 | 39 | 64 | 3.5 | 12 | 2.5 | 21 | 66 | 2 | 39.5 |
| 40 | 36 | 22 | 22 | 6 | 16 | 36 | 6 | 98 | 4'-6" | 6 | 5'-7" | 14 | 3 | 5 | 39.5 | 64 | 3.5 | 12 | 2.5 | 21 | 66 | 2 | 40 |
| 40.5 | 36.5 | 24 | 24 | 8 | 16 | 48 | 6 | 98 | 4'-6" | 8 | 5'-7" | 18 | 3 | 5 | 40 | 64 | 3.5 | 16 | 2.5 | 24 | 72 | 2 | 40.5 |
| 41 | 37 | 24 | 24 | 8 | 16 | 48 | 6 | 98 | 4'-6" | 8 | 5'-7" | 18 | 3 | 5 | 40.5 | 64 | 3.5 | 16 | 2.5 | 24 | 72 | 2 | 41 |
| 41.5 | 37.5 | 24 | 24 | 8 | 16 | 48 | 6 | 98 | 4'-6" | 8 | 5'-7" | 18 | 3 | 5 | 41 | 64 | 3.5 | 16 | 2.5 | 24 | 72 | 2 | 41.5 |
| 42 | 38 | 24 | 24 | 8 | 16 | 48 | 6 | 98 | 4'-6" | 8 | 5'-7" | 18 | 3 | 5 | 41.5 | 64 | 3.5 | 16 | 2.5 | 24 | 72 | 2 | 42 |
| 42.5 | 38.5 | 24 | 24 | 8 | 16 | 48 | 6 | 98 | 4'-6" | 8 | 5'-7" | 18 | 3 | 5 | 42 | 64 | 3.5 | 16 | 2.5 | 24 | 72 | 2 | 42.5 |
| 43 | 39 | 24 | 24 | 8 | 16 | 48 | 6 | 98 | 4'-6" | 8 | 5'-7" | 18 | 3 | 5 | 42.5 | 64 | 3.5 | 16 | 2.5 | 24 | 72 | 2 | 43 |
| 43.5 | 39.5 | 26 | 26 | 8 | 18 | 48 | 6 | 110 | 4'-6" | 8 | 5'-7" | 18 | 3 | 5 | 43 | 72 | 3.5 | 16 | 2.5 | 27 | 78 | 2 | 43.5 |
| 44 | 40 | 26 | 26 | 8 | 18 | 48 | 6 | 110 | 4'-6" | 8 | 5'-7" | 18 | 3 | 5 | 43.5 | 72 | 3.5 | 16 | 2.5 | 27 | 78 | 2 | 44 |
| 44.5 | 40.5 | 26 | 26 | 8 | 18 | 48 | 6 | 110 | 4'-6" | 8 | 5'-7" | 18 | 3 | 5 | 44 | 72 | 3.5 | 16 | 2.5 | 27 | 78 | 2 | 44.5 |
| 45 | 41 | 26 | 26 | 8 | 18 | 48 | 6 | 110 | 4'-6" | 8 | 5'-7" | 18 | 3 | 5 | 44.5 | 72 | 3.5 | 16 | 2.5 | 27 | 78 | 2 | 45 |
| 45.5 | 41.5 | 26 | 26 | 8 | 18 | 48 | 6 | 110 | 4'-6" | 8 | 5'-7" | 18 | 3 | 5 | 45 | 72 | 3.5 | 16 | 2.5 | 27 | 78 | 2 | 45.5 |
| 46 | 42 | 26 | 26 | 8 | 18 | 48 | 6 | 110 | 4'-6" | 8 | 5'-7" | 18 | 3 | 5 | 45.5 | 72 | 3.5 | 16 | 2.5 | 27 | 78 | 2 | 46 |
| 46.5 | 42.5 | 26 | 26 | 8 | 18 | 48 | 6 | 110 | 4'-6" | 8 | 5'-7" | 18 | 3 | 5 | 46 | 72 | 3.5 | 16 | 2.5 | 27 | 78 | 2 | 46.5 |

(1) SEE TABLE A FOR LENGTH OF EACH P-T DUCT.
(2) SEE TABLE A FOR LENGTH OF EACH BAR "B5".
(3) SEE TABLE A FOR COUNT OF PRETENSIONING STRANDS.

**FOR JOINT PANEL TYPE C1 OR TYPE C3**

**CONSTRUCTION DETAILS**
**REINFORCEMENT DIMENSIONS AND QUANTITIES**
**PRECAST PRESTRESSED CONCRETE PAVEMENT**

NO SCALE

**C-317**

STATE OF CALIFORNIA - DEPARTMENT OF TRANSPORTATION
Caltrans® DESIGN

FUNCTIONAL SUPERVISOR: KIRSTEN STAHL
CALCULATED-DESIGNED BY: WINNIE DEGUZMAN
CHECKED BY: KIRSTEN STAHL
REVISED BY / DATE REVISED

LAST REVISION 00-00-00 | DATE PLOTTED => 28-JUN-2011 | TIME PLOTTED => 20:00

| Dist | COUNTY | ROUTE | POST MILES TOTAL PROJECT | SHEET No. | TOTAL SHEETS |
|---|---|---|---|---|---|
| 07 | LA | 710 | 17.2/26.4 | 429 | 1507 |

REGISTERED CIVIL ENGINEER 2-3-11 DATE

6-27-11
PLANS APPROVAL DATE

REGISTERED PROFESSIONAL ENGINEER KIRSTEN R. STAHL No. C46857 Exp. 6-30-11 CIVIL STATE OF CALIFORNIA

THE STATE OF CALIFORNIA OR ITS OFFICERS OR AGENTS SHALL NOT BE RESPONSIBLE FOR THE ACCURACY OR COMPLETENESS OF SCANNED COPIES OF THIS PLAN SHEET.

NOTES:

1. FOR PANELS WITH A RADIUS (WEDGE PANELS), THE DIMENSIONS AND QUANTITIES OF THE REINFORCEMENT ARE CONSIDERED THE SAME AND VARY MINIMALLY WITH RESPECT TO THE LENGTH (L) AND IN WIDTH (W).
2. FOR TABLE A, REINFORCEMENT IS PLACED OR MEASURED IN THE LONGITUDINAL DIRECTION, UNLESS INDICATED OTHERWISE.
3. FOR TABLE B, REINFORCEMENT IS PLACED OR MEASURED IN THE TRANSVERSE DIRECTION, UNLESS INDICATED OTHERWISE.
4. ALL REINFORCEMENT DIMENSIONS ARE TO BE VERIFIED BY THE MANUFACTURER BEFORE PANEL FABRICATION.

ABBREVIATIONS:

P-T POST-TENSIONING

# TABLE B

| L | b | COUNT OF P-T DUCTS PLACED LONGITUDINALLY (1) | COUNT OF ALL BLOCK-OUTS | COUNT OF LARGER (6"x24") BLOCK-OUTS | COUNT OF SMALLER (6"x8") BLOCK-OUTS | COUNT OF BAR "A2" | LENGTH OF EACH BAR "A2" | COUNT OF BAR "A1" | LENGTH OF EACH BAR "A1" | COUNT OF BAR "A3" | LENGTH OF EACH BAR "A3" | COUNT OF BAR "C" | LENGTH OF EACH BAR "C" | COUNT OF BAR "B1" | LENGTH OF EACH BAR "B1" | COUNT OF BAR "B2" | LENGTH OF EACH BAR "B2" | COUNT OF BAR "B4" | LENGTH OF EACH BAR "B4" | COUNT OF BAR "B5" (2) | COUNT OF DOWELS | LENGTH OF EACH DOWEL | LENGTH OF EACH PRETEN-SIONING STRAND (3) (7-WIRE 1/2") |
|---|---|---|---|---|---|---|---|---|---|---|---|---|---|---|---|---|---|---|---|---|---|---|---|
| FT | FT | EA | EA | EA | EA | EA | FT | EA | FT-IN | EA | FT-IN | EA | FT | EA | FT | EA | FT | EA | FT | EA | EA | FT | FT |
| 47 | 43 | 28 | 28 | 8 | 20 | 48 | 6 | 122 | 4'-6" | 8 | 5'-7" | 18 | 3 | 5 | 46.5 | 80 | 3.5 | 16 | 2.5 | 27 | 84 | 2 | 47 |
| 47.5 | 43.5 | 28 | 28 | 8 | 20 | 48 | 6 | 122 | 4'-6" | 8 | 5'-7" | 18 | 3 | 5 | 47 | 80 | 3.5 | 16 | 2.5 | 27 | 84 | 2 | 47.5 |
| 48 | 44 | 28 | 28 | 8 | 20 | 48 | 6 | 122 | 4'-6" | 8 | 5'-7" | 18 | 3 | 5 | 47.5 | 80 | 3.5 | 16 | 2.5 | 27 | 84 | 2 | 48 |
| 48.5 | 44.5 | 28 | 28 | 8 | 20 | 48 | 6 | 122 | 4'-6" | 8 | 5'-7" | 18 | 3 | 5 | 48 | 80 | 3.5 | 16 | 2.5 | 27 | 84 | 2 | 48.5 |
| 49 | 45 | 28 | 28 | 8 | 20 | 48 | 6 | 122 | 4'-6" | 8 | 5'-7" | 18 | 3 | 5 | 48.5 | 80 | 3.5 | 16 | 2.5 | 27 | 84 | 2 | 49 |
| 49.5 | 45.5 | 28 | 28 | 8 | 20 | 48 | 6 | 122 | 4'-6" | 8 | 5'-7" | 18 | 3 | 5 | 49 | 80 | 3.5 | 16 | 2.5 | 27 | 84 | 2 | 49.5 |
| 50 | 46 | 28 | 28 | 8 | 20 | 48 | 6 | 122 | 4'-6" | 8 | 5'-7" | 18 | 3 | 5 | 49.5 | 80 | 3.5 | 16 | 2.5 | 27 | 84 | 2 | 50 |

(1) SEE TABLE A FOR LENGTH OF EACH P-T DUCT.
(2) SEE TABLE A FOR LENGTH OF EACH BAR "B5".
(3) SEE TABLE A FOR COUNT OF PRETENSIONING STRANDS.

FOR JOINT PANEL
TYPE C1 OR TYPE C3

CONSTRUCTION DETAILS
REINFORCEMENT DIMENSIONS AND QUANTITIES
PRECAST PRESTRESSED CONCRETE PAVEMENT

NO SCALE

C-318

REVISED BY | DATE REVISED
WINNIE DEGUZMAN | KIRSTEN STAHL
CALCULATED-DESIGNED BY | CHECKED BY
FUNCTIONAL SUPERVISOR: KIRSTEN STAHL
STATE OF CALIFORNIA - DEPARTMENT OF TRANSPORTATION
Caltrans DESIGN

LAST REVISION 00-00-00 | DATE PLOTTED => 28-JUN-2011 | TIME PLOTTED => 20:01

| Dist | COUNTY | ROUTE | POST MILES TOTAL PROJECT | SHEET No. | TOTAL SHEETS |
|---|---|---|---|---|---|
| 07 | LA | 710 | 17.2/26.4 | 430 | 1507 |

REGISTERED CIVIL ENGINEER 2-3-11 DATE

6-27-11
PLANS APPROVAL DATE

REGISTERED PROFESSIONAL ENGINEER KIRSTEN R. STAHL No. C46857 Exp. 6-30-11 CIVIL STATE OF CALIFORNIA

*THE STATE OF CALIFORNIA OR ITS OFFICERS OR AGENTS SHALL NOT BE RESPONSIBLE FOR THE ACCURACY OR COMPLETENESS OF SCANNED COPIES OF THIS PLAN SHEET.*

NOTES:

1. FOR PANELS WITH A RADIUS (WEDGE PANELS), THE DIMENSIONS AND QUANTITIES OF THE REINFORCEMENT ARE CONSIDERED THE SAME AND VARY MINIMALLY WITH RESPECT TO THE LENGTH (L) AND IN WIDTH (W).
2. FOR TABLE A, REINFORCEMENT IS PLACED OR MEASURED IN THE LONGITUDINAL DIRECTION, UNLESS INDICATED OTHERWISE.
3. FOR TABLE B, REINFORCEMENT IS PLACED OR MEASURED IN THE TRANSVERSE DIRECTION, UNLESS INDICATED OTHERWISE.
4. ALL REINFORCEMENT DIMENSIONS ARE TO BE VERIFIED BY THE MANUFACTURER BEFORE PANEL FABRICATION.

ABBREVIATIONS;

P-T POST-TENSIONING

## TABLE A

| W | COUNT OF PRETENSIONING STRANDS (7-WIRE 1/2") PLACED TRANSVERSELY | LENGTH OF EACH P-T DUCT | COUNT OF BAR "U1" | LENGTH OF EACH BAR "U1" | COUNT OF BAR "U2" | LENGTH OF EACH BAR "U2" | COUNT OF LIFTING ANCHORS PER PANEL |
|---|---|---|---|---|---|---|---|
| FT | EA | FT | EA | FT-IN | EA | FT-IN | EA |
| 7 | 4 | 7 | 4 | 5'-4 1/2" | 2 | 5'-8 3/4" | 4 |
| 8 | 4 | 8 | 4 | 5'-10 1/2" | 2 | 6'-2 3/4" | 4 |
| 9 | 4 | 9 | 4 | 6'-4 1/2" | 2 | 6'-8 3/4" | 4 |
| 10 | 4 | 10 | 4 | 6'-10 1/2" | 2 | 7'-2 3/4" | 4 |

## TABLE B

| L | b | SPACING BETWEEN P-T DUCTS C-C | COUNT OF P-T DUCTS PLACED LONGITUDINALLY | COUNT OF BLOCK-OUTS | COUNT OF LARGER (6"x24") BLOCK-OUTS | COUNT OF SMALLER (6"x8") BLOCK-OUTS | COUNT OF BAR "A2" | LENGTH OF EACH BAR "A2" | COUNT OF BAR "A1" | LENGTH OF EACH BAR "A1" | COUNT OF BAR "A3" | LENGTH OF EACH BAR "A3" | COUNT OF BAR "C" | LENGTH OF EACH BAR "C" | COUNT OF BAR "B1" | LENGTH OF EACH BAR "B1" | COUNT OF BAR "B2" | LENGTH OF EACH BAR "B2" | COUNT OF BAR "B4" | LENGTH OF EACH BAR "B4" | COUNT OF DOWELS | LENGTH OF EACH DOWEL | LENGTH OF EACH PRETEN-SIONING STRAND (7-WIRE 1/2") |
|---|---|---|---|---|---|---|---|---|---|---|---|---|---|---|---|---|---|---|---|---|---|---|---|
| FT | FT | FT | EA | EA | EA | EA | EA | FT | EA | FT-IN | EA | FT-IN | EA | FT | EA | FT | EA | FT | EA | FT | EA | FT | FT |
| 12 | 8 | 1.67 | 6 | 12 | 4 | 8 | 24 | 6 | 50 | 4'-6" | 4 | 5'-7" | 12 | 3 | 8 | 11.5 | 32 | 112 | 8 | 20 | 36 | 2 | 12 |
| 12.5 | 8.5 | 1.67 | 6 | 12 | 4 | 8 | 24 | 6 | 50 | 4'-6" | 4 | 5'-7" | 12 | 3 | 8 | 12 | 32 | 112 | 8 | 20 | 36 | 2 | 12.5 |
| 13 | 9 | 1.67 | 6 | 12 | 4 | 8 | 24 | 6 | 50 | 4'-6" | 4 | 5'-7" | 12 | 3 | 8 | 12.5 | 32 | 112 | 8 | 20 | 36 | 2 | 13 |
| 13.5 | 9.5 | 1.67 | 8 | 16 | 4 | 12 | 24 | 6 | 74 | 4'-6" | 4 | 5'-7" | 12 | 3 | 8 | 13 | 48 | 168 | 8 | 20 | 48 | 2 | 13.5 |
| 14 | 10 | 1.67 | 8 | 16 | 4 | 12 | 24 | 6 | 74 | 4'-6" | 4 | 5'-7" | 12 | 3 | 8 | 13.5 | 48 | 168 | 8 | 20 | 48 | 2 | 14 |
| 14.5 | 10.5 | 1.67 | 8 | 16 | 4 | 12 | 24 | 6 | 74 | 4'-6" | 4 | 5'-7" | 12 | 3 | 8 | 14 | 48 | 168 | 8 | 20 | 48 | 2 | 14.5 |
| 15 | 11 | 1.67 | 8 | 16 | 4 | 12 | 24 | 6 | 74 | 4'-6" | 4 | 5'-7" | 12 | 3 | 8 | 14.5 | 48 | 168 | 8 | 20 | 48 | 2 | 15 |
| 15.5 | 11.5 | 1.67 | 8 | 16 | 4 | 12 | 24 | 6 | 74 | 4'-6" | 4 | 5'-7" | 12 | 3 | 8 | 15 | 48 | 168 | 8 | 20 | 48 | 2 | 15.5 |
| 16 | 12 | 1.67 | 8 | 16 | 4 | 12 | 24 | 6 | 74 | 4'-6" | 4 | 5'-7" | 12 | 3 | 8 | 15.5 | 48 | 168 | 8 | 20 | 48 | 2 | 16 |
| 16.5 | 12.5 | 1.67 | 8 | 16 | 4 | 12 | 24 | 6 | 74 | 4'-6" | 4 | 5'-7" | 12 | 3 | 8 | 16 | 48 | 168 | 8 | 20 | 48 | 2 | 16.5 |

FOR JOINT PANEL TYPE C2

# CONSTRUCTION DETAILS
# REINFORCEMENT DIMENSIONS AND QUANTITIES
# PRECAST PRESTRESSED CONCRETE PAVEMENT

NO SCALE

C-319

REVISED BY | DATE REVISED
WINNIE DEGUZMAN | KIRSTEN STAHL
CALCULATED-DESIGNED BY | CHECKED BY
FUNCTIONAL SUPERVISOR: KIRSTEN STAHL

STATE OF CALIFORNIA - DEPARTMENT OF TRANSPORTATION
Caltrans®
DESIGN

LAST REVISION 00-00-00
DATE PLOTTED => 28-JUN-2011
TIME PLOTTED => 20:01

| Dist | COUNTY | ROUTE | POST MILES TOTAL PROJECT | SHEET No. | TOTAL SHEETS |
|---|---|---|---|---|---|
| 07 | LA | 710 | 17.2/26.4 | 431 | 1507 |

REGISTERED CIVIL ENGINEER 2-3-11 DATE

6-27-11
PLANS APPROVAL DATE

REGISTERED PROFESSIONAL ENGINEER KIRSTEN R. STAHL No. C46857 Exp. 6-30-11 CIVIL STATE OF CALIFORNIA

*THE STATE OF CALIFORNIA OR ITS OFFICERS OR AGENTS SHALL NOT BE RESPONSIBLE FOR THE ACCURACY OR COMPLETENESS OF SCANNED COPIES OF THIS PLAN SHEET.*

NOTES:

1. FOR PANELS WITH A RADIUS (WEDGE PANELS), THE DIMENSIONS AND QUANTITIES OF THE REINFORCEMENT ARE CONSIDERED THE SAME AND VARY MINIMALLY WITH RESPECT TO THE LENGTH (L) AND IN WIDTH (W).
2. FOR TABLE A, REINFORCEMENT IS PLACED OR MEASURED IN THE LONGITUDINAL DIRECTION, UNLESS INDICATED OTHERWISE.
3. FOR TABLE B, REINFORCEMENT IS PLACED OR MEASURED IN THE TRANSVERSE DIRECTION, UNLESS INDICATED OTHERWISE.
4. ALL REINFORCEMENT DIMENSIONS ARE TO BE VERIFIED BY THE MANUFACTURER BEFORE PANEL FABRICATION.

ABBREVIATIONS:

P-T POST-TENSIONING

# TABLE B

| L | b | SPACING BETWEEN P-T DUCTS C-C | COUNT OF P-T DUCTS PLACED LONGITUDINALLY | COUNT OF BLOCK-OUTS | COUNT OF LARGER (6"x24") BLOCK-OUTS | COUNT OF SMALLER (6"x8") BLOCK-OUTS | COUNT OF BAR "A2" | LENGTH OF EACH BAR "A2" | COUNT OF BAR "A1" | LENGTH OF EACH BAR "A1" | COUNT OF BAR "A3" | LENGTH OF EACH BAR "A3" | COUNT OF BAR "C" | LENGTH OF EACH BAR "C" | COUNT OF BAR "B1" | LENGTH OF EACH BAR "B1" | COUNT OF BAR "B2" | LENGTH OF EACH BAR "B2" | COUNT OF BAR "B4" | LENGTH OF EACH BAR "B4" | COUNT OF DOWELS | LENGTH OF EACH DOWEL | LENGTH OF EACH PRETEN-SIONING STRAND (7-WIRE 1/2") |
|---|---|---|---|---|---|---|---|---|---|---|---|---|---|---|---|---|---|---|---|---|---|---|---|
| FT | FT | FT | EA | EA | EA | EA | EA | FT | EA | FT-IN | EA | FT-IN | EA | FT | EA | FT | EA | FT | EA | FT | EA | FT | FT |
| 17 | 13 | 1.67 | 10 | 20 | 6 | 14 | 36 | 6 | 86 | 4'-6" | 6 | 5'-7" | 16 | 3 | 8 | 16.5 | 56 | 196 | 12 | 30 | 60 | 2 | 17 |
| 17.5 | 13.5 | 1.67 | 10 | 20 | 6 | 14 | 36 | 6 | 86 | 4'-6" | 6 | 5'-7" | 16 | 3 | 8 | 17 | 56 | 196 | 12 | 30 | 60 | 2 | 17.5 |
| 18 | 14 | 1.67 | 10 | 20 | 6 | 14 | 36 | 6 | 86 | 4'-6" | 6 | 5'-7" | 16 | 3 | 8 | 17.5 | 56 | 196 | 12 | 30 | 60 | 2 | 18 |
| 18.5 | 14.5 | 1.67 | 10 | 20 | 6 | 14 | 36 | 6 | 86 | 4'-6" | 6 | 5'-7" | 16 | 3 | 8 | 18 | 56 | 196 | 12 | 30 | 60 | 2 | 18.5 |
| 19 | 15 | 1.67 | 10 | 20 | 6 | 14 | 36 | 6 | 86 | 4'-6" | 6 | 5'-7" | 16 | 3 | 8 | 18.5 | 56 | 196 | 12 | 30 | 60 | 2 | 19 |
| 19.5 | 15.5 | 1.67 | 10 | 20 | 6 | 14 | 36 | 6 | 86 | 4'-6" | 6 | 5'-7" | 16 | 3 | 8 | 19 | 56 | 196 | 12 | 30 | 60 | 2 | 19.5 |
| 20 | 16 | 1.67 | 10 | 20 | 6 | 14 | 36 | 6 | 86 | 4'-6" | 6 | 5'-7" | 16 | 3 | 8 | 19.5 | 56 | 196 | 12 | 30 | 60 | 2 | 20 |
| 20.5 | 16.5 | 1.67 | 12 | 24 | 8 | 16 | 48 | 6 | 98 | 4'-6" | 8 | 5'-7" | 20 | 3 | 8 | 20 | 64 | 224 | 16 | 40 | 72 | 2 | 20.5 |
| 21 | 17 | 1.67 | 12 | 24 | 8 | 16 | 48 | 6 | 98 | 4'-6" | 8 | 5'-7" | 20 | 3 | 8 | 20.5 | 64 | 224 | 16 | 40 | 72 | 2 | 21 |
| 21.5 | 17.5 | 1.67 | 12 | 24 | 8 | 16 | 48 | 6 | 98 | 4'-6" | 8 | 5'-7" | 20 | 3 | 8 | 21 | 64 | 224 | 16 | 40 | 72 | 2 | 21.5 |
| 22 | 18 | 1.67 | 12 | 24 | 8 | 16 | 48 | 6 | 98 | 4'-6" | 8 | 5'-7" | 20 | 3 | 8 | 21.5 | 64 | 224 | 16 | 40 | 72 | 2 | 22 |
| 22.5 | 18.5 | 1.67 | 12 | 24 | 8 | 16 | 48 | 6 | 98 | 4'-6" | 8 | 5'-7" | 20 | 3 | 8 | 22 | 64 | 224 | 16 | 40 | 72 | 2 | 22.5 |
| 23 | 19 | 1.67 | 12 | 24 | 8 | 16 | 48 | 6 | 98 | 4'-6" | 8 | 5'-7" | 20 | 3 | 8 | 22.5 | 64 | 224 | 16 | 40 | 72 | 2 | 23 |
| 23.5 | 19.5 | 1.67 | 14 | 28 | 8 | 20 | 48 | 6 | 122 | 4'-6" | 8 | 5'-7" | 20 | 3 | 8 | 23 | 80 | 280 | 16 | 40 | 84 | 2 | 23.5 |
| 24 | 20 | 1.67 | 14 | 28 | 8 | 20 | 48 | 6 | 122 | 4'-6" | 8 | 5'-7" | 20 | 3 | 8 | 23.5 | 80 | 280 | 16 | 40 | 84 | 2 | 24 |
| 24.5 | 20.5 | 1.67 | 14 | 28 | 8 | 20 | 48 | 6 | 122 | 4'-6" | 8 | 5'-7" | 20 | 3 | 8 | 24 | 80 | 280 | 16 | 40 | 84 | 2 | 24.5 |
| 25 | 21 | 1.67 | 14 | 28 | 8 | 20 | 48 | 6 | 122 | 4'-6" | 8 | 5'-7" | 20 | 3 | 8 | 24.5 | 80 | 280 | 16 | 40 | 84 | 2 | 25 |
| 25.5 | 21.5 | 1.67 | 14 | 28 | 8 | 20 | 48 | 6 | 122 | 4'-6" | 8 | 5'-7" | 20 | 3 | 8 | 25 | 80 | 280 | 16 | 40 | 84 | 2 | 25.5 |
| 26 | 22 | 1.67 | 14 | 28 | 8 | 20 | 48 | 6 | 122 | 4'-6" | 8 | 5'-7" | 20 | 3 | 8 | 25.5 | 80 | 280 | 16 | 40 | 84 | 2 | 26 |
| 26.5 | 22.5 | 1.67 | 14 | 28 | 8 | 20 | 48 | 6 | 122 | 4'-6" | 8 | 5'-7" | 20 | 3 | 8 | 26 | 80 | 280 | 16 | 40 | 84 | 2 | 26.5 |

## FOR JOINT PANEL TYPE C2

## CONSTRUCTION DETAILS
## REINFORCEMENT DIMENSIONS AND QUANTITIES
## PRECAST PRESTRESSED CONCRETE PAVEMENT

NO SCALE

C-320

STATE OF CALIFORNIA - DEPARTMENT OF TRANSPORTATION
Caltrans
DESIGN

FUNCTIONAL SUPERVISOR: KIRSTEN STAHL
CALCULATED-DESIGNED BY: WINNIE DEGUZMAN
CHECKED BY: KIRSTEN STAHL
REVISED BY
DATE REVISED

LAST REVISION 00-00-00
DATE PLOTTED => 28-JUN-2011
TIME PLOTTED => 20:01

| Dist | COUNTY | ROUTE | POST MILES TOTAL PROJECT | SHEET No. | TOTAL SHEETS |
|---|---|---|---|---|---|
| 07 | LA | 710 | 17.2/26.4 | 432 | 1507 |

REGISTERED CIVIL ENGINEER 2-3-11 DATE

6-27-11
PLANS APPROVAL DATE

REGISTERED PROFESSIONAL ENGINEER KIRSTEN R. STAHL No. C46857 Exp. 6-30-11 CIVIL STATE OF CALIFORNIA

*THE STATE OF CALIFORNIA OR ITS OFFICERS OR AGENTS SHALL NOT BE RESPONSIBLE FOR THE ACCURACY OR COMPLETENESS OF SCANNED COPIES OF THIS PLAN SHEET.*

NOTES:

1. FOR PANELS WITH A RADIUS (WEDGE PANELS), THE DIMENSIONS AND QUANTITIES OF THE REINFORCEMENT ARE CONSIDERED THE SAME AND VARY MINIMALLY WITH RESPECT TO THE LENGTH (L) AND IN WIDTH (W).
2. FOR TABLE A, REINFORCEMENT IS PLACED OR MEASURED IN THE LONGITUDINAL DIRECTION, UNLESS INDICATED OTHERWISE.
3. FOR TABLE B, REINFORCEMENT IS PLACED OR MEASURED IN THE TRANSVERSE DIRECTION, UNLESS INDICATED OTHERWISE.
4. ALL REINFORCEMENT DIMENSIONS ARE TO BE VERIFIED BY THE MANUFACTURER BEFORE PANEL FABRICATION.

ABBREVIATIONS:

P-T POST-TENSIONING

# TABLE B

| L | b | SPACING BETWEEN P-T DUCTS C-C | COUNT OF P-T DUCTS PLACED LONGITUDINALLY | COUNT OF BLOCK-OUTS | COUNT OF LARGER (6"x24") BLOCK-OUTS | COUNT OF SMALLER (6"x8") BLOCK-OUTS | COUNT OF BAR "A2" | LENGTH OF EACH BAR "A2" | COUNT OF BAR "A1" | LENGTH OF EACH BAR "A1" | COUNT OF BAR "A3" | LENGTH OF EACH BAR "A3" | COUNT OF BAR "C" | LENGTH OF EACH BAR "C" | COUNT OF BAR "B1" | LENGTH OF EACH BAR "B1" | COUNT OF BAR "B2" | LENGTH OF EACH BAR "B2" | COUNT OF BAR "B4" | LENGTH OF EACH BAR "B4" | COUNT OF DOWELS | LENGTH OF EACH DOWEL | LENGTH OF EACH PRETEN-SIONING STRAND (7-WIRE 1/2") |
|---|---|---|---|---|---|---|---|---|---|---|---|---|---|---|---|---|---|---|---|---|---|---|---|
| FT | FT | FT | EA | EA | EA | EA | EA | FT | EA | FT-IN | EA | FT-IN | EA | FT | EA | FT | EA | FT | EA | FT | EA | FT | FT |
| 27 | 23 | 1.67 | 14 | 28 | 8 | 20 | 48 | 6 | 122 | 4'-6" | 8 | 5'-7" | 20 | 3 | 8 | 26.5 | 80 | 280 | 16 | 40 | 84 | 2 | 27 |
| 27.5 | 23.5 | 1.67 | 16 | 32 | 10 | 22 | 60 | 6 | 134 | 4'-6" | 10 | 5'-7" | 24 | 3 | 8 | 27 | 88 | 308 | 20 | 50 | 96 | 2 | 27.5 |
| 28 | 24 | 1.67 | 16 | 32 | 10 | 22 | 60 | 6 | 134 | 4'-6" | 10 | 5'-7" | 24 | 3 | 8 | 27.5 | 88 | 308 | 20 | 50 | 96 | 2 | 28 |
| 28.5 | 24.5 | 1.67 | 16 | 32 | 10 | 22 | 60 | 6 | 134 | 4'-6" | 10 | 5'-7" | 24 | 3 | 8 | 28 | 88 | 308 | 20 | 50 | 96 | 2 | 28.5 |
| 29 | 25 | 1.67 | 16 | 32 | 10 | 22 | 60 | 6 | 134 | 4'-6" | 10 | 5'-7" | 24 | 3 | 8 | 28.5 | 88 | 308 | 20 | 50 | 96 | 2 | 29 |
| 29.5 | 25.5 | 1.67 | 16 | 32 | 10 | 22 | 60 | 6 | 134 | 4'-6" | 10 | 5'-7" | 24 | 3 | 8 | 29 | 88 | 308 | 20 | 50 | 96 | 2 | 29.5 |
| 30 | 26 | 1.67 | 16 | 32 | 10 | 22 | 60 | 6 | 134 | 4'-6" | 10 | 5'-7" | 24 | 3 | 8 | 29.5 | 88 | 308 | 20 | 50 | 96 | 2 | 30 |
| 30.5 | 26.5 | 1.67 | 16 | 32 | 10 | 22 | 60 | 6 | 134 | 4'-6" | 10 | 5'-7" | 24 | 3 | 8 | 30 | 88 | 308 | 20 | 50 | 96 | 2 | 30.5 |
| 31 | 27 | 1.67 | 18 | 36 | 12 | 24 | 72 | 6 | 146 | 4'-6" | 12 | 5'-7" | 28 | 3 | 8 | 30.5 | 96 | 336 | 24 | 60 | 108 | 2 | 31 |
| 31.5 | 27.5 | 1.67 | 18 | 36 | 12 | 24 | 72 | 6 | 146 | 4'-6" | 12 | 5'-7" | 28 | 3 | 8 | 31 | 96 | 336 | 24 | 60 | 108 | 2 | 31.5 |
| 32 | 28 | 1.67 | 18 | 36 | 12 | 24 | 72 | 6 | 146 | 4'-6" | 12 | 5'-7" | 28 | 3 | 8 | 31.5 | 96 | 336 | 24 | 60 | 108 | 2 | 32 |
| 32.5 | 28.5 | 1.67 | 18 | 36 | 12 | 24 | 72 | 6 | 146 | 4'-6" | 12 | 5'-7" | 28 | 3 | 8 | 32 | 96 | 336 | 24 | 60 | 108 | 2 | 32.5 |
| 33 | 29 | 1.67 | 18 | 36 | 12 | 24 | 72 | 6 | 146 | 4'-6" | 12 | 5'-7" | 28 | 3 | 8 | 32.5 | 96 | 336 | 24 | 60 | 108 | 2 | 33 |
| 33.5 | 29.5 | 1.67 | 20 | 40 | 12 | 28 | 72 | 6 | 170 | 4'-6" | 12 | 5'-7" | 28 | 3 | 8 | 33 | 112 | 392 | 24 | 60 | 120 | 2 | 33.5 |
| 34 | 30 | 1.67 | 20 | 40 | 12 | 28 | 72 | 6 | 170 | 4'-6" | 12 | 5'-7" | 28 | 3 | 8 | 33.5 | 112 | 392 | 24 | 60 | 120 | 2 | 34 |
| 34.5 | 30.5 | 1.67 | 20 | 40 | 12 | 28 | 72 | 6 | 170 | 4'-6" | 12 | 5'-7" | 28 | 3 | 8 | 34 | 112 | 392 | 24 | 60 | 120 | 2 | 34.5 |
| 35 | 31 | 1.67 | 20 | 40 | 12 | 28 | 72 | 6 | 170 | 4'-6" | 12 | 5'-7" | 28 | 3 | 8 | 34.5 | 112 | 392 | 24 | 60 | 120 | 2 | 35 |
| 35.5 | 31.5 | 1.67 | 20 | 40 | 12 | 28 | 72 | 6 | 170 | 4'-6" | 12 | 5'-7" | 28 | 3 | 8 | 35 | 112 | 392 | 24 | 60 | 120 | 2 | 35.5 |
| 36 | 32 | 1.67 | 20 | 40 | 12 | 28 | 72 | 6 | 170 | 4'-6" | 12 | 5'-7" | 28 | 3 | 8 | 35.5 | 112 | 392 | 24 | 60 | 120 | 2 | 36 |
| 36.5 | 32.5 | 1.67 | 20 | 40 | 12 | 28 | 72 | 6 | 170 | 4'-6" | 12 | 5'-7" | 28 | 3 | 8 | 36 | 112 | 392 | 24 | 60 | 120 | 2 | 36.5 |

## FOR JOINT PANEL TYPE C2

## CONSTRUCTION DETAILS
## REINFORCEMENT DIMENSIONS AND QUANTITIES
## PRECAST PRESTRESSED CONCRETE PAVEMENT

NO SCALE

C-321

REVISED BY | DATE REVISED
WINNIE DEGUZMAN | KIRSTEN STAHL
CALCULATED-DESIGNED BY | CHECKED BY
FUNCTIONAL SUPERVISOR: KIRSTEN STAHL

STATE OF CALIFORNIA - DEPARTMENT OF TRANSPORTATION
Caltrans
DESIGN

LAST REVISION 00-00-00 | DATE PLOTTED => 28-JUN-2011 | TIME PLOTTED => 20:01

| Dist | COUNTY | ROUTE | POST MILES TOTAL PROJECT | SHEET No. | TOTAL SHEETS |
|---|---|---|---|---|---|
| 07 | LA | 710 | 17.2/26.4 | 433 | 1507 |

REGISTERED CIVIL ENGINEER 2-3-11 DATE

6-27-11
PLANS APPROVAL DATE

REGISTERED PROFESSIONAL ENGINEER KIRSTEN R. STAHL No. C46857 Exp. 6-30-11 CIVIL STATE OF CALIFORNIA

*THE STATE OF CALIFORNIA OR ITS OFFICERS OR AGENTS SHALL NOT BE RESPONSIBLE FOR THE ACCURACY OR COMPLETENESS OF SCANNED COPIES OF THIS PLAN SHEET.*

NOTES:

1. FOR PANELS WITH A RADIUS (WEDGE PANELS), THE DIMENSIONS AND QUANTITIES OF THE REINFORCEMENT ARE CONSIDERED THE SAME AND VARY MINIMALLY WITH RESPECT TO THE LENGTH (L) AND IN WIDTH (W).
2. FOR TABLE A, REINFORCEMENT IS PLACED OR MEASURED IN THE LONGITUDINAL DIRECTION, UNLESS INDICATED OTHERWISE.
3. FOR TABLE B, REINFORCEMENT IS PLACED OR MEASURED IN THE TRANSVERSE DIRECTION, UNLESS INDICATED OTHERWISE.
4. ALL REINFORCEMENT DIMENSIONS ARE TO BE VERIFIED BY THE MANUFACTURER BEFORE PANEL FABRICATION.

ABBREVIATIONS:

P-T POST-TENSIONING

# TABLE B

| L | b | SPACING BETWEEN P-T DUCTS C-C | COUNT OF P-T DUCTS PLACED LONGITUDINALLY | COUNT OF BLOCK-OUTS | COUNT OF LARGER (6"x24") BLOCK-OUTS | COUNT OF SMALLER (6"x8") BLOCK-OUTS | COUNT OF BAR "A2" | LENGTH OF EACH BAR "A2" | COUNT OF BAR "A1" | LENGTH OF EACH BAR "A1" | COUNT OF BAR "A3" | LENGTH OF EACH BAR "A3" | COUNT OF BAR "C" | LENGTH OF EACH BAR "C" | COUNT OF BAR "B1" | LENGTH OF EACH BAR "B1" | COUNT OF BAR "B2" | LENGTH OF EACH BAR "B2" | COUNT OF BAR "B4" | LENGTH OF EACH BAR "B4" | COUNT OF DOWELS | LENGTH OF EACH DOWEL | LENGTH OF EACH PRETEN-SIONING STRAND (7-WIRE 1/2") |
|---|---|---|---|---|---|---|---|---|---|---|---|---|---|---|---|---|---|---|---|---|---|---|---|
| FT | FT | FT | EA | EA | EA | EA | EA | FT | EA | FT-IN | EA | FT-IN | EA | FT | EA | FT | EA | FT | EA | FT | EA | FT | FT |
| 37 | 33 | 1.67 | 22 | 44 | 14 | 30 | 84 | 6 | 182 | 4'-6" | 14 | 5'-7" | 32 | 3 | 8 | 36.5 | 120 | 420 | 28 | 70 | 132 | 2 | 37 |
| 37.5 | 33.5 | 1.67 | 22 | 44 | 14 | 30 | 84 | 6 | 182 | 4'-6" | 14 | 5'-7" | 32 | 3 | 8 | 37 | 120 | 420 | 28 | 70 | 132 | 2 | 37.5 |
| 38 | 34 | 1.67 | 22 | 44 | 14 | 30 | 84 | 6 | 182 | 4'-6" | 14 | 5'-7" | 32 | 3 | 8 | 37.5 | 120 | 420 | 28 | 70 | 132 | 2 | 38 |
| 38.5 | 34.5 | 1.67 | 22 | 44 | 14 | 30 | 84 | 6 | 182 | 4'-6" | 14 | 5'-7" | 32 | 3 | 8 | 38 | 120 | 420 | 28 | 70 | 132 | 2 | 38.5 |
| 39 | 35 | 1.67 | 22 | 44 | 14 | 30 | 84 | 6 | 182 | 4'-6" | 14 | 5'-7" | 32 | 3 | 8 | 38.5 | 120 | 420 | 28 | 70 | 132 | 2 | 39 |
| 39.5 | 35.5 | 1.67 | 22 | 44 | 14 | 30 | 84 | 6 | 182 | 4'-6" | 14 | 5'-7" | 32 | 3 | 8 | 39 | 120 | 420 | 28 | 70 | 132 | 2 | 39.5 |
| 40 | 36 | 1.67 | 22 | 44 | 14 | 30 | 84 | 6 | 182 | 4'-6" | 14 | 5'-7" | 32 | 3 | 8 | 39.5 | 120 | 420 | 28 | 70 | 132 | 2 | 40 |
| 40.5 | 36.5 | 1.67 | 24 | 48 | 16 | 32 | 96 | 6 | 194 | 4'-6" | 16 | 5'-7" | 36 | 3 | 8 | 40 | 128 | 448 | 32 | 80 | 144 | 2 | 40.5 |
| 41 | 37 | 1.67 | 24 | 48 | 16 | 32 | 96 | 6 | 194 | 4'-6" | 16 | 5'-7" | 36 | 3 | 8 | 40.5 | 128 | 448 | 32 | 80 | 144 | 2 | 41 |
| 41.5 | 37.5 | 1.67 | 24 | 48 | 16 | 32 | 96 | 6 | 194 | 4'-6" | 16 | 5'-7" | 36 | 3 | 8 | 41 | 128 | 448 | 32 | 80 | 144 | 2 | 41.5 |
| 42 | 38 | 1.67 | 24 | 48 | 16 | 32 | 96 | 6 | 194 | 4'-6" | 16 | 5'-7" | 36 | 3 | 8 | 41.5 | 128 | 448 | 32 | 80 | 144 | 2 | 42 |
| 42.5 | 38.5 | 1.67 | 24 | 48 | 16 | 32 | 96 | 6 | 194 | 4'-6" | 16 | 5'-7" | 36 | 3 | 8 | 42 | 128 | 448 | 32 | 80 | 144 | 2 | 42.5 |
| 43 | 39 | 1.67 | 24 | 48 | 16 | 32 | 96 | 6 | 194 | 4'-6" | 16 | 5'-7" | 36 | 3 | 8 | 42.5 | 128 | 448 | 32 | 80 | 144 | 2 | 43 |
| 43.5 | 39.5 | 1.67 | 26 | 52 | 16 | 36 | 96 | 6 | 218 | 4'-6" | 16 | 5'-7" | 36 | 3 | 8 | 43 | 144 | 504 | 32 | 80 | 156 | 2 | 43.5 |
| 44 | 40 | 1.67 | 26 | 52 | 16 | 36 | 96 | 6 | 218 | 4'-6" | 16 | 5'-7" | 36 | 3 | 8 | 43.5 | 144 | 504 | 32 | 80 | 156 | 2 | 44 |
| 44.5 | 40.5 | 1.67 | 26 | 52 | 16 | 36 | 96 | 6 | 218 | 4'-6" | 16 | 5'-7" | 36 | 3 | 8 | 44 | 144 | 504 | 32 | 80 | 156 | 2 | 44.5 |
| 45 | 41 | 1.67 | 26 | 52 | 16 | 36 | 96 | 6 | 218 | 4'-6" | 16 | 5'-7" | 36 | 3 | 8 | 44.5 | 144 | 504 | 32 | 80 | 156 | 2 | 45 |
| 45.5 | 41.5 | 1.67 | 26 | 52 | 16 | 36 | 96 | 6 | 218 | 4'-6" | 16 | 5'-7" | 36 | 3 | 8 | 45 | 144 | 504 | 32 | 80 | 156 | 2 | 45.5 |
| 46 | 42 | 1.67 | 26 | 52 | 16 | 36 | 96 | 6 | 218 | 4'-6" | 16 | 5'-7" | 36 | 3 | 8 | 45.5 | 144 | 504 | 32 | 80 | 156 | 2 | 46 |
| 46.5 | 42.5 | 1.67 | 26 | 52 | 16 | 36 | 96 | 6 | 218 | 4'-6" | 16 | 5'-7" | 36 | 3 | 8 | 46 | 144 | 504 | 32 | 80 | 156 | 2 | 46.5 |

## FOR JOINT PANEL TYPE C2

## CONSTRUCTION DETAILS
## REINFORCEMENT DIMENSIONS AND QUANTITIES
## PRECAST PRESTRESSED CONCRETE PAVEMENT

NO SCALE

**C-322**

STATE OF CALIFORNIA - DEPARTMENT OF TRANSPORTATION
Caltrans DESIGN

FUNCTIONAL SUPERVISOR: KIRSTEN STAHL
CALCULATED-DESIGNED BY: WINNIE DEGUZMAN
CHECKED BY: KIRSTEN STAHL
REVISED BY
DATE REVISED

LAST REVISION 00-00-00
DATE PLOTTED => 28-JUN-2011
TIME PLOTTED => 20:01

| Dist | COUNTY | ROUTE | POST MILES TOTAL PROJECT | SHEET No. | TOTAL SHEETS |
|---|---|---|---|---|---|
| 07 | LA | 710 | 17.2/26.4 | 434 | 1507 |

REGISTERED CIVIL ENGINEER 2-3-11 DATE

6-27-11
PLANS APPROVAL DATE

REGISTERED PROFESSIONAL ENGINEER KIRSTEN R. STAHL No. C46857 Exp. 6-30-11 CIVIL STATE OF CALIFORNIA

*THE STATE OF CALIFORNIA OR ITS OFFICERS OR AGENTS SHALL NOT BE RESPONSIBLE FOR THE ACCURACY OR COMPLETENESS OF SCANNED COPIES OF THIS PLAN SHEET.*

## NOTES:

1. FOR PANELS WITH A RADIUS (WEDGE PANELS), THE DIMENSIONS AND QUANTITIES OF THE REINFORCEMENT ARE CONSIDERED THE SAME AND VARY MINIMALLY WITH RESPECT TO THE LENGTH (L) AND IN WIDTH (W).
2. FOR TABLE A, REINFORCEMENT IS PLACED OR MEASURED IN THE LONGITUDINAL DIRECTION, UNLESS INDICATED OTHERWISE.
3. FOR TABLE B, REINFORCEMENT IS PLACED OR MEASURED IN THE TRANSVERSE DIRECTION, UNLESS INDICATED OTHERWISE.
4. ALL REINFORCEMENT DIMENSIONS ARE TO BE VERIFIED BY THE MANUFACTURER BEFORE PANEL FABRICATION.

## ABBREVIATIONS:

P-T POST-TENSIONING

# TABLE B

| L | b | SPACING BETWEEN P-T DUCTS C-C | COUNT OF P-T DUCTS PLACED LONGITUDINALLY | COUNT OF BLOCK-OUTS | COUNT OF LARGER (6"x24") BLOCK-OUTS | COUNT OF SMALLER (6"x8") BLOCK-OUTS | COUNT OF BAR "A2" | LENGTH OF EACH BAR "A2" | COUNT OF BAR "A1" | LENGTH OF EACH BAR "A1" | COUNT OF BAR "A3" | LENGTH OF EACH BAR "A3" | COUNT OF BAR "C" | LENGTH OF EACH BAR "C" | COUNT OF BAR "B1" | LENGTH OF EACH BAR "B1" | COUNT OF BAR "B2" | LENGTH OF EACH BAR "B2" | COUNT OF BAR "B4" | LENGTH OF EACH BAR "B4" | COUNT OF DOWELS | LENGTH OF EACH DOWEL | LENGTH OF EACH PRETEN-SIONING STRAND (7-WIRE 1/2") |
|---|---|---|---|---|---|---|---|---|---|---|---|---|---|---|---|---|---|---|---|---|---|---|---|
| FT | FT | FT | EA | EA | EA | EA | EA | FT | EA | FT-IN | EA | FT-IN | EA | FT | EA | FT | EA | FT | EA | FT | EA | FT | FT |
| 47 | 43 | 1.67 | 28 | 56 | 18 | 38 | 108 | 6 | 230 | 4'-6" | 18 | 5'-7" | 40 | 3 | 8 | 46.5 | 152 | 532 | 36 | 90 | 168 | 2 | 47 |
| 47.5 | 43.5 | 1.67 | 28 | 56 | 18 | 38 | 108 | 6 | 230 | 4'-6" | 18 | 5'-7" | 40 | 3 | 8 | 47 | 152 | 532 | 36 | 90 | 168 | 2 | 47.5 |
| 48 | 44 | 1.67 | 28 | 56 | 18 | 38 | 108 | 6 | 230 | 4'-6" | 18 | 5'-7" | 40 | 3 | 8 | 47.5 | 152 | 532 | 36 | 90 | 168 | 2 | 48 |
| 48.5 | 44.5 | 1.67 | 28 | 56 | 18 | 38 | 108 | 6 | 230 | 4'-6" | 18 | 5'-7" | 40 | 3 | 8 | 48 | 152 | 532 | 36 | 90 | 168 | 2 | 48.5 |
| 49 | 45 | 1.67 | 28 | 56 | 18 | 38 | 108 | 6 | 230 | 4'-6" | 18 | 5'-7" | 40 | 3 | 8 | 48.5 | 152 | 532 | 36 | 90 | 168 | 2 | 49 |
| 49.5 | 45.5 | 1.67 | 28 | 56 | 18 | 38 | 108 | 6 | 230 | 4'-6" | 18 | 5'-7" | 40 | 3 | 8 | 49 | 152 | 532 | 36 | 90 | 168 | 2 | 49.5 |
| 50 | 46 | 1.67 | 28 | 56 | 18 | 38 | 108 | 6 | 230 | 4'-6" | 18 | 5'-7" | 40 | 3 | 8 | 49.5 | 152 | 532 | 36 | 90 | 168 | 2 | 50 |

## FOR JOINT PANEL TYPE C2

## CONSTRUCTION DETAILS
## REINFORCEMENT DIMENSIONS AND QUANTITIES
## PRECAST PRESTRESSED CONCRETE PAVEMENT

NO SCALE

C-323

REVISED BY | DATE REVISED
WINNIE DEGUZMAN | KIRSTEN STAHL
CALCULATED-DESIGNED BY | CHECKED BY
FUNCTIONAL SUPERVISOR: KIRSTEN STAHL
STATE OF CALIFORNIA - DEPARTMENT OF TRANSPORTATION
Caltrans DESIGN

LAST REVISION 00-00-00 | DATE PLOTTED => 28-JUN-2011 | TIME PLOTTED => 20:40

| Dist | COUNTY | ROUTE | POST MILES TOTAL PROJECT | SHEET No. | TOTAL SHEETS |
|---|---|---|---|---|---|
| 07 | LA | 710 | 17.2/26.4 | 435 | 1507 |

REGISTERED CIVIL ENGINEER 2-3-11 DATE

6-27-11
PLANS APPROVAL DATE

REGISTERED PROFESSIONAL ENGINEER LE NGUYEN No. 65414 Exp. 9-30-11 CIVIL STATE OF CALIFORNIA

*THE STATE OF CALIFORNIA OR ITS OFFICERS OR AGENTS SHALL NOT BE RESPONSIBLE FOR THE ACCURACY OR COMPLETENESS OF SCANNED COPIES OF THIS PLAN SHEET.*

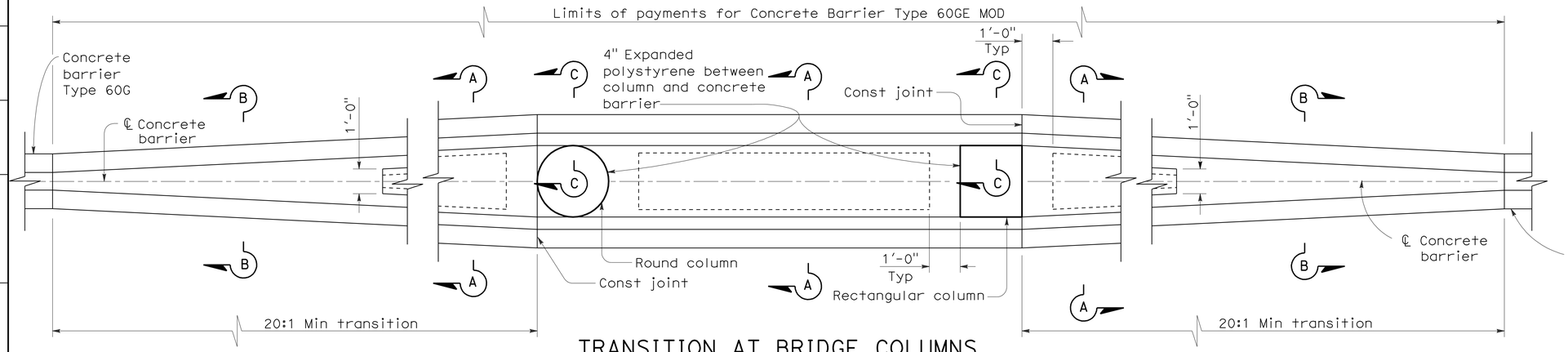


## TRANSITION AT BRIDGE COLUMNS

CONCRETE BARRIER TYPE 60GE MOD

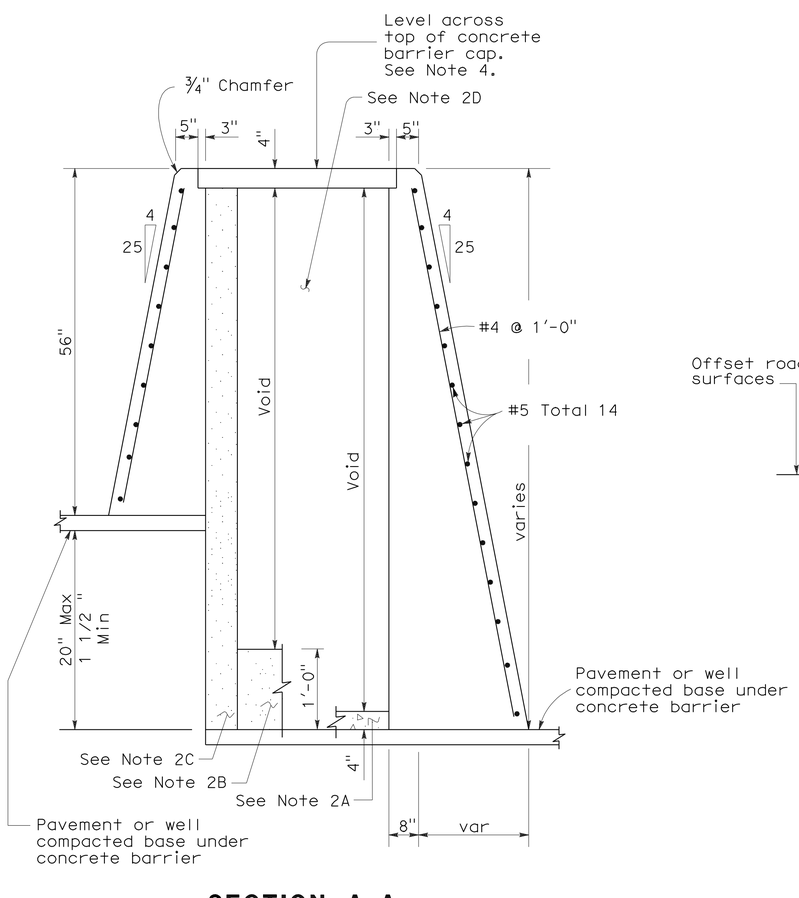


**SECTION A-A**

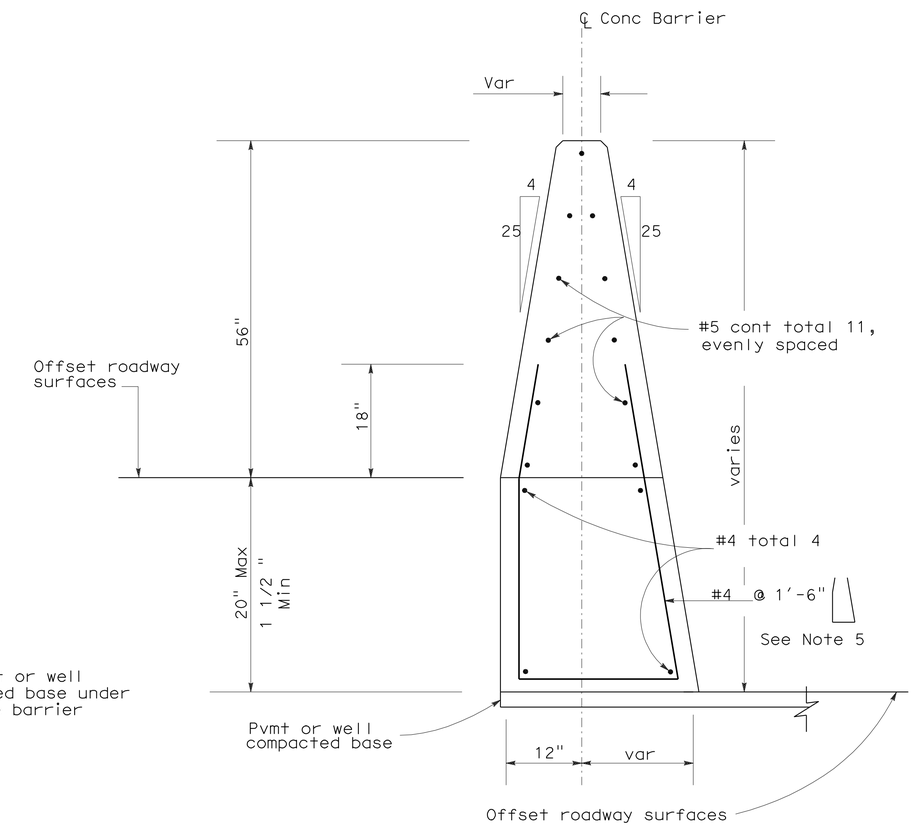


**SECTION B-B**

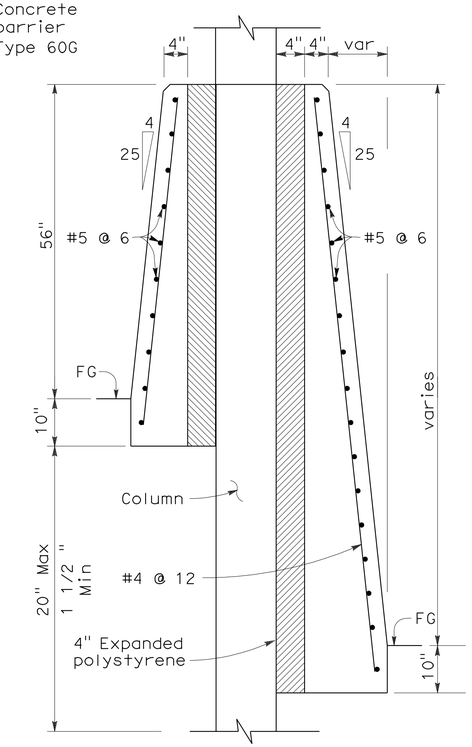


**SECTION C-C**

## NOTES:

1. See Standard Plan A76D for Concrete Barrier Type 60G.
2. Contractor options for fill between concrete barrier walls:
   A. Place 4" PCC at base between concrete barrier walls.
   B. Place 1'-0" of granular material at base between walls.
   C. Place granular material from base to bottom of 4" cap.
   D. Monolithic concrete with foam blockouts is not permitted.
3. Reinforcing steel shall extend continuous through construction joints.
4. Adjust height of concrete barrier wall on low side of offset or superelevated roadways to provide level grade across top of concrete barrier cap.

# CONSTRUCTION DETAIL
# TRANSITION AT BRIDGE COLUMN
# TYPE 60GE MOD

NO SCALE

**C-324**

STATE OF CALIFORNIA - DEPARTMENT OF TRANSPORTATION
Caltrans
DESIGN
FUNCTIONAL SUPERVISOR: RENE YIN
CALCULATED-DESIGNED BY: KDH, RA
CHECKED BY: LXN
REVISED BY
DATE REVISED

LAST REVISION 00-00-00
DATE PLOTTED => 28-JUN-2011
TIME PLOTTED => 20:41

| Dist | COUNTY | ROUTE | POST MILES TOTAL PROJECT | SHEET No. | TOTAL SHEETS |
|---|---|---|---|---|---|
| 07 | LA | 710 | 17.2/26.4 | 436 | 1507 |

Rene Yin 2-3-11
REGISTERED CIVIL ENGINEER DATE

6-27-11
PLANS APPROVAL DATE

REGISTERED PROFESSIONAL ENGINEER
RENE YIN
No. C49915
Exp. 9/30/12
CIVIL
STATE OF CALIFORNIA

*THE STATE OF CALIFORNIA OR ITS OFFICERS OR AGENTS SHALL NOT BE RESPONSIBLE FOR THE ACCURACY OR COMPLETENESS OF SCANNED COPIES OF THIS PLAN SHEET.*

NOTE:

1. FOR ACCURATE RIGHT OF WAY AND ACCESS DATA, CONTACT RIGHT OF WAY ENGINEERING AT THE DISTRICT OFFICE.

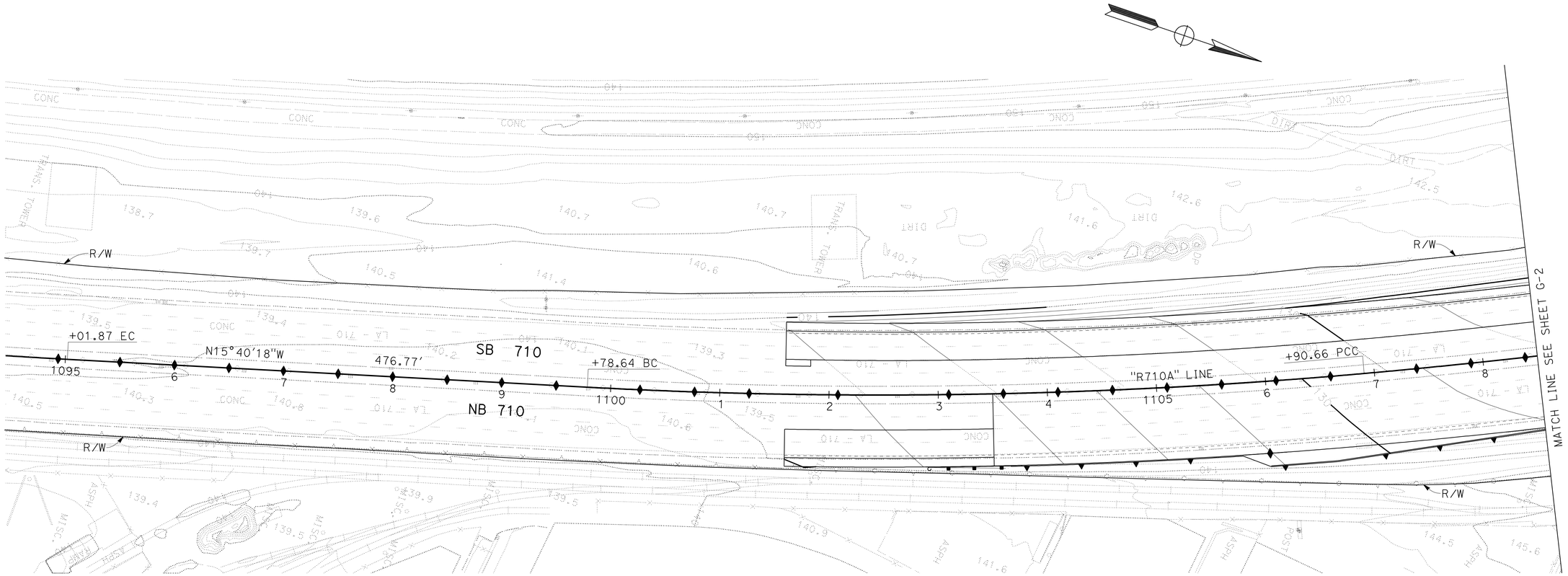


THIS PLAN ACCURATE FOR CONTOUR GRADING WORK ONLY

# CONTOUR GRADING

SCALE: 1" = 50'

G-1

REVISED BY | DATE REVISED

CALCULATED-DESIGNED BY: MONA GIRGUIS
CHECKED BY: I. L. REYNON JR.

FUNCTIONAL SUPERVISOR: ALINE ANTARAMIAN

STATE OF CALIFORNIA - DEPARTMENT OF TRANSPORTATION
Caltrans
DESIGN

LAST REVISION 00-00-00 | DATE PLOTTED => 28-JUN-2011 | TIME PLOTTED => 20:41

| Dist | COUNTY | ROUTE | POST MILES TOTAL PROJECT | SHEET No. | TOTAL SHEETS |
|---|---|---|---|---|---|
| 07 | LA | 710 | 17.2/26.4 | 437 | 1507 |

REGISTERED CIVIL ENGINEER 2-3-11 DATE

6-27-11
PLANS APPROVAL DATE

REGISTERED PROFESSIONAL ENGINEER RENE YIN No. C49915 Exp. 9/30/12 CIVIL STATE OF CALIFORNIA

*THE STATE OF CALIFORNIA OR ITS OFFICERS OR AGENTS SHALL NOT BE RESPONSIBLE FOR THE ACCURACY OR COMPLETENESS OF SCANNED COPIES OF THIS PLAN SHEET.*

NOTE:

1. FOR ACCURATE RIGHT OF WAY AND ACCESS DATA, CONTACT RIGHT OF WAY ENGINEERING AT THE DISTRICT OFFICE.

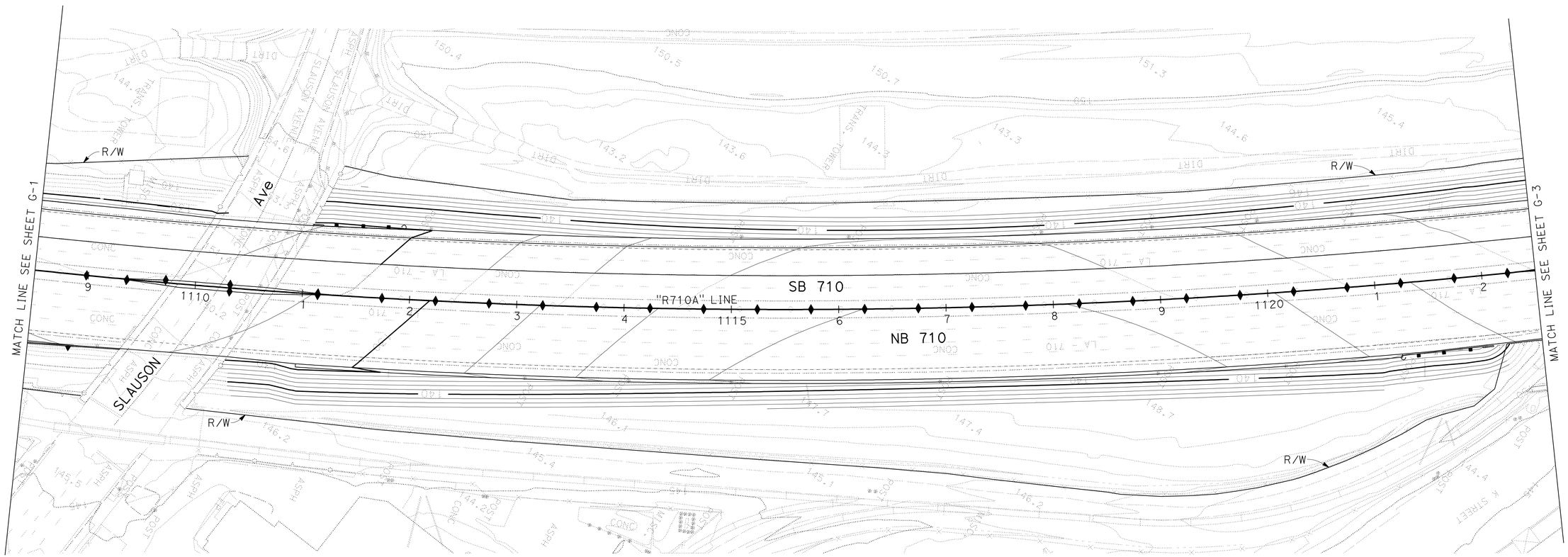


# CONTOUR GRADING

SCALE: 1" = 50'

G-2

THIS PLAN ACCURATE FOR CONTOUR GRADING WORK ONLY

STATE OF CALIFORNIA - DEPARTMENT OF TRANSPORTATION
Caltrans
DESIGN

FUNCTIONAL SUPERVISOR: ALINE ANTARAMIAN
CALCULATED-DESIGNED BY: MONA GIRGUIS
CHECKED BY: I. L. REYNON JR.
REVISED BY
DATE REVISED

LAST REVISION 00-00-00
DATE PLOTTED => 28-JUN-2011
TIME PLOTTED => 20:41

| Dist | COUNTY | ROUTE | POST MILES TOTAL PROJECT | SHEET No. | TOTAL SHEETS |
|---|---|---|---|---|---|
| 07 | LA | 710 | 17.2/26.4 | 438 | 1507 |

REGISTERED CIVIL ENGINEER 2-3-11 DATE

6-27-11
PLANS APPROVAL DATE

REGISTERED PROFESSIONAL ENGINEER
RENE YIN
No. C49915
Exp. 9/30/12
CIVIL
STATE OF CALIFORNIA

*THE STATE OF CALIFORNIA OR ITS OFFICERS OR AGENTS SHALL NOT BE RESPONSIBLE FOR THE ACCURACY OR COMPLETENESS OF SCANNED COPIES OF THIS PLAN SHEET.*

NOTE:

1. FOR ACCURATE RIGHT OF WAY AND ACCESS DATA, CONTACT RIGHT OF WAY ENGINEERING AT THE DISTRICT OFFICE.

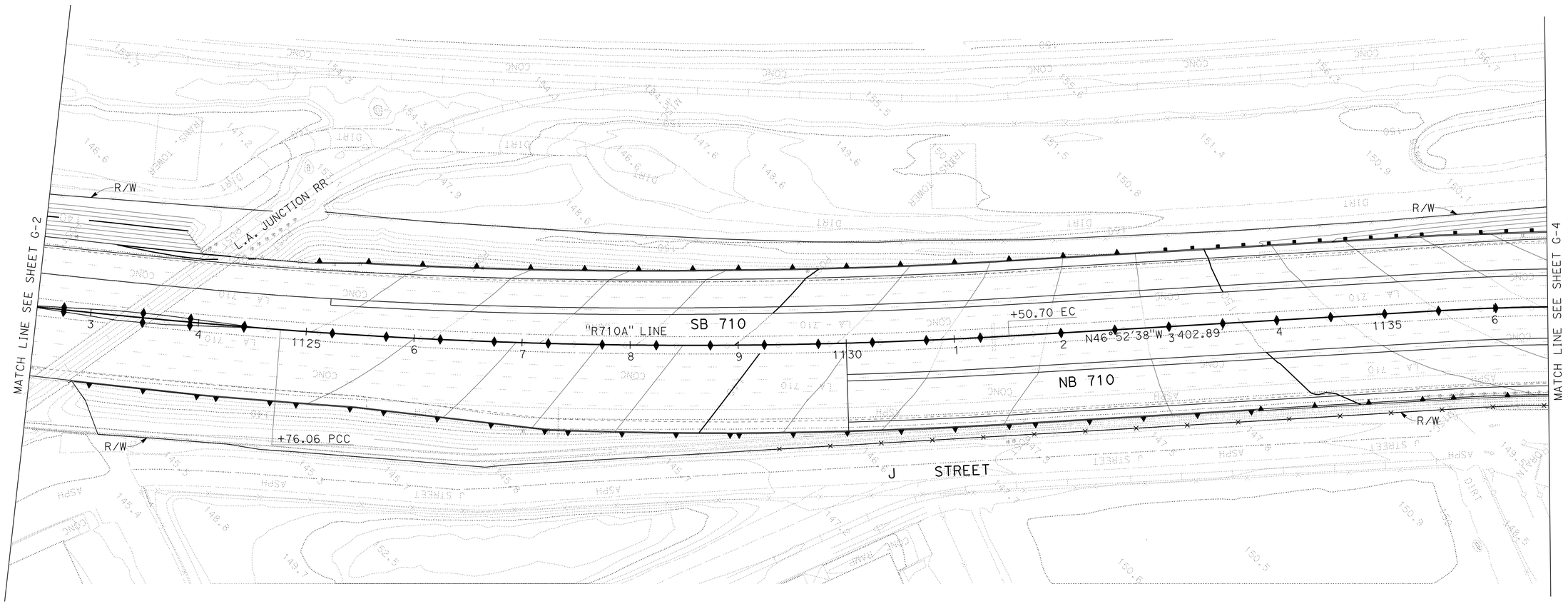


# CONTOUR GRADING

SCALE: 1" = 50'

G-3

THIS PLAN ACCURATE FOR CONTOUR GRADING WORK ONLY

STATE OF CALIFORNIA - DEPARTMENT OF TRANSPORTATION
Caltrans
DESIGN

FUNCTIONAL SUPERVISOR: ALINE ANTARAMIAN
CALCULATED-DESIGNED BY: MONA GIRGUIS
CHECKED BY: I. L. REYNON JR.
REVISED BY
DATE REVISED

LAST REVISION 00-00-00
DATE PLOTTED => 28-JUN-2011
TIME PLOTTED => 20:41

| Dist | COUNTY | ROUTE | POST MILES TOTAL PROJECT | SHEET No. | TOTAL SHEETS |
|---|---|---|---|---|---|
| 07 | LA | 710 | 17.2/26.4 | 439 | 1507 |

Rene Yin 2-3-11
REGISTERED CIVIL ENGINEER DATE

6-27-11
PLANS APPROVAL DATE

REGISTERED PROFESSIONAL ENGINEER
RENE YIN
No. C49915
Exp. 9/30/12
CIVIL
STATE OF CALIFORNIA

*THE STATE OF CALIFORNIA OR ITS OFFICERS OR AGENTS SHALL NOT BE RESPONSIBLE FOR THE ACCURACY OR COMPLETENESS OF SCANNED COPIES OF THIS PLAN SHEET.*

NOTE:

1. FOR ACCURATE RIGHT OF WAY AND ACCESS DATA, CONTACT RIGHT OF WAY ENGINEERING AT THE DISTRICT OFFICE.

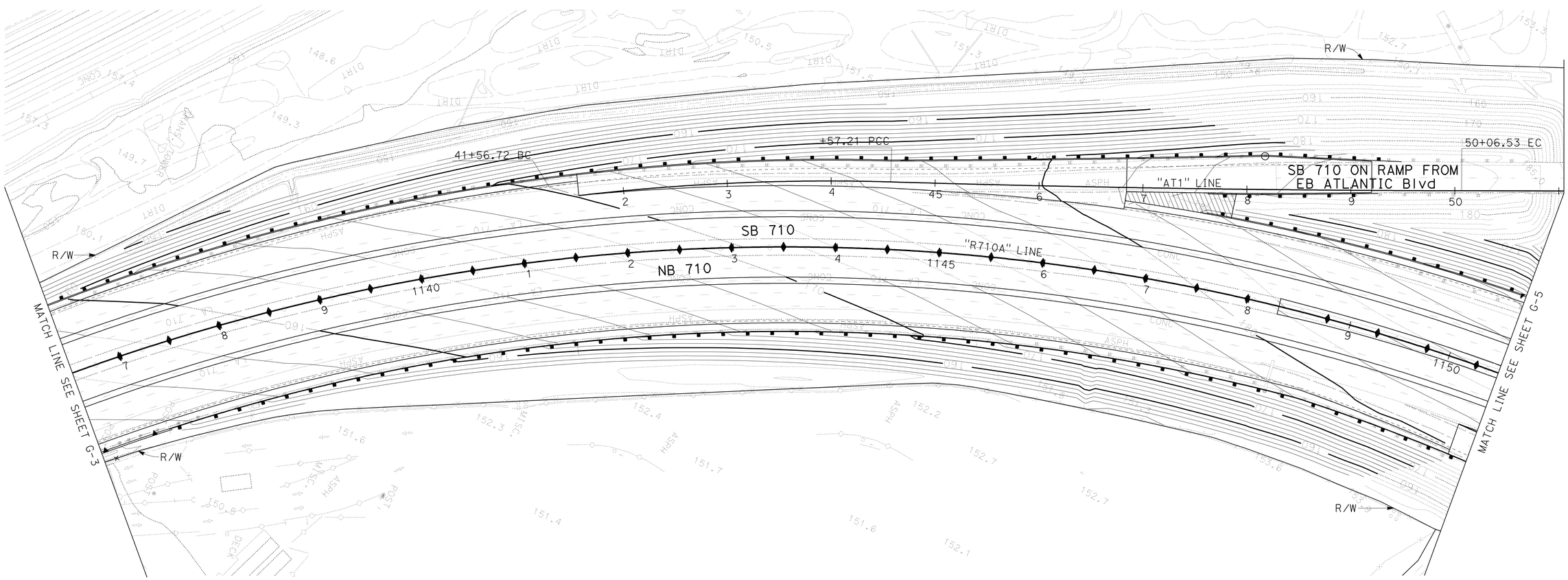


# CONTOUR GRADING

SCALE: 1" = 50'

G-4

THIS PLAN ACCURATE FOR CONTOUR GRADING WORK ONLY

STATE OF CALIFORNIA - DEPARTMENT OF TRANSPORTATION
Caltrans
DESIGN

FUNCTIONAL SUPERVISOR: ALINE ANTARAMIAN
CALCULATED-DESIGNED BY: MONA GIRGUIS
CHECKED BY: I. L. REYNON JR.
REVISED BY
DATE REVISED

LAST REVISION 00-00-00
DATE PLOTTED => 28-JUN-2011
TIME PLOTTED => 20:41

| Dist | COUNTY | ROUTE | POST MILES TOTAL PROJECT | SHEET No. | TOTAL SHEETS |
|---|---|---|---|---|---|
| 07 | LA | 710 | 17.2/26.4 | 440 | 1507 |

Rene Yin 2-3-11
REGISTERED CIVIL ENGINEER DATE

6-27-11
PLANS APPROVAL DATE

REGISTERED PROFESSIONAL ENGINEER
RENE YIN
No. C49915
Exp. 9/30/12
CIVIL
STATE OF CALIFORNIA

*THE STATE OF CALIFORNIA OR ITS OFFICERS OR AGENTS SHALL NOT BE RESPONSIBLE FOR THE ACCURACY OR COMPLETENESS OF SCANNED COPIES OF THIS PLAN SHEET.*

NOTE:

1. FOR ACCURATE RIGHT OF WAY AND ACCESS DATA, CONTACT RIGHT OF WAY ENGINEERING AT THE DISTRICT OFFICE.

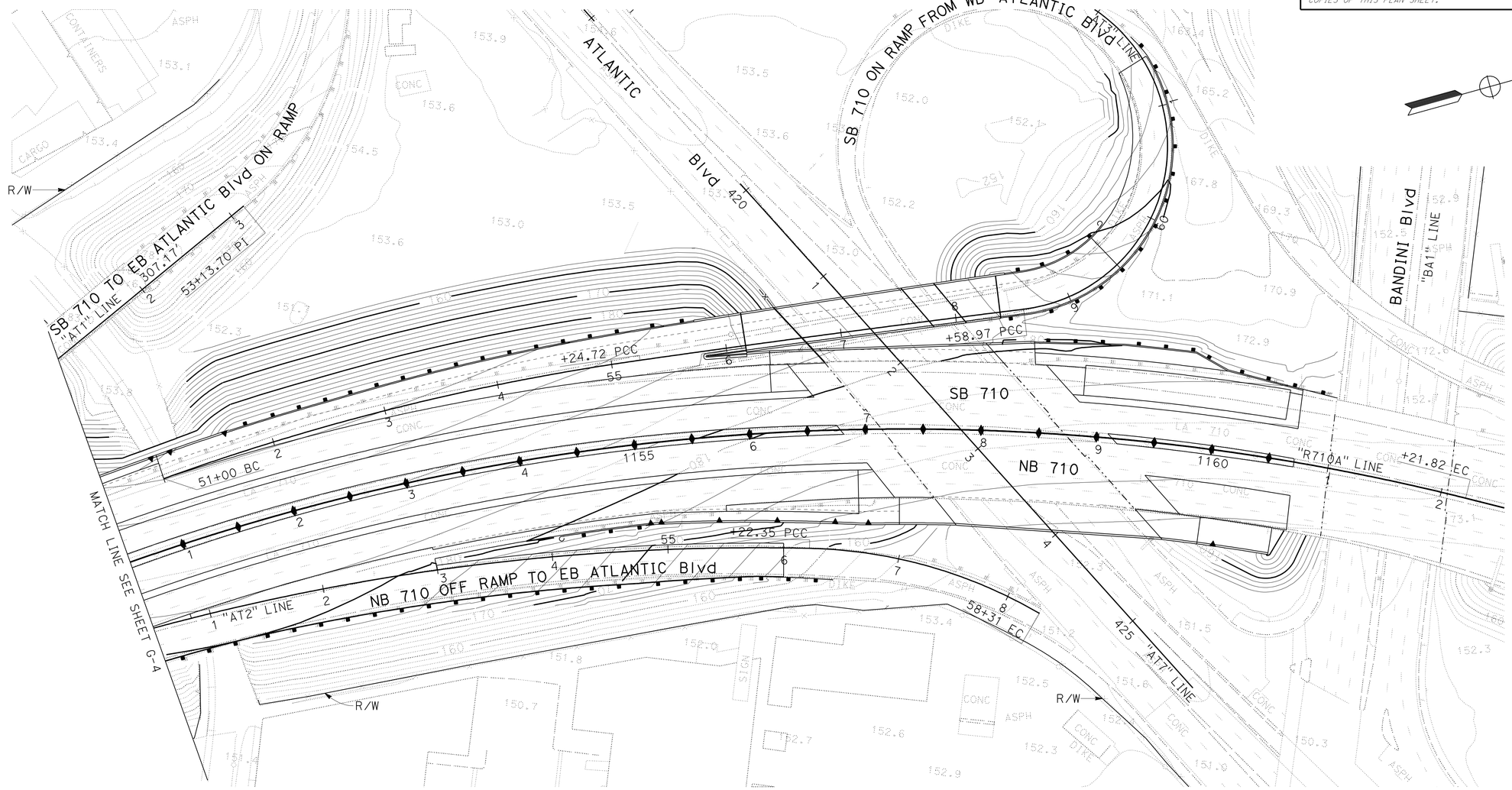


# CONTOUR GRADING

SCALE: 1" = 50'

THIS PLAN ACCURATE FOR CONTOUR GRADING WORK ONLY

G-5

STATE OF CALIFORNIA - DEPARTMENT OF TRANSPORTATION
Caltrans
DESIGN

FUNCTIONAL SUPERVISOR: ALINE ANTARAMIAN
CALCULATED-DESIGNED BY: MONA GIRGUIS
CHECKED BY: I. L. REYNON JR.
REVISED BY
DATE REVISED

LAST REVISION 00-00-00
DATE PLOTTED => 28-JUN-2011
TIME PLOTTED => 20:41

| Dist | COUNTY | ROUTE | POST MILES TOTAL PROJECT | SHEET No. | TOTAL SHEETS |
|---|---|---|---|---|---|
| 07 | LA | 710 | 17.2/26.4 | 441 | 1507 |

REGISTERED CIVIL ENGINEER 2-3-11 DATE

6-27-11
PLANS APPROVAL DATE

REGISTERED PROFESSIONAL ENGINEER
RENE YIN
No. C49915
Exp. 9/30/12
CIVIL
STATE OF CALIFORNIA

*THE STATE OF CALIFORNIA OR ITS OFFICERS OR AGENTS SHALL NOT BE RESPONSIBLE FOR THE ACCURACY OR COMPLETENESS OF SCANNED COPIES OF THIS PLAN SHEET.*

NOTE:

1. FOR ACCURATE RIGHT OF WAY AND ACCESS DATA, CONTACT RIGHT OF WAY ENGINEERING AT THE DISTRICT OFFICE.

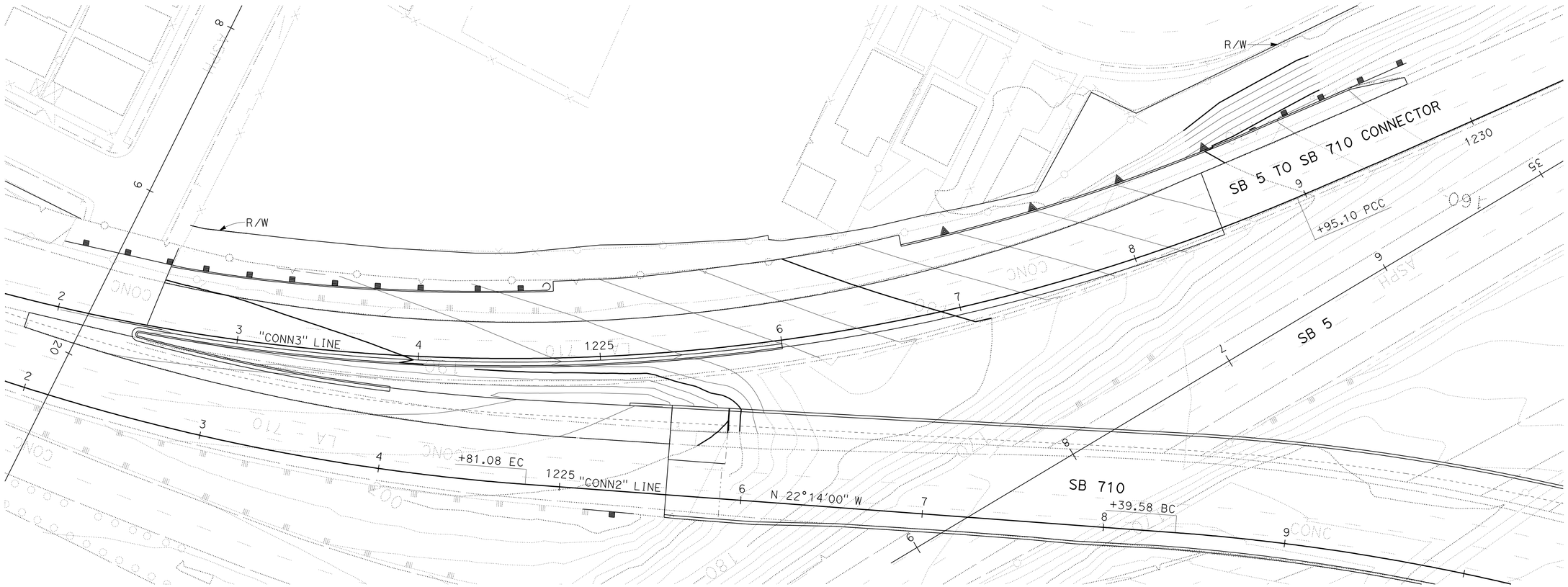


## CONTOUR GRADING

SCALE: 1" = 30'

G-6

THIS PLAN ACCURATE FOR CONTOUR GRADING WORK ONLY

STATE OF CALIFORNIA - DEPARTMENT OF TRANSPORTATION
Caltrans
DESIGN

FUNCTIONAL SUPERVISOR: ALINE ANTARAMIAN
CALCULATED-DESIGNED BY: MONA GIRGUIS
CHECKED BY: I. L. REYNON JR.
REVISED BY
DATE REVISED

LAST REVISION 00-00-00
DATE PLOTTED => 28-JUN-2011
TIME PLOTTED => 20:41

| Dist | COUNTY | ROUTE | POST MILES TOTAL PROJECT | SHEET No. | TOTAL SHEETS |
|---|---|---|---|---|---|
| 07 | LA | 710 | 17.2/26.4 | 442 | 1507 |

Rene Yin 2-3-11
REGISTERED CIVIL ENGINEER DATE

6-27-11
PLANS APPROVAL DATE

REGISTERED PROFESSIONAL ENGINEER
RENE YIN
No. C49915
Exp. 9/30/12
CIVIL
STATE OF CALIFORNIA

*THE STATE OF CALIFORNIA OR ITS OFFICERS OR AGENTS SHALL NOT BE RESPONSIBLE FOR THE ACCURACY OR COMPLETENESS OF SCANNED COPIES OF THIS PLAN SHEET.*

NOTE:

1. FOR ACCURATE RIGHT OF WAY AND ACCESS DATA, CONTACT RIGHT OF WAY ENGINEERING AT THE DISTRICT OFFICE.

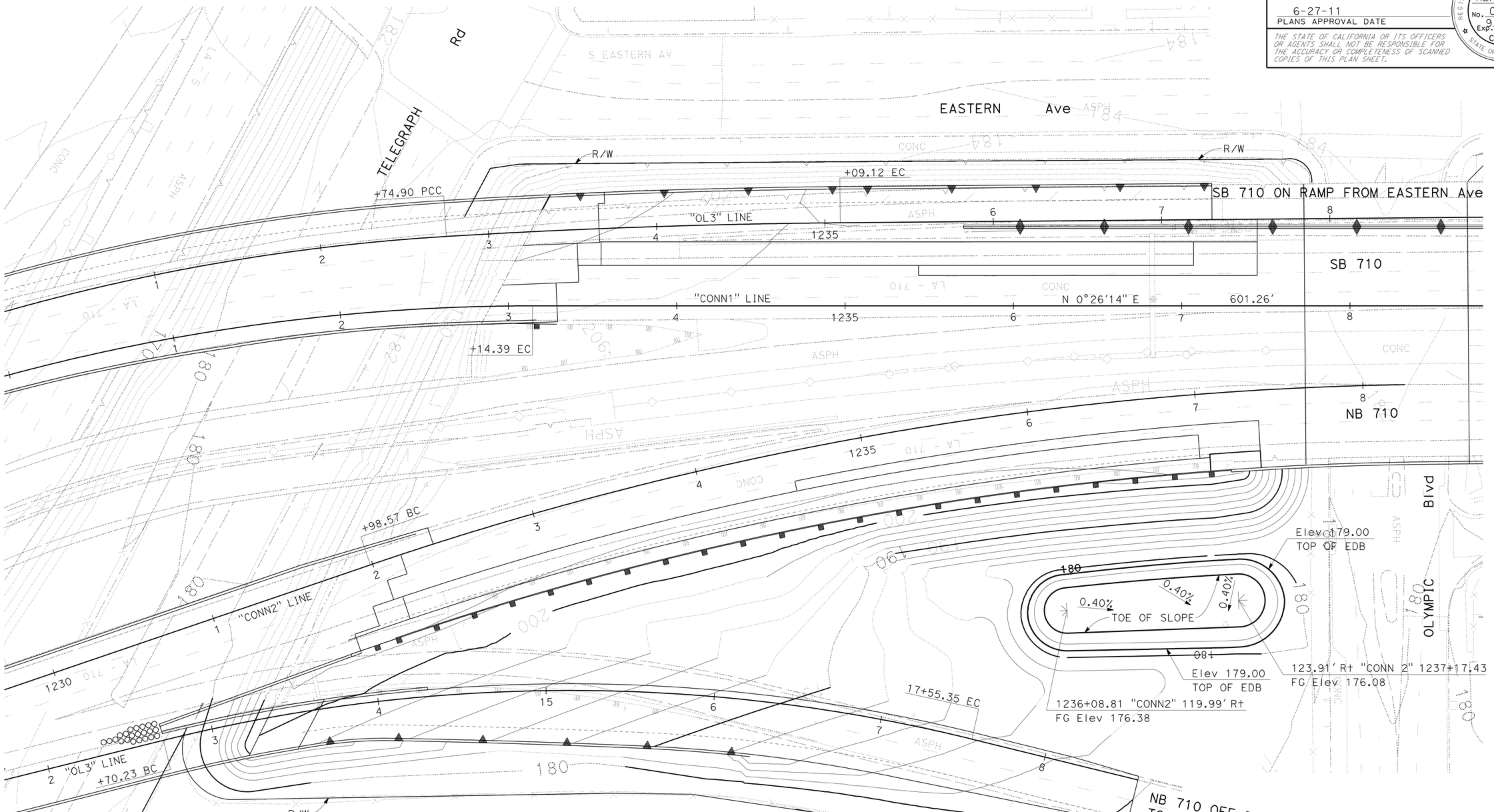


THIS PLAN ACCURATE FOR CONTOUR GRADING WORK ONLY

# CONTOUR GRADING

SCALE 1" = 30'

G-7

STATE OF CALIFORNIA - DEPARTMENT OF TRANSPORTATION
Caltrans
DESIGN

FUNCTIONAL SUPERVISOR: ALINE ANTARAMIAN
CALCULATED-DESIGNED BY: MONA GIRGUIS
CHECKED BY: I. L. REYNON JR.
REVISED BY
DATE REVISED

LAST REVISION 00-00-00
DATE PLOTTED => 28-JUN-2011
TIME PLOTTED => 20:41

| Dist | COUNTY | ROUTE | POST MILES TOTAL PROJECT | SHEET No. | TOTAL SHEETS |
|---|---|---|---|---|---|
| 07 | LA | 710 | 17.2/26.4 | 443 | 1507 |

REGISTERED CIVIL ENGINEER 2-3-11 DATE

6-27-11
PLANS APPROVAL DATE

REGISTERED PROFESSIONAL ENGINEER LE NGUYEN No. 65414 Exp. 9-30-11 CIVIL STATE OF CALIFORNIA

*THE STATE OF CALIFORNIA OR ITS OFFICERS OR AGENTS SHALL NOT BE RESPONSIBLE FOR THE ACCURACY OR COMPLETENESS OF SCANNED COPIES OF THIS PLAN SHEET.*

NOTE: FOR COMPLETE RIGHT OF WAY AND ACCURATE ACCESS DATA, SEE RIGHT OF WAY RECORD MAPS AT DISTRICT OFFICE.

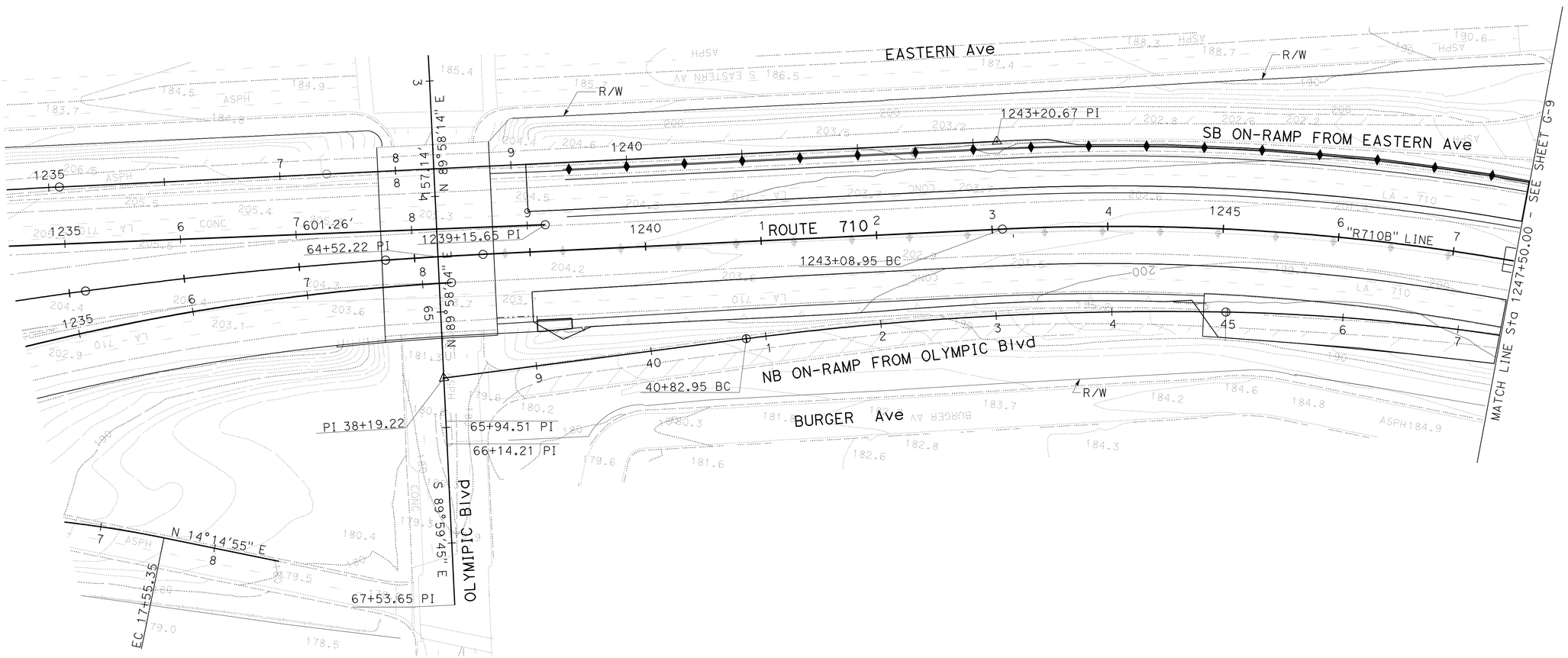


# CONTOUR GRADING

SCALE: 1" = 50'

G-8

THIS PLAN ACCURATE FOR CONTOUR GRADING WORK ONLY.

STATE OF CALIFORNIA - DEPARTMENT OF TRANSPORTATION
Caltrans DESIGN

FUNCTIONAL SUPERVISOR: RENE YIN

CALCULATED-DESIGNED BY: KENNY HA
CHECKED BY: LE NGUYEN

REVISED BY
DATE REVISED

LAST REVISION 00-00-00
DATE PLOTTED => 28-JUN-2011
TIME PLOTTED => 20:41

| Dist | COUNTY | ROUTE | POST MILES TOTAL PROJECT | SHEET No. | TOTAL SHEETS |
|---|---|---|---|---|---|
| 07 | LA | 710 | 17.2/26.4 | 444 | 1507 |

REGISTERED CIVIL ENGINEER 2-3-11 DATE

6-27-11
PLANS APPROVAL DATE

REGISTERED PROFESSIONAL ENGINEER LE NGUYEN No. 65414 Exp. 9-30-11 CIVIL STATE OF CALIFORNIA

*THE STATE OF CALIFORNIA OR ITS OFFICERS OR AGENTS SHALL NOT BE RESPONSIBLE FOR THE ACCURACY OR COMPLETENESS OF SCANNED COPIES OF THIS PLAN SHEET.*

**NOTE:** FOR COMPLETE RIGHT OF WAY AND ACCURATE ACCESS DATA, SEE RIGHT OF WAY RECORD MAPS AT DISTRICT OFFICE.

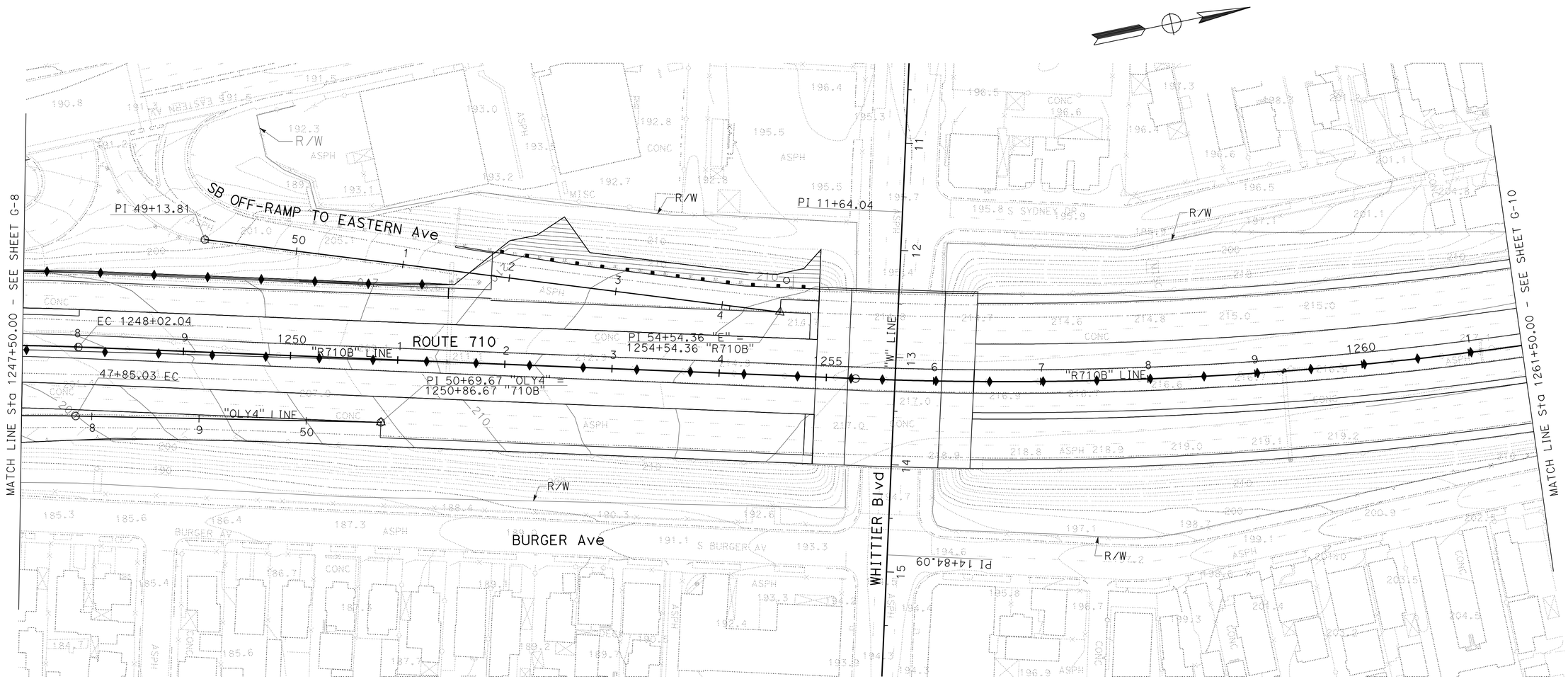


# CONTOUR GRADING

SCALE: 1" = 50'

**G-9**

THIS PLAN ACCURATE FOR CONTOUR GRADING WORK ONLY.

STATE OF CALIFORNIA - DEPARTMENT OF TRANSPORTATION
Caltrans® DESIGN

FUNCTIONAL SUPERVISOR: RENE YIN

CALCULATED-DESIGNED BY: KENNY HA
CHECKED BY: LE NGUYEN

REVISED BY
DATE REVISED

LAST REVISION 00-00-00
DATE PLOTTED => 28-JUN-2011
TIME PLOTTED => 20:41

| Dist | COUNTY | ROUTE | POST MILES TOTAL PROJECT | SHEET No. | TOTAL SHEETS |
|---|---|---|---|---|---|
| 07 | LA | 710 | 17.2/26.4 | 445 | 1507 |

REGISTERED CIVIL ENGINEER 2-3-11 DATE

6-27-11
PLANS APPROVAL DATE

REGISTERED PROFESSIONAL ENGINEER LE NGUYEN No. 65414 Exp. 9-30-11 CIVIL STATE OF CALIFORNIA

*THE STATE OF CALIFORNIA OR ITS OFFICERS OR AGENTS SHALL NOT BE RESPONSIBLE FOR THE ACCURACY OR COMPLETENESS OF SCANNED COPIES OF THIS PLAN SHEET.*

NOTE: FOR COMPLETE RIGHT OF WAY AND ACCURATE ACCESS DATA, SEE RIGHT OF WAY RECORD MAPS AT DISTRICT OFFICE.

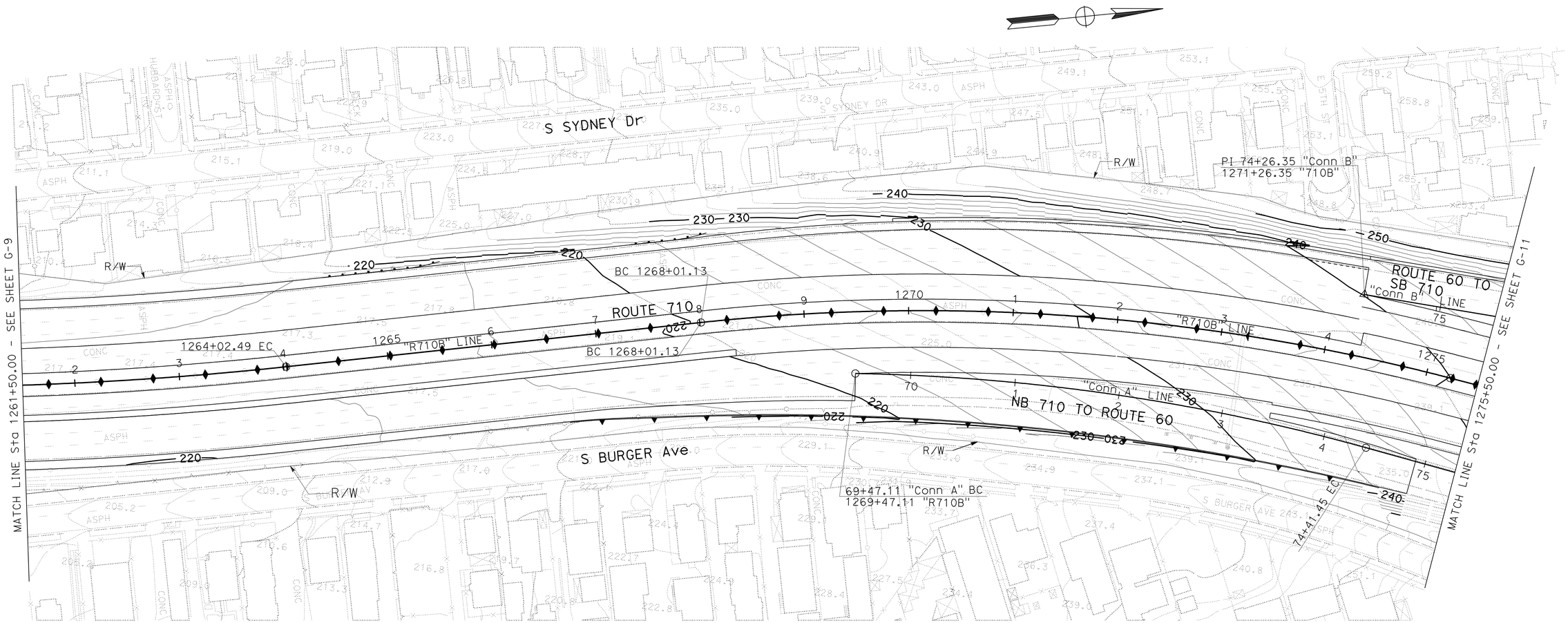


# CONTOUR GRADING

SCALE: 1" = 50'

THIS PLAN ACCURATE FOR CONTOUR GRADING WORK ONLY.

G-10

STATE OF CALIFORNIA - DEPARTMENT OF TRANSPORTATION
Caltrans
DESIGN

FUNCTIONAL SUPERVISOR: RENE YIN
CALCULATED-DESIGNED BY: KENNY HA
CHECKED BY: LE NGUYEN
REVISED BY
DATE REVISED

LAST REVISION 00-00-00
DATE PLOTTED => 28-JUN-2011
TIME PLOTTED => 20:42

| Dist | COUNTY | ROUTE | POST MILES TOTAL PROJECT | SHEET No. | TOTAL SHEETS |
|---|---|---|---|---|---|
| 07 | LA | 710 | 17.2/26.4 | 446 | 1507 |

REGISTERED CIVIL ENGINEER 2-3-11 DATE

6-27-11
PLANS APPROVAL DATE

REGISTERED PROFESSIONAL ENGINEER LE NGUYEN No. 65414 Exp. 9-30-11 CIVIL STATE OF CALIFORNIA

*THE STATE OF CALIFORNIA OR ITS OFFICERS OR AGENTS SHALL NOT BE RESPONSIBLE FOR THE ACCURACY OR COMPLETENESS OF SCANNED COPIES OF THIS PLAN SHEET.*

NOTE: FOR COMPLETE RIGHT OF WAY AND ACCURATE ACCESS DATA, SEE RIGHT OF WAY RECORD MAPS AT DISTRICT OFFICE.

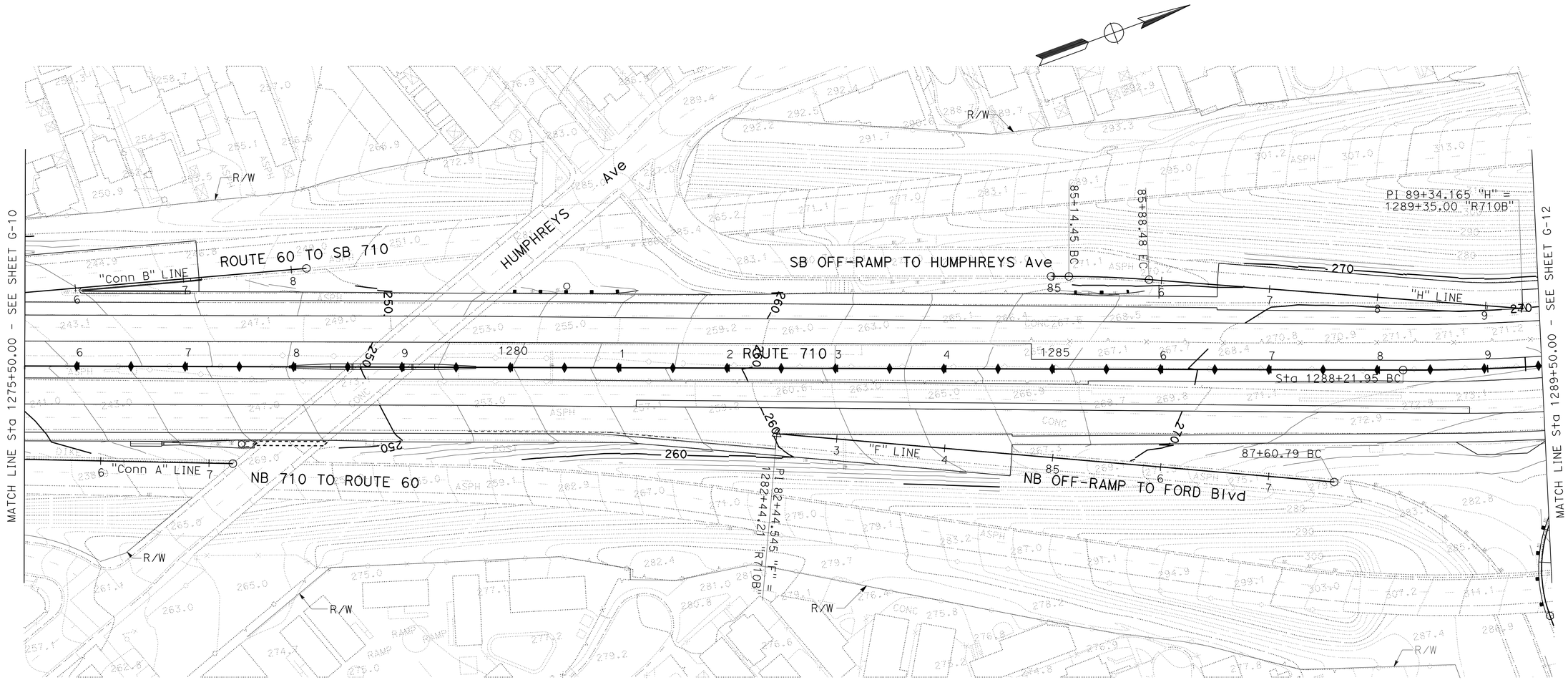


# CONTOUR GRADING

SCALE: 1" = 50'

G-11

THIS PLAN ACCURATE FOR CONTOUR GRADING WORK ONLY.

STATE OF CALIFORNIA - DEPARTMENT OF TRANSPORTATION
Caltrans DESIGN

FUNCTIONAL SUPERVISOR: RENE YIN
CALCULATED-DESIGNED BY: KENNY HA
CHECKED BY: LE NGUYEN
REVISED BY
DATE REVISED

LAST REVISION 00-00-00
DATE PLOTTED => 28-JUN-2011
TIME PLOTTED => 20:42

| Dist | COUNTY | ROUTE | POST MILES TOTAL PROJECT | SHEET No. | TOTAL SHEETS |
|---|---|---|---|---|---|
| 07 | LA | 710 | 17.2/26.4 | 447 | 1507 |

REGISTERED CIVIL ENGINEER 2-3-11 DATE

6-27-11
PLANS APPROVAL DATE

REGISTERED PROFESSIONAL ENGINEER LE NGUYEN No. 65414 Exp. 9-30-11 CIVIL STATE OF CALIFORNIA

*THE STATE OF CALIFORNIA OR ITS OFFICERS OR AGENTS SHALL NOT BE RESPONSIBLE FOR THE ACCURACY OR COMPLETENESS OF SCANNED COPIES OF THIS PLAN SHEET.*

NOTE: FOR COMPLETE RIGHT OF WAY AND ACCURATE ACCESS DATA, SEE RIGHT OF WAY RECORD MAPS AT DISTRICT OFFICE.

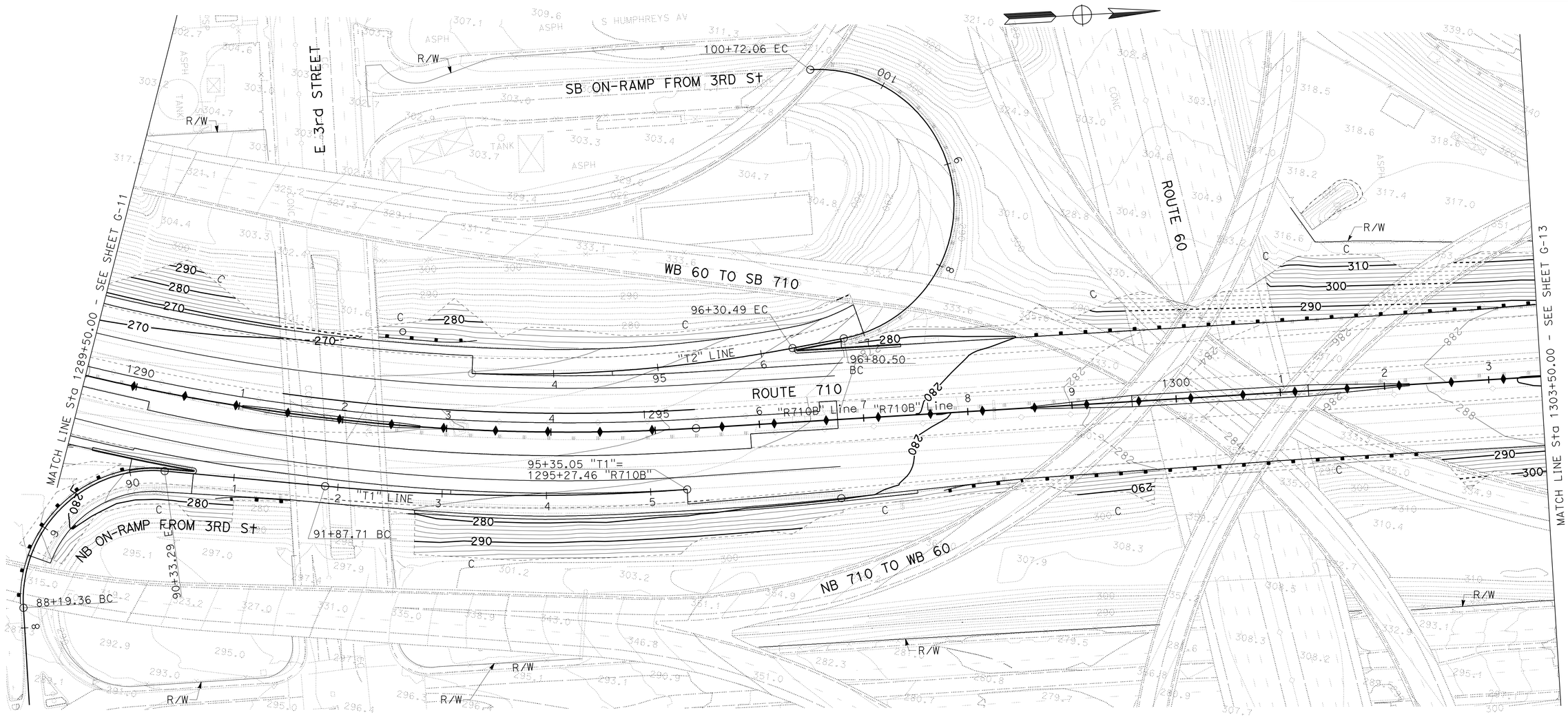


# CONTOUR GRADING

SCALE: 1" = 50'

G-12

THIS PLAN ACCURATE FOR CONTOUR GRADING WORK ONLY.

STATE OF CALIFORNIA - DEPARTMENT OF TRANSPORTATION
Caltrans
DESIGN

FUNCTIONAL SUPERVISOR: RENE YIN
CALCULATED-DESIGNED BY: KENNY HA
CHECKED BY: LE NGUYEN
REVISED BY
DATE REVISED

LAST REVISION 00-00-00
DATE PLOTTED => 28-JUN-2011
TIME PLOTTED => 20:42

| Dist | COUNTY | ROUTE | POST MILES TOTAL PROJECT | SHEET No. | TOTAL SHEETS |
|---|---|---|---|---|---|
| 07 | LA | 710 | 17.2/26.4 | 448 | 1507 |

REGISTERED CIVIL ENGINEER 2-3-11 DATE

6-27-11
PLANS APPROVAL DATE

REGISTERED PROFESSIONAL ENGINEER LE NGUYEN No. 65414 Exp. 9-30-11 CIVIL STATE OF CALIFORNIA

*THE STATE OF CALIFORNIA OR ITS OFFICERS OR AGENTS SHALL NOT BE RESPONSIBLE FOR THE ACCURACY OR COMPLETENESS OF SCANNED COPIES OF THIS PLAN SHEET.*

NOTE: FOR COMPLETE RIGHT OF WAY AND ACCURATE ACCESS DATA, SEE RIGHT OF WAY RECORD MAPS AT DISTRICT OFFICE.

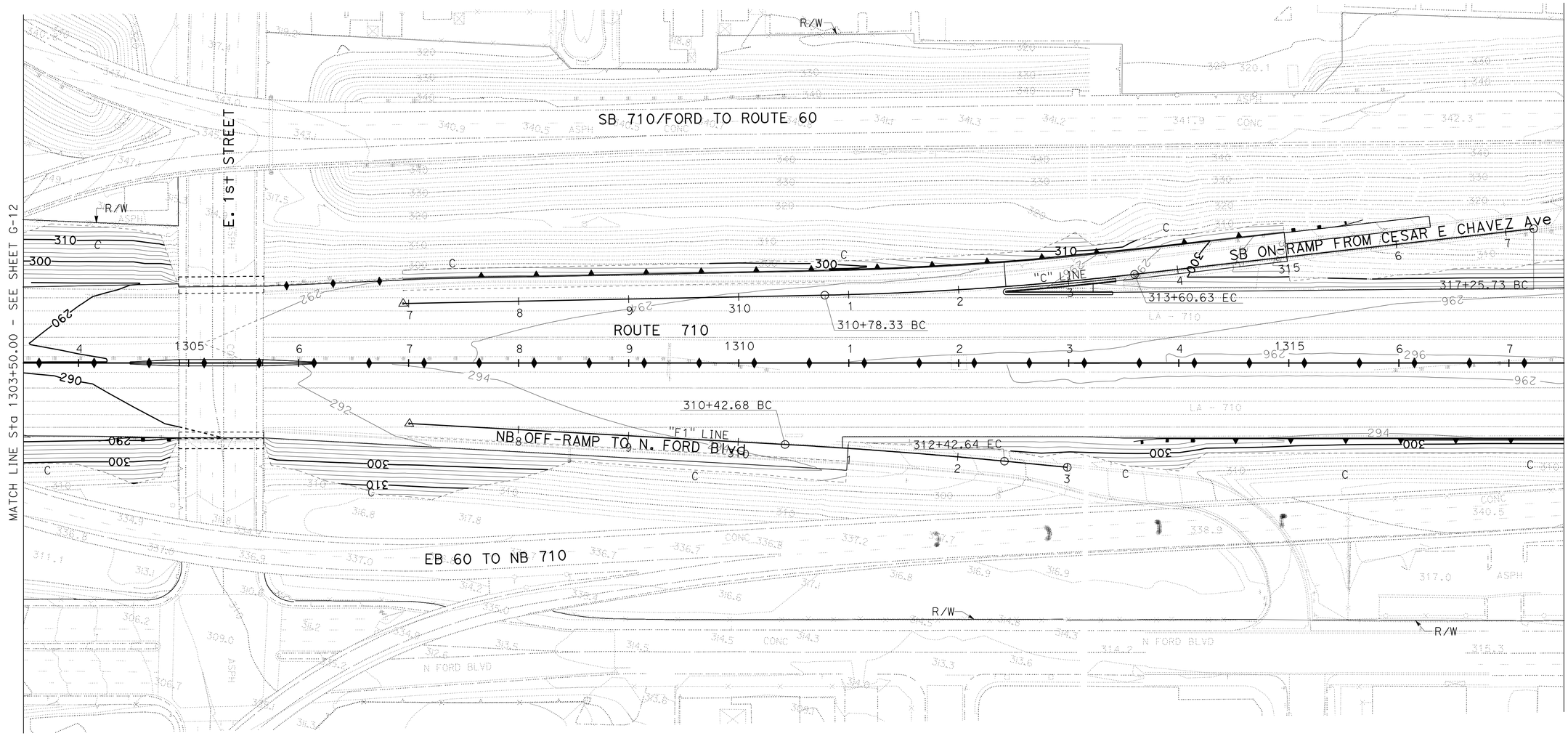


# CONTOUR GRADING

SCALE: 1" = 50'

G-13

THIS PLAN ACCURATE FOR CONTOUR GRADING WORK ONLY.

STATE OF CALIFORNIA - DEPARTMENT OF TRANSPORTATION
Caltrans DESIGN

FUNCTIONAL SUPERVISOR: RENE YIN
CALCULATED-DESIGNED BY: KENNY HA
CHECKED BY: LE NGUYEN
REVISED BY
DATE REVISED

LAST REVISION 00-00-00
DATE PLOTTED => 28-JUN-2011
TIME PLOTTED => 20:42

| Dist | COUNTY | ROUTE | POST MILES TOTAL PROJECT | SHEET No. | TOTAL SHEETS |
|---|---|---|---|---|---|
| 07 | LA | 710 | 17.2/26.4 | 449 | 1507 |

REGISTERED CIVIL ENGINEER 2-3-11 DATE

6-27-11
PLANS APPROVAL DATE

REGISTERED PROFESSIONAL ENGINEER LE NGUYEN No. 65414 Exp. 9-30-11 CIVIL STATE OF CALIFORNIA

*THE STATE OF CALIFORNIA OR ITS OFFICERS OR AGENTS SHALL NOT BE RESPONSIBLE FOR THE ACCURACY OR COMPLETENESS OF SCANNED COPIES OF THIS PLAN SHEET.*

NOTE: FOR COMPLETE RIGHT OF WAY AND ACCURATE ACCESS DATA, SEE RIGHT OF WAY RECORD MAPS AT DISTRICT OFFICE.

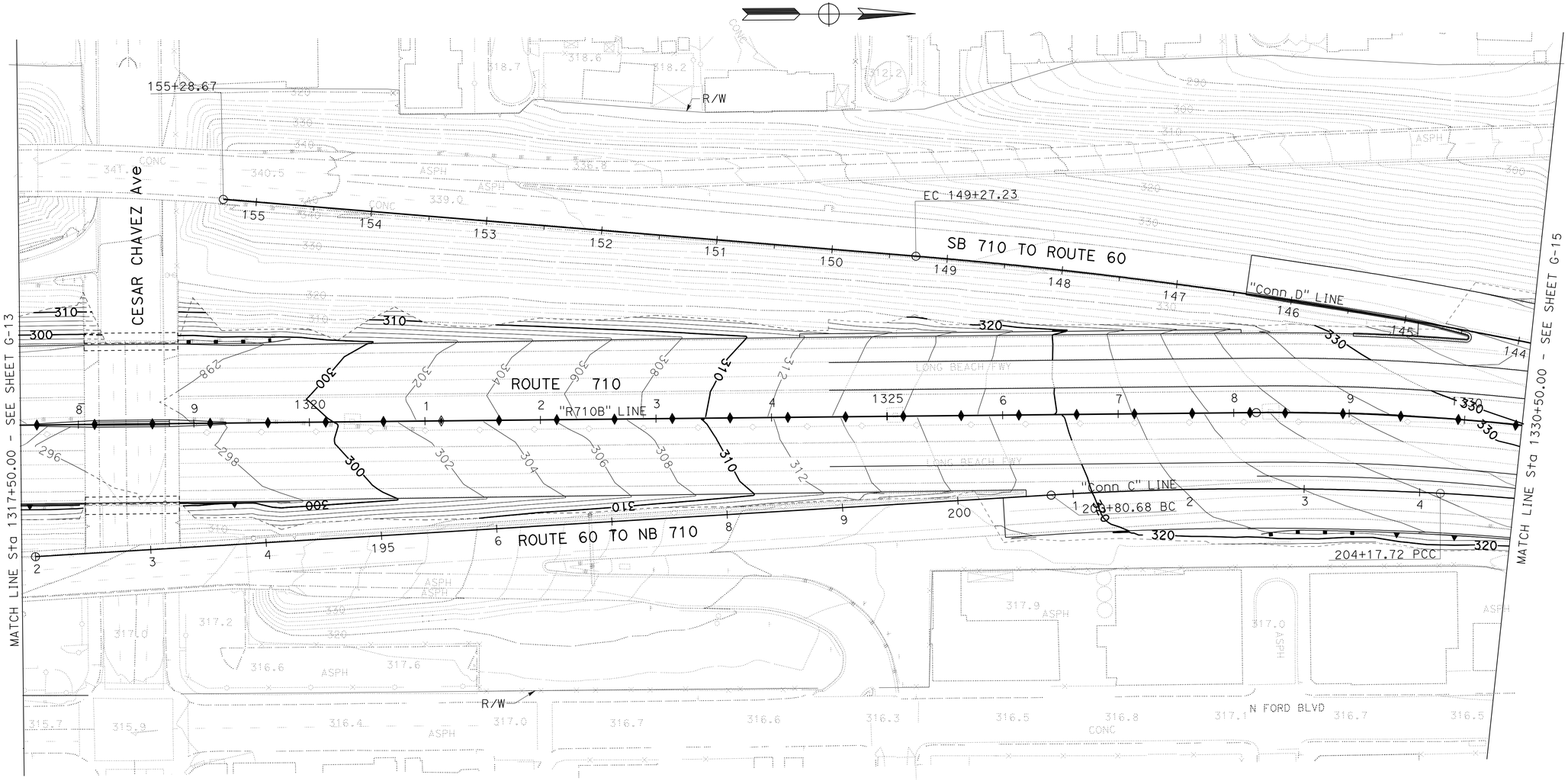


# CONTOUR GRADING

SCALE: 1" = 50'

THIS PLAN ACCURATE FOR CONTOUR GRADING WORK ONLY.

G-14

STATE OF CALIFORNIA - DEPARTMENT OF TRANSPORTATION
Caltrans
DESIGN

FUNCTIONAL SUPERVISOR: RENE YIN

CALCULATED-DESIGNED BY: KENNY HA
CHECKED BY: LE NGUYEN

REVISED BY
DATE REVISED

LAST REVISION 00-00-00
DATE PLOTTED => 28-JUN-2011
TIME PLOTTED => 20:42

| Dist | COUNTY | ROUTE | POST MILES TOTAL PROJECT | SHEET No. | TOTAL SHEETS |
|---|---|---|---|---|---|
| 07 | LA | 710 | 17.2/26.4 | 450 | 1507 |

REGISTERED CIVIL ENGINEER 2-3-11 DATE

6-27-11
PLANS APPROVAL DATE

REGISTERED PROFESSIONAL ENGINEER LE NGUYEN No. 65414 Exp. 9-30-11 CIVIL STATE OF CALIFORNIA

*THE STATE OF CALIFORNIA OR ITS OFFICERS OR AGENTS SHALL NOT BE RESPONSIBLE FOR THE ACCURACY OR COMPLETENESS OF SCANNED COPIES OF THIS PLAN SHEET.*

NOTE: FOR COMPLETE RIGHT OF WAY AND ACCURATE ACCESS DATA, SEE RIGHT OF WAY RECORD MAPS AT DISTRICT OFFICE.

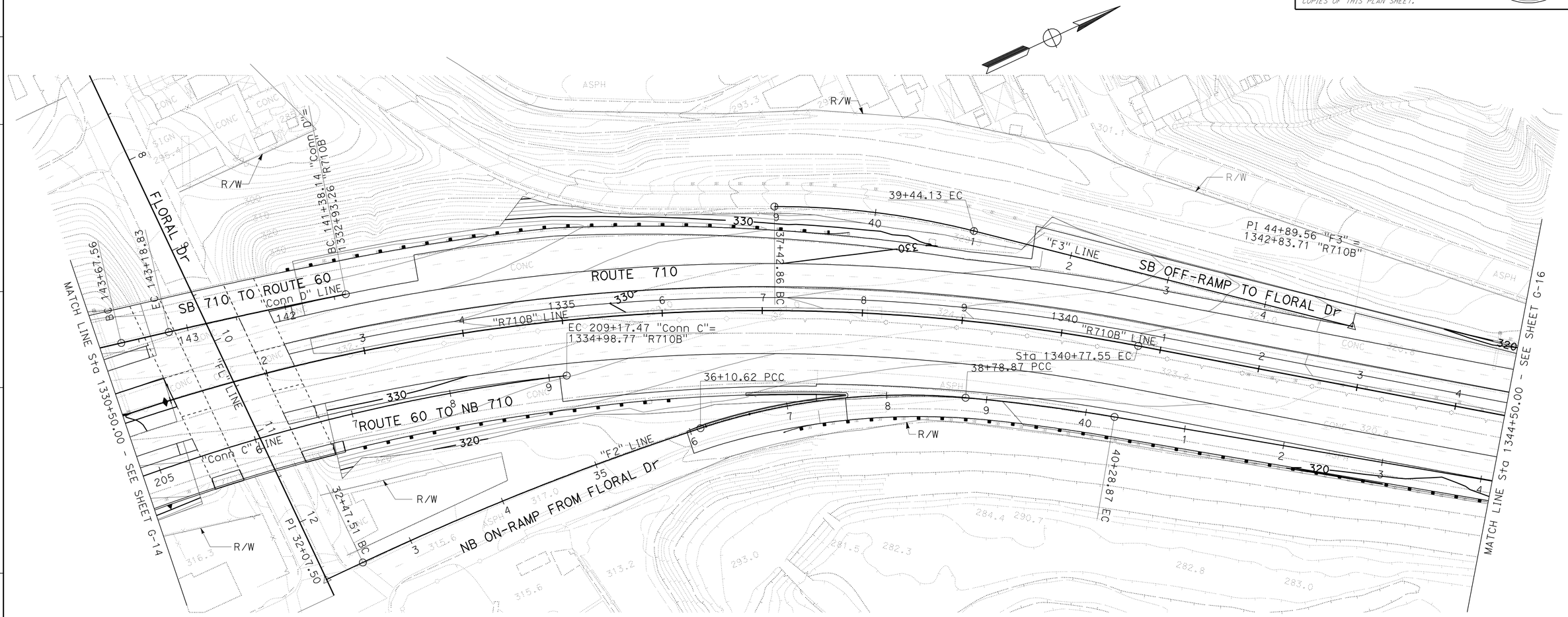


# CONTOUR GRADING

SCALE: 1" = 50'

G-15

THIS PLAN ACCURATE FOR CONTOUR GRADING WORK ONLY.

STATE OF CALIFORNIA - DEPARTMENT OF TRANSPORTATION
Caltrans
DESIGN

FUNCTIONAL SUPERVISOR: RENE YIN
CALCULATED-DESIGNED BY: KENNY HA
CHECKED BY: LE NGUYEN
REVISED BY
DATE REVISED

LAST REVISION 00-00-00
DATE PLOTTED => 28-JUN-2011
TIME PLOTTED => 20:42

| Dist | COUNTY | ROUTE | POST MILES TOTAL PROJECT | SHEET No. | TOTAL SHEETS |
|---|---|---|---|---|---|
| 07 | LA | 710 | 17.2/26.4 | 451 | 1507 |

REGISTERED CIVIL ENGINEER 2-3-11 DATE

6-27-11
PLANS APPROVAL DATE

REGISTERED PROFESSIONAL ENGINEER LE NGUYEN No. 65414 Exp. 9-30-11 CIVIL STATE OF CALIFORNIA

*THE STATE OF CALIFORNIA OR ITS OFFICERS OR AGENTS SHALL NOT BE RESPONSIBLE FOR THE ACCURACY OR COMPLETENESS OF SCANNED COPIES OF THIS PLAN SHEET.*

NOTE: FOR COMPLETE RIGHT OF WAY AND ACCURATE ACCESS DATA, SEE RIGHT OF WAY RECORD MAPS AT DISTRICT OFFICE.

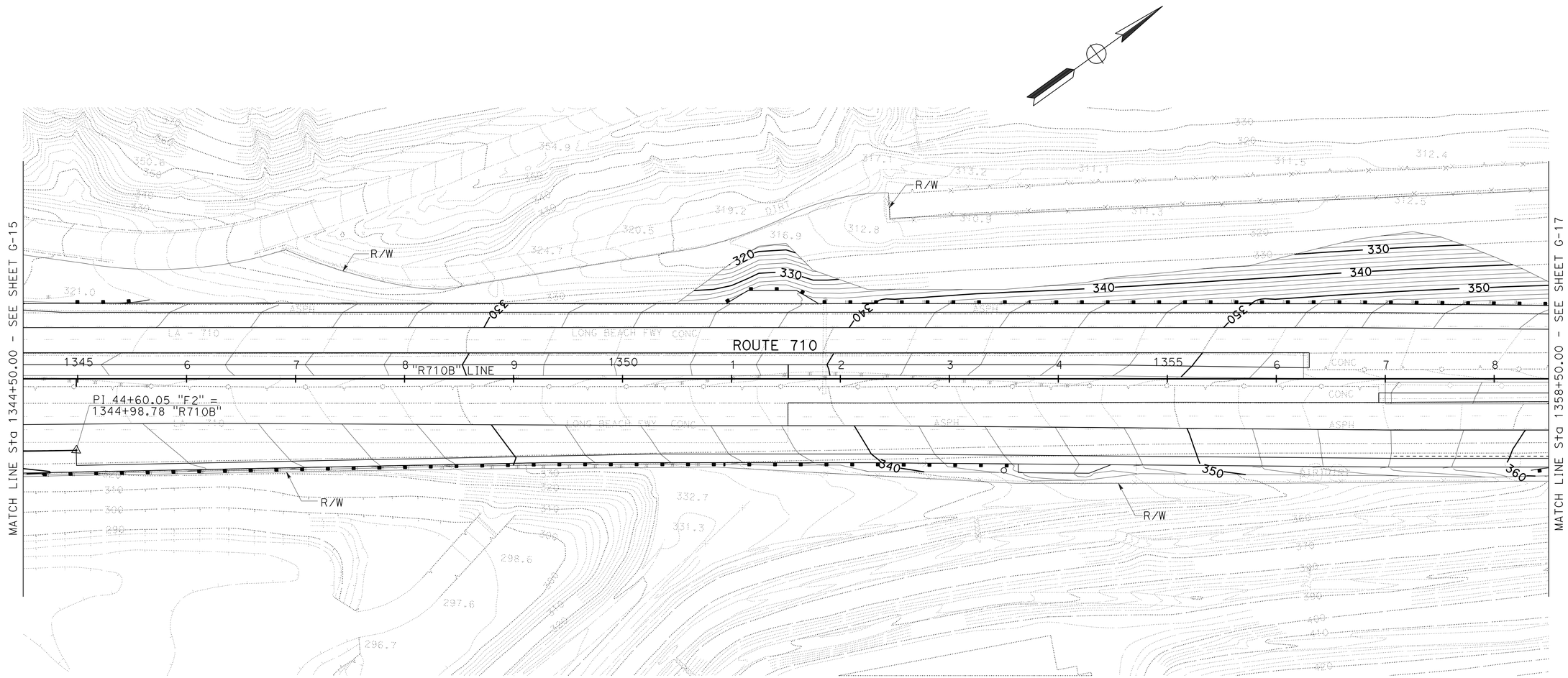


# CONTOUR GRADING

SCALE: 1" = 50'

G-16

THIS PLAN ACCURATE FOR CONTOUR GRADING WORK ONLY.

STATE OF CALIFORNIA - DEPARTMENT OF TRANSPORTATION

DESIGN

FUNCTIONAL SUPERVISOR: RENE YIN

CALCULATED-DESIGNED BY: KENNY HA

CHECKED BY: LE NGUYEN

REVISED BY

DATE REVISED

LAST REVISION 00-00-00

DATE PLOTTED => 28-JUN-2011
TIME PLOTTED => 20:42

| Dist | COUNTY | ROUTE | POST MILES TOTAL PROJECT | SHEET No. | TOTAL SHEETS |
|---|---|---|---|---|---|
| 07 | LA | 710 | 17.2/26.4 | 452 | 1507 |

REGISTERED CIVIL ENGINEER 2-3-11 DATE

6-27-11
PLANS APPROVAL DATE

REGISTERED PROFESSIONAL ENGINEER LE NGUYEN No. 65414 Exp. 9-30-11 CIVIL STATE OF CALIFORNIA

*THE STATE OF CALIFORNIA OR ITS OFFICERS OR AGENTS SHALL NOT BE RESPONSIBLE FOR THE ACCURACY OR COMPLETENESS OF SCANNED COPIES OF THIS PLAN SHEET.*

NOTE: FOR COMPLETE RIGHT OF WAY AND ACCURATE ACCESS DATA, SEE RIGHT OF WAY RECORD MAPS AT DISTRICT OFFICE.

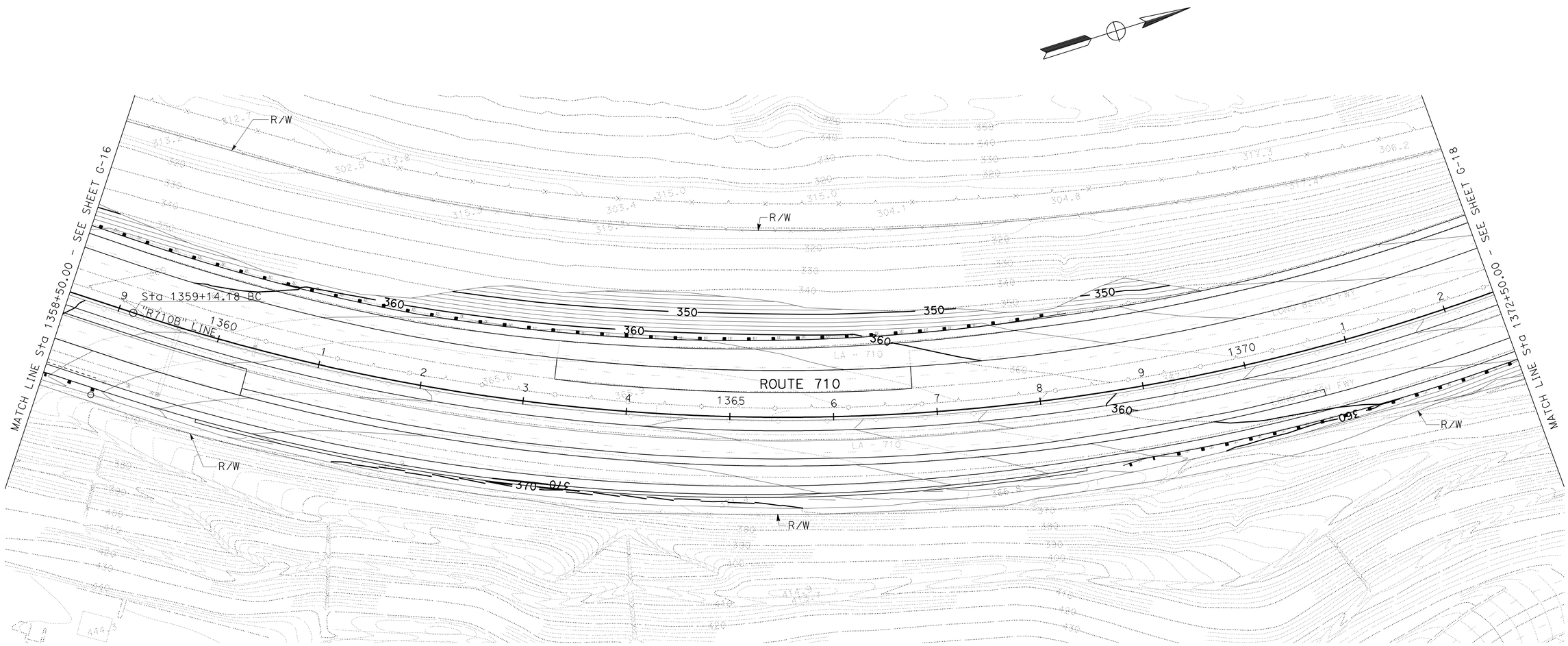


# CONTOUR GRADING

SCALE: 1" = 50'

G-17

THIS PLAN ACCURATE FOR CONTOUR GRADING WORK ONLY.

STATE OF CALIFORNIA - DEPARTMENT OF TRANSPORTATION
Caltrans DESIGN

FUNCTIONAL SUPERVISOR: RENE YIN

CALCULATED-DESIGNED BY: KENNY HA
CHECKED BY: LE NGUYEN

REVISED BY
DATE REVISED

LAST REVISION 00-00-00
DATE PLOTTED => 28-JUN-2011
TIME PLOTTED => 20:42

| Dist | COUNTY | ROUTE | POST MILES TOTAL PROJECT | SHEET No. | TOTAL SHEETS |
|---|---|---|---|---|---|
| 07 | LA | 710 | 17.2/26.4 | 453 | 1507 |

REGISTERED CIVIL ENGINEER 2-3-11 DATE

6-27-11
PLANS APPROVAL DATE

REGISTERED PROFESSIONAL ENGINEER LE NGUYEN No. 65414 Exp. 9-30-11 CIVIL STATE OF CALIFORNIA

*THE STATE OF CALIFORNIA OR ITS OFFICERS OR AGENTS SHALL NOT BE RESPONSIBLE FOR THE ACCURACY OR COMPLETENESS OF SCANNED COPIES OF THIS PLAN SHEET.*

NOTE: FOR COMPLETE RIGHT OF WAY AND ACCURATE ACCESS DATA, SEE RIGHT OF WAY RECORD MAPS AT DISTRICT OFFICE.

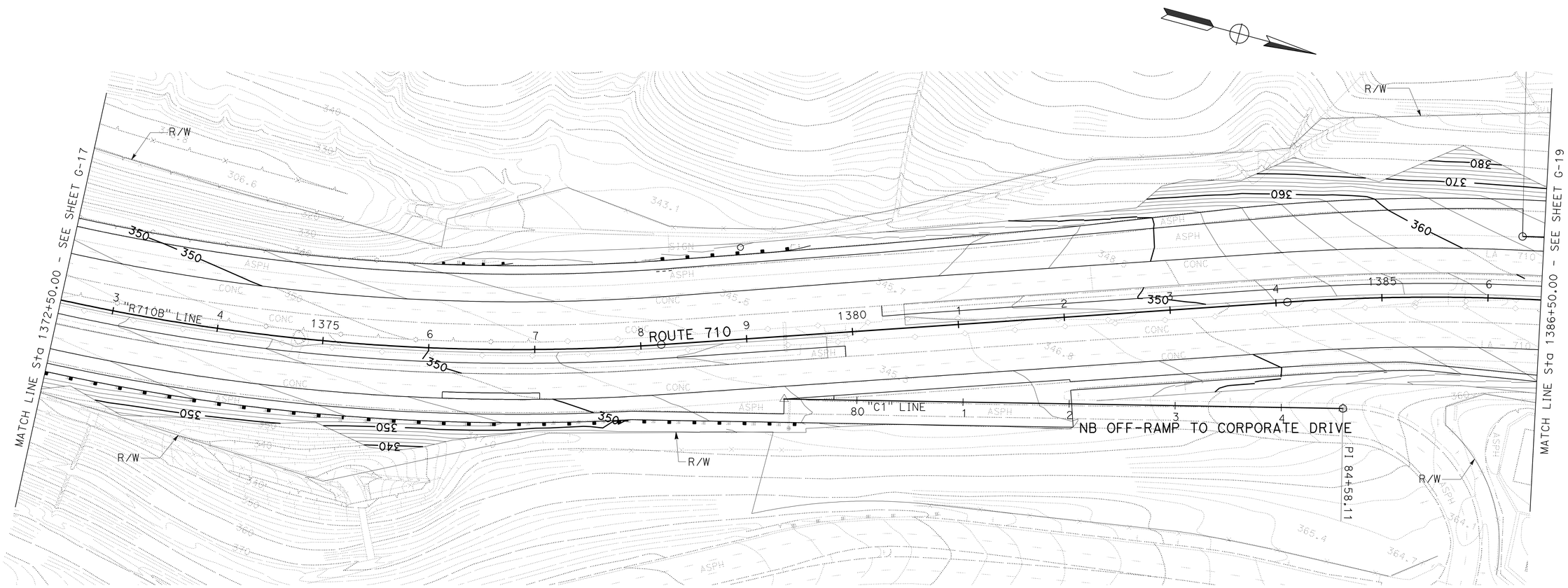


# CONTOUR GRADING

SCALE: 1" = 50'

G-18

THIS PLAN ACCURATE FOR CONTOUR GRADING WORK ONLY.

STATE OF CALIFORNIA - DEPARTMENT OF TRANSPORTATION
Caltrans DESIGN

FUNCTIONAL SUPERVISOR: RENE YIN

CALCULATED-DESIGNED BY: KENNY HA
CHECKED BY: LE NGUYEN

REVISED BY
DATE REVISED

LAST REVISION 00-00-00
DATE PLOTTED => 28-JUN-2011
TIME PLOTTED => 20:43

| Dist | COUNTY | ROUTE | POST MILES TOTAL PROJECT | SHEET No. | TOTAL SHEETS |
|---|---|---|---|---|---|
| 07 | LA | 710 | 17.2/26.4 | 454 | 1507 |

REGISTERED CIVIL ENGINEER 2-3-11 DATE

6-27-11
PLANS APPROVAL DATE

REGISTERED PROFESSIONAL ENGINEER LE NGUYEN No. 65414 Exp. 9-30-11 CIVIL STATE OF CALIFORNIA

*THE STATE OF CALIFORNIA OR ITS OFFICERS OR AGENTS SHALL NOT BE RESPONSIBLE FOR THE ACCURACY OR COMPLETENESS OF SCANNED COPIES OF THIS PLAN SHEET.*

NOTE: FOR COMPLETE RIGHT OF WAY AND ACCURATE ACCESS DATA, SEE RIGHT OF WAY RECORD MAPS AT DISTRICT OFFICE.

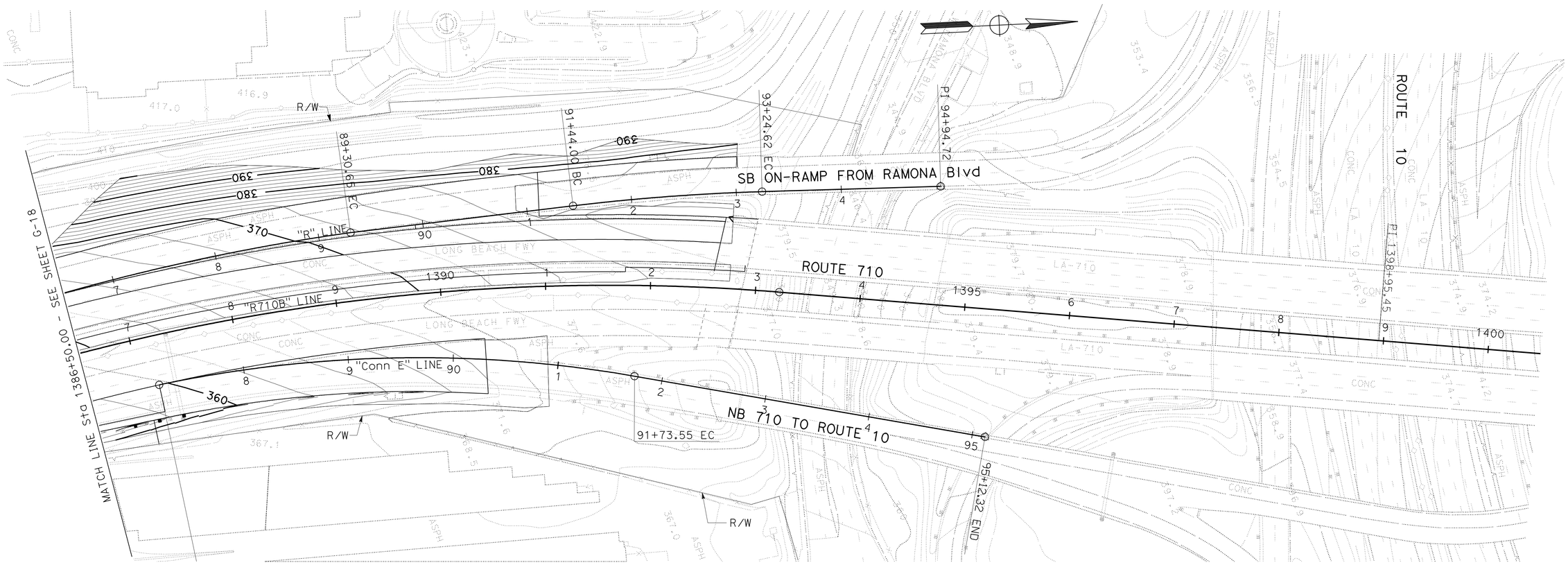


## CONTOUR GRADING

SCALE: 1" = 50'

THIS PLAN ACCURATE FOR CONTOUR GRADING WORK ONLY.

**G-19**

STATE OF CALIFORNIA - DEPARTMENT OF TRANSPORTATION
Caltrans®
**DESIGN**

FUNCTIONAL SUPERVISOR: RENE YIN
CALCULATED-DESIGNED BY: KENNY HA
CHECKED BY: LE NGUYEN
REVISED BY
DATE REVISED

LAST REVISION 00-00-00
DATE PLOTTED => 28-JUN-2011
TIME PLOTTED => 20:43

| Dist | COUNTY | ROUTE | POST MILES TOTAL PROJECT | SHEET No. | TOTAL SHEETS |
|---|---|---|---|---|---|
| 07 | LA | 710 | 17.2/26.4 | 455 | 1507 |

REGISTERED CIVIL ENGINEER 03/30/11 DATE

6-27-11
PLANS APPROVAL DATE

REGISTERED PROFESSIONAL ENGINEER GINO V. NGUYEN No. C62140 Exp. 09/30/11 CIVIL STATE OF CALIFORNIA

*THE STATE OF CALIFORNIA OR ITS OFFICERS OR AGENTS SHALL NOT BE RESPONSIBLE FOR THE ACCURACY OR COMPLETENESS OF SCANNED COPIES OF THIS PLAN SHEET.*

CALTRANS DISTRICT 7
100 S. MAIN STREET
LOS ANGELES, CA 90012

CH2M HILL
1000 WILSHIRE BLVD
LOS ANGELES, CA 90017

## LEGEND:

- XX — DRAINAGE SYSTEM NUMBER
- r — DRAINAGE UNIT NUMBER
- 1 — DRAINAGE CURVE No.
- ROCK SLOPE PROTECTION (RSP) SEE Sht DD-16
- DRAINAGE INLET
- BIOSWALE OR GRADE TO DRAIN SEE DD-16
- OSD, DD, OR WQ CULVERT
- FLARED END SECTION (FES)
- REMOVE CONCRETE DITCH
- GSRDXXXX — BMP SITE

## ABBREVIATIONS:

| | |
|---|---|
| BSW | BIOFILTRATION SWALE |
| GLD | GRATED LINE DRAIN (PRE-SLOPED) |
| GSRD | GROSS SOLIDS REMOVAL DEVICE |
| LACFCD | LOS ANGELES COUNTY FLOOD CONTROL DISTRICT |
| OSD | OVERSIDE DRAIN |
| RCC | REINFORCED CONCRETE CHANNEL |
| w/ | WITH |
| WQ | WATER QUALITY |

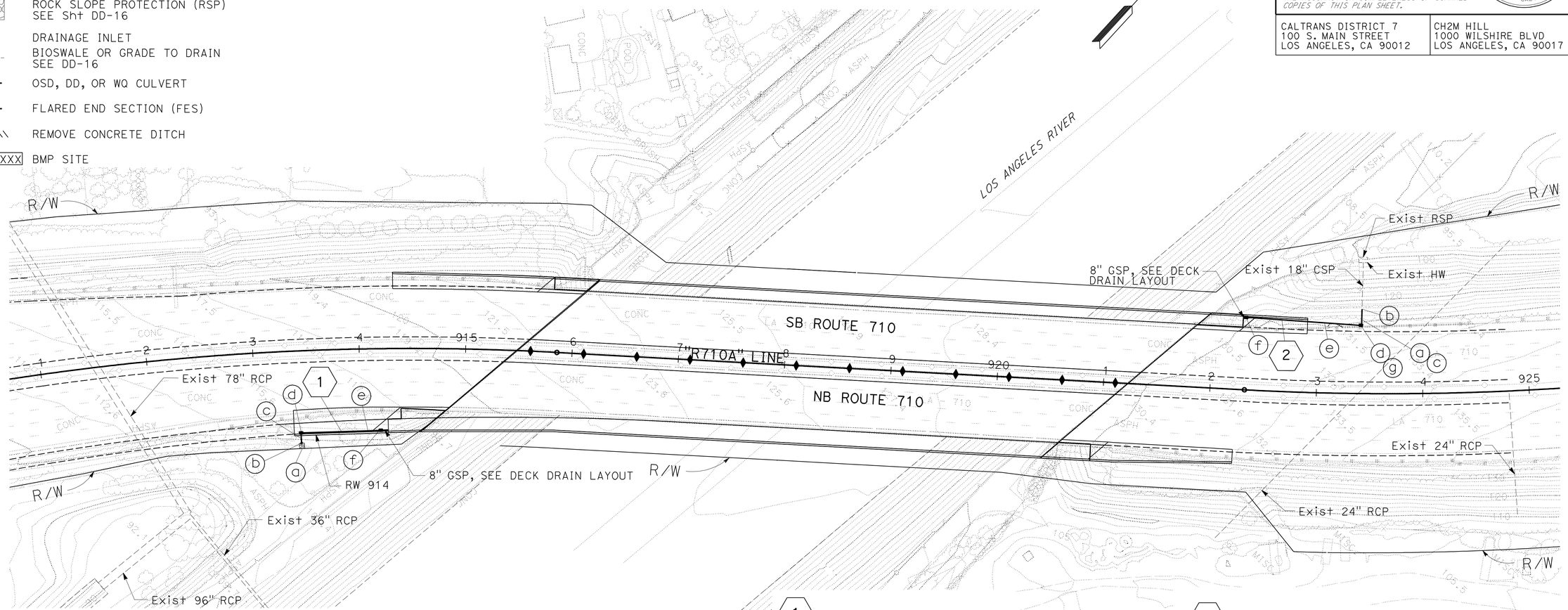


**1**
- (a) RSP (FACING, METHOD B)
- (b) 18" AFES
- (c) 18" CSP
- (d) G1 INLET
- (e) 18" APC
- (f) G2 INLET

**2**
- (a) REMOVE CULVERT, L=11.0'
- (b) Conc COLLAR
- (c) 18" APC
- (d) G2 INLET
- (e) 18" APC
- (f) G2 INLET
- (g) REMOVE INLET

## GENERAL DRAINAGE NOTES:

1. HORIZONTAL AND VERTICAL LOCATIONS OF EXISTING STORM DRAINS ARE BASED ON BEST AVAILABLE INFORMATION. ACTUAL LOCATIONS MAY VARY FROM THOSE SHOWN. CONTRACTOR SHALL VERIFY LOCATIONS AND ELEVATIONS OF ALL STORM DRAINS PRIOR TO CONSTRUCTION, AND REPORT ANY MAJOR DISCREPANCIES TO THE ENGINEER.
2. GLD DEPTH AT INLET SHALL BE A MINIMUM OF 12.0" UNLESS OTHERWISE NOTED IN DP SHEETS.
3. ALL INLET GRATES SHALL BE TYPE 24-12 PER STANDARD PLAN RSP D77A, UNLESS OTHERWISE SPECIFIED.
4. FOR TYPE CL2 INLET DETAILS, SEE DD-4 & DD-6.
5. FOR UNDERDRAIN AND WQ CULVERT DETAILS, SEE DD-18.

# DRAINAGE PLAN

SCALE: 1"=50'

FOR ACCURATE RIGHT OF WAY DATA, CONTACT RIGHT OF WAY ENGINEERING AT THE DISTRICT OFFICE.

THIS PLAN ACCURATE FOR DRAINAGE WORK ONLY

**D-1**

REVISED BY | DATE REVISED
T. GUO | G. HSU
CALCULATED-DESIGNED BY | CHECKED BY
CONSULTANT FUNCTIONAL SUPERVISOR: MELISSA DE LA PENA
STATE OF CALIFORNIA - DEPARTMENT OF TRANSPORTATION
Caltrans

LAST REVISION 00-00-00 | DATE PLOTTED => 28-JUN-2011 | TIME PLOTTED => 19:51

| Dist | COUNTY | ROUTE | POST MILES TOTAL PROJECT | SHEET No. | TOTAL SHEETS |
|---|---|---|---|---|---|
| 07 | LA | 710 | 17.2/26.4 | 456 | 1507 |

REGISTERED CIVIL ENGINEER 03/30/11 DATE

6-27-11
PLANS APPROVAL DATE

REGISTERED PROFESSIONAL ENGINEER
GINO V. NGUYEN
No. C62140
Exp. 09/30/11
CIVIL
STATE OF CALIFORNIA

*THE STATE OF CALIFORNIA OR ITS OFFICERS OR AGENTS SHALL NOT BE RESPONSIBLE FOR THE ACCURACY OR COMPLETENESS OF SCANNED COPIES OF THIS PLAN SHEET.*

CALTRANS DISTRICT 7
100 S. MAIN STREET
LOS ANGELES, CA 90012

CH2M HILL
1000 WILSHIRE BLVD
LOS ANGELES, CA 90017

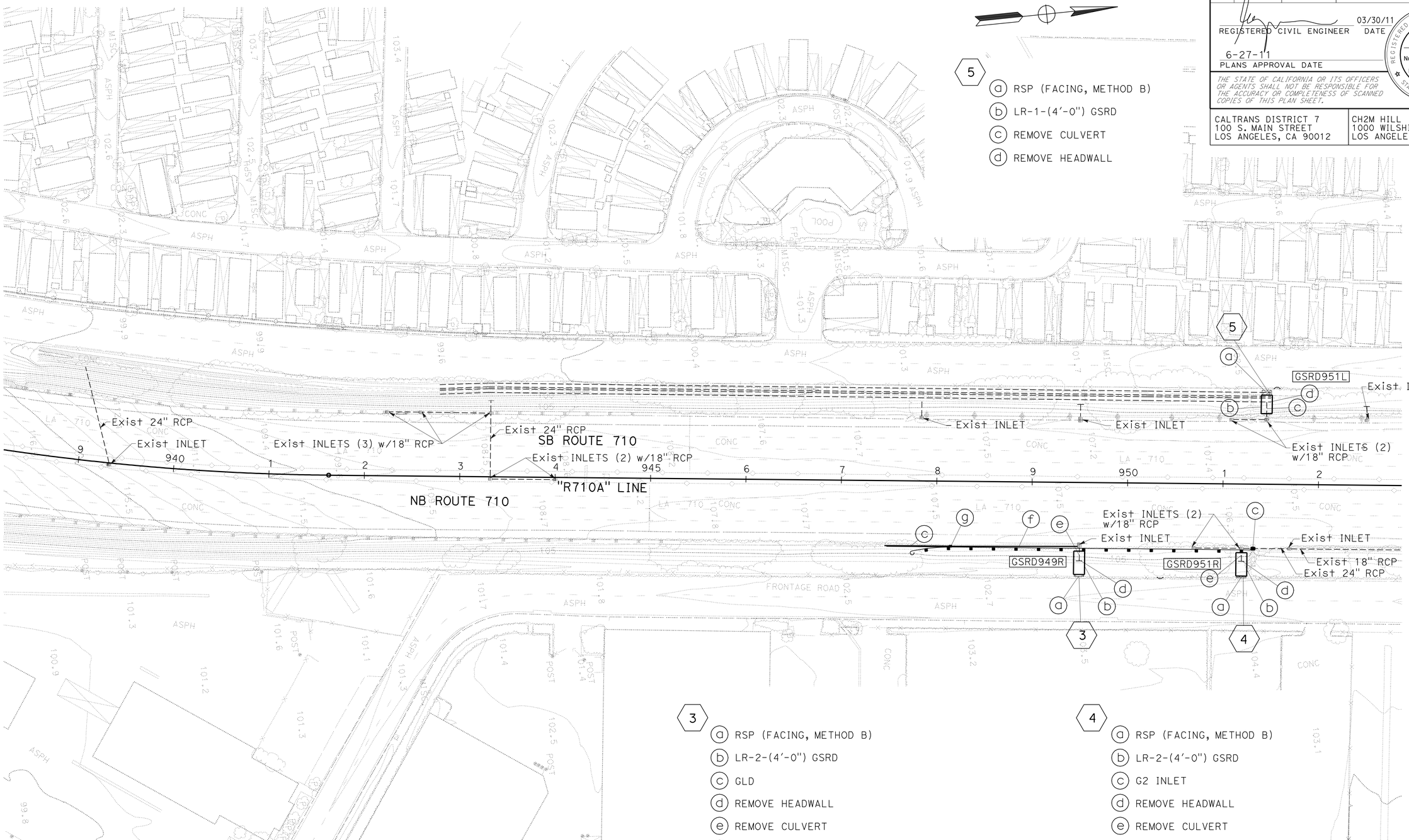


3
- ⓐ RSP (FACING, METHOD B)
- ⓑ LR-2-(4'-0") GSRD
- ⓒ GLD
- ⓓ REMOVE HEADWALL
- ⓔ REMOVE CULVERT
- ⓕ 18" APC
- ⓖ G1 INLET

4
- ⓐ RSP (FACING, METHOD B)
- ⓑ LR-2-(4'-0") GSRD
- ⓒ G2 INLET
- ⓓ REMOVE HEADWALL
- ⓔ REMOVE CULVERT

NOTE:

1. SOME EXISTING DRAINAGE SYSTEMS SHOWN HERE WILL BE DONE BY OTHERS, SEE EA 07269004.

FOR ACCURATE RIGHT OF WAY DATA, CONTACT RIGHT OF WAY ENGINEERING AT THE DISTRICT OFFICE.

THIS PLAN ACCURATE FOR DRAINAGE WORK ONLY

# DRAINAGE PLAN

SCALE: 1"=50'

D-2

STATE OF CALIFORNIA - DEPARTMENT OF TRANSPORTATION

CONSULTANT FUNCTIONAL SUPERVISOR: MELISSA DE LA PENA

CALCULATED-DESIGNED BY: T. GUO

CHECKED BY: G. HSU

REVISED BY

DATE REVISED

LAST REVISION 00-00-00

DATE PLOTTED => 28-JUN-2011
TIME PLOTTED => 19:51

| Dist | COUNTY | ROUTE | POST MILES TOTAL PROJECT | SHEET No. | TOTAL SHEETS |
|---|---|---|---|---|---|
| 07 | LA | 710 | 17.2/26.4 | 457 | 1507 |

REGISTERED CIVIL ENGINEER 03/30/11 DATE

6-27-11
PLANS APPROVAL DATE

REGISTERED PROFESSIONAL ENGINEER GINO V. NGUYEN No. C62140 Exp. 09/30/11 CIVIL STATE OF CALIFORNIA

*THE STATE OF CALIFORNIA OR ITS OFFICERS OR AGENTS SHALL NOT BE RESPONSIBLE FOR THE ACCURACY OR COMPLETENESS OF SCANNED COPIES OF THIS PLAN SHEET.*

CALTRANS DISTRICT 7
100 S. MAIN STREET
LOS ANGELES, CA 90012

CH2M HILL
1000 WILSHIRE BLVD
LOS ANGELES, CA 90017

**NOTE:**

1.Exist DRAINAGE SYSTEM MAY BE COVERED BY VEGETATION. CONTRACTOR SHALL FIELD VERIFY LOCATION.

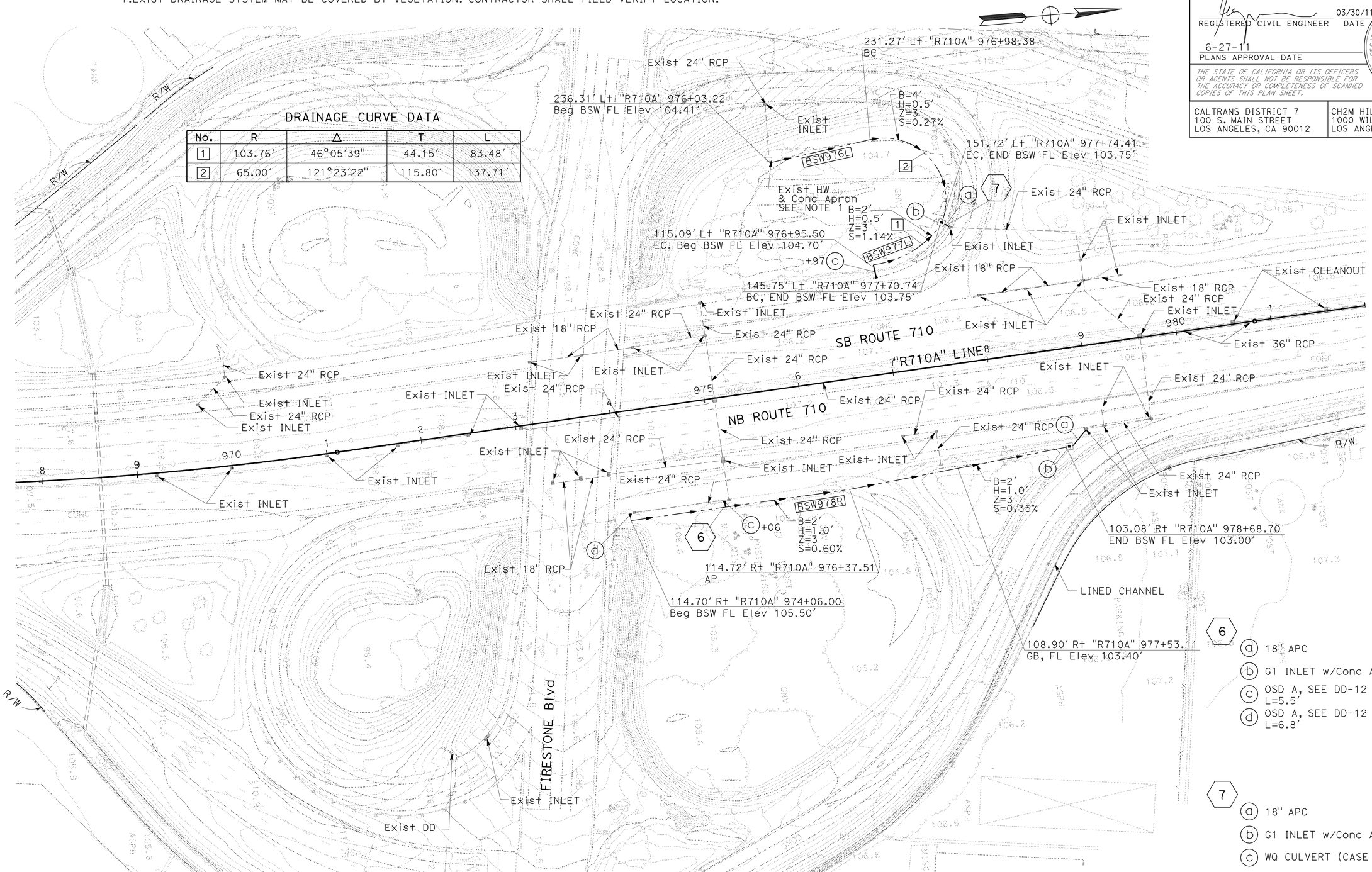


DRAINAGE CURVE DATA

| No. | R | Δ | T | L |
|---|---|---|---|---|
| 1 | 103.76' | 46°05'39" | 44.15' | 83.48' |
| 2 | 65.00' | 121°23'22" | 115.80' | 137.71' |

6

ⓐ 18" APC
ⓑ G1 INLET w/Conc APRON
ⓒ OSD A, SEE DD-12 L=5.5'
ⓓ OSD A, SEE DD-12 L=6.8'

7

ⓐ 18" APC
ⓑ G1 INLET w/Conc APRON
ⓒ WQ CULVERT (CASE A)

# DRAINAGE PLAN

SCALE: 1"=50'

FOR ACCURATE RIGHT OF WAY DATA, CONTACT
RIGHT OF WAY ENGINEERING AT THE DISTRICT OFFICE.

THIS PLAN ACCURATE FOR DRAINAGE WORK ONLY

**D-3**

STATE OF CALIFORNIA - DEPARTMENT OF TRANSPORTATION
Caltrans

CONSULTANT FUNCTIONAL SUPERVISOR: MELISSA DE LA PENA

CALCULATED-DESIGNED BY: T. GUO
CHECKED BY: G. HSU
REVISED BY
DATE REVISED

LAST REVISION 00-00-00
DATE PLOTTED => 28-JUN-2011
TIME PLOTTED => 19:51

| Dist | COUNTY | ROUTE | POST MILES TOTAL PROJECT | SHEET No. | TOTAL SHEETS |
|---|---|---|---|---|---|
| 07 | LA | 710 | 17.2/26.4 | 458 | 1507 |

REGISTERED CIVIL ENGINEER 03/30/11 DATE

6-27-11
PLANS APPROVAL DATE

REGISTERED PROFESSIONAL ENGINEER GINO V. NGUYEN No. C62140 Exp.09/30/11 CIVIL STATE OF CALIFORNIA

*THE STATE OF CALIFORNIA OR ITS OFFICERS OR AGENTS SHALL NOT BE RESPONSIBLE FOR THE ACCURACY OR COMPLETENESS OF SCANNED COPIES OF THIS PLAN SHEET.*

CALTRANS DISTRICT 7
100 S. MAIN STREET
LOS ANGELES, CA 90012

CH2M HILL
1000 WILSHIRE BLVD
LOS ANGELES, CA 90017

8
- (a) WQ CULVERT (CASE A)
- (b) WQ CULVERT (CASE C)

9
- (a) 18" APC
- (b) G1 INLET w/Conc Apron
- (c) WQ CULVERT (CASE A)

10
- (a) WQ CULVERT (CASE B)
- (b) WQ CULVERT (CASE A)
- (c) WQ CULVERT (CASE A)

11
- (a) WQ CULVERT (CASE B)
- (b) WQ CULVERT (CASE A)
- (c) WQ CULVERT (CASE A)
- (d) WQ CULVERT (CASE A)
- (e) WQ CULVERT (CASE A)

12
- (a) WQ CULVERT (CASE B)

13
- (a) G1 INLET w/Conc Apron

14
- (a) WQ CULVERT (CASE B)
- (b) WQ CULVERT (CASE C)

## DRAINAGE CURVE DATA

| No. | R | Δ | T | L |
|---|---|---|---|---|
| 1 | 416.32′ | 33°20′02″ | 124.64′ | 242.21′ |
| 2 | 111.15′ | 62°31′38″ | 67.48′ | 121.30′ |
| 3 | 155.42′ | 33°15′55″ | 46.43′ | 90.24′ |

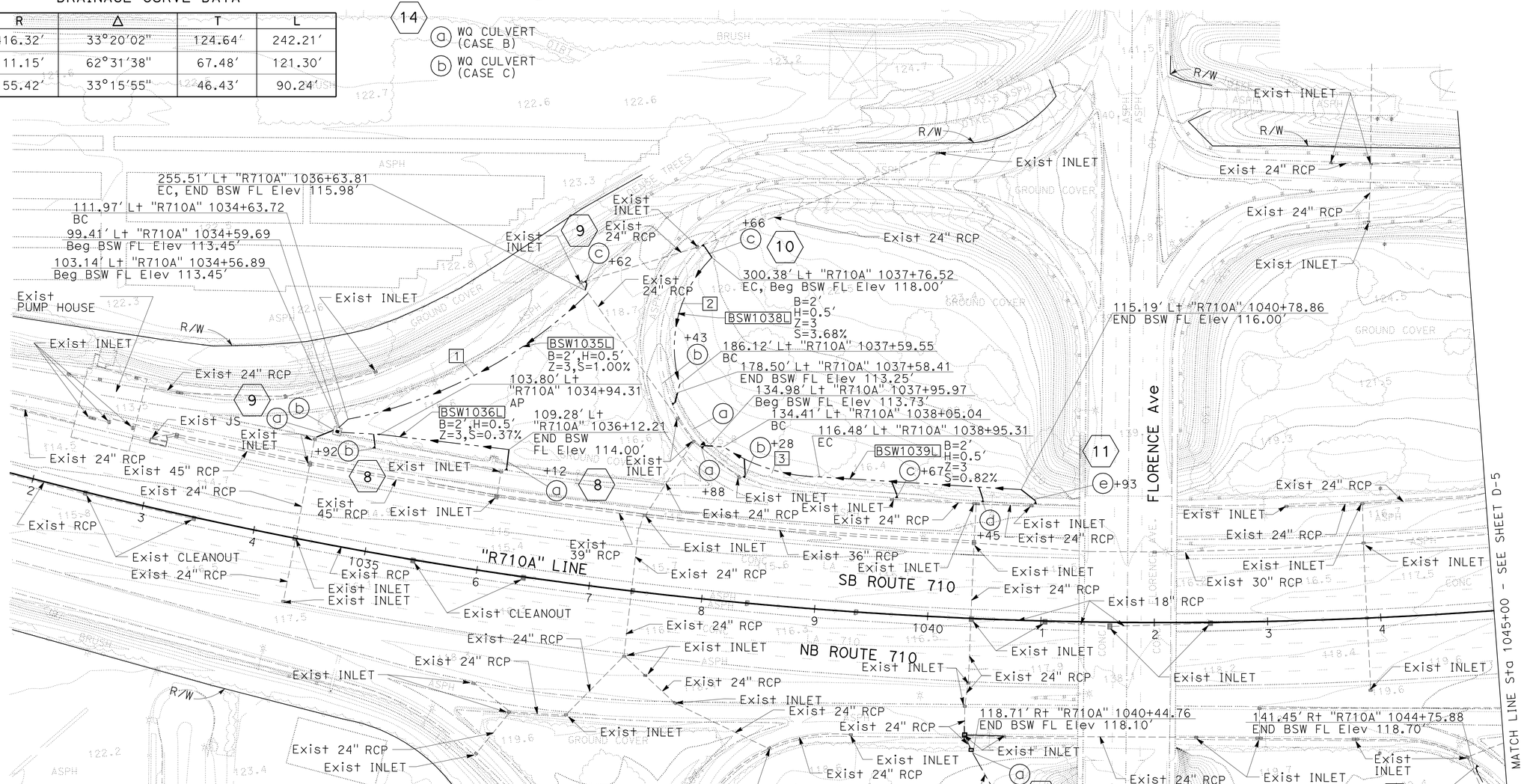


# DRAINAGE PLAN

SCALE: 1"=50′

FOR ACCURATE RIGHT OF WAY DATA, CONTACT RIGHT OF WAY ENGINEERING AT THE DISTRICT OFFICE.

THIS PLAN ACCURATE FOR DRAINAGE WORK ONLY

D-4

STATE OF CALIFORNIA - DEPARTMENT OF TRANSPORTATION

CONSULTANT FUNCTIONAL SUPERVISOR: MELISSA DE LA PENA

CALCULATED-DESIGNED BY: T. GUO

CHECKED BY: G. HSU

REVISED BY / DATE REVISED

LAST REVISION 00-00-00 | DATE PLOTTED => 28-JUN-2011 | TIME PLOTTED => 19:51

| Dist | COUNTY | ROUTE | POST MILES TOTAL PROJECT | SHEET No. | TOTAL SHEETS |
|---|---|---|---|---|---|
| 07 | LA | 710 | 17.2/26.4 | 459 | 1507 |

REGISTERED CIVIL ENGINEER 03/30/11 DATE

6-27-11
PLANS APPROVAL DATE

REGISTERED PROFESSIONAL ENGINEER GINO V. NGUYEN No. C62140 Exp. 09/30/11 CIVIL STATE OF CALIFORNIA

*THE STATE OF CALIFORNIA OR ITS OFFICERS OR AGENTS SHALL NOT BE RESPONSIBLE FOR THE ACCURACY OR COMPLETENESS OF SCANNED COPIES OF THIS PLAN SHEET.*

CALTRANS DISTRICT 7
100 S. MAIN STREET
LOS ANGELES, CA 90012

CH2M HILL
1000 WILSHIRE BLVD
LOS ANGELES, CA 90017

15
- (a) WQ CULVERT (CASE B)
- (b) WQ CULVERT (CASE A)
- (c) WQ CULVERT (CASE A)

16
- (a) 18" APC
- (b) G1 INLET w/Conc Apron
- (c) OSD
- (d) RSP (FACING METHOD B)

## DRAINAGE CURVE DATA

| No. | R | Δ | T | L |
|---|---|---|---|---|
| 1 | 121.54′ | 85°31′24" | 112.40′ | 181.42′ |

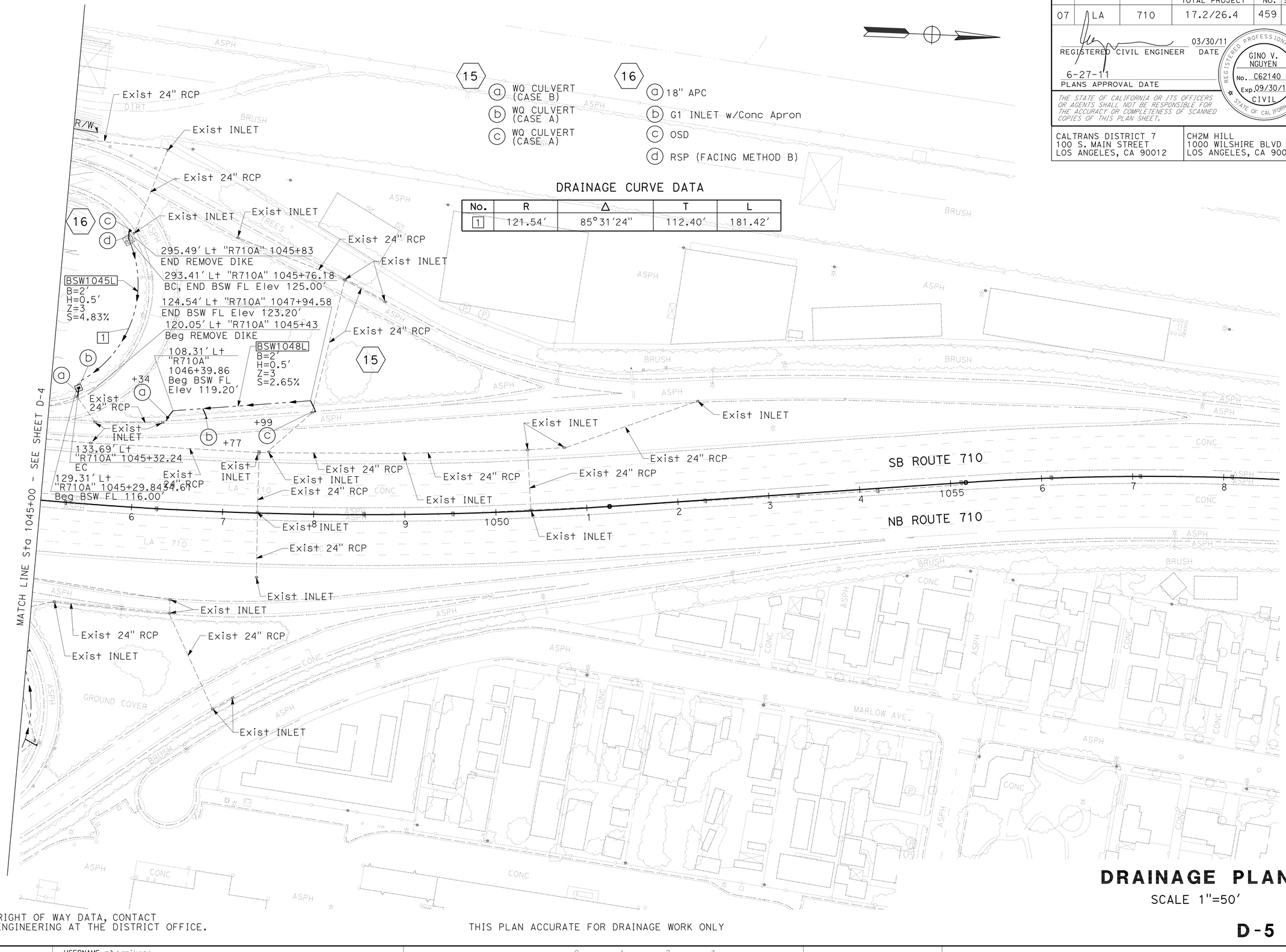


# DRAINAGE PLAN

SCALE 1"=50′

FOR ACCURATE RIGHT OF WAY DATA, CONTACT RIGHT OF WAY ENGINEERING AT THE DISTRICT OFFICE.

THIS PLAN ACCURATE FOR DRAINAGE WORK ONLY

D-5

STATE OF CALIFORNIA - DEPARTMENT OF TRANSPORTATION

Caltrans

CONSULTANT FUNCTIONAL SUPERVISOR: MELISSA DE LA PENA

CALCULATED-DESIGNED BY: T. GUO

CHECKED BY: G. HSU

REVISED BY

DATE REVISED

LAST REVISION 00-00-00

DATE PLOTTED => 28-JUN-2011
TIME PLOTTED => 19:52

| Dist | COUNTY | ROUTE | POST MILES TOTAL PROJECT | SHEET No. | TOTAL SHEETS |
|---|---|---|---|---|---|
| 07 | LA | 710 | 17.2/26.4 | 460 | 1507 |

REGISTERED CIVIL ENGINEER 03/30/11 DATE

6-27-11
PLANS APPROVAL DATE

REGISTERED PROFESSIONAL ENGINEER GINO V. NGUYEN No. C62140 Exp. 09/30/11 CIVIL STATE OF CALIFORNIA

*THE STATE OF CALIFORNIA OR ITS OFFICERS OR AGENTS SHALL NOT BE RESPONSIBLE FOR THE ACCURACY OR COMPLETENESS OF SCANNED COPIES OF THIS PLAN SHEET.*

CALTRANS DISTRICT 7
100 S. MAIN STREET
LOS ANGELES, CA 90012

CH2M HILL
1000 WILSHIRE BLVD
LOS ANGELES, CA 90017

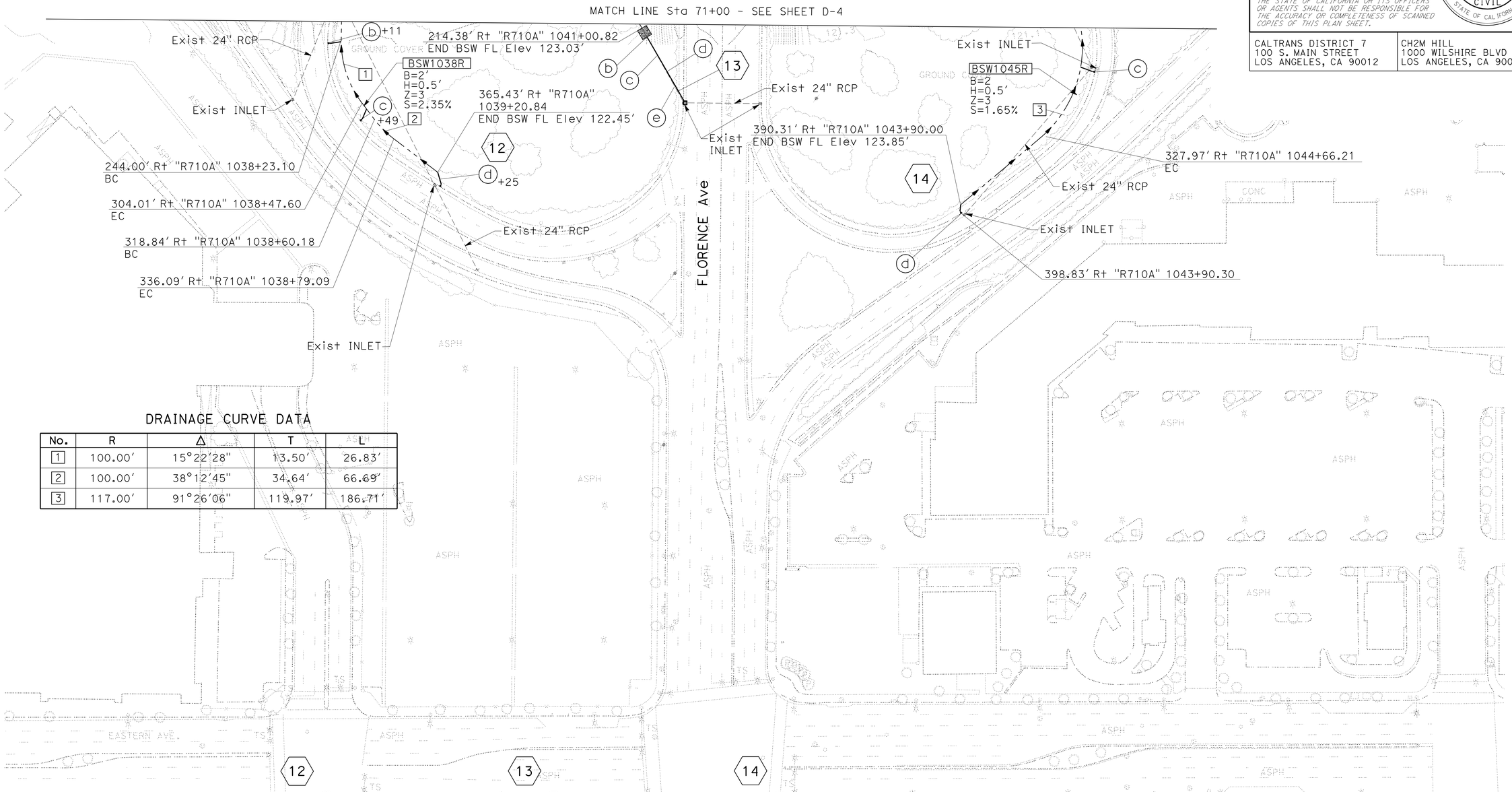


DRAINAGE CURVE DATA

| No. | R | Δ | T | L |
|---|---|---|---|---|
| 1 | 100.00' | 15°22'28" | 13.50' | 26.83' |
| 2 | 100.00' | 38°12'45" | 34.64' | 66.69' |
| 3 | 117.00' | 91°26'06" | 119.97' | 186.71' |

**12**
- (b) WQ CULVERT (CASE A)
- (c) WQ CULVERT (CASE A)
- (d) WQ CULVERT (CASE A)

**13**
- (b) RSP (FACING METHOD B)
- (c) 24" AFES
- (d) 24" CSP
- (e) REMOVE CULVERT, L=80.0'

**14**
- (c) WQ CULVERT (CASE C)
- (d) WQ CULVERT (CASE A)

# DRAINAGE PLAN

SCALE: 1"=50'

**D-6**

FOR ACCURATE RIGHT OF WAY DATA, CONTACT RIGHT OF WAY ENGINEERING AT THE DISTRICT OFFICE.

THIS PLAN ACCURATE FOR DRAINAGE WORK ONLY

REVISED BY | DATE REVISED
T. GUO | G. HSU
CALCULATED-DESIGNED BY | CHECKED BY
CONSULTANT FUNCTIONAL SUPERVISOR
MELISSA DE LA PENA
STATE OF CALIFORNIA - DEPARTMENT OF TRANSPORTATION
Caltrans

LAST REVISION 00-00-00
DATE PLOTTED => 28-JUN-2011
TIME PLOTTED => 19:52

| Dist | COUNTY | ROUTE | POST MILES TOTAL PROJECT | SHEET No. | TOTAL SHEETS |
|---|---|---|---|---|---|
| 07 | LA | 710 | 17.2/26.4 | 461 | 1507 |

REGISTERED CIVIL ENGINEER 03/30/11 DATE

6-27-11
PLANS APPROVAL DATE

REGISTERED PROFESSIONAL ENGINEER
GINO V. NGUYEN
No. C62140
Exp. 09/30/11
CIVIL
STATE OF CALIFORNIA

*THE STATE OF CALIFORNIA OR ITS OFFICERS OR AGENTS SHALL NOT BE RESPONSIBLE FOR THE ACCURACY OR COMPLETENESS OF SCANNED COPIES OF THIS PLAN SHEET.*

CALTRANS DISTRICT 7
100 S. MAIN STREET
LOS ANGELES, CA 90012

CH2M HILL
1000 WILSHIRE BLVD
LOS ANGELES, CA 90017

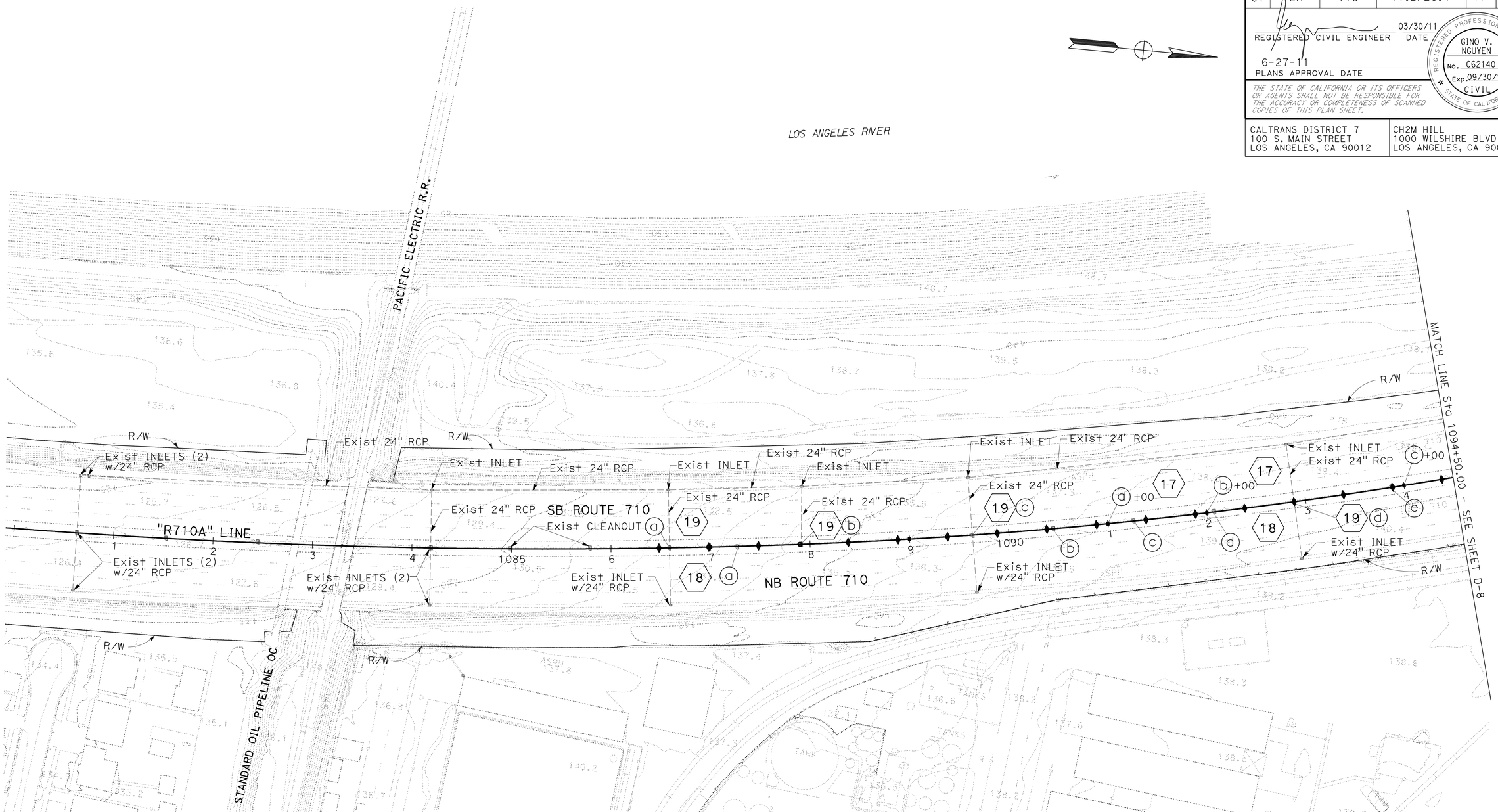


**17**
- (a) TYPE CL2 INLET (CASE 2)
- (b) TYPE CL2 INLET (CASE 2)
- (c) TYPE CL2 INLET (CASE 2)

**18**
- (a) REMOVE CLEANOUT
- (b) REMOVE CLEANOUT
- (c) REMOVE CLEANOUT
- (d) REMOVE CLEANOUT
- (e) REMOVE CLEANOUT

**19**
- (a) Adj INLET (CASE 2)
- (b) Adj INLET (CASE 2)
- (c) Adj INLET (CASE 2)
- (d) Adj INLET (CASE 2)

# DRAINAGE PLAN

SCALE: 1"=50'

FOR ACCURATE RIGHT OF WAY DATA, CONTACT RIGHT OF WAY ENGINEERING AT THE DISTRICT OFFICE.

THIS PLAN ACCURATE FOR DRAINAGE WORK ONLY

**D-7**

| REVISED BY | DATE REVISED |
|---|---|
| T. GUO | G. HSU |

CALCULATED-DESIGNED BY | CHECKED BY

CONSULTANT FUNCTIONAL SUPERVISOR: MELISSA DE LA PENA

STATE OF CALIFORNIA - DEPARTMENT OF TRANSPORTATION

Caltrans

LAST REVISION 00-00-00 | DATE PLOTTED => 28-JUN-2011 | TIME PLOTTED => 19:52

| Dist | COUNTY | ROUTE | POST MILES TOTAL PROJECT | SHEET No. | TOTAL SHEETS |
|---|---|---|---|---|---|
| 07 | LA | 710 | 17.2/26.4 | 462 | 1507 |

REGISTERED CIVIL ENGINEER 03/30/11 DATE

6-27-11
PLANS APPROVAL DATE

REGISTERED PROFESSIONAL ENGINEER GINO V. NGUYEN No. C62140 Exp. 09/30/11 CIVIL STATE OF CALIFORNIA

*THE STATE OF CALIFORNIA OR ITS OFFICERS OR AGENTS SHALL NOT BE RESPONSIBLE FOR THE ACCURACY OR COMPLETENESS OF SCANNED COPIES OF THIS PLAN SHEET.*

CALTRANS DISTRICT 7
100 S. MAIN STREET
LOS ANGELES, CA 90012

CH2M HILL
1000 WILSHIRE BLVD
LOS ANGELES, CA 90017

**NOTE:**

FOR 8" UNDERDRAIN, SEE DETAILS ON DD-18.

**20**
- (a) CAP INLET
- (b) CAP INLET
- (c) 18" APC
- (d) G1 INLET
- (e) Adj INLET (CASE 1)
- (f) 18" APC
- (g) G1 INLET
- (h) WALL DRAIN (CASE 2)
- (i) Adj INLET (CASE 2)

**21**
- (a) CAP INLET
- (b) 18" APC
- (c) G1 INLET
- (d) Adj INLET (CASE 1)

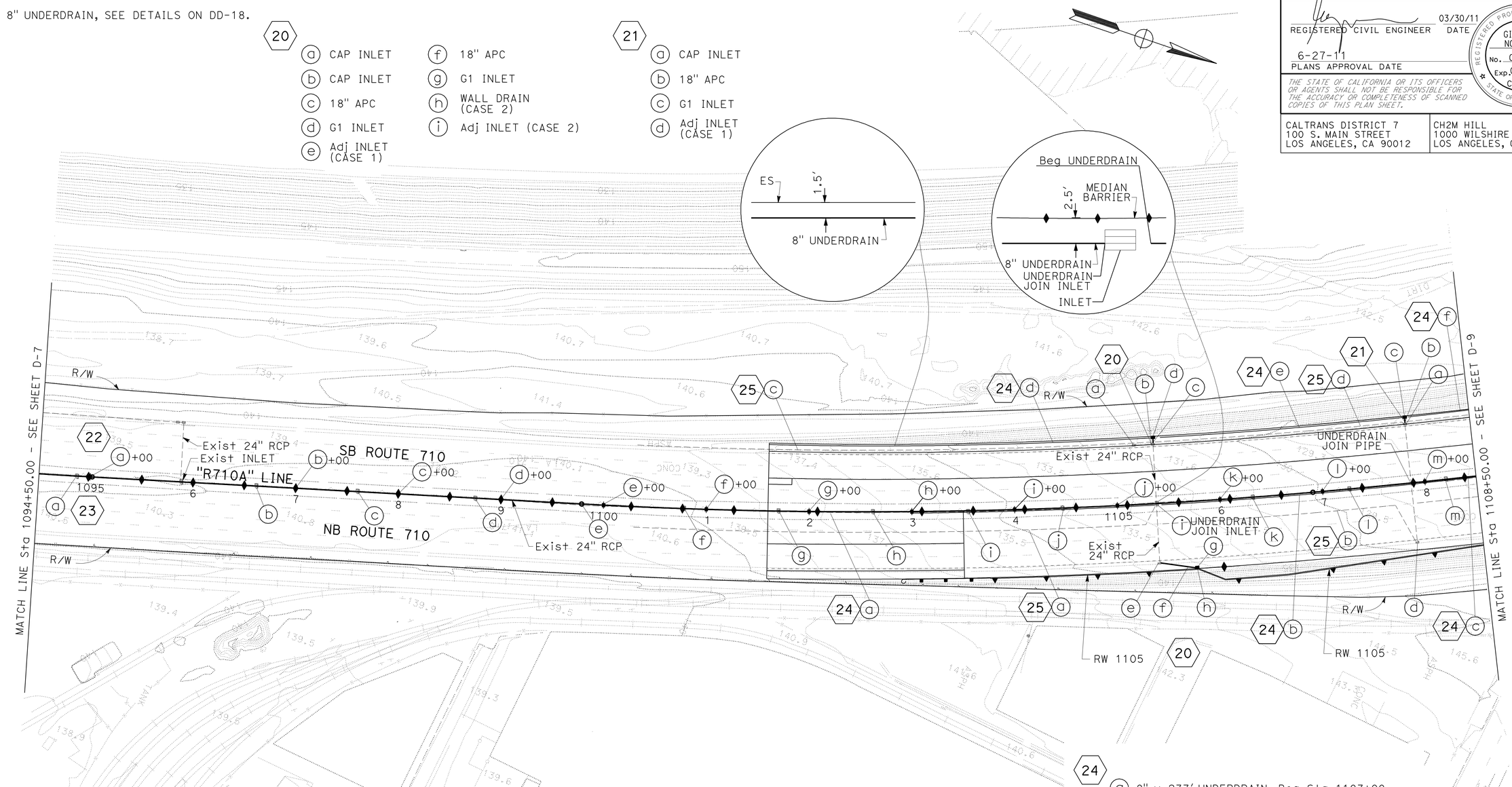


**22**
- (a) TYPE CL2 INLET (CASE 2)
- (b) TYPE CL2 INLET (CASE 2)
- (c) TYPE CL2 INLET (CASE 2)
- (d) TYPE CL2 INLET (CASE 2)
- (e) TYPE CL2 INLET (CASE 2)
- (f) TYPE CL2 INLET (CASE 2)
- (g) TYPE CL2 INLET (CASE 2)
- (h) TYPE CL2 INLET (CASE 2)
- (i) TYPE CL2 INLET (CASE 2)
- (j) TYPE CL2 INLET (CASE 2)
- (k) TYPE CL2 INLET (CASE 2)
- (l) TYPE CL2 INLET (CASE 2)
- (m) TYPE CL2 INLET (CASE 2)

**23**
- (a) REMOVE CLEANOUT
- (b) REMOVE CLEANOUT
- (c) REMOVE CLEANOUT
- (d) REMOVE CLEANOUT
- (e) REMOVE CLEANOUT
- (f) REMOVE CLEANOUT
- (g) REMOVE CLEANOUT
- (h) REMOVE CLEANOUT
- (i) REMOVE CLEANOUT
- (j) REMOVE CLEANOUT
- (k) REMOVE CLEANOUT
- (l) REMOVE CLEANOUT
- (m) REMOVE CLEANOUT

**24**
- (a) 8" x 237' UNDERDRAIN, Beg Sta 1103+00
- (b) 8" x 244' UNDERDRAIN, Beg Sta 1105+43
- (c) 8" x 121' UNDERDRAIN, Beg Sta 1107+90
- (d) 8" x 372' UNDERDRAIN, Beg Sta 1101+60
- (e) 8" x 237' UNDERDRAIN, Beg Sta 1105+45
- (f) 8" x 122' UNDERDRAIN, Beg Sta 1107+90

**25**
- (a) REMOVE 8" UNDERDRAIN
- (b) REMOVE 8" UNDERDRAIN
- (c) REMOVE 8" UNDERDRAIN
- (d) REMOVE 8" UNDERDRAIN

FOR ACCURATE RIGHT OF WAY DATA, CONTACT RIGHT OF WAY ENGINEERING AT THE DISTRICT OFFICE.

THIS PLAN ACCURATE FOR DRAINAGE WORK ONLY

# DRAINAGE PLAN

SCALE: 1"=50'

**D-8**

STATE OF CALIFORNIA - DEPARTMENT OF TRANSPORTATION

Caltrans

CONSULTANT FUNCTIONAL SUPERVISOR: MELISSA DE LA PENA

CALCULATED-DESIGNED BY: T. GUO

CHECKED BY: G. HSU

REVISED BY

DATE REVISED

LAST REVISION 00-00-00

DATE PLOTTED => 28-JUN-2011
TIME PLOTTED => 19:52

| Dist | COUNTY | ROUTE | POST MILES TOTAL PROJECT | SHEET No. | TOTAL SHEETS |
|---|---|---|---|---|---|
| 07 | LA | 710 | 17.2/26.4 | 463 | 1507 |

REGISTERED CIVIL ENGINEER 03/30/11 DATE

6-27-11
PLANS APPROVAL DATE

REGISTERED PROFESSIONAL ENGINEER GINO V. NGUYEN No. C62140 Exp. 09/30/11 CIVIL STATE OF CALIFORNIA

*THE STATE OF CALIFORNIA OR ITS OFFICERS OR AGENTS SHALL NOT BE RESPONSIBLE FOR THE ACCURACY OR COMPLETENESS OF SCANNED COPIES OF THIS PLAN SHEET.*

CALTRANS DISTRICT 7
100 S. MAIN STREET
LOS ANGELES, CA 90012

CH2M HILL
1000 WILSHIRE BLVD
LOS ANGELES, CA 90017

* UNDERDRAIN JOIN INLET

**34**
- (a) TYPE CL2 INLET (CASE 2)
- (b) TYPE CL2 INLET (CASE 2)
- (c) TYPE CL2 INLET (CASE 2)
- (d) TYPE CL2 INLET (CASE 2)
- (e) TYPE CL2 INLET (CASE 2)
- (f) TYPE CL2 INLET (CASE 2)
- (g) TYPE CL2 INLET (CASE 2)
- (h) TYPE CL2 INLET (CASE 2)
- (i) TYPE CL2 INLET (CASE 2)
- (j) TYPE CL2 INLET (CASE 2)
- (k) TYPE CL2 INLET (CASE 2)

**35**
- (a) REMOVE CLEANOUT
- (b) REMOVE CLEANOUT
- (c) REMOVE CLEANOUT
- (d) REMOVE CLEANOUT
- (e) REMOVE CLEANOUT
- (f) REMOVE CLEANOUT
- (g) REMOVE CLEANOUT
- (h) REMOVE CLEANOUT
- (i) REMOVE CLEANOUT

**36**
- (a) 8" x 180' UNDERDRAIN, Beg Sta 1111+13
- (b) 8" x 283' UNDERDRAIN, Beg Sta 1114+05
- (c) 8" x 217' UNDERDRAIN, Beg Sta 1116+30
- (d) 8" x 354' UNDERDRAIN, Beg Sta 1118+80
- (e) 8" x 204' UNDERDRAIN, Beg Sta 1111+18
- (f) 8" x 286' UNDERDRAIN, Beg Sta 1114+08
- (g) 8" x 218' UNDERDRAIN, Beg Sta 1116+30
- (h) 8" x 55' UNDERDRAIN, Beg Sta 1118+80
- (i) 8" x 294' UNDERDRAIN, Beg Sta 1119+40
- (j) 8" x 135' UNDERDRAIN, Beg Sta 1122+40
- (k) 8" x 122' UNDERDRAIN, Beg Sta 1122+44

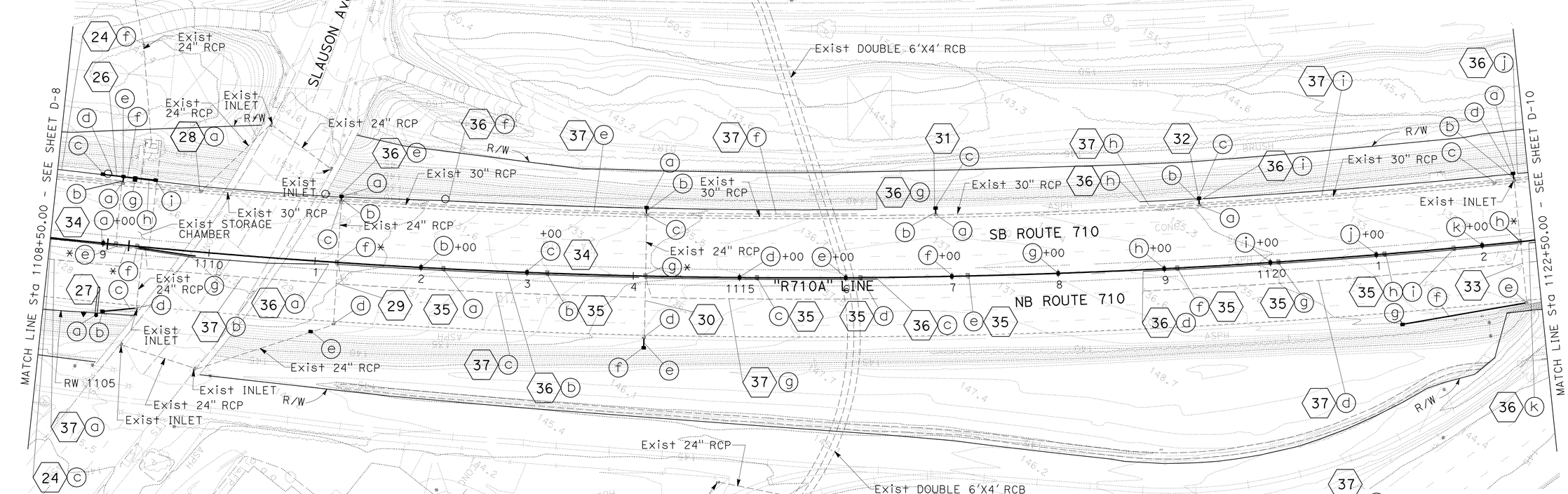


**26**
- (a) CAP INLET
- (b) 24" APC
- (c) G1 INLET
- (d) 18" APC
- (e) G1 INLET
- (f) 18" APC
- (g) GD-1 INLET
- (h) 18" APC
- (i) G1 INLET

**27**
- (a) G1 INLET
- (b) WALL DRAIN (CASE 2)
- (c) 18" APC
- (d) Adj INLET (CASE 1)
- (e) Adj INLET, (CASE 1)
- (f) Adj INLET, (CASE 1)
- (g) GLD

**28**
- (a) Adj INLET, (CASE 1)

**29**
- (a) G1 INLET
- (b) 18" APC
- (c) CAP INLET
- (d) Adj INLET, (CASE 1)
- (e) G2 INLET
- (f) Adj INLET (CASE 2)

**30**
- (a) G1 INLET
- (b) 18" APC
- (c) CAP INLET
- (d) CAP INLET
- (e) 18" APC
- (f) G1 INLET
- (g) Adj INLET, (CASE 2)

**31**
- (a) CAP INLET
- (b) 18" APC
- (c) G1 INLET

**32**
- (a) CAP INLET
- (b) 18" APC
- (c) G1 INLET

**33**
- (a) G1 INLET
- (b) 18" APC
- (c) CAP INLET
- (d) CAP INLET
- (e) Adj INLET (CASE 1)
- (f) 18" APC
- (g) G1 INLET
- (h) Adj INLET (CASE 2)

**37**
- (a) REMOVE 8" UNDERDRAIN
- (b) REMOVE 8" UNDERDRAIN
- (c) REMOVE 8" UNDERDRAIN
- (d) REMOVE 8" UNDERDRAIN
- (e) REMOVE 8" UNDERDRAIN
- (f) REMOVE 8" UNDERDRAIN
- (g) REMOVE 8" UNDERDRAIN
- (h) REMOVE 8" UNDERDRAIN
- (i) REMOVE 8" UNDERDRAIN

FOR ACCURATE RIGHT OF WAY DATA, CONTACT RIGHT OF WAY ENGINEERING AT THE DISTRICT OFFICE.

THIS PLAN ACCURATE FOR DRAINAGE WORK ONLY

# DRAINAGE PLAN

SCALE: 1"=50'

**D-9**

STATE OF CALIFORNIA - DEPARTMENT OF TRANSPORTATION
Caltrans

CONSULTANT FUNCTIONAL SUPERVISOR: MELISSA DE LA PENA

CALCULATED- DESIGNED BY: T. GUO
CHECKED BY: G. HSU
REVISED BY
DATE REVISED

LAST REVISION 00-00-00 | DATE PLOTTED => 28-JUN-2011 | TIME PLOTTED => 19:52

| Dist | COUNTY | ROUTE | POST MILES TOTAL PROJECT | SHEET No. | TOTAL SHEETS |
|---|---|---|---|---|---|
| 07 | LA | 710 | 17.2/26.4 | 464 | 1507 |

REGISTERED CIVIL ENGINEER 03/30/11 DATE

6-27-11
PLANS APPROVAL DATE

REGISTERED PROFESSIONAL ENGINEER GINO V. NGUYEN No. C62140 Exp. 09/30/11 CIVIL STATE OF CALIFORNIA

*THE STATE OF CALIFORNIA OR ITS OFFICERS OR AGENTS SHALL NOT BE RESPONSIBLE FOR THE ACCURACY OR COMPLETENESS OF SCANNED COPIES OF THIS PLAN SHEET.*

CALTRANS DISTRICT 7
100 S. MAIN STREET
LOS ANGELES, CA 90012

CH2M HILL
1000 WILSHIRE BLVD
LOS ANGELES, CA 90017

**38**
- (a) G1 INLET
- (b) 18" APC
- (c) GD-1 INLET
- (d) 24" APC
- (e) G1 INLET
- (f) 24" APC
- (g) G1 INLET
- (h) 24" APC
- (i) CAP INLET

**39**
- (a) GLD
- (b) G1 INLET
- (c) 18" APC
- (d) GLD
- (e) G1 INLET
- (f) GLD
- (g) Adj INLET (CASE 1)
- (h) 18" APC
- (i) G1 INLET
- (j) WALL DRAIN (CASE 2)

**40**
- (a) CAP INLET
- (b) 18" APC
- (c) GD-1 INLET
- (d) CAP INLET
- (e) WALL DRAIN (CASE 2)
- (f) WALL DRAIN (CASE 1)

**41**
- (a) Adj INLET (CASE 2)
- (b) 18" APC
- (c) G1 INLET
- (d) WALL DRAIN (CASE 2)
- (e) Adj INLET (CASE 2)

**42**
- (a) Adj INLET (CASE 1)
- (b) 24" APC
- (c) G2 INLET
- (d) GLD
- (e) 24" APC
- (f) GD-2 INLET
- (g) Adj INLET (CASE 2)

* UNDERDRAIN JOIN INLET

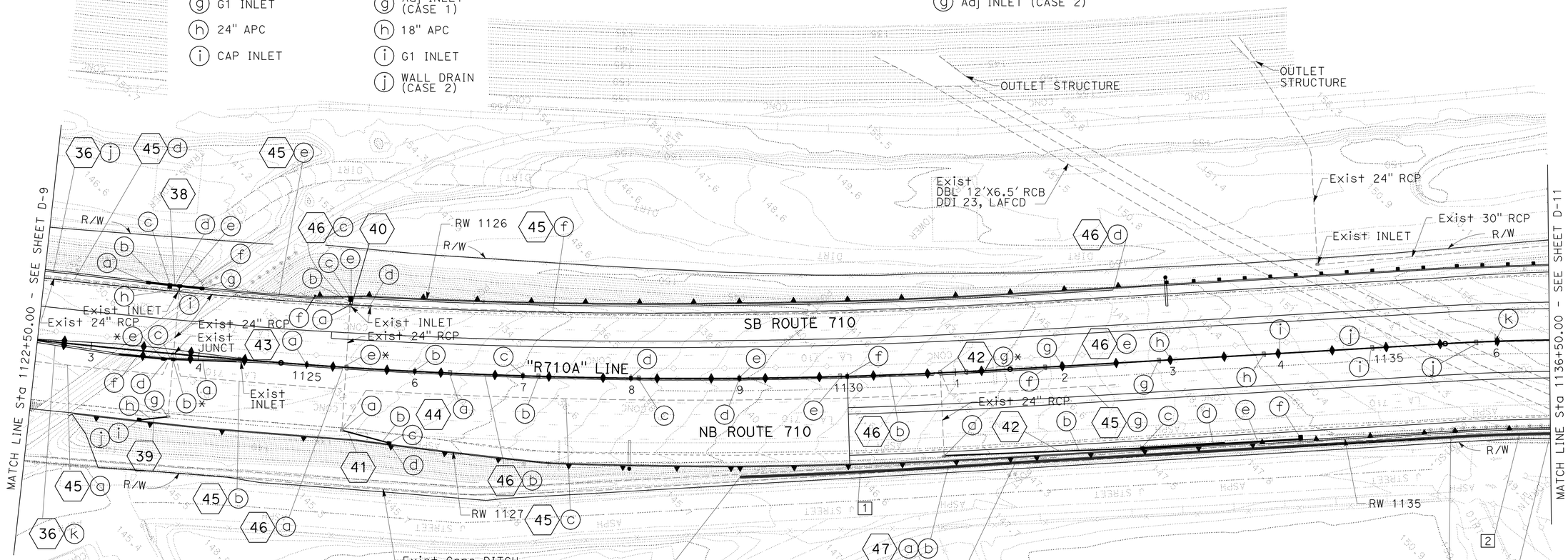


**43**
- (a) TYPE CL2 INLET (CASE 2)
- (b) TYPE CL2 INLET (CASE 2)
- (c) TYPE CL2 INLET (CASE 2)
- (d) TYPE CL2 INLET (CASE 2)
- (e) TYPE CL2 INLET (CASE 2)
- (f) TYPE CL2 INLET (CASE 2)
- (g) TYPE CL2 INLET (CASE 2)
- (h) TYPE CL2 INLET (CASE 2)
- (i) TYPE CL2 INLET (CASE 2)
- (j) TYPE CL2 INLET (CASE 2)
- (k) TYPE CL2 INLET (CASE 2)

**44**
- (a) REMOVE CLEANOUT
- (b) REMOVE CLEANOUT
- (c) REMOVE CLEANOUT
- (d) REMOVE CLEANOUT
- (e) REMOVE CLEANOUT
- (f) REMOVE CLEANOUT
- (g) REMOVE CLEANOUT
- (h) REMOVE CLEANOUT
- (i) REMOVE CLEANOUT
- (j) REMOVE CLEANOUT

**45**
- (a) REMOVE 8" UNDERDRAIN
- (b) REMOVE 8" UNDERDRAIN
- (c) REMOVE 8" UNDERDRAIN
- (d) REMOVE 8" UNDERDRAIN
- (e) REMOVE 8" UNDERDRAIN
- (f) REMOVE 8" UNDERDRAIN
- (g) REMOVE 8" UNDERDRAIN

**46**
- (a) 8" x 156' UNDERDRAIN, Beg Sta 1125+34
- (b) 8" x 792' UNDERDRAIN, Beg Sta 1132+50
- (c) 8" x 152' UNDERDRAIN, Beg Sta 1125+30
- (d) 8" x 542' UNDERDRAIN, Beg Sta 1130+80
- (e) 8" x 162' UNDERDRAIN, Beg Sta 1132+50

**47**
- (a) Conc DITCH, L=766', SEE DETAIL DD-9
- (b) REMOVE Conc DITCH

CURVE DATA

| No. | R | Δ | T | L |
|---|---|---|---|---|
| 1 | 7937.85' | 01°50'28" | 127.55' | 255.07' |
| 2 | 1913.50' | 02°45'39" | 46.11' | 92.21' |

FOR ACCURATE RIGHT OF WAY DATA, CONTACT RIGHT OF WAY ENGINEERING AT THE DISTRICT OFFICE.

THIS PLAN ACCURATE FOR DRAINAGE WORK ONLY

# DRAINAGE PLAN

SCALE: 1"=50'

**D-10**

STATE OF CALIFORNIA - DEPARTMENT OF TRANSPORTATION

Caltrans

CONSULTANT FUNCTIONAL SUPERVISOR: MELISSA DE LA PENA

CALCULATED-DESIGNED BY: T. GUO

CHECKED BY: G. HSU

REVISED BY | DATE REVISED

LAST REVISION 00-00-00 | DATE PLOTTED => 28-JUN-2011 | TIME PLOTTED => 19:52

| Dist | COUNTY | ROUTE | POST MILES TOTAL PROJECT | SHEET No. | TOTAL SHEETS |
|---|---|---|---|---|---|
| 07 | LA | 710 | 17.2/26.4 | 465 | 1507 |

REGISTERED CIVIL ENGINEER 03/30/11 DATE

6-27-11
PLANS APPROVAL DATE

REGISTERED PROFESSIONAL ENGINEER GINO V. NGUYEN No. C62140 Exp. 09/30/11 CIVIL STATE OF CALIFORNIA

*THE STATE OF CALIFORNIA OR ITS OFFICERS OR AGENTS SHALL NOT BE RESPONSIBLE FOR THE ACCURACY OR COMPLETENESS OF SCANNED COPIES OF THIS PLAN SHEET.*

CALTRANS DISTRICT 7
100 S. MAIN STREET
LOS ANGELES, CA 90012

CH2M HILL
1000 WILSHIRE BLVD
LOS ANGELES, CA 90017

**48**
- (a) HW
- (b) 24" APC
- (c) REMOVE HW
- (d) G2 INLET w/Conc APRON
- (e) REMOVE INLET
- (f) Mod GD-2 INLET

**49**
- (a) REMOVE INLET
- (b) Mod GD-2 INLET

**50**
- (a) CAP INLET
- (b) Abn CULVERT, L=30'

**51**
- (a) REMOVE INLET
- (b) Mod GD-2 INLET
- (c) Adj INLET (CASE 1)
- (d) Adj INLET (CASE 1)
- (e) CAP INLET
- (f) 18" APC
- (g) G1 INLET
- (h) GLD

**52**
- (a) REMOVE INLET
- (b) Mod GD-2 INLET

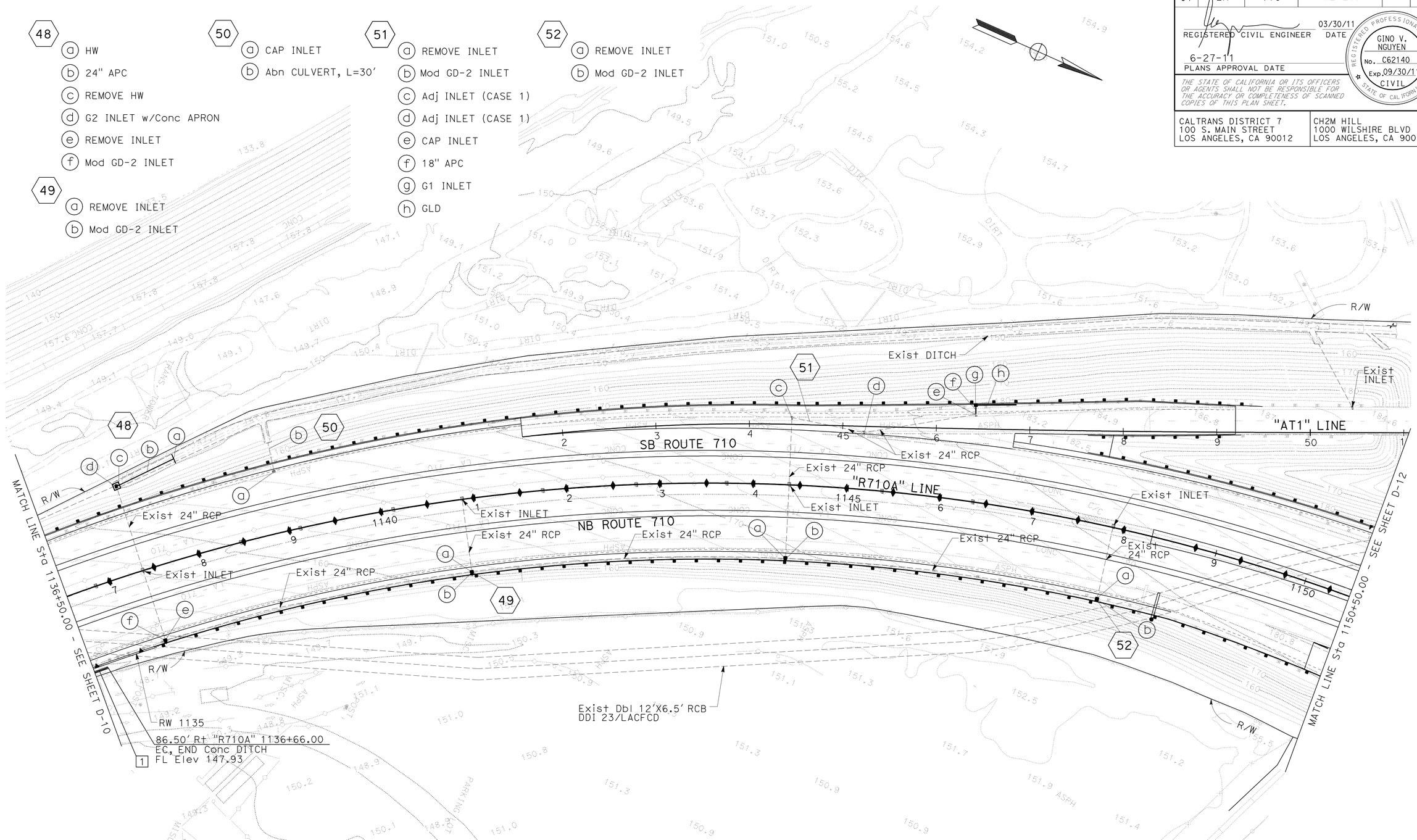


CURVE DATA

| No. | R | Δ | T | L |
|---|---|---|---|---|
| 1 | 1913.50' | 00°27'31" | 7.66' | 15.31' |

FOR ACCURACY OF RIGHT OF WAY DATA, CONTACT RIGHT OF WAY ENGINEERING AT THE DISTRICT OFFICE.

THIS PLAN ACCURATE FOR DRAINAGE WORK ONLY

# DRAINAGE PLAN

SCALE: 1"=50'

**D-11**

STATE OF CALIFORNIA - DEPARTMENT OF TRANSPORTATION

CONSULTANT FUNCTIONAL SUPERVISOR: MELISSA DE LA PENA

CALCULATED-DESIGNED BY: R. HENDERSON

CHECKED BY: G. HSU

REVISED BY / DATE REVISED

LAST REVISION 00-00-00 | DATE PLOTTED => 28-JUN-2011 | TIME PLOTTED => 19:53

| Dist | COUNTY | ROUTE | POST MILES TOTAL PROJECT | SHEET No. | TOTAL SHEETS |
|---|---|---|---|---|---|
| 07 | LA | 710 | 17.2/26.4 | 466 | 1507 |

REGISTERED CIVIL ENGINEER 03/30/11 DATE

6-27-11
PLANS APPROVAL DATE

REGISTERED PROFESSIONAL ENGINEER GINO V. NGUYEN No. C62140 Exp. 09/30/11 CIVIL STATE OF CALIFORNIA

*THE STATE OF CALIFORNIA OR ITS OFFICERS OR AGENTS SHALL NOT BE RESPONSIBLE FOR THE ACCURACY OR COMPLETENESS OF SCANNED COPIES OF THIS PLAN SHEET.*

CALTRANS DISTRICT 7
100 S. MAIN STREET
LOS ANGELES, CA 90012

CH2M HILL
1000 WILSHIRE BLVD
LOS ANGELES, CA 90017

**53**
- (a) GD-1 INLET
- (b) CAP INLET
- (c) Abn CULVERT, L=151′
- (d) Abn INLET

**54**
- (a) RSP (FACING, METHOD B)
- (b) HW
- (c) 24" CSP
- (d) REMOVE HW
- (e) Conc COLLAR
- (f) G2 INLET
- (g) Abn CULVERT, L=10′
- (h) Abn INLET

**55**
- (a) REMOVE INLET
- (b) Mod GD-2 INLET

**56**
- (a) GD-1 INLET
- (b) CAP INLET
- (c) Abn CULVERT, L=59′
- (d) Abn INLET

**57**
- (a) CAP INLET
- (b) OSD A
- (c) G1 INLET w/Conc APRON SEE DD-15
- (d) 18" APC

**58**
- (a) SIDEWALK CULVERT SEE DETAIL DD-17
- (b) REMOVE Conc CURB AND SIDEWALK

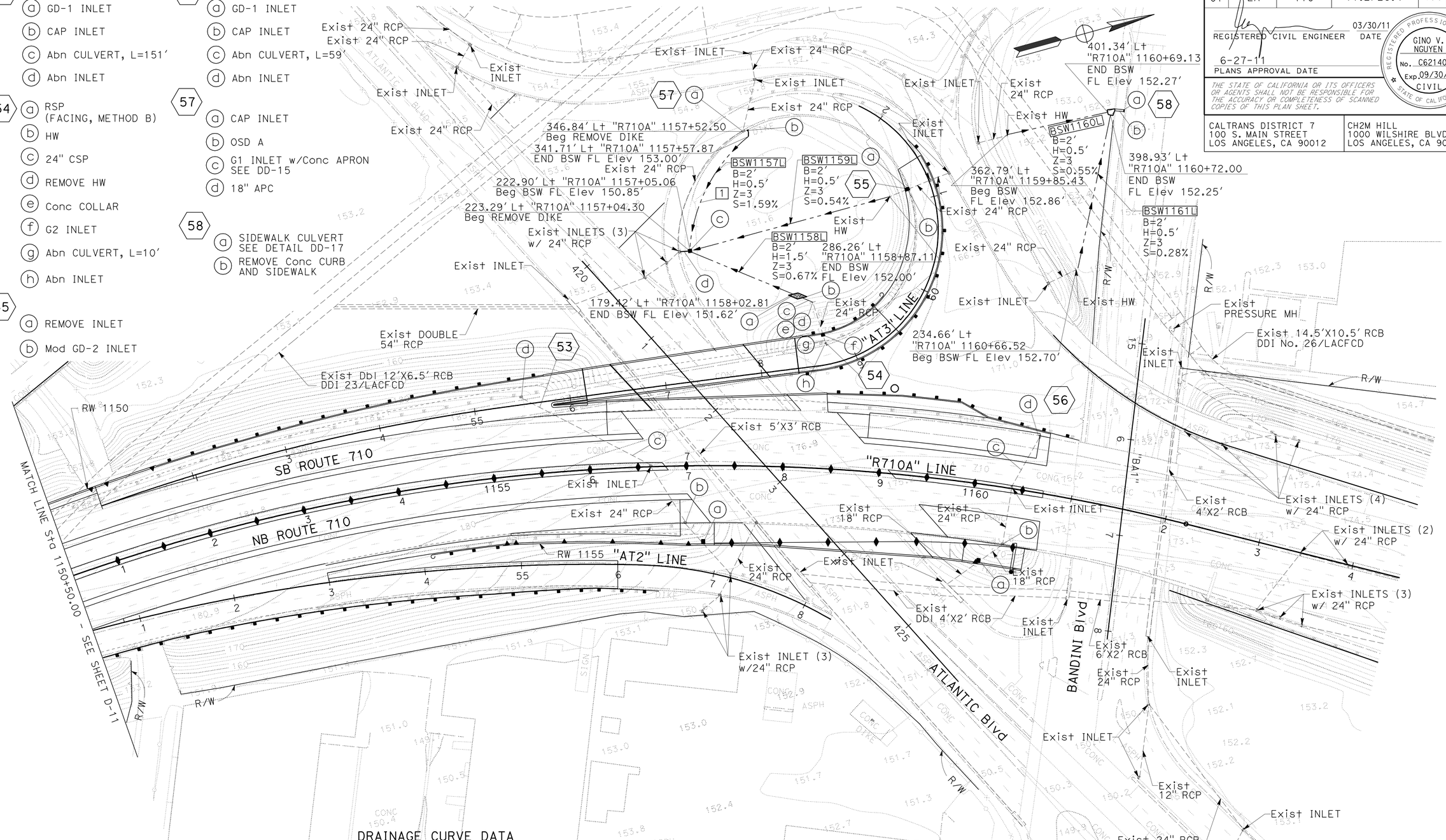


DRAINAGE CURVE DATA

| No. | R | Δ | T | L |
|---|---|---|---|---|
| 1 | 166.12′ | 46°43′48" | 71.76′ | 135.48′ |

# DRAINAGE PLAN

SCALE: 1"=50′

FOR ACCURATE RIGHT OF WAY DATA, CONTACT RIGHT OF WAY ENGINEERING AT THE DISTRICT OFFICE.

THIS PLAN ACCURATE FOR DRAINAGE WORK ONLY

**D-12**

STATE OF CALIFORNIA - DEPARTMENT OF TRANSPORTATION

Caltrans

CONSULTANT FUNCTIONAL SUPERVISOR: MELISSA DE LA PENA

CALCULATED-DESIGNED BY: T. GUO

CHECKED BY: G. HSU

REVISED BY / DATE REVISED

LAST REVISION 00-00-00

DATE PLOTTED => 28-JUN-2011
TIME PLOTTED => 19:53

| Dist | COUNTY | ROUTE | POST MILES TOTAL PROJECT | SHEET No. | TOTAL SHEETS |
|---|---|---|---|---|---|
| 07 | LA | 710 | 17.2/26.4 | 467 | 1507 |

REGISTERED CIVIL ENGINEER 03/30/11 DATE

6-27-11
PLANS APPROVAL DATE

REGISTERED PROFESSIONAL ENGINEER ROBERT M. HENDERSON No. C66736 Exp 09/30/12 CIVIL STATE OF CALIFORNIA

*THE STATE OF CALIFORNIA OR ITS OFFICERS OR AGENTS SHALL NOT BE RESPONSIBLE FOR THE ACCURACY OR COMPLETENESS OF SCANNED COPIES OF THIS PLAN SHEET.*

CALTRANS DISTRICT 7
100 S. MAIN STREET
LOS ANGELES, CA 90012

CH2M HILL
1000 WILSHIRE BLVD
LOS ANGELES, CA 90017

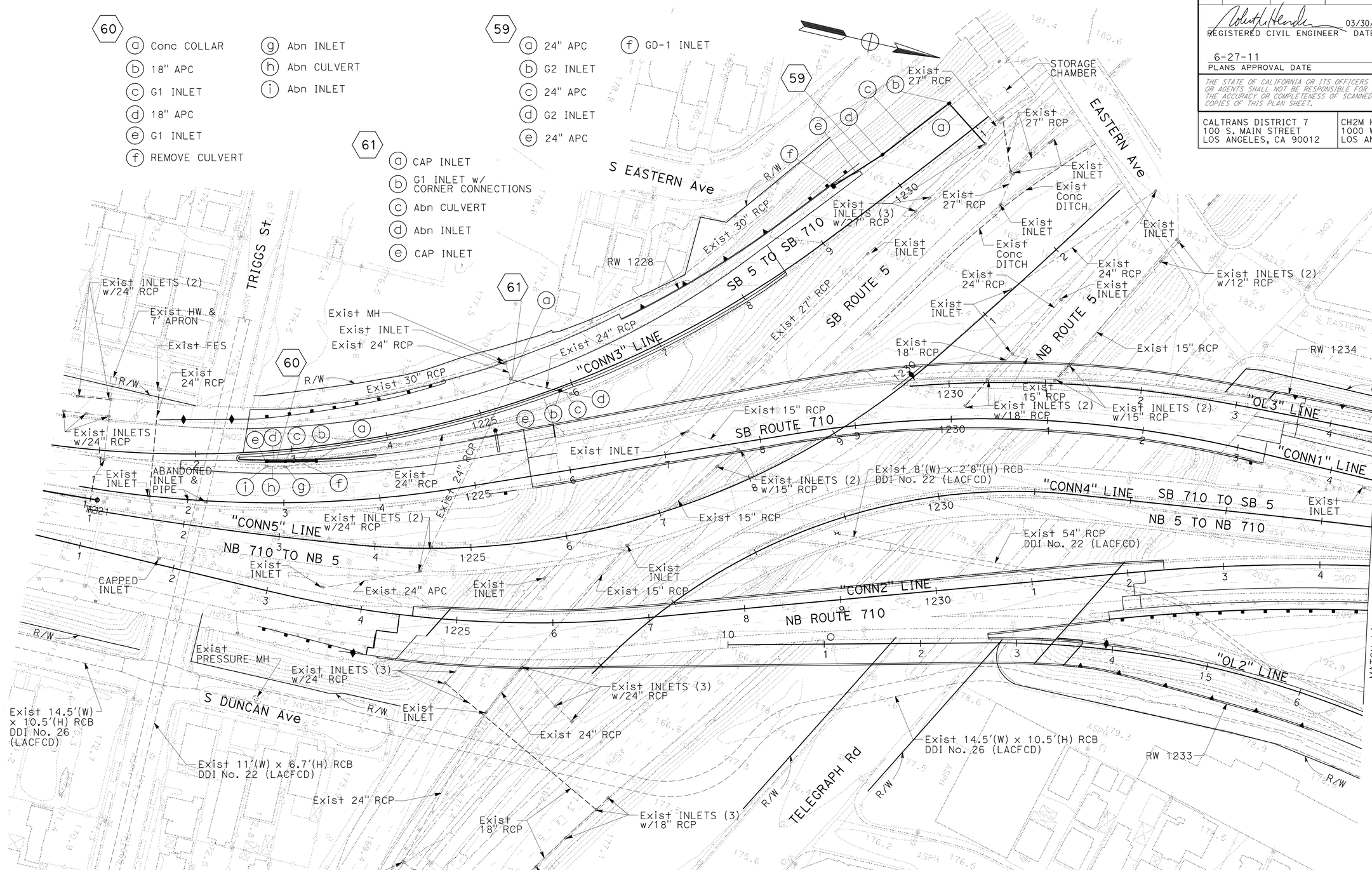


# DRAINAGE PLAN

SCALE: 1"=50'

FOR ACCURATE RIGHT OF WAY DATA, CONTACT RIGHT OF WAY ENGINEERING AT THE DISTRICT OFFICE.

THIS PLAN ACCURATE FOR DRAINAGE WORK ONLY

**D-13**

STATE OF CALIFORNIA - DEPARTMENT OF TRANSPORTATION

Caltrans

CONSULTANT FUNCTIONAL SUPERVISOR: MELISSA DE LA PENA

CALCULATED-DESIGNED BY: I. MATAGI

CHECKED BY: R. HENDERSON

REVISED BY

DATE REVISED

LAST REVISION 00-00-00

DATE PLOTTED => 28-JUN-2011
TIME PLOTTED => 19:53

| Dist | COUNTY | ROUTE | POST MILES TOTAL PROJECT | SHEET No. | TOTAL SHEETS |
|---|---|---|---|---|---|
| 07 | LA | 710 | 17.2/26.4 | 468 | 1507 |

REGISTERED CIVIL ENGINEER 03/30/11 DATE

6-27-11
PLANS APPROVAL DATE

REGISTERED PROFESSIONAL ENGINEER ROBERT M. HENDERSON No. C66736 Exp. 09/30/12 CIVIL STATE OF CALIFORNIA

*THE STATE OF CALIFORNIA OR ITS OFFICERS OR AGENTS SHALL NOT BE RESPONSIBLE FOR THE ACCURACY OR COMPLETENESS OF SCANNED COPIES OF THIS PLAN SHEET.*

CALTRANS DISTRICT 7
100 S. MAIN STREET
LOS ANGELES, CA 90012

CH2M HILL
1000 WILSHIRE BLVD
LOS ANGELES, CA 90017

**63**
- (a) RSP (FACING, METHOD B)
- (b) 24" AFES
- (c) 24" CSP
- (d) CSP ELBOW
- (e) 24" CSP
- (f) GD-1 INLET
- (g) REMOVE CULVERT L=40'

**67**
- (a) 18" APC w/ Conc ENCASEMENT
- (b) G1 INLET
- (c) GD-1 INLET
- (d) GLD
- (e) CAP INLET
- (f) Abn CULVERT L=167.2'
- (g) CAP INLET

**68**
- (a) GD-2 INLET
- (b) 18" APC
- (c) G1 INLET

**70**
- (a) GLD

**65**
- (a) G1 INLET
- (b) 18" APC
- (c) G1 INLET
- (d) 18" APC
- (e) GD-1 INLET
- (f) CAP INLET
- (g) Abn CULVERT, L=72.0'
- (h) CAP INLET

**62**
- (a) RSP (FACING, METHOD B)
- (b) 24" AFES
- (c) 24" CSP
- (d) G2 INLET w/Conc APRON
- (e) 24" CSP
- (f) CSP ELBOW
- (g) 24" CSP
- (h) Conc COLLAR
- (i) GD-1 INLET w/ CORNER CONNECTION
- (j) 24" CSP
- (k) CSP ELBOW
- (l) 24" CSP
- (m) Conc COLLAR
- (n) CAP INLET
- (o) REMOVE Conc
- (p) REMOVE HW
- (q) REMOVE HW
- (r) REMOVE CULVERT L=15'
- (s) REMOVE CULVERT L=15'

**71**
- (a) TYPE CL2 INLET (CASE 2)

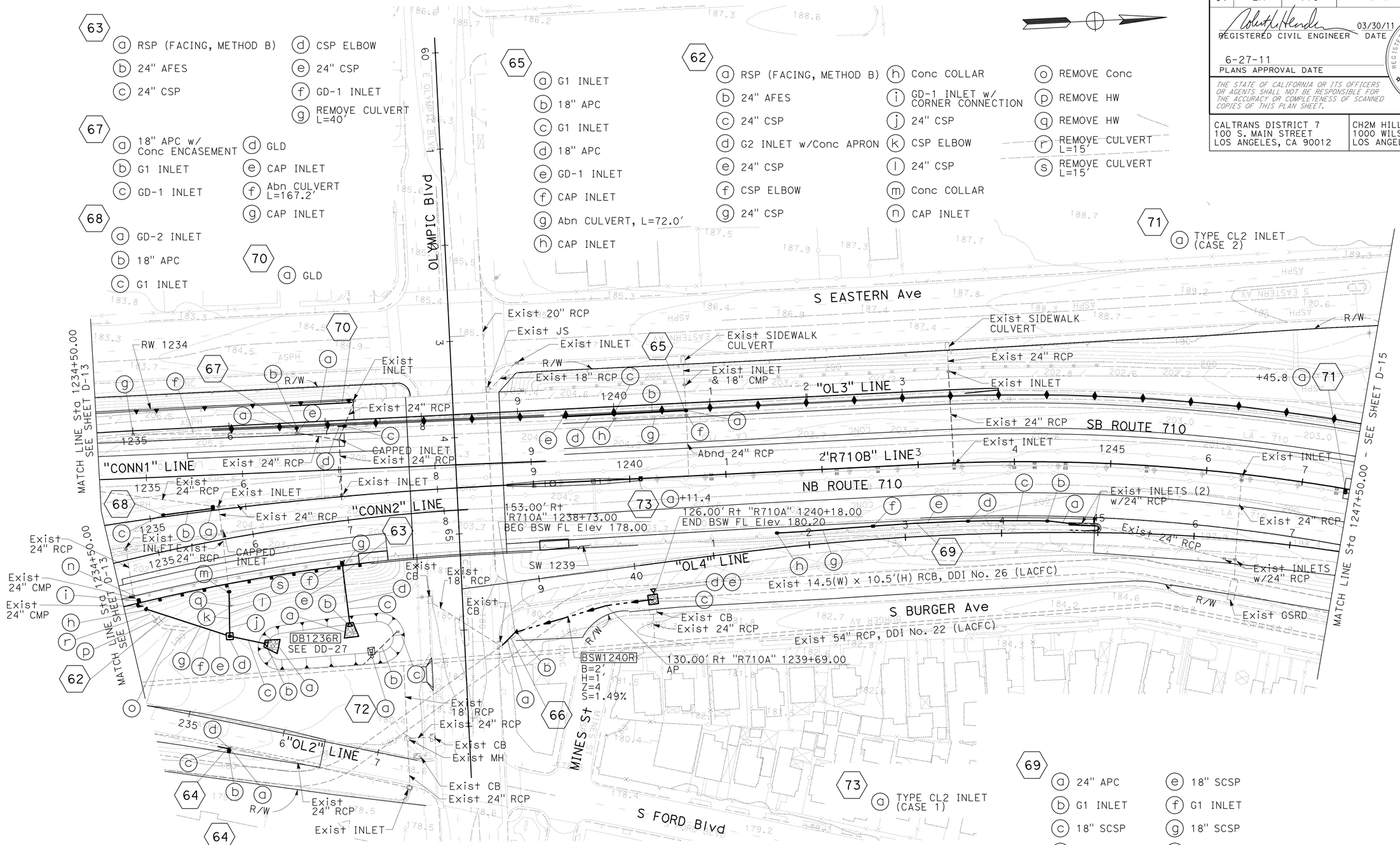


**64**
- (a) 24" APC
- (b) GD-1 INLET
- (c) GLD
- (d) CAP INLET

**72**
- (a) DUAL WATER QUALITY RISER
- (b) REMOVE CULVERT, L=32.3'
- (c) REMOVE INLET

**66**
- (a) 18" APC
- (b) 18" AFES
- (c) RSP (FACING, METHOD B)
- (d) HMA OSD
- (e) REMOVE CURB L=13'

**73**
- (a) TYPE CL2 INLET (CASE 1)

**69**
- (a) 24" APC
- (b) G1 INLET
- (c) 18" SCSP
- (d) G1 INLET
- (e) 18" SCSP
- (f) G1 INLET
- (g) 18" SCSP
- (h) G1 INLET

FOR ACCURATE RIGHT OF WAY DATA, CONTACT RIGHT OF WAY ENGINEERING AT THE DISTRICT OFFICE.

THIS PLAN ACCURATE FOR DRAINAGE WORK ONLY

# DRAINAGE PLAN

SCALE: 1"=50'

**D-14**

STATE OF CALIFORNIA - DEPARTMENT OF TRANSPORTATION

Caltrans

CONSULTANT FUNCTIONAL SUPERVISOR: MELISSA DE LA PENA

CALCULATED-DESIGNED BY: I. MATAGI

CHECKED BY: R. HENDERSON

REVISED BY

DATE REVISED

LAST REVISION 00-00-00

DATE PLOTTED => 28-JUN-2011
TIME PLOTTED => 19:53

| Dist | COUNTY | ROUTE | POST MILES TOTAL PROJECT | SHEET No. | TOTAL SHEETS |
|---|---|---|---|---|---|
| 07 | LA | 710 | 17.2/26.4 | 469 | 1507 |

REGISTERED CIVIL ENGINEER 03/30/11 DATE

6-27-11
PLANS APPROVAL DATE

REGISTERED PROFESSIONAL ENGINEER ROBERT M. HENDERSON No. C66736 Exp. 09/30/12 CIVIL STATE OF CALIFORNIA

*THE STATE OF CALIFORNIA OR ITS OFFICERS OR AGENTS SHALL NOT BE RESPONSIBLE FOR THE ACCURACY OR COMPLETENESS OF SCANNED COPIES OF THIS PLAN SHEET.*

CALTRANS DISTRICT 7
100 S. MAIN STREET
LOS ANGELES, CA 90012

CH2M HILL
1000 WILSHIRE BLVD
LOS ANGELES, CA 90017

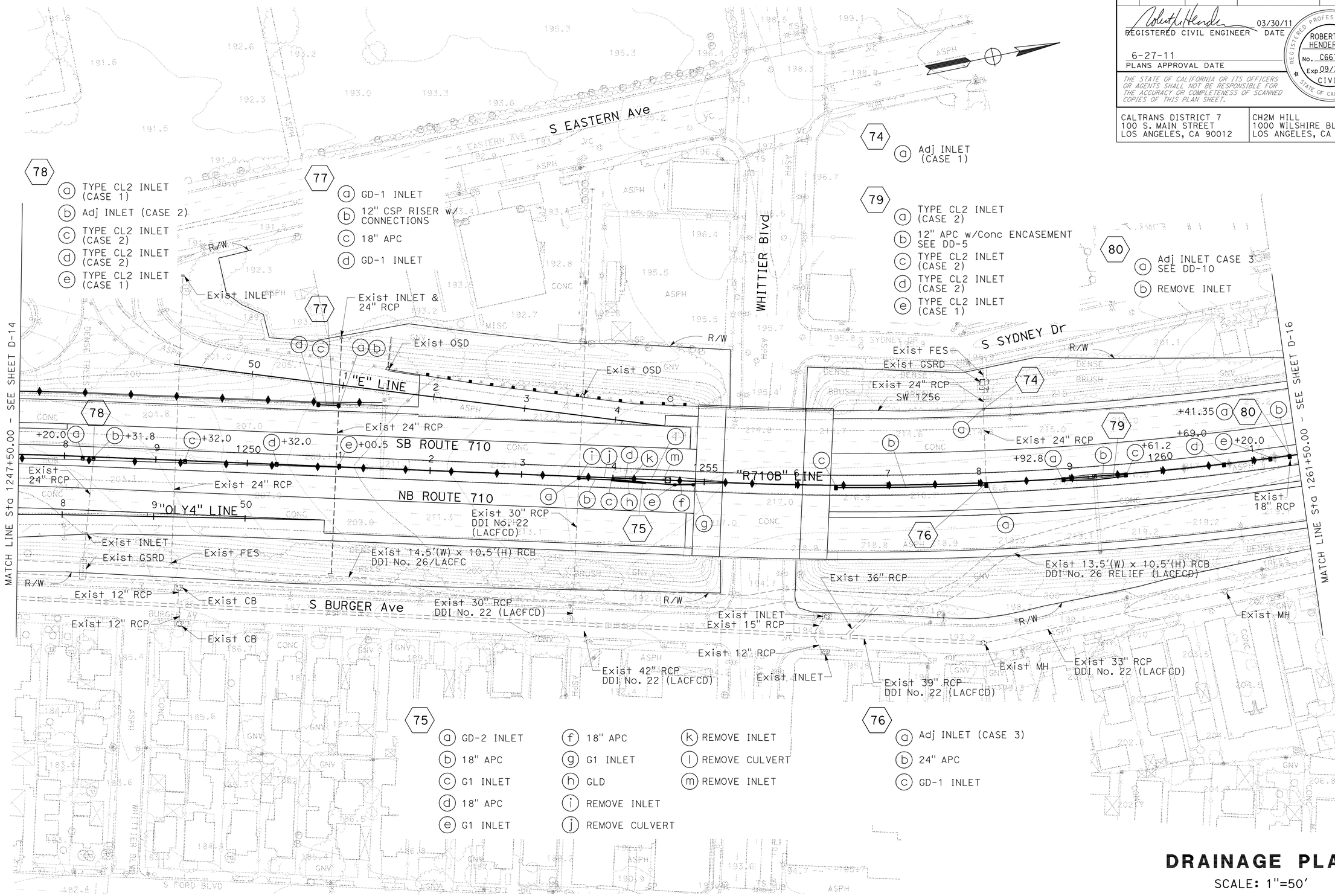


# DRAINAGE PLAN

SCALE: 1"=50'

FOR ACCURATE RIGHT OF WAY DATA, CONTACT RIGHT OF WAY ENGINEERING AT THE DISTRICT OFFICE.

THIS PLAN ACCURATE FOR DRAINAGE WORK ONLY

**D-15**

STATE OF CALIFORNIA - DEPARTMENT OF TRANSPORTATION

Caltrans

CONSULTANT FUNCTIONAL SUPERVISOR: MELISSA DE LA PENA

CALCULATED-DESIGNED BY: I. MATAGI

CHECKED BY: R. HENDERSON

REVISED BY

DATE REVISED

LAST REVISION 00-00-00 | DATE PLOTTED => 28-JUN-2011 | TIME PLOTTED => 19:53

| Dist | COUNTY | ROUTE | POST MILES TOTAL PROJECT | SHEET No. | TOTAL SHEETS |
|---|---|---|---|---|---|
| 07 | LA | 710 | 17.2/26.4 | 470 | 1507 |

REGISTERED CIVIL ENGINEER 03/30/11 DATE

6-27-11
PLANS APPROVAL DATE

REGISTERED PROFESSIONAL ENGINEER ROBERT M. HENDERSON No. C66736 Exp. 09/30/12 CIVIL STATE OF CALIFORNIA

*THE STATE OF CALIFORNIA OR ITS OFFICERS OR AGENTS SHALL NOT BE RESPONSIBLE FOR THE ACCURACY OR COMPLETENESS OF SCANNED COPIES OF THIS PLAN SHEET.*

CALTRANS DISTRICT 7
100 S. MAIN STREET
LOS ANGELES, CA 90012

CH2M HILL
1000 WILSHIRE BLVD
LOS ANGELES, CA 90017

**87**
- (a) TYPE CL2 INLET (CASE 2)
- (b) TYPE CL2 INLET (CASE 2)
- (c) TYPE CL2 INLET (CASE 2)
- (d) TYPE CL2 INLET (CASE 1)

**82**
- (a) Adj INLET (CASE 2)
- (b) TYPE CL2 INLET (CASE 2)
- (c) TYPE CL2 INLET (CASE 2)
- (d) 12" APC w/Conc ENCASEMENT SEE DD-5
- (e) TYPE CL2 INLET (CASE 2)
- (f) TYPE CL2 INLET (CASE 1)

**86**
- (a) 18" APC
- (b) G1 INLET
- (c) CAP INLET

**89**
- (a) Adj INLET (CASE 2)
- (b) TYPE CL2 INLET (CASE 2)
- (c) TYPE CL2 INLET (CASE 2)
- (d) TYPE CL2 INLET (CASE 2)
- (e) TYPE CL2 INLET (CASE 1)
- (f) REMOVE INLET

**85**
- (a) G1 INLET
- (b) CAP INLET

**88**
- (a) Adj INLET (CASE 2)
- (b) TYPE CL2 INLET (CASE 2)
- (c) REMOVE INLET

**81**
- (a) 18" APC w/Conc ENCASEMENT
- (b) GD-1 INLET
- (c) 18" APC w/Conc ENCASEMENT
- (d) GD-1 INLET

**83**
- (a) 18" APC w/Conc ENCASEMENT
- (b) GD-1 INLET
- (c) CAP INLET

**84**
- (a) GD-1 INLET
- (b) 18" APC
- (c) G-1 INLET
- (d) REMOVE INLET

FOR ACCURATE RIGHT OF WAY DATA, CONTACT RIGHT OF WAY ENGINEERING AT THE DISTRICT OFFICE.

THIS PLAN ACCURATE FOR DRAINAGE WORK ONLY

# DRAINAGE PLAN

SCALE: 1"=50'

**D-16**

STATE OF CALIFORNIA - DEPARTMENT OF TRANSPORTATION

Caltrans

CONSULTANT FUNCTIONAL SUPERVISOR: MELISSA DE LA PENA

CALCULATED-DESIGNED BY: I. MATAGI

CHECKED BY: R. HENDERSON

REVISED BY | DATE REVISED

LAST REVISION 00-00-00 | DATE PLOTTED => 28-JUN-2011 | TIME PLOTTED => 19:54

| Dist | COUNTY | ROUTE | POST MILES TOTAL PROJECT | SHEET No. | TOTAL SHEETS |
|---|---|---|---|---|---|
| 07 | LA | 710 | 17.2/26.4 | 471 | 1507 |

REGISTERED CIVIL ENGINEER 03/30/11 DATE

6-27-11
PLANS APPROVAL DATE

REGISTERED PROFESSIONAL ENGINEER ROBERT M. HENDERSON No. C66736 Exp. 09/30/12 CIVIL STATE OF CALIFORNIA

*THE STATE OF CALIFORNIA OR ITS OFFICERS OR AGENTS SHALL NOT BE RESPONSIBLE FOR THE ACCURACY OR COMPLETENESS OF SCANNED COPIES OF THIS PLAN SHEET.*

CALTRANS DISTRICT 7
100 S. MAIN STREET
LOS ANGELES, CA 90012

CH2M HILL
1000 WILSHIRE BLVD
LOS ANGELES, CA 90017

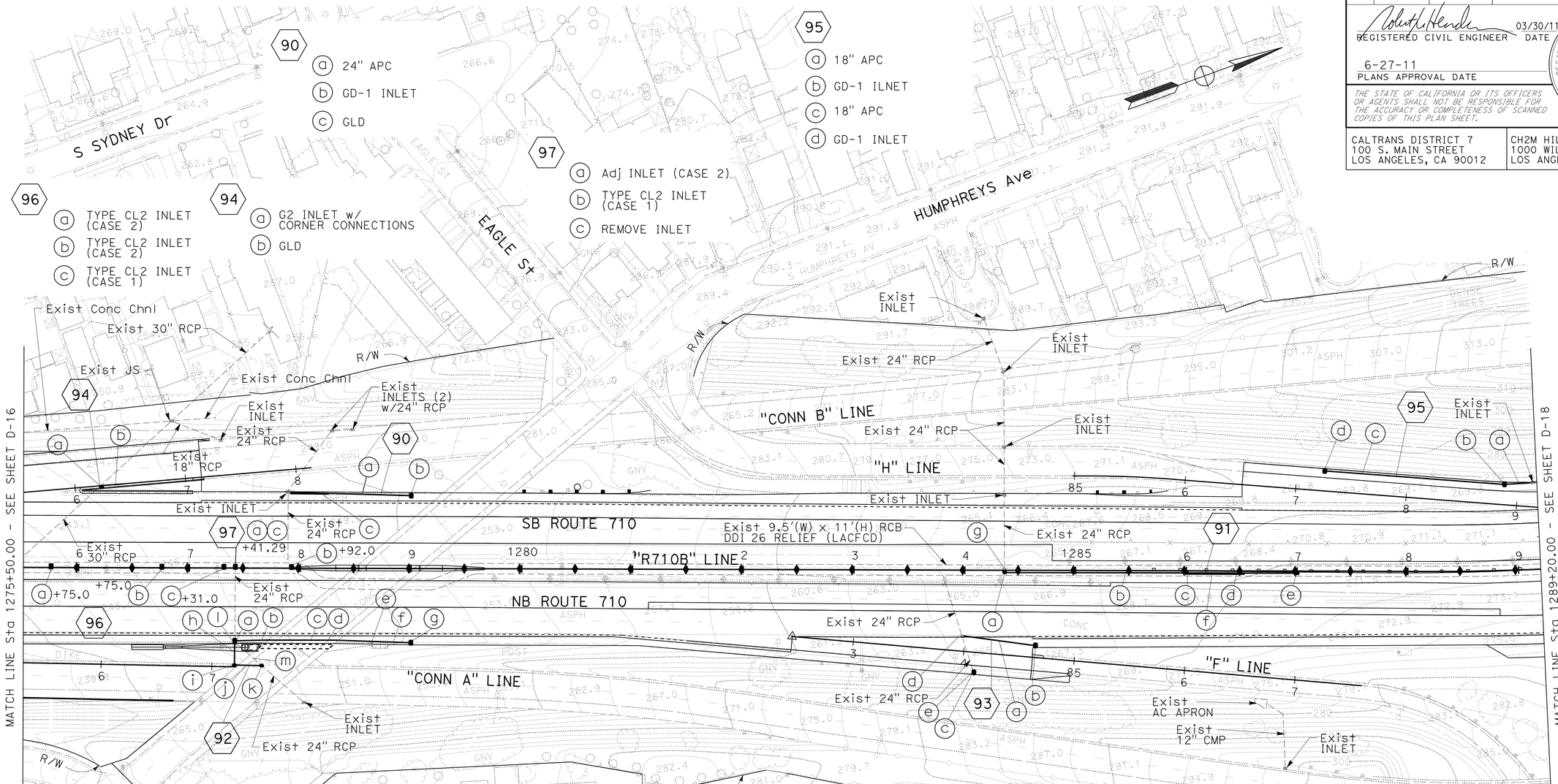


**90**
- (a) 24" APC
- (b) GD-1 INLET
- (c) GLD

**95**
- (a) 18" APC
- (b) GD-1 ILNET
- (c) 18" APC
- (d) GD-1 INLET

**97**
- (a) Adj INLET (CASE 2)
- (b) TYPE CL2 INLET (CASE 1)
- (c) REMOVE INLET

**96**
- (a) TYPE CL2 INLET (CASE 2)
- (b) TYPE CL2 INLET (CASE 2)
- (c) TYPE CL2 INLET (CASE 1)

**94**
- (a) G2 INLET w/ CORNER CONNECTIONS
- (b) GLD

**92**
- (a) GD-1 INLET
- (b) 24" APC
- (c) Conc COLLAR
- (d) 24" APC
- (e) Conc COLLAR
- (f) 24" APC
- (g) GD-1 INLET
- (h) 24" APC
- (i) G2 INLET
- (j) 24" APC
- (k) G2 INLET w/CORNER CONNECTIONS
- (l) REMOVE INLET
- (m) Abn Culvert, L=30.0'

**93**
- (a) 24" APC
- (b) GD-1 INLET
- (c) GD-2 INLET
- (d) CAP INLET
- (e) REMOVE INLET

**91**
- (a) Adj INLET (CASE 3)
- (b) 24" APC
- (c) G2 INLET
- (d) 18" APC
- (e) G1 INLET
- (f) GLD
- (g) REMOVE INLET

# DRAINAGE PLAN

SCALE: 1"=50'

FOR ACCURATE RIGHT OF WAY DATA, CONTACT RIGHT OF WAY ENGINEERING AT THE DISTRICT OFFICE.

THIS PLAN ACCURATE FOR DRAINAGE WORK ONLY

**D-17**

STATE OF CALIFORNIA - DEPARTMENT OF TRANSPORTATION

Caltrans

CONSULTANT FUNCTIONAL SUPERVISOR: MELISSA DE LA PENA

CALCULATED-DESIGNED BY: I. MATAGI

CHECKED BY: R. HENDERSON

REVISED BY / DATE REVISED

LAST REVISION 00-00-00

DATE PLOTTED => 28-JUN-2011
TIME PLOTTED => 19:54

| Dist | COUNTY | ROUTE | POST MILES TOTAL PROJECT | SHEET No. | TOTAL SHEETS |
|---|---|---|---|---|---|
| 07 | LA | 710 | 17.2/26.4 | 472 | 1507 |

REGISTERED CIVIL ENGINEER 03/30/11 DATE

6-27-11
PLANS APPROVAL DATE

REGISTERED PROFESSIONAL ENGINEER ROBERT M. HENDERSON No. C66736 Exp 09/30/12 CIVIL STATE OF CALIFORNIA

*THE STATE OF CALIFORNIA OR ITS OFFICERS OR AGENTS SHALL NOT BE RESPONSIBLE FOR THE ACCURACY OR COMPLETENESS OF SCANNED COPIES OF THIS PLAN SHEET.*

CALTRANS DISTRICT 7
100 S. MAIN STREET
LOS ANGELES, CA 90012

CH2M HILL
1000 WILSHIRE BLVD
LOS ANGELES, CA 90017

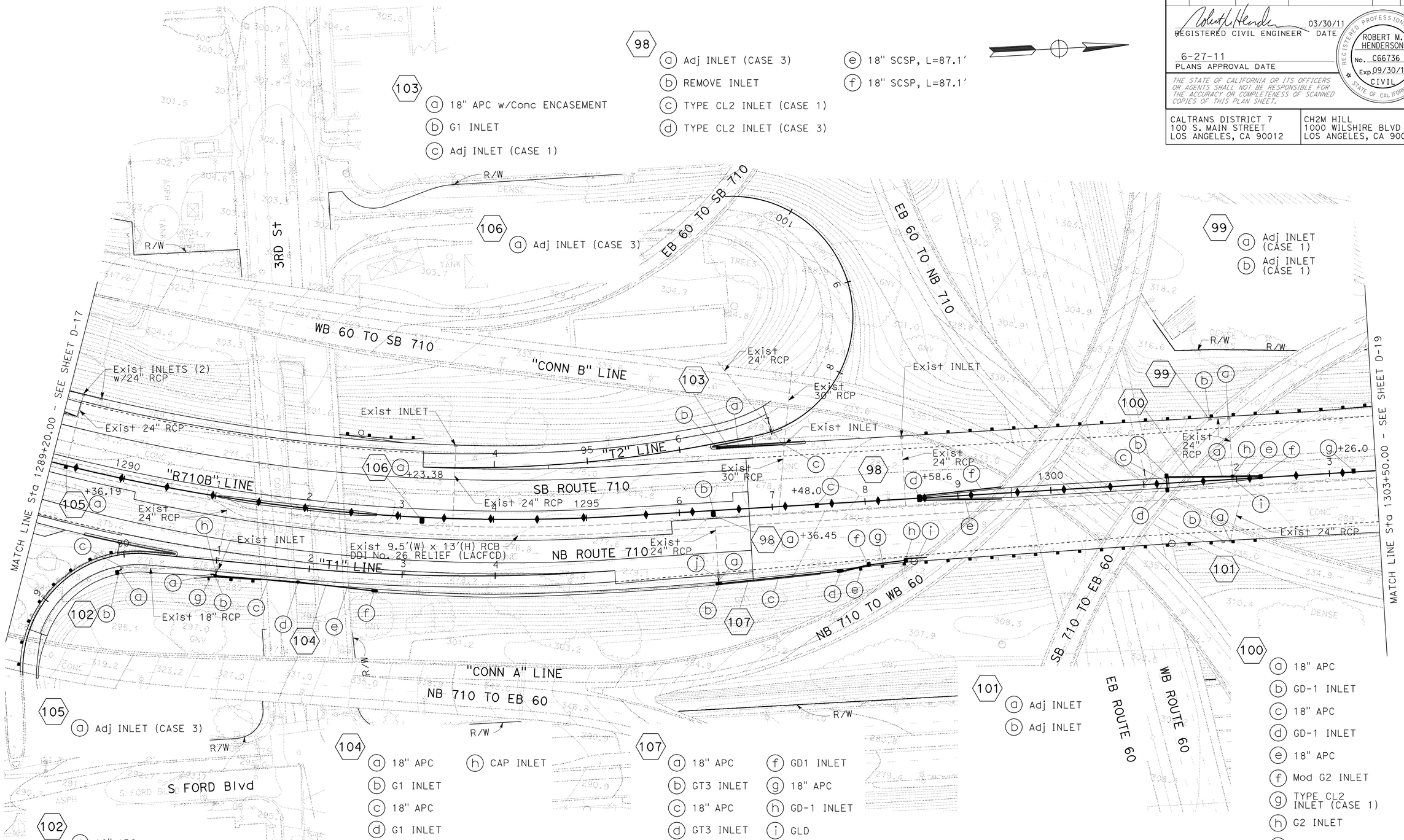


# DRAINAGE PLAN

SCALE: 1"=50'

FOR ACCURATE RIGHT OF WAY DATA, CONTACT RIGHT OF WAY ENGINEERING AT THE DISTRICT OFFICE.

THIS PLAN ACCURATE FOR DRAINAGE WORK ONLY

**D-18**

REVISED BY | DATE REVISED
I. MATAGI | R. HENDERSON
CALCULATED-DESIGNED BY | CHECKED BY
CONSULTANT FUNCTIONAL SUPERVISOR: MELISSA DE LA PENA

STATE OF CALIFORNIA - DEPARTMENT OF TRANSPORTATION
Caltrans

LAST REVISION 00-00-00 | DATE PLOTTED => 28-JUN-2011 | TIME PLOTTED => 19:54

| Dist | COUNTY | ROUTE | POST MILES TOTAL PROJECT | SHEET No. | TOTAL SHEETS |
|---|---|---|---|---|---|
| 07 | LA | 710 | 17.2/26.4 | 473 | 1507 |

REGISTERED CIVIL ENGINEER 03/30/11 DATE

6-27-11
PLANS APPROVAL DATE

REGISTERED PROFESSIONAL ENGINEER ROBERT M. HENDERSON No. C66736 Exp 09/30/12 CIVIL STATE OF CALIFORNIA

*THE STATE OF CALIFORNIA OR ITS OFFICERS OR AGENTS SHALL NOT BE RESPONSIBLE FOR THE ACCURACY OR COMPLETENESS OF SCANNED COPIES OF THIS PLAN SHEET.*

CALTRANS DISTRICT 7
100 S. MAIN STREET
LOS ANGELES, CA 90012

CH2M HILL
1000 WILSHIRE BLVD
LOS ANGELES, CA 90017

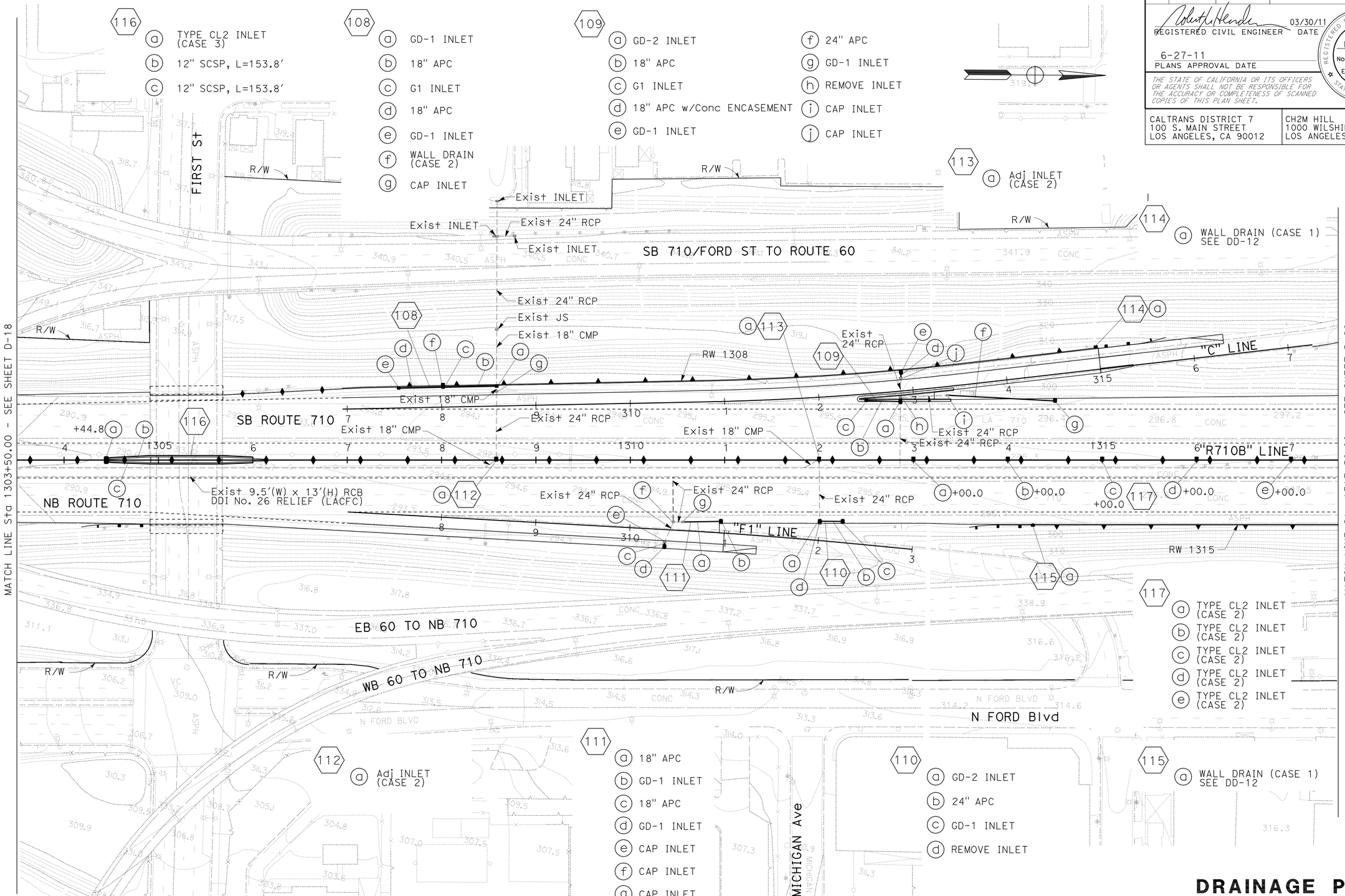


# DRAINAGE PLAN

SCALE: 1"=50'

FOR ACCURATE RIGHT OF WAY DATA, CONTACT RIGHT OF WAY ENGINEERING AT THE DISTRICT OFFICE.

THIS PLAN ACCURATE FOR DRAINAGE WORK ONLY

**D-19**

STATE OF CALIFORNIA - DEPARTMENT OF TRANSPORTATION

Caltrans

CONSULTANT FUNCTIONAL SUPERVISOR: MELISSA DE LA PENA

CALCULATED-DESIGNED BY: I. MATAGI

CHECKED BY: R. HENDERSON

REVISED BY

DATE REVISED

LAST REVISION 00-00-00

DATE PLOTTED => 28-JUN-2011
TIME PLOTTED => 19:54

| Dist | COUNTY | ROUTE | POST MILES TOTAL PROJECT | SHEET No. | TOTAL SHEETS |
|---|---|---|---|---|---|
| 07 | LA | 710 | 17.2/26.4 | 474 | 1507 |

REGISTERED CIVIL ENGINEER 03/30/11 DATE

6-27-11
PLANS APPROVAL DATE

REGISTERED PROFESSIONAL ENGINEER ROBERT M. HENDERSON No. C66736 Exp 09/30/12 CIVIL STATE OF CALIFORNIA

*THE STATE OF CALIFORNIA OR ITS OFFICERS OR AGENTS SHALL NOT BE RESPONSIBLE FOR THE ACCURACY OR COMPLETENESS OF SCANNED COPIES OF THIS PLAN SHEET.*

CALTRANS DISTRICT 7
100 S. MAIN STREET
LOS ANGELES, CA 90012

CH2M HILL
1000 WILSHIRE BLVD
LOS ANGELES, CA 90017

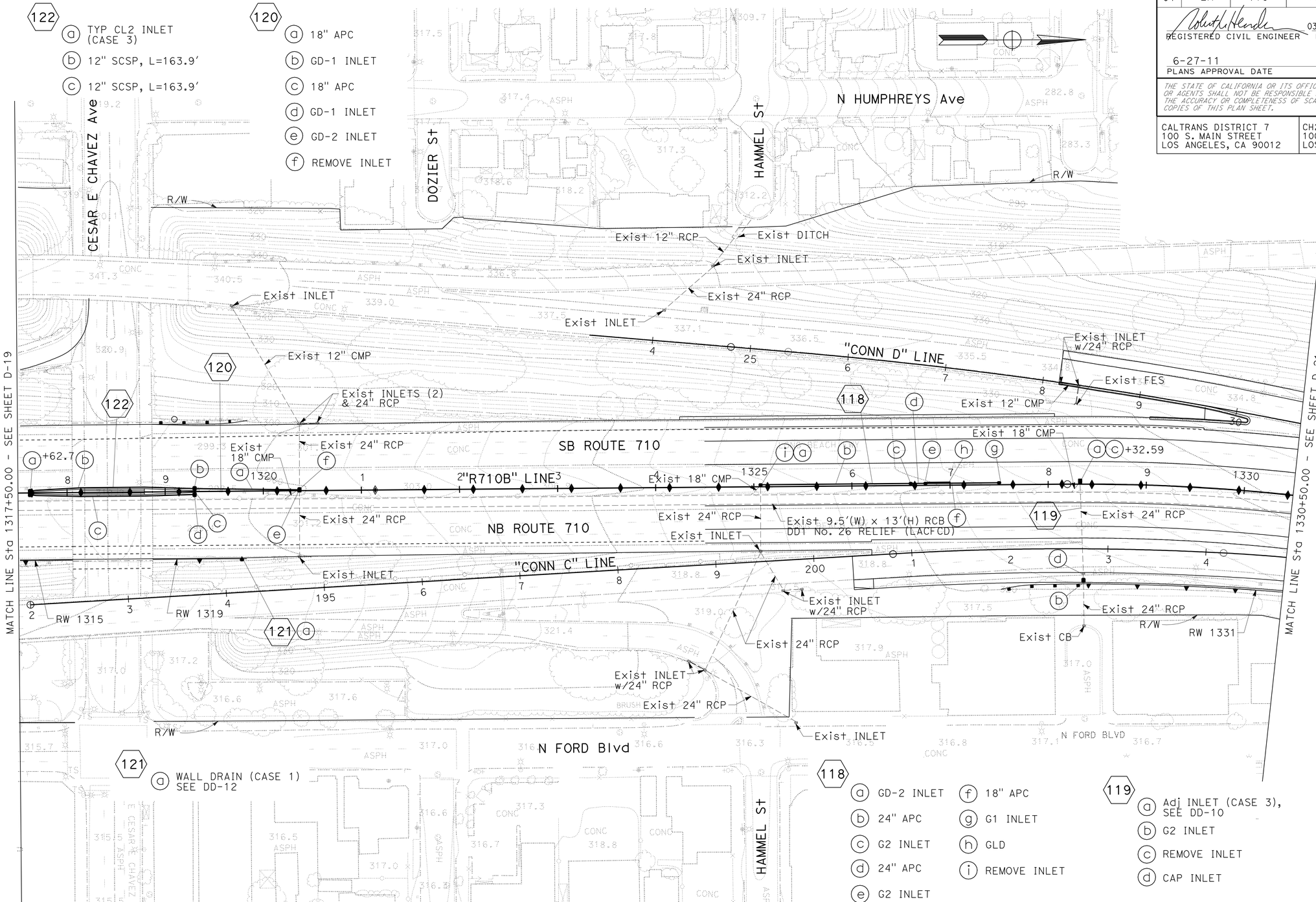


**122**
- (a) TYP CL2 INLET (CASE 3)
- (b) 12" SCSP, L=163.9'
- (c) 12" SCSP, L=163.9'

**120**
- (a) 18" APC
- (b) GD-1 INLET
- (c) 18" APC
- (d) GD-1 INLET
- (e) GD-2 INLET
- (f) REMOVE INLET

**121**
- (a) WALL DRAIN (CASE 1) SEE DD-12

**118**
- (a) GD-2 INLET
- (b) 24" APC
- (c) G2 INLET
- (d) 24" APC
- (e) G2 INLET
- (f) 18" APC
- (g) G1 INLET
- (h) GLD
- (i) REMOVE INLET

**119**
- (a) Adj INLET (CASE 3), SEE DD-10
- (b) G2 INLET
- (c) REMOVE INLET
- (d) CAP INLET

FOR ACCURATE RIGHT OF WAY DATA, CONTACT RIGHT OF WAY ENGINEERING AT THE DISTRICT OFFICE.

THIS PLAN ACCURATE FOR DRAINAGE WORK ONLY

# DRAINAGE PLAN

SCALE: 1"=50'

**D-20**

STATE OF CALIFORNIA - DEPARTMENT OF TRANSPORTATION

Caltrans

CONSULTANT FUNCTIONAL SUPERVISOR: MELISSA DE LA PENA

CALCULATED-DESIGNED BY: I. MATAGI

CHECKED BY: R. HENDERSON

REVISED BY

DATE REVISED

LAST REVISION 00-00-00 | DATE PLOTTED => 28-JUN-2011 | TIME PLOTTED => 19:54

| Dist | COUNTY | ROUTE | POST MILES TOTAL PROJECT | SHEET No. | TOTAL SHEETS |
|---|---|---|---|---|---|
| 07 | LA | 710 | 17.2/26.4 | 475 | 1507 |

REGISTERED CIVIL ENGINEER 03/30/11 DATE

6-27-11
PLANS APPROVAL DATE

REGISTERED PROFESSIONAL ENGINEER ROBERT M. HENDERSON No. C66736 Exp 09/30/12 CIVIL STATE OF CALIFORNIA

*THE STATE OF CALIFORNIA OR ITS OFFICERS OR AGENTS SHALL NOT BE RESPONSIBLE FOR THE ACCURACY OR COMPLETENESS OF SCANNED COPIES OF THIS PLAN SHEET.*

CALTRANS DISTRICT 7
100 S. MAIN STREET
LOS ANGELES, CA 90012

CH2M HILL
1000 WILSHIRE BLVD
LOS ANGELES, CA 90017

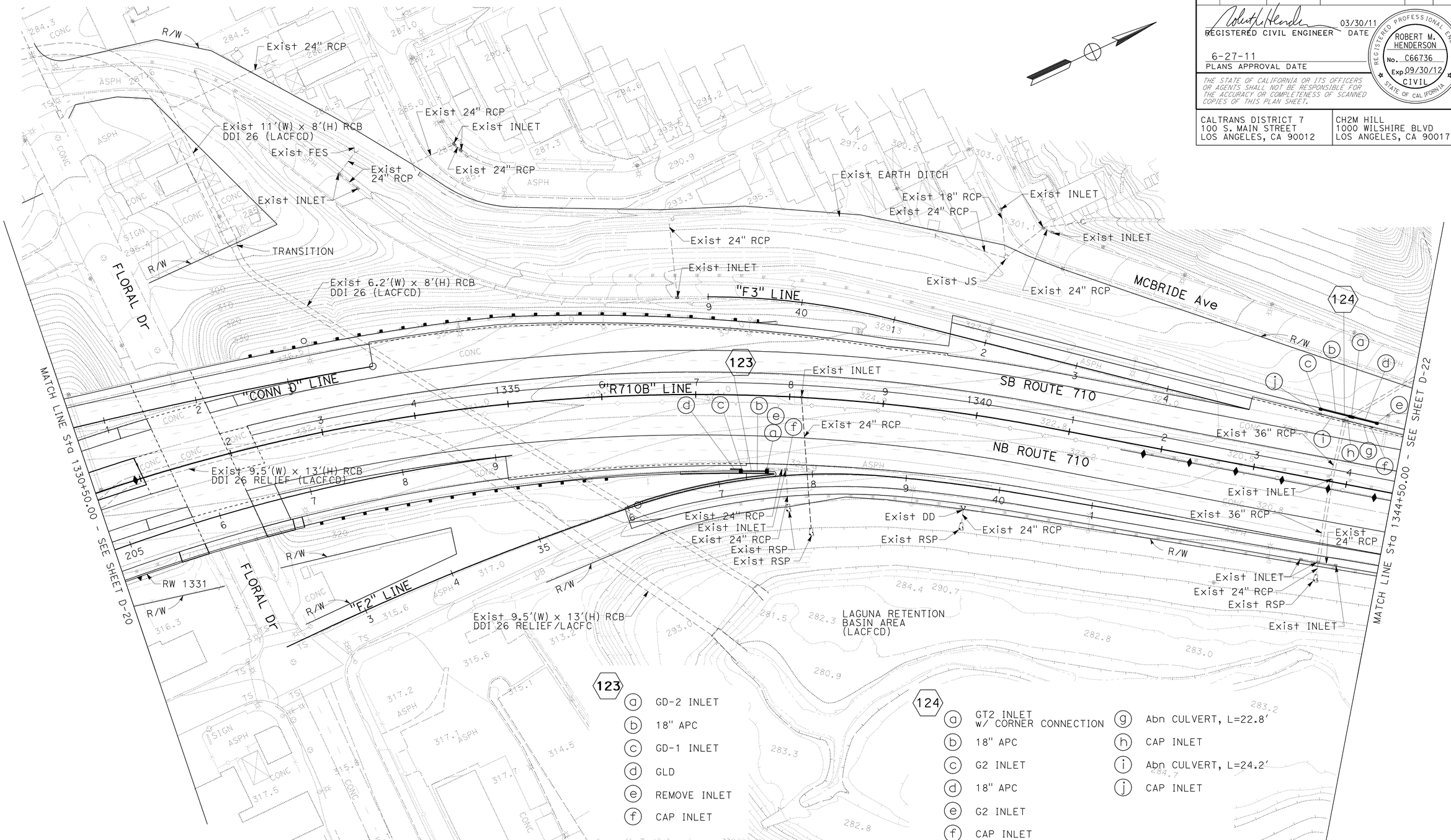


**123**

- (a) GD-2 INLET
- (b) 18" APC
- (c) GD-1 INLET
- (d) GLD
- (e) REMOVE INLET
- (f) CAP INLET

**124**

- (a) GT2 INLET w/ CORNER CONNECTION
- (b) 18" APC
- (c) G2 INLET
- (d) 18" APC
- (e) G2 INLET
- (f) CAP INLET
- (g) Abn CULVERT, L=22.8'
- (h) CAP INLET
- (i) Abn CULVERT, L=24.2'
- (j) CAP INLET

# DRAINAGE PLAN

SCALE: 1"=50'

FOR ACCURATE RIGHT OF WAY DATA, CONTACT RIGHT OF WAY ENGINEERING AT THE DISTRICT OFFICE.

THIS PLAN ACCURATE FOR DRAINAGE WORK ONLY

**D-21**

REVISED BY | DATE REVISED
I. MATAGI | R. HENDERSON
CALCULATED-DESIGNED BY | CHECKED BY
CONSULTANT FUNCTIONAL SUPERVISOR: MELISSA DE LA PENA

STATE OF CALIFORNIA - DEPARTMENT OF TRANSPORTATION
Caltrans

LAST REVISION 00-00-00 | DATE PLOTTED => 28-JUN-2011 | TIME PLOTTED => 19:55

| Dist | COUNTY | ROUTE | POST MILES TOTAL PROJECT | SHEET No. | TOTAL SHEETS |
|---|---|---|---|---|---|
| 07 | LA | 710 | 17.2/26.4 | 476 | 1507 |

REGISTERED CIVIL ENGINEER 03/30/11 DATE

6-27-11
PLANS APPROVAL DATE

REGISTERED PROFESSIONAL ENGINEER ROBERT M. HENDERSON No. C66736 Exp 09/30/12 CIVIL STATE OF CALIFORNIA

*THE STATE OF CALIFORNIA OR ITS OFFICERS OR AGENTS SHALL NOT BE RESPONSIBLE FOR THE ACCURACY OR COMPLETENESS OF SCANNED COPIES OF THIS PLAN SHEET.*

CALTRANS DISTRICT 7
100 S. MAIN STREET
LOS ANGELES, CA 90012

CH2M HILL
1000 WILSHIRE BLVD
LOS ANGELES, CA 90017

126
ⓐ Adj INLET (CASE 1) SEE DD-10

125
ⓐ Conc COLLAR
ⓑ 24" APC
ⓒ INCLINED SCREEN TYPE A GSRD
ⓓ 24" APC
ⓔ Conc COLLAR
ⓕ 24" APC
ⓖ Conc COLLAR
ⓗ GD-2 INLET
ⓘ GD-2 INLET
ⓙ REMOVE INLET
ⓚ REMOVE INLET

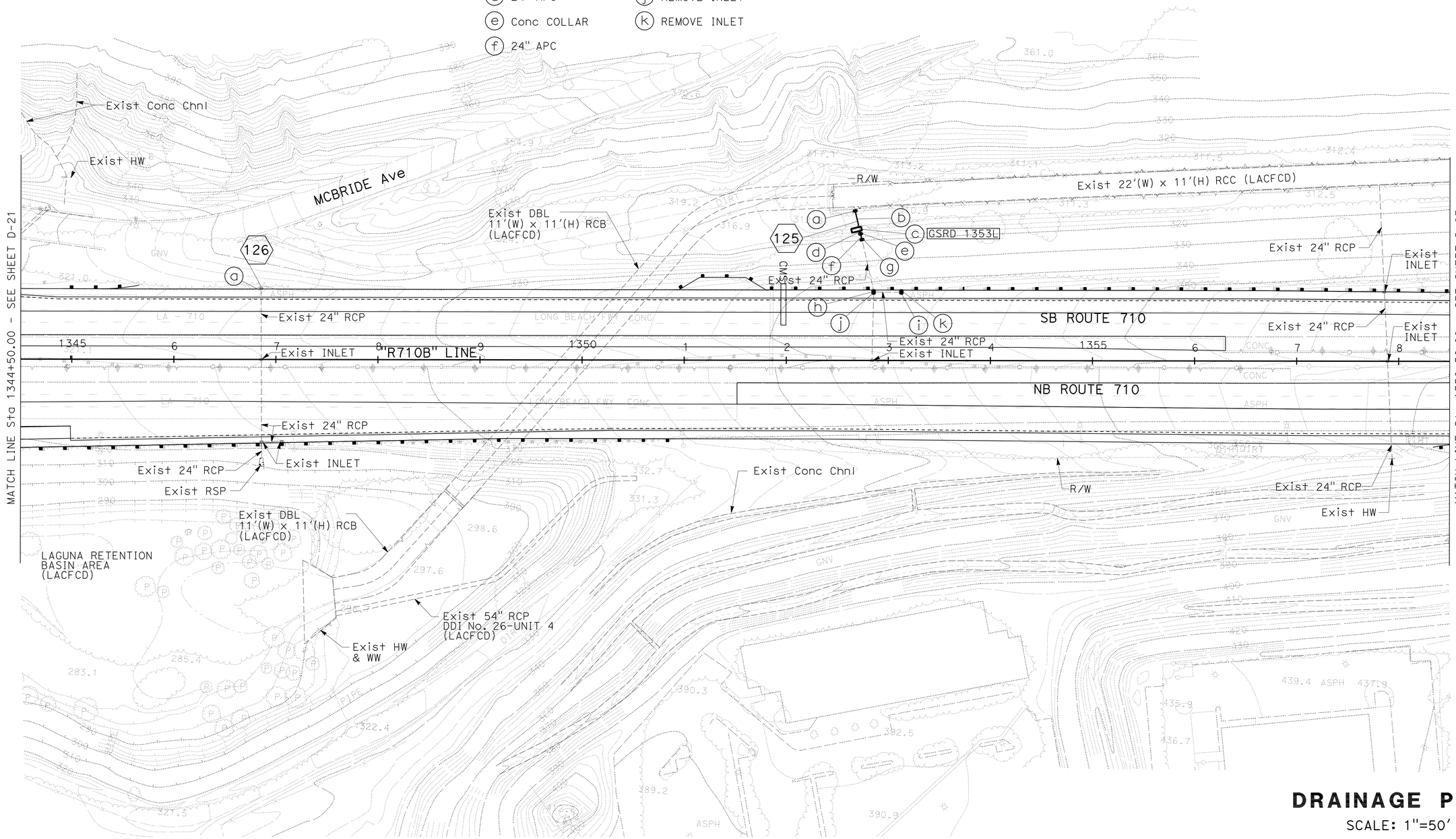


# DRAINAGE PLAN

SCALE: 1"=50'

FOR ACCURATE RIGHT OF WAY DATA, CONTACT RIGHT OF WAY ENGINEERING AT THE DISTRICT OFFICE.

THIS PLAN ACCURATE FOR DRAINAGE WORK ONLY

D-22

STATE OF CALIFORNIA - DEPARTMENT OF TRANSPORTATION
Caltrans

CONSULTANT FUNCTIONAL SUPERVISOR: MELISSA DE LA PENA
CALCULATED-DESIGNED BY: I. MATAGI
CHECKED BY: R. HENDERSON
REVISED BY
DATE REVISED

LAST REVISION 00-00-00
DATE PLOTTED => 28-JUN-2011
TIME PLOTTED => 19:55

| Dist | COUNTY | ROUTE | POST MILES TOTAL PROJECT | SHEET No. | TOTAL SHEETS |
|---|---|---|---|---|---|
| 07 | LA | 710 | 17.2/26.4 | 477 | 1507 |

REGISTERED CIVIL ENGINEER 03/30/11 DATE

6-27-11
PLANS APPROVAL DATE

REGISTERED PROFESSIONAL ENGINEER
ROBERT M. HENDERSON
No. C66736
Exp 09/30/12
CIVIL
STATE OF CALIFORNIA

*THE STATE OF CALIFORNIA OR ITS OFFICERS OR AGENTS SHALL NOT BE RESPONSIBLE FOR THE ACCURACY OR COMPLETENESS OF SCANNED COPIES OF THIS PLAN SHEET.*

CALTRANS DISTRICT 7
100 S. MAIN STREET
LOS ANGELES, CA 90012

CH2M HILL
1000 WILSHIRE BLVD
LOS ANGELES, CA 90017

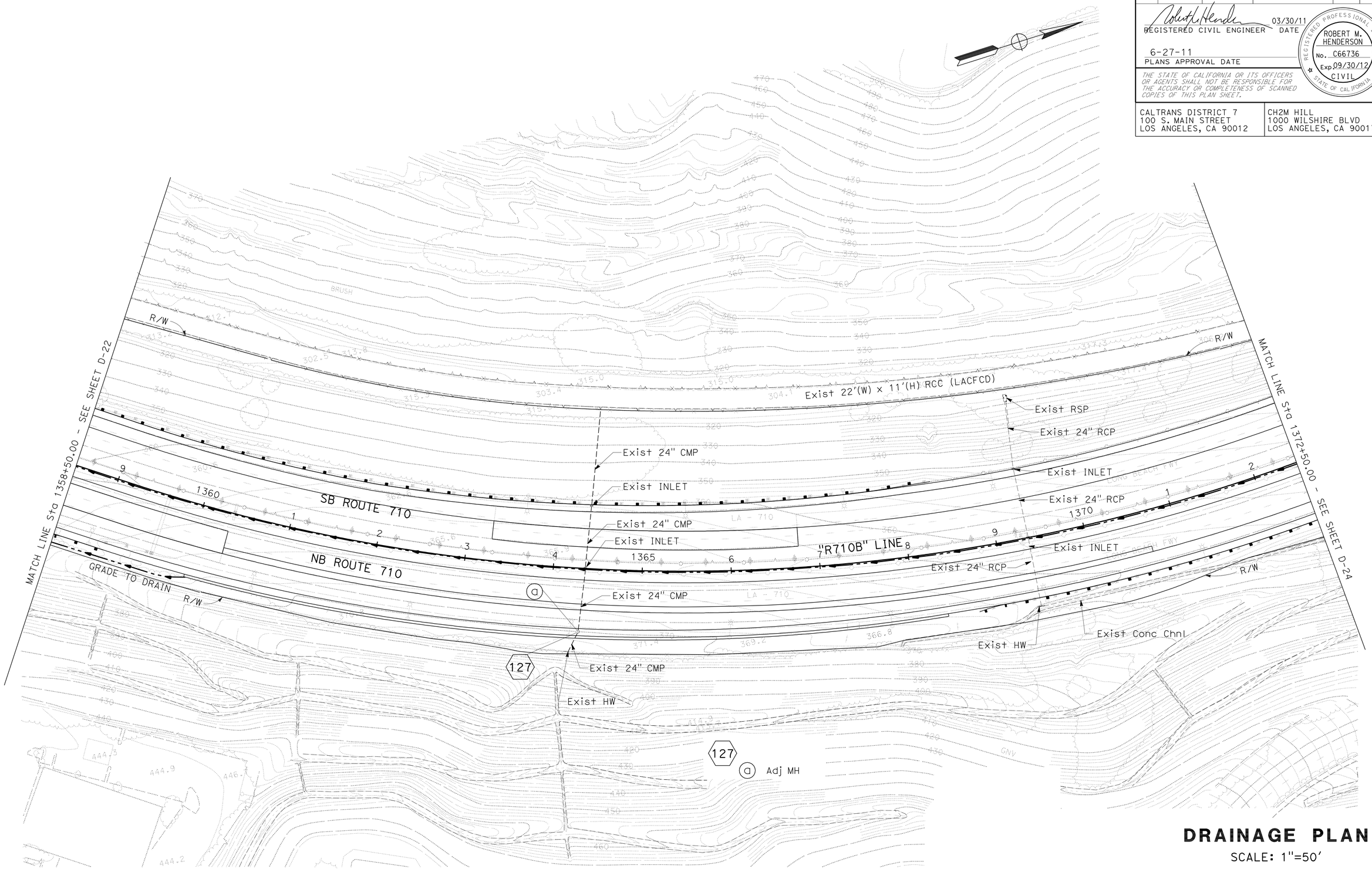


# DRAINAGE PLAN

SCALE: 1"=50'

FOR ACCURATE RIGHT OF WAY DATA, CONTACT
RIGHT OF WAY ENGINEERING AT THE DISTRICT OFFICE.

THIS PLAN ACCURATE FOR DRAINAGE WORK ONLY

**D-23**

STATE OF CALIFORNIA - DEPARTMENT OF TRANSPORTATION
Caltrans

CONSULTANT FUNCTIONAL SUPERVISOR: MELISSA DE LA PENA

CALCULATED-DESIGNED BY: I. MATAGI
CHECKED BY: R. HENDERSON

REVISED BY
DATE REVISED

LAST REVISION 00-00-00
DATE PLOTTED => 28-JUN-2011
TIME PLOTTED => 19:55

| Dist | COUNTY | ROUTE | POST MILES TOTAL PROJECT | SHEET No. | TOTAL SHEETS |
|---|---|---|---|---|---|
| 07 | LA | 710 | 17.2/26.4 | 478 | 1507 |

REGISTERED CIVIL ENGINEER 03/30/11 DATE

6-27-11
PLANS APPROVAL DATE

REGISTERED PROFESSIONAL ENGINEER ROBERT M. HENDERSON No. C66736 Exp. 09/30/12 CIVIL STATE OF CALIFORNIA

*THE STATE OF CALIFORNIA OR ITS OFFICERS OR AGENTS SHALL NOT BE RESPONSIBLE FOR THE ACCURACY OR COMPLETENESS OF SCANNED COPIES OF THIS PLAN SHEET.*

CALTRANS DISTRICT 7
100 S. MAIN STREET
LOS ANGELES, CA 90012

CH2M HILL
1000 WILSHIRE BLVD
LOS ANGELES, CA 90017

## DRAINAGE CURVE DATA

| No. | R | Δ | T | L |
|---|---|---|---|---|
| 1 | 50.00′ | 35°05′38" | 15.81′ | 30.63′ |

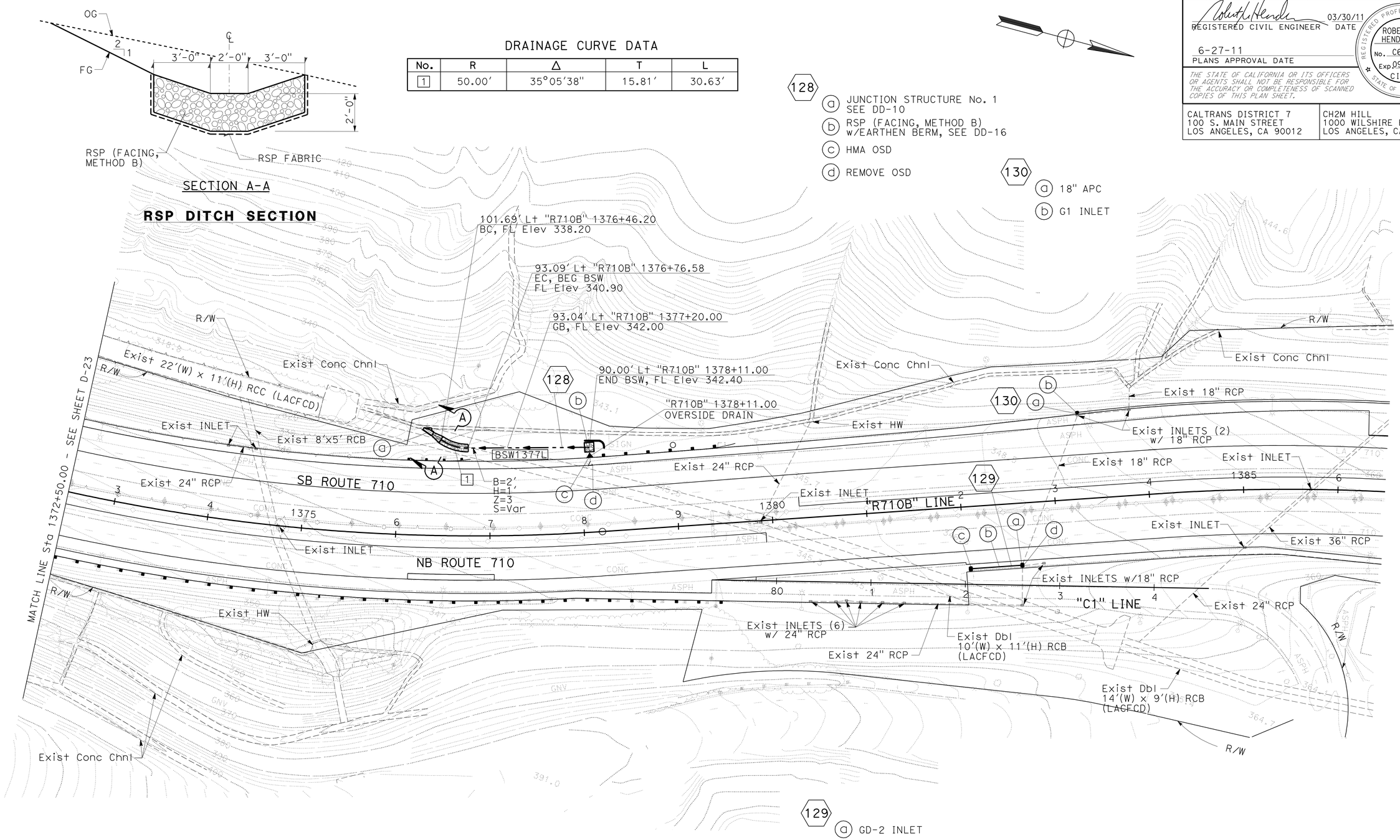


FOR ACCURATE RIGHT OF WAY DATA, CONTACT RIGHT OF WAY ENGINEERING AT THE DISTRICT OFFICE.

THIS PLAN ACCURATE FOR DRAINAGE WORK ONLY

# DRAINAGE PLAN

SCALE: 1"=50′

D-24

STATE OF CALIFORNIA - DEPARTMENT OF TRANSPORTATION

Caltrans

CONSULTANT FUNCTIONAL SUPERVISOR: MELISSA DE LA PENA

CALCULATED-DESIGNED BY: I. MATAGI

CHECKED BY: R. HENDERSON

REVISED BY | DATE REVISED

LAST REVISION 00-00-00 | DATE PLOTTED => 28-JUN-2011 | TIME PLOTTED => 19:55

| Dist | COUNTY | ROUTE | POST MILES TOTAL PROJECT | SHEET No. | TOTAL SHEETS |
|---|---|---|---|---|---|
| 07 | LA | 710 | 17.2/26.4 | 479 | 1507 |

REGISTERED CIVIL ENGINEER 03/30/11 DATE

6-27-11
PLANS APPROVAL DATE

REGISTERED PROFESSIONAL ENGINEER JOSEPH W. SAWTELLE No. C60110 Exp. 06/30/12 CIVIL STATE OF CALIFORNIA

*THE STATE OF CALIFORNIA OR ITS OFFICERS OR AGENTS SHALL NOT BE RESPONSIBLE FOR THE ACCURACY OR COMPLETENESS OF SCANNED COPIES OF THIS PLAN SHEET.*

CALTRANS DISTRICT 7
100 S. MAIN STREET
LOS ANGELES, CA 90012

TRANSYSTEMS
6 HUTTON CENTRE DRIVE
SUITE 1250
SANTA ANA, CA 92707

## NOTES:

1. FOR CONSTRUCTION WORK AREAS, SEE STAGE CONSTRUCTION SHEETS.
2. ALL DRAINAGE SYSTEMS (T01 TO T15) SHOWN ARE TEMPORARY.
3. DRAINAGE SYSTEMS T01, T02, T04, T08, AND T15 TO BE INSTALLED IN STAGE 1 (PHASE 2) AND REMOVED IN STAGE 1 (PHASE 4).
4. DRAINAGE SYSTEMS T03, T05, T09, T10, AND T14 TO BE INSTALLED IN STAGE 1 (PHASE 3) AND REMOVED IN STAGE 1 (PHASE 4).
5. DRAINAGE SYSTEMS T07, T11, T12, AND T13 TO BE INSTALLED IN STAGE 1 (PHASE 3) AND REMOVED IN STAGE 1 (PHASE 5).
6. DRAINAGE SYSTEM T06 TO BE INSTALLED IN STAGE 1 (PHASE 2) AND IN STAGE 1 (PHASE 3). THE ENTIRE DRAINAGE SYSTEM T06 TO BE REMOVED IN STAGE 1 (PHASE 5).

T01
- (a) 18" X 114' SCSP

T02
- (a) 18" X 314' SCSP

T03
- (a) 12" X 8' CSP RISER
- (b) 18" X 340' SCSP

T04
- (a) 18" X 604' SCSP

T05
- (a) 12" X 8' CSP RISER
- (b) 18" X 640' SCSP

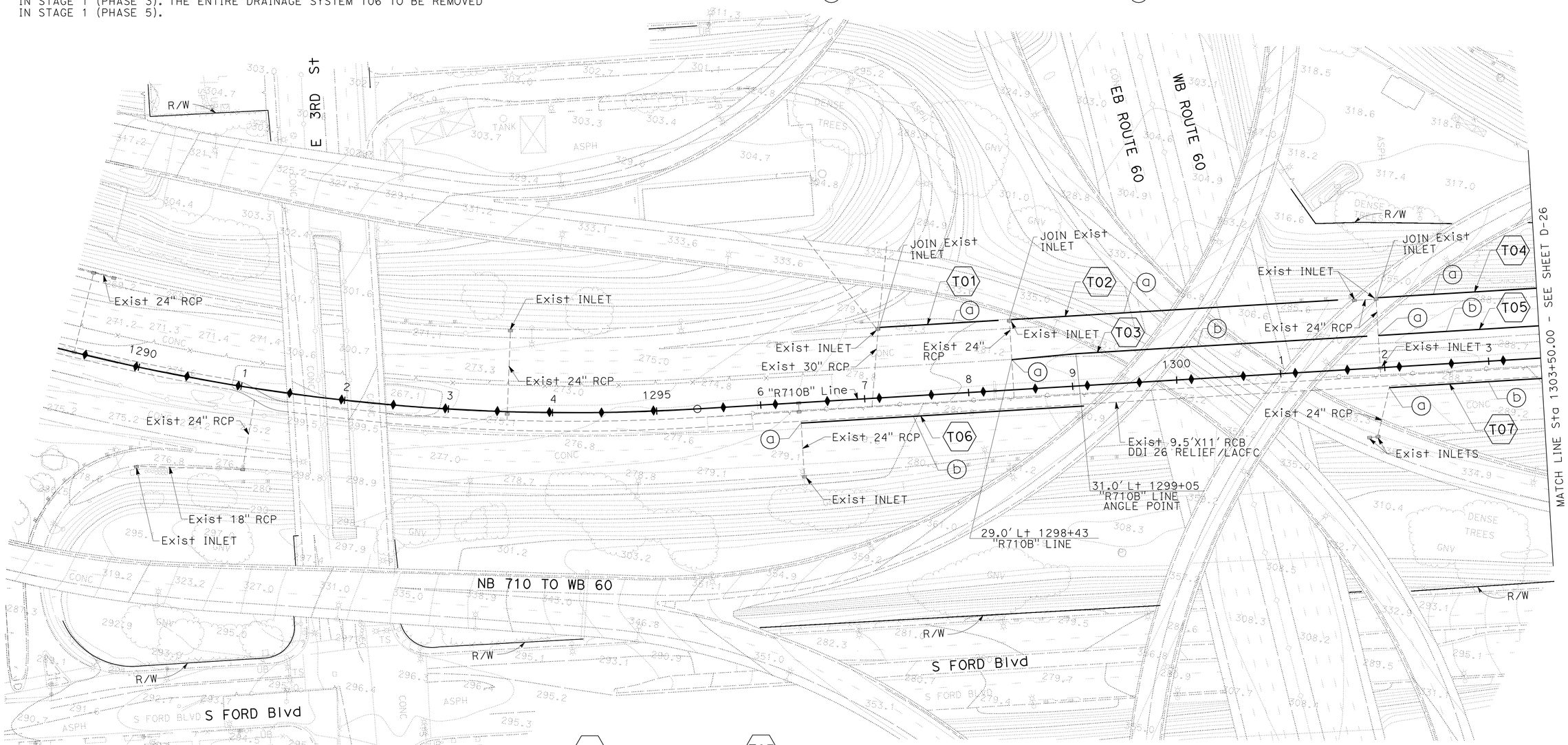


T06
- (a) 12" X 6' CSP RISER
- (b) 18" X 270' SCSP

T07
- (a) 12" X 12' CSP RISER
- (b) 18" X 830' SCSP

FOR ACCURATE RIGHT OF WAY DATA, CONTACT RIGHT OF WAY ENGINEERING AT THE DISTRICT OFFICE.

THIS PLAN ACCURATE FOR TEMPORARY DRAINAGE WORK ONLY.

# DRAINAGE PLAN
# TEMPORARY DRAINAGE
# FOR CESAR CHAVEZ DIGOUT

SCALE: 1"=50'

**D-25**

STATE OF CALIFORNIA - DEPARTMENT OF TRANSPORTATION

Caltrans

CONSULTANT FUNCTIONAL SUPERVISOR: MELISSA DE LA PENA

CALCULATED-DESIGNED BY: C. SOSA

CHECKED BY: J. SAWTELLE

REVISED BY

DATE REVISED

LAST REVISION 00-00-00 | DATE PLOTTED => 28-JUN-2011 | TIME PLOTTED => 19:55

| Dist | COUNTY | ROUTE | POST MILES TOTAL PROJECT | SHEET No. | TOTAL SHEETS |
|---|---|---|---|---|---|
| 07 | LA | 710 | 17.2/26.4 | 480 | 1507 |

REGISTERED CIVIL ENGINEER 03/30/11 DATE

6-27-11
PLANS APPROVAL DATE

REGISTERED PROFESSIONAL ENGINEER JOSEPH W. SAWTELLE No. C60110 Exp. 06/30/12 CIVIL STATE OF CALIFORNIA

*THE STATE OF CALIFORNIA OR ITS OFFICERS OR AGENTS SHALL NOT BE RESPONSIBLE FOR THE ACCURACY OR COMPLETENESS OF SCANNED COPIES OF THIS PLAN SHEET.*

CALTRANS DISTRICT 7
100 S. MAIN STREET
LOS ANGELES, CA 90012

TRANSYSTEMS
6 HUTTON CENTRE DRIVE
SUITE 1250
SANTA ANA, CA 92707

## NOTES:

1. FOR CONSTRUCTION WORK AREAS, SEE STAGE CONSTRUCTION SHEETS.
2. ALL DRAINAGE SYSTEMS (T01 TO T15) SHOWN ARE TEMPORARY.
3. DRAINAGE SYSTEMS T01, T02, T04, T08, AND T15 TO BE INSTALLED IN STAGE 1 (PHASE 2) AND REMOVED IN STAGE 1 (PHASE 4).
4. DRAINAGE SYSTEMS T03, T05, T09, T10, AND T14 TO BE INSTALLED IN STAGE 1 (PHASE 3) AND REMOVED IN STAGE 1 (PHASE 4).
5. DRAINAGE SYSTEMS T07, T11, T12, AND T13 TO BE INSTALLED IN STAGE 1 (PHASE 3) AND REMOVED IN STAGE 1 (PHASE 5).
6. DRAINAGE SYSTEM T06 TO BE INSTALLED IN STAGE 1 (PHASE 2) AND IN STAGE 1 (PHASE 3). THE ENTIRE DRAINAGE SYSTEM T06 TO BE REMOVED IN STAGE 1 (PHASE 5).

**T04**
- (a) 18" X 604' SCSP

**T05**
- (a) 12" X 8' CSP RISER
- (b) 18" X 640' SCSP

**T10**
- (a) 12" X 7' CSP RISER
- (b) 18" X 410' SCSP

**T09**
- (a) 12" X 11' CSP RISER
- (b) 18" X 740' SCSP

**T08**
- (a) 18" X 684' SCSP

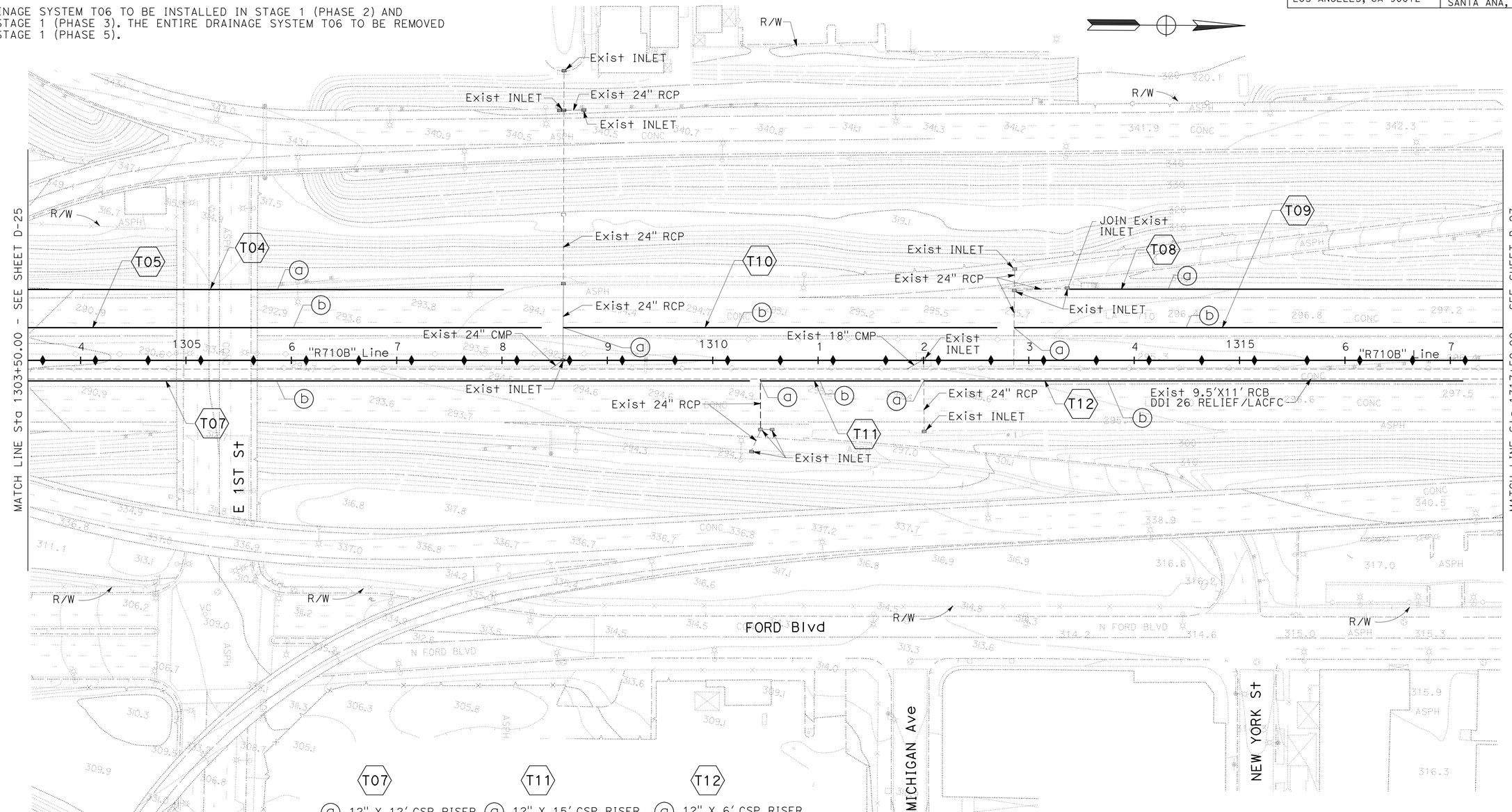


**T07**
- (a) 12" X 12' CSP RISER
- (b) 18" X 830' SCSP

**T11**
- (a) 12" X 15' CSP RISER
- (b) 18" X 150' SCSP

**T12**
- (a) 12" X 6' CSP RISER
- (b) 18" X 510' SCSP

FOR ACCURATE RIGHT OF WAY DATA, CONTACT RIGHT OF WAY ENGINEERING AT THE DISTRICT OFFICE.

THIS PLAN ACCURATE FOR TEMPORARY DRAINAGE WORK ONLY.

# DRAINAGE PLAN TEMPORARY DRAINAGE FOR CESAR CHAVEZ DIGOUT

SCALE: 1"=50'

**D-26**

REVISED BY | DATE REVISED
C. SOSA | J. SAWTELLE
CALCULATED-DESIGNED BY | CHECKED BY
CONSULTANT FUNCTIONAL SUPERVISOR: MELISSA DE LA PENA
STATE OF CALIFORNIA - DEPARTMENT OF TRANSPORTATION
Caltrans

LAST REVISION 00-00-00
DATE PLOTTED => 28-JUN-2011
TIME PLOTTED => 19:55

| Dist | COUNTY | ROUTE | POST MILES TOTAL PROJECT | SHEET No. | TOTAL SHEETS |
|---|---|---|---|---|---|
| 07 | LA | 710 | 17.2/26.4 | 481 | 1507 |

REGISTERED CIVIL ENGINEER 03/30/11 DATE

6-27-11
PLANS APPROVAL DATE

REGISTERED PROFESSIONAL ENGINEER JOSEPH W. SAWTELLE No. C60110 Exp 06/30/12 CIVIL STATE OF CALIFORNIA

*THE STATE OF CALIFORNIA OR ITS OFFICERS OR AGENTS SHALL NOT BE RESPONSIBLE FOR THE ACCURACY OR COMPLETENESS OF SCANNED COPIES OF THIS PLAN SHEET.*

CALTRANS DISTRICT 7
100 S. MAIN STREET
LOS ANGELES, CA 90012

TRANSYSTEMS
6 HUTTON CENTRE DRIVE
SUITE 1250
SANTA ANA, CA 92707

## NOTES:

1. FOR CONSTRUCTION WORK AREAS, SEE STAGE CONSTRUCTION SHEETS.
2. ALL DRAINAGE SYSTEMS (T01 TO T15) SHOWN ARE TEMPORARY.
3. DRAINAGE SYSTEMS T01, T02, T04, T08, AND T15 TO BE INSTALLED IN STAGE 1 (PHASE 2) AND REMOVED IN STAGE 1 (PHASE 4).
4. DRAINAGE SYSTEMS T03, T05, T09, T10, AND T14 TO BE INSTALLED IN STAGE 1 (PHASE 3) AND REMOVED IN STAGE 1 (PHASE 4).
5. DRAINAGE SYSTEMS T07, T11, T12, AND T13 TO BE INSTALLED IN STAGE 1 (PHASE 3) AND REMOVED IN STAGE 1 (PHASE 5).
6. DRAINAGE SYSTEM T06 TO BE INSTALLED IN STAGE 1 (PHASE 2) AND IN STAGE 1 (PHASE 3). THE ENTIRE DRAINAGE SYSTEM T06 TO BE REMOVED IN STAGE 1 (PHASE 5).

T14
- (a) 12" X 6' CSP RISER
- (b) 18" X 360' SCSP

T15
- (a) 18" X 234' SCSP

T13
- (a) 12" X 6' CSP RISER
- (b) 18" X 410' SCSP

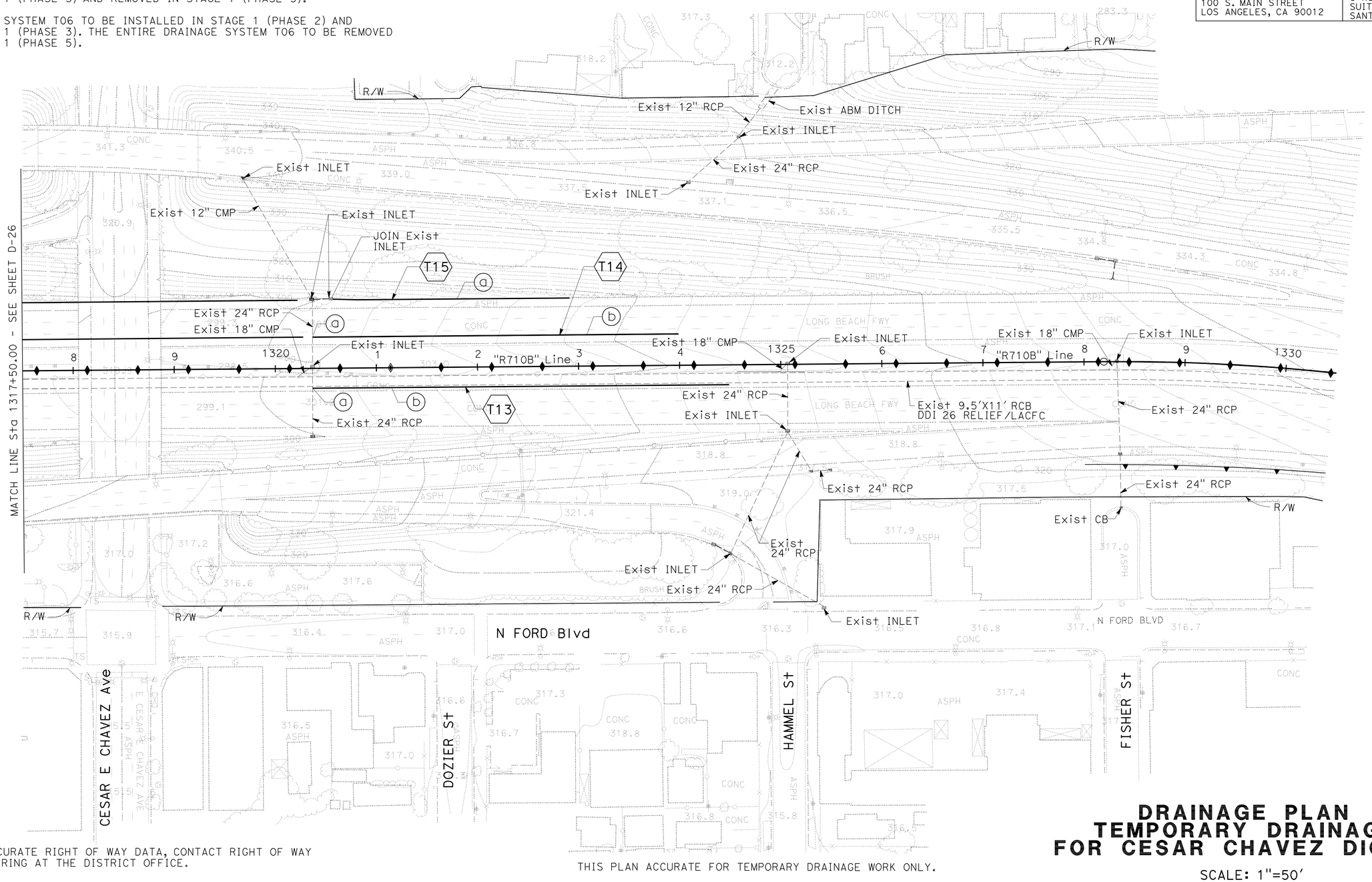


FOR ACCURATE RIGHT OF WAY DATA, CONTACT RIGHT OF WAY ENGINEERING AT THE DISTRICT OFFICE.

THIS PLAN ACCURATE FOR TEMPORARY DRAINAGE WORK ONLY.

# DRAINAGE PLAN TEMPORARY DRAINAGE FOR CESAR CHAVEZ DIGOUT

SCALE: 1"=50'

D - 27

STATE OF CALIFORNIA - DEPARTMENT OF TRANSPORTATION

Caltrans

CONSULTANT FUNCTIONAL SUPERVISOR: MELISSA DE LA PENA

CALCULATED-DESIGNED BY: C. SOSA

CHECKED BY: J. SAWTELLE

REVISED BY / DATE REVISED

LAST REVISION 00-00-00

DATE PLOTTED => 28-JUN-2011
TIME PLOTTED => 19:56

| Dist | COUNTY | ROUTE | POST MILES TOTAL PROJECT | SHEET No. | TOTAL SHEETS |
|---|---|---|---|---|---|
| 07 | LA | 710 | 17.2/26.4 | 482 | 1507 |

REGISTERED CIVIL ENGINEER 03/30/11 DATE

6-27-11
PLANS APPROVAL DATE

REGISTERED PROFESSIONAL ENGINEER GINO V. NGUYEN No. C62140 Exp. 09/30/11 CIVIL STATE OF CALIFORNIA

*THE STATE OF CALIFORNIA OR ITS OFFICERS OR AGENTS SHALL NOT BE RESPONSIBLE FOR THE ACCURACY OR COMPLETENESS OF SCANNED COPIES OF THIS PLAN SHEET.*

CALTRANS DISTRICT 7
100 S. MAIN STREET
LOS ANGELES, CA 90012

CH2M HILL
1000 WILSHIRE BLVD
LOS ANGELES, CA 90017

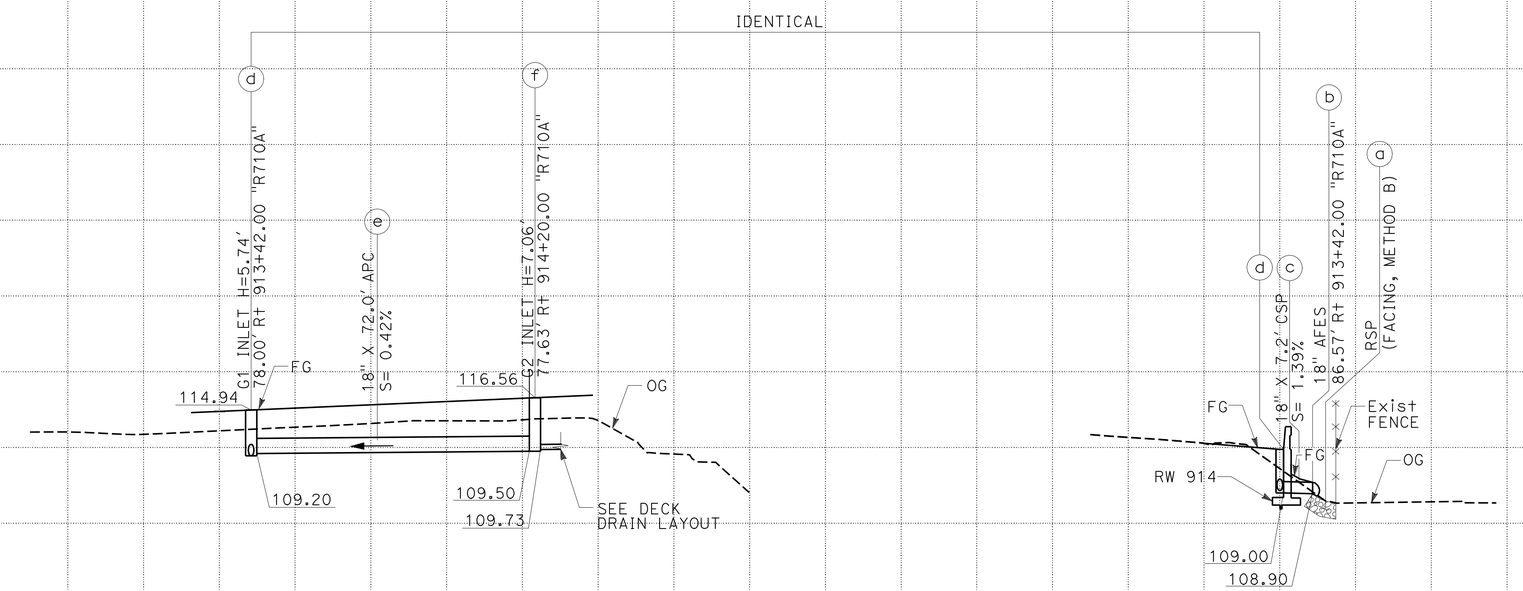


**DRAINAGE SYSTEM No. 1**

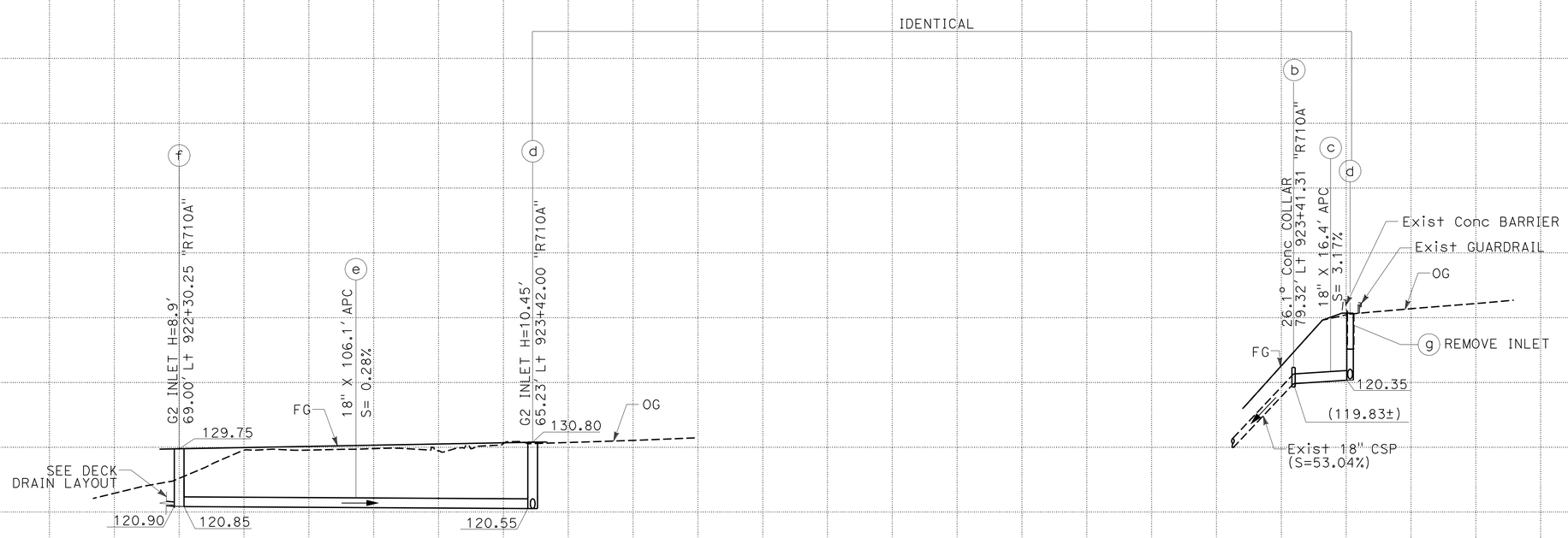


**DRAINAGE SYSTEM No. 2**

## NOTES:

1. FOR RSP DETAILS, SEE DD-16.
2. FOR Conc COLLAR, Conc APRON, AND Conc ENCASEMENT DETAILS SEE DD-15.
3. FOR GD-1 INLET DETAILS, SEE DD-2.
4. FOR CAP INLET DETAILS, SEE DD-11.
5. FOR Adj INLET DETAILS, SEE DD-10.
6. FOR Mod GD-2 INLET DETAILS, SEE DD-3.
7. FOR WALL DRAIN DETAILS, SEE DD-12.

# DRAINAGE PROFILE

SCALE: Horiz: 1" = 20'
Vert: 1" = 10'

**DP-1**

REVISED BY | DATE REVISED
G. NGUYEN | G. HSU
CALCULATED-DESIGNED BY | CHECKED BY
CONSULTANT FUNCTIONAL SUPERVISOR
MELISSA DE LA PENA
STATE OF CALIFORNIA - DEPARTMENT OF TRANSPORTATION
Caltrans

LAST REVISION 00-00-00 | DATE PLOTTED => 28-JUN-2011 | TIME PLOTTED => 19:56

| Dist | COUNTY | ROUTE | POST MILES TOTAL PROJECT | SHEET No. | TOTAL SHEETS |
|---|---|---|---|---|---|
| 07 | LA | 710 | 17.2/26.4 | 483 | 1507 |

REGISTERED CIVIL ENGINEER 03/30/11 DATE

6-27-11
PLANS APPROVAL DATE

REGISTERED PROFESSIONAL ENGINEER GINO V. NGUYEN No. C62140 Exp. 09/30/11 CIVIL STATE OF CALIFORNIA

*THE STATE OF CALIFORNIA OR ITS OFFICERS OR AGENTS SHALL NOT BE RESPONSIBLE FOR THE ACCURACY OR COMPLETENESS OF SCANNED COPIES OF THIS PLAN SHEET.*

CALTRANS DISTRICT 7
100 S. MAIN STREET
LOS ANGELES, CA 90012

CH2M HILL
1000 WILSHIRE BLVD
LOS ANGELES, CA 90017

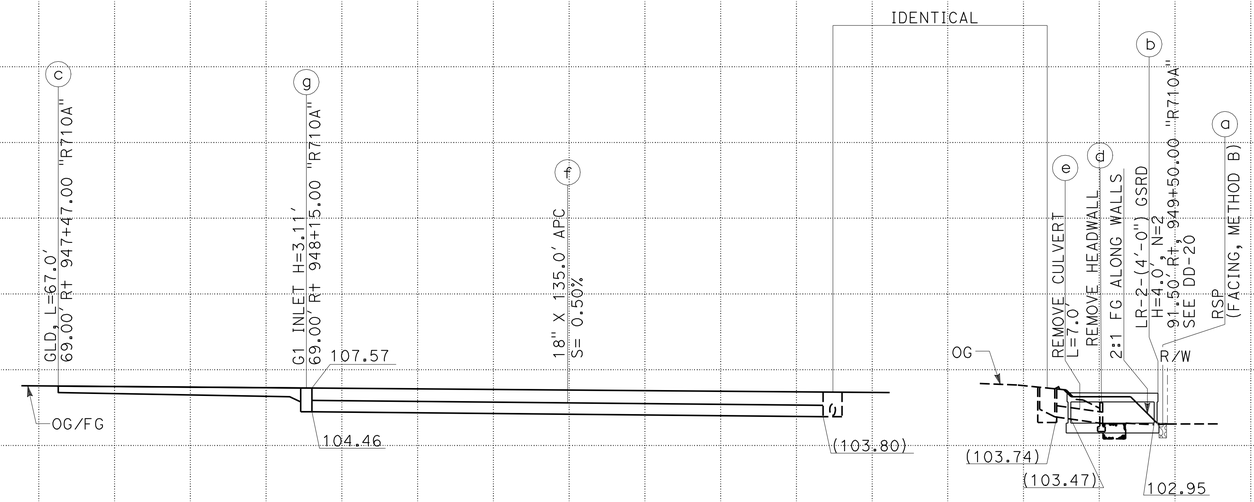


DRAINAGE SYSTEM No. 3

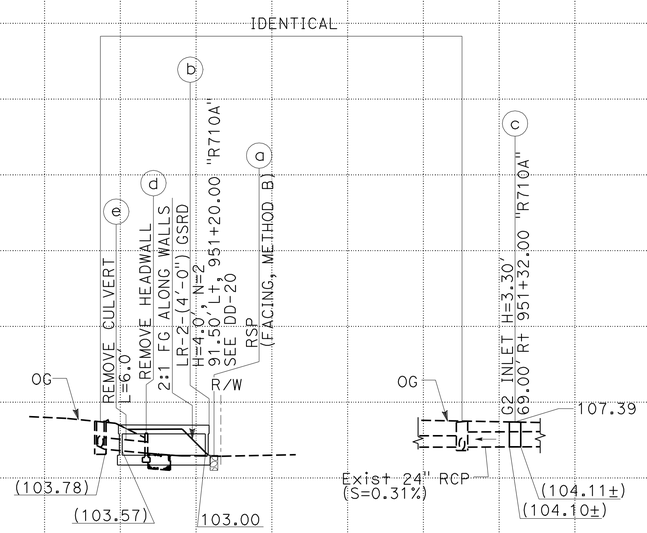


DRAINAGE SYSTEM No. 4

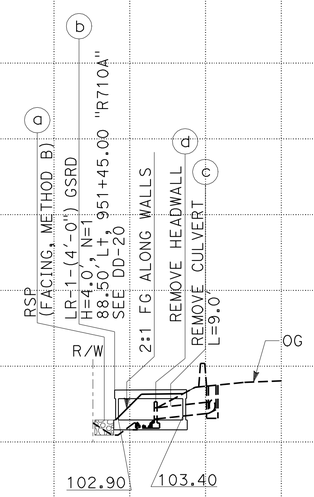


DRAINAGE SYSTEM No. 5

# DRAINAGE PROFILE

SCALE: Horiz: 1" = 20'
Vert: 1" = 10'

DP-2

STATE OF CALIFORNIA - DEPARTMENT OF TRANSPORTATION
Caltrans

CONSULTANT FUNCTIONAL SUPERVISOR: MELISSA DE LA PENA

CALCULATED-DESIGNED BY: G. NGUYEN
CHECKED BY: G. HSU

REVISED BY
DATE REVISED

LAST REVISION 00-00-00
DATE PLOTTED => 28-JUN-2011
TIME PLOTTED => 19:56

| Dist | COUNTY | ROUTE | POST MILES TOTAL PROJECT | SHEET No. | TOTAL SHEETS |
|---|---|---|---|---|---|
| 07 | LA | 710 | 17.2/26.4 | 484 | 1507 |

REGISTERED CIVIL ENGINEER 03/30/11 DATE

6-27-11
PLANS APPROVAL DATE

REGISTERED PROFESSIONAL ENGINEER GINO V. NGUYEN No. C62140 Exp. 09/30/11 CIVIL STATE OF CALIFORNIA

*THE STATE OF CALIFORNIA OR ITS OFFICERS OR AGENTS SHALL NOT BE RESPONSIBLE FOR THE ACCURACY OR COMPLETENESS OF SCANNED COPIES OF THIS PLAN SHEET.*

CALTRANS DISTRICT 7
100 S. MAIN STREET
LOS ANGELES, CA 90012

CH2M HILL
1000 WILSHIRE BLVD
LOS ANGELES, CA 90017

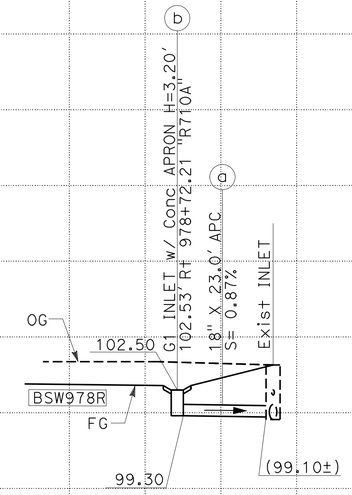


**DRAINAGE SYSTEM No. 6**

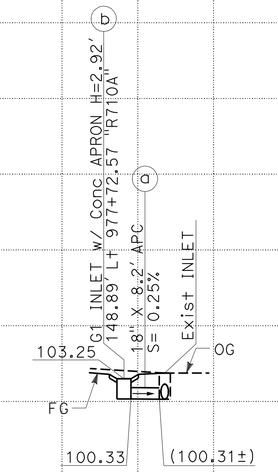


**DRAINAGE SYSTEM No. 7**

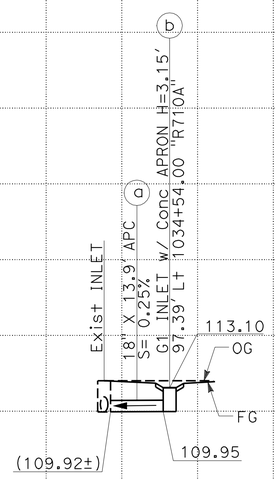


**DRAINAGE SYSTEM No. 9**

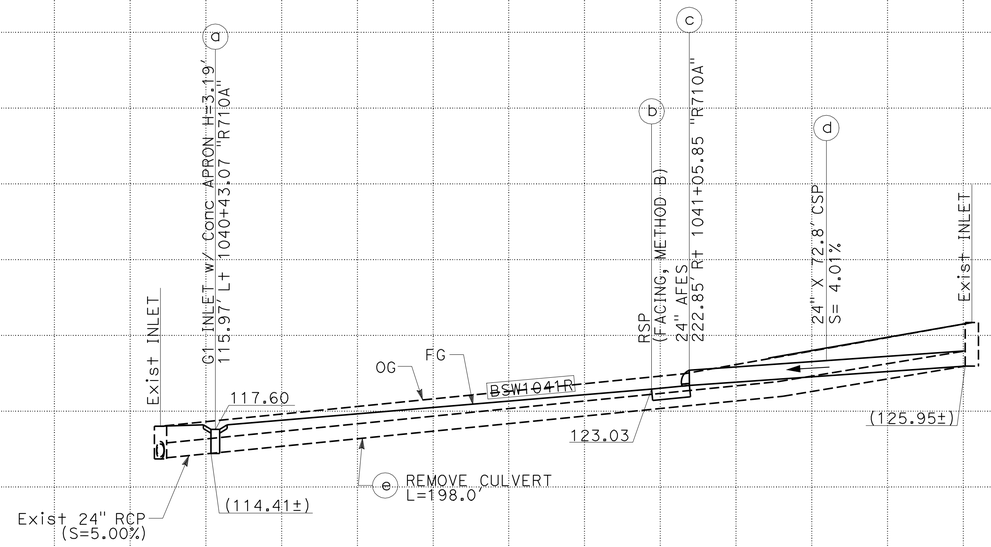


**DRAINAGE SYSTEM No. 13**

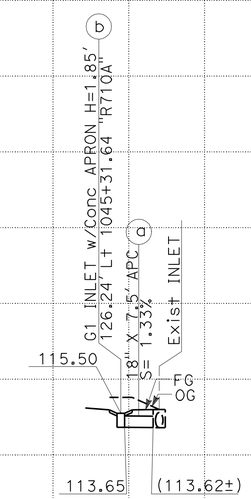


**DRAINAGE SYSTEM No. 16**

# DRAINAGE PROFILE

SCALE: Horiz: 1" = 20'
Vert: 1" = 10'

**DP-3**

STATE OF CALIFORNIA - DEPARTMENT OF TRANSPORTATION
Caltrans

CONSULTANT FUNCTIONAL SUPERVISOR: MELISSA DE LA PENA

CALCULATED-DESIGNED BY: G. NGUYEN
CHECKED BY: G. HSU

REVISED BY | DATE REVISED

LAST REVISION 00-00-00 | DATE PLOTTED => 28-JUN-2011 | TIME PLOTTED => 19:56

| Dist | COUNTY | ROUTE | POST MILES TOTAL PROJECT | SHEET No. | TOTAL SHEETS |
|---|---|---|---|---|---|
| 07 | LA | 710 | 17.2/26.4 | 485 | 1507 |

REGISTERED CIVIL ENGINEER 03/30/11 DATE

6-27-11
PLANS APPROVAL DATE

REGISTERED PROFESSIONAL ENGINEER GINO V. NGUYEN No. C62140 Exp. 09/30/11 CIVIL STATE OF CALIFORNIA

*THE STATE OF CALIFORNIA OR ITS OFFICERS OR AGENTS SHALL NOT BE RESPONSIBLE FOR THE ACCURACY OR COMPLETENESS OF SCANNED COPIES OF THIS PLAN SHEET.*

CALTRANS DISTRICT 7
100 S. MAIN STREET
LOS ANGELES, CA 90012

CH2M HILL
1000 WILSHIRE BLVD
LOS ANGELES, CA 90017

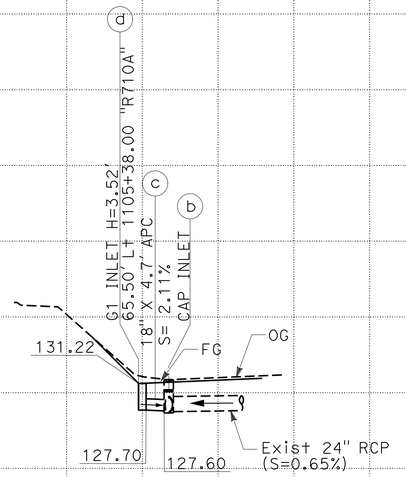


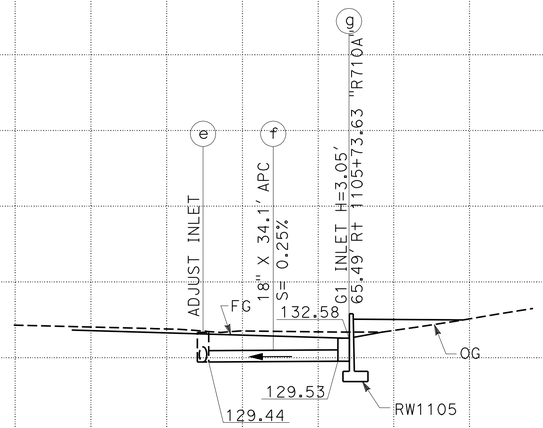


**DRAINAGE SYSTEM No. 20**

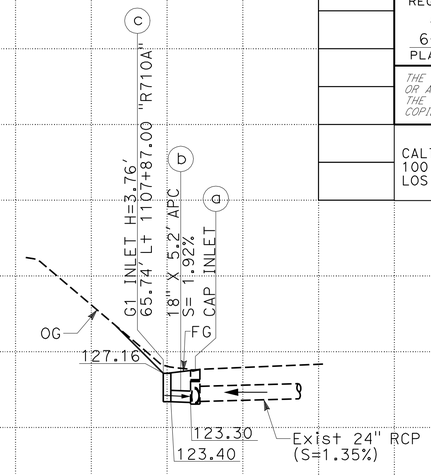


**DRAINAGE SYSTEM No. 21**

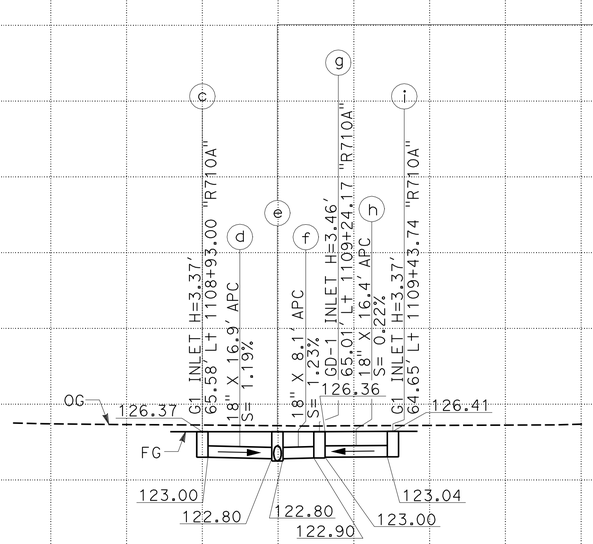


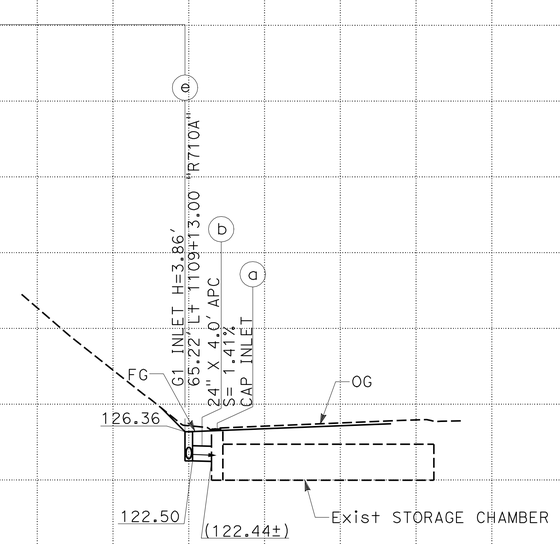


**DRAINAGE SYSTEM No. 26**

# DRAINAGE PROFILE

SCALE: Horiz: 1" = 20'
Vert: 1" = 10'

**DP-4**

STATE OF CALIFORNIA - DEPARTMENT OF TRANSPORTATION
Caltrans

CONSULTANT FUNCTIONAL SUPERVISOR: MELISSA DE LA PENA

CALCULATED-DESIGNED BY: G. NGUYEN
CHECKED BY: G. HSU

REVISED BY
DATE REVISED

LAST REVISION 00-00-00
DATE PLOTTED => 28-JUN-2011
TIME PLOTTED => 19:56

| Dist | COUNTY | ROUTE | POST MILES TOTAL PROJECT | SHEET No. | TOTAL SHEETS |
|---|---|---|---|---|---|
| 07 | LA | 710 | 17.2/26.4 | 486 | 1507 |

REGISTERED CIVIL ENGINEER 03/30/11 DATE

6-27-11
PLANS APPROVAL DATE

REGISTERED PROFESSIONAL ENGINEER GINO V. NGUYEN No. C62140 Exp. 09/30/11 CIVIL STATE OF CALIFORNIA

*THE STATE OF CALIFORNIA OR ITS OFFICERS OR AGENTS SHALL NOT BE RESPONSIBLE FOR THE ACCURACY OR COMPLETENESS OF SCANNED COPIES OF THIS PLAN SHEET.*

CALTRANS DISTRICT 7
100 S. MAIN STREET
LOS ANGELES, CA 90012

CH2M HILL
1000 WILSHIRE BLVD
LOS ANGELES, CA 90017

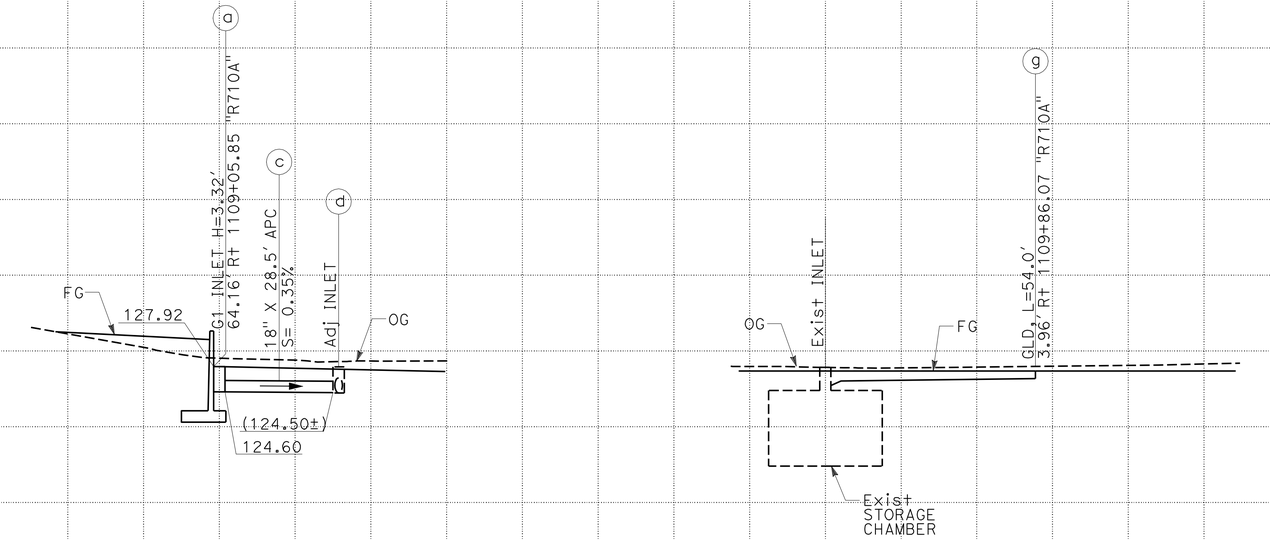


**DRAINAGE SYSTEM No. 27**

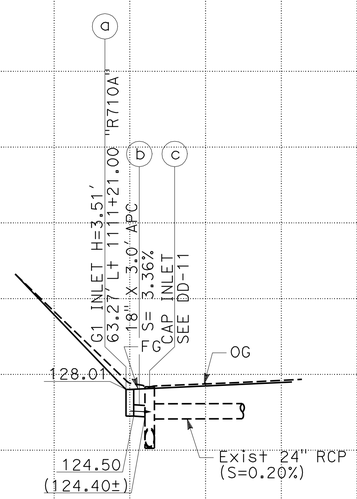


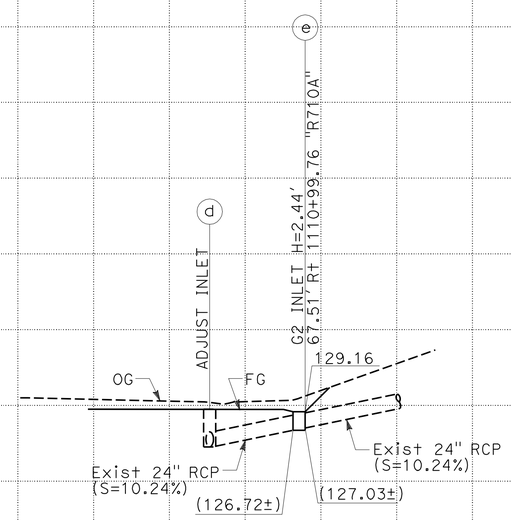


**DRAINAGE SYSTEM No. 29**

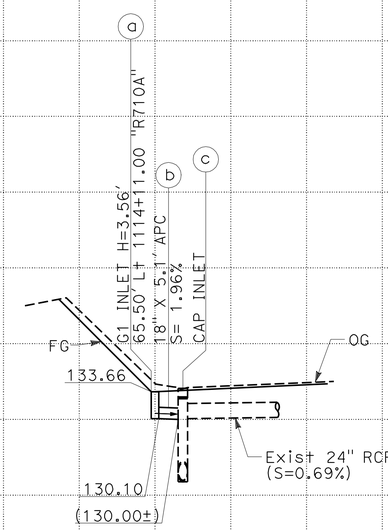


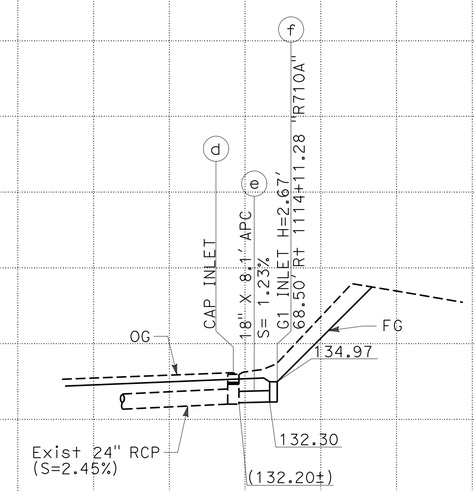


**DRAINAGE SYSTEM No. 30**

# DRAINAGE PROFILE

SCALE: Horiz: 1" = 20'
Vert: 1" = 10'

**DP-5**

REVISED BY | DATE REVISED
G. NGUYEN | G. HSU
CALCULATED-DESIGNED BY | CHECKED BY
CONSULTANT FUNCTIONAL SUPERVISOR: MELISSA DE LA PENA
STATE OF CALIFORNIA - DEPARTMENT OF TRANSPORTATION
Caltrans

LAST REVISION 00-00-00 | DATE PLOTTED => 28-JUN-2011 | TIME PLOTTED => 19:56

| Dist | COUNTY | ROUTE | POST MILES TOTAL PROJECT | SHEET No. | TOTAL SHEETS |
|---|---|---|---|---|---|
| 07 | LA | 710 | 17.2/26.4 | 487 | 1507 |

REGISTERED CIVIL ENGINEER 03/30/11 DATE

6-27-11
PLANS APPROVAL DATE

REGISTERED PROFESSIONAL ENGINEER GINO V. NGUYEN No. C62140 Exp. 09/30/11 CIVIL STATE OF CALIFORNIA

*THE STATE OF CALIFORNIA OR ITS OFFICERS OR AGENTS SHALL NOT BE RESPONSIBLE FOR THE ACCURACY OR COMPLETENESS OF SCANNED COPIES OF THIS PLAN SHEET.*

CALTRANS DISTRICT 7
100 S. MAIN STREET
LOS ANGELES, CA 90012

CH2M HILL
1000 WILSHIRE BLVD
LOS ANGELES, CA 90017

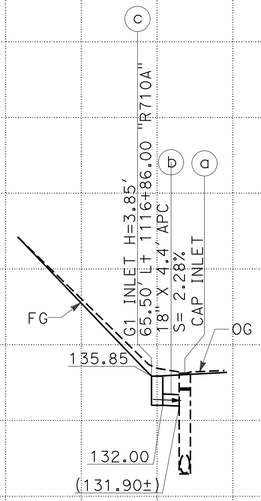


**DRAINAGE SYSTEM No. 31**

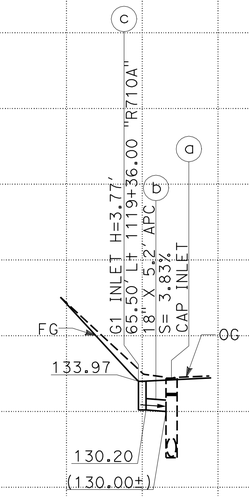


**DRAINAGE SYSTEM No. 32**

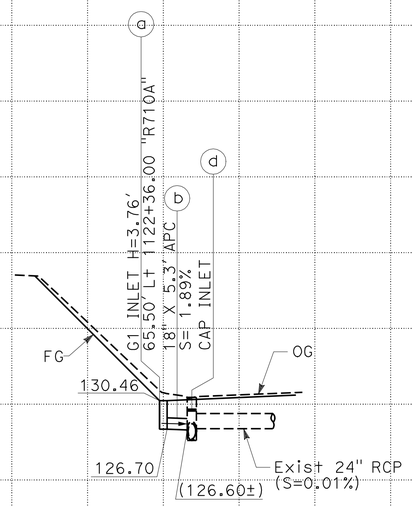


**DRAINAGE SYSTEM No. 33**

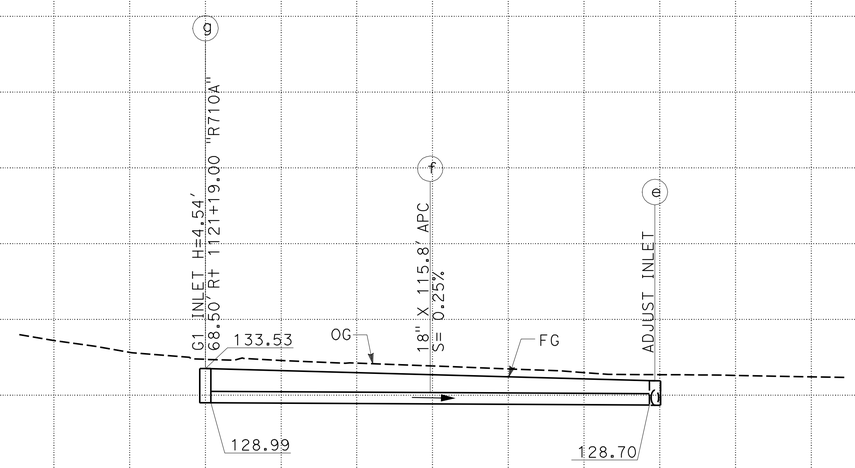


# DRAINAGE PROFILE

SCALE: Horiz: 1" = 20'
Vert: 1" = 10'

**DP-6**

STATE OF CALIFORNIA - DEPARTMENT OF TRANSPORTATION
Caltrans

CONSULTANT FUNCTIONAL SUPERVISOR: MELISSA DE LA PENA

CALCULATED-DESIGNED BY: G. NGUYEN
CHECKED BY: G. HSU

REVISED BY | DATE REVISED

LAST REVISION 00-00-00 | DATE PLOTTED => 28-JUN-2011 | TIME PLOTTED => 19:56

| Dist | COUNTY | ROUTE | POST MILES TOTAL PROJECT | SHEET No. | TOTAL SHEETS |
|---|---|---|---|---|---|
| 07 | LA | 710 | 17.2/26.4 | 488 | 1507 |

REGISTERED CIVIL ENGINEER 03/30/11 DATE

6-27-11
PLANS APPROVAL DATE

REGISTERED PROFESSIONAL ENGINEER GINO V. NGUYEN No. C62140 Exp. 09/30/11 CIVIL STATE OF CALIFORNIA

*THE STATE OF CALIFORNIA OR ITS OFFICERS OR AGENTS SHALL NOT BE RESPONSIBLE FOR THE ACCURACY OR COMPLETENESS OF SCANNED COPIES OF THIS PLAN SHEET.*

CALTRANS DISTRICT 7
100 S. MAIN STREET
LOS ANGELES, CA 90012

CH2M HILL
1000 WILSHIRE BLVD
LOS ANGELES, CA 90017

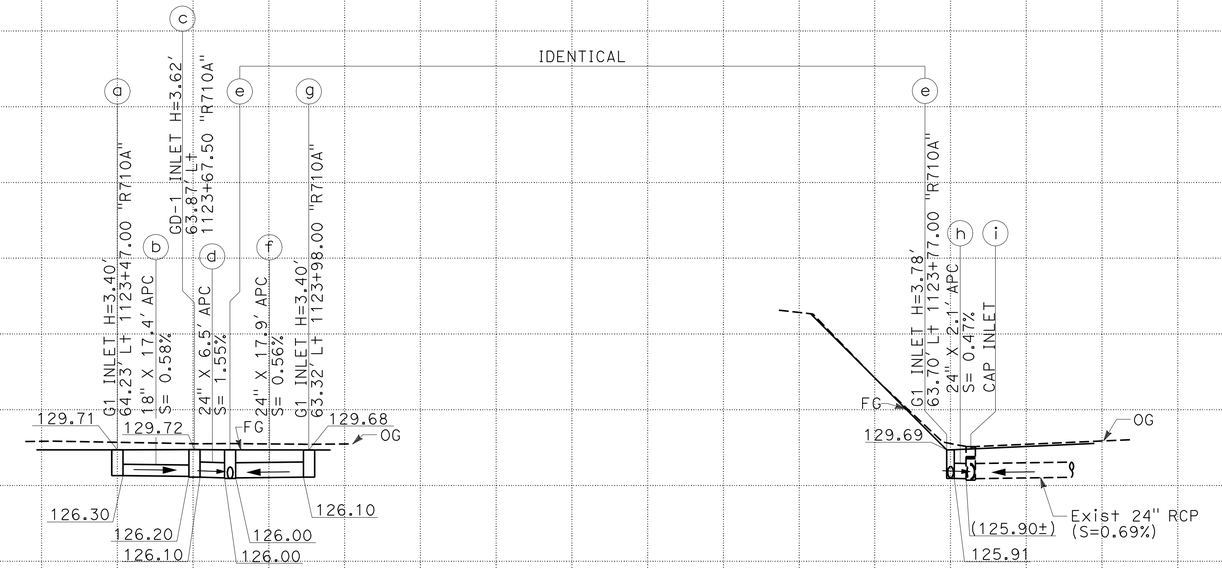


**DRAINAGE SYSTEM No. 38**

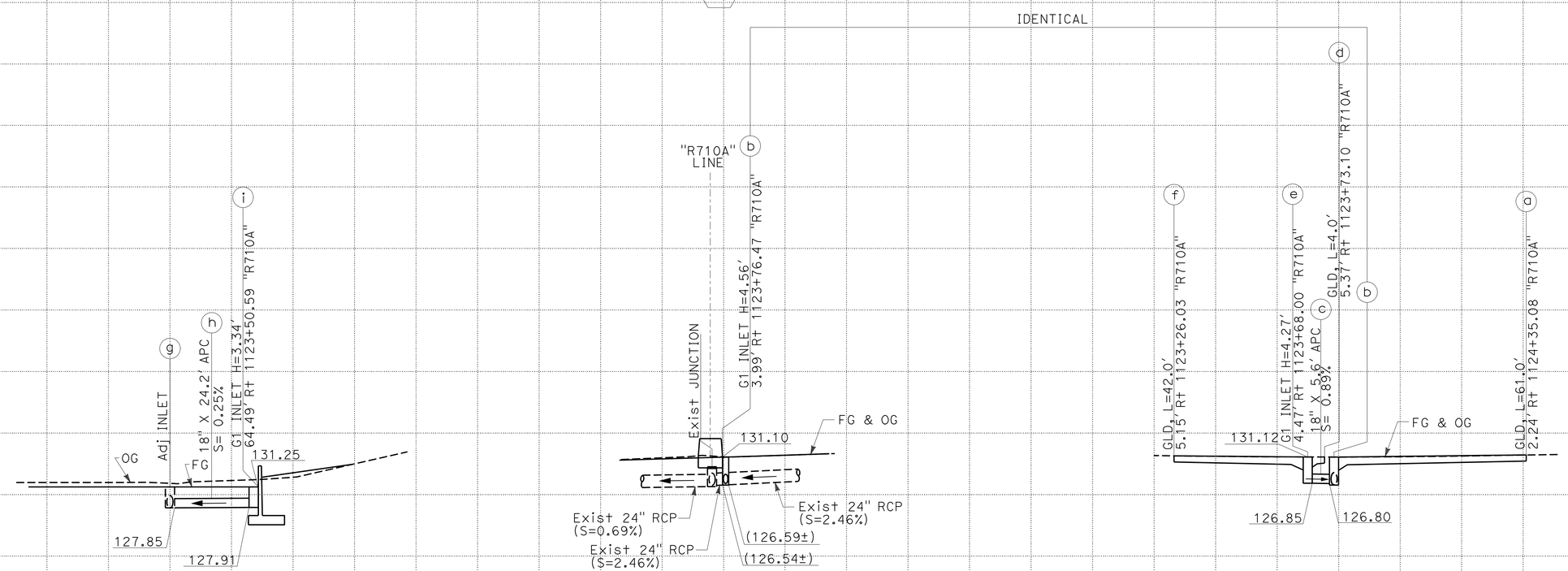


**DRAINAGE SYSTEM No. 39**

# DRAINAGE PROFILE

SCALE: Horiz: 1" = 20'
Vert: 1" = 10'

**DP-7**

STATE OF CALIFORNIA - DEPARTMENT OF TRANSPORTATION
Caltrans

CONSULTANT FUNCTIONAL SUPERVISOR: MELISSA DE LA PENA
CALCULATED-DESIGNED BY: G. NGUYEN
CHECKED BY: G. HSU
REVISED BY
DATE REVISED

LAST REVISION 00-00-00
DATE PLOTTED => 28-JUN-2011
TIME PLOTTED => 19:56

| Dist | COUNTY | ROUTE | POST MILES TOTAL PROJECT | SHEET No. | TOTAL SHEETS |
|---|---|---|---|---|---|
| 07 | LA | 710 | 17.2/26.4 | 489 | 1507 |

REGISTERED CIVIL ENGINEER 03/30/11 DATE

6-27-11
PLANS APPROVAL DATE

REGISTERED PROFESSIONAL ENGINEER GINO V. NGUYEN No. C62140 Exp. 09/30/11 CIVIL STATE OF CALIFORNIA

*THE STATE OF CALIFORNIA OR ITS OFFICERS OR AGENTS SHALL NOT BE RESPONSIBLE FOR THE ACCURACY OR COMPLETENESS OF SCANNED COPIES OF THIS PLAN SHEET.*

CALTRANS DISTRICT 7
100 S. MAIN STREET
LOS ANGELES, CA 90012

CH2M HILL
1000 WILSHIRE BLVD
LOS ANGELES, CA 90017

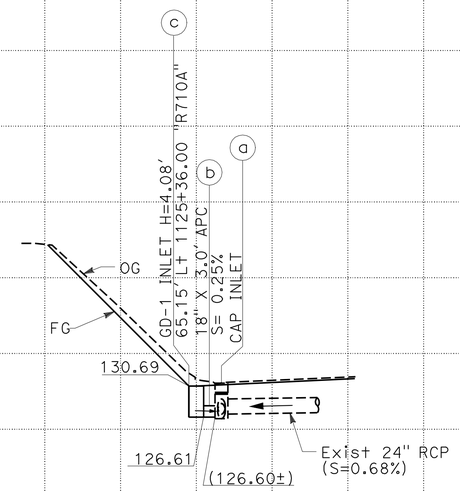


**DRAINAGE SYSTEM No. 40**

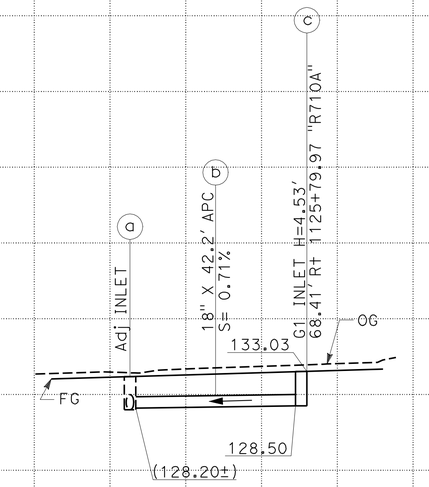


**DRAINAGE SYSTEM No. 41**

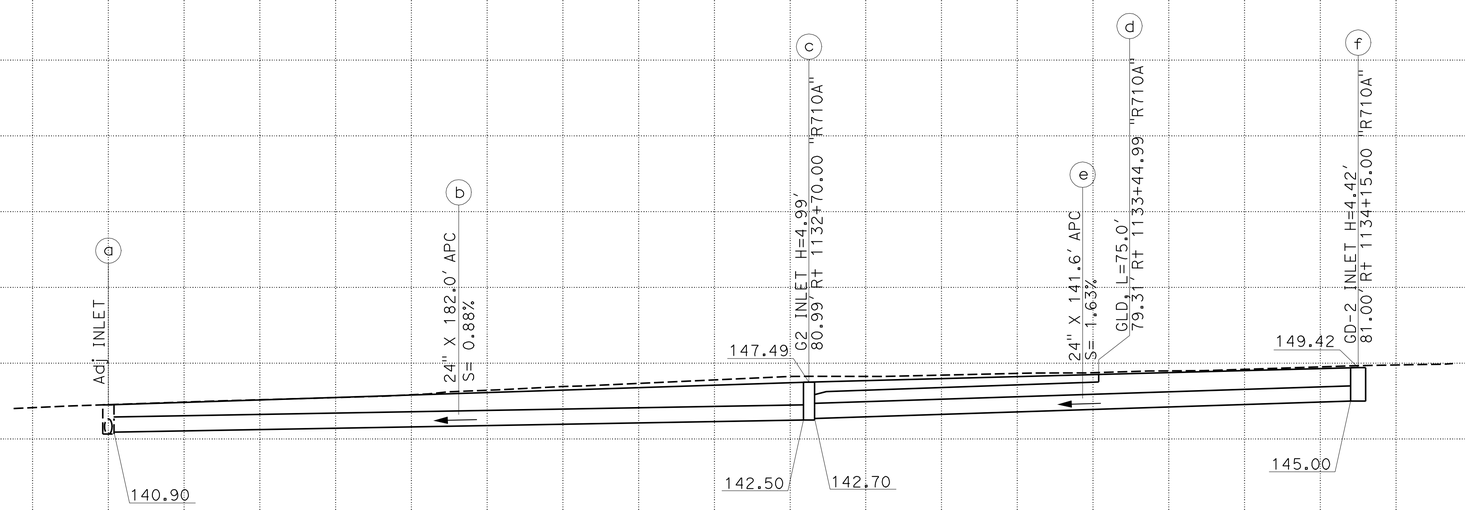


**DRAINAGE SYSTEM No. 42**

# DRAINAGE PROFILE

SCALE: Horiz: 1" = 20'
Vert: 1" = 10'

**DP-8**

STATE OF CALIFORNIA - DEPARTMENT OF TRANSPORTATION
Caltrans

CONSULTANT FUNCTIONAL SUPERVISOR: MELISSA DE LA PENA

CALCULATED-DESIGNED BY: G. NGUYEN
CHECKED BY: G. HSU

REVISED BY
DATE REVISED

LAST REVISION 00-00-00
DATE PLOTTED => 28-JUN-2011
TIME PLOTTED => 19:56

| Dist | COUNTY | ROUTE | POST MILES TOTAL PROJECT | SHEET No. | TOTAL SHEETS |
|---|---|---|---|---|---|
| 07 | LA | 710 | 17.2/26.4 | 490 | 1507 |

REGISTERED CIVIL ENGINEER 03/30/11 DATE

6-27-11
PLANS APPROVAL DATE

REGISTERED PROFESSIONAL ENGINEER GINO V. NGUYEN No. C62140 Exp. 09/30/11 CIVIL STATE OF CALIFORNIA

*THE STATE OF CALIFORNIA OR ITS OFFICERS OR AGENTS SHALL NOT BE RESPONSIBLE FOR THE ACCURACY OR COMPLETENESS OF SCANNED COPIES OF THIS PLAN SHEET.*

CALTRANS DISTRICT 7
100 S. MAIN STREET
LOS ANGELES, CA 90012

CH2M HILL
1000 WILSHIRE BLVD
LOS ANGELES, CA 90017

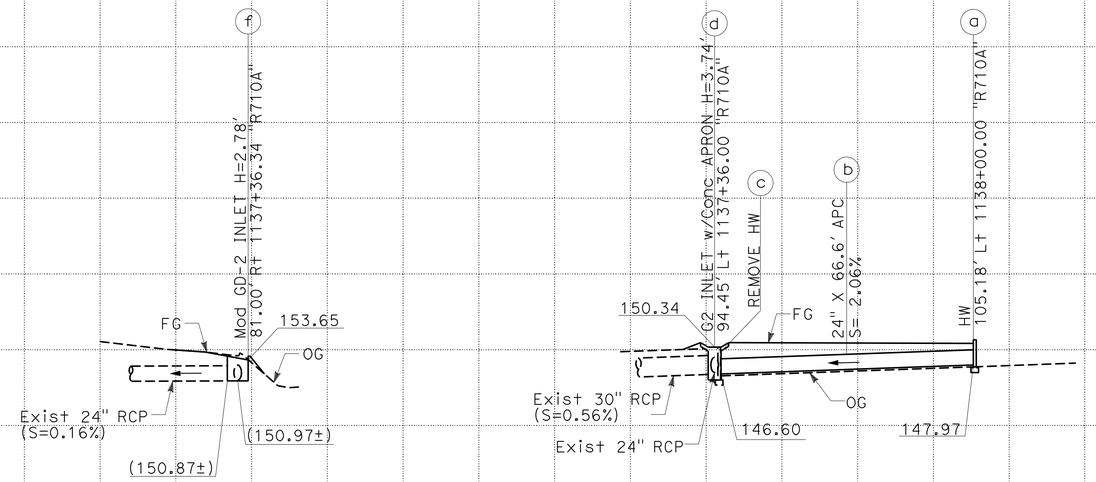


**DRAINAGE SYSTEM No. 48**

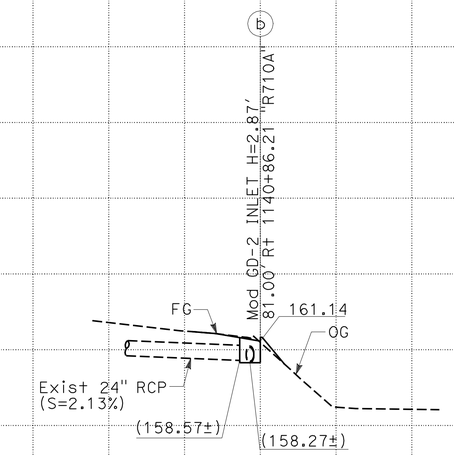


**DRAINAGE SYSTEM No. 49**

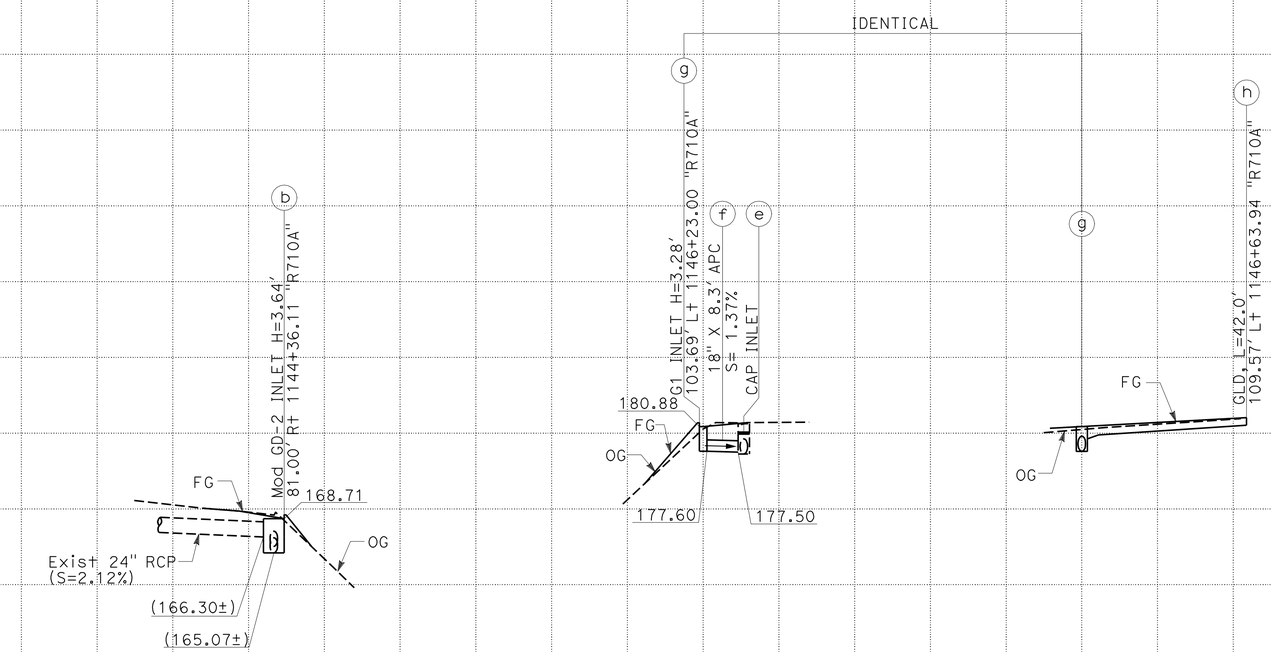


**DRAINAGE SYSTEM No. 51**

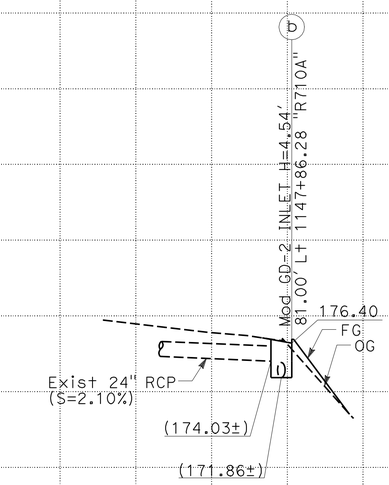


**DRAINAGE SYSTEM No. 52**

# DRAINAGE PROFILE

SCALE: Horiz: 1" = 20'
Vert: 1" = 10'

**DP-9**

STATE OF CALIFORNIA - DEPARTMENT OF TRANSPORTATION
Caltrans

CONSULTANT FUNCTIONAL SUPERVISOR: MELISSA DE LA PENA

CALCULATED-DESIGNED BY: G. NGUYEN
CHECKED BY: G. HSU

REVISED BY
DATE REVISED

LAST REVISION 00-00-00
DATE PLOTTED => 28-JUN-2011
TIME PLOTTED => 19:56

| Dist | COUNTY | ROUTE | POST MILES TOTAL PROJECT | SHEET No. | TOTAL SHEETS |
|---|---|---|---|---|---|
| 07 | LA | 710 | 17.2/26.4 | 491 | 1507 |

REGISTERED CIVIL ENGINEER 03/30/11 DATE

6-27-11
PLANS APPROVAL DATE

REGISTERED PROFESSIONAL ENGINEER GINO V. NGUYEN No. C62140 Exp. 09/30/11 CIVIL STATE OF CALIFORNIA

*THE STATE OF CALIFORNIA OR ITS OFFICERS OR AGENTS SHALL NOT BE RESPONSIBLE FOR THE ACCURACY OR COMPLETENESS OF SCANNED COPIES OF THIS PLAN SHEET.*

CALTRANS DISTRICT 7
100 S. MAIN STREET
LOS ANGELES, CA 90012

CH2M HILL
1000 WILSHIRE BLVD
LOS ANGELES, CA 90017

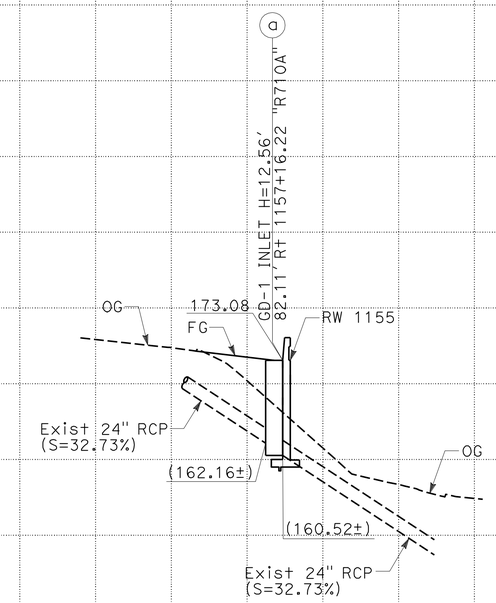


DRAINAGE SYSTEM No. 53

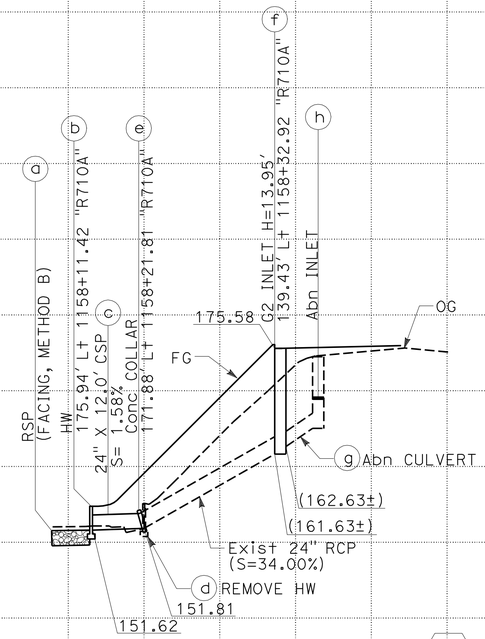


DRAINAGE SYSTEM No. 54

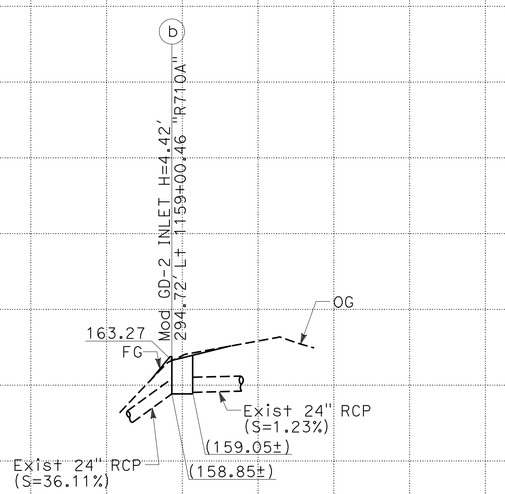


DRAINAGE SYSTEM No. 55

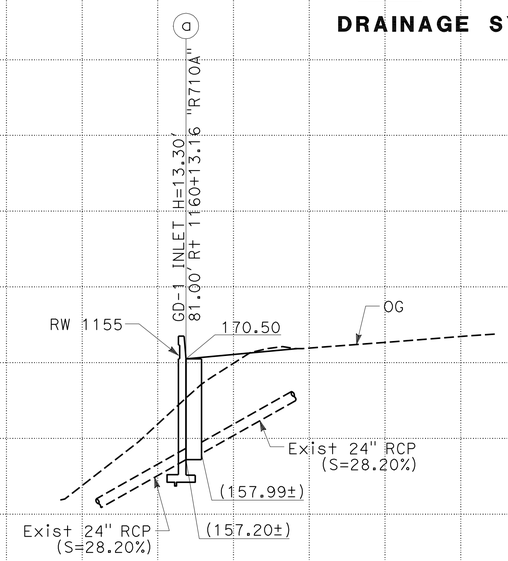


DRAINAGE SYSTEM No. 56

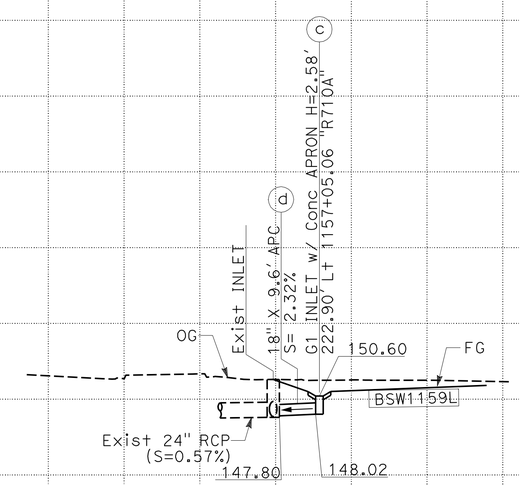


DRAINAGE SYSTEM No. 57

# DRAINAGE PROFILE

SCALE: Horiz: 1" = 20'
Vert: 1" = 10'

DP-10

REVISED BY | DATE REVISED
G. NGUYEN | G. HSU
CALCULATED-DESIGNED BY | CHECKED BY
CONSULTANT FUNCTIONAL SUPERVISOR
MELISSA DE LA PENA
STATE OF CALIFORNIA - DEPARTMENT OF TRANSPORTATION
Caltrans

LAST REVISION 00-00-00 | DATE PLOTTED => 28-JUN-2011 | TIME PLOTTED => 19:57

| Dist | COUNTY | ROUTE | POST MILES TOTAL PROJECT | SHEET No. | TOTAL SHEETS |
|---|---|---|---|---|---|
| 07 | LA | 710 | 17.2/26.4 | 492 | 1507 |

REGISTERED CIVIL ENGINEER 03/30/11 DATE

6-27-11
PLANS APPROVAL DATE

REGISTERED PROFESSIONAL ENGINEER ROBERT M. HENDERSON No. C66736 Exp. 09/30/12 CIVIL STATE OF CALIFORNIA

*THE STATE OF CALIFORNIA OR ITS OFFICERS OR AGENTS SHALL NOT BE RESPONSIBLE FOR THE ACCURACY OR COMPLETENESS OF SCANNED COPIES OF THIS PLAN SHEET.*

CALTRANS DISTRICT 7
100 S. MAIN STREET
LOS ANGELES, CA 90012

CH2M HILL
1000 WILSHIRE BLVD
LOS ANGELES, CA 90017

**DRAINAGE SYSTEM No. 59**

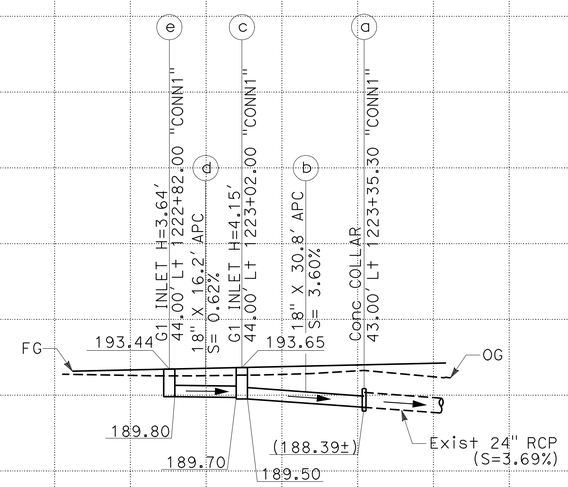


**DRAINAGE SYSTEM No. 60**

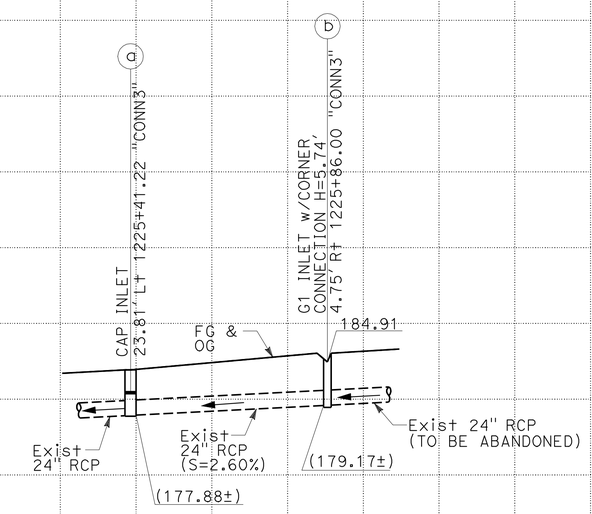


**DRAINAGE SYSTEM No. 61**

# DRAINAGE PROFILE

SCALE: Horiz: 1" = 20'
Vert: 1" = 10'

**DP-11**

STATE OF CALIFORNIA - DEPARTMENT OF TRANSPORTATION
Caltrans

CONSULTANT FUNCTIONAL SUPERVISOR: MELISSA DE LA PENA

CALCULATED-DESIGNED BY: R. HENDERSON
CHECKED BY: I. MATAGI

REVISED BY
DATE REVISED

LAST REVISION 00-00-00
DATE PLOTTED => 28-JUN-2011
TIME PLOTTED => 19:57

| Dist | COUNTY | ROUTE | POST MILES TOTAL PROJECT | SHEET No. | TOTAL SHEETS |
|---|---|---|---|---|---|
| 07 | LA | 710 | 17.2/26.4 | 493 | 1507 |

REGISTERED CIVIL ENGINEER 03/30/11 DATE

6-27-11
PLANS APPROVAL DATE

REGISTERED PROFESSIONAL ENGINEER ROBERT M. HENDERSON No. C66736 Exp. 09/30/12 CIVIL STATE OF CALIFORNIA

*THE STATE OF CALIFORNIA OR ITS OFFICERS OR AGENTS SHALL NOT BE RESPONSIBLE FOR THE ACCURACY OR COMPLETENESS OF SCANNED COPIES OF THIS PLAN SHEET.*

CALTRANS DISTRICT 7
100 S. MAIN STREET
LOS ANGELES, CA 90012

CH2M HILL
1000 WILSHIRE BLVD
LOS ANGELES, CA 90017

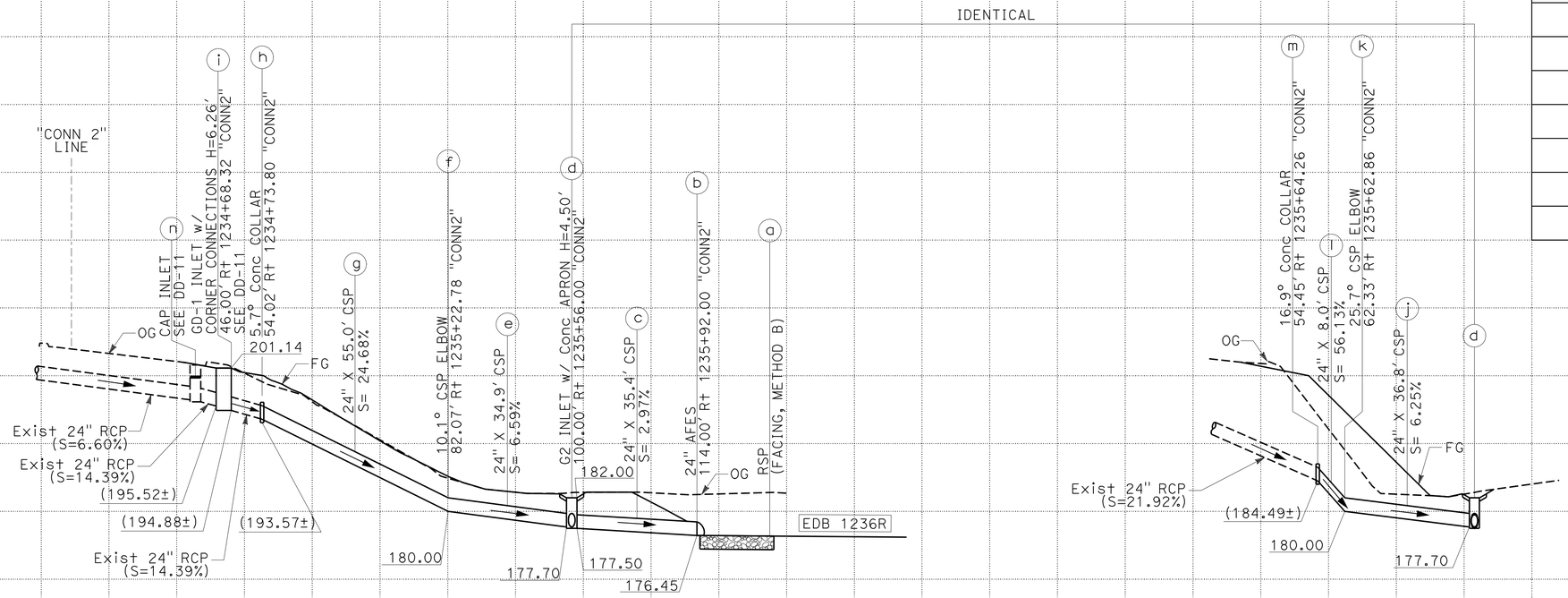


DRAINAGE SYSTEM No. 62

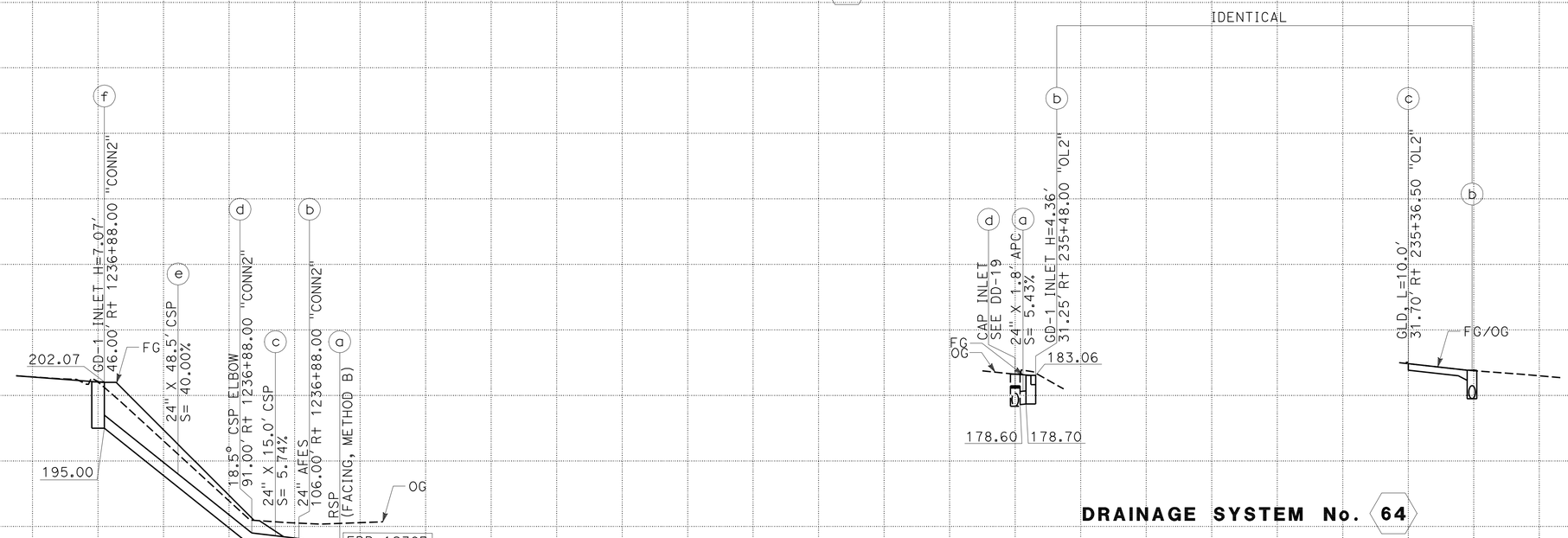


DRAINAGE SYSTEM No. 63

DRAINAGE SYSTEM No. 64

# DRAINAGE PROFILE

SCALE: Horiz: 1" = 20'
Vert: 1" = 10'

DP-12

STATE OF CALIFORNIA - DEPARTMENT OF TRANSPORTATION
Caltrans

CONSULTANT FUNCTIONAL SUPERVISOR: MELISSA DE LA PENA
CALCULATED-DESIGNED BY: I. MATAGI
CHECKED BY: R. HENDERSON
REVISED BY
DATE REVISED

LAST REVISION 00-00-00 | DATE PLOTTED => 28-JUN-2011 | TIME PLOTTED => 19:57

| Dist | COUNTY | ROUTE | POST MILES TOTAL PROJECT | SHEET No. | TOTAL SHEETS |
|---|---|---|---|---|---|
| 07 | LA | 710 | 17.2/26.4 | 494 | 1507 |

REGISTERED CIVIL ENGINEER 03/30/11 DATE

6-27-11
PLANS APPROVAL DATE

REGISTERED PROFESSIONAL ENGINEER ROBERT M. HENDERSON No. C66736 Exp. 09/30/12 CIVIL STATE OF CALIFORNIA

*THE STATE OF CALIFORNIA OR ITS OFFICERS OR AGENTS SHALL NOT BE RESPONSIBLE FOR THE ACCURACY OR COMPLETENESS OF SCANNED COPIES OF THIS PLAN SHEET.*

CALTRANS DISTRICT 7
100 S. MAIN STREET
LOS ANGELES, CA 90012

CH2M HILL
1000 WILSHIRE BLVD
LOS ANGELES, CA 90017

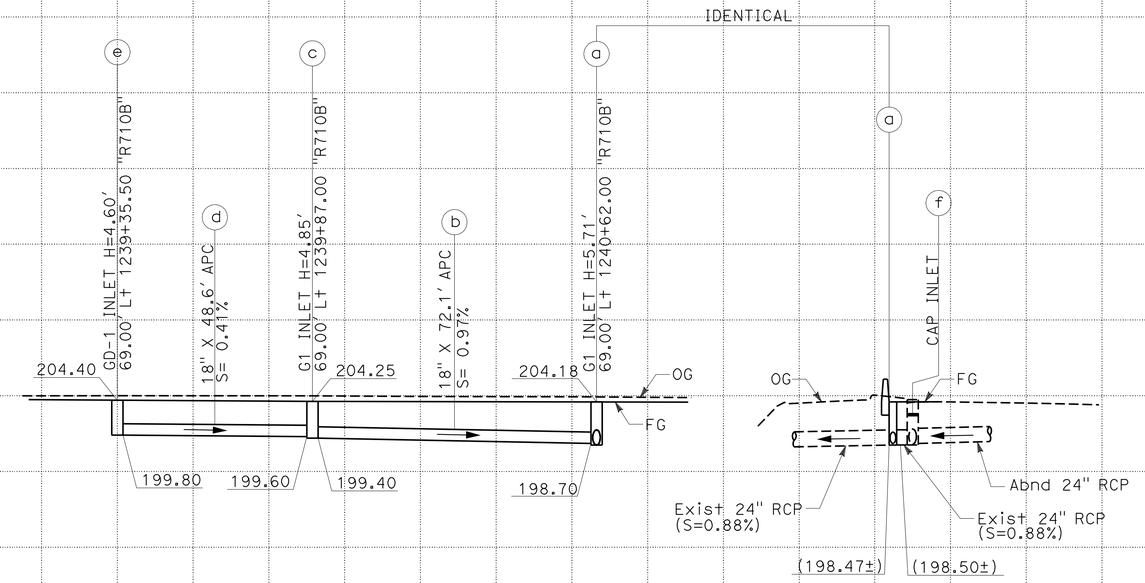


**DRAINAGE SYSTEM No. 65**

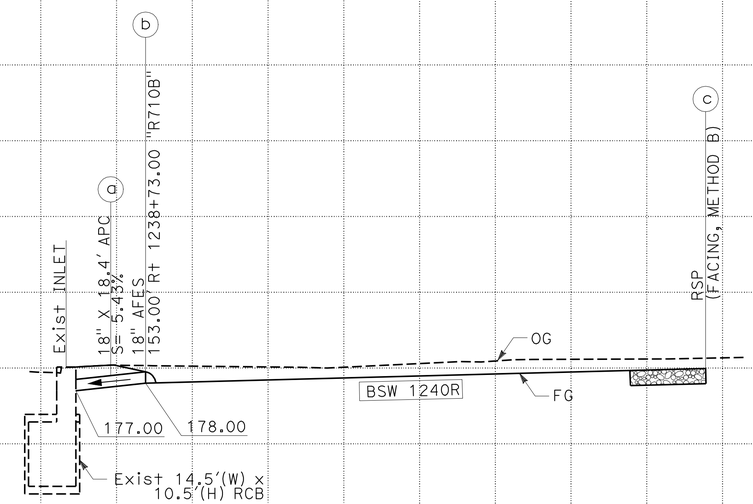


**DRAINAGE SYSTEM No. 66**

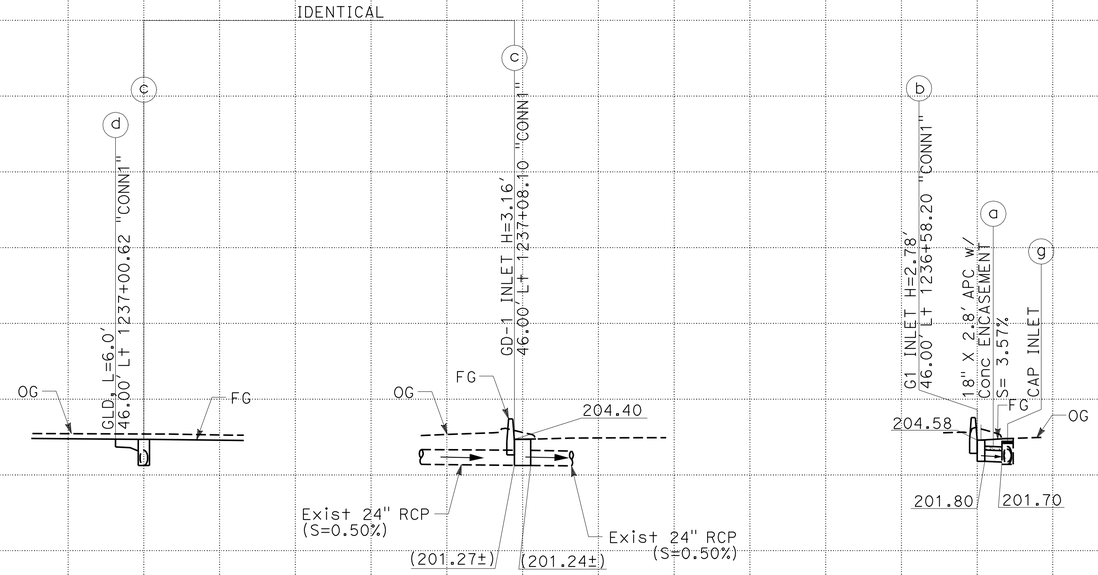


**DRAINAGE SYSTEM No. 67**




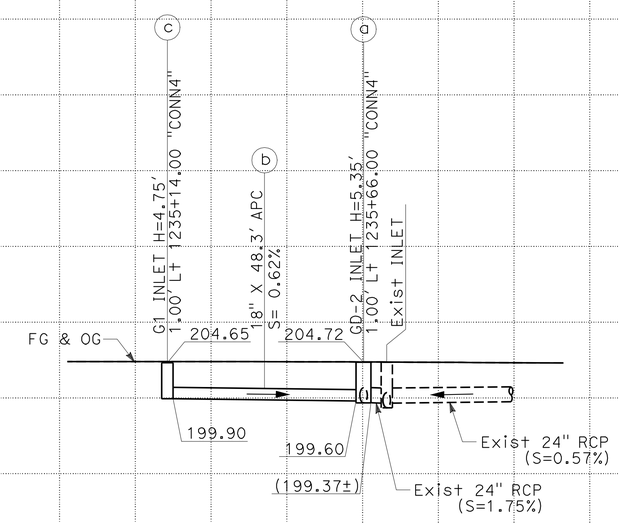


**DRAINAGE SYSTEM No. 68**

# DRAINAGE PROFILE

SCALE: Horiz: 1" = 20'
Vert: 1" = 10'

**DP-13**

STATE OF CALIFORNIA - DEPARTMENT OF TRANSPORTATION
Caltrans

CONSULTANT FUNCTIONAL SUPERVISOR: MELISSA DE LA PENA

CALCULATED-DESIGNED BY: I. MATAGI
CHECKED BY: R. HENDERSON

REVISED BY | DATE REVISED

LAST REVISION 00-00-00 | DATE PLOTTED => 28-JUN-2011 | TIME PLOTTED => 19:57

| Dist | COUNTY | ROUTE | POST MILES TOTAL PROJECT | SHEET No. | TOTAL SHEETS |
|---|---|---|---|---|---|
| 07 | LA | 710 | 17.2/26.4 | 495 | 1507 |

REGISTERED CIVIL ENGINEER 03/30/11 DATE

6-27-11
PLANS APPROVAL DATE

REGISTERED PROFESSIONAL ENGINEER ROBERT M. HENDERSON No. C66736 Exp 09/30/12 CIVIL STATE OF CALIFORNIA

*THE STATE OF CALIFORNIA OR ITS OFFICERS OR AGENTS SHALL NOT BE RESPONSIBLE FOR THE ACCURACY OR COMPLETENESS OF SCANNED COPIES OF THIS PLAN SHEET.*

CALTRANS DISTRICT 7
100 S. MAIN STREET
LOS ANGELES, CA 90012

CH2M HILL
1000 WILSHIRE BLVD
LOS ANGELES, CA 90017

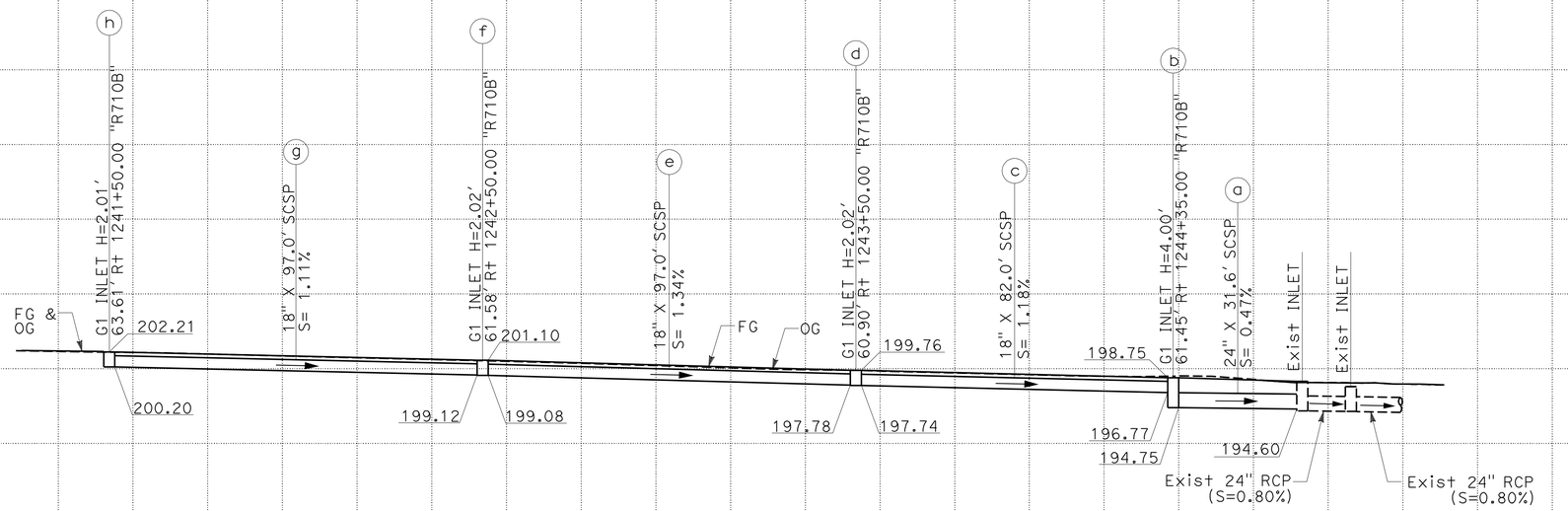


**DRAINAGE SYSTEM No. 69**

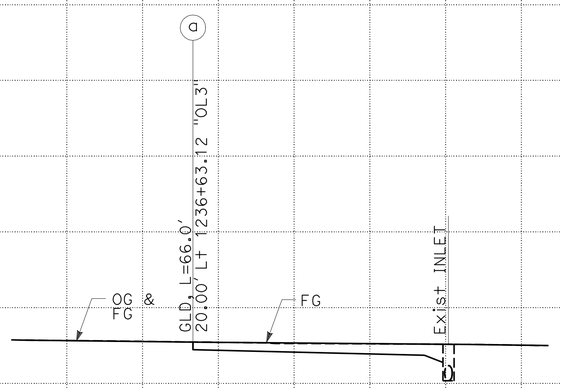


**DRAINAGE SYSTEM No. 70**

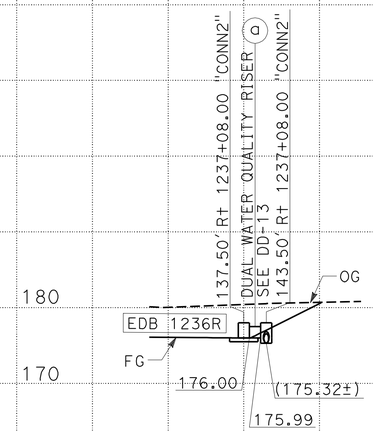


**DRAINAGE SYSTEM No. 72**

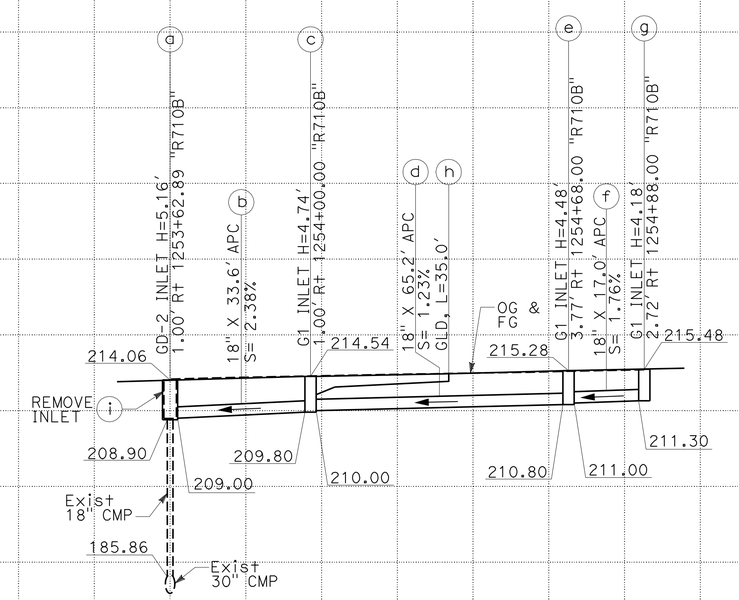


**DRAINAGE SYSTEM No. 75**

# DRAINAGE PROFILE

SCALE: Horiz: 1" = 20'
Vert: 1" = 10'

**DP-14**

REVISED BY | DATE REVISED

I. MATAGI | R. HENDERSON

CALCULATED-DESIGNED BY | CHECKED BY

CONSULTANT FUNCTIONAL SUPERVISOR: MELISSA DE LA PENA

STATE OF CALIFORNIA - DEPARTMENT OF TRANSPORTATION

Caltrans

LAST REVISION 00-00-00 | DATE PLOTTED => 28-JUN-2011 | TIME PLOTTED => 19:57

| Dist | COUNTY | ROUTE | POST MILES TOTAL PROJECT | SHEET No. | TOTAL SHEETS |
|---|---|---|---|---|---|
| 07 | LA | 710 | 17.2/26.4 | 496 | 1507 |

REGISTERED CIVIL ENGINEER 03/30/11 DATE

6-27-11
PLANS APPROVAL DATE

REGISTERED PROFESSIONAL ENGINEER ROBERT M. HENDERSON No. C66736 Exp 09/30/12 CIVIL STATE OF CALIFORNIA

*THE STATE OF CALIFORNIA OR ITS OFFICERS OR AGENTS SHALL NOT BE RESPONSIBLE FOR THE ACCURACY OR COMPLETENESS OF SCANNED COPIES OF THIS PLAN SHEET.*

CALTRANS DISTRICT 7
100 S. MAIN STREET
LOS ANGELES, CA 90012

CH2M HILL
1000 WILSHIRE BLVD
LOS ANGELES, CA 90017

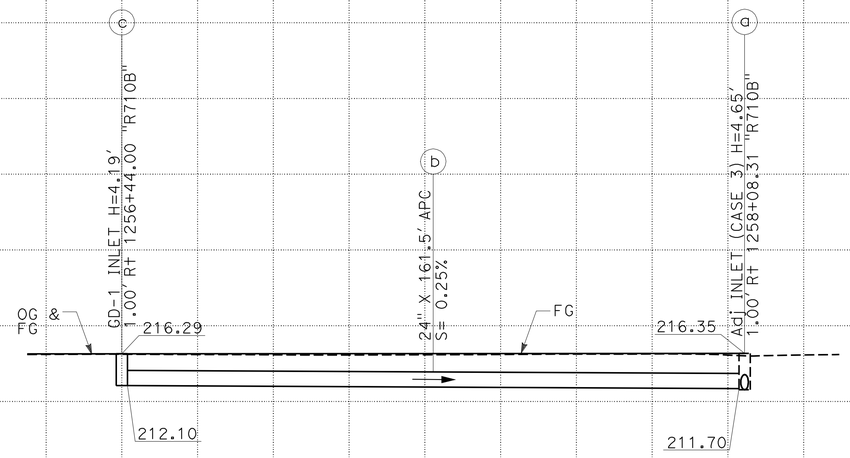


**DRAINAGE SYSTEM No. 76**

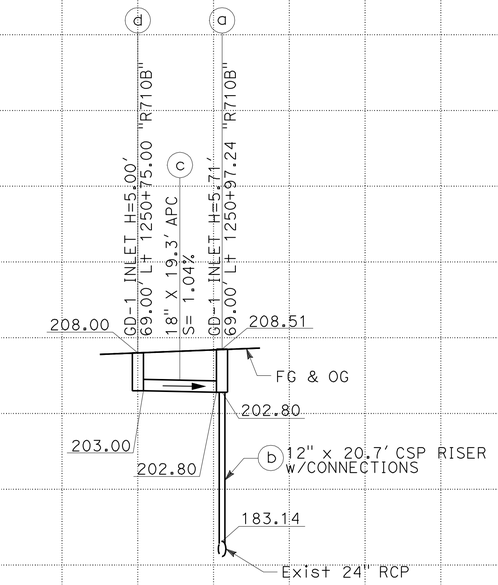


**DRAINAGE SYSTEM No. 77**

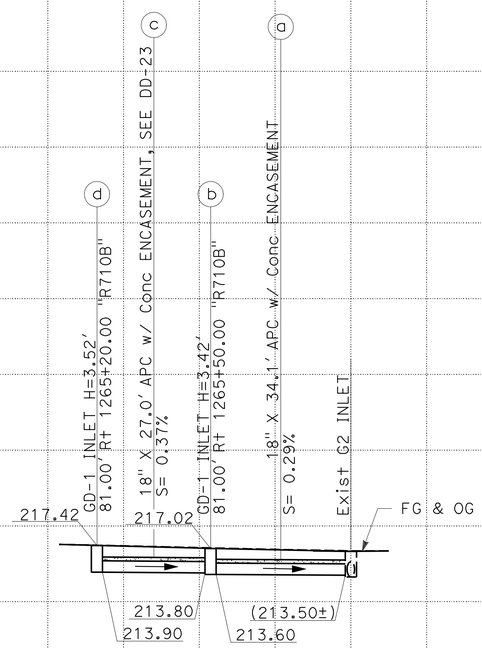


**DRAINAGE SYSTEM No. 81**

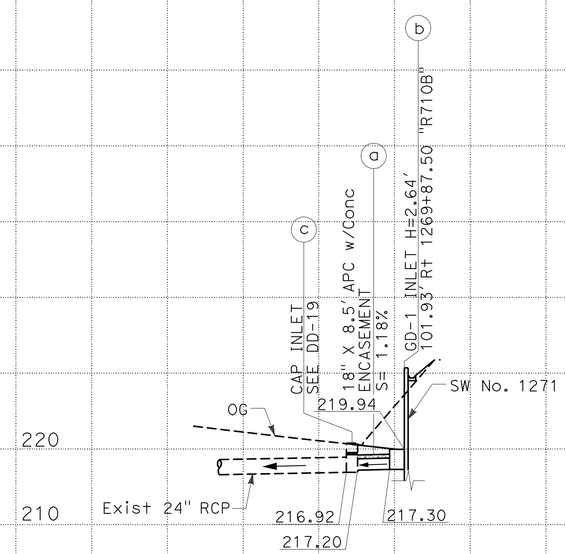


**DRAINAGE SYSTEM No. 83**

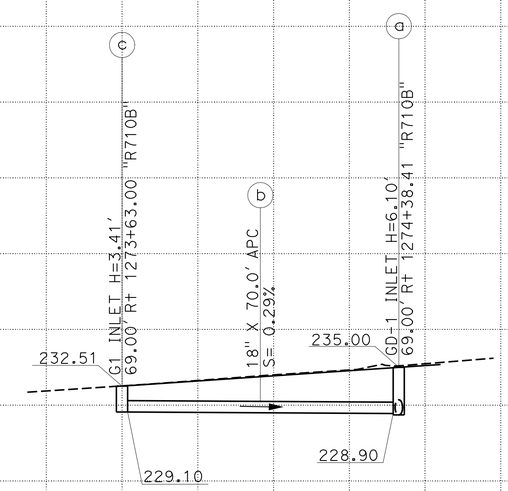


**DRAINAGE SYSTEM No. 84**

# DRAINAGE PROFILE

SCALE: Horiz: 1" = 20'
Vert: 1" = 10'

**DP-15**

REVISED BY | DATE REVISED
I. MATAGI | R. HENDERSON
CALCULATED-DESIGNED BY | CHECKED BY
CONSULTANT FUNCTIONAL SUPERVISOR: MELISSA DE LA PENA
STATE OF CALIFORNIA - DEPARTMENT OF TRANSPORTATION
Caltrans

LAST REVISION 00-00-00 | DATE PLOTTED => 28-JUN-2011 | TIME PLOTTED => 19:57

| Dist | COUNTY | ROUTE | POST MILES TOTAL PROJECT | SHEET No. | TOTAL SHEETS |
|---|---|---|---|---|---|
| 07 | LA | 710 | 17.2/26.4 | 497 | 1507 |

REGISTERED CIVIL ENGINEER 03/30/11 DATE

6-27-11
PLANS APPROVAL DATE

REGISTERED PROFESSIONAL ENGINEER ROBERT M. HENDERSON No. C66736 Exp 09/30/12 CIVIL STATE OF CALIFORNIA

*THE STATE OF CALIFORNIA OR ITS OFFICERS OR AGENTS SHALL NOT BE RESPONSIBLE FOR THE ACCURACY OR COMPLETENESS OF SCANNED COPIES OF THIS PLAN SHEET.*

CALTRANS DISTRICT 7
100 S. MAIN STREET
LOS ANGELES, CA 90012

CH2M HILL
1000 WILSHIRE BLVD
LOS ANGELES, CA 90017

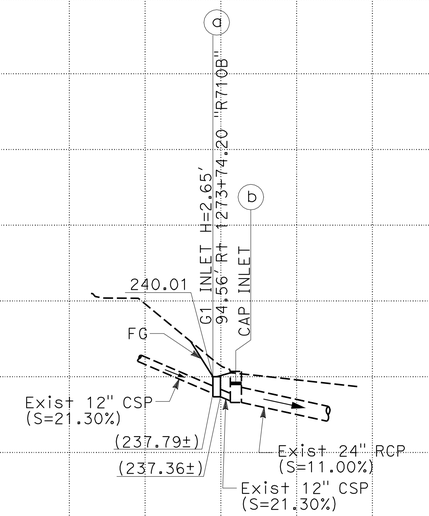


**DRAINAGE SYSTEM No. 85**

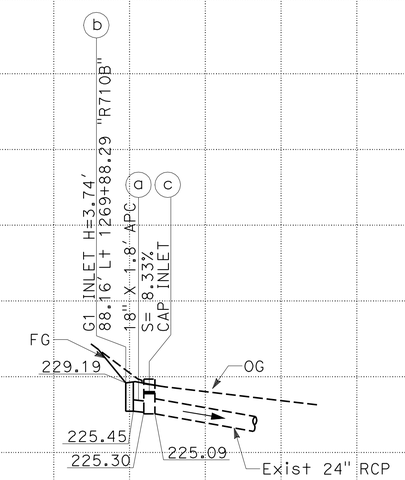


**DRAINAGE SYSTEM No. 86**

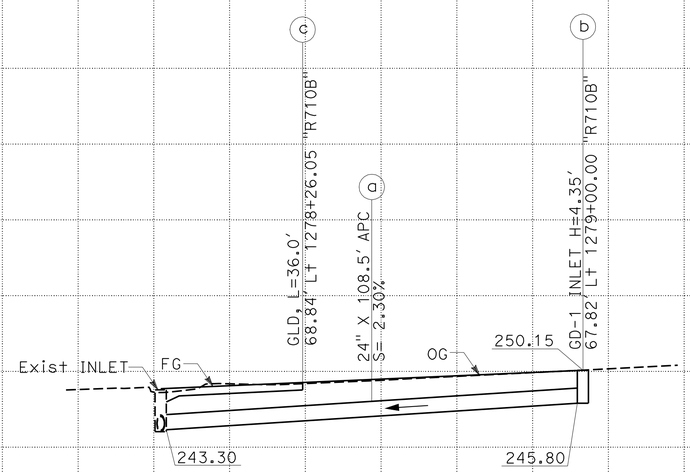


**DRAINAGE SYSTEM No. 90**

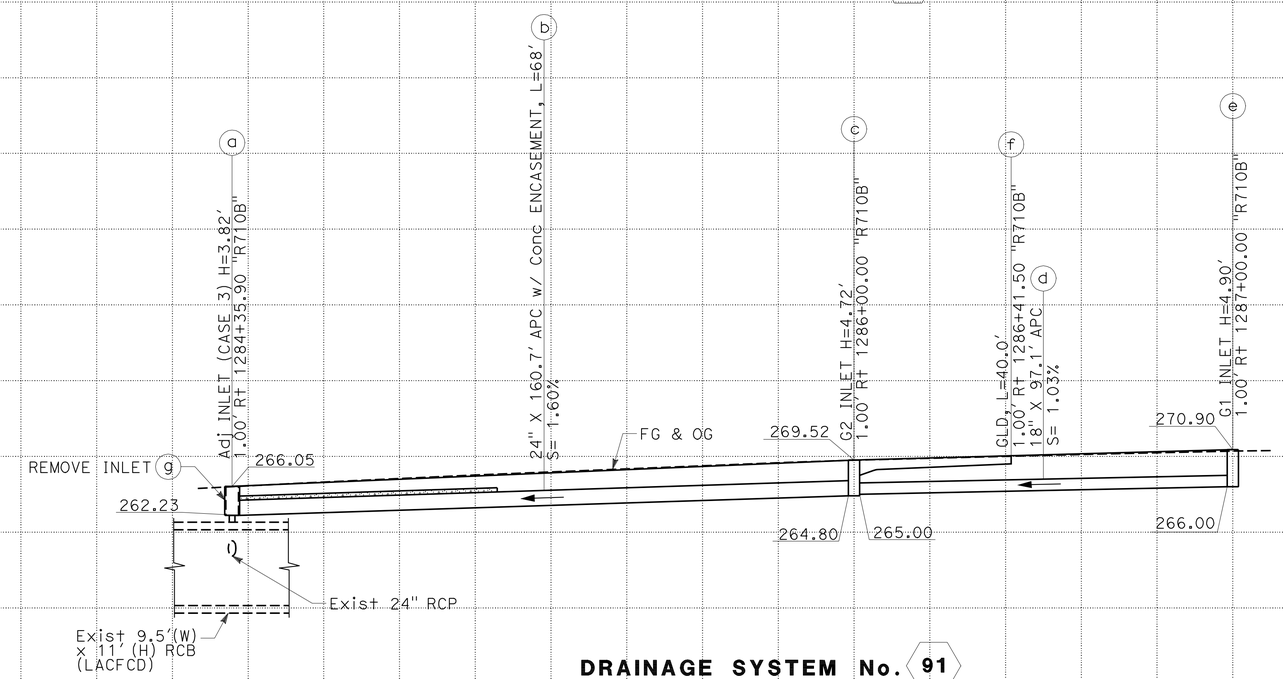


**DRAINAGE SYSTEM No. 91**

# DRAINAGE PROFILE

SCALE: Horiz: 1" = 20'
Vert: 1" = 10'

**DP-16**

STATE OF CALIFORNIA - DEPARTMENT OF TRANSPORTATION
Caltrans

CONSULTANT FUNCTIONAL SUPERVISOR: MELISSA DE LA PENA

CALCULATED-DESIGNED BY: I. MATAGI
CHECKED BY: R. HENDERSON

REVISED BY
DATE REVISED

LAST REVISION 00-00-00
DATE PLOTTED => 28-JUN-2011
TIME PLOTTED => 19:57

| Dist | COUNTY | ROUTE | POST MILES TOTAL PROJECT | SHEET No. | TOTAL SHEETS |
|---|---|---|---|---|---|
| 07 | LA | 710 | 17.2/26.4 | 498 | 1507 |

REGISTERED CIVIL ENGINEER 03/30/11 DATE

6-27-11
PLANS APPROVAL DATE

REGISTERED PROFESSIONAL ENGINEER ROBERT M. HENDERSON No. C66736 Exp. 09/30/12 CIVIL STATE OF CALIFORNIA

*THE STATE OF CALIFORNIA OR ITS OFFICERS OR AGENTS SHALL NOT BE RESPONSIBLE FOR THE ACCURACY OR COMPLETENESS OF SCANNED COPIES OF THIS PLAN SHEET.*

CALTRANS DISTRICT 7
100 S. MAIN STREET
LOS ANGELES, CA 90012

CH2M HILL
1000 WILSHIRE BLVD
LOS ANGELES, CA 90017

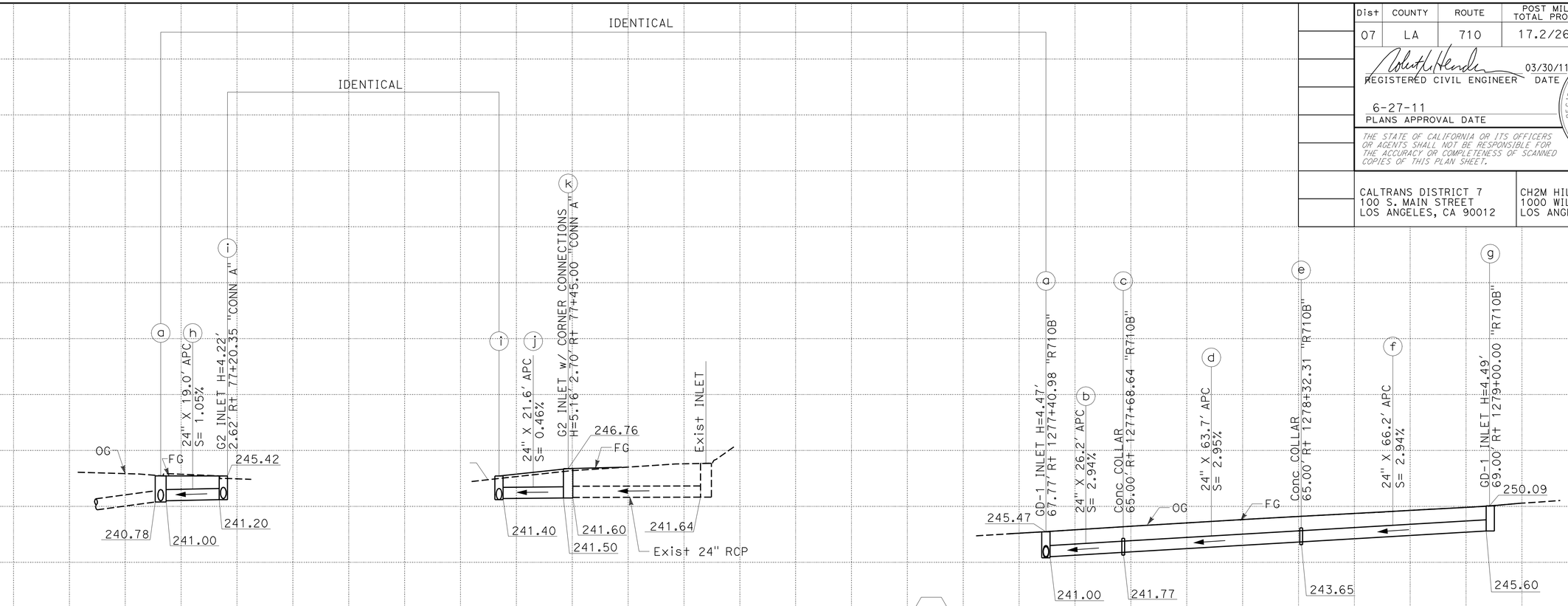


# DRAINAGE PROFILE

SCALE: Horiz: 1" = 20'
Vert: 1" = 10'

**DP-17**

REVISED BY | DATE REVISED
I. MATAGI | R. HENDERSON
CALCULATED-DESIGNED BY | CHECKED BY
CONSULTANT FUNCTIONAL SUPERVISOR
MELISSA DE LA PENA
STATE OF CALIFORNIA - DEPARTMENT OF TRANSPORTATION
Caltrans

LAST REVISION 00-00-00
DATE PLOTTED => 28-JUN-2011
TIME PLOTTED => 19:57

| Dist | COUNTY | ROUTE | POST MILES TOTAL PROJECT | SHEET No. | TOTAL SHEETS |
|---|---|---|---|---|---|
| 07 | LA | 710 | 17.2/26.4 | 499 | 1507 |

REGISTERED CIVIL ENGINEER 03/30/11 DATE

6-27-11
PLANS APPROVAL DATE

REGISTERED PROFESSIONAL ENGINEER ROBERT M. HENDERSON No. C66736 Exp 09/30/12 CIVIL STATE OF CALIFORNIA

*THE STATE OF CALIFORNIA OR ITS OFFICERS OR AGENTS SHALL NOT BE RESPONSIBLE FOR THE ACCURACY OR COMPLETENESS OF SCANNED COPIES OF THIS PLAN SHEET.*

CALTRANS DISTRICT 7
100 S. MAIN STREET
LOS ANGELES, CA 90012

CH2M HILL
1000 WILSHIRE BLVD
LOS ANGELES, CA 90017

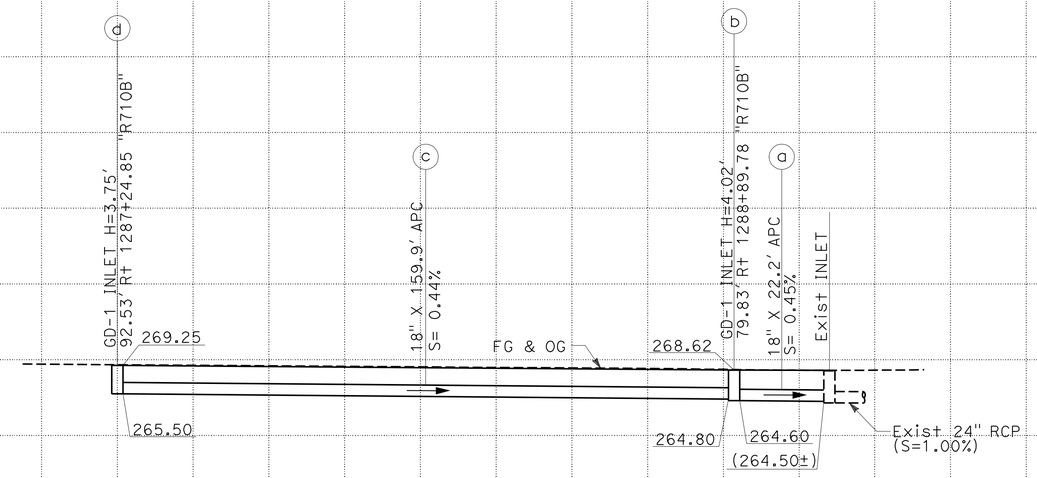


**DRAINAGE SYSTEM No. 95**

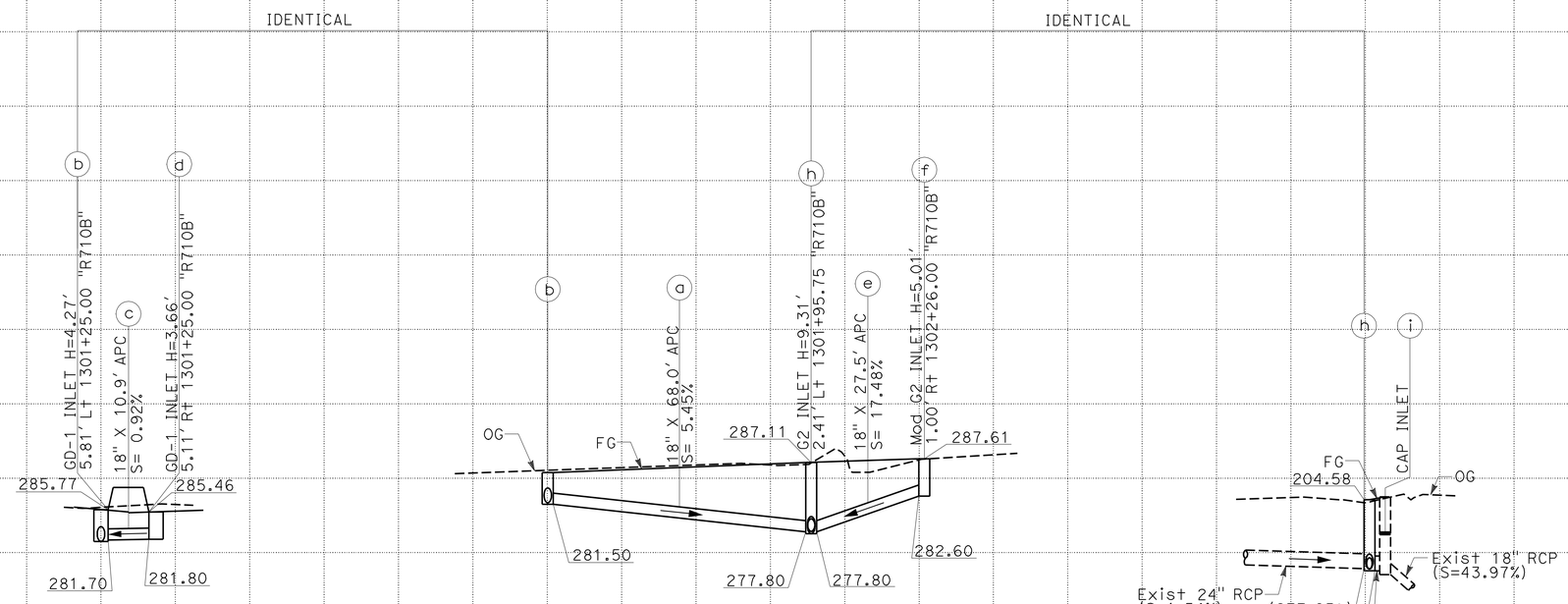


**DRAINAGE SYSTEM No. 100**

# DRAINAGE PROFILE

SCALE: Horiz: 1" = 20'
Vert: 1" = 10'

**DP-18**

REVISED BY | DATE REVISED
I. MATAGI | R. HENDERSON
CALCULATED-DESIGNED BY | CHECKED BY
CONSULTANT FUNCTIONAL SUPERVISOR: MELISSA DE LA PENA
STATE OF CALIFORNIA - DEPARTMENT OF TRANSPORTATION
Caltrans

LAST REVISION 00-00-00 | DATE PLOTTED => 28-JUN-2011 | TIME PLOTTED => 19:57

| Dist | COUNTY | ROUTE | POST MILES TOTAL PROJECT | SHEET No. | TOTAL SHEETS |
|---|---|---|---|---|---|
| 07 | LA | 710 | 17.2/26.4 | 500 | 1507 |

REGISTERED CIVIL ENGINEER 03/30/11 DATE

6-27-11
PLANS APPROVAL DATE

REGISTERED PROFESSIONAL ENGINEER ROBERT M. HENDERSON No. C66736 Exp. 09/30/12 CIVIL STATE OF CALIFORNIA

*THE STATE OF CALIFORNIA OR ITS OFFICERS OR AGENTS SHALL NOT BE RESPONSIBLE FOR THE ACCURACY OR COMPLETENESS OF SCANNED COPIES OF THIS PLAN SHEET.*

CALTRANS DISTRICT 7
100 S. MAIN STREET
LOS ANGELES, CA 90012

CH2M HILL
1000 WILSHIRE BLVD
LOS ANGELES, CA 90017

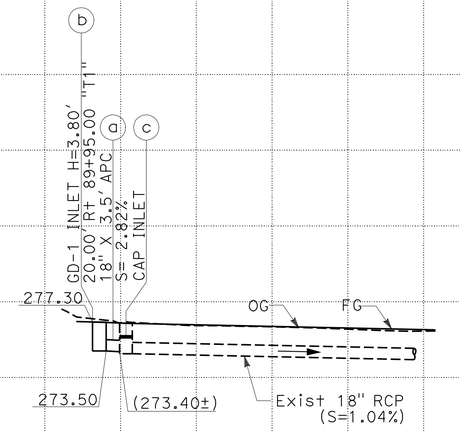


**DRAINAGE SYSTEM No. 102**

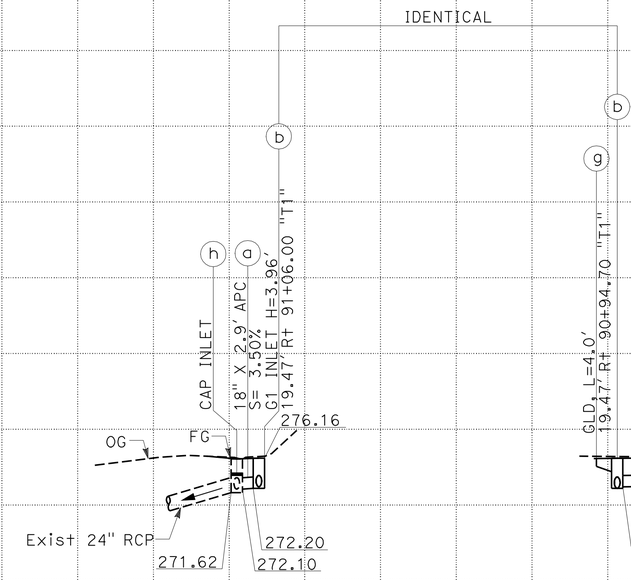


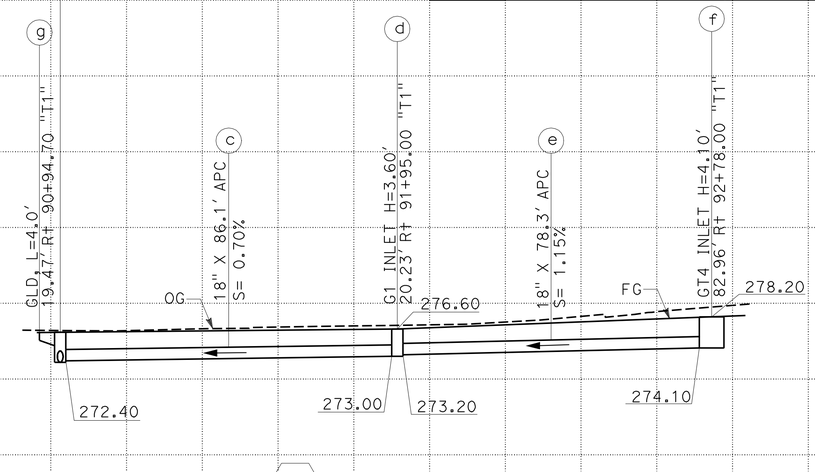


**DRAINAGE SYSTEM No. 104**

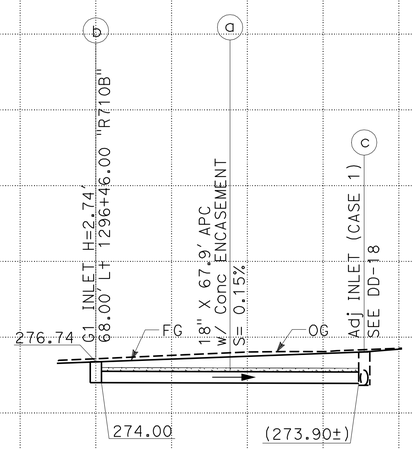


**DRAINAGE SYSTEM No. 103**

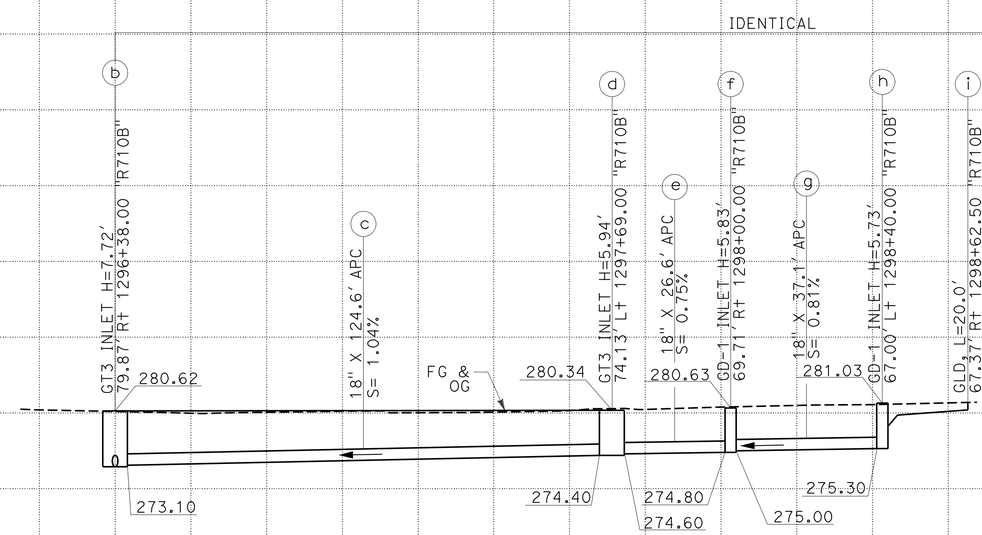


**DRAINAGE SYSTEM No. 107**

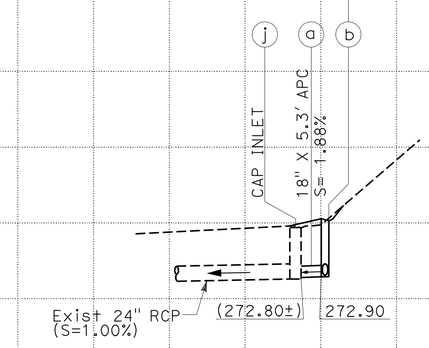


# DRAINAGE PROFILE

SCALE: Horiz: 1" = 20'
Vert: 1" = 10'

**DP-19**

STATE OF CALIFORNIA - DEPARTMENT OF TRANSPORTATION

Caltrans

CONSULTANT FUNCTIONAL SUPERVISOR: MELISSA DE LA PENA

CALCULATED-DESIGNED BY: R. HENDERSON

CHECKED BY

REVISED BY: I. MATAGI

DATE REVISED

LAST REVISION 00-00-00

DATE PLOTTED => 28-JUN-2011
TIME PLOTTED => 20:01