Dist	COUNTY	ROUTE	POST MILES TOTAL PROJECT	SHEET No.	TOTAL SHEETS
07	LA	710	17.2/26.4	14	1507

REGISTERED CIVIL ENGINEER 2-3-11 DATE

6-27-11
PLANS APPROVAL DATE

REGISTERED PROFESSIONAL ENGINEER LE NGUYEN No. 65414 Exp. 9-30-11 CIVIL STATE OF CALIFORNIA

THE STATE OF CALIFORNIA OR ITS OFFICERS OR AGENTS SHALL NOT BE RESPONSIBLE FOR THE ACCURACY OR COMPLETENESS OF SCANNED COPIES OF THIS PLAN SHEET.

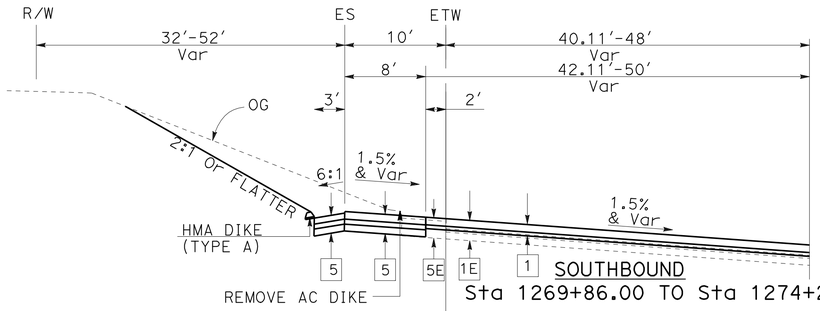

SOUTHBOUND
Sta 1269+86.00 TO Sta 1274+26.35

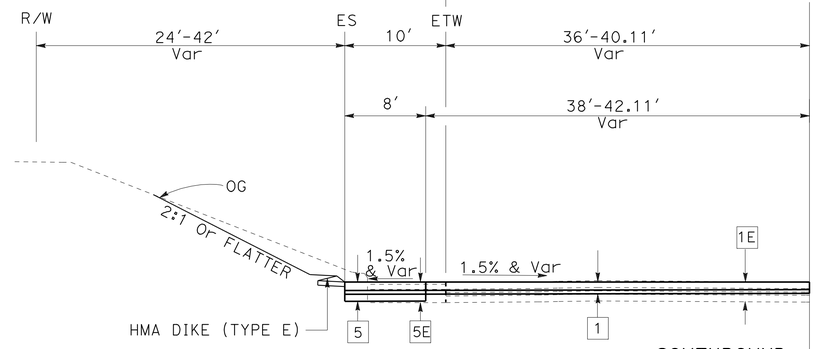

SOUTHBOUND
Sta 1264+46.49 TO Sta 1269+86.00

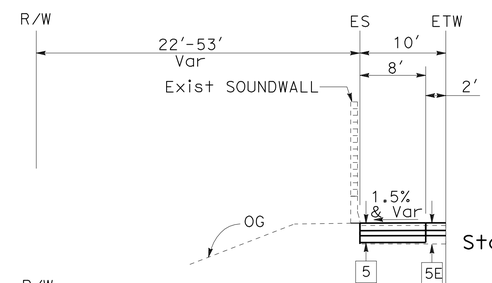

SOUTHBOUND
Sta 1257+16.61 TO Sta 1264+46.49

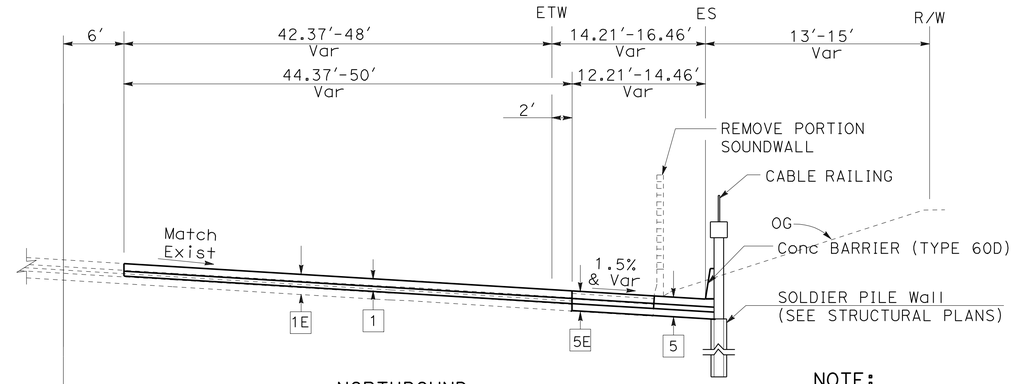

NORTHBOUND
Sta 1268+32.11 TO Sta 1269+47.11

NOTE:

1. NOT ALL TIE BAR LOCATIONS SHOWN, REFER TO STANDARD PLANS.

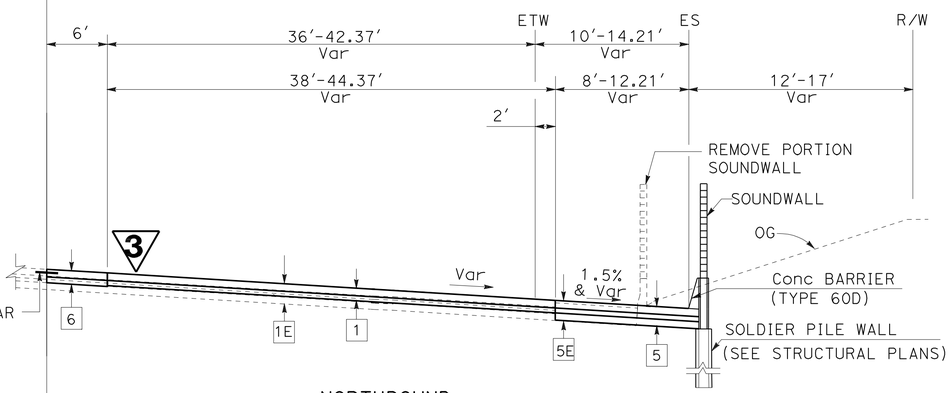

NORTHBOUND
Sta 1266+66.52 TO Sta 1268+32.11

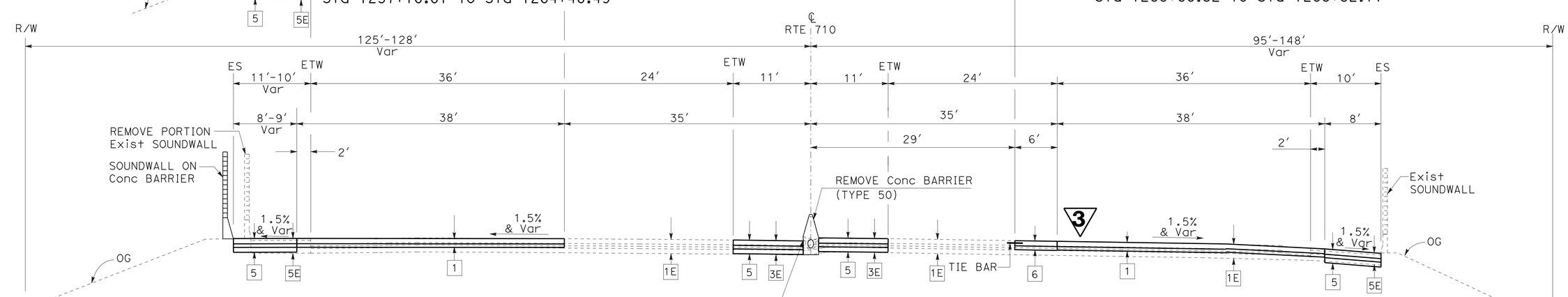

SOUTHBOUND
Sta 1256+37.67 TO Sta 1257+16.61

NORTHBOUND
Sta 1256+37.67 TO Sta 1266+66.52

3 **REVISED PER ADDENDUM No. 3 DATED JANUARY 31, 2012**

TYPICAL CROSS SECTION

NO SCALE

X-13

STATE OF CALIFORNIA - DEPARTMENT OF TRANSPORTATION
Caltrans
DESIGN

FUNCTIONAL SUPERVISOR: RENE YIN
CALCULATED-DESIGNED BY: LE NGUYEN
CHECKED BY: RENE YIN
REVISED BY
DATE REVISED

LAST REVISION 00-00-00
DATE PLOTTED => 30-JAN-2012
TIME PLOTTED => 14:36

Dist	COUNTY	ROUTE	POST MILES TOTAL PROJECT	SHEET No.	TOTAL SHEETS
07	LA	710	17.2/26.4	16	1507

REGISTERED CIVIL ENGINEER 2-3-11 DATE

6-27-11
PLANS APPROVAL DATE

REGISTERED PROFESSIONAL ENGINEER LE NGUYEN No. 65414 Exp. 9-30-11 CIVIL STATE OF CALIFORNIA

THE STATE OF CALIFORNIA OR ITS OFFICERS OR AGENTS SHALL NOT BE RESPONSIBLE FOR THE ACCURACY OR COMPLETENESS OF SCANNED COPIES OF THIS PLAN SHEET.

NOTE:

1. NOT ALL TIE BAR LOCATIONS SHOWN, REFER TO STANDARD PLANS.

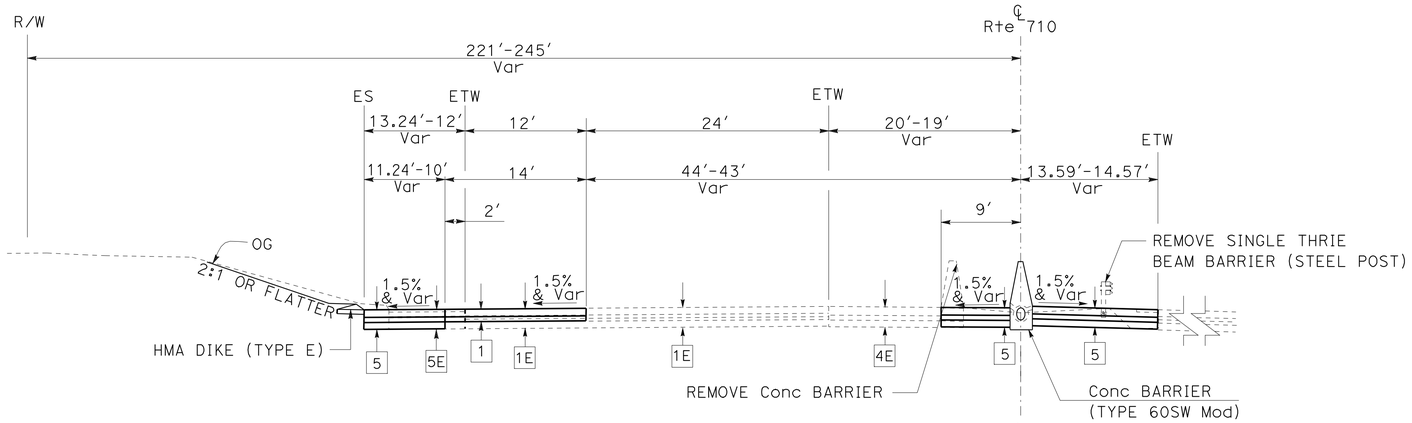

SOUTHBOUND
Sta 1284+79.00 TO Sta 1286+50.12

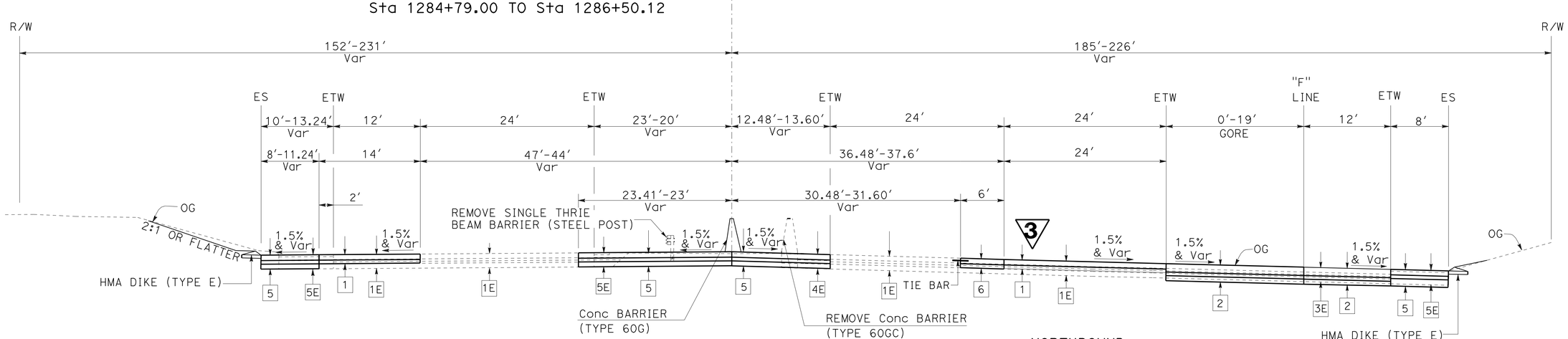

SOUTHBOUND
Sta 1277+10.53 TO Sta 1284+79.00

NORTHBOUND
Sta 1282+44.21 TO Sta 1284+61.30

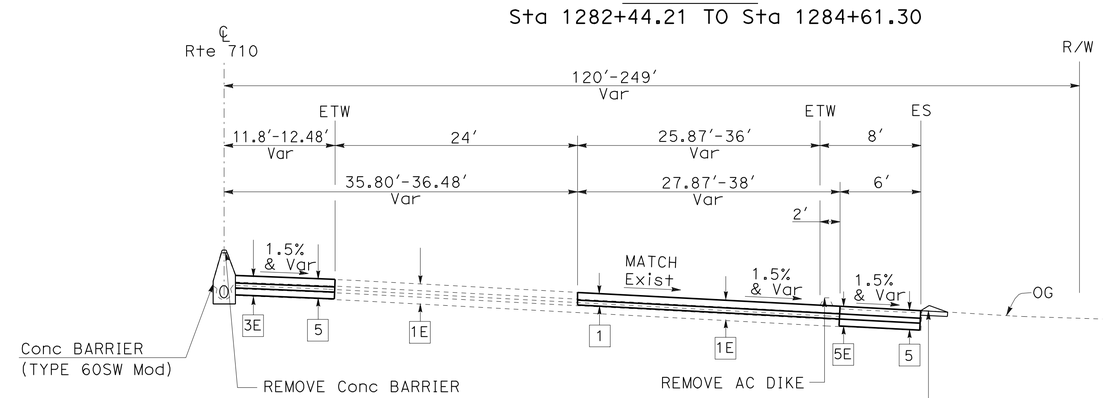

NORTHBOUND
Sta 1281+14.42 TO Sta 1282+44.21

3 **REVISED PER ADDENDUM No. 3 DATED JANUARY 31, 2012**

TYPICAL CROSS SECTION

NO SCALE **X-15**

REVISED BY	DATE REVISED

CALCULATED-DESIGNED BY	CHECKED BY
LE NGUYEN	RENE YIN

FUNCTIONAL SUPERVISOR: RENE YIN

STATE OF CALIFORNIA - DEPARTMENT OF TRANSPORTATION
Caltrans® DESIGN

LAST REVISION 00-00-00 | DATE PLOTTED => 30-JAN-2012 | TIME PLOTTED => 14:36

Dist	COUNTY	ROUTE	POST MILES TOTAL PROJECT	SHEET No.	TOTAL SHEETS
07	LA	710	17.2/26.4	17	1507

REGISTERED CIVIL ENGINEER 2-3-11 DATE

6-27-11
PLANS APPROVAL DATE

REGISTERED PROFESSIONAL ENGINEER LE NGUYEN No. 65414 Exp. 9-30-11 CIVIL STATE OF CALIFORNIA

THE STATE OF CALIFORNIA OR ITS OFFICERS OR AGENTS SHALL NOT BE RESPONSIBLE FOR THE ACCURACY OR COMPLETENESS OF SCANNED COPIES OF THIS PLAN SHEET.

NOTE:

1. NOT ALL TIE BAR LOCATIONS SHOWN, REFER TO STANDARD PLANS.

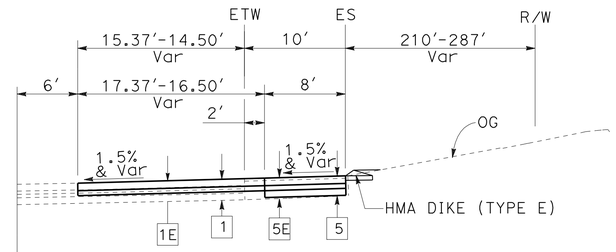

NORTHBOUND
Sta 1289+51.87 TO Sta 1290+09.50

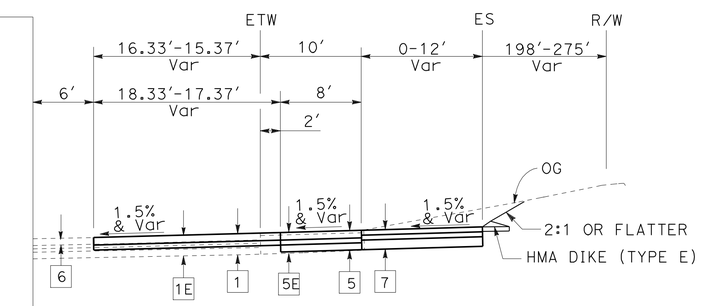

NORTHBOUND
MAINTENANCE VEHICLE PULLOUT (LOCATION 1)
Sta 1288+82.31 TO Sta 1289+51.87

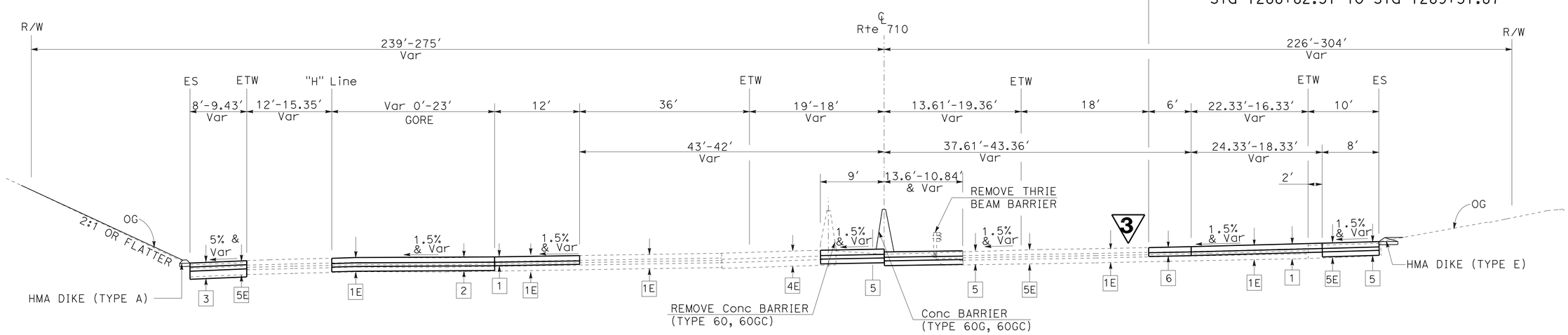

SOUTHBOUND
Sta 1286+50.12 TO Sta 1289+35.00

NORTHBOUND
Sta 1284+61.30 TO Sta 1288+82.31

3 **REVISED PER ADDENDUM No. 3 DATED JANUARY 31, 2012**

TYPICAL CROSS SECTION X-16

NO SCALE

STATE OF CALIFORNIA - DEPARTMENT OF TRANSPORTATION
Caltrans® DESIGN

FUNCTIONAL SUPERVISOR: RENE YIN
CALCULATED-DESIGNED BY: LE NGUYEN
CHECKED BY: RENE YIN
REVISED BY
DATE REVISED

LAST REVISION 00-00-00
DATE PLOTTED => 30-JAN-2012
TIME PLOTTED => 14:36

Dist	COUNTY	ROUTE	POST MILES TOTAL PROJECT	SHEET No.	TOTAL SHEETS
07	LA	710	17.2/26.4	26	1507

REGISTERED CIVIL ENGINEER 2-3-11 DATE

6-27-11
PLANS APPROVAL DATE

REGISTERED PROFESSIONAL ENGINEER LE NGUYEN No. C65414 Exp. 9-30-11 CIVIL STATE OF CALIFORNIA

THE STATE OF CALIFORNIA OR ITS OFFICERS OR AGENTS SHALL NOT BE RESPONSIBLE FOR THE ACCURACY OR COMPLETENESS OF SCANNED COPIES OF THIS PLAN SHEET.

NOTE:

1. NOT ALL TIE BAR LOCATIONS SHOWN, REFER TO STANDARD PLANS.

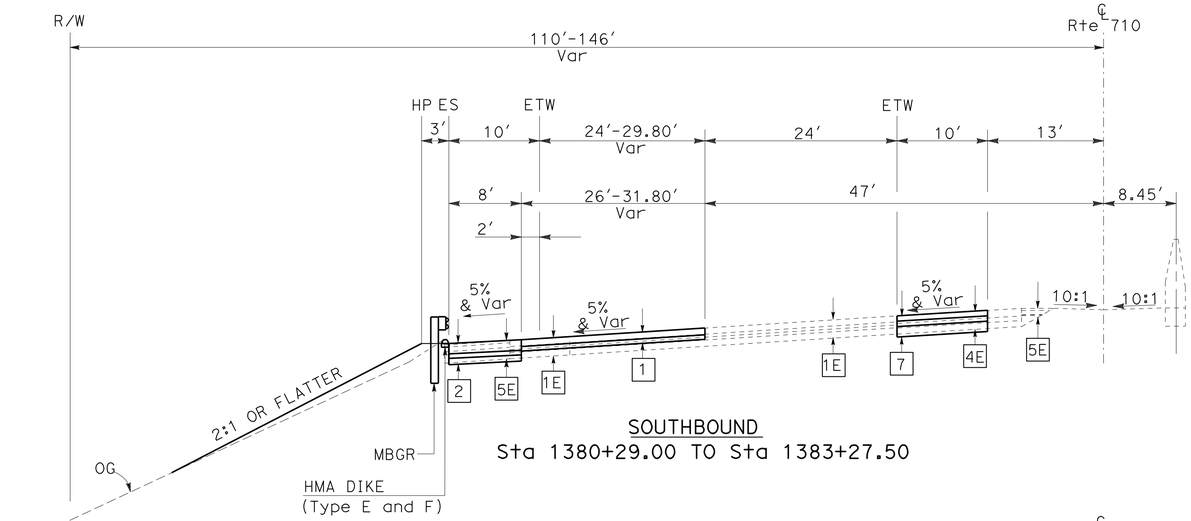

SOUTHBOUND
Sta 1380+29.00 TO Sta 1383+27.50

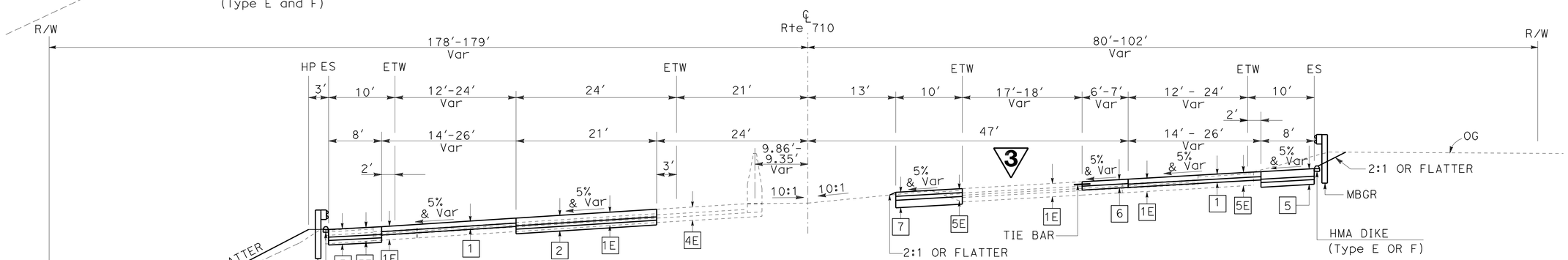

SOUTHBOUND
Sta 1363+28.00 TO Sta 1366+70.00

NORTHBOUND
Sta 1376+14.00 TO Sta 1377+04.00
Sta 1368+35.28 TO Sta 1370+68.28

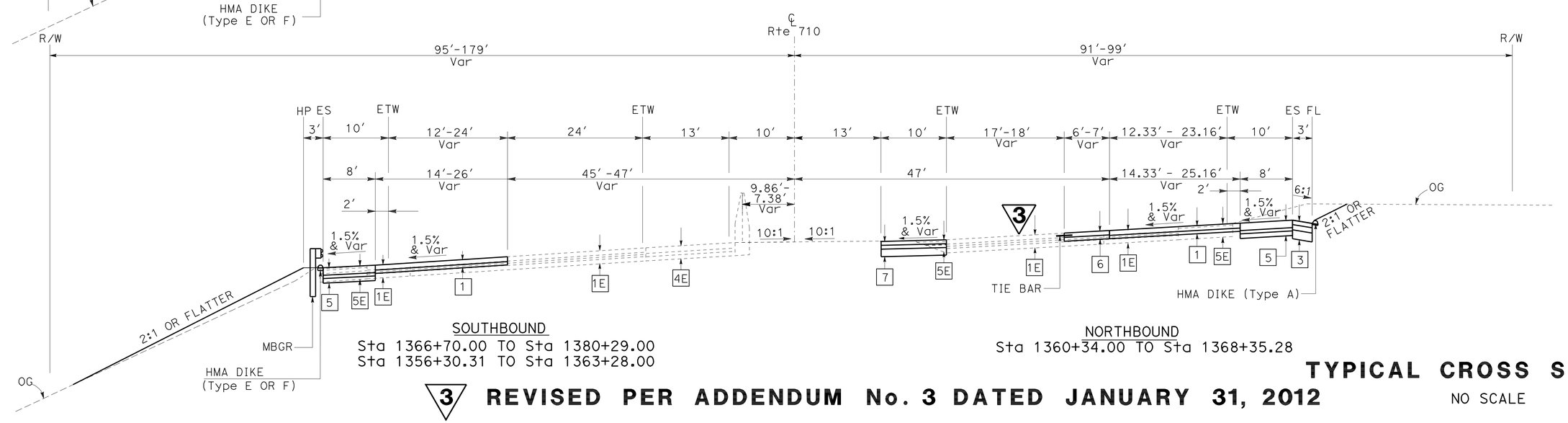

SOUTHBOUND
Sta 1366+70.00 TO Sta 1380+29.00
Sta 1356+30.31 TO Sta 1363+28.00

NORTHBOUND
Sta 1360+34.00 TO Sta 1368+35.28

3 REVISED PER ADDENDUM No. 3 DATED JANUARY 31, 2012

TYPICAL CROSS SECTION

NO SCALE

X-25

STATE OF CALIFORNIA - DEPARTMENT OF TRANSPORTATION
Caltrans
DESIGN

FUNCTIONAL SUPERVISOR: RENE YIN
CALCULATED-DESIGNED BY: LE NGUYEN
CHECKED BY: RENE YIN
REVISED BY
DATE REVISED

LAST REVISION 00-00-00
DATE PLOTTED => 31-JAN-2012
TIME PLOTTED => 08:19

Dist	COUNTY	ROUTE	POST MILES TOTAL PROJECT	SHEET No.	TOTAL SHEETS
07	LA	710	17.2/26.4	39	1507

REGISTERED CIVIL ENGINEER 2-3-11 DATE

6-27-11
PLANS APPROVAL DATE

REGISTERED PROFESSIONAL ENGINEER RENE YIN No. C49915 Exp. 9/30/12 CIVIL STATE OF CALIFORNIA

THE STATE OF CALIFORNIA OR ITS OFFICERS OR AGENTS SHALL NOT BE RESPONSIBLE FOR THE ACCURACY OR COMPLETENESS OF SCANNED COPIES OF THIS PLAN SHEET.

NOTE:

1. FOR ACCURATE RIGHT OF WAY AND ACCESS DATA, CONTACT RIGHT OF WAY ENGINEERING AT THE DISTRICT OFFICE.

CURVE DATA

No.	R	Δ	T	L
23	2000.00′	17°56′41"	315.78′	626.39′
24	1000.00′	27°47′42"	247.43′	485.12′
26	4500.00′	2°58′56"	117.14′	234.22′
27	4018.52′	1°59′54"	70.09′	140.16′
28	4000.00′	4°56′44"	172.74′	345.26′
50	2000.00′	14°7′34"	247.80′	493.09′
51	2800.00′	8°30′24"	208.24′	415.72′
52	1800.00′	9°6′55"	143.48′	286.36′

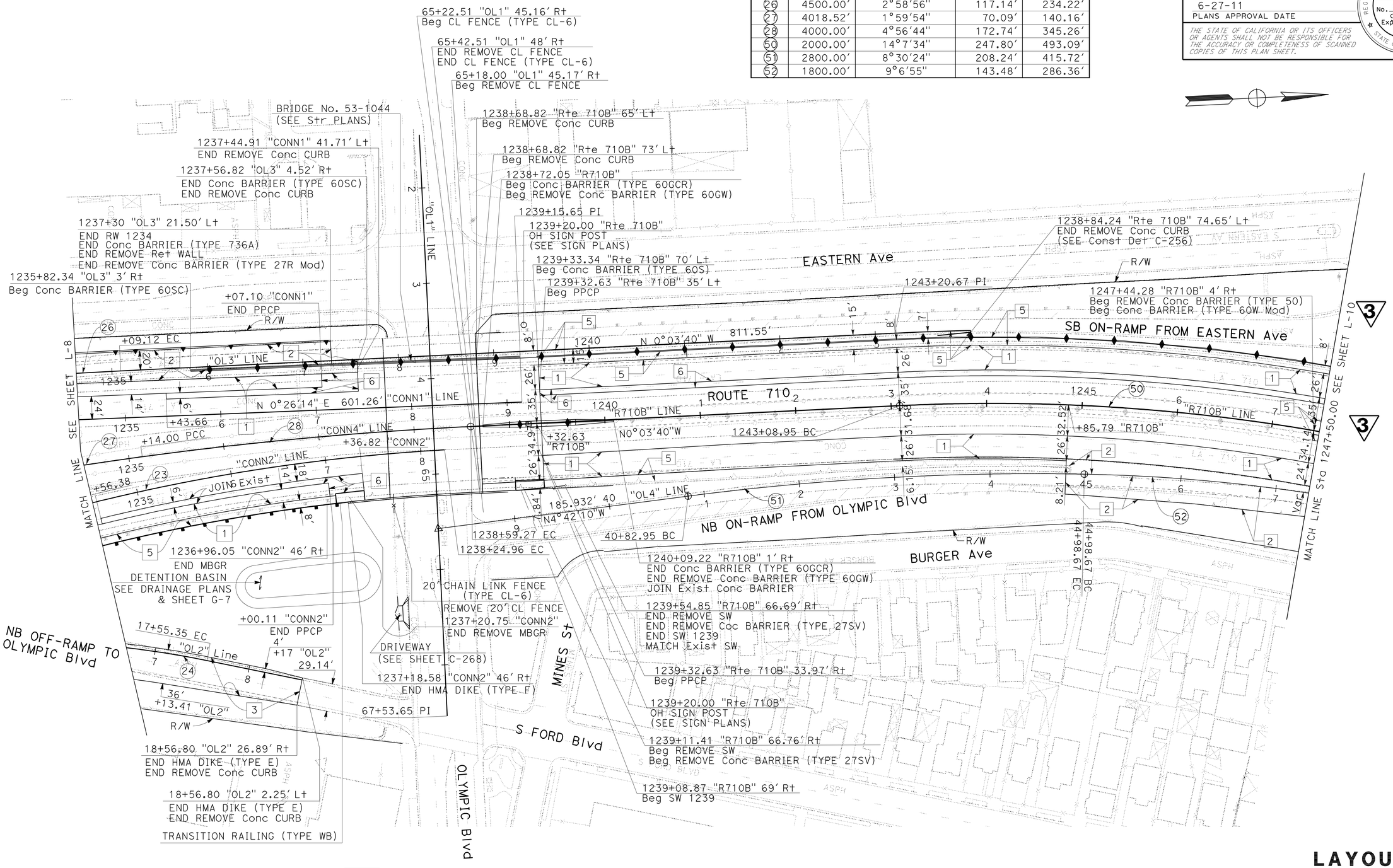

3 **REVISED PER ADDENDUM No. 3 DATED JANUARY 31, 2012**

LAYOUT
SCALE 1" = 50′
L-9

STATE OF CALIFORNIA - DEPARTMENT OF TRANSPORTATION
Caltrans
DESIGN
FUNCTIONAL SUPERVISOR: ALINE ANTARAMIAN
CALCULATED-DESIGNED BY: I. L. REYNON JR. LE NGUYEN
CHECKED BY: RENE YIN
REVISED BY
DATE REVISED

LAST REVISION DATE PLOTTED => 30-JAN-2012
00-00-00 TIME PLOTTED => 14:39

Dist	COUNTY	ROUTE	POST MILES TOTAL PROJECT	SHEET No.	TOTAL SHEETS
07	LA	710	17.2/26.4	40	1507

REGISTERED CIVIL ENGINEER 2-3-11 DATE

6-27-11
PLANS APPROVAL DATE

REGISTERED PROFESSIONAL ENGINEER LE NGUYEN No. C65414 Exp. 9-30-11 CIVIL STATE OF CALIFORNIA

THE STATE OF CALIFORNIA OR ITS OFFICERS OR AGENTS SHALL NOT BE RESPONSIBLE FOR THE ACCURACY OR COMPLETENESS OF SCANNED COPIES OF THIS PLAN SHEET.

NOTE:
FOR ACCURATE RIGHT OF WAY AND ACCESS DATA, CONTACT RIGHT OF WAY ENGINEERING AT THE DISTRICT OFFICE.

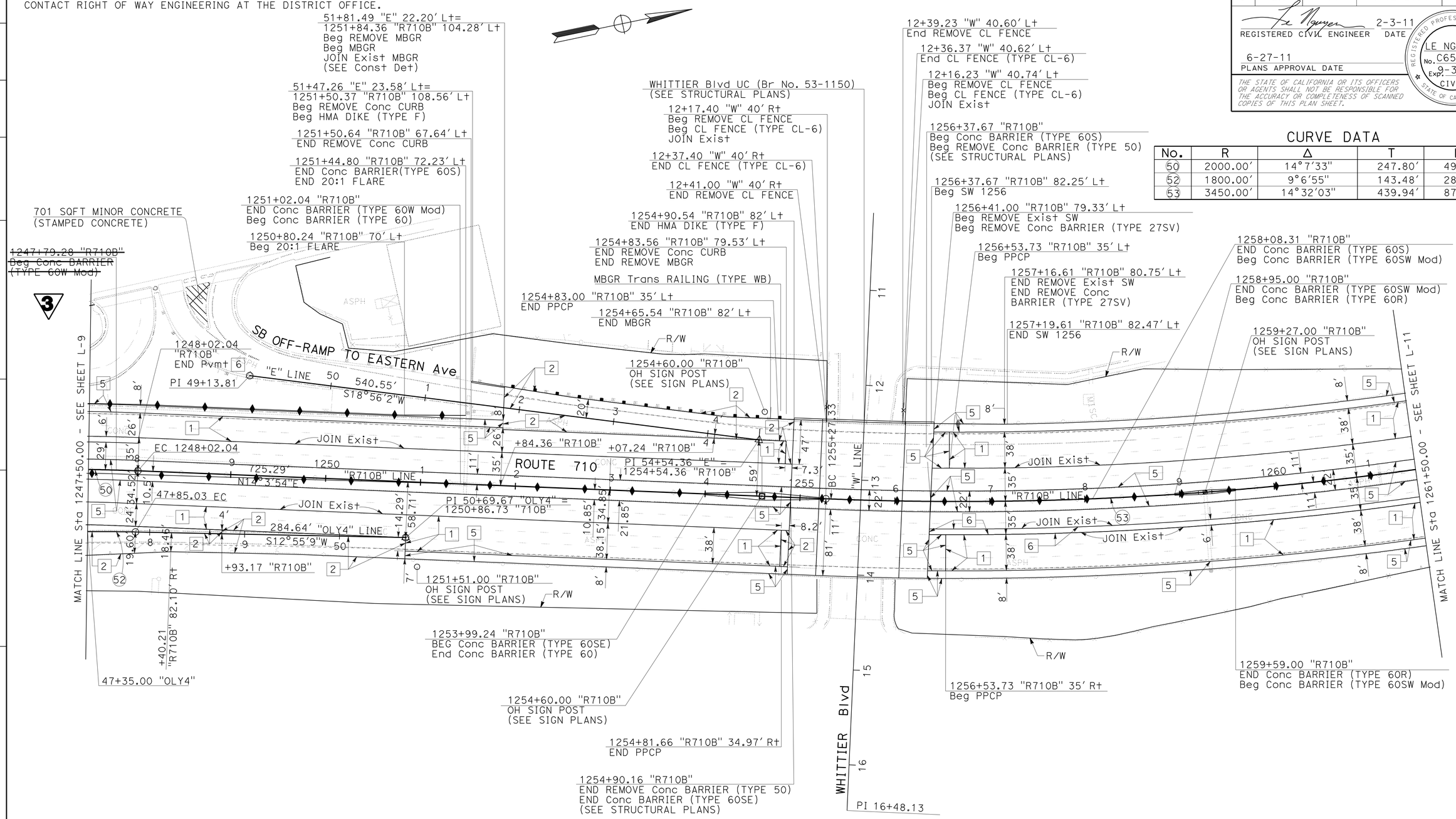

CURVE DATA

No.	R	Δ	T	L
50	2000.00'	14°7'33"	247.80'	493.09'
52	1800.00'	9°6'55"	143.48'	286.36'
53	3450.00'	14°32'03"	439.94'	875.16'

3 REVISED PER ADDENDUM No. 3 DATED JANUARY 31, 2012

LAYOUT

SCALE: 1" = 50'

L-10

STATE OF CALIFORNIA - DEPARTMENT OF TRANSPORTATION
Caltrans DESIGN

FUNCTIONAL SUPERVISOR: RENE YIN
CALCULATED-DESIGNED BY: LE NGUYEN
CHECKED BY: RENE YIN
REVISED BY
DATE REVISED

LAST REVISION 00-00-00 | DATE PLOTTED => 30-JAN-2012 | TIME PLOTTED => 12:33

Dist	COUNTY	ROUTE	POST MILES TOTAL PROJECT	SHEET No.	TOTAL SHEETS
07	LA	710	17.2/26.4	42	1507

REGISTERED CIVIL ENGINEER 2-3-11 DATE

6-27-11
PLANS APPROVAL DATE

REGISTERED PROFESSIONAL ENGINEER LE NGUYEN No. C65414 Exp. 9-30-11 CIVIL STATE OF CALIFORNIA

THE STATE OF CALIFORNIA OR ITS OFFICERS OR AGENTS SHALL NOT BE RESPONSIBLE FOR THE ACCURACY OR COMPLETENESS OF SCANNED COPIES OF THIS PLAN SHEET.

NOTE:
FOR ACCURATE RIGHT OF WAY AND ACCESS DATA, CONTACT RIGHT OF WAY ENGINEERING AT THE DISTRICT OFFICE.

CURVE DATA

No.	R	Δ	T	L
56	2000.00′	20°32′43″	362.47′	717.16′
57	1000.02′	4°14′30″	37.03′	74.03′

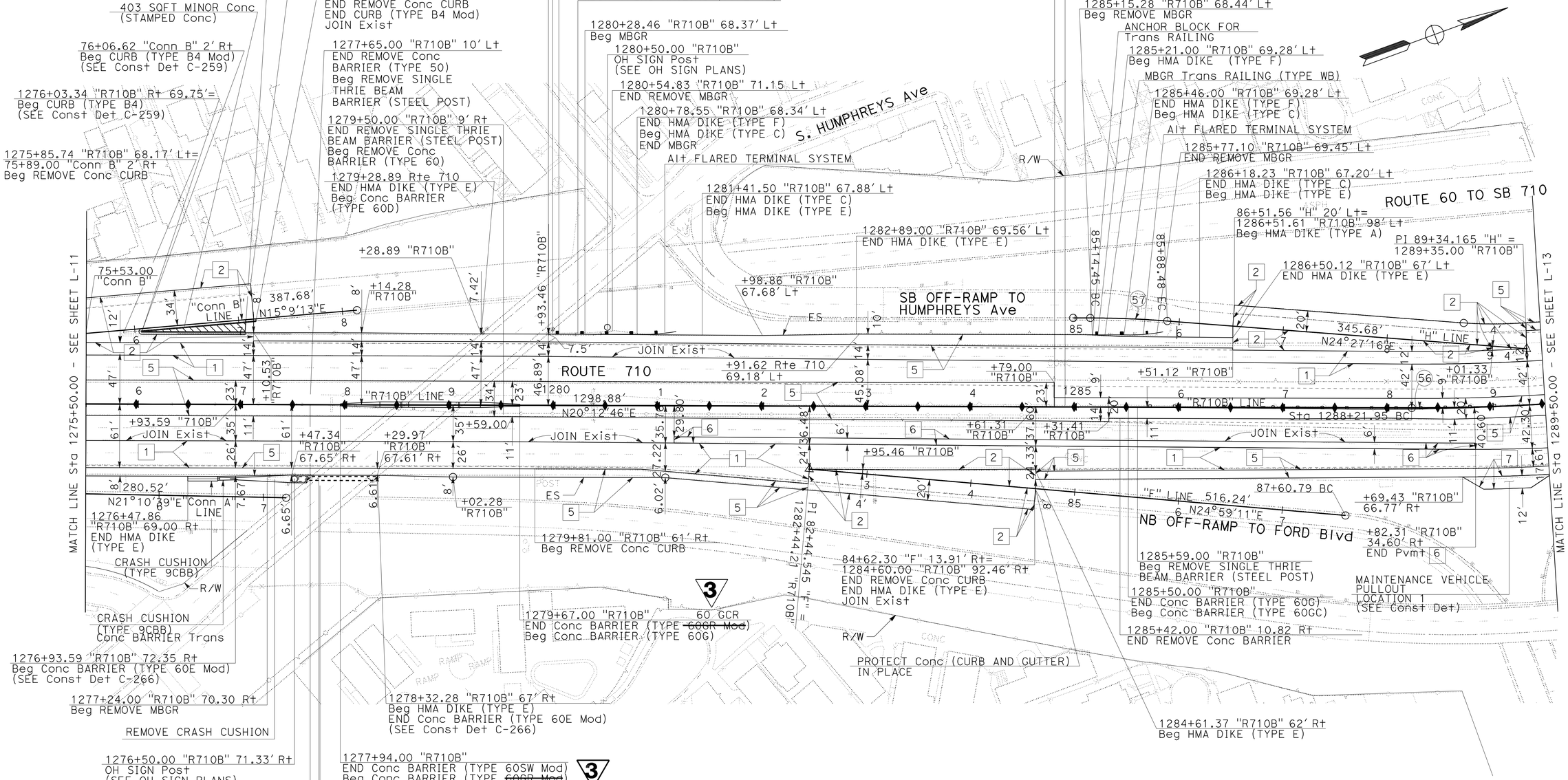

3 REVISED PER ADDENDUM No. 3 DATED JANUARY 31, 2012

LAYOUT

SCALE: 1" = 50′

L-12

STATE OF CALIFORNIA - DEPARTMENT OF TRANSPORTATION
Caltrans DESIGN
FUNCTIONAL SUPERVISOR: RENE YIN
CALCULATED-DESIGNED BY: LE NGUYEN
CHECKED BY: RENE YIN
REVISED BY / DATE REVISED

LAST REVISION 00-00-00 | DATE PLOTTED => 30-JAN-2012 | TIME PLOTTED => 14:57

Dist	COUNTY	ROUTE	POST MILES TOTAL PROJECT	SHEET No.	TOTAL SHEETS
07	LA	710	17.2/26.4	46	1507

REGISTERED CIVIL ENGINEER 2-3-11 DATE

6-27-11
PLANS APPROVAL DATE

REGISTERED PROFESSIONAL ENGINEER LE NGUYEN No. C65414 Exp. 9-30-11 CIVIL STATE OF CALIFORNIA

THE STATE OF CALIFORNIA OR ITS OFFICERS OR AGENTS SHALL NOT BE RESPONSIBLE FOR THE ACCURACY OR COMPLETENESS OF SCANNED COPIES OF THIS PLAN SHEET.

NOTE:

FOR ACCURATE RIGHT OF WAY AND ACCESS DATA, CONTACT RIGHT OF WAY ENGINEERING AT THE DISTRICT OFFICE.

CURVE DATA

No.	R	Δ	T	L
66	2000.00′	36°2′16"	650.57′	1257.96′
68	5400.81	1°55′01"	90.36′	180.69′
71	2999.96′	6°56′06"	181.78′	363.11′
72	658.37′	23°20′41"	136.01′	268.25′
73	1900.00′	4°31′24"	75.04′	150.00′

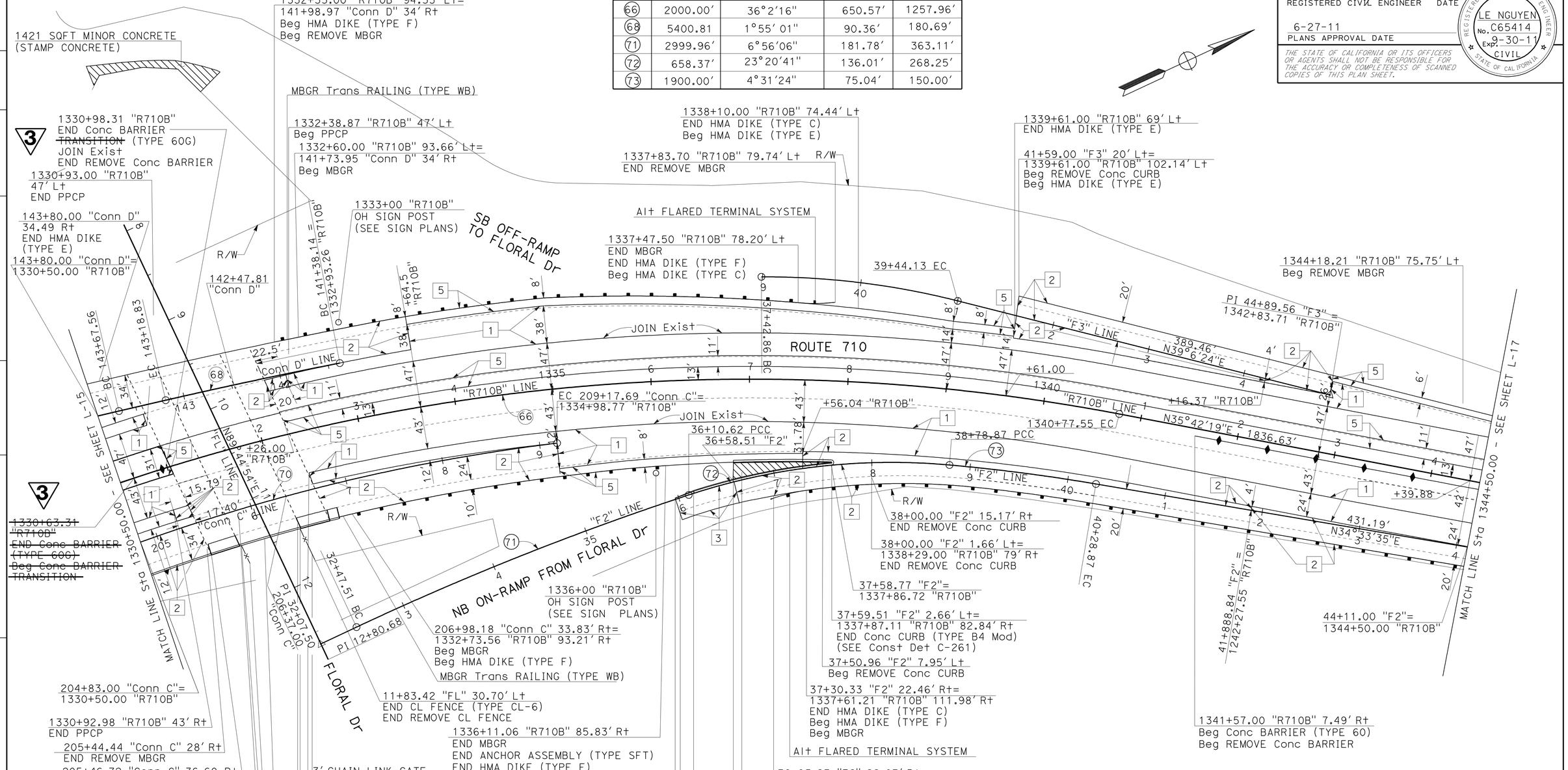

3 REVISED PER ADDENDUM No. 3 DATED JANUARY 31, 2012

LAYOUT

SCALE: 1" = 50′

L-16

REVISED BY | DATE REVISED
LE NGUYEN | RENE YIN | CALCULATED-DESIGNED BY | CHECKED BY
FUNCTIONAL SUPERVISOR: RENE YIN
STATE OF CALIFORNIA - DEPARTMENT OF TRANSPORTATION | DESIGN | Caltrans

LAST REVISION 00-00-00 | DATE PLOTTED => 31-JAN-2012 | TIME PLOTTED => 08:19

Dist	COUNTY	ROUTE	POST MILES TOTAL PROJECT	SHEET No.	TOTAL SHEETS
07	LA	710	17.2/26.4	131	1507

REGISTERED CIVIL ENGINEER 2-3-11 DATE

6-27-11
PLANS APPROVAL DATE

REGISTERED PROFESSIONAL ENGINEER
LE NGUYEN
No. 65414
Exp. 9-30-11
CIVIL
STATE OF CALIFORNIA

THE STATE OF CALIFORNIA OR ITS OFFICERS OR AGENTS SHALL NOT BE RESPONSIBLE FOR THE ACCURACY OR COMPLETENESS OF SCANNED COPIES OF THIS PLAN SHEET.

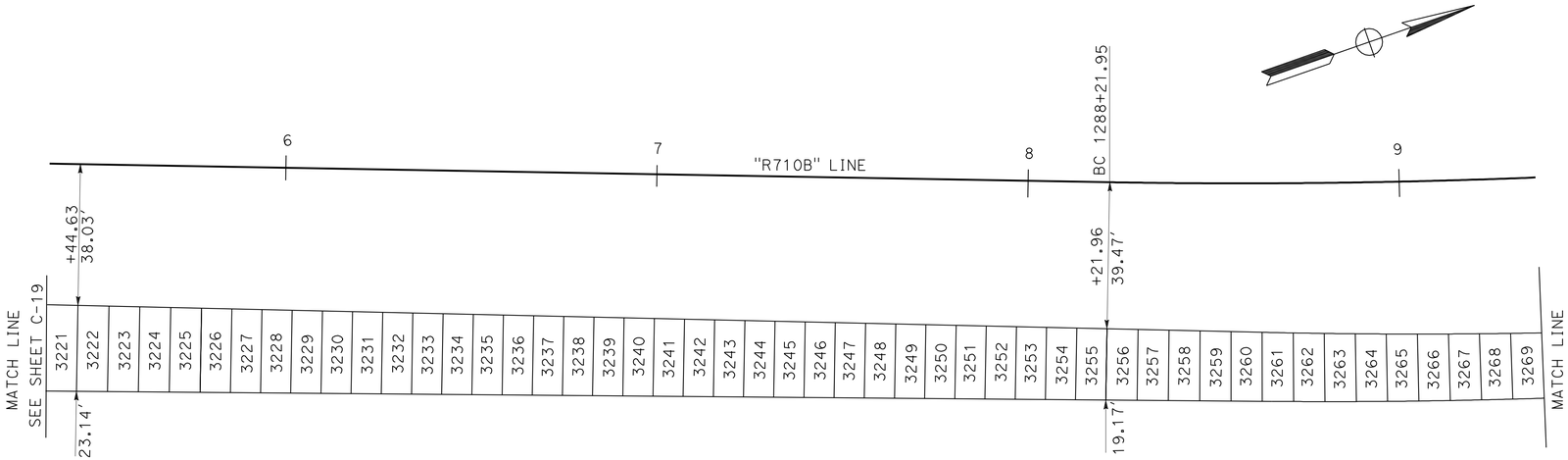

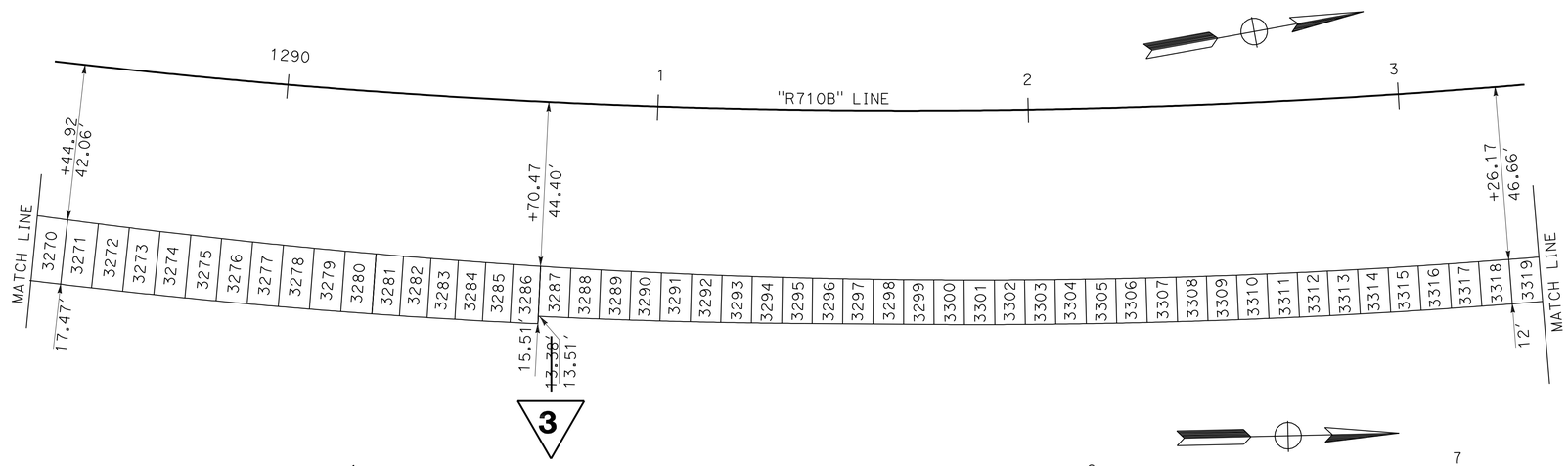

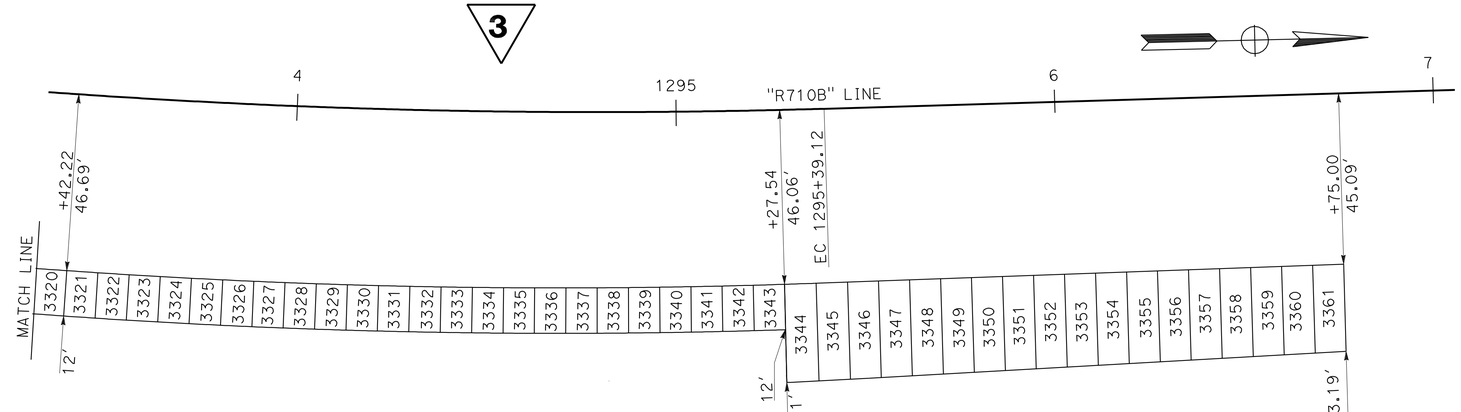

3 **REVISED PER ADDENDUM No. 3 DATED JANUARY 31, 2012**

CONSTRUCTION DETAILS
NORTHBOUND 710
PRECAST PRESTRESSED CONCRETE PAVEMENT

SCALE: 1" = 20'

C-20

STATE OF CALIFORNIA - DEPARTMENT OF TRANSPORTATION
Caltrans®
DESIGN

FUNCTIONAL SUPERVISOR: RENE YIN
CALCULATED-DESIGNED BY: KENNY HA, RAHEL ADERA
CHECKED BY: LE NGUYEN
REVISED BY
DATE REVISED

LAST REVISION 00-00-00 | DATE PLOTTED => 30-JAN-2012 | TIME PLOTTED => 12:33

Dist	COUNTY	ROUTE	POST MILES TOTAL PROJECT	SHEET No.	TOTAL SHEETS
07	LA	710	17.2/26.4	310	1507

REGISTERED CIVIL ENGINEER 2-3-11 DATE

6-27-11
PLANS APPROVAL DATE

REGISTERED PROFESSIONAL ENGINEER LE NGUYEN No. C65414 Exp. 9-30-11 CIVIL STATE OF CALIFORNIA

THE STATE OF CALIFORNIA OR ITS OFFICERS OR AGENTS SHALL NOT BE RESPONSIBLE FOR THE ACCURACY OR COMPLETENESS OF SCANNED COPIES OF THIS PLAN SHEET.

PANEL TYPE "A"

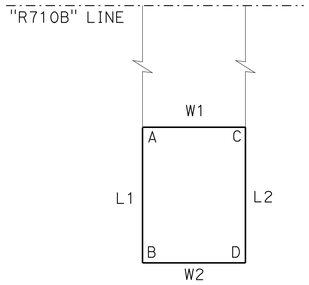

PANEL TYPE "B"

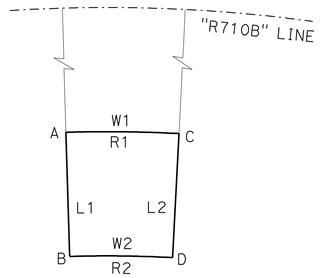

PANEL TYPE "C"

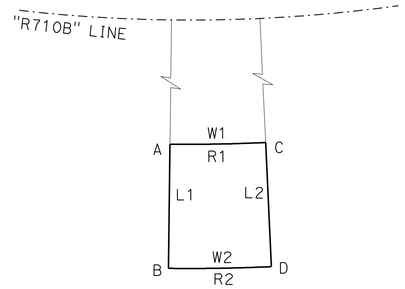

PANEL TYPE "D"

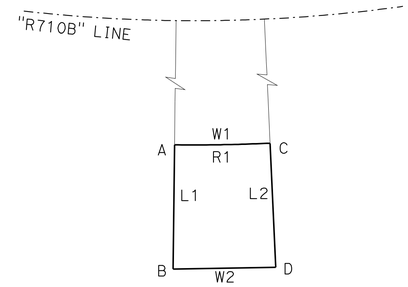

PANEL TYPE "E"

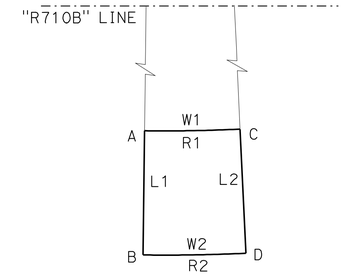

PANEL #	PANEL TYPE	STATION / OFFSET				WIDTH (ft)		LENGTH (ft)		RADIUS (ft)		ELEVATION				PANEL DETAIL
		A	B	C	D	W1	W2	L1	L2	R1	R2	A	B	C	D	
3278	C	1290+02.31	1290+02.31	1290+10.51	1290+10.51	8.37	8.43	16.61	16.49	1859.00	1812.00	274.74	275.72	274.80	275.77	BASE PANEL
		43.23	59.84	43.381	59.867											
3279	C	1290+10.51	1290+10.51	1290+18.71	1290+18.71	8.37	8.43	16.49	16.36	1859.00	1812.00	274.80	275.77	274.85	275.81	BASE PANEL
		43.38	59.87	43.53	59.888											
3280	C	1290+18.71	1290+18.71	1290+26.91	1290+26.91	8.37	8.43	16.36	16.23	1859.00	1812.00	274.85	275.81	274.91	275.86	BASE PANEL
		43.53	59.89	43.676	59.904											
3281	C	1290+26.91	1290+26.91	1290+34.17	1290+34.17	7.42	7.48	16.23	16.11	1859.00	1812.00	274.91	275.86	274.95	275.91	BASE PANEL
		43.68	59.90	43.803	59.914											
3282	C	1290+34.17	1290+34.17	1290+41.43	1290+41.43	7.42	7.48	16.11	15.99	1859.00	1812.00	274.95	275.91	275.00	275.95	BASE PANEL
		43.80	59.91	43.927	59.921											
3283	C	1290+41.43	1290+41.43	1290+48.69	1290+48.69	7.42	7.48	15.99	15.88	1859.00	1812.00	275.00	275.95	275.05	275.99	BASE PANEL
		43.93	59.92	44.048	59.923											
3284	C	1290+48.69	1290+48.69	1290+55.95	1290+55.95	7.42	7.48	15.88	15.76	1859.00	1812.00	275.05	275.99	275.09	276.04	BASE PANEL
		44.05	59.92	44.166	59.922											
3285	C	1290+55.95	1290+55.95	1290+63.21	1290+63.21	7.42	7.48	15.76	15.64	1859.00	1812.00	275.09	276.04	275.14	276.09	BASE PANEL
		44.17	59.92	44.282	59.918											
3286	C	1290+63.21	1290+63.21	1290+70.47	1290+70.47	7.42	7.48	15.64	15.51	1859.00	1812.00	275.14	276.09	275.18	276.10	JOINT PANEL (TYPE MODIFIED)
		44.28	59.92	44.395	59.909											
3287	C	1290+70.47	1290+70.47	1290+78.46	1290+78.46	8.17	8.22	~~15.51~~ 13.51	13.38	1859.00	1810.17	275.18	276.10	275.23	276.03	BASE PANEL
		44.40	57.91 ~~59.91~~	44.52	57.90											
3288	C	1290+78.46	1290+78.46	1290+86.45	1290+86.45	8.17	8.22	13.38	13.24	1859.00	1810.17	275.23	276.03	275.29	276.09	BASE PANEL
		44.52	57.90	44.64	57.88											
3289	C	1290+86.45	1290+86.45	1290+94.44	1290+94.44	8.17	8.22	13.24	13.11	1859.00	1810.17	275.29	276.09	275.35	276.14	BASE PANEL
		44.64	57.88	44.75	57.86											
3290	C	1290+94.44	1290+94.44	1291+02.43	1291+02.43	8.17	8.22	13.11	12.97	1859.00	1810.17	275.35	276.14	275.41	276.19	BASE PANEL
		44.75	57.86	44.86	57.83											
3291	C	1291+02.43	1291+02.43	1291+10.42	1291+10.42	8.17	8.22	12.97	12.83	1859.00	1810.17	275.41	276.19	275.47	276.25	BASE PANEL
		44.86	57.83	44.97	57.80											
3292	C	1291+10.42	1291+10.42	1291+18.41	1291+18.41	8.17	8.22	12.83	12.69	1859.00	1810.17	275.47	276.25	275.54	276.31	BASE PANEL
		44.97	57.80	45.08	57.76											
3293	C	1291+18.41	1291+18.41	1291+26.40	1291+26.40	8.17	8.22	12.69	12.54	1859.00	1810.17	275.54	276.31	275.60	276.37	BASE PANEL
		45.08	57.76	45.18	57.72											
3294	C	1291+26.40	1291+26.40	1291+34.40	1291+34.40	8.17	8.22	12.54	12.40	1859.00	1810.17	275.60	276.37	275.65	276.42	BASE PANEL
		45.18	57.72	45.28	57.68											
3295	C	1291+34.40	1291+34.40	1291+42.39	1291+42.39	8.17	8.22	12.40	12.26	1859.00	1810.17	275.65	276.42	275.70	276.46	BASE PANEL
		45.28	57.68	45.37	57.63											
3296	D	1291+42.39	1291+42.39	1291+50.38	1291+50.38	8.17	8.17	12.26	12.14	1859.00		275.70	276.46	275.75	276.50	BASE PANEL
		45.37	57.63	45.46	57.60											
3297	D	1291+50.38	1291+50.38	1291+58.37	1291+58.37	8.17	8.17	12.14	12.06	1859.00		275.75	276.50	275.77	276.50	BASE PANEL
		45.46	57.60	45.55	57.61											
3298	D	1291+58.37	1291+58.37	1291+66.36	1291+66.36	8.17	8.17	12.06	12.01	1859.00		275.77	276.50	275.79	276.50	BASE PANEL
		45.55	57.61	45.64	57.65											

3 REVISED PER ADDENDUM No. 3 DATED JANUARY 31, 2012

CONSTRUCTION DETAILS

NORTHBOUND 710
PRECAST PRESTRESSED CONCRETE PAVEMENT
NO SCALE

C-199

STATE OF CALIFORNIA - DEPARTMENT OF TRANSPORTATION
Caltrans® DESIGN
FUNCTIONAL SUPERVISOR: RENE YIN
CALCULATED-DESIGNED BY: KENNY HA, RAHEL ADERA
CHECKED BY: LE NGUYEN
REVISED BY / DATE REVISED

LAST REVISION 00-00-00
DATE PLOTTED => 30-JAN-2012
TIME PLOTTED => 12:33

Dist	COUNTY	ROUTE	POST MILES TOTAL PROJECT	SHEET No.	TOTAL SHEETS
07	LA	710	17.2/26.4	312	1507

REGISTERED CIVIL ENGINEER 2-3-11 DATE

6-27-11
PLANS APPROVAL DATE

REGISTERED PROFESSIONAL ENGINEER LE NGUYEN No. C65414 Exp. 9-30-11 CIVIL STATE OF CALIFORNIA

THE STATE OF CALIFORNIA OR ITS OFFICERS OR AGENTS SHALL NOT BE RESPONSIBLE FOR THE ACCURACY OR COMPLETENESS OF SCANNED COPIES OF THIS PLAN SHEET.

3

PANEL TYPE "A"

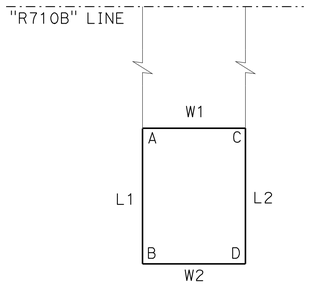

PANEL TYPE "B"

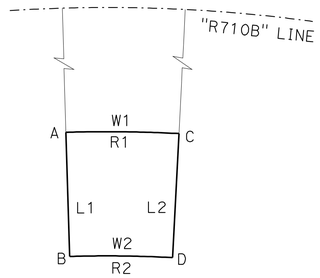

PANEL TYPE "C"

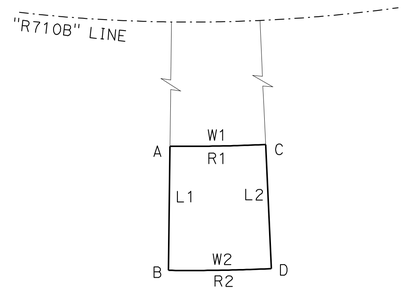

PANEL TYPE "D"

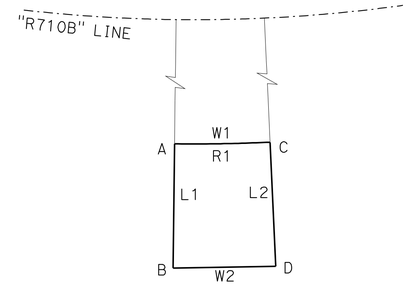

PANEL TYPE "E"

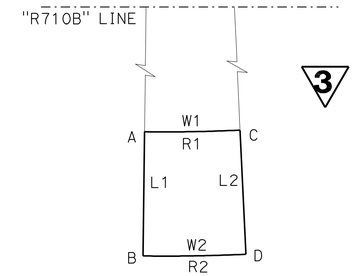

3

PANEL #	PANEL TYPE	STATION / OFFSET A	B	C	D	WIDTH (ft) W1	W2	LENGTH (ft) L1	L2	RADIUS (ft) R1	R2	ELEVATION A	B	C	D	PANEL DETAIL
3320	C	1293+34.16	1293+34.16	1293+42.22	1293+42.22	7.92	7.96	12.00	12.00	1859.00	1871.02	276.86	277.56	276.93	277.63	BASE PANEL
		46.67	58.67	46.69	58.68											
3321	C	1293+42.22	1293+42.22	1293+50.28	1293+50.28	7.92	7.96	12.00	12.00	1859.00	1871.02	276.93	277.63	276.99	277.70	BASE PANEL
		46.69	58.68	46.70	58.69											
3322	C	1293+50.28	1293+50.28	1293+58.34	1293+58.34	7.92	7.96	12.00	12.00	1859.00	1871.02	276.99	277.70	277.05	277.76	BASE PANEL
		46.70	58.69	46.70	58.70											
3323	C	1293+58.34	1293+58.34	1293+66.39	1293+66.39	7.92	7.96	12.00	12.00	1859.00	1871.02	277.05	277.76	277.11	277.82	BASE PANEL
		46.70	58.70	46.71	58.70											
3324	C	1293+66.39	1293+66.39	1293+74.45	1293+74.45	7.92	7.96	12.00	12.00	1859.00	1871.02	277.11	277.82	277.16	277.87	BASE PANEL
		46.71	58.70	46.71	58.70											
3325	C	1293+74.45	1293+74.45	1293+82.51	1293+82.51	7.92	7.96	12.00	12.00	1859.00	1871.02	277.16	277.87	277.22	277.93	BASE PANEL
		46.71	58.70	46.70	58.70											
3326	C	1293+82.51	1293+82.51	1293+90.56	1293+90.56	7.92	7.96	12.00	12.00	1859.00	1871.02	277.22	277.93	277.28	277.98	BASE PANEL
		46.70	58.70	46.70	58.69											
3327	C	1293+90.56	1293+90.56	1293+98.62	1293+98.62	7.92	7.96	12.00	12.00	1859.00	1871.02	277.28	277.98	277.33	278.03	BASE PANEL
		46.70	58.69	46.69	58.68											
3328	C	1293+98.62	1293+98.62	1294+06.68	1294+06.68	7.92	7.96	12.00	12.00	1859.00	1871.02	277.33	278.03	277.39	278.07	BASE PANEL
		46.69	58.68	46.67	58.67											
3329	C	1294+06.68	1294+06.68	1294+14.74	1294+14.74	7.92	7.96	12.00	12.00	1859.00	1871.02	277.39	278.07	277.44	278.11	CENTRAL STRESSING PANEL (TYPE A1)
		46.67	58.67	46.65	58.65											
3330	C	1294+14.74	1294+14.74	1294+22.79	1294+22.79	7.92	7.96	12.00	12.00	1859.00	1871.02	277.44	278.11	277.48	278.15	CENTRAL STRESSING PANEL (TYPE A2)
		46.65	58.65	46.63	58.63											
3331	C	1294+22.79	1294+22.79	1294+30.85	1294+30.85	7.92	7.96	12.00	12.00	1859.00	1871.02	277.48	278.15	277.53	278.19	BASE PANEL
		46.63	58.63	46.61	58.61											
3332	C	1294+30.85	1294+30.85	1294+38.91	1294+38.91	7.92	7.96	12.00	12.00	1859.00	1871.02	277.53	278.19	277.57	278.22	BASE PANEL
		46.61	58.61	46.58	58.58											
3333	C	1294+38.91	1294+38.91	1294+46.97	1294+46.97	7.92	7.96	12.00	12.00	1859.00	1871.02	277.57	278.22	277.61	278.26	BASE PANEL
		46.58	58.58	46.55	58.55											
3334	C	1294+46.97	1294+46.97	1294+55.02	1294+55.02	7.92	7.96	12.00	12.00	1859.00	1871.02	277.61	278.26	277.66	278.29	BASE PANEL
		46.55	58.55	46.52	58.52											
3335	C	1294+55.02	1294+55.02	1294+63.08	1294+63.08	7.92	7.96	12.00	12.00	1859.00	1871.02	277.66	278.29	277.70	278.32	BASE PANEL
		46.52	58.52	46.48	58.48											
3336	C	1294+63.08	1294+63.08	1294+71.14	1294+71.14	7.92	7.96	12.00	12.00	1859.00	1871.02	277.70	278.32	277.75	278.35	BASE PANEL
		46.48	58.48	46.44	58.44											
3337	C	1294+71.14	1294+71.14	1294+79.20	1294+79.20	7.92	7.96	12.00	12.00	1859.00	1871.02	277.75	278.35	277.79	278.38	BASE PANEL
		46.44	58.44	46.40	58.40											
3338	C	1294+79.20	1294+79.20	1294+87.25	1294+87.25	7.92	7.96	12.00	12.00	1859.00	1871.02	277.79	278.38	277.84	278.41	BASE PANEL
		46.40	58.40	46.35	58.35											
3339	C	1294+87.25	1294+87.25	1294+95.31	1294+95.31	7.92	7.96	12.00	12.00	1859.00	1871.02	277.84	278.41	277.89	278.44	BASE PANEL
		46.35	58.35	46.30	58.30											
3340	C	1294+95.31	1294+95.31	1295+03.37	1295+03.37	7.92	7.96	12.00	12.00	1859.00	1871.02	277.89	278.44	277.94	278.47	BASE PANEL
		46.30	58.30	46.25	58.24											

3 **REVISED PER ADDENDUM No. 3 DATED JANUARY 31, 2012**

CONSTRUCTION DETAILS

NORTHBOUND 710
PRECAST PRESTRESSED CONCRETE PAVEMENT
NO SCALE

C-201

STATE OF CALIFORNIA - DEPARTMENT OF TRANSPORTATION
Caltrans®
DESIGN

FUNCTIONAL SUPERVISOR: RENE YIN
CALCULATED-DESIGNED BY: KENNY HA, RAHEL ADERA
CHECKED BY: LE NGUYEN
REVISED BY
DATE REVISED

LAST REVISION 00-00-00
DATE PLOTTED => 30-JAN-2012
TIME PLOTTED => 12:33

Dist	COUNTY	ROUTE	POST MILES TOTAL PROJECT	SHEET No.	TOTAL SHEETS
07	LA	710	17.2/26.4	315	1507

REGISTERED CIVIL ENGINEER 2-3-11 DATE

6-27-11
PLANS APPROVAL DATE

REGISTERED PROFESSIONAL ENGINEER LE NGUYEN No. C65414 Exp. 9-30-11 CIVIL STATE OF CALIFORNIA

THE STATE OF CALIFORNIA OR ITS OFFICERS OR AGENTS SHALL NOT BE RESPONSIBLE FOR THE ACCURACY OR COMPLETENESS OF SCANNED COPIES OF THIS PLAN SHEET.

PANEL TYPE "A"

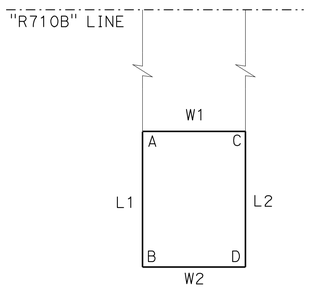

PANEL TYPE "B"

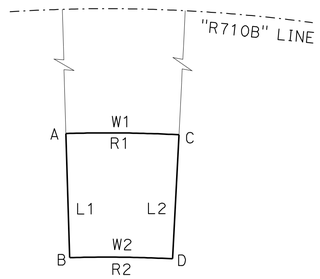

PANEL TYPE "C"

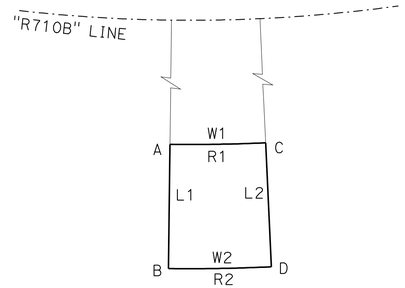

PANEL TYPE "D"

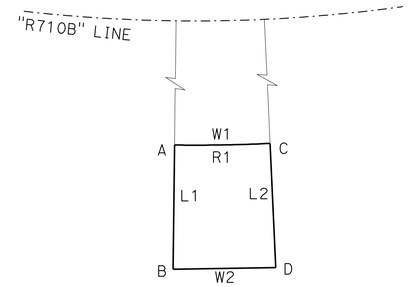

PANEL TYPE "E"

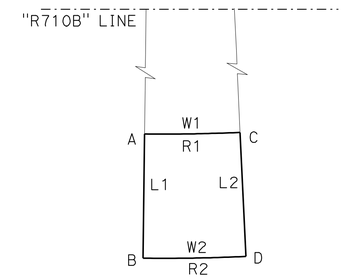

PANEL #	PANEL TYPE	STATION / OFFSET				WIDTH (ft)		LENGTH (ft)		RADIUS (ft)		ELEVATION				PANEL DETAIL
		A	B	C	D	W1	W2	L1	L2	R1	R2	A	B	C	D	
3378	A	1325+79.056	1325+79.056	1325+87.122	1325+87.122	8.07	8.07	14.00	14.00			317.15	316.96	317.41	317.22	BASE PANEL
		43.00	57.00	43.00	57.00											
3379	A	1325+87.122	1325+87.122	1325+95.188	1325+95.188	8.07	8.07	14.00	14.00			317.41	317.22	317.66	317.48	BASE PANEL
		43.00	57.00	43.00	57.00											
3380	A	1325+95.188	1325+95.188	1326+03.254	1326+03.254	8.07	8.07	14.00	14.00			317.66	317.48	317.92	317.74	BASE PANEL
		43.00	57.00	43.00	57.00											
3381	A	1326+03.254	1326+03.254	1326+11.320	1326+11.320	8.07	8.07	14.00	14.00			317.92	317.74	318.18	317.99	BASE PANEL
		43.00	57.00	43.00	57.00											
3382	A	1326+11.320	1326+11.320	1326+19.380	1326+19.380	8.06	8.06	14.00	14.00			318.18	317.99	318.44	318.25	JOINT PANEL (TYPE MODIFIED)
		43.00	57.00	43.00	57.00											
3383	A	1326+19.380	1326+19.380	1326+27.388	1326+27.388	8.01	~~10.07~~ 8.01	~~14.00~~ 12.00	12.00			318.44	318.25	318.70	318.54	BASE PANEL
		43.00	55.00 ~~57.00~~	43.00	55.00											
3384	A	1326+27.388	1326+27.388	1326+35.396	1326+35.396	8.01	8.01	12.00	12.00			318.70	318.54	318.96	318.81	BASE PANEL
		43.00	55.00	43.00	55.00											
3385	A	1326+35.396	1326+35.396	1326+43.404	1326+43.404	8.01	8.01	12.00	12.00			318.96	318.81	319.23	319.08	BASE PANEL
		43.00	55.00	43.00	55.00											
3386	A	1326+43.404	1326+43.404	1326+51.412	1326+51.412	8.01	8.01	12.00	12.00			319.23	319.08	319.49	319.35	BASE PANEL
		43.00	55.00	43.00	55.00											
3387	A	1326+51.412	1326+51.412	1326+59.420	1326+59.420	8.01	8.01	12.00	12.00			319.49	319.35	319.74	319.59	BASE PANEL
		43.00	55.00	43.00	55.00											
3388	A	1326+59.420	1326+59.420	1326+67.428	1326+67.428	8.01	8.01	12.00	12.00			319.74	319.59	319.98	319.83	BASE PANEL
		43.00	55.00	43.00	55.00											
3389	A	1326+67.428	1326+67.428	1326+75.436	1326+75.436	8.01	8.01	12.00	12.00			319.98	319.83	320.22	320.07	BASE PANEL
		43.00	55.00	43.00	55.00											
3390	A	1326+75.436	1326+75.436	1326+83.444	1326+83.444	8.01	8.01	12.00	12.00			320.22	320.07	320.46	320.31	BASE PANEL
		43.00	55.00	43.00	55.00											
3391	A	1326+83.444	1326+83.444	1326+91.452	1326+91.452	8.01	8.01	12.00	12.00			320.46	320.31	320.70	320.55	BASE PANEL
		43.00	55.00	43.00	55.00											
3392	A	1326+91.452	1326+91.452	1326+99.460	1326+99.460	8.01	8.01	12.00	12.00			320.70	320.55	320.94	320.79	BASE PANEL
		43.00	55.00	43.00	55.00											
3393	A	1326+99.460	1326+99.460	1327+07.468	1327+07.468	8.01	8.01	12.00	12.00			320.94	320.79	321.17	321.01	BASE PANEL
		43.00	55.00	43.00	55.00											

3 REVISED PER ADDENDUM No. 3 DATED JANUARY 31, 2012

CONSTRUCTION DETAILS

NORTHBOUND 710
PRECAST PRESTRESSED CONCRETE PAVEMENT

NO SCALE

C-204

STATE OF CALIFORNIA - DEPARTMENT OF TRANSPORTATION
Caltrans
DESIGN
FUNCTIONAL SUPERVISOR: RENE YIN
CALCULATED-DESIGNED BY: KENNY HA, RAHEL ADERA
CHECKED BY: LE NGUYEN
REVISED BY
DATE REVISED

LAST REVISION 00-00-00
DATE PLOTTED => 30-JAN-2012
TIME PLOTTED => 12:33

Dist	COUNTY	ROUTE	POST MILES TOTAL PROJECT	SHEET No.	TOTAL SHEETS
07	LA	710	17.2/26.4	316	1507

REGISTERED CIVIL ENGINEER 2-3-11 DATE

6-27-11
PLANS APPROVAL DATE

REGISTERED PROFESSIONAL ENGINEER LE NGUYEN No. C65414 Exp. 9-30-11 CIVIL STATE OF CALIFORNIA

THE STATE OF CALIFORNIA OR ITS OFFICERS OR AGENTS SHALL NOT BE RESPONSIBLE FOR THE ACCURACY OR COMPLETENESS OF SCANNED COPIES OF THIS PLAN SHEET.

PANEL TYPE "A"

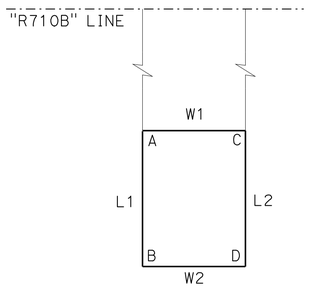

PANEL TYPE "B"

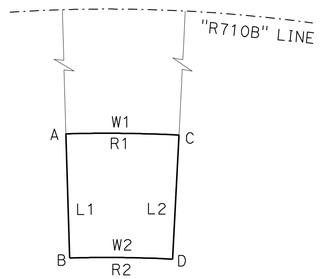

PANEL TYPE "C"

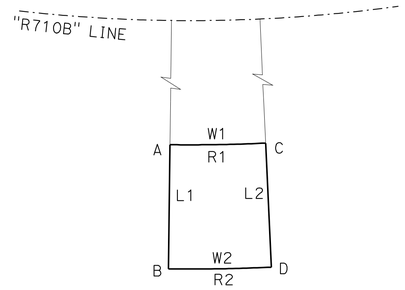

PANEL TYPE "D"

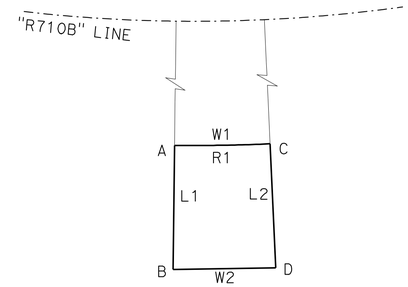

PANEL TYPE "E"

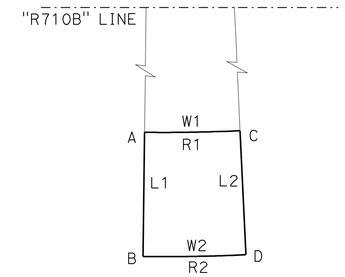

PANEL #	PANEL TYPE	STATION / OFFSET A	B	C	D	WIDTH (ft) W1	W2	LENGTH (ft) L1	L2	RADIUS (ft) R1	R2	ELEVATION A	B	C	D	PANEL DETAIL
3394	A	1327+07.468 / 43.00	1327+07.468 / 55.00	1327+15.476 / 43.00	1327+15.476 / 55.00	8.01	8.01	12.00	12.00			321.17	321.01	321.41	321.23	BASE PANEL
3395	A	1327+15.476 / 43.00	1327+15.476 / 55.00	1327+23.484 / 43.00	1327+23.484 / 55.00	8.01	8.01	12.00	12.00			321.41	321.23	321.64	321.45	BASE PANEL
3396	A	1327+23.484 / 43.00	1327+23.484 / 55.00	1327+31.492 / 43.00	1327+31.492 / 55.00	8.01	8.01	12.00	12.00			321.64	321.45	321.86	321.67	BASE PANEL
3397	A	1327+31.492 / 43.00	1327+31.492 / 55.00	1327+39.500 / 43.00	1327+39.500 / 55.00	8.01	8.01	12.00	12.00			321.86	321.67	322.09	321.88	CENTRAL STRESSING PANEL (TYPE A1)
3398	A	1327+39.500 / 43.00	1327+39.500 / 55.00	1327+47.508 / 43.00	1327+47.508 / 55.00	8.01	8.01	12.00	12.00			322.09	321.88	322.31	322.09	CENTRAL STRESSING PANEL (TYPE A2)
3399	A	1327+47.508 / 43.00	1327+47.508 / 55.00	1327+55.516 / 43.00	1327+55.516 / 55.00	8.01	8.01	12.00	12.00			322.31	322.09	322.53	322.30	BASE PANEL
3400	A	1327+55.516 / 43.00	1327+55.516 / 55.00	1327+63.524 / 43.00	1327+63.524 / 55.00	8.01	8.01	12.00	12.00			322.53	322.30	322.75	322.50	BASE PANEL
3401	A	1327+63.524 / 43.00	1327+63.524 / 55.00	1327+71.532 / 43.00	1327+71.532 / 55.00	8.01	8.00	12.00	12.00			322.75	322.50	322.98	322.71	BASE PANEL
3402	A	1327+71.532 / 43.00	1327+71.532 / 55.00	1327+79.540 / 43.00	1327+79.540 / 55.00	8.01	8.01	12.00	12.00			322.98	322.71	323.19	322.90	BASE PANEL
3403	A	1327+79.540 / 43.00	1327+79.540 / 55.00	1327+87.548 / 43.00	1327+87.548 / 55.00	8.01	8.01	12.00	12.00			323.19	322.90	323.39	323.08	BASE PANEL
3404	A	1327+87.548 / 43.00	1327+87.548 / 55.00	1327+95.556 / 43.00	1327+95.556 / 55.00	8.01	8.01	12.00	12.00			323.39	323.08	323.59	323.26	BASE PANEL
3405	A	1327+95.556 / 43.00	1327+95.556 / 55.00	1328+03.564 / 43.00	1328+03.564 / 55.00	8.01	8.01	12.00	12.00			323.59	323.26	323.79	323.44	BASE PANEL
3406	A	1328+03.564 / 43.00	1328+03.564 / 55.00	1328+11.572 / 43.00	1328+11.572 / 55.00	8.01	8.01	12.00	12.00			323.79	323.44	323.59	323.62	BASE PANEL
3407	A	1328+11.572 / 43.00	1328+11.572 / 55.00	1328+19.580 / 43.00	1328+19.580 / 55.00	8.01	8.01	12.00	12.00			323.59	323.62	324.19	323.79	BASE PANEL

3 3

3 **REVISED PER ADDENDUM No. 3 DATED JANUARY 31, 2012**

CONSTRUCTION DETAILS

NORTHBOUND 710
PRECAST PRESTRESSED CONCRETE PAVEMENT
NO SCALE

C-205

STATE OF CALIFORNIA - DEPARTMENT OF TRANSPORTATION
Caltrans® DESIGN
FUNCTIONAL SUPERVISOR: RENE YIN
CALCULATED-DESIGNED BY: KENNY HA, RAHEL ADERA
CHECKED BY: LE NGUYEN
REVISED BY / DATE REVISED

LAST REVISION 00-00-00 | DATE PLOTTED => 30-JAN-2012 | TIME PLOTTED => 11:04

Dist	COUNTY	ROUTE	POST MILES TOTAL PROJECT	SHEET No.	TOTAL SHEETS
07	LA	710	17.2/26.4	318	1507

REGISTERED CIVIL ENGINEER 2-3-11 DATE

6-27-11
PLANS APPROVAL DATE

REGISTERED PROFESSIONAL ENGINEER LE NGUYEN No. C65414 Exp. 9-30-11 CIVIL STATE OF CALIFORNIA

THE STATE OF CALIFORNIA OR ITS OFFICERS OR AGENTS SHALL NOT BE RESPONSIBLE FOR THE ACCURACY OR COMPLETENESS OF SCANNED COPIES OF THIS PLAN SHEET.

PANEL TYPE "A"

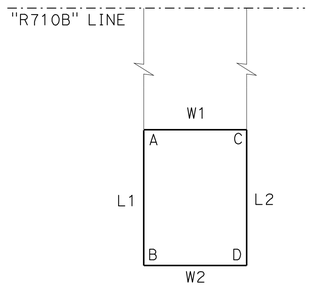

PANEL TYPE "B"

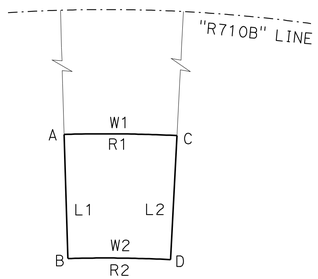

PANEL TYPE "C"

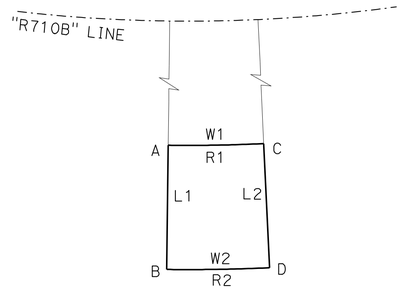

PANEL TYPE "D"

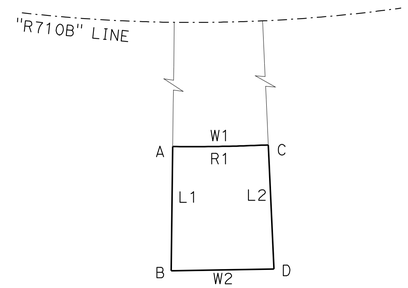

PANEL TYPE "E"

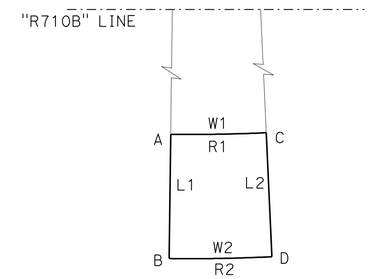

PANEL #	PANEL TYPE	STATION / OFFSET A	STATION / OFFSET B	STATION / OFFSET C	STATION / OFFSET D	WIDTH (ft) W1	WIDTH (ft) W2	LENGTH (ft) L1	LENGTH (ft) L2	RADIUS (ft) R1	RADIUS (ft) R2	ELEVATION A	ELEVATION B	ELEVATION C	ELEVATION D	PANEL DETAIL
3426	B	1329+64.33 / 43.00	1329+64.33 / 55.00	1329+72.37 / 43.00	1329+72.37 / 55.00	7.87	7.82	12.00	12.00	1957.00	1945.00	327.14	326.44	327.30	326.60	CENTRAL STRESSING PANEL (TYPE A1)
3427	B	1329+72.37 / 43.00	1329+72.37 / 55.00	1329+80.41 / 43.00	1329+80.41 / 55.00	7.87	7.82	12.00	12.00	1957.00	1945.00	327.30	326.60	327.46	326.75	CENTRAL STRESSING PANEL (TYPE A2)
3428	B	1329+80.41 / 43.00	1329+80.41 / 55.00	1329+88.45 / 43.00	1329+88.45 / 55.00	7.87	7.82	12.00	12.00	1957.00	1945.00	327.46	326.75	327.61	326.90	BASE PANEL
3429	B	1329+88.45 / 43.00	1329+88.45 / 55.00	1329+96.49 / 43.00	1329+96.49 / 55.00	7.87	7.82	12.00	12.00	1957.00	1945.00	327.61	326.90	327.76	327.05	BASE PANEL
3430	B	1329+96.49 / 43.00	1329+96.49 / 55.00	1330+04.53 / 43.00	1330+04.53 / 55.00	7.87	7.82	12.00	12.00	1957.00	1945.00	327.76	327.05	327.90	327.19	BASE PANEL
3431	B	1330+04.53 / 43.00	1330+04.53 / 55.00	1330+12.57 / 43.00	1330+12.57 / 55.00	7.87	7.82	12.00	12.00	1957.00	1945.00	327.90	327.19	328.03	327.32	BASE PANEL
3432	B	1330+12.57 / 43.00	1330+12.57 / 55.00	1330+20.61 / 43.00	1330+20.61 / 55.00	7.87	7.82	12.00	12.00	1957.00	1945.00	328.03	327.32	328.16	327.45	BASE PANEL
3433	B	1330+20.61 / 43.00	1330+20.61 / 55.00	1330+28.66 / 43.00	1330+28.66 / 55.00	7.87	7.82	12.00	12.00	1957.00	1945.00	328.16	327.45	328.28	327.57	BASE PANEL
3434	B	1330+28.66 / 43.00	1330+28.66 / 55.00	1330+36.70 / 43.00	1330+36.70 / 55.00	7.87	7.81	12.00	12.00	1957.00	1945.00	328.28	327.57	328.39	327.69	BASE PANEL
3435	B	1330+36.70 / 43.00	1330+36.70 / 55.00	1330+44.74 / 43.00	1330+44.74 / 55.00	7.87	7.83	12.00	12.00	1957.00	1945.00	328.39	327.69	328.50	327.80	BASE PANEL
3436	B	1330+44.74 / 43.00	1330+44.74 / 55.00	1330+52.78 / 43.00	1330+52.78 / 55.00	7.87	7.83	12.00	12.00	1957.00	1945.00	328.50	327.80	328.61	327.91	BASE PANEL
3437	B	1330+52.78 / 43.00	1330+52.78 / 55.00	1330+60.82 / 43.00	1330+60.82 / 55.00	7.87	7.81	12.00	12.00	1957.00	1945.00	328.61	327.91	328.71	328.02	BASE PANEL
3438	B	1330+60.82 / 43.00	1330+60.82 / 55.00	1330+68.86 / 43.00	1330+68.86 / 55.00	7.87	7.82	12.00	12.00	1957.00	1945.00	328.71	328.02	328.81	328.12	BASE PANEL
3439	B	1330+68.86 / 43.00	1330+68.86 / 55.00	1330+76.90 / 43.00	1330+76.90 / 55.00	7.87	7.82	12.00	12.00	1957.00	1945.00	328.81	328.12	328.91	328.23	BASE PANEL
3440	B	1330+76.90 / 43.00	1330+76.90 / 55.00	1330+84.94 / 43.00	1330+84.94 / 55.00	7.87	7.82	12.00	12.00	1957.00	1945.00	328.91	328.23	329.02	328.34	BASE PANEL
3441	B	1330+84.94 / 43.00	1330+84.94 / 55.00	1330+92.98 / 43.00	1330+92.98 / 55.00	7.87	7.82	12.00	12.00	1957.00	1945.00	329.02	328.34	329.13	328.45	JOINT PANEL (TYPE C3)
3442	B	1332+38.87 / 43.00	~~1332+40.17~~ / 55.00	1332+47.00 / 43.00	1332+47.00 / 55.00	7.95	7.90 ~~6.6~~	12.00 ~~12.07~~	12.00	1957.00	1945.00	330.42	329.70	330.44	329.72	JOINT PANEL (TYPE C1)
3443	B	1332+47.00 / 43.00	1332+47.00 / 55.00	1332+55.12 / 43.00	1332+55.12 / 55.00	7.95	7.90	12.00	12.00	1957.00	1945.00	330.44	329.72	330.45	329.73	BASE PANEL

1332+28.87

3 REVISED PER ADDENDUM No. 3 DATED JANUARY 31, 2012

CONSTRUCTION DETAILS

NORTHBOUND 710
PRECAST PRESTRESSED CONCRETE PAVEMENT

NO SCALE

C-207

STATE OF CALIFORNIA - DEPARTMENT OF TRANSPORTATION
Caltrans
DESIGN
FUNCTIONAL SUPERVISOR: RENE YIN
CALCULATED-DESIGNED BY: KENNY HA, RAHEL ADERA
CHECKED BY: LE NGUYEN
REVISED BY
DATE REVISED

LAST REVISION 00-00-00
DATE PLOTTED => 30-JAN-2012
TIME PLOTTED => 11:04

Dist	COUNTY	ROUTE	POST MILES TOTAL PROJECT	SHEET No.	TOTAL SHEETS
07	LA	710	17.2/26.4	327	1507

REGISTERED CIVIL ENGINEER 2-3-11 DATE

6-27-11
PLANS APPROVAL DATE

REGISTERED PROFESSIONAL ENGINEER LE NGUYEN No. C65414 Exp. 9-30-11 CIVIL STATE OF CALIFORNIA

THE STATE OF CALIFORNIA OR ITS OFFICERS OR AGENTS SHALL NOT BE RESPONSIBLE FOR THE ACCURACY OR COMPLETENESS OF SCANNED COPIES OF THIS PLAN SHEET.

PANEL TYPE "A"

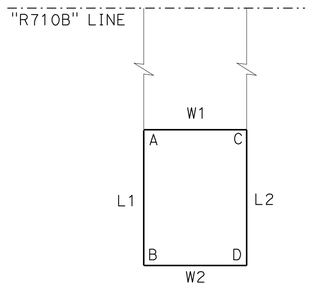

PANEL TYPE "B"

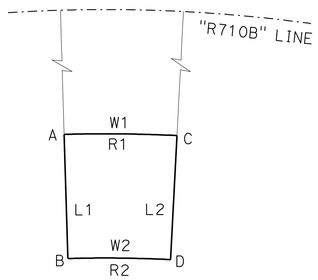

PANEL TYPE "C"

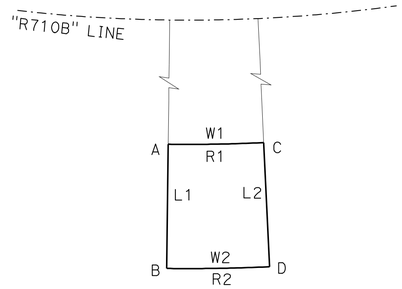

PANEL TYPE "D"

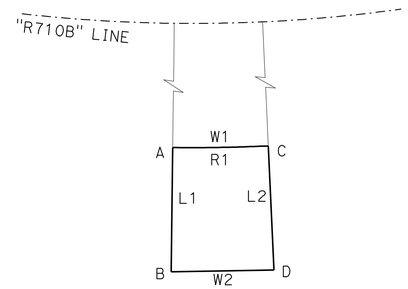

PANEL TYPE "E"

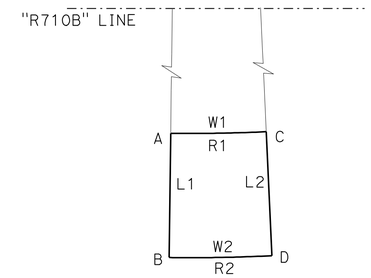

PANEL #	PANEL TYPE	STATION / OFFSET A	B	C	D	WIDTH (ft) W1	W2	LENGTH (ft) L1	L2	RADIUS (ft) R1	R2	ELEVATION A	B	C	D	PANEL DETAIL
3588	A	1344+17.71 / 42.25	1344+17.71 / 66.25	1344+25.81 / 42.18	1344+25.81 / 66.19	8.10	8.10	24.00	24.00			320.57	320.16	320.62	320.19	BASE PANEL
3589	A	1344+25.81 / 42.18	1344+25.81 / 66.19	1344+33.91 / 42.12	1344+33.91 / 66.12	8.10	8.10	24.00	24.00			320.62	320.19	320.68	320.26	CENTRAL STRESSING PANEL (TYPE A1)
3590	A	1344+33.91 / 42.12	1344+33.91 / 66.12	1344+42.01 / 42.05	1344+42.01 / 66.05	8.10	8.10	24.00	24.00			320.68	320.26	320.75	320.33	CENTRAL STRESSING PANEL (TYPE A2)
3591	A	1344+42.01 / 42.05	1344+42.01 / 66.05	1344+50.10 / 41.98	1344+50.10 / 65.98	8.10	8.10	24.00	24.00			320.75	320.33	320.82	320.40	BASE PANEL
3592	A	1344+50.10 / 41.98	1344+50.10 / 65.98	1344+58.20 / 41.91	1344+58.20 / 65.92	8.10	8.10	24.00	24.00			320.82	320.40	320.89	320.47	BASE PANEL
3593	A	1344+58.20 / 41.91	1344+58.20 / 65.92	1344+66.30 / 41.85	1344+66.30 / 65.85	8.10	8.10	24.00	24.00			320.89	320.47	320.95	320.54	BASE PANEL
3594	A	1344+66.30 / 41.85	1344+66.30 / 65.85	1344+74.40 / 41.78	1344+74.40 / 65.78	8.10	8.10	24.00	24.00			320.95	320.54	321.02	320.61	BASE PANEL
3595	A	1344+74.40 / 41.78	1344+74.40 / 65.78	1344+82.50 / 41.71	1344+82.50 / 65.71	8.10	8.10	24.00	24.00			321.02	320.61	321.09	320.68	BASE PANEL
3596	A	1344+82.50 / 41.71	1344+82.50 / 65.71	1344+90.60 / 41.64	1344+90.60 / 65.65	8.10	8.10	24.00	24.00			321.09	320.68	321.16	320.75	BASE PANEL
3597	A	1344+90.60 / 41.64	1344+90.60 / 65.65	1344+98.71 / 41.58	1344+98.71 / 65.58	8.11	8.10	24.00	24.00			321.16	320.75	321.32	320.82	BASE PANEL
3598	A	1344+98.71 / 41.58	1344+98.71 / 77.82	1345+06.73 / 41.51	1345+06.73 / 79.47	8.02	~~9.76~~ 8.03	38.05	37.96	3		321.32	320.64	321.32	320.75	JOINT PANEL (TYPE MODIFIED)
3599	A	1345+06.73 / 41.51	1345+06.73 / 79.47	1345+14.75 / 41.44	1345+14.75 / 79.31	8.02	8.02	37.96	37.86			321.32	320.75	321.40	320.84	BASE PANEL
3600	A	1345+14.75 / 41.44	1345+14.75 / 79.31	1345+22.78 / 41.38	1345+22.78 / 79.15	8.02	8.03	37.86	37.77			321.40	320.84	321.49	320.95	BASE PANEL
3601	A	1345+22.78 / 41.38	1345+22.78 / 79.15	1345+30.80 / 41.31	1345+30.80 / 78.99	8.02	8.03	37.77	37.68			321.49	320.95	321.60	321.06	BASE PANEL
3602	A	1345+30.80 / 41.31	1345+30.80 / 78.99	1345+38.83 / 41.24	1345+38.83 / 78.83	8.02	8.02	37.68	37.59			321.60	321.06	321.71	321.18	BASE PANEL
3603	A	1345+38.83 / 41.24	1345+38.83 / 78.83	1345+46.85 / 41.18	1345+46.85 / 78.67	8.02	8.03	37.59	37.49			321.71	321.18	321.82	321.29	BASE PANEL
3604	A	1345+46.85 / 41.18	1345+46.85 / 78.67	1345+54.87 / 41.11	1345+54.87 / 78.51	8.03	8.02	37.49	37.40			321.82	321.29	321.93	321.40	BASE PANEL
3605	A	1345+54.87 / 41.11	1345+54.87 / 78.51	1345+62.90 / 41.04	1345+62.90 / 78.35	8.02	8.03	37.40	37.31			321.93	321.40	322.04	321.52	BASE PANEL

3 **REVISED PER ADDENDUM No. 3 DATED JANUARY 31, 2012**

CONSTRUCTION DETAILS

NORTHBOUND 710
PRECAST PRESTRESSED CONCRETE PAVEMENT

NO SCALE

C-216

STATE OF CALIFORNIA - DEPARTMENT OF TRANSPORTATION
Caltrans® **DESIGN**
FUNCTIONAL SUPERVISOR: RENE YIN
CALCULATED-DESIGNED BY: KENNY HA, RAHEL ADERA
CHECKED BY: LE NGUYEN
REVISED BY / DATE REVISED

LAST REVISION 00-00-00 | DATE PLOTTED => 30-JAN-2012 | TIME PLOTTED => 11:04

Dist	COUNTY	ROUTE	POST MILES TOTAL PROJECT	SHEET No.	TOTAL SHEETS
07	LA	710	17.2/26.4	406	1507

REGISTERED CIVIL ENGINEER 2-3-11 DATE

6-27-11
PLANS APPROVAL DATE

REGISTERED PROFESSIONAL ENGINEER KIRSTEN R. STAHL No. C46857 Exp. 6-30-13 CIVIL STATE OF CALIFORNIA

THE STATE OF CALIFORNIA OR ITS OFFICERS OR AGENTS SHALL NOT BE RESPONSIBLE FOR THE ACCURACY OR COMPLETENESS OF SCANNED COPIES OF THIS PLAN SHEET.

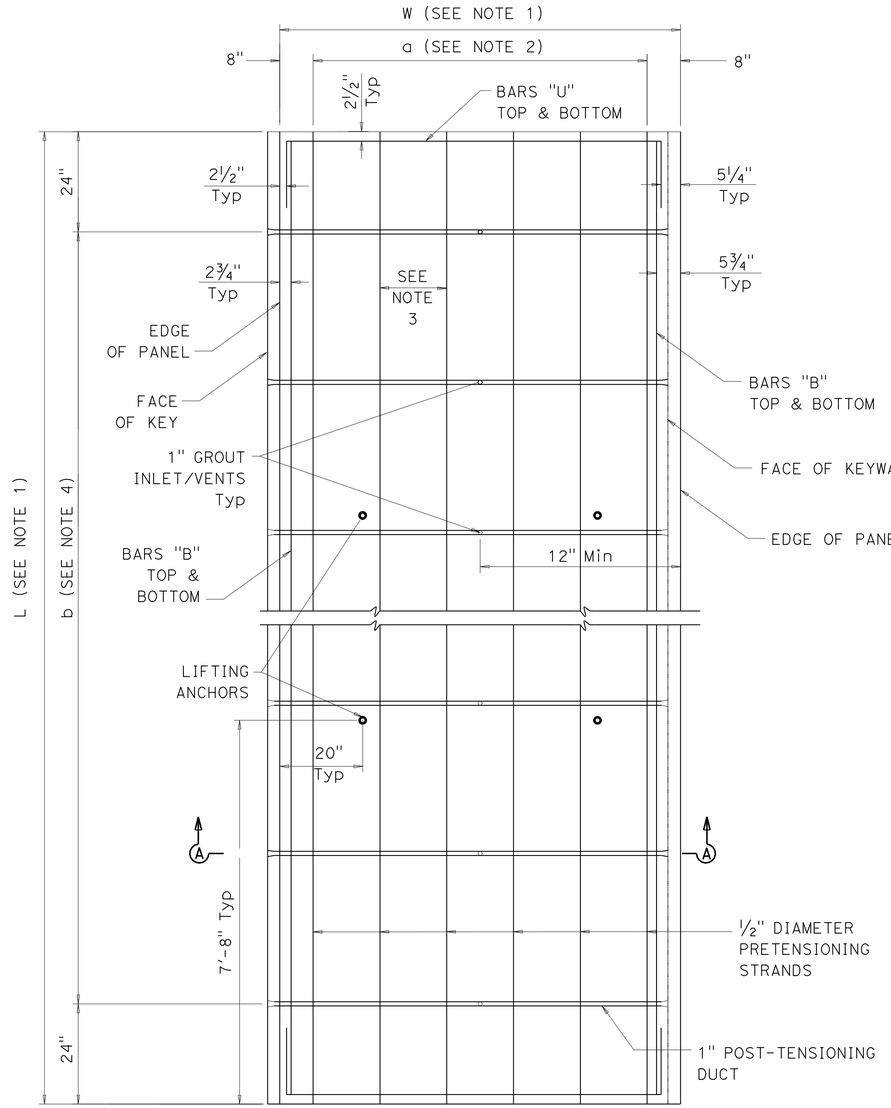

PLAN

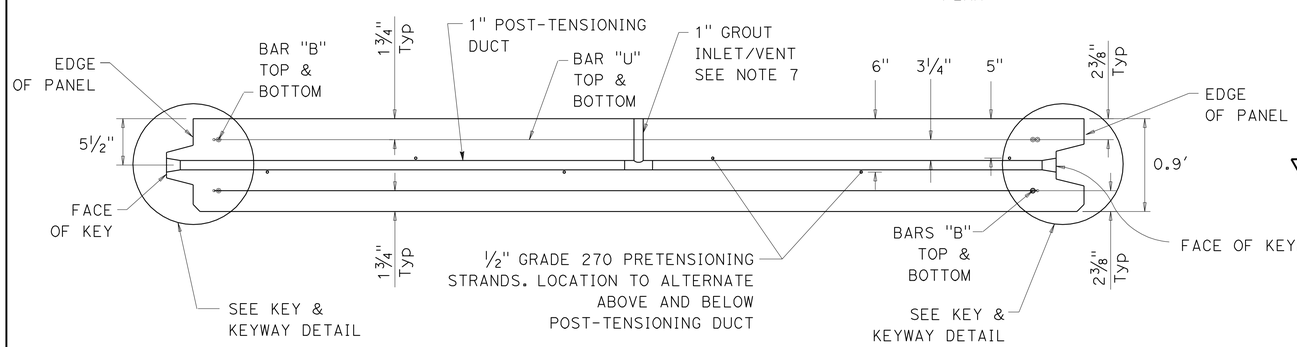

SECTION A-A

BASE PANEL

NOTES:

1. SEE TABLES A AND B FOR WIDTH (W) OR LENGTH (L) FOR BASE PANELS.
2. FOR "a" DIMENSION, SEE TABLE A FOR BASE PANELS.
3. THE SPACING BETWEEN PRETENSIONING STRANDS IS 16" C-C.
4. FOR "b" DIMENSION, SEE TABLE B FOR BASE PANELS.
5. SEE MISCELLANEOUS PANEL DETAILS FOR KEY & KEYWAY DETAIL.
6. FOR BAR "U" LENGTH, SEE TABLE A FOR BASE PANELS.
7. SEE MISCELLANEOUS PANEL DETAILS FOR GROUT INLET/VENT.
8. IN THE PANEL TYPE TABLES SHOWN ON CONSTRUCTION DETAILS C-26 THROUGH C-245, THE PANELS WITH A RADIUS (TYPE "B" AND "C") WITH ARC DIMENSIONS "w1" AND "w2"ARE CONSIDERED AS TANGENTS.
9. ALL REINFORCEMENT DIMENSIONS ARE TO BE VERIFIED BY THE MANUFACTURER BEFORE PANEL FABRICATION.
10. EXCEPT AS NOTED, REBAR IS #4.

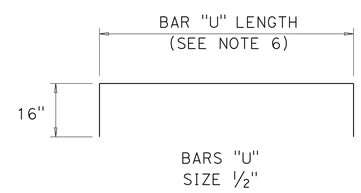

PLAN

3 REVISED PER ADDENDUM No. 3 DATED JANUARY 31, 2012

CONSTRUCTION DETAILS
PRECAST PRESTRESSED CONCRETE PAVEMENT

NO SCALE

C-295

STATE OF CALIFORNIA - DEPARTMENT OF TRANSPORTATION
Caltrans DESIGN

FUNCTIONAL SUPERVISOR: KIRSTEN STAHL
CALCULATED-DESIGNED BY: WINNIE DEGUZMAN
CHECKED BY: KIRSTEN STAHL
REVISED BY
DATE REVISED

LAST REVISION 00-00-00
DATE PLOTTED => 30-JAN-2012
TIME PLOTTED => 11:04

Dist	COUNTY	ROUTE	POST MILES TOTAL PROJECT	SHEET No.	TOTAL SHEETS
07	LA	710	17.2/26.4	407	1507

REGISTERED CIVIL ENGINEER 2-3-11 DATE

6-27-11
PLANS APPROVAL DATE

REGISTERED PROFESSIONAL ENGINEER KIRSTEN R. STAHL No. C46857 Exp. 6-30-13 CIVIL STATE OF CALIFORNIA

THE STATE OF CALIFORNIA OR ITS OFFICERS OR AGENTS SHALL NOT BE RESPONSIBLE FOR THE ACCURACY OR COMPLETENESS OF SCANNED COPIES OF THIS PLAN SHEET.

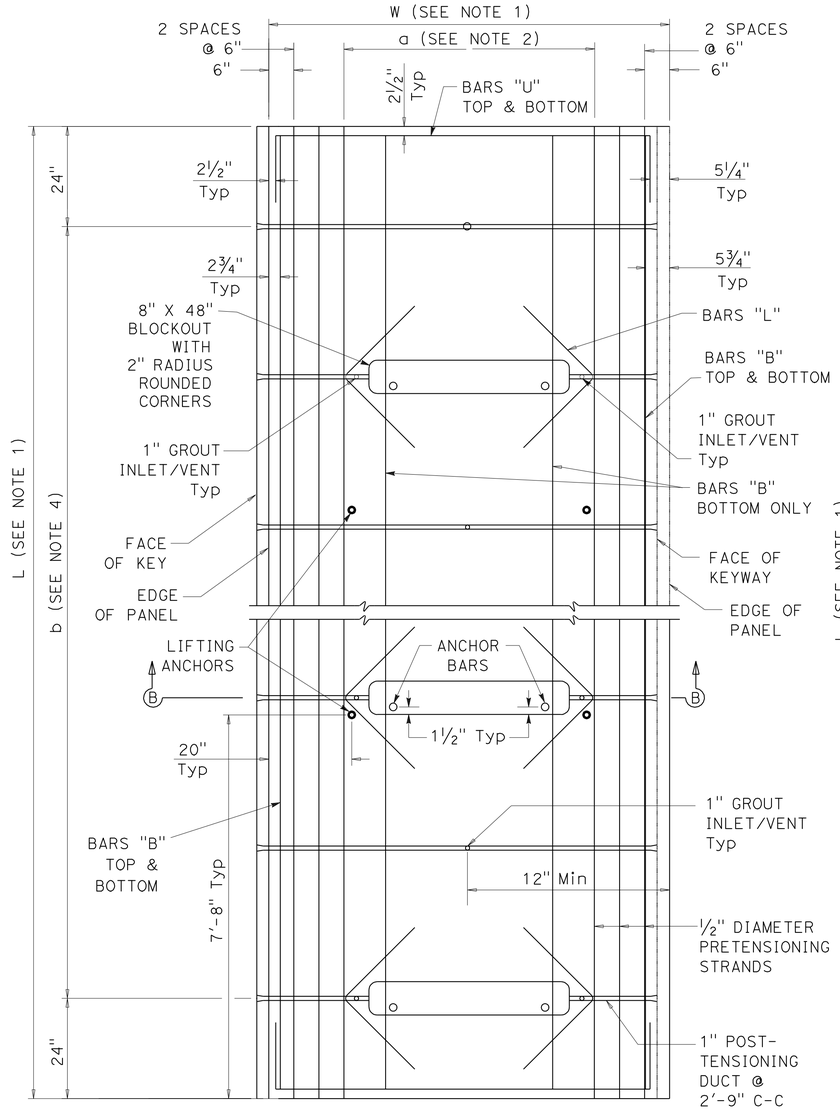

PLAN
TYPE A1

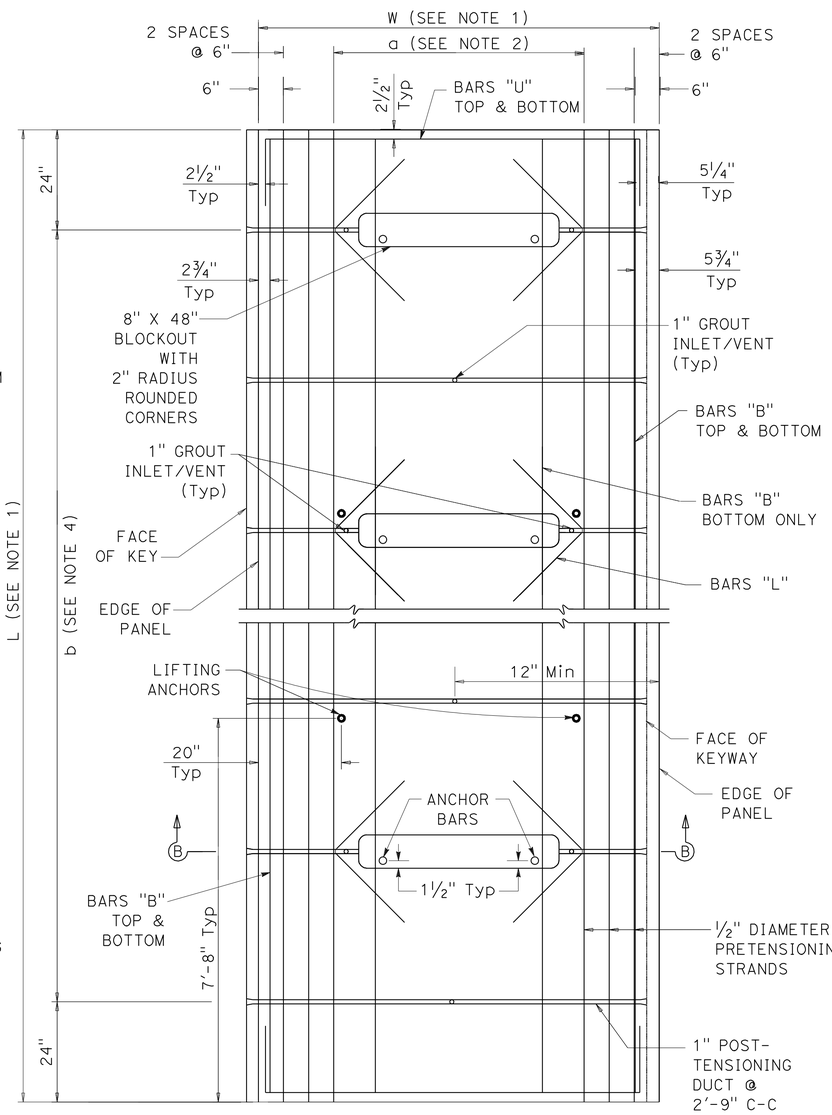

PLAN
TYPE A2

NOTES:

1. SEE TABLES A AND B FOR WIDTH (W) OR LENGTH (L) FOR CENTRAL STRESSING PANELS.
2. FOR "a" DIMENSION, SEE TABLE A FOR CENTRAL STRESSING PANELS.
3. THE SPACING BETWEEN PRETENSIONING STRANDS IS 6" C-C.
4. FOR "b" DIMENSION, SEE TABLE B FOR CENTRAL STRESSING PANELS.
5. SEE MISCELLANEOUS PANEL DETAILS FOR KEY & KEYWAY DETAIL.
6. FOR BAR "U" LENGTH, SEE TABLE A FOR CENTRAL STRESSING PANELS.
7. SEE MISCELLANEOUS PANEL DETAILS FOR GROUT INLET/VENT.
8. IN THE PANEL TYPE TABLES SHOWN ON CONSTRUCTION DETAILS C-26 THROUGH C-245, THE PANELS WITH A RADIUS (TYPE "B" AND "C") WITH ARC DIMENSIONS "w1" AND "w2"ARE CONSIDERED AS TANGENTS.
9. SEE CENTRAL STRESSING BLOCKOUT DETAIL AND ANCHOR BAR DETAIL IN MISCELLANEOUS PANEL DETAILS.
10. ALL REINFORCEMENT DIMENSIONS ARE TO BE VERIFIED BY THE MANUFACTURER BEFORE PANEL FABRICATION.

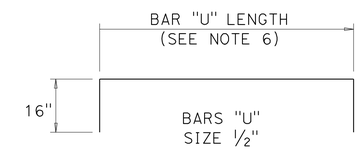

PLAN

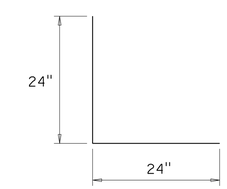

BARS "L"
PLAN

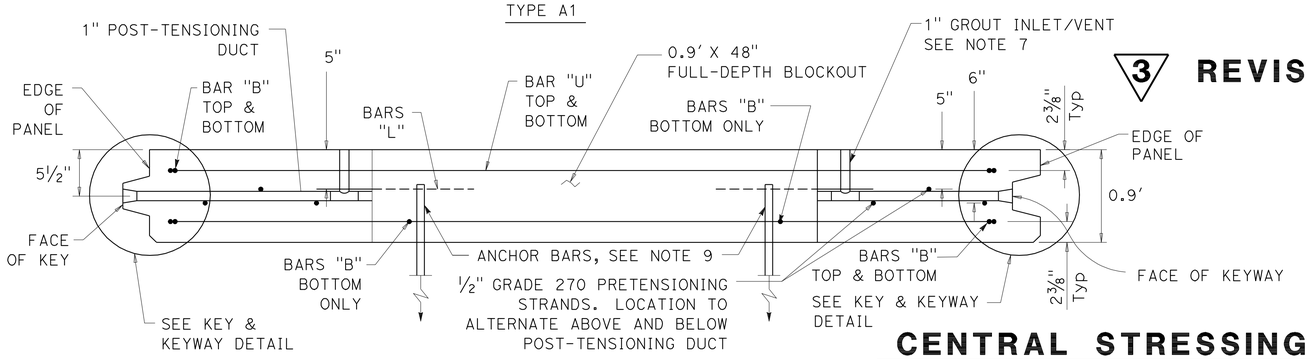

SECTION B-B

3 REVISED PER ADDENDUM No. 3 DATED JANUARY 31, 2012

CENTRAL STRESSING PANELS (TYPE A1 & A2)

CONSTRUCTION DETAILS PRECAST PRESTRESSED CONCRETE PAVEMENT

NO SCALE

C-296

STATE OF CALIFORNIA - DEPARTMENT OF TRANSPORTATION
DESIGN
FUNCTIONAL SUPERVISOR: KRISTEN STAHL
CALCULATED-DESIGNED BY: WINNIE DEGUZMAN
CHECKED BY: KRISTEN STAHL
REVISED BY
DATE REVISED

LAST REVISION 00-00-00
DATE PLOTTED => 30-JAN-2012
TIME PLOTTED => 11:04

Dist	COUNTY	ROUTE	POST MILES TOTAL PROJECT	SHEET No.	TOTAL SHEETS
07	LA	710	17.2/26.4	408	1507

REGISTERED CIVIL ENGINEER 2-3-11 DATE

6-27-11
PLANS APPROVAL DATE

REGISTERED PROFESSIONAL ENGINEER KIRSTEN R. STAHL No. C46857 Exp. 6-30-13 CIVIL STATE OF CALIFORNIA

THE STATE OF CALIFORNIA OR ITS OFFICERS OR AGENTS SHALL NOT BE RESPONSIBLE FOR THE ACCURACY OR COMPLETENESS OF SCANNED COPIES OF THIS PLAN SHEET.

3

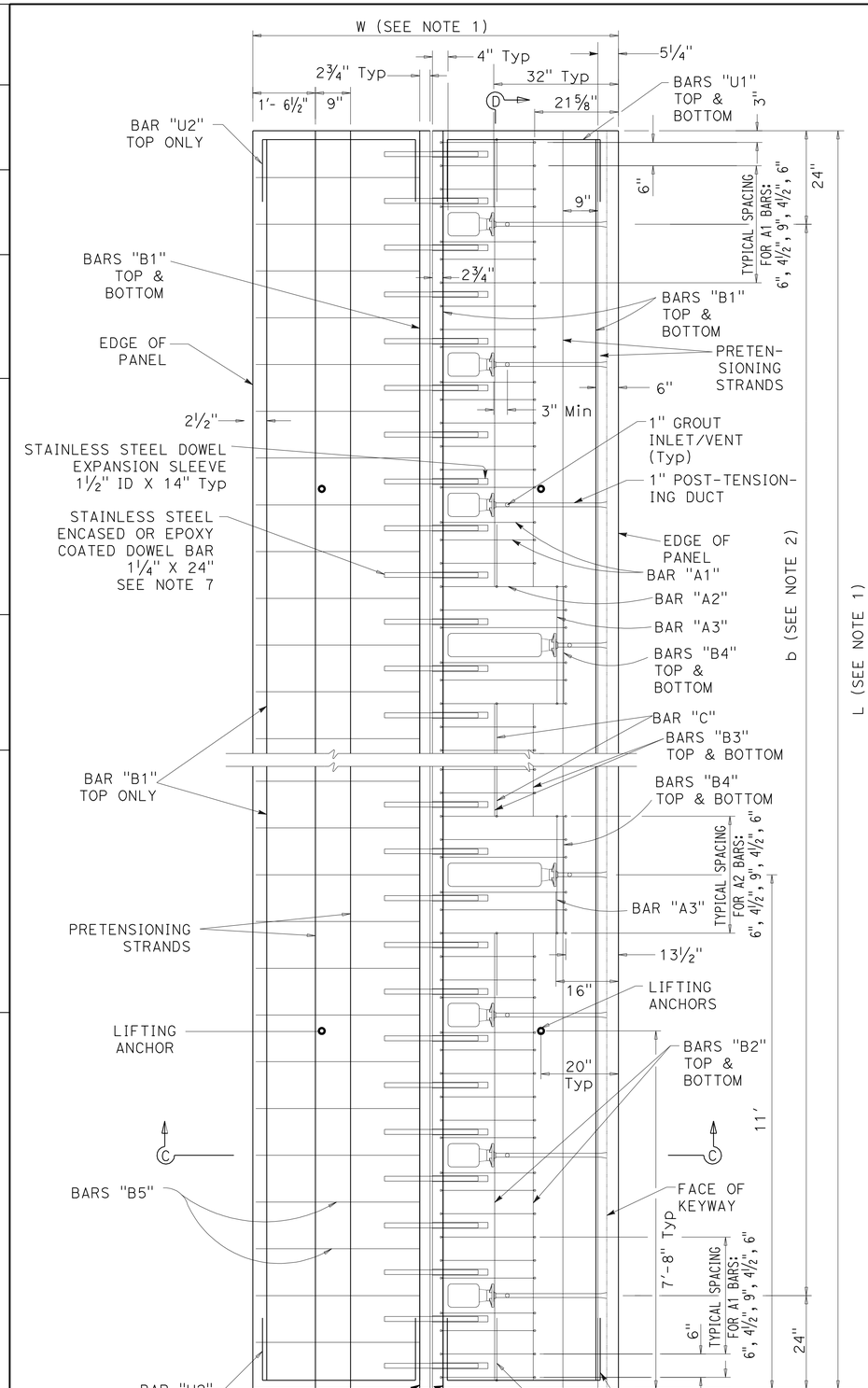

PLAN

NOTES:

1. SEE TABLES A AND B FOR WIDTH (W) OR LENGTH (L) FOR JOINT PANEL C1.
2. FOR "b" DIMENSIONS, SEE TABLE B FOR JOINT PANEL C1.
3. SEE MISCELLANEOUS PANEL DETAILS FOR KEY & KEYWAY DETAIL.
4. SEE MISCELLANEOUS PANEL DETAILS FOR GROUT INLET/VENT.
5. FOR BAR "U1" AND "U2" LENGTHS, SEE TABLE A FOR JOINT PANEL TYPE C1.
6. IN THE PANEL TYPE TABLES SHOWN ON CONSTRUCTION DETAILS C-26 THROUGH C-245, THE PANELS WITH A RADIUS (TYPE "B" AND "C") WITH ARC DIMENSIONS "w1" AND "w2"ARE CONSIDERED AS TANGENTS.
7. THE SECTION OF DOWEL EXTENDING INTO THE EXPANSION SLEEVE SHALL BE GREASED PRIOR TO BEING INSERTED INTO THE EXPANSION SLEEVE PRIOR TO CASTING.
8. ALL REINFORCEMENT DIMENSIONS ARE TO BE VERIFIED BY THE MANUFACTURER BEFORE PANEL FABRICATION.

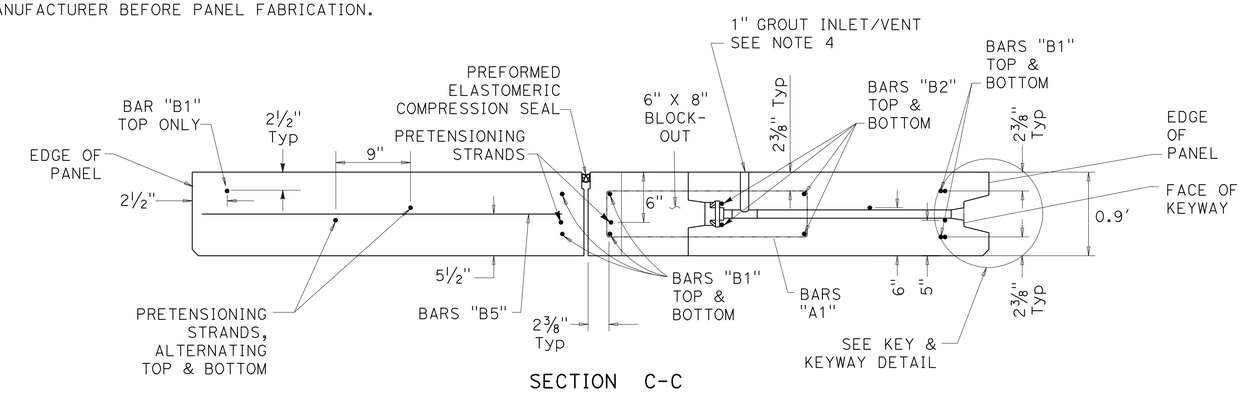

SECTION C-C

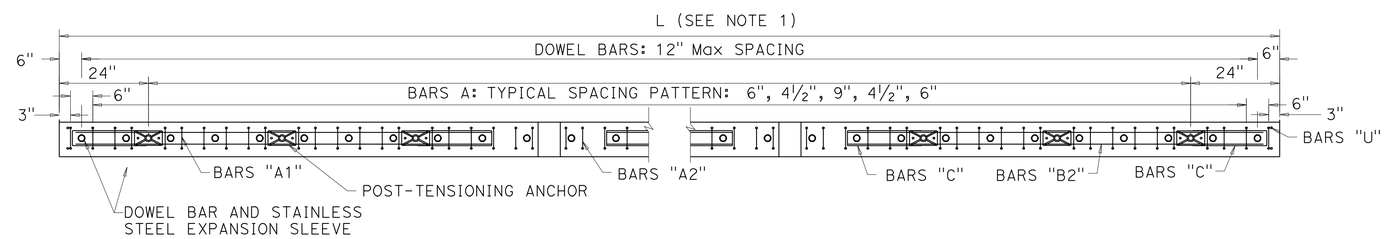

SECTION D-D

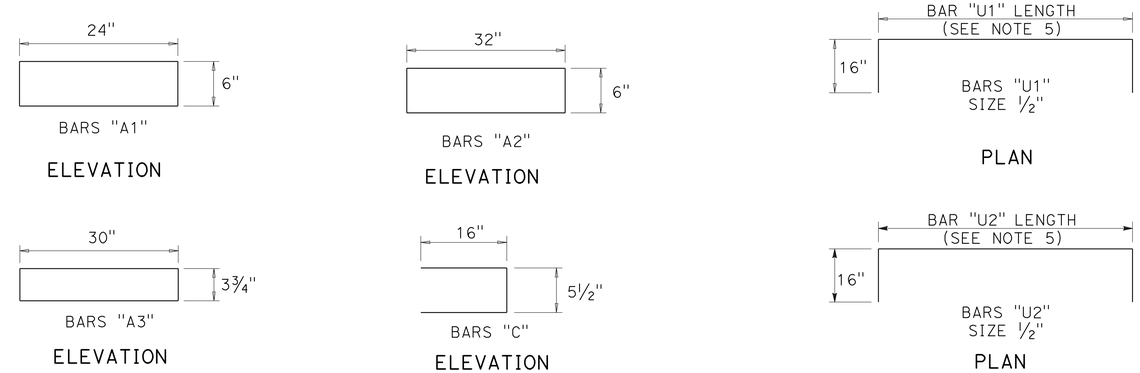

JOINT PANEL TYPE C1

CONSTRUCTION DETAILS
PRECAST PRESTRESSED CONCRETE PAVEMENT

NO SCALE

3 **REVISED PER ADDENDUM No. 3 DATED JANUARY 31, 2012**

C-297

STATE OF CALIFORNIA - DEPARTMENT OF TRANSPORTATION
Caltrans® DESIGN

FUNCTIONAL SUPERVISOR: KRISTEN STAHL
CALCULATED-DESIGNED BY: WINNIE DEGUZMAN
CHECKED BY: KRISTEN STAHL
REVISED BY
DATE REVISED

LAST REVISION 00-00-00
DATE PLOTTED => 30-JAN-2012
TIME PLOTTED => 13:47

Dist	COUNTY	ROUTE	POST MILES TOTAL PROJECT	SHEET No.	TOTAL SHEETS
07	LA	710	17.2/26.4	409	1507

REGISTERED CIVIL ENGINEER 2-3-11 DATE

6-27-11
PLANS APPROVAL DATE

REGISTERED PROFESSIONAL ENGINEER KIRSTEN R. STAHL No. C46857 Exp. 6-30-13 CIVIL STATE OF CALIFORNIA

THE STATE OF CALIFORNIA OR ITS OFFICERS OR AGENTS SHALL NOT BE RESPONSIBLE FOR THE ACCURACY OR COMPLETENESS OF SCANNED COPIES OF THIS PLAN SHEET.

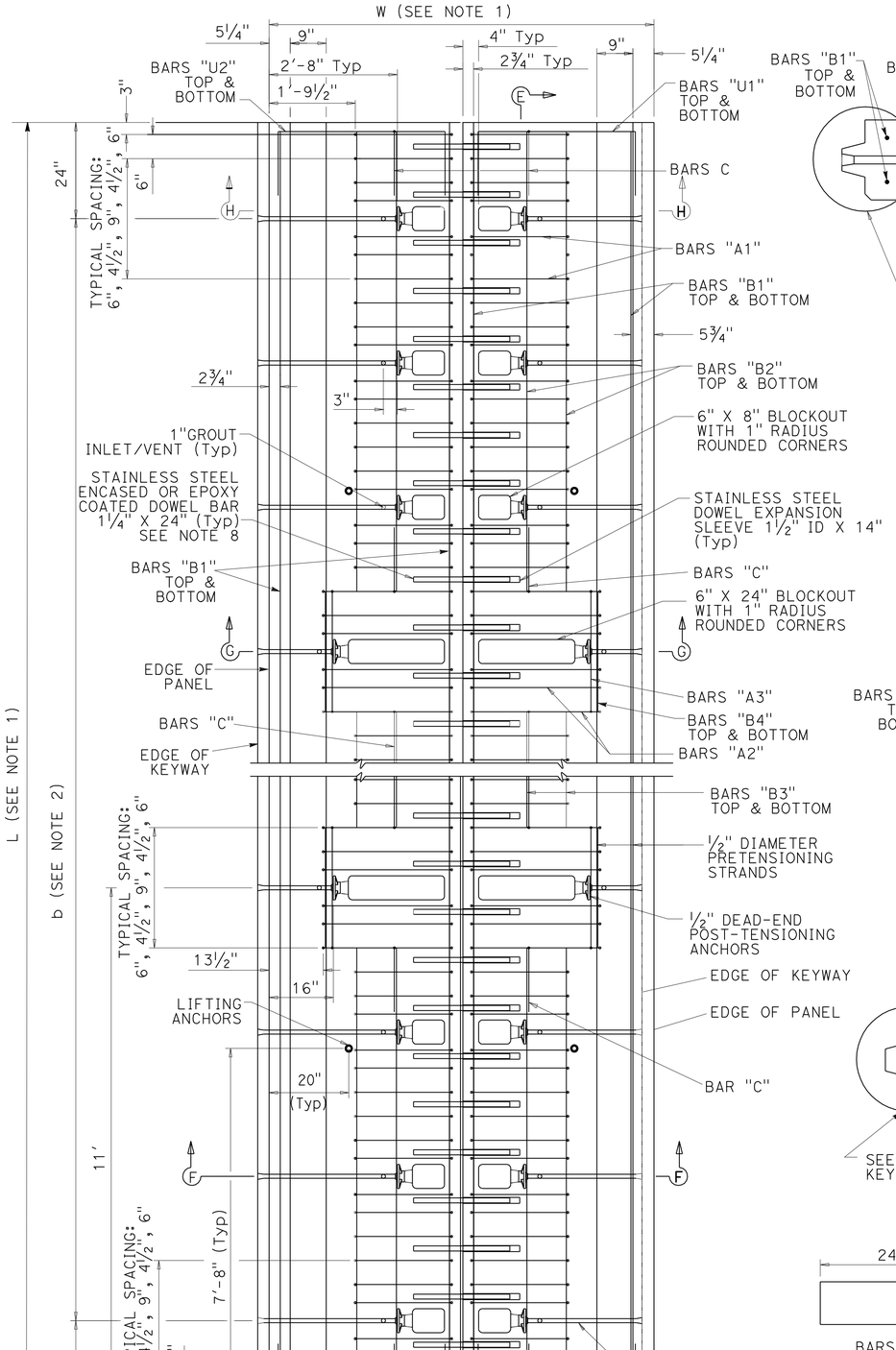

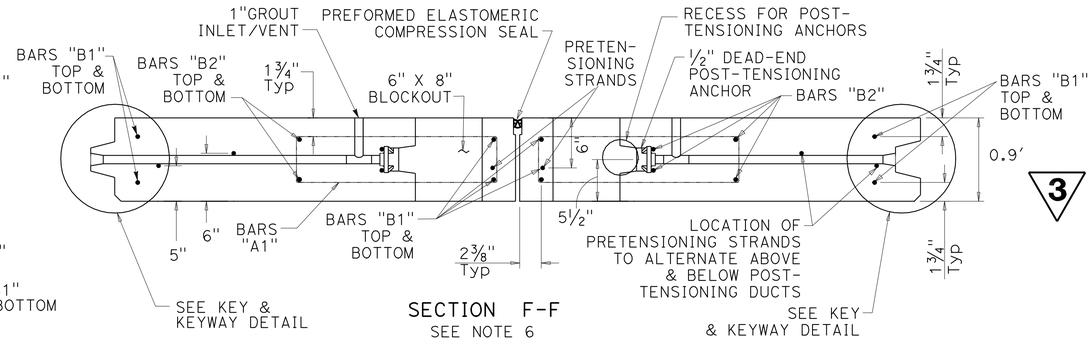

SECTION F-F
SEE NOTE 6

3

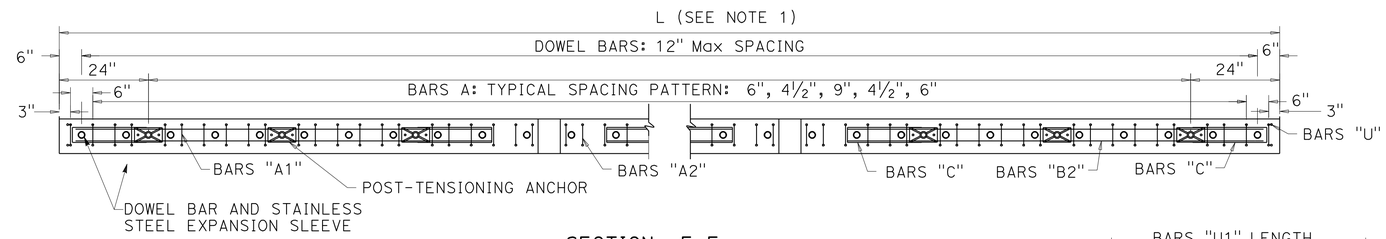

SECTION E-E

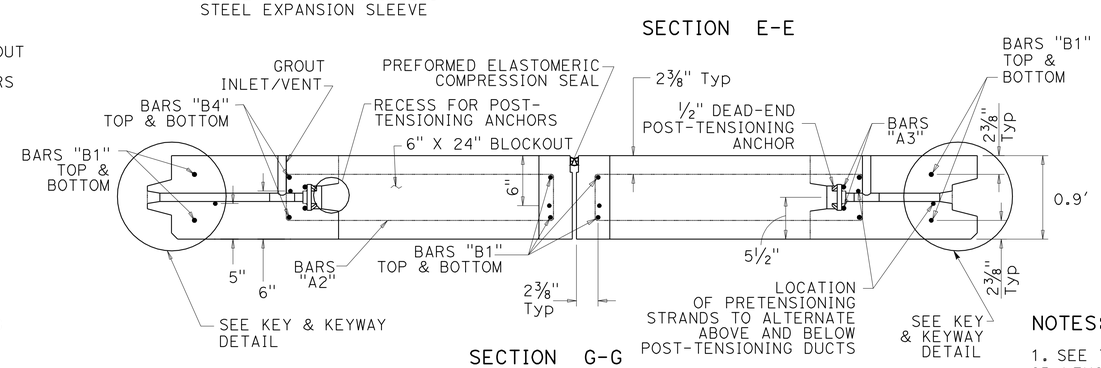

SECTION G-G
SEE NOTE 6

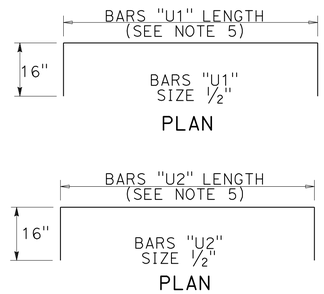

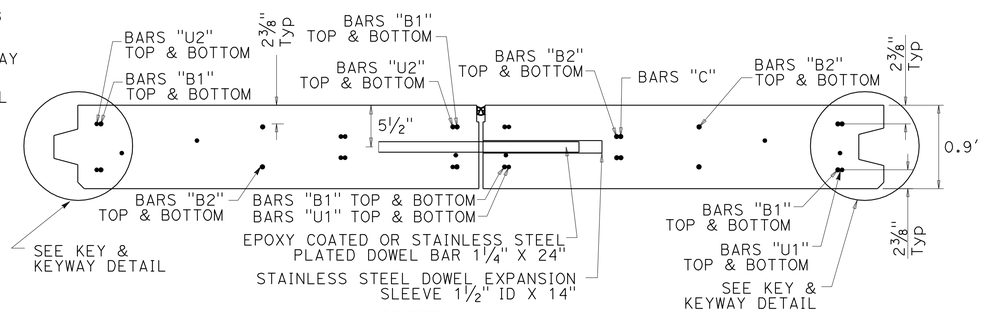

SECTION H-H

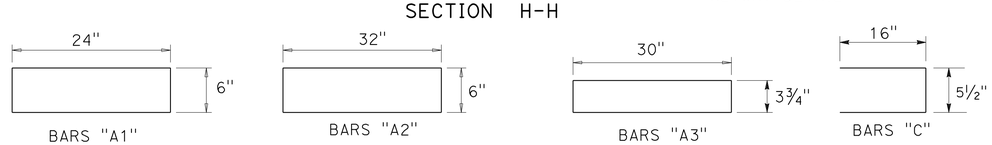

BARS "A1" ELEVATION
BARS "A2" ELEVATION
BARS "A3" ELEVATION
BARS "C" ELEVATION

NOTES:

1. SEE TABLES A AND B FOR WIDTH (W) OR LENGTH (L) FOR JOINT PANEL TYPE C2 FOR EACH PANEL.
2. FOR "b" DIMENSIONS, SEE TABLE B FOR JOINT PANEL TYPE C2.
3. SEE MISCELLANEOUS PANEL DETAILS FOR KEY & KEYWAY DETAIL.
4. SEE MISCELLANEOUS PANEL DETAILS FOR GROUT INLET/VENT.
5. FOR BAR "U1" AND "U2" LENGTHS, SEE TABLE A FOR JOINT PANEL TYPE C2.
6. SEE MISCELLANEOUS PANEL DETAILS FOR EXPANSION JOINT/ANCHOR DETAIL.
7. IN THE PANEL TYPE TABLES SHOWN ON CONSTRUCTION DETAILS C-26 THROUGH C-245, THE PANELS WITH A RADIUS (TYPE "B" AND "C") WITH ARC DIMENSIONS "w1" AND "w2"ARE CONSIDERED AS TANGENTS.
8. THE SECTION OF DOWEL EXTENDING INTO THE EXPANSION SLEEVE SHALL BE GREASED PRIOR TO BEING INSERTED INTO THE EXPANSION SLEEVE PRIOR TO CASTING.
9. ALL REINFORCEMENT DIMENSIONS ARE TO BE VERIFIED BY THE MANUFACTURER BEFORE PANEL FABRICATION.

3 REVISED PER ADDENDUM No. 3 DATED JANUARY 31, 2012

JOINT PANEL TYPE C2

CONSTRUCTION DETAILS
PRECAST PRESTRESSED CONCRETE PAVEMENT

NO SCALE

C-298

STATE OF CALIFORNIA - DEPARTMENT OF TRANSPORTATION
DESIGN
FUNCTIONAL SUPERVISOR: KRISTEN STAHL
CALCULATED-DESIGNED BY: WINNIE DEGUZMAN
CHECKED BY: KRISTEN STAHL
REVISED BY
DATE REVISED

LAST REVISION 00-00-00
DATE PLOTTED => 30-JAN-2012
TIME PLOTTED => 13:47

Dist	COUNTY	ROUTE	POST MILES TOTAL PROJECT	SHEET No.	TOTAL SHEETS
07	LA	710	17.2/26.4	410	1507

REGISTERED CIVIL ENGINEER 2-3-11 DATE

6-27-11
PLANS APPROVAL DATE

REGISTERED PROFESSIONAL ENGINEER KIRSTEN R. STAHL No. C46857 Exp. 6-30-13 CIVIL STATE OF CALIFORNIA

THE STATE OF CALIFORNIA OR ITS OFFICERS OR AGENTS SHALL NOT BE RESPONSIBLE FOR THE ACCURACY OR COMPLETENESS OF SCANNED COPIES OF THIS PLAN SHEET.

3

NOTES:

1. SEE TABLES A AND B FOR WIDTH (W) OR LENGTH (L) FOR JOINT PANEL C3.
2. FOR "B" DIMENSIONS, SEE TABLE B FOR JOINT PANEL C3.
3. SEE MISCELLANEOUS PANEL DETAILS FOR KEY & KEYWAY DETAIL.
4. SEE MISCELLANEOUS PANEL DETAILS FOR GROUT INLET/VENT.
5. FOR BAR "U1" AND "U2" LENGTHS, SEE TABLE A FOR JOINT PANEL TYPE C3.
6. IN THE PANEL TYPE TABLES SHOWN ON CONSTRUCTION DETAILS C-26 THROUGH C-245, THE PANELS WITH A RADIUS (TYPE "B" AND "C") WITH ARC DIMENSIONS "w1" AND "w2"ARE CONSIDERED AS TANGENTS.
7. THE SECTION OF DOWEL EXTENDING INTO THE EXPANSION SLEEVE SHALL BE GREASED PRIOR TO BEING INSERTED INTO THE EXPANSION SLEEVE PRIOR TO CASTING.
8. ALL REINFORCEMENT DIMENSIONS ARE TO BE VERIFIED BY THE MANUFACTURER BEFORE PANEL FABRICATION.

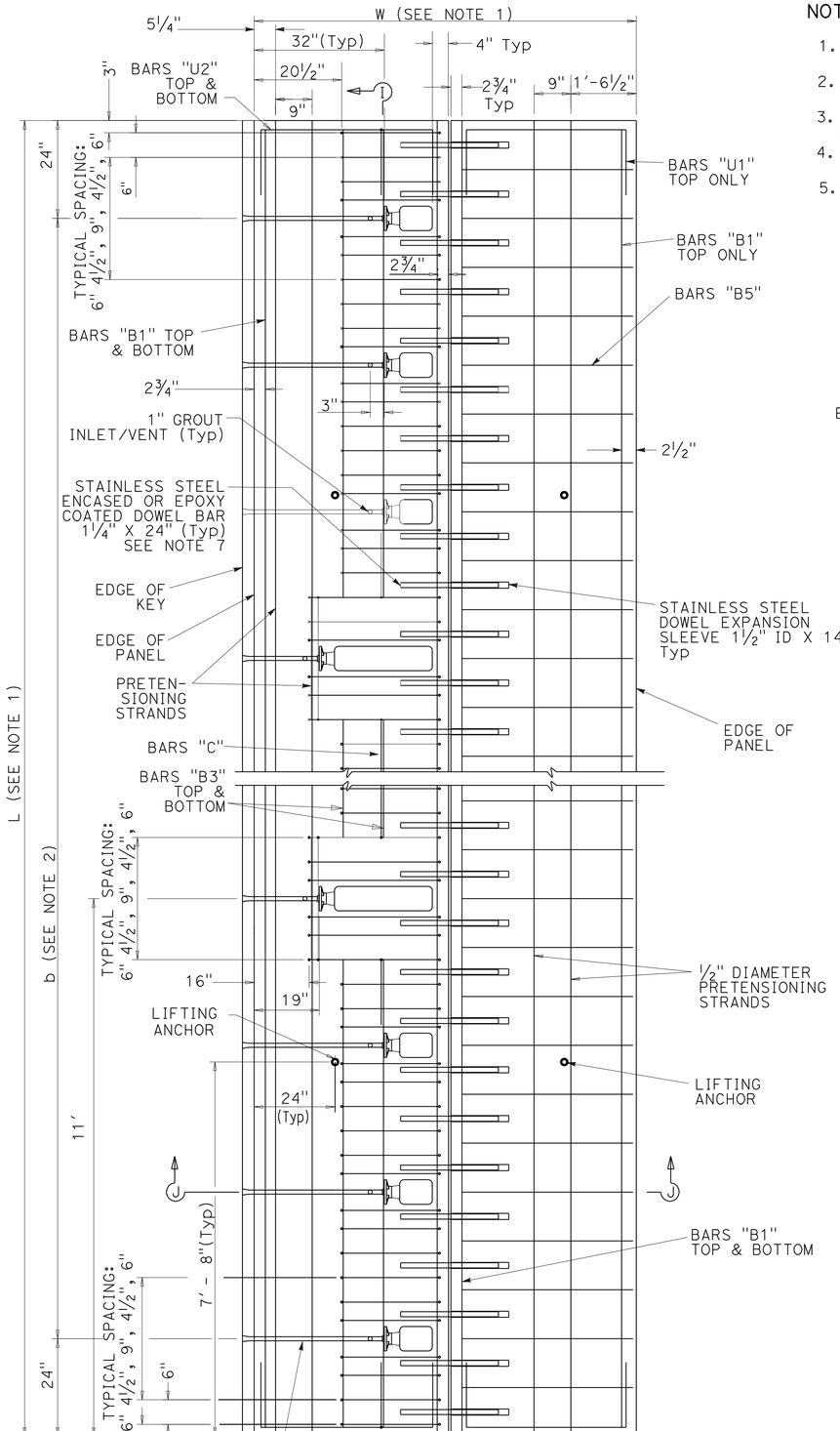

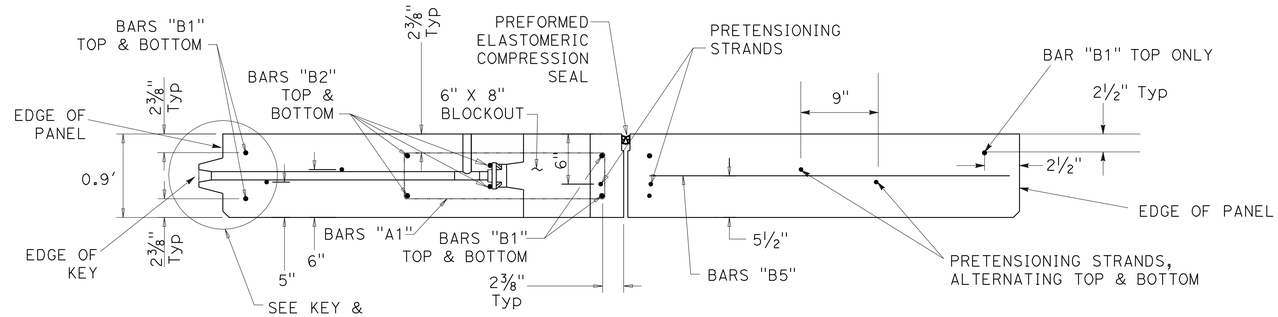

SECTION J-J

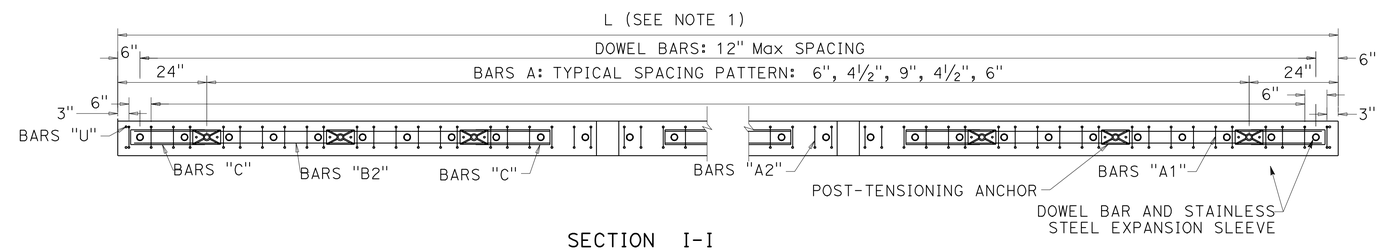

SECTION I-I

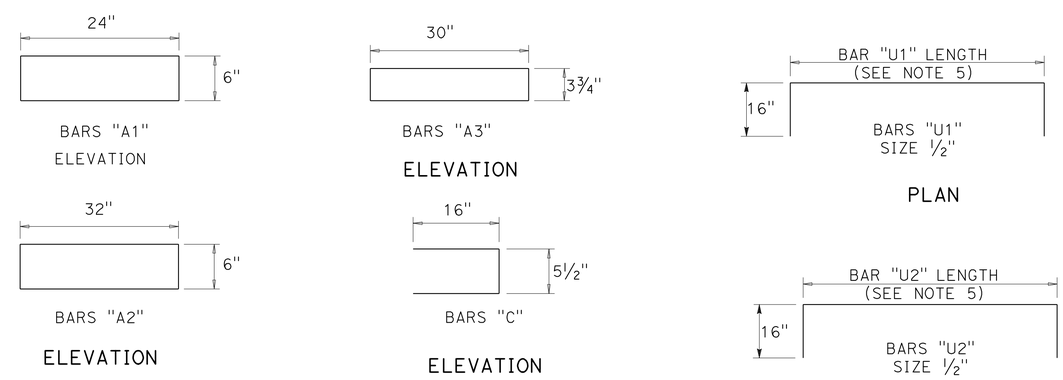

JOINT PANEL TYPE C3

CONSTRUCTION DETAILS PRECAST PRESTRESSED CONCRETE PAVEMENT

NO SCALE

3 REVISED PER ADDENDUM No. 3 DATED JANUARY 31, 2012

C-299

STATE OF CALIFORNIA - DEPARTMENT OF TRANSPORTATION
Caltrans DESIGN

FUNCTIONAL SUPERVISOR: KRISTEN STAHL
CALCULATED-DESIGNED BY: WINNIE DEGUZMAN
CHECKED BY: KRISTEN STAHL
REVISED BY
DATE REVISED

LAST REVISION 00-00-00
DATE PLOTTED => 31-JAN-2012
TIME PLOTTED => 09:33

Dist	COUNTY	ROUTE	POST MILES TOTAL PROJECT	SHEET No.	TOTAL SHEETS
07	LA	710	17.2/26.4	411	1507

REGISTERED CIVIL ENGINEER 2-3-11 DATE

6-27-11
PLANS APPROVAL DATE

REGISTERED PROFESSIONAL ENGINEER KIRSTEN R. STAHL No. C46857 Exp. 6-30-13 CIVIL STATE OF CALIFORNIA

THE STATE OF CALIFORNIA OR ITS OFFICERS OR AGENTS SHALL NOT BE RESPONSIBLE FOR THE ACCURACY OR COMPLETENESS OF SCANNED COPIES OF THIS PLAN SHEET.

3

NOTES:

1. SEE TABLES A AND B FOR WIDTH (W) OR LENGTH (L) FOR JOINT PANEL TYPE C2 FOR EACH PANEL.
2. FOR "b" DIMENSIONS, SEE TABLE B FOR JOINT PANEL TYPE C2.
3. SEE MISCELLANEOUS PANEL DETAILS FOR KEY & KEYWAY DETAIL.
4. SEE MISCELLANEOUS PANEL DETAILS FOR GROUT INLET/VENT.
5. FOR BAR "U1" AND "U2" LENGTHS, SEE TABLE A FOR JOINT PANEL TYPE C2.
6. SEE MISCELLANEOUS PANEL DETAILS FOR EXPANSION JOINT/ANCHOR DETAIL.
7. IN THE PANEL TYPE TABLES SHOWN ON CONSTRUCTION DETAILS C-26 THROUGH C-245, THE PANELS WITH A RADIUS (TYPE "B" AND "C") WITH ARCDIMENSIONS "W1" AND "W2" ARE CONSIDERED AS TANGENTS.
8. THE SECTION OF DOWEL EXTENDING INTO THE EXPANSION SLEEVE SHALL BE GREASED PRIOR TO BEING INSERTED INTO THE EXPANSION SLEEVE PRIOR TO CASTING.

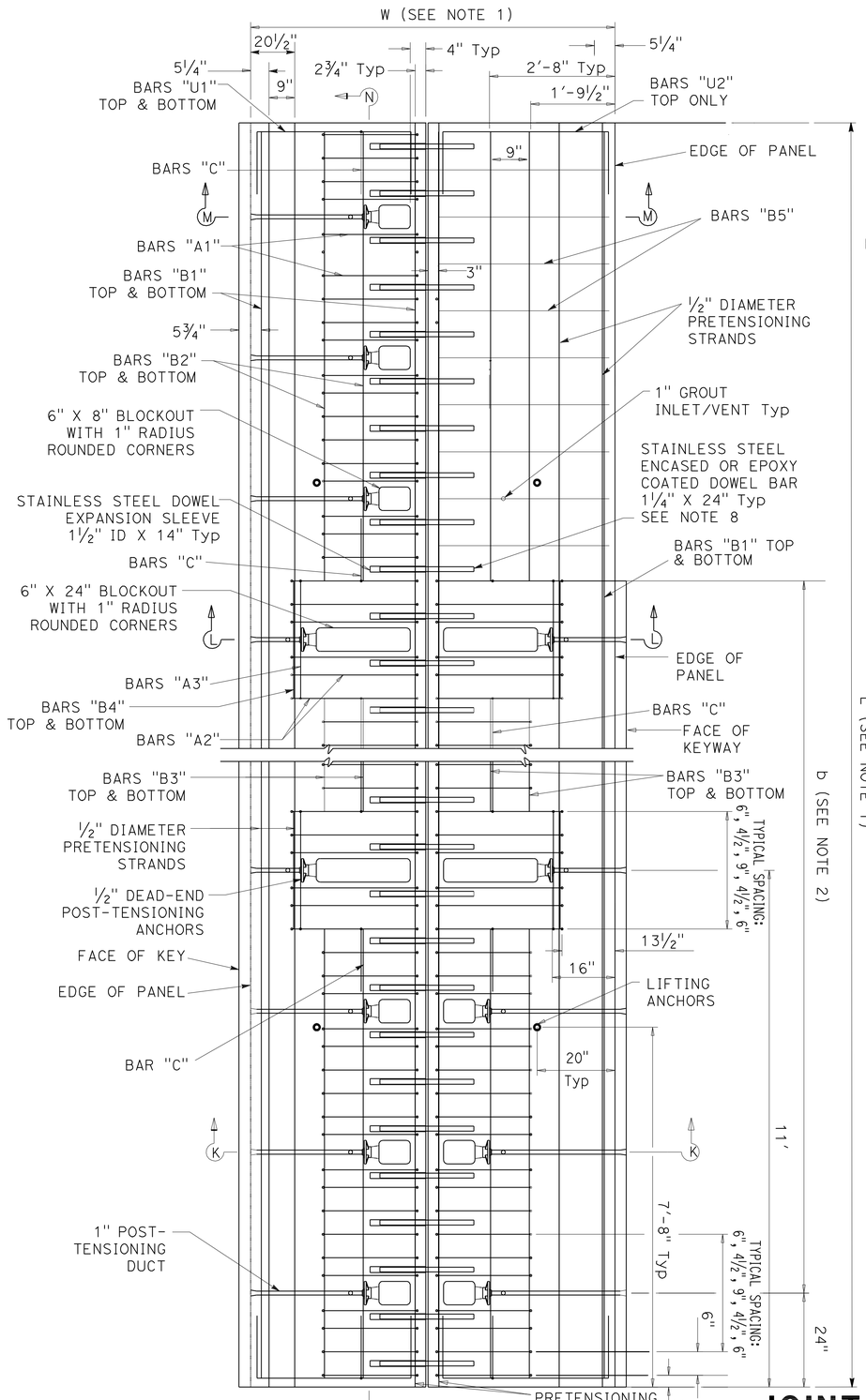

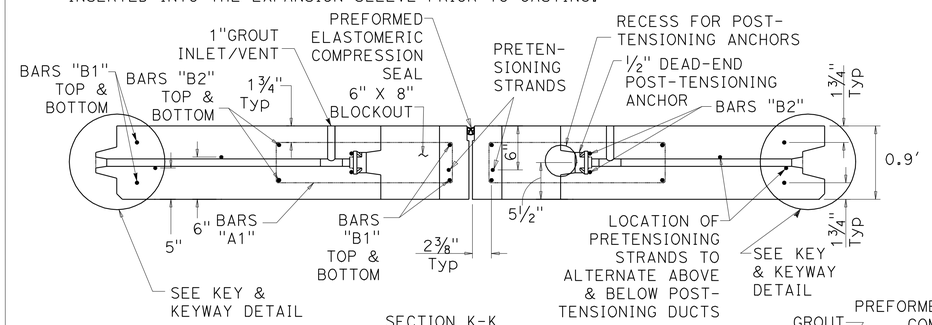

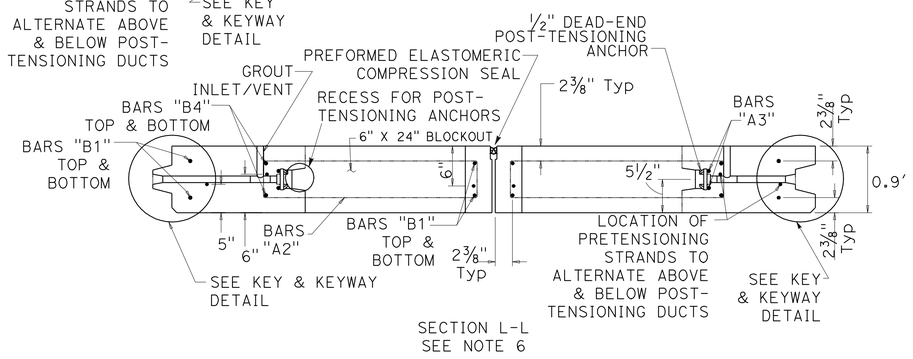

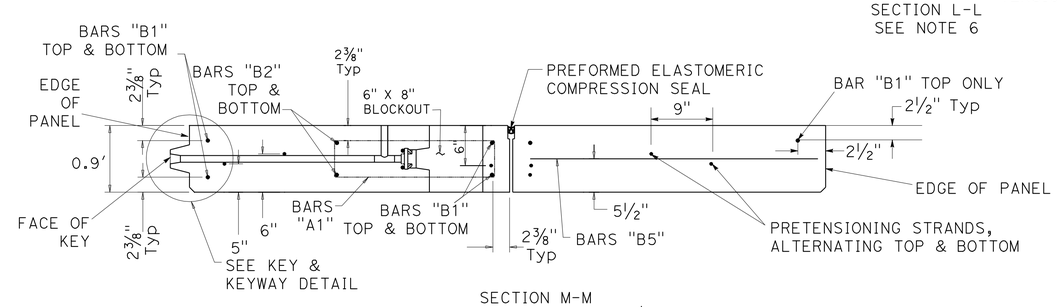

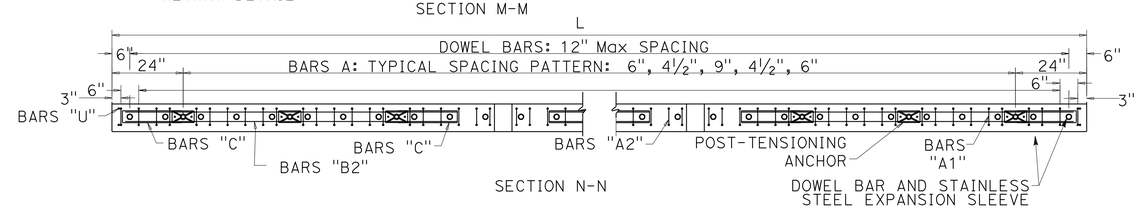

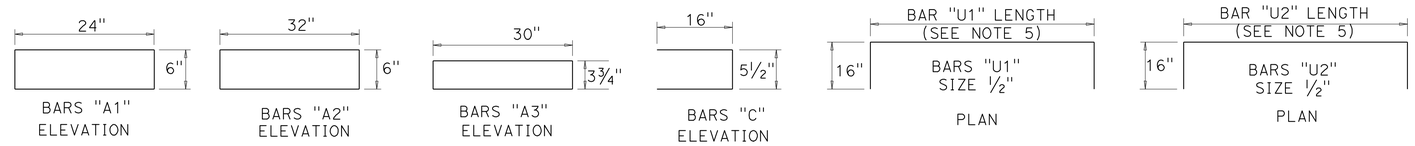

CONSTRUCTION DETAILS
PRECAST PRESTRESSED CONCRETE PAVEMENT

NO SCALE

JOINT PANEL (MODIFIED) TYPICAL

3 **REVISED PER ADDENDUM No. 3 DATED JANUARY 31, 2012**

C-300

STATE OF CALIFORNIA - DEPARTMENT OF TRANSPORTATION
Caltrans® DESIGN
FUNCTIONAL SUPERVISOR: KIRSTEN STAHL
CALCULATED-DESIGNED BY: WINNIE DEGUZMAN
CHECKED BY: KIRSTEN STAHL
REVISED BY
DATE REVISED

LAST REVISION 00-00-00
DATE PLOTTED => 30-JAN-2012
TIME PLOTTED => 13:47

Dist	COUNTY	ROUTE	POST MILES TOTAL PROJECT	SHEET No.	TOTAL SHEETS
07	LA	710	17.2/26.4	412	1507

REGISTERED CIVIL ENGINEER 2-3-11 DATE

6-27-11
PLANS APPROVAL DATE

REGISTERED PROFESSIONAL ENGINEER KIRSTEN R. STAHL No. C46857 Exp. 6-30-13 CIVIL STATE OF CALIFORNIA

THE STATE OF CALIFORNIA OR ITS OFFICERS OR AGENTS SHALL NOT BE RESPONSIBLE FOR THE ACCURACY OR COMPLETENESS OF SCANNED COPIES OF THIS PLAN SHEET.

3

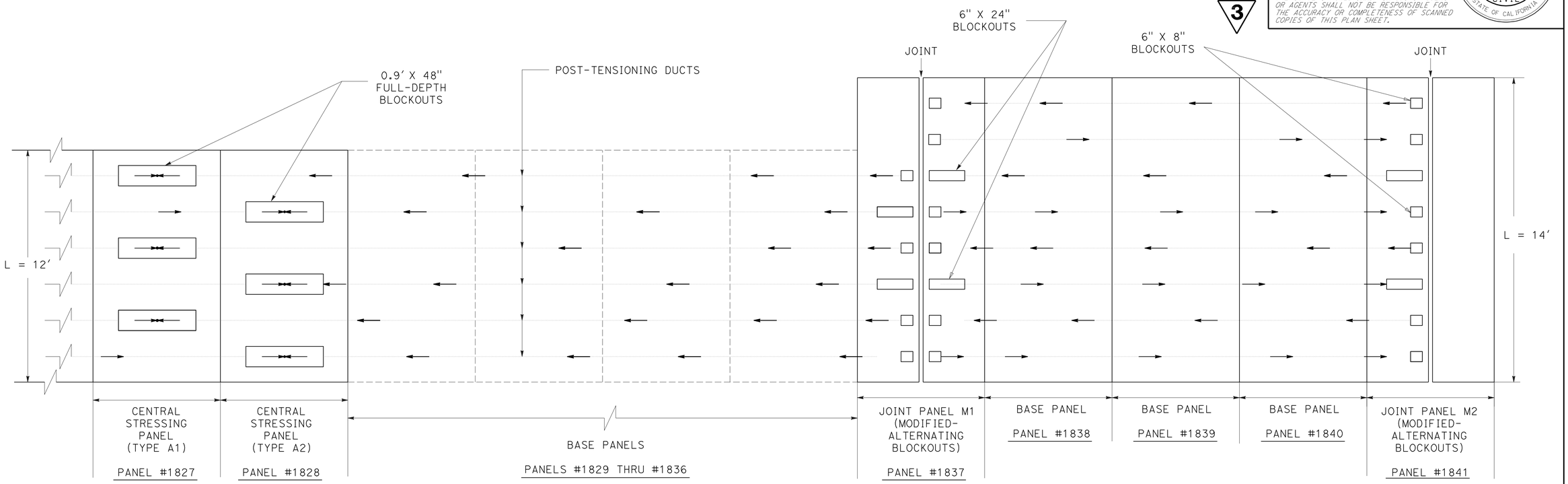

LAYOUT OF PANELS #1837 THROUGH #1841

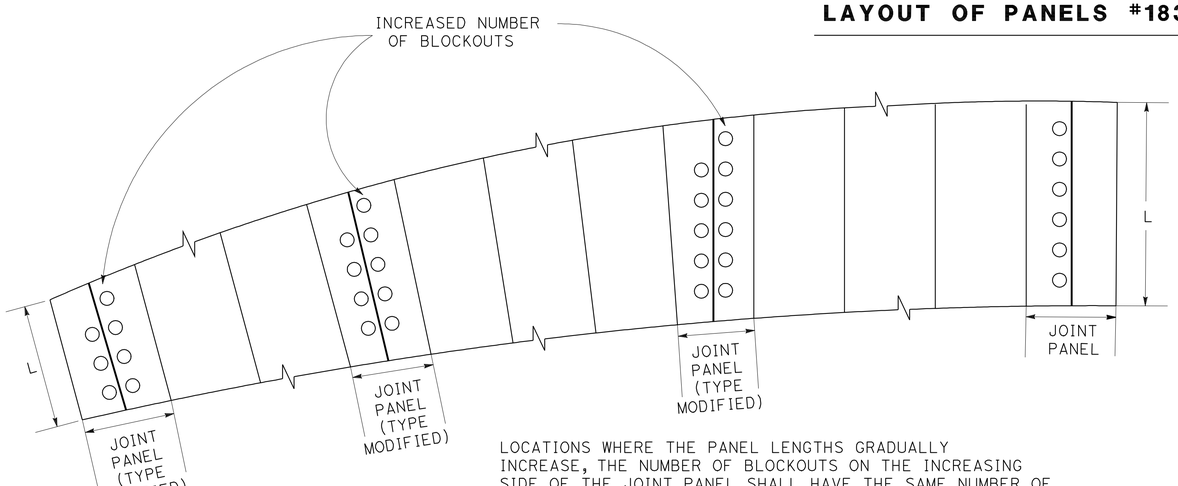

LOCATIONS WHERE THE PANEL LENGTHS GRADUALLY INCREASE, THE NUMBER OF BLOCKOUTS ON THE INCREASING SIDE OF THE JOINT PANEL SHALL HAVE THE SAME NUMBER OF BLOCKOUTS AS THE NEXT LONGER JOINT PANEL.

NUMBER OF BLOCKOUTS

SYMBOLS:

← DIRECTION OF PULL FOR POST-TENSIONING

○ REPRESENTATION OF BLOCKOUTS (SMALL: 6"X8" OR LARGE: 6"X24")

3 **REVISED PER ADDENDUM No. 3 DATED JANUARY 31, 2012**

CONSTRUCTION DETAILS
JOINT PANELS M1 & M2 LAYOUT
PRECAST PRESTRESSED CONCRETE PAVEMENT

NO SCALE

C-301

STATE OF CALIFORNIA - DEPARTMENT OF TRANSPORTATION
Caltrans® DESIGN

FUNCTIONAL SUPERVISOR: KIRSTEN STAHL
CALCULATED-DESIGNED BY: WINNIE DEGUZMAN
CHECKED BY: KIRSTEN STAHL
REVISED BY
DATE REVISED

LAST REVISION 00-00-00
DATE PLOTTED => 30-JAN-2012
TIME PLOTTED => 13:47

Dist	COUNTY	ROUTE	POST MILES TOTAL PROJECT	SHEET No.	TOTAL SHEETS
07	LA	710	17.2/26.4	413	1507

REGISTERED CIVIL ENGINEER 2-3-11 DATE

6-27-11
PLANS APPROVAL DATE

REGISTERED PROFESSIONAL ENGINEER KIRSTEN R. STAHL No. C46857 Exp. 6-30-13 CIVIL STATE OF CALIFORNIA

THE STATE OF CALIFORNIA OR ITS OFFICERS OR AGENTS SHALL NOT BE RESPONSIBLE FOR THE ACCURACY OR COMPLETENESS OF SCANNED COPIES OF THIS PLAN SHEET.

3

NOTES:

1. SEE MISCELLANEOUS PANEL DETAILS FOR KEY & KEYWAY DETAIL.
2. SEE MISCELLANEOUS PANELS DETAILS FOR GROUT INLET/VENT.
3. FOR BAR "U1" AND "U2" LENGTHS, SEE TABLE A FOR JOINT PANEL TYPE C2.
4. SEE MISCELLANEOUS PANEL DETAILS FOR EXPANSION JOINT/ANCHOR DETAIL.
5. IN THE PANEL TYPE TABLES SHOWN ON CONSTRUCTION DETAILS C-26 THROUGH C-245, THE PANELS WITH A RADIUS (TYPE "B" AND "C") WITH ARC DIMENSIONS "w1" AND "w2" ARE CONSIDERED AS TANGENTS.
6. THE SECTION OF DOWEL EXTENDING INTO THE EXPANSION SLEEVE SHALL BE GREASED PRIOR TO BEING INSERTED INTO THE EXPANSION SLEEVE PRIOR TO CASTING.

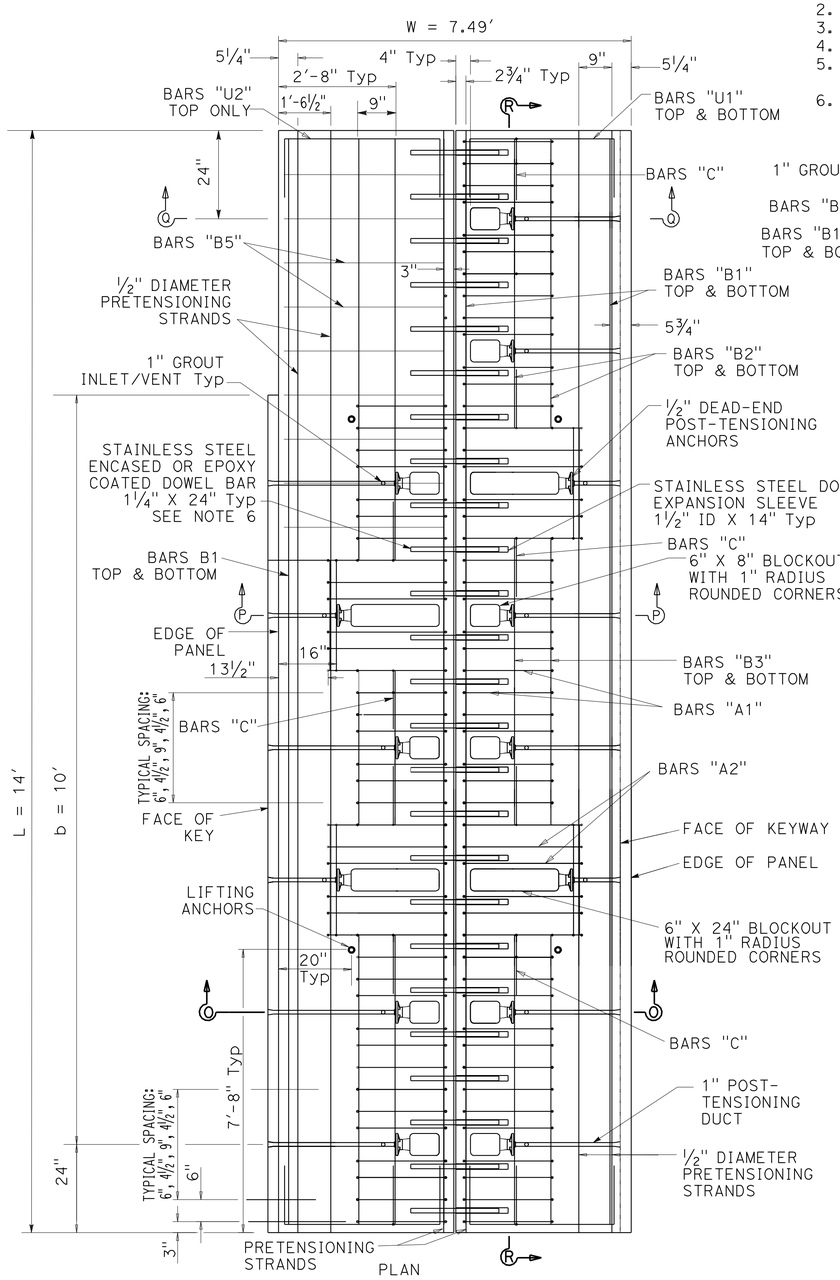

JOINT PANEL M1 FOR PANEL #1837

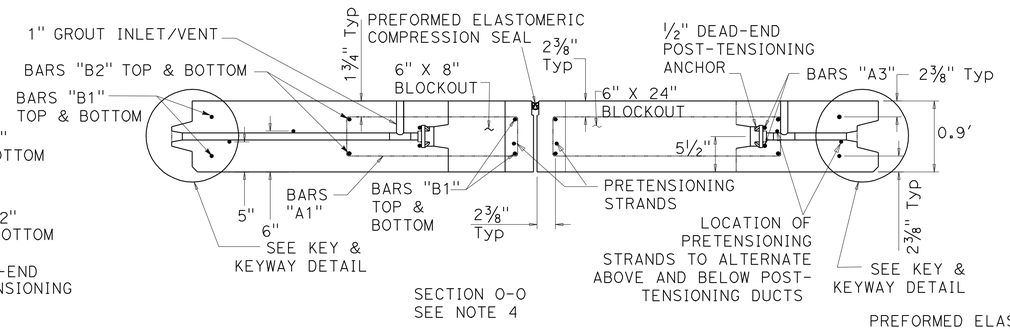

SECTION O-O
SEE NOTE 4

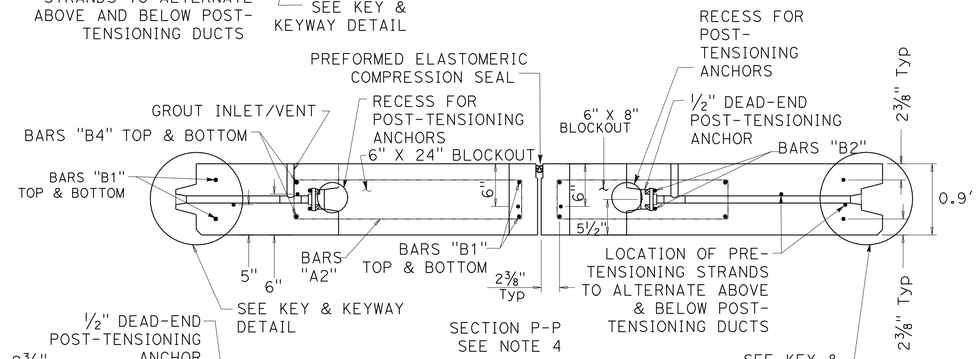

SECTION P-P
SEE NOTE 4

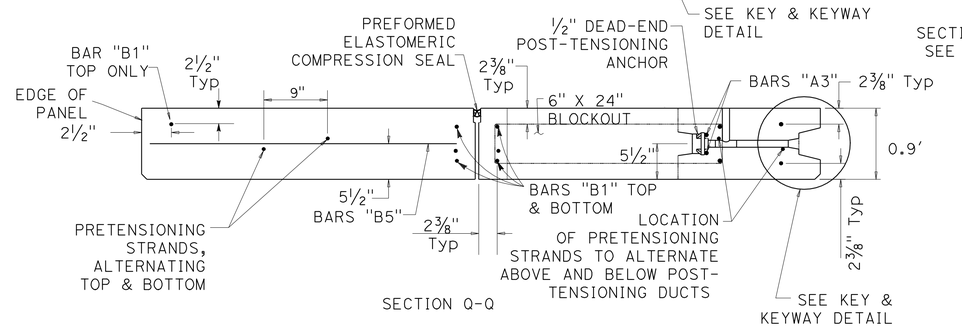

SECTION Q-Q

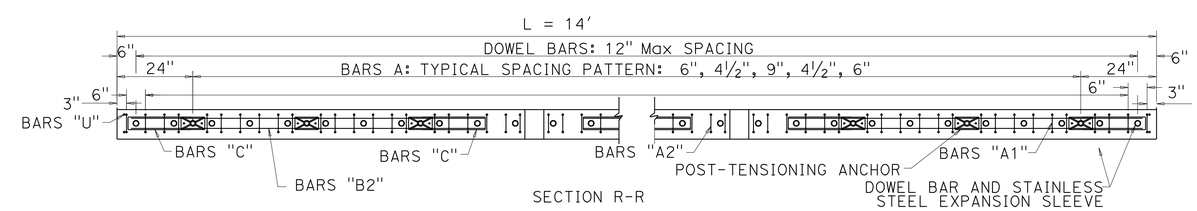

SECTION R-R

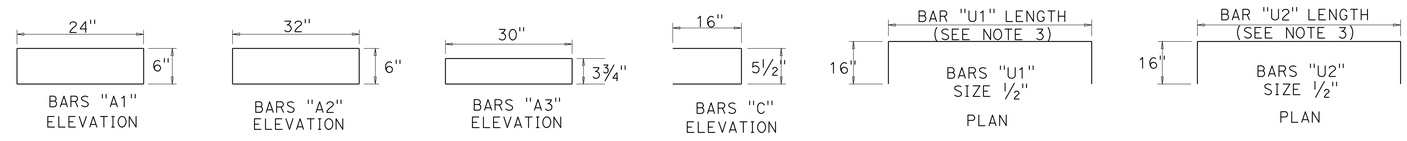

JOINT PANELS M1 (MODIFIED-ALTERNATING BLOCKOUTS)

3 **REVISED PER ADDENDUM No. 3 DATED JANUARY 31, 2012**

CONSTRUCTION DETAILS
PRECAST PRESTRESSED CONCRETE PAVEMENT

NO SCALE

C-302

STATE OF CALIFORNIA - DEPARTMENT OF TRANSPORTATION
Caltrans® DESIGN

FUNCTIONAL SUPERVISOR: KIRSTEN STAHL
CALCULATED-DESIGNED BY: WINNIE DEGUZMAN
CHECKED BY: KIRSTEN STAHL
REVISED BY
DATE REVISED

LAST REVISION 00-00-00
DATE PLOTTED => 30-JAN-2012
TIME PLOTTED => 13:48

Dist	COUNTY	ROUTE	POST MILES TOTAL PROJECT	SHEET No.	TOTAL SHEETS
07	LA	710	17.2/26.4	414	1507

REGISTERED CIVIL ENGINEER 2-3-11 DATE

6-27-11
PLANS APPROVAL DATE

REGISTERED PROFESSIONAL ENGINEER KIRSTEN R. STAHL No. C46857 Exp. 6-30-13 CIVIL STATE OF CALIFORNIA

THE STATE OF CALIFORNIA OR ITS OFFICERS OR AGENTS SHALL NOT BE RESPONSIBLE FOR THE ACCURACY OR COMPLETENESS OF SCANNED COPIES OF THIS PLAN SHEET.

3

NOTES:

1. SEE MISCELLEANEOUS PANEL DETAILS FOR KEY & KEYWAY DETAIL.
2. SEE MISCELLANEOUS PANEL DETAILS FOR GROUT INLET/VENT.
3. FOR BAR "U1" AND "U2" LENGTHS, SEE TABLE A FOR JOINT PANEL TYPE C2.
4. SEE MISCELLANEOUS PANEL DETAILS FOR EXPANSION JOINT/ANCHOR DETAIL.
5. IN THE PANEL TYPE TABLES SHOWN ON CONSTRUCTION DETAILS C-26 THROUGH C-245, THE PANELS WITH A RADIUS (TYPE "B" AND "C") WITH ARC DIMENSIONS "w1" AND "w2" ARE CONSIDERED AS TANGENTS.
6. THE SECTION OF DOWEL EXTENDING INTO THE EXPANSION SLEEVE SHALL BE GREASED PRIOR TO BEING INSERTED INTO THE EXPANSION SLEEVE PRIOR TO CASTING.

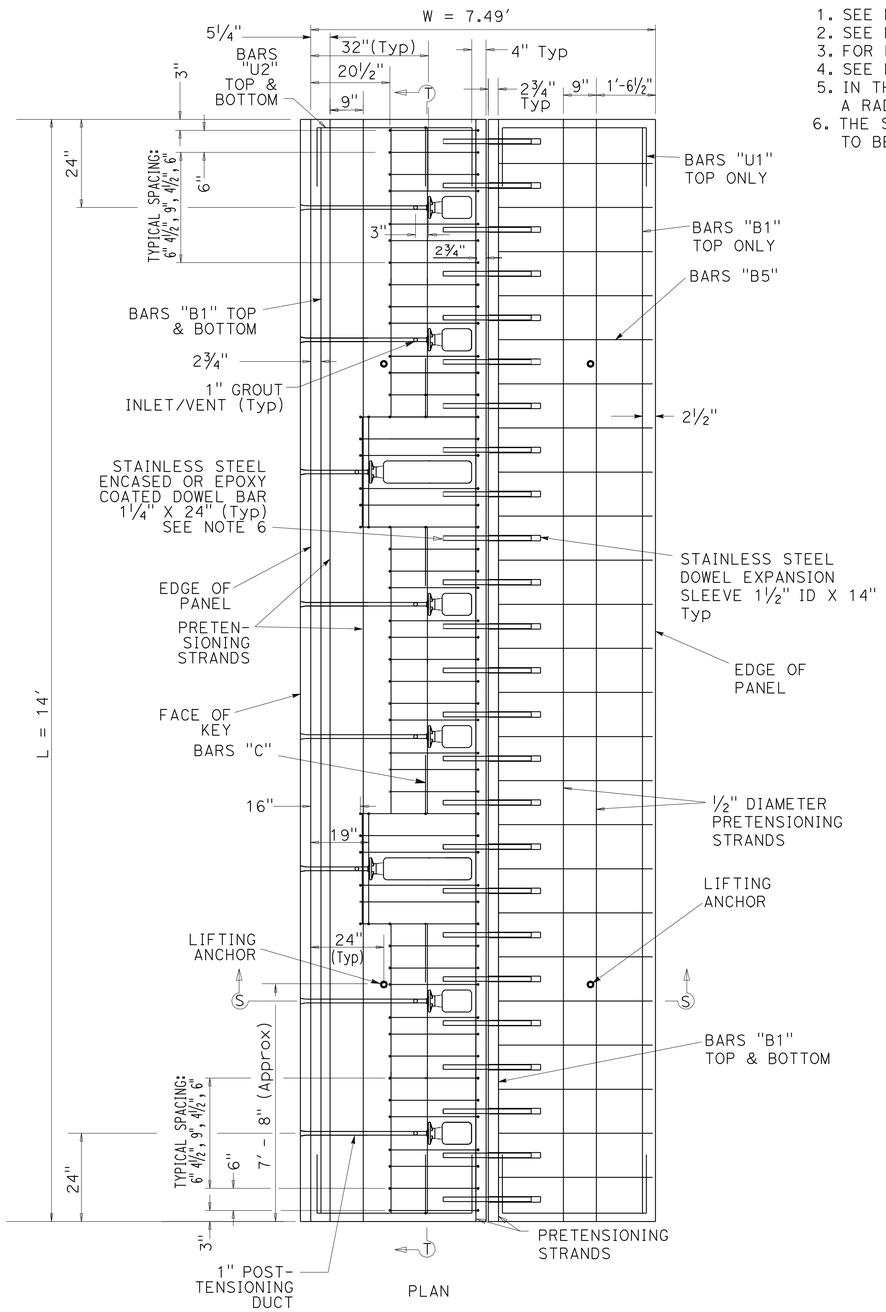

JOINT PANEL M2
FOR PANEL #1841

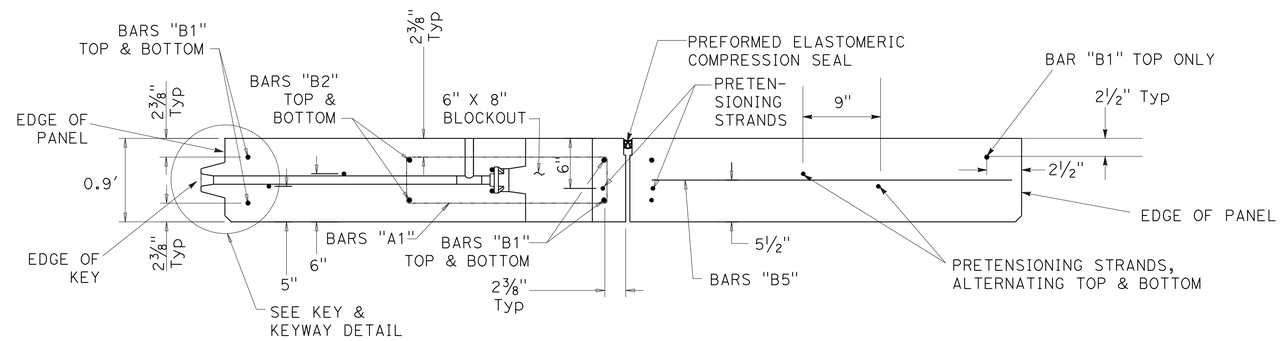

SECTION S-S

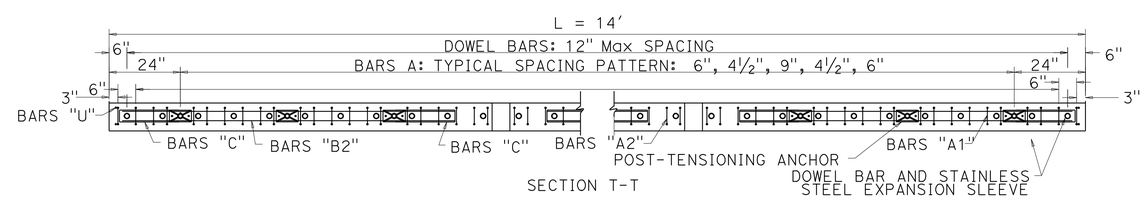

SECTION T-T

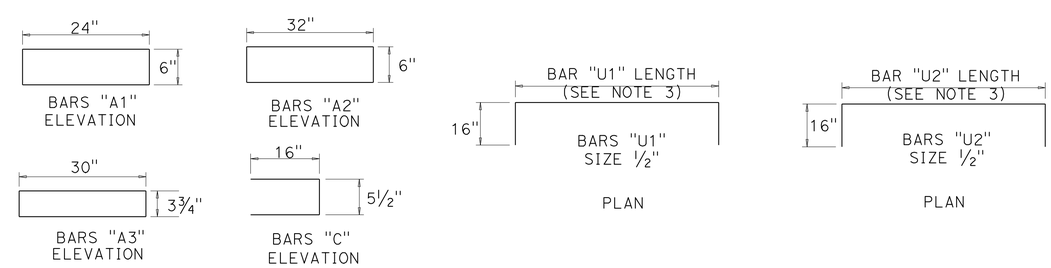

JOINT PANEL M2 (MODIFIED-ALTERNATING BLOCKOUTS)

3 **REVISED PER ADDENDUM No. 3 DATED JANUARY 31, 2012**

CONSTRUCTION DETAILS
PRECAST PRESTRESSED CONCRETE PAVEMENT

NO SCALE

C-303

STATE OF CALIFORNIA - DEPARTMENT OF TRANSPORTATION
Caltrans® DESIGN

FUNCTIONAL SUPERVISOR: KIRSTEN STAHL
CALCULATED-DESIGNED BY: WINNIE DEGUZMAN
CHECKED BY: KIRSTEN STAHL
REVISED BY
DATE REVISED

LAST REVISION 00-00-00
DATE PLOTTED => 30-JAN-2012
TIME PLOTTED => 13:48

Dist	COUNTY	ROUTE	POST MILES TOTAL PROJECT	SHEET No.	TOTAL SHEETS
07	LA	710	17.2/26.4	415	1507

REGISTERED CIVIL ENGINEER 2-3-11 DATE

6-27-11
PLANS APPROVAL DATE

REGISTERED PROFESSIONAL ENGINEER KIRSTEN R. STAHL No. C46857 Exp. 6-30-13 CIVIL STATE OF CALIFORNIA

THE STATE OF CALIFORNIA OR ITS OFFICERS OR AGENTS SHALL NOT BE RESPONSIBLE FOR THE ACCURACY OR COMPLETENESS OF SCANNED COPIES OF THIS PLAN SHEET.

3

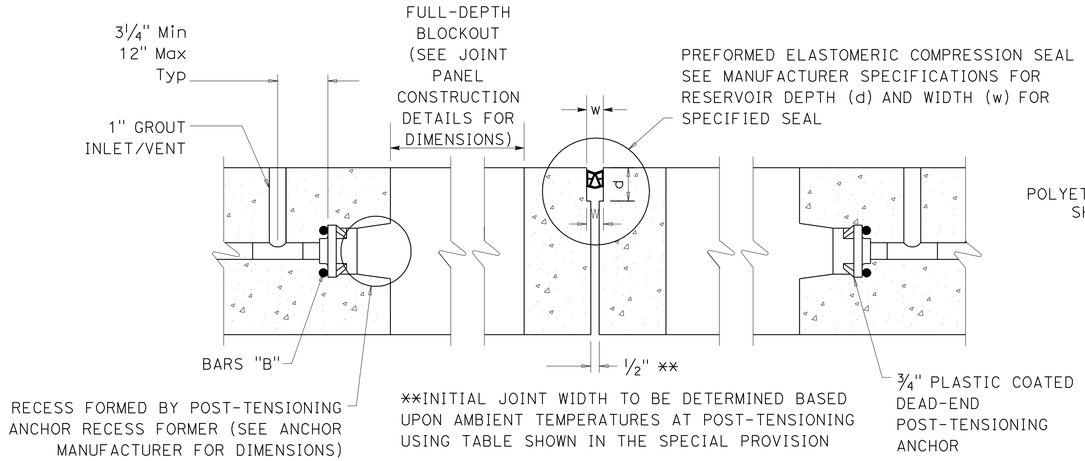

EXPANSION JOINT/ANCHOR DETAIL

FOR TYPE C2 JOINT PANELS AND ALL MODIFIED JOINT PANELS

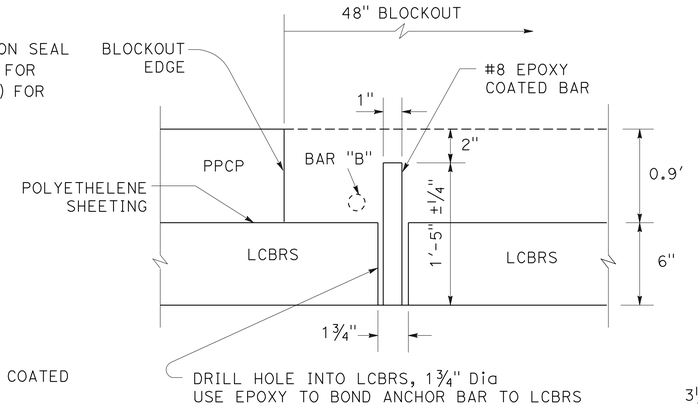

ANCHOR BAR DETAIL AT FULL-DEPTH BLOCKOUTS FOR CENTRAL STRESSING PANELS

ABBREVIATIONS:

LCBRS = LEAN CONCRETE BASE RAPID SETTING
PPCP = PRECAST PRESTRESSED CONCRETE PAVEMENT
P-T = POST TENSIONING

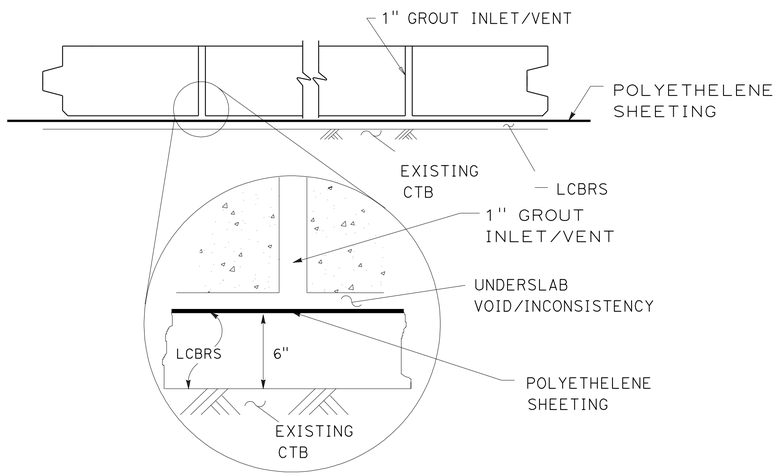

UNDERSLAB GROUT INLET/VENT AND POLYETHELENE SHEETING

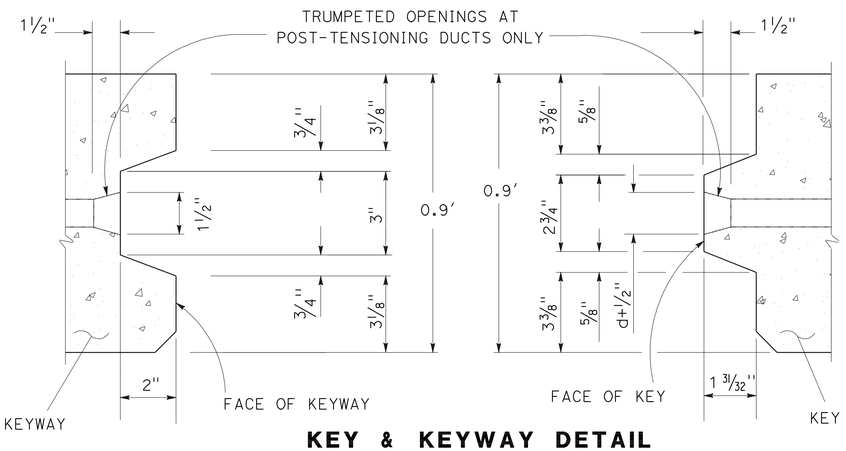

KEY & KEYWAY DETAIL

d = DIAMETER OF THE POST-TENSIONING DUCT = 1"

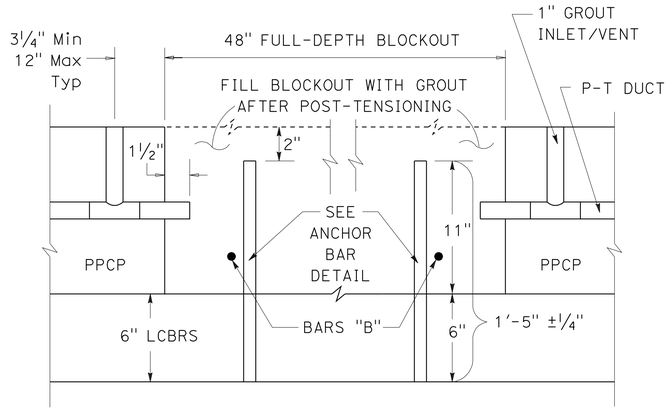

CENTRAL STRESSING BLOCKOUT DETAIL

FOR TYPE A1 AND TYPE A2 CENTRAL STRESSING PANELS

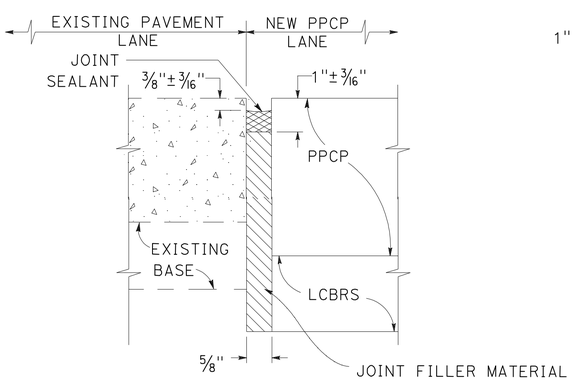

ISOLATION JOINT DETAIL

FOR LONGITUDINAL JOINTS ADJACENT TO EXISTING PAVEMENT, JPCP, RSC, AND PPCP

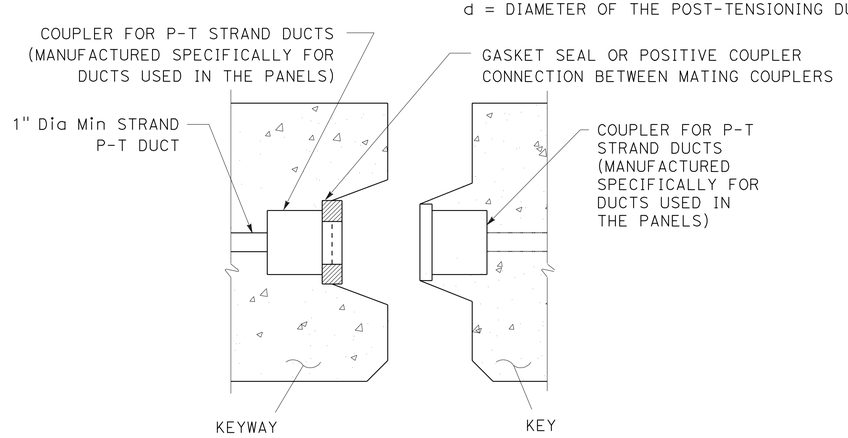

COUPLER ALTERNATIVE FOR STRAND POST-TENSIONING DUCT SEAL

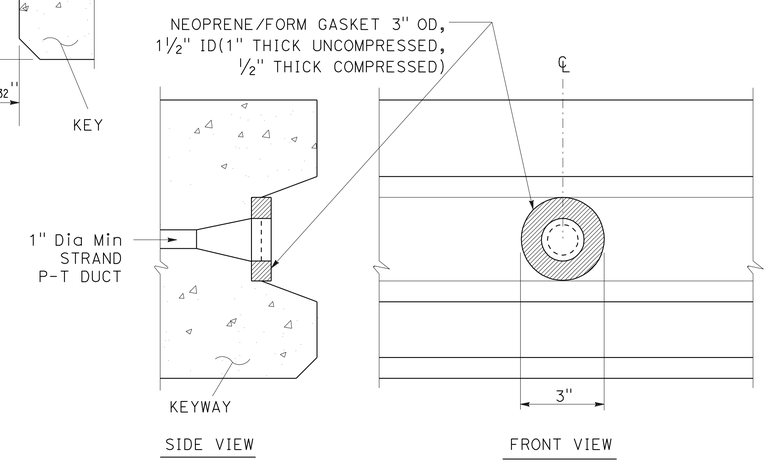

STRAND POST-TENSIONING DUCT SEAL DETAIL

CONSTRUCTION DETAILS
MISCELLANEOUS PANEL DETAILS
PRECAST PRESTRESSED CONCRETE PAVEMENT

NO SCALE

3 **REVISED PER ADDENDUM No. 3 DATED JANUARY 31, 2012**

C-304

STATE OF CALIFORNIA - DEPARTMENT OF TRANSPORTATION
Caltrans® DESIGN
FUNCTIONAL SUPERVISOR: KIRSTEN STAHL
CALCULATED-DESIGNED BY: WINNIE DEGUZMAN
CHECKED BY: KIRSTEN STAHL
REVISED BY
DATE REVISED

LAST REVISION 00-00-00
DATE PLOTTED => 30-JAN-2012
TIME PLOTTED => 13:48

Dist	COUNTY	ROUTE	POST MILES TOTAL PROJECT	SHEET No.	TOTAL SHEETS
07	LA	710	17.2/26.4	416	1507

REGISTERED CIVIL ENGINEER 2-3-11 DATE

6-27-11
PLANS APPROVAL DATE

REGISTERED PROFESSIONAL ENGINEER KIRSTEN R. STAHL No. C46857 Exp. 6-30-13 CIVIL STATE OF CALIFORNIA

THE STATE OF CALIFORNIA OR ITS OFFICERS OR AGENTS SHALL NOT BE RESPONSIBLE FOR THE ACCURACY OR COMPLETENESS OF SCANNED COPIES OF THIS PLAN SHEET.

3

ABBREVIATIONS:

LCBRS = LEAN CONCRETE BASE RAPID SETTING
P-T = POST-TENSIONING
RSC = RAPID STRENGTH CONCRETE
PPCP = PRECAST PRESTRESSED CONCRETE PAVEMENT

NOTES:

1. 1 1/2 " DIAMETER DOWEL BARS 1'-6" ± 1/4 " LENGTH ARE TO BE USED WHEN THE EXISTING PAVEMENT THICKNESS, D, IS EQUAL TO OR GREATER THAN 0.70'. FOR A PAVEMENT THICKNESS, D, LESS THAN 0.70', USE 1 1/4 " DIAMETER DOWEL BAR 1'-6" ± 1/4 " IN LENGTH.
2. SEAL EXISTING TRANSVERSE JOINT AT BOTTOM AND SIDES OF THE DOWEL BAR SLOT WITH CAULKING FILLER PRIOR TO PLACING DOWEL BAR AND FOAM CORE INSERT.
3. SEE STANDARD PLAN P7 FOR FOAM CORE INSERT DETAIL.
4. CAST SLEEVES EVERY 1' C-C DURING PANEL FABRICATION OR DRILL AND BOND HOLE EVERY 1' C-C. SLEEVES OR DRILLED HOLES ARE 1/8 " LARGER THAN THE DOWEL DIAMETER.

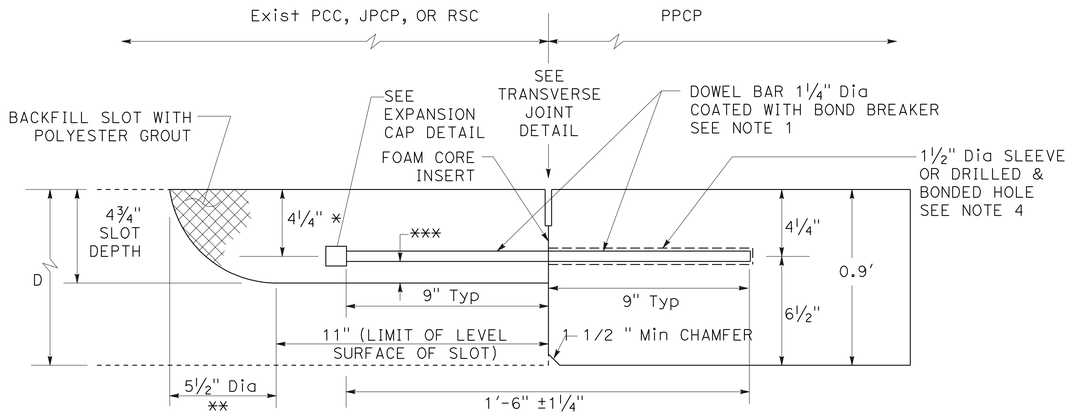

ELEVATION

D = EXISTING THICKNESS OF PCC, JPCP, OR RSC
* D/2 ±¼"
** D/2 +1½"
*** Min Clr ½" BETWEEN BAR AND BOTTOM OF SLOT

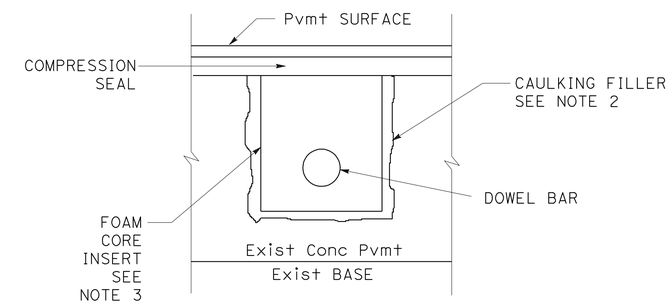

SECTION N-N

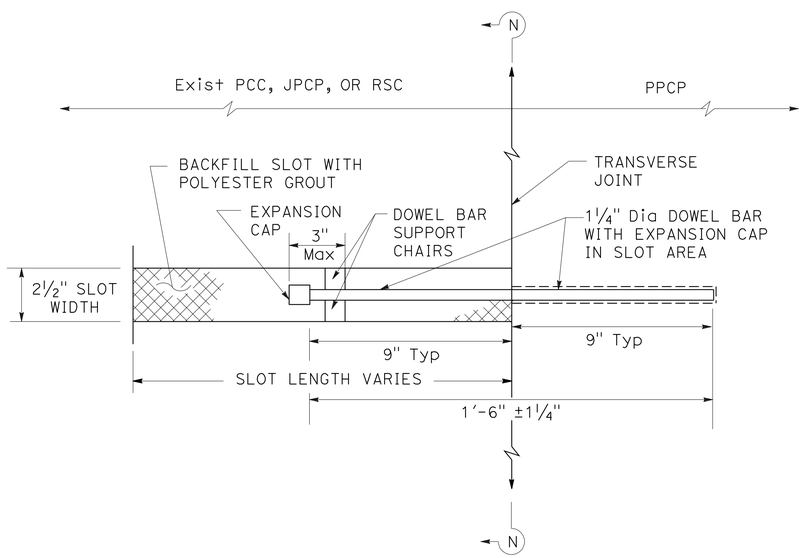

PLAN

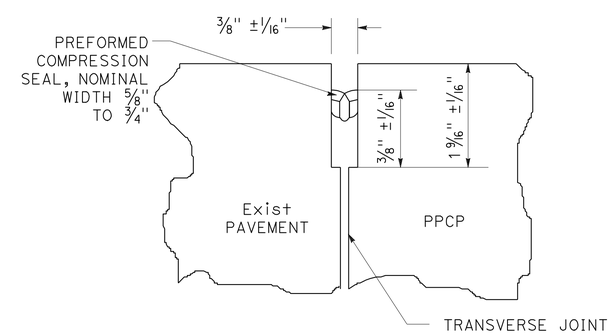

TRANSVERSE JOINT DETAIL (COMPRESSION SEAL)

DOWEL SLOT & DOWEL BAR PLACEMENT AT THE TRANSVERSE CONTACT JOINT WITH PCC, JPCP, OR RSC

3 **REVISED PER ADDENDUM No. 3 DATED JANUARY 31, 2012**

CONSTRUCTION DETAILS DOWEL BAR RETROFIT PRECAST PRESTRESSED CONCRETE PAVEMENT

NO SCALE

C-305

STATE OF CALIFORNIA - DEPARTMENT OF TRANSPORTATION
Caltrans DESIGN
FUNCTIONAL SUPERVISOR KIRSTEN STAHL
CALCULATED-DESIGNED BY WINNIE DEGUZMAN
CHECKED BY KIRSTEN STAHL
REVISED BY
DATE REVISED

LAST REVISION 00-00-00
DATE PLOTTED => 31-JAN-2012
TIME PLOTTED => 05:34

Dist	COUNTY	ROUTE	POST MILES TOTAL PROJECT	SHEET No.	TOTAL SHEETS
07	LA	710	17.2/26.4	417	1507

REGISTERED CIVIL ENGINEER 2-3-11 DATE

6-27-11
PLANS APPROVAL DATE

REGISTERED PROFESSIONAL ENGINEER KIRSTEN R. STAHL No. C46857 Exp. 6-30-13 CIVIL STATE OF CALIFORNIA

THE STATE OF CALIFORNIA OR ITS OFFICERS OR AGENTS SHALL NOT BE RESPONSIBLE FOR THE ACCURACY OR COMPLETENESS OF SCANNED COPIES OF THIS PLAN SHEET.

3

NOTES:

1. FOR PANELS WITH A RADIUS (WEDGE PANELS), THE DIMENSIONS AND QUANTITIES OF THE REINFORCEMENT ARE CONSIDERED THE SAME AND VARY MINIMALLY WITH RESPECT TO THE LENGTH (L) AND IN WIDTH (W).
2. FOR TABLE A, REINFORCEMENT IS PLACED OR MEASURED IN THE LONGITUDINAL DIRECTION, UNLESS INDICATED OTHERWISE.
3. FOR TABLE B, REINFORCEMENT IS PLACED OR MEASURED IN THE TRANSVERSE DIRECTION, UNLESS INDICATED OTHERWISE.
4. ALL REINFORCEMENT DIMENSIONS ARE TO BE VERIFIED BY THE MANUFACTURER BEFORE PANEL FABRICATION.

ABBREVIATIONS:

P-T POST-TENSIONING

TABLE A

W	a	COUNT OF PRETENSIONING STRANDS (7-WIRE 1/2") (1) PLACED TRANSVERSELY	LENGTH OF EACH P-T DUCT (2)	COUNT OF BAR "U"	LENGTH OF EACH BAR "U"	COUNT OF LIFTING ANCHORS
FT	FT-IN	EA	FT	EA	FT-IN	EA
7	5'-8"	11	7	4	9'-0"	4
8	6'-8"	13	8	4	10'-0"	4
9	7'-8"	14	9	4	11'-0"	4
10	8'-8"	16	10	4	12'-0"	4

(1) SEE TABLE B FOR LENGTH OF EACH PRETENSIONING STRAND.
(2) SEE TABLE B FOR COUNT OF P-T DUCTS.

TABLE B

L	b	COUNT OF P-T DUCTS PLACED (1) LONGITUDINALLY	COUNT OF BAR "B"	LENGTH OF EACH BAR "B"	LENGTH OF EACH PRETENSIONING STRAND (7-WIRE 1/2") (2)	COUNT OF GROUT INLET VENT
FT	FT	EA	EA	FT-IN	FT	EA
12	8	4	4	11'-7"	12	4
12.5	8.5	4	4	12'-1"	12.5	4
13	9	4	4	12'-7"	13	4
13.5	9.5	4	4	13'-1"	13.5	4
14	10	5	4	13'-7"	14	5
14.5	10.5	5	4	14'-1"	14.5	5
15	11	5	4	14'-7"	15	5
15.5	11.5	5	4	15'-1"	15.5	5
16	12	5	4	15'-7"	16	5
16.5	12.5	6	4	16'-1"	16.5	6

(1) SEE TABLE A FOR LENGTH OF EACH P-T DUCT.
(2) SEE TABLE A FOR COUNT OF PRETENSIONING STRANDS.

FOR BASE PANELS

CONSTRUCTION DETAILS
REINFORCEMENT DIMENSIONS AND QUANTITIES
PRECAST PRESTRESSED CONCRETE PAVEMENT

NO SCALE

C-306

3 **REVISED PER ADDENDUM No. 3 DATED JANUARY 31, 2012**

STATE OF CALIFORNIA - DEPARTMENT OF TRANSPORTATION
Caltrans® DESIGN
FUNCTIONAL SUPERVISOR KIRSTEN STAHL
CALCULATED-DESIGNED BY WINNIE DEGUZMAN
CHECKED BY KIRSTEN STAHL
REVISED BY
DATE REVISED

LAST REVISION 00-00-00 | DATE PLOTTED => 30-JAN-2012 | TIME PLOTTED => 13:48

Dist	COUNTY	ROUTE	POST MILES TOTAL PROJECT	SHEET No.	TOTAL SHEETS
07	LA	710	17.2/26.4	418	1507

REGISTERED CIVIL ENGINEER 2-3-11 DATE

6-27-11
PLANS APPROVAL DATE

REGISTERED PROFESSIONAL ENGINEER KIRSTEN R. STAHL No. C46857 Exp. 6-30-13 CIVIL STATE OF CALIFORNIA

THE STATE OF CALIFORNIA OR ITS OFFICERS OR AGENTS SHALL NOT BE RESPONSIBLE FOR THE ACCURACY OR COMPLETENESS OF SCANNED COPIES OF THIS PLAN SHEET.

NOTES:

1. FOR PANELS WITH A RADIUS (WEDGE PANELS), THE DIMENSIONS AND QUANTITIES OF THE REINFORCEMENT ARE CONSIDERED THE SAME AND VARY MINIMALLY WITH RESPECT TO THE LENGTH (L) AND IN WIDTH (W).
2. FOR TABLE A, REINFORCEMENT IS PLACED OR MEASURED IN THE LONGITUDINAL DIRECTION, UNLESS INDICATED OTHERWISE.
3. FOR TABLE B, REINFORCEMENT IS PLACED OR MEASURED IN THE TRANSVERSE DIRECTION, UNLESS INDICATED OTHERWISE.
4. ALL REINFORCEMENT DIMENSIONS ARE TO BE VERIFIED BY THE MANUFACTURER BEFORE PANEL FABRICATION.

ABBREVIATIONS:

P-T POST-TENSIONING

TABLE B

L	b	COUNT OF P-T DUCTS PLACED LONGITUDINALLY (1)	COUNT OF BAR "B"	LENGTH OF EACH BAR "B"	LENGTH OF EACH PRETENSIONING STRAND (7-WIRE 1/2") (2)	COUNT OF GROUT INLET VENT
FT	FT	EA	EA	FT-IN	FT	EA
17	13	6	4	16'-7"	17	6
17.5	13.5	6	4	17'-1"	17.5	6
18	14	6	4	17'-7"	18	6
18.5	14.5	6	4	18'-1"	18.5	6
19	15	7	4	18'-7"	19	7
19.5	15.5	7	4	19'-1"	19.5	7
20	16	7	4	19'-7"	20	7
20.5	16.5	7	4	20'-1"	20.5	7
21	17	7	4	20'-7"	21	7
21.5	17.5	8	4	21'-1"	21.5	8
22	18	8	4	21'-7"	22	8
22.5	18.5	8	4	22'-1"	22.5	8
23	19	8	4	22'-7"	23	8
23.5	19.5	8	4	23'-1"	23.5	8
24	20	9	4	23'-7"	24	9
24.5	20.5	9	4	24'-1"	24.5	9
25	21	9	4	24'-7"	25	9
25.5	21.5	9	4	25'-1"	25.5	9
26	22	9	4	25'-7"	26	9
26.5	22.5	10	4	26'-1"	26.5	10

(1) SEE TABLE A FOR LENGTH OF EACH P-T DUCT.
(2) SEE TABLE A FOR COUNT OF PRETENSIONING STRANDS.

TABLE B

L	b	COUNT OF P-T DUCTS PLACED LONGITUDINALLY (1)	COUNT OF BAR "B"	LENGTH OF EACH BAR "B"	LENGTH OF EACH PRETENSIONING STRAND (7-WIRE 1/2") (2)	COUNT OF GROUT INLET VENT
FT	FT	EA	EA	FT-IN	FT	EA
27	23	10	4	26'-7"	27	10
27.5	23.5	10	4	27'-1"	27.5	10
28	24	10	4	27'-7"	28	10
28.5	24.5	10	4	28'-1"	28.5	10
29	25	11	4	28'-7"	29	11
29.5	25.5	11	4	29'-1"	29.5	11
30	26	11	4	29'-7"	30	11
30.5	26.5	11	4	30'-1"	30.5	11
31	27	11	4	30'-7"	31	11
31.5	27.5	12	4	31'-1"	31.5	12
32	28	12	4	31'-7"	32	12
32.5	28.5	12	4	32'-1"	32.5	12
33	29	12	4	32'-7"	33	12
33.5	29.5	12	4	33'-1"	33.5	12
34	30	13	4	33'-7"	34	13
34.5	30.5	13	4	34'-1"	34.5	13
35	31	13	4	34'-7"	35	13
35.5	31.5	13	4	35'-1"	35.5	13
36	32	13	4	35'-7"	36	13
36.5	32.5	14	4	36'-1"	36.5	14

(1) SEE TABLE A FOR LENGTH OF EACH P-T DUCT.
(2) SEE TABLE A FOR COUNT OF PRETENSIONING STRANDS.

FOR BASE PANELS

3 REVISED PER ADDENDUM No. 3 DATED JANUARY 31, 2012

CONSTRUCTION DETAILS
REINFORCEMENT DIMENSIONS AND QUANTITIES
PRECAST PRESTRESSED CONCRETE PAVEMENT

NO SCALE

C-307

STATE OF CALIFORNIA - DEPARTMENT OF TRANSPORTATION
Caltrans®
DESIGN
FUNCTIONAL SUPERVISOR KIRSTEN STAHL
CALCULATED-DESIGNED BY WINNIE DEGUZMAN
CHECKED BY KIRSTEN STAHL
REVISED BY
DATE REVISED

LAST REVISION 00-00-00
DATE PLOTTED => 30-JAN-2012
TIME PLOTTED => 11:42

Dist	COUNTY	ROUTE	POST MILES TOTAL PROJECT	SHEET No.	TOTAL SHEETS
07	LA	710	17.2/26.4	419	1507

REGISTERED CIVIL ENGINEER 2-3-11 DATE

6-27-11
PLANS APPROVAL DATE

REGISTERED PROFESSIONAL ENGINEER KIRSTEN R. STAHL No. C46857 Exp. 6-30-13 CIVIL STATE OF CALIFORNIA

THE STATE OF CALIFORNIA OR ITS OFFICERS OR AGENTS SHALL NOT BE RESPONSIBLE FOR THE ACCURACY OR COMPLETENESS OF SCANNED COPIES OF THIS PLAN SHEET.

NOTES:

1. FOR PANELS WITH A RADIUS (WEDGE PANELS), THE DIMENSIONS AND QUANTITIES OF THE REINFORCEMENT ARE CONSIDERED THE SAME AND VARY MINIMALLY WITH RESPECT TO THE LENGTH (L) AND IN WIDTH (W).
2. FOR TABLE A, REINFORCEMENT IS PLACED OR MEASURED IN THE LONGITUDINAL DIRECTION, UNLESS INDICATED OTHERWISE.
3. FOR TABLE B, REINFORCEMENT IS PLACED OR MEASURED IN THE TRANSVERSE DIRECTION, UNLESS INDICATED OTHERWISE.
4. ALL REINFORCEMENT DIMENSIONS ARE TO BE VERIFIED BY THE MANUFACTURER BEFORE PANEL FABRICATION.

ABBREVIATIONS:

P-T POST-TENSIONING

3

TABLE B

L	b	COUNT OF P-T DUCTS PLACED LONGITUDINALLY (1)	COUNT OF BAR "B"	LENGTH OF EACH BAR "B"	LENGTH OF EACH PRETENSIONING STRAND (7-WIRE 1/2") (2)	COUNT OF GROUT INLET VENT
FT	FT		EA	FT-IN	FT	EA
37	33	14	4	36'-7"	37	14
37.5	33.5	14	4	37'-1"	37.5	14
38	34	14	4	37'-7"	38	14
38.5	34.5	14	4	38'-1"	38.5	14
39	35	15	4	38'-7"	39	15
39.5	35.5	15	4	39'-1"	39.5	15
40	36	15	4	39'-7"	40	15
40.5	36.5	15	4	40'-1"	40.5	15
41	37	15	4	40'-7"	41	15
41.5	37.5	16	4	41'-1"	41.5	16
42	38	16	4	41'-7"	42	16
42.5	38.5	16	4	42'-1"	42.5	16
43	39	16	4	42'-7"	43	16
43.5	39.5	16	4	43'-1"	43.5	16
44	40	17	4	43'-7"	44	17
44.5	40.5	17	4	44'-1"	44.5	17
45	41	17	4	44'-7"	45	17
45.5	41.5	17	4	45'-1"	45.5	17
46	42	17	4	45'-7"	46	17
46.5	42.5	18	4	46'-1"	46.5	18

(1) SEE TABLE A FOR LENGTH OF EACH P-T DUCT.
(2) SEE TABLE A FOR COUNT OF PRETENSIONING STRANDS.

TABLE B

L	b	COUNT OF P-T DUCTS PLACED LONGITUDINALLY (1)	COUNT OF BAR "B"	LENGTH OF EACH BAR "B"	LENGTH OF EACH PRETENSIONING STRAND (7-WIRE 1/2") (2)	COUNT OF GROUT INLET VENT
FT	FT	EA	EA	FT-IN	FT	EA
47	43	18	4	46'-7"	47	18
47.5	43.5	18	4	47'-1"	47.5	18
48	44	18	4	47'-7"	48	18
48.5	44.5	18	4	48'-1"	48.5	18
49	45	19	4	48'-7"	49	19
49.5	45.5	19	4	49'-1"	49.5	19
50	46	19	4	49'-7"	50	19

(1) SEE TABLE A FOR LENGTH OF EACH P-T DUCT.
(2) SEE TABLE A FOR COUNT OF PRETENSIONING STRANDS.

CONSTRUCTION DETAILS
REINFORCEMENT DIMENSIONS AND QUANTITIES
PRECAST PRESTRESSED CONCRETE PAVEMENT

FOR BASE PANELS

3 **REVISED PER ADDENDUM No. 3 DATED JANUARY 31, 2012**

NO SCALE

C-308

STATE OF CALIFORNIA - DEPARTMENT OF TRANSPORTATION
Caltrans DESIGN

FUNCTIONAL SUPERVISOR: KIRSTEN STAHL
CALCULATED-DESIGNED BY: WINNIE DEGUZMAN
CHECKED BY: KIRSTEN STAHL
REVISED BY
DATE REVISED

LAST REVISION 00-00-00
DATE PLOTTED => 30-JAN-2012
TIME PLOTTED => 11:42

Dist	COUNTY	ROUTE	POST MILES TOTAL PROJECT	SHEET No.	TOTAL SHEETS
07	LA	710	17.2/26.4	420	1507

REGISTERED CIVIL ENGINEER 2-3-11 DATE

6-27-11
PLANS APPROVAL DATE

REGISTERED PROFESSIONAL ENGINEER KIRSTEN R. STAHL No. C46857 Exp. 6-30-13 CIVIL STATE OF CALIFORNIA

THE STATE OF CALIFORNIA OR ITS OFFICERS OR AGENTS SHALL NOT BE RESPONSIBLE FOR THE ACCURACY OR COMPLETENESS OF SCANNED COPIES OF THIS PLAN SHEET.

3

NOTES:

1. FOR PANELS WITH A RADIUS (WEDGE PANELS), THE DIMENSIONS AND QUANTITIES OF THE REINFORCEMENT ARE CONSIDERED THE SAME AND VARY MINIMALLY WITH RESPECT TO THE LENGTH (L) AND IN WIDTH (W).
2. FOR TABLE A, REINFORCEMENT IS PLACED OR MEASURED IN THE LONGITUDINAL DIRECTION, UNLESS INDICATED OTHERWISE.
3. FOR TABLE B, REINFORCEMENT IS PLACED OR MEASURED IN THE TRANSVERSE DIRECTION, UNLESS INDICATED OTHERWISE.
4. ALL REINFORCEMENT DIMENSIONS ARE TO BE VERIFIED BY THE MANUFACTURER BEFORE PANEL FABRICATION.

ABBREVIATIONS:

P-T POST-TENSIONING

TABLE A

W	a	COUNT OF PRETENSIONING STRANDS (7-WIRE 1/2") (1) PLACED TRANSVERSELY	LENGTH OF P-T DUCT AT BLOCKOUTS		COUNT OF BAR "U"	LENGTH OF EACH BAR "U"	COUNT OF LIFTING ANCHORS	LENGTH OF EACH P-T DUCT (2)
FT	FT	EA	FT-IN	FT-IN	EA	FT-IN	EA	FT
7	4	11	1'-6"	1'-4"	4	9'-0"	4	7
8	5	13	2'-0"	1'-10"	4	10'-0"	4	8
9	6	14	2'-6"	2'-4"	4	11'-0"	4	9
10	7	16	3'-0"	2'-10"	4	12'-0"	4	10

(1) SEE TABLE B FOR LENGTH OF EACH PRETENSIONING STRAND.
(2) SEE TABLE B FOR COUNT OF P-T DUCTS.

TABLE B

L	b	COUNT OF P-T DUCTS PLACED (1) LONGITUDINALLY	COUNT OF BLOCKOUTS (8" X 48")	COUNT OF BAR "L"	LENGTH OF EACH BAR "L"	COUNT OF BAR "B"	LENGTH OF EACH BAR "B"	LENGTH OF EACH PRETENSIONING STRAND (7-WIRE 1/2") (2)	COUNT OF GROUT INLET VENT
FT	FT	EA	EA	EA	FT	EA	FT-IN	FT	EA
12	8	4	2	4	4	6	11'-7"	12	6
12.5	8.5	4	2	4	4	6	12'-1"	12.5	6
13	9	4	2	4	4	6	12'-7"	13	6
13.5	9.5	4	2	4	4	6	13'-1"	13.5	6
14	10	5	2 , 3	4 , 6	4	6	13'-7"	14	7 , 8
14.5	10.5	5	2 , 3	4 , 6	4	6	14'-1"	14.5	7 , 8
15	11	5	2 , 3	4 , 6	4	6	14'-7"	15	7 , 8
15.5	11.5	5	2 , 3	4 , 6	4	6	15'-1"	15.5	7 , 8
16	12	5	2 , 3	4 , 6	4	6	15'-7"	16	7 , 8
16.5	12.5	6	3	6	4	6	16'-1"	16.5	9

(1) SEE TABLE A FOR LENGTH OF EACH P-T DUCT.
(2) SEE TABLE A FOR COUNT OF PRETENSIONING STRANDS.

FOR CENTRAL STRESSING PANELS TYPE A1 OR TYPE A2

CONSTRUCTION DETAILS REINFORCEMENT DIMENSIONS AND QUANTITIES PRECAST PRESTRESSED CONCRETE PAVEMENT

3 REVISED PER ADDENDUM No. 3 DATED JANUARY 31, 2012

NO SCALE

C-309

STATE OF CALIFORNIA - DEPARTMENT OF TRANSPORTATION
Caltrans DESIGN
FUNCTIONAL SUPERVISOR KIRSTEN STAHL
CALCULATED-DESIGNED BY WINNIE DEGUZMAN
CHECKED BY KIRSTEN STAHL
REVISED BY
DATE REVISED

LAST REVISION 00-00-00
DATE PLOTTED => 30-JAN-2012
TIME PLOTTED => 11:42

Dist	COUNTY	ROUTE	POST MILES TOTAL PROJECT	SHEET No.	TOTAL SHEETS
07	LA	710	17.2/26.4	421	1507

REGISTERED CIVIL ENGINEER 2-3-11 DATE

6-27-11
PLANS APPROVAL DATE

REGISTERED PROFESSIONAL ENGINEER KIRSTEN R. STAHL No. C46857 Exp. 6-30-13 CIVIL STATE OF CALIFORNIA

THE STATE OF CALIFORNIA OR ITS OFFICERS OR AGENTS SHALL NOT BE RESPONSIBLE FOR THE ACCURACY OR COMPLETENESS OF SCANNED COPIES OF THIS PLAN SHEET.

3

NOTES:

1. FOR PANELS WITH A RADIUS (WEDGE PANELS), THE DIMENSIONS AND QUANTITIES OF THE REINFORCEMENT ARE CONSIDERED THE SAME AND VARY MINIMALLY WITH RESPECT TO THE LENGTH (L) AND IN WIDTH (W).
2. FOR TABLE A, REINFORCEMENT IS PLACED OR MEASURED IN THE LONGITUDINAL DIRECTION, UNLESS INDICATED OTHERWISE.
3. FOR TABLE B, REINFORCEMENT IS PLACED OR MEASURED IN THE TRANSVERSE DIRECTION, UNLESS INDICATED OTHERWISE.
4. ALL REINFORCEMENT DIMENSIONS ARE TO BE VERIFIED BY THE MANUFACTURER BEFORE PANEL FABRICATION.

ABBREVIATIONS:

P-T POST-TENSIONING

TABLE B

L	b	COUNT OF P-T DUCTS PLACED LONGITUDINALLY(1)	COUNT OF BLOCKOUTS (8" X 48")	COUNT OF BAR "L"	LENGTH OF EACH BAR "L"	COUNT OF BAR "B"	LENGTH OF EACH BAR "B"	LENGTH OF EACH PRETENSIONING STRAND (7-WIRE 1/2")(2)	COUNT OF GROUT INLET VENT
FT	FT	EA	EA	EA	FT	EA	FT-IN	FT	EA
17	13	6	3	6	4	6	16'-7"	17	9
17.5	13.5	6	3	6	4	6	17'-1"	17.5	9
18	14	6	3	6	4	6	17'-7"	18	9
18.5	14.5	6	3	6	4	6	18'-1"	18.5	9
19	15	7	3 , 4	6 , 8	4	6	18'-7"	19	10 , 11
19.5	15.5	7	3 , 4	6 , 8	4	6	19'-1"	19.5	10 , 11
20	16	7	3 , 4	6 , 8	4	6	19'-7"	20	10 , 11
20.5	16.5	7	3 , 4	6 , 8	4	6	20'-1"	20.5	10 , 11
21	17	7	3 , 4	6 , 8	4	6	20'-7"	21	10 , 11
21.5	17.5	8	4	8	4	6	21'-1"	21.5	12
22	18	8	4	8	4	6	21'-7"	22	12
22.5	18.5	8	4	8	4	6	22'-1"	22.5	12
23	19	8	4	8	4	6	22'-7"	23	12
23.5	19.5	8	4	8	4	6	23'-1"	23.5	12
24	20	9	4 , 5	8 , 10	4	6	23'-7"	24	13 , 14
24.5	20.5	9	4 , 5	8 , 10	4	6	24'-1"	24.5	13 , 14
25	21	9	4 , 5	8 , 10	4	6	24'-7"	25	13 , 14
25.5	21.5	9	4 , 5	8 , 10	4	6	25'-1"	25.5	13 , 14
26	22	9	4 , 5	8 , 10	4	6	25'-7"	26	13 , 14
26.5	22.5	10	5	10	4	6	26'-1"	26.5	15

(1) SEE TABLE A FOR LENGTH OF EACH P-T DUCT.
(2) SEE TABLE A FOR COUNT OF PRETENSIONING STRANDS.

FOR CENTRAL STRESSING PANELS TYPE A1 OR TYPE A2

CONSTRUCTION DETAILS
REINFORCEMENT DIMENSIONS AND QUANTITIES
PRECAST PRESTRESSED CONCRETE PAVEMENT

NO SCALE

C-310

3 REVISED PER ADDENDUM No. 3 DATED JANUARY 31, 2012

STATE OF CALIFORNIA - DEPARTMENT OF TRANSPORTATION
Caltrans DESIGN

FUNCTIONAL SUPERVISOR KIRSTEN STAHL
CALCULATED-DESIGNED BY WINNIE DEGUZMAN
CHECKED BY KIRSTEN STAHL
REVISED BY
DATE REVISED

LAST REVISION 00-00-00
DATE PLOTTED => 30-JAN-2012
TIME PLOTTED => 11:43

Dist	COUNTY	ROUTE	POST MILES TOTAL PROJECT	SHEET No.	TOTAL SHEETS
07	LA	710	17.2/26.4	422	1507

REGISTERED CIVIL ENGINEER 2-3-11 DATE

6-27-11
PLANS APPROVAL DATE

REGISTERED PROFESSIONAL ENGINEER KIRSTEN R. STAHL No. C46857 Exp. 6-30-13 CIVIL STATE OF CALIFORNIA

THE STATE OF CALIFORNIA OR ITS OFFICERS OR AGENTS SHALL NOT BE RESPONSIBLE FOR THE ACCURACY OR COMPLETENESS OF SCANNED COPIES OF THIS PLAN SHEET.

3

NOTES:

1. FOR PANELS WITH A RADIUS (WEDGE PANELS), THE DIMENSIONS AND QUANTITIES OF THE REINFORCEMENT ARE CONSIDERED THE SAME AND VARY MINIMALLY WITH RESPECT TO THE LENGTH (L) AND IN WIDTH (W).
2. FOR TABLE A, REINFORCEMENT IS PLACED OR MEASURED IN THE LONGITUDINAL DIRECTION, UNLESS INDICATED OTHERWISE.
3. FOR TABLE B, REINFORCEMENT IS PLACED OR MEASURED IN THE TRANSVERSE DIRECTION, UNLESS INDICATED OTHERWISE.
4. ALL REINFORCEMENT DIMENSIONS ARE TO BE VERIFIED BY THE MANUFACTURER BEFOARE PANEL FABRICATION.

ABBREVIATIONS

P-T POST-TENSIONING

TABLE B

L	b	COUNT OF P-T DUCTS PLACED LONGITUDINALLY (1)	COUNT OF BLOCKOUTS (8" X 48")	COUNT OF BAR "L"	LENGTH OF EACH BAR "L"	COUNT OF BAR "B"	LENGTH OF EACH BAR "B"	LENGTH OF EACH PRETENSIONING STRAND (7-WIRE 1/2") (2)	COUNT OF GROUT INLET VENT
FT	FT	EA	EA	EA	FT	EA	FT-IN	FT	EA
27	23	10	5	10	4	6	26'-7"	27	15
27.5	23.5	10	5	10	4	6	27'-1"	27.5	15
28	24	10	5	10	4	6	27'-7"	28	15
28.5	24.5	10	5	10	4	6	28'-1"	28.5	15
29	25	11	5 , 6	10 , 12	4	6	28'-7"	29	16 , 17
29.5	25.5	11	5 , 6	10 , 12	4	6	29'-1"	29.5	16 , 17
30	26	11	5 , 6	10 , 12	4	6	29'-7"	30	16 , 17
30.5	26.5	11	5 , 6	10 , 12	4	6	30'-1"	30.5	16 , 17
31	27	11	5 , 6	10 , 12	4	6	30'-7"	31	16 , 17
31.5	27.5	12	6	12	4	6	31'-1"	31.5	18
32	28	12	6	12	4	6	31'-7"	32	18
32.5	28.5	12	6	12	4	6	32'-1"	32.5	18
33	29	12	6	12	4	6	32'-7"	33	18
33.5	29.5	12	6	12	4	6	33'-1"	33.5	18
34	30	13	6 , 7	12 , 14	4	6	33'-7"	34	19 , 20
34.5	30.5	13	6 , 7	12 , 14	4	6	34'-1"	34.5	19 , 20
35	31	13	6 , 7	12 , 14	4	6	34'-7"	35	19 , 20
35.5	31.5	13	6 , 7	12 , 14	4	6	35'-1"	35.5	19 , 20
36	32	13	6 , 7	12 , 14	4	6	35'-7"	36	19 , 20
36.5	32.5	14	7	14	4	6	36'-1"	36.5	21

(1) SEE TABLE A FOR LENGTH OF EACH P-T DUCT.
(2) SEE TABLE A FOR COUNT OF PRETENSIONING STRANDS.

FOR CENTRAL STRESSING PANELS TYPE A1 OR TYPE A2

CONSTRUCTION DETAILS
REINFORCEMENT DIMENSIONS AND QUANTITIES
PRECAST PRESTRESSED CONCRETE PAVEMENT

3 REVISED PER ADDENDUM No. 3 DATED JANUARY 31, 2012

NO SCALE

C-311

STATE OF CALIFORNIA - DEPARTMENT OF TRANSPORTATION
Caltrans
DESIGN

FUNCTIONAL SUPERVISOR: KIRSTEN STAHL
CALCULATED-DESIGNED BY: WINNIE DEGUZMAN
CHECKED BY: KIRSTEN STAHL
REVISED BY
DATE REVISED

LAST REVISION 00-00-00
DATE PLOTTED => 30-JAN-2012
TIME PLOTTED => 11:43

Dist	COUNTY	ROUTE	POST MILES TOTAL PROJECT	SHEET No.	TOTAL SHEETS
07	LA	710	17.2/26.4	423	1507

REGISTERED CIVIL ENGINEER 2-3-11 DATE

6-27-11
PLANS APPROVAL DATE

REGISTERED PROFESSIONAL ENGINEER KIRSTEN R. STAHL No. C46857 Exp. 6-30-13 CIVIL STATE OF CALIFORNIA

THE STATE OF CALIFORNIA OR ITS OFFICERS OR AGENTS SHALL NOT BE RESPONSIBLE FOR THE ACCURACY OR COMPLETENESS OF SCANNED COPIES OF THIS PLAN SHEET.

3

NOTES:

1. FOR PANELS WITH A RADIUS (WEDGE PANELS), THE DIMENSIONS AND QUANTITIES OF THE REINFORCEMENT ARE CONSIDERED THE SAME AND VARY MINIMALLY WITH RESPECT TO THE LENGTH (L) AND IN WIDTH (W).
2. FOR TABLE A, REINFORCEMENT IS PLACED OR MEASURED IN THE LONGITUDINAL DIRECTION, UNLESS INDICATED OTHERWISE.
3. FOR TABLE B, REINFORCEMENT IS PLACED OR MEASURED IN THE TRANSVERSE DIRECTION, UNLESS INDICATED OTHERWISE.
4. ALL REINFORCEMENT DIMENSIONS ARE TO BE VERIFIED BY THE MANUFACTURER BEFORE PANEL FABRICATION.

ABBREVIATIONS:

P-T POST-TENSIONING

TABLE B

L	b	COUNT OF P-T DUCTS PLACED LONGITUDINALLY (1)	COUNT OF BLOCKOUTS (8" X 48")	COUNT OF BAR "L"	LENGTH OF EACH BAR "L"	COUNT OF BAR "B"	LENGTH OF EACH BAR "B"	LENGTH OF EACH PRETENSIONING STRAND (7-WIRE 1/2") (2)	COUNT OF GROUT INLET VENT
FT	FT	EA	EA	EA	FT	EA	FT-IN	FT	EA
37	33	14	7	14	4	6	36'-7"	37	21
37.5	33.5	14	7	14	4	6	37'-1"	37.5	21
38	34	14	7	14	4	6	37'-7"	38	21
38.5	34.5	14	7	14	4	6	38'-1"	38.5	21
39	35	15	7, 8	14, 16	4	6	38'-7"	39	22, 23
39.5	35.5	15	7, 8	14, 16	4	6	39'-1"	39.5	22, 23
40	36	15	7, 8	14, 16	4	6	39'-7"	40	22, 23
40.5	36.5	15	7, 8	14, 16	4	6	40'-1"	40.5	22, 23
41	37	15	7, 8	14, 16	4	6	40'-7"	41	22, 23
41.5	37.5	16	8	16	4	6	41'-1"	41.5	24
42	38	16	8	16	4	6	41'-7"	42	24
42.5	38.5	16	8	16	4	6	42'-1"	42.5	24
43	39	16	8	16	4	6	42'-7"	43	24
43.5	39.5	16	8	16	4	6	43'-1"	43.5	24
44	40	17	8, 9	16, 18	4	6	43'-7"	44	25, 26
44.5	40.5	17	8, 9	16, 18	4	6	44'-1"	44.5	25, 26
45	41	17	8, 9	16, 18	4	6	44'-7"	45	25, 26
45.5	41.5	17	8, 9	16, 18	4	6	45'-1"	45.5	25, 26
46	42	17	8, 9	16, 18	4	6	45'-7"	46	25, 26
46.5	42.5	18	9	18	4	6	46'-1"	46.5	27

(1) SEE TABLE A FOR LENGTH OF EACH P-T DUCT.
(2) SEE TABLE A FOR COUNT OF PRETENSIONING STRANDS.

FOR CENTRAL STRESSING PANELS
TYPE A1 OR TYPE A2

CONSTRUCTION DETAILS
REINFORCEMENT DIMENSIONS AND QUANTITIES
PRECAST PRESTRESSED CONCRETE PAVEMENT

3 **REVISED PER ADDENDUM No. 3 DATED JANUARY 31, 2012**

NO SCALE

C-312

STATE OF CALIFORNIA - DEPARTMENT OF TRANSPORTATION
Caltrans
DESIGN

FUNCTIONAL SUPERVISOR: KIRSTEN STAHL
CALCULATED-DESIGNED BY: WINNIE DEGUZMAN
CHECKED BY: KIRSTEN STAHL
REVISED BY
DATE REVISED

LAST REVISION 00-00-00
DATE PLOTTED => 30-JAN-2012
TIME PLOTTED => 11:43

Dist	COUNTY	ROUTE	POST MILES TOTAL PROJECT	SHEET No.	TOTAL SHEETS
07	LA	710	17.2/26.4	424	1507

REGISTERED CIVIL ENGINEER 2-3-11 DATE

6-27-11
PLANS APPROVAL DATE

REGISTERED PROFESSIONAL ENGINEER KIRSTEN R. STAHL No. C46857 Exp. 6-30-13 CIVIL STATE OF CALIFORNIA

THE STATE OF CALIFORNIA OR ITS OFFICERS OR AGENTS SHALL NOT BE RESPONSIBLE FOR THE ACCURACY OR COMPLETENESS OF SCANNED COPIES OF THIS PLAN SHEET.

3

NOTES:

1. FOR PANELS WITH A RADIUS (WEDGE PANELS), THE DIMENSIONS AND QUANTITIES OF THE REINFORCEMENT ARE CONSIDERED THE SAME AND VARY MINIMALLY WITH RESPECT TO THE LENGTH (L) AND IN WIDTH (W).
2. FOR TABLE A, REINFORCEMENT IS PLACED OR MEASURED IN THE LONGITUDINAL DIRECTION, UNLESS INDICATED OTHERWISE.
3. FOR TABLE B, REINFORCEMENT IS PLACED OR MEASURED IN THE TRANSVERSE DIRECTION, UNLESS INDICATED OTHERWISE.
4. ALL REINFORCEMENT DIMENSIONS ARE TO BE VERIFIED BY THE MANUFACTURER BEFORE PANEL FABRICATION.

ABBREVIATIONS:

P-T POST-TENSIONING

TABLE B

L	b	COUNT OF P-T DUCTS PLACED LONGITUDINALLY (1)	COUNT OF BLOCKOUTS	COUNT OF BAR "L"	LENGTH OF EACH BAR "L"	COUNT OF BAR "B"	LENGTH OF EACH BAR "B"	LENGTH OF EACH PRETENSIONING STRAND (7-WIRE 1/2") (2)	COUNT OF GROUT INLET VENT
FT	FT	EA	EA	EA	FT	EA	FT-IN	FT	EA
47	43	18	9	18	4	6	46'-7"	47	27
47.5	43.5	18	9	18	4	6	47'-1"	47.5	27
48	44	18	9	18	4	6	47'-7"	48	27
48.5	44.5	18	9	18	4	6	48'-1"	48.5	27
49	45	19	9, 10	18, 20	4	6	48'-7"	49	28, 29
49.5	45.5	19	9, 10	18, 20	4	6	49'-1"	49.5	28, 29
50	46	19	9, 10	18, 20	4	6	49'-7"	50	28, 29

(1) SEE TABLE A FOR LENGTH OF EACH P-T DUCT.
(2) SEE TABLE A FOR COUNT OF PRETENSIONING STRANDS.

FOR CENTRAL STRESSING PANELS
TYPE A1 OR TYPE A2

CONSTRUCTION DETAILS
REINFORCEMENT DIMENSIONS AND QUANTITIES
PRECAST PRESTRESSED CONCRETE PAVEMENT

3 **REVISED PER ADDENDUM No. 3 DATED JANUARY 31, 2012**

NO SCALE

C-313

STATE OF CALIFORNIA - DEPARTMENT OF TRANSPORTATION
Caltrans® DESIGN

FUNCTIONAL SUPERVISOR: KIRSTEN STAHL
CALCULATED-DESIGNED BY: WINNIE DEGUZMAN
CHECKED BY: KIRSTEN STAHL
REVISED BY
DATE REVISED

LAST REVISION 00-00-00
DATE PLOTTED => 30-JAN-2012
TIME PLOTTED => 11:43

Dist	COUNTY	ROUTE	POST MILES TOTAL PROJECT	SHEET No.	TOTAL SHEETS
07	LA	710	17.2/26.4	425	1507

REGISTERED CIVIL ENGINEER 2-3-11 DATE

6-27-11
PLANS APPROVAL DATE

REGISTERED PROFESSIONAL ENGINEER KIRSTEN R. STAHL No. C46857 Exp. 6-30-13 CIVIL STATE OF CALIFORNIA

THE STATE OF CALIFORNIA OR ITS OFFICERS OR AGENTS SHALL NOT BE RESPONSIBLE FOR THE ACCURACY OR COMPLETENESS OF SCANNED COPIES OF THIS PLAN SHEET.

3

NOTES:

1. FOR PANELS WITH A RADIUS (WEDGE PANELS), THE DIMENSIONS AND QUANTITIES OF THE REINFORCEMENT ARE CONSIDERED THE SAME AND VARY MINIMALLY WITH RESPECT TO THE LENGTH (L) AND IN WIDTH (W).
2. FOR TABLE A, REINFORCEMENT IS PLACED OR MEASURED IN THE LONGITUDINAL DIRECTION, UNLESS INDICATED OTHERWISE.
3. FOR TABLE B, REINFORCEMENT IS PLACED OR MEASURED IN THE TRANSVERSE DIRECTION, UNLESS INDICATED OTHERWISE.
4. ALL REINFORCEMENT DIMENSIONS ARE TO BE VERIFIED BY THE MANUFACTURER BEFORE PANEL FABRICATION.

ABBREVIATIONS:

P-T POST-TENSIONING

TABLE A

W	COUNT OF PRETENSIONING STRANDS (7-WIRE 1/2") PLACED TRANSVERSELY (1)	LENGTH OF EACH P-T DUCT AT LONG BLOCKOUT	LENGTH OF EACH P-T DUCT (2) AT SHORT BLOCKOUT	COUNT OF BAR "U1"	LENGTH OF EACH BAR "U1"	COUNT OF BAR "U2"	LENGTH OF EACH BAR "U2"	LENGTH OF EACH BAR "B5" (3)	COUNT OF LIFTING ANCHORS
FT	EA	FT-IN	FT-IN	EA	FT-IN	EA	FT-IN	FT-IN	EA
7	6, 6	0'-10", 0'-8"	2'-2", 2'-0"	4	5'-11"	2	6'-3"	3'-1"	4
8	7, 7	1'-4", 1'-2"	2'-8", 2'-6"	4	6'-5"	2	6'-9"	3'-7"	4
9	7, 7	1'-10", 1'-8"	3'-2", 3'-0"	4	6'-11"	2	7'-3"	4'-1"	4
10	8, 8	2'-4", 2'-2"	3'-8", 3'-6"	4	7'-5"	2	7'-9"	4'-7"	4

(1) SEE TABLE B FOR LENGTH OF EACH PRETENSIONING STRAND.
(2) SEE TABLE B FOR COUNT OF P-T DUCTS.
(3) SEE TABLE B FOR COUNT OF BAR "B5".

TABLE B

L	b	COUNT OF P-T DUCTS PLACED LONGITUDINALLY (1)	COUNT OF ALL BLOCK-OUTS	COUNT OF LARGER (6"x24") BLOCK-OUTS	COUNT OF SMALLER (6"x8") BLOCK-OUTS	COUNT OF BAR "A2"	LENGTH OF EACH BAR "A2"	COUNT OF BAR "A1"	LENGTH OF EACH BAR "A1"	COUNT OF BAR "A3"	LENGTH OF EACH BAR "A3"	COUNT OF BAR "C"	LENGTH OF EACH BAR "C"	COUNT OF BAR "B1"	LENGTH OF EACH BAR "B1"	COUNT OF BAR "B2"	LENGTH OF EACH BAR "B2"	COUNT OF BAR "B3" & "B4"	LENGTH OF EACH BAR "B3"	LENGTH OF EACH BAR "B4"	COUNT OF BAR "B5" (2)	COUNT OF DOWELS	LENGTH OF EACH DOWEL	LENGTH OF EACH PRETEN-SIONING STRAND (3) (7-WIRE 1/2")
FT	FT	EA	EA	EA	EA	EA	FT-IN	EA	FT	EA	FT-IN	EA	FT-IN	EA	FT	EA	FT-IN	EA	FT-IN	FT	EA	EA	FT	FT
12	8	4	4	2	2	12	6'-4"	14	5	2	5'-8"	6	3'-2"	7	11.5	8	3'-5"	4	0'-2"	2.5	12	11	2	12
12.5	8.5	4	4	2	2	12	6'-4"	14	5	2	5'-8"	6	3'-2"	7	12	8	3'-7"	4	0'-4"	2.5	12	11	2	12.5
13	9	4	4	2	2	12	6'-4"	14	5	2	5'-8"	6	3'-2"	7	12.5	8	3'-9"	4	0'-6"	2.5	13	12	2	13
13.5	9.5	4	4	2	2	12	6'-4"	14	5	2	5'-8"	6	3'-2"	7	13	8	3'-11"	4	0'-8"	2.5	13	12	2	13.5
14	10	5	5	2	3	12	6'-4"	20	5	2	5'-8"	6	3'-2"	7	13.5	8	3'-3"	4	2'-6"	2.5	14	13	2	14
14.5	10.5	5	5	2	3	12	6'-4"	20	5	2	5'-8"	6	3'-2"	7	14	8	3'-5"	4	2'-9"	2.5	14	13	2	14.5
15	11	5	5	2	3	12	6'-4"	20	5	2	5'-8"	6	3'-2"	7	14.5	8	3'-6"	4	3'-0"	2.5	15	14	2	15
15.5	11.5	5	5	2	3	12	6'-4"	20	5	2	5'-8"	6	3'-2"	7	15	8	3'-8"	4	3'-3"	2.5	15	14	2	15.5
16	12	5	5	2	3	12	6'-4"	20	5	2	5'-8"	6	3'-2"	7	15.5	8	3'-9"	4	3'-6"	2.5	16	15	2	16
16.5	12.5	6	6	2	4	12	6'-4"	26	5	2	5'-8"	6	3'-2"	7	16	8	3'-3"	4	5'-0"	2.5	16	15	2	16.5

(1) SEE TABLE A FOR LENGTH OF EACH P-T DUCT.
(2) SEE TABLE A FOR LENGTH OF EACH BAR "B5".
(3) SEE TABLE A FOR COUNT OF PRETENSIONING STRANDS.

FOR JOINT PANEL TYPE C1 OR TYPE C3

CONSTRUCTION DETAILS
REINFORCEMENT DIMENSIONS AND QUANTITIES
PRECAST PRESTRESSED CONCRETE PAVEMENT

3 **REVISED PER ADDENDUM No. 3 DATED JANUARY 31, 2012**

NO SCALE

C-314

STATE OF CALIFORNIA - DEPARTMENT OF TRANSPORTATION
Caltrans
DESIGN
FUNCTIONAL SUPERVISOR KIRSTEN STAHL
CALCULATED-DESIGNED BY WINNIE DEGUZMAN
CHECKED BY KIRSTEN STAHL
REVISED BY
DATE REVISED

LAST REVISION 00-00-00
DATE PLOTTED => 30-JAN-2012
TIME PLOTTED => 11:43

Dist	COUNTY	ROUTE	POST MILES TOTAL PROJECT	SHEET No.	TOTAL SHEETS
07	LA	710	17.2/26.4	426	1507

REGISTERED CIVIL ENGINEER 2-3-11 DATE

6-27-11
PLANS APPROVAL DATE

REGISTERED PROFESSIONAL ENGINEER KIRSTEN R. STAHL No. C46857 Exp. 6-30-13 CIVIL STATE OF CALIFORNIA

THE STATE OF CALIFORNIA OR ITS OFFICERS OR AGENTS SHALL NOT BE RESPONSIBLE FOR THE ACCURACY OR COMPLETENESS OF SCANNED COPIES OF THIS PLAN SHEET.

NOTES:

1. FOR PANELS WITH A RADIUS (WEDGE PANELS), THE DIMENSIONS AND QUANTITIES OF THE REINFORCEMENT ARE CONSIDERED THE SAME AND VARY MINIMALLY WITH RESPECT TO THE LENGTH (L) AND IN WIDTH (W).
2. FOR TABLE A, REINFORCEMENT IS PLACED OR MEASURED IN THE LONGITUDINAL DIRECTION, UNLESS INDICATED OTHERWISE.
3. FOR TABLE B, REINFORCEMENT IS PLACED OR MEASURED IN THE TRANSVERSE DIRECTION, UNLESS INDICATED OTHERWISE.
4. ALL REINFORCEMENT DIMENSIONS ARE TO BE VERIFIED BY THE MANUFACTURER BEFORE PANEL FABRICATION.

3

ABBREVIATIONS;

P-T POST-TENSIONING

TABLE B

L	b	COUNT OF P-T DUCTS PLACED LONGITUDINALLY (1)	COUNT OF ALL BLOCK-OUTS	COUNT OF LARGER (6"x24") BLOCK-OUTS	COUNT OF SMALLER (6"x8") BLOCK-OUTS	COUNT OF BAR "A2"	LENGTH OF EACH BAR "A2"	COUNT OF BAR "A1"	LENGTH OF EACH BAR "A1"	COUNT OF BAR "A3"	LENGTH OF EACH BAR "A3"	COUNT OF BAR "C"	LENGTH OF EACH BAR "C"	COUNT OF BAR "B1"	LENGTH OF EACH BAR "B1"	COUNT OF BAR "B2"	LENGTH OF EACH BAR "B2"	COUNT OF BAR "B3" & "B4"	LENGTH OF EACH BAR "B3"	LENGTH OF EACH BAR "B4"	COUNT OF BAR "B5" (2)	COUNT OF DOWELS	LENGTH OF EACH DOWEL	LENGTH OF EACH PRETEN-SIONING STRAND (3) (7-WIRE 1/2")
FT	FT	EA	EA	EA	EA	EA	FT-IN	EA	FT	EA	FT-IN	EA	FT-IN	EA	FT	EA	FT-IN	EA	FT-IN	FT	EA	EA	FT	FT
17	13	6	6	2	4	12	6'-4"	26	5	2	5'-8"	6	3'-2"	7	16.5	8	3'-4"	4	5'-4"	2.5	17	16	2	17
17.5	13.5	6	6	2	4	12	6'-4"	26	5	2	5'-8"	6	3'-2"	7	17	8	3'-5"	4	5'-7"	2.5	17	16	2	17.5
18	14	6	6	2	4	12	6'-4"	26	5	2	5'-8"	6	3'-2"	7	17.5	8	3'-7"	4	5'-11"	2.5	18	17	2	18
18.5	14.5	6	6	2	4	12	6'-4"	26	5	2	5'-8"	6	3'-2"	7	18	8	3'-8"	4	6'-2"	2.5	18	17	2	18.5
19	15	7	7	2	5	12	6'-4"	32	5	2	5'-8"	6	3'-2"	7	18.5	8	3'-3"	4	7'-6"	2.5	19	18	2	19
19.5	15.5	7	7	2	5	12	6'-4"	32	5	2	5'-8"	6	3'-2"	7	19	8	3'-4"	4	7'-10"	2.5	19	18	2	19.5
20	16	7	7	2	5	12	6'-4"	32	5	2	5'-8"	6	3'-2"	7	19.5	8	3'-5"	4	8'-2"	2.5	20	19	2	20
20.5	16.5	7	7	2	5	12	6'-4"	32	5	2	5'-8"	6	3'-2"	7	20	8	3'-6"	4	8'-6"	2.5	20	19	2	20.5
21	17	7	7	2	5	12	6'-4"	32	5	2	5'-8"	6	3'-2"	7	20.5	8	3'-7"	4	8'-10"	2.5	21	20	2	21
21.5	17.5	8	8	2	6	12	6'-4"	38	5	2	5'-8"	6	3'-2"	7	21	8	3'-9"	4	5'-0"	2.5	21	20	2	21.5
22	18	8	8	2	6	12	6'-4"	38	5	2	5'-8"	6	3'-2"	7	21.5	8	5'-11"	4	5'-3"	2.5	22	21	2	22
22.5	18.5	8	8	2	6	12	6'-4"	38	5	2	5'-8"	6	3'-2"	7	22	8	6'-0"	4	5'-5"	2.5	22	21	2	22.5
23	19	8	8	2	6	12	6'-4"	38	5	2	5'-8"	6	3'-2"	7	22.5	8	6'-2"	4	5'-8"	2.5	23	22	2	23
23.5	19.5	8	8	2	6	12	6'-4"	38	5	2	5'-8"	6	3'-2"	7	23	8	6'-4"	4	5'-10"	2.5	23	22	2	23.5
24	20	9	9	2	7	12	6'-4"	44	5	2	5'-8"	6	3'-2"	7	23.5	8	6'-9"	4	7'-6"	2.5	24	23	2	24
24.5	20.5	9	9	2	7	12	6'-4"	44	5	2	5'-8"	6	3'-2"	7	24	8	5'-11"	4	7'-9"	2.5	24	23	2	24.5
25	21	9	9	2	7	12	6'-4"	44	5	2	5'-8"	6	3'-2"	7	24.5	8	5'-0"	4	8'-0"	2.5	25	24	2	25
25.5	21.5	9	9	2	7	12	6'-4"	44	5	2	5'-8"	6	3'-2"	7	25	8	6'-2"	4	8'-3"	2.5	25	24	2	25.5
26	22	9	9	2	7	12	6'-4"	44	5	2	5'-8"	6	3'-2"	7	25.5	8	6'-3"	4	8'-6"	2.5	26	25	2	26
26.5	22.5	10	10	2	8	12	6'-4"	50	5	2	5'-8"	6	3'-2"	7	26	8	6'-9"	4	10'-0"	2.5	26	25	2	26.5

(1) SEE TABLE A FOR LENGTH OF EACH P-T DUCT.
(2) SEE TABLE A FOR LENGTH OF EACH BAR "B5".
(3) SEE TABLE A FOR COUNT OF PRETENSIONING STRANDS.

FOR JOINT PANEL TYPE C1 OR TYPE C3

CONSTRUCTION DETAILS
REINFORCEMENT DIMENSIONS AND QUANTITIES
PRECAST PRESTRESSED CONCRETE PAVEMENT

NO SCALE

C-315

3 **REVISED PER ADDENDUM No. 3 DATED JANUARY 31, 2012**

STATE OF CALIFORNIA - DEPARTMENT OF TRANSPORTATION
Caltrans® DESIGN

FUNCTIONAL SUPERVISOR: KIRSTEN STAHL
CALCULATED-DESIGNED BY: WINNIE DEGUZMAN
CHECKED BY: KIRSTEN STAHL
REVISED BY
DATE REVISED

LAST REVISION 00-00-00
DATE PLOTTED => 30-JAN-2012
TIME PLOTTED => 11:43

Dist	COUNTY	ROUTE	POST MILES TOTAL PROJECT	SHEET No.	TOTAL SHEETS
07	LA	710	17.2/26.4	427	1507

REGISTERED CIVIL ENGINEER 2-3-11 DATE

6-27-11
PLANS APPROVAL DATE

REGISTERED PROFESSIONAL ENGINEER KIRSTEN R. STAHL No. C46857 Exp. 6-30-13 CIVIL STATE OF CALIFORNIA

THE STATE OF CALIFORNIA OR ITS OFFICERS OR AGENTS SHALL NOT BE RESPONSIBLE FOR THE ACCURACY OR COMPLETENESS OF SCANNED COPIES OF THIS PLAN SHEET.

3

NOTES:

1. FOR PANELS WITH A RADIUS (WEDGE PANELS), THE DIMENSIONS AND QUANTITIES OF THE REINFORCEMENT ARE CONSIDERED THE SAME AND VARY MINIMALLY WITH RESPECT TO THE LENGTH (L) AND IN WIDTH (W).
2. FOR TABLE A, REINFORCEMENT IS PLACED OR MEASURED IN THE LONGITUDINAL DIRECTION, UNLESS INDICATED OTHERWISE.
3. FOR TABLE B, REINFORCEMENT IS PLACED OR MEASURED IN THE TRANSVERSE DIRECTION, UNLESS INDICATED OTHERWISE.
4. ALL REINFORCEMENT DIMENSIONS ARE TO BE VERIFIED BY THE MANUFACTURER BEFORE PANEL FABRICATION.

ABBREVIATIONS:

P-T POST-TENSIONING

TABLE B

L	b	COUNT OF P-T DUCTS PLACED LONGITUDINALLY (1)	COUNT OF ALL BLOCK-OUTS	COUNT OF LARGER (6"x24") BLOCK-OUTS	COUNT OF SMALLER (6"x8") BLOCK-OUTS	COUNT OF BAR "A2"	LENGTH OF EACH BAR "A2"	COUNT OF BAR "A1"	LENGTH OF EACH BAR "A1"	COUNT OF BAR "A3"	LENGTH OF EACH BAR "A3"	COUNT OF BAR "C"	LENGTH OF EACH BAR "C"	COUNT OF BAR "B1"	LENGTH OF EACH BAR "B1"	COUNT OF BAR "B2"	LENGTH OF EACH BAR "B2"	COUNT OF BAR "B3" & "B4"	LENGTH OF EACH BAR "B3"	LENGTH OF EACH BAR "B4"	COUNT OF BAR "B5" (2)	COUNT OF DOWELS	LENGTH OF EACH DOWEL	LENGTH OF EACH PRETEN-SIONING STRAND (3) (7-WIRE 1/2")
FT	FT	EA	EA	EA	EA	EA	FT-IN	EA	FT	EA	FT-IN	EA	FT-IN	EA	FT	EA	FT-IN	EA	FT-IN	FT	EA	EA	FT	FT
27	23	10	10	2	8	12	6'-4"	50	5	2	5'-8"	6	3'-2"	7	26.5	8	5'-10"	4	10'-3"	2.5	27	26	2	27
27.5	23.5	10	10	2	8	12	6'-4"	50	5	2	5'-8"	6	3'-2"	7	27	8	6'-0"	4	10'-7"	2.5	27	26	2	27.5
28	24	10	10	2	8	12	6'-4"	50	5	2	5'-8"	6	3'-2"	7	27.5	8	6'-1"	4	10'-10"	2.5	28	27	2	28
28.5	24.5	10	10	2	8	12	6'-4"	50	5	2	5'-8"	6	3'-2"	7	28	8	6'-2"	4	11'-1"	2.5	28	27	2	28.5
29	25	11	11	2	9	12	6'-4"	56	5	2	5'-8"	6	3'-2"	7	28.5	8	6'-3"	4	7'-6"	2.5	29	28	2	29
29.5	25.5	11	11	2	9	12	6'-4"	56	5	2	5'-8"	6	3'-2"	7	29	8	8'-5"	4	7'-8"	2.5	29	28	2	29.5
30	26	11	11	2	9	12	6'-4"	56	5	2	5'-8"	6	3'-2"	7	29.5	8	8'-7"	4	7'-11"	2.5	30	29	2	30
30.5	26.5	11	11	2	9	12	6'-4"	56	5	2	5'-8"	6	3'-2"	7	30	8	8'-8"	4	8'-1"	2.5	30	29	2	30.5
31	27	11	11	2	9	12	6'-4"	56	5	2	5'-8"	6	3'-2"	7	30.5	8	8'-10"	4	8'-4"	2.5	31	30	2	31
31.5	27.5	12	12	2	10	12	6'-4"	62	5	2	5'-8"	6	3'-2"	7	31	8	8'-3"	4	10'-0"	2.5	31	30	2	31.5
32	28	12	12	2	10	12	6'-4"	62	5	2	5'-8"	6	3'-2"	7	31.5	8	8'-5"	4	10'-3"	2.5	32	31	2	32
32.5	28.5	12	12	2	10	12	6'-4"	62	5	2	5'-8"	6	3'-2"	7	32	8	8'-6"	4	10'-6"	2.5	32	31	2	32.5
33	29	12	12	2	10	12	6'-4"	62	5	2	5'-8"	6	3'-2"	7	32.5	8	8'-8"	4	10'-8"	2.5	33	32	2	33
33.5	29.5	12	12	2	10	12	6'-4"	62	5	2	5'-8"	6	3'-2"	7	33	8	8'-10"	4	10'-11"	2.5	33	32	2	33.5
34	30	13	13	2	11	12	6'-4"	68	5	2	5'-8"	6	3'-2"	7	33.5	8	8'-3"	4	12'-6"	2.5	34	33	2	34
34.5	30.5	13	13	2	11	12	6'-4"	68	5	2	5'-8"	6	3'-2"	7	34	8	8'-5"	4	12'-9"	2.5	34	33	2	34.5
35	31	13	13	2	11	12	6'-4"	68	5	2	5'-8"	6	3'-2"	7	34.5	8	8'-6"	4	13'-0"	2.5	35	34	2	35
35.5	31.5	13	13	2	11	12	6'-4"	68	5	2	5'-8"	6	3'-2"	7	35	8	8'-8"	4	13'-3"	2.5	35	34	2	35.5
36	32	13	13	2	11	12	6'-4"	68	5	2	5'-8"	6	3'-2"	7	35.5	8	8'-9"	4	13'-6"	2.5	36	35	2	36
36.5	32.5	14	14	2	12	12	6'-4"	74	5	2	5'-8"	6	3'-2"	7	36	8	10'-9"	4	10'-0"	2.5	36	35	2	36.5

(1) SEE TABLE A FOR LENGTH OF EACH P-T DUCT.
(2) SEE TABLE A FOR LENGTH OF EACH BAR "B5".
(3) SEE TABLE A FOR COUNT OF PRETENSIONING STRANDS.

FOR JOINT PANEL TYPE C1 OR TYPE C3

3 **REVISED PER ADDENDUM No. 3 DATED JANUARY 31, 2012**

CONSTRUCTION DETAILS
REINFORCEMENT DIMENSIONS AND QUANTITIES
PRECAST PRESTRESSED CONCRETE PAVEMENT

NO SCALE

C-316

STATE OF CALIFORNIA - DEPARTMENT OF TRANSPORTATION
DESIGN
FUNCTIONAL SUPERVISOR KIRSTEN STAHL
CALCULATED-DESIGNED BY WINNIE DEGUZMAN
CHECKED BY KIRSTEN STAHL
REVISED BY
DATE REVISED

LAST REVISION 00-00-00
DATE PLOTTED => 30-JAN-2012
TIME PLOTTED => 11:43

Dist	COUNTY	ROUTE	POST MILES TOTAL PROJECT	SHEET No.	TOTAL SHEETS
07	LA	710	17.2/26.4	428	1507

REGISTERED CIVIL ENGINEER 2-3-11 DATE

6-27-11
PLANS APPROVAL DATE

REGISTERED PROFESSIONAL ENGINEER KIRSTEN R. STAHL No. C46857 Exp. 6-30-13 CIVIL STATE OF CALIFORNIA

3

THE STATE OF CALIFORNIA OR ITS OFFICERS OR AGENTS SHALL NOT BE RESPONSIBLE FOR THE ACCURACY OR COMPLETENESS OF SCANNED COPIES OF THIS PLAN SHEET.

NOTES:

1. FOR PANELS WITH A RADIUS (WEDGE PANELS), THE DIMENSIONS AND QUANTITIES OF THE REINFORCEMENT ARE CONSIDERED THE SAME AND VARY MINIMALLY WITH RESPECT TO THE LENGTH (L) AND IN WIDTH (W).
2. FOR TABLE A, REINFORCEMENT IS PLACED OR MEASURED IN THE LONGITUDINAL DIRECTION, UNLESS INDICATED OTHERWISE.
3. FOR TABLE B, REINFORCEMENT IS PLACED OR MEASURED IN THE TRANSVERSE DIRECTION, UNLESS INDICATED OTHERWISE.
4. ALL REINFORCEMENT DIMENSIONS ARE TO BE VERIFIED BY THE MANUFACTURER BEFORE PANEL FABRICATION.

ABBREVIATIONS:

P-T POST-TENSIONING

TABLE B

L	b	COUNT OF P-T DUCTS PLACED LONGITUDINALLY (1)	COUNT OF ALL BLOCK-OUTS	COUNT OF LARGER (6"x24") BLOCK-OUTS	COUNT OF SMALLER (6"x8") BLOCK-OUTS	COUNT OF BAR "A2"	LENGTH OF EACH BAR "A2"	COUNT OF BAR "A1"	LENGTH OF EACH BAR "A1"	COUNT OF BAR "A3"	LENGTH OF EACH BAR "A3"	COUNT OF BAR "C"	LENGTH OF EACH BAR "C"	COUNT OF BAR "B1"	LENGTH OF EACH BAR "B1"	COUNT OF BAR "B2"	LENGTH OF EACH BAR "B2"	COUNT OF BAR "B3" & "B4"	LENGTH OF EACH BAR "B3"	LENGTH OF EACH BAR "B4"	COUNT OF BAR "B5" (2)	COUNT OF DOWELS	LENGTH OF EACH DOWEL	LENGTH OF EACH PRETEN-SIONING STRAND (3) (7-WIRE 1/2")
FT	FT	EA	EA	EA	EA	EA	FT-IN	EA	FT	EA	FT-IN	EA	FT-IN	EA	FT	EA	FT-IN	EA	FT-IN	FT	EA	EA	FT	FT
37	33	14	14	2	12	12	6'-4"	74	5	2	5'-8"	6	3'-2"	7	36.5	8	10'-11"	4	10'-2"	2.5	37	36	2	37
37.5	33.5	14	14	2	12	12	6'-4"	74	5	2	5'-8"	6	3'-2"	7	37	8	11'-1"	4	10'-5"	2.5	37	36	2	37.5
38	34	14	14	2	12	12	6'-4"	74	5	2	5'-8"	6	3'-2"	7	37.5	8	11'-3"	4	10'-7"	2.5	38	37	2	38
38.5	34.5	14	14	2	12	12	6'-4"	74	5	2	5'-8"	6	3'-2"	7	38	8	11'-4"	4	10'-9"	2.5	38	37	2	38.5
39	35	15	15	2	13	12	6'-4"	80	5	2	5'-8"	6	3'-2"	7	38.5	8	10'-9"	4	12'-6"	2.5	39	38	2	39
39.5	35.5	15	15	2	13	12	6'-4"	80	5	2	5'-8"	6	3'-2"	7	39	8	10'-11"	4	12'-9"	2.5	39	38	2	39.5
40	36	15	15	2	13	12	6'-4"	80	5	2	5'-8"	6	3'-2"	7	39.5	8	11'-0"	4	12'-11"	2.5	40	39	2	40
40.5	36.5	15	15	2	13	12	6'-4"	80	5	2	5'-8"	6	3'-2"	7	40	8	11'-2"	4	13'-2"	2.5	40	39	2	40.5
41	37	15	15	2	13	12	6'-4"	80	5	2	5'-8"	6	3'-2"	7	40.5	8	11'-4"	4	13'-4"	2.5	41	40	2	41
41.5	37.5	16	16	2	14	12	6'-4"	86	5	2	5'-8"	6	3'-2"	7	41	8	10'-9"	4	15'-0"	2.5	41	40	2	41.5
42	38	16	16	2	14	12	6'-4"	86	5	2	5'-8"	6	3'-2"	7	41.5	8	10'-11"	4	15'-3"	2.5	42	41	2	42
42.5	38.5	16	16	2	14	12	6'-4"	86	5	2	5'-8"	6	3'-2"	7	42	8	11'-0"	4	15'-6"	2.5	42	41	2	42.5
43	39	16	16	2	14	12	6'-4"	86	5	2	5'-8"	6	3'-2"	7	42.5	8	11'-2"	4	15'-8"	2.5	43	42	2	43
43.5	39.5	16	16	2	14	12	6'-4"	86	5	2	5'-8"	6	3'-2"	7	43	8	11'-3"	4	15'-11"	2.5	43	42	2	43.5
44	40	17	17	2	15	12	6'-4"	92	5	2	5'-8"	6	3'-2"	7	43.5	8	13'-3"	4	12'-6"	2.5	44	43	2	44
44.5	40.5	17	17	2	15	12	6'-4"	92	5	2	5'-8"	6	3'-2"	7	44	8	13'-5"	4	12'-8"	2.5	44	43	2	44.5
45	41	17	17	2	15	12	6'-4"	92	5	2	5'-8"	6	3'-2"	7	44.5	8	13'-7"	4	12'-11"	2.5	45	44	2	45
45.5	41.5	17	17	2	15	12	6'-4"	92	5	2	5'-8"	6	3'-2"	7	45	8	13'-9"	4	13'-1"	2.5	45	44	2	45.5
46	42	17	17	2	15	12	6'-4"	92	5	2	5'-8"	6	3'-2"	7	45.5	8	13'-11"	4	13'-3"	2.5	46	45	2	46
46.5	42.5	18	18	2	16	12	6'-4"	98	5	2	5'-8"	6	3'-2"	7	46	8	13'-3"	4	15'-0"	2.5	46	45	2	46.5

(1) SEE TABLE A FOR LENGTH OF EACH P-T DUCT.
(2) SEE TABLE A FOR LENGTH OF EACH BAR "B5".
(3) SEE TABLE A FOR COUNT OF PRETENSIONING STRANDS.

FOR JOINT PANEL TYPE C1 OR TYPE C3

CONSTRUCTION DETAILS
REINFORCEMENT DIMENSIONS AND QUANTITIES
PRECAST PRESTRESSED CONCRETE PAVEMENT

NO SCALE

C-317

3 REVISED PER ADDENDUM No. 3 DATED JANUARY 31, 2012

REVISED BY | DATE REVISED
WINNIE DEGUZMAN | KIRSTEN STAHL
CALCULATED-DESIGNED BY | CHECKED BY
FUNCTIONAL SUPERVISOR: KIRSTEN STAHL
STATE OF CALIFORNIA - DEPARTMENT OF TRANSPORTATION
Caltrans DESIGN

LAST REVISION 00-00-00 | DATE PLOTTED => 30-JAN-2012 | TIME PLOTTED => 11:13

Dist	COUNTY	ROUTE	POST MILES TOTAL PROJECT	SHEET No.	TOTAL SHEETS
07	LA	710	17.2/26.4	429	1507

REGISTERED CIVIL ENGINEER 2-3-11 DATE

6-27-11
PLANS APPROVAL DATE

REGISTERED PROFESSIONAL ENGINEER KIRSTEN R. STAHL No. C46857 Exp. 6-30-13 CIVIL STATE OF CALIFORNIA

3

THE STATE OF CALIFORNIA OR ITS OFFICERS OR AGENTS SHALL NOT BE RESPONSIBLE FOR THE ACCURACY OR COMPLETENESS OF SCANNED COPIES OF THIS PLAN SHEET.

NOTES:

1. FOR PANELS WITH A RADIUS (WEDGE PANELS), THE DIMENSIONS AND QUANTITIES OF THE REINFORCEMENT ARE CONSIDERED THE SAME AND VARY MINIMALLY WITH RESPECT TO THE LENGTH (L) AND IN WIDTH (W).
2. FOR TABLE A, REINFORCEMENT IS PLACED OR MEASURED IN THE LONGITUDINAL DIRECTION, UNLESS INDICATED OTHERWISE.
3. FOR TABLE B, REINFORCEMENT IS PLACED OR MEASURED IN THE TRANSVERSE DIRECTION, UNLESS INDICATED OTHERWISE.
4. ALL REINFORCEMENT DIMENSIONS ARE TO BE VERIFIED BY THE MANUFACTURER BEFORE PANEL FABRICATION.

ABBREVIATIONS:

P-T POST-TENSIONING

TABLE B

L	b	COUNT OF P-T DUCTS PLACED LONGITUDINALLY (1)	COUNT OF ALL BLOCK-OUTS	COUNT OF LARGER (6"x24") BLOCK-OUTS	COUNT OF SMALLER (6"x8") BLOCK-OUTS	COUNT OF BAR "A2"	LENGTH OF EACH BAR "A2"	COUNT OF BAR "A1"	LENGTH OF EACH BAR "A1"	COUNT OF BAR "A3"	LENGTH OF EACH BAR "A3"	COUNT OF BAR "C"	LENGTH OF EACH BAR "C"	COUNT OF BAR "B1"	LENGTH OF EACH BAR "B1"	COUNT OF BAR "B2"	LENGTH OF EACH BAR "B2"	COUNT OF BAR "B3" & "B4"	LENGTH OF EACH BAR "B3"	LENGTH OF EACH BAR "B4"	COUNT OF BAR "B5" (2)	COUNT OF DOWELS	LENGTH OF EACH DOWEL	LENGTH OF EACH PRETEN-SIONING STRAND (3) (7-WIRE 1/2")
FT	FT	EA	EA	EA	EA	EA	FT-IN	EA	FT	EA	FT-IN	EA	FT-IN	EA	FT	EA	FT-IN	EA	FT-IN	FT	EA	EA	FT	FT
47′	43′	18	18	2	16	12	6′-4"	98	5′	2	5′-8"	6	3′-2"	7	46.5′	8	13′-5"	4	15′-2"	2.5′	47	46	2′	47′
47.5′	43.5′	18	18	2	16	12	6′-4"	98	5′	2	5′-8"	6	3′-2"	7	47′	8	13′-7"	4	15′-5"	2.5′	47	46	2′	47.5′
48′	44′	18	18	2	16	12	6′-4"	98	5′	2	5′-8"	6	3′-2"	7	47.5′	8	13′-8"	4	15′-7"	2.5′	48	47	2′	48′
48.5′	44.5′	18	18	2	16	12	6′-4"	98	5′	2	5′-8"	6	3′-2"	7	48′	8	13′-10"	4	15′-10"	2.5′	48	47	2′	48.5′
49′	45′	19	19	2	17	12	6′-4"	104	5′	2	5′-8"	6	3′-2"	7	48.5′	8	13′-3"	4	17′-6"	2.5′	49	48	2′	49′
49.5′	45.5′	19	19	2	17	12	6′-4"	104	5′	2	5′-8"	6	3′-2"	7	49′	8	13′-5"	4	17′-9"	2.5′	49	48	2′	49.5′
50′	46′	19	19	2	17	12	6′-4"	104	5′	2	5′-8"	6	3′-2"	7	49.5′	8	13′-6′	4	17′-11"	2.5′	50	49	2′	50′

(1) SEE TABLE A FOR LENGTH OF EACH P-T DUCT.
(2) SEE TABLE A FOR LENGTH OF EACH BAR "B5".
(3) SEE TABLE A FOR COUNT OF PRETENSIONING STRANDS.

FOR JOINT PANEL
TYPE C1 OR TYPE C3

3 REVISED PER ADDENDUM No. 3 DATED JANUARY 31, 2012

CONSTRUCTION DETAILS
REINFORCEMENT DIMENSIONS AND QUANTITIES
PRECAST PRESTRESSED CONCRETE PAVEMENT

NO SCALE

C-318

REVISED BY | DATE REVISED
WINNIE DEGUZMAN | KIRSTEN STAHL
CALCULATED-DESIGNED BY | CHECKED BY
FUNCTIONAL SUPERVISOR: KIRSTEN STAHL
STATE OF CALIFORNIA - DEPARTMENT OF TRANSPORTATION
Caltrans DESIGN

LAST REVISION 00-00-00 | DATE PLOTTED => 30-JAN-2012 | TIME PLOTTED => 11:13

Dist	COUNTY	ROUTE	POST MILES TOTAL PROJECT	SHEET No.	TOTAL SHEETS
07	LA	710	17.2/26.4	430	1507

REGISTERED CIVIL ENGINEER 2-3-11 DATE

6-27-11
PLANS APPROVAL DATE

REGISTERED PROFESSIONAL ENGINEER KIRSTEN R. STAHL No. C46857 Exp. 6-30-13 CIVIL STATE OF CALIFORNIA

3

THE STATE OF CALIFORNIA OR ITS OFFICERS OR AGENTS SHALL NOT BE RESPONSIBLE FOR THE ACCURACY OR COMPLETENESS OF SCANNED COPIES OF THIS PLAN SHEET.

NOTES:

1. FOR PANELS WITH A RADIUS (WEDGE PANELS), THE DIMENSIONS AND QUANTITIES OF THE REINFORCEMENT ARE CONSIDERED THE SAME AND VARY MINIMALLY WITH RESPECT TO THE LENGTH (L) AND IN WIDTH (W).
2. FOR TABLE A, REINFORCEMENT IS PLACED OR MEASURED IN THE LONGITUDINAL DIRECTION, UNLESS INDICATED OTHERWISE.
3. FOR TABLE B, REINFORCEMENT IS PLACED OR MEASURED IN THE TRANSVERSE DIRECTION, UNLESS INDICATED OTHERWISE.
4. ALL REINFORCEMENT DIMENSIONS ARE TO BE VERIFIED BY THE MANUFACTURER BEFORE PANEL FABRICATION.

ABBREVIATIONS;

P-T POST-TENSIONING

TABLE A

W	COUNT OF PRETENSIONING STRANDS (7-WIRE 1/2") PLACED TRANSVERSELY	LENGTH OF EACH P-T DUCT AT LONG BLOCKOUT	LENGTH OF EACH P-T DUCT AT SHORT BLOCKOUT	COUNT OF BAR "U1"	LENGTH OF EACH BAR "U1"	COUNT OF BAR "U2"	LENGTH OF EACH BAR "U2"	COUNT OF LIFTING ANCHORS PER PANEL
FT	EA	FT-IN	FT-IN	EA	FT-IN	EA	FT-IN	EA
7	6 , 6	0'-10" , 0'-8"	2'-2" , 2'-0"	4	5'-11"	4	6'-3"	4
8	7 , 7	1'-4' , 1'-2"	2'-8' , 2'-6"	4	6'-5"	4	6'-9"	4
9	7 , 7	1'-10" , 1'-8"	3'-2" , 3'-0"	4	6'-11"	4	7'-3"	4
10	8 , 8	2'-4" , 2'-2"	3'-8" , 3'-6"	4	7'-5"	4	7'-9"	4

TABLE B

L	b	COUNT OF P-T DUCTS PLACED LONGITUDINALLY (1)	COUNT OF ALL BLOCK-OUTS	COUNT OF LARGER (6"x24") BLOCK-OUTS	COUNT OF SMALLER (6"x8") BLOCK-OUTS	COUNT OF BAR "A2"	LENGTH OF EACH BAR "A2"	COUNT OF BAR "A1"	LENGTH OF EACH BAR "A1"	COUNT OF BAR "A3"	LENGTH OF EACH BAR "A3"	COUNT OF BAR "C"	LENGTH OF EACH BAR "C"	COUNT OF BAR "B1"	LENGTH OF EACH BAR "B1"	COUNT OF BAR "B2"	LENGTH OF EACH BAR "B2"	COUNT OF BAR "B3" & "B4"	LENGTH OF EACH BAR "B3"	LENGTH OF EACH BAR "B4"	COUNT OF DOWELS	LENGTH OF EACH DOWEL	LENGTH OF EACH PRETEN-SIONING STRAND (3) (7-WIRE 1/2")
FT	FT	EA	EA	EA	EA	EA	FT-IN	EA	FT	EA	FT-IN	EA	FT-IN	EA	FT	EA	FT-IN	EA	FT-IN	FT	EA	FT	FT
12'	8'	8	8	4	4	24	6'-4"	28	5'	4	5'-8"	12	3'-2"	8	11.5'	16	3'-5"	8	0'-2"	2.5'	11	2'	12'
12.5'	8.5'	8	8	4	4	24	6'-4"	28	5'	4	5'-8"	12	3'-2"	8	12'	16	3'-7"	8	0'-4"	2.5'	11	2'	12.5'
13'	9'	8	8	4	4	24	6'-4"	28	5'	4	5'-8"	12	3'-2"	8	12.5'	16	3'-9"	8	0'-6"	2.5'	12	2'	13'
13.5'	9.5'	8	8	4	4	24	6'-4"	28	5'	4	5'-8"	12	3'-2"	8	13'	16	3'-11"	8	0'-8"	2.5'	12	2'	13.5'
14'	10'	10	10	4	6	24	6'-4"	40	5'	4	5'-8"	12	3'-2"	8	13.5'	16	3'-2"	8	2'-6"	2.5'	13	2'	14'
14.5'	10.5'	10	10	4	6	24	6'-4"	40	5'	4	5'-8"	12	3'-2"	8	14'	16	3'-5"	8	2'-9"	2.5'	13	2'	14.5'
15'	11'	10	10	4	6	24	6'-4"	40	5'	4	5'-8"	12	3'-2"	8	14.5'	16	3'-6	8	3'-0"	2.5'	14	2'	15'
15.5'	11.5'	10	10	4	6	24	6'-4"	40	5'	4	5'-8"	12	3'-2"	8	15'	16	3'-8"	8	3'-3"	2.5'	14	2'	15.5'
16'	12'	10	10	4	6	24	6'-4"	40	5'	4	5'-8"	12	3'-2"	8	15.5'	16	3'-9"	8	3'-6"	2.5'	15	2'	16'
16.5'	12.5'	12	12	4	8	24	6'-4"	52	5'	4	5'-8"	12	3'-2"	8	16'	16	3'-3'	8	5'-0"	2.5'	15	2'	16.5'

FOR JOINT PANEL TYPE C2

3 **REVISED PER ADDENDUM No. 3 DATED JANUARY 31, 2012**

CONSTRUCTION DETAILS
REINFORCEMENT DIMENSIONS AND QUANTITIES
PRECAST PRESTRESSED CONCRETE PAVEMENT

NO SCALE

C-319

STATE OF CALIFORNIA - DEPARTMENT OF TRANSPORTATION
Caltrans® DESIGN

FUNCTIONAL SUPERVISOR: KIRSTEN STAHL
CALCULATED-DESIGNED BY: WINNIE DEGUZMAN
CHECKED BY: KIRSTEN STAHL
REVISED BY / DATE REVISED

LAST REVISION 00-00-00
DATE PLOTTED => 30-JAN-2012
TIME PLOTTED => 11:13

Dist	COUNTY	ROUTE	POST MILES TOTAL PROJECT	SHEET No.	TOTAL SHEETS
07	LA	710	17.2/26.4	431	1507

REGISTERED CIVIL ENGINEER 2-3-11 DATE

6-27-11
PLANS APPROVAL DATE

REGISTERED PROFESSIONAL ENGINEER KIRSTEN R. STAHL No. C46857 Exp. 6-30-13 CIVIL STATE OF CALIFORNIA

THE STATE OF CALIFORNIA OR ITS OFFICERS OR AGENTS SHALL NOT BE RESPONSIBLE FOR THE ACCURACY OR COMPLETENESS OF SCANNED COPIES OF THIS PLAN SHEET.

NOTES:

1. FOR PANELS WITH A RADIUS (WEDGE PANELS), THE DIMENSIONS AND QUANTITIES OF THE REINFORCEMENT ARE CONSIDERED THE SAME AND VARY MINIMALLY WITH RESPECT TO THE LENGTH (L) AND IN WIDTH (W).
2. FOR TABLE A, REINFORCEMENT IS PLACED OR MEASURED IN THE LONGITUDINAL DIRECTION, UNLESS INDICATED OTHERWISE.
3. FOR TABLE B, REINFORCEMENT IS PLACED OR MEASURED IN THE TRANSVERSE DIRECTION, UNLESS INDICATED OTHERWISE.
4. ALL REINFORCEMENT DIMENSIONS ARE TO BE VERIFIED BY THE MANUFACTURER BEFORE PANEL FABRICATION.

ABBREVIATIONS:

P-T POST-TENSIONING

3

TABLE B

L	b	COUNT OF P-T DUCTS PLACED LONGITUDINALLY (1)	COUNT OF ALL BLOCK-OUTS	COUNT OF LARGER (6"x24") BLOCK-OUTS	COUNT OF SMALLER (6"x8") BLOCK-OUTS	COUNT OF BAR "A2"	LENGTH OF EACH BAR "A2"	COUNT OF BAR "A1"	LENGTH OF EACH BAR "A1"	COUNT OF BAR "A3"	LENGTH OF EACH BAR "A3"	COUNT OF BAR "C"	LENGTH OF EACH BAR "C"	COUNT OF BAR "B1"	LENGTH OF EACH BAR "B1"	COUNT OF BAR "B2"	LENGTH OF EACH BAR "B2"	COUNT OF BAR "B3" & "B4"	LENGTH OF EACH BAR "B3"	LENGTH OF EACH BAR "B4"	COUNT OF DOWELS	LENGTH OF EACH DOWEL	LENGTH OF EACH PRETEN-SIONING STRAND (3) (7-WIRE 1/2")
FT	FT	EA	EA	EA	EA	EA	FT-IN	EA	FT	EA	FT-IN	EA	FT-IN	EA	FT	EA	FT-IN	EA	FT-IN	FT	EA	FT	FT
17′	13′	12	12	4	8	24	6′-4"	52	5′	8	5′-8"	12	3′-2"	8	16.5′	16	3′-4"	8	5′-4"	2.5′	16	2′	17′
17.5′	13.5′	12	12	4	8	24	6′-4"	52	5′	4	5′-8"	12	3′-2"	8	17′	16	3′-5"	8	5′-7"	2.5′	16	2′	17.5′
18′	14′	12	12	4	8	24	6′-4"	52	5′	4	5′-8"	12	3′-2"	8	17.5′	16	3′-7"	8	5′-11"	2.5′	17	2′	18′
18.5′	14.5′	12	12	4	8	24	6′-4"	52	5′	4	5′-8"	12	3′-2"	8	18′	16	3′-8"	8	6′-2"	2.5′	17	2′	18.5′
19′	15′	14	14	4	10	24	6′-4"	64	5′	4	5′-8"	12	3′-2"	8	18.5′	16	3′-3"	8	7′-6"	2.5′	18	2′	19′
19.5′	15.5′	14	14	4	10	24	6′-4"	64	5′	4	5′-8"	12	3′-2"	8	19′	16	3′-4"	8	7′-10"	2.5′	18	2′	19.5′
20′	16′	14	14	4	10	24	6′-4"	64	5′	4	5′-8"	12	3′-2"	8	19.5′	16	3′-5"	8	8′-2"	2.5′	19	2′	20′
20.5′	16.5′	14	14	4	10	24	6′-4"	64	5′	4	5′-8"	12	3′-2"	8	20′	16	3′-6"	8	8′-6"	2.5′	19	2′	20.5′
21′	17′	14	14	4	10	24	6′-4"	64	5′	4	5′-8"	12	3′-2"	8	20.5′	16	3′-7"	8	8′-10"	2.5′	20	2′	21′
21.5′	17.5′	16	16	4	12	24	6′-4"	76	5′	4	5′-8"	12	3′-2"	8	21′	16	3′-9′	8	5′-0"	2.5′	20	2′	21.5′
22′	18′	16	16	4	12	24	6′-4"	76	5′	4	5′-8"	12	3′-2"	8	21.5′	16	5′-11"	8	5′-3"	2.5′	21	2′	22′
22.5′	18.5′	16	16	4	12	24	6′-4"	76	5′	4	5′-8"	12	3′-2"	8	22′	16	6′-0"	8	5′-5"	2.5′	21	2′	22.5′
23′	19′	16	16	4	12	24	6′-4"	76	5′	4	5′-8"	12	3′-2"	8	22.5′	16	6′-2"	8	5′-8"	2.5′	22	2′	23′
23.5′	19.5′	16	16	4	12	24	6′-4"	76	5′	4	5′-8"	12	3′-2"	8	23′	16	6′-4"	8	5′-10"	2.5′	22	2′	23.5′
24′	20′	18	18	4	14	24	6′-4"	88	5′	4	5′-8"	12	3′-2"	8	23.5′	16	6′-9"	8	7′-6"	2.5′	23	2′	24′
24.5′	20.5′	18	18	4	14	24	6′-4"	88	5′	4	5′-8"	12	3′-2"	8	24′	16	6′-11"	8	7′-9"	2.5′	23	2′	24.5′
25′	21′	18	18	4	14	24	6′-4"	88	5′	4	5′-8"	12	3′-2"	8	24.5′	16	6′-0"	8	8′-0"	2.5′	24	2′	25′
25.5′	21.5′	18	18	4	14	24	6′-4"	88	5′	4	5′-8"	12	3′-2"	8	25′	16	6′-2"	8	8′-3"	2.5′	24	2′	25.5′
26′	22′	18	18	4	14	24	6′-4"	88	5′	4	5′-8"	12	3′-2"	8	25.5′	16	6′-3"	8	8′-6"	2.5′	25	2′	26′
26.5′	22.5′	20	20	4	16	24	6′-4"	100	5′	4	5′-8"	12	3′-2"	8	26′	16	6′-9′	8	10′-0"	2.5′	25	2′	26.5′

FOR JOINT PANEL TYPE C2

CONSTRUCTION DETAILS
REINFORCEMENT DIMENSIONS AND QUANTITIES
PRECAST PRESTRESSED CONCRETE PAVEMENT

3 REVISED PER ADDENDUM No. 3 DATED JANUARY 31, 2012

NO SCALE

C-320

REVISED BY | DATE REVISED
WINNIE DEGUZMAN | KIRSTEN STAHL
CALCULATED-DESIGNED BY | CHECKED BY
FUNCTIONAL SUPERVISOR: KIRSTEN STAHL
STATE OF CALIFORNIA - DEPARTMENT OF TRANSPORTATION
Caltrans DESIGN

LAST REVISION 00-00-00 | DATE PLOTTED => 30-JAN-2012 | TIME PLOTTED => 11:13

Dist	COUNTY	ROUTE	POST MILES TOTAL PROJECT	SHEET No.	TOTAL SHEETS
07	LA	710	17.2/26.4	432	1507

REGISTERED CIVIL ENGINEER 2-3-11 DATE

6-27-11
PLANS APPROVAL DATE

REGISTERED PROFESSIONAL ENGINEER KIRSTEN R. STAHL No. C46857 Exp. 6-30-13 CIVIL STATE OF CALIFORNIA

THE STATE OF CALIFORNIA OR ITS OFFICERS OR AGENTS SHALL NOT BE RESPONSIBLE FOR THE ACCURACY OR COMPLETENESS OF SCANNED COPIES OF THIS PLAN SHEET.

3

NOTES:

1. FOR PANELS WITH A RADIUS (WEDGE PANELS), THE DIMENSIONS AND QUANTITIES OF THE REINFORCEMENT ARE CONSIDERED THE SAME AND VARY MINIMALLY WITH RESPECT TO THE LENGTH (L) AND IN WIDTH (W).
2. FOR TABLE A, REINFORCEMENT IS PLACED OR MEASURED IN THE LONGITUDINAL DIRECTION, UNLESS INDICATED OTHERWISE.
3. FOR TABLE B, REINFORCEMENT IS PLACED OR MEASURED IN THE TRANSVERSE DIRECTION, UNLESS INDICATED OTHERWISE.
4. ALL REINFORCEMENT DIMENSIONS ARE TO BE VERIFIED BY THE MANUFACTURER BEFORE PANEL FABRICATION.

ABBREVIATIONS:

P-T POST-TENSIONING

TABLE B

L	b	COUNT OF P-T DUCTS PLACED LONGITUDINALLY (1)	COUNT OF ALL BLOCK-OUTS	COUNT OF LARGER (6"x24") BLOCK-OUTS	COUNT OF SMALLER (6"x8") BLOCK-OUTS	COUNT OF BAR "A2"	LENGTH OF EACH BAR "A2"	COUNT OF BAR "A1"	LENGTH OF EACH BAR "A1"	COUNT OF BAR "A3"	LENGTH OF EACH BAR "A3"	COUNT OF BAR "C"	LENGTH OF EACH BAR "C"	COUNT OF BAR "B1"	LENGTH OF EACH BAR "B1"	COUNT OF BAR "B2"	LENGTH OF EACH BAR "B2"	COUNT OF BAR "B3" & "B4"	LENGTH OF EACH BAR "B3"	LENGTH OF EACH BAR "B4"	COUNT OF DOWELS	LENGTH OF EACH DOWEL	LENGTH OF EACH PRETEN-SIONING STRAND (3) (7-WIRE 1/2")
FT	FT	EA	EA	EA	EA	EA	FT-IN	EA	FT	EA	FT-IN	EA	FT-IN	EA	FT	EA	FT-IN	EA	FT-IN	FT	EA	FT	FT
27′	23′	20	20	4	16	24	6′-4"	100	5′	4	5′-8"	12	3′-2"	8	26.5′	16	5′-10"	8	10′-3"	2.5′	26	2′	27′
27.5′	23.5′	20	20	4	16	24	6′-4"	100	5′	4	5′-8"	12	3′-2"	8	27′	16	6′-0"	8	10′-7"	2.5′	26	2′	27.5′
28′	24′	20	20	4	16	24	6′-4"	100	5′	4	5′-8"	12	3′-2"	8	27.5′	16	6′-1"	8	10′-10"	2.5′	27	2′	28′
28.5′	24.5′	20	20	4	16	24	6′-4"	100	5′	4	5′-8"	12	3′-2"	8	28′	16	6′-2"	8	11′-1"	2.5′	27	2′	28.5′
29′	25′	22	22	4	18	24	6′-4"	112	5′	4	5′-8"	12	3′-2"	8	28.5′	16	6′-3"	8	7′-6"	2.5′	28	2′	29′
29.5′	25.5′	22	22	4	18	24	6′-4"	112	5′	4	5′-8"	12	3′-2"	8	29′	16	8′-5"	8	7′-8"	2.5′	28	2′	29.5′
30′	26′	22	22	4	18	24	6′-4"	112	5′	4	5′-8"	12	3′-2"	8	29.5′	16	8′-7"	8	7′-11"	2.5′	29	2′	30′
30.5′	26.5′	22	22	4	18	24	6′-4"	112	5′	4	5′-8"	12	3′-2"	8	30′	16	8′-8"	8	8′-1"	2.5′	29	2′	30.5′
31′	27′	22	22	4	18	24	6′-4"	112	5′	4	5′-8"	12	3′-2"	8	30.5′	16	8′-10"	8	8′-4"	2.5′	30	2′	31′
31.5′	27.5′	24	24	4	20	24	6′-4"	124	5′	4	5′-8"	12	3′-2"	8	31′	16	8′-3′	8	10′-0"	2.5′	30	2′	31.5′
32′	28′	24	24	4	20	24	6′-4"	124	5′	4	5′-8"	12	3′-2"	8	31.5′	16	8′-5"	8	10′-3"	2.5′	31	2′	32′
32.5′	28.5′	24	24	4	20	24	6′-4"	124	5′	4	5′-8"	12	3′-2"	8	32′	16	8′-6"	8	10′-6"	2.5′	31	2′	32.5′
33′	29′	24	24	4	20	24	6′-4"	124	5′	4	5′-8"	12	3′-2"	8	32.5′	16	8′-8"	8	10′-8"	2.5′	32	2′	33′
33.5′	29.5′	24	24	4	20	24	6′-4"	124	5′	4	5′-8"	12	3′-2"	8	33′	16	8′-10"	8	10′-11"	2.5′	32	2′	33.5′
34′	30′	26	26	4	22	24	6′-4"	136	5′	4	5′-8"	12	3′-2"	8	33.5′	16	8′-3"	8	12′-6"	2.5′	33	2′	34′
34.5′	30.5′	26	26	4	22	24	6′-4"	136	5′	4	5′-8"	12	3′-2"	8	34′	16	8′-5"	8	12′-9"	2.5′	33	2′	34.5′
35′	31′	26	26	4	22	24	6′-4"	136	5′	4	5′-8"	12	3′-2"	8	34.5′	16	8′-6"	8	13′-0"	2.5′	34	2′	35′
35.5′	31.5′	26	26	4	22	24	6′-4"	136	5′	4	5′-8"	12	3′-2"	8	35′	16	8′-8"	8	13′-3"	2.5′	34	2′	35.5′
36′	32′	26	26	4	22	24	6′-4"	136	5′	4	5′-8"	12	3′-2"	8	35.5′	16	8′-9"	8	13′-6"	2.5′	35	2′	36′
36.5′	32.5′	28	28	4	24	24	6′-4"	148	5′	4	5′-8"	12	3′-2"	8	36′	16	10′-9′	8	10′-0"	2.5′	35	2′	36.5′

FOR JOINT PANEL TYPE C2 CONSTRUCTION DETAILS
REINFORCEMENT DIMENSIONS AND QUANTITIES
PRECAST PRESTRESSED CONCRETE PAVEMENT

3 **REVISED PER ADDENDUM No. 3 DATED JANUARY 31, 2012**

NO SCALE

C-321

STATE OF CALIFORNIA - DEPARTMENT OF TRANSPORTATION
Caltrans
DESIGN
FUNCTIONAL SUPERVISOR KIRSTEN STAHL
CALCULATED-DESIGNED BY WINNIE DEGUZMAN
CHECKED BY KIRSTEN STAHL
REVISED BY
DATE REVISED

LAST REVISION 00-00-00
DATE PLOTTED => 30-JAN-2012
TIME PLOTTED => 11:20

Dist	COUNTY	ROUTE	POST MILES TOTAL PROJECT	SHEET No.	TOTAL SHEETS
07	LA	710	17.2/26.4	433	1507

REGISTERED CIVIL ENGINEER 2-3-11 DATE

6-27-11
PLANS APPROVAL DATE

REGISTERED PROFESSIONAL ENGINEER KIRSTEN R. STAHL No. C46857 Exp. 6-30-13 CIVIL STATE OF CALIFORNIA

THE STATE OF CALIFORNIA OR ITS OFFICERS OR AGENTS SHALL NOT BE RESPONSIBLE FOR THE ACCURACY OR COMPLETENESS OF SCANNED COPIES OF THIS PLAN SHEET.

NOTES:

1. FOR PANELS WITH A RADIUS (WEDGE PANELS), THE DIMENSIONS AND QUANTITIES OF THE REINFORCEMENT ARE CONSIDERED THE SAME AND VARY MINIMALLY WITH RESPECT TO THE LENGTH (L) AND IN WIDTH (W).
2. FOR TABLE A, REINFORCEMENT IS PLACED OR MEASURED IN THE LONGITUDINAL DIRECTION, UNLESS INDICATED OTHERWISE.
3. FOR TABLE B, REINFORCEMENT IS PLACED OR MEASURED IN THE TRANSVERSE DIRECTION, UNLESS INDICATED OTHERWISE.
4. ALL REINFORCEMENT DIMENSIONS ARE TO BE VERIFIED BY THE MANUFACTURER BEFORE PANEL FABRICATION.

ABBREVIATIONS:

P-T POST-TENSIONING

TABLE B

L	b	COUNT OF P-T DUCTS PLACED LONGITUDINALLY (1)	COUNT OF ALL BLOCK-OUTS	COUNT OF LARGER (6"x24") BLOCK-OUTS	COUNT OF SMALLER (6"x8") BLOCK-OUTS	COUNT OF BAR "A2"	LENGTH OF EACH BAR "A2"	COUNT OF BAR "A1"	LENGTH OF EACH BAR "A1"	COUNT OF BAR "A3"	LENGTH OF EACH BAR "A3"	COUNT OF BAR "C"	LENGTH OF EACH BAR "C"	COUNT OF BAR "B1"	LENGTH OF EACH BAR "B1"	COUNT OF BAR "B2"	LENGTH OF EACH BAR "B2"	COUNT OF BAR "B3" & "B4"	LENGTH OF EACH BAR "B3"	LENGTH OF EACH BAR "B4"	COUNT OF DOWELS	LENGTH OF EACH DOWEL	LENGTH OF EACH PRETEN-SIONING STRAND (3) (7-WIRE 1/2")
FT	FT	EA	EA	EA	EA	EA	FT-IN	EA	FT	EA	FT-IN	EA	FT-IN	EA	FT	EA	FT-IN	EA	FT-IN	FT	EA	FT	FT
37′	33′	28	28	4	24	24	6′-4"	148	5′	4	5′-8"	12	3′-2"	8	36.5′	16	10′-11"	8	10′-2"	2.5′	36	2′	37′
37.5′	33.5′	28	28	4	24	24	6′-4"	148	5′	4	5′-8"	12	3′-2"	8	37′	16	11′-1"	8	10′-5"	2.5′	36	2′	37.5′
38′	34′	28	28	4	24	24	6′-4"	148	5′	4	5′-8"	12	3′-2"	8	37.5′	16	11′-3"	8	10′-7"	2.5′	37	2′	38′
38.5′	34.5′	28	28	4	24	24	6′-4"	148	5′	4	5′-8"	12	3′-2"	8	38′	16	11′-4"	8	10′-9"	2.5′	37	2′	38.5′
39′	35′	30	30	4	26	24	6′-4"	160	5′	4	5′-8"	12	3′-2"	8	38.5′	16	10′-9"	8	12′-6"	2.5′	38	2′	39′
39.5′	35.5′	30	30	4	26	24	6′-4"	160	5′	4	5′-8"	12	3′-2"	8	39′	16	10′-11"	8	12′-9"	2.5′	38	2′	39.5′
40′	36′	30	30	4	26	24	6′-4"	160	5′	4	5′-8"	12	3′-2"	8	39.5′	16	11′-0"	8	12′-11"	2.5′	39	2′	40′
40.5′	36.5′	30	30	4	26	24	6′-4"	160	5′	4	5′-8"	12	3′-2"	8	40′	16	11′-2"	8	13′-2"	2.5′	39	2′	40.5′
41′	37′	30	30	4	26	24	6′-4"	160	5′	4	5′-8"	12	3′-2"	8	40.5′	16	11′-4"	8	13′-4"	2.5′	40	2′	41′
41.5′	37.5′	32	32	4	28	24	6′-4"	172	5′	4	5′-8"	12	3′-2"	8	41′	16	10′-9′	8	15′-0"	2.5′	40	2′	41.5′
42′	38′	32	32	4	28	24	6′-4"	172	5′	4	5′-8"	12	3′-2"	8	41.5′	16	10′-11"	8	15′-3"	2.5′	41	2′	42′
42.5′	38.5′	32	32	4	28	24	6′-4"	172	5′	4	5′-8"	12	3′-2"	8	42′	16	11′-0"	8	15′-6"	2.5′	41	2′	42.5′
43′	39′	32	32	4	28	24	6′-4"	172	5′	4	5′-8"	12	3′-2"	8	42.5′	16	11′-2"	8	15′-8"	2.5′	42	2′	43′
43.5′	39.5′	32	32	4	28	24	6′-4"	172	5′	4	5′-8"	12	3′-2"	8	43′	16	11′-3"	8	15′-11"	2.5′	42	2′	43.5′
44′	40′	34	34	4	30	24	6′-4"	184	5′	4	5′-8"	12	3′-2"	8	43.5′	16	13′-3"	8	12′-6"	2.5′	43	2′	44′
44.5′	40.5′	34	34	4	30	24	6′-4"	184	5′	4	5′-8"	12	3′-2"	8	44′	16	13′-5"	8	12′-8"	2.5′	43	2′	44.5′
45′	41′	34	34	4	30	24	6′-4"	184	5′	4	5′-8"	12	3′-2"	8	44.5′	16	13′-7"	8	12′-11"	2.5′	44	2′	45′
45.5′	41.5′	34	34	4	30	24	6′-4"	184	5′	4	5′-8"	12	3′-2"	8	45′	16	13′-9"	8	13′-1"	2.5′	44	2′	45.5′
46′	42′	34	34	4	30	24	6′-4"	184	5′	4	5′-8"	12	3′-2"	8	45.5′	16	13′-11"	8	13′-3"	2.5′	45	2′	46′
46.5′	42.5′	36	36	4	32	24	6′-4"	196	5′	4	5′-8"	12	3′-2"	8	46′	16	13′-3′	8	15′-0"	2.5′	45	2′	46.5′

FOR JOINT PANEL TYPE C2

CONSTRUCTION DETAILS
REINFORCEMENT DIMENSIONS AND QUANTITIES
PRECAST PRESTRESSED CONCRETE PAVEMENT

3 REVISED PER ADDENDUM No. 3 DATED JANUARY 31, 2012

NO SCALE

C-322

REVISED BY | DATE REVISED
WINNIE DEGUZMAN | KIRSTEN STAHL
CALCULATED-DESIGNED BY | CHECKED BY
FUNCTIONAL SUPERVISOR: KIRSTEN STAHL
STATE OF CALIFORNIA - DEPARTMENT OF TRANSPORTATION
Caltrans DESIGN

LAST REVISION 00-00-00 | DATE PLOTTED => 30-JAN-2012 | TIME PLOTTED => 11:20

Dist	COUNTY	ROUTE	POST MILES TOTAL PROJECT	SHEET No.	TOTAL SHEETS
07	LA	710	17.2/26.4	434	1507

REGISTERED CIVIL ENGINEER 2-3-11 DATE

6-27-11
PLANS APPROVAL DATE

REGISTERED PROFESSIONAL ENGINEER KIRSTEN R. STAHL No. C46857 Exp. 6-30-13 CIVIL STATE OF CALIFORNIA

THE STATE OF CALIFORNIA OR ITS OFFICERS OR AGENTS SHALL NOT BE RESPONSIBLE FOR THE ACCURACY OR COMPLETENESS OF SCANNED COPIES OF THIS PLAN SHEET.

3

NOTES:

1. FOR PANELS WITH A RADIUS (WEDGE PANELS), THE DIMENSIONS AND QUANTITIES OF THE REINFORCEMENT ARE CONSIDERED THE SAME AND VARY MINIMALLY WITH RESPECT TO THE LENGTH (L) AND IN WIDTH (W).
2. FOR TABLE A, REINFORCEMENT IS PLACED OR MEASURED IN THE LONGITUDINAL DIRECTION, UNLESS INDICATED OTHERWISE.
3. FOR TABLE B, REINFORCEMENT IS PLACED OR MEASURED IN THE TRANSVERSE DIRECTION, UNLESS INDICATED OTHERWISE.
4. ALL REINFORCEMENT DIMENSIONS ARE TO BE VERIFIED BY THE MANUFACTURER BEFORE PANEL FABRICATION.

ABBREVIATIONS:

P-T POST-TENSIONING

TABLE B

L	b	COUNT OF P-T DUCTS PLACED LONGITUDINALLY (1)	COUNT OF ALL BLOCK-OUTS	COUNT OF LARGER (6"x24") BLOCK-OUTS	COUNT OF SMALLER (6"x8") BLOCK-OUTS	COUNT OF BAR "A2"	LENGTH OF EACH BAR "A2"	COUNT OF BAR "A1"	LENGTH OF EACH BAR "A1"	COUNT OF BAR "A3"	LENGTH OF EACH BAR "A3"	COUNT OF BAR "C"	LENGTH OF EACH BAR "C"	COUNT OF BAR "B1"	LENGTH OF EACH BAR "B1"	COUNT OF BAR "B2"	LENGTH OF EACH BAR "B2"	COUNT OF BAR "B3" & "B4"	LENGTH OF EACH BAR "B3"	LENGTH OF EACH BAR "B4"	COUNT OF DOWELS	LENGTH OF EACH DOWEL	LENGTH OF EACH PRETEN-SIONING STRAND (3) (7-WIRE 1/2")
FT	FT	EA	EA	EA	EA	EA	FT-IN	EA	FT	EA	FT-IN	EA	FT-IN	EA	FT	EA	FT-IN	EA	FT-IN	FT	EA	FT	FT
47′	43′	36	36	4	32	24	6′-4"	196	5′	4	5′-8"	12	3′-2"	8	46.5′	16	13′-5"	8	15′-2"	2.5′	46	2′	47′
47.5′	43.5′	36	36	4	32	24	6′-4"	196	5′	4	5′-8"	12	3′-2"	8	47′	16	13′-7"	8	15′-5"	2.5′	46	2′	47.5′
48′	44′	36	36	4	32	24	6′-4"	196	5′	4	5′-8"	12	3′-2"	8	47.5′	16	13′-8"	8	15′-7"	2.5′	47	2′	48′
48.5′	44.5′	36	36	4	32	24	6′-4"	196	5′	4	5′-8"	12	3′-2"	8	48′	16	13′-10"	8	15′-10"	2.5′	47	2′	48.5′
49′	45′	38	38	4	34	24	6′-4"	208	5′	4	5′-8"	12	3′-2"	8	48.5′	16	13′-3"	8	17′-6"	2.5′	48	2′	49′
49.5′	45.5′	38	38	4	34	24	6′-4"	208	5′	4	5′-8"	12	3′-2"	8	49′	16	13′-5"	8	17′-9"	2.5′	48	2′	49.5′
50′	46′	38	38	4	34	24	6′-4"	208	5′	4	5′-8"	12	3′-2"	8	49.5′	16	13′-6′	8	17′-11"	2.5′	49	2′	50′

FOR JOINT PANEL TYPE C2

CONSTRUCTION DETAILS
REINFORCEMENT DIMENSIONS AND QUANTITIES
PRECAST PRESTRESSED CONCRETE PAVEMENT

3 REVISED PER ADDENDUM No. 3 DATED JANUARY 31, 2012

NO SCALE

C-323

REVISED BY | DATE REVISED
WINNIE DEGUZMAN | KIRSTEN STAHL
CALCULATED-DESIGNED BY | CHECKED BY
FUNCTIONAL SUPERVISOR: KIRSTEN STAHL
STATE OF CALIFORNIA - DEPARTMENT OF TRANSPORTATION
Caltrans DESIGN

LAST REVISION 00-00-00 | DATE PLOTTED => 30-JAN-2012 | TIME PLOTTED => 11:21

Dist	COUNTY	ROUTE	POST MILES TOTAL PROJECT	SHEET No.	TOTAL SHEETS
07	LA	710	17.2/26.4	923	1507

Rene Yin 2-3-11
REGISTERED CIVIL ENGINEER DATE

6-27-11
PLANS APPROVAL DATE

REGISTERED PROFESSIONAL ENGINEER RENE YIN No. C49915 Exp. 9/30/12 CIVIL STATE OF CALIFORNIA

THE STATE OF CALIFORNIA OR ITS OFFICERS OR AGENTS SHALL NOT BE RESPONSIBLE FOR THE ACCURACY OR COMPLETENESS OF SCANNED COPIES OF THIS PLAN SHEET.

ROADWAY ITEMS

LOCATION	SHEET No.	ROADWAY EXCAVATION (TYPE Y-1) AERIALLY DEPOSITED LEAD	ROADWAY EXCAVATION (TYPE Z-2) AERIALLY DEPOSITED LEAD	ROADWAY EXCAVATION	EMBANKMENT (N)	PRECAST PRESTRESSED CONCRETE PAVEMENT	JOINTED PLAIN CONCRETE PAVEMENT	JOINTED PLAIN CONCRETE PAVEMENT (RAPID STRENGTH CONCRETE 550 PSI)	JOINTED PLAIN CONCRETE PAVEMENT (RAPID STRENGTH CONCRETE 400 PSI)	DOWEL BAR RETROFIT	DOWEL BAR (DRILL & BOND)	3 HOT MIXED ASPHALT ~~(TYPE B)~~ (TYPE A)	GEOSYNTHETIC PAVEMENT INTERLAYER	PAVING ASPHALT (BINDER, GEOSYNTHETIC PAVEMENT INTERLAYER)	LEAN CONCRETE BASE (RAPID SETTING)	LEAN CONCRETE BASE	CLASS 3 AGGREGATE BASE	TIE BAR (DRILL & BOND)	SEAL PAVEMENT JOINT	SEAL LONGITUDINAL ISOLATION JOINT	GRIND CONCRETE PAVEMENT	PLACE HMA DIKE (TYPE A)	PLACE HMA DIKE (TYPE C)	PLACE HMA DIKE (TYPE E)	PLACE HMA DIKE (TYPE F)	BAR REINFORCING STEEL	REPAIR SPALLED JOINT (POLYESTER GROUT)
		CY	CY	CY	CY	CY	CY	CY	CY	EA	EA	TON	SQYD	TON	CY	CY	CY	EA	LF	LF	SQYD	LF	LF	LF	LF	LB	SQYD
Sta 947+47 TO Sta 951+48 (NB)	C-268											6											68		333		
Sta 914+32.07 TO Sta 922+90.05 (SB)	L-1		25	366								186				92	184										
Sta 913+35.76 TO Sta 922+24.41 (NB)	L-1			182								131				46	91										
Sta 1086+50 TO Sta 1094+50 (C/L)	L-2																			54							
Sta 1101+60 TO Sta 1103+65 (NB)	L-3											4										102	107				
Sta 1101+60 TO Sta 1103+50 (NB)	L-3					170			70	52	8				140		45		130	430	1410					90	
Sta 1103+50 TO Sta 1108+50 (NB)	L-3								1415		32				615		865		4310		3695						
Sta 1103+75 TO Sta 1108+50 (NB)	L-3																										
Sta 1105+74.85 TO Sta 1108+50 (NB)	L-3											95			47		89										
Sta 1094+50 TO Sta 1108+50	L-3		455	5625																252						340	
Sta 1101+60 TO Sta 1108+50 (SB)	L-3					607	233			26	8	19			385	102	142		458	1402	5000	683				50	50
Sta 1101+60 TO Sta 1101+82.93 (SB)	L-3								5		12				3			20	12								
Sta 1108+50 TO Sta 1122+50 (NB)	L-4							720 ~~3310~~	3310 ~~720~~						1775		2480		12020	90	10280					191	
Sta 1108+50 TO Sta 1109+36.38 (NB)	L-4											2			1		2										
Sta 1109+31 TO Sta 1110+38 (NB)	L-4								29																	2075	
Sta 1110+33.7 TO Sta 1121+94.74 (NB)	L-4											32										1107			76		
Sta 1122+00 TO Sta 1122+50 (NB)	L-4							16																		1225	
Sta 1108+50 TO Sta 1122+50	L-4		3670	15640	1															320						1375	
Sta 1108+50 TO Sta 1122+50 (SB)	L-4					1235	460								781	200	280		940	2942	10100					210	
Sta 1108+50 TO Sta 1110+11.99 (SB)	L-4											5										162					
Sta 1111+15.88 TO Sta 1122+50 (SB)	L-4											29										1025	79		25		
SHEET TOTAL			4150	21813	1	2012	693	736 ~~3326~~	4829 ~~2239~~	78	60	509			3747	440	4178	20	17870	5490	30485	3079	254		434	5556	50

(N) - NOT A SEPARATE PAY ITEM, FOR INFORMATION ONLY

3 3 3 REVISED PER ADDENDUM No. 3 DATED JANUARY 31, 2012

SUMMARY OF QUANTITIES

Q-1

STATE OF CALIFORNIA - DEPARTMENT OF TRANSPORTATION
Caltrans DESIGN

MONA GIRGUIS — CALCULATED-DESIGNED BY
I. L. REYNON JR. — CHECKED BY
ALINE ANTARAMIAN — FUNCTIONAL SUPERVISOR
REVISED BY — DATE REVISED

LAST REVISION 00-00-00 — DATE PLOTTED => 31-JAN-2012 — TIME PLOTTED => 08:19

Dist	COUNTY	ROUTE	POST MILES TOTAL PROJECT	SHEET No.	TOTAL SHEETS
07	LA	710	17.2/26.4	932	1507

REGISTERED CIVIL ENGINEER 2-3-11 DATE

6-27-11
PLANS APPROVAL DATE

REGISTERED PROFESSIONAL ENGINEER LE NGUYEN No. 65414 Exp. 9-30-11 CIVIL STATE OF CALIFORNIA

THE STATE OF CALIFORNIA OR ITS OFFICERS OR AGENTS SHALL NOT BE RESPONSIBLE FOR THE ACCURACY OR COMPLETENESS OF SCANNED COPIES OF THIS PLAN SHEET.

ROADWAY ITEMS

LOCATION	SHEET No.	ROADWAY EXCAVATION (TYPE Y-1) AERIALLY DEPOSITED LEAD	ROADWAY EXCAVATION (TYPE Z-2) AERIALLY DEPOSITED LEAD	ROADWAY EXCAVATION	EMBANKMENT (N)	PRECAST PRESTRESSED CONCRETE PAVEMENT	JOINTED PLAIN CONCRETE PAVEMENT	JOINTED PLAIN CONCRETE PAVEMENT (RAPID STRENGTH CONCRETE 550 PSI)	JOINTED PLAIN CONCRETE PAVEMENT (RAPID STRENGTH CONCRETE 400 PSI)	DOWEL BAR RETROFIT	DOWEL BAR (DRILL & BOND)	3 HOT MIXED ASPHALT ~~(TYPE B)~~ (TYPE A)	GEOSYNTHETIC PAVEMENT INTERLAYER	PAVING ASPHALT (BINDER, GEOSYNTHETIC PAVEMENT INTERLAYER)	LEAN CONCRETE BASE (RAPID SETTING)	LEAN CONCRETE BASE	CLASS 3 AGGREGATE BASE	TIE BAR (DRILL & BOND)	SEAL PAVEMENT JOINT	SEAL LONGITUDINAL ISOLATION JOINT	GRIND CONCRETE PAVEMENT	PLACE HMA DIKE (TYPE A)	PLACE HMA DIKE (TYPE C)	PLACE HMA DIKE (TYPE E)	PLACE HMA DIKE (TYPE F)	BAR REINFORCING STEEL	REPAIR SPALLED JOINTS (POLYESTER GROUT)
		CY	CY	CY	CY	CY	CY	CY	CY	EA	EA	TON	SQYD	TON	CY	CY	CY	EA	LF	LF	SQYD	LF	LF	LF	LF	LB	SQYD
Sta 1358+00.00 TO Sta 1372+50.00 (SB)	L-18					931	769.5								517.5	334.5	468.5		1505	2727	7981						
Sta 1358+00.00 TO Sta 1372+50.00 (SB)	L-18											14													987		
Sta 1358+00.00 TO Sta 1372+50.00 (NB)	L-18					924	812.5		246		14	618			650	657.5	1078	434	1375	2876	8208						
Sta 1358+00.00 TO Sta 1372+50.00 (NB)	L-18											44.5										836	94	90	1368		
Sta 1372+50.00 TO Sta 1386+50.00	L-19		958	6898	293																						
Sta 1372+50.00 TO Sta 1386+50.00 (SB)	L-19					1320.5	510.5			26	9	281			747	360.5	595		1047	2809	9513					18	
Sta 1372+50.00 TO Sta 1386+50.00 (SB)	L-19											14											140	409.5	150		
Sta 86+30.15 TO Sta 86+51.00 (R)	L-19											38			19		37.5										
Sta 1372+50.00 TO Sta 1386+50.00 (NB)	L-19					691.5	378.5		402	14	28	337			551	331	782	47	1549	2852	8049					57	
Sta 1372+50.00 TO Sta 1386+50.00 (NB)	L-19											18.5											10	339	694		
Sta 79+31.37 TO Sta 82+04.21 (C1)	L-19											7.5												259			90
Sta 1386+50.00 TO Sta 1392+88.78	L-20		742	5159	24																						
Sta 86+51.00 TO Sta 93+02.14 (R)	L-20											899.5			443		886										
Sta 1386+50.00 TO Sta 1392+88.78 (SB)	L-20					357			761	24		269.5			528.5	133	717		1432	1266	4737						
Sta 1386+50.00 TO Sta 1390+39.35 (NB)	L-20					56	17		524	32	6				258.5	7.5	329		1976	133	2614						
Sta 1386+50.00 TO Sta 1390+39.35 (NB)	L-20											1.5											55		50		
Sta 87+18.17 TO Sta 90+31.39 (Conn E)	L-20											7.3												277			
SHEET TOTAL			1700	12057	317	4280	2488		1933	96	57	2550.3			3714.5	1824	4893	481	8884	12663	41102	836	299	1374.5	3249	75	90
TOTAL FROM SCQ-30							147.9					2445.2				1274.1	2405.8										
3 TOTAL FROM DQ-29												1.52															3
TOTAL ALL SHEETS		8818	19245	171962	25385	27669	34480.4	5666	18281	886	831	10215.8 ~~10214.3~~	1981	2.3	29594	16762.1	43567.3	7775	89781	70968	340506	7092	2073	8904	14174	13884	895

3 REVISED PER ADDENDUM No. 3 DATED JANUARY 31, 2012

SUMMARY OF QUANTITIES
Q-10

STATE OF CALIFORNIA - DEPARTMENT OF TRANSPORTATION
Caltrans DESIGN

FUNCTIONAL SUPERVISOR: RENE YIN
CALCULATED-DESIGNED BY: LE NGUYEN
CHECKED BY: DARRYL MAYS
REVISED BY
DATE REVISED

LAST REVISION 00-00-00
DATE PLOTTED => 30-JAN-2012
TIME PLOTTED => 11:21

Dist	COUNTY	ROUTE	POST MILES TOTAL PROJECT	SHEET No.	TOTAL SHEETS
07	LA	710	17.2/26.4	935	1507

REGISTERED CIVIL ENGINEER 2-3-11 DATE

6-27-11
PLANS APPROVAL DATE

REGISTERED PROFESSIONAL ENGINEER LE NGUYEN No. 65414 Exp. 9-30-11 CIVIL STATE OF CALIFORNIA

THE STATE OF CALIFORNIA OR ITS OFFICERS OR AGENTS SHALL NOT BE RESPONSIBLE FOR THE ACCURACY OR COMPLETENESS OF SCANNED COPIES OF THIS PLAN SHEET.

3

CONCRETE BARRIER

LOCATION	SHEET NO.	CONCRETE BARRIER (TYPE 736B)	CONCRETE BARRIER (TYPE 736B Mod)	CONCRETE BARRIER (TYPE 732B)	CONCRETE BARRIER (TYPE 60)	CONCRETE BARRIER (TYPE 60D)	CONCRETE BARRIER (TYPE 60G)	CONCRETE BARRIER (TYPE 60GC)	CONCRETE BARRIER (TYPE 60GE MOD)	CONCRETE BARRIER (TYPE 60GCR)	CONCRETE BARRIER (TYPE 60R)	CONCRETE BARRIER (TYPE 60S)	CONCRETE BARRIER (TYPE 60SE)	CONCRETE BARRIER (TYPE 60SC)	CONCRETE BARRIER (TYPE 60SW Mod)	CONCRETE BARRIER (TYPE 60W Mod)	CONCRETE BARRIER (TYPE 60E Mod)
		LF	LF	LF	LF	LF	LF	LF	LF	LF	LF	LF	LF	LF	LF	LF	LF
Sta1238+72.05 TO Sta 1240+09.22 (C/L)	L-9									137.5							
Sta1239+33.34 TO Sta 1247+50.00 (SB)	L-9											817					
Sta 1247+44.28 TO Sta 1247+50.00 (C/L)	L-9															6	
Sta 1247+50.00 TO Sta 1254+90.16 (C/L)	L-10				297.5								91			352	
Sta 1247+50.00 TO Sta 1251+44.80 (SB)	L-10											395					
Sta 1256+37.67 TO Sta 1261+50.00 (C/L)	L-10										64	171			278		
Sta 1261+50.00 TO Sta 1275+50.00 (C/L)	L-11										96				1304		
Sta 1266+66.52 TO Sta 1274+81.29 (NB)	L-11					815											
Sta 1275+50.00 TO Sta 1289+50.00 (NB)	L-12						583	400		173					244		
STA 1276+93.59 TO STA 1278+32.28 (NB)	L-12																139
Sta 1279+28.89 TO Sta 1279+93.46 (SB)	L-12					65											
Sta 1279+93.46 TO Sta 1280+03.46 (SB)	L-12		10														
Sta 1289+50.00 TO Sta 1303+50.00 (C/L)	L-13							513.5	363	172						226	
SHEET TOTAL			10		297.5	880	583	913.5	363	482.5	160	1383	91		1826	584	139

3 **REVISED PER ADDENDUM No. 3 DATED JANUARY 31, 2012**

SUMMARY OF QUANTITIES
Q-13

STATE OF CALIFORNIA - DEPARTMENT OF TRANSPORTATION
Caltrans® DESIGN

FUNCTIONAL SUPERVISOR: RENE YIN
CALCULATED-DESIGNED BY: DARRYL MAYS
CHECKED BY: LE NGUYEN
REVISED BY
DATE REVISED

LAST REVISION 00-00-00
DATE PLOTTED => 30-JAN-2012
TIME PLOTTED => 11:36

Dist	COUNTY	ROUTE	POST MILES TOTAL PROJECT	SHEET No.	TOTAL SHEETS
07	LA	710	17.2/26.4	936	1507

REGISTERED CIVIL ENGINEER 2-3-11 DATE

6-27-11
PLANS APPROVAL DATE

REGISTERED PROFESSIONAL ENGINEER LE NGUYEN No. 65414 Exp. 9-30-11 CIVIL STATE OF CALIFORNIA

THE STATE OF CALIFORNIA OR ITS OFFICERS OR AGENTS SHALL NOT BE RESPONSIBLE FOR THE ACCURACY OR COMPLETENESS OF SCANNED COPIES OF THIS PLAN SHEET.

3

CONCRETE BARRIER

LOCATION	SHEET NO.	CONCRETE BARRIER (TYPE 736B)	CONCRETE BARRIER (TYPE 736B Mod)	CONCRETE BARRIER (TYPE 732B)	CONCRETE BARRIER (TYPE 60)	CONCRETE BARRIER (TYPE 60D)	CONCRETE BARRIER (TYPE 60G)	CONCRETE BARRIER (TYPE 60GC)	CONCRETE BARRIER (TYPE 60GE MOD)	CONCRETE BARRIER (TYPE 60GCR)	CONCRETE BARRIER (TYPE 60R)	CONCRETE BARRIER (TYPE 60S)	CONCRETE BARRIER (TYPE 60SE)	CONCRETE BARRIER (TYPE 60SC)	CONCRETE BARRIER (TYPE 60SW Mod)	CONCRETE BARRIER (TYPE 60W Mod)	CONCRETE BARRIER (TYPE 60E Mod)
		LF	LF	LF	LF	LF	LF	LF	LF	LF	LF	LF	LF	LF	LF	LF	LF
Sta 1303+50.00 TO Sta 1317+50.00 (C/L)	L-14							586.5								648.5	
Sta 1305+68.42 TO Sta 1306+94.62 (SB)	L-14		126.5						165.5								
Sta 306+95.06 "C" TO Sta 315+00.00 "C" (SB)	L-14					805											
Sta 315+00.00 "C" TO Sta 315+10.00 "C" (SB)	L-14		10														
Sta 1303+50.00 TO Sta 1317+50.00	L-14					406											
Sta 1317+50.00 TO Sta 1330+50.00 (C/L)	L-15						1063	59.5	163.5							15	
Sta 1317+50.00 TO Sta 1319+82.70 (NB)	L-15					233											
Sta 1318+05.70 TO Sta 1318+87.00 (SB)	L-15					81.5											
Sta 1330+50.00 TO Sta 1330+98.31 (C/L)	L-16						48.5										
Sta 1341+57.00 TO Sta 1344+50.00 (NB)	L-16				293												
Sta 1344+50.00 TO Sta 1348+77.77 (NB)	L-17				428												
SHEET TOTAL			136.5		721	1525.5	1111.5	646	329	165.5						663.5	
TOTAL ALL SHEETS		173	177	131	1124	5023	1694.5	1560	692	1074	160	1383	91	175	4111	5776	139

3 REVISED PER ADDENDUM No. 3 DATED JANUARY 31, 2012

SUMMARY OF QUANTITIES

Q-14

STATE OF CALIFORNIA - DEPARTMENT OF TRANSPORTATION
Caltrans DESIGN

DARRYL MAYS — REVISED BY
LE NGUYEN — DATE REVISED
CALCULATED-DESIGNED BY
CHECKED BY
FUNCTIONAL SUPERVISOR
RENE YIN

LAST REVISION 00-00-00 | DATE PLOTTED => 30-JAN-2012 | TIME PLOTTED => 11:26

DIST	COUNTY	ROUTE	POST MILES TOTAL PROJECT	SHEET No.	TOTAL SHEETS
07	LA	710	17.2/26.4	1264	1507

REGISTERED CIVIL ENGINEER 03-01-11 DATE

6-27-11
PLANS APPROVAL DATE

REGISTERED PROFESSIONAL ENGINEER WEI-KUNG HSIA No. C50210 Exp. 06-30-11 CIVIL STATE OF CALIFORNIA

The State of California or its officers or agents shall not be responsible for the accuracy or completeness of electronic copies of this plan sheet.

NOTES:

1. Paint "BRIDGE NO. 53-0788L"
2. Paint "Rte 710/5 SEPARATION WEST"
3. Concrete Barrier Type 732
4. Structure Approach Type R(30D) and Paving Notch Extension
5. Structure Approach Type N(30S)
6. Existing Railing Type 1 and curb to be removed
7. Clean bridge deck and treat bridge deck with methacrylate resin.
8. Remove Existing Type 27 MOD Barrier and Construct New Concrete Barrier Type 732 MOD
9. Remove Existing Type 27B MOD Barrier and Construct New Concrete Barrier Type 732B MOD
10. Existing Electroliers to be relocated (tot 5), see Road Plan
11. Clean Existing expansion joint and install new Joint Seal, see "JOINT REPLACEMENT DETAIL" on "ABUTMENT DETAILS NO. 2" sheet
12. Isolation Casing, see "ISOLATION CASING DETAILS" sheet.

LEGEND:

- Indicates Bridge Removal, portion
- Indicates Existing Structure
- Indicates direction of traffic
- Point of minimum vertical clearance
- Indicates Existing Electrolier
- Indicates Relocated Electrolier

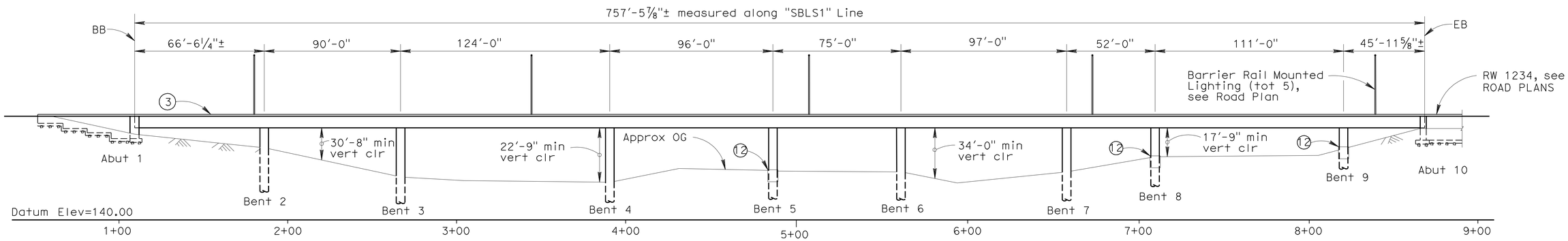

MIRRORED ELEVATION

1" = 30'

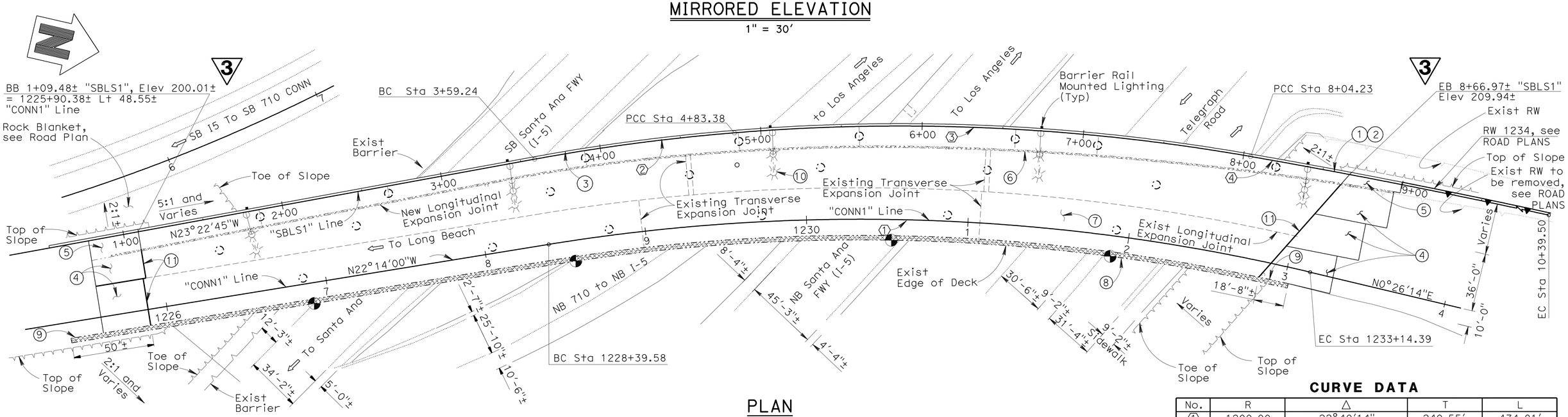

PLAN

1" = 30'

NOTE:
The Contractor shall verify all controlling field Dimensions before ordering or fabricating any material.

REVISED PER ADDENDUM No. 3 DATED JANUARY 31, 2012

CURVE DATA

No.	R	Δ	T	L
1	1200.00	22°40'14"	240.55'	474.81'
2	1244.00	5°43'03"	62.12'	124.14'
3	1256.00	14°38'12"	161.30'	320.85'
4	4520.00	2°58'56"	117.66'	235.26'

PAUL CHUNG
DESIGN ENGINEER

	BY	CHECKED
DESIGN	WEI-KUNG HSIA	JUAN TORRES
DETAILS	HECTOR INIGUEZ	JUAN TORRES
QUANTITIES	EDWARD MERCADO	DARYOUSH BALBAS

LOAD & RESISTANCE FACTOR DESIGN — LIVE LOADING: HL93 W/"LOW-BOY"; PERMIT DESIGN VEHICLE

LAYOUT: BY WEI-KUNG HSIA, CHECKED JUAN TORRES
SPECIFICATIONS: BY K. ELLINGSON, PLANS AND SPECS COMPARED K. ELLINGSON

STATE OF CALIFORNIA
DEPARTMENT OF TRANSPORTATION

DIVISION OF ENGINEERING SERVICES
STRUCTURE DESIGN
DESIGN BRANCH 19

BRIDGE NO. 53-0788L
POST MILE 23.2

RTE 710/5 SEPARATION WEST (WIDEN)
GENERAL PLAN NO. 1

ORIGINAL SCALE IN INCHES FOR REDUCED PLANS 0 1 2 3

UNIT: 3621
PROJECT NUMBER & PHASE: 0700020869 1 CONTRACT NO.: 07-202111

DISREGARD PRINTS BEARING EARLIER REVISION DATES — REVISION DATES 02-02-10 02-17-11 03-01-11

SHEET 1 OF 33

STRUCTURES DESIGN GENERAL PLAN SHEET (ENGLISH) (REV.09-01-10)

FILE => 53-0788l-a-gp01.dgn

USERNAME => s128843 DATE PLOTTED => 30-JAN-2012 TIME PLOTTED => 12:34