Dist	COUNTY	ROUTE	POST MILES TOTAL PROJECT	SHEET No.	TOTAL SHEETS
07	LA	10,110	Var	1	22

STATE OF CALIFORNIA

DEPARTMENT OF TRANSPORTATION

PROJECT PLANS FOR CONSTRUCTION ON

STATE HIGHWAY

IN LOS ANGELES COUNTY AT VARIOUS LOCATIONS

TO BE SUPPLEMENTED BY STANDARD PLANS DATED MAY 2010

INDEX OF PLANS

SHEET No.	DESCRIPTION
1	TITLE AND LOCATION MAP
2-3	CONSTRUCTION DETAILS
4-9	DRAINAGE PLANS AND PROFILES
10	DRAINAGE QUANTITIES
11	CONSTRUCTION AREA SIGNS
12-20	TRAFFIC HANDLING DETAILS
21	SUMMARY OF QUANTITIES
22	REVISED STANDARD PLAN

THE STANDARD PLANS LIST APPLICABLE TO THIS CONTRACT IS INCLUDED IN THE NOTICE TO BIDDERS AND SPECIAL PROVISIONS BOOK.

LOCATIONS OF CONSTRUCTION

LOCATION No.	PM	ROUTE	DIRECTION
1	R3.9	10	WESTBOUND
2	R9.9	10	EASTBOUND/WESTBOUND
3	R13.9	10	EASTBOUND ON RAMP FROM VERMONT Ave
4	10.9	110	SOUTHBOUND ON RAMP FROM REDONDO BEACH Blvd

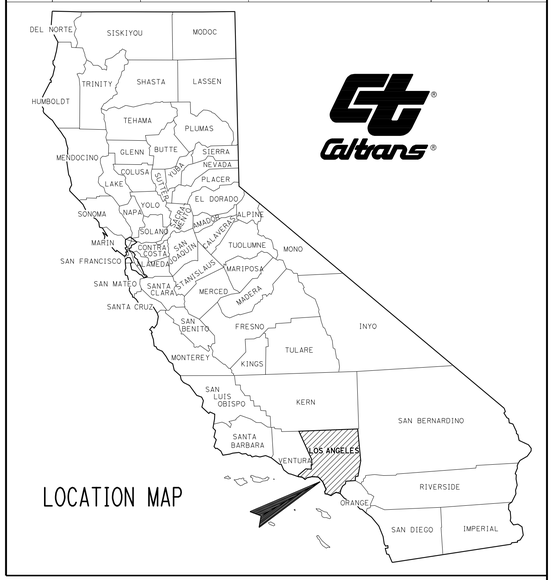

LOCATION MAP

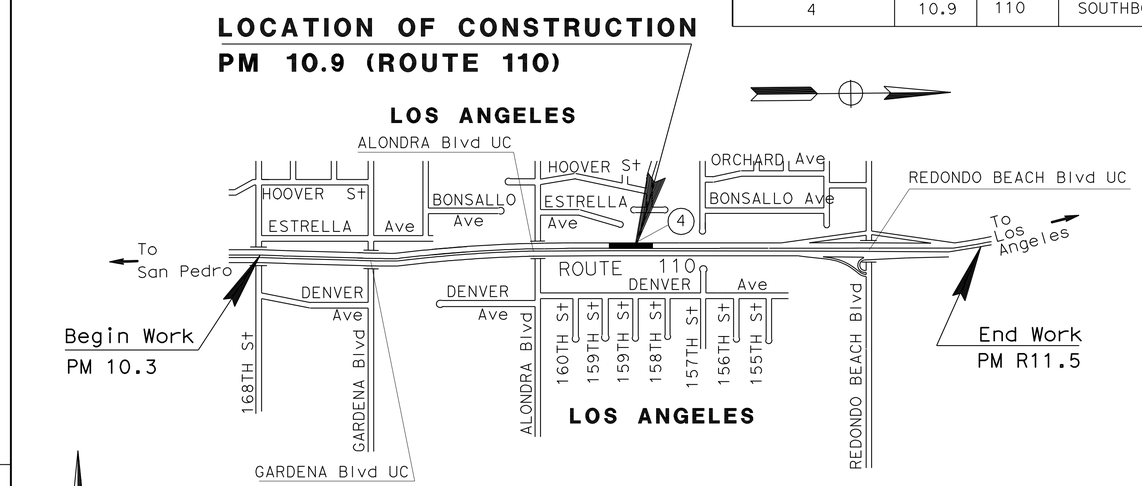

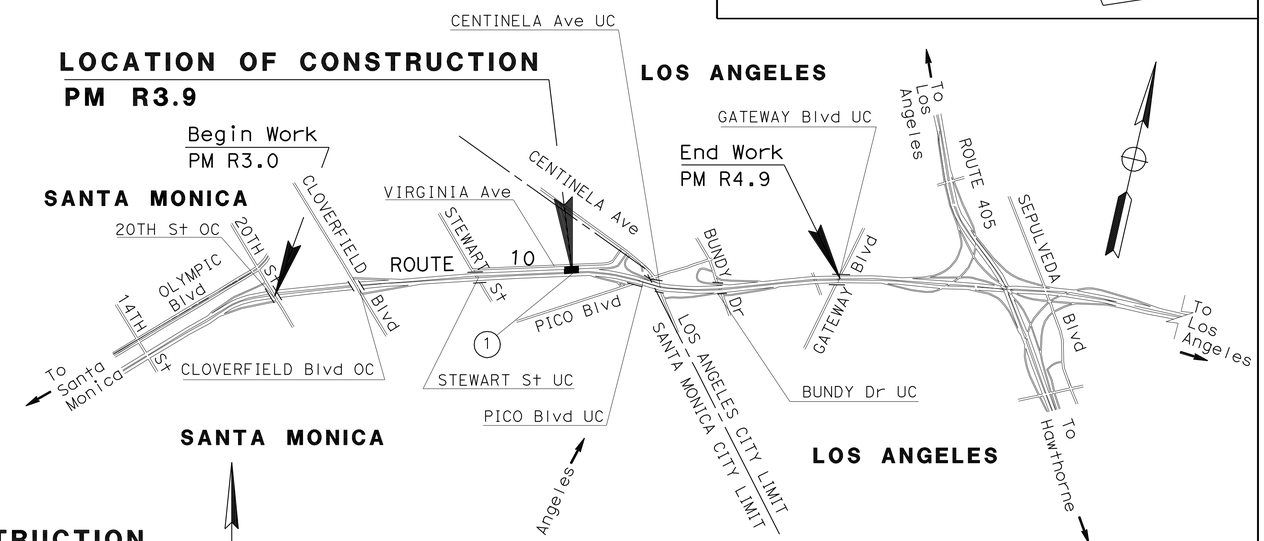

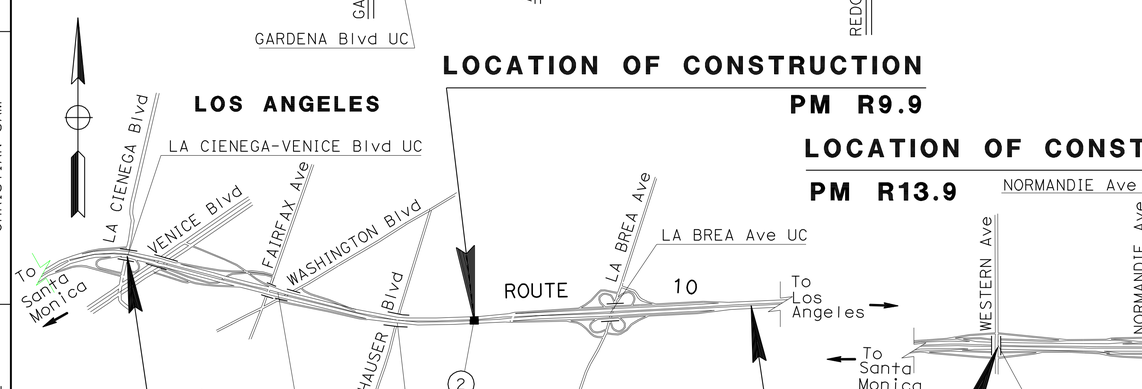

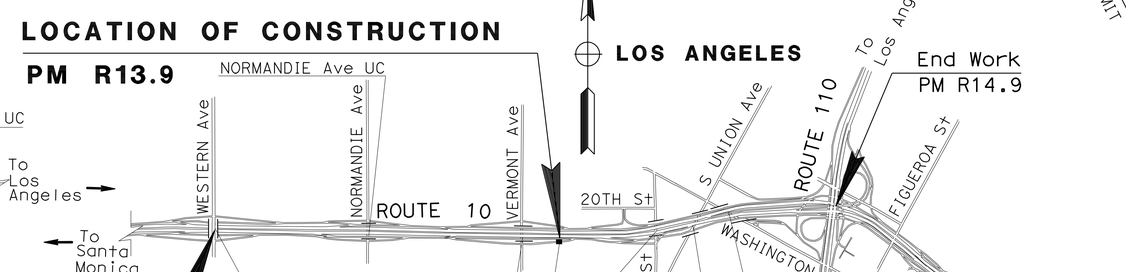

THE CONTRACTOR SHALL POSSESS THE CLASS (OR CLASSES) OF LICENSE AS SPECIFIED IN THE "NOTICE TO BIDDERS."

PROJECT ENGINEER REGISTERED CIVIL ENGINEER — DATE 10-19-12

November 19, 2012
PLANS APPROVAL DATE

REGISTERED PROFESSIONAL ENGINEER — BIPIN PATEL — No. C60082 — Exp. 6/30/14 — CIVIL — STATE OF CALIFORNIA

THE STATE OF CALIFORNIA OR ITS OFFICERS OR AGENTS SHALL NOT BE RESPONSIBLE FOR THE ACCURACY OR COMPLETENESS OF SCANNED COPIES OF THIS PLAN SHEET.

CONTRACT No.	07-1W4504
PROJECT ID	0712000208

PROJECT MANAGER: CHRISTIAN SAM
DESIGN ENGINEER: BIPIN PATEL

LAST REVISION 00-00-00 — DATE PLOTTED => 14-NOV-2012 — TIME PLOTTED => 10:45

Dist	COUNTY	ROUTE	POST MILES TOTAL PROJECT	SHEET No.	TOTAL SHEETS
07	LA	10, 110	Var	2	22

REGISTERED CIVIL ENGINEER 10-19-12 DATE

11-19-12
PLANS APPROVAL DATE

REGISTERED PROFESSIONAL ENGINEER BIPIN PATEL No. C60082 Exp 6-30-14 CIVIL STATE OF CALIFORNIA

THE STATE OF CALIFORNIA OR ITS OFFICERS OR AGENTS SHALL NOT BE RESPONSIBLE FOR THE ACCURACY OR COMPLETENESS OF SCANNED COPIES OF THIS PLAN SHEET.

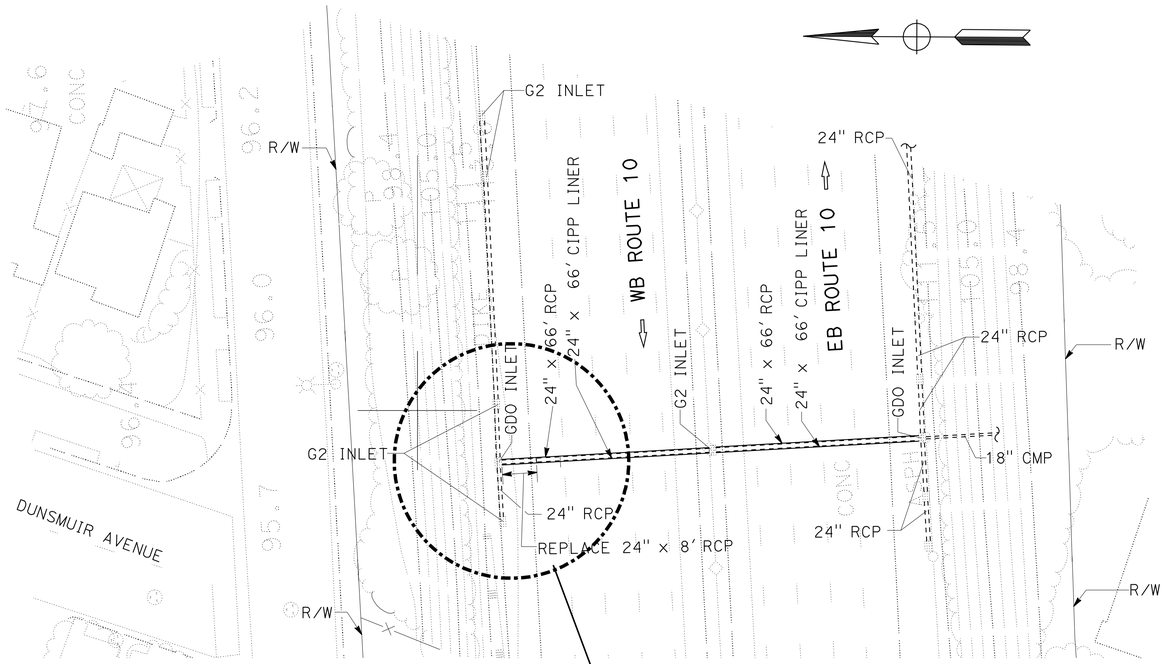

DETAIL - A

NOTES:

1. FOR ACCURATE RIGHT OF WAY DATA, CONTACT RIGHT OF WAY ENGINEERING AT THE DISTRICT OFFICE.
2. THE ENGINEER DETERMINES EXACT PAVING LIMITS.
3. EXISTING UTILITY FACILITIES HAVE NOT BEEN PLOTTED.
4. EXISTING STRUCTURE FACILITIES ARE NOT SHOWN.
5. DIMENSIONS OF THE PAVEMENT STRUCTURES (STRUCTURAL SECTIONS) ARE SUBJECT TO TOLERANCES SPECIFIED IN THE STANDARD SPECIFICATIONS.
6. SUPERLEVATION AS SHOWN OR AS DIRECTED BY THE ENGINEER.
7. STRUCTURE BACKFILL (CULVERT) MUST BE CONTROLLED LOW STRENGTH MATERIAL.

LEGEND:

✳ FOR PIPE DETAIL SEE DRAINAGE PLAN AND PROFILE

ABBREVIATION:

CIPP CURED-IN-PLACE PIPELINER

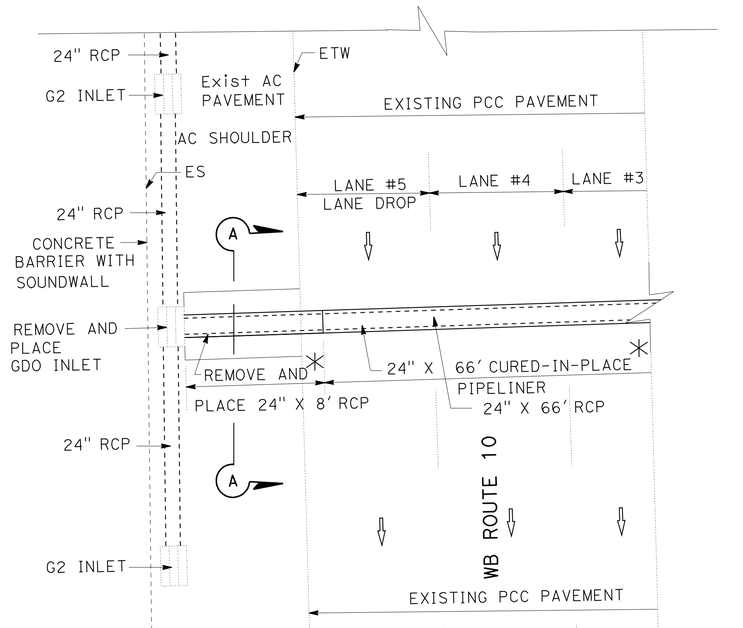

DETAIL - A

PLAN

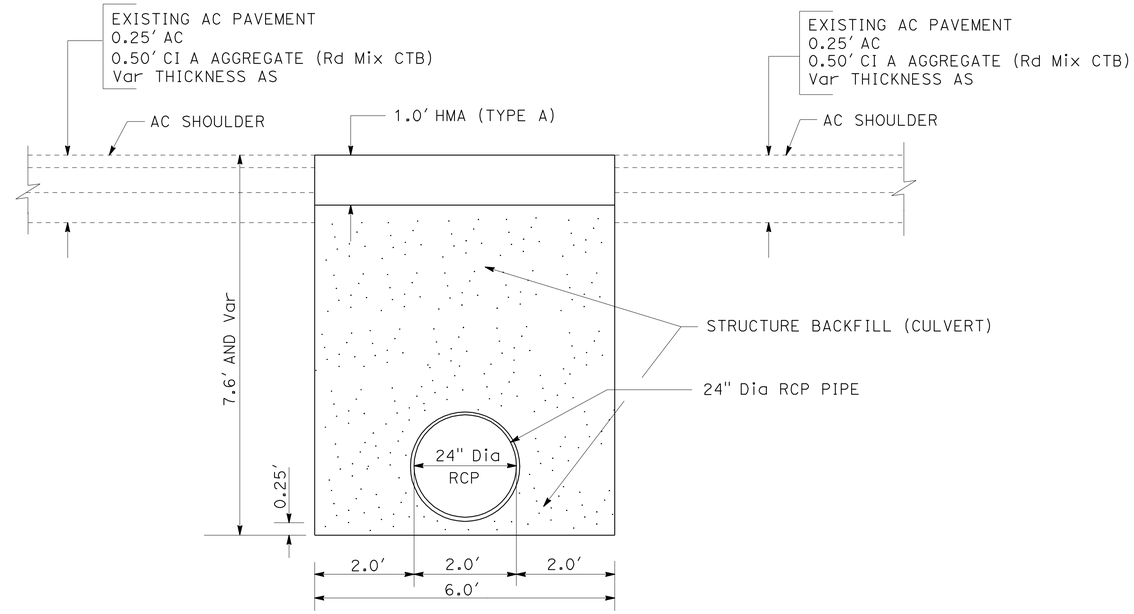

SECTION A-A

CONSTRUCTION DETAILS
NO SCALE

LOCATION No. 2
ROUTE 10 PM R9.9

C-1

STATE OF CALIFORNIA - DEPARTMENT OF TRANSPORTATION
Caltrans MAINTENANCE ENGINEERING

FUNCTIONAL SUPERVISOR: LARRY WIERING
CALCULATED-DESIGNED BY: BIPIN PATEL
CHECKED BY: LARRY WIERING
REVISED BY
DATE REVISED

LAST REVISION 11-19-12 | DATE PLOTTED => 14-NOV-2012 | TIME PLOTTED => 10:46

Dist	COUNTY	ROUTE	POST MILES TOTAL PROJECT	SHEET No.	TOTAL SHEETS
07	LA	10, 110	Var	3	22

REGISTERED CIVIL ENGINEER 10-19-12 DATE

11-19-12
PLANS APPROVAL DATE

REGISTERED PROFESSIONAL ENGINEER BIPIN PATEL No. C60082 Exp 6-30-14 CIVIL STATE OF CALIFORNIA

THE STATE OF CALIFORNIA OR ITS OFFICERS OR AGENTS SHALL NOT BE RESPONSIBLE FOR THE ACCURACY OR COMPLETENESS OF SCANNED COPIES OF THIS PLAN SHEET.

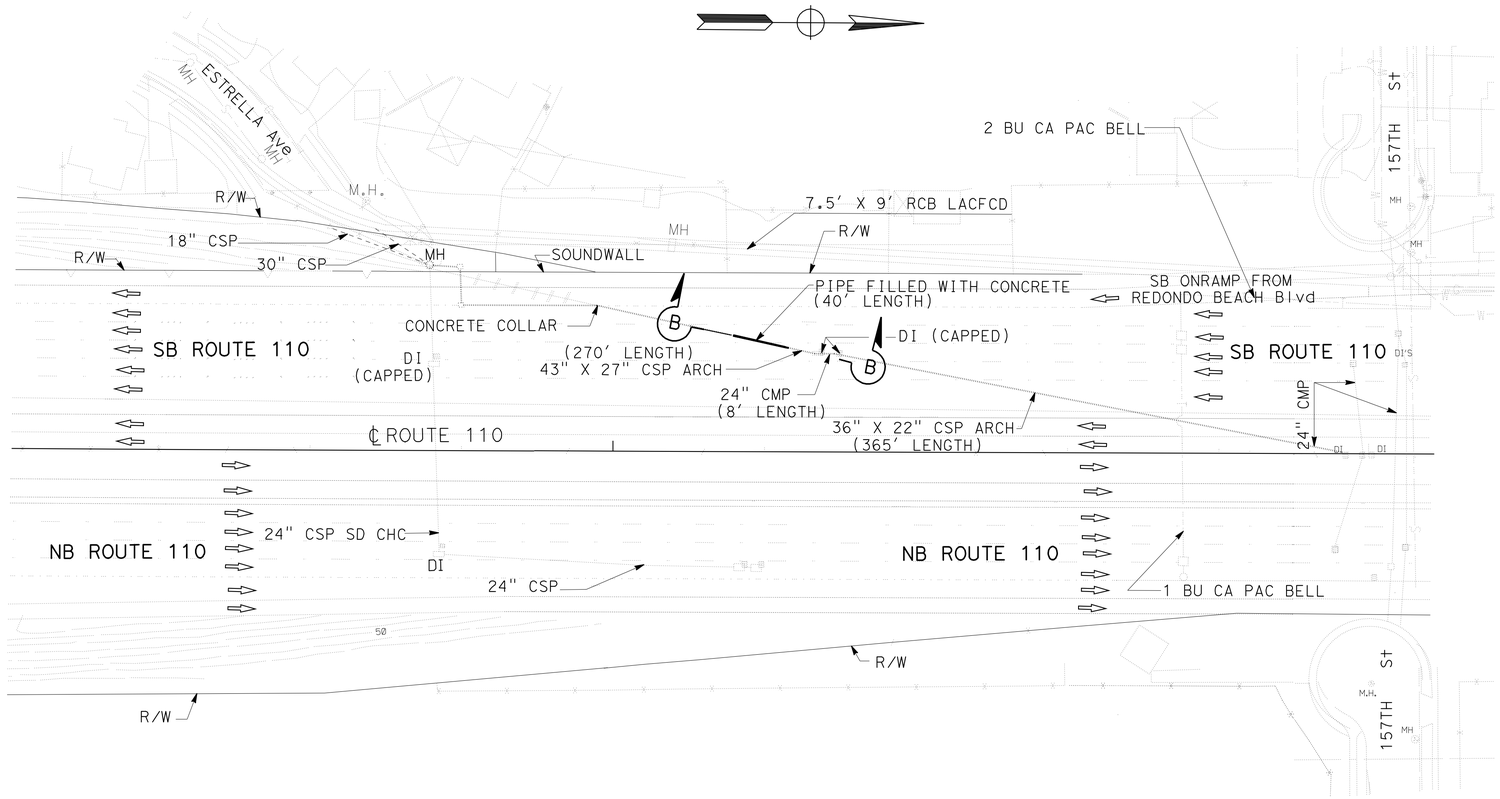

NOTE:

FOR ACCURATE RIGHT OF WAY DATA, CONTACT RIGHT OF WAY ENGINEERING AT THE DISTRICT OFFICE.

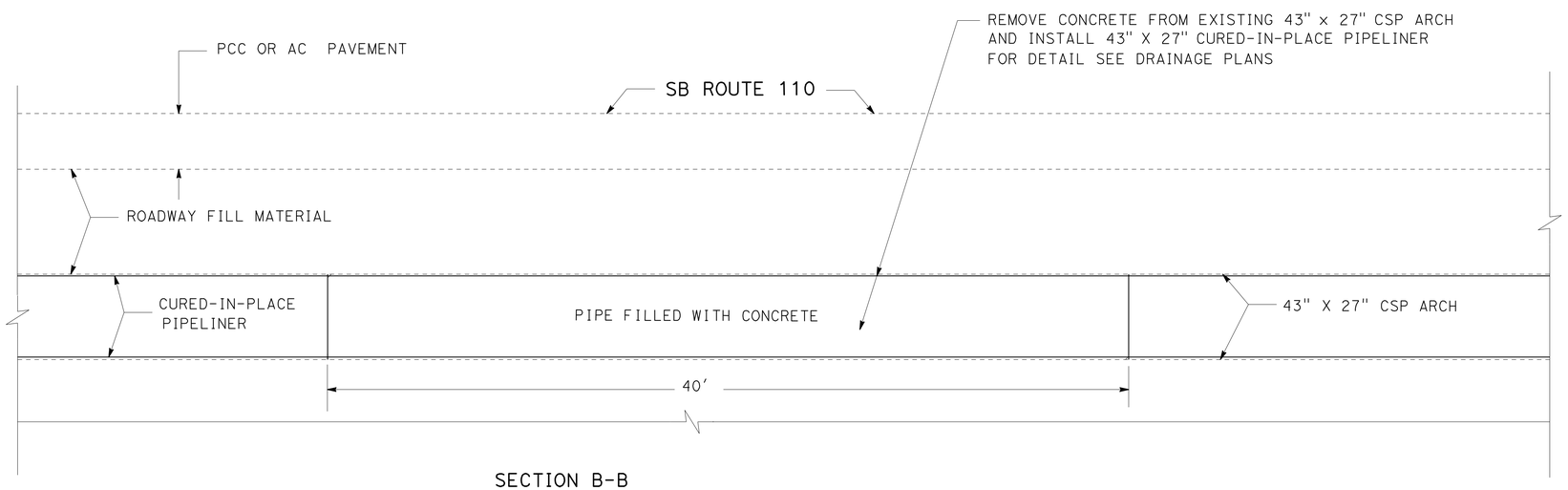

SECTION B-B

LOCATION No. 4
ROUTE 110 PM 10.9

CONSTRUCTION DETAILS
NO SCALE

C-2

STATE OF CALIFORNIA - DEPARTMENT OF TRANSPORTATION
Caltrans MAINTENANCE ENGINEERING

FUNCTIONAL SUPERVISOR: LARRY WIERING
CALCULATED-DESIGNED BY: BIPIN PATEL
CHECKED BY: LARRY WIERING
REVISED BY
DATE REVISED

LAST REVISION 11-19-12
DATE PLOTTED => 14-NOV-2012
TIME PLOTTED => 10:46

Dist	COUNTY	ROUTE	POST MILES TOTAL PROJECT	SHEET No.	TOTAL SHEETS
07	LA	10, 110	Var	4	22

REGISTERED CIVIL ENGINEER 10-19-12 DATE

11-19-12
PLANS APPROVAL DATE

REGISTERED PROFESSIONAL ENGINEER DAVE BHALLA No. 34350 Exp. 9-30-13 CIVIL STATE OF CALIFORNIA

THE STATE OF CALIFORNIA OR ITS OFFICERS OR AGENTS SHALL NOT BE RESPONSIBLE FOR THE ACCURACY OR COMPLETENESS OF SCANNED COPIES OF THIS PLAN SHEET.

NOTES:

1. FOR ACCURATE RIGHT OF WAY DATA, CONTACT RIGHT OF WAY ENGINEERING AT THE DISTRICT OFFICE.
2. YOU MUST VERIFY EXISTING AND PROPOSED ELEVATIONS BEFORE COMMENCING OF WORK.

LEGEND:

X — DRAINAGE SYSTEM No.

X — DRAINAGE UNIT No.

CIPP LINER — CURED-IN-PLACE PIPELINER

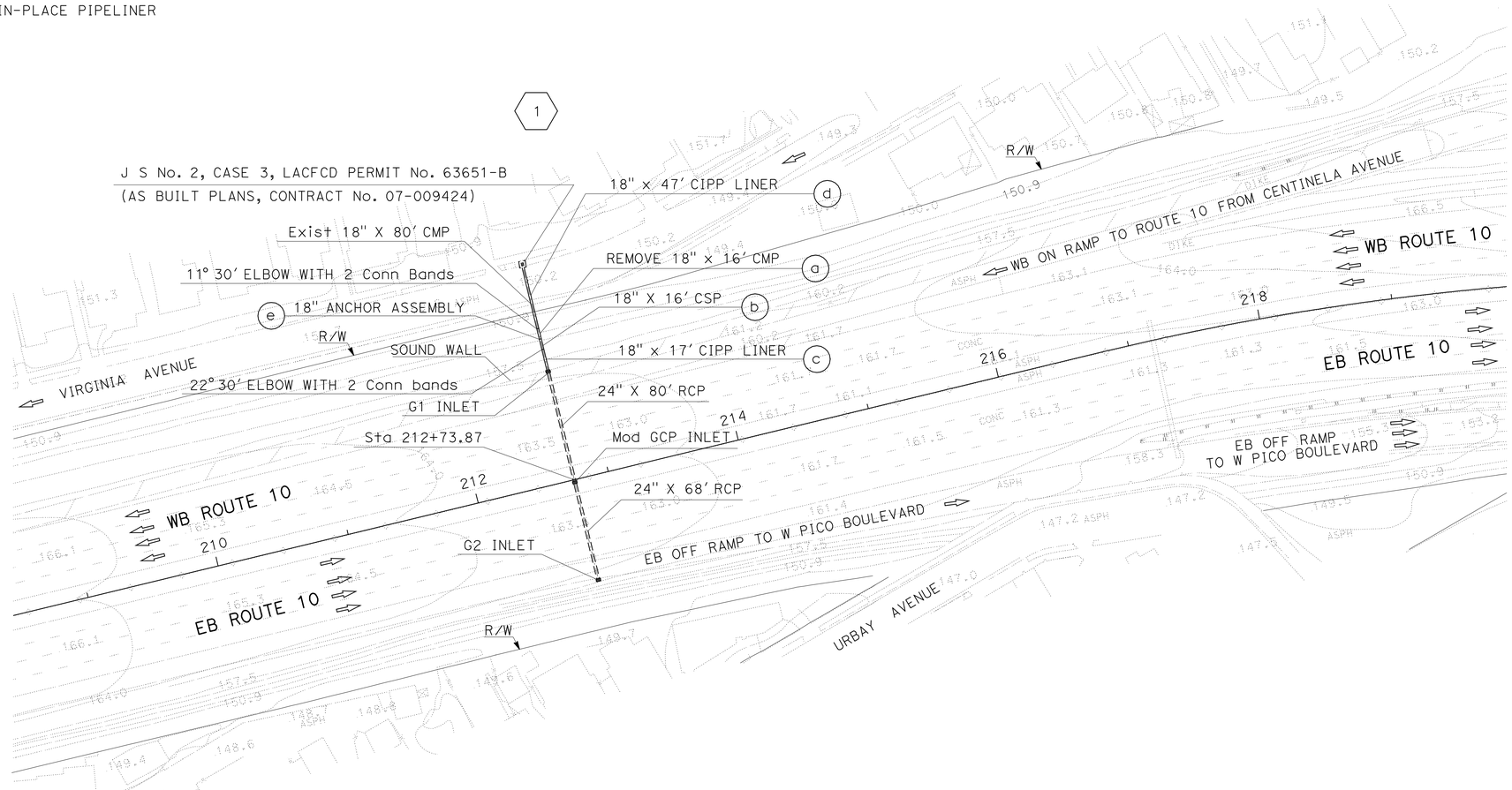

LOCATION No. 1

ROUTE 10 PM R3.9

DRAINAGE PLAN

SCALE 1" = 50'

D-1

APPROVED FOR DRAINAGE WORK ONLY

STATE OF CALIFORNIA - DEPARTMENT OF TRANSPORTATION

Caltrans

HYDRAULICS

FUNCTIONAL SUPERVISOR: DAVE BHALLA

CALCULATED-DESIGNED BY: DARREN TRINH

CHECKED BY: DAVE BHALLA

REVISED BY

DATE REVISED

LAST REVISION 11-19-12

DATE PLOTTED => 14-NOV-2012

TIME PLOTTED => 10:46

Dist	COUNTY	ROUTE	POST MILES TOTAL PROJECT	SHEET No.	TOTAL SHEETS
07	LA	10, 110	Var	5	22

REGISTERED CIVIL ENGINEER 10-19-12 DATE

11-19-12
PLANS APPROVAL DATE

REGISTERED PROFESSIONAL ENGINEER DAVE BHALLA No. 34350 Exp. 9-30-13 CIVIL STATE OF CALIFORNIA

THE STATE OF CALIFORNIA OR ITS OFFICERS OR AGENTS SHALL NOT BE RESPONSIBLE FOR THE ACCURACY OR COMPLETENESS OF SCANNED COPIES OF THIS PLAN SHEET.

NOTE:

1. FOR ACCURATE RIGHT OF WAY DATA, CONTACT RIGHT OF WAY ENGINEERING AT THE DISTRICT OFFICE.

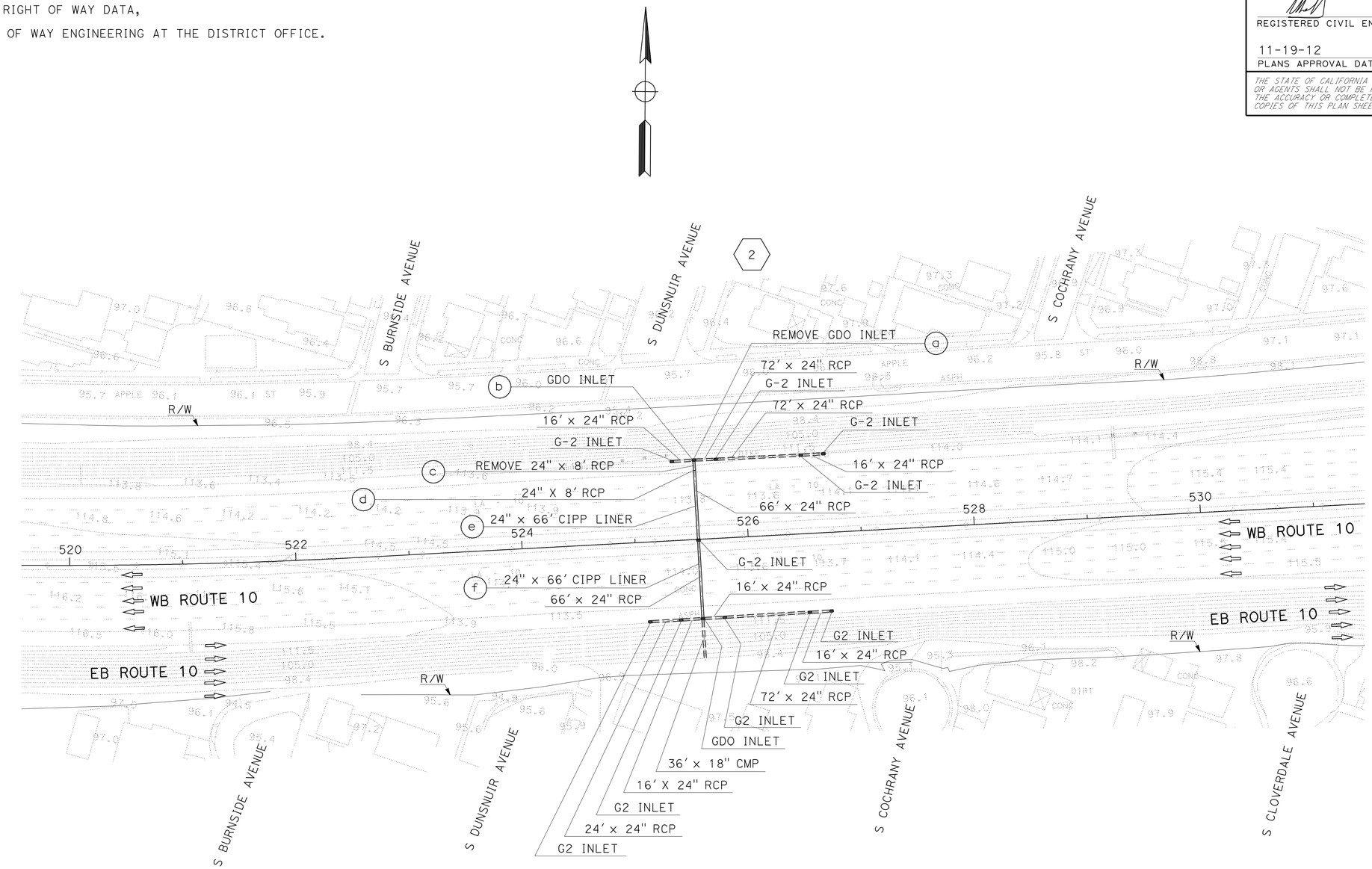

LOCATION No. 2

ROUTE 10 PM R9.9

DRAINAGE PLAN

SCALE 1" = 50'

D-2

APPROVED FOR DRAINAGE WORK ONLY

STATE OF CALIFORNIA - DEPARTMENT OF TRANSPORTATION
Caltrans
HYDRAULICS

FUNCTIONAL SUPERVISOR: DAVE BHALLA
CALCULATED-DESIGNED BY: DARREN TRINH
CHECKED BY: DAVE BHALLA
REVISED BY
DATE REVISED

LAST REVISION 11-19-12
DATE PLOTTED => 14-NOV-2012
TIME PLOTTED => 10:46

Dist	COUNTY	ROUTE	POST MILES TOTAL PROJECT	SHEET No.	TOTAL SHEETS
07	LA	10, 110	Var	6	22

REGISTERED CIVIL ENGINEER 10-19-12 DATE

11-19-12
PLANS APPROVAL DATE

REGISTERED PROFESSIONAL ENGINEER
DAVE BHALLA
No. 34350
Exp. 9-30-13
CIVIL
STATE OF CALIFORNIA

THE STATE OF CALIFORNIA OR ITS OFFICERS OR AGENTS SHALL NOT BE RESPONSIBLE FOR THE ACCURACY OR COMPLETENESS OF SCANNED COPIES OF THIS PLAN SHEET.

NOTE:

1. FOR ACCURATE RIGHT OF WAY DATA,
   CONTACT RIGHT OF WAY ENGINEERING AT THE DISTRICT OFFICE.

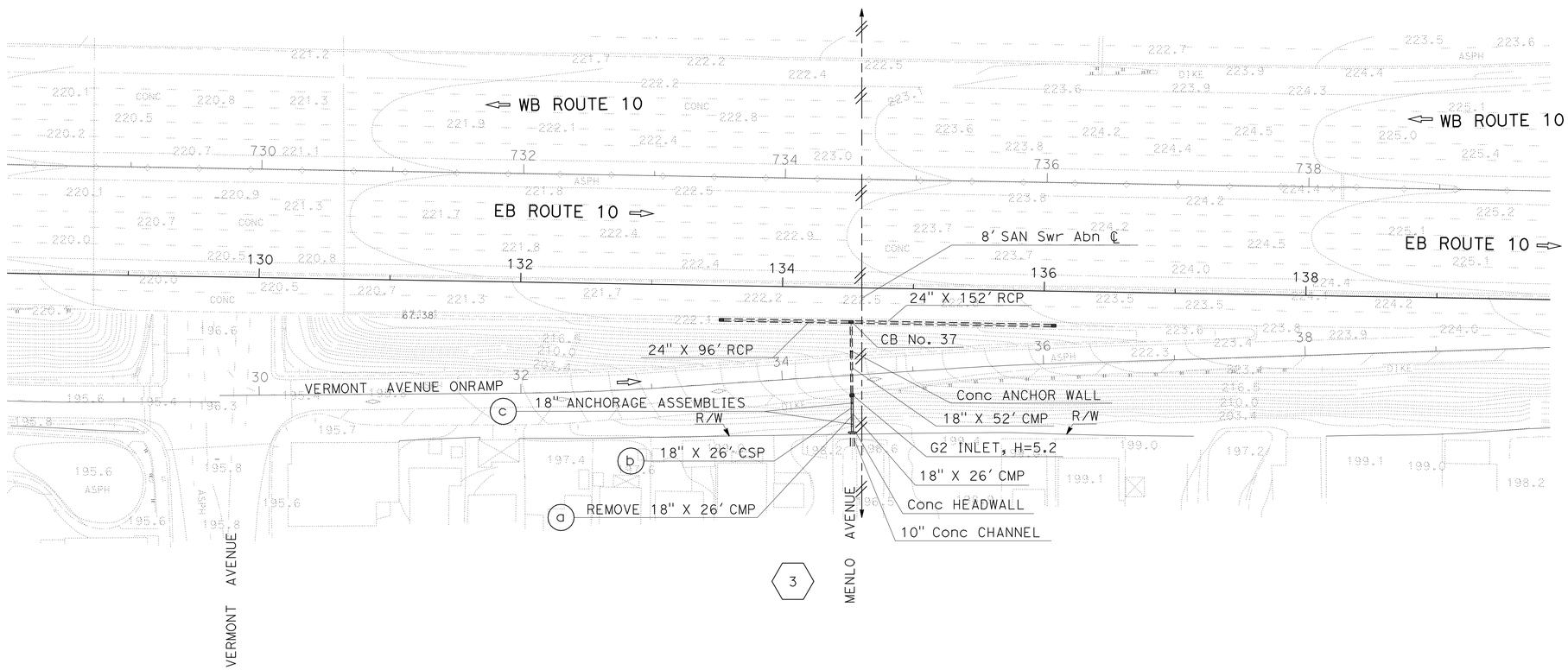

LOCATION No. 3

ROUTE 10 PM R13.9

DRAINAGE PLAN

SCALE 1" = 50'

D-3

APPROVED FOR DRAINAGE WORK ONLY

STATE OF CALIFORNIA - DEPARTMENT OF TRANSPORTATION
Caltrans MAINTENANCE ENGINEERING

FUNCTIONAL SUPERVISOR: DAVE BHALLA
CALCULATED-DESIGNED BY: DARREN TRINH
CHECKED BY: DAVE BHALLA
REVISED BY
DATE REVISED

LAST REVISION 00-00-00
DATE PLOTTED => 14-NOV-2012
TIME PLOTTED => 10:46

Dist	COUNTY	ROUTE	POST MILES TOTAL PROJECT	SHEET No.	TOTAL SHEETS
07	LA	10, 110	Var	7	22

REGISTERED CIVIL ENGINEER 10-19-12 DATE

11-19-12
PLANS APPROVAL DATE

REGISTERED PROFESSIONAL ENGINEER DAVE BHALLA No. 34350 Exp. 9-30-13 CIVIL STATE OF CALIFORNIA

THE STATE OF CALIFORNIA OR ITS OFFICERS OR AGENTS SHALL NOT BE RESPONSIBLE FOR THE ACCURACY OR COMPLETENESS OF SCANNED COPIES OF THIS PLAN SHEET.

NOTE:

1. FOR ACCURATE RIGHT OF WAY DATA, CONTACT RIGHT OF WAY ENGINEERING AT THE DISTRICT OFFICE.

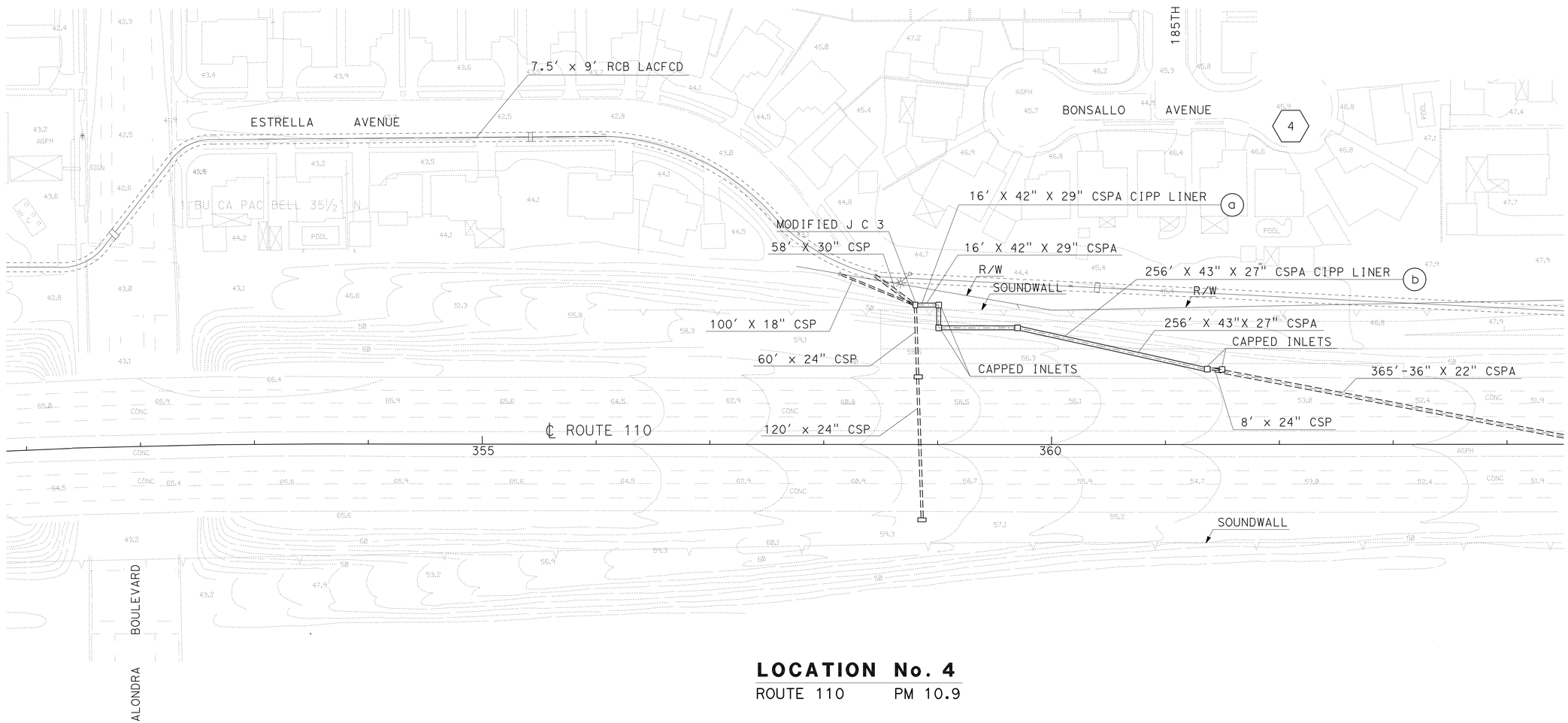

LOCATION No. 4
ROUTE 110 PM 10.9

DRAINAGE PLAN
SCALE 1" = 50'

D-4

APPROVED FOR DRAINAGE WORK ONLY

STATE OF CALIFORNIA - DEPARTMENT OF TRANSPORTATION
Caltrans MAINTENANCE ENGINEERING

FUNCTIONAL SUPERVISOR: DAVE BHALLA
CALCULATED-DESIGNED BY: DARREN TRINH
CHECKED BY: DAVE BHALLA
REVISED BY
DATE REVISED

LAST REVISION 00-00-00
DATE PLOTTED => 14-NOV-2012
TIME PLOTTED => 10:46

Dist	COUNTY	ROUTE	POST MILES TOTAL PROJECT	SHEET No.	TOTAL SHEETS
07	LA	10, 110	Var	8	22

REGISTERED CIVIL ENGINEER 10-19-12 DATE

11-19-12
PLANS APPROVAL DATE

REGISTERED PROFESSIONAL ENGINEER DAVE BHALLA No. 34350 Exp. 9-30-13 CIVIL STATE OF CALIFORNIA

THE STATE OF CALIFORNIA OR ITS OFFICERS OR AGENTS SHALL NOT BE RESPONSIBLE FOR THE ACCURACY OR COMPLETENESS OF SCANNED COPIES OF THIS PLAN SHEET.

CONTRACTOR SHALL VERIFY ELEVATIONS OF EXISTING AND PROPOSED DRAINAGE SYSTEMS BEFORE COMMENCEMENT OF WORK

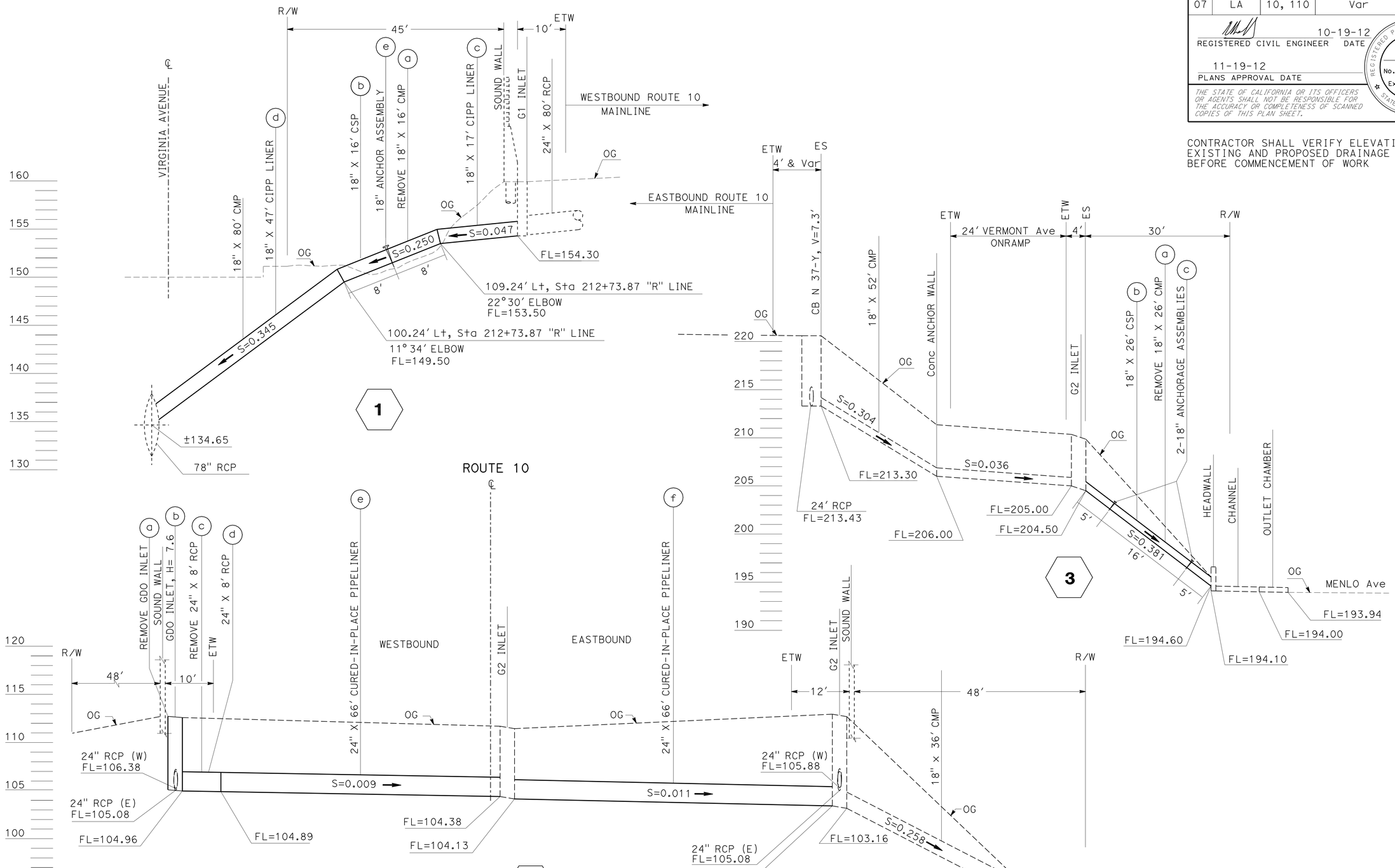

DRAINAGE PROFILE

SCALE: HORIZ 1" = 10′
VERT 1" = 2′

DP-1

STATE OF CALIFORNIA - DEPARTMENT OF TRANSPORTATION
Caltrans MAINTENANCE ENGINEERING

FUNCTIONAL SUPERVISOR: DAVE BHALLA
CALCULATED-DESIGNED BY: DARREN TRINH
CHECKED BY: DAVE BHALLA
REVISED BY
DATE REVISED

LAST REVISION 00-00-00 | DATE PLOTTED => 14-NOV-2012 | TIME PLOTTED => 10:46

Dist	COUNTY	ROUTE	POST MILES TOTAL PROJECT	SHEET No.	TOTAL SHEETS
07	LA	10, 110	Var	9	22

REGISTERED CIVIL ENGINEER 10-19-12 DATE

11-19-12
PLANS APPROVAL DATE

REGISTERED PROFESSIONAL ENGINEER DAVE BHALLA No. 34350 Exp. 9-30-13 CIVIL STATE OF CALIFORNIA

THE STATE OF CALIFORNIA OR ITS OFFICERS OR AGENTS SHALL NOT BE RESPONSIBLE FOR THE ACCURACY OR COMPLETENESS OF SCANNED COPIES OF THIS PLAN SHEET.

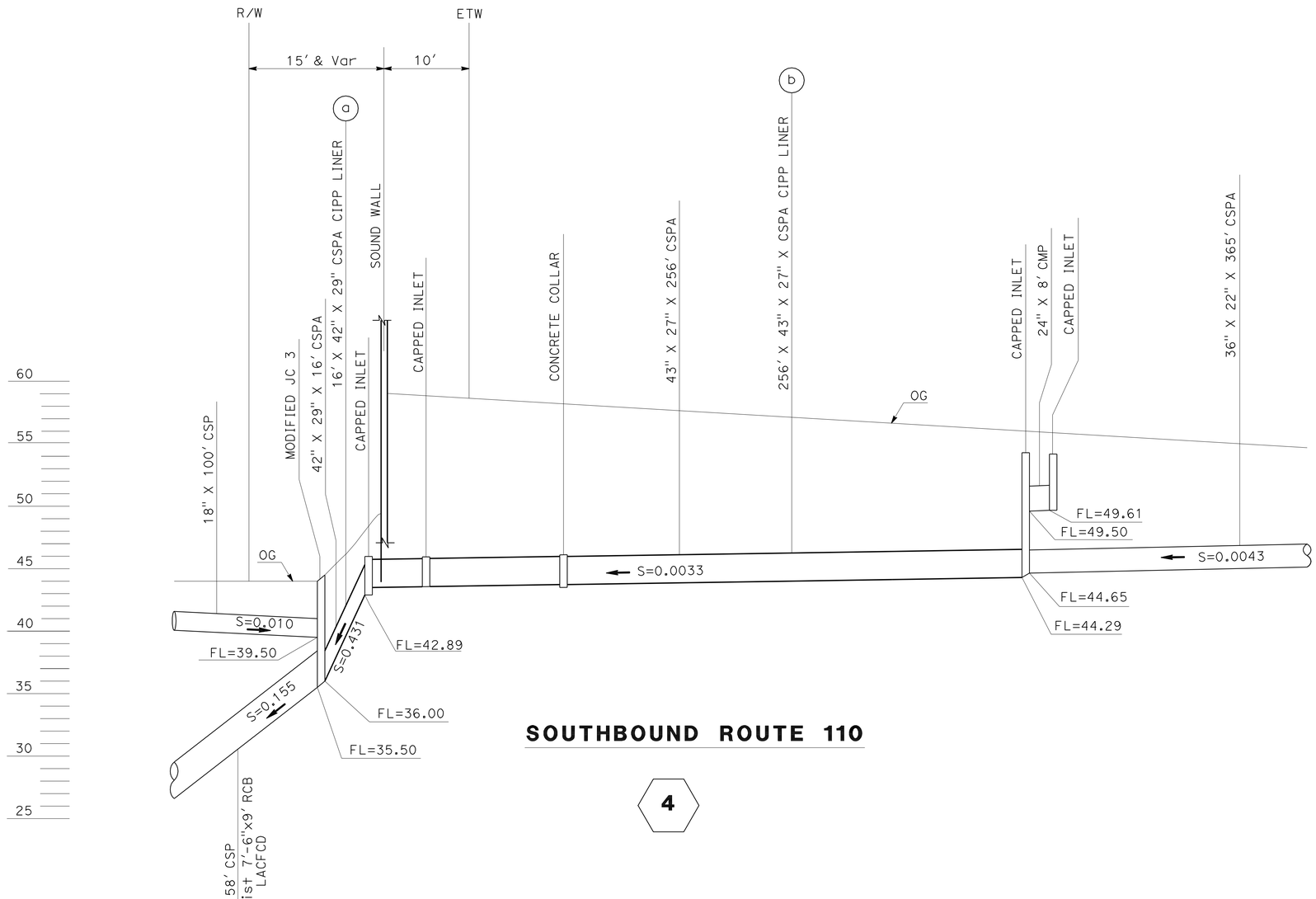

SOUTHBOUND ROUTE 110

4

DRAINAGE PROFILE

SCALE: HORIZ 1" = 10′
VERT 1" = 2′

DP-2

STATE OF CALIFORNIA - DEPARTMENT OF TRANSPORTATION
Caltrans
HYDRAULICS

FUNCTIONAL SUPERVISOR: DAVE BHALLA
CALCULATED-DESIGNED BY: DARREN TRINH
CHECKED BY: DAVE BHALLA
REVISED BY
DATE REVISED

LAST REVISION 11-19-12
DATE PLOTTED => 14-NOV-2012
TIME PLOTTED => 10:46

Dist	COUNTY	ROUTE	POST MILES TOTAL PROJECT	SHEET No.	TOTAL SHEETS
07	LA	10, 110	Var	10	22

REGISTERED CIVIL ENGINEER 10-19-12 DATE

11-19-12
PLANS APPROVAL DATE

REGISTERED PROFESSIONAL ENGINEER DAVE BHALLA No. 34350 Exp. 9-30-13 CIVIL STATE OF CALIFORNIA

THE STATE OF CALIFORNIA OR ITS OFFICERS OR AGENTS SHALL NOT BE RESPONSIBLE FOR THE ACCURACY OR COMPLETENESS OF SCANNED COPIES OF THIS PLAN SHEET.

NOTE:

PIPE JOINTS ARE STANDARD.

ABBREVIATION:

(N) NOT A SEPARATE PAY ITEM, FOR INFORMATION ONLY.

DRAINAGE PLAN SHEET No.	DRAINAGE SYSTEM No.	DRAINAGE UNIT No.	(N) H OR V Ft	MINOR CONCRETE (MINOR STRUCTURE) CY	MISCELLANEOUS IRON AND STEEL LB	REMOVE INLET EA	REMOVE PIPE LF	18" CORRUGATED STEEL PIPE (.064" THICK) LF	18" ANCHOR ASSEMBLY EA	24" REINFORCED CONCRETE PIPE LF	CLEANING, INSPECTING AND PREPARING CULVERT CY	18" CURED-IN-PLACE PIPELINER LF	24" CURED-IN-PLACE PIPELINER LF	42" X 29" CURED-IN-PLACE PIPELINER LF	43" X 27" CURED-IN-PLACE PIPELINER LF	(N) TYPE 24-12 FRAME AND GRATE EA	(N) MAXIMUM COVER Ft	DESCRIPTION
D-1	1	a					16											REMOVE 18" CMP
		b						16										18" CSP
		c									0.34	17						CIPP LINER
		d									0.92	47						CIPP LINER
		e							1									ANCHORAGE ASSEMBLY
D-2	2	a				1												REMOVE GDO INLET
		b	7.6	3.10	634											2		TYPE GDO INLET
		c					8											REMOVE 24" RCP
		d								8							5.6	24" RCP
		e									15.36		66					CIPP LINER
		f									15.36		66					CIPP LINER
D-3	3	a					26											REMOVE 18" CMP
		b						26										18" CSP
		c							2									ANCHORAGE ASSEMBLY
D-4	4	a									1.16			16				CIPP LINER
		b									18.50				256			CIPP LINER
SHEET TOTAL			7.6	3.10	634	1	50	42	3	8	51.64	64	132	16	256	2	5.6	

DRAINAGE QUANTITIES

DQ-1

STATE OF CALIFORNIA - DEPARTMENT OF TRANSPORTATION
Caltrans
HYDRAULICS

FUNCTIONAL SUPERVISOR: DAVE BHALLA
CALCULATED-DESIGNED BY: DARREN TRINH
CHECKED BY: DAVE BHALLA
REVISED BY
DATE REVISED

LAST REVISION 11-19-12
DATE PLOTTED => 14-NOV-2012
TIME PLOTTED => 10:46

Dist	COUNTY	ROUTE	POST MILES TOTAL PROJECT	SHEET No.	TOTAL SHEETS
07	LA	10, 110	Var	11	22

REGISTERED CIVIL ENGINEER 10-19-12 DATE

11-19-12
PLANS APPROVAL DATE

REGISTERED PROFESSIONAL ENGINEER BIPIN PATEL No. C60082 Exp 6-30-14 CIVIL STATE OF CALIFORNIA

THE STATE OF CALIFORNIA OR ITS OFFICERS OR AGENTS SHALL NOT BE RESPONSIBLE FOR THE ACCURACY OR COMPLETENESS OF SCANNED COPIES OF THIS PLAN SHEET.

NOTES:

1. "TRAFFIC FINES DOUBLED IN CONSTRUCTION ZONES" SIGNS MUST BE PLACED APPROXIMATELY 500 FEET IN ADVANCE OF "ROAD WORK AHEAD" SIGNS OR AS THE ENGINEER DETERMINES.
2. LOCATIONS OF CONSTRUCTION AREA SIGNS ARE APPROXIMATE. THE ENGINEER DETERMINES EXACT LOCATIONS.

STATIONARY MOUNTED CONSTRUCTION AREA SIGNS

SIGN No. (X)	SIGN CODE	PANEL SIZE	NUMBER OF POSTS AND SIZE	SIGN MESSAGE	QUANTITY
A	W20-1	48" x 48"	1 - 6" x 6"	ROAD WORK AHEAD	8
B	G20-2	48" x 24"	1 - 4" x 6"	END ROAD WORK	7
C	C40(CA)	144" x 60"	2 - 6" x 8"	TRAFFIC FINES DOUBLED IN CONSTRUCTION ZONES	5

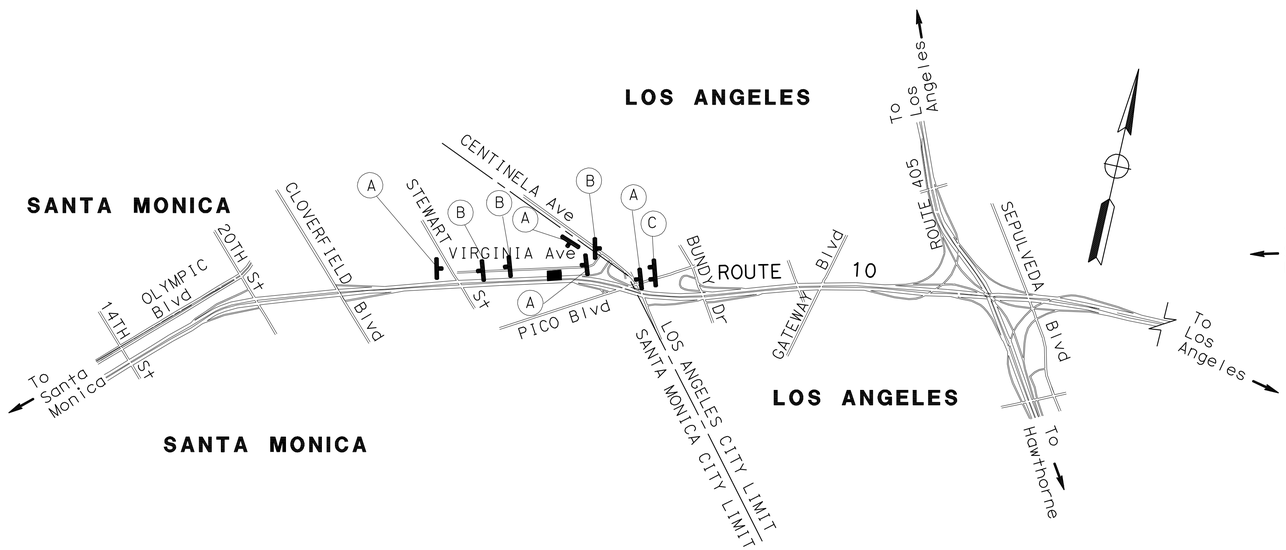

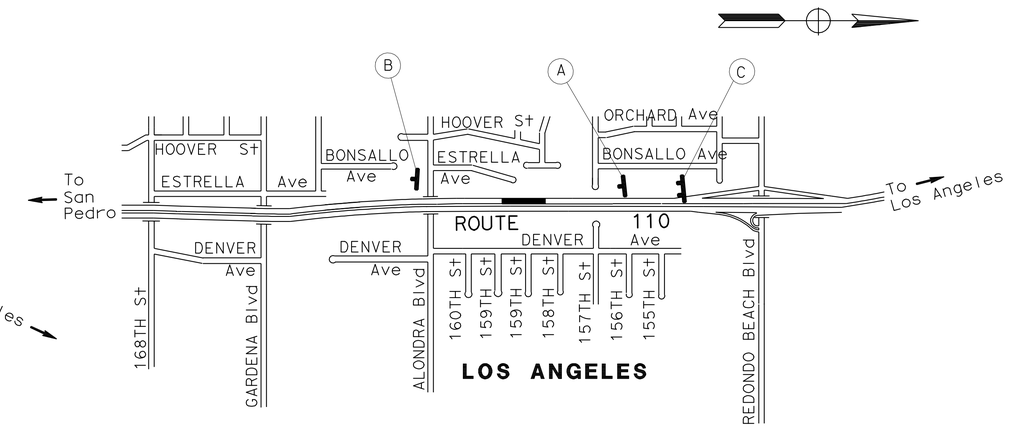

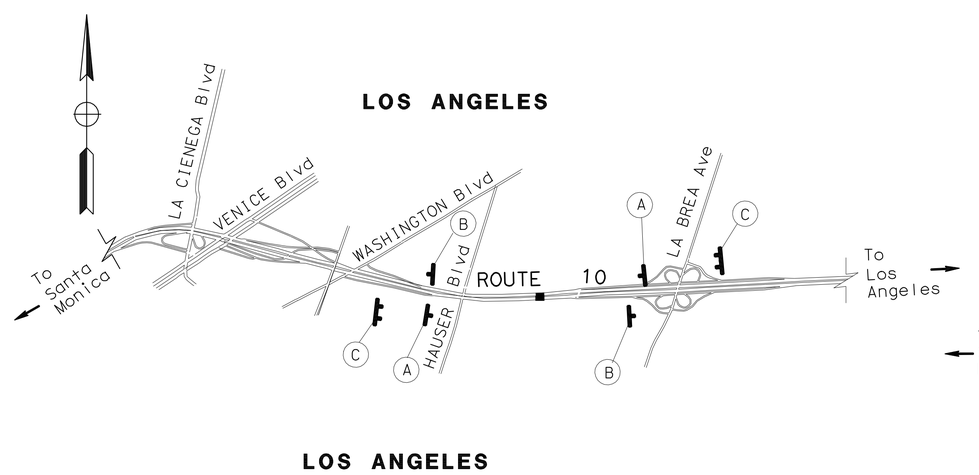

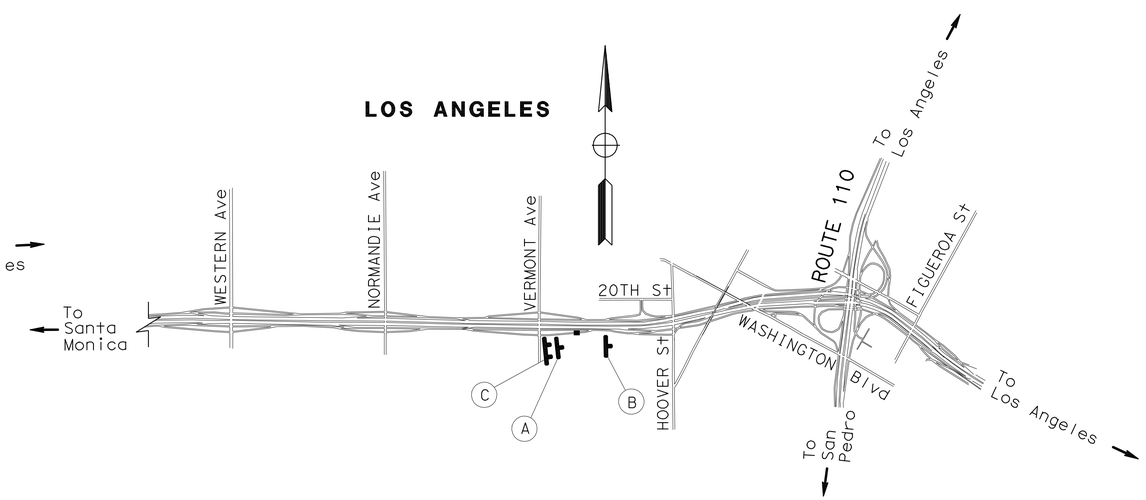

CONSTRUCTION AREA SIGNS

NO SCALE

CS-1

APPROVED FOR CONSTRUCTION AREA SIGN WORK ONLY

STATE OF CALIFORNIA - DEPARTMENT OF TRANSPORTATION
Caltrans MAINTENANCE ENGINEERING

FUNCTIONAL SUPERVISOR: LARRY WIERING
CALCULATED-DESIGNED BY: BIPIN PATEL
CHECKED BY: LARRY WIERING
REVISED BY
DATE REVISED

LAST REVISION 11-19-12 | DATE PLOTTED => 14-NOV-2012 | TIME PLOTTED => 10:47

Dist	COUNTY	ROUTE	POST MILES TOTAL PROJECT	SHEET No.	TOTAL SHEETS
07	LA	10, 110	Var	12	22

REGISTERED CIVIL ENGINEER 7-2-12 DATE

11-19-12
PLANS APPROVAL DATE

REGISTERED PROFESSIONAL ENGINEER ALBERT K. YU No. C43220 Exp. 3-31-14 CIVIL STATE OF CALIFORNIA

THE STATE OF CALIFORNIA OR ITS OFFICERS OR AGENTS SHALL NOT BE RESPONSIBLE FOR THE ACCURACY OR COMPLETENESS OF SCANNED COPIES OF THIS PLAN SHEET.

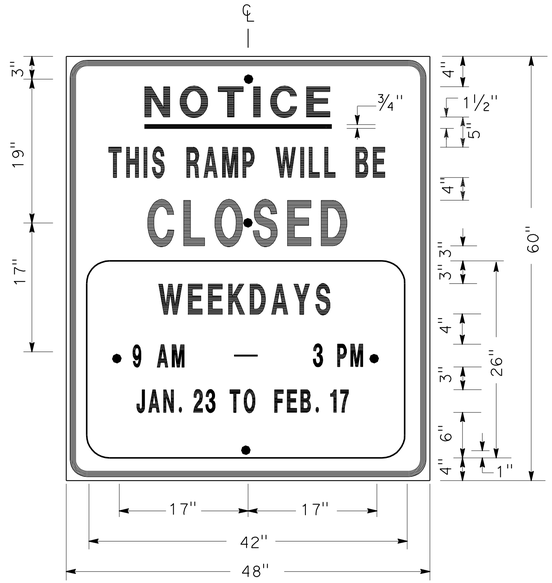

SIGN SP-1

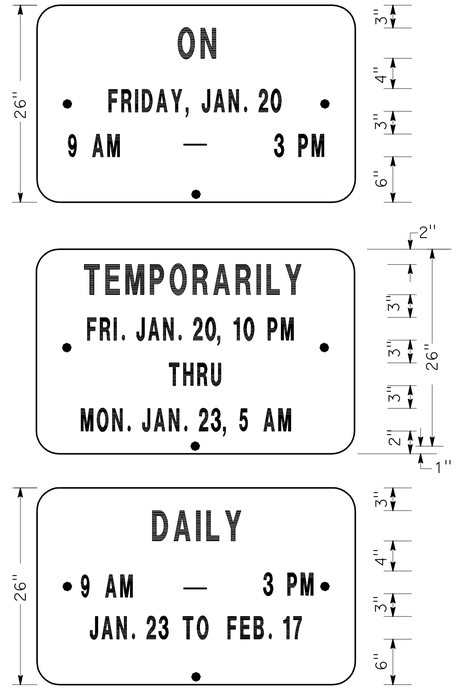

ALTERNATE OVERLAY PANELS (TYPICAL)

SPECIAL ADVANCE NOTICE PUBLICITY SIGN

NOTES: (SIGN SP-1)

1. LETTERS AND BORDER SHALL BE BLACK ON REFLECTORIZED ORANGE BACKGROUND.
2. BOLT HOLES SHALL BE 3/8" DIAMETER.
3. BASE MATERIAL SHALL BE ALUMINUM (MINIMUM 0.06").
4. SIGNS SHALL BE MOUNTED WITH BOTTOMS OF SIGNS A MINIMUM OF 7' ABOVE GROUND.

SIZE	BORDER WIDTH	MARGIN WIDTH	LETTER SIZE					CORNER RADIUS
			LINE 1	LINE 2*	LINE 3	LINE 4	LINE 5, 6, & 7*	
48"x60"	1 1/4"	3/4"	4E	4D	6E	4D		3"
42"x26"	OVERLAY						3D	1 1/2"
* CONDENSED SPACING IF NECESSARY								

SIGN SP-4

NOTES: (SIGN SP-4)

1. LETTERS - 6" SERIES C.
2. LETTERS AND BORDER SHALL BE BLACK ON REFLECTORIZED WHITE BACKGROUND.
3. BOLT HOLES SHALL BE 3/8" DIAMETER.
4. BASE MATERIAL SHALL BE ALUMINUM (MINIMUM 0.06").
5. SIGNS SHALL BE PLACED AT RAMP ENTRANCES IN ADDITION TO SIGNS POSTED IN ACCORDANCE WITH STANDARD PLAN T14.

SPECIAL SIGN FOR ENTRANCE RAMP CLOSURES

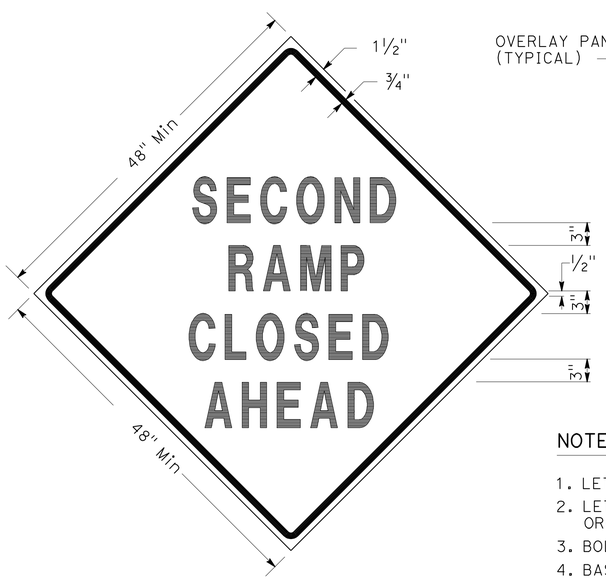

SIGN SP-3

SIGN SP-5

NOTES: (SIGNS SP-3 & SP-5)

1. LETTERS - 6" SERIES D.
2. LETTERS AND BORDER SHALL BE BLACK ON REFLECTORIZED ORANGE BACKGROUND.
3. BOLT HOLES SHALL BE 3/8" DIAMETER.
4. BASE MATERIAL SHALL BE ALUMINUM (MINIMUM 0.06").
5. SIGNS SHALL BE MOUNTED WITH BOTTOMS OF SIGNS A MINIMUM OF 7' ABOVE GROUND.
6. SIGN SP-5 SHALL BE USED IF THE OFF-RAMP TO BE CLOSED FOLLOWS A FREEWAY OFF-CONNECTOR.

SPECIAL SIGNS FOR EXIT RAMP CLOSURES

TRAFFIC HANDLING DETAILS
TRAFFIC CONTROL SYSTEM FOR RAMP CLOSURES, DETOUR SIGNS, AND MISCELLANEOUS DETAILS
SHEET 1 OF 2

NO SCALE

THD-1

STATE OF CALIFORNIA - DEPARTMENT OF TRANSPORTATION
Caltrans DTM

FUNCTIONAL SUPERVISOR: JOHN YANG
CALCULATED-DESIGNED BY: JOCELYN C CHIANG
CHECKED BY: ALBERT K YU
REVISED BY / DATE REVISED

LAST REVISION 11-19-12 DATE PLOTTED => 14-NOV-2012 TIME PLOTTED => 10:47

Dist	COUNTY	ROUTE	POST MILES TOTAL PROJECT	SHEET No.	TOTAL SHEETS
07	LA	10, 110	Var	13	22

REGISTERED CIVIL ENGINEER 7-2-12 DATE

11-19-12
PLANS APPROVAL DATE

REGISTERED PROFESSIONAL ENGINEER ALBERT K. YU No. C43220 Exp. 3-31-14 CIVIL STATE OF CALIFORNIA

THE STATE OF CALIFORNIA OR ITS OFFICERS OR AGENTS SHALL NOT BE RESPONSIBLE FOR THE ACCURACY OR COMPLETENESS OF SCANNED COPIES OF THIS PLAN SHEET.

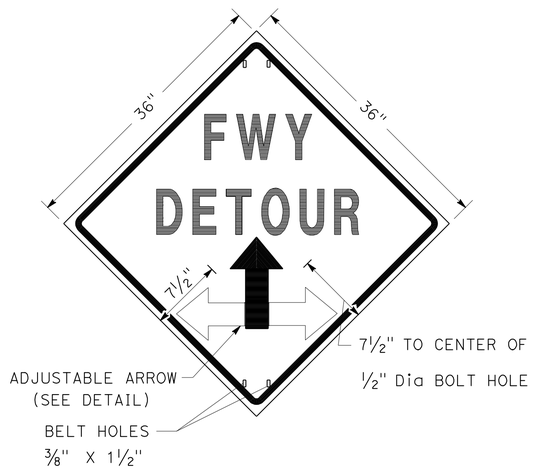

SIGN SP-2

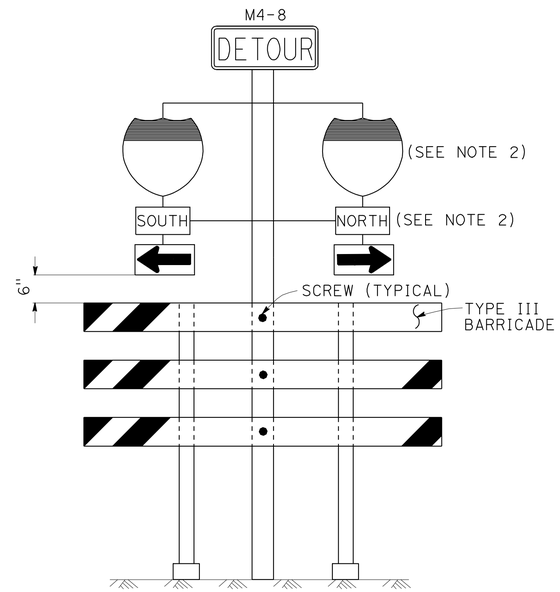

SIGN SP-6 (SEE NOTE 1)

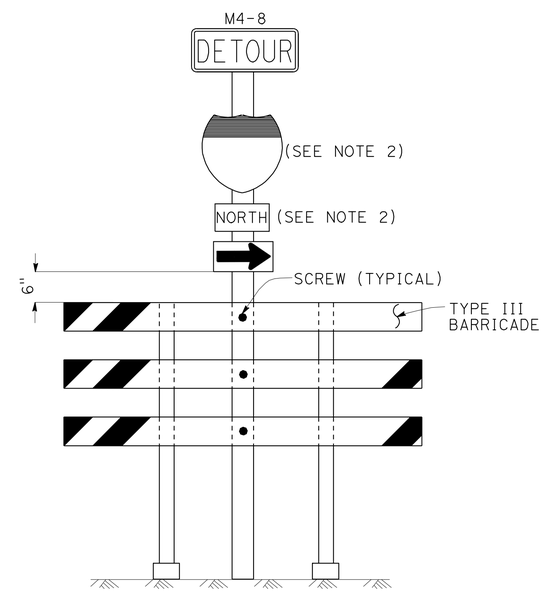

SIGN SP-7 (SEE NOTE 1)

NOTES: SIGN SP-2

1. LETTERS - 6" SERIES E.
2. LETTERS, BORDER AND ARROW - BLACK ON RETROREFLECTORIZED ORANGE BACKGROUND.
3. BASE MATERIAL FOR SIGNS AND ARROWS SHALL BE ALUMINUM (MINIMUM 0.06").
4. BELTS (LUGGAGE STRAPS) SHALL BE 1" WIDE BY 48" LONG, MADE OF COTTON OR POLYPROPYLENE WEB MATERIAL.
5. SIGNS SHALL BE MOUNTED WITH BOTTOMS OF SIGNS A MINIMUM OF 7' ABOVE GROUND EXCEPT AS OTHERWISE SHOWN ON OTHER TRAFFIC HANDLING DETAILS PLANS.

NOTES: (SIGNS SP-6 & SP-7)

1. IN LIEU OF PLACING SIGNS ON TYPE III BARRICADES, SIGNS, INCLUDING POSTS, MAY BE PLACED INTO THE GROUND OR FASTENED ONTO ELECTROLIERS.
2. USE APPROPRIATE ROUTE MARKER [G26-2(CA), G27-2(CA), G28-2(CA)] AND CARDINAL DIRECTION [NORTH (M3-1), SOUTH (M3-3), EAST (M3-2), WEST (M3-4)].

SPECIAL PORTABLE FREEWAY DETOUR SIGNS

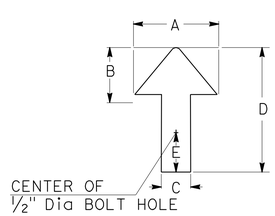

DIMENSIONS				
A	B	C	D	E
6"	3"	2"	8"	1"

ADJUSTABLE ARROW DETAIL

ABBREVIATION

(CA) CALIFORNIA CODE

TRAFFIC HANDLING DETAILS

TRAFFIC CONTROL SYSTEM FOR RAMP CLOSURES, DETOUR SIGNS, AND MISCELLANEOUS DETAILS

SHEET 2 OF 2

NO SCALE

THD-2

STATE OF CALIFORNIA - DEPARTMENT OF TRANSPORTATION
Caltrans DTM

FUNCTIONAL SUPERVISOR: JOHN YANG
CALCULATED-DESIGNED BY: ALBERT K YU
CHECKED BY: JOCELYN C CHIANG
REVISED BY
DATE REVISED

LAST REVISION 11-19-12 | DATE PLOTTED => 14-NOV-2012 | TIME PLOTTED => 10:47

Dist	COUNTY	ROUTE	POST MILES TOTAL PROJECT	SHEET No.	TOTAL SHEETS
07	LA	10, 110	Var	14	22

REGISTERED CIVIL ENGINEER 7-2-12 DATE

11-19-12
PLANS APPROVAL DATE

REGISTERED PROFESSIONAL ENGINEER ALBERT K. YU No. C43220 Exp. 3-31-14 CIVIL STATE OF CALIFORNIA

THE STATE OF CALIFORNIA OR ITS OFFICERS OR AGENTS SHALL NOT BE RESPONSIBLE FOR THE ACCURACY OR COMPLETENESS OF SCANNED COPIES OF THIS PLAN SHEET.

LEGEND

- SIGN SP-2
- AND/OR — DESIGNATED DETOUR ROUTE
- DETOUR DIRECTION
- CONTROLLED INTERSECTION

NOTES:

1. SP-2 SIGNS MAY BE STRAPPED ON EXISTING ELECTROLIER, SIGNAL POST OR SIGN POST.
2. SP-2 SIGNS SHALL NOT BE INSTALLED ON BARRICADES EXCEPT AS OTHERWISE SHOWN.
3. SIGN LOCATIONS ARE APPROXIMATE. EXACT LOCATIONS WILL BE DETERMINED BY THE ENGINEER.
4. SP-2 SIGNS SHALL BE POSTED AT EACH CONTROLLED INTERSECTION (EXCEPT AT COMMERCIAL PROPERTY, RESIDENTIAL COMPLEX OR T-INTERSECTION FROM ONE-WAY STREET) ALONG THE DESIGNATED DETOUR ROUTE.
5. UNLESS OTHERWISE SHOWN ON OTHER THD PLANS, WHEN CONTROLLED INTERSECTIONS ALONG THE DESIGNATED DETOUR ROUTE ARE CLOSELY SPACED, PLACE SP-2 SIGNS AT CONTROLLED INTERSECTIONS AT A DISTANCE NOT TO EXCEED 1/4 MILE FROM THE PRECEDING DETOUR SIGN.
6. EXCEPT AS OTHERWISE SHOWN ON OTHER PLANS OR SPECIFIED IN THE SPECIAL PROVISIONS, SP-2 SIGNS SHALL BE PLACED AS SHOWN ON THIS PLAN.

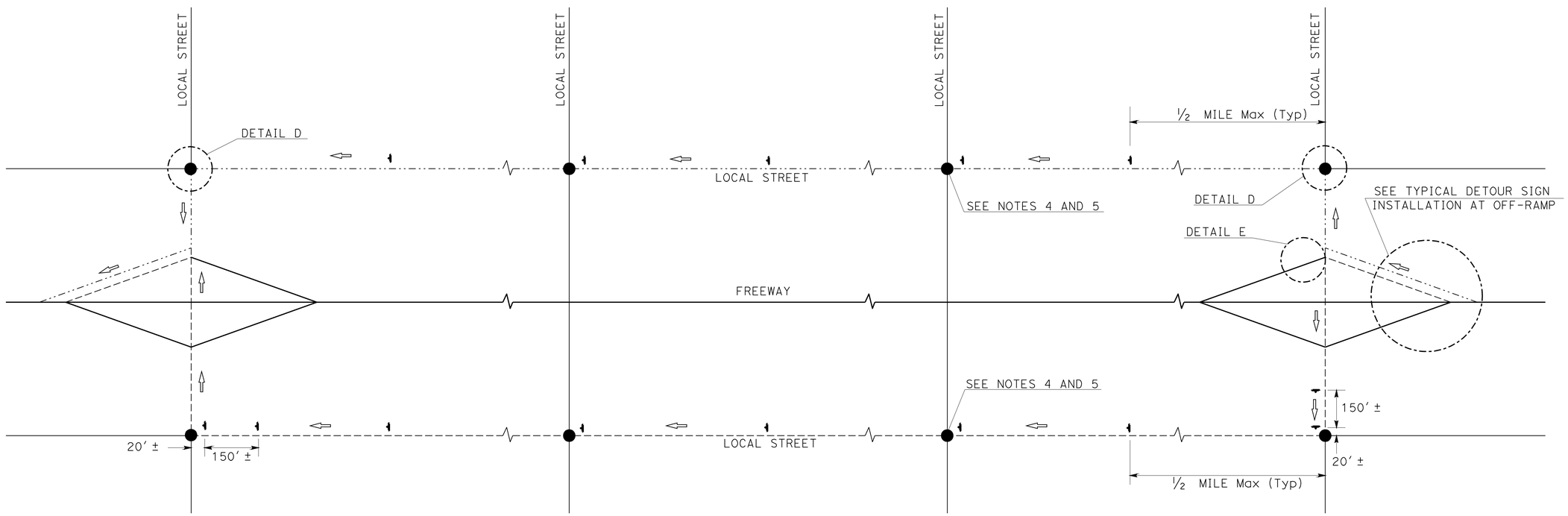

TYPICAL DETOUR SIGN INSTALLATION ALONG DESIGNATED DETOUR ROUTE

TRAFFIC HANDLING DETAILS

TRAFFIC CONTROL SYSTEM FOR DETOUR SIGN INSTALLATION ALONG DESIGNATED DETOUR ROUTE

SHEET 1 OF 3

NO SCALE

THD-3

STATE OF CALIFORNIA - DEPARTMENT OF TRANSPORTATION
Caltrans® DTM

FUNCTIONAL SUPERVISOR: JOHN YANG
CALCULATED-DESIGNED BY: ALBERT K YU
CHECKED BY: JOCELYN C CHIANG
REVISED BY
DATE REVISED

LAST REVISION 11-19-12
DATE PLOTTED => 14-NOV-2012
TIME PLOTTED => 10:47

Dist	COUNTY	ROUTE	POST MILES TOTAL PROJECT	SHEET No.	TOTAL SHEETS
07	LA	10, 110	Var	15	22

REGISTERED CIVIL ENGINEER 7-2-12 DATE

11-19-12
PLANS APPROVAL DATE

REGISTERED PROFESSIONAL ENGINEER ALBERT K. YU No. C43220 Exp. 3-31-14 CIVIL STATE OF CALIFORNIA

THE STATE OF CALIFORNIA OR ITS OFFICERS OR AGENTS SHALL NOT BE RESPONSIBLE FOR THE ACCURACY OR COMPLETENESS OF SCANNED COPIES OF THIS PLAN SHEET.

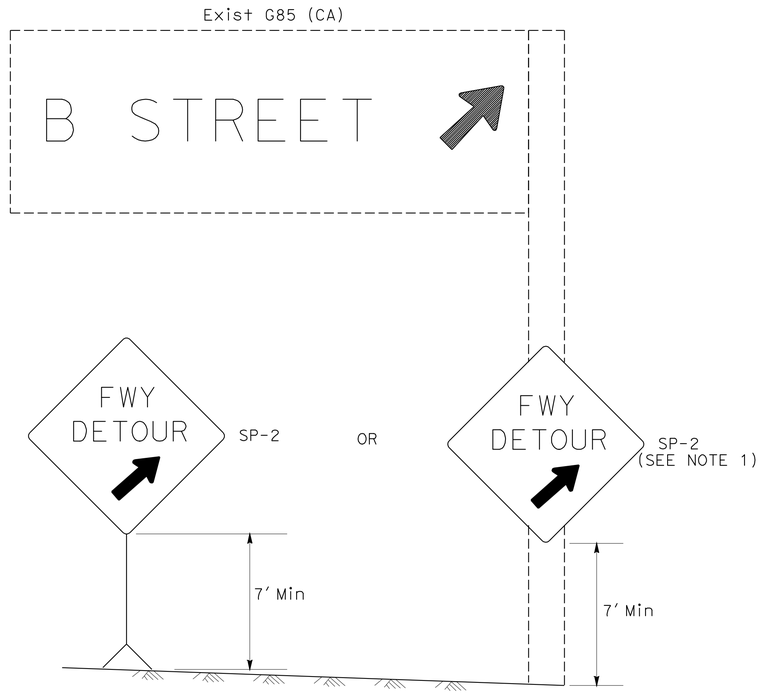

DETAIL A (SEE NOTE 3)

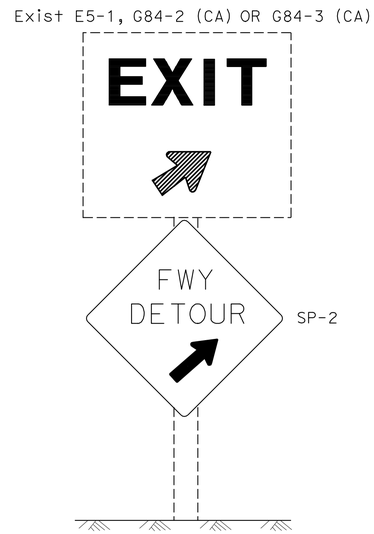

DETAIL B (SEE NOTE 3)

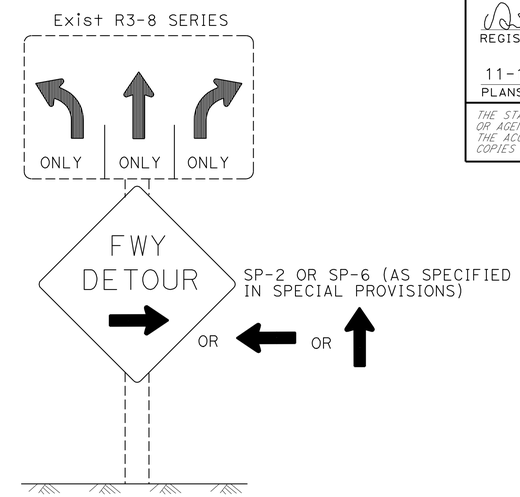

DETAIL C (SEE NOTES 4, 5, AND 6)

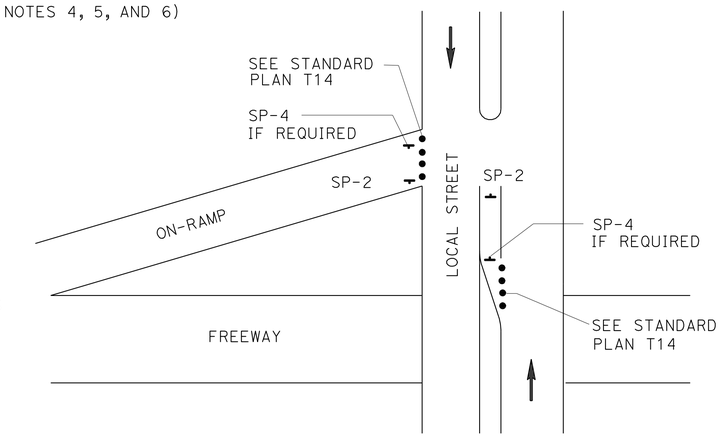

DETAIL E

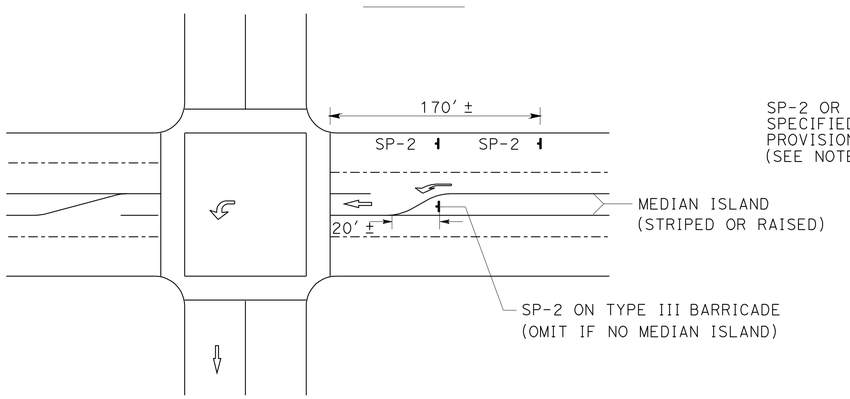

DETAIL D

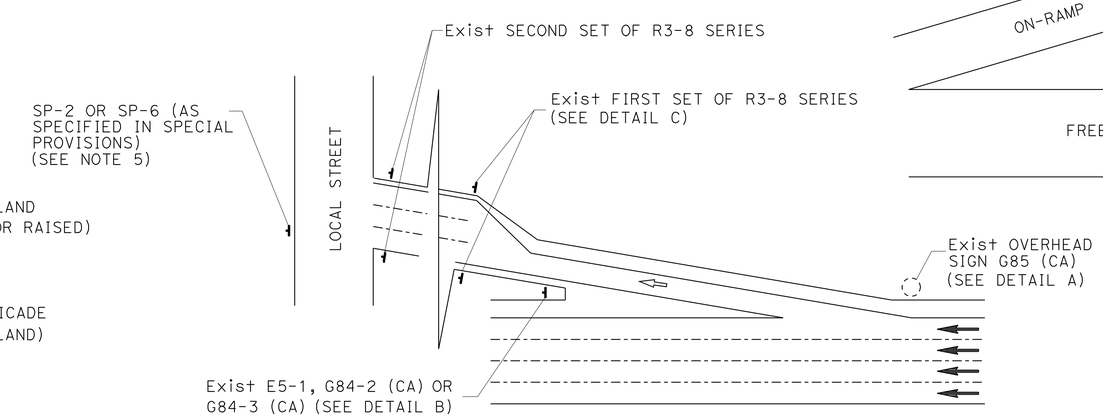

TYPICAL DETOUR SIGN INSTALLATION AT OFF-RAMP

LEGEND

- CONE
- PORTABLE SIGN
- DIRECTION OF TRAVEL
- DETOUR DIRECTION
- EXISTING OVERHEAD SIGN

NOTES: SIGN SP-2

1. SP-2 SIGNS MAY BE STRAPPED ON EXISTING ELECTROLIER, SIGNAL POST OR SIGN POST.
2. SP-2 SIGNS SHALL NOT BE INSTALLED ON BARRICADES EXCEPT AS OTHERWISE SHOWN.
3. OMIT DETAILS A AND B FOR FULL FREEWAY CLOSURES.
4. SEE TRAFFIC HANDLING DETAILS-TRAFFIC CONTROL SYSTEM FOR RAMP CLOSURES, DETOUR SIGNS, AND MISCELLANEOUS DETAILS PLAN SHEET 2 OF 2 FOR SP-6 SIGN DETAILS.
5. IF R3-8 SERIES SIGNS ARE NOT PRESENT AT THE OFF-RAMP, SP-2 OR SP-6 SIGNS SHALL BE FASTENED ONTO EXISTING ELECTROLIER, SIGNAL POST OR SIGN POST.
6. EXCEPT FOR DETAILS A & B, OMIT SP-2 SIGNS IF RAMP HAS MANDATORY SINGLE MOVE.

SIGN CODE LEGEND

XXYY-Y: FEDERAL SIGN CODE PER MANUAL ON UNIFORM TRAFFIC CONTROL DEVICES (MUTCD)

XXYY-Y (CA): CALIFORNIA SIGN CODE PER CALIFORNIA MUTCD

TRAFFIC HANDLING DETAILS
TRAFFIC CONTROL SYSTEM FOR DETOUR SIGN INSTALLATION ALONG DESIGNATED DETOUR ROUTE
SHEET 2 OF 3

NO SCALE

THD-4

STATE OF CALIFORNIA - DEPARTMENT OF TRANSPORTATION
Caltrans DTM

FUNCTIONAL SUPERVISOR: JOHN YANG
CALCULATED-DESIGNED BY: ALBERT K YU
CHECKED BY: JOCELYN C CHIANG
REVISED BY
DATE REVISED

LAST REVISION DATE PLOTTED => 14-NOV-2012
11-19-12 TIME PLOTTED => 10:47

Dist	COUNTY	ROUTE	POST MILES TOTAL PROJECT	SHEET No.	TOTAL SHEETS
07	LA	10, 110	Var	16	22

REGISTERED CIVIL ENGINEER 7-2-12 DATE

11-19-12
PLANS APPROVAL DATE

REGISTERED PROFESSIONAL ENGINEER ALBERT K. YU No. C43220 Exp. 3-31-14 CIVIL STATE OF CALIFORNIA

THE STATE OF CALIFORNIA OR ITS OFFICERS OR AGENTS SHALL NOT BE RESPONSIBLE FOR THE ACCURACY OR COMPLETENESS OF SCANNED COPIES OF THIS PLAN SHEET.

NOTES:

1. LANE CLOSURES SHALL NOT BE PLACED ON CREST VERTICAL CURVES OR ON HORIZONTAL CURVES.
2. PCMS SHALL BE ACTIVATED PRIOR TO TRAFFIC CONTROL ACTIVITIES ON THE LANE.
3. A MINIMUM SIGHT DISTANCE OF 1500′ SHALL BE PROVIDED IN ADVANCE OF PCMS.
4. VEHICLE-MOUNTED SIGN PANELS SHALL BE TYPE III OR IV RETROREFLECTORIZED SHEETING, BLACK ON WHITE OR BLACK ON ORANGE WITH 8" MINIMUM SERIES D LETTERS PER CALTRANS SIGN SPECIFICATIONS.

LEGEND

V1, V2	SHADOW VEHICLES
V3	WORK/APPLICATION VEHICLE
	PCMS
	DIRECTION OF TRAVEL
	CONSTRUCTION AREA SIGN

ABBREVIATIONS

FAS	FLASHING ARROW SIGN
IAV	IMPACT ATTENUATOR VEHICLE
CMS	CHANGEABLE MESSAGE SIGN
PCMS	PORTABLE CHANGEABLE MESSAGE SIGN
(CA)	CALIFORNIA CODE

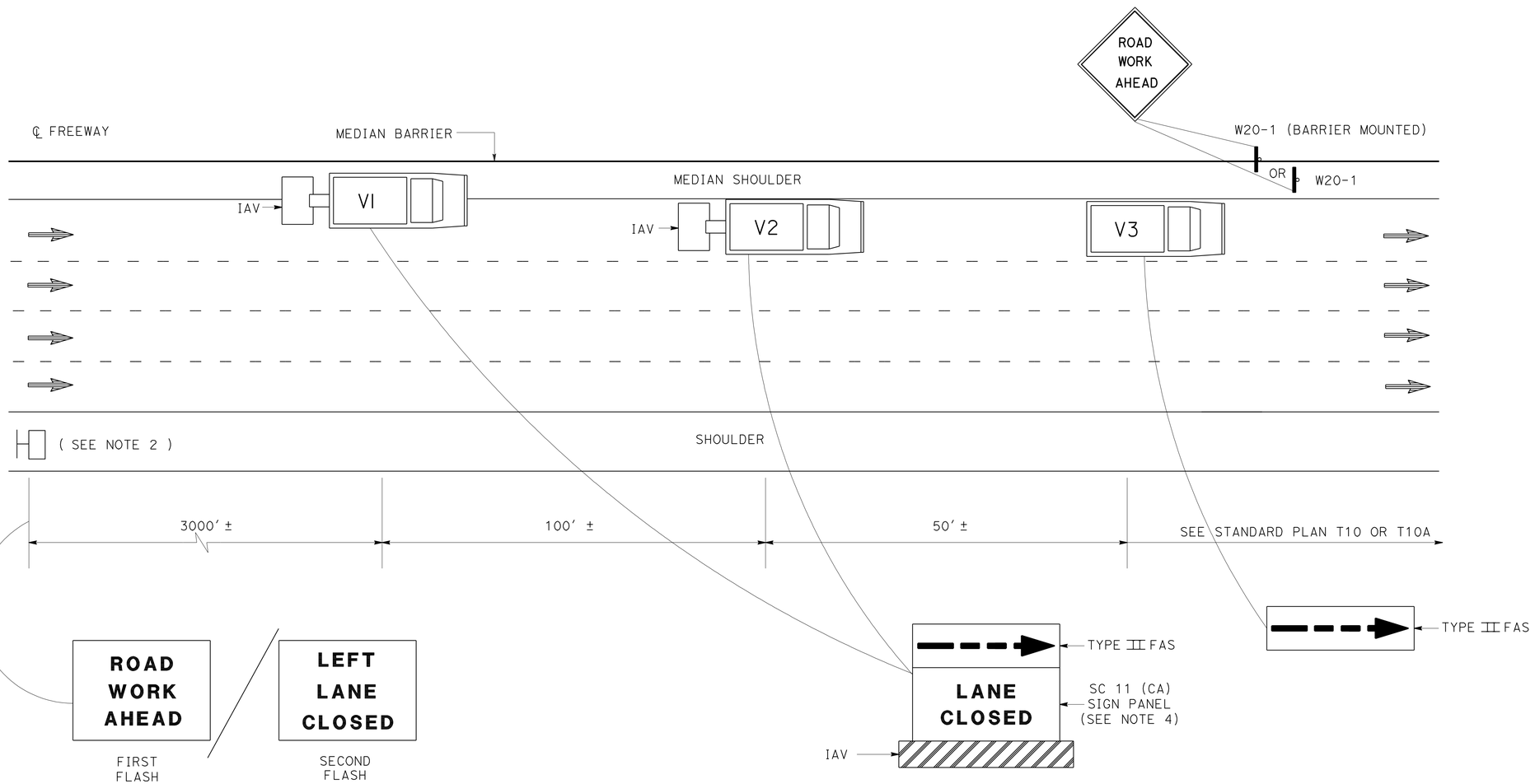

PCMS OR TRUCK MOUNTED CMS MESSAGE

TRAFFIC HANDLING DETAILS
TRAFFIC CONTROL SYSTEM FOR MEDIAN SHOULDERS LESS THAN 8 FEET

NO SCALE

THD-5

STATE OF CALIFORNIA - DEPARTMENT OF TRANSPORTATION
Caltrans DTM

FUNCTIONAL SUPERVISOR: JOHN YANG
CALCULATED-DESIGNED BY: ALBERT K YU
CHECKED BY: JOCELYN C CHIANG
REVISED BY / DATE REVISED

LAST REVISION 11-19-12 | DATE PLOTTED => 14-NOV-2012 | TIME PLOTTED => 10:47

Dist	COUNTY	ROUTE	POST MILES TOTAL PROJECT	SHEET No.	TOTAL SHEETS
07	LA	10, 110	Var	17	22

REGISTERED CIVIL ENGINEER 7-2-12 DATE

11-19-12
PLANS APPROVAL DATE

REGISTERED PROFESSIONAL ENGINEER ALBERT K. YU No. C43220 Exp. 3-31-14 CIVIL STATE OF CALIFORNIA

THE STATE OF CALIFORNIA OR ITS OFFICERS OR AGENTS SHALL NOT BE RESPONSIBLE FOR THE ACCURACY OR COMPLETENESS OF SCANNED COPIES OF THIS PLAN SHEET.

NOTES:

1. LANE CLOSURES SHALL NOT BE PLACED ON CREST VERTICAL CURVES OR ON HORIZONTAL CURVES.
2. PCMS SHALL BE ACTIVATED PRIOR TO TRAFFIC CONTROL ACTIVITIES ON THE HOV LANE.
3. A MINIMUM SIGHT DISTANCE OF 1500′ SHALL BE PROVIDED IN ADVANCE OF PCMS.
4. VEHICLE-MOUNTED SIGN PANELS SHALL BE TYPE III OR IV RETROREFLECTORIZED SHEETING, BLACK ON WHITE OR BLACK ON ORANGE WITH 8" MINIMUM SERIES D LETTERS PER CALTRANS SIGN SPECIFICATIONS.
5. PLACE PCMS ON THE MEDIAN SHOULDER WHERE SUFFICIENT ROOM (SUCH AS CHP ENFORCEMENT AREAS) EXISTS.
6. ADVANCE WARNING SIGN INSTALLATIONS SHALL BE EQUIPPED WITH FLAGS FOR DAYTIME CLOSURES. TYPE B HIGH INTENSITY FLASHING WARNING LIGHTS SHALL BE USED ON SP-16 SIGN DURING NIGHT LANE CLOSURES. FLAGS AND WARNING LIGHTS SHALL BE ATTACHED TO SIGNS AS APPROVED BY THE ENGINEER.

LEGEND

V1, V2	SHADOW VEHICLES
V3	WORK/APPLICATION VEHICLE
	PCMS
	DIRECTION OF TRAVEL
	HOV LANE
	FLASHING BEACON

ABBREVIATIONS

FAS	FLASHING ARROW SIGN
IAV	IMPACT ATTENUATOR VEHICLE
CMS	CHANGEABLE MESSAGE SIGN
(CA)	CALIFORNIA CODE
PCMS	PORTABLE CHANGEABLE MESSAGE SIGN
HOV	HIGH OCCUPANCY VEHICLE
CHP	CALIFORNIA HIGHWAY PATROL

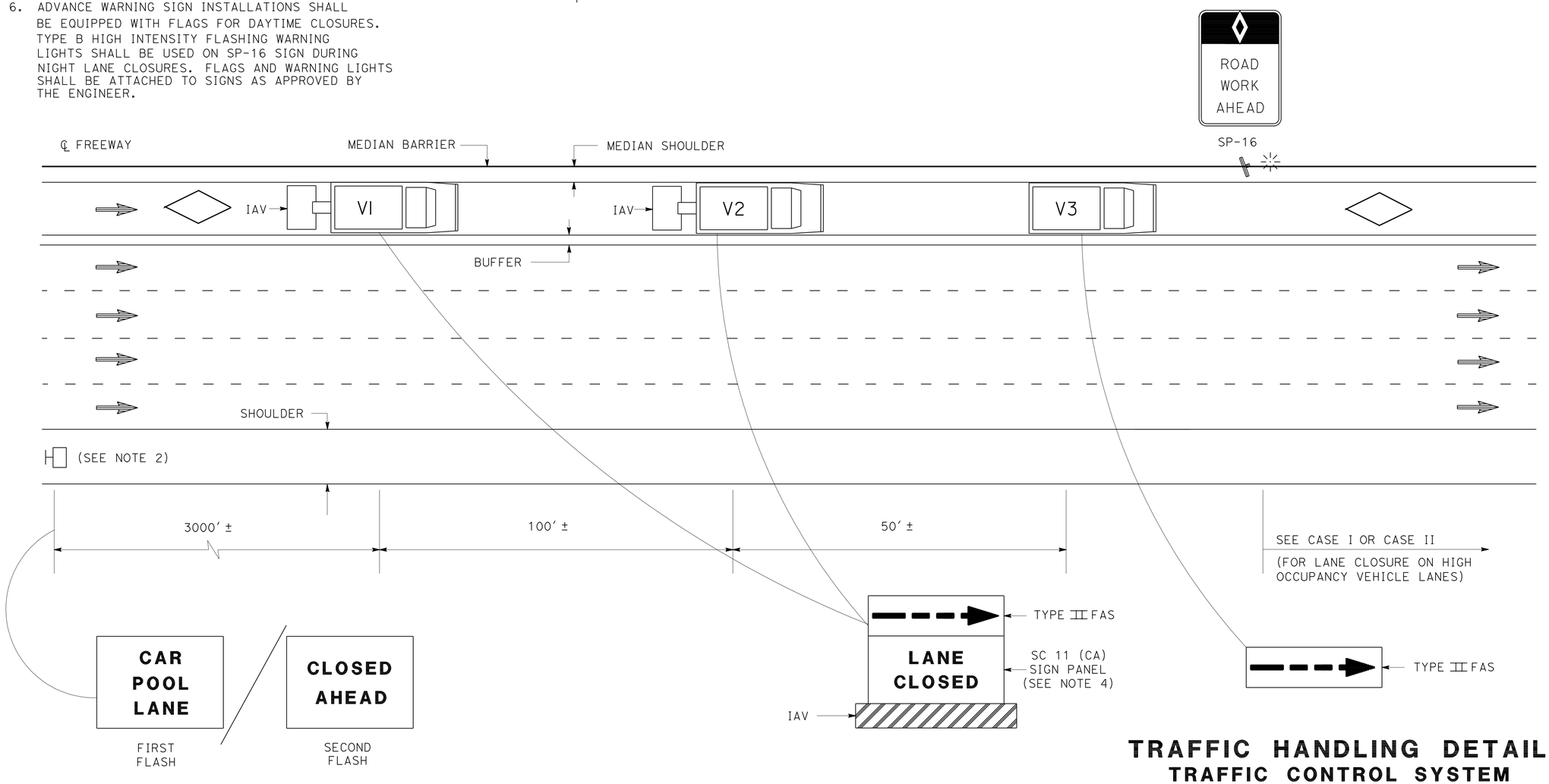

PCMS OR TRUCK MOUNTED CMS MESSAGE

(SEE NOTE 5)

TRAFFIC HANDLING DETAILS
TRAFFIC CONTROL SYSTEM FOR HIGH OCCUPANCY VEHICLE LANES WITH MEDIAN SHOULDERS LESS THAN 8 FEET

NO SCALE

THD-6

STATE OF CALIFORNIA - DEPARTMENT OF TRANSPORTATION
Caltrans® DTM

FUNCTIONAL SUPERVISOR: JOHN YANG
CALCULATED-DESIGNED BY: ALBERT K YU
CHECKED BY: JOCELYN C CHIANG
REVISED BY / DATE REVISED

LAST REVISION 11-19-12 | DATE PLOTTED => 14-NOV-2012 | TIME PLOTTED => 10:47

Dist	COUNTY	ROUTE	POST MILES TOTAL PROJECT	SHEET No.	TOTAL SHEETS
07	LA	10, 110	Var	18	22

REGISTERED CIVIL ENGINEER 7-2-12 DATE

11-19-12
PLANS APPROVAL DATE

REGISTERED PROFESSIONAL ENGINEER ALBERT K. YU No. C43220 Exp. 3-31-14 CIVIL STATE OF CALIFORNIA

THE STATE OF CALIFORNIA OR ITS OFFICERS OR AGENTS SHALL NOT BE RESPONSIBLE FOR THE ACCURACY OR COMPLETENESS OF SCANNED COPIES OF THIS PLAN SHEET.

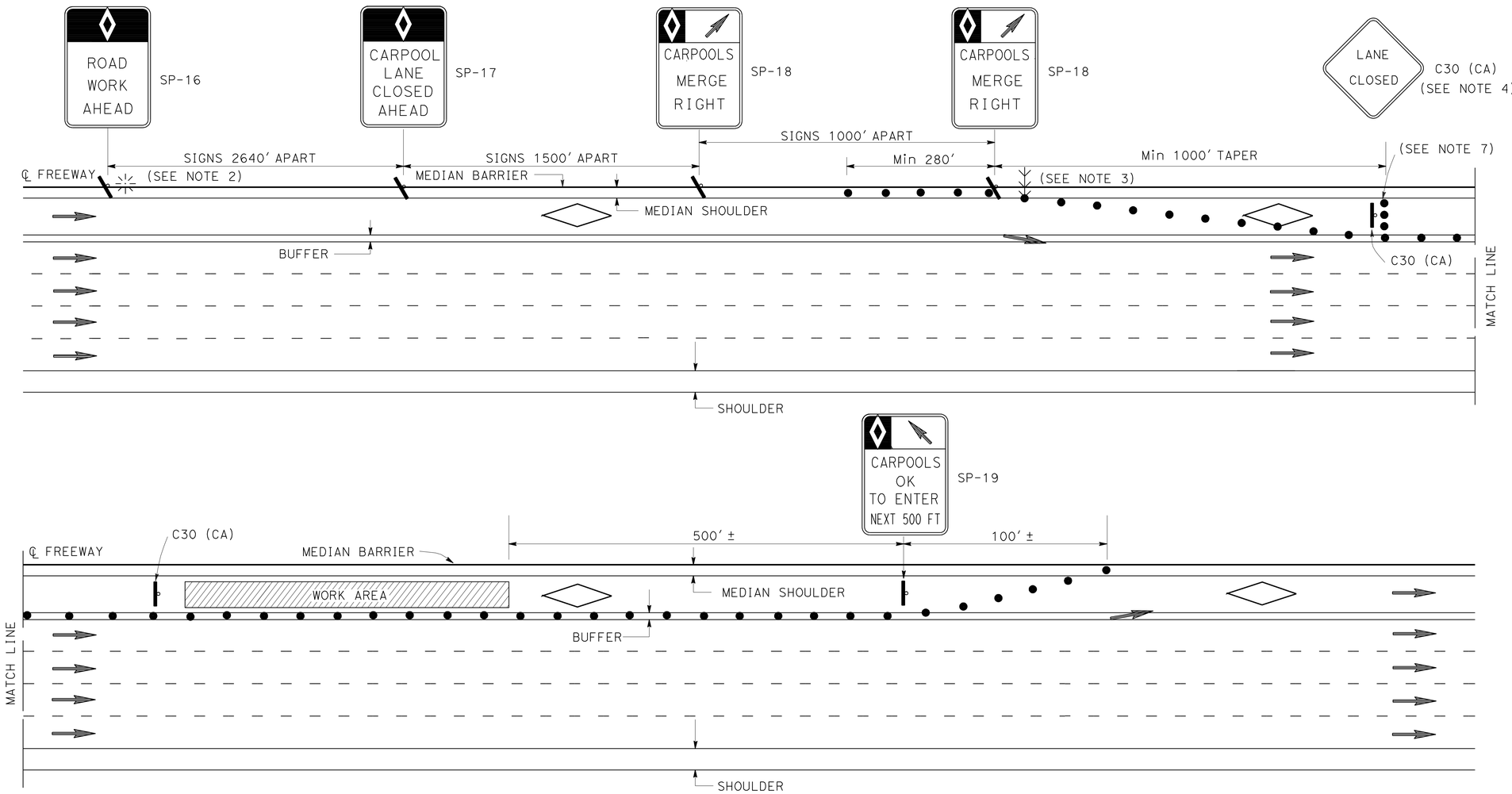

LEGEND

- CONE
- FLASHING BEACON
- HOV LANE
- FLASHING ARROW SIGN
- PORTABLE SIGN
- DIRECTION OF TRAVEL

ABBREVIATIONS

(CA)	CALIFORNIA CODE
HOV	HIGH OCCUPANCY VEHICLE

SIGN PANEL

	SIZE (MIN)
SP-16	36" X 54"
SP-17	36" X 54"
SP-18	36" X 48"
SP-19	36" X 60"
C30 (CA)	30" X 30"
G20-2	48" X 24"

NOTES: (FOR CASE I AND CASE II)

1. AT LEAST ONE PERSON SHALL BE ASSIGNED TO FULL TIME MAINTENANCE OF TRAFFIC CONTROL DEVICES ON NIGHT LANE CLOSURES OR DAY-TIME CLOSURES EXCEEDING 1 MILE LENGTH, INCLUDING TAPERS.
2. ADVANCE WARNING SIGN INSTALLATIONS SHALL BE EQUIPPED WITH FLAGS FOR DAYTIME CLOSURES. TYPE B HIGH INTENSITY FLASHING WARNING LIGHTS SHALL BE USED ON SP-16 SIGN DURING NIGHT LANE CLOSURES. FLAGS AND WARNING LIGHTS SHALL BE ATTACHED TO SIGNS AS APPROVED BY THE ENGINEER.
3. THE FLASHING ARROW SIGN SHALL BE TYPE I.
4. PLACE C30 (CA) SIGNS EVERY 2000' THROUGHOUT THE LENGTH OF LANE CLOSURE.
5. A MINIMUM 1500' OF SIGHT DISTANCE SHALL BE PROVIDED WHERE POSSIBLE FOR VEHICLES APPROACHING THE FLASHING ARROW SIGN. LANE CLOSURES SHALL NOT BE PLACED ON CREST VERTICAL CURVES OR ON HORIZONTAL CURVES.
6. PORTABLE DELINEATORS PLACED AT ONE-HALF THE SPACING INDICATED FOR TRAFFIC CONES MAY BE USED INSTEAD OF CONES FOR DAYTIME CLOSURES.
7. A MINIMUM OF 3 CONES SHALL BE PLACED TRANSVERSELY ACROSS CLOSED LANES WHERE TAPERS END AND EVERY 2000'. TWO TYPE II BARRICADES MAY BE USED INSTEAD OF 3 CONES. THE ALIGNMENT OF CONES OR BARRICADES MAY BE SHIFTED FROM THE TRANSVERSE ALIGNMENT TO PROVIDE ACCESS TO WORK.
8. IF AN INGRESS/EGRESS AREA IS WITHIN 5250' UPSTREAM OR DOWNSTREAM OF THE WORK AREA, LANE CLOSURES SHALL BE EXTENDED TO THAT AREA AS SHOWN IN CASE II.
9. SIGNS SP-16, 17, 18, AND 19 MAY BE OVERLAID ON EXISTING CARPOOL SIGNS IN MEDIANS AS APPROVED BY THE ENGINEER.
10. SIGNS SP-16, 17, 18, AND C30 (CA) SHALL BE BLACK ON ORANGE BACKGROUND. SIGN SP-19 SHALL BE BLACK ON WHITE BACKGROUND. DIAMONDS ON SIGNS SHALL BE WHITE.
11. FOR CLOSURE OF LANE(S) ADJACENT TO HOV LANES, SEE CASE II.
12. THE MAXIMUM SPACING BETWEEN CONES SHALL BE APPROXIMATELY 50' IN TAPERS AND 100' ON TANGENTS.

TRAFFIC HANDLING DETAILS
TRAFFIC CONTROL SYSTEM FOR HIGH OCCUPANCY VEHICLE LANES AT NON-INGRESS/EGRESS AREAS
CASE I

NO SCALE

THD-7

REVISED BY | DATE REVISED
ALBERT K YU | JOCELYN C CHIANG
CALCULATED-DESIGNED BY | CHECKED BY
FUNCTIONAL SUPERVISOR: JOHN YANG
STATE OF CALIFORNIA - DEPARTMENT OF TRANSPORTATION
Caltrans DTM

LAST REVISION 11-19-12 | DATE PLOTTED => 14-NOV-2012 | TIME PLOTTED => 10:48

Dist	COUNTY	ROUTE	POST MILES TOTAL PROJECT	SHEET No.	TOTAL SHEETS
07	LA	10, 110	Var	19	22

REGISTERED CIVIL ENGINEER 7-2-12 DATE

11-19-12
PLANS APPROVAL DATE

REGISTERED PROFESSIONAL ENGINEER ALBERT K. YU No. C43220 Exp. 3-31-14 CIVIL STATE OF CALIFORNIA

THE STATE OF CALIFORNIA OR ITS OFFICERS OR AGENTS SHALL NOT BE RESPONSIBLE FOR THE ACCURACY OR COMPLETENESS OF SCANNED COPIES OF THIS PLAN SHEET.

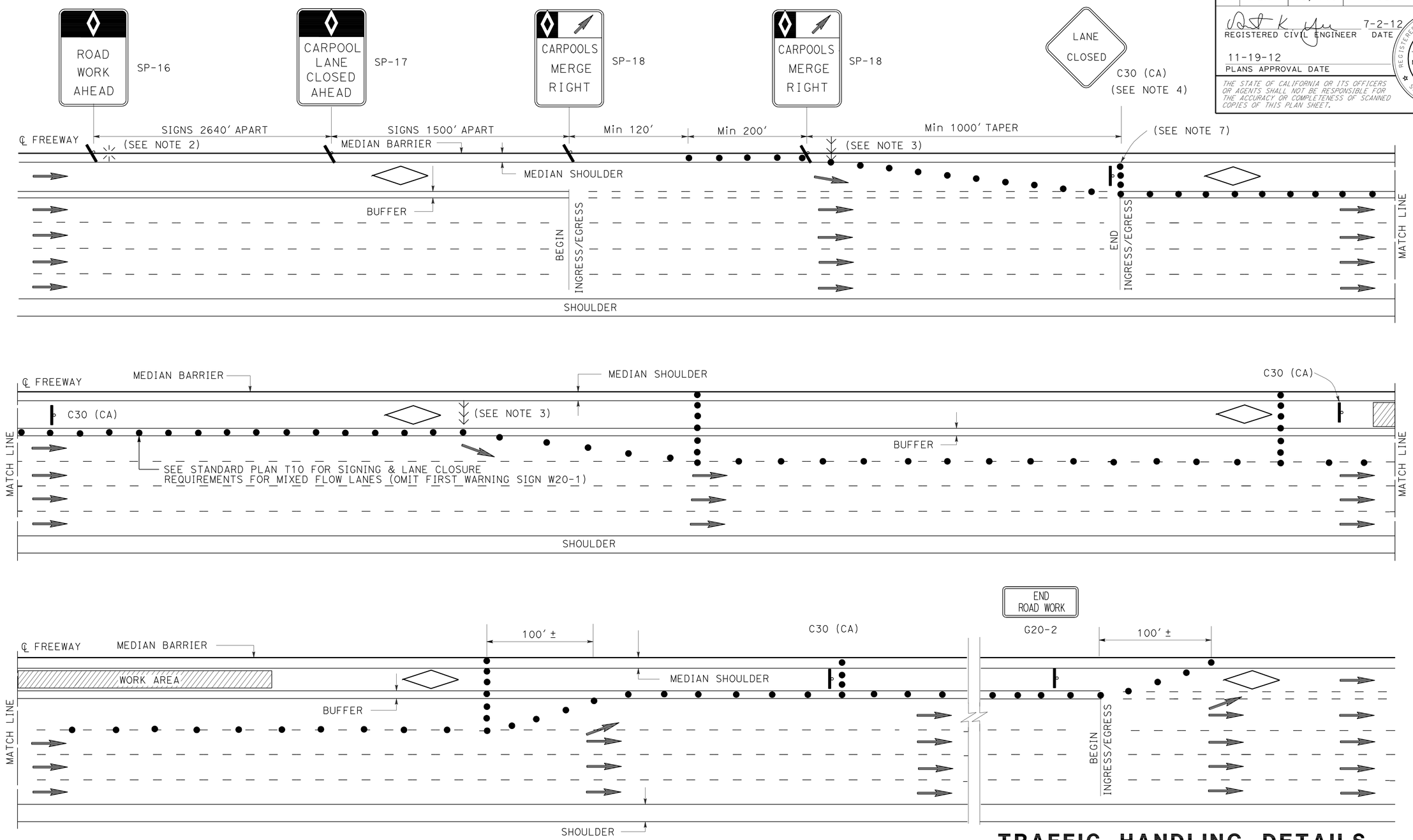

NOTES:

1. SEE CASE I FOR NOTES, LEGEND, SIGN PANEL, AND ABBREVIATIONS FOR THIS SHEET.
2. CLOSURES OF ONE MIXED FLOW TRAFFIC LANE ADJACENT TO HOV LANE SHOWN ON THIS SHEET. MULTIPLE MIXED FLOW LANE CLOSURES ARE SIMILAR.

TRAFFIC HANDLING DETAILS
TRAFFIC CONTROL SYSTEM FOR HIGH OCCUPANCY VEHICLE LANES AND ADJACENT FREEWAY LANES BETWEEN INGRESS/EGRESS AREAS
CASE II
NO SCALE

THD-8

REVISED BY | DATE REVISED
ALBERT K YU | JOCELYN C CHIANG
CALCULATED-DESIGNED BY | CHECKED BY
FUNCTIONAL SUPERVISOR
JOHN YANG

STATE OF CALIFORNIA - DEPARTMENT OF TRANSPORTATION
DTM
Caltrans

LAST REVISION 11-19-12 | DATE PLOTTED => 14-NOV-2012 | TIME PLOTTED => 10:48

Dist	COUNTY	ROUTE	POST MILES TOTAL PROJECT	SHEET No.	TOTAL SHEETS
07	LA	10, 110	Var	20	22

REGISTERED CIVIL ENGINEER 10-19-12 DATE

11-19-12
PLANS APPROVAL DATE

REGISTERED PROFESSIONAL ENGINEER BIPIN PATEL No. C60082 Exp 6-30-14 CIVIL STATE OF CALIFORNIA

THE STATE OF CALIFORNIA OR ITS OFFICERS OR AGENTS SHALL NOT BE RESPONSIBLE FOR THE ACCURACY OR COMPLETENESS OF SCANNED COPIES OF THIS PLAN SHEET.

LEGEND:

- DIRECTION OF TRAVEL
- CHANNELIZER (SURFACE MOUNTED)
- TEMPORARY CRASH CUSHION MODULE (ARRAY TS14)
- CONSTRUCTION AREA SIGN
- WORK AREA
- TEMPORARY RAILING (TYPE K)

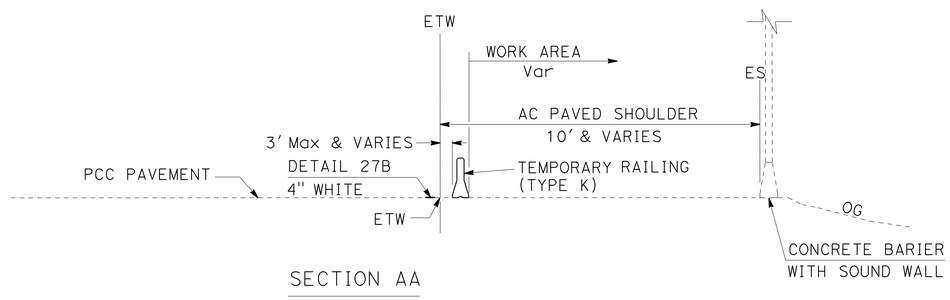

SECTION AA

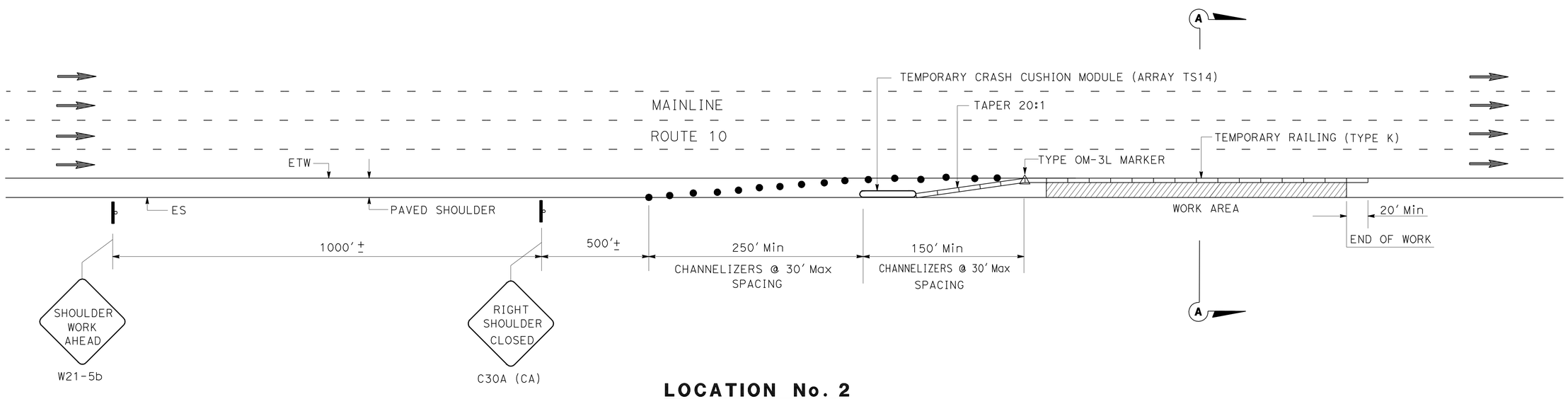

LOCATION No. 2
ROUTE 10 PM R9.9

TRAFFIC HANDLING DETAILS
TYPICAL SHOULDER CLOSURES
WITH TEMPORARY RAILING (TYPE K)
THD-9

REVISED BY	DATE REVISED

CALCULATED-DESIGNED BY	CHECKED BY
BIPIN PATEL	LARRY WIERING

FUNCTIONAL SUPERVISOR: LARRY WIERING

STATE OF CALIFORNIA - DEPARTMENT OF TRANSPORTATION
Caltrans MAINTENANCE ENGINEERING

LAST REVISION 11-19-12 | DATE PLOTTED => 14-NOV-2012 | TIME PLOTTED => 10:48

Dist	COUNTY	ROUTE	POST MILES TOTAL PROJECT	SHEET No.	TOTAL SHEETS
07	LA	10, 110	Var	21	22

REGISTERED CIVIL ENGINEER 10-19-12 DATE

11-19-12
PLANS APPROVAL DATE

REGISTERED PROFESSIONAL ENGINEER BIPIN PATEL No. C60082 Exp 6-30-14 CIVIL STATE OF CALIFORNIA

THE STATE OF CALIFORNIA OR ITS OFFICERS OR AGENTS SHALL NOT BE RESPONSIBLE FOR THE ACCURACY OR COMPLETENESS OF SCANNED COPIES OF THIS PLAN SHEET.

ROADWAY AND TRAFFIC HANDLING QUANTITIES

Loc No.	PM	ROUTE	LOCATION	CHANNERLIZER (SURFACE MOUNTED)	TEMPORARY RAILING (TYPE K)	TEMPORARY CRASH CUSHION MODULE (ARRAY TS14)	STRUCTURE BACKFILL (CULVERT)	HOT MIX ASPHALT (TYPE A)
				EA	LF	EA	CY	TON
2	R9.9	10	BETWEEN WB ON RAMP FROM LA BREA AVENUE AND HAUSER BOULEVARD	16	240	14	12	4
			TOTAL	16	240	14	12	4

SUMMARY OF QUANTITIES

Q-1

STATE OF CALIFORNIA - DEPARTMENT OF TRANSPORTATION
Caltrans MAINTENANCE ENGINEERING

FUNCTIONAL SUPERVISOR: LARRY WIERING
CALCULATED-DESIGNED BY: BIPIN PATEL
CHECKED BY: LARRY WIERING
REVISED BY
DATE REVISED

LAST REVISION 11-19-12 | DATE PLOTTED => 14-NOV-2012 | TIME PLOTTED => 10:48

DIST	COUNTY	ROUTE	POST MILES TOTAL PROJECT	SHEET NO.	TOTAL SHEETS
07	LA	10, 110	Var	22	22

Raymond Don Tsztoo
REGISTERED CIVIL ENGINEER

July 20, 2012
PLANS APPROVAL DATE

REGISTERED PROFESSIONAL ENGINEER Raymond Don Tsztoo No. C37332 Exp. 6-30-14 CIVIL STATE OF CALIFORNIA

The State of California or its officers or agents shall not be responsible for the accuracy or completeness of electronic copies of this plan sheet.

To accompany plans dated 11-19-12

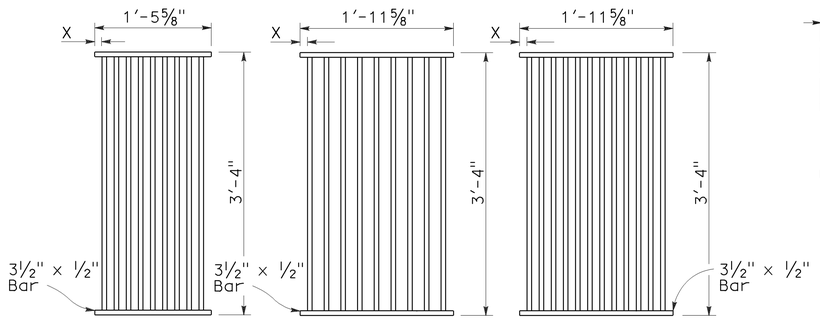

TYPE 18-9

1⅜" Clear spacing. Use within the roadbed on highways where bicycles and pedestrians are excluded.

TYPE 24-9

2" Clear spacing. Use in locations off the roadbed on all types of highways.

TYPE 24-12

1⅜" Clear spacing. Use within the roadbed on highways where bicycles and pedestrians are excluded.

RECTANGULAR GRATE DETAILS

(See table below)

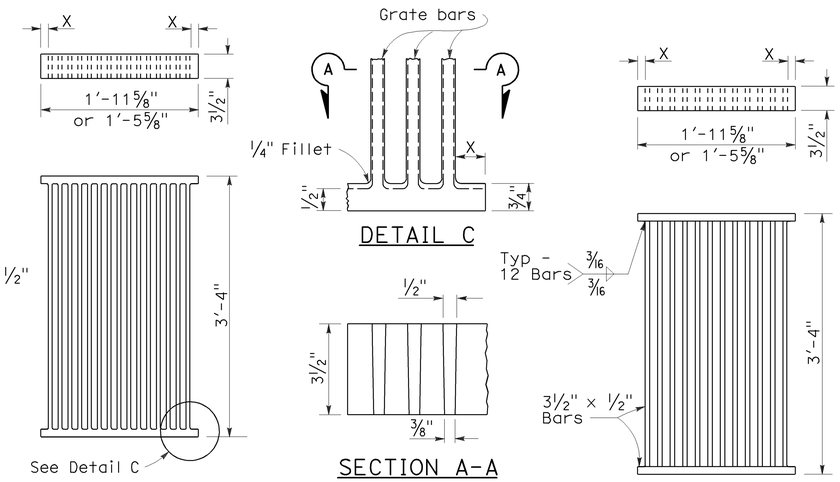

ALTERNATIVE CAST DUCTILE IRON GRATE OR CAST CARBON STEEL GRATE

ALTERNATIVE WELDED GRATE

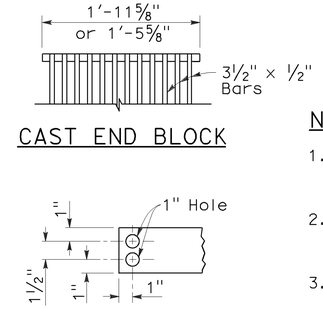

CAST END BLOCK

END OF BAR

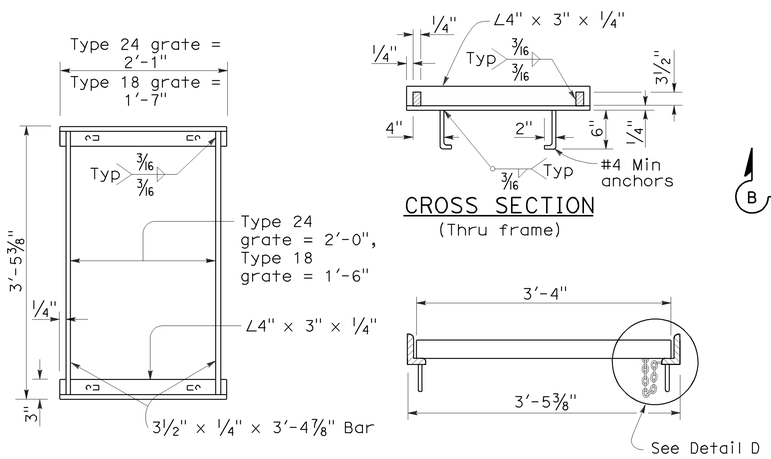

TYPICAL FRAME

CROSS SECTION
(Thru frame)

LONGITUDINAL SECTION
(Thru frame and grate)

RECTANGULAR FRAME DETAILS

(For all rectangular grates)

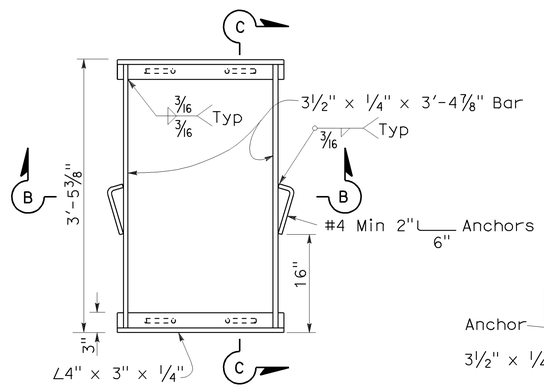

TYPICAL FRAME

ALTERNATIVE ANCHOR FOR RECTANGULAR FRAME

(For details not shown, See Rectangular Frame Details)

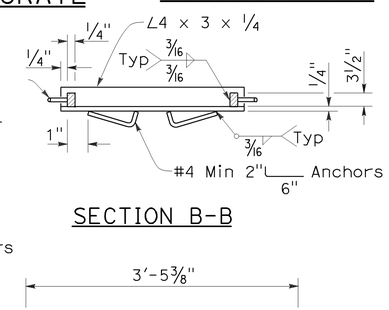

SECTION B-B

SECTION C-C

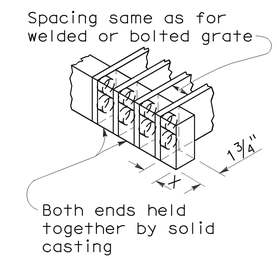

ALTERNATIVE CAST DUCTILE IRON OR CAST CARBON STEEL END BLOCK GRATE

NOTES:

1. Grate type numbers refer to approximate width of grate in inches and number of bars, respectively.
2. Contractor has the option of using cast ductile iron, cast carbon steel, welded, bolted, or cast end block grate.
3. See Special Provisions for requirements pertaining to galvanizing or asphalt dipping of grates and frames.
4. Rounded top of bars optional on all grates.
5. Pipe inlets with a grate shall be placed so that bars parallel direction of principle surface flow.
6. Complete joint penetration butt welds may be substituted for the fillet welds on all anchors.
7. Standard square, hexagon, round or equivalent headed anchors may be substituted for the right angle hooks on the anchors shown on this plan.
8. Grate and frame weights are based on welded grates (weights of face angles, steps, protection bars, etc. are not included).
9. Connect chain to grate and frame only at locations shown on the plans. When chain is required, do not use cast ductile iron grates.

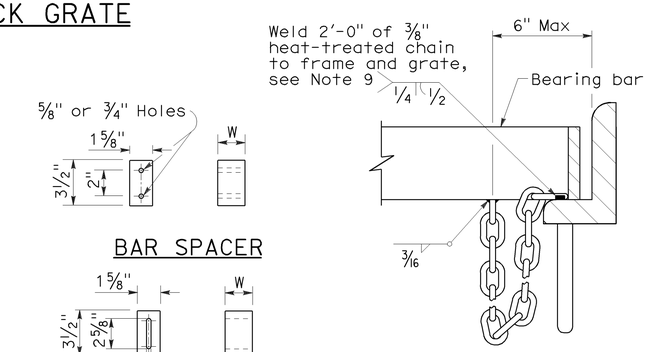

BAR SPACER

ALTERNATIVE SPACER
W = 1⅜" or 2"

DETAIL D
(Steel grates only)

GRATE BAR SPACING TABLE

TYPE	No. OF BARS	CLEAR BAR SPACING	X
18-9	9	1⅜"	1 1/16"
24-9	9	2"	1 9/16"
24-12	12	1⅜"	1¼"

INLET TYPE	COVER TYPE	WEIGHT LB
OS	PLATE	174
OL-7	PLATE	170
OL-10	PLATE	170
OL-14	PLATE	170
OL-21	PLATE	170
OCP	PLATE	112
OCPI	PLATE	112
OCPI	REDWOOD	42
OMP	PLATE	177
OMPI	PLATE	177

INLET TYPE	GRATE TYPE	No. OF GRATES	WEIGHT LB
GDO	24-12	2	634
GOL-7	24-12	1	326
GOL-10	24-12	1	326
GO,G1,G2,G3,G4 (TYPE 24)	24-9	1	263
	24-12	1	326
G4 (TYPE 18),G5,G6	18-9	1	249
GT1	18-9	2	498
GT2	18-9	2	498
GT3	24-12	2	652
GT4	24-12	2	652
TRASH RACK			22
GRATE CHAIN			3

BASIS FOR Misc IRON & STEEL FINAL PAY WEIGHTS FOR DRAINAGE INLETS

(See Note 8)

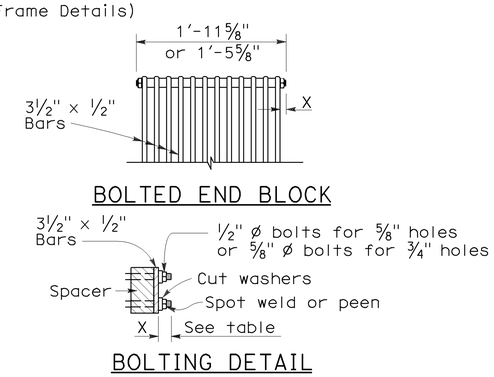

BOLTED END BLOCK

BOLTING DETAIL

ALTERNATIVE BOLTED GRATE

STATE OF CALIFORNIA
DEPARTMENT OF TRANSPORTATION

GRATE DETAILS

NO SCALE

RSP D77A DATED JULY 20, 2012 SUPERSEDES RSP D77A DATED JANUARY 18, 2008 AND STANDARD PLAN D77A DATED MAY 1, 2006 - PAGE 155 OF THE STANDARD PLANS BOOK DATED MAY 2006.

REVISED STANDARD PLAN RSP D77A

2006 REVISED STANDARD PLAN RSP D77A

6-13-12