Dist	COUNTY	ROUTE	POST MILES TOTAL PROJECT	SHEET No.	TOTAL SHEETS
07	Ven	33	6.3/11.1	1	22

INDEX OF PLANS

SHEET No.	DESCRIPTION
1	TITLE AND LOCATION MAP
2	TYPICAL CROSS SECTIONS
3-4	CONSTRUCTION DETAILS
5	CONSTRUCTION AREA SIGNS
6	SUMMARY OF QUANTITIES
7-12	ELECTRICAL PLANS
13-22	NEW AND REVISED STANDARD PLANS

THE STANDARD PLANS LIST APPLICABLE TO THIS CONTRACT IS INCLUDED IN THE NOTICE TO BIDDERS AND SPECIAL PROVISIONS BOOK.

STATE OF CALIFORNIA

DEPARTMENT OF TRANSPORTATION

PROJECT PLANS FOR CONSTRUCTION ON

STATE HIGHWAY

IN VENTURA COUNTY
IN VENTURA
FROM 0.1 MILE SOUTH OF PARK VIEW DRIVE
TO 0.1 MILE SOUTH OF ROUTE 150

TO BE SUPPLEMENTED BY STANDARD PLANS DATED MAY 2006

LOCATION MAP

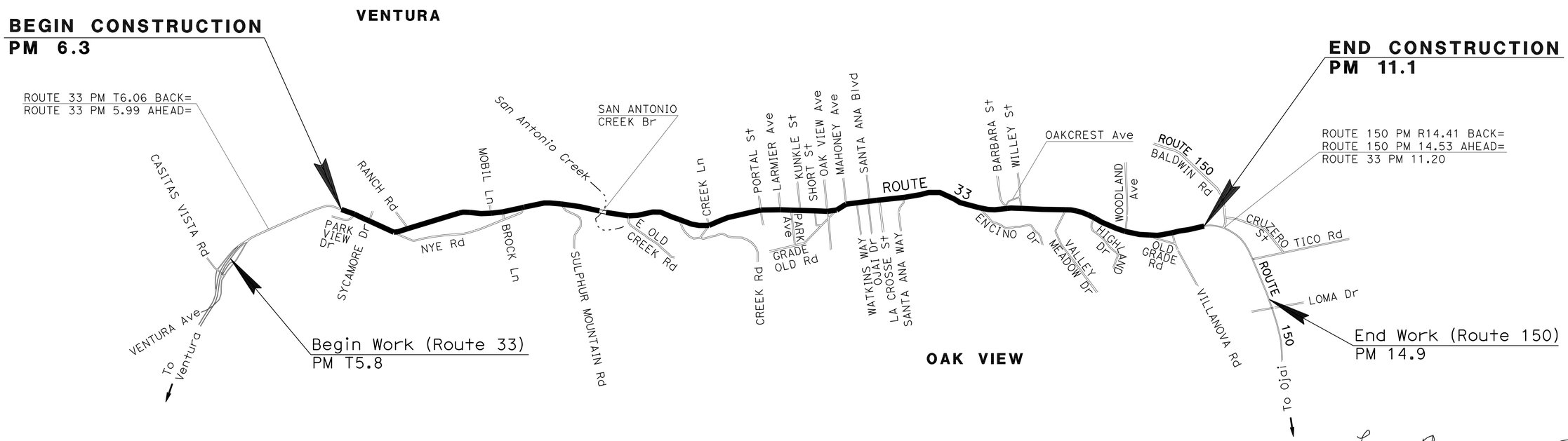

PROJECT MANAGER: GARY KEVORKIAN

DESIGN ENGINEER: PAUL CRISPI

Trung Phan 1-10-12
PROJECT ENGINEER REGISTERED CIVIL ENGINEER — DATE

REGISTERED PROFESSIONAL ENGINEER — TRUNG PHAN — No. 77878 — Exp. 6-30-13 — CIVIL — STATE OF CALIFORNIA

April 2, 2012
PLANS APPROVAL DATE

THE STATE OF CALIFORNIA OR ITS OFFICERS OR AGENTS SHALL NOT BE RESPONSIBLE FOR THE ACCURACY OR COMPLETENESS OF SCANNED COPIES OF THIS PLAN SHEET.

THE CONTRACTOR SHALL POSSESS THE CLASS (OR CLASSES) OF LICENSE AS SPECIFIED IN THE "NOTICE TO BIDDERS."

NO SCALE

CONTRACT No.	07-1W1204
PROJECT ID	0700021006

LAST REVISION 04-02-12 — DATE PLOTTED => 15-MAR-2012 — TIME PLOTTED => 13:57

Dist	COUNTY	ROUTE	POST MILES TOTAL PROJECT	SHEET No.	TOTAL SHEETS
07	Ven	33	6.3/11.1	2	22

Trung Phan 1-10-12
REGISTERED CIVIL ENGINEER DATE

4-2-12
PLANS APPROVAL DATE

REGISTERED PROFESSIONAL ENGINEER TRUNG PHAN No. 77878 Exp. 6-30-13 CIVIL STATE OF CALIFORNIA

THE STATE OF CALIFORNIA OR ITS OFFICERS OR AGENTS SHALL NOT BE RESPONSIBLE FOR THE ACCURACY OR COMPLETENESS OF SCANNED COPIES OF THIS PLAN SHEET.

NOTES:

1. DIMENSIONS OF THE PAVEMENT STRUCTURES (STRUCTURAL SECTIONS) ARE SUBJECT TO TOLERANCES SPECIFIED IN THE STANDARD SPECIFICATIONS.
2. SUPERELEVATION AS SHOWN OR AS DIRECTED BY THE ENGINEER.
3. OMIT COLD PLANE AND RUBBERIZED HOT MIX ASPHALT (GAP GRADED) OR HOT MIX ASPHALT (TYPE A) PLACEMENT ON PCC PAVEMENT, BRIDGE DECKS, AND CURB AND GUTTER.
4. EXISTING UTILITY FACILITIES HAVE NOT BEEN PLOTTED ON THESE PLANS.

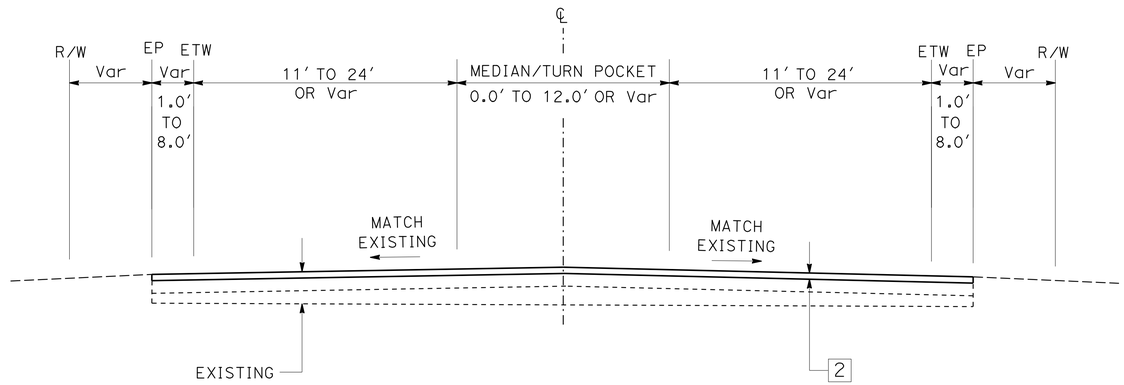

SOUTHBOUND NORTHBOUND

ROUTE 33
PM 10.49/11.10

TYPICAL PAVEMENT STRUCTURE SECTIONS

1 — 0.10′ COLD PLANE ASPHALT CONCRETE PAVEMENT
0.10′ RUBBERIZED HOT MIX ASPHALT (GAP GRADED)

2 — 0.10′ COLD PLANE ASPHALT CONCRETE PAVEMENT
0.10′ HOT MIX ASPHALT (TYPE A)

EXISTING STRUCTURAL SECTION

0.33′ TO 0.45′ ASPHALT CONCRETE PAVEMENT
0.50′ TO 0.70′ AGGREGATE BASE

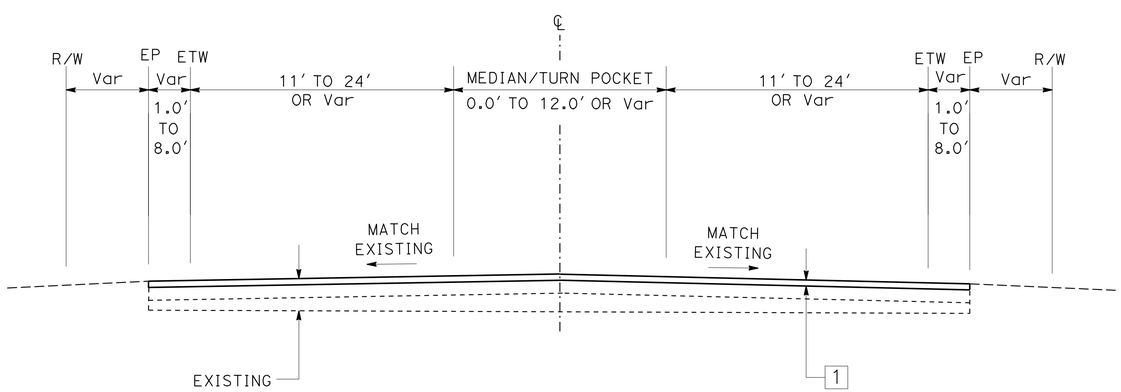

SOUTHBOUND NORTHBOUND

ROUTE 33
PM 7.68/9.10

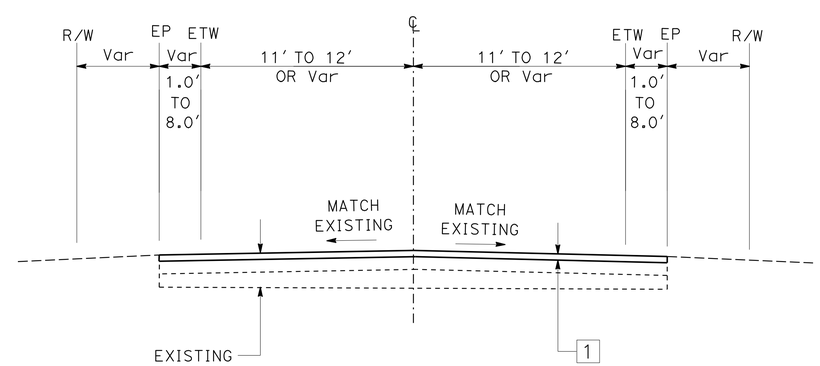

SOUTHBOUND NORTHBOUND

ROUTE 33
PM 9.10/10.49
PM 6.30/7.68

TYPICAL CROSS SECTIONS

NO SCALE

X-1

STATE OF CALIFORNIA - DEPARTMENT OF TRANSPORTATION
Caltrans MAINTENANCE ENGINEERING

FUNCTIONAL SUPERVISOR: PAUL CRISPI
CALCULATED-DESIGNED BY: TRUNG PHAN
CHECKED BY: PAUL CRISPI
REVISED BY
DATE REVISED

LAST REVISION 04-02-12
DATE PLOTTED => 15-MAR-2012
TIME PLOTTED => 13:57

Dist	COUNTY	ROUTE	POST MILES TOTAL PROJECT	SHEET No.	TOTAL SHEETS
07	Ven	33	6.3/11.1	3	22

Trung Phan 1-10-12
REGISTERED CIVIL ENGINEER DATE

4-2-12
PLANS APPROVAL DATE

REGISTERED PROFESSIONAL ENGINEER TRUNG PHAN No. 77878 Exp. 6-30-13 CIVIL STATE OF CALIFORNIA

THE STATE OF CALIFORNIA OR ITS OFFICERS OR AGENTS SHALL NOT BE RESPONSIBLE FOR THE ACCURACY OR COMPLETENESS OF SCANNED COPIES OF THIS PLAN SHEET.

NOTES:

1. FOR ACCURATE RIGHT OF WAY DATA, CONTACT RIGHT OF WAY ENGINEERING AT THE DISTRICT OFFICE.
2. OMIT COLD PLANE AND RUBBERIZED HOT MIX ASPHALT (GAP GRADED) OR HOT MIX ASPHALT (TYPE A) ON BRIDGE DECKS AND PCC PAVEMENT.
3. EXISTING DRAINAGE INLETS HAVE NOT BEEN PLOTTED ON THESE PLANS.
4. EXISTING UTILITY FACILITIES HAVE NOT BEEN PLOTTED ON THESE PLANS.

LEGEND:

COLD PLANE ASPHALT CONCRETE PAVEMENT/ RUBBERIZED HOT MIX ASPHALT (GAP GRADED) PLACEMENT

COLD PLANE ASPHALT CONCRETE PAVEMENT/ HOT MIX ASPHALT (TYPE A) PLACEMENT

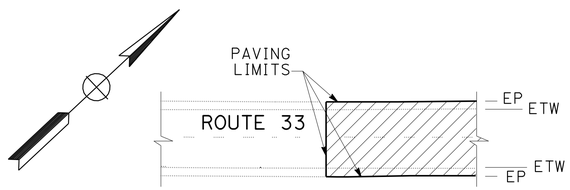

BEGIN PAVING LIMIT
PM 6.30

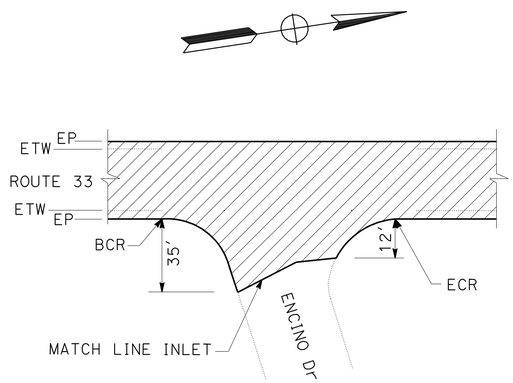

PAVING DETAIL AT ENCINO Dr
PM 9.89

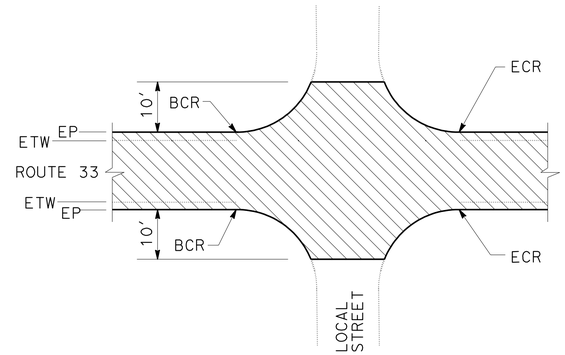

TYPICAL PAVING LIMITS
AT INTERSECTIONS
AFTER PM 10.49
(EXCEPT AT PM 10.65 AND PM 10.92)

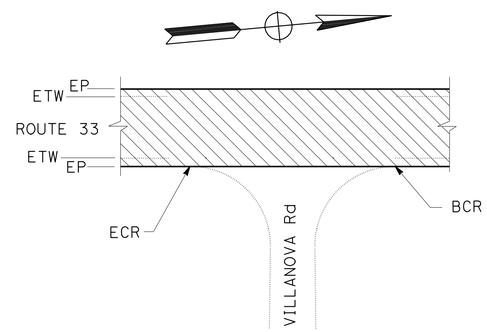

PAVING DETAIL AT VILLANOVA Rd
PM 10.92

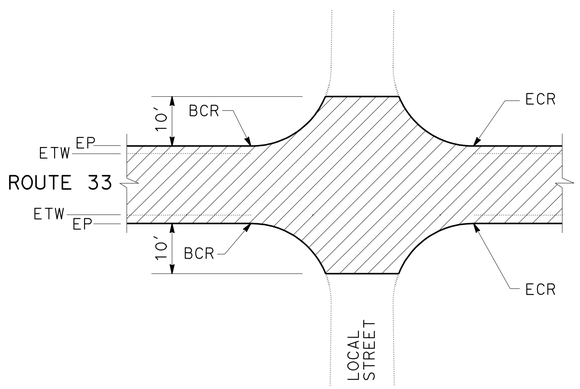

TYPICAL PAVING LIMITS
AT INTERSECTIONS
BEFORE PM 10.49
(EXCEPT AT PM 9.89 AND PM 10.00)

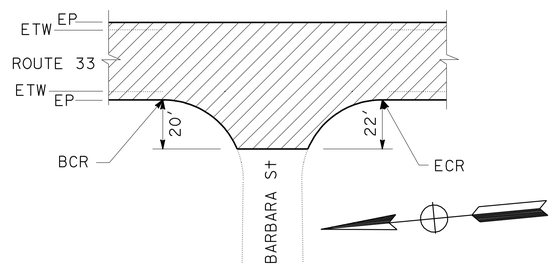

PAVING DETAIL AT BARBARA St
PM 10.00

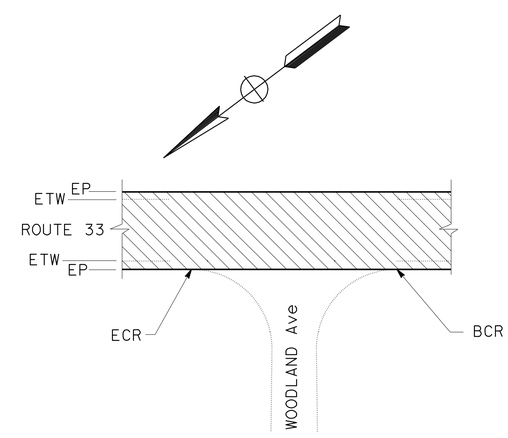

PAVING DETAIL AT WOODLAND Ave
PM 10.65

PAVING LIMIT AT BRIDGE DECK
PM 7.58

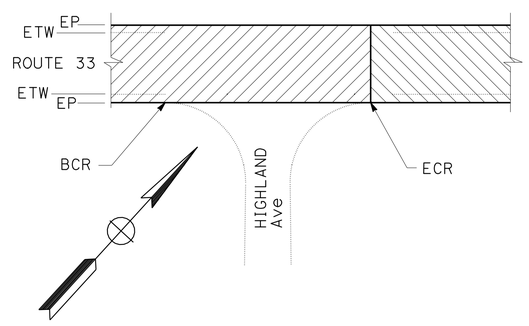

PAVING DETAIL AT HIGHLAND Ave
PM 10.49

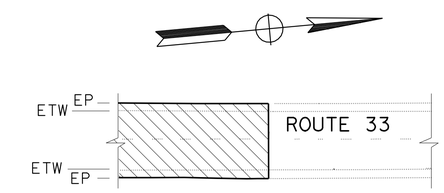

END PAVING LIMIT
PM 11.10

PAVING LIMITS

CONSTRUCTION DETAILS
NO SCALE

C-1

STATE OF CALIFORNIA - DEPARTMENT OF TRANSPORTATION
Caltrans MAINTENANCE ENGINEERING

FUNCTIONAL SUPERVISOR: PAUL CRISPI
CALCULATED-DESIGNED BY: TRUNG PHAN
CHECKED BY: PAUL CRISPI
REVISED BY
DATE REVISED

LAST REVISION 04-02-12
DATE PLOTTED => 15-MAR-2012
TIME PLOTTED => 13:57

Dist	COUNTY	ROUTE	POST MILES TOTAL PROJECT	SHEET No.	TOTAL SHEETS
07	Ven	33	6.3/11.1	4	22

Trung Phan 1-10-12
REGISTERED CIVIL ENGINEER DATE

4-2-12
PLANS APPROVAL DATE

REGISTERED PROFESSIONAL ENGINEER TRUNG PHAN No. 77878 Exp. 6-30-13 CIVIL STATE OF CALIFORNIA

THE STATE OF CALIFORNIA OR ITS OFFICERS OR AGENTS SHALL NOT BE RESPONSIBLE FOR THE ACCURACY OR COMPLETENESS OF SCANNED COPIES OF THIS PLAN SHEET.

NOTE:

LOCATIONS OF REPLACE ASPHALT CONCRETE SURFACING ARE APPROXIMATE. EXACT LOCATIONS WILL BE DETERMINED BY THE ENGINEER.

REPLACE ASPHALT CONCRETE SURFACING

LOCATION	DIMENSIONS W x L	VOLUME (CY)
SB PM 6.40	6′ x 180′	18.0
SB PM 6.40	6′ x170′	17.0
SB PM 6.60	10′ x 150′	25.0
SB PM 6.80	4′ x 30′	2.0
SB PM 6.90	6′ x 160′	16.0
SB PM 7.10	6′ x 300′	30.0
SB PM 7.20	12′ x 120′	24.0
SB PM 7.20	8′ x 150′	20.0
SB PM 7.20	12′ x 90′	18.0
SB PM 7.70	6′ x 360′	36.0
SB PM 7.70	6′ x 170′	17.0
SB PM 7.90	4′ x 115′	7.7
SB PM 8.50 LANE 2	8′ x 90′	8.8
SB PM 8.60/8.70	5′ x 100′	6.1
SB PM 8.70 LANE 1	12′ x 85′	12.5
SB PM 8.70 LANE 2	12′ x 65′	9.5
SB PM 8.70/8.75	6′ x 170′	12.5
SB PM 8.80/8.90 LANE 1	12′ x 161′	23.6
SB PM 9.00 LANE 2	12′ x 150′	22.0
NB PM 6.80	4′ x 80′	5.3
NB PM 6.85	4′ x 260′	17.3
NB PM 6.90	4′ x 90′	6.0
NB PM 7.20	10′ x 100′	16.7
NB PM 7.62	4′ x 8′	0.5
NB PM 7.60/7.80	10′ x 515′	85.7
NB PM 8.20/8.40	4′ x 520′	25.4
NB PM 8.56/8.92 LANE 2	12′ x 1900′	278.4
NB PM 8.80/8.90 LANE 1	12′ x 528′	77.4
NB PM 8.90/9.00 LANE 1	12′ x 528′	77.4
NB PM 8.90/9.00 LANE 2	12′ x 528′	77.4
	TOTAL	993.2

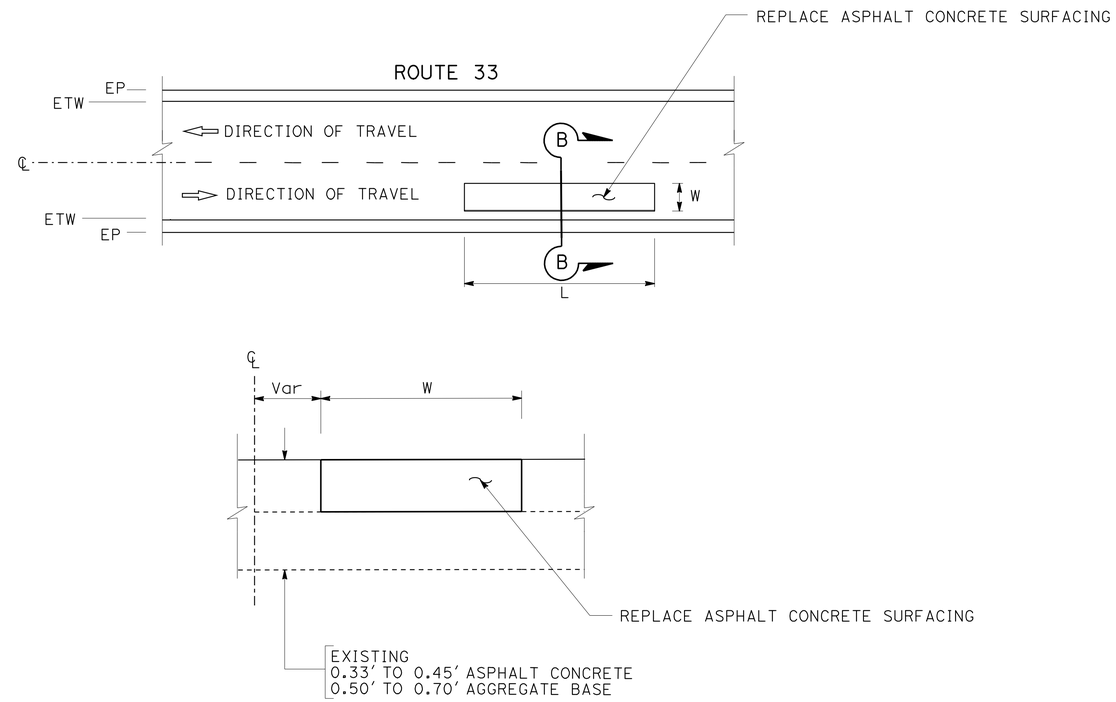

SECTION B-B

TYPICAL REPLACE ASPHALT CONCRETE SURFACING DETAIL

CONSTRUCTION DETAILS

NO SCALE

C-2

STATE OF CALIFORNIA - DEPARTMENT OF TRANSPORTATION
Caltrans MAINTENANCE ENGINEERING

FUNCTIONAL SUPERVISOR: PAUL CRISPI
CALCULATED-DESIGNED BY: TRUNG PHAN
CHECKED BY: PAUL CRISPI
REVISED BY
DATE REVISED

LAST REVISION 04-02-12 | DATE PLOTTED => 15-MAR-2012 | TIME PLOTTED => 13:57

Dist	COUNTY	ROUTE	POST MILES TOTAL PROJECT	SHEET No.	TOTAL SHEETS
07	Ven	33	6.3/11.1	5	22

Trung Phan 1-10-12
REGISTERED CIVIL ENGINEER DATE

4-2-12
PLANS APPROVAL DATE

REGISTERED PROFESSIONAL ENGINEER TRUNG PHAN No. 77878 Exp. 6-30-13 CIVIL STATE OF CALIFORNIA

THE STATE OF CALIFORNIA OR ITS OFFICERS OR AGENTS SHALL NOT BE RESPONSIBLE FOR THE ACCURACY OR COMPLETENESS OF SCANNED COPIES OF THIS PLAN SHEET.

NOTES:

1. LOCATIONS OF CONSTRUCTION AREA SIGNS SHOWN ARE APPROXIMATE. EXACT LOCATIONS WILL BE DETERMINED BY THE ENGINEER.
2. FOR ACCURATE RIGHT OF WAY DATA, CONTACT RIGHT OF WAY ENGINEERING AT THE DISTRICT OFFICE.

STATIONARY MOUNTED CONSTRUCTION AREA SIGNS

SIGN NUMBER	SIGN CODE	SIGN MESSAGE	PANEL SIZE (in)	NUMBER OF POSTS AND SIZE	NUMBER OF SIGNS
A	W20-1	ROAD WORK AHEAD	36 x 36	1-4" x 4"	37
B	G20-2	END ROAD WORK	36 x 18	1-4" x 4"	3
C	C40(CA)	TRAFFIC FINES DOUBLED IN CONSTRUCTION ZONES	108 x 42	2-4" x 6"	3
D	W20-1	ROAD WORK AHEAD	48 x 48	1-4" x 6"	4
				TOTAL	43

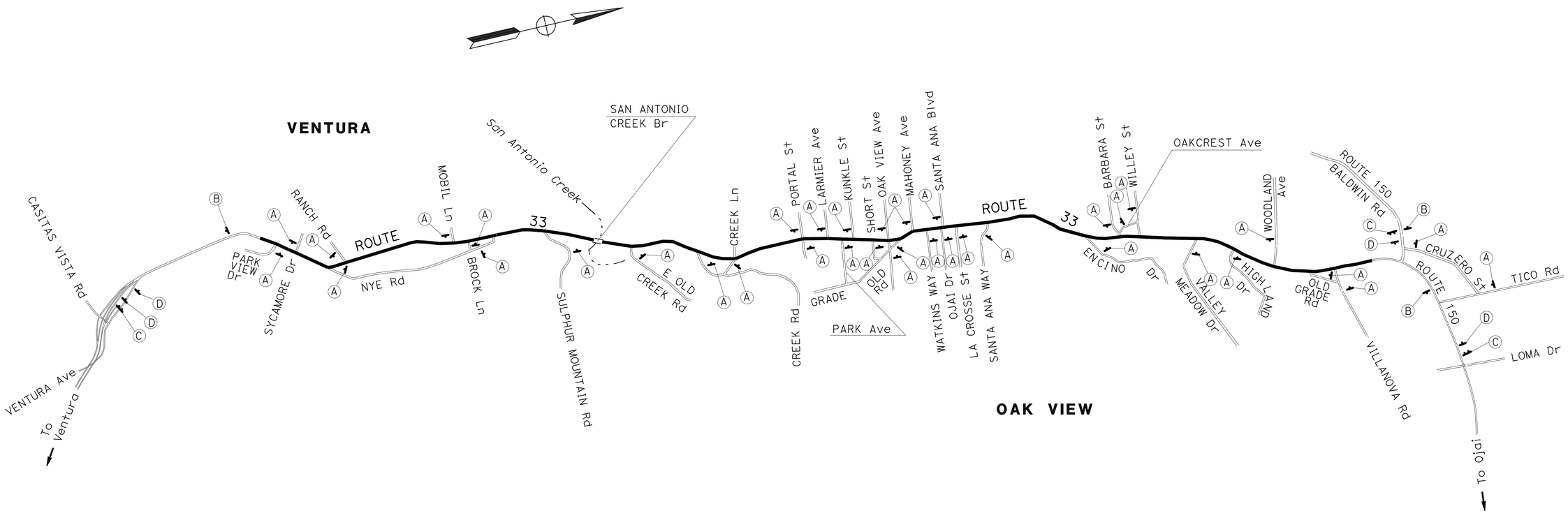

CONSTRUCTION AREA SIGNS

NO SCALE

CS-1

APPROVED FOR CONSTRUCTION AREA SIGN WORK ONLY

STATE OF CALIFORNIA - DEPARTMENT OF TRANSPORTATION
Caltrans MAINTENANCE ENGINEERING

FUNCTIONAL SUPERVISOR: PAUL CRISPI
CALCULATED-DESIGNED BY: TRUNG PHAN
CHECKED BY: PAUL CRISPI
REVISED BY
DATE REVISED

LAST REVISION 04-02-12
DATE PLOTTED => 15-MAR-2012
TIME PLOTTED => 13:57

Dist	COUNTY	ROUTE	POST MILES TOTAL PROJECT	SHEET No.	TOTAL SHEETS
07	Ven	33	6.3/11.1	6	22

REGISTERED CIVIL ENGINEER Trung Phan DATE 1-10-12

4-2-12
PLANS APPROVAL DATE

REGISTERED PROFESSIONAL ENGINEER TRUNG PHAN No. 77878 Exp. 6-30-13 CIVIL STATE OF CALIFORNIA

THE STATE OF CALIFORNIA OR ITS OFFICERS OR AGENTS SHALL NOT BE RESPONSIBLE FOR THE ACCURACY OR COMPLETENESS OF SCANNED COPIES OF THIS PLAN SHEET.

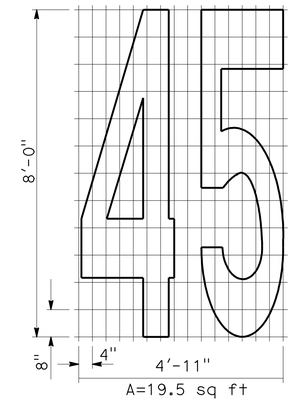

A=19.5 sq ft

NUMERALS

NO SCALE

LOCATION	PM	COLD PLANE ASPHALT CONCRETE PAVEMENT (SQYD)	RUBBERIZED HOT MIX ASPHALT (GAP GRADED) (TON)	HOT MIX ASPHALT (TYPE A) (TON)	TACK COAT (TON)	THERMOPLASTIC TRAFFIC STRIPE (LF) DETAIL 27 4" WHITE	29 4" YELLOW	32 4" YELLOW	22 4" YELLOW	9 4" WHITE (BROKEN 17 - 7)	38 8" WHITE	38A 8" WHITE	PAVEMENT MARKER (EA) TYPE G (RETROREFLECTIVE)	TYPE D (RETROREFLECTIVE)	THERMOPLASTIC PAVEMENT MARKING (SQFT) NUMERALS, WORDS, AND CROSSWALKS DIAGONAL STRIPE/ CROSSWALK/ LIMIT LINE	35	45	NO	LEFT	SIGNAL	AHEAD	KEEP	CLEAR	PED	XING	STOP	ARROWS TYPE IV (L/R)	TYPE VI
0.06 MILE SOUTH OF PARK VIEW Dr	6.30/6.64	7,831	529		2.3	3,590			3,590		110	50	6	196	45	16.5					31			18	21		30	
RANCH Rd TO NYE Rd	6.64/7.19	13,289	897		3.9	5,808			5,808		91		5	244	82	16.5					31			18	21		30	
NYE Rd TO CREEK Rd	7.19/8.00	19,833	1,339		5.8	8,120	2,720		6,578	615	645		27	340	229		19.5									44	90	
CREEK Rd TO LAMIER Ave	8.00/8.51	14,889	1,005		4.3	5,220	2,748	452	3,442	2,750	420		77	219	271		19.5	14	19	64	62						135	126
LAMIER Ave TO KUNKLE St	8.51/8.61	4,689	317		1.4			248	846	1,080	293		37	46	182							24	27				90	
KUNKLE St TO SHORT St	8.61/8.71	4,111	278		1.2			1,152	444	1,020	162		30	54	27							24	27				30	
SHORT St TO OAK VIEW Ave	8.71/8.79	2,867	194		0.8				650	650	255		27	29	250												60	
OAK VIEW Ave TO MAHONEY Ave	8.79/8.92	4,156	281		1.2				510	1,020	379		39	23	171												120	
MAHONEY Ave TO OJAI Dr	8.92/9.04	4,033	272		1.2		412	1,140	330	1,120	150		31	60	105												30	
OJAI Dr TO ENCINO Dr	9.04/9.89	20,689	1,397		6.0	8,500			8,836	180	90		10	370	348												30	126
ENCINO Dr TO BARBARA St	9.89/10.00	3,244	219		0.9	840			1,130		234	135	11	49	62											44	60	
BARBARA St TO VALLEY MEADOW Dr	10.00/10.34	7,844	530		2.3	3,145			3,340		115	140	6	141	48												30	
VALLEY MEADOW Dr TO HIGHLAND Dr	10.34/10.49	3,637	245		1.1	1,580			1,580		97		5	67													30	
HIGHLAND Dr TO WOODLAND Rd	10.49/10.65	4,494		303	1.3	1,830			1,830		197		9	78	28					32	31						60	
WOODLAND Rd TO VILLANOVA Rd	10.65/10.92	8,453		571	2.5	1,625		4,180	420		811		35	132	136					32	31					44	120	
VILLANOVA Rd TO 0.10 MILE SOUTH OF ROUTE 150	10.92/11.10	4,674		316	1.4	1,900		3,240	280		135		7	101	197												30	
	SUBTOTAL	128,733	7,503	1,190	37.6	42,158	5,880	10,412	39,614	8,435	4,184	325	362	2,149	2,181	33	39	14	19	128	186	48	54	36	42	132	975	252
	TOTAL	128,733	7,503	1,190	37.6	98,066				8,435	4,509		2,511		4,139													

SUMMARY OF QUANTITIES

Q-1

STATE OF CALIFORNIA - DEPARTMENT OF TRANSPORTATION
Caltrans MAINTENANCE ENGINEERING

FUNCTIONAL SUPERVISOR: PAUL CRISPI
CALCULATED-DESIGNED BY: TRUNG PHAN
CHECKED BY: PAUL CRISPI
REVISED BY
DATE REVISED

LAST REVISION 04-02-12 | DATE PLOTTED => 15-MAR-2012 | TIME PLOTTED => 13:57

Dist	COUNTY	ROUTE	POST MILES TOTAL PROJECT	SHEET No.	TOTAL SHEETS
07	Ven	33	6.3/11.1	7	22

REGISTERED ELECTRICAL ENGINEER 3-5-12 DATE

4-2-12
PLANS APPROVAL DATE

REGISTERED PROFESSIONAL ENGINEER VUONG HONG No. E16613 Exp. 6-30-12 ELECTRICAL STATE OF CALIFORNIA

THE STATE OF CALIFORNIA OR ITS OFFICERS OR AGENTS SHALL NOT BE RESPONSIBLE FOR THE ACCURACY OR COMPLETENESS OF SCANNED COPIES OF THIS PLAN SHEET.

GENERAL NOTES: (ALL SHEETS)

1. PRIOR TO CONSTRUCTION, THE CONTRACTOR SHALL LOCATE ALL EXISTING INDUCTIVE LOOP DETECTORS.
2. TAG EXISTING dlc IN ADJACENT PULL BOX AND AT THE CONTROLLER CABINET.
3. INSTALL 5 TURNS FOR D LOOPS.
4. FOR LOOP CONNECTION DETAILS, SEE SHEET E-6.

PROJECT NOTE: (SHEETS E-1 TO E-3)

1 INSTALL NEW STUBOUT NEAR THE EXISTING STUBOUT.

RC EXISTING PULL BOX. INSTALL TYPE 5 PULL BOX.

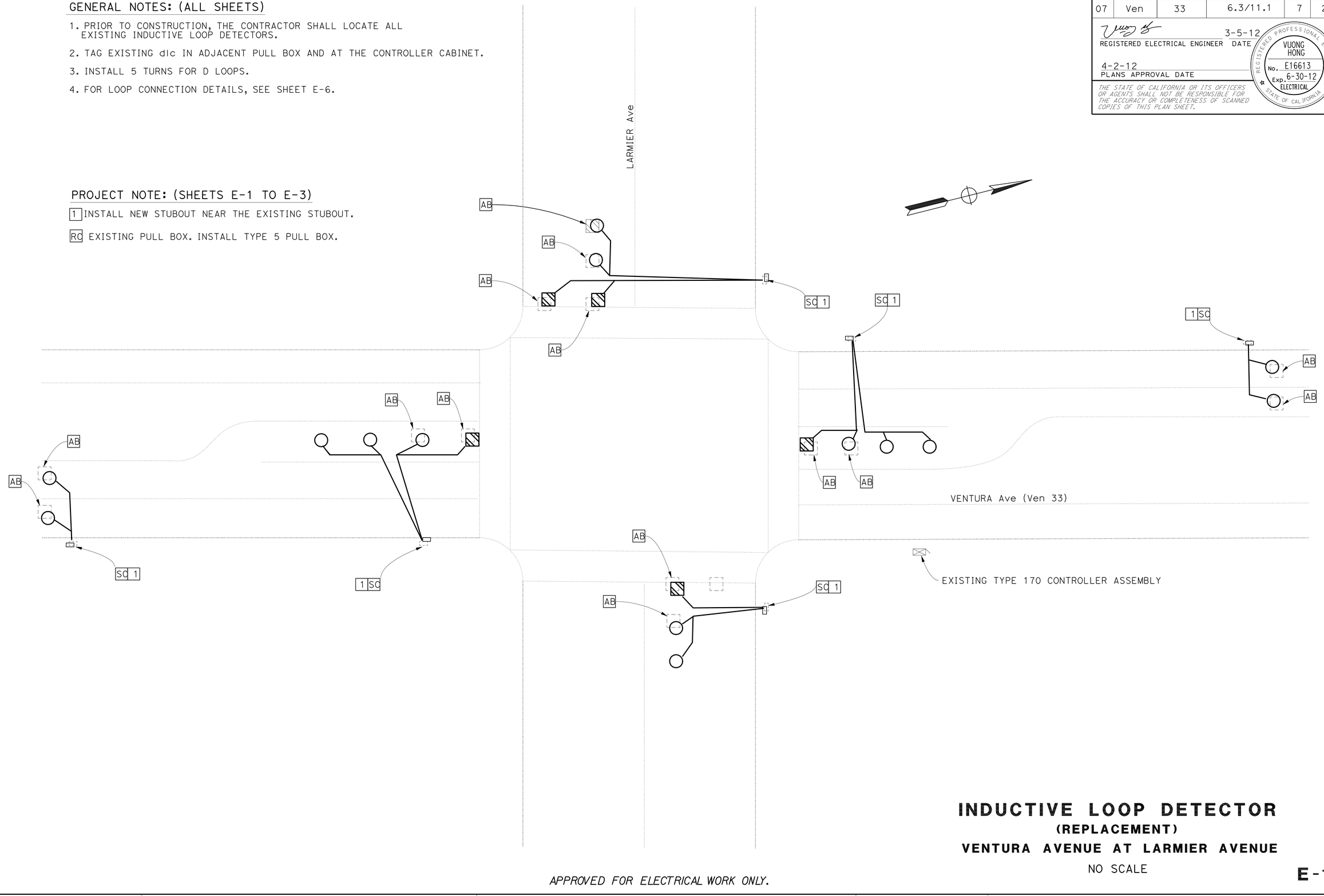

APPROVED FOR ELECTRICAL WORK ONLY.

INDUCTIVE LOOP DETECTOR
(REPLACEMENT)
VENTURA AVENUE AT LARMIER AVENUE

NO SCALE

E-1

STATE OF CALIFORNIA - DEPARTMENT OF TRANSPORTATION
Caltrans® TRAFFIC DESIGN

FUNCTIONAL SUPERVISOR: OSWALD ELIZONDO
CALCULATED-DESIGNED BY: VUONG HONG
CHECKED BY: OSWALD ELIZONDO
REVISED BY
DATE REVISED

LAST REVISION 04-02-12 | DATE PLOTTED => 15-MAR-2012 | TIME PLOTTED => 13:57

Dist	COUNTY	ROUTE	POST MILES TOTAL PROJECT	SHEET No.	TOTAL SHEETS
07	Ven	33	6.3/11.1	8	22

REGISTERED ELECTRICAL ENGINEER 3-5-12 DATE

4-2-12
PLANS APPROVAL DATE

REGISTERED PROFESSIONAL ENGINEER VUONG HONG No. E16613 Exp. 6-30-12 ELECTRICAL STATE OF CALIFORNIA

THE STATE OF CALIFORNIA OR ITS OFFICERS OR AGENTS SHALL NOT BE RESPONSIBLE FOR THE ACCURACY OR COMPLETENESS OF SCANNED COPIES OF THIS PLAN SHEET.

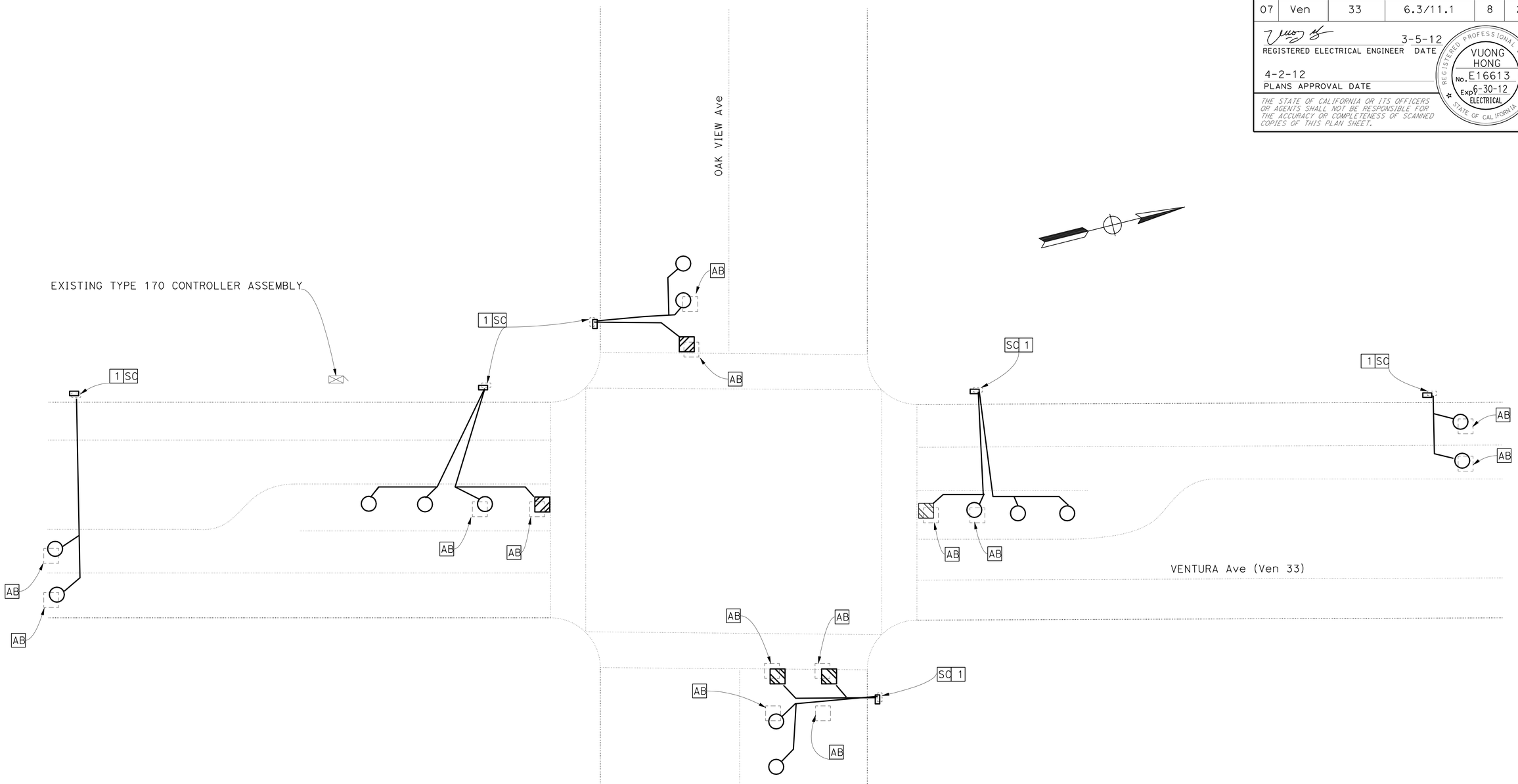

APPROVED FOR ELECTRICAL WORK ONLY.

INDUCTIVE LOOP DETECTOR

(REPLACEMENT)

VENTURA AVENUE AT OAK VIEW AVENUE

NO SCALE

E-2

REVISED BY | DATE REVISED

VUONG HONG | OSWALD ELIZONDO

CALCULATED-DESIGNED BY | CHECKED BY

FUNCTIONAL SUPERVISOR: OSWALD ELIZONDO

STATE OF CALIFORNIA - DEPARTMENT OF TRANSPORTATION

Caltrans® **TRAFFIC DESIGN**

LAST REVISION | DATE PLOTTED => 15-MAR-2012 | TIME PLOTTED => 13:57

04-02-12

Dist	COUNTY	ROUTE	POST MILES TOTAL PROJECT	SHEET No.	TOTAL SHEETS
07	Ven	33	6.3/11.1	9	22

REGISTERED ELECTRICAL ENGINEER 3-5-12 DATE

4-2-12
PLANS APPROVAL DATE

REGISTERED PROFESSIONAL ENGINEER
VUONG HONG
No. E16613
Exp. 6-30-12
ELECTRICAL
STATE OF CALIFORNIA

THE STATE OF CALIFORNIA OR ITS OFFICERS OR AGENTS SHALL NOT BE RESPONSIBLE FOR THE ACCURACY OR COMPLETENESS OF SCANNED COPIES OF THIS PLAN SHEET.

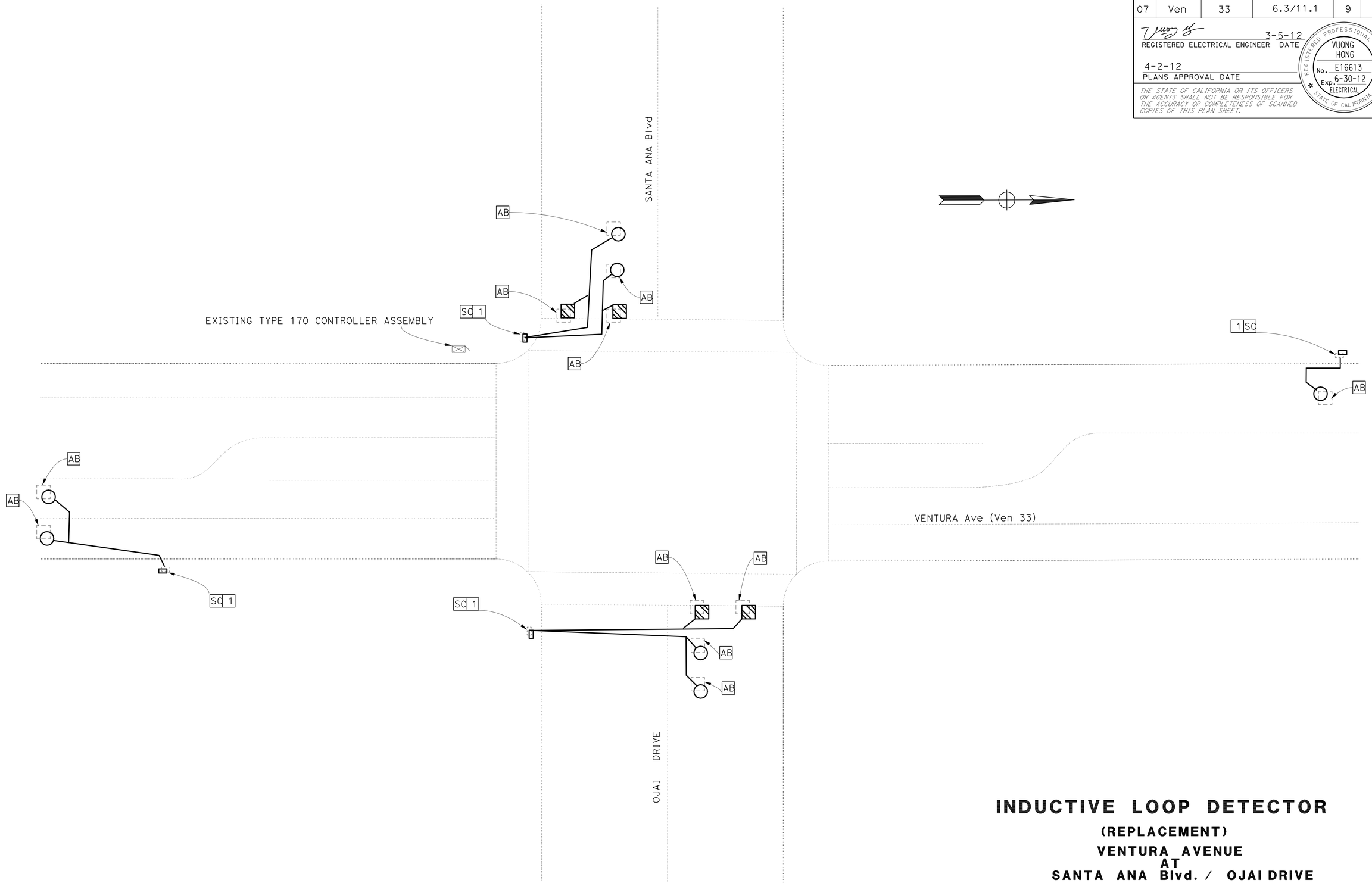

INDUCTIVE LOOP DETECTOR

(REPLACEMENT)

VENTURA AVENUE
AT
SANTA ANA Blvd. / OJAI DRIVE

NO SCALE

APPROVED FOR ELECTRICAL WORK ONLY.

E-3

STATE OF CALIFORNIA - DEPARTMENT OF TRANSPORTATION
Caltrans® **TRAFFIC DESIGN**

FUNCTIONAL SUPERVISOR: OSWALD ELIZONDO
CALCULATED-DESIGNED BY: VUONG HONG
CHECKED BY: OSWALD ELIZONDO
REVISED BY
DATE REVISED

LAST REVISION 04-02-12
DATE PLOTTED => 15-MAR-2012
TIME PLOTTED => 13:57

Dist	COUNTY	ROUTE	POST MILES TOTAL PROJECT	SHEET No.	TOTAL SHEETS
07	Ven	33	6.3/11.1	10	22

REGISTERED ELECTRICAL ENGINEER 3-5-12 DATE

4-2-12
PLANS APPROVAL DATE

REGISTERED PROFESSIONAL ENGINEER VUONG HONG No. E16613 Exp. 6-30-12 ELECTRICAL STATE OF CALIFORNIA

THE STATE OF CALIFORNIA OR ITS OFFICERS OR AGENTS SHALL NOT BE RESPONSIBLE FOR THE ACCURACY OR COMPLETENESS OF SCANNED COPIES OF THIS PLAN SHEET.

PROJECT NOTES: (THIS SHEET)

1 INSTALL NEW STUBOUT NEAR THE EXISTING STUBOUT.
RC EXISTING PULL BOX. INSTALL TYPE 5 PULL BOX.
2 EXISTING 1½" C, 2 dlc. ADD 1 DLC.
3 EXISTING 3"C, 16#14, 2#10, 2 dlc. ADD 1 DLC.
4 EXISTING 3"C, 26#14, 5#10, 2dlc. ADD 1 DLC.
5 EXISTING 3"C, 35#14, 6#10, 2#6, 2dlc. ADD 1 DLC.
6 EXISTING 2-3"C, 71#14, 12#10, 2#6, 5dlc. ADD 1 DLC.

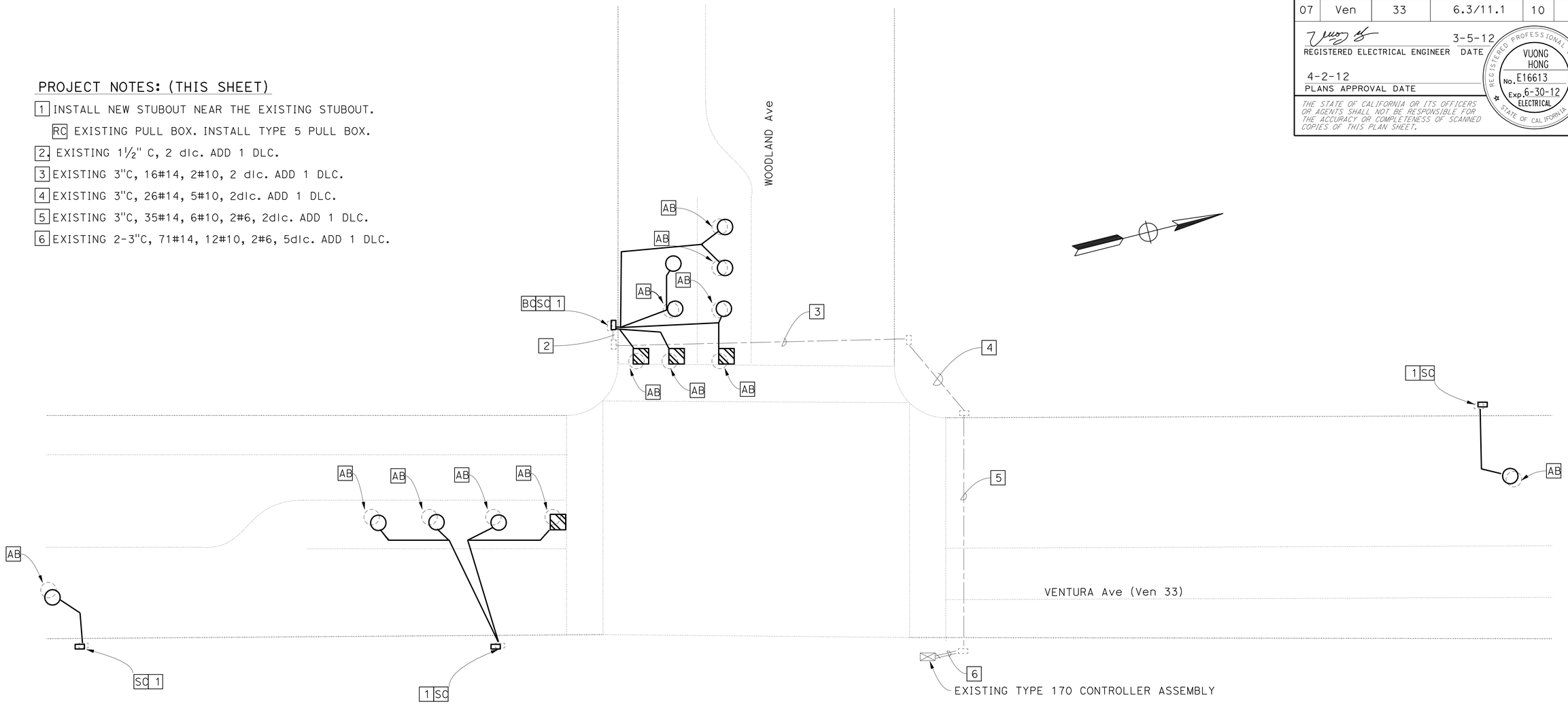

INDUCTIVE LOOP DETECTOR
(REPLACEMENT)
VENTURA AVENUE AT WOODLAND AVENUE
NO SCALE

APPROVED FOR ELECTRICAL WORK ONLY.

E-4

STATE OF CALIFORNIA - DEPARTMENT OF TRANSPORTATION
Caltrans® **TRAFFIC DESIGN**

FUNCTIONAL SUPERVISOR: OSWALD ELIZONDO
CALCULATED-DESIGNED BY: VUONG HONG
CHECKED BY: OSWALD ELIZONDO
REVISED BY
DATE REVISED

LAST REVISION DATE PLOTTED => 15-MAR-2012
04-02-12 TIME PLOTTED => 13:57

Dist	COUNTY	ROUTE	POST MILES TOTAL PROJECT	SHEET No.	TOTAL SHEETS
07	Ven	33	6.3/11.1	11	22

REGISTERED ELECTRICAL ENGINEER 3-5-12 DATE

4-2-12
PLANS APPROVAL DATE

REGISTERED PROFESSIONAL ENGINEER VUONG HONG No. E16613 Exp. 6-30-12 ELECTRICAL STATE OF CALIFORNIA

THE STATE OF CALIFORNIA OR ITS OFFICERS OR AGENTS SHALL NOT BE RESPONSIBLE FOR THE ACCURACY OR COMPLETENESS OF SCANNED COPIES OF THIS PLAN SHEET.

PROJECT NOTES: (THIS SHEET)

1 INSTALL NEW STUBOUT NEAR THE EXISTING STUBOUT.
RC EXISTING PULL BOX. INSTALL TYPE 5 PULL BOX.

2 EXISTING 1#3"C, 1#12CSC, 1#3CSC, 2#10, 1#8G, 2#6, 1dlc. ADD 1 DLC.

3 EXISTING 1#3"C, 3#12CSC, 3#3CSC, 1#8G, 2#6, 1dlc. ADD 1 DLC.

4 EXISTING 2#3"C, 5#12CSC, 4#3CSC, 1#8G, 2#6, 5dlc. ADD 1 DLC.

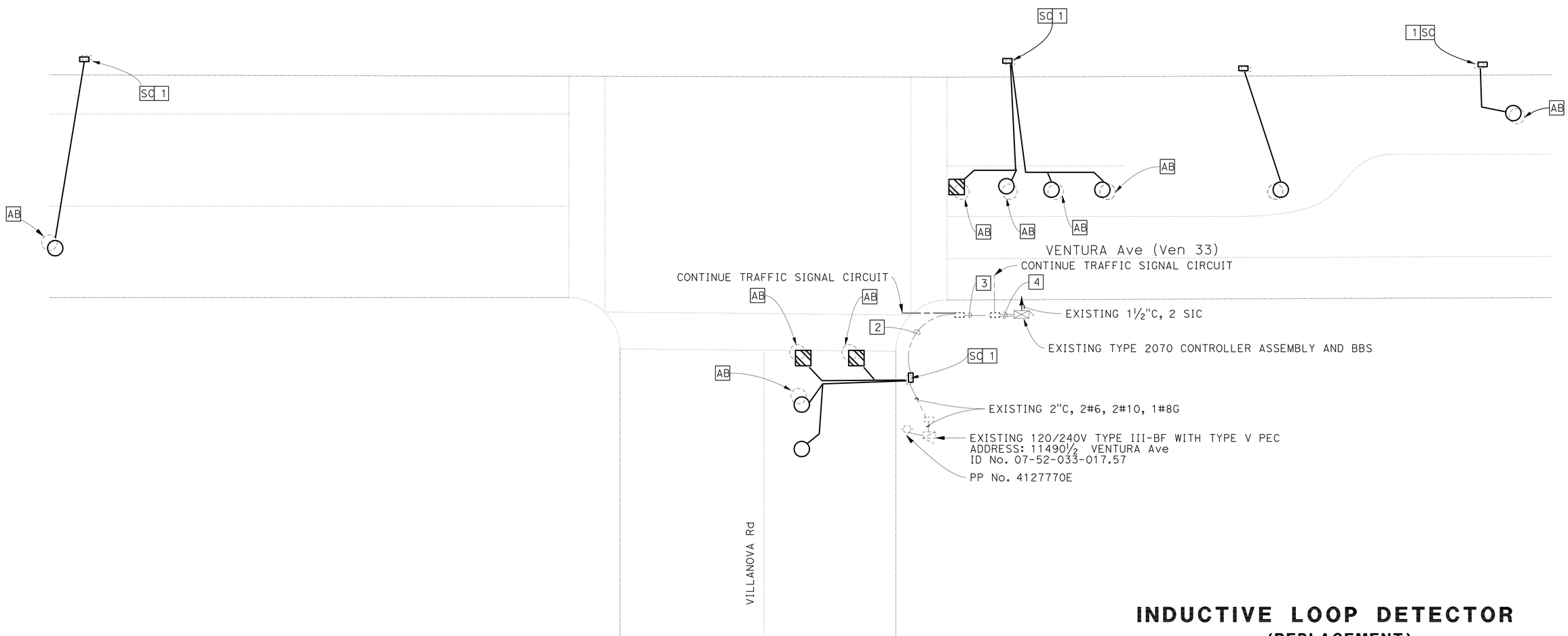

INDUCTIVE LOOP DETECTOR
(REPLACEMENT)
VENTURA AVENUE AT VILLANOVA ROAD
NO SCALE

E-5

APPROVED FOR ELECTRICAL WORK ONLY.

STATE OF CALIFORNIA - DEPARTMENT OF TRANSPORTATION
Caltrans® TRAFFIC DESIGN

FUNCTIONAL SUPERVISOR: OSWALD ELIZONDO
CALCULATED-DESIGNED BY: VUONG HONG
CHECKED BY: OSWALD ELIZONDO
REVISED BY
DATE REVISED

LAST REVISION 04-02-12 | DATE PLOTTED => 15-MAR-2012 | TIME PLOTTED => 13:57

Dist	COUNTY	ROUTE	POST MILES TOTAL PROJECT	SHEET No.	TOTAL SHEETS
07	Ven	33	6.3/11.1	12	22

REGISTERED ELECTRICAL ENGINEER 3-5-12 DATE

4-2-12
PLANS APPROVAL DATE

REGISTERED PROFESSIONAL ENGINEER VUONG HONG No. E16613 Exp. 6-30-12 ELECTRICAL STATE OF CALIFORNIA

THE STATE OF CALIFORNIA OR ITS OFFICERS OR AGENTS SHALL NOT BE RESPONSIBLE FOR THE ACCURACY OR COMPLETENESS OF SCANNED COPIES OF THIS PLAN SHEET.

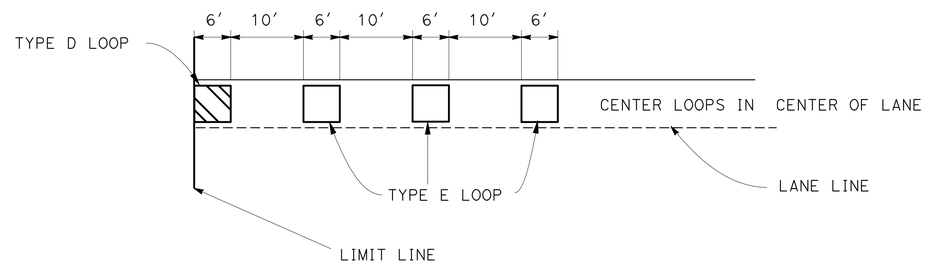

TYPICAL LOOP DETAIL

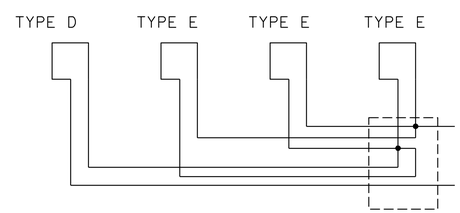

CONNECTION 1D+3E LOOPS

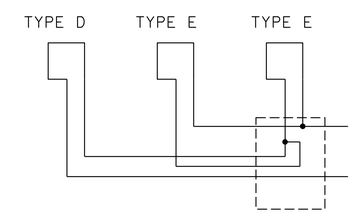

CONNECTION 1D+2E LOOPS

INDUCTIVE LOOP DETECTOR (DETAILS)

NO SCALE

APPROVED FOR ELECTRICAL WORK ONLY.

E-6

STATE OF CALIFORNIA - DEPARTMENT OF TRANSPORTATION
Caltrans® TRAFFIC DESIGN

FUNCTIONAL SUPERVISOR: OSWALD ELIZONDO
CALCULATED-DESIGNED BY: VUONG HONG
CHECKED BY: OSWALD ELIZONDO
REVISED BY
DATE REVISED

LAST REVISION 04-02-12
DATE PLOTTED => 15-MAR-2012
TIME PLOTTED => 13:57

DIST	COUNTY	ROUTE	KILOMETER POST TOTAL PROJECT	SHEET NO.	TOTAL SHEETS
07	Ven	33	6.3/11.1	13	22

Caltrans Metric

Donald E Howe
REGISTERED CIVIL ENGINEER

June 6, 2008
PLANS APPROVAL DATE

REGISTERED PROFESSIONAL ENGINEER Donald E. Howe No. C46402 Exp. 3-31-09 CIVIL STATE OF CALIFORNIA

The State of California or its officers or agents shall not be responsible for the accuracy or completeness of electronic copies of this plan sheet.

To get to the Caltrans web site, go to: http://www.dot.ca.gov

To accompany plans dated 4-2-12

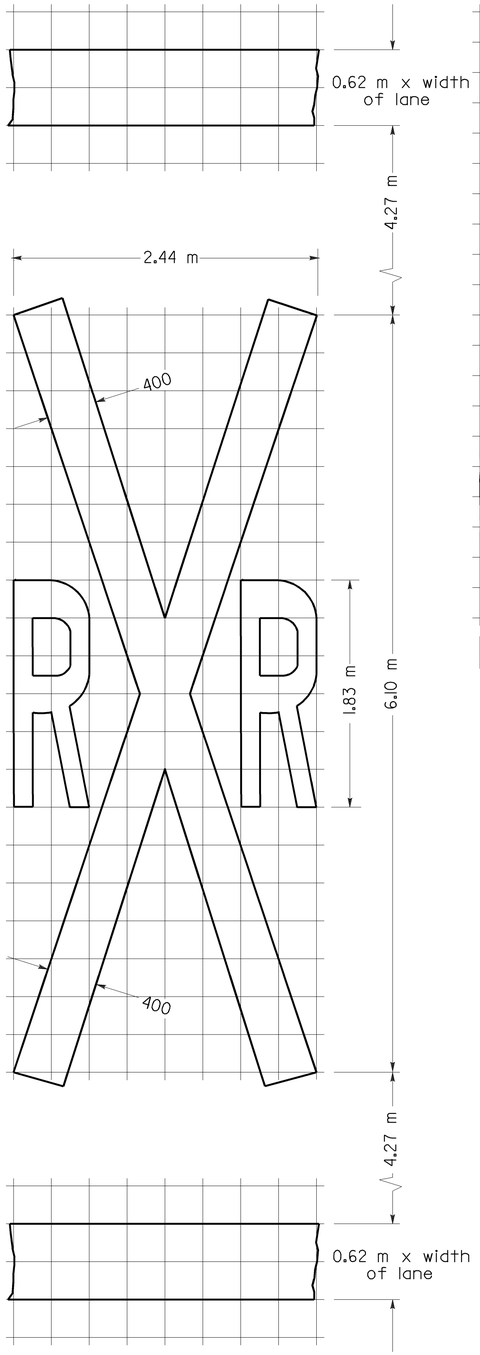

300 mm GRID
A=6.50 m² ✳

RAILROAD CROSSING SYMBOL

✳6.5 m² DOES NOT INCLUDE THE 0.6 m x VARIABLE WIDTH TRANSVERSE LINES.

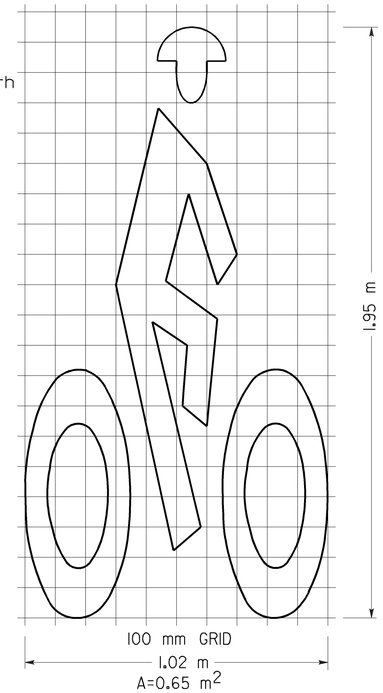

100 mm GRID
1.02 m
A=0.65 m²

BIKE LANE SYMBOL

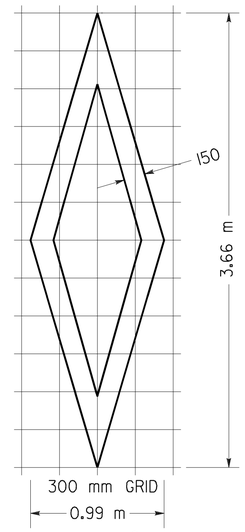

300 mm GRID
0.99 m
A=1.02 m²

DIAMOND SYMBOL

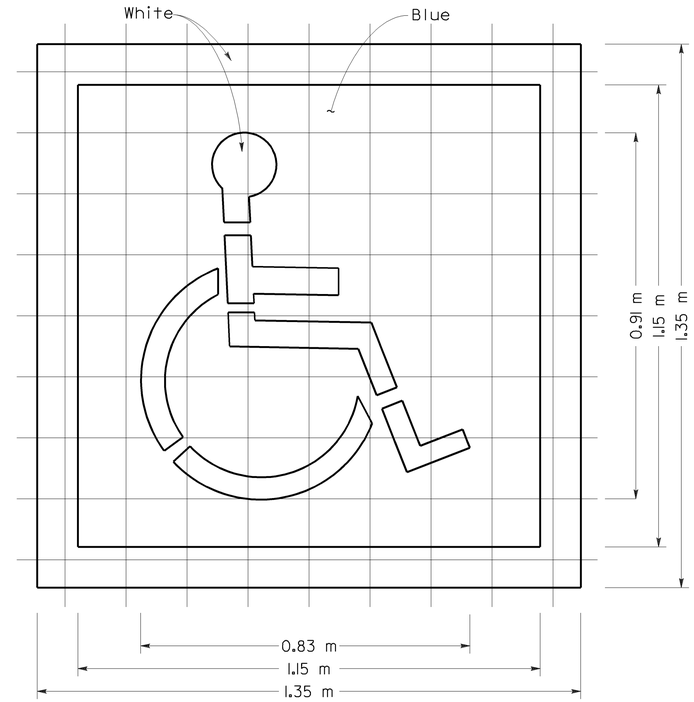

150 mm GRID
A (White) =0.82 m²
A (Blue) =1.32 m²

INTERNATIONAL SYMBOL OF ACCESSIBILITY MARKING

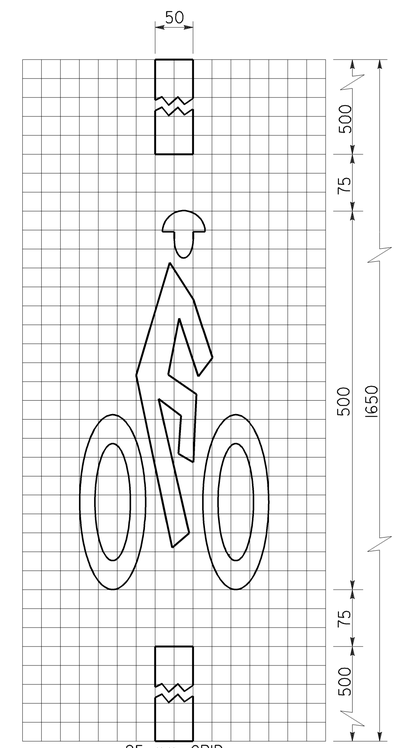

25 mm GRID
250
A=0.19 m²

BICYCLE LOOP DETECTOR SYMBOL

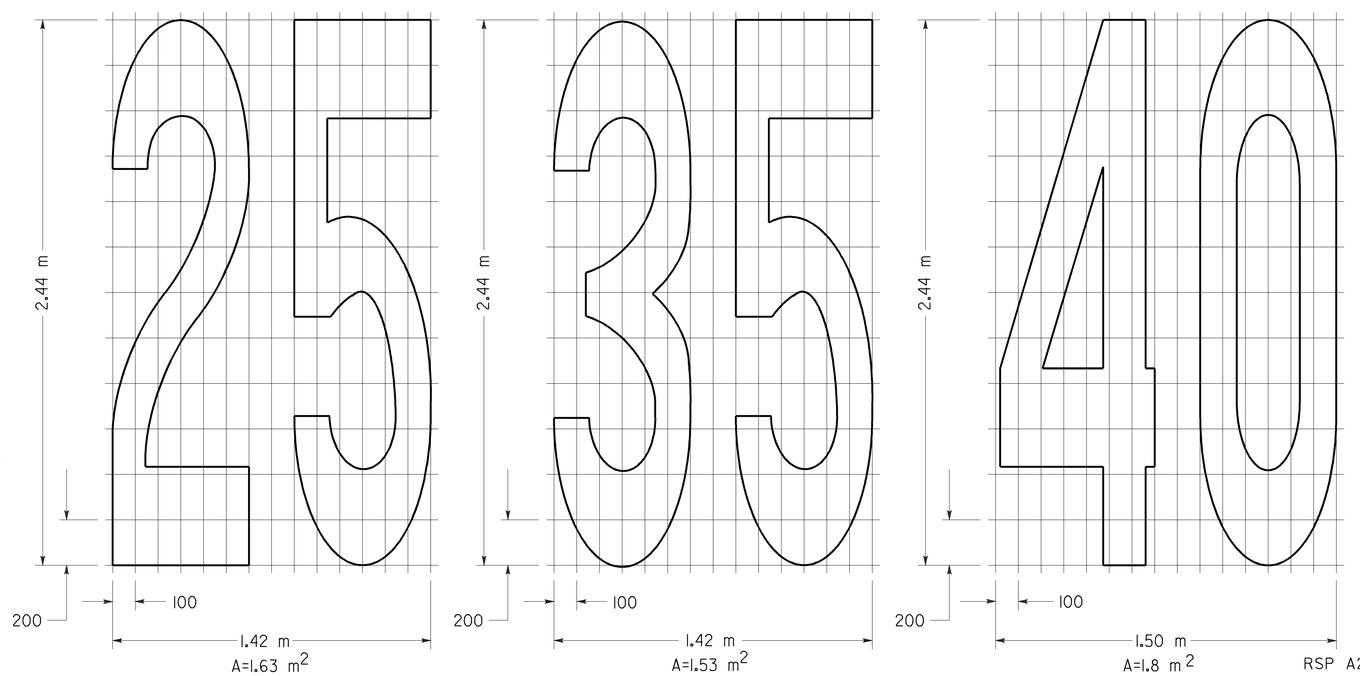

NUMERALS

NOTE:

1. Minor variations in dimensions may be accepted by the Engineer.

STATE OF CALIFORNIA
DEPARTMENT OF TRANSPORTATION

PAVEMENT MARKINGS SYMBOLS AND NUMERALS

NO SCALE

ALL DIMENSIONS ARE IN MILLIMETERS UNLESS OTHERWISE SHOWN

RSP A24C DATED JUNE 6, 2008 SUPERSEDES STANDARD PLAN A24C DATED July 1, 2004 - PAGE 11 OF THE STANDARD PLANS BOOK DATED July 2004.

REVISED STANDARD PLAN RSP A24C

2004 REVISED Std PLAN RSP A24C

5-27-08

DIST	COUNTY	ROUTE	KILOMETER POST TOTAL PROJECT	SHEET NO.	TOTAL SHEETS
07	Ven	33	6.3/11.1	14	22

Caltrans Metric

Randell D. Hiatt
REGISTERED CIVIL ENGINEER

June 6, 2008
PLANS APPROVAL DATE

REGISTERED PROFESSIONAL ENGINEER
Randell D. Hiatt
No. C50200
Exp. 6-30-09
CIVIL
STATE OF CALIFORNIA

The State of California or its officers or agents shall not be responsible for the accuracy or completeness of electronic copies of this plan sheet.

To get to the Caltrans web site, go to: http://www.dot.ca.gov

To accompany plans dated 4-2-12

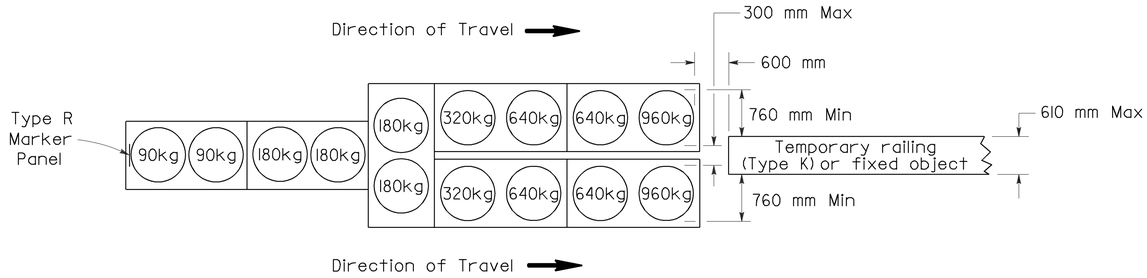

ARRAY 'TU14'

Approach speed 70 km/h or more

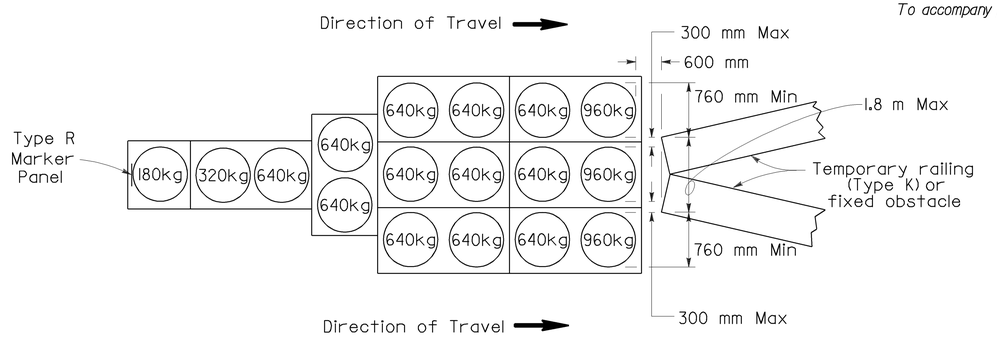

ARRAY 'TU17'

Approach speed less than 70 km/h

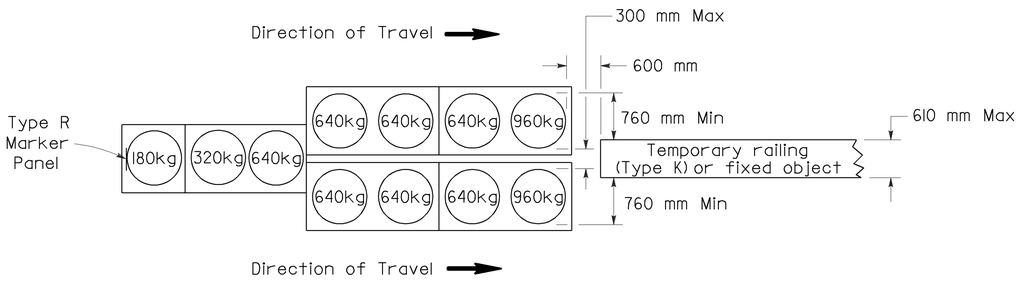

ARRAY 'TU11'

Approach speed less than 70 km/h

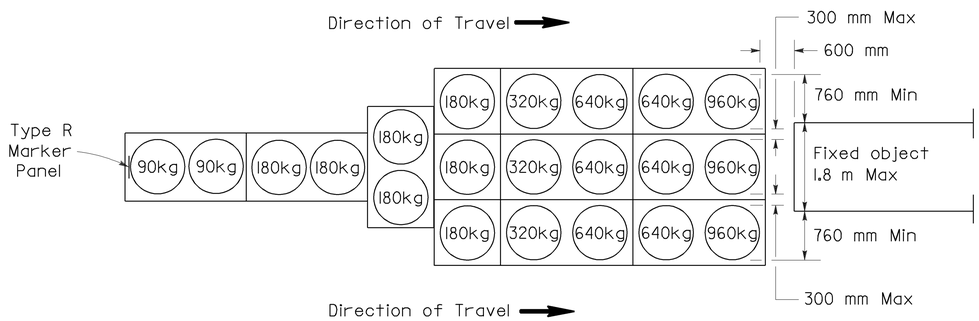

ARRAY 'TU21'

Approach speed 70 km/h or more

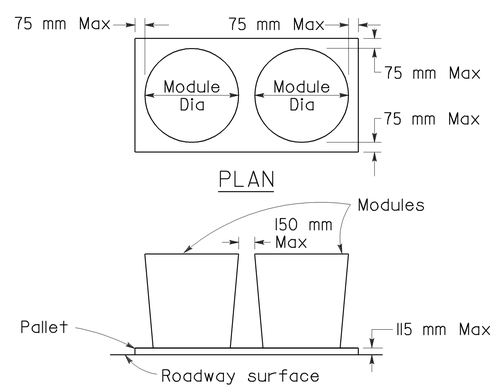

CRASH CUSHION PALLET DETAIL

See Note 7

NOTES

1. (XXX) Indicates sand filled module location and mass of sand in kilograms for each module. Module spacing is based on the greater diameter of the module.
2. All sand masses are nominal.
3. Temporary crash cushion arrays shall not encroach on the traveled way.
4. Place the top of Type R marker panel 25 mm below the module lid.
5. Refer to Standard Plan A73B for marker details.
6. Approach speeds indicated conform to NCHRP 350 Report criteria.
7. Use of Pallets is optional.

STATE OF CALIFORNIA
DEPARTMENT OF TRANSPORTATION

TEMPORARY CRASH CUSHION, SAND FILLED (UNIDIRECTIONAL)

NO SCALE

ALL DIMENSIONS ARE IN MILLIMETERS UNLESS OTHERWISE SHOWN

RSP T1A DATED JUNE 6, 2008 SUPERSEDES STANDARD PLAN T1A
DATED July 1, 2004 - PAGE 211 OF THE STANDARD PLANS BOOK DATED July 2004.

REVISED STANDARD PLAN RSP T1A

2004 REVISED Std PLAN RSP T1A

5-16-08

DIST	COUNTY	ROUTE	KILOMETER POST TOTAL PROJECT	SHEET NO.	TOTAL SHEETS
07	Ven	33	6.3/11.1	15	22

Caltrans Metric

Randell D. Hiatt
REGISTERED CIVIL ENGINEER

June 6, 2008
PLANS APPROVAL DATE

REGISTERED PROFESSIONAL ENGINEER
Randell D. Hiatt
No. C50200
Exp. 6-30-09
CIVIL
STATE OF CALIFORNIA

The State of California or its officers or agents shall not be responsible for the accuracy or completeness of electronic copies of this plan sheet.

To get to the Caltrans web site, go to: http://www.dot.ca.gov

To accompany plans dated 4-2-12

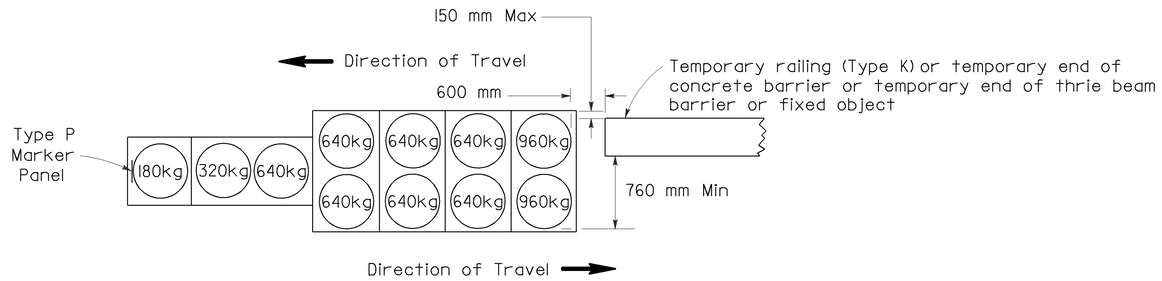

ARRAY 'TBI1'

Approach speed less than 70 km/h

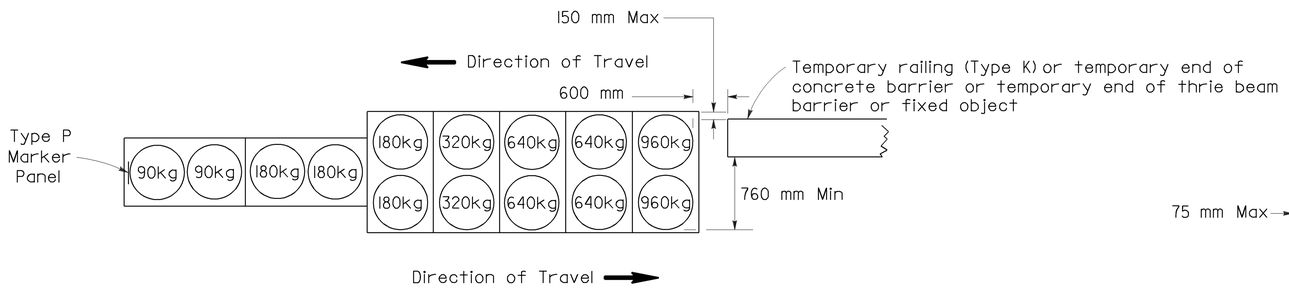

ARRAY 'TBI4'

Approach speed 70 km/h or more

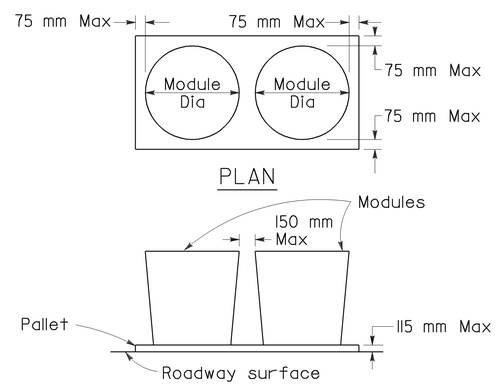

CRASH CUSHION PALLET DETAIL

See Note 7

NOTES

1. (XXX) Indicates sand filled module location and mass of sand in kilograms for each module. Module spacing is based on the greater diameter of the module.
2. All sand masses are nominal.
3. Temporary crash cushion arrays shall not encroach on the traveled way.
4. Place the Type P marker panel so that the bottom of the panel rests upon the pallet.
5. Refer to Standard Plan A73B for marker details.
6. Approach speeds indicated conform to NCHRP 350 Report criteria.
7. Use of Pallets is optional.

STATE OF CALIFORNIA
DEPARTMENT OF TRANSPORTATION

TEMPORARY CRASH CUSHION, SAND FILLED (BIDIRECTIONAL)

NO SCALE

ALL DIMENSIONS ARE IN MILLIMETERS UNLESS OTHERWISE SHOWN

RSP T1B DATED JUNE 6, 2008 SUPERSEDES STANDARD PLAN T1B DATED July 1, 2004 - PAGE 212 OF THE STANDARD PLANS BOOK DATED July 2004.

REVISED STANDARD PLAN RSP T1B

2004 REVISED Std PLAN RSP T1B

5-16-08

DIST	COUNTY	ROUTE	KILOMETER POST TOTAL PROJECT	SHEET NO.	TOTAL SHEETS
07	Ven	33	6.3/11.1	16	22

Caltrans Metric

Randell D. Hiatt
REGISTERED CIVIL ENGINEER

June 6, 2008
PLANS APPROVAL DATE

REGISTERED PROFESSIONAL ENGINEER
Randell D. Hiatt
No. C50200
Exp. 6-30-09
CIVIL
STATE OF CALIFORNIA

The State of California or its officers or agents shall not be responsible for the accuracy or completeness of electronic copies of this plan sheet.

To get to the Caltrans web site, go to: http://www.dot.ca.gov

To accompany plans dated 4-2-12

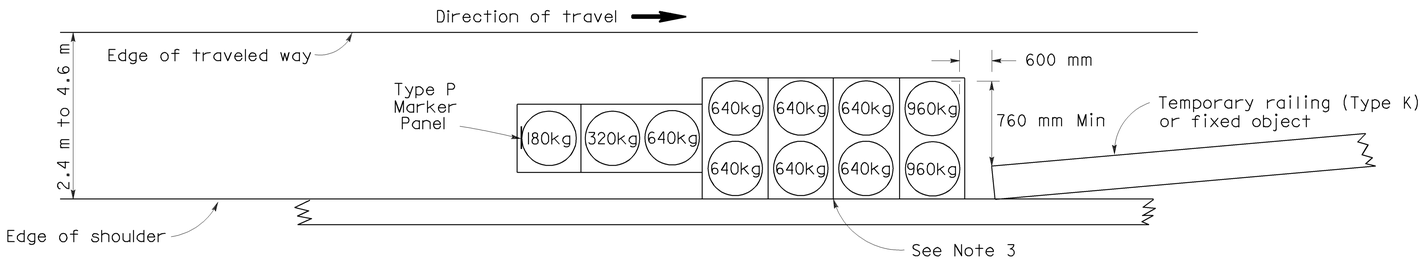

ARRAY 'TSI1'

Approach speed less than 70 km/h
See Note 9

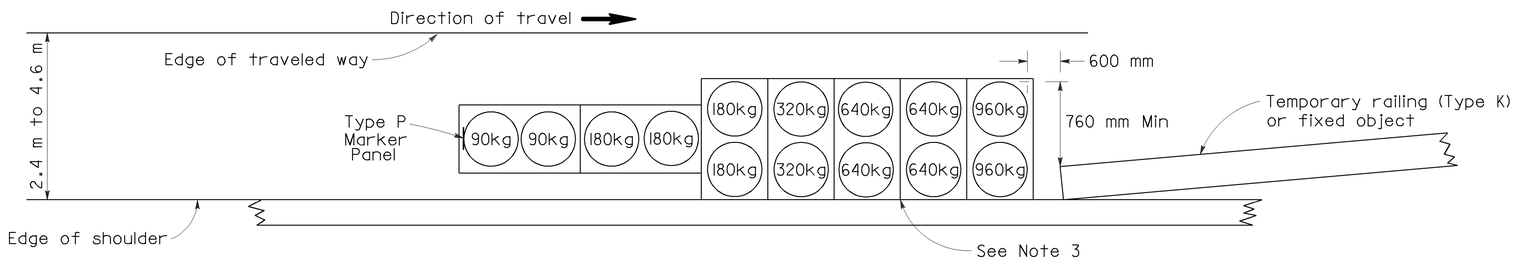

ARRAY 'TSI4'

Approach speed 70 km/h or more
See Note 9

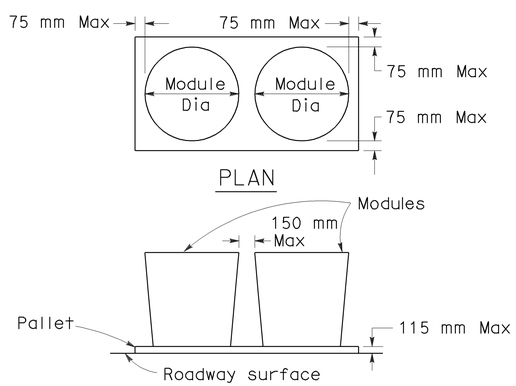

CRASH CUSHION PALLET DETAIL

See Note 11

NOTES

1. (XXX) Indicates sand filled module location and mass of sand in kilograms for each module. Module spacing is based on the greater diameter of the module.
2. All sand masses are nominal.
3. The temporary crash cushion arrays shown on this plan shall be used only in locations where there will be traffic on one side of the temporary crash cushion array.
4. If the fixed object or approach end of the temporary railing is less than 4.60 meters from the edge of traveled way, a temporary crash cushion is required.
5. Temporary crash cushion arrays shall not encroach on the traveled way.
6. Arrays for median shoulders shall conform to details shown on this plan for outside shoulders.
7. Place the Type P marker panel so that the bottom of the panel rest upon the pallet and faces traffic.
8. Refer to Standard Plan A73B for marker details.
9. For shoulder widths less than 2.4 m, appropriate approved crash cushion protection, other than sand filled modules, shall be provided at fixed objects and at approach ends of temporary railing. The specific type of crash cushion shall be as shown on the project plans or as specified in the Special Provisions, or if not shown on the project plans or specified in the Special Provisions, shall be as approved by the Engineer.
10. Approach speeds indicated conform to NCHRP 350 Report criteria.
11. Use of Pallets is optional.

STATE OF CALIFORNIA
DEPARTMENT OF TRANSPORTATION

TEMPORARY CRASH CUSHION, SAND FILLED (SHOULDER INSTALLATIONS)

NO SCALE

ALL DIMENSIONS ARE IN MILLIMETERS UNLESS OTHERWISE SHOWN

RSP T2 DATED JUNE 6, 2008 SUPERSEDES STANDARD PLAN T2
DATED July 1, 2004 - PAGE 213 OF THE STANDARD PLANS BOOK DATED July 2004.

REVISED STANDARD PLAN RSP T2

2004 REVISED Std PLAN RSP T2

5-16-08

Dist	COUNTY	ROUTE	POST MILES TOTAL PROJECT	SHEET No.	TOTAL SHEETS
07	Ven	33	6.3/11.1	17	22

Randell D. Hiatt
REGISTERED CIVIL ENGINEER

May 20, 2011
PLANS APPROVAL DATE

REGISTERED PROFESSIONAL ENGINEER
Randell D. Hiatt
No. C50200
Exp. 6-30-11
CIVIL
STATE OF CALIFORNIA

The State of California or its officers or agents shall not be responsible for the accuracy or completeness of electronic copies of this plan sheet.

To accompany plans dated 4-2-12

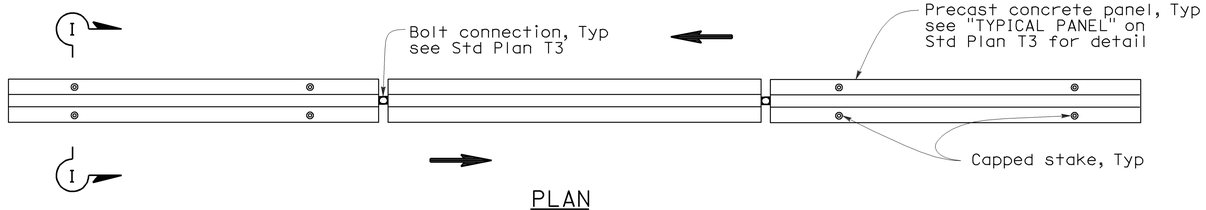

PLAN

RAILING STAKING CONFIGURATION FOR TWO-WAY TRAFFIC

See Note 1

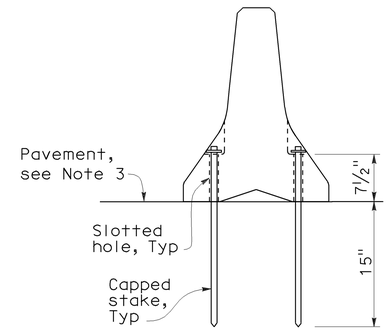

SECTION I-I

NOTES:

1. Where Type K Temporary Railing is placed as a temporary or long term barrier in two-way traffic on highways with less than 24" from the edge of traveled way, use four capped stakes per every other panel with end panels staked.
2. Where Type K Temporary Railing is placed 3" to 24" from the edge of an excavation on highways, use two capped stakes per panel along the traffic side.
3. Staked Type K Temporary Railing must be supported by at least 4" thick concrete, hot mix asphalt or existing asphalt concrete pavement.
4. The minimum yield strength for the washer must be 60,000 psi.
5. Direction of adjacent traffic indicated by ⟹.

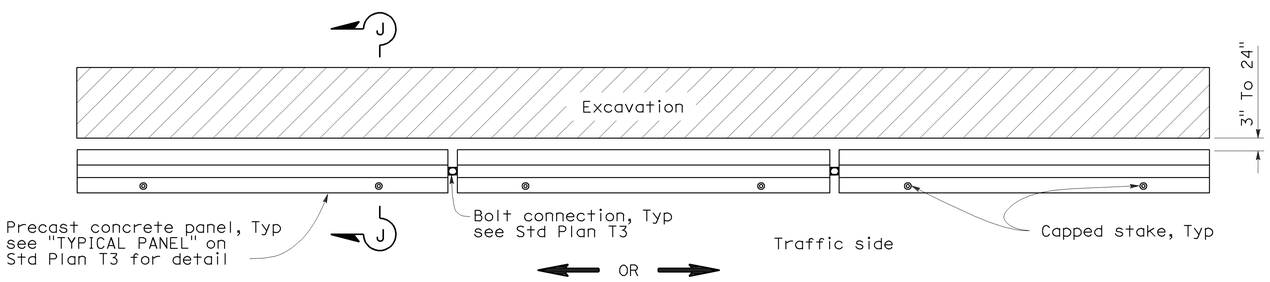

PLAN

RAILING STAKING CONFIGURATION ADJACENT TO AN EXCAVATION

See Note 2

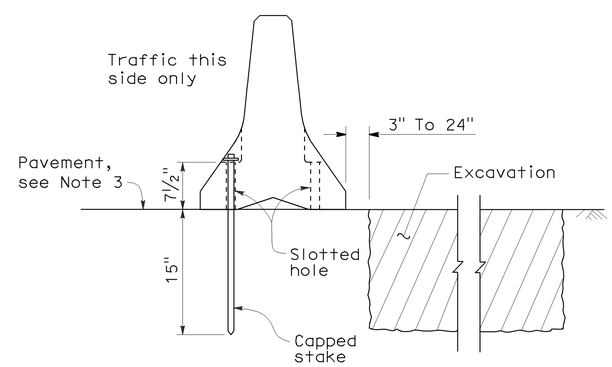

SECTION J-J

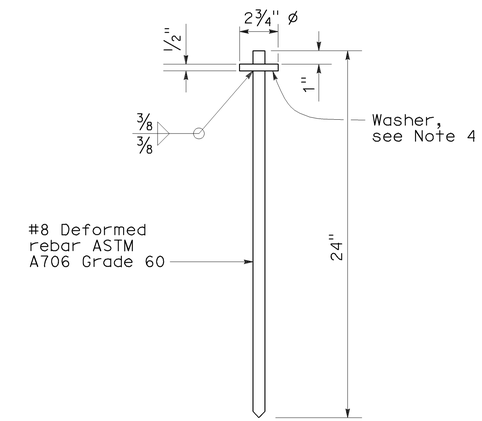

CAPPED STAKE DETAIL

STATE OF CALIFORNIA
DEPARTMENT OF TRANSPORTATION

TEMPORARY RAILING (TYPE K)

NO SCALE

NSP T3A DATED MAY 20, 2011 SUPPLEMENTS THE STANDARD PLANS BOOK DATED MAY 2006.

NEW STANDARD PLAN NSP T3A

2006 NEW STANDARD PLAN NSP T3A

DIST	COUNTY	ROUTE	KILOMETER POST TOTAL PROJECT	SHEET NO.	TOTAL SHEETS
07	Ven	33	6.3/11.1	18	22

Caltrans Metric

Jeffery G. McRae
REGISTERED ELECTRICAL ENGINEER

October 5, 2007
PLANS APPROVAL DATE

REGISTERED PROFESSIONAL ENGINEER
Jeffery G. McRae
No. E14512
Exp. 6-30-08
ELECTRICAL
STATE OF CALIFORNIA

The State of California or its officers or agents shall not be responsible for the accuracy or completeness of electronic copies of this plan sheet.

To get to the Caltrans web site, go to: http://www.dot.ca.gov

To accompany plans dated 4-2-12

ELECTROLIERS

STANDARD TYPES
15, 15D
15 STRUCTURE
21, 21D STRUCTURE
30
31
32
35
36-20A

High mast lighting standard

Double arm lighting standard

Existing electrolier

Electrolier foundation (Future installation)

NOTES

1. Luminaires shall be 310 W HPS when installed on Type 21, 21D, 30, 31, 32, 35 and 36-20A Standards, unless otherwise specified. Luminaires shall be 200 W HPS when installed on other type standards or poles, unless otherwise specified.
2. Luminaires shall be the cutoff type, ANSI Type III medium cutoff lighting distribution, unless otherwise specified.
3. Variations noted adjacent to symbol on project plans.

Electrolier (see project notes or project plans)

Luminaire on wood pole

STANDARD NOTES

- AB — Abandon. If applied to conduit, remove conductors.
- BC — Install pull box in existing conduit run.
- BP — Pedestrian barricade, type as indicated on plan.
- CB — Install conduit into existing pull box.
- CC — Connect new and existing conduit. Remove existing conductors and install conductors as indicated.
- CF — Conduit to remain for future use. Remove conductors. Install pull wire or rope.
- DH — Detector handhole.
- FA — Foundation to be abandoned.
- IS — Install sign on signal mast arm.
- NS — No slip base on standard.
- PEC — Photoelectric control.
- PEU — Photoelectric unit.
- RC — Equipment or material to be removed and become the property of the Contractor.
- RE — Remove electrolier, fuses and ballast. Tape ends of conductors.
- RL — Relocate equipment.
- RR — Remove and reuse equipment.
- RS — Remove and salvage equipment.
- SC — Splice new to existing conductors.
- SD — Service disconnect.
- SF — Standard to remain for future use. Remove luminaire, pole conductors, fuses and ballast. Tape disconnects.
- TSP — Telephone service point.

ABBREVIATIONS AND EQUIPMENT DESIGNATIONS

PROPOSED	EXISTING	
BBS	bbs	Battery backup system
BC	bc	Bolt circle
C	C	Conduit
CCTV	cctv	Closed circuit television
CKT	ckt	Circuit
CMS	cms	Changeable message sign
DLC	dlc	Loop detector lead-in cable
EMS	ems	Extinguishable message sign
EVC	evc	Emergency vehicle cable
EVD	evd	Emergency vehicle detector
FB	fb	Flashing beacon
FBCA	fbca	Flashing beacon control assembly
FBS	fbs	Flashing beacon with slip base
FO	fo	Fiber optic
G	G	Ground (Equipment Grounding Conductor)
GFCI	GFCI	Ground fault circuit interrupt
HAR	har	Highway advisory radio
HEX	hex	Hexagonal
HPS	hps	High pressure sodium
IISNS	iisns	Internally illuminated street name sign
ISL	isl	Induction sign lighting
LED	led	Light emitting diode
LMA	lma	Luminaire mast arm
LPS	lps	Low pressure sodium
LTG	ltg	Lighting
LUM	lum	Luminaire
MAT	mat	Mast arm mounted vehicle signal faces, top attachment
MAS	mas	Mast arm mounted vehicle signal faces, side attachment
MAS-4A	mas-4A	Mast arm mounted vehicle signal faces, side attachment - 4 signal section
MAS-4B	mas-4B	
MAS-4C	mas-4C	
MAS-5A	mas-5A	Mast arm mounted vehicle signal faces, side attachment - 5 signal section
MAS-5B	mas-5B	
MC	mc	Mercury contactor
M/M	m/m	Multiple to multiple transformer
MT	mt	Conduit with pull wire or rope only
MTG	mtg	Mounting
	mv	Mercury vapor lighting fixture
N	N	Neutral (Grounded Conductor)
NC	NC	Normally closed
NO	NO	Normally open
PB	pb	Pull box
PEC	pec	Photoelectric control (Type I, II, III, IV or V as shown)
PED	ped	Pedestrian
PEU	peu	Photoelectric unit
PPB	ppb	Pedestrian push button
RL	RL	Relocated equipment
RM	rm	Ramp metering
SB	sb	Slip base
SIC	sic	Signal interconnect cable
SIG	sig	Signal
SMA	sma	Signal mast arm
SNS	sns	Street name sign
SP	sp	Service point
TDC	tdc	Telephone demarcation cabinet
TMS	tms	Traffic monitoring station
TOS	tos	Traffic Operations System
VEH	veh	Vehicle
XFMR	xfmr	Transformer
COMM	comm	Communication
RWIS	rwis	Roadway weather information system

SOFFIT AND WALL MOUNTED LUMINAIRES

Pendant, 70 W HPS unless otherwise specified.

Flush, 70 W HPS unless otherwise specified.

Wall surface, 70 W HPS unless otherwise specified.

Existing soffit or wall luminaire to remain unmodified.

Existing soffit or wall luminaire to be modified as specified.

NOTE

Arrow indicates "street side" of luminaire.

STATE OF CALIFORNIA
DEPARTMENT OF TRANSPORTATION

ELECTRICAL SYSTEMS (SYMBOLS AND ABBREVIATIONS)

NO SCALE

ALL DIMENSIONS ARE IN MILLIMETERS UNLESS OTHERWISE SHOWN

RSP ES-1A DATED OCTOBER 5, 2007 SUPERSEDES STANDARD PLAN ES-1A DATED JULY 1, 2004-PAGE 413 OF THE STANDARD PLANS BOOK DATED JULY 2004.

REVISED STANDARD PLAN RSP ES-1A

2004 REVISED Std PLAN RSP ES-1A

DIST	COUNTY	ROUTE	KILOMETER POST TOTAL PROJECT	SHEET NO.	TOTAL SHEETS
07	Ven	33	6.3/11.1	19	22

Caltrans Metric

Jeffery G. McRae
REGISTERED ELECTRICAL ENGINEER

October 5, 2007
PLANS APPROVAL DATE

REGISTERED PROFESSIONAL ENGINEER
Jeffery G. McRae
No. E14512
Exp. 6-30-08
ELECTRICAL
STATE OF CALIFORNIA

The State of California or its officers or agents shall not be responsible for the accuracy or completeness of electronic copies of this plan sheet.

To get to the Caltrans web site, go to: http://www.dot.ca.gov

To accompany plans dated 4-2-12

CONDUIT

PROPOSED	EXISTING	
		Lighting conduit, unless otherwise indicated or noted
		Traffic signal conduit
C	c	Communication conduit
T	t	Telephone conduit
F	f	Fire alarm conduit
FO	fo	Fiber optic conduit
		Conduit termination (RSP ES-9A C)
R	r	Conduit riser in/on structure or Service pole

SERVICE EQUIPMENT

PROPOSED	EXISTING	
OH	oh	Overhead lines
U	u	Wood pole "U" indicates utility owned
		Pole guy-with anchor
		Utility transformer-ground mounted
III		Service equipment enclosure type
		Service equipment enclosure door indicates front of enclosure
T	t	Telephone demarcation cabinet

POLE-MOUNTED SERVICE DESIGNATION

Type of installation

TYPE H SERVICE - 8.8 m ← Pole height above grade

ILLUMINATED OVERHEAD SIGN

PROPOSED	EXISTING	
		Overhead sign - Single post
		Overhead sign - Two post
		Overhead sign - Mounted on structure
		Overhead sign with electrolier

SIGNAL EQUIPMENT

PROPOSED	EXISTING	
		Pedestrian signal face
		Pedestrian push button post
		Pedestrian barricade
		Vehicle signal face (with backplate, 3-Section: red, yellow and green)
		Vehicle signal face with angle visors
PV	PV	Modifications of basic symbols: "L" Indicates all non-arrow sections louvered "LG" Indicates louvered green section only "PV" indicates 300 mm programmed visibility sections "200" indicates all 200 mm sections (only when specified)
		Type 15TS and Vehicle signal face
		Vehicle signal face with red, yellow and green left arrow sections
		Vehicle signal face with red and yellow sections and up green arrow
		Vehicle signal face (5 Section) with red, yellow and green sections and yellow and green right arrows
		Type 1 Standard and attached vehicle signal faces
		Standard with signal mast arm only and attached vehicle signal faces and internally illuminated street name sign
		Type 33 Standard, Left-turn vehicle signal face and sign
		Standard with luminaire and signal mast arms and attached vehicle signal faces
		Cantilever flashing beacon Type 9 Frame, with a sign unless otherwise specified or indicated
Y Y	Y Y	Type 15-FBS Standard with two vehicle signal face sections with lens, backplate and visor with a sign
R	Y	Flashing beacon. One vehicle signal face section with lens, backplate and visor. "R" indicates red indication, "Y" indicates yellow indication
		Controller assembly. Door indicates front of cabinet
		Guard post
		Type 1 Standard with "Meter On" sign
		Emergency vehicle detector

NOTES

1. All signal sections shall be 300 mm unless shown otherwise.
2. Signal heads shall be provided with backplates unless shown otherwise.
3. Signal indication shall be LED.

STATE OF CALIFORNIA
DEPARTMENT OF TRANSPORTATION

ELECTRICAL SYSTEMS (SYMBOLS AND ABBREVIATIONS)

NO SCALE

ALL DIMENSIONS ARE IN MILLIMETERS UNLESS OTHERWISE SHOWN

RSP ES-1B DATED OCTOBER 5, 2007 SUPERSEDES STANDARD PLAN ES-1B DATED JULY 1, 2004-PAGE 414 OF THE STANDARD PLANS BOOK DATED JULY 2004.

REVISED STANDARD PLAN RSP ES-1B

2004 REVISED Std PLAN RSP ES-1B

8-9-07

DIST	COUNTY	ROUTE	KILOMETER POST TOTAL PROJECT	SHEET NO.	TOTAL SHEETS
07	Ven	33	6.3/11.1	20	22

Caltrans Metric

Jeffery G. McRae
REGISTERED ELECTRICAL ENGINEER

October 5, 2007
PLANS APPROVAL DATE

REGISTERED PROFESSIONAL ENGINEER
Jeffery G. McRae
No. E14512
Exp. 6-30-08
ELECTRICAL
STATE OF CALIFORNIA

The State of California or its officers or agents shall not be responsible for the accuracy or completeness of electronic copies of this plan sheet.

To get to the Caltrans web site, go to: http://www.dot.ca.gov

To accompany plans dated 4-2-12

EQUIPMENT IDENTIFICATION

ILLUMINATED SIGN IDENTIFICATION NUMBER:

Sign No. 12345 — Sign number - Place on post or structure

10 ISL SCI 1.0

- 1.0 — Transformer rating (kVA)
- SCI — Lighting control type
- ISL — Number and type of fixtures

Do NOT place on standard or structure

ELECTROLIER OR EQUIPMENT IDENTIFICATION NUMBER:

12345 - 4.6

- 4.6 — Mast arm length in meters, if shown. Do not place on standard or structure.
- 12345 — Equipment number - Place on standard or structure. Existing equipment numbers are shown in parenthesis

CONDUIT AND CONDUCTOR IDENTIFICATION:

41C, 2#10, 15#14, 2 DLC

- 2#10, 15#14, 2 DLC — Number and size of conductors and cables
- 41C — Size of conduit in millimeters

Ø1, Ø2, Ø2P, etc.	Traffic phase identification for signal faces, detectors and phase diagrams
1 2 3	Project note numbers
A B C	Equipment description, installation or item numbers
1 2 3	Conduit run numbers

SIGNAL AND LIGHTING STANDARD (TYPICAL DESIGNATION):

19A - 3 - 161

- 161 — Wind velocity=161 km/h
- 3 — Case 3 arm loading
- 19A — Standard type
- Standard Plan sheet number
- Detail number or letter

WIRING DIAGRAM LEGEND

P	Pole
CB	Circuit breaker
A	Ampere
V	Volt
M	Metered
UM	Unmetered
NB	Neutral bus
GB	Ground bus
G	Equipment grounding conductor
N	Grounded conductor (Neutral)

- External conductor
- Conductor or bus
- Tie point
- Contactor coil
- Contactor, Contact NO
- Terminal blocks
- Contactor, Contact NC
- Enclosure bond
- Grounding electrode
- Circuit breaker
- Receptacle

PULL BOXES

PROPOSED EXISTING

Pull box-No. 5 unless otherwise indicated or noted.

3 / 9A(21)

Pull box-Additional designations or descriptions

3 = No. 3½ pull box
5 = No. 5 pull box
6 = No. 6 pull box
7 = No. 7 (Ceiling pull box)
8 = No. 8 (Pendant soffit pull box)
9 = No. 9 pull box
9A = No. 9A pull box

(C) = Communications pull box
(E) = Pull box with extension
(S) = Sprinkler control pull box
(21) = Anchor bolts and conduit for future installation of Type 21 Standard
(T) = Traffic pull box

MISCELLANEOUS EQUIPMENT

PROPOSED	EXISTING	
CMS	cms	Changeable message sign
		Closed circuit television camera
		Highway advisory radio pole and antenna
EMS	ems	Extinguishable message sign
		Detection device
M V	m v	M = Microwave sensor V = Video image sensor

VEHICLE DETECTORS

5 J 9 U

- U — Vehicle detector designation
- 9 — U = Upper, L = Lower
- J — Slot number in input file
- 5 — Input file (I or J)
- Phase

PROPOSED	EXISTING	
		Type A detector loop. Outline of sawcut shown.
		Type B detector loop. Outline of sawcut shown.
		Type C detector loop. Outline of sawcut shown.
		Type D detector loop. Outline of sawcut shown.
		Type E detector loop. Outline of sawcut shown.
		Type Q detector loop. Outline of sawcut shown.
		Magnetic detector
DH	dh	Detector handhole
		Microwave or video detection zone

STATE OF CALIFORNIA
DEPARTMENT OF TRANSPORTATION

ELECTRICAL SYSTEMS (SYMBOLS AND ABBREVIATIONS)

NO SCALE

ALL DIMENSIONS ARE IN MILLIMETERS UNLESS OTHERWISE SHOWN

RSP ES-1C DATED OCTOBER 5, 2007 SUPERSEDES STANDARD PLAN ES-1C DATED JULY 1, 2004-PAGE 415 OF THE STANDARD PLANS BOOK DATED JULY 2004.

REVISED STANDARD PLAN RSP ES-1C

2004 REVISED Std PLAN RSP ES-1C

10-1-07

DIST	COUNTY	ROUTE	KILOMETER POST TOTAL PROJECT	SHEET NO.	TOTAL SHEETS
07	Ven	33	6.3/11.1	21	22

REGISTERED ELECTRICAL ENGINEER

October 5, 2007
PLANS APPROVAL DATE

REGISTERED PROFESSIONAL ENGINEER Jeffery G. McRae No. E14512 Exp. 6-30-08 ELECTRICAL STATE OF CALIFORNIA

The State of California or its officers or agents shall not be responsible for the accuracy or completeness of electronic copies of this plan sheet.

To get to the Caltrans web site, go to: http://www.dot.ca.gov

To accompany plans dated 4-2-12

Caltrans Metric

LOOP INSTALLATION PROCEDURE

1. Loops shall be centered in lanes.
2. Saw slots in pavement for loop conductors as shown in details.
3. Distance between side of loop and a lead-in saw cut from adjacent detectors shall be 600 mm minimum. Distance between lead-in saw cuts shall be 150 mm minimum.
4. Bottom of saw slot shall be smooth with no sharp edges.
5. Slots shall be washed until clean, blown out and thoroughly dried before installing loop conductors.
6. Adjacent loops on the same sensor unit channel shall be wound in opposite directions.
7. Identify and tag loop circuit pairs in the pull box with loop number, start (S) and finish (F) of conductor. Identify and tag lead-in-cable with sensor number and phase.
8. Install loop conductor in slot using a 5 mm to 6 mm thick wood paddle. Hold loop conductors with wood paddles (at the bottom of the sawed slot) during sealant placement.
9. No more than 2 twisted pairs shall be installed in one sawed slot.
10. Allow additional 1.5 m of slack length of conductor for the lead-in run to pull box.
11. The additional length of each conductor for each loop shall be twisted together into a pair (6 turns per meter minimum) before being placed in the slot and conduit leading to pull box.
12. Test each loop circuit for continuity, circuit resistance and insulation resistance at the pull box before filling slots.
13. Fill slots as shown in details.
14. Splice loop conductors to lead-in cable. Splices shall be soldered.
15. End of lead-in-cable and Type 2 loop conductor shall be waterproofed prior to installing in conduit to prevent moisture from entering the cable.
16. Lead-in-cable shall not be spliced between the pull box and the controller cabinet terminals.
17. Test each loop circuit for continuity, circuit resistance and insulation resistance at the controller cabinet location.
18. Where loop conductors are not to be spliced to a lead-in-cable, the ends of the conductors shall be taped and waterproofed with electrical insulating coating.

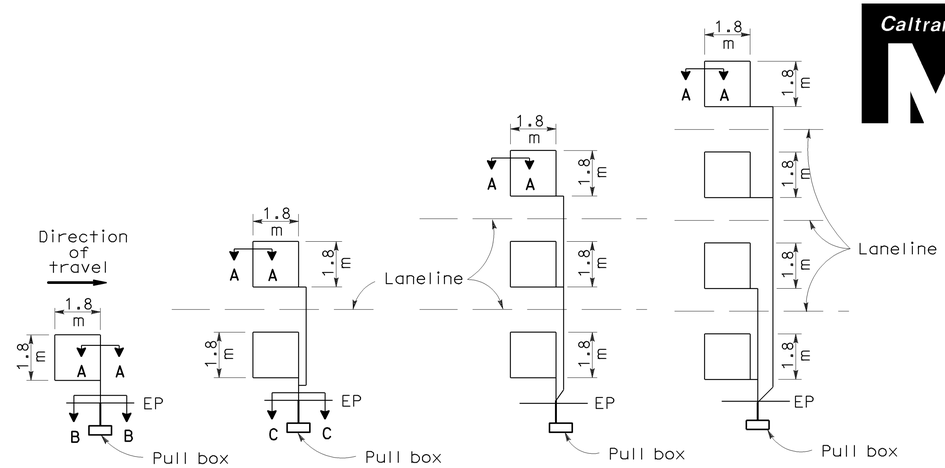

TYPE 1A INSTALLATION | TYPE 2A INSTALLATION | TYPE 3A INSTALLATION | TYPE 4A INSTALLATION

SAWCUT DETAILS

(Type A loop detector configurations illustrated)

1. 1A thru 4A = 1 Type A loop configuration in each lane.
2. 1B thru 4B = 1 Type B loop configuration in each lane.
3. 1C = 1 Type C loop configuration entering lanes as required.
4. 1D thru 4D = 1 Type D loop configuration in each lane.
5. 1E thru 4E = 1 Type E loop configuration in each lane.
6. 1Q thru 4Q = 1 Type Q loop configuration in each lane.
   (Use Type A, B, C, D, E or Q loop detector configurations only when specified or shown on plans)

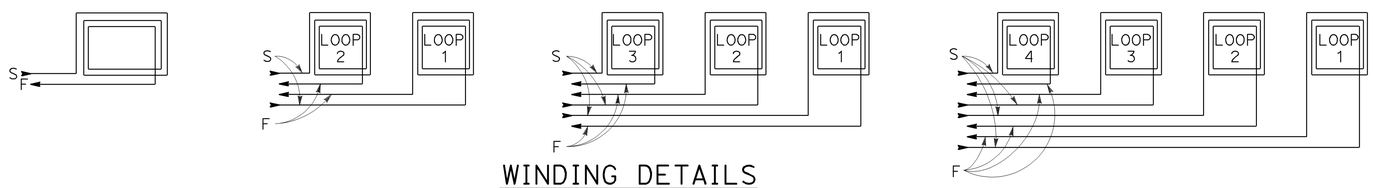

WINDING DETAILS

See Notes 6 and 7

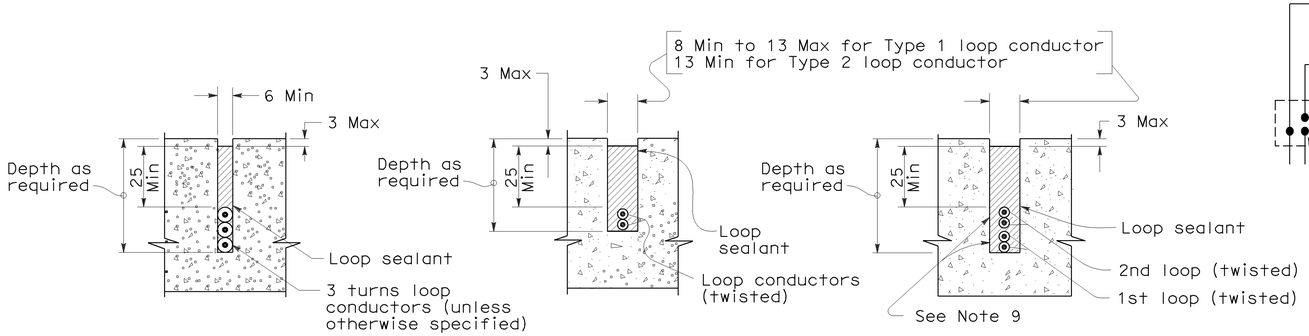

SECTION A-A | SECTION B-B | SECTION C-C

SLOT DETAILS - TYPE 1 AND TYPE 2 LOOP CONDUCTOR

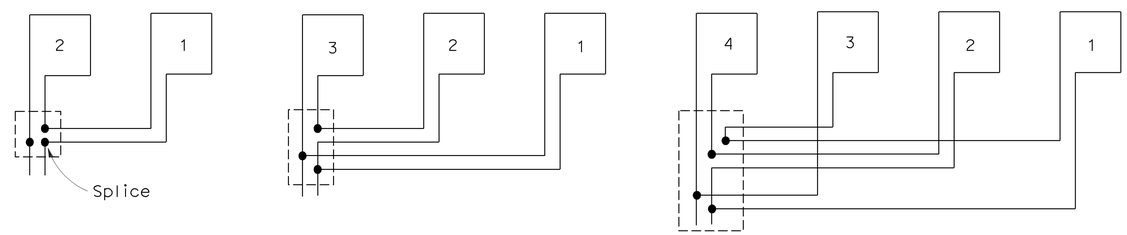

TYPICAL LOOP CONNECTIONS

(Dashed lines represent the pull box)

STATE OF CALIFORNIA
DEPARTMENT OF TRANSPORTATION

ELECTRICAL SYSTEMS (DETECTORS)

NO SCALE

ALL DIMENSIONS ARE IN MILLIMETERS UNLESS OTHERWISE SHOWN

RSP ES-5A DATED OCTOBER 5, 2007 SUPERSEDES STANDARD PLAN ES-5A DATED JULY 1, 2004-PAGE 436 OF THE STANDARD PLANS BOOK DATED JULY 2004.

REVISED STANDARD PLAN RSP ES-5A

2004 REVISED Std PLAN RSP ES-5A

8-9-07

DIST	COUNTY	ROUTE	POST MILES TOTAL PROJECT	SHEET NO.	TOTAL SHEETS
07	Ven	33	6.3/11.1	22	22

REGISTERED ELECTRICAL ENGINEER

January 20, 2012
PLANS APPROVAL DATE

REGISTERED PROFESSIONAL ENGINEER
Jeffery G. McRae
No. E14512
Exp. 6-30-12
ELECTRICAL
STATE OF CALIFORNIA

The State of California or its officers or agents shall not be responsible for the accuracy or completeness of electronic copies of this plan sheet.

To accompany plans dated 4-2-12

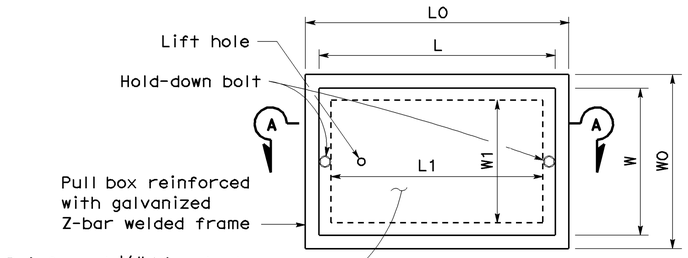

TOP VIEW

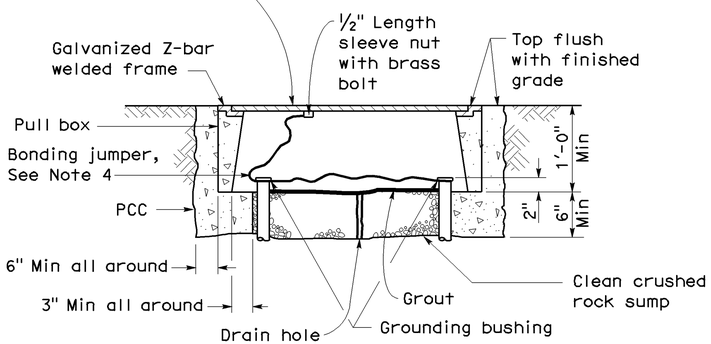

SECTION A-A

No. 3½(T), No. 5(T) AND No. 6(T) TRAFFIC PULL BOX

NOTES ON PULL BOXES:

1. Traffic pull box shall be provided with steel cover and special concrete footing. Steel cover shall have embossed non-skid pattern.
2. Steel reinforcing shall be as regularly used in the standard products of the respective manufacturer.
3. Pull box covers must be marked as follows: "SERVICE" Service circuits between service point and service disconnect; "SPRINKLER-CONTROL" Sprinkler control circuits, 50 V or less; "CALTRANS" On all pull boxes, except pull boxes marked "SPRINKLER-CONTROL"; and "TELEPHONE" Telephone service.
   A) No. 3½(T) pull box.
      1) "SIGNAL" - Traffic signal circuits with or without street or sign lighting circuits.
      2) "ST LIGHTING" - Street or sign lighting circuits where voltage is under 600 V.
   B) No. 5(T) or 6(T) pull box.
      1) "TRAFFIC SIGNAL" - Traffic signal circuits with or without street or sign lighting circuits.
      2) "STREET LIGHTING" - Street or sign lighting circuits where voltage is under 600 V.
      3) "STREET LIGHTING-HIGH VOLTAGE" - Street or sign lighting circuits where voltage is above 600 V.
      4) "IRRIGATION" - Circuits to irrigation controller 120 V or more.
      5) "RAMP METER" - Ramp meter circuits.
      6) "COUNT STATION" - Count or speed monitor circuits.
      7) "COMMUNICATION" - Communication circuits.
      8) "TOS COMMUNICATIONS" - TOS communications line.
      9) "TOS POWER" - TOS power.
      10) "TDC POWER" - Telephone demarcation cabinet power.
      11) "CCTV" - Closed circuit television circuits.
      12) "TMS" - Traffic monitoring station circuits.
      13) "CMS" - Changeable message sign circuits.
      14) "HAR" - Highway advisory radio circuits.
4. Bonding jumper for metal covers shall be 3' long, minimum.
5. The nominal dimensions of the opening in which the cover sets must be the same as the cover dimensions except the length and width dimensions shall be ⅛" greater.
6. Covers and boxes must be interchangeable with California standard male and female gages. When interchanged with a standard male or female gage, the top surfaces must be flush within ⅛".

DIMENSION TABLE

PULL BOX	BOX						COVER				
	Minimum * Thickness	Minimum Depth Box and Extension	WO	LO	L1	W1	L **	W **	R	Edge Thickness	Edge Taper
No. 3½(T)	1½"	1'-0"	1'-5"± 1"	1'-8⅞"±	1'-2½"±	10⅝"± 1"	1'-8"±	1'-1¾"±	0"	½"	None
No. 5(T)	1¾"	1'-0"	1'-11½"± 1"	2'-5½"±	1'-7"±	1'-1"± 1"	2'-3"±	1'-4"±	0"	½"	None
No. 6(T)	2"	1'-0"	2'-6"± 1"	2'-11½"±	1'-11½"±	1'-5"± 1"	2'-9"±	1'-8"±	0"	½"	None

* Excluding conduit web ** Top dimension

STATE OF CALIFORNIA
DEPARTMENT OF TRANSPORTATION

ELECTRICAL SYSTEMS (TRAFFIC RATED PULL BOX)

NO SCALE

NSP ES-8B DATED JANUARY 20, 2012 SUPPLEMENTS THE STANDARD PLANS BOOK DATED MAY 2006.

NEW STANDARD PLAN NSP ES-8B

2006 NEW STANDARD PLAN NSP ES-8B