Dist	COUNTY	ROUTE	KILOMETER POST TOTAL PROJECT	SHEET No.	TOTAL SHEETS
07	LA	101	24.9/25.9	1	213

NH-Q101(185)E

STATE OF CALIFORNIA
DEPARTMENT OF TRANSPORTATION

PROJECT PLANS FOR CONSTRUCTION ON
STATE HIGHWAY
IN LOS ANGELES COUNTY
IN LOS ANGELES
FROM 0.7 KM EAST OF VAN NUYS BOULEVARD UNDERCROSSING
TO 0.4 KM WEST OF VAN NUYS BOULEVARD UNDERCROSSING

TO BE SUPPLEMENTED BY STANDARD PLANS DATED JULY 2004

INDEX OF SHEETS

SHEET No.	DESCRIPTION
1	TITLE AND LOCATION MAP
2-4	TYPICAL CROSS SECTIONS
5-8	LAYOUT
9-13	PROFILE
14-43	CONSTRUCTION DETAILS
44	TEMPORARY WATER POLLUTION CONTROL DETAILS
45-52	DRAINAGE PLAN, PROFILES, DETAILS AND QUANTITIES
53-56	UTILITY PLAN
57	CONSTRUCTION AREA SIGNS
58-67	STAGE CONSTRUCTION, TRAFFIC HANDLING PLANS AND QUANTITIES
68-72	TRAFFIC HANDLING DETAILS
73-79	PAVEMENT DELINEATION AND SIGN PLAN, DETAILS AND QUANTITES
80-99	SIGN DETAILS AND QUANTITIES
100	SUMMARY OF QUANTITIES
101-122	SOUND WALL PLANS AND DETAILS
123-130	HIGHWAY PLANTING
131-164	ELECTRICAL PLANS
165-213	REVISED AND NEW STANDARD PLANS

THE STANDARD PLANS LIST APPLICABLE TO THIS CONTRACT IS INCLUDED IN THE NOTICE TO BIDDERS AND SPECIAL PROVISIONS BOOK.

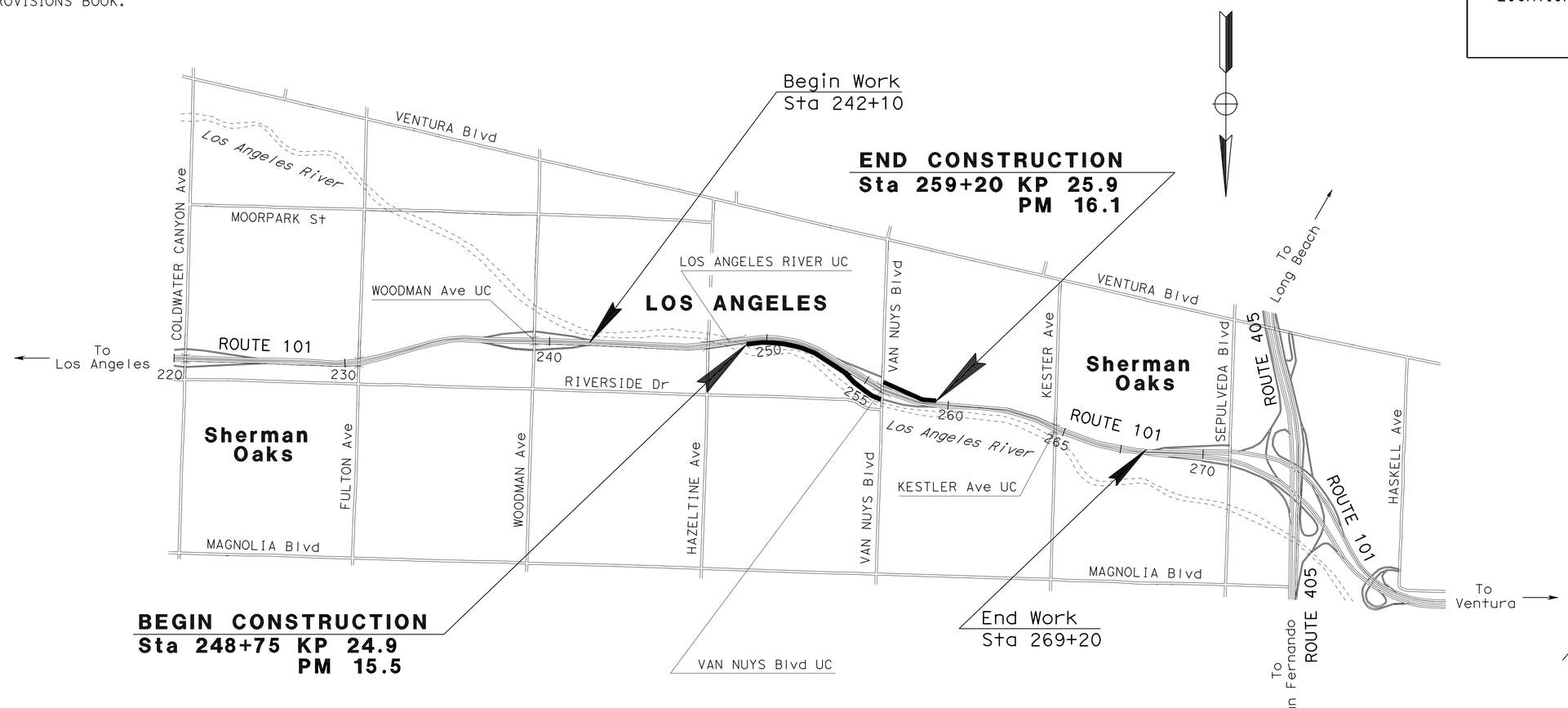

NO SCALE

THE CONTRACTOR SHALL POSSESS THE CLASS (OR CLASSES) OF LICENSE AS SPECIFIED IN THE "NOTICE TO BIDDERS."

PROJECT ENGINEER
REGISTERED CIVIL ENGINEER

2-20-08
DATE

REGISTERED PROFESSIONAL ENGINEER
BF VORREITER
No. C 63128
Exp. 06/30/12
CIVIL
STATE OF CALIFORNIA

August 9, 2010
PLANS APPROVAL DATE

THE STATE OF CALIFORNIA OR ITS OFFICERS OR AGENTS SHALL NOT BE RESPONSIBLE FOR THE ACCURACY OR COMPLETENESS OF ELECTRONIC COPIES OF THIS PLAN SHEET.

PROJECT MANAGER: JAVAD RAHIMZADEH
DESIGN ENGINEER: BARNABAS F. VORREITER

CONTRACT No.	07-199634
PROJECT ID	0700000210

LAST REVISION 02-26-08
DATE PLOTTED => 21-SEP-2010
TIME PLOTTED => 1121

Dist	COUNTY	ROUTE	KILOMETER POST TOTAL PROJECT	SHEET No.	TOTAL SHEETS
07	LA	101	24.9/25.9	2	213

REGISTERED CIVIL ENGINEER 2-20-08 DATE

8-9-10
PLANS APPROVAL DATE

REGISTERED PROFESSIONAL ENGINEER BF VORREITER No. C 63128 EXP. 06/30/12 CIVIL STATE OF CALIFORNIA

THE STATE OF CALIFORNIA OR ITS OFFICERS OR AGENTS SHALL NOT BE RESPONSIBLE FOR THE ACCURACY OR COMPLETENESS OF ELECTRONIC COPIES OF THIS PLAN SHEET.

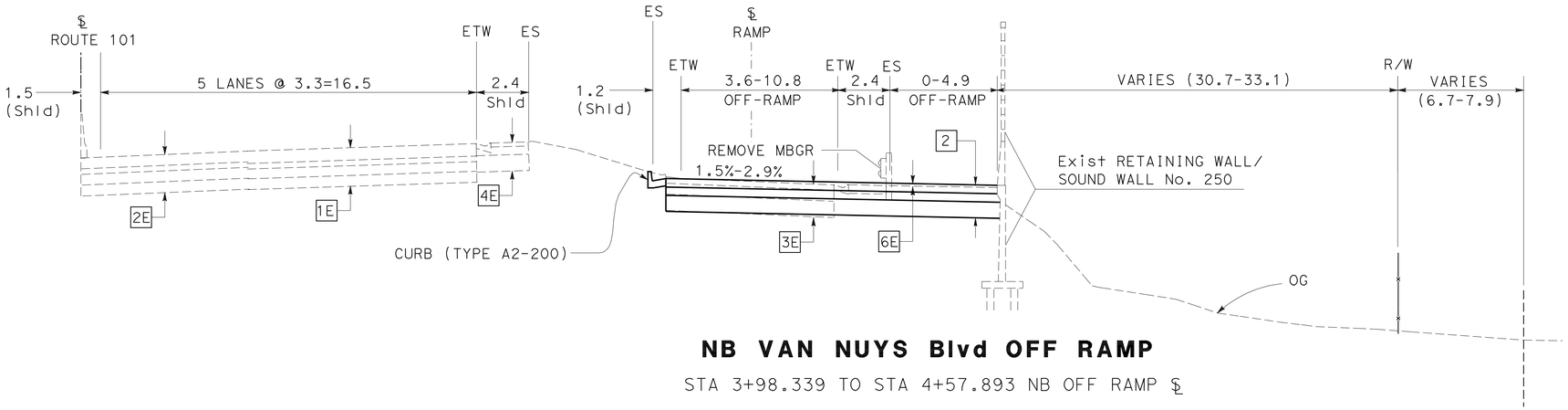

NB VAN NUYS Blvd OFF RAMP

STA 3+98.339 TO STA 4+57.893 NB OFF RAMP ℄

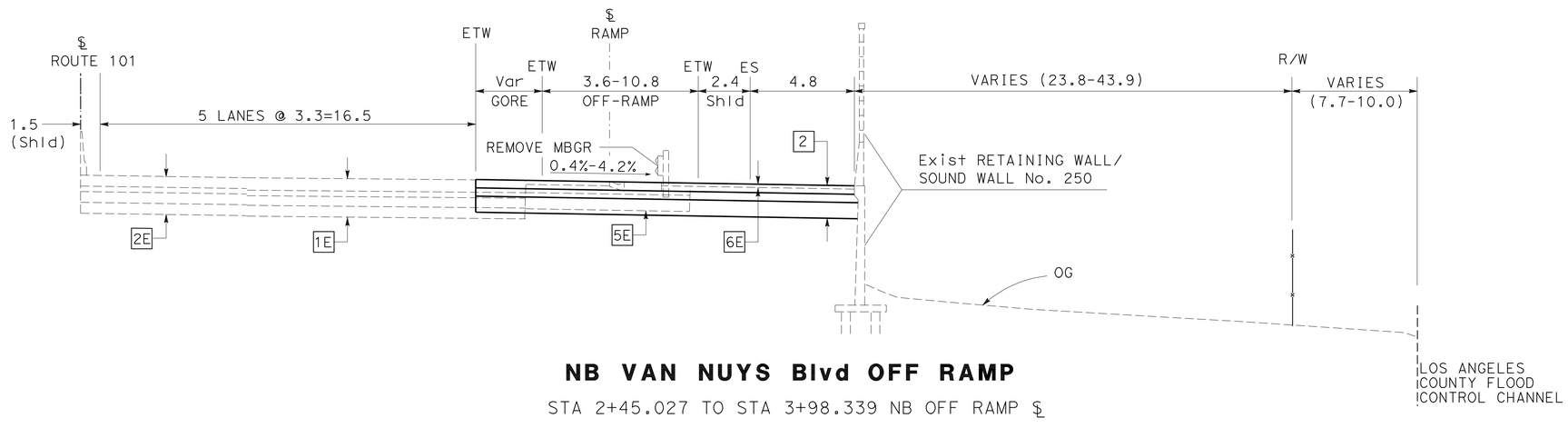

NB VAN NUYS Blvd OFF RAMP

STA 2+45.027 TO STA 3+98.339 NB OFF RAMP ℄

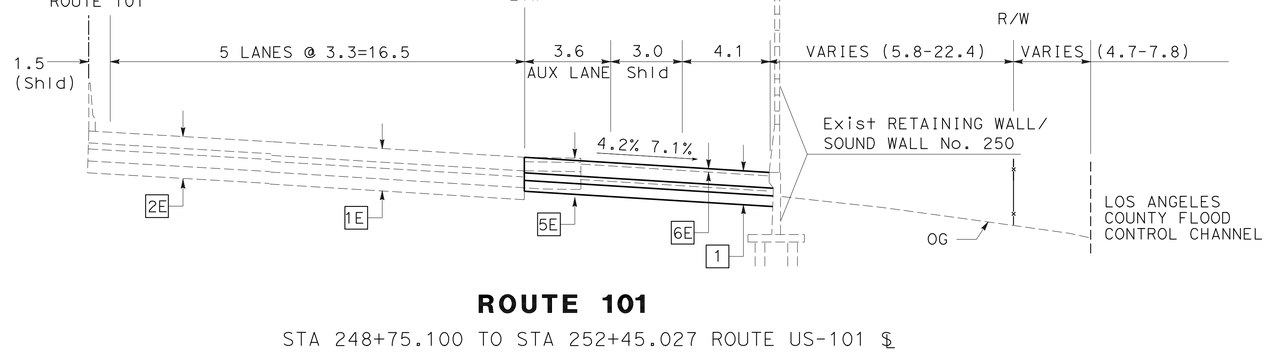

ROUTE 101

STA 248+75.100 TO STA 252+45.027 ROUTE US-101 ℄

Exist STRUCTURAL SECTIONS

1E	230 mm PCC 100 mm CEMENT TREATED SUBGRADE 180 mm UNTREATED BASE MATERIAL 200 mm IMPORTED SUBBASE MATERIAL
2E	75 mm AC (TYPE B) 200 mm PCC 100 mm CEMENT TREATED SUBGRADE 200 mm UNTREATED BASE MATERIAL 200 mm IMPORTED SUBBASE MATERIAL
3E	100 mm AC (TYPE A) 200 mm UNTREATED BASE MATERIAL 300 mm IMPORTED SUBBASE MATERIAL
4E	300 mm PCC 300 mm IMPORTED SUBBASE MATERIAL
5E	75 mm AC (TYPE A) 150 mm UNTREATED BASE MATERIAL 300 mm IMPORTED SUBBASE MATERIAL
6E	60 mm AC (TYPE B)

STRUCTURAL SECTIONS

1	300 mm JPCP 150 mm LEAN CONCRETE BASE 210 mm CLASS 3 AGGREGATE BASE
2	180 mm HOT MIX ASPHALT (TYPE B) 180 mm LEAN CONCRETE BASE 345 mm CLASS 3 AGGREGATE BASE
3	180 mm HOT MIX ASPHALT (TYPE B) 180 mm LCB (RAPID SETTING) 345 mm CLASS 3 AGGREGATE BASE
4	270 mm REPLACE CONCRETE PAVEMENT (RSC) 150 mm LCB (RAPID SETTING) 210 mm CLASS 3 AGGREGATE BASE

NOTES:

1. DIMENSIONS OF THE STRUCTURAL SECTIONS ARE SUBJECT TO TOLERANCES SPECIFIED IN THE STANDARD SPECIFICATIONS.
2. SUPERELEVATION AS SHOWN OR AS DIRECTED BY THE ENGINEER.

ABBREVIATIONS:

RSC: RAPID STRENGTH CONCRETE
AUX: AUXILIARY

DESIGN DESIGNATION (ROUTE 101)

2000 ADT= 149,000 D= 50%
2020 ADT= 174,300 T= 3.9%
DHV= 15,300 V= 105 kmh

DESIGN DESIGNATION (RAMP)

2000 ADT= 13,000
2020 ADT= 15,200 T= 5%
DHV= 1500

ALL DIMENSIONS ARE IN METERS UNLESS OTHERWISE SHOWN

TYPICAL CROSS SECTIONS

NO SCALE

X-1

STATE OF CALIFORNIA - DEPARTMENT OF TRANSPORTATION
Caltrans DESIGN

FUNCTIONAL SUPERVISOR: OC LEE
CALCULATED-DESIGNED BY: BARNABAS F. VORREITER
CHECKED BY: DWARAKESWAR PENUBOLU
REVISED BY / DATE REVISED

LAST REVISION 02-26-08 | DATE PLOTTED => 21-SEP-2010 | TIME PLOTTED => 11:22

Dist	COUNTY	ROUTE	KILOMETER POST TOTAL PROJECT	SHEET No.	TOTAL SHEETS
07	LA	101	24.9/25.9	3	213

REGISTERED CIVIL ENGINEER 2-20-08 DATE

8-9-10
PLANS APPROVAL DATE

REGISTERED PROFESSIONAL ENGINEER BF VORREITER No. C 63128 Exp. 06/30/12 CIVIL STATE OF CALIFORNIA

THE STATE OF CALIFORNIA OR ITS OFFICERS OR AGENTS SHALL NOT BE RESPONSIBLE FOR THE ACCURACY OR COMPLETENESS OF ELECTRONIC COPIES OF THIS PLAN SHEET.

Caltrans Metric

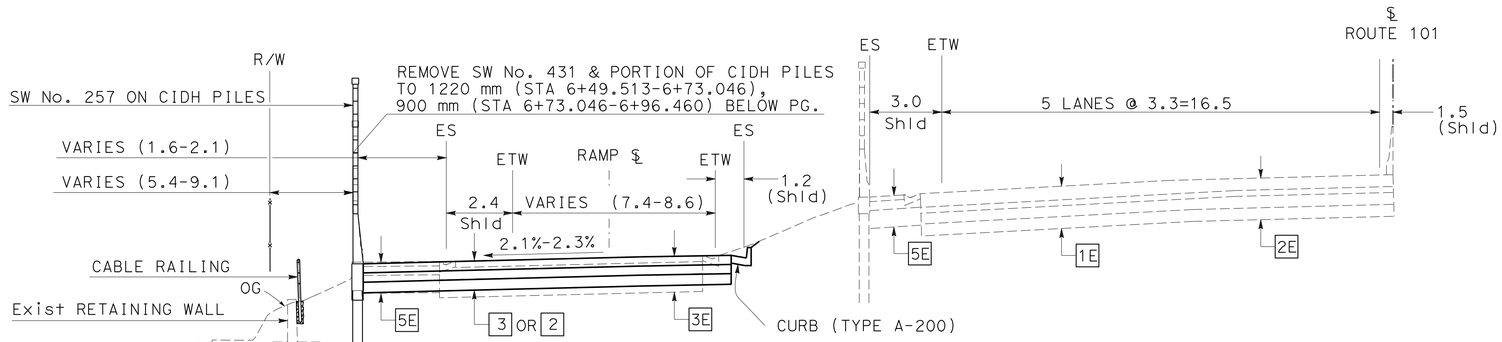

SB VAN NUYS Blvd OFF RAMP

STA 6+49.513 TO STA 6+96.460 SB OFF RAMP ℄

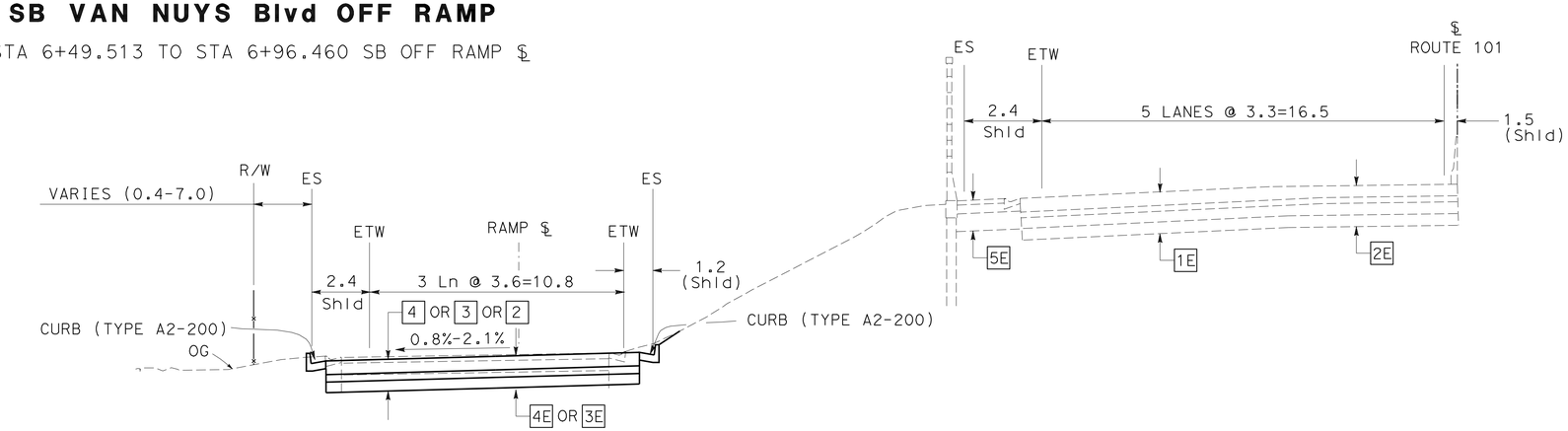

SB VAN NUYS Blvd OFF RAMP

STA 5+66.176 TO STA 6+10.000 SB OFF RAMP ℄ 4
STA 6+10.000 TO STA 6+49.513 SB OFF RAMP ℄ 2 OR 3

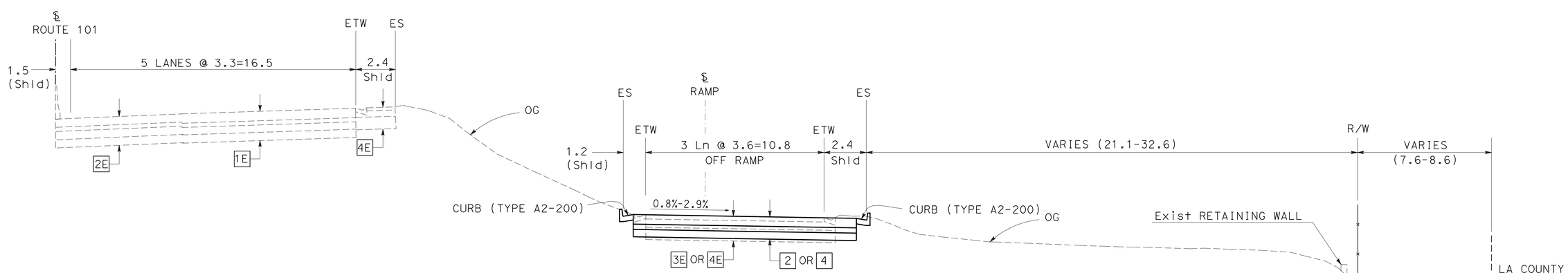

NB VAN NUYS Blvd OFF RAMP

STA 4+57.893 TO STA 5+30.000 NB OFF RAMP ℄ 2
STA 5+30.000 TO STA 5+75.473 NB OFF RAMP ℄ 4

ALL DIMENSIONS ARE IN METERS UNLESS OTHERWISE SHOWN

TYPICAL CROSS SECTIONS

NO SCALE

X-2

STATE OF CALIFORNIA - DEPARTMENT OF TRANSPORTATION
Caltrans **DESIGN**

FUNCTIONAL SUPERVISOR: OC LEE
CALCULATED-DESIGNED BY: BARNABAS F. VORREITER
CHECKED BY: DWARAKESWAR PENUBOLU
REVISED BY / DATE REVISED

LAST REVISION 02-20-08
DATE PLOTTED => 21-SEP-2010
TIME PLOTTED => 11:22

Dist	COUNTY	ROUTE	KILOMETER POST TOTAL PROJECT	SHEET No.	TOTAL SHEETS
07	LA	101	24.9/25.9	4	213

REGISTERED CIVIL ENGINEER 2-20-08 DATE

8-9-10
PLANS APPROVAL DATE

REGISTERED PROFESSIONAL ENGINEER BF VORREITER No. C 63128 Exp. 06/30/12 CIVIL STATE OF CALIFORNIA

THE STATE OF CALIFORNIA OR ITS OFFICERS OR AGENTS SHALL NOT BE RESPONSIBLE FOR THE ACCURACY OR COMPLETENESS OF ELECTRONIC COPIES OF THIS PLAN SHEET.

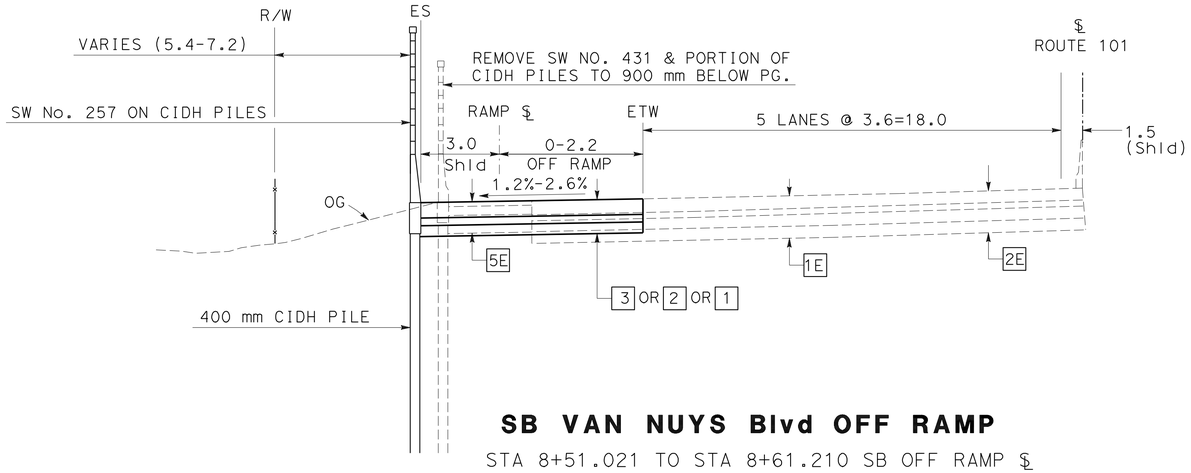

SB VAN NUYS Blvd OFF RAMP

STA 8+51.021 TO STA 8+61.210 SB OFF RAMP ℄
STA 258+70.849 TO STA 259+24.594 ROUTE 101 ℄

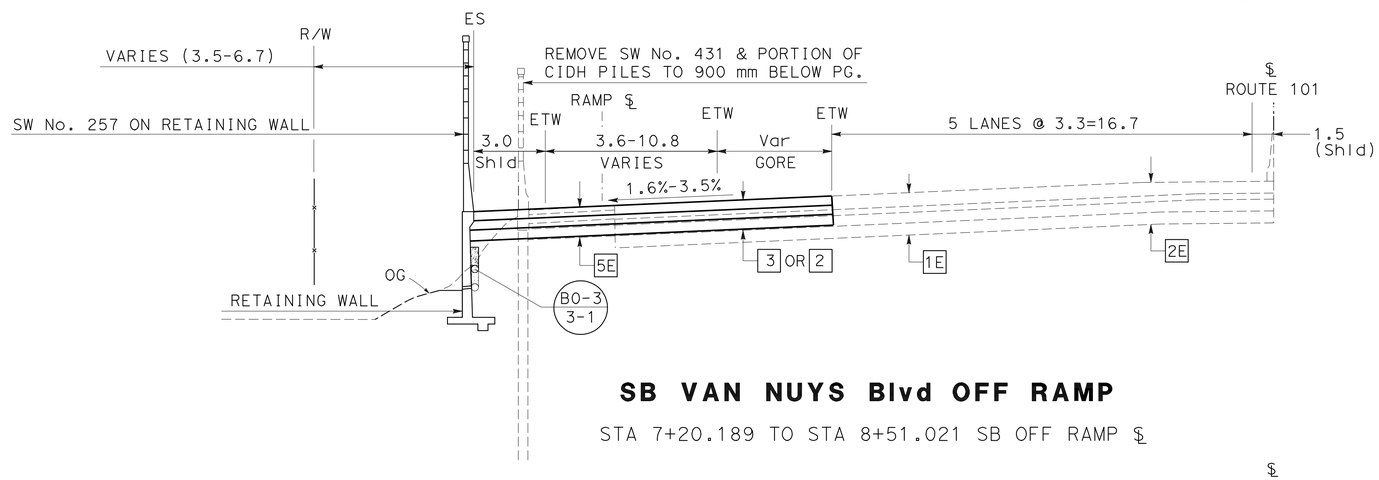

SB VAN NUYS Blvd OFF RAMP

STA 7+20.189 TO STA 8+51.021 SB OFF RAMP ℄

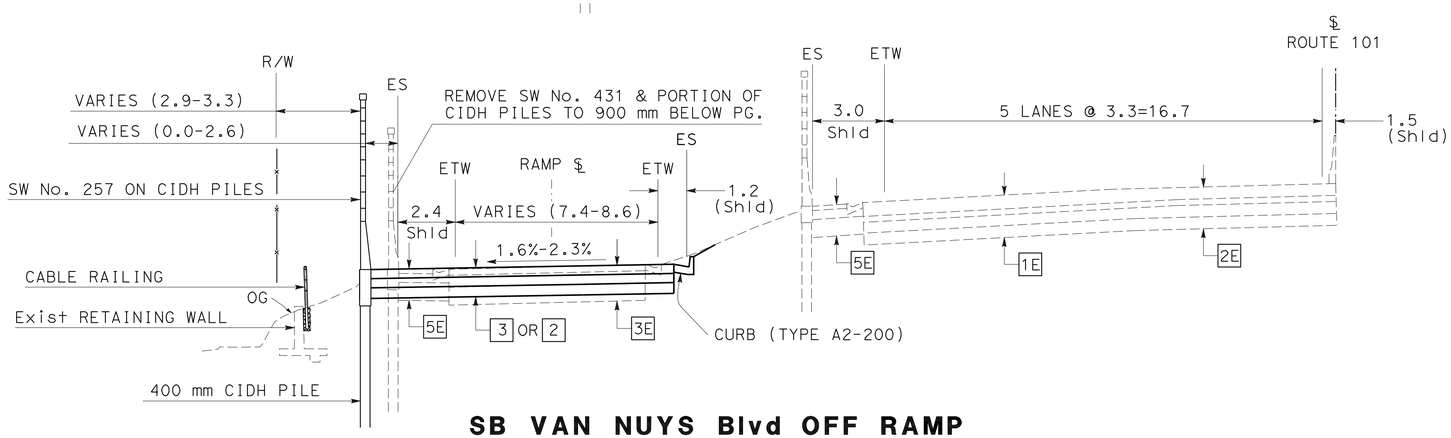

SB VAN NUYS Blvd OFF RAMP

STA 6+96.460 TO STA 7+20.189 SB OFF RAMP ℄

ALL DIMENSIONS ARE IN METERS
UNLESS OTHERWISE SHOWN

TYPICAL CROSS SECTIONS

NO SCALE

X-3

STATE OF CALIFORNIA - DEPARTMENT OF TRANSPORTATION
Caltrans
DESIGN

FUNCTIONAL SUPERVISOR: OC LEE

CALCULATED-DESIGNED BY: BARNABAS F. VORREITER
CHECKED BY: DWARAKESWAR PENUBOLU

REVISED BY | DATE REVISED

LAST REVISION 04-09-08 | DATE PLOTTED => 21-SEP-2010 | TIME PLOTTED => 11:22

Dist	COUNTY	ROUTE	KILOMETER POST TOTAL PROJECT	SHEET No.	TOTAL SHEETS
07	LA	101	24.9/25.9	5	213

REGISTERED CIVIL ENGINEER 2-20-08 DATE

8-9-10
PLANS APPROVAL DATE

REGISTERED PROFESSIONAL ENGINEER BF VORREITER No. C 63128 Exp. 06/30/12 CIVIL STATE OF CALIFORNIA

THE STATE OF CALIFORNIA OR ITS OFFICERS OR AGENTS SHALL NOT BE RESPONSIBLE FOR THE ACCURACY OR COMPLETENESS OF ELECTRONIC COPIES OF THIS PLAN SHEET.

Caltrans Metric

NOTE:
FOR COMPLETE RIGHT OF WAY AND ACCURATE ACCESS DATA SEE RIGHT OF WAY RECORD MAPS AT DISTRICT OFFICE.

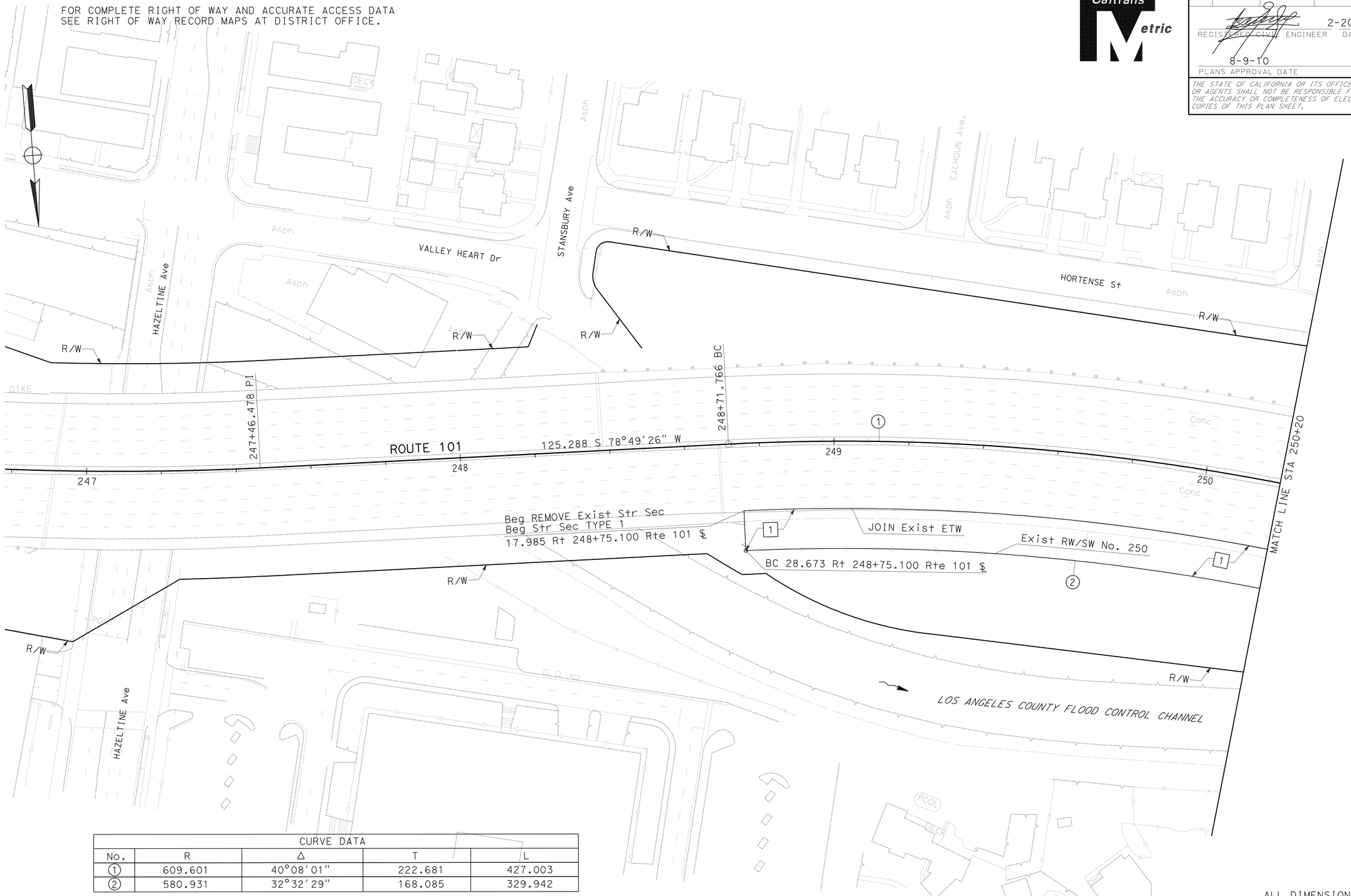

CURVE DATA				
No.	R	Δ	T	L
1	609.601	40°08'01"	222.681	427.003
2	580.931	32°32'29"	168.085	329.942

ALL DIMENSIONS ARE IN METERS UNLESS OTHERWISE SHOWN

LAYOUT

SCALE 1:500

L-1

STATE OF CALIFORNIA - DEPARTMENT OF TRANSPORTATION
Caltrans
DESIGN

FUNCTIONAL SUPERVISOR: OC LEE
CALCULATED-DESIGNED BY: BARNABAS F. VORREITER
CHECKED BY: DWARAKESWAR PENUBOLU
REVISED BY
DATE REVISED

LAST REVISION 02-20-08
DATE PLOTTED => 21-SEP-2010
TIME PLOTTED => 11:22

Dist	COUNTY	ROUTE	KILOMETER POST TOTAL PROJECT	SHEET No.	TOTAL SHEETS
07	LA	101	24.9/25.9	6	213

REGISTERED CIVIL ENGINEER 2-20-08 DATE

8-9-10
PLANS APPROVAL DATE

REGISTERED PROFESSIONAL ENGINEER BF VORREITER No. C 63128 Exp. 06/30/12 CIVIL STATE OF CALIFORNIA

THE STATE OF CALIFORNIA OR ITS OFFICERS OR AGENTS SHALL NOT BE RESPONSIBLE FOR THE ACCURACY OR COMPLETENESS OF ELECTRONIC COPIES OF THIS PLAN SHEET.

Caltrans Metric

NOTE:
FOR COMPLETE RIGHT OF WAY AND ACCURATE ACCESS DATA SEE RIGHT OF WAY RECORD MAPS AT DISTRICT OFFICE.

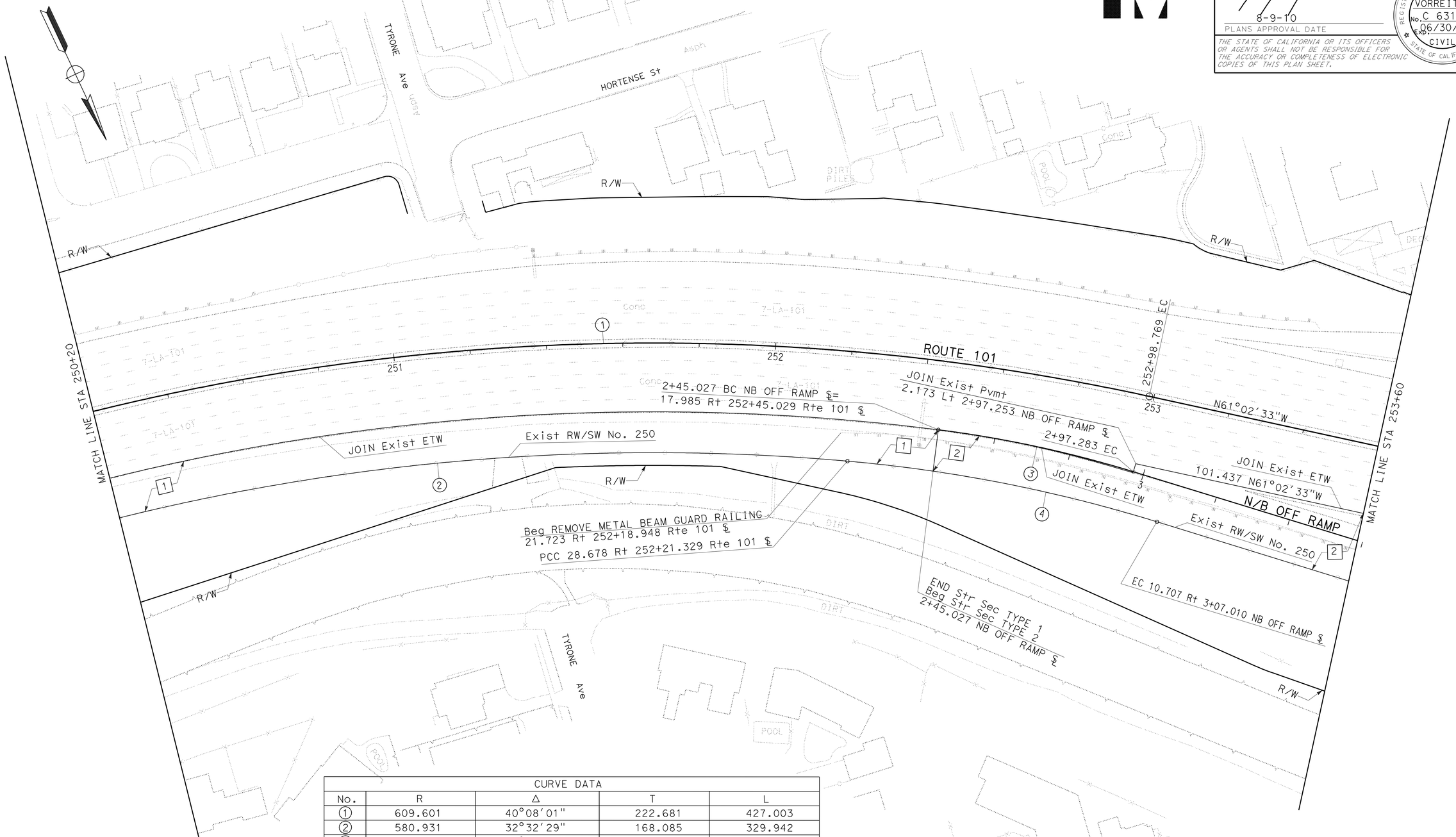

CURVE DATA				
No.	R	Δ	T	L
1	609.601	40°08′01″	222.681	427.003
2	580.931	32°32′29″	168.085	329.942
3	304.797	09°49′23″	26.192	52.256
4	389.665	12°09′24″	41.495	82.678

ALL DIMENSIONS ARE IN METERS UNLESS OTHERWISE SHOWN

LAYOUT

SCALE 1:500

L-2

STATE OF CALIFORNIA - DEPARTMENT OF TRANSPORTATION
Caltrans
DESIGN

FUNCTIONAL SUPERVISOR: OC LEE
CALCULATED-DESIGNED BY: BARNABAS F. VORREITER
CHECKED BY: DWARAKESWAR PENUBOLU
REVISED BY / DATE REVISED

LAST REVISION 02-26-08 | DATE PLOTTED => 21-SEP-2010 | TIME PLOTTED => 11:22

Dist	COUNTY	ROUTE	KILOMETER POST TOTAL PROJECT	SHEET No.	TOTAL SHEETS
07	LA	101	24.9/25.9	7	213

REGISTERED CIVIL ENGINEER 2-20-08 DATE

8-9-10
PLANS APPROVAL DATE

REGISTERED PROFESSIONAL ENGINEER BF VORREITER No. C 63128 Exp. 06/30/12 CIVIL STATE OF CALIFORNIA

THE STATE OF CALIFORNIA OR ITS OFFICERS OR AGENTS SHALL NOT BE RESPONSIBLE FOR THE ACCURACY OR COMPLETENESS OF ELECTRONIC COPIES OF THIS PLAN SHEET.

Caltrans Metric

NOTE:

FOR COMPLETE RIGHT OF WAY AND ACCURATE ACCESS DATA SEE RIGHT OF WAY RECORD MAPS AT DISTRICT OFFICE.

CURVE DATA

No.	R	Δ	T	L
5	482.903	07°41′11"	32.440	64.783
6	487.269	07°41′12"	32.735	65.371
7	497.269	07°41′13"	33.408	66.715
8	18.000	56°22′28"	9.646	17.711
9	2.500	115°37′21"	3.972	5.045
10	853.441	08°18′59"	62.045	123.872
11	2.500	114°25′57"	3.882	4.993
12	14.000	54°54′56"	7.275	13.418
13	615.255	09°08′07"	49.153	98.098
14	609.600	13°09′59"	70.351	140.083
15	1005.229	15°01′04"	132.499	263.480

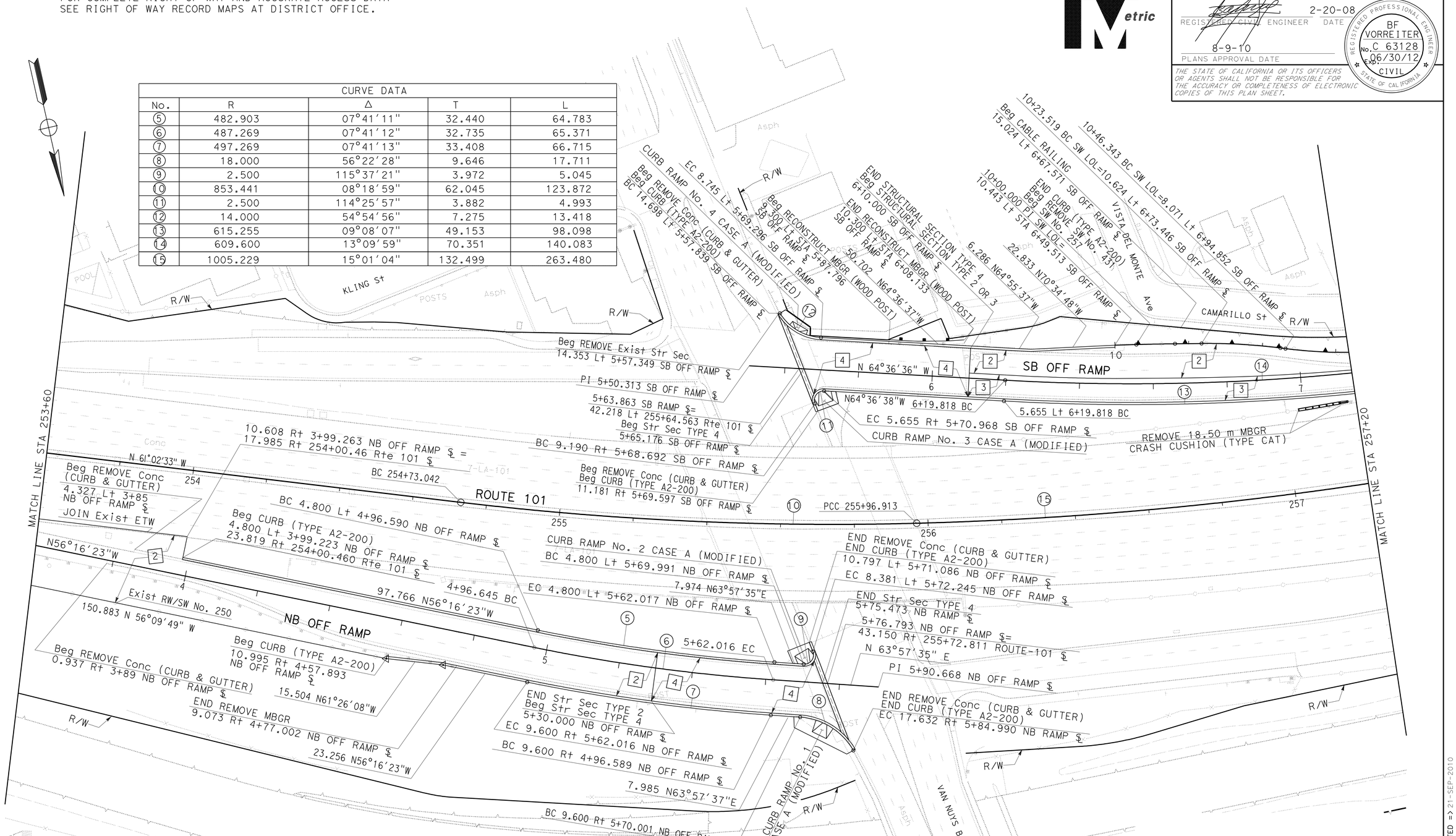

ALL DIMENSIONS ARE IN METERS UNLESS OTHERWISE SHOWN

LAYOUT

SCALE 1:500

L-3

STATE OF CALIFORNIA - DEPARTMENT OF TRANSPORTATION

Caltrans **DESIGN**

FUNCTIONAL SUPERVISOR: OC LEE

CALCULATED-DESIGNED BY: BARNABAS F. VORREITER

CHECKED BY: DWARAKESWAR PENUBOLU

REVISED BY / DATE REVISED

LAST REVISION 04-09-08 | DATE PLOTTED => 21-SEP-2010 | TIME PLOTTED => 11:22

Dist	COUNTY	ROUTE	KILOMETER POST TOTAL PROJECT	SHEET No.	TOTAL SHEETS
07	LA	101	24.9/25.9	8	213

REGISTERED CIVIL ENGINEER 2-20-08 DATE

8-9-10
PLANS APPROVAL DATE

REGISTERED PROFESSIONAL ENGINEER BF VORREITER No. C 63128 Exp. 06/30/12 CIVIL STATE OF CALIFORNIA

THE STATE OF CALIFORNIA OR ITS OFFICERS OR AGENTS SHALL NOT BE RESPONSIBLE FOR THE ACCURACY OR COMPLETENESS OF ELECTRONIC COPIES OF THIS PLAN SHEET.

Caltrans Metric

NOTE:
FOR COMPLETE RIGHT OF WAY AND ACCURATE ACCESS DATA
SEE RIGHT OF WAY RECORD MAPS AT DISTRICT OFFICE.

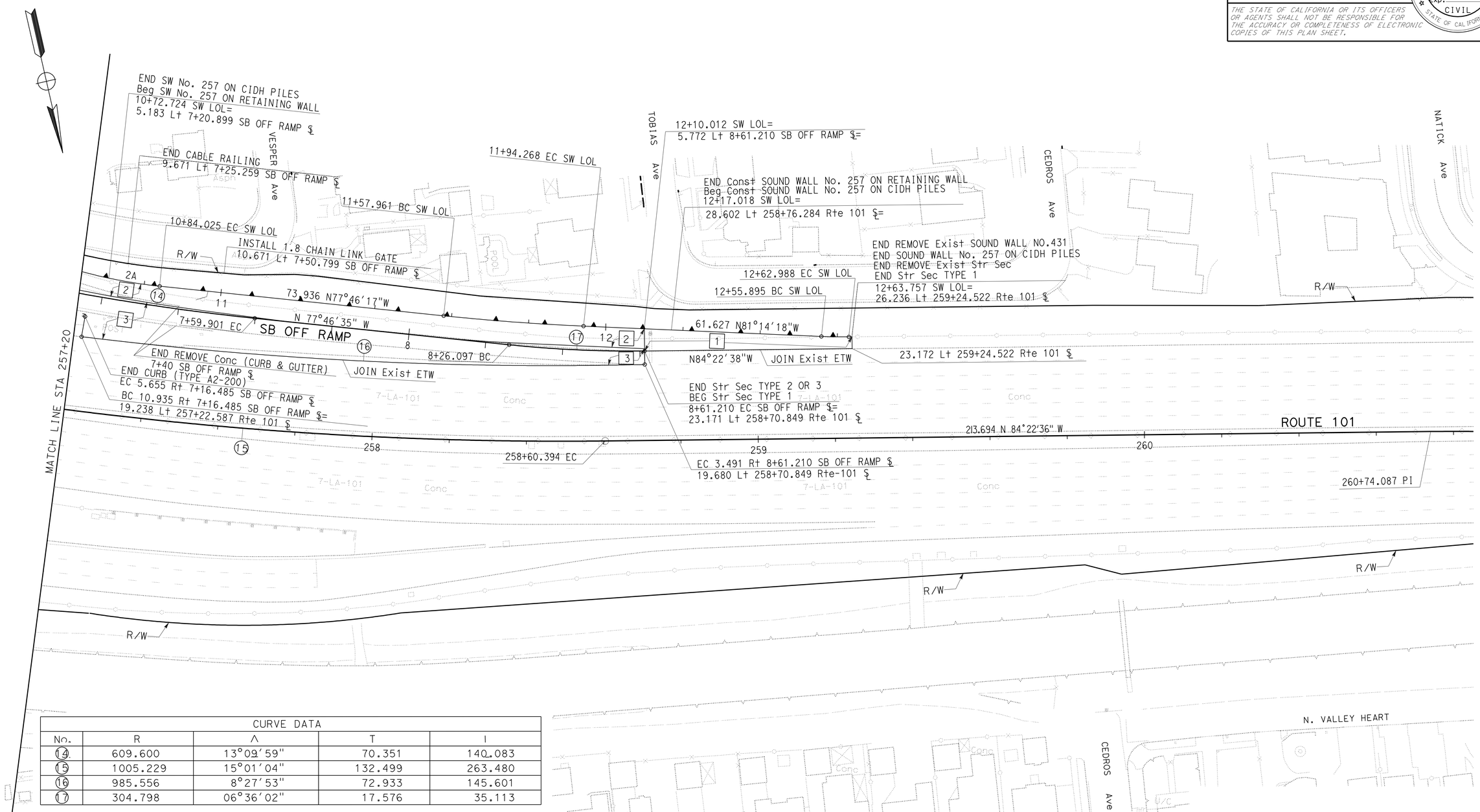

CURVE DATA				
No.	R	Δ	T	L
14	609.600	13°09'59"	70.351	140.083
15	1005.229	15°01'04"	132.499	263.480
16	985.556	8°27'53"	72.933	145.601
17	304.798	06°36'02"	17.576	35.113

ALL DIMENSIONS ARE IN METERS
UNLESS OTHERWISE SHOWN

LAYOUT
SCALE 1:500

L-4

STATE OF CALIFORNIA - DEPARTMENT OF TRANSPORTATION
Caltrans **DESIGN**

FUNCTIONAL SUPERVISOR: OC LEE
CALCULATED-DESIGNED BY: BARNABAS F. VORREITER
CHECKED BY: DWARAKESWAR PENUBOLU
REVISED BY / DATE REVISED

LAST REVISION DATE PLOTTED => 21-SEP-2010
02-20-08 TIME PLOTTED => 11:22

Dist	COUNTY	ROUTE	KILOMETER POST TOTAL PROJECT	SHEET No.	TOTAL SHEETS
07	LA	101	24.9/25.9	9	213

REGISTERED CIVIL ENGINEER 2-20-08 DATE

8-9-10
PLANS APPROVAL DATE

REGISTERED PROFESSIONAL ENGINEER BF VORREITER No. C 63128 Exp. 06/30/12 CIVIL STATE OF CALIFORNIA

THE STATE OF CALIFORNIA OR ITS OFFICERS OR AGENTS SHALL NOT BE RESPONSIBLE FOR THE ACCURACY OR COMPLETENESS OF ElevECTRONIC COPIES OF THIS PLAN SHEET.

Caltrans Metric

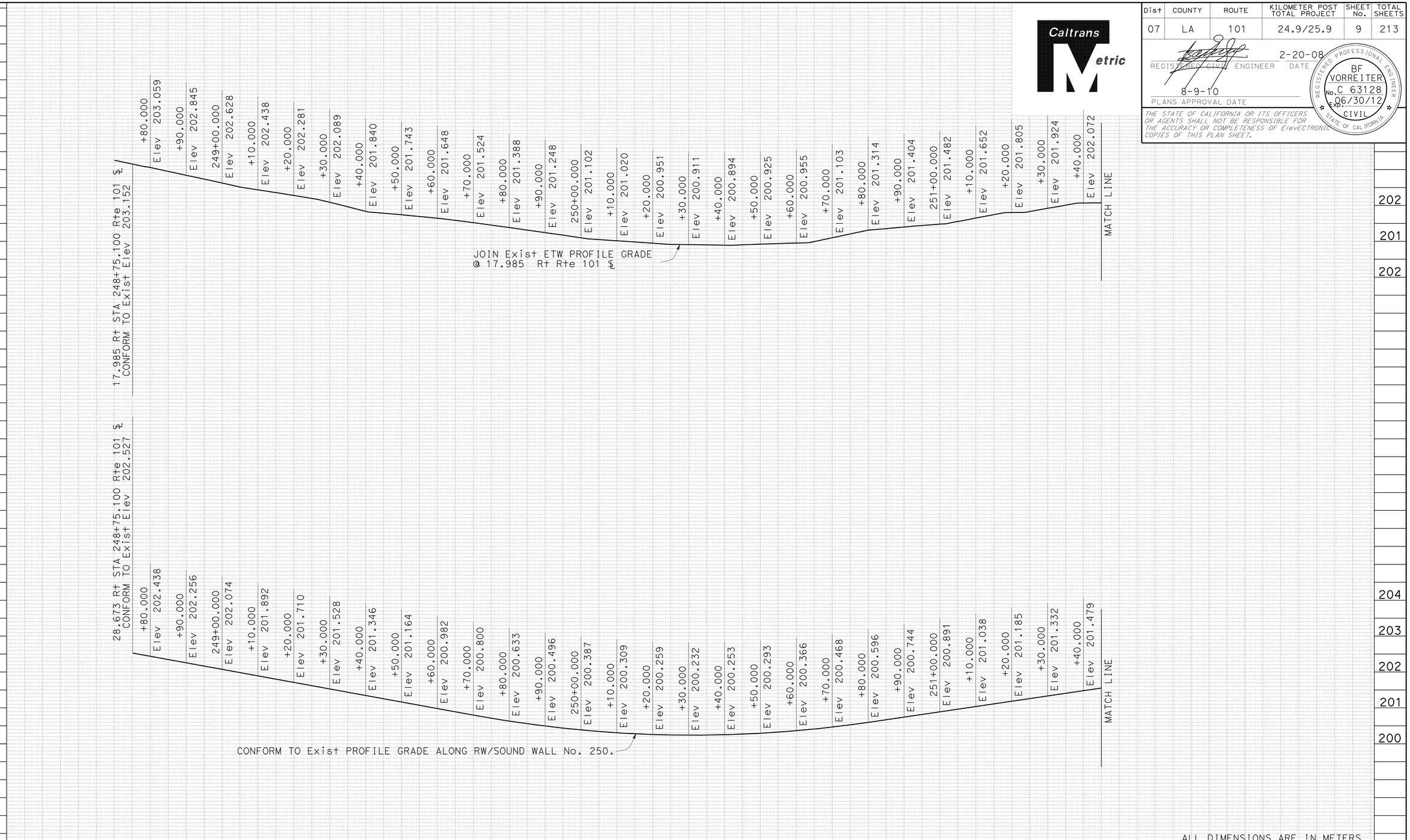

ALL DIMENSIONS ARE IN METERS UNLESS OTHERWISE SHOWN

PROFILE

SCALE: Horiz 1:500
Vert 1:50

P-1

REVISED BY	DATE REVISED

CALCULATED-DESIGNED BY: BARNABAS F. VORREITER
CHECKED BY: DWARAKESWAR PENUBOLU

FUNCTIONAL SUPERVISOR: OC LEE

STATE OF CALIFORNIA - DEPARTMENT OF TRANSPORTATION
Caltrans
DESIGN

LAST REVISION 02-20-08
DATE PLOTTED => 21-SEP-2010
TIME PLOTTED => 11:22

Dist	COUNTY	ROUTE	KILOMETER POST TOTAL PROJECT	SHEET No.	TOTAL SHEETS
07	LA	101	24.9/25.9	10	213

REGISTERED CIVIL ENGINEER 2-20-08 DATE

8-9-10
PLANS APPROVAL DATE

REGISTERED PROFESSIONAL ENGINEER BF VORREITER No. C 63128 Exp. 06/30/12 CIVIL STATE OF CALIFORNIA

THE STATE OF CALIFORNIA OR ITS OFFICERS OR AGENTS SHALL NOT BE RESPONSIBLE FOR THE ACCURACY OR COMPLETENESS OF ElevECTRONIC COPIES OF THIS PLAN SHEET.

Caltrans Metric

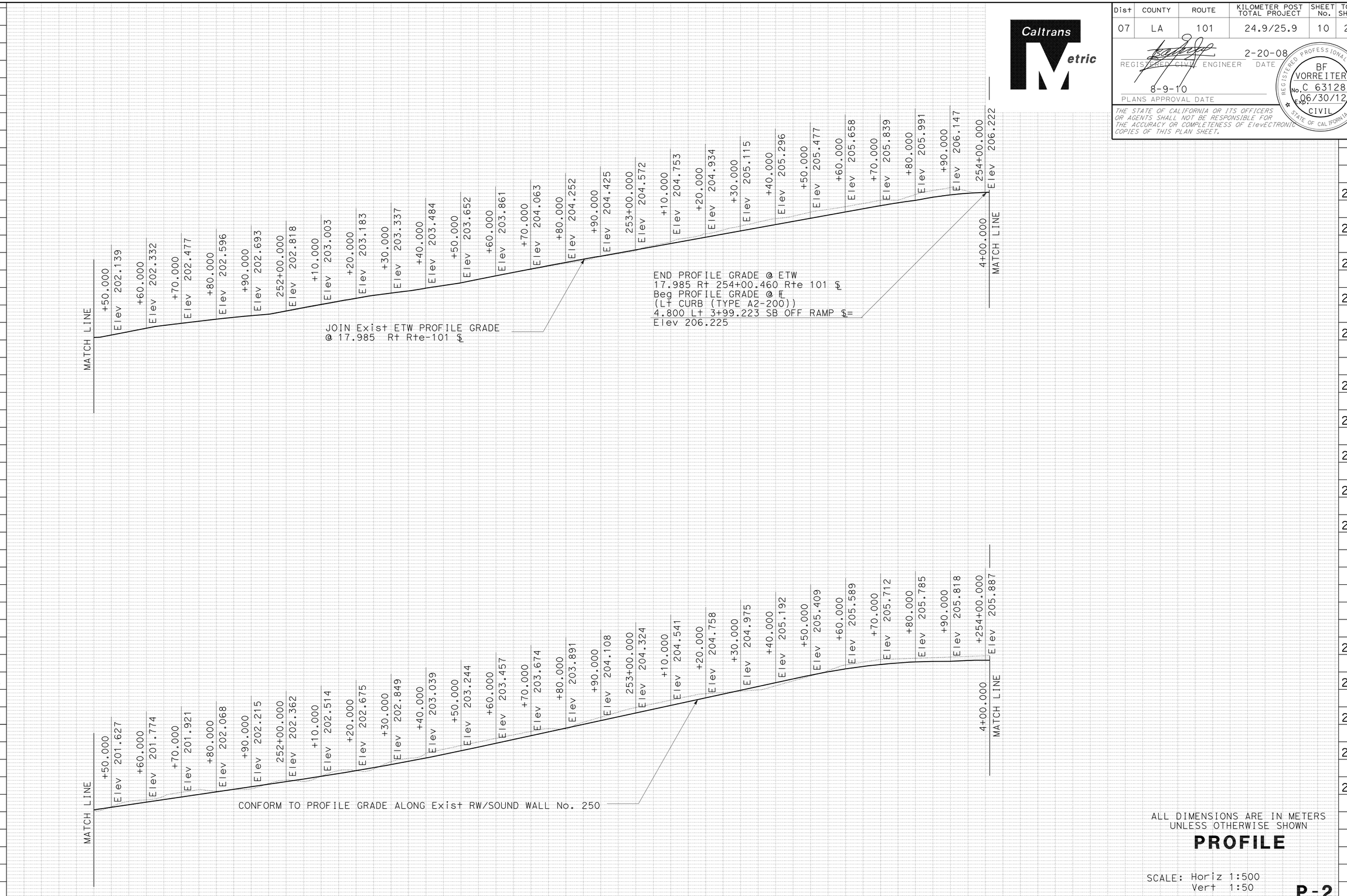

ALL DIMENSIONS ARE IN METERS UNLESS OTHERWISE SHOWN

PROFILE

SCALE: Horiz 1:500
Vert 1:50

P-2

STATE OF CALIFORNIA - DEPARTMENT OF TRANSPORTATION
Caltrans
DESIGN

FUNCTIONAL SUPERVISOR: OC LEE

CALCULATED-DESIGNED BY: BARNABAS F. VORREITER
CHECKED BY: DWARAKESWAR PENUBOLU

REVISED BY | DATE REVISED

LAST REVISION 02-20-08 | DATE PLOTTED => 21-SEP-2010 | TIME PLOTTED => 11:22

Dist	COUNTY	ROUTE	KILOMETER POST TOTAL PROJECT	SHEET No.	TOTAL SHEETS
07	LA	101	24.9/25.9	11	213

REGISTERED CIVIL ENGINEER 2-20-08 DATE

8-9-10
PLANS APPROVAL DATE

REGISTERED PROFESSIONAL ENGINEER BF VORREITER No. C 63128 Exp. 06/30/12 CIVIL STATE OF CALIFORNIA

THE STATE OF CALIFORNIA OR ITS OFFICERS OR AGENTS SHALL NOT BE RESPONSIBLE FOR THE ACCURACY OR COMPLETENESS OF ElevECTRONIC COPIES OF THIS PLAN SHEET.

Caltrans Metric

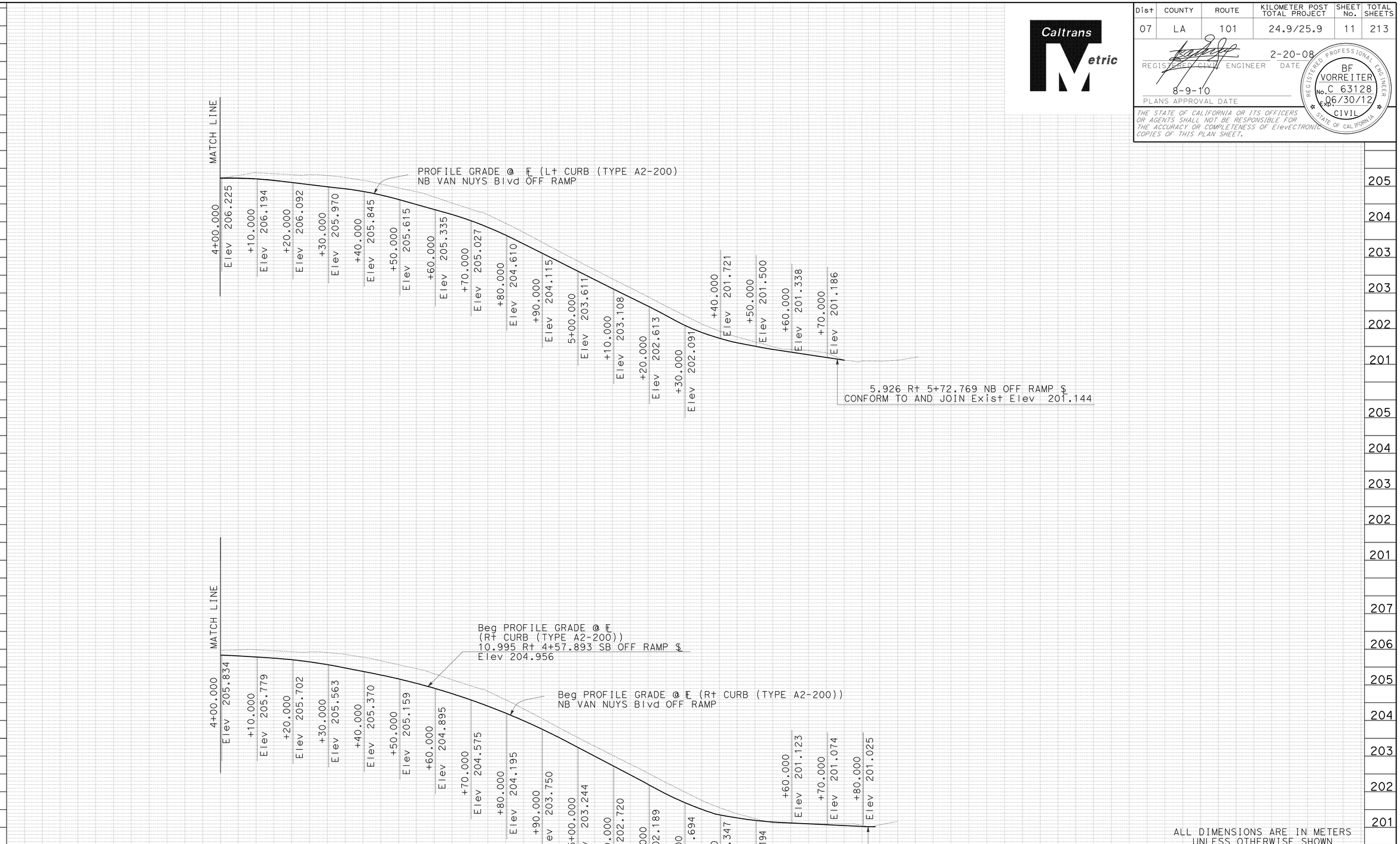

ALL DIMENSIONS ARE IN METERS UNLESS OTHERWISE SHOWN

PROFILE

SCALE: Horiz 1:500
Vert 1:50

P-3

STATE OF CALIFORNIA - DEPARTMENT OF TRANSPORTATION
Caltrans
DESIGN

FUNCTIONAL SUPERVISOR: OC LEE

CALCULATED-DESIGNED BY: BARNABAS F. VORREITER
CHECKED BY: DWARAKESWAR PENUBOLU

REVISED BY / DATE REVISED

LAST REVISION 02-20-08
DATE PLOTTED => 21-SEP-2010
TIME PLOTTED => 11:23

Dist	COUNTY	ROUTE	KILOMETER POST TOTAL PROJECT	SHEET No.	TOTAL SHEETS
07	LA	101	24.9/25.9	12	213

REGISTERED CIVIL ENGINEER 2-20-08 DATE

8-9-10
PLANS APPROVAL DATE

REGISTERED PROFESSIONAL ENGINEER BF VORREITER No. C 63128 Exp. 06/30/12 CIVIL STATE OF CALIFORNIA

THE STATE OF CALIFORNIA OR ITS OFFICERS OR AGENTS SHALL NOT BE RESPONSIBLE FOR THE ACCURACY OR COMPLETENESS OF ElevECTRONIC COPIES OF THIS PLAN SHEET.

Caltrans Metric

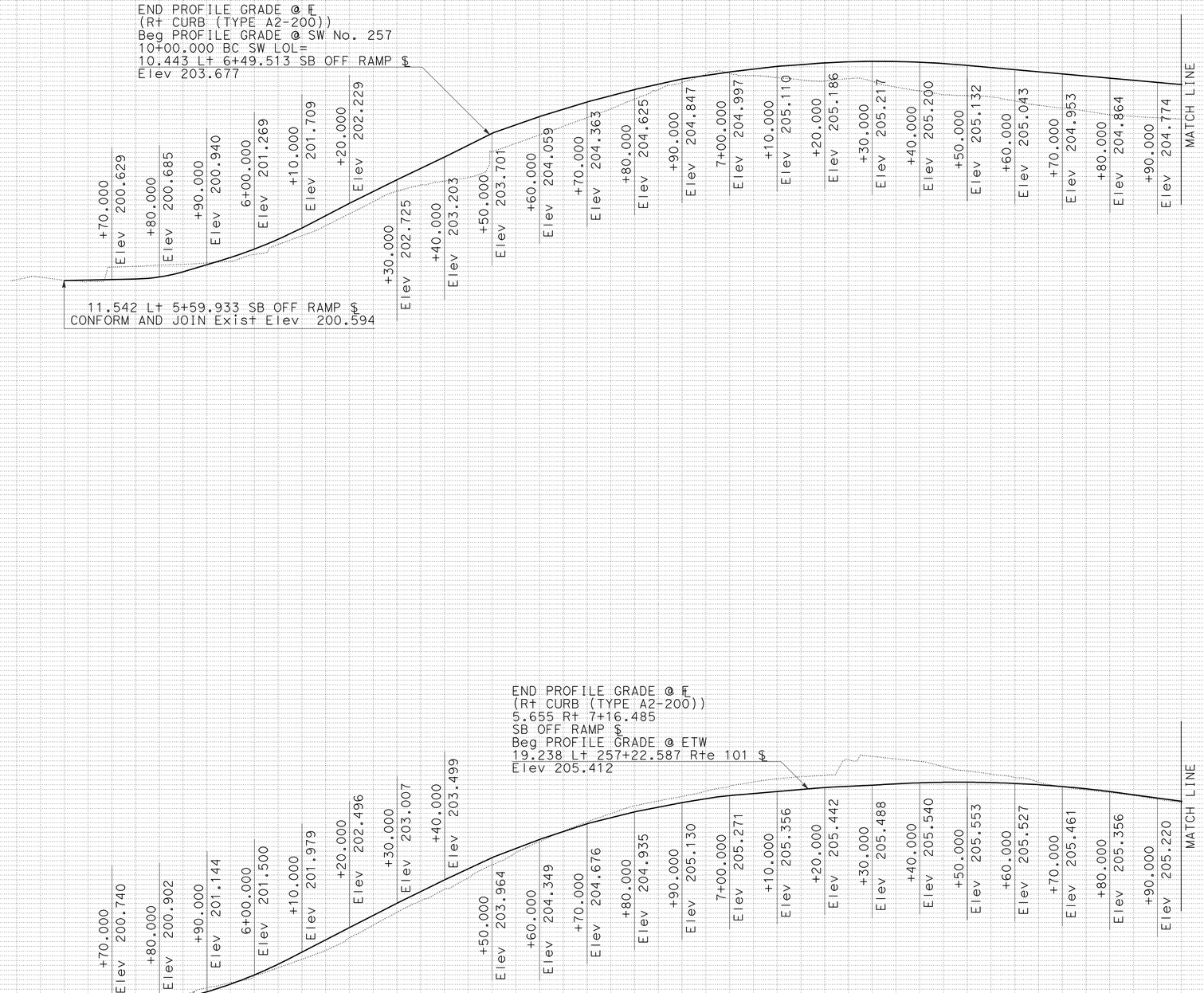

ALL DIMENSIONS ARE IN METERS UNLESS OTHERWISE SHOWN

PROFILE

SCALE: Horiz 1:500
Vert 1:50

P-4

STATE OF CALIFORNIA - DEPARTMENT OF TRANSPORTATION
Caltrans
DESIGN

FUNCTIONAL SUPERVISOR: OC LEE

CALCULATED-DESIGNED BY: BARNABAS F. VORREITER
CHECKED BY: DWARAKESWAR PENUBOLU

REVISED BY | DATE REVISED

LAST REVISION 02-20-08 | DATE PLOTTED => 21-SEP-2010 | TIME PLOTTED => 11:23

Dist	COUNTY	ROUTE	KILOMETER POST TOTAL PROJECT	SHEET No.	TOTAL SHEETS
07	LA	101	24.9/25.9	13	213

REGISTERED CIVIL ENGINEER 2-20-08 DATE

8-9-10
PLANS APPROVAL DATE

REGISTERED PROFESSIONAL ENGINEER BF VORREITER No. C 63128 EXP. 06/30/12 CIVIL STATE OF CALIFORNIA

THE STATE OF CALIFORNIA OR ITS OFFICERS OR AGENTS SHALL NOT BE RESPONSIBLE FOR THE ACCURACY OR COMPLETENESS OF ElevECTRONIC COPIES OF THIS PLAN SHEET.

Caltrans Metric

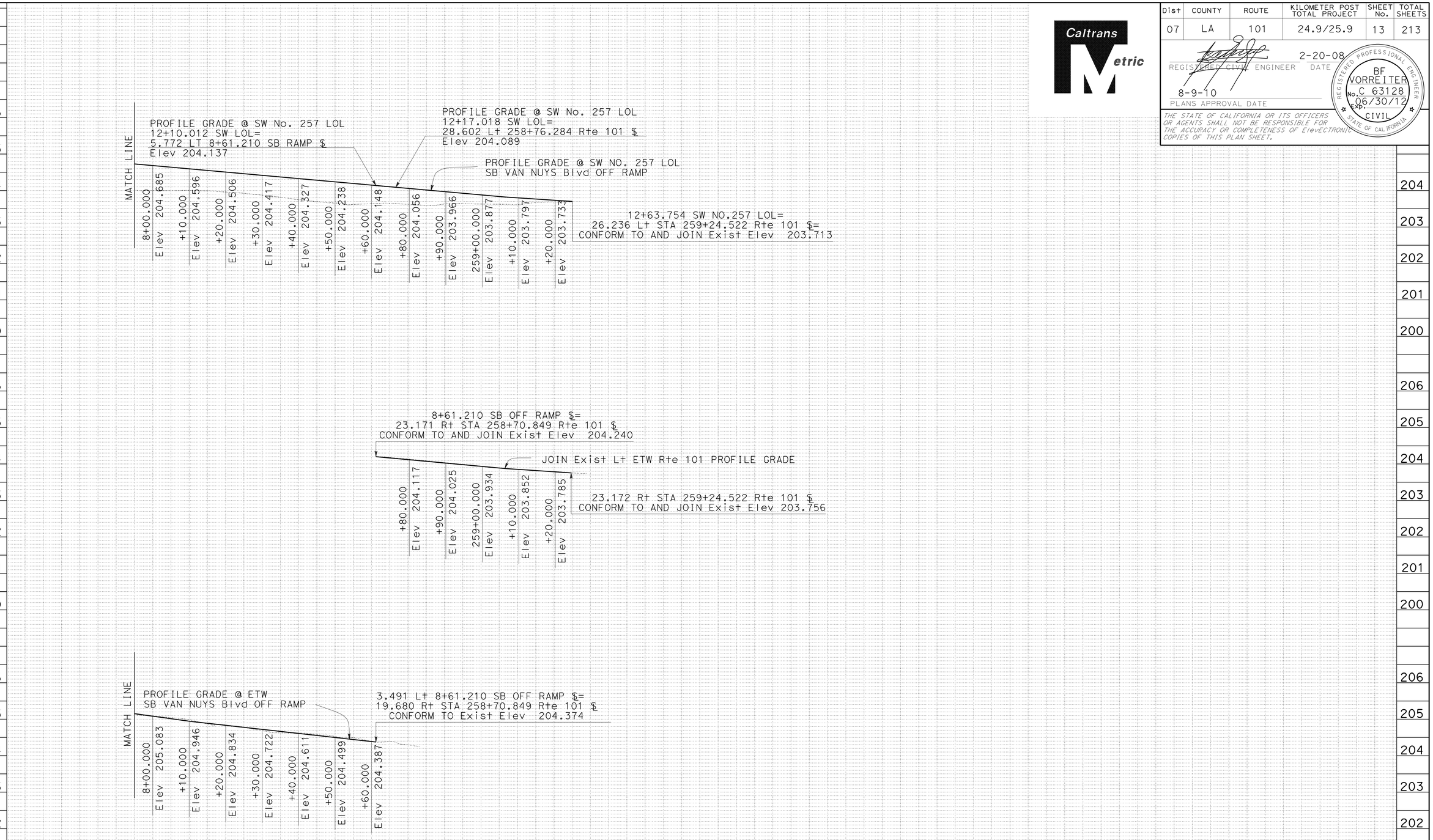

ALL DIMENSIONS ARE IN METERS
UNLESS OTHERWISE SHOWN

PROFILE

SCALE: Horiz 1:500
Vert 1:50

P-5

STATE OF CALIFORNIA - DEPARTMENT OF TRANSPORTATION
Caltrans
DESIGN

FUNCTIONAL SUPERVISOR: OC LEE

CALCULATED-DESIGNED BY: BARNABAS F. VORREITER
CHECKED BY: DWARAKESWAR PENUBOLU

REVISED BY | DATE REVISED

LAST REVISION 02-20-08
DATE PLOTTED => 21-SEP-2010
TIME PLOTTED => 11:23

Dist	COUNTY	ROUTE	KILOMETER POST TOTAL PROJECT	SHEET No.	TOTAL SHEETS
07	LA	101	24.9/25.9	14	213

REGISTERED CIVIL ENGINEER 2-20-08 DATE

8-9-10
PLANS APPROVAL DATE

REGISTERED PROFESSIONAL ENGINEER BF VORREITER No. C 63128 Exp. 06/30/12 CIVIL STATE OF CALIFORNIA

THE STATE OF CALIFORNIA OR ITS OFFICERS OR AGENTS SHALL NOT BE RESPONSIBLE FOR THE ACCURACY OR COMPLETENESS OF ELECTRONIC COPIES OF THIS PLAN SHEET.

Caltrans Metric

LEGEND:

ROADWAY Exc (TYPE Z-2) (AERIALLY DEPOSITED LEAD)

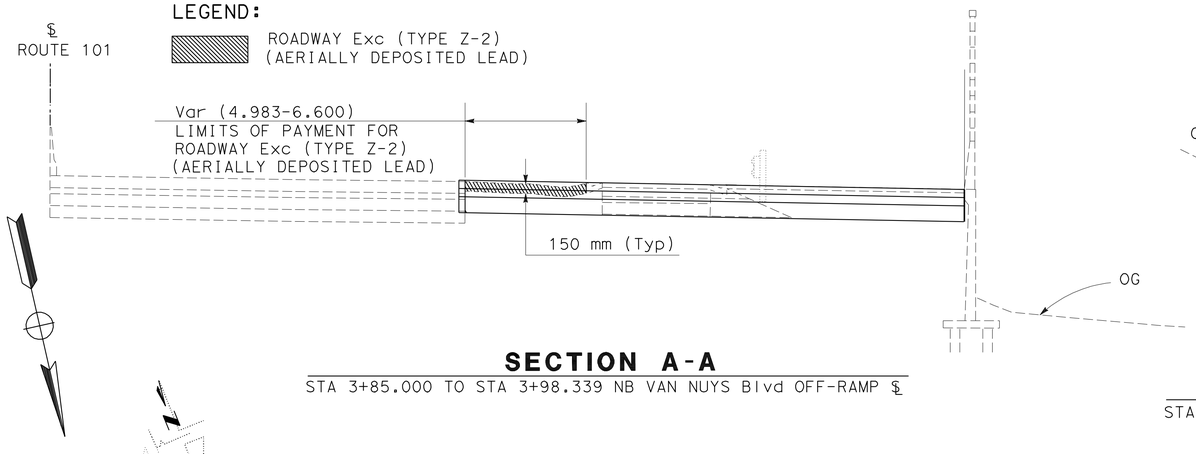

SECTION A-A

STA 3+85.000 TO STA 3+98.339 NB VAN NUYS Blvd OFF-RAMP ℄

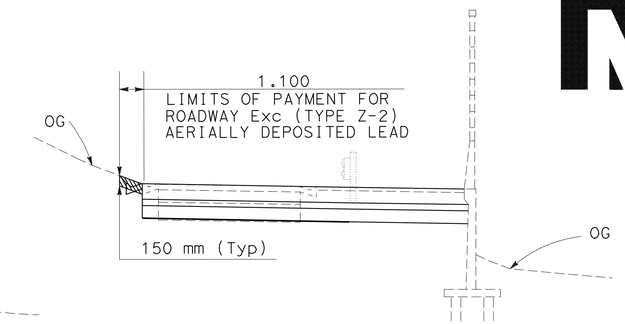

SECTION B-B

STA 3+98.339 TO STA 4+58.000 NB VAN NUYS Blvd OFF-RAMP ℄

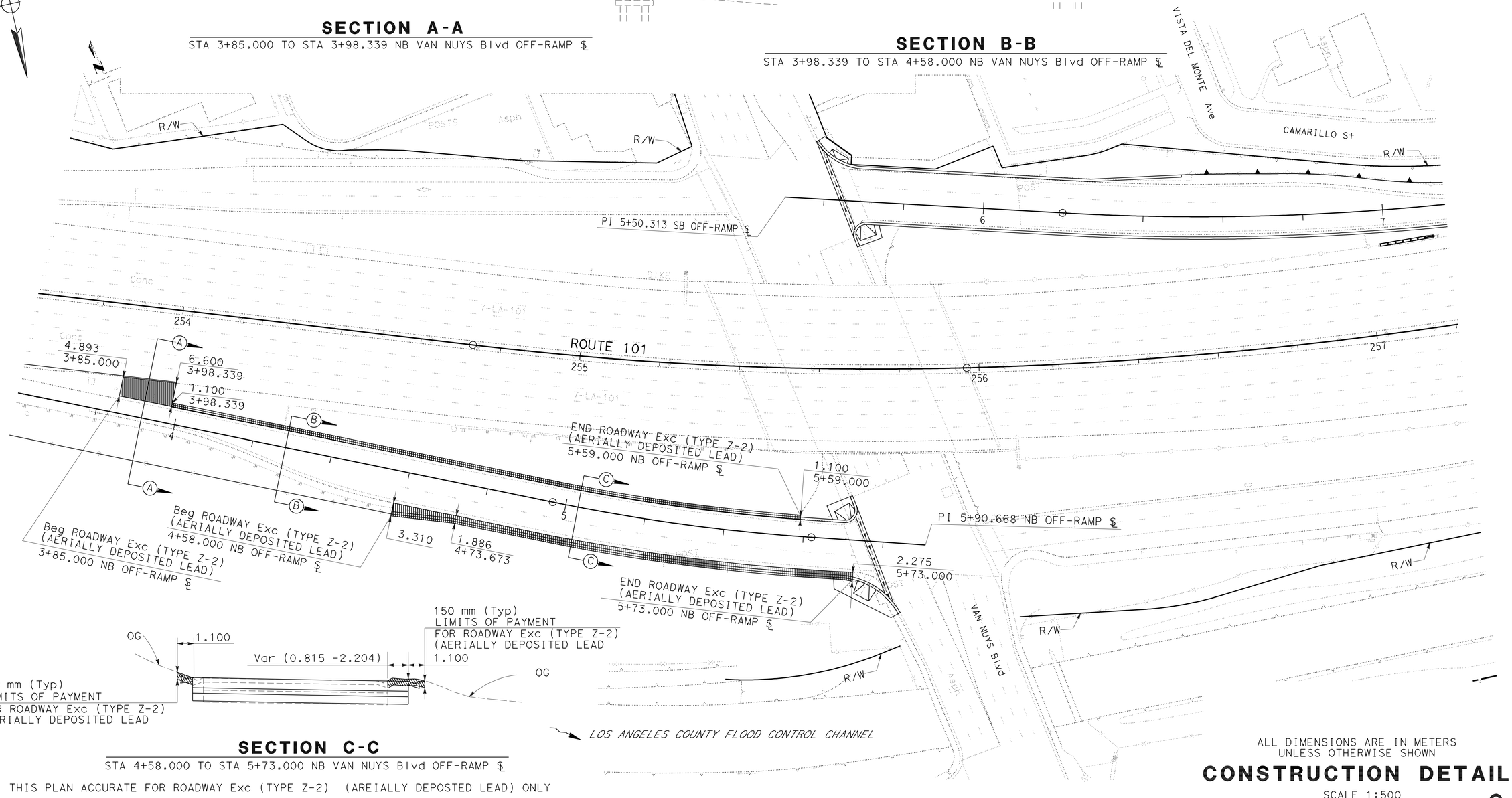

SECTION C-C

STA 4+58.000 TO STA 5+73.000 NB VAN NUYS Blvd OFF-RAMP ℄

THIS PLAN ACCURATE FOR ROADWAY Exc (TYPE Z-2) (AREIALLY DEPOSTED LEAD) ONLY

ALL DIMENSIONS ARE IN METERS UNLESS OTHERWISE SHOWN

CONSTRUCTION DETAILS

SCALE 1:500

C-1

STATE OF CALIFORNIA - DEPARTMENT OF TRANSPORTATION

Caltrans DESIGN

FUNCTIONAL SUPERVISOR: OC LEE

CALCULATED-DESIGNED BY: BARNABAS F. VORREITER

CHECKED BY: DWARAKESWAR PENUBOLU

REVISED BY / DATE REVISED

LAST REVISION 02-20-08

DATE PLOTTED => 21-SEP-2010
TIME PLOTTED => 11:23

Dist	COUNTY	ROUTE	KILOMETER POST TOTAL PROJECT	SHEET No.	TOTAL SHEETS
07	LA	101	24.9/25.9	15	213

REGISTERED CIVIL ENGINEER DATE 2-20-08

8-9-10
PLANS APPROVAL DATE

REGISTERED PROFESSIONAL ENGINEER BF VORREITER No. C 63128 Exp. 06/30/12 CIVIL STATE OF CALIFORNIA

THE STATE OF CALIFORNIA OR ITS OFFICERS OR AGENTS SHALL NOT BE RESPONSIBLE FOR THE ACCURACY OR COMPLETENESS OF ELECTRONIC COPIES OF THIS PLAN SHEET.

Caltrans Metric

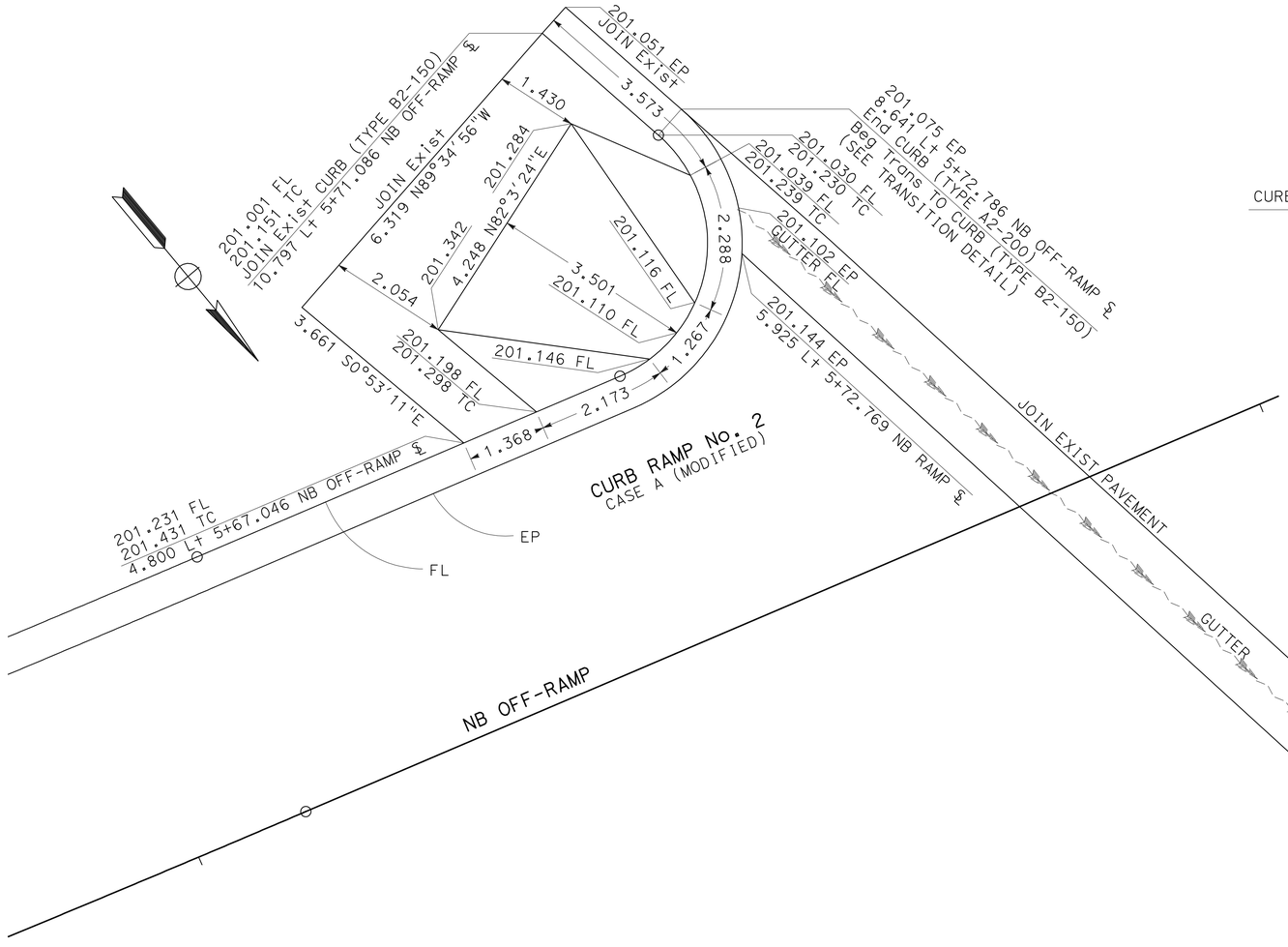

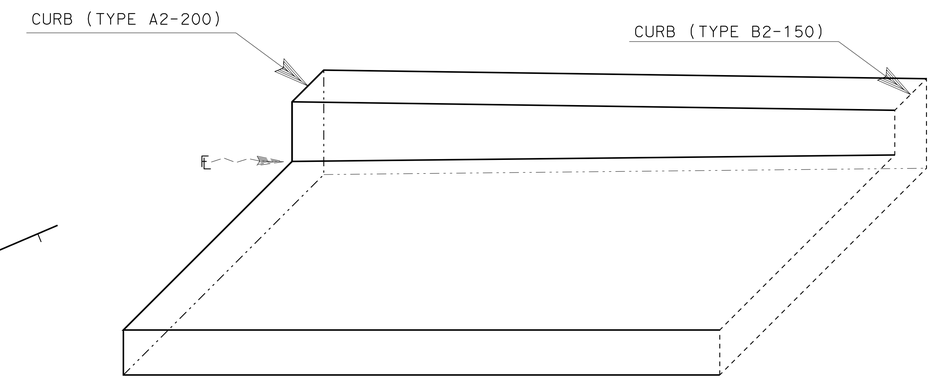

TRANSITION DETAIL
CURB (TYPE A2-200) TO CURB (TYPE B1-150)

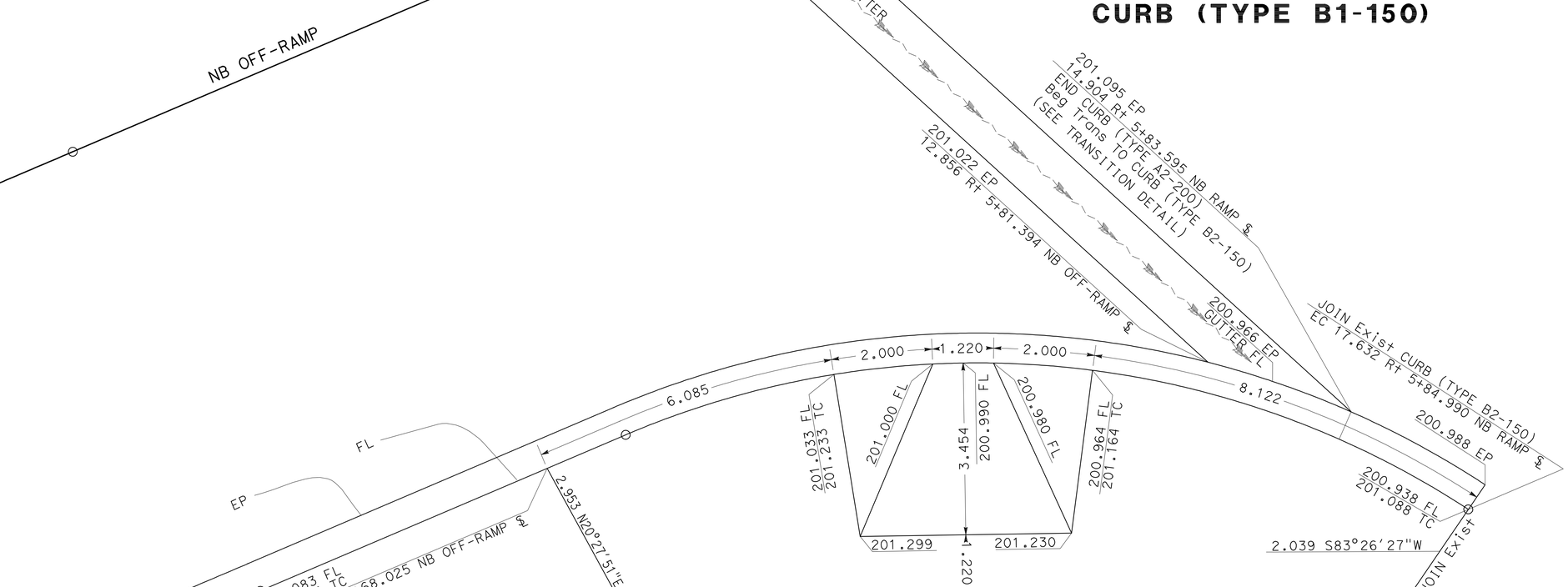

CURB RAMP No. 1
CASE A (MODIFIED)

ALL DIMENSIONS ARE IN METERS UNLESS OTHERWISE SHOWN

CONSTRUCTION DETAILS

SCALE 1:50

C-2

STATE OF CALIFORNIA - DEPARTMENT OF TRANSPORTATION
Caltrans
DESIGN

FUNCTIONAL SUPERVISOR: OC LEE
CALCULATED-DESIGNED BY: BARNABAS F. VORREITER
CHECKED BY: DWARAKESWAR PENUBOLU
REVISED BY
DATE REVISED

LAST REVISION 02-27-08
DATE PLOTTED => 21-SEP-2010
TIME PLOTTED => 11:23

Dist	COUNTY	ROUTE	KILOMETER POST TOTAL PROJECT	SHEET No.	TOTAL SHEETS
07	LA	101	24.9/25.9	16	213

REGISTERED CIVIL ENGINEER 2-20-08 DATE

8-9-10
PLANS APPROVAL DATE

REGISTERED PROFESSIONAL ENGINEER BF VORREITER No. C 63128 Exp. 06/30/12 CIVIL STATE OF CALIFORNIA

THE STATE OF CALIFORNIA OR ITS OFFICERS OR AGENTS SHALL NOT BE RESPONSIBLE FOR THE ACCURACY OR COMPLETENESS OF ELECTRONIC COPIES OF THIS PLAN SHEET.

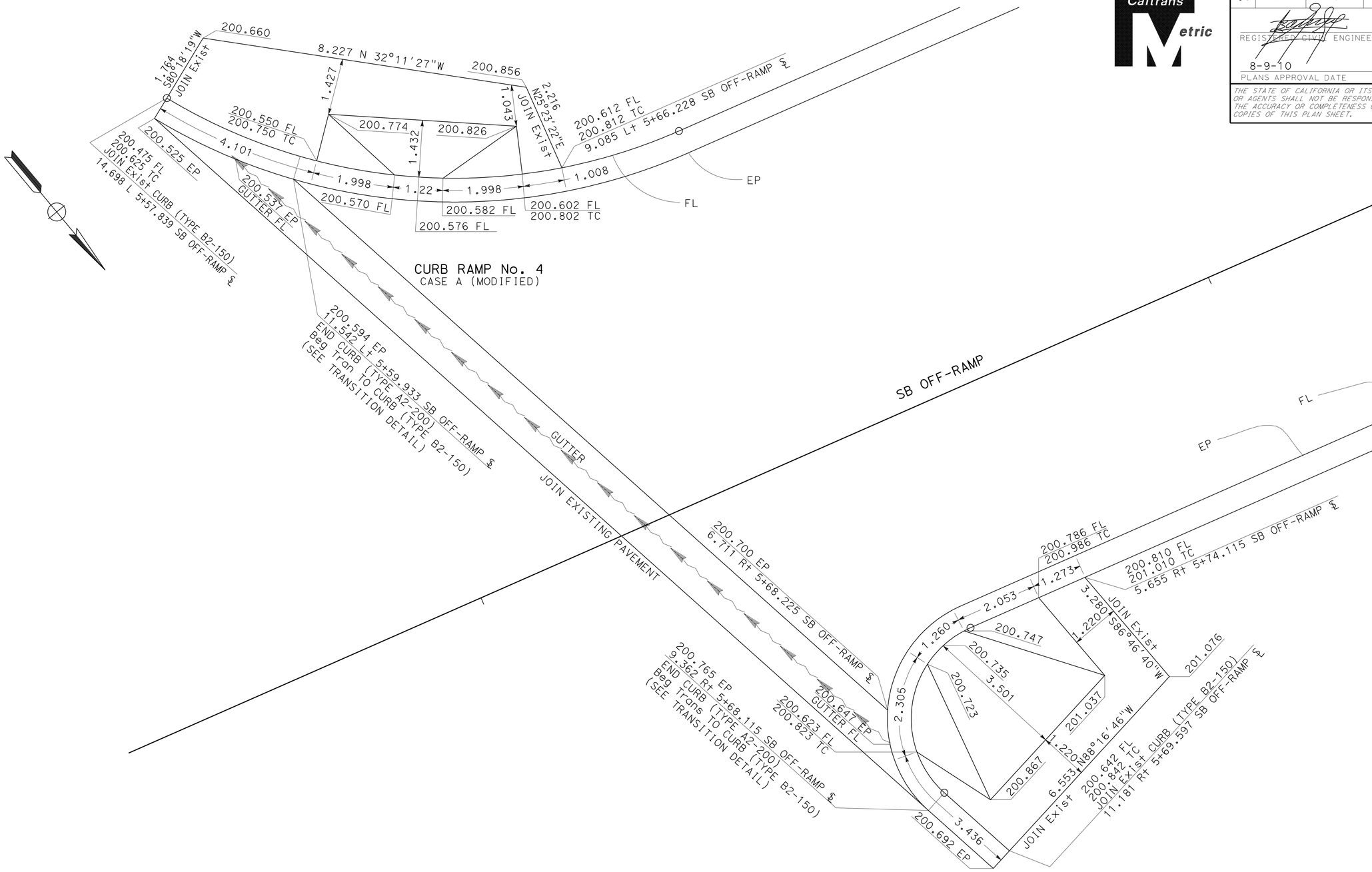

ALL DIMENSIONS ARE IN METERS
UNLESS OTHERWISE SHOWN

CONSTRUCTION DETAILS

SCALE 1:50

C-3

STATE OF CALIFORNIA - DEPARTMENT OF TRANSPORTATION
Caltrans
DESIGN

FUNCTIONAL SUPERVISOR: OC LEE
CALCULATED-DESIGNED BY: BARNABAS F. VORREITER
CHECKED BY: DWARAKESWAR PENUBOLU
REVISED BY / DATE REVISED

LAST REVISION 02-27-08
DATE PLOTTED => 21-SEP-2010
TIME PLOTTED => 11:23

Dist	COUNTY	ROUTE	KILOMETER POST TOTAL PROJECT	SHEET No.	TOTAL SHEETS
07	LA	101	24.9/25.9	17	213

REGISTERED CIVIL ENGINEER 6/30/10 DATE

8-9-10
PLANS APPROVAL DATE

REGISTERED PROFESSIONAL ENGINEER AINSLEY CHIANG No. C74005 Exp. 6/30/11 CIVIL STATE OF CALIFORNIA

THE STATE OF CALIFORNIA OR ITS OFFICERS OR AGENTS SHALL NOT BE RESPONSIBLE FOR THE ACCURACY OR COMPLETENESS OF ELECTRONIC COPIES OF THIS PLAN SHEET.

Caltrans Metric

A

AB	aggregate base
ABBC	asbestos bonded bituminous coated
ABM	air-blown mortar
Abn	abandon
Abut	abutment
AC	asphalt concrete
ACB	asphalt concrete base
ACP	asbestos cement pipe
ADL	added dead load
Adj	adjust
AFES	alternative flared end section
Ahd	ahead
Alt	alternate
AM	time from midnight to noon
AP	alternative pipe
APC	alternative pipe culvert
Approx	approximate
APU	alternative pipe underdrain
ARS	acceleration response spectrum
AS	aggregate subbase
ASRP	aluminum spiral rib pipe
Assy	assembly
ATPB	asphalt treated permeable base
ATPM	asphalt treated permeable material
Ave	avenue
Avg	average
@	at

B

BAGR	bridge approach guard railing
BB	beginning of bridge
B-B	back-to-back
BC	begin horizontal curve
BCR	begin curb return
Beg	begin
Bit Ctd	bituminous coated
Bk	back
Bkf	backfill
Bldg	building
BLM	bridge-log mile
Blvd	boulevard
BM	bench mark
Bot	bottom
Br	bridge
Brg	bearing
BTU	british thermal unit
BVC	begin vertical curve
BW	barbed wire

C

CAA	cable anchor assembly
cal	calorie
CAP	corrugated aluminum pipe
CAPA	corrugated aluminum pipe arch
CAS	construction area sign
CB	concrete barrier
CBW	concrete block wall
C-C	center to center
CG	center of gravity

C continued

Chnl	channel
CI	cast iron
CIDH	cast-in-drilled-hole
CIP	cast-in-place, cast iron pipe
CIPCP	cast in place concrete pipe
CISS	cast-in-steel-shell
CJP	complete joint penetration
CL	chain link
CL-6	chain link fence (6 ft)
Cl	class
Clr	clear, clearance
CM	corrugated metal
cm	centimeters
CMP	corrugated metal pipe
Co	county
Col	column
Conc	concrete
Cond	conduit
Conn	connector
Const	construct, construction
Cont	continuous
Coord	coordinate
CP	candlepower
Cr	creek
CRSP	concreted rock slope protection
CSP	corrugated steel pipe
CSPA	corrugated steel pipe arch
CTB	cement treated base
CTPB	cement treated permeable base
CTPM	cement treated permeable material
Ctrs	centers
Culv	culvert
℄	centerline

D

D	depth
DD	downdrain
Dbl	double
Deg	degree
Del	delineator
Det	detail, detour
DF	douglas fir
DI	drainage inlet, drop inlet
Dia	diameter
Diaph	diaphragm
Dist	distance, district
DMBB	double metal beam barrier
Dr	drive
DTBB	double thrie beam barrier
Dwy	driveway

E

E	east
EA	each
Ease	easement
EB	end of bridge, eastbound
EC	end horizontal curve
ECR	end curb return
ED	edge drain
EDC	edge drain cleanout
EDO	edge drain outlet
EDV	edge drain vent
Elec	electrolier
Elect	electric
Elev	elevation
Emb	embankment
Engr	Engineer
EOD	edge of deck
EP	edge of pavement
Eq	equation
ES	edge of shoulder
ETW	edge of traveled way
EVC	end vertical curve
EW	endwall
Exc	excavation
Exist, (E)	existing
Exp	expansion, expressway
Exp Jt	expansion joint
Ext	exterior

F

F & C	frame and cover
F & G	frame and grate
FB	floor beam
Fdn	foundation
FEBT	facing eastbound traffic
FES	flared end section
FF	filter fabric
FG	finished grade
FH	fire hydrant
Fig	figure
FL	flow line
FNBT	facing northbound traffic
FOB	free on board
FOC	face of concrete
Fr Rd	frontage road
FS	far side, finished surface
FSBT	facing southbound traffic
Ftg	footing
FWBT	facing westbound traffic
Fwy	freeway

G

g	acceleration due to gravity
Ga	gage
Galv	galvanized
GP	grading plane
GR	guard railing
GSP	galvanized steel pipe

G continued

Gtr	gutter

H

H	height
h, hr	hour
HD	horizontal drain
hdwl	headwall
Hex Hd	hexagonal head
HMA	hot mixed asphalt
Horiz	horizontal
HP	hinge point, horsepower
HPS	high performance steel
HS	high strength
HW	headwall, high water
HWM	high water mark
Hwy	highway

I

IB	imported borrow
ID	inside diameter
IF	inside face
Int	interior
Inv	invert
Irr	irrigation

J

Jct	junction
JP	joint pole
JPCP	jointed plain concrete pavement
JS	junction structure
Jt	joint

K

km	kilometer (always lower case)
KP	kilometer post

L

L	length
Lat	latitude
LCB	lean concrete base
Ln	lane
Loc	location
LOL	layout line
Long	longitude
Longit	longitudinal
LS	lump sum
Lt	left

General Rules:

1. Abbreviations should be upper and lower case letters.
   i.e., Misc = miscellaneous
   and Bit Ctd = bituminous coated
2. Acronyms should be all upper case letters.
   i.e., BCR = begin curb return

CONSTRUCTION DETAILS
ACRONYMS AND ABBREVIATIONS (A-L)
NO SCALE

C-4

STATE OF CALIFORNIA - DEPARTMENT OF TRANSPORTATION
Caltrans DESIGN

FUNCTIONAL SUPERVISOR: DEREK HIGA
CALCULATED-DESIGNED BY: AINSLEY CHIANG
CHECKED BY: KAZ KAYODA
REVISED BY / DATE REVISED

LAST REVISION 00-00-00
DATE PLOTTED => 21-SEP-2010
TIME PLOTTED => 11:23

Dist	COUNTY	ROUTE	KILOMETER POST TOTAL PROJECT	SHEET No.	TOTAL SHEETS
07	LA	101	24.9/25.9	18	213

REGISTERED CIVIL ENGINEER 6/30/10 DATE

8-9-10
PLANS APPROVAL DATE

REGISTERED PROFESSIONAL ENGINEER AINSLEY CHIANG No. C74005 Exp. 6/30/11 CIVIL STATE OF CALIFORNIA

THE STATE OF CALIFORNIA OR ITS OFFICERS OR AGENTS SHALL NOT BE RESPONSIBLE FOR THE ACCURACY OR COMPLETENESS OF ELECTRONIC COPIES OF THIS PLAN SHEET.

Caltrans Metric

M

Maint	maintenance
Max	maximum
MB	metal beam
MBB	metal beam barrier
MBGR	metal beam guard railing
Med	median
MH	manhole
Min	minimum
Misc	miscellaneous
Misc I & S	miscellaneous iron and steel
Mkr	marker
mm	millimeter(s)
Mod	modified,
	modify
Mon	monument
MP	metal plate
MPGR	metal plate guard railing
MR	movement rating
MSE	mechanically stabilized embankment
Mtl	material

N

N	north
(N)	new
NB	northbound
No.	number (must have period)
Nos.	numbers (must have period)
NPS	nominal pipe size
NS	near side
NTS	not to scale
ø	nominal diameter

O

Oblr	obliterate
OC	overcrossing
OD	outside diameter
OF	outside face
OG	original ground
OGAC	open graded asphalt concrete
OH	overhead
O-O	out to out
Opp	opposite

P

p	page
PAP	perforated aluminum pipe
PB	pull box
PC	point of curvature,
	precast
PCC	point of compound curve,
	portland cement concrete
PCP	perforated concrete pipe,
	prestressed concrete pipe
PCVC	point of compound vertical curve
Ped	pedestrian
Ped OC	pedestrian overcrossing
Ped UC	pedestrian undercrossing
Perm Mtl	permeable material
PG	profile grade

P continued

PI	point of intersection
PJP	partial joint penetration
₱,PL	plate
P/L	property line
PM	post mile,
	time from noon to midnight
PN	paving notch
POC	point of horizontal curve
POT	point of tangent
POVC	point of vertical curve
PP	pipe pile,
	plastic pipe,
	power pole
PPL	preformed permeable liner
PPP	perforated plastic pipe
PRC	point of reverse curve
PRF	pavement reinforcing fabric
PRVC	point of reverse vertical curve
PS&E	plans, specifications and estimates
PS, P/S	prestressed
PSP	perforated steel pipe
PT	point of tangency
PVC	polyvinyl chloride
Pvmt	pavement

Q

Qty	quantity

R

R	radius
R & D	remove and dispose
R & S	remove and salvage
R/C	rate of change
RCA	reinforced concrete arch
RCB	reinforced concrete box
RCP	reinforced concrete pipe
RCPA	reinforced concrete pipe arch
Rd	road
Reinf	reinforced,
	reinforcement,
	reinforcing
Rel	relocate
Repl	replacement
Ret	retaining
Rev	revised
Rdwy	roadway
RM	road-mixed
RP	radius point,
	reference point
RR	railroad
RSP	rock slope protection
Rt	right
Rte	route
RW	redwood,
	retaining wall
R/W	right of way
Rwy	railway

S

S	south,
	supplement
SAE	structure approach embankment
Salv	salvage
SAPP	structural aluminum plate pipe
SB	southbound
SC	sand cushion
SCSP	sacked concrete slope protection,
	slotted corrugated steel pipe
SD	storm drain
Sec	second,
	section
Sep	separation
SG	subgrade
Shld	shoulder
Sht	sheet
SI	international system of units
Sim	similar
℄L	station line
SM	selected material
Spec	special,
	specifications
SPP	slotted plastic pipe
SS	slope stake
SSBM	strap and saddle bracket method
SSD	structural section drain
SSPA	structural steel plate arch
SSPP	structural steel plate pipe
SSPPA	structural steel plate pipe arch
SSRP	steel spiral rib pipe
St	street
STA, Sta	station
STBB	single thrie beam barrier
Std	standard
Str	structure
Surf	surfacing
SW	sidewalk,
	sound wall
Swr	sewer
Sym	symmetrical
S4S	surface 4 sides

T

T	semi-tangent
TAB	tablet
Tan	tangent
TBB	thrie beam barrier
Tbr	timber
TC	top of curb
TCB	traffic control box
Tel	telephone
Temp	temporary
TG	top of grade
Tot	total
TP	telephone pole
TPB	treated permeable base
TPM	treated permeable material
Trans	transition

T continued

TS	traffic signal,
	tubular steel
Typ	typical

U

UC	undercrossing
UD	underdrain
UON	unless otherwise noted
UP	underpass

V

V	valve,
	design speed
Var	variable
VC	vertical curve
VCP	vitrified clay pipe
Vert	vertical
Via	viaduct
Vol	volume

W

W	west,
	width
WB	westbound
WH	weep hole
WM	wire mesh
WS	water surface
WSP	welded steel pipe
Wt	weight
WV	water valve
WW	wing wall
WWLOL	wingwall layout line

X

X Sec	cross section
Xing	crossing

Y

Yr	year
Yrs	years

SI PREFIXES

SYMBOL	PREFIX	MULTIPLICATION FACTOR
m	milli-	10^{-3}
k	kilo-	10^{3}
M	mega-	10^{6}
G	giga-	10^{9}

METRIC UNITS (SI)

SYMBOL	UNIT
m	meter
g	gram
s	second
A	ampere
°C	degrees Celsius
Hz	hertz
N	newton
Pa	pascal
L	liter
ha	hectare
W	Watt

CONSTRUCTION DETAILS
ACRONYMS AND ABBREVIATIONS (M-Z)
NO SCALE

C-5

STATE OF CALIFORNIA - DEPARTMENT OF TRANSPORTATION
Caltrans DESIGN

FUNCTIONAL SUPERVISOR: DEREK HIGA
CALCULATED-DESIGNED BY: AINSLEY CHIANG
CHECKED BY: KAZ KAYODA
REVISED BY / DATE REVISED

LAST REVISION 00-00-00 | DATE PLOTTED => 21-SEP-2010 | TIME PLOTTED => 11:23

Dist	COUNTY	ROUTE	KILOMETER POST TOTAL PROJECT	SHEET No.	TOTAL SHEETS
07	LA	101	24.9/25.9	19	213

REGISTERED CIVIL ENGINEER 6/30/10 DATE

8-9-10
PLANS APPROVAL DATE

REGISTERED PROFESSIONAL ENGINEER AINSLEY CHIANG No. C74005 Exp. 6/30/11 CIVIL STATE OF CALIFORNIA

THE STATE OF CALIFORNIA OR ITS OFFICERS OR AGENTS SHALL NOT BE RESPONSIBLE FOR THE ACCURACY OR COMPLETENESS OF ELECTRONIC COPIES OF THIS PLAN SHEET.

Caltrans Metric

SYMBOLOGY FOR CONSTRUCTION FEATURES

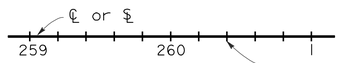

Centerline
Station Line

Intermediate ticks @ 20 m intervals

Right of Way Line

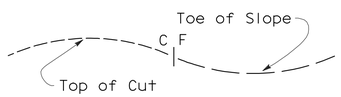

Slope Line

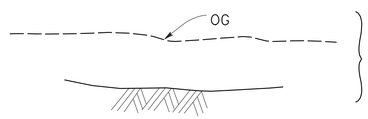

Original Ground Line

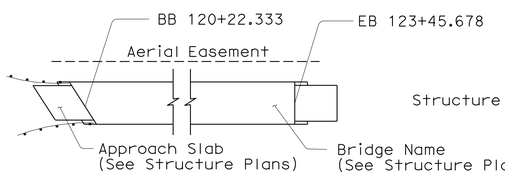

Structure (Bridge)

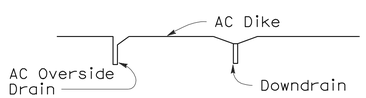

Dike, Downdrain and Oversize Drain

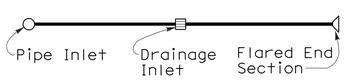

Pipe Culvert - single line
(900 mm or less in diameter)
(plus - other drainage features)

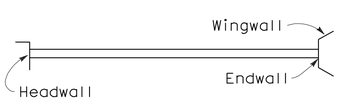

Pipe Culvert - two lines
greater than 900 mm in diameter)
(plus - other drainage features)

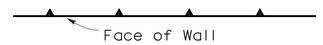

Wall

Existing Guard Railing
(to be modified)

New Guard Railing

Concrete (Median) Barrier

Wall on Barrier

Temporary Railing (Type K)

Double Thrie Beam Barrier

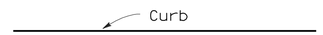

Curb without Gutter

Curb with Gutter
(curb-lip, flow line, back-top of curb)

Fence

Ditch Flow Line

Existing Walls or Barriers should be shown as hollow filled
(See example of Wall below)

Existing Wall

AERIAL UTILITES

E (OH)	New Electrical
e (oh)	Exist Electrical
TC (OH)	New Telemeter Cable
tc (oh)	Exist Telemeter Cable
T (OH)	New Telephone
t (oh)	Exist Telephone
TV (OH)	New Television
tv (oh)	Exist Television
FO (OH)	New Fiber Optic
fo (oh)	Exist Fiber Optic

UNDERGROUND UTILITIES

W	New Water
w	Exist Water
G	New Gas
g	Exist Gas
S	New Sewer
s	Exist Sewer
E	New Electrical
e	Exist Electrical
T	New Telephone
t	Exist Telephone
GS	New Gasoline
gs	Exist Gasoline
O	New Oil
o	Exist Oil
TV	New Television
tv	Exist Televison
ST	New Steam
st	Exist Steam
TC	New Telemeter Cable
tc	Exist Telemeter Cable
SD	New Storm Drain
sd	Exist Storm Drain
FO	New Fiber Optic
fo	Exist Fiber Optic

CONSTRUCTION DETAILS
SYMBOLS
NO SCALE

C-6

STATE OF CALIFORNIA - DEPARTMENT OF TRANSPORTATION
Caltrans
DESIGN

FUNCTIONAL SUPERVISOR: DEREK HIGA
CALCULATED-DESIGNED BY: AINSLEY CHIANG
CHECKED BY: KAZ KAYODA
REVISED BY / DATE REVISED

LAST REVISION 00-00-00
DATE PLOTTED => 21-SEP-2010
TIME PLOTTED => 11:24

Dist	COUNTY	ROUTE	KILOMETER POST TOTAL PROJECT	SHEET No.	TOTAL SHEETS
07	LA	101	24.9/25.9	20	213

REGISTERED CIVIL ENGINEER 6/30/10 DATE

8-9-10
PLANS APPROVAL DATE

REGISTERED PROFESSIONAL ENGINEER AINSLEY CHIANG No. C74005 Exp. 6/30/11 CIVIL STATE OF CALIFORNIA

THE STATE OF CALIFORNIA OR ITS OFFICERS OR AGENTS SHALL NOT BE RESPONSIBLE FOR THE ACCURACY OR COMPLETENESS OF ELECTRONIC COPIES OF THIS PLAN SHEET.

Caltrans Metric

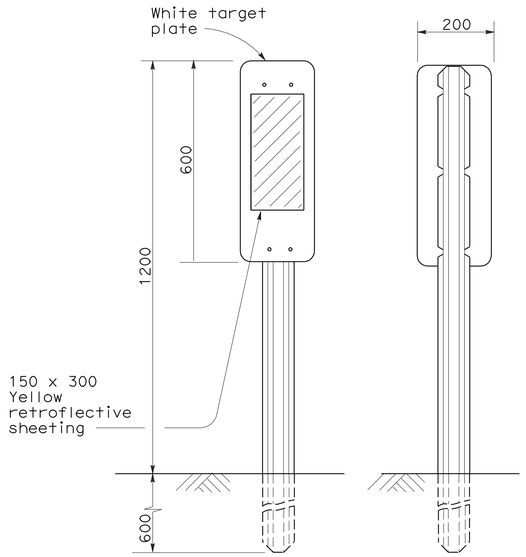

FRONT BACK

TYPE L-1 (CA)

See Note 1

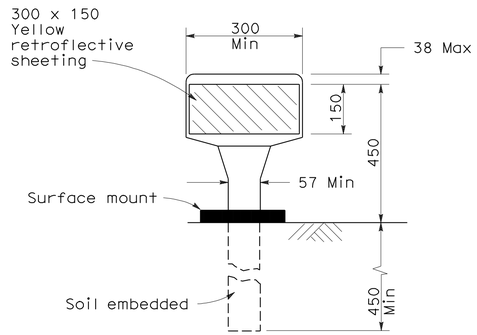

TYPE K-1 (CA)

(Flexible post with horizonal orientation of sheeting)

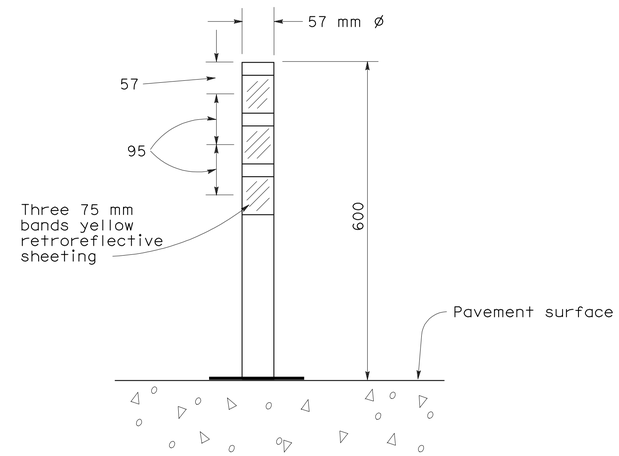

TYPE Q (CA)

(Tubular flexible post surface mount)

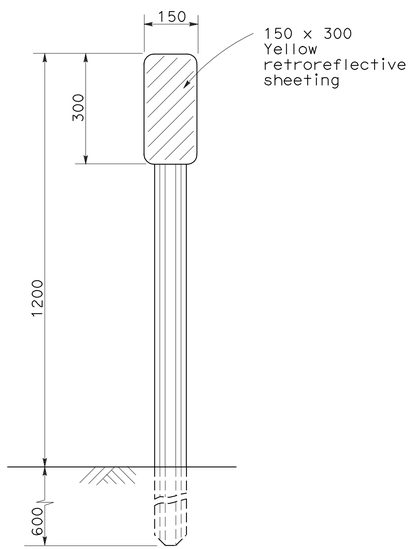

TYPE L-2 (CA)

See Note 1

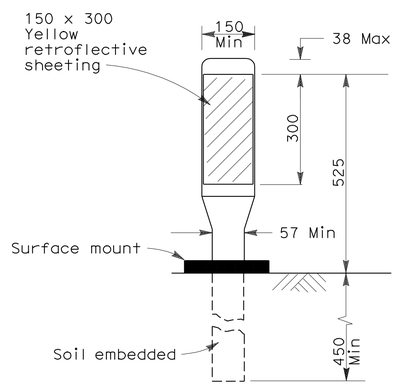

TYPE K-2 (CA)

(Flexible post with vertical orientation of sheeting)

NOTE:

1.See "CONSTRUCTION DETAILS, MARKERS," for metal post details and additional markers.

ALL DIMENSIONS ARE IN MILLIMETERS UNLESS OTHERWISE SHOWN.

CONSTRUCTION DETAILS
OBJECT MARKERS

NO SCALE

C-7

STATE OF CALIFORNIA - DEPARTMENT OF TRANSPORTATION
Caltrans DESIGN

FUNCTIONAL SUPERVISOR: DEREK HIGA
CALCULATED-DESIGNED BY: AINSLEY CHIANG
CHECKED BY: KAZ KAYODA
REVISED BY / DATE REVISED

LAST REVISION 00-00-00 DATE PLOTTED => 21-SEP-2010 TIME PLOTTED => 11:24

Dist	COUNTY	ROUTE	KILOMETER POST TOTAL PROJECT	SHEET No.	TOTAL SHEETS
07	LA	101	24.9/25.9	21	213

REGISTERED CIVIL ENGINEER 6/30/10 DATE

8-9-10
PLANS APPROVAL DATE

REGISTERED PROFESSIONAL ENGINEER AINSLEY CHIANG No. C74005 Exp. 6/30/11 CIVIL STATE OF CALIFORNIA

THE STATE OF CALIFORNIA OR ITS OFFICERS OR AGENTS SHALL NOT BE RESPONSIBLE FOR THE ACCURACY OR COMPLETENESS OF ELECTRONIC COPIES OF THIS PLAN SHEET.

Caltrans Metric

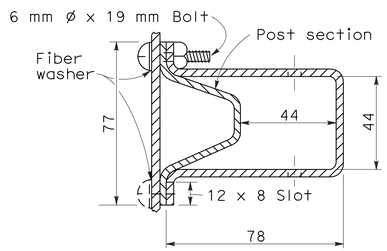

TOP VIEW

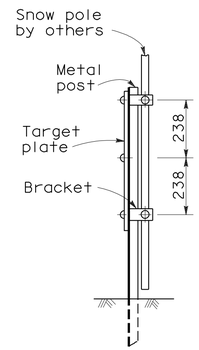

POST SIDE VIEW

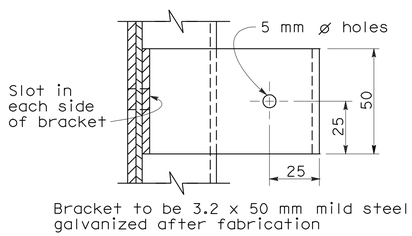

SIDE VIEW

SNOW POLE BRACKET

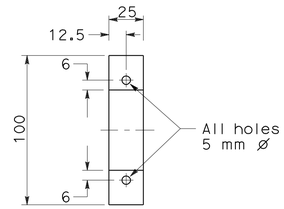

SIDE VIEW

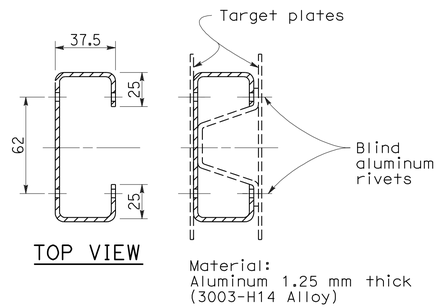

TOP VIEW

TWO PLATE POST MOUNT

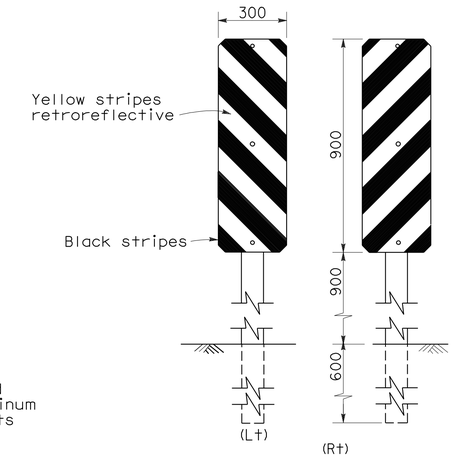

TYPE P (CA)

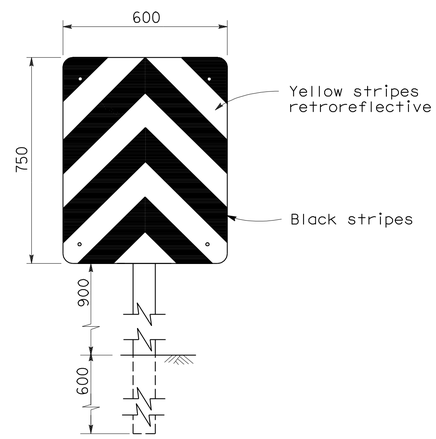

TYPE R (CA)

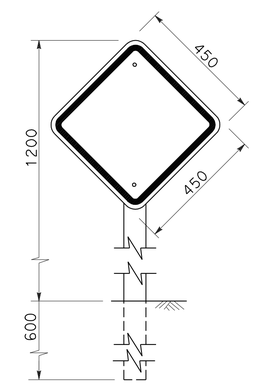

TYPE N-1, N-2, N-3 (CA)

N-1. Yellow retroreflective background with black border.
N-2. Red retroreflective background with black border.
N-3. Orange retroreflective background with black border.

OBJECT MARKERS

NOTES:

1. See "CONSTRUCTION DETAILS, OBJECT MARKERS" for additional object markers.
2. Type P and R markers shall have orange and white retroreflective stripes in work zones.

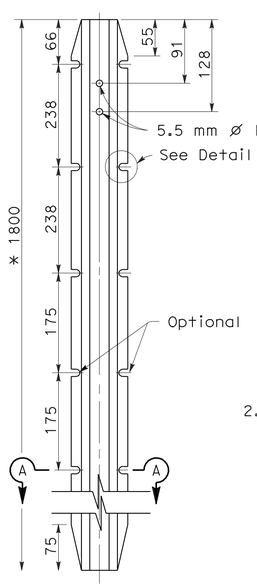

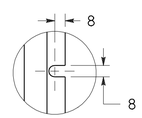

DETAIL A

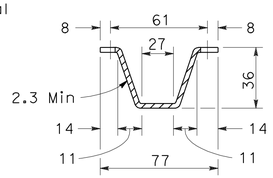

SECTION A-A

Metal post to be as shown except that minor variations in design and dimensions will be permitted to meet manufacturer's standards.

* 2400 mm for Type P object marker

METAL POST DETAIL

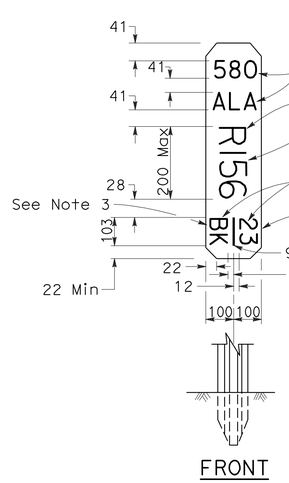

FRONT

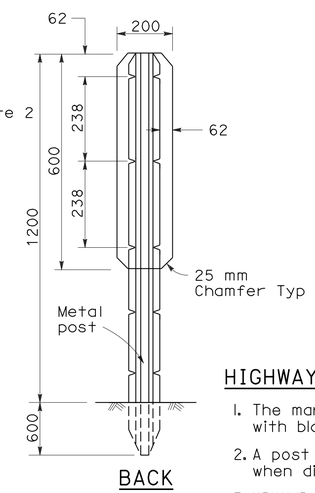

BACK

HIGHWAY POST MARKER

HIGHWAY POST MARKER NOTES

1. The marker shall be white (non-reflective) target plate with black Series D numerals and letters.
2. A post mile prefix, such as "R", shall apply only when directed by the Engineer.
3. "BK" (Back), "AH" (Ahead), or a blank space shall apply as directed by the Engineer.
4. All information shall be in English units (miles).

ALL DIMENSIONS ARE IN MILLIMETERS UNLESS OTHERWISE SHOWN.

CONSTRUCTION DETAILS
MARKERS

NO SCALE

C-8

STATE OF CALIFORNIA - DEPARTMENT OF TRANSPORTATION
Caltrans
DESIGN

FUNCTIONAL SUPERVISOR: DEREK HIGA
CALCULATED-DESIGNED BY: AINSLEY CHIANG
CHECKED BY: KAZ KAYODA
REVISED BY / DATE REVISED

LAST REVISION 00-00-00 | DATE PLOTTED => 21-SEP-2010 | TIME PLOTTED => 11:24

Dist	COUNTY	ROUTE	KILOMETER POST TOTAL PROJECT	SHEET No.	TOTAL SHEETS
07	LA	101	24.9/25.9	22	213

REGISTERED CIVIL ENGINEER 6/30/10 DATE

8-9-10
PLANS APPROVAL DATE

REGISTERED PROFESSIONAL ENGINEER AINSLEY CHIANG No. C74005 Exp. 6/30/11 CIVIL STATE OF CALIFORNIA

THE STATE OF CALIFORNIA OR ITS OFFICERS OR AGENTS SHALL NOT BE RESPONSIBLE FOR THE ACCURACY OR COMPLETENESS OF ELECTRONIC COPIES OF THIS PLAN SHEET.

Caltrans Metric

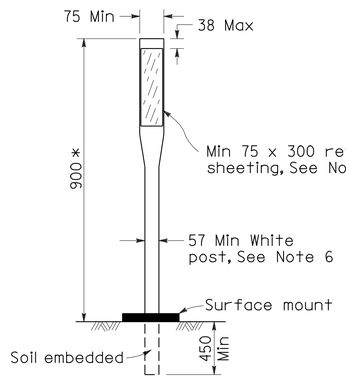

* 915 Min where speeds are 65 km/h or less.

CHANNELIZERS

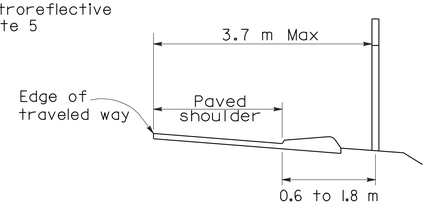

DELINEATOR POSITIONING

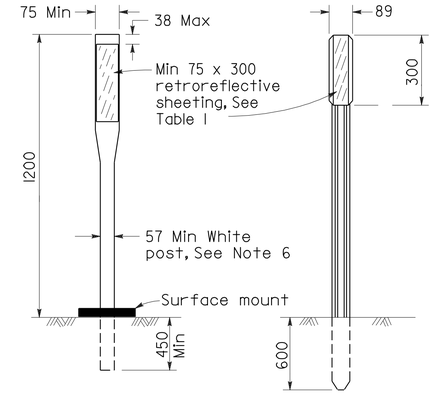

CLASS 1 FLEXIBLE POST

CLASS 2 METAL POST

See Note 4

DELINEATORS

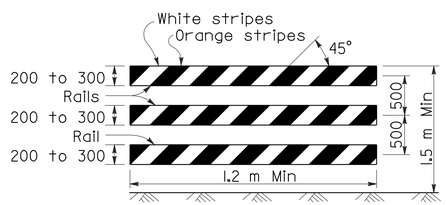

TYPE III BARRICADE

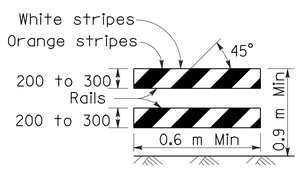

TYPE II BARRICADE

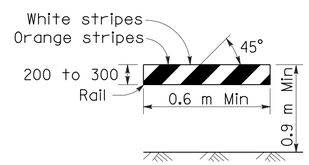

TYPE I BARRICADE

See Note A

BARRICADES (See Note 3)

Only face of rails shown. Barricade construction materials and supports as specified in the specifications.

TABLE 2 - BARRICADES

BARRICADE	TYPE I	TYPE II	TYPE III
Width of Rail	200 Min-300 Max *	200 Min-300 Max *	200 Min-300 Max *
Length of Rail	0.6 m Min	0.6 m Min	1.2 m Min
Width of Stripes * *	150	150	150
Height	0.9 m Min	0.9 m Min	1.5 m Min
Number of Retroreflective Rail Faces	2 (one each direction)	4 (two each direction)	3 if facing traffic in one direction 6 if facing traffic in two direction

* For the wooden option dimensions are nominal lumber dimensions.
* * For rails less than 0.9 m long, 100 mm wide stripes shall be used.

NOTE A

Barricades to have a minimum of 0.17 m^2 of retroreflective area facing traffic when used on freeways, expressways, and other high speed highways.

TABLE 1- DELINEATORS

TYPE	RETROREFLECTIVE SHEETING	
	FRONT	BACK
E	White	White (See Note 1)
F	White	None
G	Yellow	None
I	Yellow	Yellow (See Note 1)
J	Red	None

NOTES:

1. The retroreflective sheeting used on the back of delineator shall be a minimum size of 75 mm x 75 mm.
2. The type of delineator to be installed will be designated on the plans.
3. All barricade stripes shall be retroreflective.
4. See "CONSTRUCTION DETAILS, MARKERS" for Metal Post Details.
5. Unless shown otherwise on the plans, or as directed by the Engineer, the color of the retroreflective sheeting for permanent channelizers shall conform to the color of the pavement markings it supplements.
6. Except, Class 1 (Flexible Post) temporary delineators and temporary channelizers in work zones shall be orange post with white retroreflective sheeting.

ALL DIMENSIONS ARE IN MILLIMETERS UNLESS OTHERWISE SHOWN.

CONSTRUCTION DETAILS
DELINEATORS, CHANNELIZERS AND BARRICADES

NO SCALE

C-9

REVISED BY	DATE REVISED

CALCULATED-DESIGNED BY: AINSLEY CHIANG
CHECKED BY: KAZ KAYODA
FUNCTIONAL SUPERVISOR: DEREK HIGA

STATE OF CALIFORNIA - DEPARTMENT OF TRANSPORTATION
Caltrans DESIGN

LAST REVISION 00-00-00 | DATE PLOTTED => 21-SEP-2010 | TIME PLOTTED => 11:24

Dist	COUNTY	ROUTE	KILOMETER POST TOTAL PROJECT	SHEET No.	TOTAL SHEETS
07	LA	101	24.9/25.9	23	213

REGISTERED CIVIL ENGINEER 6/30/10 DATE

8-9-10
PLANS APPROVAL DATE

REGISTERED PROFESSIONAL ENGINEER AINSLEY CHIANG No. C74005 Exp. 6/30/11 CIVIL STATE OF CALIFORNIA

THE STATE OF CALIFORNIA OR ITS OFFICERS OR AGENTS SHALL NOT BE RESPONSIBLE FOR THE ACCURACY OR COMPLETENESS OF ELECTRONIC COPIES OF THIS PLAN SHEET.

Caltrans Metric

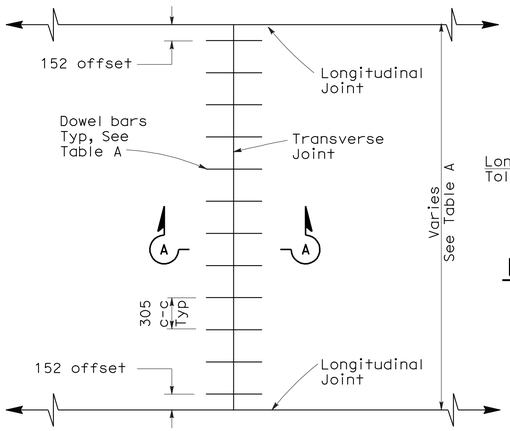

TRANSVERSE JOINT DOWEL BAR LAYOUT

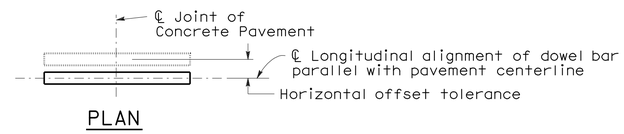

PLAN

HORIZONTAL OFFSET TOLERANCE

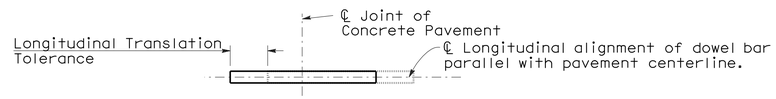

PLAN

LONGITUDINAL TRANSLATION TOLERANCE

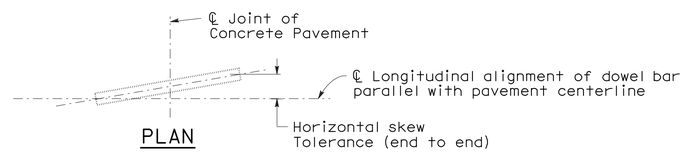

PLAN

HORIZONTAL SKEW TOLERANCE

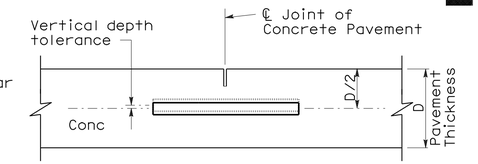

ELEVATION

VERTICAL DEPTH TOLERANCE

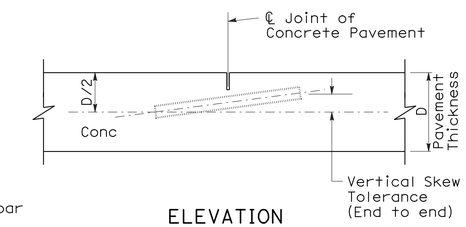

ELEVATION

VERTICAL SKEW TOLERANCE

NOTES:

1. See Revised Standard Plan RSP P1 for typical dowel bar placement and locations.
2. 38 mm Dia smooth dowel bars are to be used with a pavement thickness, D, equal to or greater than 215 mm. For pavement thickness, D, less than 215 mm, use 32 mm Dia smooth dowel bars.
3. For widths not shown, see Project Plans.
4. If fresh concrete pavement is placed adjacent to existing concrete pavement, the top corner of the existing concrete pavement does not need to be rounded to the 6 mm radius, as shown.

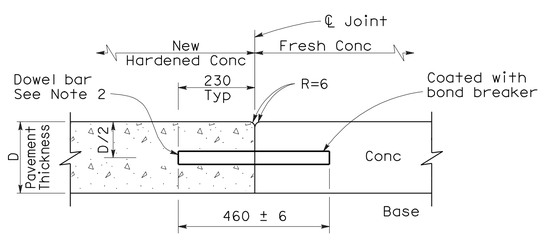

SECTION A-A

TRANSVERSE CONSTRUCTION JOINT DETAIL

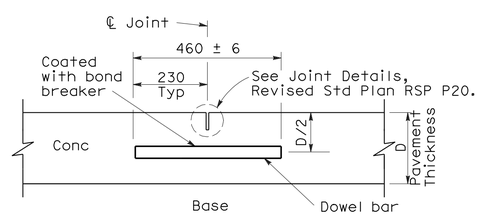

TRANSVERSE CONTRACTION JOINT

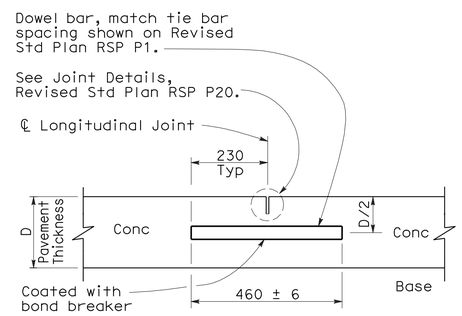

LONGITUDINAL CONTRACTION JOINT WITH DOWEL BARS

(See Revised Std Plan RSP P18)

TABLE A (See Note 3)

Dowel Bar Transverse Spacing Table	
Width between Longitudinal Joints (m)	Number of Dowels between Longitudinal Joints
4.27	14
3.96	13
3.66	12
3.35	11
3.05	10
2.44	8
1.52	5
1.22	4

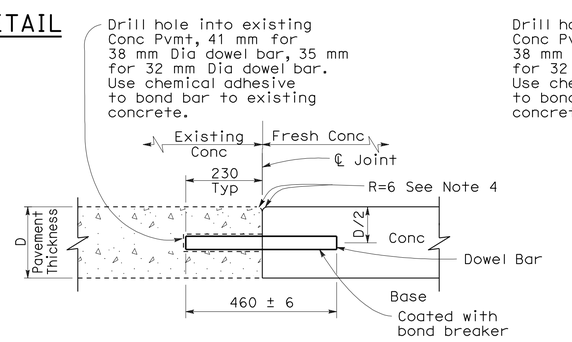

TRANSVERSE CONSTRUCTION JOINT FOR EXISTING CONCRETE PAVEMENT

(Drill and bond locations)

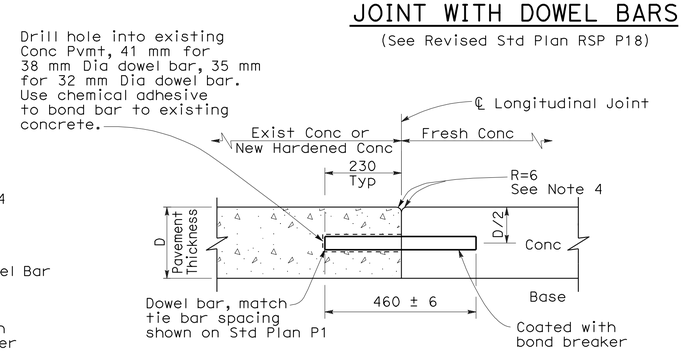

LONGITUDINAL CONSTRUCTION JOINT WITH DOWEL BARS

(See Revised Std Plan RSP P18)

ALL DIMENSIONS ARE IN MILLIMETERS UNLESS OTHERWISE SHOWN.

CONSTRUCTION DETAILS
CONCRETE PAVEMENT DOWEL BAR DETAILS

NO SCALE

C-10

STATE OF CALIFORNIA - DEPARTMENT OF TRANSPORTATION
Caltrans DESIGN
FUNCTIONAL SUPERVISOR DEREK HIGA
CALCULATED-DESIGNED BY AINSLEY CHIANG
CHECKED BY KAZ KAYODA
REVISED BY DATE REVISED

LAST REVISION 00-00-00 DATE PLOTTED => 21-SEP-2010 TIME PLOTTED => 11:24

Dist	COUNTY	ROUTE	KILOMETER POST TOTAL PROJECT	SHEET No.	TOTAL SHEETS
07	LA	101	24.9/25.9	24	213

REGISTERED CIVIL ENGINEER 6/30/10 DATE

8-9-10
PLANS APPROVAL DATE

REGISTERED PROFESSIONAL ENGINEER AINSLEY CHIANG No. C74005 Exp. 6/30/11 CIVIL STATE OF CALIFORNIA

THE STATE OF CALIFORNIA OR ITS OFFICERS OR AGENTS SHALL NOT BE RESPONSIBLE FOR THE ACCURACY OR COMPLETENESS OF ELECTRONIC COPIES OF THIS PLAN SHEET.

Caltrans Metric

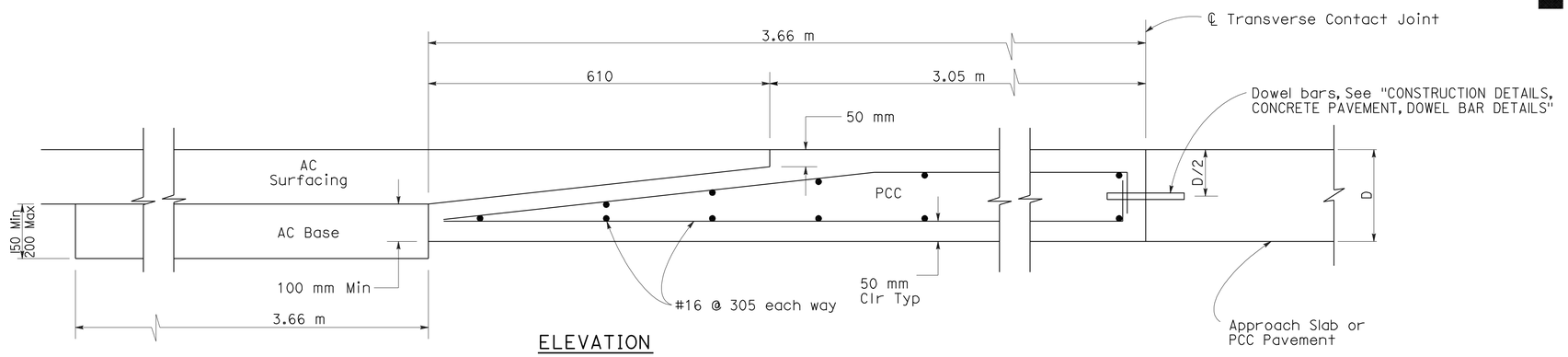

ELEVATION

CONCRETE PAVEMENT TO ASPHALT CONCRETE PAVEMENT TRANSITION PANEL

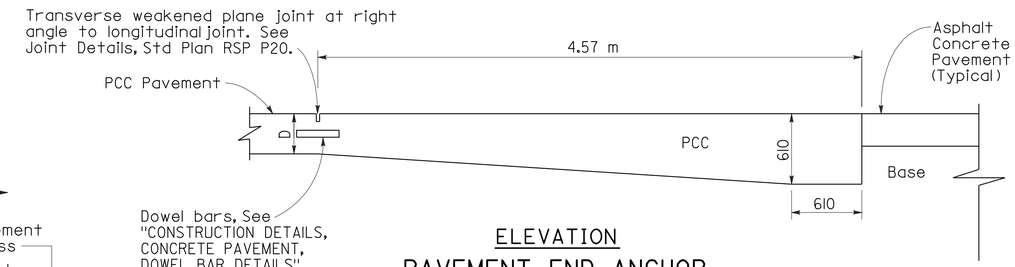

ELEVATION

PAVEMENT END ANCHOR

(Joint Plain Concrete Pavement Only)

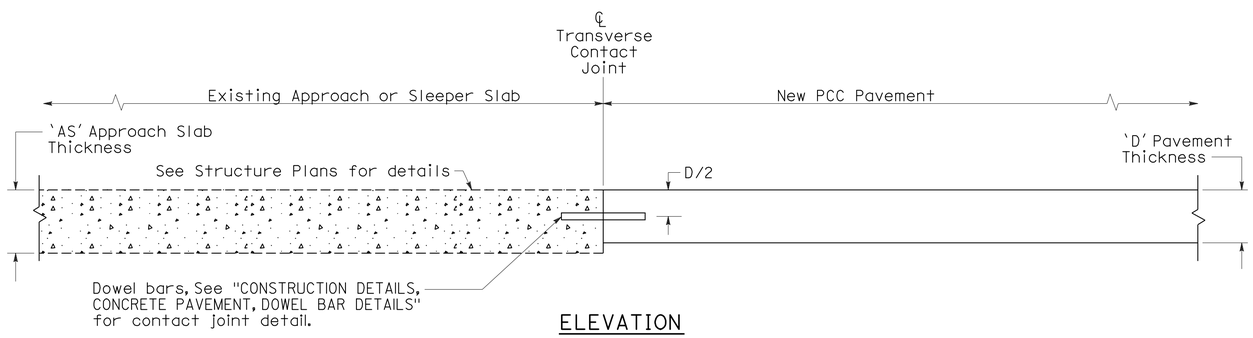

ELEVATION

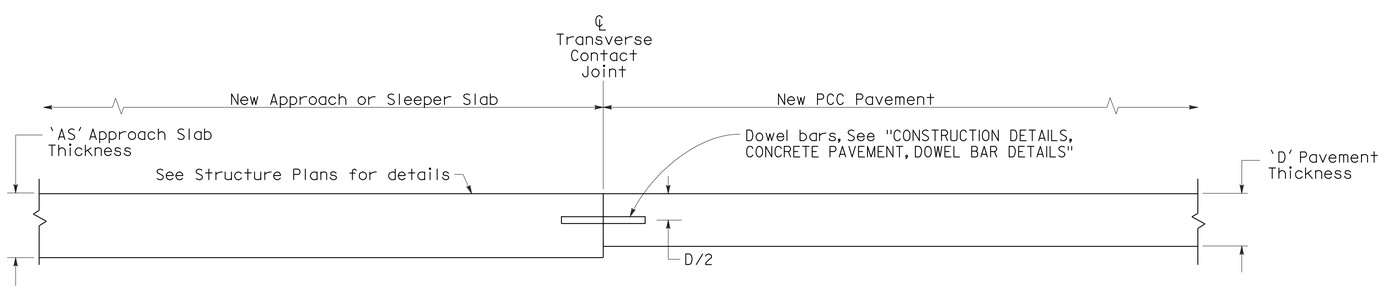

ELEVATION

CONCRETE PAVEMENT TRANSITION TO APPROACH OR SLEEPER SLAB

ALL DIMENSIONS ARE IN MILLIMETERS UNLESS OTHERWISE SHOWN.

CONSTRUCTION DETAILS
CONCRETE PAVEMENT-END PANEL PAVEMENT TRANSITIONS

NO SCALE

C-11

STATE OF CALIFORNIA - DEPARTMENT OF TRANSPORTATION
Caltrans
DESIGN

FUNCTIONAL SUPERVISOR: DEREK HIGA
CALCULATED-DESIGNED BY: AINSLEY CHIANG
CHECKED BY: KAZ KAYODA
REVISED BY / DATE REVISED

LAST REVISION 00-00-00 | DATE PLOTTED => 21-SEP-2010 | TIME PLOTTED => 11:24

Dist	COUNTY	ROUTE	KILOMETER POST TOTAL PROJECT	SHEET No.	TOTAL SHEETS
07	LA	101	24.9/25.9	25	213

REGISTERED CIVIL ENGINEER 6/30/10 DATE

8-9-10
PLANS APPROVAL DATE

REGISTERED PROFESSIONAL ENGINEER AINSLEY CHIANG No. C74005 Exp. 6/30/11 CIVIL STATE OF CALIFORNIA

THE STATE OF CALIFORNIA OR ITS OFFICERS OR AGENTS SHALL NOT BE RESPONSIBLE FOR THE ACCURACY OR COMPLETENESS OF ELECTRONIC COPIES OF THIS PLAN SHEET.

Caltrans Metric

NOTES

1. Details for gore area paving are applicable to both exit and entrance ramps.
2. Transverse Joint Layouts are not shown. Refer to Standard Plan RSP P1 or to Project Plans for details regarding joint layouts, tie bars, and dowels not shown.
3. WWF 102 x 102 - MW30 x MW30 can be used in place of #13 Bars.
4. Omit longitudinal joint when PCC on ramp shoulder is less than 915 mm.
5. Place joint perpendicular to ramp longitudinal joints. Match location of joint with ramp transverse weakened plane joints.
6. Place joint perpendicular to mainline longitudinal joints. Match location of joint with mainline transverse weakened plane joints.
7. Isolation joint detail shown on Standard Plan RSP P18.
8. For Jointed plain concrete pavement, transverse joints to be spaced from fixed transverse joint and shall follow spacing pattern on Standard Plan RSP P1. Minimum spacing shall be 1.83 meters.

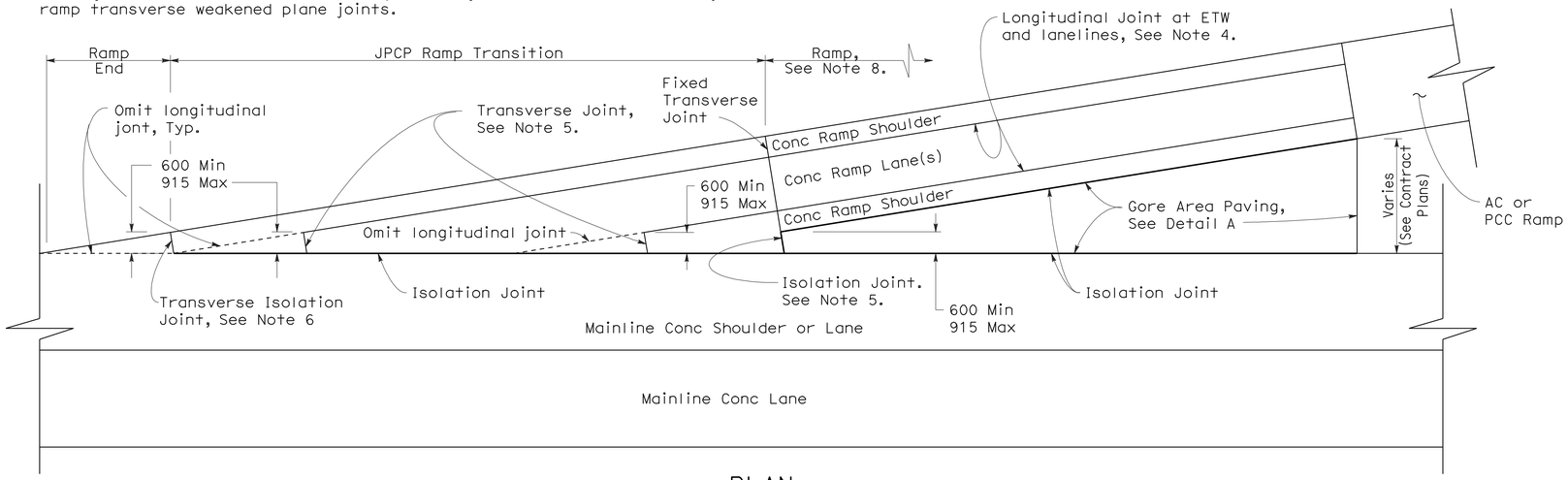

PLAN
GORE AREA PAVING
See Note 1

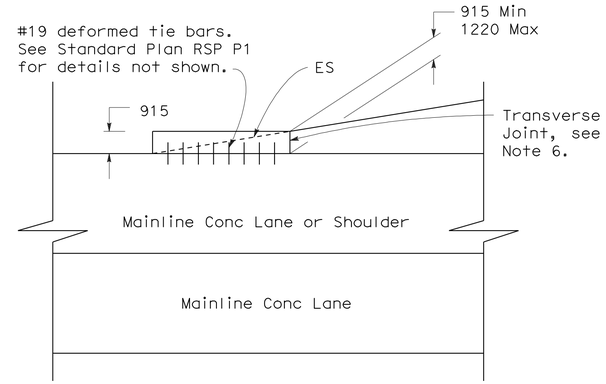

PLAN
ALTERNATE RAMP END DETAIL

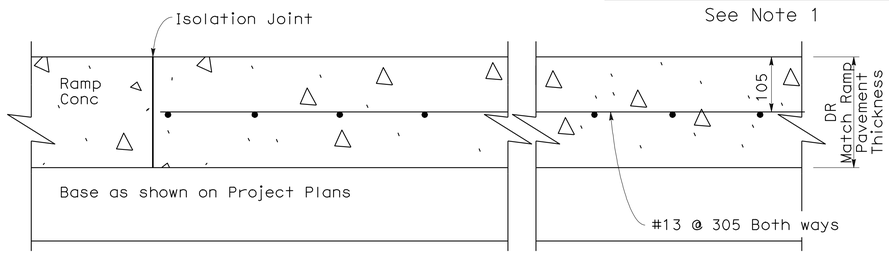

SECTION A-A

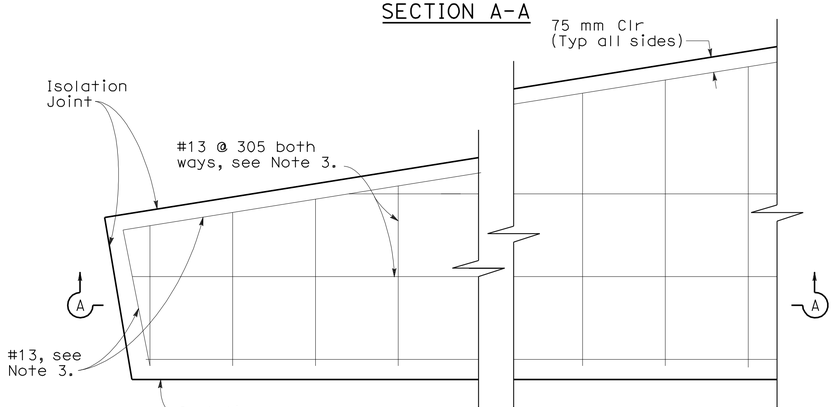

DETAIL A

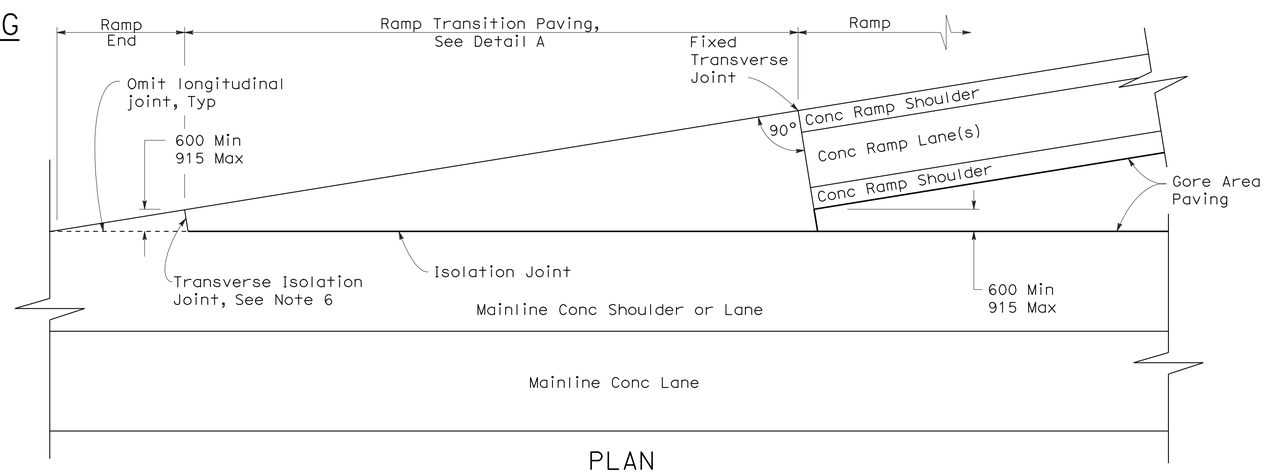

PLAN
ALTERNATE RAMP TRANSITION DETAIL
(JPCP and CRCP)

ALL DIMENSIONS ARE IN MILLIMETERS UNLESS OTHERWISE SHOWN.

CONSTRUCTION DETAILS
CONCRETE PAVEMENT-
RAMP GORE AREA
PAVING DETAILS

NO SCALE

C-12

REVISED BY | DATE REVISED
AINSLEY CHIANG | KAZ KAYODA
CALCULATED-DESIGNED BY | CHECKED BY
FUNCTIONAL SUPERVISOR | DEREK HIGA
STATE OF CALIFORNIA - DEPARTMENT OF TRANSPORTATION
DESIGN
Caltrans

LAST REVISION 00-00-00 | DATE PLOTTED => 21-SEP-2010 | TIME PLOTTED => 11:24

Dist	COUNTY	ROUTE	KILOMETER POST TOTAL PROJECT	SHEET No.	TOTAL SHEETS
07	LA	101	24.9/25.9	26	213

REGISTERED CIVIL ENGINEER 6/30/10 DATE

8-9-10
PLANS APPROVAL DATE

REGISTERED PROFESSIONAL ENGINEER AINSLEY CHIANG No. C74005 Exp. 6/30/11 CIVIL STATE OF CALIFORNIA

THE STATE OF CALIFORNIA OR ITS OFFICERS OR AGENTS SHALL NOT BE RESPONSIBLE FOR THE ACCURACY OR COMPLETENESS OF ELECTRONIC COPIES OF THIS PLAN SHEET.

Caltrans Metric

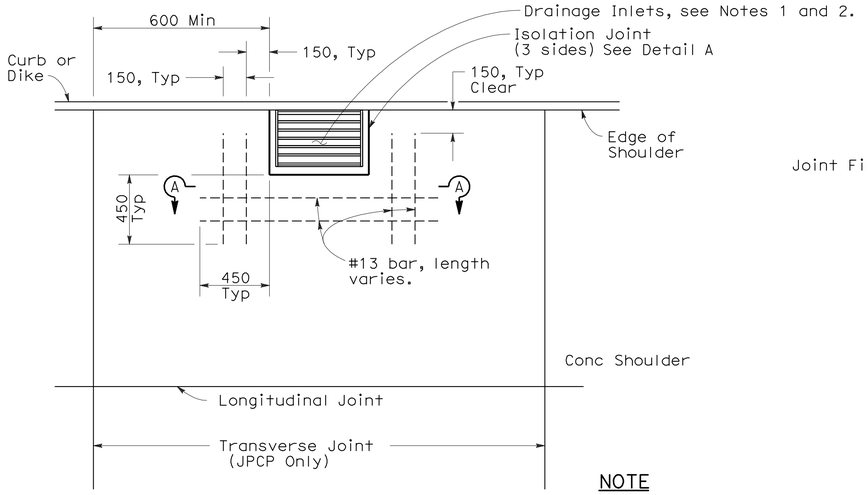

NOTE

Dowels and tie bars not shown, See Std. Plan RSP P1.

CASE 1

Transverse joint more than 600 mm clear of drainage inlet wall or no transverse joint

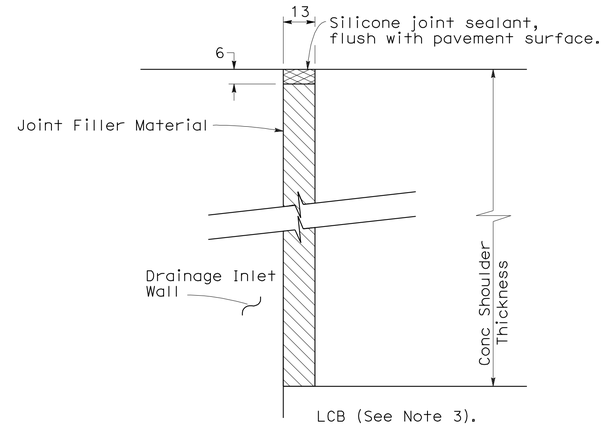

DETAIL "A"
ISOLATION JOINT AROUND DRAINAGE INLET

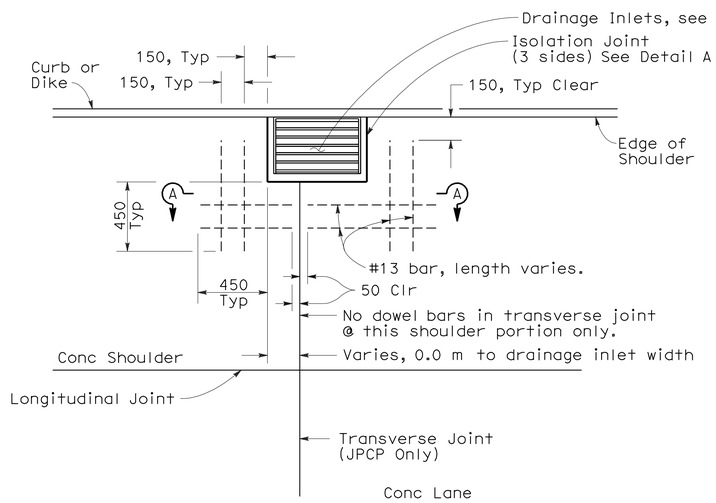

CASE 2

Transverse joint intersects drainage inlet, or matches drainage inlet wall.

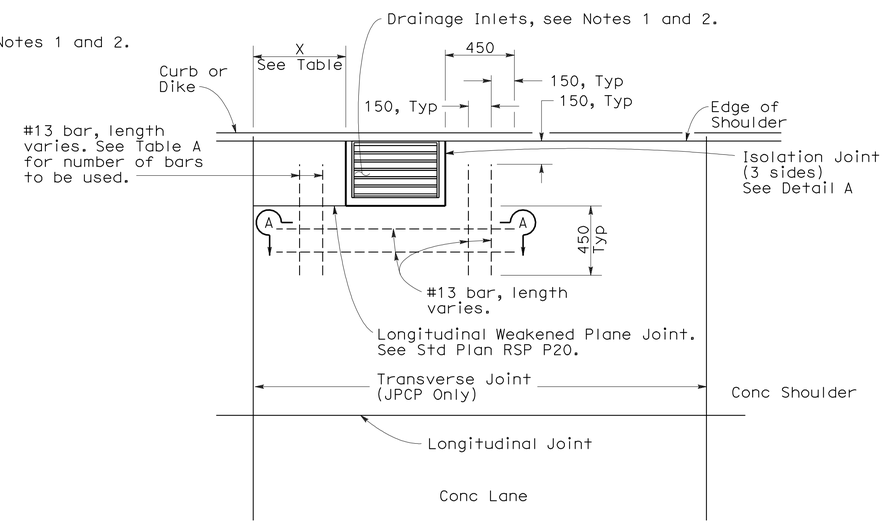

CASE 3

Transverse joint within 600 mm of drainage inlet wall, or matches drainage inlet wall.

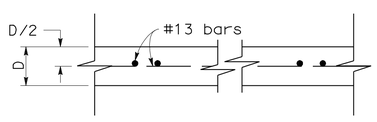

SECTION A-A

D = Pavement Thickness

NOTES

1. Refer to Project Plans for location and types of drainage inlets.
2. Top of inlet shall be flush with shoulder surface.
3. Extend joint filler material to bottom of LCB. Where LCB is not used as base material, the joint filler material shall only extend to the bottom of the new PCC pavement.
4. For jointed plain concrete pavement only. For continuous reinforced concrete pavement, terminate pavement steel reinforcement 2" from all edges of longitudinal isolation joint.

TABLE A

DISTANCE X	BARS REQUIRED
600-450	2
450-225	1 @ X/2
225 or less	None

ALL DIMENSIONS ARE IN MILLIMETERS UNLESS OTHERWISE SHOWN.

CONSTRUCTION DETAILS
CONCRETE PAVEMENT DRAINAGE INLET DETAILS No. 1

NO SCALE

C-13

STATE OF CALIFORNIA - DEPARTMENT OF TRANSPORTATION
DESIGN
Caltrans

FUNCTIONAL SUPERVISOR: DEREK HIGA
CALCULATED-DESIGNED BY: AINSLEY CHIANG
CHECKED BY: KAZ KAYODA
REVISED BY
DATE REVISED

LAST REVISION 00-00-00
DATE PLOTTED => 21-SEP-2010
TIME PLOTTED => 11:24

Dist	COUNTY	ROUTE	KILOMETER POST TOTAL PROJECT	SHEET No.	TOTAL SHEETS
07	LA	101	24.9/25.9	27	213

REGISTERED CIVIL ENGINEER 6/30/10 DATE

8-9-10
PLANS APPROVAL DATE

REGISTERED PROFESSIONAL ENGINEER AINSLEY CHIANG No. C74005 Exp. 6/30/11 CIVIL STATE OF CALIFORNIA

THE STATE OF CALIFORNIA OR ITS OFFICERS OR AGENTS SHALL NOT BE RESPONSIBLE FOR THE ACCURACY OR COMPLETENESS OF ELECTRONIC COPIES OF THIS PLAN SHEET.

Caltrans Metric

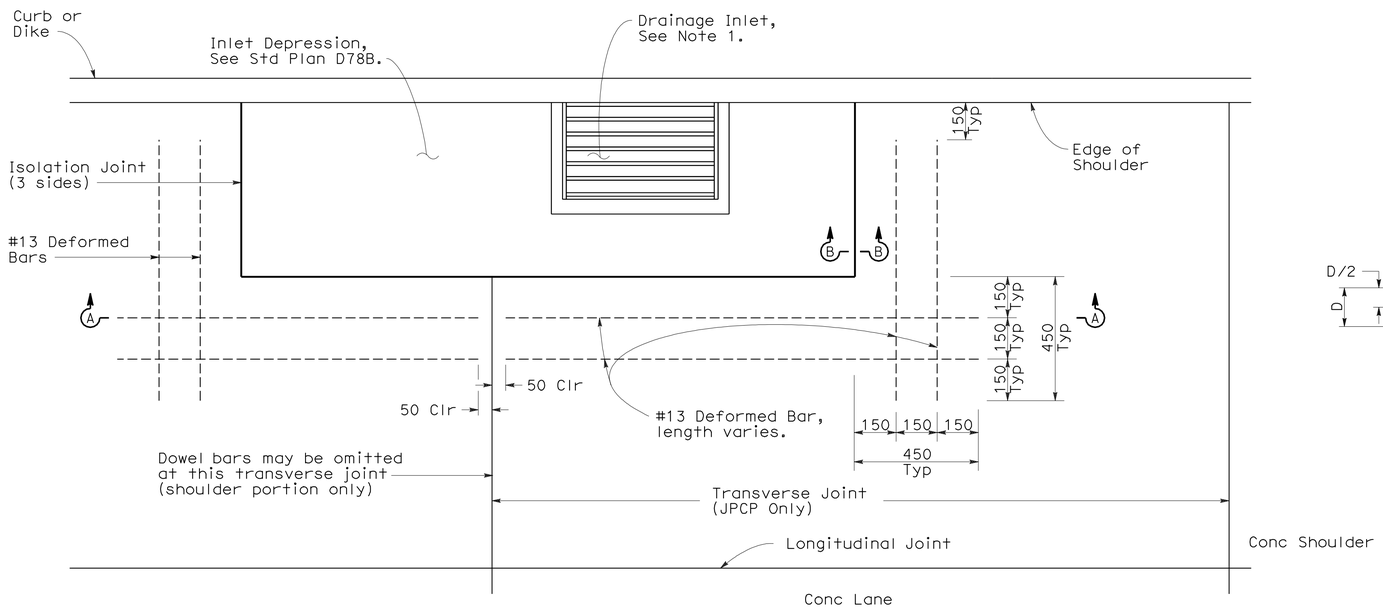

CASE A

Transverse Joint intersects inlet depression or no transverse joints.

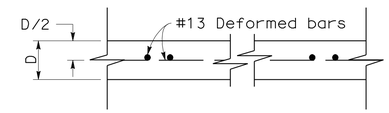

SECTION A-A

D = Pavement Thickness

TABLE A

DISTANCE X	BARS REQUIRED
600-450	2
450-300	1
300 or less	None

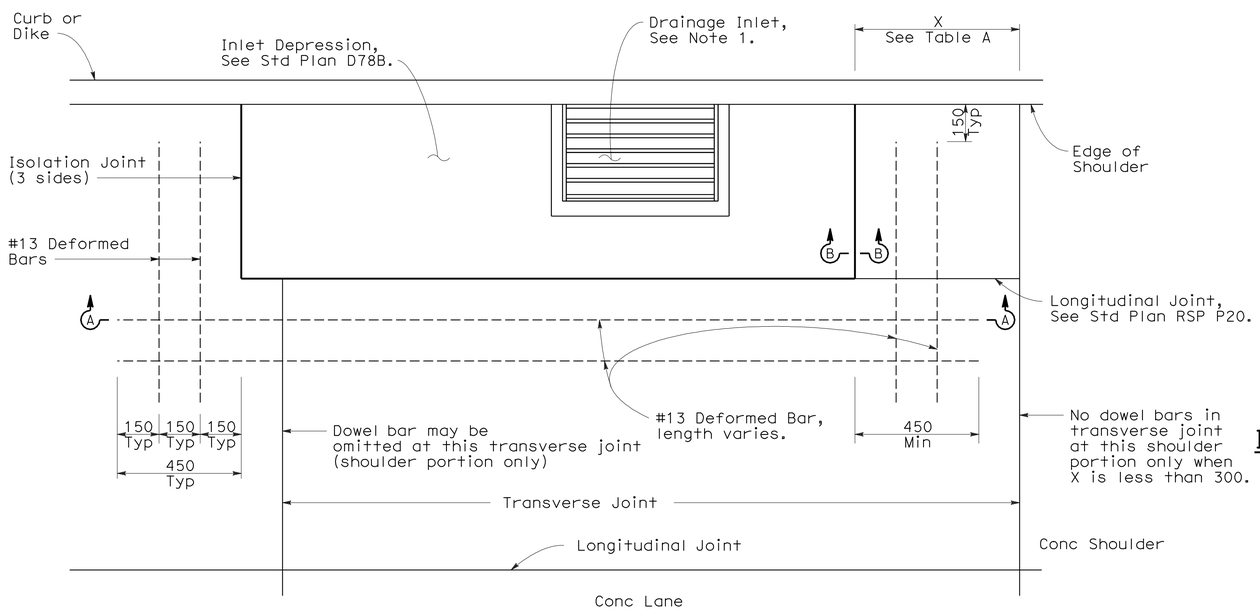

CASE B

Transverse Joint within 600 mm of edge of inlet depression.

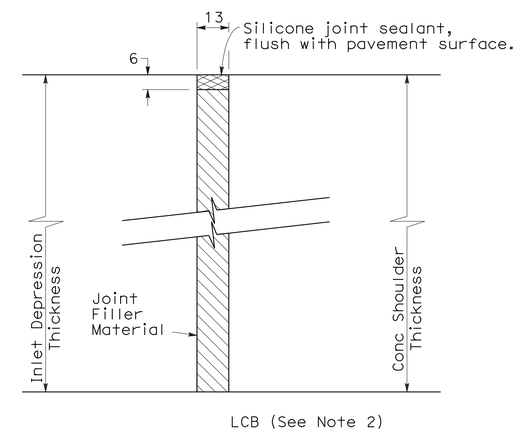

SECTION B-B

ISOLATION JOINT AROUND CONCRETE APRON

NOTES

1. Refer to Project Plans for location and types of drainage inlets.
2. Extend joint filler material to bottom of LCB. Where LCB is not used as base material, the joint filler material shall only extend to the bottom of the new PCC pavement.
3. For Jointed Plain Concrete Pavement only. For continuous reinforced concrete pavement, terminate pavement steel reinforcement 50 mm from all edges of longitudinal isolation joint.

ALL DIMENSIONS ARE IN MILLIMETERS UNLESS OTHERWISE SHOWN.

CONSTRUCTION DETAILS
CONCRETE PAVEMENT
DRAINAGE INLET
DETAILS No. 2

NO SCALE

C-14

STATE OF CALIFORNIA - DEPARTMENT OF TRANSPORTATION
Caltrans DESIGN

FUNCTIONAL SUPERVISOR: DEREK HIGA
CALCULATED-DESIGNED BY: AINSLEY CHIANG
CHECKED BY: KAZ KAYODA
REVISED BY / DATE REVISED

LAST REVISION 00-00-00
DATE PLOTTED => 21-SEP-2010
TIME PLOTTED => 11:25

Dist	COUNTY	ROUTE	KILOMETER POST TOTAL PROJECT	SHEET No.	TOTAL SHEETS
07	LA	101	24.9/25.9	28	213

REGISTERED CIVIL ENGINEER 6/30/10 DATE

8-9-10
PLANS APPROVAL DATE

REGISTERED PROFESSIONAL ENGINEER AINSLEY CHIANG No. C74005 Exp. 6/30/11 CIVIL STATE OF CALIFORNIA

THE STATE OF CALIFORNIA OR ITS OFFICERS OR AGENTS SHALL NOT BE RESPONSIBLE FOR THE ACCURACY OR COMPLETENESS OF ELECTRONIC COPIES OF THIS PLAN SHEET.

Caltrans Metric

A

AB	aggregate base
ABS	acrylonitrile-butadiene-styrene
AC	asphalt concrete
Adj	adjacent/adjustable
AIC	auxiliary irrigation controller
Alt	alternative
AMEND	amendment
ARV	air release valve
AUTO	automatic
AUX	auxiliary
AVB	atmospheric vacuum breaker

B

B&B	balled and burlapped
B/B	brass/bronze
B/B/PL	brass/bronze/plastic
B/PL	brass/plastic
Bit Ctd	bituminous coated
BP	booster pump
BPA	backflow preventer assembly
BPAE	backflow preventer assembly in enclosure
BPE	backflow preventer enclosure
BV	ball valve

C

CAP	corrugated aluminum pipe
CARV	combination air release valve
CCA	cam coupler assembly
CEC	controller enclosure cabinet
CHDPE	corrugated high density polyethylene
CL	chain link
CNC	control and neutral conductors
Conc	concrete
Cond	conduit
CSP	corrugated steel pipe
CST	center strip
CV	check valve

D

Dia	diameter
DIP	ductile iron pipe
DN	diameter nominal

E

EA	each
ELEC	electric/electrical
Elev	elevation
ENCL	enclosure
EP	edge of pavement
ES	edge of shoulder
EST	end strip
ESTB	establishment
ETW	edge of traveled way

F

F	full circle
F/P	full/part circle
FAU	filter assembly unit
FCV	flow control valve
FERT	fertilizer
FG	finished grade
FIPT	female iron pipe thread
FIS	fertilizer injector system
FL	flow line
FM	flow monitor
FS	flow sensor
FV	flush valve

G

Galv	galvanized
GARV	garden valve
GSP	galvanized steel pipe
GV	gate valve

H

H	half circle, height, hour
HB	hose bib
HDPE	high density polyethylene
HP	horsepower/hinge point
HPL	high pressure line
Hwy	highway

I

IC	irrigation controller
ICC	irrigation controller(s) in controller enclosure cabinet
ID	inside diameter
IFS	irrigation filtration system
IPS	iron pipe size
IPT	iron pipe thread
Irr	irrigation

K

KP	kilometer post

L

L/h	liters per hour
L/min	liters per minute
L/s	liters per second

M

Max	maximum
MBGR	metal beam guard railing
MCV	manual control valve
MIC	master irrigation controller
Min	minimum
MIPT	male iron pipe thread
Misc	miscellaneous
Mtl	material
MVP	maintenance vehicle pullout

N

NCN	no common name
NL	nozzle line
No.	number
NPT	national pipe thread

O

O/C	on center
OD	outside diameter

P

P	part circle
PB	pull box
PCC	portland cement concrete
PE	polyethylene
Pkt	packet
PL	plastic
PLT	plant/planting
PLT ESTB	plant establishment
PR	pressure rated
PRLV	pressure relief valve
PRV	pressure reducing valve
PVC	polyvinyl chloride
Pvmt	pavement

Q

Q	quarter circle
QCV	quick coupling valve

R

R	radius
RCP	reinforced concrete pipe
RCV	remote control valve
RCVM	remote control valve (master)
RCW	reclaimed water
REQ	required
R/W	right of way

S

S	slip
SCC	sprinkler control conduit
SCH	schedule
SF	state-furnished
Shld	shoulder
SI	international system of units
SST	side strip
STA	station
Std	standard
SW	sidewalk/sound wall

T

T	third circle/thread
TLS	truck loading standpipe
TQ	three quarter circle
TRVD	traveled
TT	two third circle
Typ	typical

U

UG	underground

V

VAU	valve assembly unit

W

W	width
W/	with
WM	water meter
WS	wye strainer
WSP	welded steel pipe
WWM	welded wire mesh

METRIC UNITS (SI)

SYMBOL	UNIT
mm	millimeter
m	meter
m^2	square meter
m^3	cubic meter
g	gram
kg	kilogram
s	second
kPa	kilopascal
L	liter
ha	hectare

NOTE

FOR ADDITIONAL ABBREVIATIONS, SEE "CONSTRUCTION DETAILS, ACRONYMS AND ABBREVIATIONS, (A-L) AND (M-Z)".

CONSTRUCTION DETAILS
PLANTING AND IRRIGATION ABBREVIATIONS

NO SCALE

C-15

REVISED BY | DATE REVISED
AINSLEY CHIANG | KAZ KAYODA
CALCULATED-DESIGNED BY | CHECKED BY
FUNCTIONAL SUPERVISOR | DEREK HIGA

STATE OF CALIFORNIA - DEPARTMENT OF TRANSPORTATION
Caltrans DESIGN

LAST REVISION 00-00-00 | DATE PLOTTED => 21-SEP-2010 | TIME PLOTTED => 11:25

Dist	COUNTY	ROUTE	KILOMETER POST TOTAL PROJECT	SHEET No.	TOTAL SHEETS
07	LA	101	24.9/25.9	29	213

REGISTERED CIVIL ENGINEER 6/30/10 DATE

8-9-10
PLANS APPROVAL DATE

REGISTERED PROFESSIONAL ENGINEER AINSLEY CHIANG No. C74005 Exp. 6/30/11 CIVIL STATE OF CALIFORNIA

THE STATE OF CALIFORNIA OR ITS OFFICERS OR AGENTS SHALL NOT BE RESPONSIBLE FOR THE ACCURACY OR COMPLETENESS OF ELECTRONIC COPIES OF THIS PLAN SHEET.

Caltrans Metric

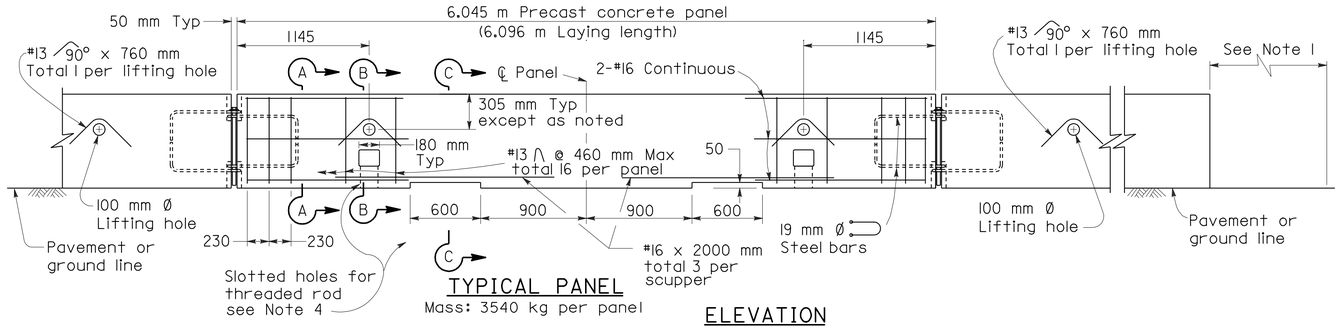

TYPICAL PANEL
Mass: 3540 kg per panel

ELEVATION

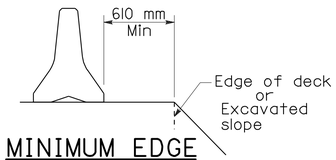

MINIMUM EDGE DISTANCE
See Note 4

NOTES

1. For end treatment, layout and crash cushions, where needed, see Project Plans or Special Provisions.
2. All 90 mm gaps at removable panels are to be backed at the base with #25 x 260 mm dowel or 25.4 mm Ø pin each side of joint. See Section G-G.
3. Where Temporary Railing (Type K) is placed on curves and radii that are too severe to connect panels with bolted joints, the railing is to be backed continuously with earth fill. See Section F-F.
4. Where the offset distance from the exposed edge of deck to the closest edge of the temporary railing is less than 610 mm, attach each panel to deck slab with 25 mm diameter threaded rods (total four per panel) inserted through the slotted holes of the panel and bond in drilled holes 150 mm deep in the deck slabs. See "Bridge Memo to Designers" Manual.

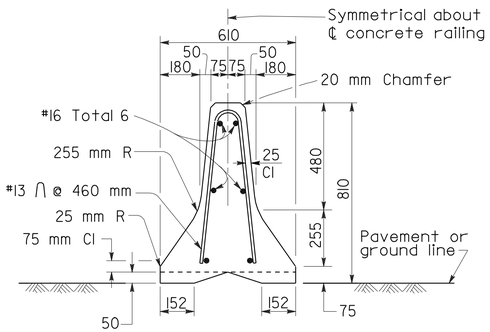

SECTION A-A

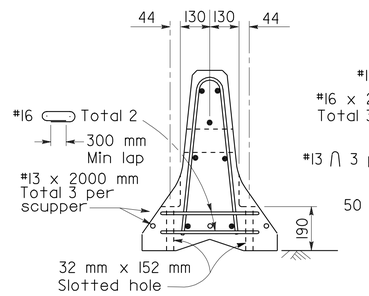

SECTION B-B

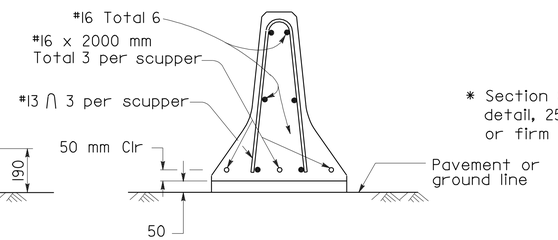

SECTION C-C

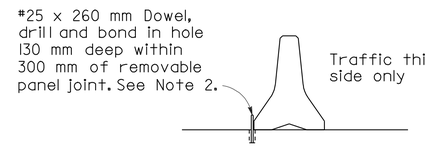

SECTION G-G *

* Section G-G is for PCC pavement. Alternative detail, 25.4 mm Ø pins 610 mm long driven in AC or firm soil permitted, minimum 460 mm deep.

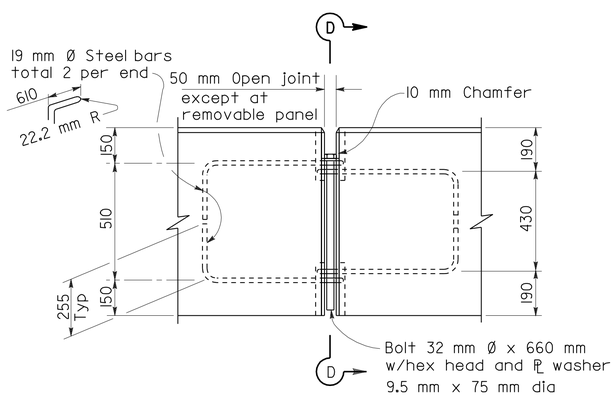

ELEVATION

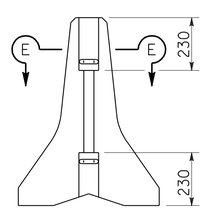

VIEW D-D

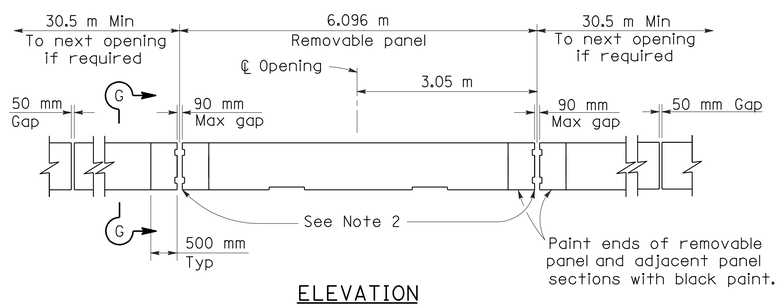

ELEVATION

TYPICAL OPENING DETAIL

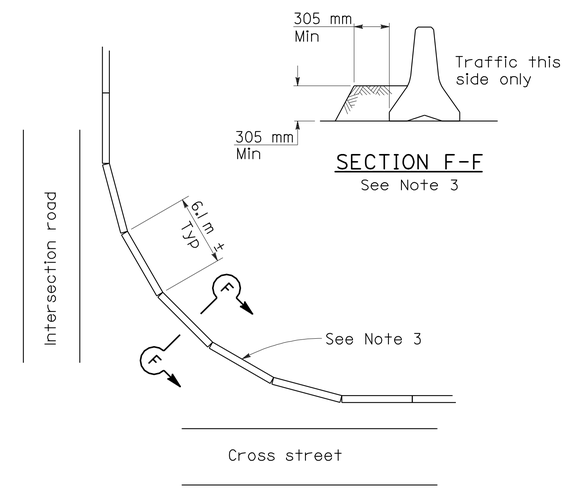

SECTION F-F
See Note 3

CURVED LAYOUT

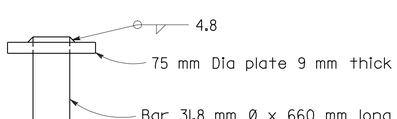

ALTERNATIVE HEAD DETAIL

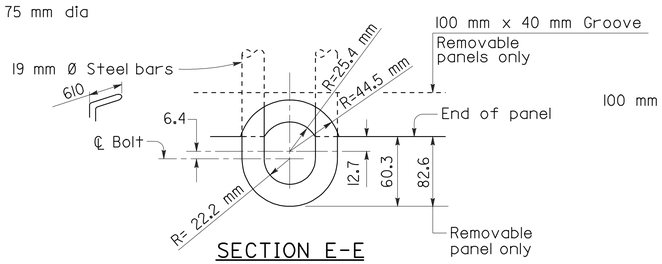

SECTION E-E

BOLT CONNECTION DETAIL

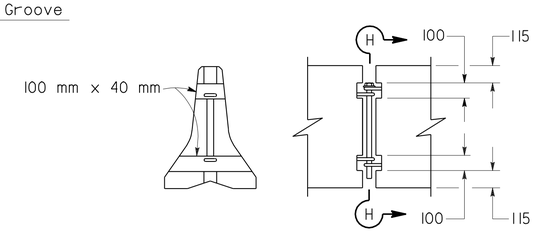

SECTION H-H ELEVATION

REMOVABLE PANEL GROOVE DETAILS

ALL DIMENSIONS ARE IN MILLIMETERS
UNLESS OTHERWISE SHOWN.

CONSTRUCTION DETAILS
TEMPORARY RAILING (TYPE K)

NO SCALE

C-16

STATE OF CALIFORNIA - DEPARTMENT OF TRANSPORTATION
Caltrans DESIGN

FUNCTIONAL SUPERVISOR DEREK HIGA
CALCULATED-DESIGNED BY AINSLEY CHIANG
CHECKED BY KAZ KAYODA
REVISED BY DATE REVISED

LAST REVISION 00-00-00 DATE PLOTTED => 21-SEP-2010 TIME PLOTTED => 11:25

Dist	COUNTY	ROUTE	KILOMETER POST TOTAL PROJECT	SHEET No.	TOTAL SHEETS
07	LA	101	24.9/25.9	30	213

REGISTERED CIVIL ENGINEER 6/30/10 DATE

8-9-10
PLANS APPROVAL DATE

REGISTERED PROFESSIONAL ENGINEER AINSLEY CHIANG No. C74005 Exp. 6/30/11 CIVIL STATE OF CALIFORNIA

THE STATE OF CALIFORNIA OR ITS OFFICERS OR AGENTS SHALL NOT BE RESPONSIBLE FOR THE ACCURACY OR COMPLETENESS OF ELECTRONIC COPIES OF THIS PLAN SHEET.

Caltrans Metric

NOTES

Unless otherwise specified in the special provisions, all temporary warning signs shall have black legend on orange background.

California code are designated by (CA). Otherwise, Federal codes are shown.

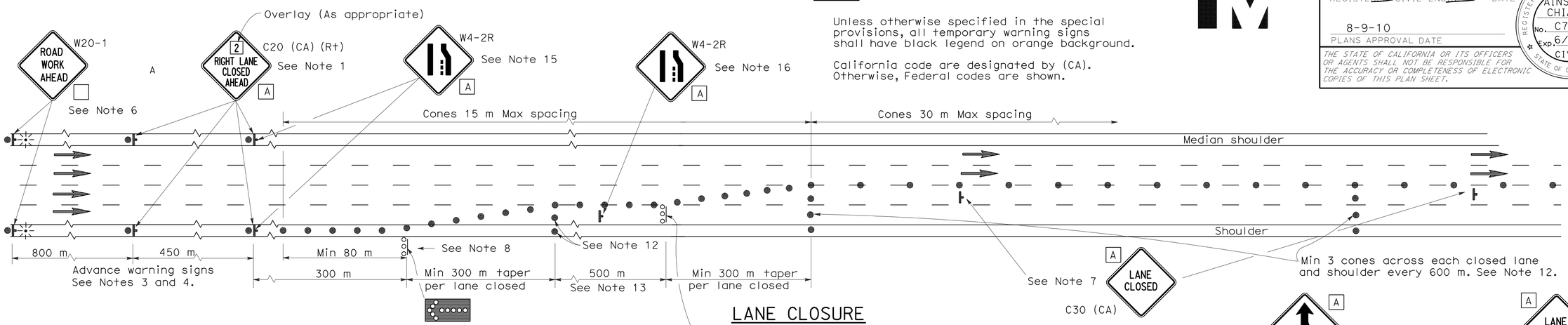

LANE CLOSURE

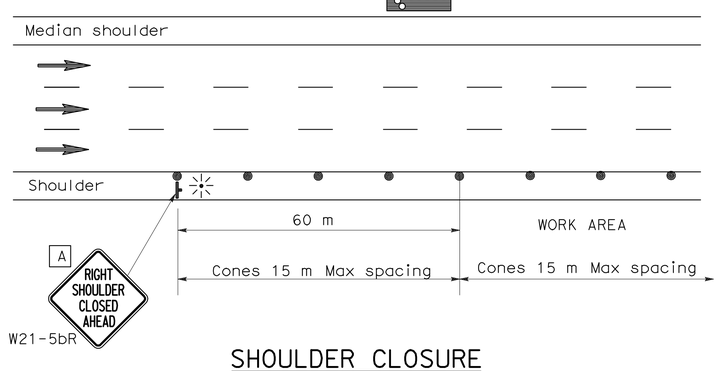

SHOULDER CLOSURE

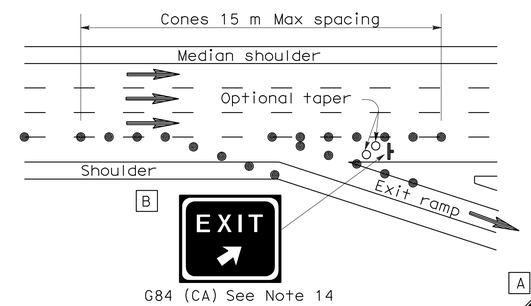

LANE CLOSURE AT EXIT RAMP

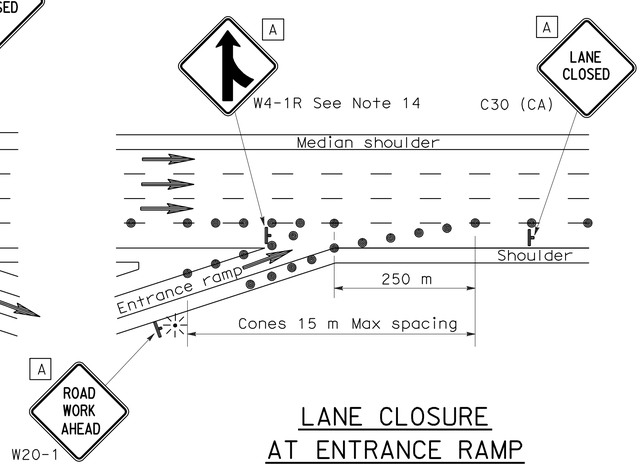

LANE CLOSURE AT ENTRANCE RAMP

NOTES

1. Median lane closures shall conform to the details for outside lane closures except that C20 (CA) (Lt) signs shall be used.
2. At least one person shall be assigned to provide full time maintenance of traffic control devices for lane closures.
3. Duplicate sign installations are not required:
   a) On opposite shoulder if at least one-half of the available lanes remain open to traffic.
   b) In the median if the width of the median shoulder is less than 2.4 m and the outside lanes are to be closed.
4. Each advance warning sign on each side of the roadway shall be equipped with at least two flags for daytime closure. Each flag shall be at least 400 mm x 400 mm in size and shall be orange or fluorescent red-orange in color. Flashing beacons shall be placed at the locations indicated for lane closure during hours of darkness.
5. A C14 (CA) "END ROAD WORK" sign, as appropriate, shall be placed at the end of the lane closure unless the end of work area is obvious or ends within a larger project's limits.
6. If the W20-1 sign would follow within 600 m of a stationary W20-1 or C11 (CA) "ROAD WORK NEXT _____ MILES", use a C20 (CA) sign for the first advance warning sign.
7. Place a C30 (CA) sign every 600 m throughout length of lane closure.
8. One flashing arrow sign for each lane closed. The first flashing arrow sign shall be Type I. All others may be either Type I or Type II.
9. A minimum 450 m of sight distance shall be provided where possible for vehicles approaching the first flashing arrow sign. Lane closures shall not begin at top of crest vertical curve or on a horizontal curve.
10. All cones used for lane closures during the hours of darkness shall be fitted with retroreflective bands (or sleeves) as specified in the specifications.
11. Portable delineators, placed at one-half the spacing indicated for traffic cones may be used instead of cones for daytime closures only.
12. Unless otherwise specified in the special provisions, a minimum of 3 cones shall be placed transversely across each closed lane and shoulder at each location where a taper across a traffic lane ends and every 600 m as shown on the "Lane Closure" detail. Two Type II barricades may be used instead of the 3 cones. The transverse alignment of the cones or barricades on the closed shoulder may be shifted from the transverse alignment to provide access to the work.
13. Unless otherwise specified in the special provisions, the 500 m tangent shown along lane lines shall be used between the 300 m tapers required for each closed traffic lane.
14. Unless otherwise specified in the special provisions, the G84 (CA) and W4-1 signs shall be used as shown.
15. When specified in the special provisions, a W4-2 "LANE ENDS" symbol sign is to be used in place of the C20 (CA) "RIGHT LANE CLOSED AHEAD" sign.
16. The W4-2 "LANE ENDS" symbol sign shown at this location is to be used where the W4-2 sign is used as advance warning as described in Note 15.

SIGN PANEL SIZE (Min)

A	1200 mm x 1200 mm
B	1372 mm x 1219 mm

LEGEND

- Traffic Cone
- Traffic Cone (optional taper)
- Temporary Sign
- Flashing Arrow Sign (FAS)
- FAS Support or Trailer
- Direction of Travel
- Portable Flashing Beacon

ALL DIMENSIONS ARE IN MILLIMETERS UNLESS OTHERWISE SHOWN.

CONSTRUCTION DETAILS
TRAFFIC CONTROL SYSTEM FOR LANE CLOSURE ON FREEWAYS AND EXPRESSWAYS

NO SCALE

C-17

REVISED BY | DATE REVISED
KAZ KAYODA | AINSLEY CHIANG
CALCULATED-DESIGNED BY | CHECKED BY
FUNCTIONAL SUPERVISOR | DEREK HIGA
STATE OF CALIFORNIA - DEPARTMENT OF TRANSPORTATION
Caltrans DESIGN

LAST REVISION 00-00-00 | DATE PLOTTED => 21-SEP-2010 | TIME PLOTTED => 11:25

Dist	COUNTY	ROUTE	KILOMETER POST TOTAL PROJECT	SHEET No.	TOTAL SHEETS
07	LA	101	24.9/25.9	31	213

REGISTERED CIVIL ENGINEER 6/30/10 DATE

8-9-10
PLANS APPROVAL DATE

REGISTERED PROFESSIONAL ENGINEER AINSLEY CHIANG No. C74005 Exp. 6/30/11 CIVIL STATE OF CALIFORNIA

THE STATE OF CALIFORNIA OR ITS OFFICERS OR AGENTS SHALL NOT BE RESPONSIBLE FOR THE ACCURACY OR COMPLETENESS OF ELECTRONIC COPIES OF THIS PLAN SHEET.

Caltrans Metric

NOTES

Unless otherwise specified in the special provisions, all temporary warning signs shall have black legend on orange background.

California code are designated by (CA). Otherwise, Federal codes are shown.

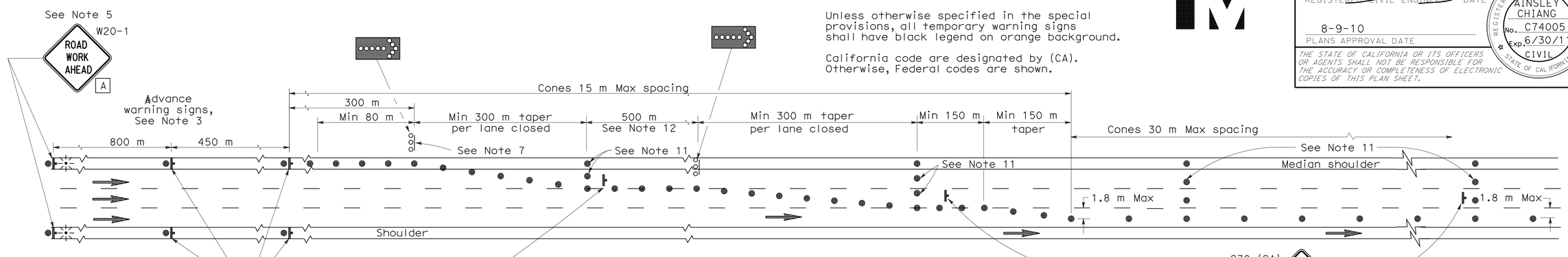

LANE CLOSURE WITH PARTIAL SHOULDER USE

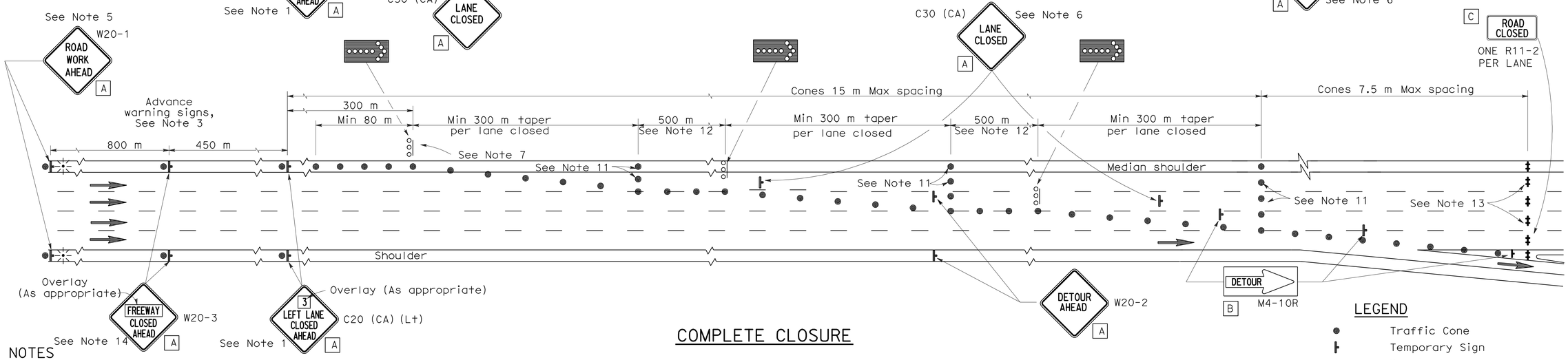

COMPLETE CLOSURE

NOTES

1. Lane closures on the right side using partial median shoulder as a traffic lane shall conform to the details for inside lane closure except that C20 (CA) (Rt) signs shall be used.
2. At least one person shall be assigned to provide full time maintenance of traffic control devices for lane closures.
3. Each advance warning sign on each side of the roadway shall be equipped with at least two flags for daytime closure. Each flag shall be at least 400 mm x 400 mm in size and shall be orange or fluorescent red-orange in color. Flashing beacons shall be placed at the locations indicated for lane closure during hours of darkness.
4. A C14 (CA) "END ROAD WORK" sign, as appropriate, shall be placed at the end of the lane closure unless the end of work area is obvious or ends within a larger project's limits.
5. If the W20-1 sign would follow within 600 m of a stationary W20-1 or C11 (CA) "ROAD WORK NEXT ___ MILES", use a C20 (CA) sign for the first advance warning sign.
6. Place a C30 (CA) sign every 600 m throughout length of lane closure.
7. One flashing arrow sign for each lane closed. The first flashing arrow sign shall be Type I. All others may be either Type I or Type II.
8. A minimum 450 m of sight distance shall be provided where possible for vehicles approaching the first flashing arrow sign. Lane closures shall not begin at the top of crest vertical curve or on a horizontal curve.
9. All cones used for lane closures during the hours of darkness shall be fitted with retroreflective bands (or sleeves) as specified in the specifications.
10. Portable delineators, placed at one-half the spacing indicated for traffic cones, may be used instead of cones for daytime closures only.
11. Unless otherwise specified in the special provisions, a minimum of 3 cones shall be placed transversely across each closed lane and shoulder at each location where a taper across a traffic lane ends and every 600 m as shown on the "Lane Closure With Partial Shoulder Use" detail. Two Type II barricades may be used instead of the 3 cones. The transverse alignment of the cones or barricades on the closed shoulder may be shifted from the transverse alignment to provide access to the work.
12. Unless otherwise specified in the special provisions, the 500 m tangent shown along lane lines shall be used between the 300 m tapers required for each closed traffic lane.
13. A minimum of Two Type II barricades shall be placed across each closed lane and shoulder at the location shown and every 600 m within the complete closure area. Within the complete closure area, the transverse alignment of the barricades on the closed shoulder may be shifted from the transverse alignment to provide access to the work.
14. When specified in the special provisions, a W20-2 "DETOUR AHEAD" sign is to be used in place of the W20-3 "FREEWAY CLOSED AHEAD" sign.

SIGN PANEL SIZE (Min)

A	1200 mm x 1200 mm
B	1200 mm x 450 mm
C	1200 mm x 750 mm

LEGEND

- Traffic Cone
- Temporary Sign
- Barricade
- Flashing Arrow Sign (FAS)
- FAS Support or Trailer
- Direction of Travel
- Portable Flashing Beacon

ALL DIMENSIONS ARE IN MILLIMETERS UNLESS OTHERWISE SHOWN.

CONSTRUCTION DETAILS

TRAFFIC CONTROL SYSTEM FOR LANE AND COMPLETE CLOSURES ON FREEWAYS AND EXPRESSWAYS

NO SCALE

C-18

REVISED BY	DATE REVISED
KAZ KAYODA	AINSLEY CHIANG

CALCULATED-DESIGNED BY / CHECKED BY

FUNCTIONAL SUPERVISOR: DEREK HIGA

STATE OF CALIFORNIA - DEPARTMENT OF TRANSPORTATION
Caltrans DESIGN

LAST REVISION 00-00-00 | DATE PLOTTED => 21-SEP-2010 | TIME PLOTTED => 11:25

Dist	COUNTY	ROUTE	KILOMETER POST TOTAL PROJECT	SHEET No.	TOTAL SHEETS
07	LA	101	24.9/25.9	32	213

REGISTERED CIVIL ENGINEER 6/30/10 DATE

8-9-10
PLANS APPROVAL DATE

REGISTERED PROFESSIONAL ENGINEER AINSLEY CHIANG No. C74005 Exp. 6/30/11 CIVIL STATE OF CALIFORNIA

THE STATE OF CALIFORNIA OR ITS OFFICERS OR AGENTS SHALL NOT BE RESPONSIBLE FOR THE ACCURACY OR COMPLETENESS OF ELECTRONIC COPIES OF THIS PLAN SHEET.

Caltrans Metric

TYPICAL RAMP CLOSURES

SIGN PANEL SIZE (Min)

- A 1200 mm x 1200 mm
- B 1200 mm x 750 mm
- C 750 mm x 750 mm
- D 1200 mm x 1200 mm - Speed of 80 kph or more
  900 mm x 900 mm - Speed less than 80 kph
- E 1219 mm x 914 mm

LEGEND

- Traffic Cone
- Temporary Sign
- Barricades
- Direction of Travel
- Turn Arrow

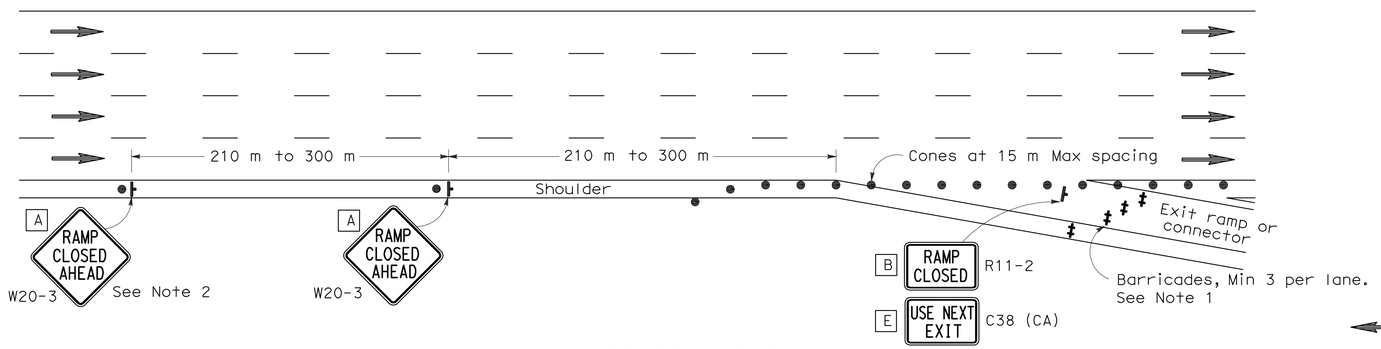

EXIT RAMP OR CONNECTOR

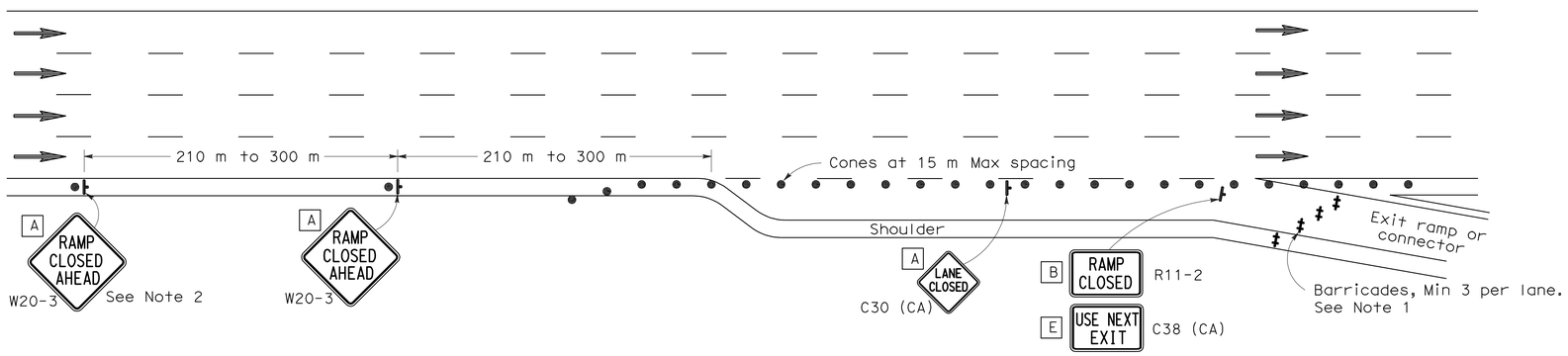

EXIT RAMP OR CONNECTOR WITH ADDITIONAL LANE

NOTES

1. Barricades shall be Type I, II, or III for closures lasting one week or less and Type III for closures lasting longer than one week.
2. Instead of placing the W20-3 "RAMP CLOSED AHEAD" and C30 (CA) "RAMP CLOSED" signs, black on orange overlay plates with the word "CLOSED" may be mounted, as directed by the Engineer, on all guide signs that refer to the closed ramp. The letter size on the overlay shall be the same as the guide sign.
3. Each advance W20-3 "RAMP CLOSED AHEAD" sign shall be equipped with at least two flags for daytime closure. Each flag shall be at least 400 mm x 400 mm in size and shall be orange or fluorescent red-orange in color.
4. All cones used for ramp closures during the hours of darkness shall be fitted with retroreflective bands (or sleeves) as specified in the specifications.
5. Portable delineators, placed at one-half the spacing indicated for traffic cones, may be used instead of cones for daytime ramp closures only.
6. At least one person shall be assigned to provide full time maintenance of traffic control devices, unless otherwise directed by the Engineer.
7. The existing "EXIT" sign in the gore area shall be covered during ramp closures.

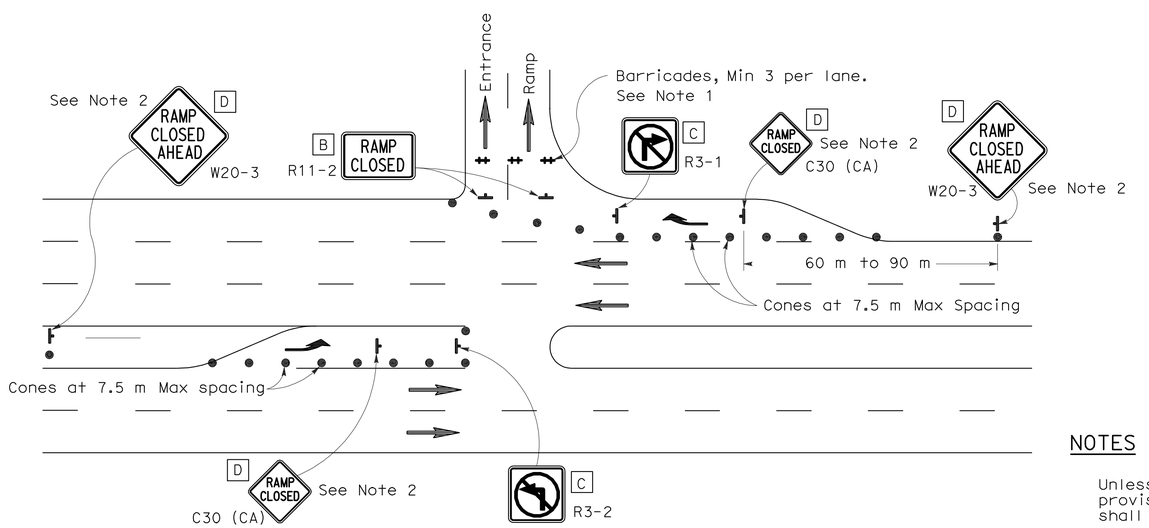

ENTRANCE RAMP WITH TURNING POCKETS

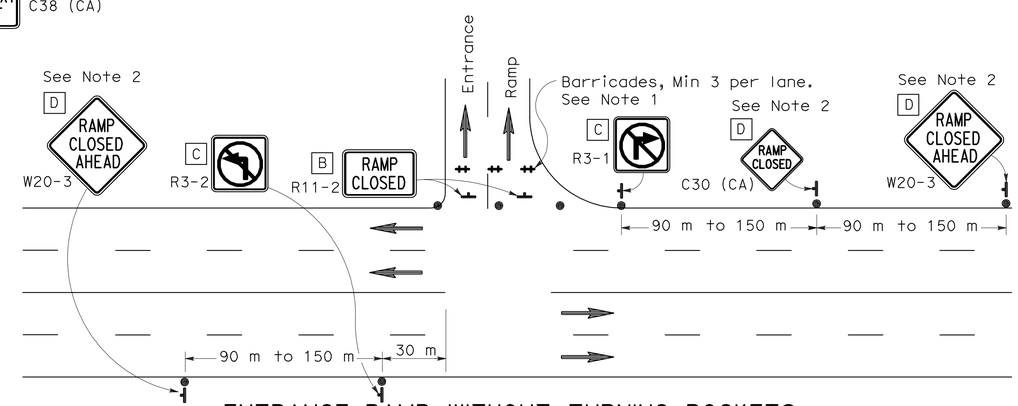

ENTRANCE RAMP WITHOUT TURNING POCKETS

NOTES

Unless otherwise specified in the special provisions, all temporary warning signs shall have black legend on orange background.

California code are designated by (CA). Otherwise, Federal codes are shown.

ALL DIMENSIONS ARE IN MILLIMETERS UNLESS OTHERWISE SHOWN.

CONSTRUCTION DETAILS
TRAFFIC CONTROL SYSTEM FOR RAMP CLOSURE

NO SCALE

C-19

STATE OF CALIFORNIA - DEPARTMENT OF TRANSPORTATION
DESIGN
Caltrans

FUNCTIONAL SUPERVISOR: DEREK HIGA
CALCULATED-DESIGNED BY: AINSLEY CHIANG
CHECKED BY: KAZ KAYODA
REVISED BY / DATE REVISED

LAST REVISION 00-00-00 | DATE PLOTTED => 21-SEP-2010 | TIME PLOTTED => 11:26

Dist	COUNTY	ROUTE	KILOMETER POST TOTAL PROJECT	SHEET No.	TOTAL SHEETS
07	LA	101	24.9/25.9	33	213

REGISTERED CIVIL ENGINEER 6/30/10 DATE

8-9-10
PLANS APPROVAL DATE

REGISTERED PROFESSIONAL ENGINEER AINSLEY CHIANG No. C74005 Exp. 6/30/11 CIVIL STATE OF CALIFORNIA

THE STATE OF CALIFORNIA OR ITS OFFICERS OR AGENTS SHALL NOT BE RESPONSIBLE FOR THE ACCURACY OR COMPLETENESS OF ELECTRONIC COPIES OF THIS PLAN SHEET.

Caltrans Metric

INSTRUCTIONS TO FABRICATOR

PROJECT PLANS SHOW:

1. Sign structure location.
2. Length of structure frame.
3. Panel size and locations on structure.
4. Walkway length for two post signs.
5. Post type and height to bottom of frame.
6. Base plate elevation.
7. Footing elevation or location of pile foundation.
8. Photoelectric unit location if required.

REFER TO THE FOLLOWING STANDARD PLANS FOR DETAILS NOT SHOWN ON PROJECT PLANS:

Sheet #	SHEET NAME
C-20	Overhead Signs-Truss, Instructions and Examples
C-21	Overhead Signs-Truss, Single Post Type, Post Types II to IX
RSP S3	Overhead Signs-Truss, Single Post Type, Base Plate and Anchorage Details
C-22	Overhead Signs-Truss, Single Post Type, Structural Frame Members Details No. 1
S5	Overhead Signs-Truss, Single Post Type, Structural Frame Members Details No. 2
C-23	Overhead Signs-Truss, Gusset Plate Details
RSP S7	Overhead Signs-Truss, Single Post Type, Square Pedestal Pile Foundation
C-24	Overhead Signs-Truss, Single Post Type, Round Pedestal Pile Foundation
RSP S9	Overhead Signs-Truss, Two Post Type, Post Types I-S through VII-S
C-25	Overhead Signs-Truss, Two Post Type, Base Plate and Anchorage Details
RSP S11	Overhead Signs-Truss, Two Post Type, Structural Frame Members
RSP S12	Overhead Signs-Truss, Structural Frame Details
RSP S13	Overhead Signs-Truss, Frame Juncture Details
RSP S14	Overhead Signs-Truss, Two Post Type, Square Pedestal Pile Foundation
RSP S15	Overhead Signs-Truss, Two Post Type, Round Pedestal Pile Foundation
C-26	Overhead Signs, Walkway Details No. 1
C-27	Overhead Signs, Walkway Details No. 2
C-28	Overhead Signs, Walkway Details No. 3
RSP S18	Overhead Signs, Walkway Safety Railing Details
RSP S19	Overhead Signs-Truss, Sign Mounting Details, Laminated Panel-Type A
RSP S20	Overhead Signs, Steel Frames, Removable Sign Panel Frames
S21	Overhead Signs, Removable Sign Panel Frames, Mounting Details
RSP S22	Overhead Signs-Truss, Removable Sign Panel Frames, 2794 mm and 3048 mm Sign Panels

WALKWAY BRACKETS:

Space all walkway brackets maintaining uniform spacing where possible. Maximum spacing shall not exceed 1676 mm.

LIGHTING FIXTURE SUPPORTS:

Where distance from walkway bracket to end of sign panel exceeds 406 mm, extend lighting fixture supports to next walkway bracket. See Example No. 2.

WALKWAY AND SAFETY RAILING:

Walkway to be continuous for entire length of frame for single post signs. For two post signs, see Project Plans. Safety railing to protect entire walkway, but continuous for no more than 3353 mm in one unit.

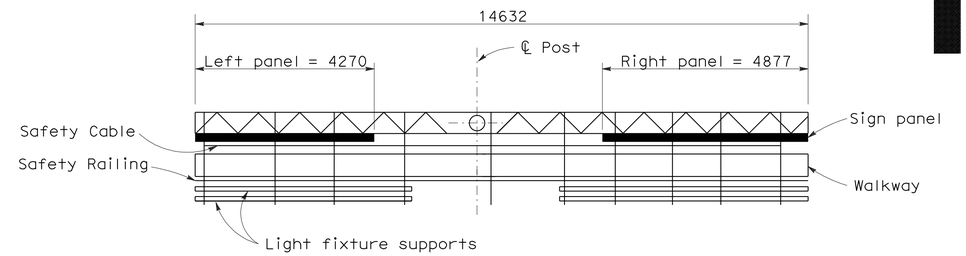

PLAN

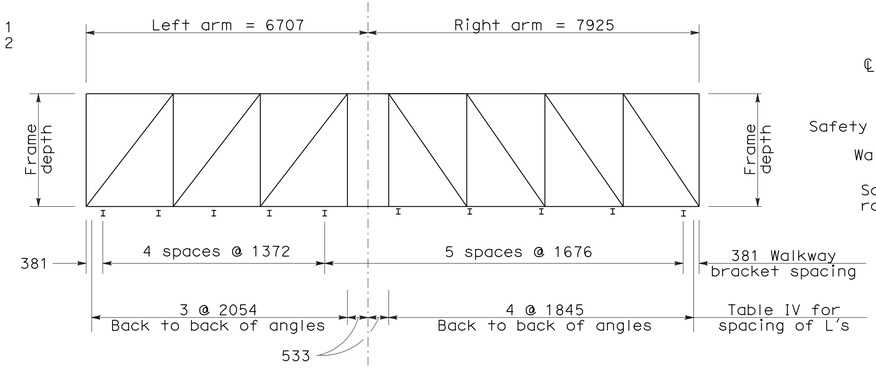

UNBALANCED SINGLE POST TYPE

Example No. 1

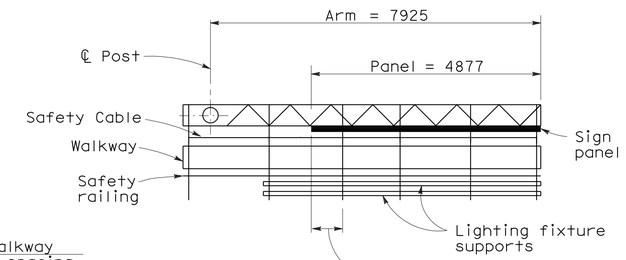

Where sign panel extends 406 mm beyond ℄ walkway bracket, extend lighting supports to next bracket as shown.

PLAN

CANTILEVER SINGLE POST TYPE

Example No. 2

GENERAL NOTES

DESIGN:

AASHTO Specifications for Structural Supports for Highway Signs, Luminaires and Traffic Signals, dated 2001.

CONSTRUCTION:

Standard Specifications and the Special Provisions.

LOADING:

WIND LOADING:

Normal to face of sign: 1930 Pa on 100% Truss surface area (i.e. 100% panel coverage).

Transverse to face of sign: 20% of normal force.

WALKWAY LOADING:

Dead load +229 kg concentrated live load.

UNIT STRESSES:

STRUCTURAL STEEL: fy = 250 MPa
REINFORCED CONCRETE: fy = 415 MPa
f'c = 25 MPa
FOOTING SOIL PRESSURE: 120 kPa (spread footing)

MINIMUM CLEARANCE

Vertical roadway clearance 5500 mm.

WELDING:

All welding continuous unless otherwise noted on the plans. All welding to be done in accordance with the Standard Specifications.

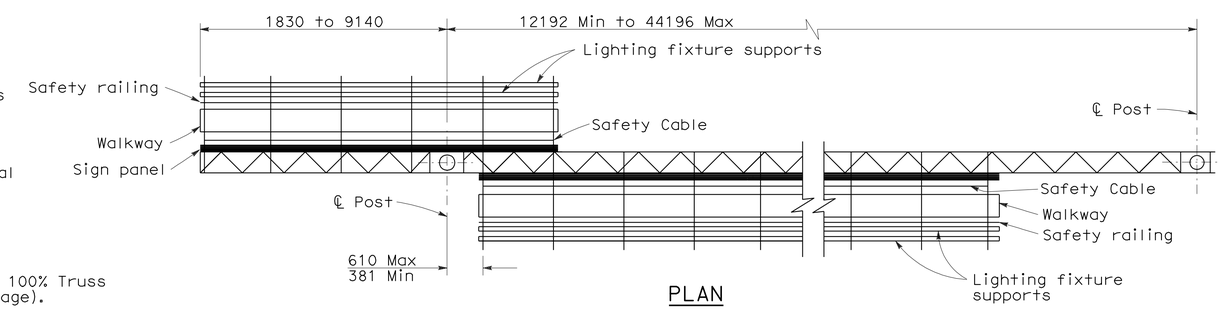

PLAN

TWO POST TYPE WITH CANTILEVER (PART DOUBLE-FACED)

Example No. 3

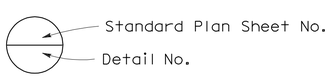

NOTE

Signs are shown and dimensioned looking in the direction of traffic. Double faced signs are shown and dimensioned looking ahead along stationing.

ALL DIMENSIONS ARE IN MILLIMETERS UNLESS OTHERWISE SHOWN.

CONSTRUCTION DETAILS
OVERHEAD SIGNS - TRUSS INSTRUCTIONS AND EXAMPLES

NO SCALE

C-20

STATE OF CALIFORNIA - DEPARTMENT OF TRANSPORTATION
Caltrans DESIGN
FUNCTIONAL SUPERVISOR DEREK HIGA
CALCULATED-DESIGNED BY AINSLEY CHIANG KAZ KAYODA
CHECKED BY
REVISED BY DATE REVISED

LAST REVISION 00-00-00
DATE PLOTTED => 21-SEP-2010
TIME PLOTTED => 11:26

Dist	COUNTY	ROUTE	KILOMETER POST TOTAL PROJECT	SHEET No.	TOTAL SHEETS
07	LA	101	24.9/25.9	34	213

REGISTERED CIVIL ENGINEER 6/30/10 DATE

8-9-10
PLANS APPROVAL DATE

REGISTERED PROFESSIONAL ENGINEER AINSLEY CHIANG No. C74005 Exp. 6/30/11 CIVIL STATE OF CALIFORNIA

THE STATE OF CALIFORNIA OR ITS OFFICERS OR AGENTS SHALL NOT BE RESPONSIBLE FOR THE ACCURACY OR COMPLETENESS OF ELECTRONIC COPIES OF THIS PLAN SHEET.

Caltrans Metric

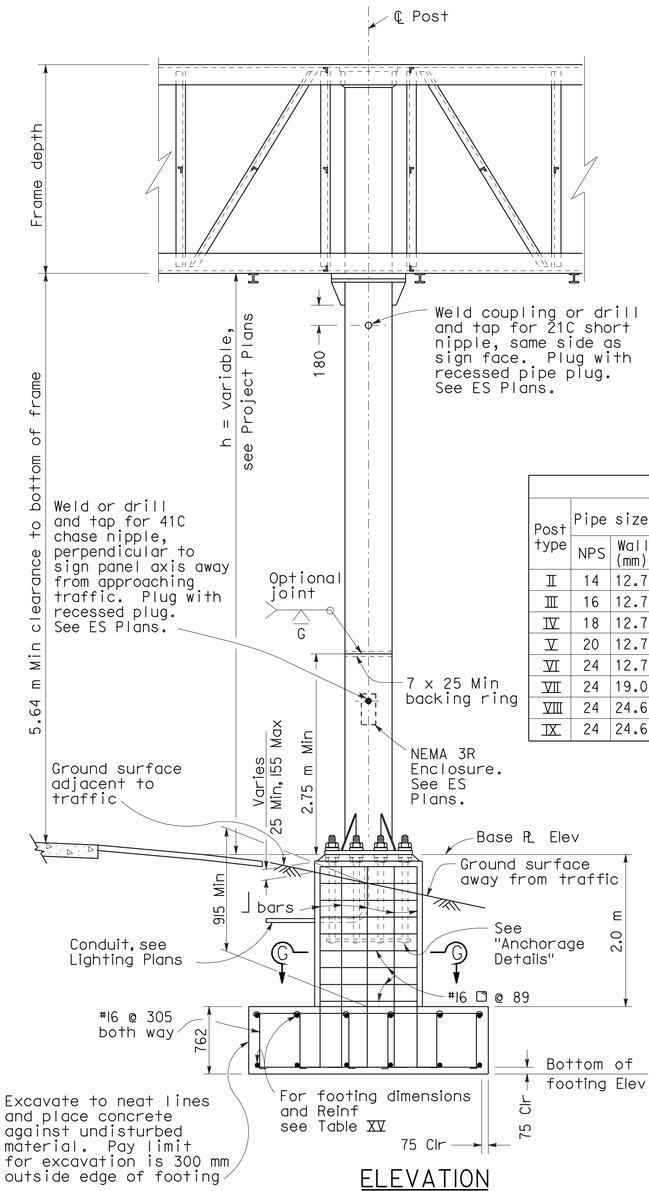

ELEVATION

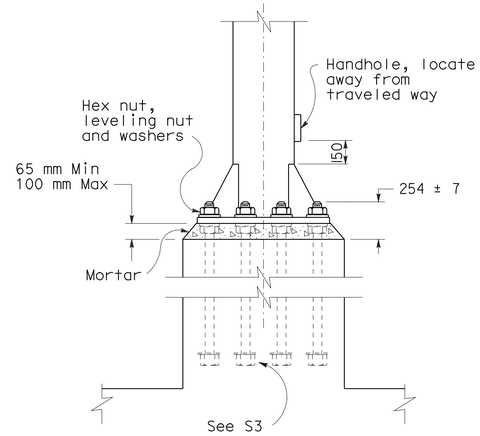

ELEVATION
ANCHORAGE DETAILS

TABLE XV

Post type	Pipe size NPS	Pipe size Wall (mm)	Cap Plate for L 127x127 (mm)	Cap Plate for L 152x152 (mm)	Round Pedestal: Pedestal Size Dia (mm)	Round Pedestal: Vertical ⊥-Bars Equally spaced total	Round Pedestal: Vertical ⊥-Bars Bar Size	Round Pedestal: Vertical ⊥-Bars Bar B.C. (mm)	Round Pedestal: Spiral Bar Size	Round Pedestal: Spiral Pitch (mm)	Square Pedestal: Pedestal Size Square (mm)	Square Pedestal: Vertical ⊥-Bars Equally spaced total	Square Pedestal: Vertical ⊥-Bars Bar Size	Square Pedestal: Vertical ⊥-Bars Spacing ea face (mm)	Square Pedestal: Hoop Bar Size	Square Pedestal: Hoop Spacing (mm)	Pile footing Dia (mm)	Pile footing Depth (m)	Alternate: Spread Footing See note 2 (mm)	Alternate: Spread Footing Reinforcement: Width Top	Alternate: Spread Footing Reinforcement: Width Bottom	Alternate: Spread Footing Reinforcement: Longitudinal Top	Alternate: Spread Footing Reinforcement: Longitudinal Bottom	Alternate: Footing Stirrups
II	14	12.7	610 x 610 x 25	660 x 660 x 25	1600	16	32	1372	16	89	1600	16	32	346	16	89	1372	4.5	3658 x 4267 x 762	14-#19	14-#22	13-#29	13-#29	#16 @ 305
III	16	12.7	660 x 660 x 25	711 x 711 x 25	1600	16	32	1372	16	89	1600	16	32	346	16	89	1372	4.9	3658 x 4267 x 762	15-#19	15-#22	13-#29	13-#29	#16 @ 305
IV	18	12.7	711 x 711 x 25	762 x 762 x 25	1600	16	32	1372	16	89	1600	16	32	346	16	89	1372	5.5	3658 x 4267 x 762	15-#19	15-#22	13-#29	13-#29	#16 @ 305
V	20	12.7	762 x 762 x 25	813 x 813 x 25	1600	16	32	1372	16	89	1600	16	32	346	16	89	1372	5.8	3962 x 4267 x 762	15-#19	15-#22	14-#29	14-#29	#16 @ 305
VI	24	12.7	864 x 864 x 25	914 x 914 x 25	1753	16	36	1534	16	89	1753	16	36	381	16	89	1524	6.7	3962 x 4877 x 762	17-#22	17-#22	14-#29	14-#36	#16 @ 305
VII	24	19.0	864 x 864 x 25	914 x 914 x 25	1753	16	36	1534	16	89	1753	16	36	381	16	89	1524	7.0	3962 x 5182 x 762	18-#22	18-#22	14-#29	14-#36	#16 @ 305
VIII	24	24.6	864 x 864 x 25	914 x 914 x 25	1753	16	36	1534	16	89	1753	16	36	381	16	89	1524	7.6	3962 x 5486 x 762	19-#22	19-#22	14-#29	14-#36	#16 @ 305
IX	24	24.6	864 x 864 x 25	914 x 914 x 25	1753	16	36	1534	16	89	1753	16	36	381	16	89	1524	7.6	3962 x 5486 x 762	19-#22	19-#22	14-#29	14-#36	#16 @ 305

Notes:

1. For "General Notes" see Sheet C-20.
2. Longer side of footing shall be normal to axis of sign.
3. Backfill shall be in place prior to erection of post.
4. Thread upper 254 mm of anchor bolts and galvanize upper 305 mm.
5. Spread footing shown, use Pile Foundation when shown on the Project Plans.
6. Anchor plates may be retained with hexagon nut or formed head as alternatives to details shown.
7. On single post sign structures, the post shall be raked out of plumb, with the use of the leveling nuts to make the bottom of the sign frame level.
8. At final position of post all top and bottom nuts shall be tightened against base plate.
9. When foundation is located on a steep slope with exposed face of concrete adjacent to traffic, see "Detail C" on Revised Standard Plan RSP S7 or C-24, as applicable.
10. Slope protection required when indicated on the Project Plans.

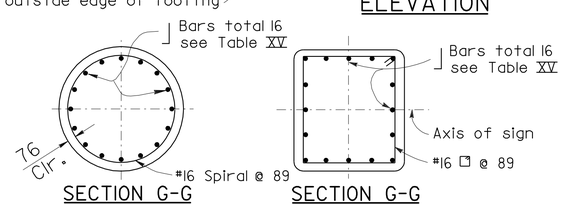

SECTION G-G
ROUND PEDESTAL

SECTION G-G
RECTANGLE PEDESTAL

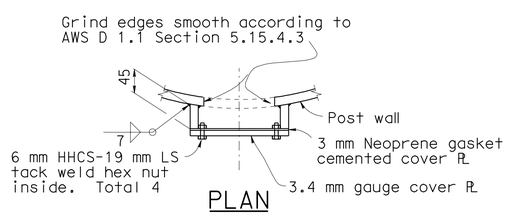

PLAN

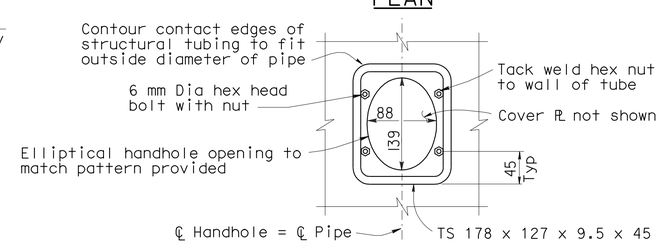

ELEVATION
TYPICAL DETAILS OF HANDHOLE AND COVER

ALL DIMENSIONS ARE IN MILLIMETERS UNLESS OTHERWISE SHOWN.

CONSTRUCTION DETAILS
OVERHEAD SIGNS - TRUSS SINGLE POST TYPE POST TYPES II THROUGH IX

NO SCALE

C-21

STATE OF CALIFORNIA - DEPARTMENT OF TRANSPORTATION
Caltrans DESIGN
FUNCTIONAL SUPERVISOR DEREK HIGA
CALCULATED-DESIGNED BY KAZ KAYODA
CHECKED BY AINSLEY CHIANG
REVISED BY
DATE REVISED

LAST REVISION 00-00-00
DATE PLOTTED => 21-SEP-2010
TIME PLOTTED => 11:26

Dist	COUNTY	ROUTE	KILOMETER POST TOTAL PROJECT	SHEET No.	TOTAL SHEETS
07	LA	101	24.9/25.9	35	213

REGISTERED CIVIL ENGINEER 6/30/10 DATE

8-9-10
PLANS APPROVAL DATE

REGISTERED PROFESSIONAL ENGINEER AINSLEY CHIANG No. C74005 Exp. 6/30/11 CIVIL STATE OF CALIFORNIA

THE STATE OF CALIFORNIA OR ITS OFFICERS OR AGENTS SHALL NOT BE RESPONSIBLE FOR THE ACCURACY OR COMPLETENESS OF ELECTRONIC COPIES OF THIS PLAN SHEET.

Caltrans Metric

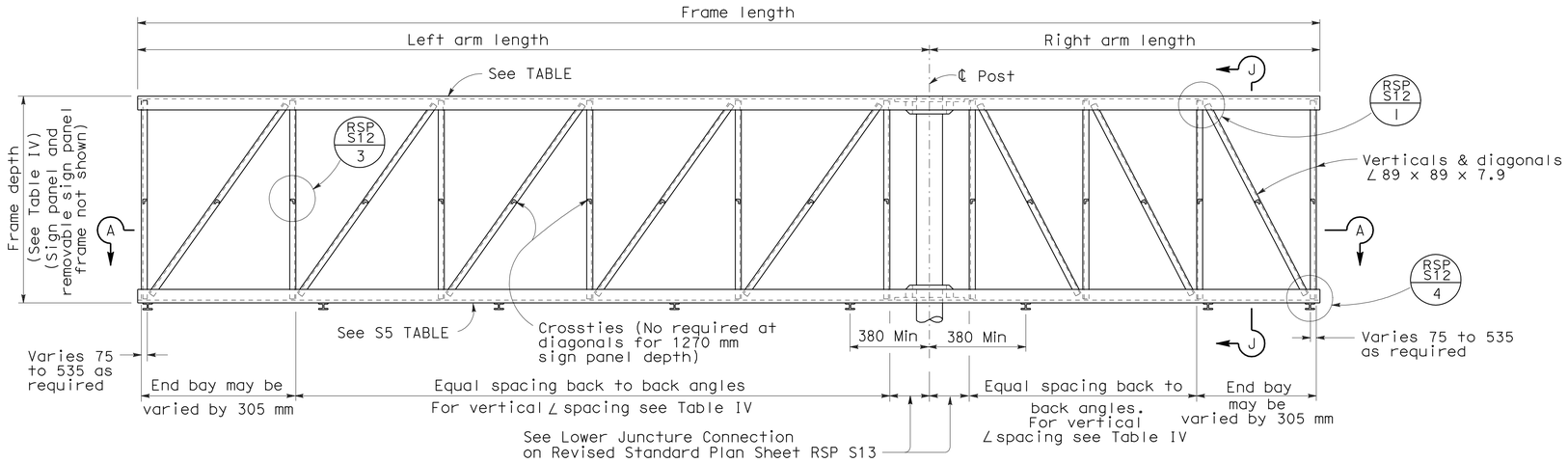

Note:

Left arm may be shorter, longer or equal to right arm length

ELEVATION

TABLE IV

Sign Panel Depth (mm)	Frame Depth (mm)	Maximum Vertical ∠ Spacing (mm)	See Note 6 (mm)
1270	1423	1372	1220
1524	1675	1524	1220
1778	1931	1676	1220
2032	2185	1829	1525
2286	2439	2134	1525
2540	2693	2134	1830
2794	2693	2134	1830
3048	2693	2134	1830

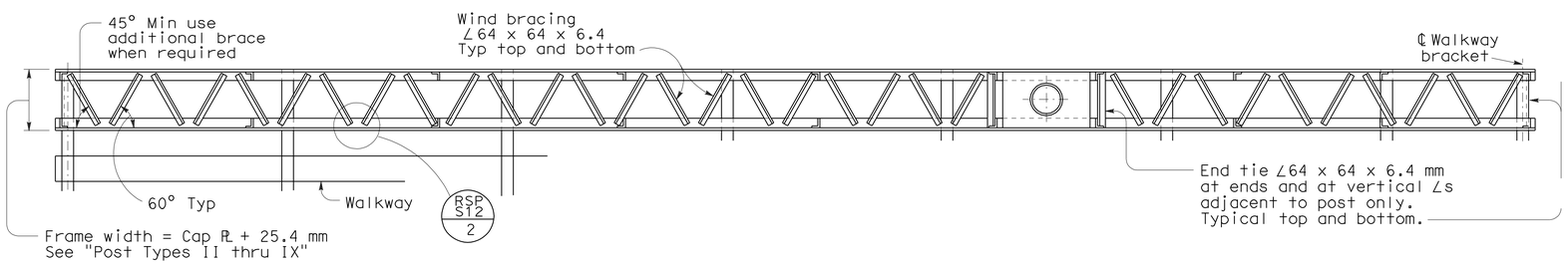

SECTION A-A

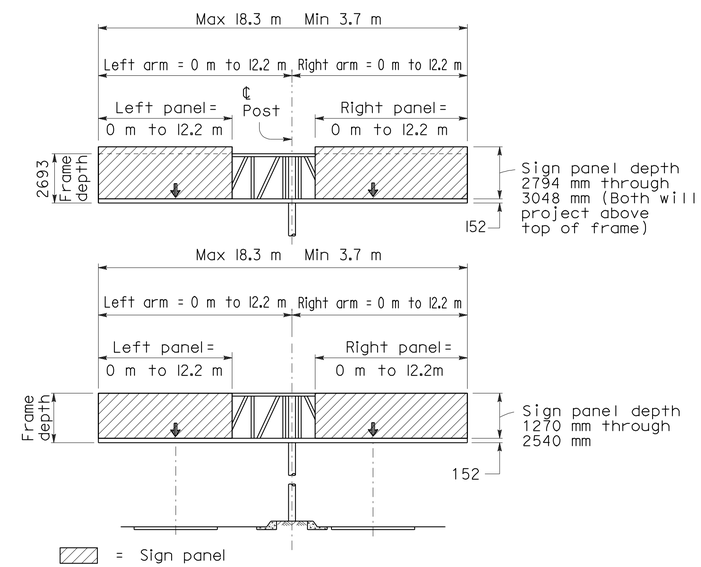

RANGE OF STRUCTURE SIZES

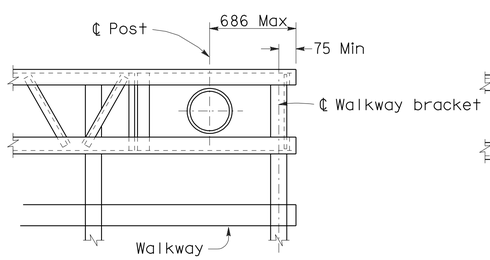

PART PLAN OF CANTILEVER TYPE AT POST

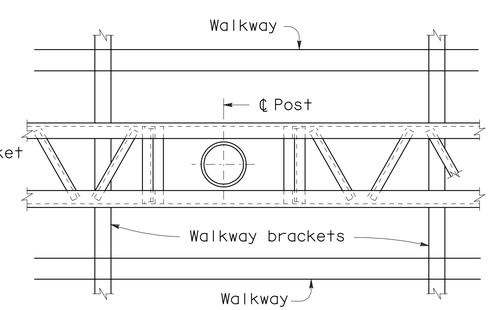

PART PLAN OF DOUBLE FACED TYPE AT POST

Notes:

1. For connection of frame to post see RSP S13.
2. For walkway, see C-26 and C-27.
3. For walkway length, see C-20.
4. Minimum length of frame = 3660 mm.
5. Maximum length of frame = 18 290 mm.
6. Diagonal not required if arm length is equal to or less than shown in this column see table IV.
7. For Section J-J, See Revised Std Plans RSP S-12.

Standard Plan sheet number
Detail number

ALL DIMENSIONS ARE IN MILLIMETERS UNLESS OTHERWISE SHOWN.

CONSTRUCTION DETAILS
OVERHEAD SIGNS - TRUSS SINGLE POST TYPE STRUCTURAL FRAME MEMBERS DETAILS No. 1

NO SCALE

C-22

STATE OF CALIFORNIA - DEPARTMENT OF TRANSPORTATION
Caltrans DESIGN

FUNCTIONAL SUPERVISOR: DEREK HIGA
CALCULATED-DESIGNED BY: KAZ KAYODA
CHECKED BY: AINSLEY CHIANG
REVISED BY / DATE REVISED

LAST REVISION 00-00-00 DATE PLOTTED => 21-SEP-2010 TIME PLOTTED => 11:26

Dist	COUNTY	ROUTE	KILOMETER POST TOTAL PROJECT	SHEET No.	TOTAL SHEETS
07	LA	101	24.9/25.9	36	213

REGISTERED CIVIL ENGINEER 6/30/10 DATE

8-9-10
PLANS APPROVAL DATE

REGISTERED PROFESSIONAL ENGINEER AINSLEY CHIANG No. C74005 Exp. 6/30/11 CIVIL STATE OF CALIFORNIA

THE STATE OF CALIFORNIA OR ITS OFFICERS OR AGENTS SHALL NOT BE RESPONSIBLE FOR THE ACCURACY OR COMPLETENESS OF ELECTRONIC COPIES OF THIS PLAN SHEET.

Caltrans Metric

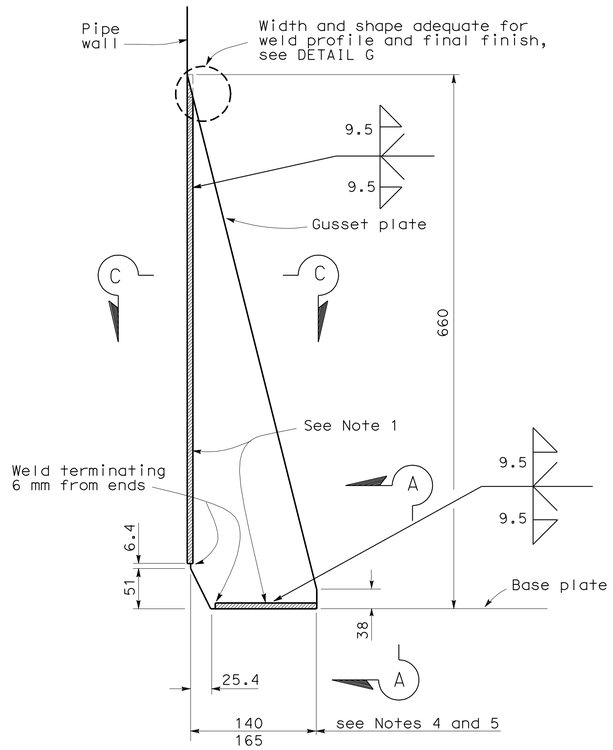

WELD DETAILS

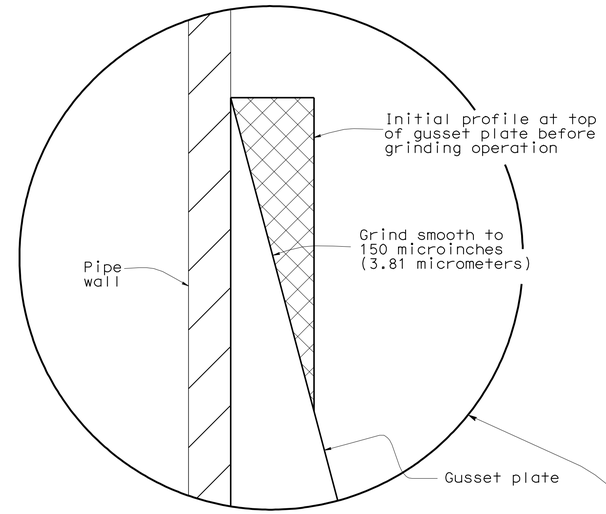

DETAIL G

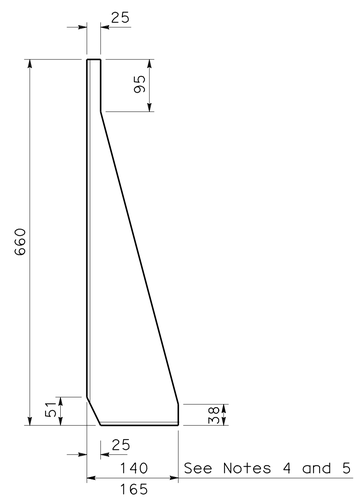

GUSSET PLATE
(Initial Shape)

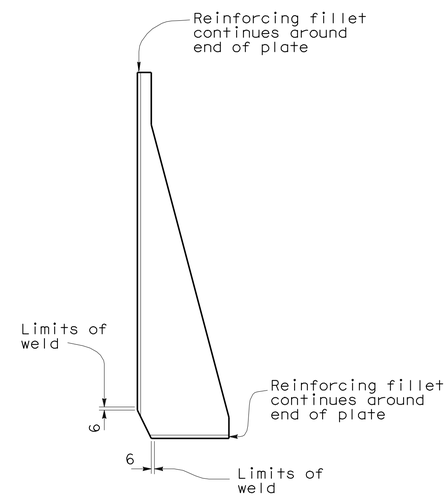

GUSSET PLATE WELDING
(See Weld Details)

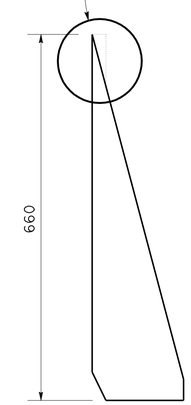

GUSSET PLATE GRINDING
(See Detail G)

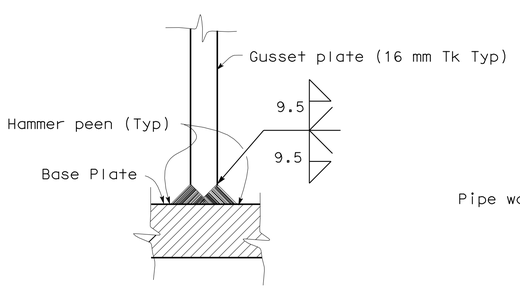

SECTION A-A

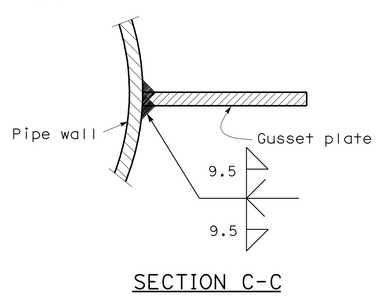

SECTION C-C

NOTES

1. All welding details shall conform to the requirements of AWS D1.1 and special provisions.
2. All gussets to be same height.
3. Provide a smooth transition from gusset plate to tube.
4. 140 mm for post Types I-S through V-S and single post with 12 and 14 bolts pattern.
5. 165 mm for post Type VI-S and VII-S and single post with 16 bolts pattern.

ALL DIMENSIONS ARE IN MILLIMETERS UNLESS OTHERWISE SHOWN.

CONSTRUCTION DETAILS
OVERHEAD SIGNS - TRUSS GUSSET PLATE DETAILS

NO SCALE

C-23

STATE OF CALIFORNIA - DEPARTMENT OF TRANSPORTATION
Caltrans DESIGN

FUNCTIONAL SUPERVISOR: DEREK HIGA
CALCULATED-DESIGNED BY: KAZ KAYODA
CHECKED BY: AINSLEY CHIANG
REVISED BY / DATE REVISED

LAST REVISION 00-00-00
DATE PLOTTED => 21-SEP-2010
TIME PLOTTED => 11:26

Dist	COUNTY	ROUTE	KILOMETER POST TOTAL PROJECT	SHEET No.	TOTAL SHEETS
07	LA	101	24.9/25.9	37	213

REGISTERED CIVIL ENGINEER 6/30/10 DATE

8-9-10
PLANS APPROVAL DATE

REGISTERED PROFESSIONAL ENGINEER AINSLEY CHIANG No. C74005 Exp. 6/30/11 CIVIL STATE OF CALIFORNIA

THE STATE OF CALIFORNIA OR ITS OFFICERS OR AGENTS SHALL NOT BE RESPONSIBLE FOR THE ACCURACY OR COMPLETENESS OF ELECTRONIC COPIES OF THIS PLAN SHEET.

Caltrans Metric

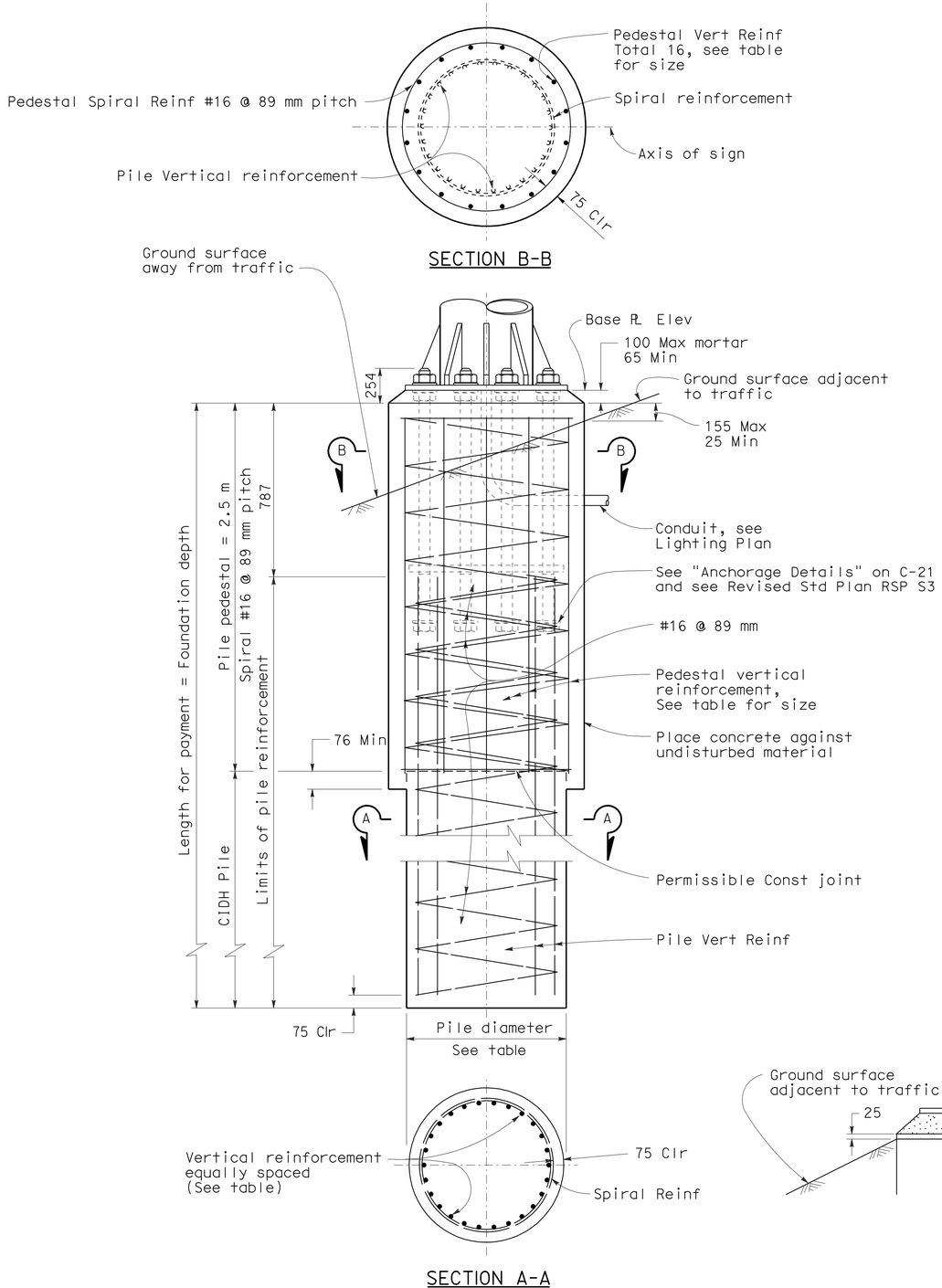

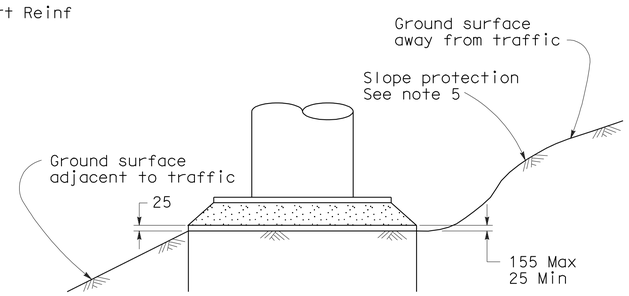

DETAIL C

Post Type No.	Anchor Bolts			Round Pedestal						CIDH						
					Reinforcing			Spiral			**	Vertical Reinforcing			Spiral	
	Bolt Circle (mm)	Bolts Total & Dia (mm)	Total Length (mm)	Dia (mm)	Total	Bar Size	Loop Circle (mm)	Bar Size	Pitch (mm)	Pile Dia (mm)	Pile Depth (m)	Total	Bar Size	Bar Circle (mm)	Bar Size	Pitch (mm)
II	610	12-51	1270	1600	16	#32	1435	#16	89	1372	4.5	26	#32	1143	#16	89
III	610	12-51	1270	1600	16	#32	1435	#16	89	1372	4.9	26	#32	1143	#16	89
IV	610	12-51	1270	1600	16	#32	1435	#16	89	1372	5.5	26	#32	1143	#16	89
V	864	14-51	1270	1600	16	#32	1435	#16	89	1372	5.8	26	#32	1143	#16	89
VI	864	16-64	1524	1753	16	#36	1581	#16	89	1524	6.7	28	#36	1295	#16	89
VII	864	16-64	1524	1753	16	#36	1581	#16	89	1524	7.0	28	#36	1295	#16	89
VIII	864	16-64	1524	1753	16	#36	1581	#16	89	1524	7.6	28	#36	1295	#16	89
IX	864	16-64	1524	1753	16	#36	1581	#16	89	1524	7.6	28	#36	1295	#16	89

** Use Foundation Depth shown in table unless otherwise shown on the Project Plans.

NOTES

1. For anchor bolt layout see Standard Plan RSP S-3.
2. For "Base ℞ elevation" see Project Plans.
3. Prior to erection of the post, backfill which is equivalent to the surrounding material shall be in place.
4. Pedestal shall be formed 150 mm minimum below ground surface Remainder to be placed against undisturbed material.
5. Slope protection required when indicated on the Project Plans.
6. Foundation design is based on 2001 AASHTO article 13.6 Broms' approximate procedure assuming a cohesionless material. The angle of internal friction used is 30 degree and unit weight of soil used is 1922 kg/m^3.

ALL DIMENSIONS ARE IN MILLIMETERS
UNLESS OTHERWISE SHOWN.

CONSTRUCTION DETAILS
OVERHEAD SIGNS - TRUSS
SINGLE POST TYPE
ROUND PEDESTAL PILE FOUNDATION

NO SCALE

C-24

STATE OF CALIFORNIA - DEPARTMENT OF TRANSPORTATION
Caltrans DESIGN

FUNCTIONAL SUPERVISOR: DEREK HIGA
CALCULATED-DESIGNED BY: KAZ KAYODA
CHECKED BY: AINSLEY CHIANG
REVISED BY
DATE REVISED

LAST REVISION 00-00-00 | DATE PLOTTED => 21-SEP-2010 | TIME PLOTTED => 11:27

Dist	COUNTY	ROUTE	KILOMETER POST TOTAL PROJECT	SHEET No.	TOTAL SHEETS
07	LA	101	24.9/25.9	38	213

REGISTERED CIVIL ENGINEER 6/30/10 DATE

8-9-10
PLANS APPROVAL DATE

REGISTERED PROFESSIONAL ENGINEER AINSLEY CHIANG No. C74005 Exp. 6/30/11 CIVIL STATE OF CALIFORNIA

THE STATE OF CALIFORNIA OR ITS OFFICERS OR AGENTS SHALL NOT BE RESPONSIBLE FOR THE ACCURACY OR COMPLETENESS OF ELECTRONIC COPIES OF THIS PLAN SHEET.

Caltrans Metric

TWO POST TRUSS

Post Type	Nominal Pipe Size (NPS)	Pipe Wall Thickness (mm)	Pipe split (mm)	Base PL OD & Thickness (mm)	Anchor: Bolt Circle (mm)	Anchor: Bolts total & Dia (mm)	Anchor: Length (mm)
I-S	14	12.7	127	864 x 51	711	12-51	1270
II-S	16	12.7	152	864 x 51	711	12-51	1270
III-S	18	12.7	178	940 x 51	787	12-51	1270
IV-S	20	12.7	203	1016 x 51	864	14-51	1270
V-S	24	12.7	203	1118 X 51	965	16-64	1524
VI-S	24	24.6	254	1219 x 64	1041	16-64	1524
VII-S	24	24.6	254	1219 x 64	1041	16-64	1524

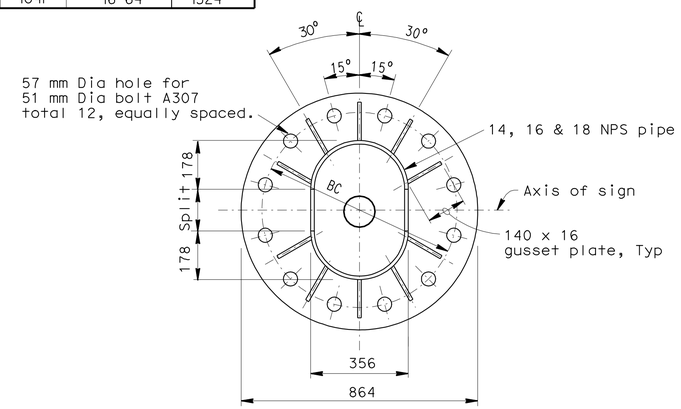

12 BOLTS
Type I-S shown

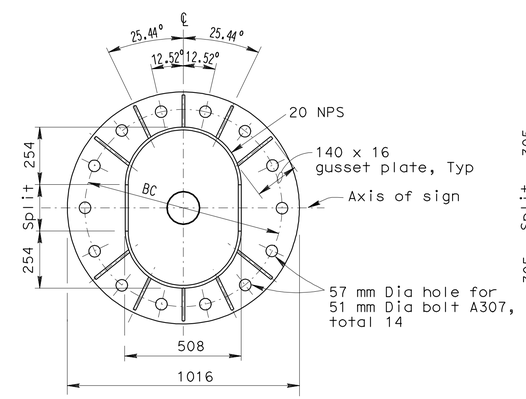

14 BOLTS

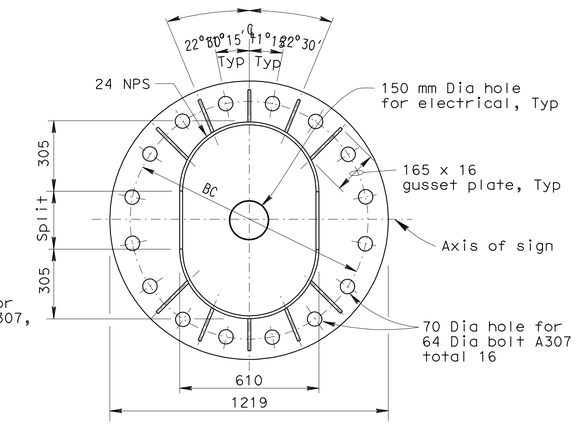

16 BOLTS
Type VI-S shown

BASE PLATE DETAILS
TWO POST TYPE

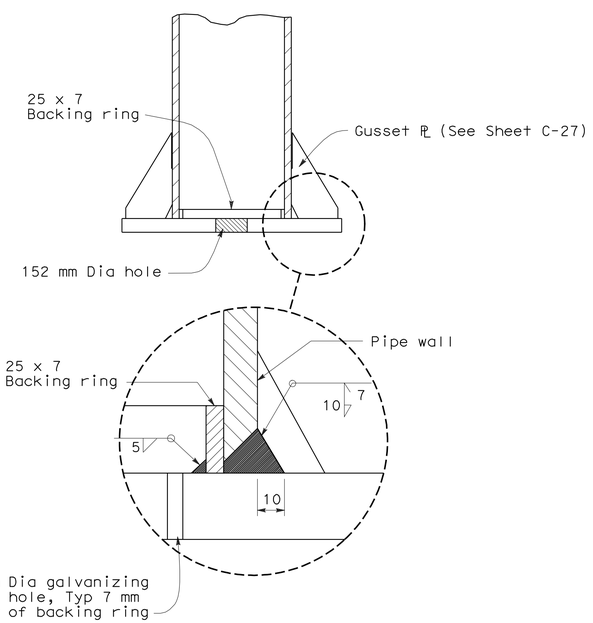

POST TO BASE PLATE CONNECTION DETAIL

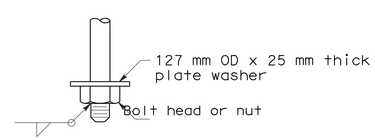

ANCHORAGE DETAIL

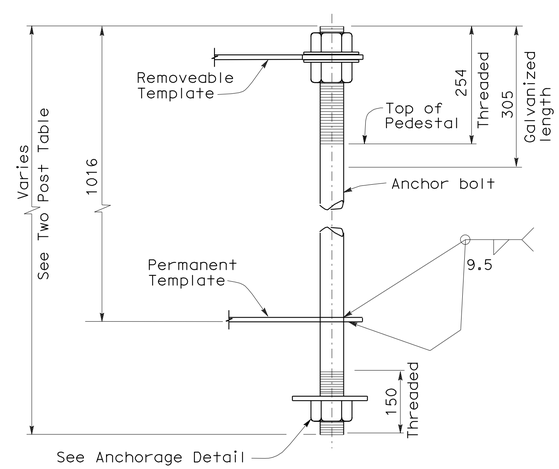

ANCHOR BOLT TEMPLATE ASSEMBLY

NOTE: One bolt shown only. Other bolts same configuration around pipe sleeve. Template to match base plate anchor bolt pattern.

ALL DIMENSIONS ARE IN MILLIMETERS
UNLESS OTHERWISE SHOWN.

CONSTRUCTION DETAILS
OVERHEAD SIGNS - TRUSS
TWO POST TYPE
BASE PLATE AND ANCHORAGE DETAILS

NO SCALE

C-25

STATE OF CALIFORNIA - DEPARTMENT OF TRANSPORTATION
Caltrans DESIGN

FUNCTIONAL SUPERVISOR: DEREK HIGA
CALCULATED-DESIGNED BY: KAZ KAYODA
CHECKED BY: AINSLEY CHIANG
REVISED BY / DATE REVISED

LAST REVISION 00-00-00
DATE PLOTTED => 21-SEP-2010
TIME PLOTTED => 11:27

Dist	COUNTY	ROUTE	KILOMETER POST TOTAL PROJECT	SHEET No.	TOTAL SHEETS
07	LA	101	24.9/25.9	39	213

REGISTERED CIVIL ENGINEER 6/30/10 DATE

8-9-10
PLANS APPROVAL DATE

REGISTERED PROFESSIONAL ENGINEER AINSLEY CHIANG No. C74005 Exp. 6/30/11 CIVIL STATE OF CALIFORNIA

THE STATE OF CALIFORNIA OR ITS OFFICERS OR AGENTS SHALL NOT BE RESPONSIBLE FOR THE ACCURACY OR COMPLETENESS OF ELECTRONIC COPIES OF THIS PLAN SHEET.

Caltrans Metric

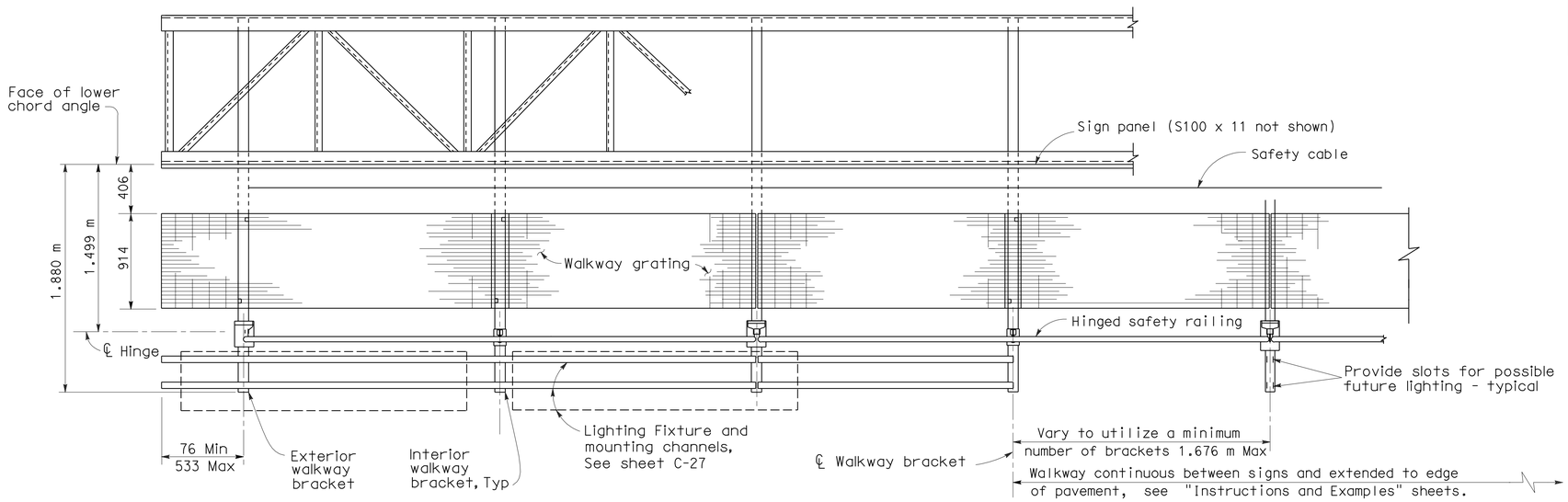

WALKWAY PLAN (TRUSS)

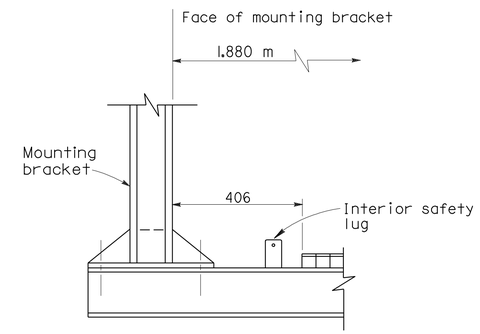

TUBULAR MOUNTED

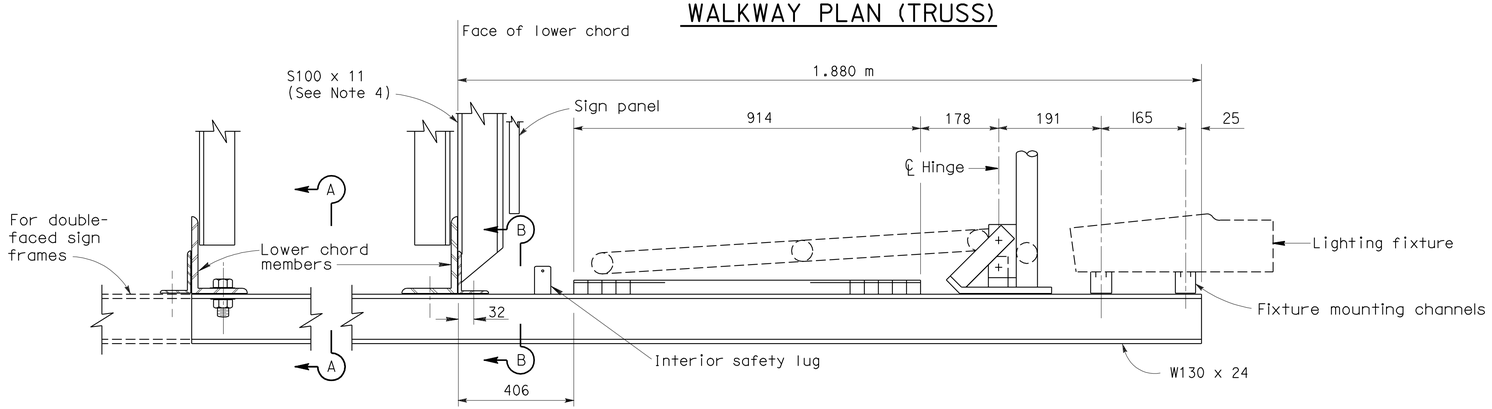

TRUSS

TYPICAL WALKWAY SECTION

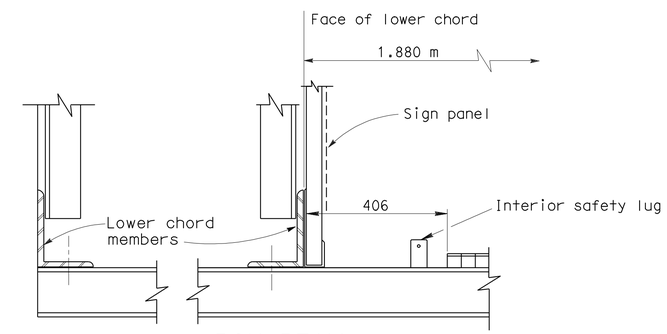

BOX BEAM
CLOSED TRUSS

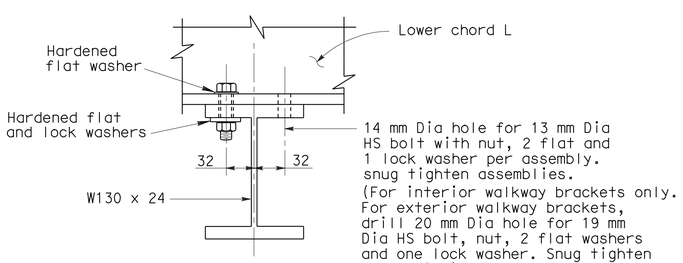

SECTION A-A

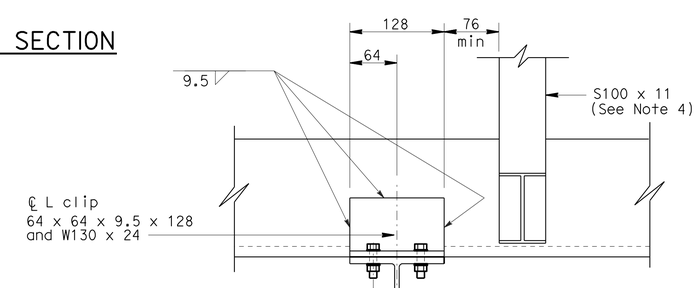

SECTION B-B

NOTES:

1. For spacing of lighting fixtures, see Standard Plan ES-15A.
2. For safety lug details, see sheet C-27.
3. For double faced sign frames with double walkways, use a total 8 bolt assemblies per bracket.
4. S100 x 11 to be used with laminated Type A panels. See Revised Standard Plan RSP S19.

ALL DIMENSIONS ARE IN MILLIMETERS
UNLESS OTHERWISE SHOWN.

CONSTRUCTION DETAILS
OVERHEAD SIGNS
WALKWAY DETAILS No. 1

NO SCALE

C-26

REVISED BY | DATE REVISED
KAZ KAYODA | AINSLEY CHIANG
CALCULATED-DESIGNED BY | CHECKED BY
FUNCTIONAL SUPERVISOR
DEREK HIGA

STATE OF CALIFORNIA - DEPARTMENT OF TRANSPORTATION
Caltrans
DESIGN

LAST REVISION 00-00-00 | DATE PLOTTED => 21-SEP-2010 | TIME PLOTTED => 11:27

Dist	COUNTY	ROUTE	KILOMETER POST TOTAL PROJECT	SHEET No.	TOTAL SHEETS
07	LA	101	24.9/25.9	40	213

REGISTERED CIVIL ENGINEER 6/30/10 DATE

8-9-10
PLANS APPROVAL DATE

REGISTERED PROFESSIONAL ENGINEER AINSLEY CHIANG No. C74005 Exp. 6/30/11 CIVIL STATE OF CALIFORNIA

THE STATE OF CALIFORNIA OR ITS OFFICERS OR AGENTS SHALL NOT BE RESPONSIBLE FOR THE ACCURACY OR COMPLETENESS OF ELECTRONIC COPIES OF THIS PLAN SHEET.

Caltrans Metric

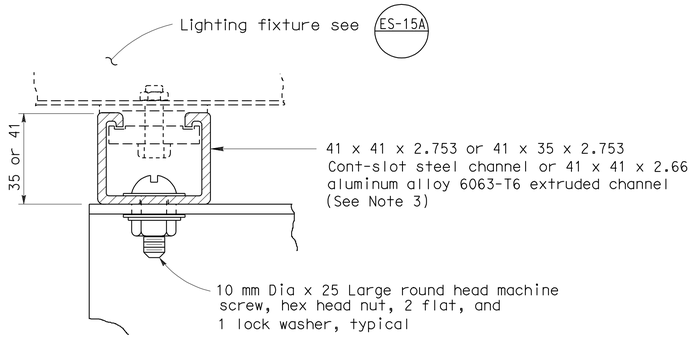

LIGHTING FIXTURE MOUNTING CHANNEL DETAILS 1

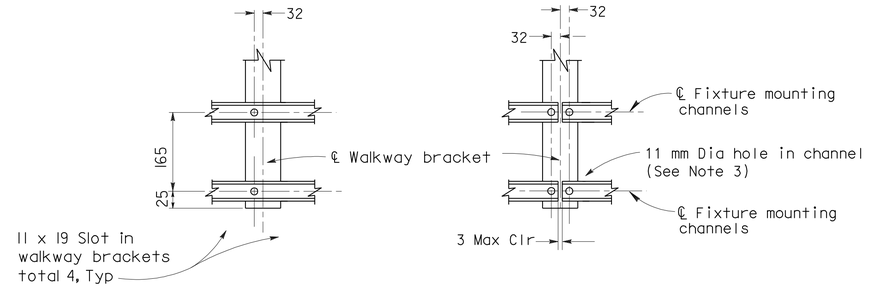

TYPICAL CONNECTION CONNECTION AT SPLICE

LIGHTING FIXTURE MOUNTING CHANNEL DETAILS 2

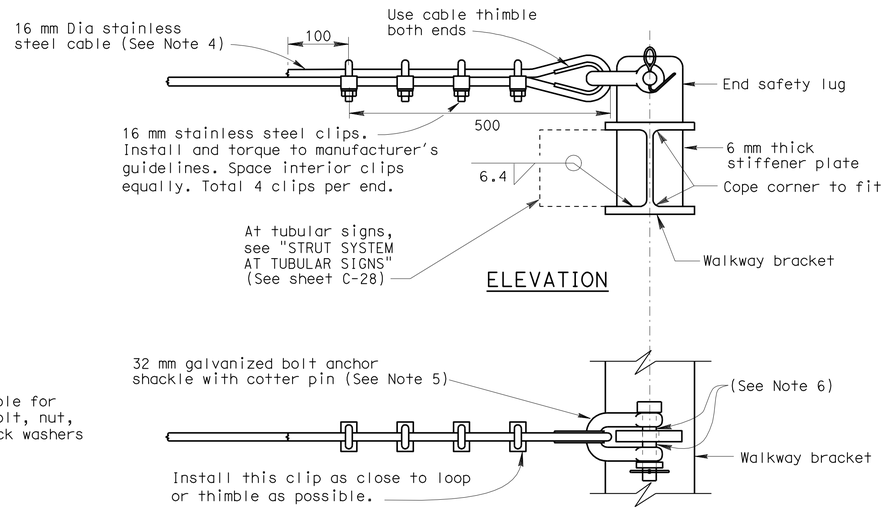

END SAFETY CABLE DETAIL

NOTES

1. Welded type grating shall have 32 x 3 bearing bars at 30 mm centers with 6 mm diameter (or equal) cross bars at 102 mm centers. If mechanical lock grating is used, it shall be equal in strength to the welded type. Alternate hold-down clips may be submitted for approval.
2. Walkway grating and light fixture mounting channels to be continuous (no splices) over as many walkway brackets as practical and consistent with fabrication, ease of handling and assembly.
3. Contractor may substitute 41 x 41 x 2.753 cont-slot steel channel with pre-punched slots not larger than 10 mm x 77 mm. Slots shall be at bottom of channel and shall be parallel to channel. Slots shall be spaced not closer than 100 mm center to center.
4. Stainless steel cable shall be plain with 6 x 19 IWRC construction using Type 302 or 304 stainless steel strands. Minimun cable breaking strength shall exceed 155 kN. Cable shall be free of kinks, knots, or deformation and shall be continuous between end lugs. Splices not allowed.
5. Shackle shall be galvanized steel with working load limit of 107 kN.
6. Place an equal amount of washers on each side to align cable with end lug without restricting shakle bolt rotation or contacting cable.
7. Prior to tightening cable clips at end anchorage, slack in cable shall be removed by the full effortof a typical construction worker.

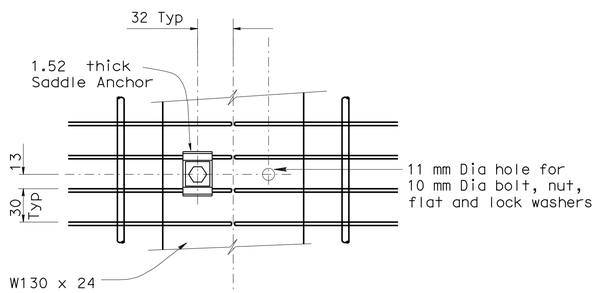

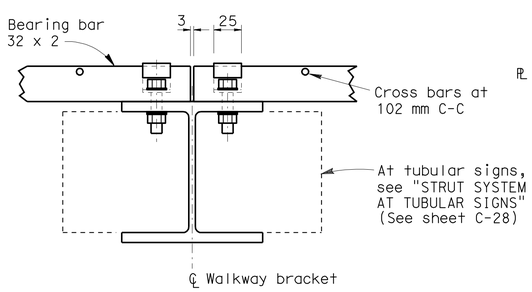

SECTION A-A

WALKWAY GRATING DETAILS

Shown at splice

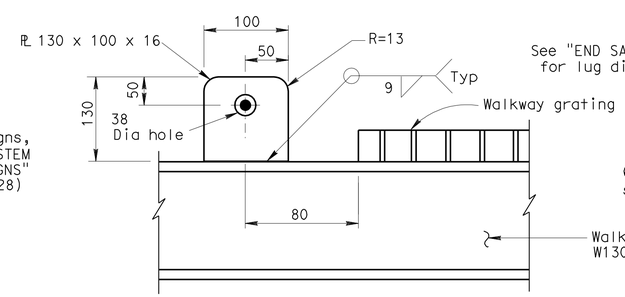

INTERIOR SAFETY LUG DETAIL

(At every walkway bracket between exterior walkway brackets)

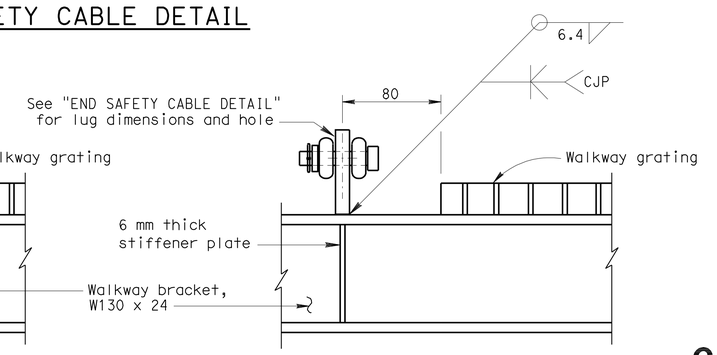

END SAFETY LUG DETAIL

(At exterior walkway brackets)

ALL DIMENSIONS ARE IN MILLIMETERS UNLESS OTHERWISE SHOWN.

CONSTRUCTION DETAILS
OVERHEAD SIGNS
WALKWAY DETAILS No. 2

NO SCALE

C-27

STATE OF CALIFORNIA - DEPARTMENT OF TRANSPORTATION
Caltrans DESIGN

FUNCTIONAL SUPERVISOR DEREK HIGA
CALCULATED-DESIGNED BY KAZ KAYODA
CHECKED BY AINSLEY CHIANG
REVISED BY DATE REVISED

LAST REVISION 00-00-00 DATE PLOTTED => 21-SEP-2010 TIME PLOTTED => 11:27

Dist	COUNTY	ROUTE	KILOMETER POST TOTAL PROJECT	SHEET No.	TOTAL SHEETS
07	LA	101	24.9/25.9	41	213

REGISTERED CIVIL ENGINEER 6/30/10 DATE

8-9-10
PLANS APPROVAL DATE

REGISTERED PROFESSIONAL ENGINEER AINSLEY CHIANG No. C74005 Exp. 6/30/11 CIVIL STATE OF CALIFORNIA

THE STATE OF CALIFORNIA OR ITS OFFICERS OR AGENTS SHALL NOT BE RESPONSIBLE FOR THE ACCURACY OR COMPLETENESS OF ELECTRONIC COPIES OF THIS PLAN SHEET.

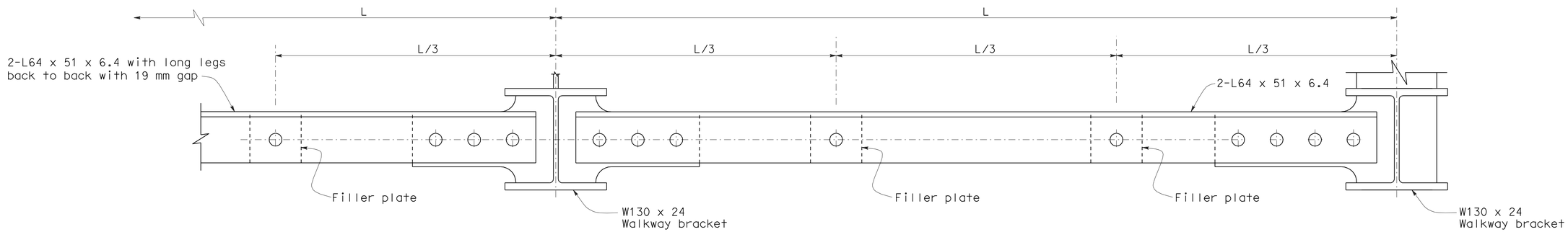

STRUT SYSTEM AT TUBULAR SIGNS

(Continuous between end safety lug locations)

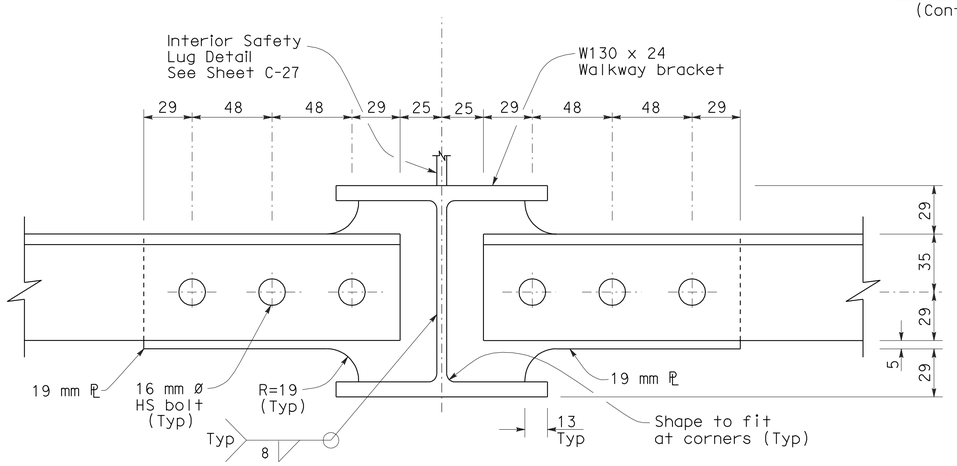

INTERIOR SAFETY LUG LOCATION

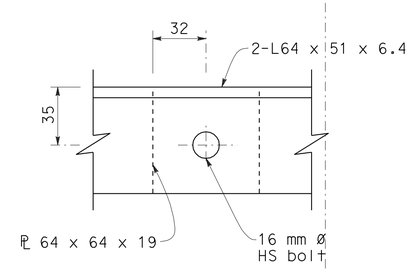

FILLER PLATE

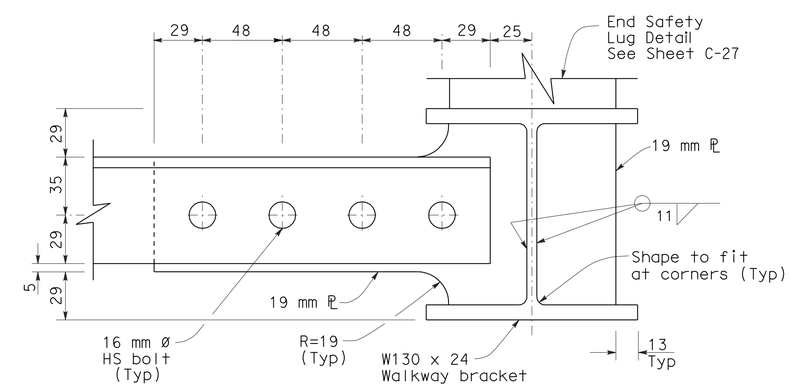

END SAFETY LUG LOCATION

ALL DIMENSIONS ARE IN MILLIMETERS
UNLESS OTHERWISE SHOWN.

CONSTRUCTION DETAILS
OVERHEAD SIGNS
WALKWAY DETAILS No. 3

NO SCALE

C-28

STATE OF CALIFORNIA - DEPARTMENT OF TRANSPORTATION
Caltrans
DESIGN

FUNCTIONAL SUPERVISOR: DEREK HIGA
CALCULATED-DESIGNED BY: KAZ KAYODA
CHECKED BY: AINSLEY CHIANG
REVISED BY
DATE REVISED

LAST REVISION 00-00-00
DATE PLOTTED => 21-SEP-2010
TIME PLOTTED => 11:27

Dist	COUNTY	ROUTE	KILOMETER POST TOTAL PROJECT	SHEET No.	TOTAL SHEETS
07	LA	101	24.9/25.9	42	213

REGISTERED CIVIL ENGINEER 6/30/10 DATE

8-9-10
PLANS APPROVAL DATE

REGISTERED PROFESSIONAL ENGINEER AINSLEY CHIANG No. C74005 Exp. 6/30/11 CIVIL STATE OF CALIFORNIA

THE STATE OF CALIFORNIA OR ITS OFFICERS OR AGENTS SHALL NOT BE RESPONSIBLE FOR THE ACCURACY OR COMPLETENESS OF ELECTRONIC COPIES OF THIS PLAN SHEET.

Caltrans Metric

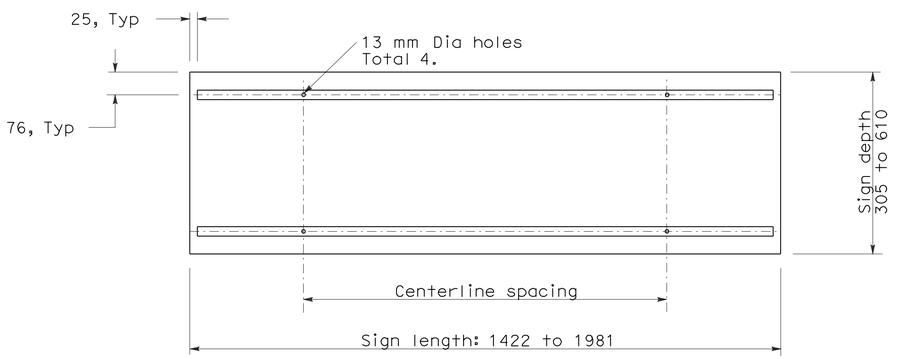

ROADSIDE SIGN No. 1

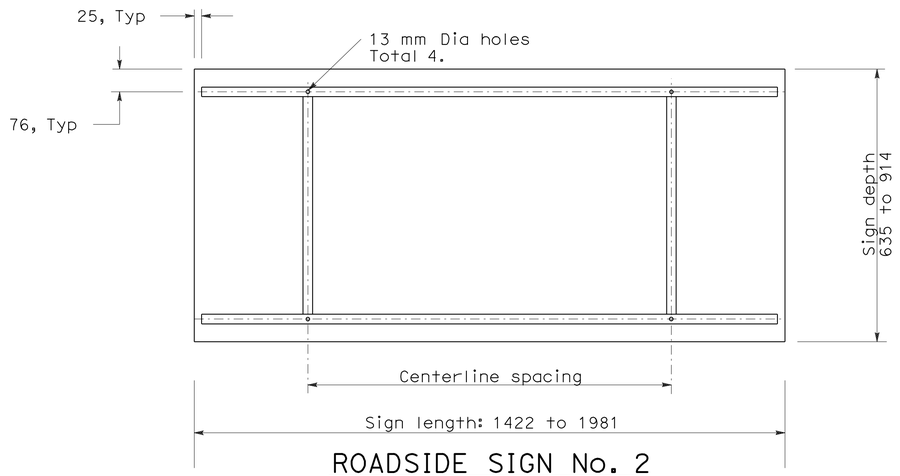

ROADSIDE SIGN No. 2

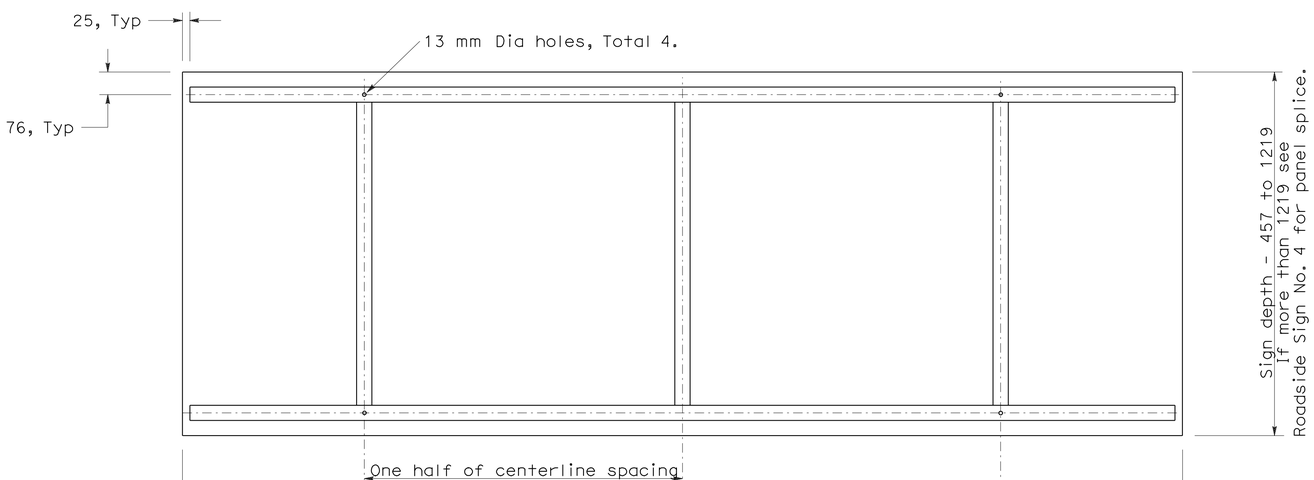

ROADSIDE SIGN No. 3

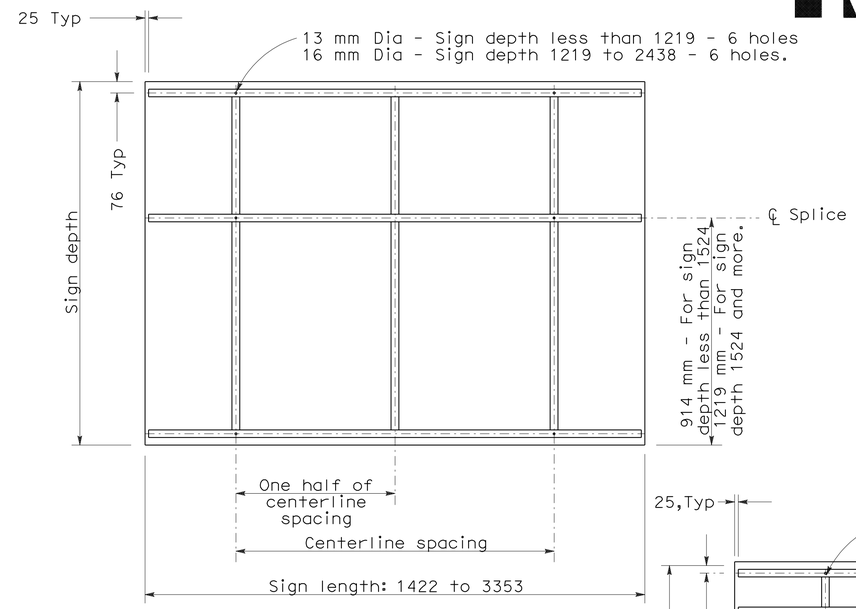

ROADSIDE SIGN No. 4

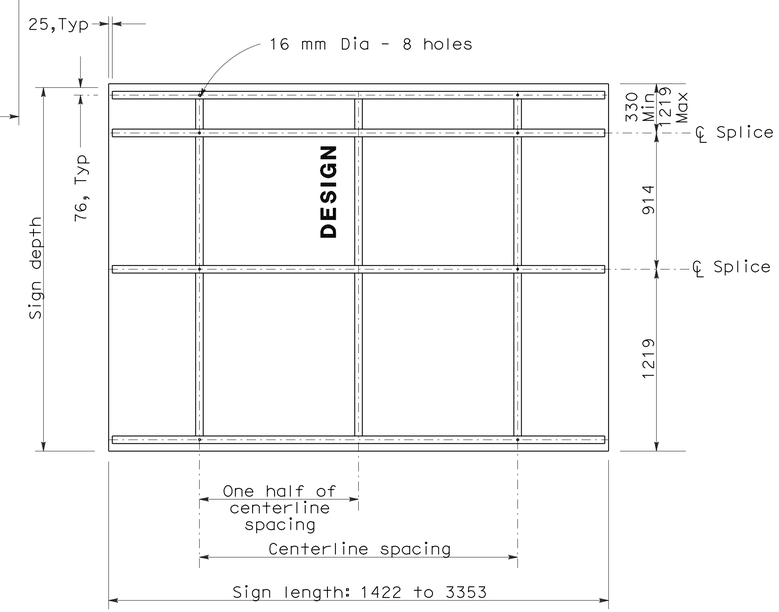

ROADSIDE SIGN No. 5

NOTES

1. See Standard Plan S93 for framing details.
2. All members welded at joints as shown on Standard Plan S93.

ALL DIMENSIONS ARE IN MILLIMETERS
UNLESS OTHERWISE SHOWN.

CONSTRUCTION DETAILS
ROADSIDE FRAMED SINGLE SHEET ALUMINUM SIGNS RECTANGULAR SHAPE

NO SCALE

C-29

STATE OF CALIFORNIA - DEPARTMENT OF TRANSPORTATION
Caltrans DESIGN

FUNCTIONAL SUPERVISOR: DEREK HIGA
CALCULATED-DESIGNED BY: AINSLEY CHIANG
CHECKED BY: KAZ KAYODA
REVISED BY / DATE REVISED

LAST REVISION 00-00-00 | DATE PLOTTED => 21-SEP-2010 | TIME PLOTTED => 11:27

Dist	COUNTY	ROUTE	KILOMETER POST TOTAL PROJECT	SHEET No.	TOTAL SHEETS
07	LA	101	24.9/25.9	43	213

REGISTERED CIVIL ENGINEER 6/30/10 DATE

8-9-10
PLANS APPROVAL DATE

REGISTERED PROFESSIONAL ENGINEER AINSLEY CHIANG No. C74005 Exp. 6/30/11 CIVIL STATE OF CALIFORNIA

THE STATE OF CALIFORNIA OR ITS OFFICERS OR AGENTS SHALL NOT BE RESPONSIBLE FOR THE ACCURACY OR COMPLETENESS OF ELECTRONIC COPIES OF THIS PLAN SHEET.

Caltrans Metric

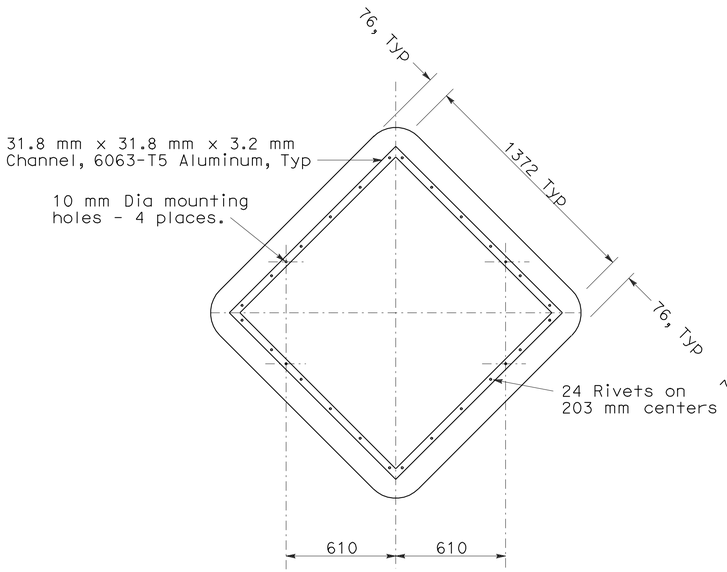

ROADSIDE SIGN No. 6

Framing detail for 1524 mm x 1524 mm diamond

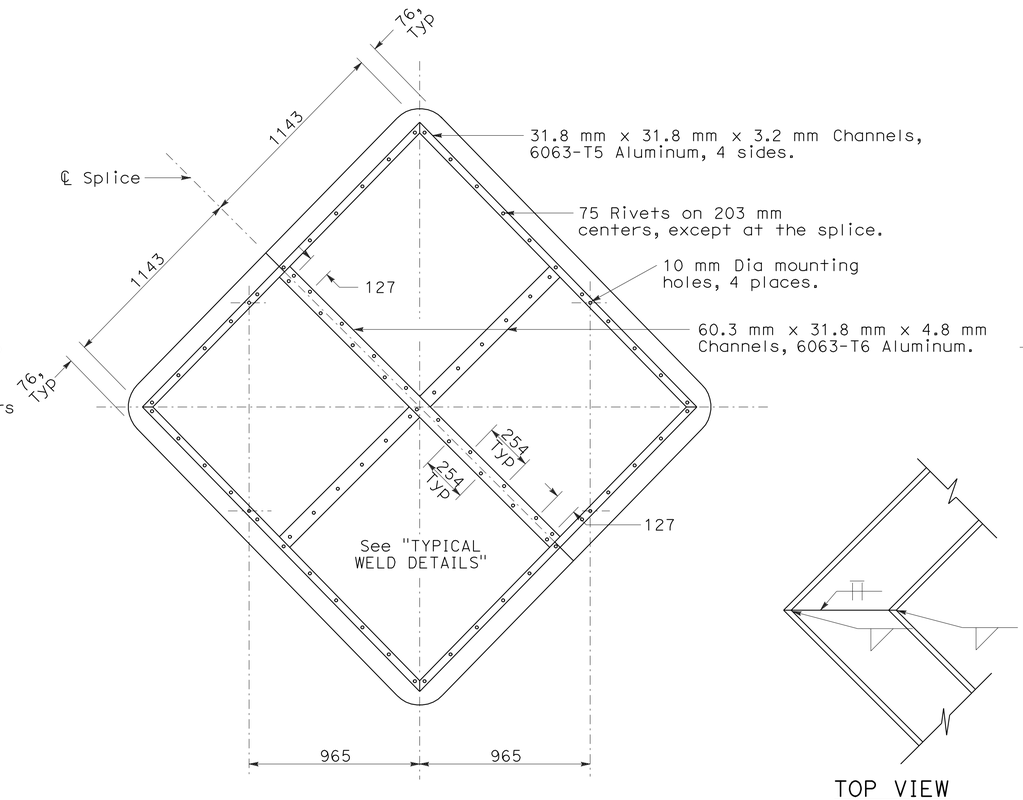

ROADSIDE SIGN No. 8

Framing detail for 2438 mm x 2438 mm diamond.
Made from 2 - 1219 mm x 2438 mm panels, spliced and braced by channels as shown.

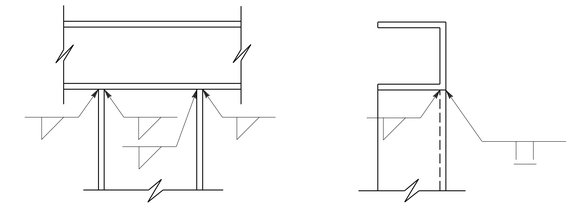

TOP VIEW SIDE VIEW

WELD DETAIL No. 3

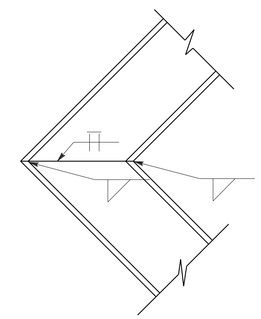

TOP VIEW

WELD DETAIL No. 4

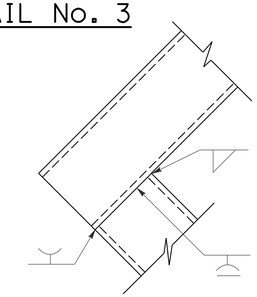

TOP VIEW

ALTERNATE WELD DETAIL No. 4A

Weld all around outside

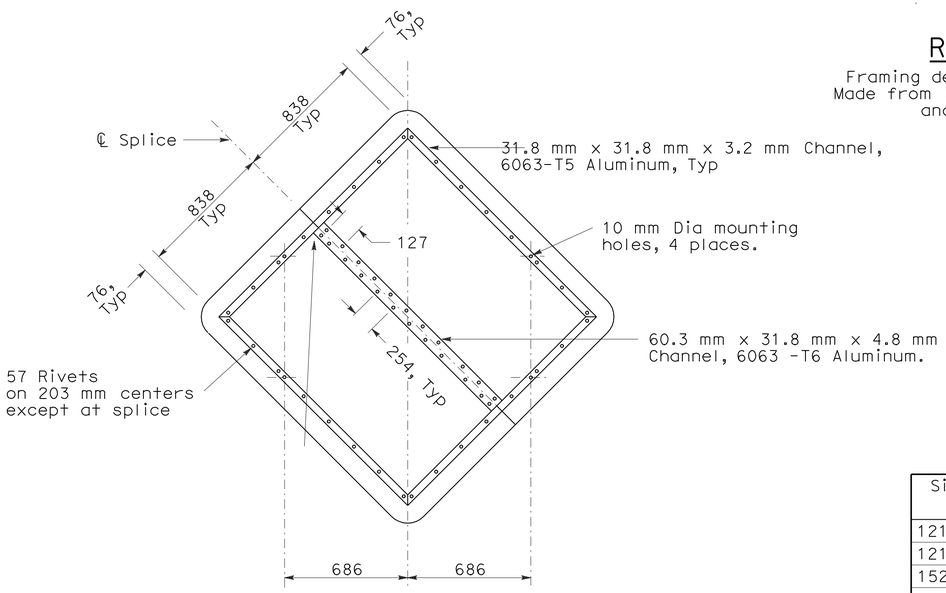

ROADSIDE SIGN No. 7

Framing detail for 1829 mm x 1829 mm diamond.
Made from 2 - 914 mm x 1829 mm panels, spliced and braced by channels as shown.

CHANNEL SIZES

Sign Size (mm)	Panel Thickness (mm)	Frame Type
1219 x 1219	1.6	No frame required
1219 x 1219	2.0	No frame required
1524 x 1524	2.0	See Roadside Sign No. 6
1829 x 1829	2.0	See Roadside Sign No. 7
2438 x 2438	2.0	See Roadside Sign No. 8

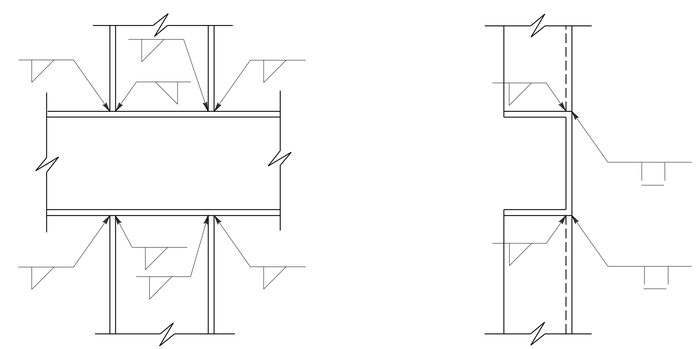

TOP VIEW SIDE VIEW

WELD DETAIL No. 5

TYPICAL WELD DETAILS

ALL DIMENSIONS ARE IN MILLIMETERS UNLESS OTHERWISE SHOWN.

CONSTRUCTION DETAILS
ROADSIDE SINGLE SHEET ALUMINUM SIGNS DIAMOND SHAPE

NO SCALE

C-30

REVISED BY	DATE REVISED

AINSLEY CHIANG — CALCULATED-DESIGNED BY
KAZ KAYODA — CHECKED BY
DEREK HIGA — FUNCTIONAL SUPERVISOR

STATE OF CALIFORNIA - DEPARTMENT OF TRANSPORTATION
Caltrans DESIGN

LAST REVISION 00-00-00 DATE PLOTTED => 21-SEP-2010 TIME PLOTTED => 11:27

DIST	COUNTY	ROUTE	KILOMETER POST TOTAL PROJECT	SHEET NO.	TOTAL SHEETS
07	LA	101	24.9/25.9	44	213

REGISTERED CIVIL ENGINEER 03-03-07

8-9-10
PLANS APPROVAL DATE

REGISTERED PROFESSIONAL ENGINEER BF VORREITER No. C 63128 EXP. 06/30/12 CIVIL STATE OF CALIFORNIA

The State of California or its officers or agents shall not be responsible for the accuracy or completeness of electronic copies of this plan sheet.

Caltrans Metric

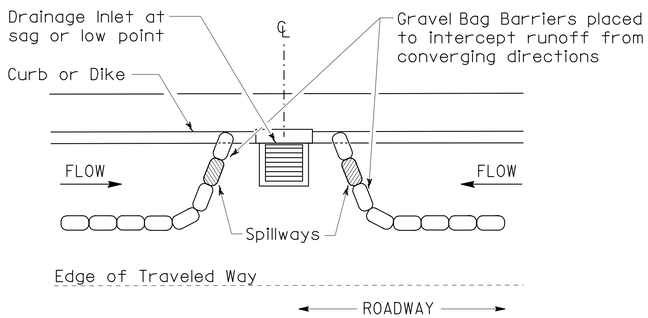

PLAN

CONFIGURATION FOR SAG POINT INLET (GRAVEL BAG BARRIER)

GRAVEL BAG BARRIER (TYPE 3A) SPACING TABLE

SLOPE OF ROADWAY (PERCENT)	1 to 4	4 to 6	6 to 8	8 to 10	10 +
INTERVAL BETWEEN BARRIERS (m)	30.0	22.5	15.0	7.5	4.0

For slope of less than 1%, install barriers only if erosion/sediment is prevalent

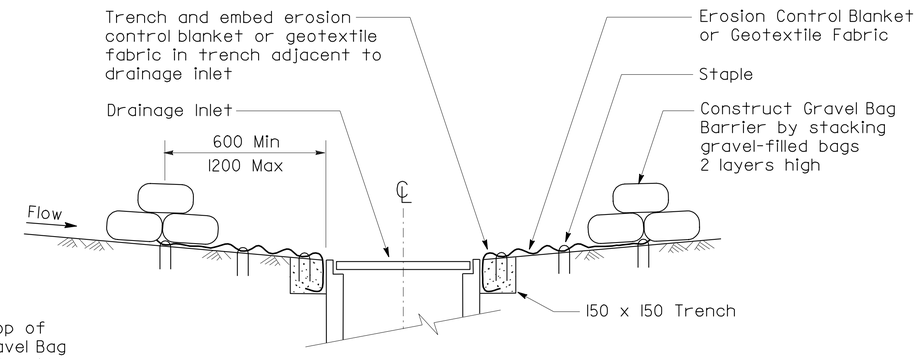

SECTION A-A

NOTES

1. Place safety cones adjacent to drainage inlet protection.
2. Dimensions may vary to fit field conditions.
3. Install a minimum of 3 gravel bag barriers upstream of each drainage inlet to be protected.
4. Position erosion control blanket or geotextile fabric at edge of concrete apron and secure in trench.
5. Erosion control blanket/geotextile fabric is not required if the area adjacent to the drainage inlet is vegetated or paved.

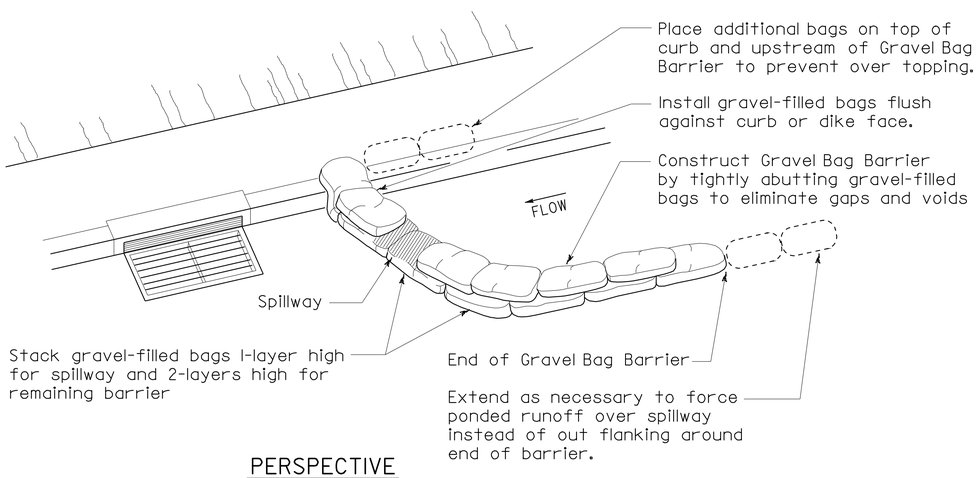

PERSPECTIVE

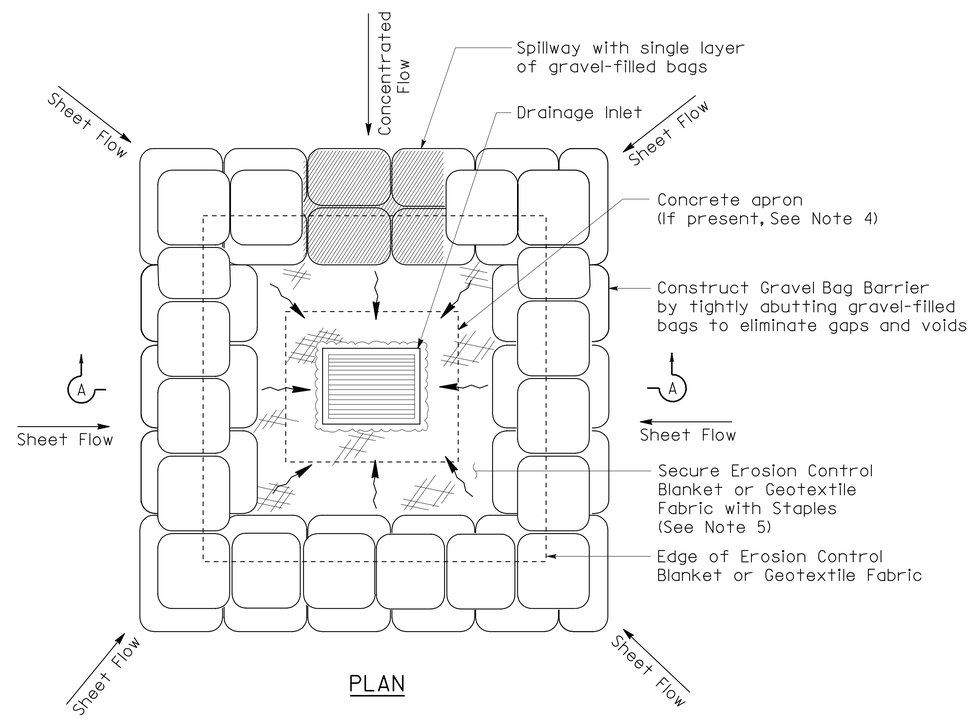

PLAN

TEMPORARY DRAINAGE INLET PROTECTION (TYPE 3B) (GRAVEL BAG BARRIER)

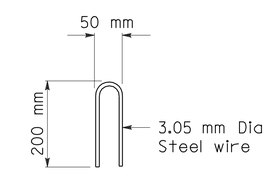

STAPLE DETAIL

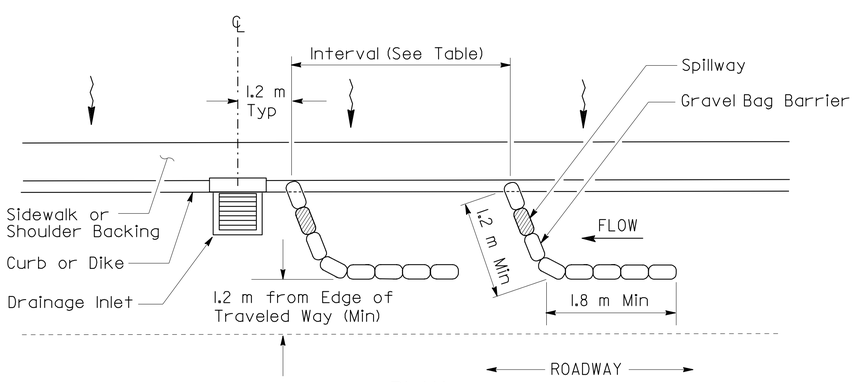

PLAN

TEMPORARY DRAINAGE INLET PROTECTION (TYPE 3A) (GRAVEL BAG BARRIER)

TEMPORARY WATER POLLUTION CONTROL DETAILS (TEMPORARY DRAINAGE INLET PROTECTION)

NO SCALE

ALL DIMENSIONS ARE IN MILLIMETERS UNLESS OTHERWISE SHOWN

WPC-1

DATE	REVISED BY	DATE REVISED
3-3-08	BFV	

CALCULATED/DESIGNED BY
CHECKED BY

PROJECT ENGINEER BARNABAS F. VORREITER

STATE OF CALIFORNIA - DEPARTMENT OF TRANSPORTATION
Caltrans DESIGN

LAST REVISION 03-03-08
DATE PLOTTED => 21-SEP-2010
TIME PLOTTED => 11:28

NOTE:
CONTRACTOR SHALL VERIFY ELEVATIONS OF EXISTING AND PROPOSED DRAINAGE SYSYTEMS BEFORE COMMENCEMENT WORK.

Dist	COUNTY	ROUTE	KILOMETER POST TOTAL PROJECT	SHEET No.	TOTAL SHEETS
07	LA	101	24.9/25.9	45	213

REGISTERED CIVIL ENGINEER 2-19-08 DATE

8-9-10
PLANS APPROVAL DATE

REGISTERED PROFESSIONAL ENGINEER BALDEV K. BHALLA No. 34350 EXP. 9-30-2011 CIVIL STATE OF CALIFORNIA

THE STATE OF CALIFORNIA OR ITS OFFICERS OR AGENTS SHALL NOT BE RESPONSIBLE FOR THE ACCURACY OR COMPLETENESS OF ELECTRONIC COPIES OF THIS PLAN SHEET.

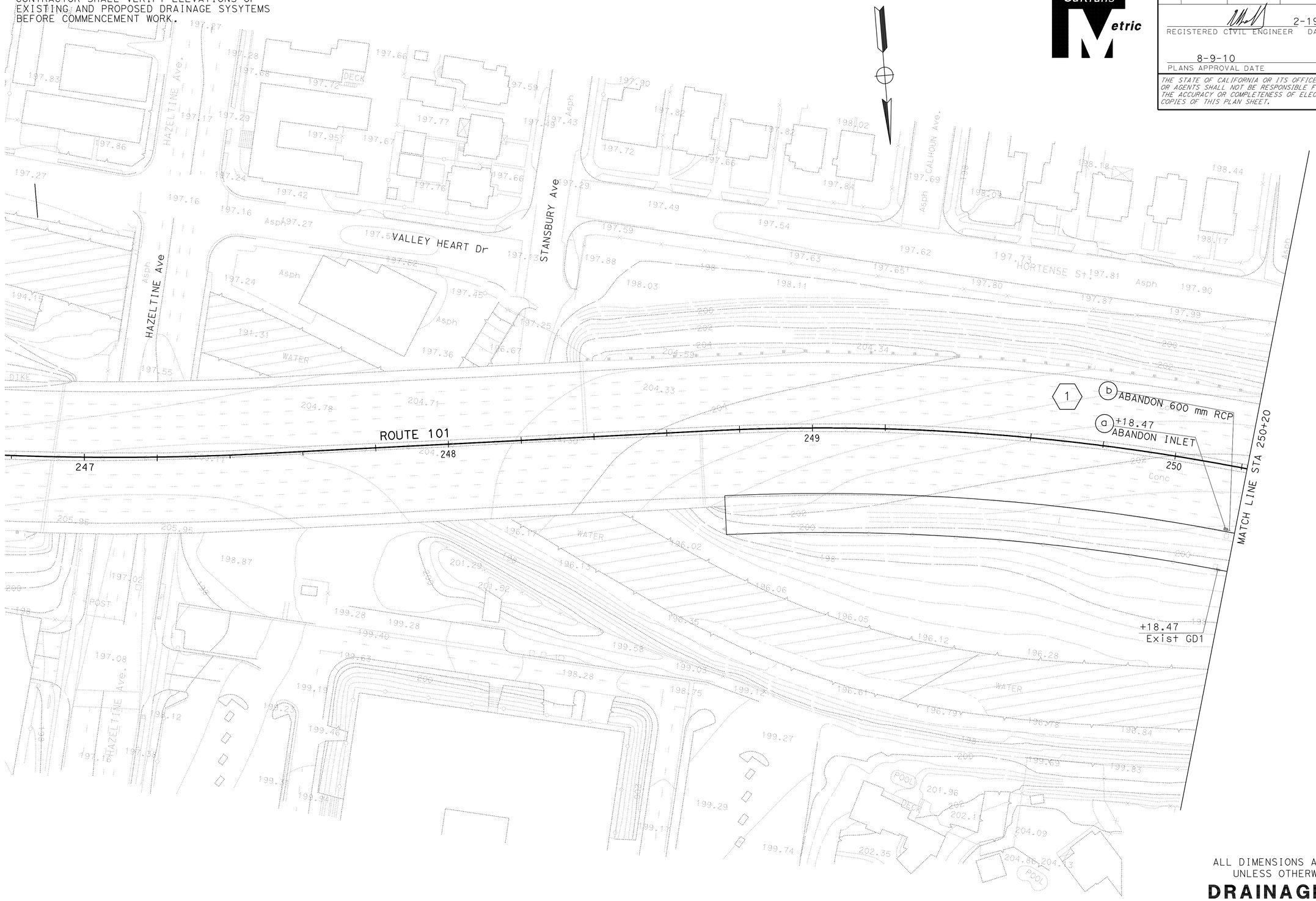

ALL DIMENSIONS ARE IN METERS UNLESS OTHERWISE SHOWN

DRAINAGE PLAN

SCALE 1:500

D-1

THIS PLAN ACCURATE FOR DRAINAGE WORK ONLY

STATE OF CALIFORNIA - DEPARTMENT OF TRANSPORTATION
Caltrans
HYDRAULICS

FUNCTIONAL SUPERVISOR: BALDEV K. BAHLLA
CALCULATED-DESIGNED BY: TAN HOANG
CHECKED BY: BFV
REVISED BY
DATE REVISED

LAST REVISION 00-00-00
DATE PLOTTED => 21-SEP-2010
TIME PLOTTED => 11:28

Dist	COUNTY	ROUTE	KILOMETER POST TOTAL PROJECT	SHEET No.	TOTAL SHEETS
07	LA	101	24.9/25.9	46	213

REGISTERED CIVIL ENGINEER 2-19-08 DATE

8-9-10
PLANS APPROVAL DATE

REGISTERED PROFESSIONAL ENGINEER BALDEV K. BHALLA No. 34350 EXP. 9-30-2011 CIVIL STATE OF CALIFORNIA

THE STATE OF CALIFORNIA OR ITS OFFICERS OR AGENTS SHALL NOT BE RESPONSIBLE FOR THE ACCURACY OR COMPLETENESS OF ELECTRONIC COPIES OF THIS PLAN SHEET.

Caltrans Metric

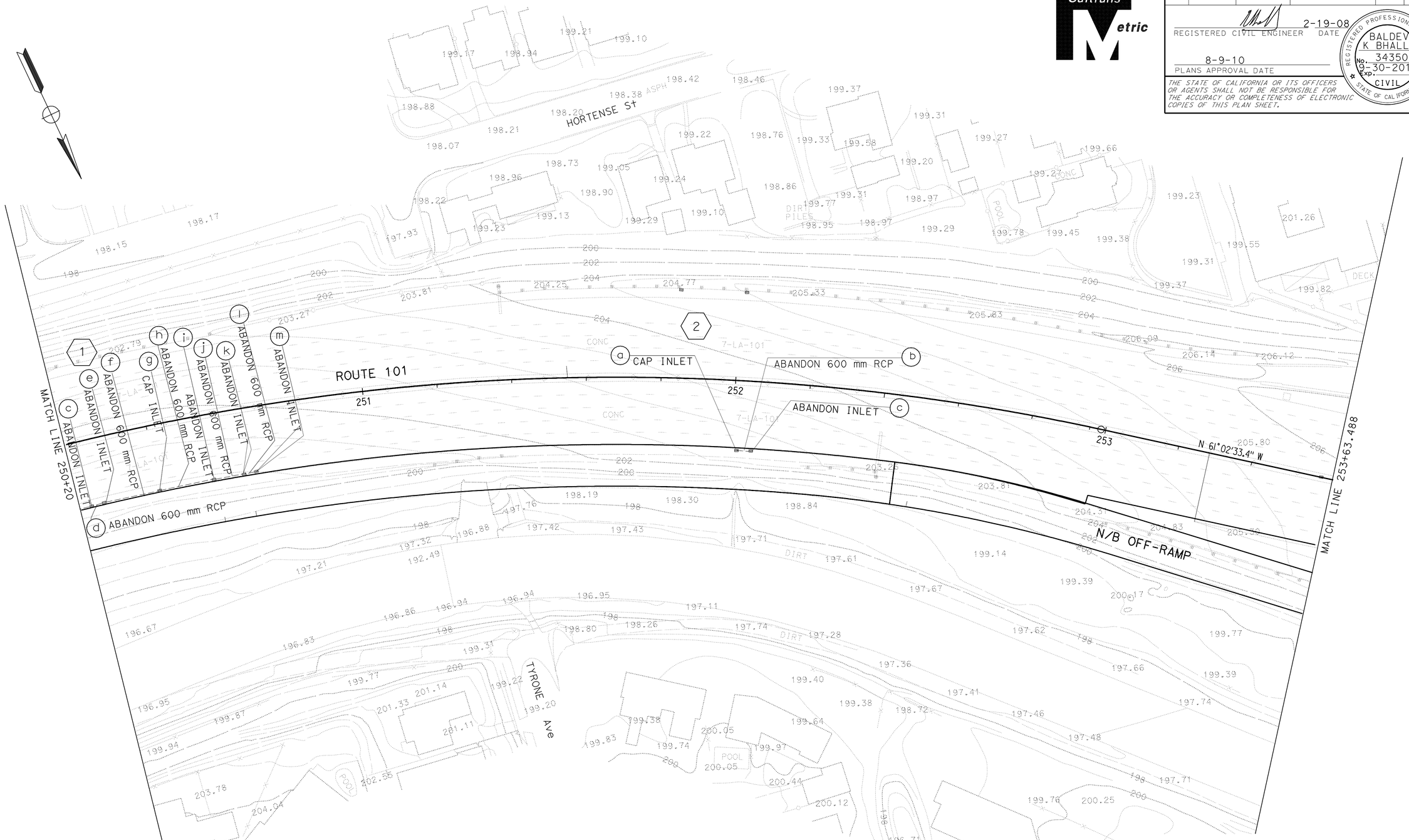

ALL DIMENSIONS ARE IN METERS UNLESS OTHERWISE SHOWN

THIS PLAN ACCURATE FOR DRAINAGE WORK ONLY

DRAINAGE PLAN

SCALE 1:500

D-2

STATE OF CALIFORNIA - DEPARTMENT OF TRANSPORTATION

Caltrans

HYDRAULICS

FUNCTIONAL SUPERVISOR: BALDEV K. BAHLLA

CALCULATED-DESIGNED BY: TAN HOANG

CHECKED BY: BFV

REVISED BY | DATE REVISED

LAST REVISION 00-00-00 | DATE PLOTTED => 21-SEP-2010 | TIME PLOTTED => 11:28

BORDER LAST REVISED 3/1/2007

RELATIVE BORDER SCALE IS IN MILLIMETERS 0 20 40 60 80

USERNAME => trmikesl
DGN FILE => 719963la002.dgn

CU 07314

EA 199631

Dist	COUNTY	ROUTE	KILOMETER POST TOTAL PROJECT	SHEET No.	TOTAL SHEETS
07	LA	101	24.9/25.9	47	213

REGISTERED CIVIL ENGINEER 2-19-08 DATE

8-9-10
PLANS APPROVAL DATE

REGISTERED PROFESSIONAL ENGINEER BALDEV K BHALLA No. 34350 EXP. 9-30-2011 CIVIL STATE OF CALIFORNIA

THE STATE OF CALIFORNIA OR ITS OFFICERS OR AGENTS SHALL NOT BE RESPONSIBLE FOR THE ACCURACY OR COMPLETENESS OF ELECTRONIC COPIES OF THIS PLAN SHEET.

Caltrans Metric

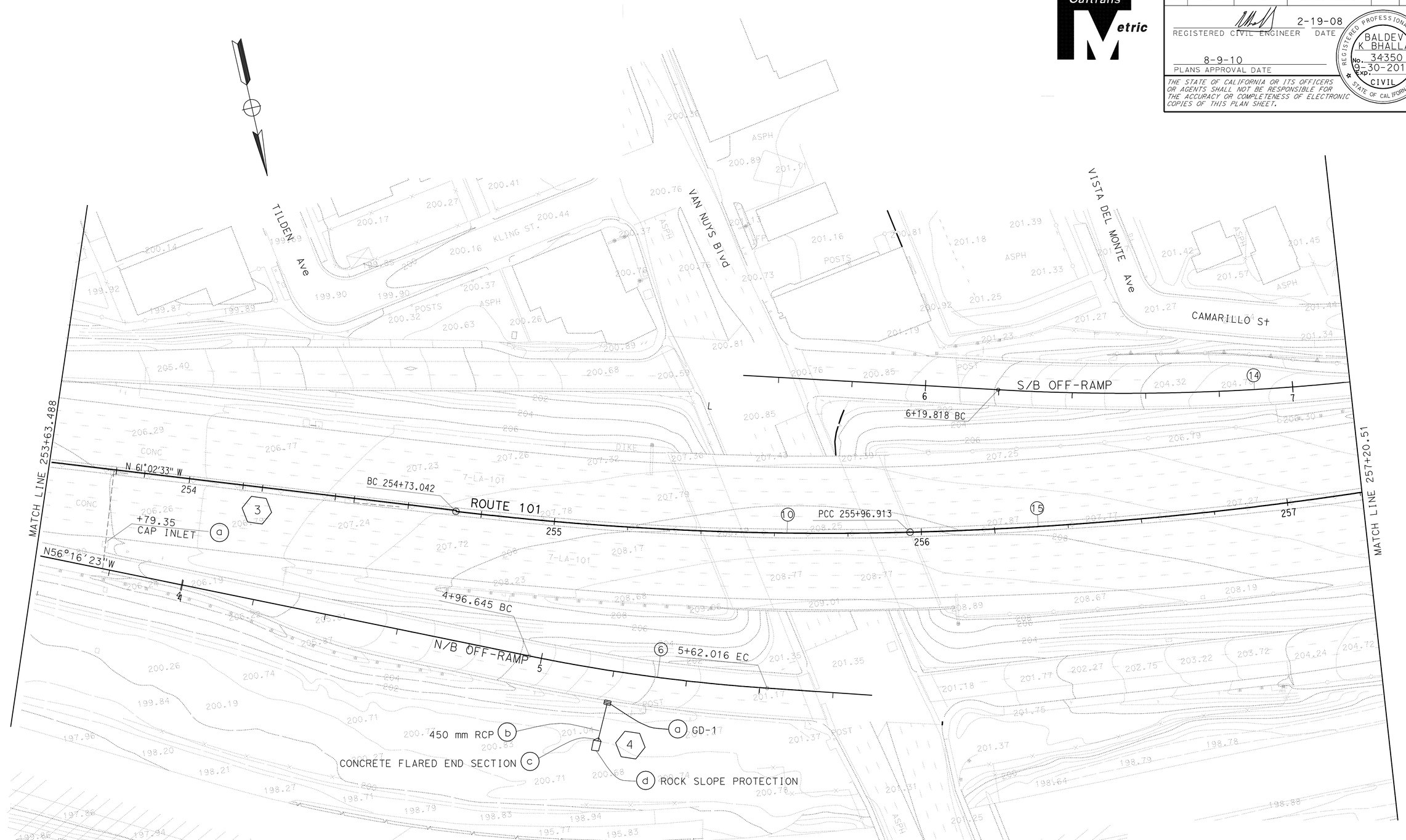

ALL DIMENSIONS ARE IN METERS
UNLESS OTHERWISE SHOWN

DRAINAGE PLAN

SCALE 1:500

D-3

THIS PLAN ACCURATE FOR DRAINAGE WORK ONLY

STATE OF CALIFORNIA - DEPARTMENT OF TRANSPORTATION
Caltrans
HYDRAULICS

FUNCTIONAL SUPERVISOR: BALDEV K. BAHLLA
CALCULATED-DESIGNED BY: TAN HOANG
CHECKED BY: BFV
REVISED BY
DATE REVISED

LAST REVISION 00-00-00
DATE PLOTTED => 21-SEP-2010
TIME PLOTTED => 11:28

Dist	COUNTY	ROUTE	KILOMETER POST TOTAL PROJECT	SHEET No.	TOTAL SHEETS
07	LA	101	24.9/25.9	48	213

REGISTERED CIVIL ENGINEER 2-19-08 DATE

8-9-10
PLANS APPROVAL DATE

REGISTERED PROFESSIONAL ENGINEER BALDEV K BHALLA No. 34350 EXP. 9-30-2011 CIVIL STATE OF CALIFORNIA

THE STATE OF CALIFORNIA OR ITS OFFICERS OR AGENTS SHALL NOT BE RESPONSIBLE FOR THE ACCURACY OR COMPLETENESS OF ELECTRONIC COPIES OF THIS PLAN SHEET.

Caltrans Metric

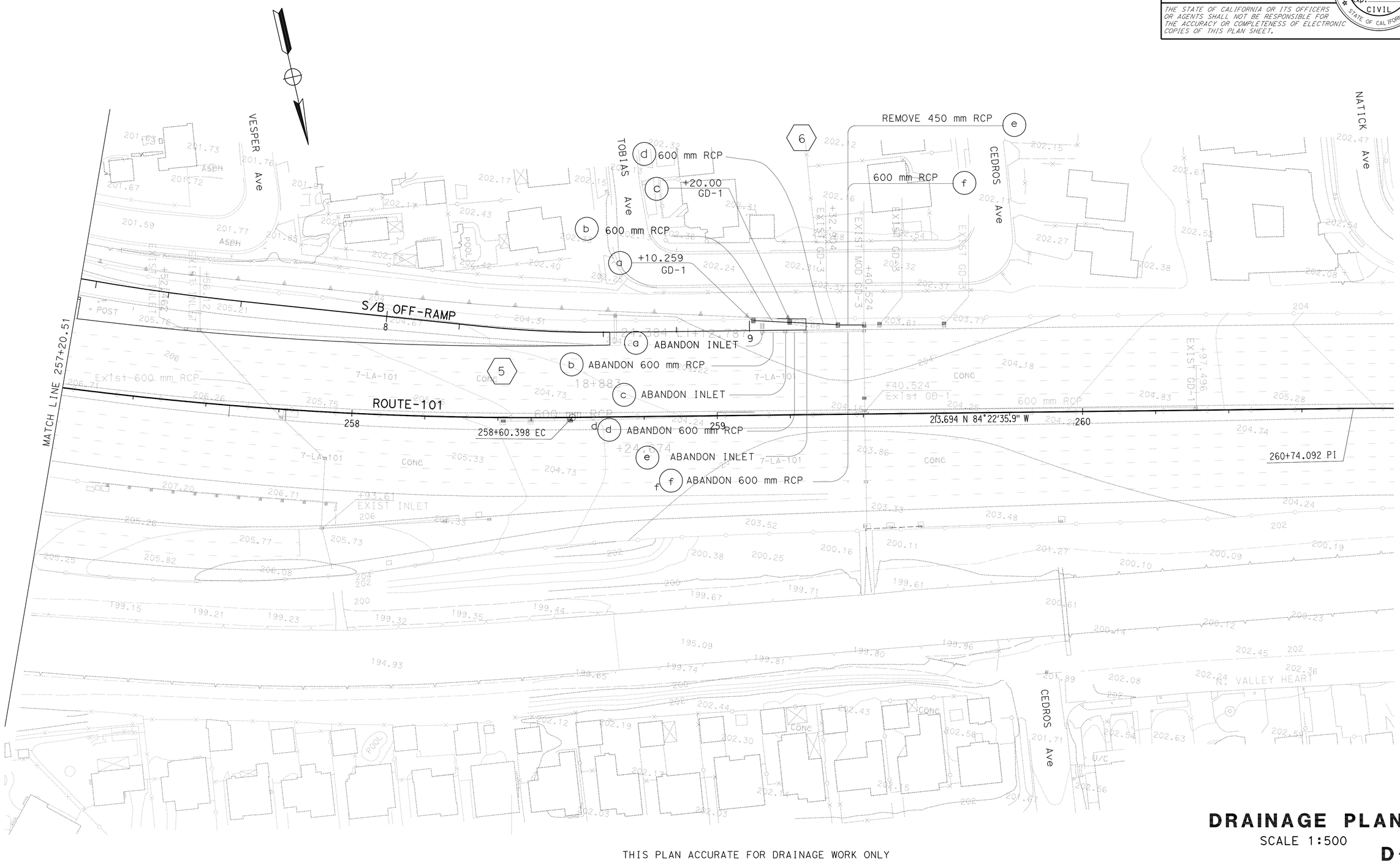

THIS PLAN ACCURATE FOR DRAINAGE WORK ONLY

DRAINAGE PLAN

SCALE 1:500

D-4

STATE OF CALIFORNIA - DEPARTMENT OF TRANSPORTATION
Caltrans
HYDRAULICS

FUNCTIONAL SUPERVISOR: BALDEV K. BAHLLA

CALCULATED-DESIGNED BY: TAN HOANG
CHECKED BY: BFV

REVISED BY | DATE REVISED

LAST REVISION 00-00-00 | DATE PLOTTED => 21-SEP-2010 | TIME PLOTTED => 11:28

Dist	COUNTY	ROUTE	KILOMETER POST TOTAL PROJECT	SHEET No.	TOTAL SHEETS
07	LA	101	24.9/25.9	49	213

REGISTERED CIVIL ENGINEER 2-19-08 DATE

8-9-10
PLANS APPROVAL DATE

REGISTERED PROFESSIONAL ENGINEER BALDEV K. BHALLA No. 34350 EXP. 9-30-2011 CIVIL STATE OF CALIFORNIA

THE STATE OF CALIFORNIA OR ITS OFFICERS OR AGENTS SHALL NOT BE RESPONSIBLE FOR THE ACCURACY OR COMPLETENESS OF ELECTRONIC COPIES OF THIS PLAN SHEET.

Caltrans Metric

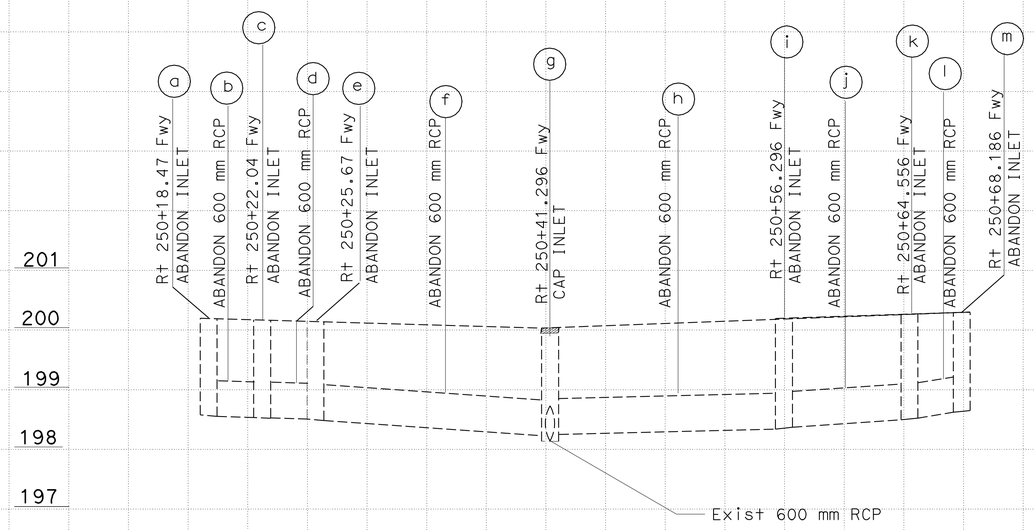

DRAINAGE SYSTEM No. 1
SCALE Horiz 1:200
Vert 1:50

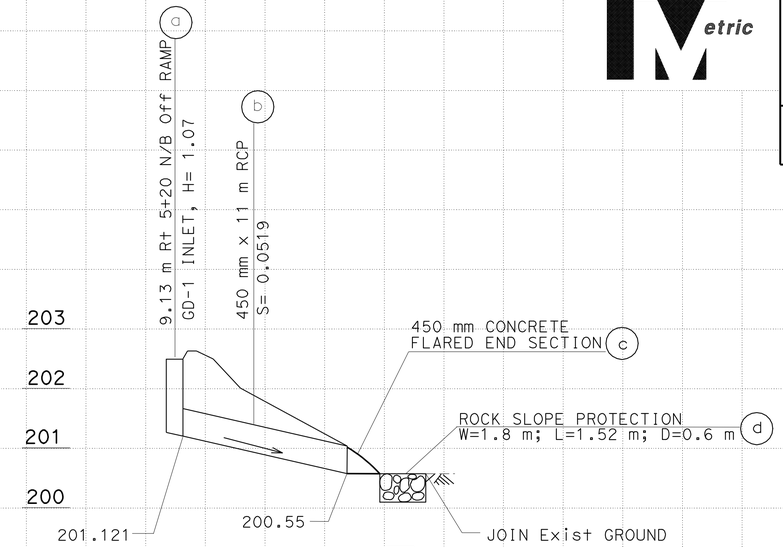

DRAINAGE SYSTEM No. 4
SCALE Horiz 1:200
Vert 1:50

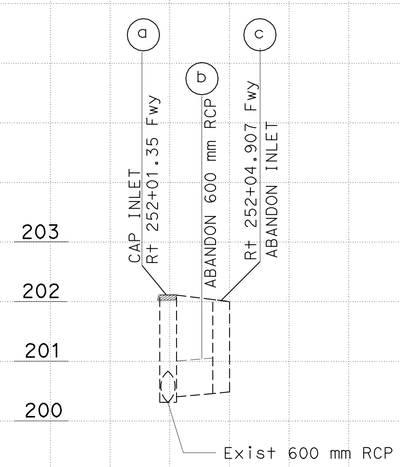

DRAINAGE SYSTEM No. 2
SCALE Horiz 1:200
Vert 1:50

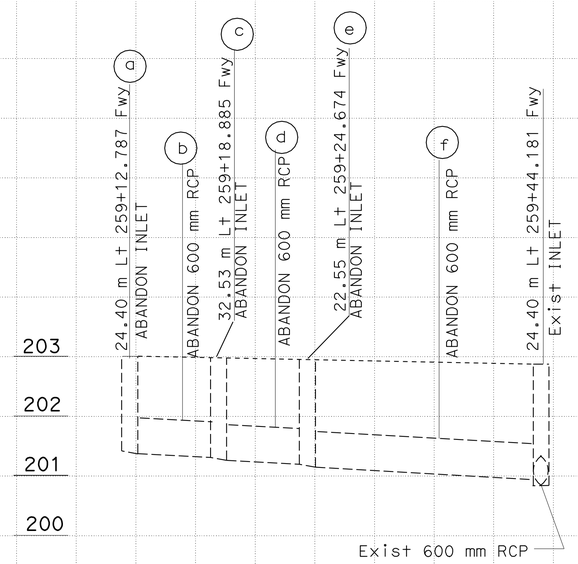

DRAINAGE SYSTEM No. 5
SCALE Horiz 1:200
Vert 1:50

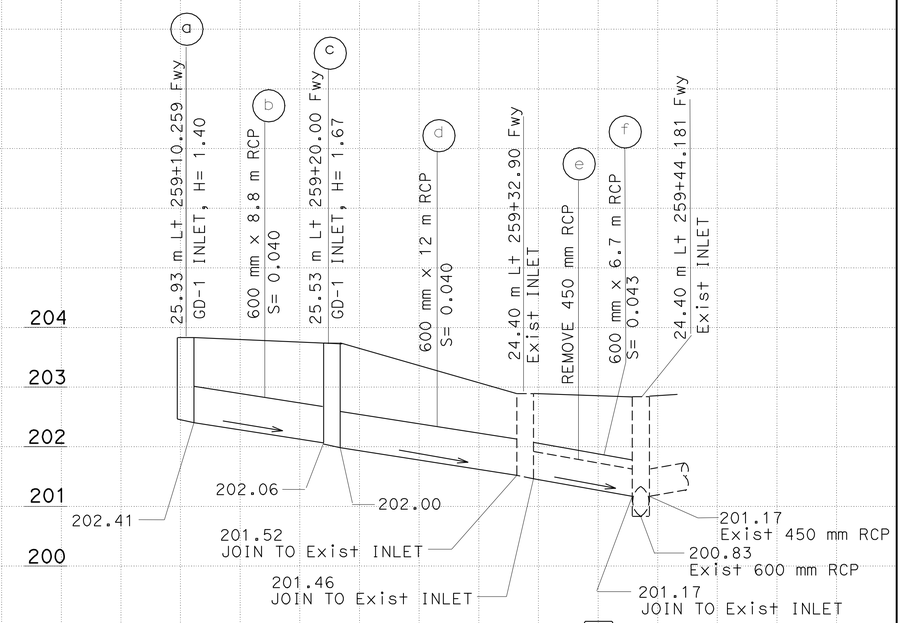

DRAINAGE SYSTEM No. 6
SCALE Horiz 1:200
Vert 1:50

ALL DIMENSIONS ARE IN METERS
UNLESS OTHERWISE SHOWN

DRAINAGE PROFILES

DP-1

STATE OF CALIFORNIA - DEPARTMENT OF TRANSPORTATION
Caltrans HYDRAULICS

FUNCTIONAL SUPERVISOR BALDEV K. BAHLLA
CALCULATED-DESIGNED BY TAN HOANG
CHECKED BY BFV
REVISED BY
DATE REVISED

LAST REVISION 04-14-08 DATE PLOTTED => 21-SEP-2010 TIME PLOTTED => 11:28

Dist	COUNTY	ROUTE	KILOMETER POST TOTAL PROJECT	SHEET No.	TOTAL SHEETS
07	LA	101	24.9/25.9	50	213

REGISTERED CIVIL ENGINEER 2-19-08 DATE

8-9-10
PLANS APPROVAL DATE

REGISTERED PROFESSIONAL ENGINEER BALDEV K BHALLA No. 34350 Exp. 9-30-2011 CIVIL STATE OF CALIFORNIA

THE STATE OF CALIFORNIA OR ITS OFFICERS OR AGENTS SHALL NOT BE RESPONSIBLE FOR THE ACCURACY OR COMPLETENESS OF ELECTRONIC COPIES OF THIS PLAN SHEET.

Caltrans Metric

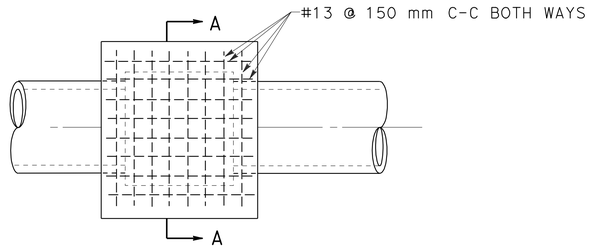

PLAN

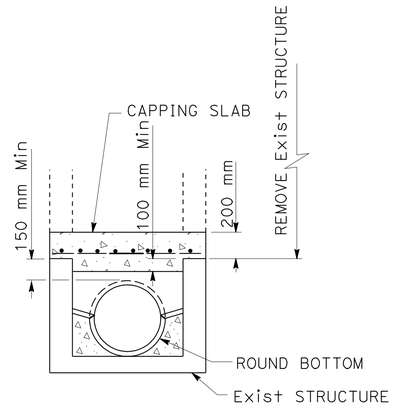

SECTION A-A

CAP INLET DETAIL

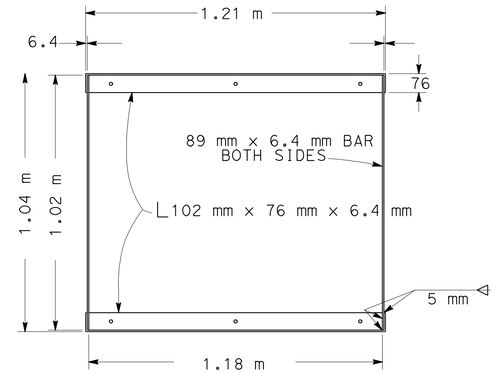

GRATE FRAME DETAIL

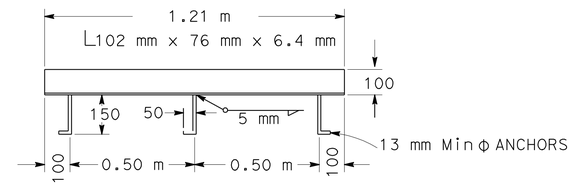

ANCHOR PLACEMENT DETAIL

NOTES:

1. 'H' IS THE DIFFERENCE IN ELEVATION BETWEEN THE OUTLET PIPE FLOW LINE AND THE FLOW LINE OF THE GRATES.
2. STEPS - NONE REQUIRED WHEN 'H' IS 1.07 m OR LESS. INSTALL ONE STEP 400 mm± ABOVE FLOOR WHEN 'H' IS MORE THAN 1.07 m AND LESS THAN 1.52 m. WHERE 'H' IS MORE THAN 1.52 m STEPS SHALL BE EVENLY SPACED @ 300 mm± INTERVALS FROM 400 mm± ABOVE FLOOR TO WITHIN 300 mm± OF THE TOP OF THE BOX. PLACE STEPS IN WALL WITHOUT PIPE OPENINGS. SEE STANDARD PLAN D74C FOR STEP DETAIL.
3. PIPE(S) CAN BE PLACED IN ANY WALL.
4. REINFORCING STEEL NOT REQUIRED IN WALLS WHEN H=1.83 m OR LESS.
5. REINFORCING STEEL IN WALLS SHALL BE #13 BARS @ 460 mm± CENTERS PLACED 40 mm CLEAR TO INSIDE OF BOX.

MISCELLANEOUS IRON & STEEL

INLET TYPE	GRATE TYPE	MASS(kg)
GD-1	600 - 12	264
	600 - 10C	172
	600 - 10S	197
	600 - 12X	206
	600 - 13	160

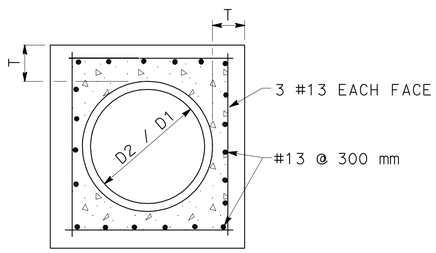

SECTION B-B

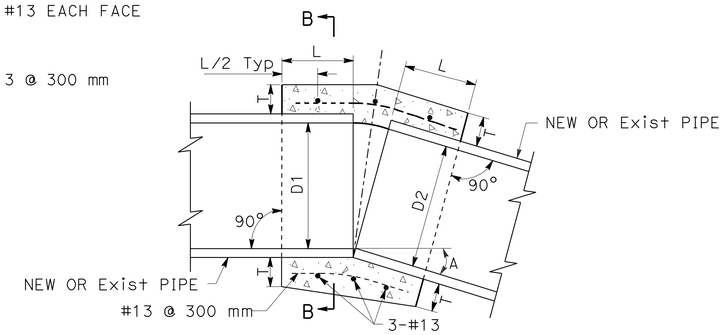

D (mm)	L (mm)	T (mm)
300	300	100
450	300	125
600	300	150
900	460	200
1200	460	250
1350	460	250
1500	530	275
1650	530	275
1800	600	300

CONCRETE COLLAR

NOTES:

1. WHERE PIPES OF DIFFERENT DIAMETERS ARE JOINED WITH A CONCRETE COLLAR, 'L' AND 'T' SHALL BE THOSE OF THE LARGER PIPE. D=D1 OR D2, WHICHEVER IS GREATER.
2. FOR PIPE SIZE NOT LISTED USE NEXT SIZE LARGER.
3. OMIT REINFORCING ON PIPES 600 mm AND LESS IN DIAMETER AND ON ALL PIPES WHERE ANGLE A IS LESS THAN 10°.
4. JOIN PIPES AT INVERTS.
5. REINFORCEMENT SHALL BE PLACED 40 mm CLEAR FROM OUTSIDE DIAMETER OF PIPE.

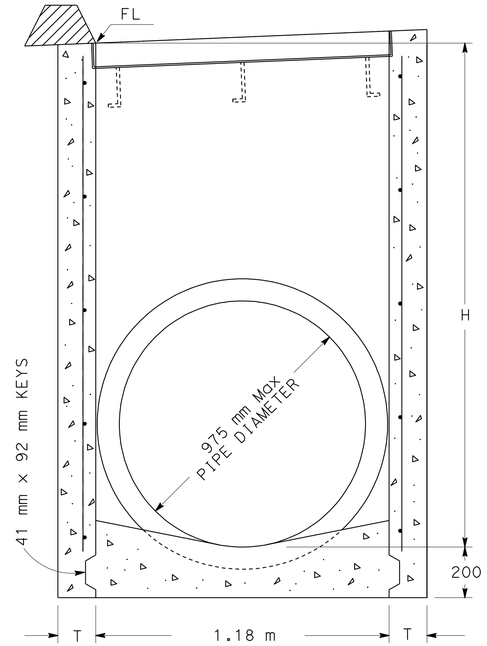

SECTION A-A

(FOR PIPE DIAMETERS 975 mm OR LESS)

H	T
2.44 m OR LESS	150 mm
2.46 m to 6.10 m	200 mm

GD-1

THIS PLAN ACCURATE FOR DRAINAGE ONLY

ALL DIMENSIONS ARE IN MILLIMETERS UNLESS OTHERWISE SHOWN

DRAINAGE DETAILS

NO SCALE

DD-1

STATE OF CALIFORNIA - DEPARTMENT OF TRANSPORTATION
Caltrans
HYDRAULICS

FUNCTIONAL SUPERVISOR: BALDEV K. BHALLA
CALCULATED-DESIGNED BY: TAN HOANG
CHECKED BY: BFV
REVISED BY / DATE REVISED

LAST REVISION 00-00-00 DATE PLOTTED => 21-SEP-2010 TIME PLOTTED => 11:29

NOTES:

1. PIPE JOINTS ARE STANDARD OR AS NOTED ON PLANS.
2. (N) NOT A SEPARATE PAY ITEM, FOR INFORMATION ONLY.
3. * L= 0.91 m FOR 1 GRATE, ADD 1.07 m FOR EACH ADDITIONAL GRATE.

DRAINAGE QUANTITIES

DRAINAGE SHEET No.	DRAINAGE SYSTEM No. (⬡)	DRAINAGE UNIT No. (○)	(N) H OR $(H_1 + H_2)/2$	MINOR CONCRETE (MINOR STRUCTURE)	MISCELLANEOUS IRON AND STEEL	CAP INLET	REMOVE PIPE	ABANDON INLET	ABANDON PIPE LINE	SAND BACK FILL	ROCK SLOPE PROTECTION	ROCK SLOPE PROTECTION (BACKING No. 2 - METHOD B)	450 mm FLARED END SECTION	450 mm RCP	600 mm RCP	(N) TYPE 600-12 FRAME AND GRATE	(N) MAXIMUM COVER	DESCRIPTION	STATION	DRAINAGE SHEET No.	DRAINAGE SYSTEM No. (⬡)	DRAINAGE UNIT No. (○)
			m	m^3	kg	EA	m	EA	m	m^3	m^2	m^3	EA	m	m	EA	m					
D-1	1	a						1										ABANDON INLET	R† 250+18.470 Fwy	D-1	1	a
↓		b							2.50	0.70								ABANDON 600 mm RCP	R† 250+18.470 - 250+22.040 Fwy	↓		b
D-2		c						1										ABANDON INLET	R† 250+22.040 Fwy	D-2		c
		d							2.50	0.70								ABANDON 600 mm RCP	R† 250+22.040 - 250+25.670 Fwy			d
		e						1										ABANDON INLET	R† 250+25.670 Fwy			e
		f							14.60	4.10								ABANDON 600 mm RCP	R† 250+25.670 - 250+41.296 Fwy			f
		g				1												CAP INLET	R† 250+41.296 Fwy			g
		h							14.60	4.10								ABANDON 600 mm RCP	R† 250+41.296 - 250+56.296 Fwy			h
		i						1										ABANDON INLET	R† 250+56.296 Fwy			i
		j							7.30	2.10								ABANDON 600 mm RCP	R† 250+56.296 - 250+64.556 Fwy			j
		k						1										ABANDON INLET	R† 250+64.556 Fwy			k
		l							2.50	0.70								ABANDON 600 mm RCP	R† 250+64.556 - 250+68.186 Fwy			l
↓	↓	m						1										ABANDON INLET	R† 250+68.186 Fwy	↓	↓	m
D-2	2	a				1												CAP INLET	R† 252+01.350 Fwy	D-2	2	a
		b							2.50	0.70								ABANDON 600 mm RCP	R† 252+01.350 - 252+68.04.907 Fwy			b
↓	↓	c						1										ABANDON INLET	R† 252+04.907 Fwy	↓	↓	c
D-3	3	a				1												CAP INLET	R† 253+79.330 Fwy	D-3	3	a
SUBTOTAL						3		7	46.5	13.1												

Caltrans Metric

Dist	COUNTY	ROUTE	KILOMETER POST TOTAL PROJECT	SHEET No.	TOTAL SHEETS
07	LA	101	24.9/25.9	51	213

REGISTERED CIVIL ENGINEER 2-19-08 DATE

8-9-10
PLANS APPROVAL DATE

REGISTERED PROFESSIONAL ENGINEER BALDEV K. BHALLA No. 34350 Exp. 9/30/11 CIVIL STATE OF CALIFORNIA

THE STATE OF CALIFORNIA OR ITS OFFICERS OR AGENTS SHALL NOT BE RESPONSIBLE FOR THE ACCURACY OR COMPLETENESS OF ELECTRONIC COPIES OF THIS PLAN SHEET.

REVISED BY | DATE REVISED

TAN HOANG | BFV

CALCULATED-DESIGNED BY | CHECKED BY

FUNCTIONAL SUPERVISOR
BALDEV K.BHALLA

STATE OF CALIFORNIA - DEPARTMENT OF TRANSPORTATION
Caltrans
HYDRAULICS

DRAINAGE QUANTITIES
DQ-1

LAST REVISION 00-00-00 | DATE PLOTTED => 21-SEP-2010 | TIME PLOTTED => 11:29

NOTES:

1. PIPE JOINTS ARE STANDARD OR AS NOTED ON PLANS.
2. (N) NOT A SEPARATE PAY ITEM, FOR INFORMATION ONLY.
3. * L= 0.91 m FOR 1 GRATE, ADD 1.07 m FOR EACH ADDITIONAL GRATE

Caltrans Metric

Dist	COUNTY	ROUTE	KILOMETER POST TOTAL PROJECT	SHEET No.	TOTAL SHEETS
07	LA	101	24.9/25.9	52	213

REGISTERED CIVIL ENGINEER 2-19-08 DATE

8-9-10
PLANS APPROVAL DATE

REGISTERED PROFESSIONAL ENGINEER BALDEV K. BHALLA No. 34350 Exp. 9/30/11 CIVIL STATE OF CALIFORNIA

THE STATE OF CALIFORNIA OR ITS OFFICERS OR AGENTS SHALL NOT BE RESPONSIBLE FOR THE ACCURACY OR COMPLETENESS OF ELECTRONIC COPIES OF THIS PLAN SHEET.

DRAINAGE QUANTITIES

DRAINAGE SHEET No.	DRAINAGE SYSTEM No.	DRAINAGE UNIT No.	(N) H OR $(H_1 + H_2)/2$	MINOR CONCRETE (MINOR STRUCTURE)	MISCELLANEOUS IRON AND STEEL	CAP INLET	REMOVE PIPE	ABANDON INLET	ABANDON PIPE LINE	SAND BACK FILL	ROCK SLOPE PROTECTION FABRIC	ROCK SLOPE PROTECTION (BACKING No. 2 - METHOD B)	450 mm CONCRETE FLARED END SECTION	450 mm RCP	600 mm RCP	(N) TYPE 600-12 FRAME AND GRATE	(N) MAXIMUM COVER	DESCRIPTION	STATION	DRAINAGE SHEET No.	DRAINAGE SYSTEM No.	DRAINAGE UNIT No.
			m	m^3	kg	EA	m	EA	m	m^3	m^2	m^3	EA	m	m	EA	m					
D-3	4	a	1.07	1.20	264											1		GD-1 INLET	9.13 m Rt 5+20 N/B OFF-RAMP	D-3	4	a
		b												11				450 mm RCP	Rt 5+20 N/B OFF-RAMP			b
		c											1					450 mm CONRETE FLARED EDND SECTION	Rt 5+20 N/B OFF-RAMP			c
		d									8.2	1.64						ROCK SLOPE PROTECTION	Rt 5+20 N/B OFF-RAMP			d
D-4	5	a						1										ABANDON INLET	Rt 259+12.787 Fwy	D-4	5	a
		b							4.88	1.38								ABANDON 600 mm RCP	Lt 259+12.787 - 259+18.885 Fwy			b
		c						1										ABANDON INLET	Lt 259+18.885 Fwy			c
		d							4.88	1.38								ABANDON 600 mm RCP	Lt 259+18.885 - 259+24.674 Fwy			d
		e						1										ABANDON INLET	Lt 259+24.674 Fwy			e
		f							14.63	4.14								ABANDON 600 mm RCP	Lt 259+24.674 - 259+44.181 Fwy			f
D-4	6	a	1.40	1.40	264											1		GD-1 INLET	25.93 m Lt 259+10.259 Fwy	D-4	6	a
		b													8.80		1.15	600 mm RCP	Lt 259+10.259 - 259+20.000 Fwy			b
		c	1.67	1.60	264											1		GD-1 INLET	25.53 m Lt 259+20.000 Fwy			c
		d													12.0		0.83	600 mm RCP	Lt 259+20.000 - 259+32.900 Fwy			d
		e					6.70											REMOVE 450 mm RCP	Lt 259+32.900 - 259+44.181 Fwy			e
		f													6.70		1.11	600 mm RCP	Lt 259+32.900 - 259+44.181 Fwy			f
SUBTOTAL				4.20	792		6.70	3	24.39	6.9			1	11	27.50	3						
GRANDTOTAL				4.20	792	3	6.70	10	70.9	20.0	8.2	1.64	1	11	27.50	3						

DRAINAGE QUANTITIES
DQ-2

STATE OF CALIFORNIA - DEPARTMENT OF TRANSPORTATION
Caltrans HYDRAULICS

FUNCTIONAL SUPERVISOR BALDEV K.BHALLA
CALCULATED-DESIGNED BY TAN HOANG
CHECKED BY BFV
REVISED BY
DATE REVISED

LAST REVISION 00-00-00
DATE PLOTTED => 21-SEP-2010
TIME PLOTTED => 11:29

Dist	COUNTY	ROUTE	KILOMETER POST TOTAL PROJECT	SHEET No.	TOTAL SHEETS
07	LA	101	24.9/25.9	53	213

Caltrans Metric

Parviz Yeganeh 2-20-08
REGISTERED CIVIL ENGINEER DATE

8-9-10
PLANS APPROVAL DATE

REGISTERED PROFESSIONAL ENGINEER PARVIZ YEGANEH No. C53797 Exp. 06/30/11 CIVIL STATE OF CALIFORNIA

THE STATE OF CALIFORNIA OR ITS OFFICERS OR AGENTS SHALL NOT BE RESPONSIBLE FOR THE ACCURACY OR COMPLETENESS OF ELECTRONIC COPIES OF THIS PLAN SHEET.

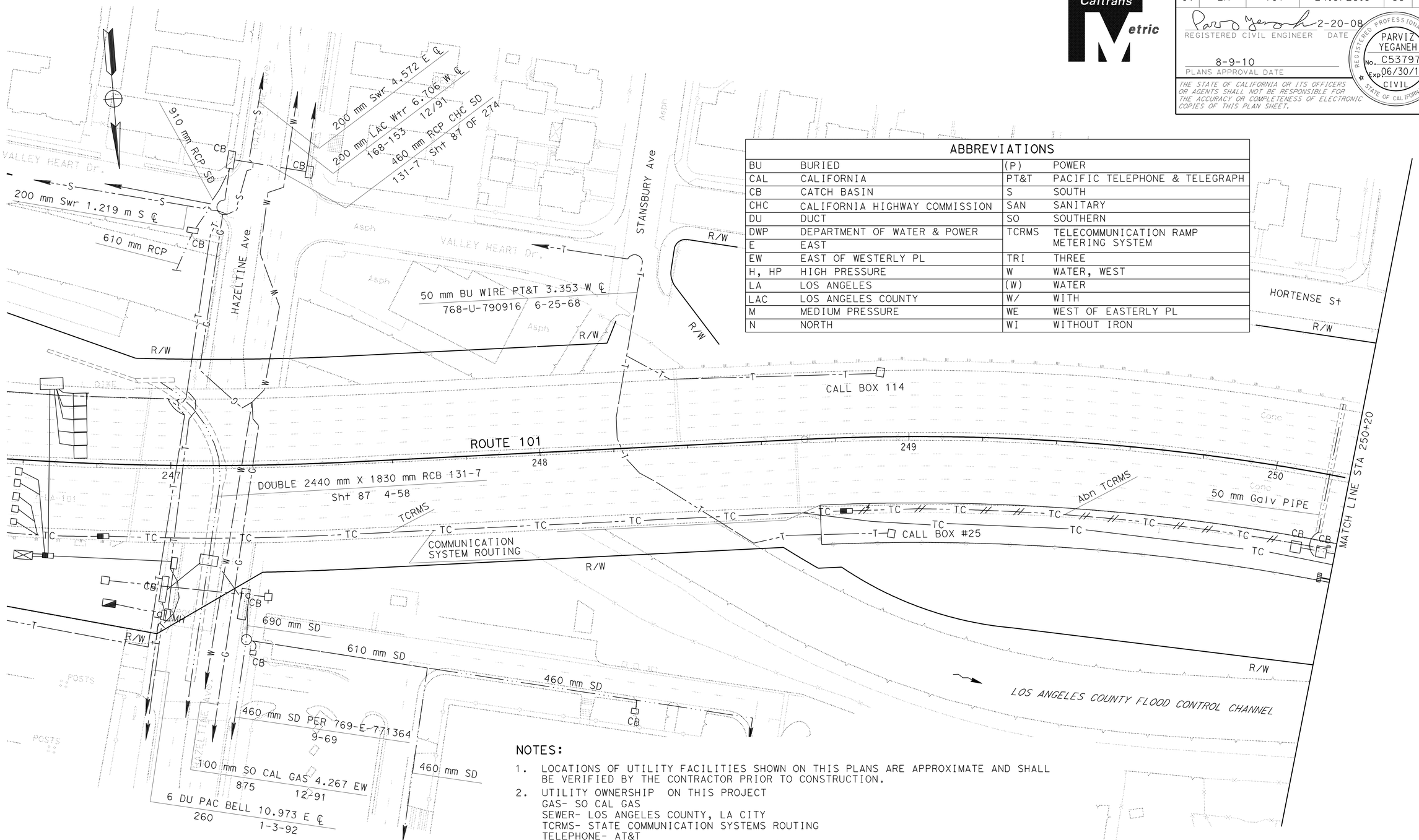

ABBREVIATIONS

BU	BURIED	(P)	POWER
CAL	CALIFORNIA	PT&T	PACIFIC TELEPHONE & TELEGRAPH
CB	CATCH BASIN	S	SOUTH
CHC	CALIFORNIA HIGHWAY COMMISSION	SAN	SANITARY
DU	DUCT	SO	SOUTHERN
DWP	DEPARTMENT OF WATER & POWER	TCRMS	TELECOMMUNICATION RAMP METERING SYSTEM
E	EAST		
EW	EAST OF WESTERLY PL	TRI	THREE
H, HP	HIGH PRESSURE	W	WATER, WEST
LA	LOS ANGELES	(W)	WATER
LAC	LOS ANGELES COUNTY	W/	WITH
M	MEDIUM PRESSURE	WE	WEST OF EASTERLY PL
N	NORTH	WI	WITHOUT IRON

NOTES:

1. LOCATIONS OF UTILITY FACILITIES SHOWN ON THIS PLANS ARE APPROXIMATE AND SHALL BE VERIFIED BY THE CONTRACTOR PRIOR TO CONSTRUCTION.
2. UTILITY OWNERSHIP ON THIS PROJECT
   GAS- SO CAL GAS
   SEWER- LOS ANGELES COUNTY, LA CITY
   TCRMS- STATE COMMUNICATION SYSTEMS ROUTING
   TELEPHONE- AT&T
   WATER- DEPARTMENT OF WATER & POWER (DWP)
3. ALL ELEVATIONS SHOWN REFER TO THE TOP OF PIPE ELEVATION UNLESS OTHERWISE INDICATED.
4. ALL UTILITIES SHOWN ARE EXISTING UNLESS OTHERWISE NOTED.

THIS PLAN ACCURATE FOR UTILITIES ONLY

ALL DIMENSIONS ARE IN METERS UNLESS OTHERWISE SHOWN

UTILITY PLAN

SCALE 1:500

U-1

STATE OF CALIFORNIA - DEPARTMENT OF TRANSPORTATION
Caltrans DESIGN

FUNCTIONAL SUPERVISOR: UGO ANAKWENZE
CALCULATED-DESIGNED BY: PARVIZ YEGANEH
CHECKED BY: BARNABAS F. VORREITER
REVISED BY / DATE REVISED

LAST REVISION 04-09-08
DATE PLOTTED => 21-SEP-2010
TIME PLOTTED => 11:29

Dist	COUNTY	ROUTE	KILOMETER POST TOTAL PROJECT	SHEET No.	TOTAL SHEETS
07	LA	101	24.9/25.9	54	213

Parviz Yeganeh 2-20-08
REGISTERED CIVIL ENGINEER DATE

8-9-10
PLANS APPROVAL DATE

REGISTERED PROFESSIONAL ENGINEER PARVIZ YEGANEH No. C53797 Exp. 06/30/11 CIVIL STATE OF CALIFORNIA

THE STATE OF CALIFORNIA OR ITS OFFICERS OR AGENTS SHALL NOT BE RESPONSIBLE FOR THE ACCURACY OR COMPLETENESS OF ELECTRONIC COPIES OF THIS PLAN SHEET.

Caltrans Metric

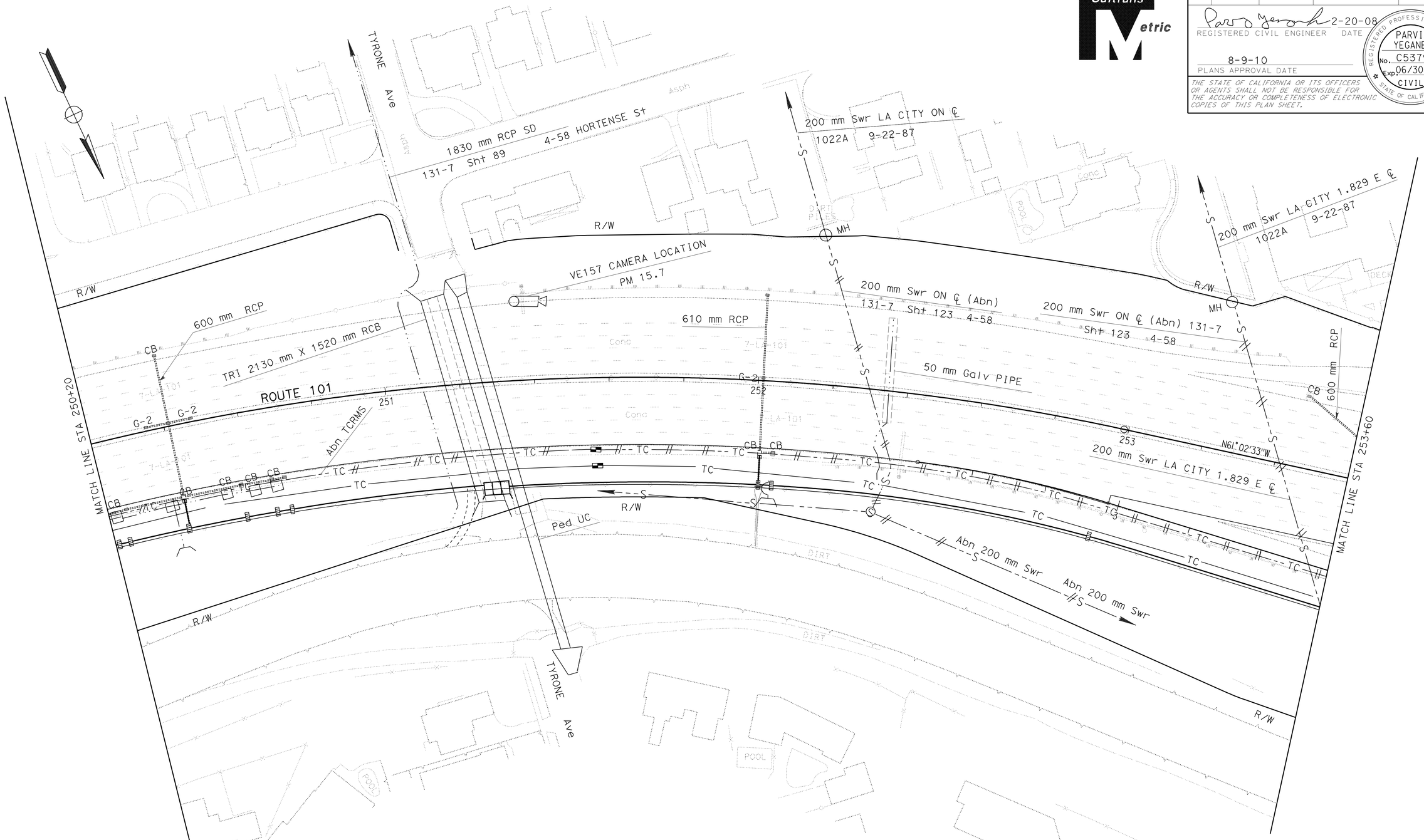

THIS PLAN ACCURATE FOR UTILITIES ONLY

ALL DIMENSIONS ARE IN METERS
UNLESS OTHERWISE SHOWN

UTILITY PLAN

SCALE 1:500

U-2

LAST REVISION 02-20-08 | DATE PLOTTED => 21-SEP-2010 | TIME PLOTTED => 11:29

STATE OF CALIFORNIA - DEPARTMENT OF TRANSPORTATION
Caltrans
DESIGN

FUNCTIONAL SUPERVISOR: UGO ANAKWENZE

CALCULATED-DESIGNED BY: PARVIZ YEGANEH
CHECKED BY: BARNABAS F. VORREITER

REVISED BY | DATE REVISED

BORDER LAST REVISED 3/1/2007

RELATIVE BORDER SCALE IS IN MILLIMETERS 0 20 40 60 80

USERNAME => trmikesl
DGN FILE => 719963ka002.dgn

CU 07265

EA 199631

Dist	COUNTY	ROUTE	KILOMETER POST TOTAL PROJECT	SHEET No.	TOTAL SHEETS
07	LA	101	24.9/25.9	55	213

Parviz Yeganeh 2-20-08
REGISTERED CIVIL ENGINEER DATE

8-9-10
PLANS APPROVAL DATE

REGISTERED PROFESSIONAL ENGINEER PARVIZ YEGANEH No. C53797 Exp. 06/30/11 CIVIL STATE OF CALIFORNIA

THE STATE OF CALIFORNIA OR ITS OFFICERS OR AGENTS SHALL NOT BE RESPONSIBLE FOR THE ACCURACY OR COMPLETENESS OF ELECTRONIC COPIES OF THIS PLAN SHEET.

Caltrans Metric

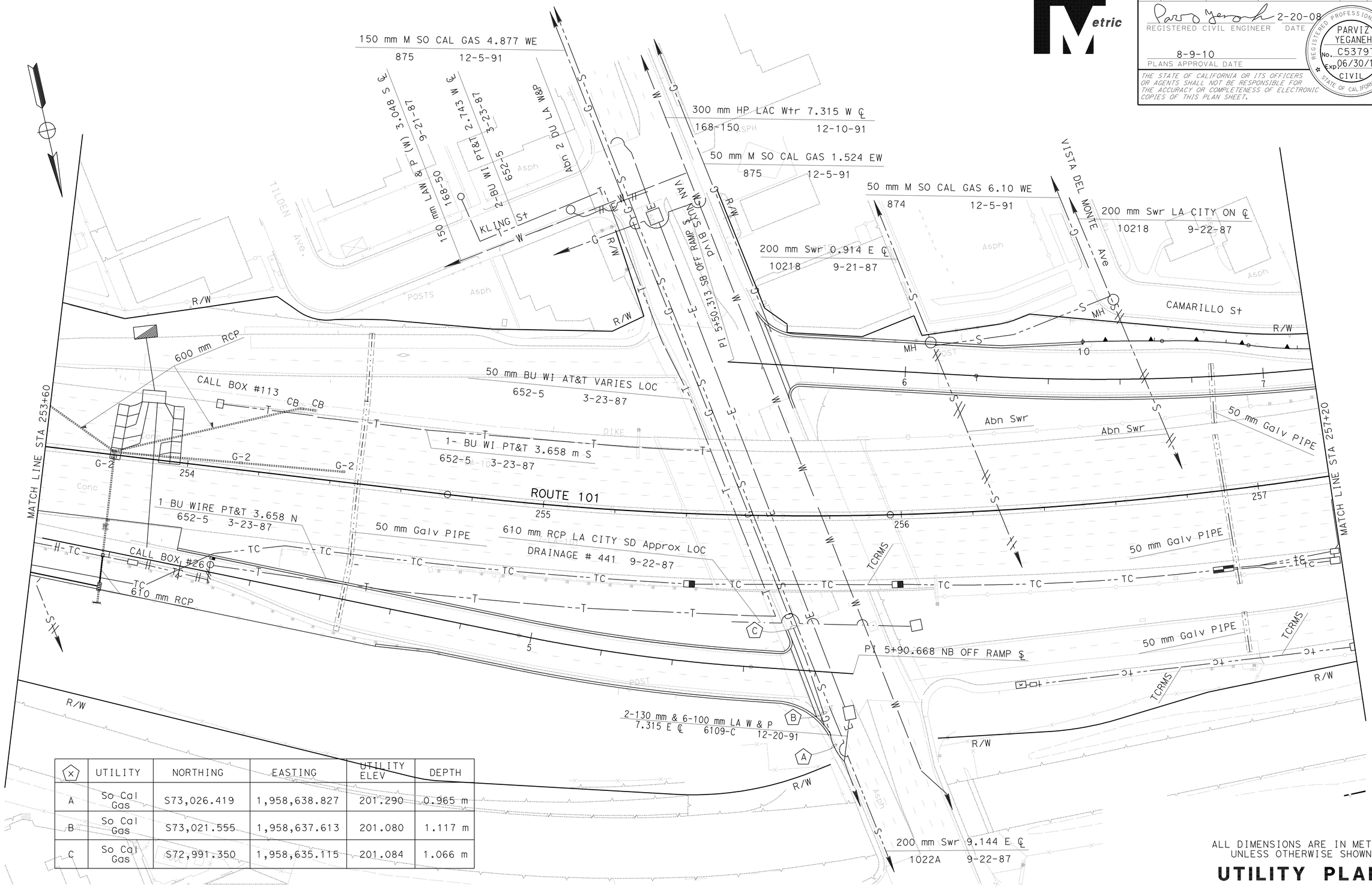

X	UTILITY	NORTHING	EASTING	UTILITY ELEV	DEPTH
A	So Cal Gas	S73,026.419	1,958,638.827	201.290	0.965 m
B	So Cal Gas	S73,021.555	1,958,637.613	201.080	1.117 m
C	So Cal Gas	S72,991.350	1,958,635.115	201.084	1.066 m

THIS PLAN ACCURATE FOR UTILITIES ONLY

ALL DIMENSIONS ARE IN METERS UNLESS OTHERWISE SHOWN

UTILITY PLAN

SCALE 1:500 **U-3**

LAST REVISION 02-20-08 | DATE PLOTTED => 21-SEP-2010 | TIME PLOTTED => 11:29

STATE OF CALIFORNIA - DEPARTMENT OF TRANSPORTATION
Caltrans **DESIGN**

FUNCTIONAL SUPERVISOR: UGO ANAKWENZE
CALCULATED-DESIGNED BY: PARVIZ YEGANEH
CHECKED BY: BARNABAS F. VORREITER
REVISED BY | DATE REVISED

Dist	COUNTY	ROUTE	KILOMETER POST TOTAL PROJECT	SHEET No.	TOTAL SHEETS
07	LA	101	24.9/25.9	56	213

Caltrans Metric

Parviz Yeganeh 2-20-08
REGISTERED CIVIL ENGINEER DATE

8-9-10
PLANS APPROVAL DATE

REGISTERED PROFESSIONAL ENGINEER PARVIZ YEGANEH No. C53797 Exp. 06/30/11 CIVIL STATE OF CALIFORNIA

THE STATE OF CALIFORNIA OR ITS OFFICERS OR AGENTS SHALL NOT BE RESPONSIBLE FOR THE ACCURACY OR COMPLETENESS OF ELECTRONIC COPIES OF THIS PLAN SHEET.

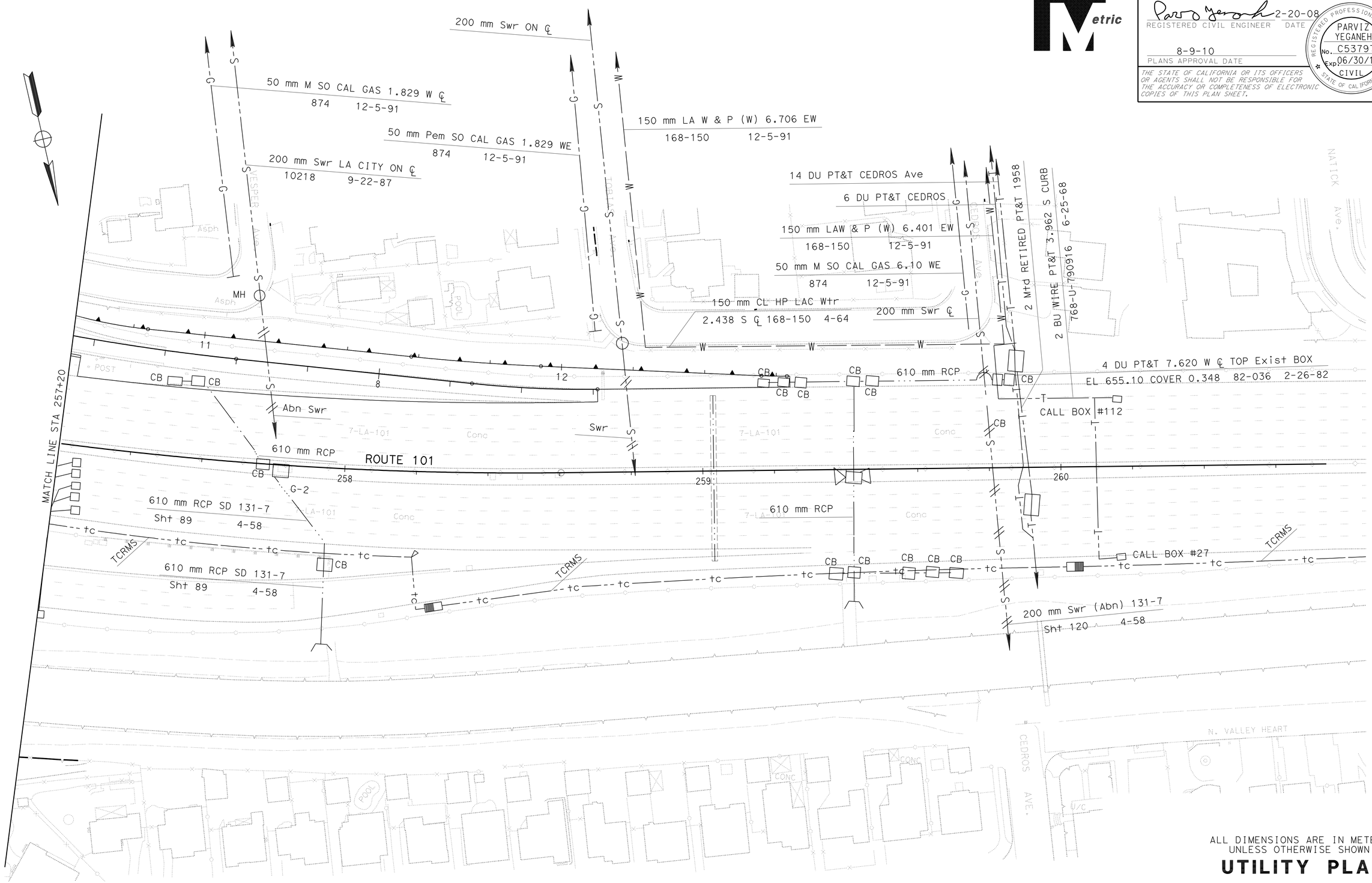

ALL DIMENSIONS ARE IN METERS UNLESS OTHERWISE SHOWN

UTILITY PLAN

SCALE 1:500

U-4

THIS PLAN ACCURATE FOR UTILITIES ONLY.

STATE OF CALIFORNIA - DEPARTMENT OF TRANSPORTATION
Caltrans
DESIGN

FUNCTIONAL SUPERVISOR: UGO ANAKWENZE
CALCULATED-DESIGNED BY: PARVIZ YEGANEH
CHECKED BY: BARNABAS F. VORREITER
REVISED BY / DATE REVISED

LAST REVISION 02-20-08
DATE PLOTTED => 21-SEP-2010
TIME PLOTTED => 11:29

Dist	COUNTY	ROUTE	KILOMETER POST TOTAL PROJECT	SHEET No.	TOTAL SHEETS
07	LA	101	24.9/25.9	57	213

REGISTERED CIVIL ENGINEER 2-20-08 DATE

8-9-10
PLANS APPROVAL DATE

REGISTERED PROFESSIONAL ENGINEER BF VORREITER No. C 63128 Exp. 06/30/12 CIVIL STATE OF CALIFORNIA

THE STATE OF CALIFORNIA OR ITS OFFICERS OR AGENTS SHALL NOT BE RESPONSIBLE FOR THE ACCURACY OR COMPLETENESS OF ELECTRONIC COPIES OF THIS PLAN SHEET.

Caltrans Metric

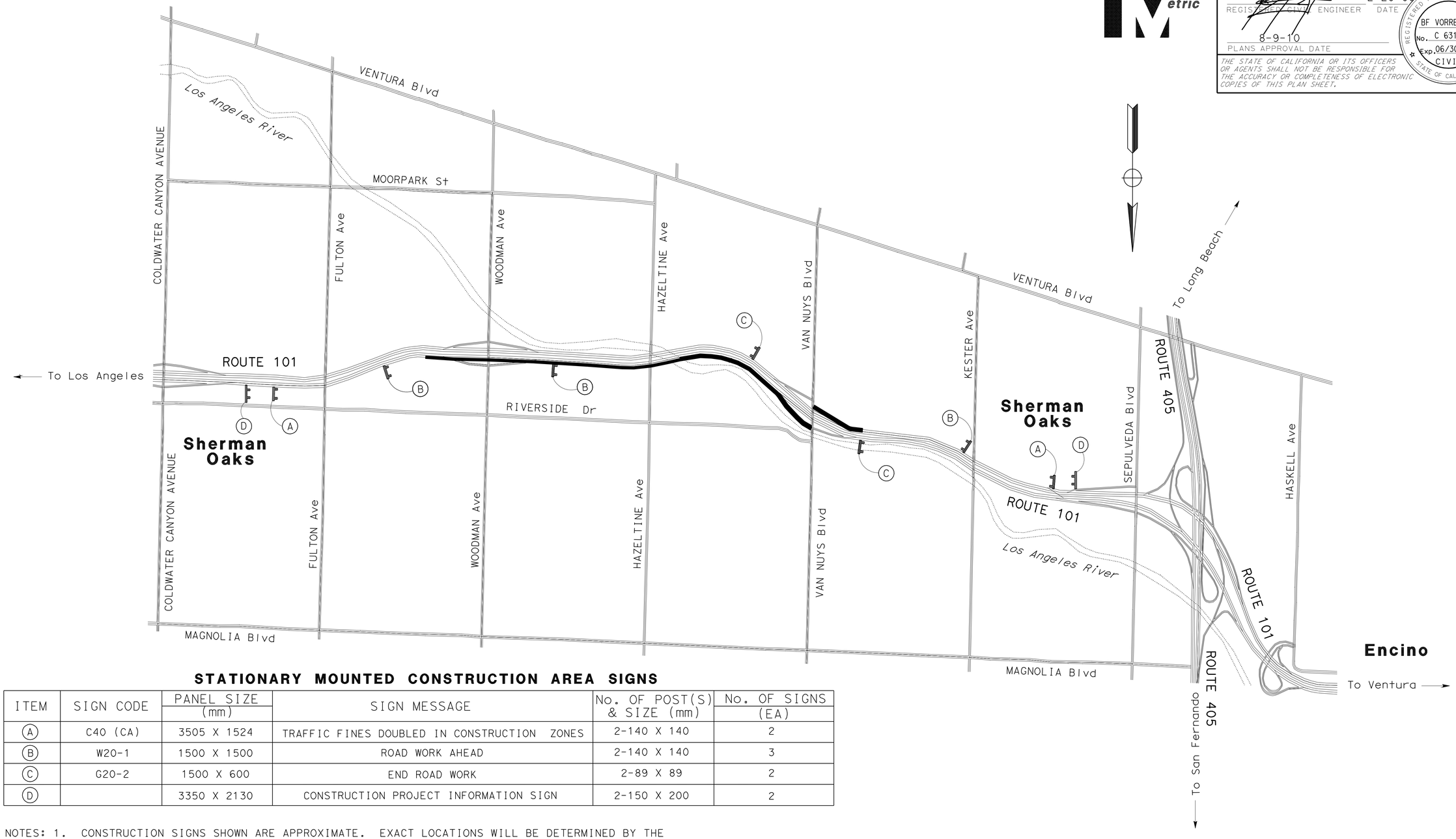

STATIONARY MOUNTED CONSTRUCTION AREA SIGNS

ITEM	SIGN CODE	PANEL SIZE (mm)	SIGN MESSAGE	No. OF POST(S) & SIZE (mm)	No. OF SIGNS (EA)
A	C40 (CA)	3505 X 1524	TRAFFIC FINES DOUBLED IN CONSTRUCTION ZONES	2-140 X 140	2
B	W20-1	1500 X 1500	ROAD WORK AHEAD	2-140 X 140	3
C	G20-2	1500 X 600	END ROAD WORK	2-89 X 89	2
D		3350 X 2130	CONSTRUCTION PROJECT INFORMATION SIGN	2-150 X 200	2

NOTES:
1. CONSTRUCTION SIGNS SHOWN ARE APPROXIMATE. EXACT LOCATIONS WILL BE DETERMINED BY THE ENGINEER.
2. CONSTRUCTION SIGNS SHALL BE BLACK LEGEND ON ORANGE BACKGROUND UNLESS OTHERWISE NOTED.
3. "TRAFFIC FINES DOUBLE IN CONSTRUCTION ZONES" SIGN SHALL BE PLACED APPROXIMATELY 150 METERS IN ADVANCE OF "ROAD WORK AHEAD" SIGN OR AS DIRECTED BY THE ENGINEER.
4. SEE TRAFFIC HANDLING PLANS FOR ADDITIONAL CONSTRUCTION AREA SIGNS.

THIS PLAN ACCURATE FOR CONSTRUCTION AREA SIGNS ONLY.

CONSTRUCTION AREA SIGNS

NO SCALE

CS-1

STATE OF CALIFORNIA - DEPARTMENT OF TRANSPORTATION
Caltrans
DESIGN

FUNCTIONAL SUPERVISOR: OC LEE
CALCULATED-DESIGNED BY: BARNABAS F. VORREITER
CHECKED BY: DWARAKESWAR PENUBOLU
REVISED BY
DATE REVISED

LAST REVISION 02-20-08
DATE PLOTTED => 21-SEP-2010
TIME PLOTTED => 11:29

Dist	COUNTY	ROUTE	KILOMETER POST TOTAL PROJECT	SHEET No.	TOTAL SHEETS
07	LA	101	24.9/25.9	58	213

REGISTERED CIVIL ENGINEER 2-20-08 DATE

8-9-10
PLANS APPROVAL DATE

REGISTERED PROFESSIONAL ENGINEER BF VORREITER No. C 63128 Exp. 06/30/12 CIVIL STATE OF CALIFORNIA

THE STATE OF CALIFORNIA OR ITS OFFICERS OR AGENTS SHALL NOT BE RESPONSIBLE FOR THE ACCURACY OR COMPLETENESS OF ELECTRONIC COPIES OF THIS PLAN SHEET.

Caltrans Metric

GENERAL NOTES:

1. REMOVE STRIPING AND PAVEMENT MARKERS IN CONFLICT WITH TEMPORARY PAVEMENT DELINATION.
2. ALL TEMPORARY TRAFFIC STRIPES ARE PAINT (2 COAT).
3. CONSTRUCTION AREA WORK INDICATED ON SC-1 & SC-2 PLAN IS TO BE COMPLETED DURING EXTENDED HOURS OF WEEKEND CLOSURE.

LEGEND

- CONSTRUCTION AREA
- DIRECTION OF TRAFFIC
- CHANNELIZERS (SURFACE MOUNTED)
- TEMPORARY RAILING (TYPE K) WITH SCUPPERS
- TEMPORARY CRASH CUSHION
- XX TEMPORARY TRAFFIC STRIPE DETAIL NUMBER
- POINT OF CHANGE IN PAVEMENT DELINEATION

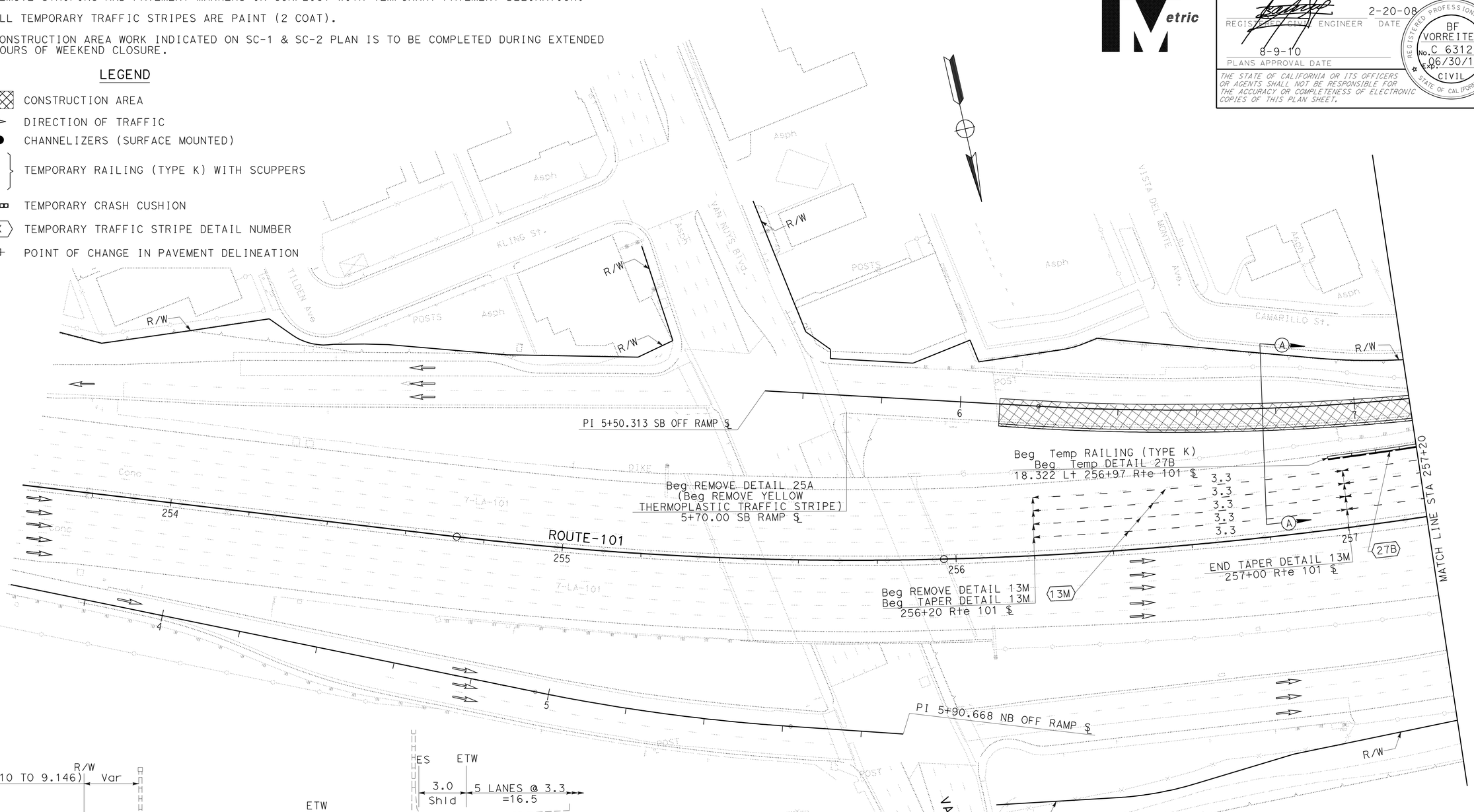

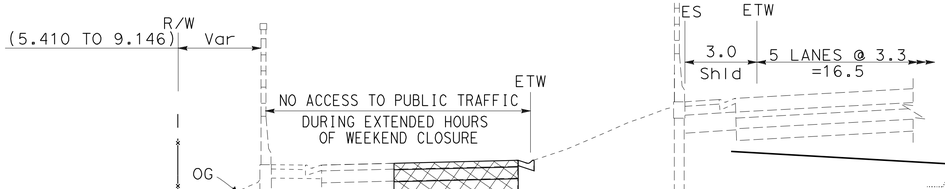

SB VAN NUYS Blvd OFF-RAMP

SECTION A-A (Typ)

STA 6+49.513 TO STA 6+95.000 SB OFF RAMP ℄

STA 6+10.000 TO STA 6+49.419 S/B OFF RAMP ℄ (NO SW ON OFF RAMP)

THIS PLAN ACCURATE FOR TRAFFIC HANDLING ONLY.

ALL DIMENSIONS ARE IN METERS
UNLESS OTHERWISE SHOWN

STAGE 1
STAGE CONSTRUCTION AND TRAFFIC HANDLING PLAN
(EXTENDED WEEKEND CLOSURE)

SCALE 1:500

SC-1

STATE OF CALIFORNIA - DEPARTMENT OF TRANSPORTATION
Caltrans
DESIGN

FUNCTIONAL SUPERVISOR: OC LEE

CALCULATED-DESIGNED BY: BARNABAS F. VORREITER
CHECKED BY: DWARAKESWAR PENUBOLU

REVISED BY | DATE REVISED

LAST REVISION 03-03-08 | DATE PLOTTED => 21-SEP-2010 | TIME PLOTTED => 11:30

Dist	COUNTY	ROUTE	KILOMETER POST TOTAL PROJECT	SHEET No.	TOTAL SHEETS
07	LA	101	24.9/25.9	59	213

REGISTERED CIVIL ENGINEER 2-20-08 DATE

8-9-10
PLANS APPROVAL DATE

REGISTERED PROFESSIONAL ENGINEER BF VORREITER No. C 63128 Exp. 06/30/12 CIVIL STATE OF CALIFORNIA

THE STATE OF CALIFORNIA OR ITS OFFICERS OR AGENTS SHALL NOT BE RESPONSIBLE FOR THE ACCURACY OR COMPLETENESS OF ELECTRONIC COPIES OF THIS PLAN SHEET.

Caltrans Metric

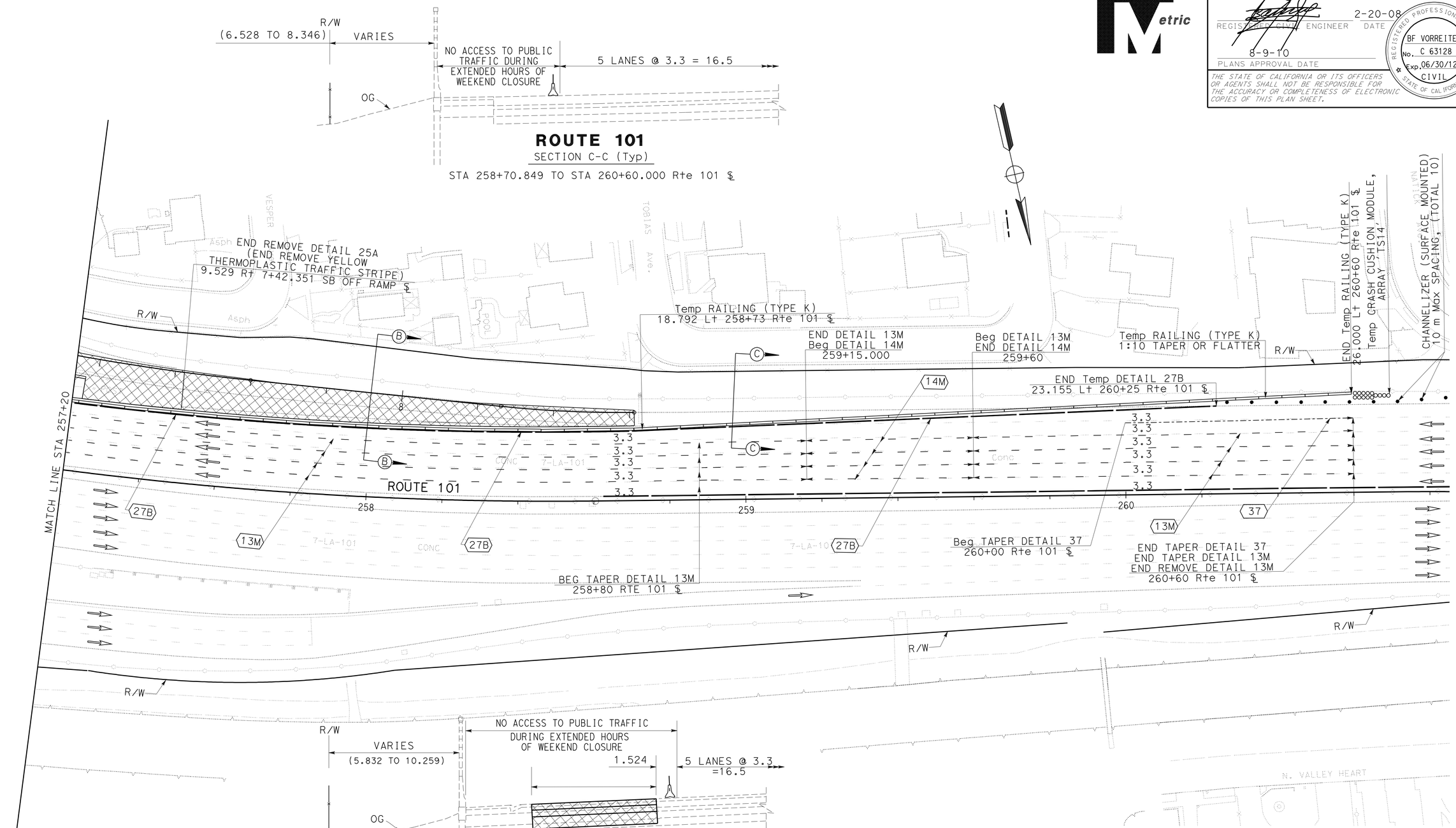

SB VAN NUYS Blvd OFF-RAMP

SECTION B-B (Typ)

STA 6+95.000 TO STA 8+61.210 SB OFF RAMP ℄

THIS PLAN ACCURATE FOR TRAFFIC HANDLING ONLY.

ALL DIMENSIONS ARE IN METERS UNLESS OTHERWISE SHOWN

STAGE 1
STAGE CONSTRUCTION AND TRAFFIC HANDLING PLAN
(EXTENDED WEEKEND CLOSURE)

SCALE 1:500

SC-2

STATE OF CALIFORNIA - DEPARTMENT OF TRANSPORTATION
Caltrans DESIGN

FUNCTIONAL SUPERVISOR: OC LEE

CALCULATED-DESIGNED BY: BARNABAS F. VORREITER
CHECKED BY: DWARAKESWAR PENUBOLU

REVISED BY | DATE REVISED

LAST REVISION 03-03-08 | DATE PLOTTED => 21-SEP-2010 | TIME PLOTTED => 11:30

Dist	COUNTY	ROUTE	KILOMETER POST TOTAL PROJECT	SHEET No.	TOTAL SHEETS
07	LA	101	24.9/25.9	60	213

REGISTERED CIVIL ENGINEER 2-20-08 DATE

8-9-10
PLANS APPROVAL DATE

REGISTERED PROFESSIONAL ENGINEER BF VORREITER No. C 63128 Exp. 06/30/12 CIVIL STATE OF CALIFORNIA

THE STATE OF CALIFORNIA OR ITS OFFICERS OR AGENTS SHALL NOT BE RESPONSIBLE FOR THE ACCURACY OR COMPLETENESS OF ELECTRONIC COPIES OF THIS PLAN SHEET.

Caltrans Metric

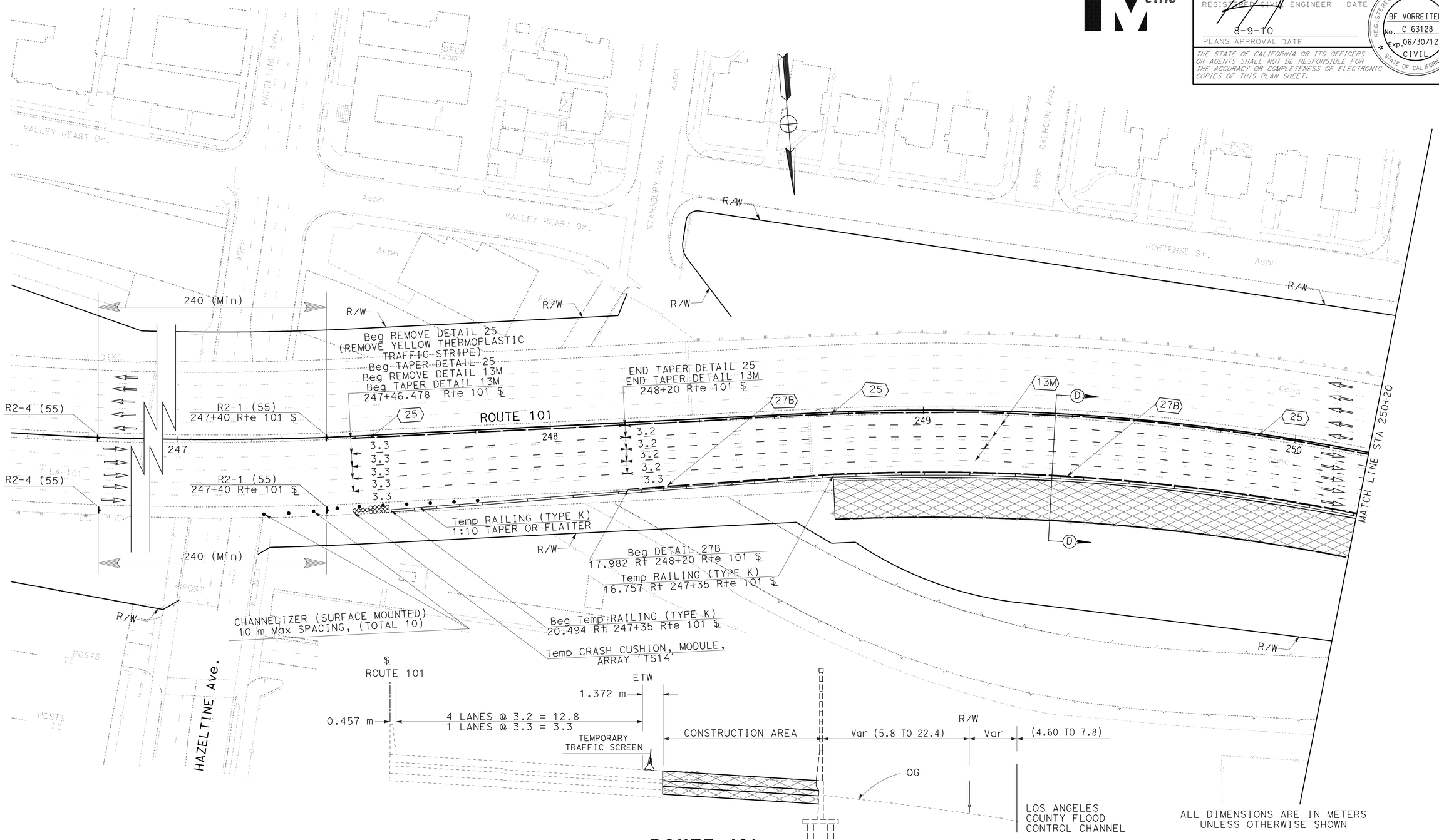

ALL DIMENSIONS ARE IN METERS UNLESS OTHERWISE SHOWN

ROUTE 101

SECTION D-D (Typ)

STA 247+46.478 TO STA 252+45.027 Rte 101 ℄

THIS PLAN ACCURATE FOR TRAFFIC HANDLING ONLY.

STAGE 2
STAGE CONSTRUCTION AND TRAFFIC HANDLING PLAN

SCALE 1:500

SC-3

CALCULATED-DESIGNED BY	BARNABAS F. VORREITER
CHECKED BY	DWARAKESWAR PENUBOLU
REVISED BY	
DATE REVISED	
FUNCTIONAL SUPERVISOR	OC LEE

STATE OF CALIFORNIA - DEPARTMENT OF TRANSPORTATION
Caltrans
DESIGN

LAST REVISION 02-27-08 | DATE PLOTTED => 21-SEP-2010 | TIME PLOTTED => 11:30

Dist	COUNTY	ROUTE	KILOMETER POST TOTAL PROJECT	SHEET No.	TOTAL SHEETS
07	LA	101	24.9/25.9	61	213

REGISTERED CIVIL ENGINEER 02-26-08 DATE

8-9-10
PLANS APPROVAL DATE

REGISTERED PROFESSIONAL ENGINEER BF VORREITER No. C 63128 Exp. 06/30/12 CIVIL STATE OF CALIFORNIA

THE STATE OF CALIFORNIA OR ITS OFFICERS OR AGENTS SHALL NOT BE RESPONSIBLE FOR THE ACCURACY OR COMPLETENESS OF ELECTRONIC COPIES OF THIS PLAN SHEET.

Caltrans Metric

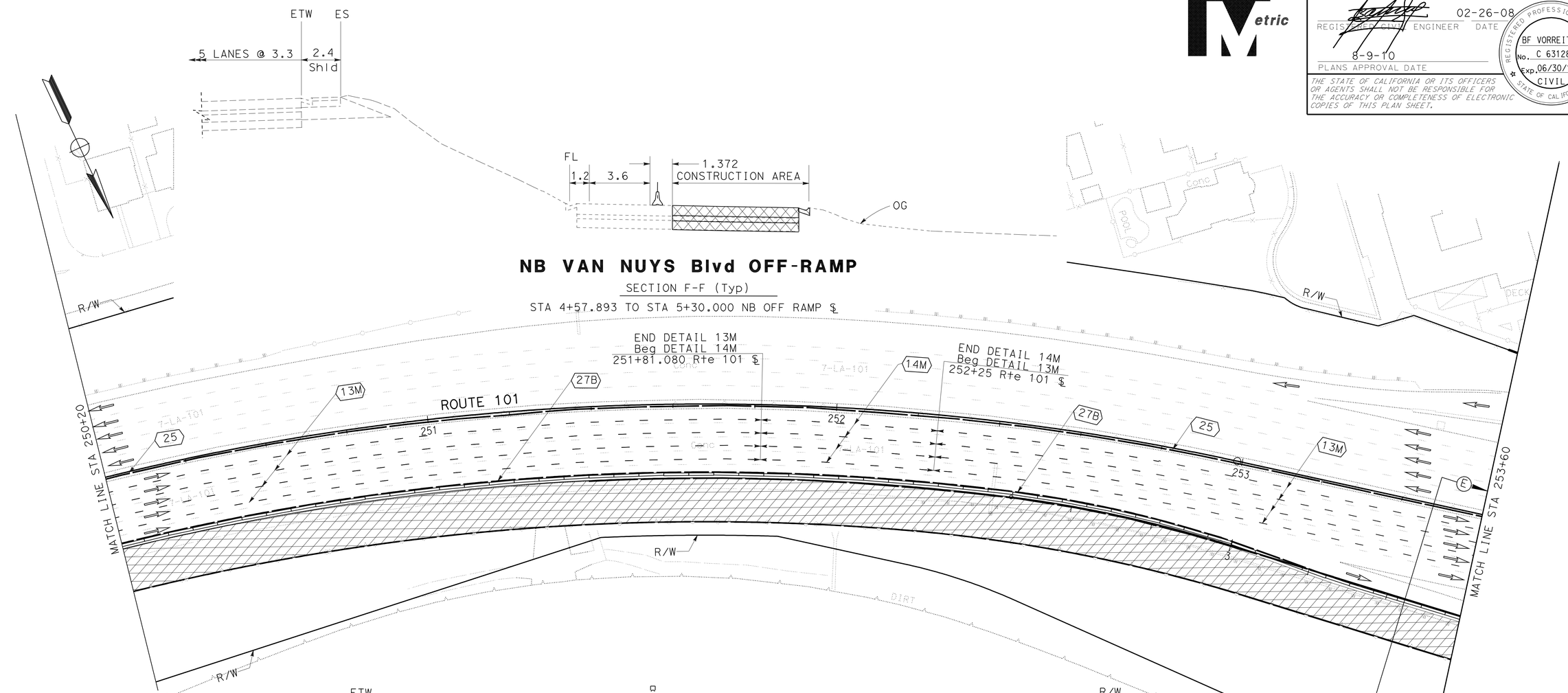

NB VAN NUYS Blvd OFF-RAMP

SECTION F-F (Typ)

STA 4+57.893 TO STA 5+30.000 NB OFF RAMP ℄

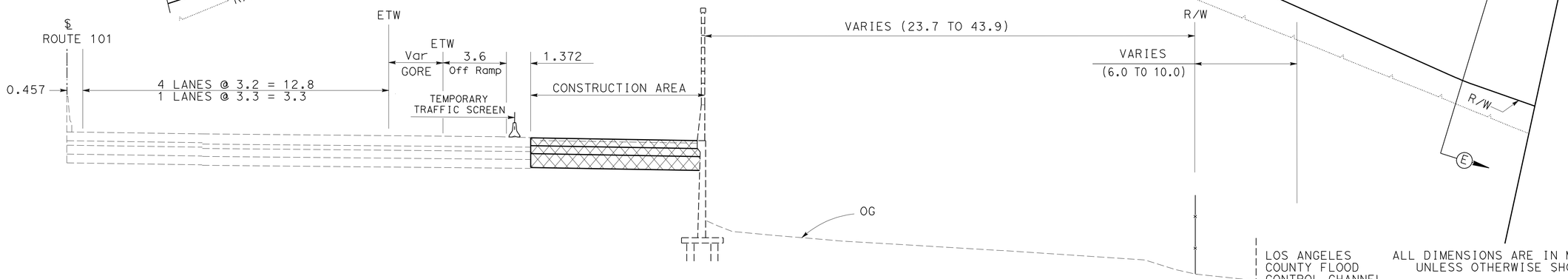

NB VAN NUYS Blvd OFF-RAMP

SECTION E-E (Typ)

STA 2+45.027 TO STA 4+70.000 NB OFF RAMP ℄

THIS PLAN ACCURATE FOR TRAFFIC HANDLING ONLY.

LOS ANGELES COUNTY FLOOD CONTROL CHANNEL

ALL DIMENSIONS ARE IN METERS UNLESS OTHERWISE SHOWN

STAGE 2
STAGE CONSTRUCTION AND TRAFFIC HANDLING PLAN

SCALE 1:500

SC-4

STATE OF CALIFORNIA - DEPARTMENT OF TRANSPORTATION

Caltrans **DESIGN**

FUNCTIONAL SUPERVISOR: OC LEE

CALCULATED-DESIGNED BY: BARNABAS F. VORREITER

CHECKED BY: DWARAKESWAR PENUBOLU

REVISED BY / DATE REVISED

LAST REVISION DATE PLOTTED => 21-SEP-2010
02-26-08 TIME PLOTTED => 11:30

Dist	COUNTY	ROUTE	KILOMETER POST TOTAL PROJECT	SHEET No.	TOTAL SHEETS
07	LA	101	24.9/25.9	62	213

REGISTERED CIVIL ENGINEER 2-20-08 DATE

8-9-10
PLANS APPROVAL DATE

REGISTERED PROFESSIONAL ENGINEER BF VORREITER No. C 63128 Exp. 06/30/12 CIVIL STATE OF CALIFORNIA

THE STATE OF CALIFORNIA OR ITS OFFICERS OR AGENTS SHALL NOT BE RESPONSIBLE FOR THE ACCURACY OR COMPLETENESS OF ELECTRONIC COPIES OF THIS PLAN SHEET.

Caltrans Metric

THIS PLAN ACCURATE FOR TRAFFIC HANDLING ONLY.

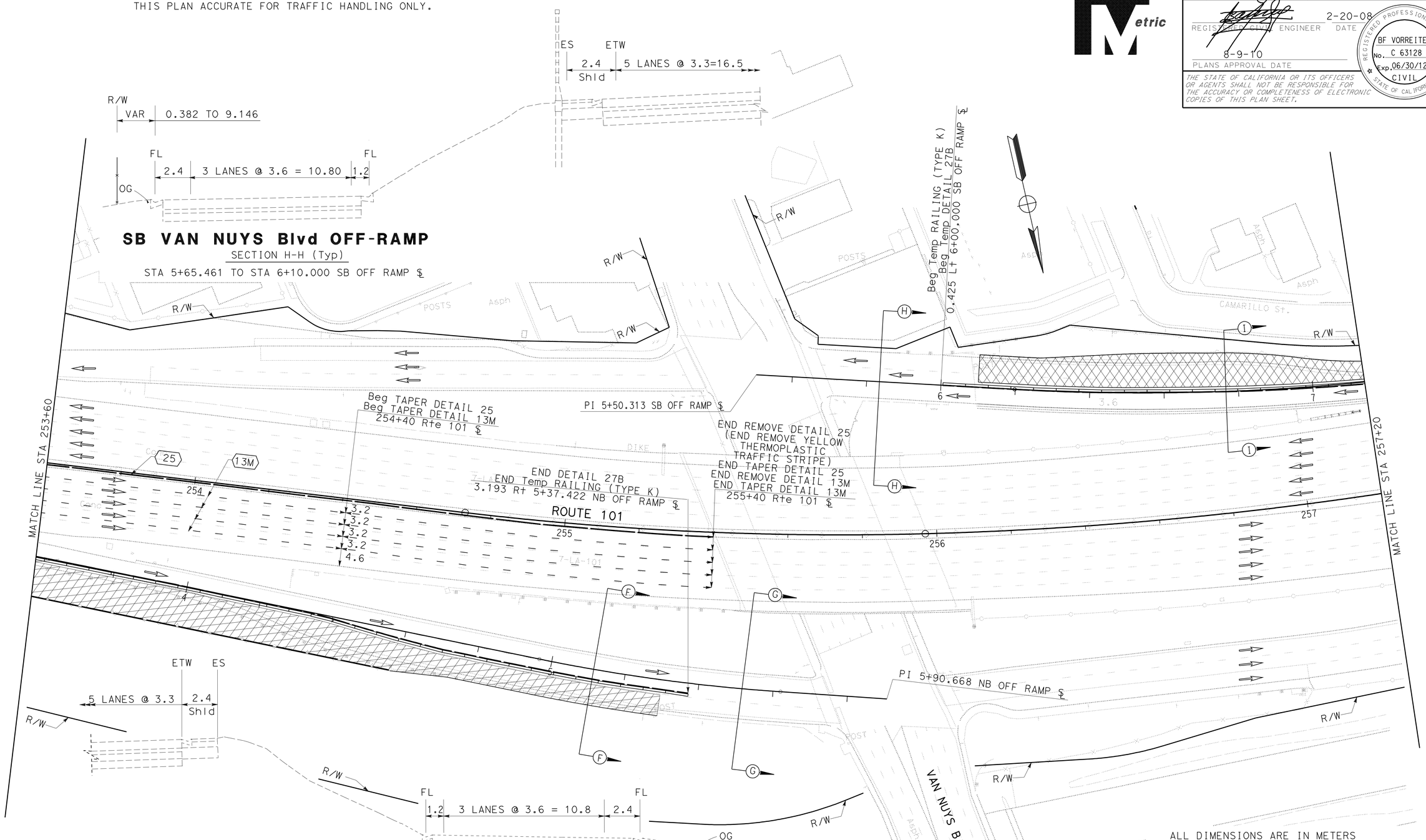

ALL DIMENSIONS ARE IN METERS
UNLESS OTHERWISE SHOWN

STAGE 2
STAGE CONSTRUCTION AND TRAFFIC HANDLING PLAN

SCALE 1:500

SC-5

STATE OF CALIFORNIA - DEPARTMENT OF TRANSPORTATION
Caltrans
DESIGN

FUNCTIONAL SUPERVISOR: OC LEE
CALCULATED-DESIGNED BY: BARNABAS F. VORREITER
CHECKED BY: DWARAKESWAR PENUBOLU
REVISED BY / DATE REVISED

LAST REVISION 02-27-08 | DATE PLOTTED => 21-SEP-2010 | TIME PLOTTED => 11:30

BORDER LAST REVISED 3/1/2007 | RELATIVE BORDER SCALE IS IN MILLIMETERS 0 20 40 60 80 | USERNAME => trmikesl | DGN FILE => 719963md005.dgn | CU 07265 | EA 199631

Dist	COUNTY	ROUTE	KILOMETER POST TOTAL PROJECT	SHEET No.	TOTAL SHEETS
07	LA	101	24.9/25.9	63	213

REGISTERED CIVIL ENGINEER 2-20-08 DATE

8-9-10
PLANS APPROVAL DATE

REGISTERED PROFESSIONAL ENGINEER BF VORREITER No. C 63128 Exp. 06/30/12 CIVIL STATE OF CALIFORNIA

THE STATE OF CALIFORNIA OR ITS OFFICERS OR AGENTS SHALL NOT BE RESPONSIBLE FOR THE ACCURACY OR COMPLETENESS OF ELECTRONIC COPIES OF THIS PLAN SHEET.

Caltrans Metric

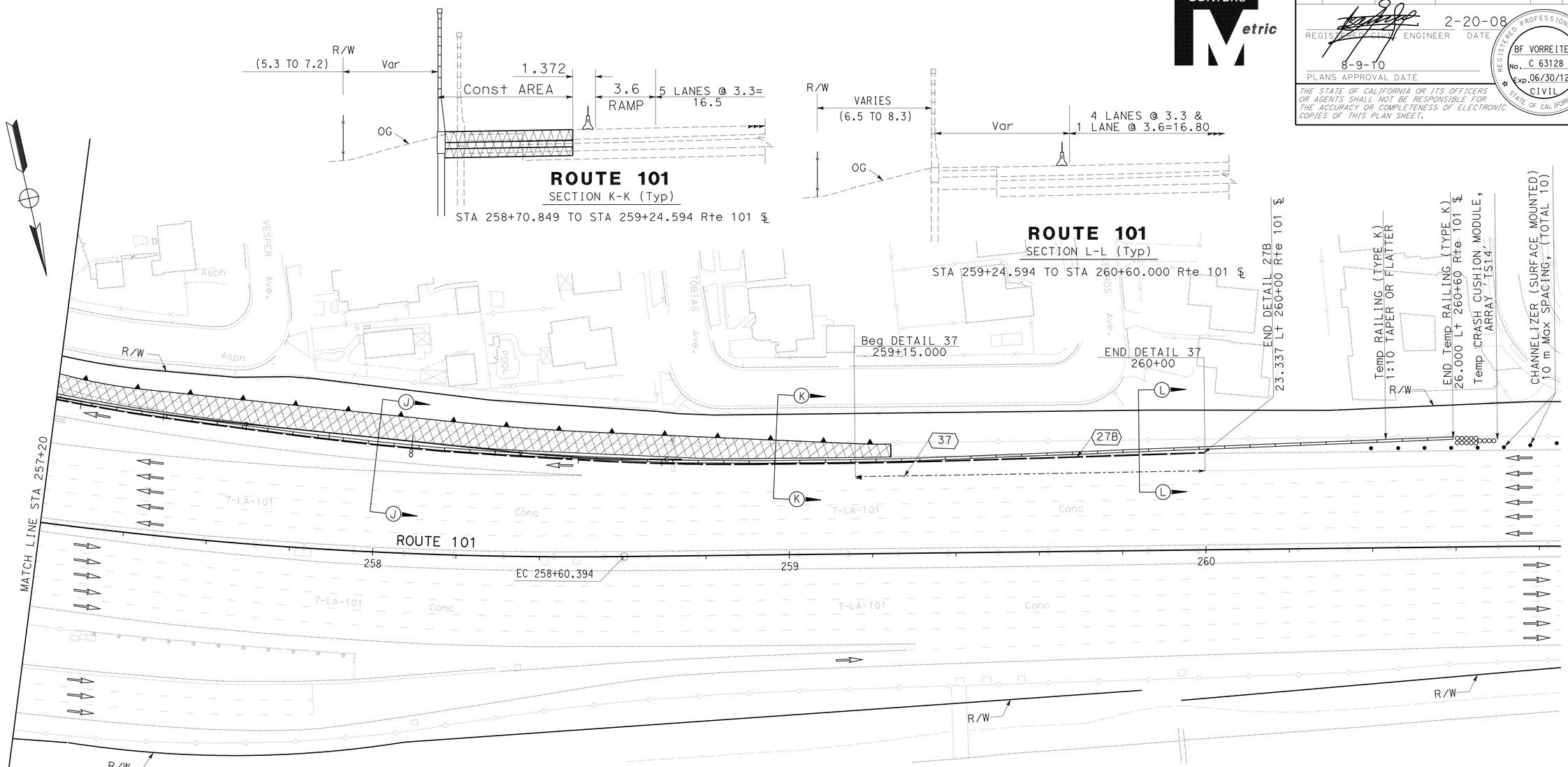

ALL DIMENSIONS ARE IN METERS
UNLESS OTHERWISE SHOWN

THIS PLAN ACCURATE FOR TRAFFIC HANDLING ONLY.

STAGE 2
STAGE CONSTRUCTION AND TRAFFIC HANDLING PLAN

SCALE 1:500

SC-6

REVISED BY	DATE REVISED
BARNABAS F. VORREITER	
DWARAKESWAR PENUBOLU	
CALCULATED-DESIGNED BY	
CHECKED BY	
FUNCTIONAL SUPERVISOR	
OC LEE	

STATE OF CALIFORNIA - DEPARTMENT OF TRANSPORTATION
Caltrans
DESIGN

LAST REVISION DATE PLOTTED => 21-SEP-2010
02-27-08 TIME PLOTTED => 11:30

Dist	COUNTY	ROUTE	KILOMETER POST TOTAL PROJECT	SHEET No.	TOTAL SHEETS
07	LA	101	24.9/25.9	64	213

REGISTERED CIVIL ENGINEER 2-20-08 DATE

8-9-10
PLANS APPROVAL DATE

REGISTERED PROFESSIONAL ENGINEER
BF VORREITER
No. C 63128
Exp. 06/30/12
CIVIL
STATE OF CALIFORNIA

THE STATE OF CALIFORNIA OR ITS OFFICERS OR AGENTS SHALL NOT BE RESPONSIBLE FOR THE ACCURACY OR COMPLETENESS OF ELECTRONIC COPIES OF THIS PLAN SHEET.

Caltrans Metric

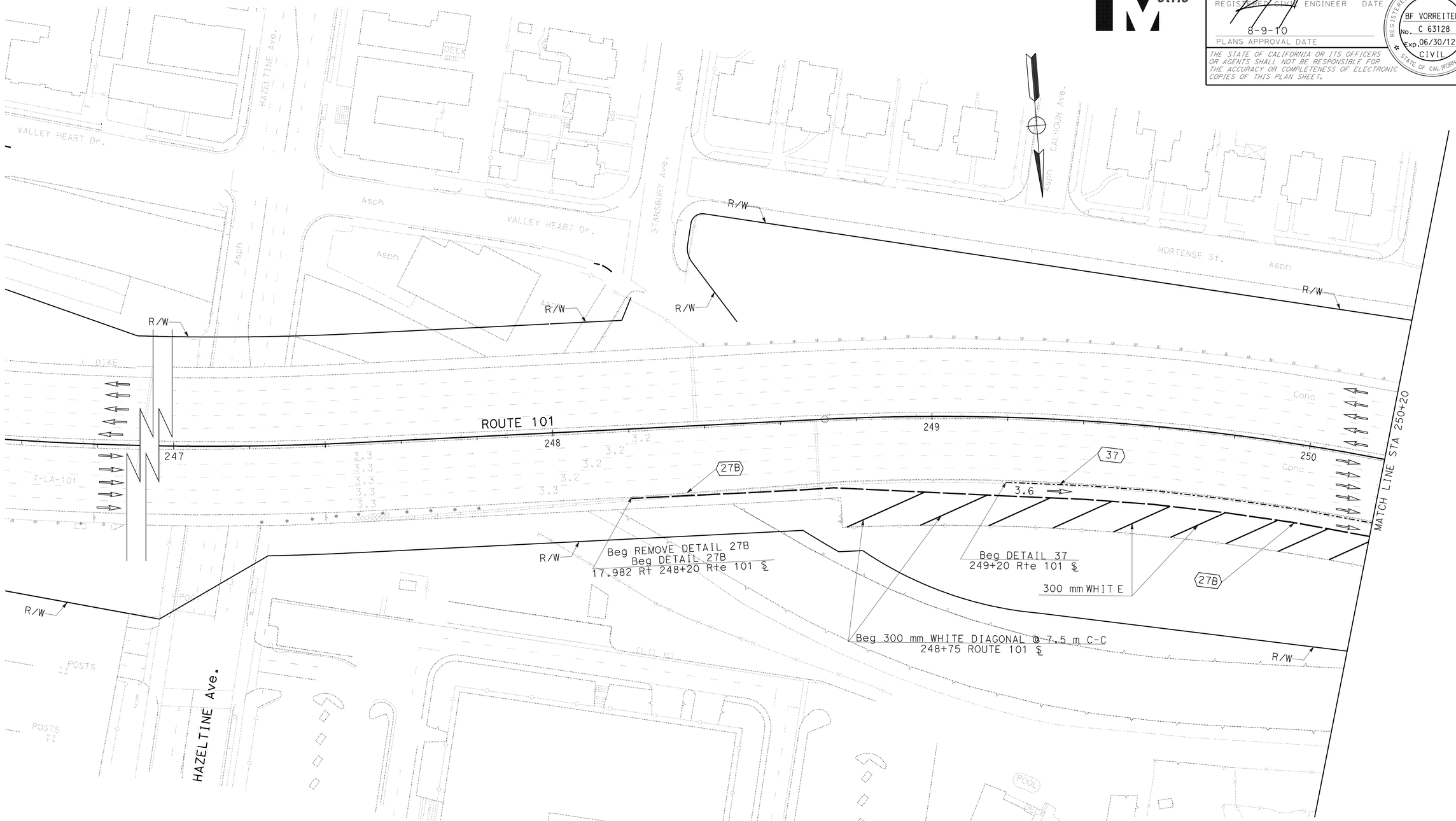

ALL DIMENSIONS ARE IN METERS
UNLESS OTHERWISE SHOWN

THIS PLAN ACCURATE FOR TRAFFIC HANDLING ONLY.

STAGE 3
STAGE CONSTRUCTION AND TRAFFIC HANDLING PLAN

SCALE 1:500

SC-7

STATE OF CALIFORNIA - DEPARTMENT OF TRANSPORTATION
Caltrans
DESIGN

FUNCTIONAL SUPERVISOR: OC LEE

CALCULATED-DESIGNED BY: BARNABAS F. VORREITER
CHECKED BY: DWARAKESWAR PENUBOLU

REVISED BY | DATE REVISED

LAST REVISION 02-26-08 | DATE PLOTTED => 21-SEP-2010 | TIME PLOTTED => 11:30

Dist	COUNTY	ROUTE	KILOMETER POST TOTAL PROJECT	SHEET No.	TOTAL SHEETS
07	LA	101	24.9/25.9	65	213

REGISTERED CIVIL ENGINEER — DATE 2-20-08

8-9-10
PLANS APPROVAL DATE

REGISTERED PROFESSIONAL ENGINEER BF VORREITER No. C 63128 Exp. 06/30/12 CIVIL STATE OF CALIFORNIA

THE STATE OF CALIFORNIA OR ITS OFFICERS OR AGENTS SHALL NOT BE RESPONSIBLE FOR THE ACCURACY OR COMPLETENESS OF ELECTRONIC COPIES OF THIS PLAN SHEET.

Caltrans Metric

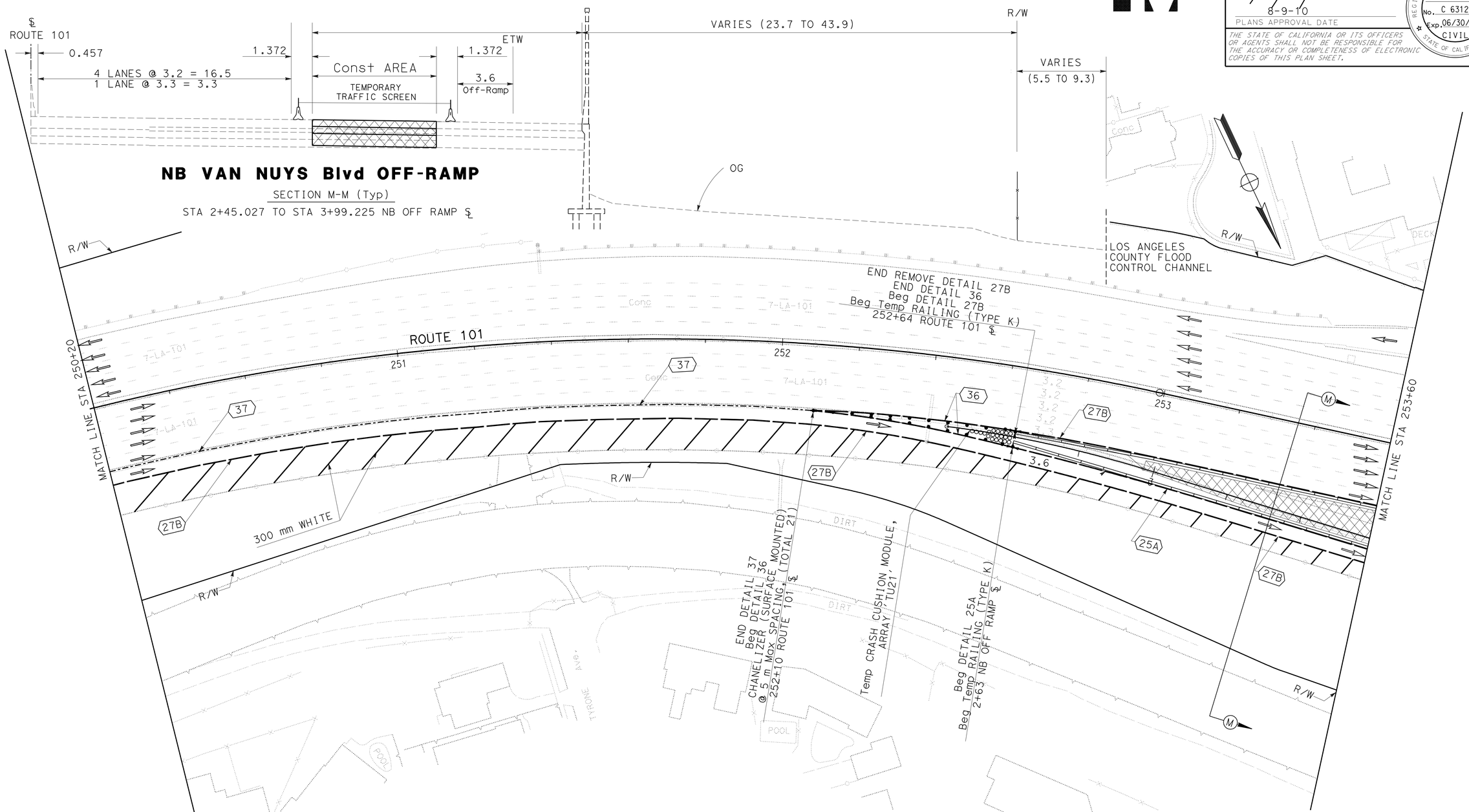

NB VAN NUYS Blvd OFF-RAMP

SECTION M-M (Typ)

STA 2+45.027 TO STA 3+99.225 NB OFF RAMP ℄

ALL DIMENSIONS ARE IN METERS UNLESS OTHERWISE SHOWN

THIS PLAN ACCURATE FOR TRAFFIC HANDLING ONLY.

STAGE 3
STAGE CONSTRUCTION AND TRAFFIC HANDLING PLAN

SCALE 1:500

SC-8

STATE OF CALIFORNIA - DEPARTMENT OF TRANSPORTATION
Caltrans
DESIGN

FUNCTIONAL SUPERVISOR: OC LEE
CALCULATED-DESIGNED BY: BARNABAS F. VORREITER
CHECKED BY: DWARAKESWAR PENUBOLU
REVISED BY / DATE REVISED

LAST REVISION 04-09-08 | DATE PLOTTED => 21-SEP-2010 | TIME PLOTTED => 11:31

BORDER LAST REVISED 3/1/2007 | RELATIVE BORDER SCALE IS IN MILLIMETERS 0 20 40 60 80 | USERNAME => trmikesl | DGN FILE => 719963md008.dgn | CU 07265 | EA 199631

Dist	COUNTY	ROUTE	KILOMETER POST TOTAL PROJECT	SHEET No.	TOTAL SHEETS
07	LA	101	24.9/25.9	66	213

REGISTERED CIVIL ENGINEER — DATE 2-20-08

8-9-10
PLANS APPROVAL DATE

REGISTERED PROFESSIONAL ENGINEER
BF VORREITER
No. C 63128
Exp. 06/30/12
CIVIL
STATE OF CALIFORNIA

THE STATE OF CALIFORNIA OR ITS OFFICERS OR AGENTS SHALL NOT BE RESPONSIBLE FOR THE ACCURACY OR COMPLETENESS OF ELECTRONIC COPIES OF THIS PLAN SHEET.

Caltrans Metric

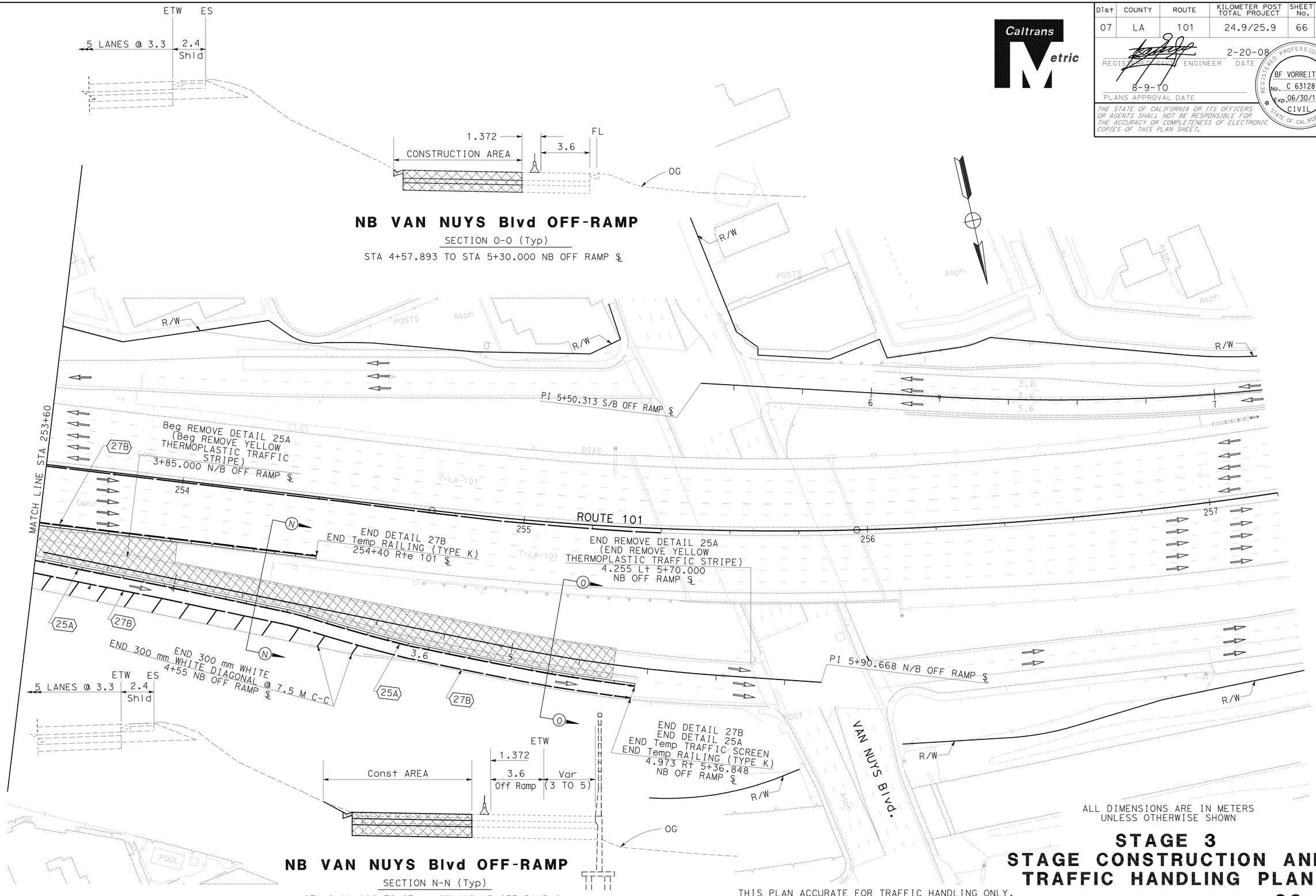

NB VAN NUYS Blvd OFF-RAMP

SECTION O-O (Typ)

STA 4+57.893 TO STA 5+30.000 NB OFF RAMP ℄

NB VAN NUYS Blvd OFF-RAMP

SECTION N-N (Typ)

STA 3+99.225 TO STA 4+57.893 NB OFF RAMP ℄

ALL DIMENSIONS ARE IN METERS
UNLESS OTHERWISE SHOWN

THIS PLAN ACCURATE FOR TRAFFIC HANDLING ONLY.

STAGE 3
STAGE CONSTRUCTION AND TRAFFIC HANDLING PLAN

SCALE 1:500

SC-9

STATE OF CALIFORNIA - DEPARTMENT OF TRANSPORTATION
Caltrans
DESIGN

FUNCTIONAL SUPERVISOR: OC LEE

CALCULATED-DESIGNED BY: BARNABAS F. VORREITER
CHECKED BY: DWARAKESWAR PENUBOLU

REVISED BY | DATE REVISED

LAST REVISION DATE PLOTTED => 21-SEP-2010
02-27-08 TIME PLOTTED => 11:31

BORDER LAST REVISED 3/1/2007

RELATIVE BORDER SCALE IS IN MILLIMETERS 0 20 40 60 80

USERNAME => trmikesl
DGN FILE => 719963md009.dgn

CU 07265

EA 199631

Dist	COUNTY	ROUTE	KILOMETER POST TOTAL PROJECT	SHEET No.	TOTAL SHEETS
07	LA	101	24.9/25.9	67	213

REGISTERED CIVIL ENGINEER 2-20-08 DATE

8-9-10
PLANS APPROVAL DATE

REGISTERED PROFESSIONAL ENGINEER BF VORREITER No. C 63128 Exp. 06/30/12 CIVIL STATE OF CALIFORNIA

SCE STATE OF CALIFORNIA OR ITS OFFICERS OR AGENTS SHALL NOT BE RESPONSIBLE FOR SCE ACCURACY OR COMPLETENESS OF ELECTRONIC COPIES OF SCIS PLAN SHEET.

Caltrans Metric

TRAFFIC HANDLING QUANTITIES

SHEET NUMBER	STAGE/LOCATION	CHANNELIZER (SURFACE MAOUNTED)	TEMPORARY RAILING (TYPE K)	TEMPORARY CRASH CUSHION MODULE	REMOVE YELLOW THERMOPLASTIC TRAFFIC STRIPE	REMOVE THERMOPLASTIC TRAFFIC STRIPE	REMOVE PAVEMENT MARKER	TEMPORARY TRAFFIC STRIPE (PAINT)	PAVEMENT DELINATION												REMOVE PAINTED TRAFFIC STRIPE
									PAINT TRAFFIC STRIPE (2 COAT)							PAINT PAVEMENT MARKING (2-COAT) (300-mm WHITE DIAGONAL)	PAVEMENT MARKER RETROREFLECTIVE				
									100 mm					200 mm							
									DETAIL 13 (MOD) BROKEN 10.98 m - 3.66 m (WHITE)	DETAIL 14 (MOD) BROKEN 10.98 m - 3.66 m (WHITE)	DETAIL 25 SOLID (YELLOW)	DETAIL 25A SOLID (YELLOW)	DETAIL 27B SOLID (WHITE)	DETAIL 37 BROKEN 3.66 m - 0.91 m (WHITE)	DETAIL 36 SOLID (WHITE)		TYPE C	TYPE G	TYPE H	NON REFLECTIVE TYPE A	
	TRAFFIC HANDLING PLAN	EA	m	EA	m	m	EA	m	m	m	m	m	m	m	m	m2	EA	EA	EA	EA	m
SC-1	255+60 - 257+20 ROUTE 101 ℄		25			400	140	25	400									30		110	
SC-1	5+50 - 7+15 SB OFF RAMP ℄				145		25														
SC-2	257+20 - 260+80 ROUTE 101 ℄	10	340	14	30	1360	475	305	1180	180				60			15	85		375	
SC-3	247+00 - 250+20 ROUTE 101 ℄	10	285	14	275	1100	420		1100		275		200					80	20	375	
SC-4	250+20 - 253+60 ROUTE 101 ℄		340		340	1360	520		1190	175	340		340				15	85	25	300	
SC-5	253+60 - 255+60 ROUTE 101 ℄				180	720	280		720		180							55	15	200	
SC-5	3+60 - 5+90 NB OFF RAMP ℄		180										180								
SC-5	5+50 - 7+15 SB OFF RAMP ℄		115										115								
SC-6	257+20 - 260+80 ROUTE 101 ℄	10	340	14									280	85			15				
SC-7	247+00 - 250+20 ROUTE 101 ℄												200	100		150	15				200
SC-8	250+20 - 253+60 ROUTE 101 ℄	21	100	21									345	190	110	290	25	20	30		245
SC-8	2+45 - 3+60 NB OFF RAMP ℄		100									100	100						20		
SC-9	253+60 - 255+60 ROUTE 101 ℄		80										80								
SC-9	3+60 - 5+90 NB OFF RAMP ℄		180		185		30					180	180			60			30		
SUBTOTAL		51	2085	63	1155	4940	1890	330	4945			3095		435	110	500	85	355	140	1360	445
TOTAL		51	2085	63	1155	4940	1890	330	8585							500	580			1360	445

STAGE CONSTRUCTION AND TRAFFIC HANDLING QUANTITIES

SCQ-1

STATE OF CALIFORNIA - DEPARTMENT OF TRANSPORTATION
Caltrans DESIGN

FUNCTIONAL SUPERVISOR OC LEE
CALCULATED-DESIGNED BY BARNABAS F. VORREITER
CHECKED BY DWARAKESWAR PENUBOLU
REVISED BY
DATE REVISED

LAST REVISION 04-09-08
DATE PLOTTED => 21-SEP-2010
TIME PLOTTED => 11:31

Dist	COUNTY	ROUTE	KILOMETER POST TOTAL PROJECT	SHEET No.	TOTAL SHEETS
07	LA	101	24.9/25.9	68	213

REGISTERED CIVIL ENGINEER 6-19-10 DATE

8-9-10
PLANS APPROVAL DATE

REGISTERED PROFESSIONAL ENGINEER Albert K. Yu No. 43220 Exp. 3-31-12 CIVIL STATE OF CALIFORNIA

THE STATE OF CALIFORNIA OR ITS OFFICERS OR AGENTS SHALL NOT BE RESPONSIBLE FOR THE ACCURACY OR COMPLETENESS OF ELECTRONIC COPIES OF THIS PLAN SHEET.

Caltrans Metric

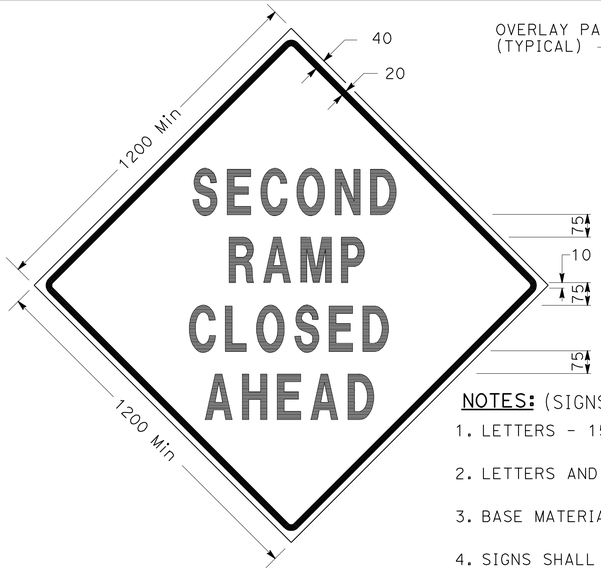

SIGN SP-3

SIGN SP-5

NOTES: (SIGNS SP-3 & SP-5)

1. LETTERS - 150 SERIES D.
2. LETTERS AND BORDERS - BLACK ON RETROREFLECTORIZED ORANGE BACKGROUND.
3. BASE MATERIAL SHALL BE ALUMINUM (MINIMUM 1.5).
4. SIGNS SHALL BE MOUNTED WITH BOTTOMS OF SIGNS A MINIMUM OF 1.8 METERS ABOVE GROUND.

SPECIAL SIGN FOR EXIT RAMP CLOSURES

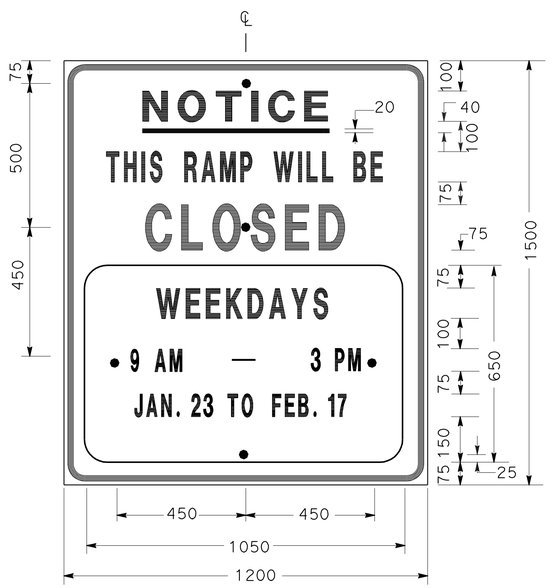

SIGN SP-1

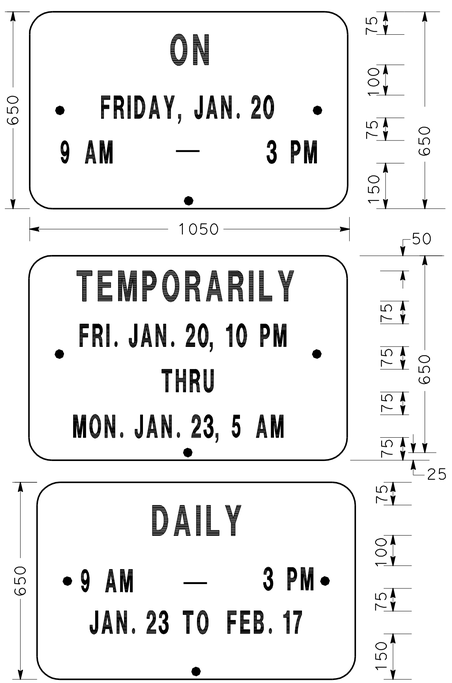

ALTERNATE OVERLAY PANELS (TYPICAL)

SIZE	BORDER WIDTH	MARGIN WIDTH	LETTER SIZE LINE 1	LINE 2*	LINE 3	LINE 4	LINE 5,6 & 7*	CORNER RADIUS
1200x1500	30	20	100E	100D	150E	100D		75
1050x650	OVERLAY						75D	40
* CONDENSED SPACING IF NECESSARY								

SPECIAL ADVANCE NOTICE PUBLICITY SIGN

SIGN SP-4

NOTES: (SIGN SP-4)

1. LETTERS - 150 SERIES C.
2. LETTERS AND BORDERS - BLACK ON RETROREFLECTORIZED WHITE BACKGROUND.
3. BASE MATERIAL SHALL BE ALUMINUM (MINIMUM 1.5).
4. SIGNS SHALL BE PLACED AT RAMP ENTRANCES IN ADDITION TO SIGNS POSTED IN ACCORDANCE WITH REVISED STANDARD PLAN T14.

SPECIAL SIGN FOR ENTRANCE RAMP CLOSURES

NOTES: (SIGN SP-1)

1. SIGNS SHALL HAVE ORANGE RETROREFLECTORIZED BACKGROUND WITH BLACK BORDER AND LETTERS.
2. BOLT HOLES SHALL BE 10 DIAMETER.
3. BASE MATERIAL SHALL BE ALUMINUM (MINIMUM 1.5).
4. SIGNS SHALL BE MOUNTED WITH BOTTOMS OF SIGNS A MINIMUM OF 1.8 METERS ABOVE GROUND.

ALL DIMENSIONS ARE IN MILLIMETERS UNLESS OTHERWISE SHOWN

TRAFFIC HANDLING DETAILS TRAFFIC CONTROL SYSTEM FOR RAMP CLOSURES, DETOUR SIGNS AND MISCELLANEOUS DETAILS

SHEET 1 OF 2

NO SCALE

THD-1

JC	9/08	ALBERT K YU	JOCELYN C CHIANG
REVISED BY	DATE REVISED	CALCULATED-DESIGNED BY	CHECKED BY
FUNCTIONAL SUPERVISOR		JOHN YANG	

STATE OF CALIFORNIA - DEPARTMENT OF TRANSPORTATION

Caltrans DTM

LAST REVISION 00-00-00 DATE PLOTTED => 21-SEP-2010 TIME PLOTTED => 11:31

Dist	COUNTY	ROUTE	KILOMETER POST TOTAL PROJECT	SHEET No.	TOTAL SHEETS
07	LA	101	24.9/25.9	69	213

REGISTERED CIVIL ENGINEER 6-19-10 DATE

8-9-10
PLANS APPROVAL DATE

REGISTERED PROFESSIONAL ENGINEER Albert K. Yu No. 43220 Exp. 3-31-12 CIVIL STATE OF CALIFORNIA

THE STATE OF CALIFORNIA OR ITS OFFICERS OR AGENTS SHALL NOT BE RESPONSIBLE FOR THE ACCURACY OR COMPLETENESS OF ELECTRONIC COPIES OF THIS PLAN SHEET.

Caltrans Metric

NOTES: (SIGN SP-2)

1. LETTERS -150 SERIES E.
2. LETTERS, BORDER AND ARROW - BLACK ON RETROREFLECTORIZED ORANGE BACKGROUND.
3. BASE MATERIAL FOR SIGNS AND ARROWS SHALL BE ALUMINUM (MINIMUM 1.5).
4. BELTS (LUGGAGE STRAPS) SHALL BE 25 WIDE BY 1200 LONG, MADE OF COTTON OR POLYPROPYLENE WEB MATERIAL.
5. SIGNS SHALL BE MOUNTED WITH BOTTOMS OF SIGNS A MINIMUM OF 1.8 METERS ABOVE GROUND EXCEPT AS OTHERWISE SHOWN ON OTHER TRAFFIC HANDLING DETAILS PLANS.

ABBREVIATION

(CA) CALIFORNIA CODE

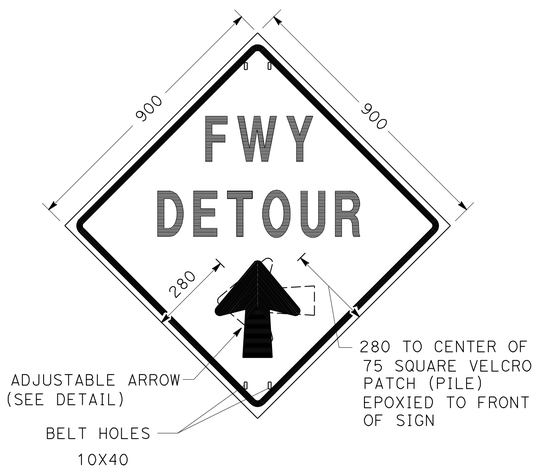

SIGN SP-2

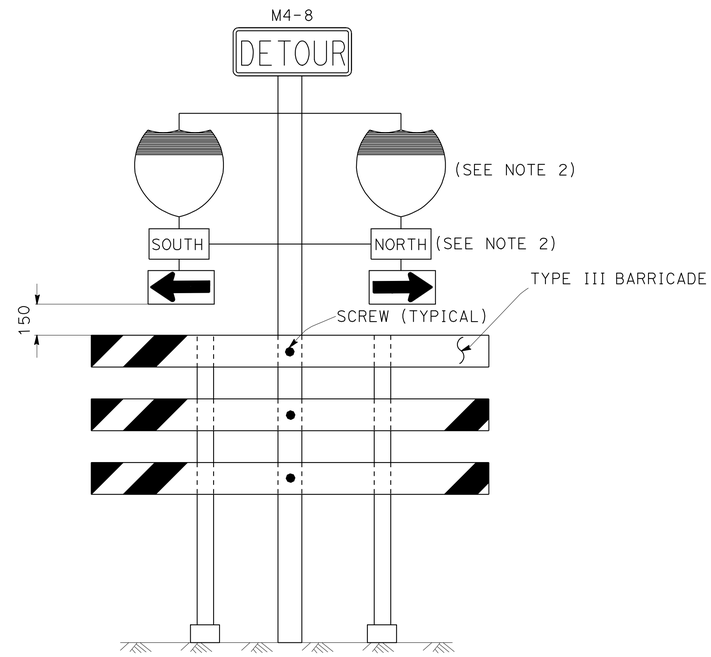

SIGN SP-6 (SEE NOTE 1)

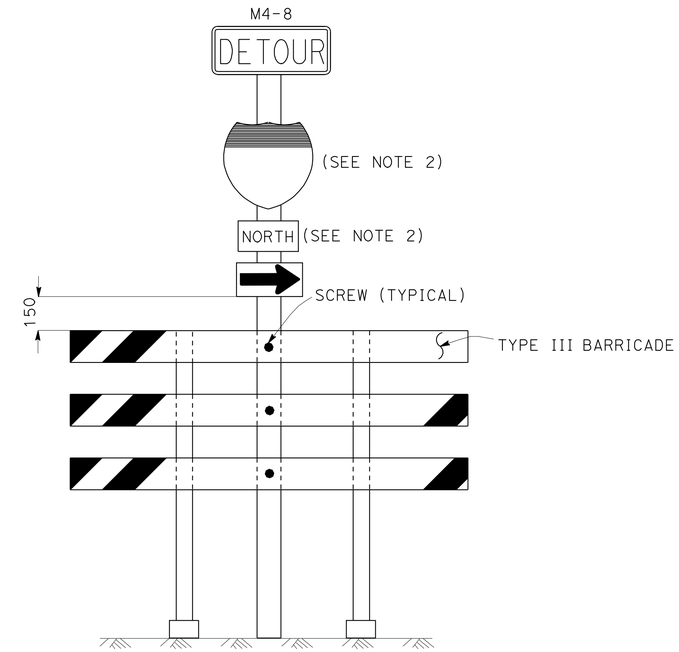

SIGN SP-7 (SEE NOTE 1)

SPECIAL PORTABLE FREEWAY DETOUR SIGNS

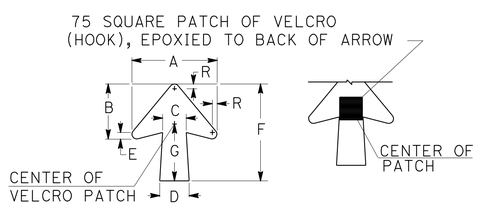

DIMENSIONS IN MILLIMETERS							
A	B	C	D	E	F	G	R
285	185	80	100	20	325	190	15

SPECIAL PORTABLE FREEWAY DETOUR SIGN

ADJUSTABLE ARROW DETAIL

NOTES: (SIGNS SP-6 & SP-7)

1. IN LIEU OF PLACING SIGNS ON TYPE III BARRICADES, SIGNS, INCLUDING POSTS, MAY BE PLACED INTO THE GROUND OR FASTENED ONTO ELECTROLIERS.
2. USE APPROPRIATE ROUTE SHIELD [G26-2(CA), G27-2(CA), G28-2(CA)] AND CARDINAL DIRECTION [NORTH (M3-1), SOUTH (M3-3), EAST (M3-2), WEST (M3-4)]

ALL DIMENSIONS ARE IN MILLIMETERS UNLESS OTHERWISE SHOWN

TRAFFIC HANDLING DETAILS
TRAFFIC CONTROL SYSTEM
FOR RAMP CLOSURES, DETOUR SIGNS AND MISCELLANEOUS DETAILS
SHEET 1 OF 2

NO SCALE

THD-2

REVISED BY	DATE REVISED
JC	7/08
JC	12/07
JC	4/07

CALCULATED-DESIGNED BY: ALBERT K YU
CHECKED BY: JOCELYN C CHIANG
FUNCTIONAL SUPERVISOR: JOHN YANG

STATE OF CALIFORNIA - DEPARTMENT OF TRANSPORTATION
Caltrans DTM

LAST REVISION 00-00-00 | DATE PLOTTED => 21-SEP-2010 | TIME PLOTTED => 11:31

Dist	COUNTY	ROUTE	KILOMETER POST TOTAL PROJECT	SHEET No.	TOTAL SHEETS
07	LA	101	24.9/25.9	70	213

REGISTERED CIVIL ENGINEER 6-19-10 DATE

8-9-10
PLANS APPROVAL DATE

REGISTERED PROFESSIONAL ENGINEER Albert K. Yu No. 43220 Exp. 3-31-12 CIVIL STATE OF CALIFORNIA

THE STATE OF CALIFORNIA OR ITS OFFICERS OR AGENTS SHALL NOT BE RESPONSIBLE FOR THE ACCURACY OR COMPLETENESS OF ELECTRONIC COPIES OF THIS PLAN SHEET.

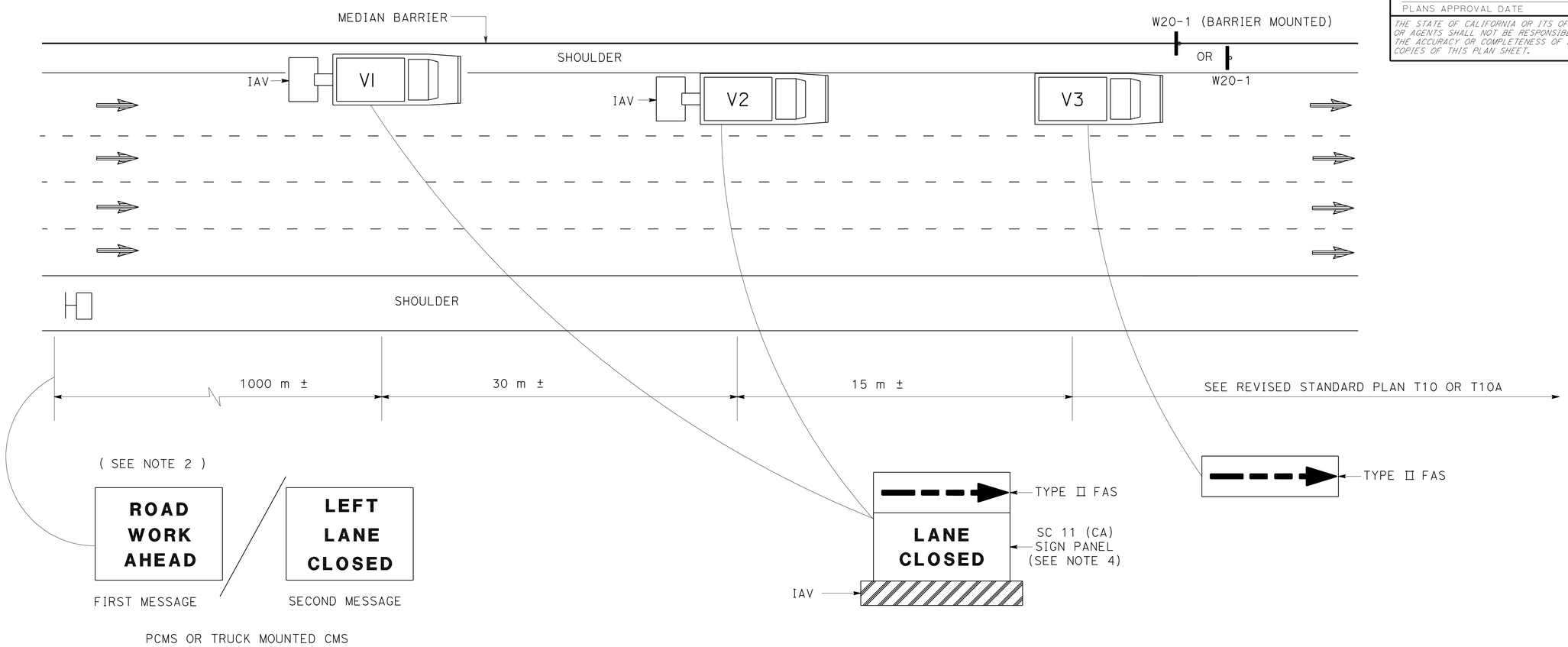

NOTES:

1. LANE CLOSURES SHALL NOT BE PLACED ON CREST VERTICAL CURVES OR ON HORIZONTAL CURVES.
2. PCMS SHALL BE ACTIVATED PRIOR TO TRAFFIC CONTROL ACTIVITIES ON THE LANE.
3. A MINIMUM SIGHT DISTANCE OF 450 METERS SHALL BE PROVIDED IN ADVANCE OF PCMS.
4. VEHICLE-MOUNTED SIGN PANELS SHALL BE TYPE III OR IV RETROREFLECTORIZED SHEETING, BLACK ON WHITE OR BLACK ON ORANGE WITH 200 MILLIMETERS MINIMUM SERIES D LETTERS PER CALTRANS SIGN SPECIFICATIONS.

LEGEND

V1, V2	SHADOW VEHICLE
V3	WORK/APPLICATION VEHICLE
	PORTABLE CHANGEABLE MESSAGE SIGN (PCMS)
	DIRECTION OF TRAVEL
	CONSTRUCTION AREA SIGN

ABBREVIATIONS

FAS	FLASHING ARROW SIGN
IAV	IMPACT ATTENUATOR VEHICLE
CMS	CHANGEABLE MESSAGE SIGN
PCMS	PORTABLE CHANGEABLE MESSAGE SIGN
(CA)	CALIFORNIA CODE
m	METER

TRAFFIC HANDLING DETAILS
TRAFFIC CONTROL SYSTEM
FOR MEDIAN SHOULDERS LESS THAN 2.4 m

NO SCALE

THD-3

CALCULATED-DESIGNED BY	ALBERT K YU
CHECKED BY	JOCELYN C CHIANG
FUNCTIONAL SUPERVISOR	JOHN YANG
REVISED BY	JC
DATE REVISED	7/08

STATE OF CALIFORNIA - DEPARTMENT OF TRANSPORTATION
Caltrans DTM

LAST REVISION 00-00-00 | DATE PLOTTED => 21-SEP-2010 | TIME PLOTTED => 11:31

Dist	COUNTY	ROUTE	KILOMETER POST TOTAL PROJECT	SHEET No.	TOTAL SHEETS
07	LA	101	24.9/25.9	71	213

REGISTERED CIVIL ENGINEER 6-19-10 DATE

8-9-10
PLANS APPROVAL DATE

REGISTERED PROFESSIONAL ENGINEER Albert K. Yu No. 43220 Exp. 3-31-12 CIVIL STATE OF CALIFORNIA

THE STATE OF CALIFORNIA OR ITS OFFICERS OR AGENTS SHALL NOT BE RESPONSIBLE FOR THE ACCURACY OR COMPLETENESS OF ELECTRONIC COPIES OF THIS PLAN SHEET.

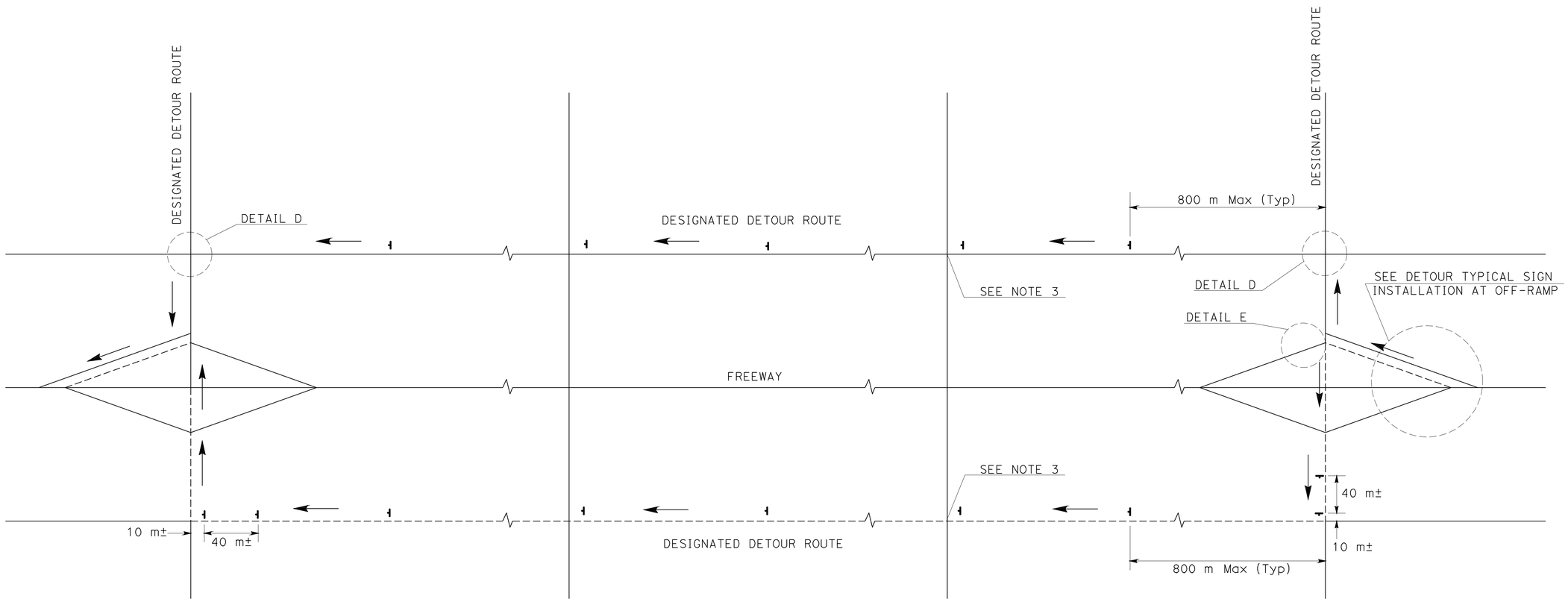

TYPICAL DETOUR SIGN INSTALLATION ALONG DESIGNATED DETOUR ROUTE

LEGEND

- SIGN SP-2
- AND/OR DESIGNATED DETOUR ROUTE
- DIRECTION OF TRAVEL

ABBREVIATION

m METER

NOTES:

1. SP-2 SIGNS SHALL NOT BE INSTALLED ON BARRICADES EXCEPT AS OTHERWISE SHOWN.
2. SIGN LOCATIONS ARE APPROXIMATE. EXACT LOCATIONS WILL BE DETERMINED BY THE ENGINEER.
3. SP-2 SIGNS SHALL BE POSTED AT SIGNALIZED INTERSECTIONS ALONG THE DESIGNATED DETOUR ROUTE OR 800 METERS MAXIMUM APART.

TRAFFIC HANDLING DETAILS
TRAFFIC CONTROL SYSTEM
FOR DETOUR SIGN INSTALLATION ALONG DESIGNATED DETOUR ROUTE
SHEET 1 OF 2

NO SCALE

THD-4

REVISED BY	DATE REVISED
JC	7/08
JC	4/07

CALCULATED-DESIGNED BY: ALBERT K YU
CHECKED BY: JOCELYN C CHIANG
FUNCTIONAL SUPERVISOR: JOHN YANG

STATE OF CALIFORNIA - DEPARTMENT OF TRANSPORTATION
Caltrans
DTM

LAST REVISION 00-00-00
DATE PLOTTED => 21-SEP-2010
TIME PLOTTED => 11:31

Dist	COUNTY	ROUTE	KILOMETER POST TOTAL PROJECT	SHEET No.	TOTAL SHEETS
07	LA	101	24.9/25.9	72	213

REGISTERED CIVIL ENGINEER 6-19-10 DATE

8-9-10
PLANS APPROVAL DATE

REGISTERED PROFESSIONAL ENGINEER Albert K. Yu No. 43220 Exp. 3-31-12 CIVIL STATE OF CALIFORNIA

THE STATE OF CALIFORNIA OR ITS OFFICERS OR AGENTS SHALL NOT BE RESPONSIBLE FOR THE ACCURACY OR COMPLETENESS OF ELECTRONIC COPIES OF THIS PLAN SHEET.

Caltrans Metric

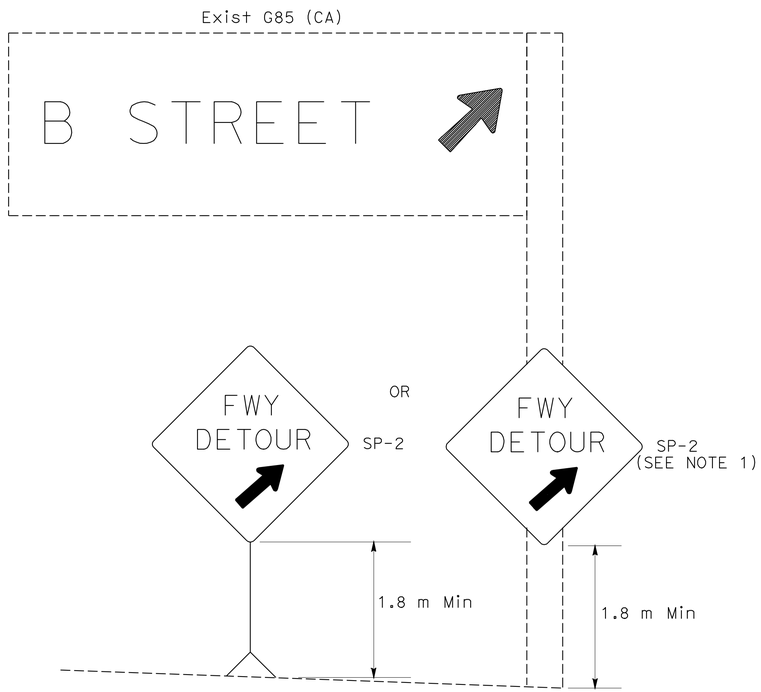

DETAIL A (SEE NOTE 2)

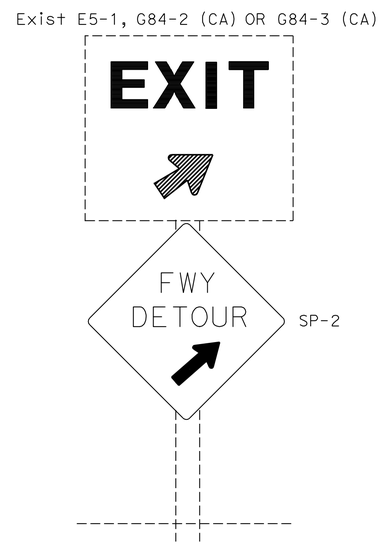

DETAIL B (SEE NOTE 2)

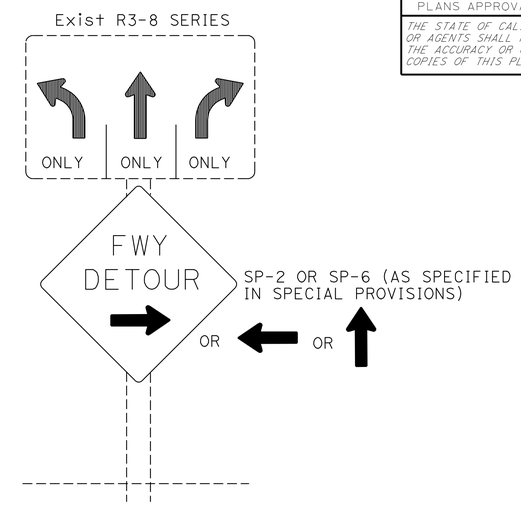

DETAIL C (SEE NOTE 3)

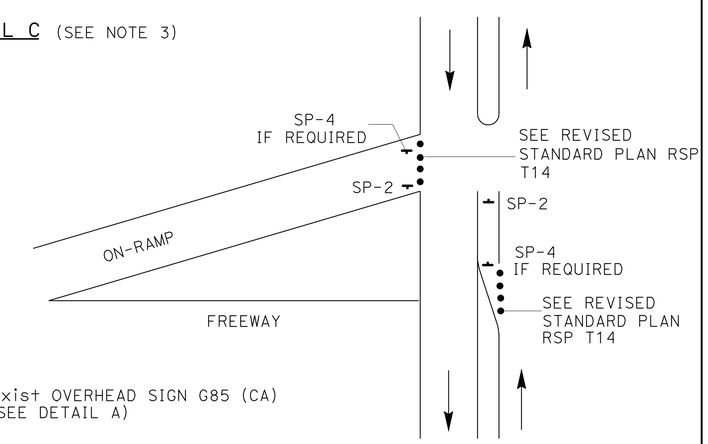

DETAIL E

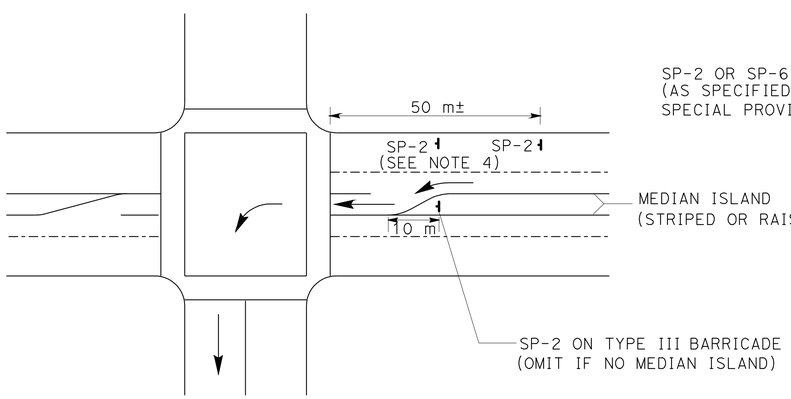

DETAIL D

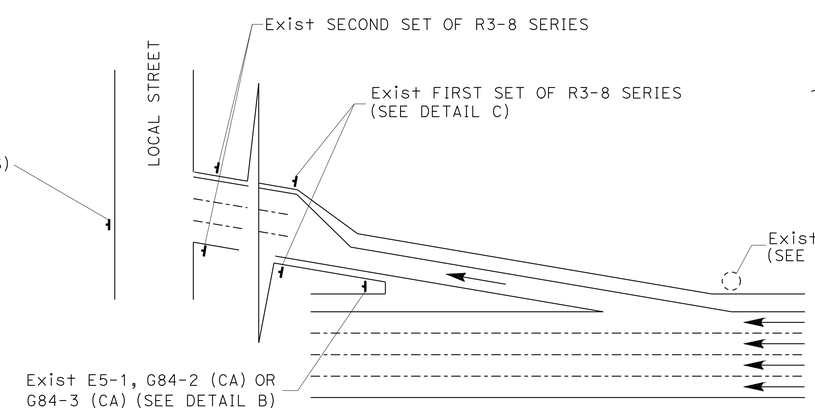

TYPICAL DETOUR SIGN INSTALLATION AT OFF-RAMP

NOTES:

1. SP-2 MAY BE STRAPPED ON EXISTING ELECTROLIER SIGNAL POSTS OR SIGN POSTS.
2. OMIT DETAIL A AND DETAIL B FOR FULL FREEWAY CLOSURES.
3. SEE TRAFFIC HANDLING DETAILS PLAN-TRAFFIC CONTROL SYSTEM FOR RAMP CLOSURES, DETOUR SIGNS AND MISCELLANEOUS DETAILS SHEET 2 OF 2 FOR SP-6.
4. OMIT IF MEDIAN ISLAND EXIST.

ABBREVIATIONS

(CA)	CALIFORNIA CODE
m	METER

LEGEND

- CONE
- PORTABLE SIGN
- DIRECTION OF TRAVEL
- EXISTING OVERHEAD SIGN

TRAFFIC HANDLING DETAILS
TRAFFIC CONTROL SYSTEM
FOR DETOUR SIGN INSTALLATION ALONG DESIGNATED DETOUR ROUTE
SHEET 2 OF 2

NO SCALE

THD-5

JC	JC	JC
7/08	1/08	4/07

REVISED BY — DATE REVISED

ALBERT K YU — JOCELYN C CHIANG

CALCULATED-DESIGNED BY — CHECKED BY

FUNCTIONAL SUPERVISOR: JOHN YANG

STATE OF CALIFORNIA - DEPARTMENT OF TRANSPORTATION — Caltrans — DTM

LAST REVISION 00-00-00 — DATE PLOTTED => 21-SEP-2010 — TIME PLOTTED => 11:32

Dist	COUNTY	ROUTE	KILOMETER POST TOTAL PROJECT	SHEET No.	TOTAL SHEETS
07	LA	101	24.9/25.9	73	213

REGISTERED CIVIL ENGINEER 7-17-10 DATE

8-9-10
PLANS APPROVAL DATE

REGISTERED PROFESSIONAL ENGINEER ANH D. NGUYEN No. C62370 Exp. 9/30/11 CIVIL STATE OF CALIFORNIA

THE STATE OF CALIFORNIA OR ITS OFFICERS OR AGENTS SHALL NOT BE RESPONSIBLE FOR THE ACCURACY OR COMPLETENESS OF ELECTRONIC COPIES OF THIS PLAN SHEET.

Caltrans Metric

LEGEND:

- XX — STRIPING DETAIL NO.
- R — REMOVE ROADSIDE SIGN (WOOD POST)
- RS — REMOVE ROADSIDE SIGN - REMOVE SIGN PANEL (STRAP AND SADDLE BRACKET METHOD)
- 1 — ROADSIDE SIGN - 1 POST
- 2 — ROADSIDE SIGN - 2 POST
- 1R — ROADSIDE SIGN - 1 POST (REUSE SIGN PANEL)
- SS — INSTALL SIGN (STRAP AND SADDLE BRACKET METHOD)
- BM — METAL - (BARRIER MOUNTED SIGN)
- WM — METAL - (SOUNDWALL MOUNTED SIGN)
- IB — INSTALL BRIDGE OVERLAY (STICKY BACK)
- CHANGE IN PAVEMENT DELINEATION DETAILS
- F, G — DELINEATOR (CLASS I, TYPE F OR G)
- B — BOTH (LEFT & RIGHT ARROWS)
- XXYY-# — FEDERAL HIGHWAY SIGN CODE PER MANUAL ON UNIFORM TRAFFIC CONTROL DEVICES (MUTCD)
- XXYY-# (CA) — CALIFORNIA SIGN CODE PER CALIFORNIA MUTCD

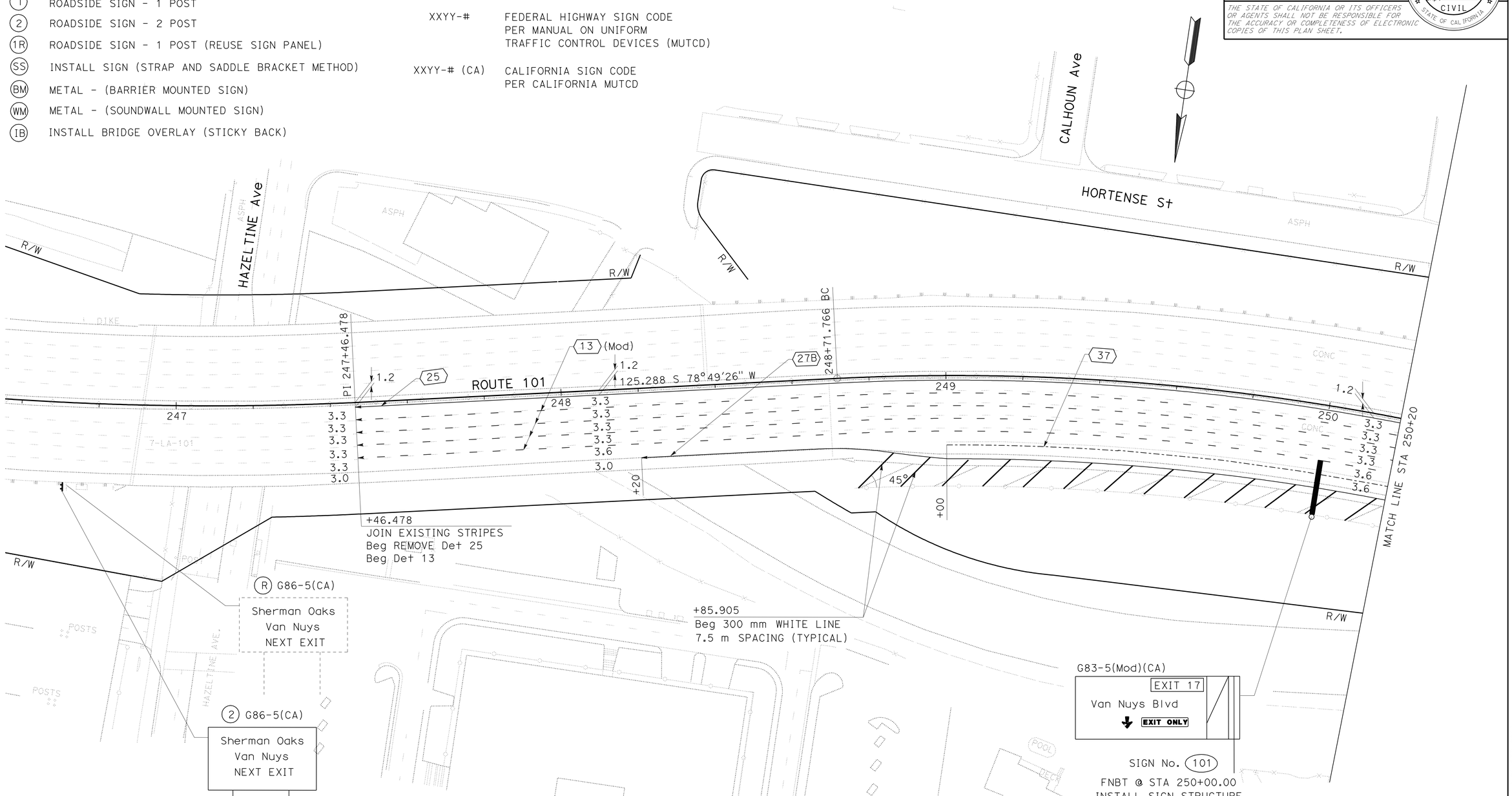

ALL DIMENSIONS ARE IN METERS UNLESS OTHERWISE SHOWN

PAVEMENT DELINEATION AND SIGN PLAN

SCALE 1:500

PD-1

THIS PLAN ACCURATE FOR PAVEMENT DELINEATION AND SIGNING ONLY.

J.C.	REVISED BY	11/2007
JANE CHANG	DATE REVISED	
ANH D. NGUYEN		
CALCULATED-DESIGNED BY		
CHECKED BY		
FUNCTIONAL SUPERVISOR		
ALI ZAGHARI		

STATE OF CALIFORNIA - DEPARTMENT OF TRANSPORTATION
Caltrans **TRAFFIC DESIGN**

LAST REVISION 00-00-00 | DATE PLOTTED => 21-SEP-2010 | TIME PLOTTED => 11:32

Dist	COUNTY	ROUTE	KILOMETER POST TOTAL PROJECT	SHEET No.	TOTAL SHEETS
07	LA	101	24.9/25.9	74	213

REGISTERED CIVIL ENGINEER 7-17-10 DATE

8-9-10
PLANS APPROVAL DATE

REGISTERED PROFESSIONAL ENGINEER ANH D. NGUYEN No. C62370 Exp. 9/30/11 CIVIL STATE OF CALIFORNIA

THE STATE OF CALIFORNIA OR ITS OFFICERS OR AGENTS SHALL NOT BE RESPONSIBLE FOR THE ACCURACY OR COMPLETENESS OF ELECTRONIC COPIES OF THIS PLAN SHEET.

Caltrans Metric

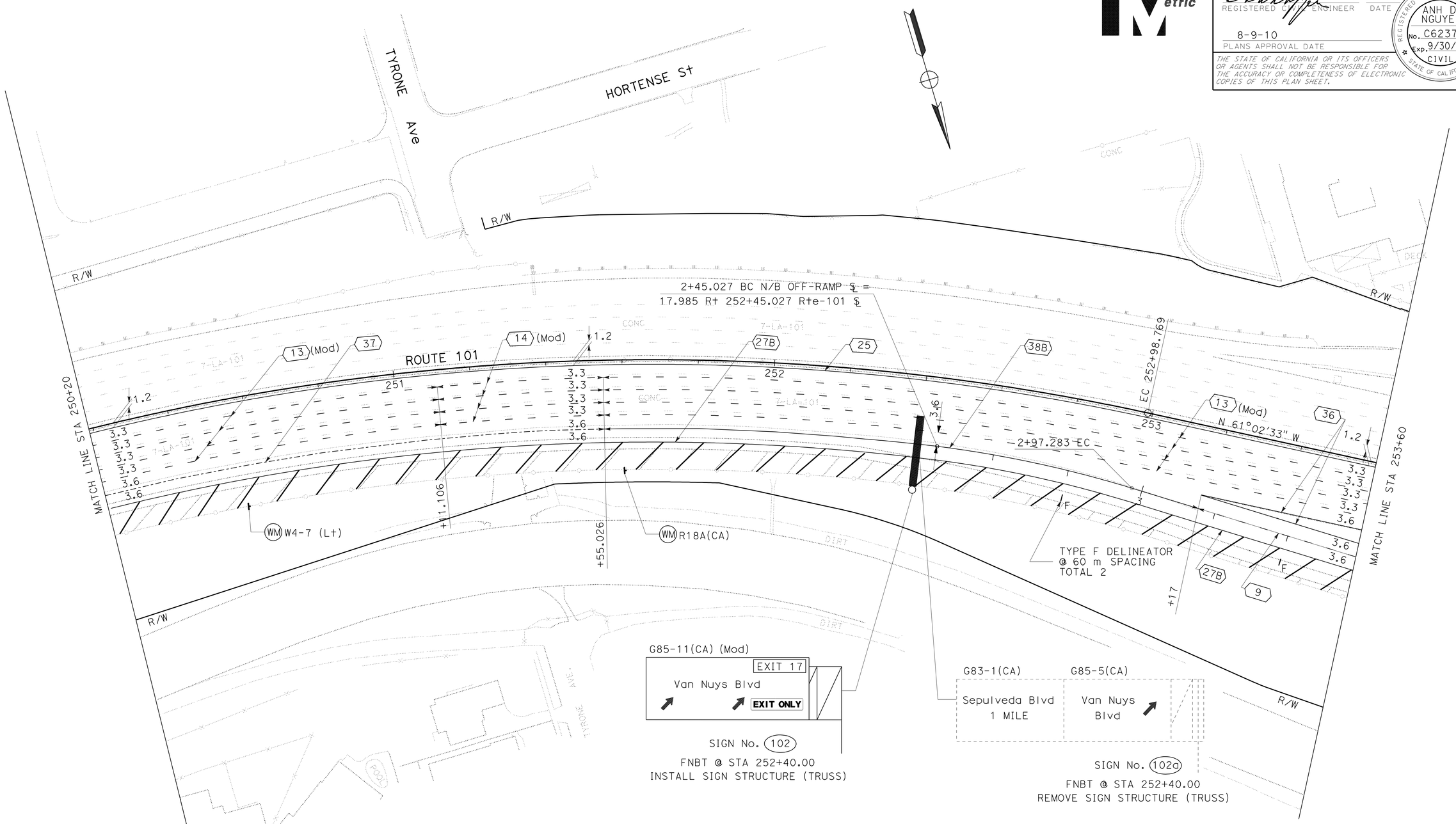

ALL DIMENSIONS ARE IN METERS UNLESS OTHERWISE SHOWN

PAVEMENT DELINEATION AND SIGN PLAN

SCALE 1:500

THIS PLAN ACCURATE FOR PAVEMENT DELINEATION AND SIGNING ONLY.

PD-2

CALCULATED-DESIGNED BY	JANE CHANG	REVISED BY	J.C.
CHECKED BY	ANH D. NGUYEN	DATE REVISED	11/2007

FUNCTIONAL SUPERVISOR: ALI ZAGHARI

STATE OF CALIFORNIA - DEPARTMENT OF TRANSPORTATION
Caltrans TRAFFIC DESIGN

LAST REVISION 00-00-00 | DATE PLOTTED => 21-SEP-2010 | TIME PLOTTED => 11:32

Dist	COUNTY	ROUTE	KILOMETER POST TOTAL PROJECT	SHEET No.	TOTAL SHEETS
07	LA	101	24.9/25.9	75	213

REGISTERED CIVIL ENGINEER 7-17-10 DATE

8-9-10
PLANS APPROVAL DATE

REGISTERED PROFESSIONAL ENGINEER ANH D. NGUYEN No. C62370 Exp. 9/30/11 CIVIL STATE OF CALIFORNIA

THE STATE OF CALIFORNIA OR ITS OFFICERS OR AGENTS SHALL NOT BE RESPONSIBLE FOR THE ACCURACY OR COMPLETENESS OF ELECTRONIC COPIES OF THIS PLAN SHEET.

Caltrans Metric

NOTE

1. 7 AM - 9 AM, 4 PM - 6PM EXCEPT SAT & SUN

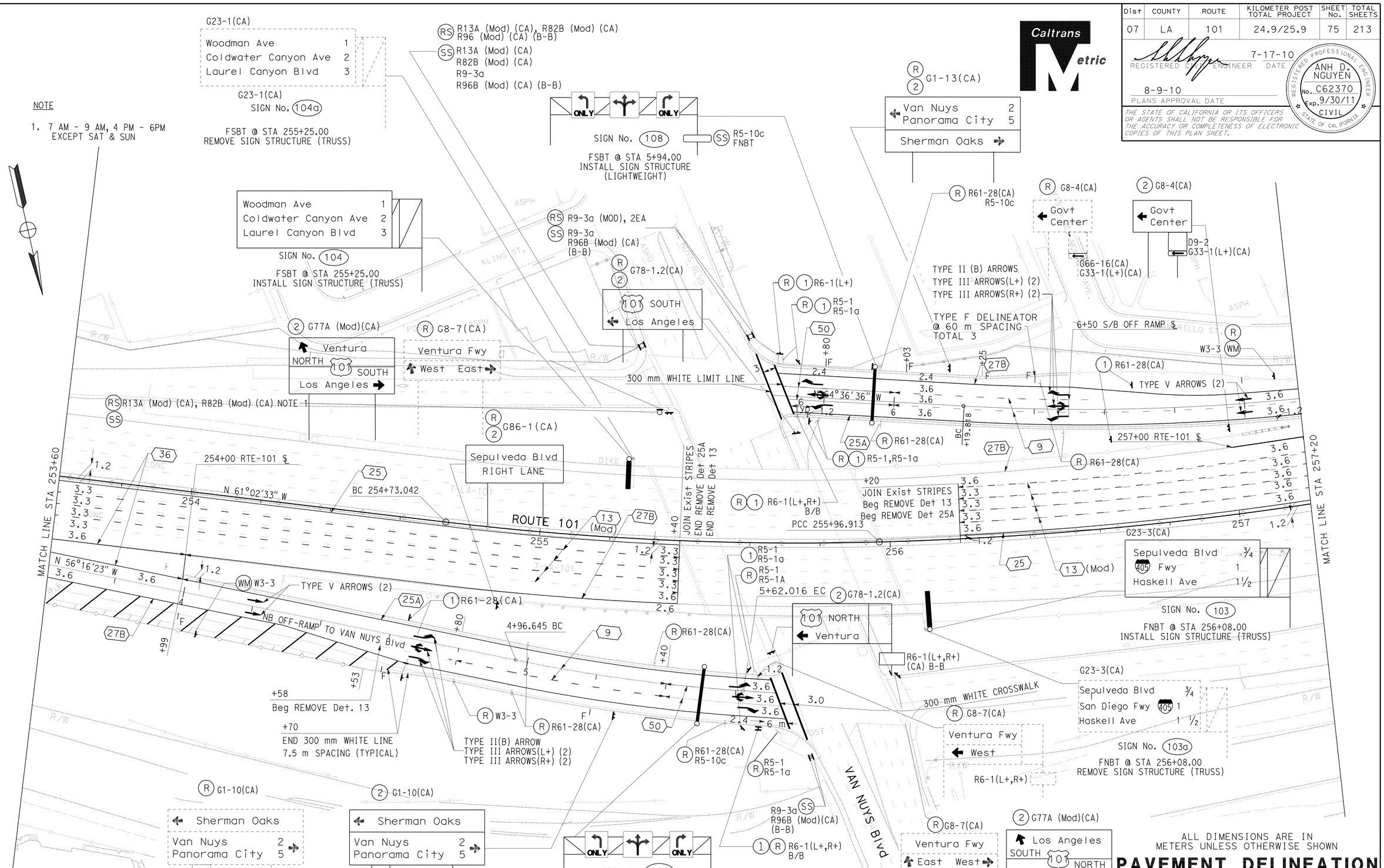

ALL DIMENSIONS ARE IN METERS UNLESS OTHERWISE SHOWN

PAVEMENT DELINEATION AND SIGN PLAN

SCALE 1:500

THIS PLAN ACCURATE FOR PAVEMENT DELINEATION AND SIGNING ONLY.

PD-3

J.C.	11/2007	JANE CHANG	ANH D. NGUYEN
REVISED BY	DATE REVISED	CALCULATED-DESIGNED BY	CHECKED BY

FUNCTIONAL SUPERVISOR: ALI ZAGHARI

STATE OF CALIFORNIA - DEPARTMENT OF TRANSPORTATION
Caltrans TRAFFIC DESIGN

LAST REVISION 00-00-00 DATE PLOTTED => 21-SEP-2010 TIME PLOTTED => 11:32

×719963na003.dgn

BORDER LAST REVISED 3/1/2007 | RELATIVE BORDER SCALE IS IN MILLIMETERS 0 20 40 60 80 | USERNAME => trmikesl DGN FILE => 719963na003.dgn | CU 07265 | EA 199631

Dist	COUNTY	ROUTE	KILOMETER POST TOTAL PROJECT	SHEET No.	TOTAL SHEETS
07	LA	101	24.9/25.9	76	213

REGISTERED CIVIL ENGINEER 7-17-10 DATE

8-9-10
PLANS APPROVAL DATE

REGISTERED PROFESSIONAL ENGINEER ANH D. NGUYEN No. C62370 Exp. 9/30/11 CIVIL STATE OF CALIFORNIA

THE STATE OF CALIFORNIA OR ITS OFFICERS OR AGENTS SHALL NOT BE RESPONSIBLE FOR THE ACCURACY OR COMPLETENESS OF ELECTRONIC COPIES OF THIS PLAN SHEET.

Caltrans Metric

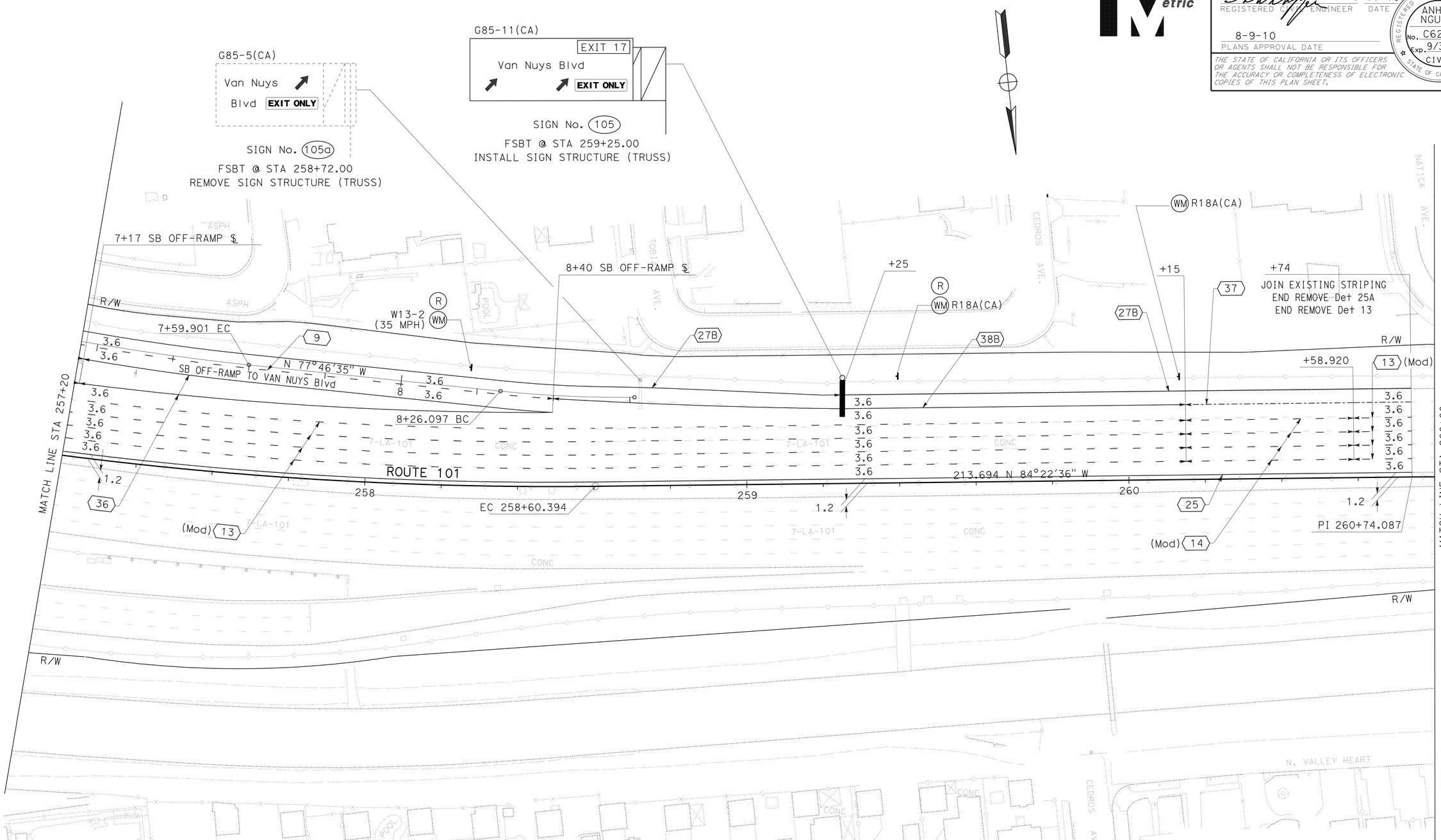

ALL DIMENSIONS ARE IN METERS UNLESS OTHERWISE SHOWN

PAVEMENT DELINEATION AND SIGN PLAN

SCALE 1:500

THIS PLAN ACCURATE FOR PAVEMENT DELINEATION AND SIGNING ONLY.

PD-4

CALCULATED-DESIGNED BY	CHECKED BY	REVISED BY	DATE REVISED	FUNCTIONAL SUPERVISOR
JANE CHANG	ANH D. NGUYEN	J.C.	11/2007	ALI ZAGHARI

STATE OF CALIFORNIA - DEPARTMENT OF TRANSPORTATION
Caltrans TRAFFIC DESIGN

LAST REVISION 00-00-00 | DATE PLOTTED => 21-SEP-2010 | TIME PLOTTED => 11:32

×719963na004.dgn

Dist	COUNTY	ROUTE	KILOMETER POST TOTAL PROJECT	SHEET No.	TOTAL SHEETS
07	LA	101	24.9/25.9	77	213

REGISTERED CIVIL ENGINEER 7-17-10 DATE

8-9-10
PLANS APPROVAL DATE

REGISTERED PROFESSIONAL ENGINEER ANH D. NGUYEN No. C62370 Exp. 9/30/11 CIVIL STATE OF CALIFORNIA

THE STATE OF CALIFORNIA OR ITS OFFICERS OR AGENTS SHALL NOT BE RESPONSIBLE FOR THE ACCURACY OR COMPLETENESS OF ELECTRONIC COPIES OF THIS PLAN SHEET.

Caltrans Metric

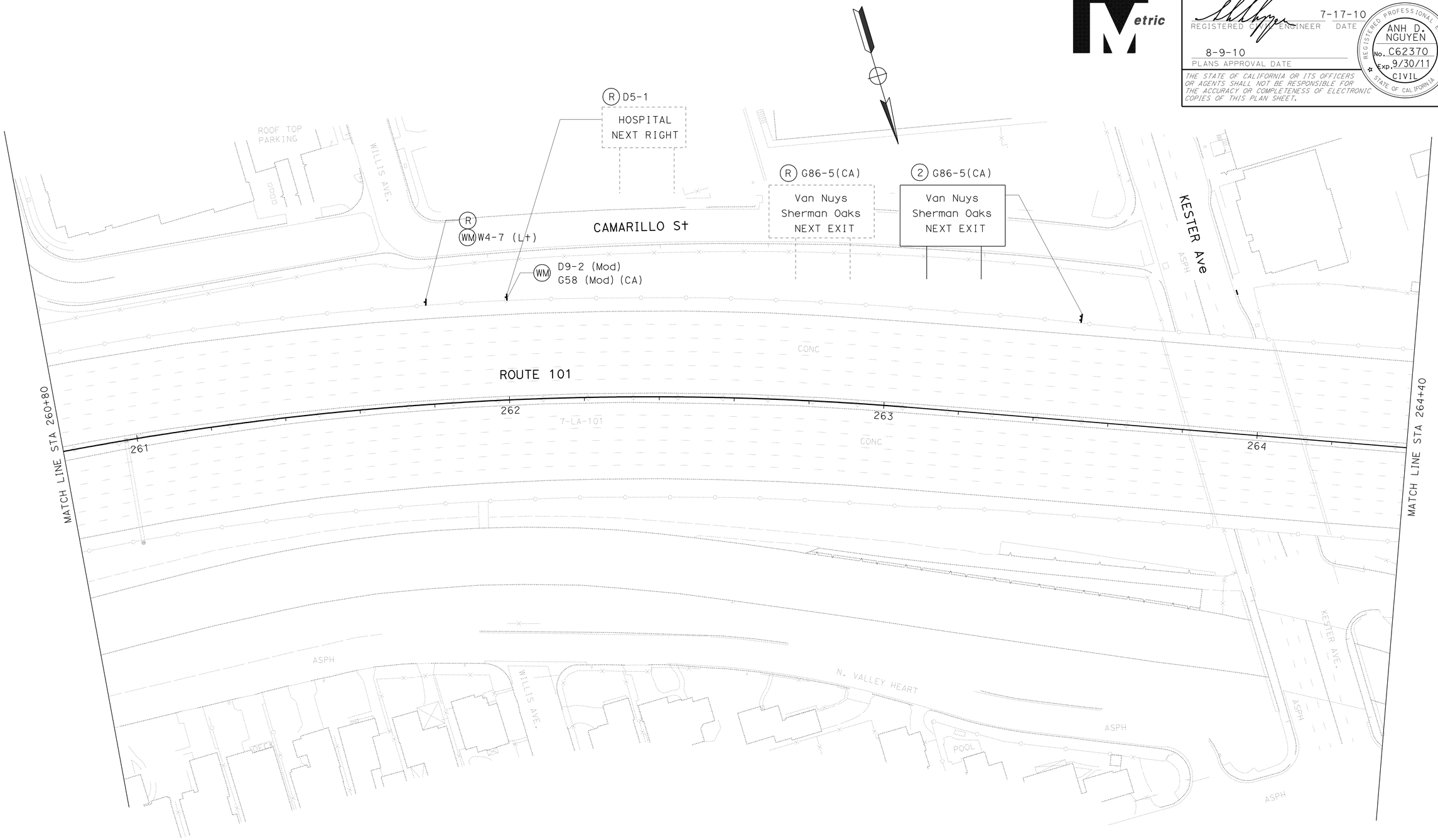

ALL DIMENSIONS ARE IN METERS UNLESS OTHERWISE SHOWN

PAVEMENT DELINEATION AND SIGN PLAN

SCALE 1:500

THIS PLAN ACCURATE FOR PAVEMENT DELINEATION AND SIGNING ONLY.

PD-5

CALCULATED-DESIGNED BY	JANE CHANG
CHECKED BY	ANH D. NGUYEN
REVISED BY	
DATE REVISED	11/2007
J.C.	

FUNCTIONAL SUPERVISOR: ALI ZAGHARI

STATE OF CALIFORNIA - DEPARTMENT OF TRANSPORTATION

Caltrans **TRAFFIC DESIGN**

×719963na005.dgn

LAST REVISION 00-00-00 | DATE PLOTTED => 21-SEP-2010 | TIME PLOTTED => 11:32

BORDER LAST REVISED 3/1/2007

RELATIVE BORDER SCALE IS IN MILLIMETERS 0 20 40 60 80

USERNAME => trmikesl
DGN FILE => 719963na005.dgn

CU 07384

EA 199631

Dist	COUNTY	ROUTE	KILOMETER POST TOTAL PROJECT	SHEET No.	TOTAL SHEETS
07	LA	101	24.9/25.9	78	213

REGISTERED CIVIL ENGINEER 7-17-10 DATE

8-9-10
PLANS APPROVAL DATE

REGISTERED PROFESSIONAL ENGINEER ANH D. NGUYEN No. C62370 Exp. 9/30/11 CIVIL STATE OF CALIFORNIA

THE STATE OF CALIFORNIA OR ITS OFFICERS OR AGENTS SHALL NOT BE RESPONSIBLE FOR THE ACCURACY OR COMPLETENESS OF ELECTRONIC COPIES OF THIS PLAN SHEET.

Caltrans Metric

ALL DIMENSIONS ARE IN METERS UNLESS OTHERWISE SHOWN

PAVEMENT DELINEATION AND SIGN PLAN

SCALE 1:500

PD-6

THIS PLAN ACCURATE FOR PAVEMENT DELINEATION AND SIGNING ONLY.

STATE OF CALIFORNIA - DEPARTMENT OF TRANSPORTATION
Caltrans **TRAFFIC DESIGN**

FUNCTIONAL SUPERVISOR: ALI ZAGHARI
CALCULATED-DESIGNED BY: JANE CHANG
CHECKED BY: ANH D. NGUYEN
REVISED BY: J.C.
DATE REVISED: 11/2007

LAST REVISION 00-00-00 | DATE PLOTTED => 21-SEP-2010 | TIME PLOTTED => 11:33

×719963na006.dgn

BORDER LAST REVISED 3/1/2007 | RELATIVE BORDER SCALE IS IN MILLIMETERS 0 20 40 60 80 | USERNAME => trmikesl | DGN FILE => 719963na006.dgn | CU 07384 | EA 199631

Dist	COUNTY	ROUTE	KILOMETER POST TOTAL PROJECT	SHEET No.	TOTAL SHEETS
07	LA	101	24.9/25.9	79	213

REGISTERED CIVIL ENGINEER 7-17-10 DATE

8-9-10
PLANS APPROVAL DATE

REGISTERED PROFESSIONAL ENGINEER ANH D. NGUYEN No. C62370 Exp. 9/30/11 CIVIL STATE OF CALIFORNIA

THE STATE OF CALIFORNIA OR ITS OFFICERS OR AGENTS SHALL NOT BE RESPONSIBLE FOR THE ACCURACY OR COMPLETENESS OF ELECTRONIC COPIES OF THIS PLAN SHEET.

Caltrans Metric

LEGEND:

100 mm WHITE TRAFFIC STRIPE

DIRECTION OF TRAVEL

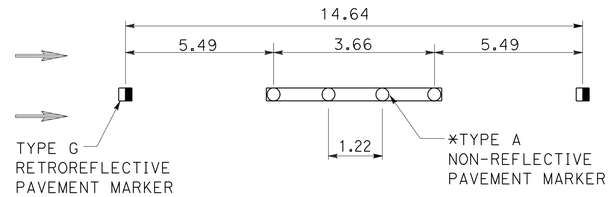

DETAIL 13 (Mod)

*NOTES:

1. INSTALL NON-REFLECTIVE MARKERS ON ROADWAY LANELINE BEFORE PLACING 100 mm WHITE TRAFFIC STRIPE.
2. FOR ADDITIONAL QUATITIES, SEE SHEET SCQ-1.

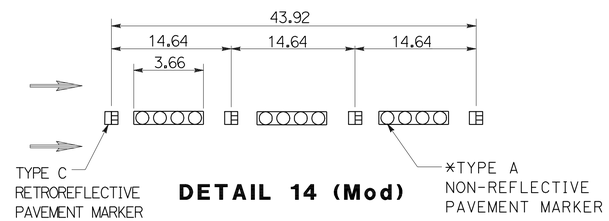

DETAIL 14 (Mod)

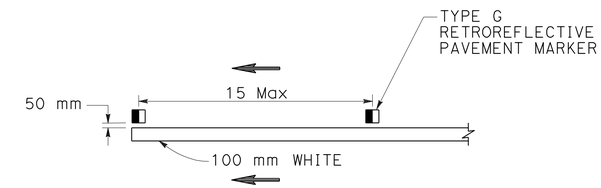

DETAIL 50
(must have 50 Min in length)

PAVEMENT DELINEATION QUANTITIES

SHEET No.	THERMOPLASTIC TRAFFIC STRIPE										REMOVE									PAVEMENT MARKER				THERMOPLASTIC PAVEMENT MARKING		
	Det 9	Det 13 (Mod)	Det 14 (Mod)	Det 25	Det 25A	Det 27B	Det 50	Det 37	Det 36	Det 38B	PAINTED TRAFFIC STRIPE							PAINTED PAVEMENT MARKING	PAVEMENT MARKER	RETRO-REFLECTIVE			NON-REFLECTIVE			
	100 mm (BROKEN 5.18 m - 2.14 m) (WHITE)	100 mm (BROKEN 10.98 m - 3.66 m) (WHITE)	100 mm (BROKEN 10.98 m - 3.66 m) (WHITE)	100 mm SOLID YELLOW	100 mm SOLID YELLOW	100 mm SOLID WHITE	100 mm SOLID WHITE	200 mm (BROKEN 3.66 m - 0.91 m) (WHITE)	200 mm SOLID WHITE	200 mm SOLID WHITE	Det 13 (Mod)	Det 14 (Mod)	Det 25	Det 25A	Det 27B	Det 36	Det 37			TYPE G	TYPE H	TYPE C	TYPE A	ARROW	CHEVRON OR DIAGONAL	CROSSWALK / LIMIT LINE
	m	m	m	m	m	m	m	m	m	m	m	m	m	m	m	m	m	m^2	EA	EA	EA	EA	EA	m^2	m^2	m^2
PD-1		1094		274		200		120			274		274		400		40	27	415	108	20		304		56.4	
PD-2	43	1184	176	340		340		135	86	162	296	41	340	100	440	200	76	72	554	181	25	33	404		136.6	
PD-3	410	1120		280	320	514	130		80		205		180	260	563			18	430	179	69		320	65.36	37.5	71.1
PD-4	120	1240	176	354		354		59	240	175	295	44			585		34		478	154	26	33	420			
SUBTOTAL	573	4638	352	1248	320	1408	130	314	406	337	1070	85	794	360	1988	200	150	117	1877	622	140	66	1448	65.36	230.5	71.1
TOTAL	573	4990		3106				314	743		4647							117	1877	828			1448	366.96		

ALL DIMENSIONS ARE IN METERS UNLESS OTHERWISE SHOWN

PAVEMENT DELINEATION DETAILS AND QUANTITIES

NO SCALE

PDQ-1

REVISED BY	DATE REVISED
J.C.	11/2007

JANE CHANG — CALCULATED-DESIGNED BY
ANH D. NGUYEN — CHECKED BY
ALI ZAGHARI — FUNCTIONAL SUPERVISOR

STATE OF CALIFORNIA - DEPARTMENT OF TRANSPORTATION
Caltrans **TRAFFIC DESIGN**

LAST REVISION 00-00-00 | DATE PLOTTED => 21-SEP-2010 | TIME PLOTTED => 11:33

S:\projects\199631\Resubmit5\719963nb001.dgn

Dist	COUNTY	ROUTE	KILOMETER POST TOTAL PROJECT	SHEET No.	TOTAL SHEETS
07	LA	101	24.9/25.9	80	213

REGISTERED CIVIL ENGINEER 7-17-10 DATE

8-9-10
PLANS APPROVAL DATE

REGISTERED PROFESSIONAL ENGINEER ANH D. NGUYEN No. C62370 Exp. 9/30/11 CIVIL STATE OF CALIFORNIA

THE STATE OF CALIFORNIA OR ITS OFFICERS OR AGENTS SHALL NOT BE RESPONSIBLE FOR THE ACCURACY OR COMPLETENESS OF ELECTRONIC COPIES OF THIS PLAN SHEET.

Caltrans Metric

NOTES

1. BASE PLATE ELEVATIONS TO BE SET IN FIELD TO PROVIDE MINIMUM VERTICAL CLEARANCE OF 5.51 m FROM BOTTOM OF OVERHEAD SIGN STRUCTURE, INCLUDING LIGHTING FIXTURES, TO FINISHED GRADE.
2. THE CONTRACTOR SHALL VERIFY ALL DEPENDENT DIMENSIONS IN THE FIELD BEFORE ORDERING.
3. ALL "h" HEIGHTS AND BASE PLATE ELEVATIONS ARE FOR QUANTITIES ONLY AND ARE SUBJECT TO CHANGES BASED ON NOTE No. 1 ABOVE.

ABBREVIATION:

RSPF REMOVEABLE SIGN PANEL FRAME

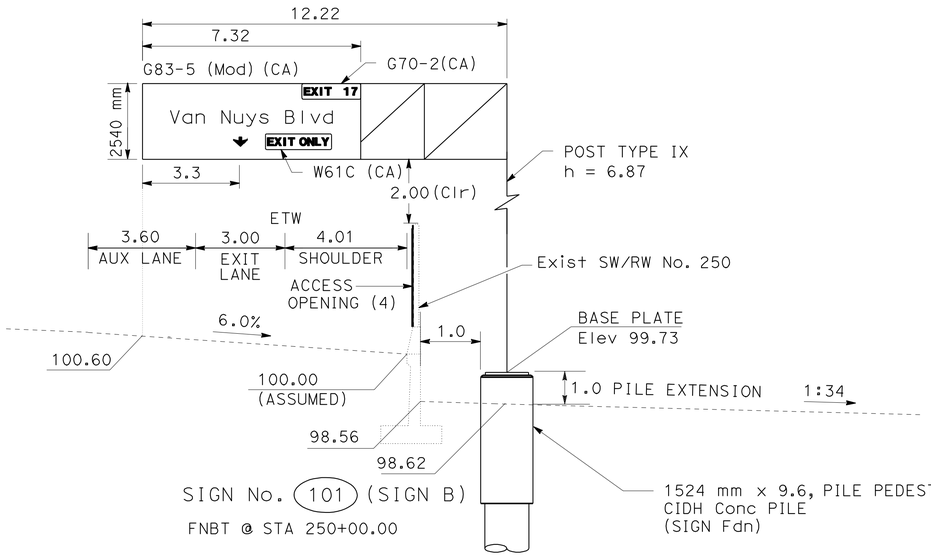

SIGN No. 101 (SIGN B)

FNBT @ STA 250+00.00

1. FURNISH AND INSTALL SIGN STRUCTURE (TRUSS), INCLUDING RSPFs.
2. INSTALL FORMED SIGN PANEL.
3. ILLUMINATION REQUIRED.
4. SEE ACCESS PLATE DETAIL.

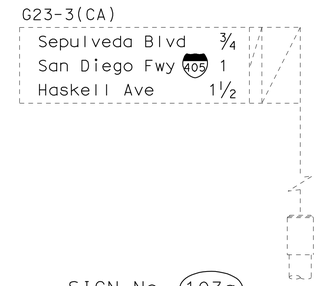

SIGN No. 103a

FNBT @ STA 256+08.00
REMOVE SIGN STRUCTURE (TRUSS)

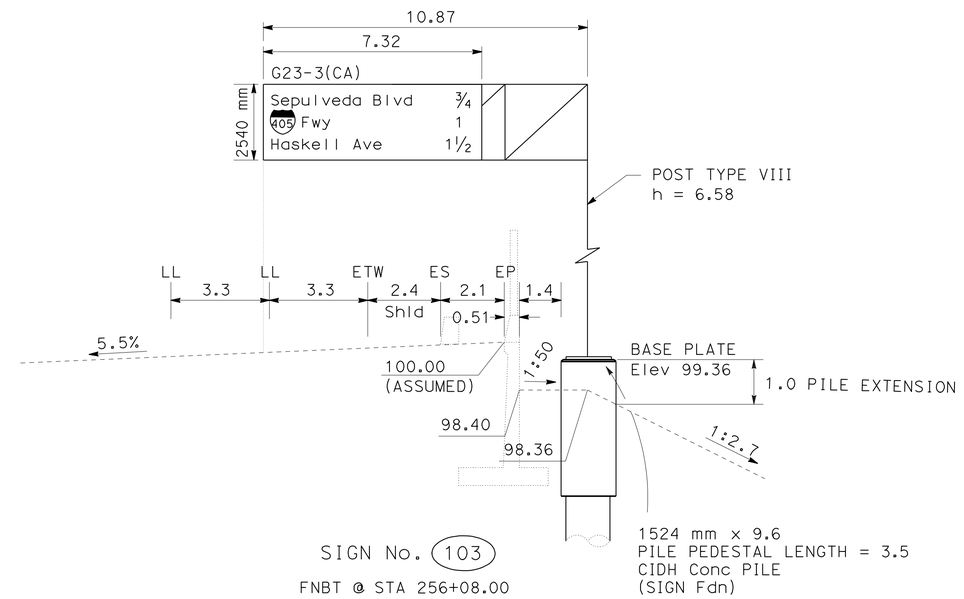

SIGN No. 103

FNBT @ STA 256+08.00

1. FURNISH AND INSTALL SIGN STRUCTURE (TRUSS), INCLUDING RSPFs.
2. INSTALL FORMED SIGN PANEL.
3. ILLUMINATION REQUIRED.

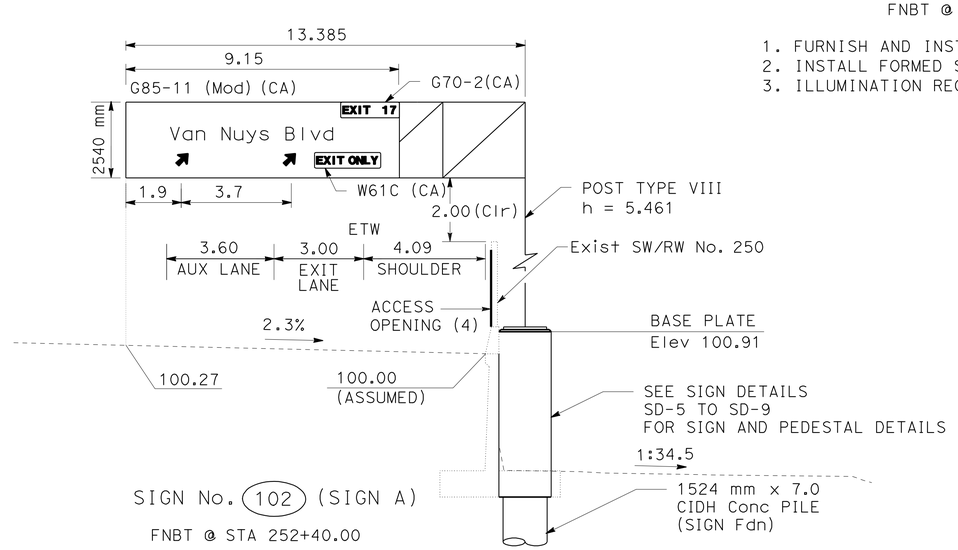

SIGN No. 102 (SIGN A)

FNBT @ STA 252+40.00

1. FURNISH AND INSTALL SIGN STRUCTURE (TRUSS), INCLUDING RSPFs.
2. INSTALL FORMED SIGN PANEL.
3. ILLUMINATION REQUIRED.
4. SEE ACCESS PLATE DETAIL.

ALL DIMENSIONS ARE IN METERS UNLESS OTHERWISE SHOWN

SIGN DETAILS

NO SCALE

SD-1

J.C.	REVISED BY	11/2007 DATE REVISED
JANE CHANG	ANH D. NGUYEN	CALCULATED-DESIGNED BY / CHECKED BY
FUNCTIONAL SUPERVISOR	ALI ZAGHARI	

STATE OF CALIFORNIA - DEPARTMENT OF TRANSPORTATION
Caltrans TRAFFIC DESIGN

719963ob001.dgn

LAST REVISION 00-00-00 DATE PLOTTED => 21-SEP-2010 TIME PLOTTED => 11:33

Dist	COUNTY	ROUTE	KILOMETER POST TOTAL PROJECT	SHEET No.	TOTAL SHEETS
07	LA	101	24.9/25.9	81	213

REGISTERED CIVIL ENGINEER 7-17-10 DATE

8-9-10
PLANS APPROVAL DATE

REGISTERED PROFESSIONAL ENGINEER ANH D. NGUYEN No. C62370 Exp. 9/30/11 CIVIL STATE OF CALIFORNIA

THE STATE OF CALIFORNIA OR ITS OFFICERS OR AGENTS SHALL NOT BE RESPONSIBLE FOR THE ACCURACY OR COMPLETENESS OF ELECTRONIC COPIES OF THIS PLAN SHEET.

Caltrans Metric

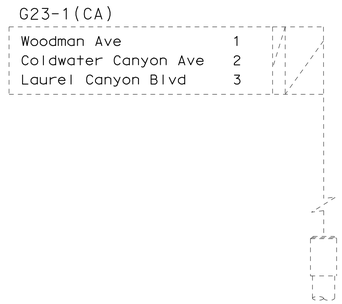

SIGN No. 104a

FSBT @ STA 255+25.00
REMOVE SIGN STRUCTURE (TRUSS)

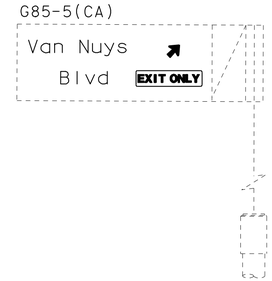

SIGN No. 105a

FSBT @ STA 258+72.00
REMOVE SIGN STRUCTURE (TRUSS)

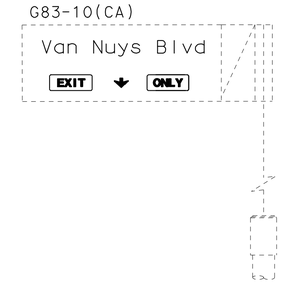

SIGN No. 106a

FSBT @ STA 265+11.00
REMOVE SIGN STRUCTURE (TRUSS)

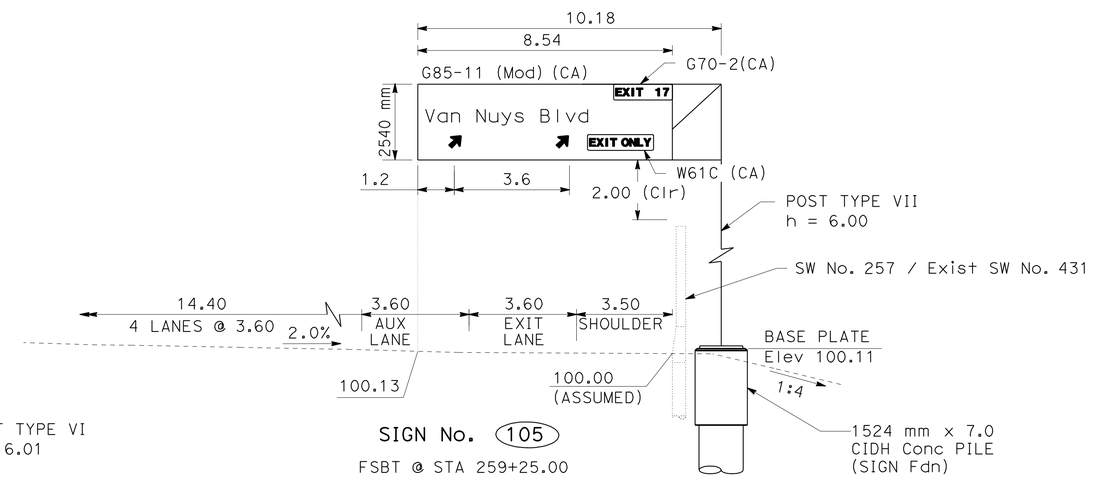

SIGN No. 105

FSBT @ STA 259+25.00

NOTES:

1. FURNISH AND INSTALL SIGN STRUCTURE (TRUSS), INCLUDING RSPFs.
2. INSTALL FORMED SIGN PANEL.
3. ILLUMINATION REQUIRED.

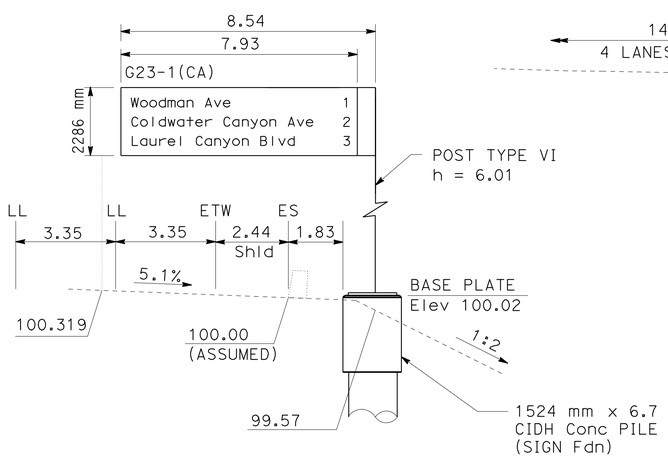

SIGN No. 104

FSBT @ STA 255+25.00

NOTES:

1. FURNISH AND INSTALL SIGN STRUCTURE (TRUSS), INCLUDING RSPFs.
2. INSTALL FORMED SIGN PANELS.
3. ILLUMINATION REQUIRED.

ALL DIMENSIONS ARE IN METERS UNLESS OTHERWISE SHOWN

SIGN DETAILS

NO SCALE

SD-2

STATE OF CALIFORNIA - DEPARTMENT OF TRANSPORTATION
Caltrans TRAFFIC DESIGN

FUNCTIONAL SUPERVISOR: ALI ZAGHARI
CALCULATED-DESIGNED BY: JANE CHANG
CHECKED BY: ANH D. NGUYEN
REVISED BY / DATE REVISED: J.C. 11/2007

LAST REVISION 00-00-00
DATE PLOTTED => 21-SEP-2010
TIME PLOTTED => 11:33

719963ob002.dgn

Dist	COUNTY	ROUTE	KILOMETER POST TOTAL PROJECT	SHEET No.	TOTAL SHEETS
07	LA	101	24.9/25.9	82	213

REGISTERED CIVIL ENGINEER — DATE 7-17-10

8-9-10
PLANS APPROVAL DATE

REGISTERED PROFESSIONAL ENGINEER — ANH D. NGUYEN — No. C62370 — Exp. 9/30/11 — CIVIL — STATE OF CALIFORNIA

THE STATE OF CALIFORNIA OR ITS OFFICERS OR AGENTS SHALL NOT BE RESPONSIBLE FOR THE ACCURACY OR COMPLETENESS OF ELECTRONIC COPIES OF THIS PLAN SHEET.

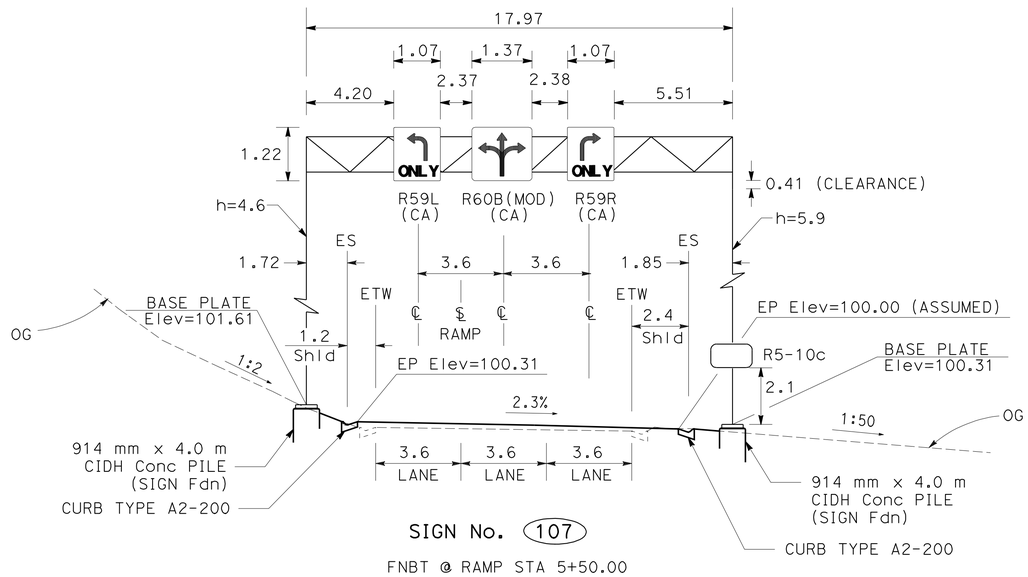

SIGN No. 107

FNBT @ RAMP STA 5+50.00

1. FURNISH AND INSTALL OVERHEAD STRUCTURE (LIGHTWEIGHT, TYPE A-2).
2. INSTALL SIGN PANELS.
3. ILLUMINATION REQUIRED.
4. POST SIZE NPS=10, "+"=12.7.
5. CROSS BEAM SIZE 203 mm X 102 mm X 6.4 mm.

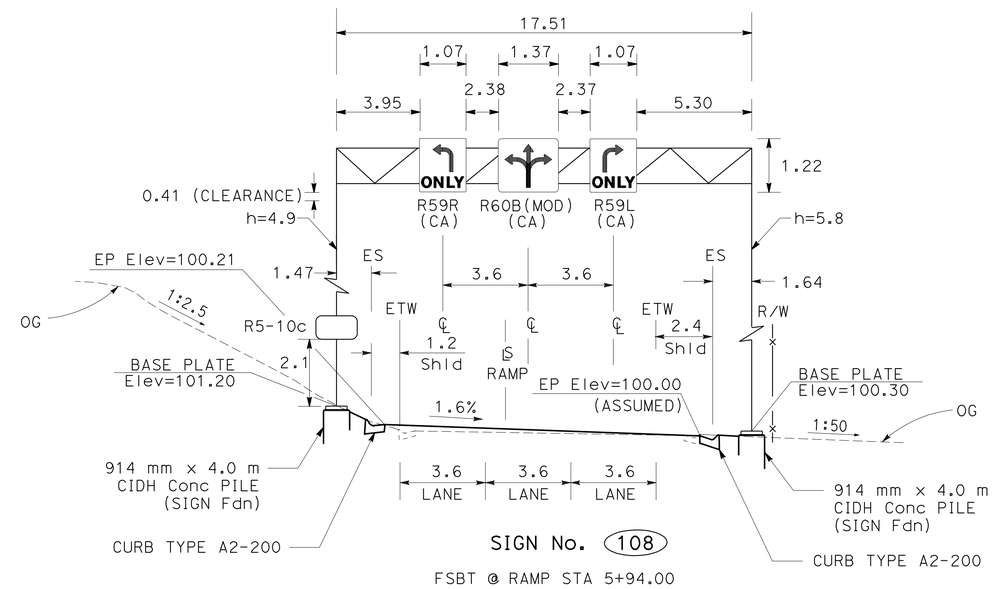

SIGN No. 108

FSBT @ RAMP STA 5+94.00

1. FURNISH AND INSTALL OVERHEAD STRUCTURE (LIGHTWEIGHT, TYPE A-2).
2. INSTALL SIGN PANELS.
3. ILLUMINATION REQUIRED.
4. POST SIZE NPS=10, "+"=12.7.
5. CROSS BEAM SIZE 203 mm X 102 mm X 6.4 mm.

ALL DIMENSIONS ARE IN METERS UNLESS OTHERWISE SHOWN

SIGN DETAILS

NO SCALE

SD-3

CALCULATED-DESIGNED BY	CHECKED BY	REVISED BY	DATE REVISED	FUNCTIONAL SUPERVISOR
JANE CHANG	ANH D. NGUYEN	J.C.	11/2007	ALI ZAGHARI

STATE OF CALIFORNIA - DEPARTMENT OF TRANSPORTATION
Caltrans TRAFFIC DESIGN

LAST REVISION 00-00-00 DATE PLOTTED => 21-SEP-2010 TIME PLOTTED => 11:33

Dist	COUNTY	ROUTE	KILOMETER POST TOTAL PROJECT	SHEET No.	TOTAL SHEETS
07	LA	101	24.9/25.9	83	213

REGISTERED CIVIL ENGINEER 7-17-10 DATE

8-9-10
PLANS APPROVAL DATE

REGISTERED PROFESSIONAL ENGINEER ANH D. NGUYEN No. C62370 Exp. 9/30/11 CIVIL STATE OF CALIFORNIA

THE STATE OF CALIFORNIA OR ITS OFFICERS OR AGENTS SHALL NOT BE RESPONSIBLE FOR THE ACCURACY OR COMPLETENESS OF ELECTRONIC COPIES OF THIS PLAN SHEET.

Caltrans Metric

NOTES:

1. THE CONTRACTOR SHALL VERIFY ALL CONTROLLING FIELD DIMENSIONS BEFORE ORDERING OR FABRICATING ANY MATERIAL.
2. FOR DETAILS NOT SHOWN, SEE STANDARD PLANS.
3. DAMAGED SOUNDWALL BLOCKS WILL BE REPLACED IN KIND.
4. ALL STEEL SHALL TO BE GALVANIZED AFTER FABRICATION.
5. RESIN CAPSULE ANCHORAGE IS SUBJECT TO APPROVAL OF ENGINEER. INSTALLATION PROCEDURES SHALL COMPLY WITH MANUFACTURER'S INSTRUCTIONS.
6. WASHER ASSEMBLY CONSISTS OF TWO OVERSIZED WASHERS, NUT AND JAM NUT.
7. SEE SIGN PLANS FOR SIGN LOCATION.

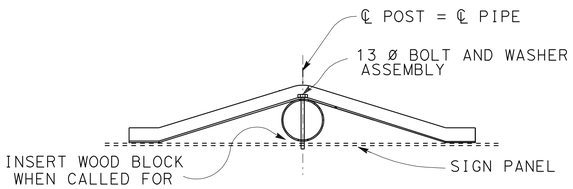

PLAN

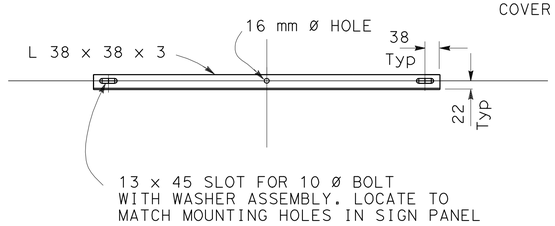

ELEVATION

BACK BRACE DETAILS

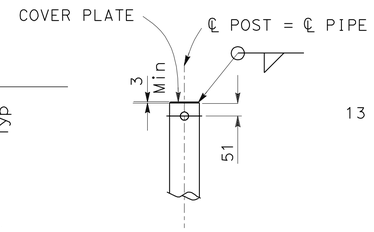

TOP OF POST DETAIL

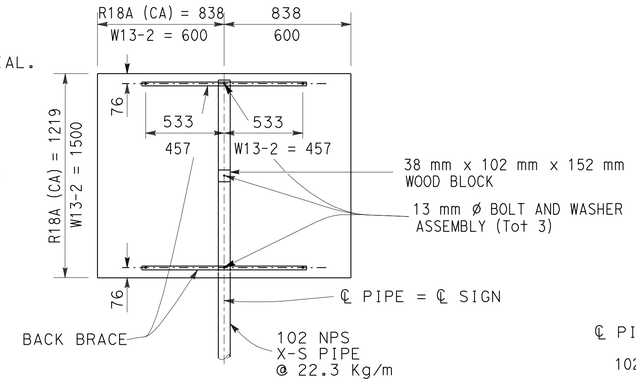

SIGN R18A(CA) & W13-2

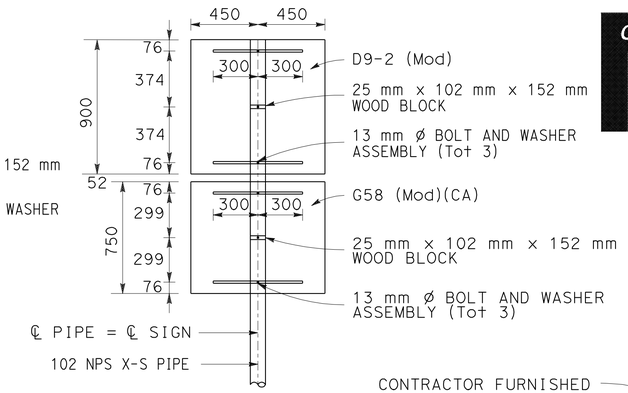

SIGN D9-2(Mod) & G58A (Mod)(CA)

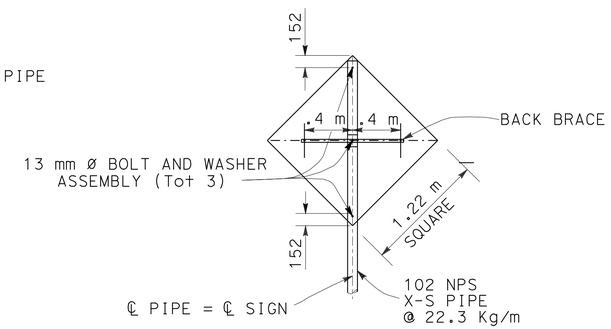

SIGN W3-3

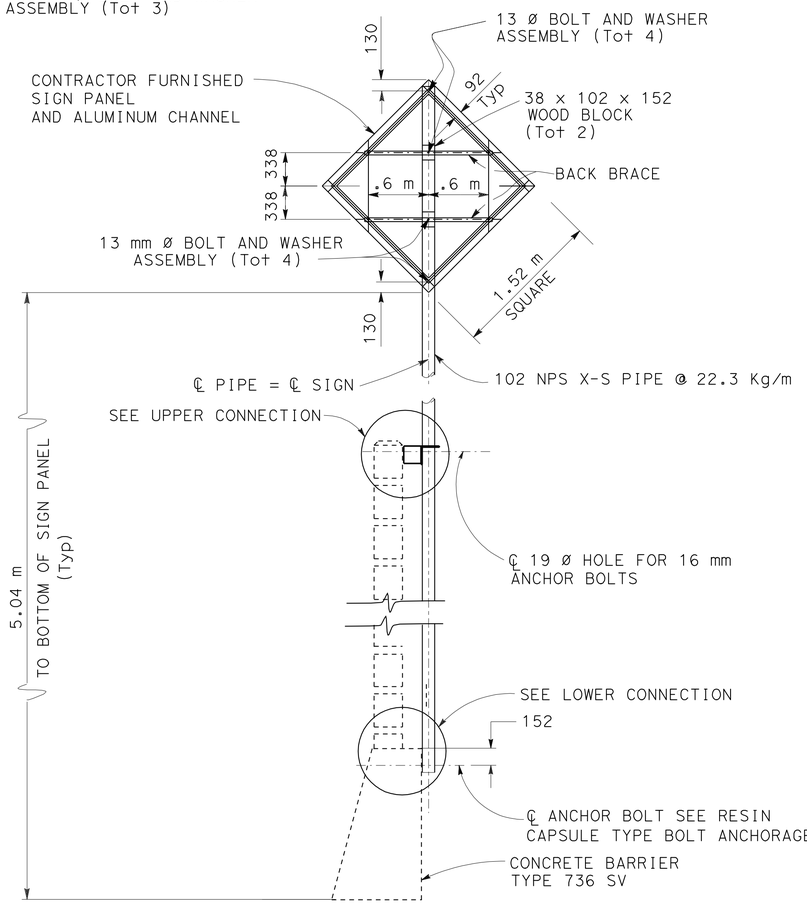

ELEVATION

SIGN W4-7

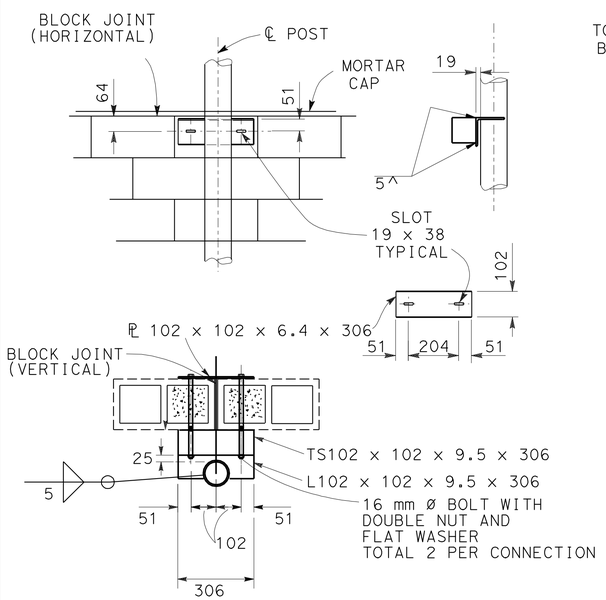

UPPER CONNECTION

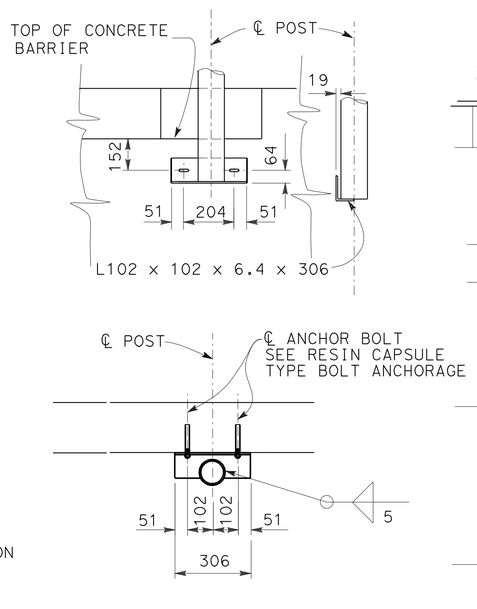

LOWER CONNECTION

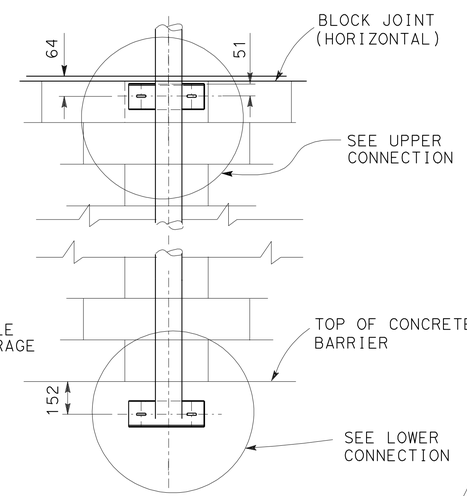

PART SIDE

ELEVATION

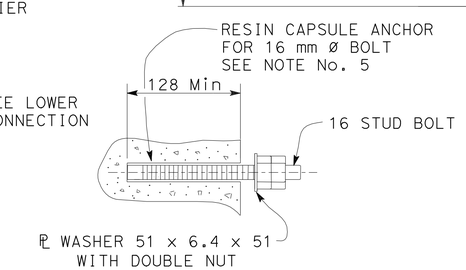

RESIN CAPSULE TYPE BOLT ANCHORAGE

ALL DIMENSIONS ARE IN MILLIMETERS UNLESS OTHERWISE SHOWN

SIGN DETAILS

NO SCALE

SD-4

JANE CHANG	J.C.
ANH D. NGUYEN	11/2007
REVISED BY	DATE REVISED
CALCULATED-DESIGNED BY	
CHECKED BY	
FUNCTIONAL SUPERVISOR	
ALI ZAGHARI	

STATE OF CALIFORNIA - DEPARTMENT OF TRANSPORTATION
Caltrans TRAFFIC DESIGN

LAST REVISION 00-00-00 | DATE PLOTTED => 21-SEP-2010 | TIME PLOTTED => 11:33

DIST	COUNTY	ROUTE	KILOMETER POST TOTAL PROJECT	SHEET No	TOTAL SHEETS
07	LA	101	24.9/25.9	84	213

Genaro M. Doria 12/27/07
REGISTERED CIVIL ENGINEER DATE

8-9-10
PLANS APPROVAL DATE

REGISTERED PROFESSIONAL ENGINEER GENARO M. DORIA No. C63583 Exp. 9/30/10 CIVIL STATE OF CALIFORNIA

The State of California or its officers or agents shall not be responsible for the accuracy or completeness of electronic copies of this plan sheet.

INDEX TO PLANS

1. PLAN AND ELEVATION DETAIL
2. DETAILS NO. 1
3. DETAILS NO. 1
4. LIMITS OF CONCRETE REMOVAL
5. OH SIGN PEDESTAL @ 252+43
5. LOG OF TEST BORINGS

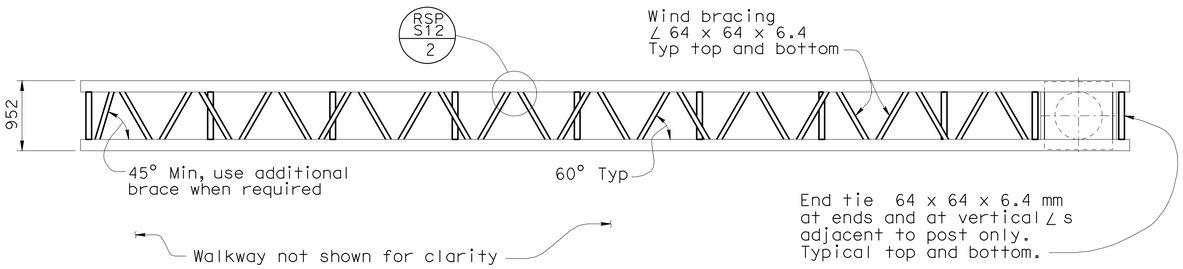

PLAN VIEW

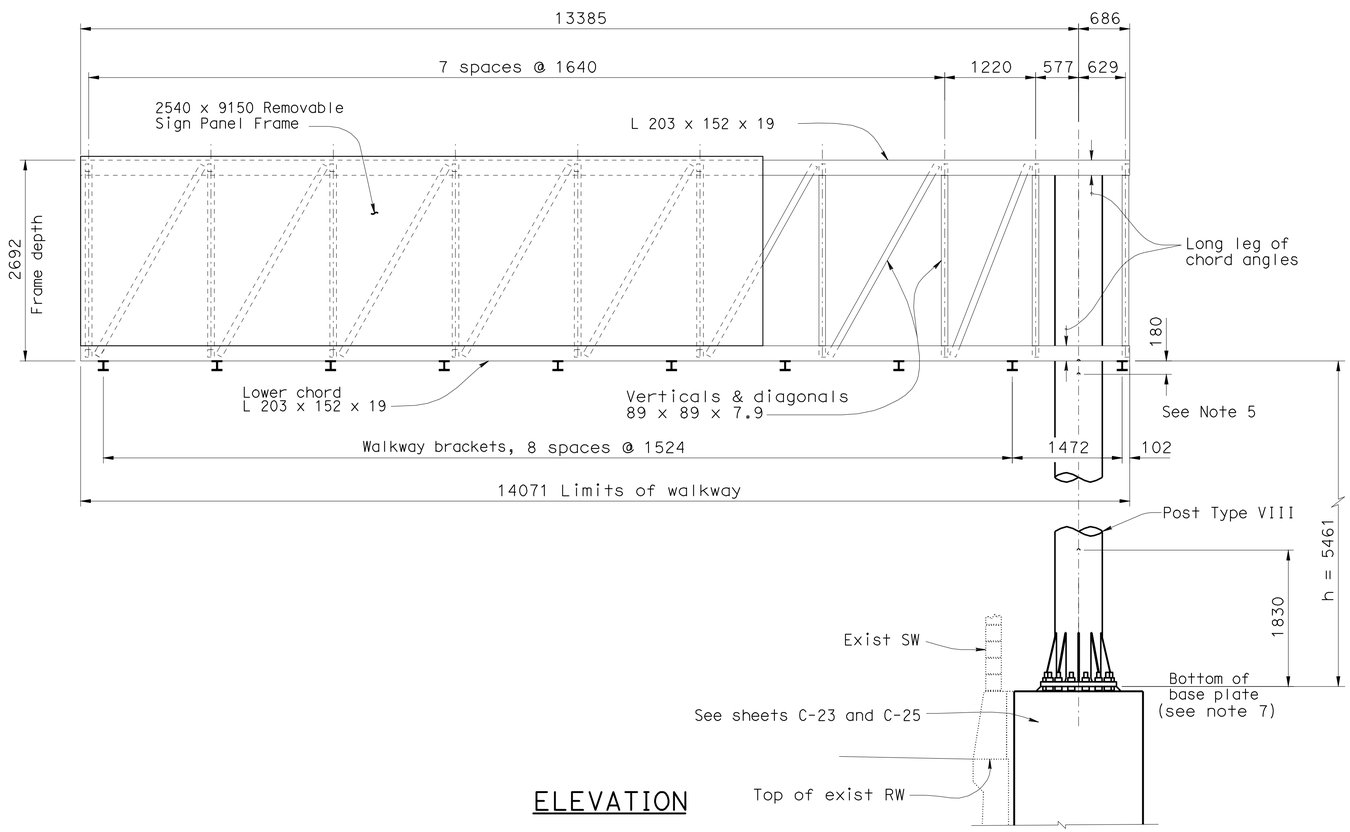

ELEVATION

FNBT near Sta 252+43

For details not shown, see sheets C-21, C-22, C-23, C-24 and

RSP-S3 | RSP S12 | RSP S13 | RSP S18 | RSP S20 | S21

NOTES:

1. For details not shown, see "STANDARD PLANS" dated July 2004 and "REVISED STANDARD PLANS".
2. The Contractor shall verify all controlling field dimensions before ordering or fabricating any material.
3. All steel shall be galvanized after fabrication.
4. All welding details shall conform to the requirements of AWS D1.1 and Special Provisions.
5. All welds and cuts made during construction are considered damaged area.
6. No bolt splicing in chords shall be allowed.
7. For location of sign and "Base plate elevation" see "Road Plans".

SIGN DETAILS

NO SCALE

SD-5

Caltrans Metric

	BY	CHECKED
DESIGN	GENARO DORIA	JOEL MAGANA
DETAILS	P C WELLS	G DORIA
QUANTITIES	G DORIA	J MAGANA

STATE OF CALIFORNIA DEPARTMENT OF TRANSPORTATION

DIVISION OF ENGINEERING SERVICES STRUCTURE DESIGN
SPECIAL DESIGNS BRANCH

BRIDGE NO.
KILOMETER POST 24.8/25.6

OH SIGN TRUSS ON RW/SW-250
PLAN AND ELEVATION DETAIL

ALL DIMENSIONS ARE IN MILLIMETERS UNLESS OTHERWISE SHOWN

ORIGINAL SCALE IN MILLIMETERS FOR REDUCED PLANS 0 10 20 30 40 50 60 70 80 90 100

CU 07
EA 199631

DISREGARD PRINTS BEARING EARLIER REVISION DATES 10/24/07 10/30/07

REVISION DATES

SHEET 1 OF 6

FILE => 719963ob005.dgn

STRUCTURES DESIGN DETAIL SHEET (METRIC) (REV.03-17-04)

USERNAME => trmikest DATE PLOTTED => 21-SEP-2010 TIME PLOTTED => 11:33

DIST	COUNTY	ROUTE	KILOMETER POST TOTAL PROJECT	SHEET No	TOTAL SHEETS
07	LA	101	24.9/25.9	85	213

REGISTERED CIVIL ENGINEER 12/27/07 DATE

8-9-10
PLANS APPROVAL DATE

REGISTERED PROFESSIONAL ENGINEER GENARO M. DORIA No. C63583 Exp. 9/30/10 CIVIL STATE OF CALIFORNIA

The State of California or its officers or agents shall not be responsible for the accuracy or completeness of electronic copies of this plan sheet.

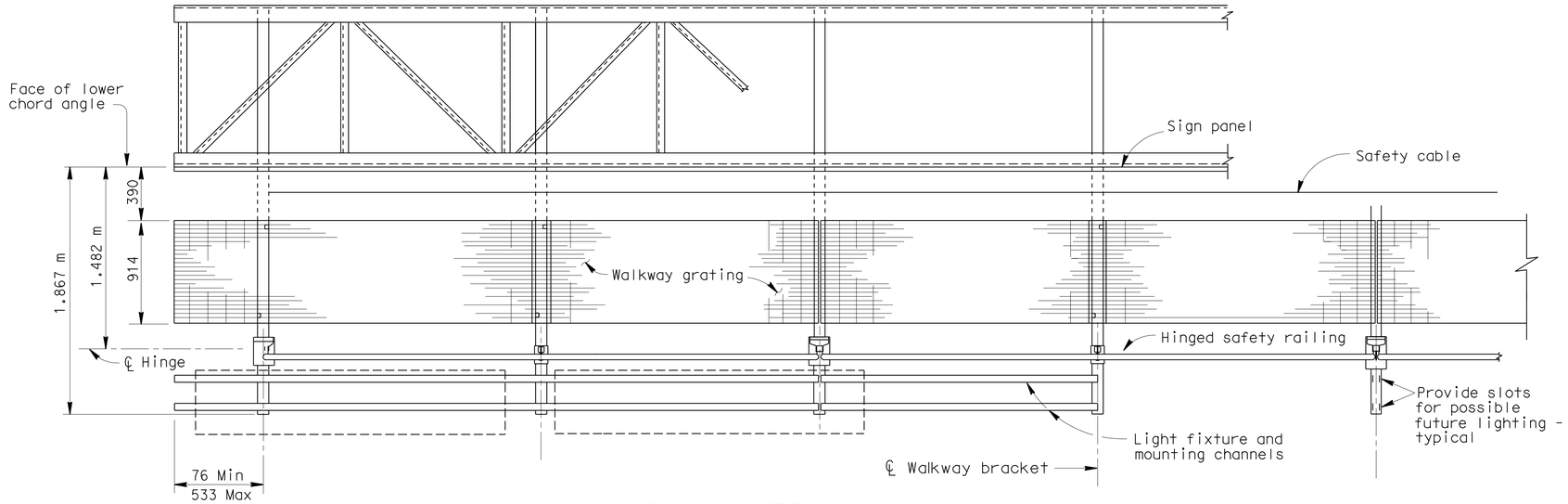

WALKWAY PLAN (TRUSS)

NO SCALE

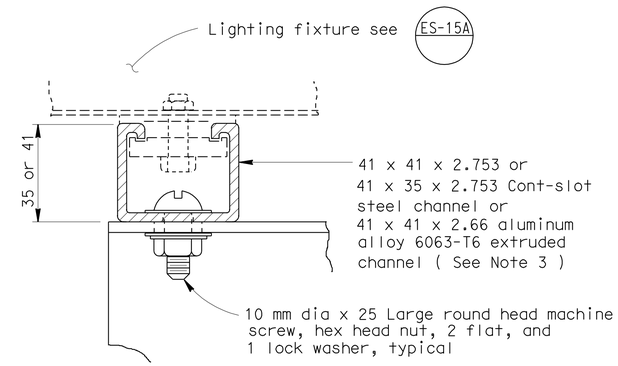

LIGHTING FIXTURE MOUNTING CHANNEL DETAILS 1

NO SCALE

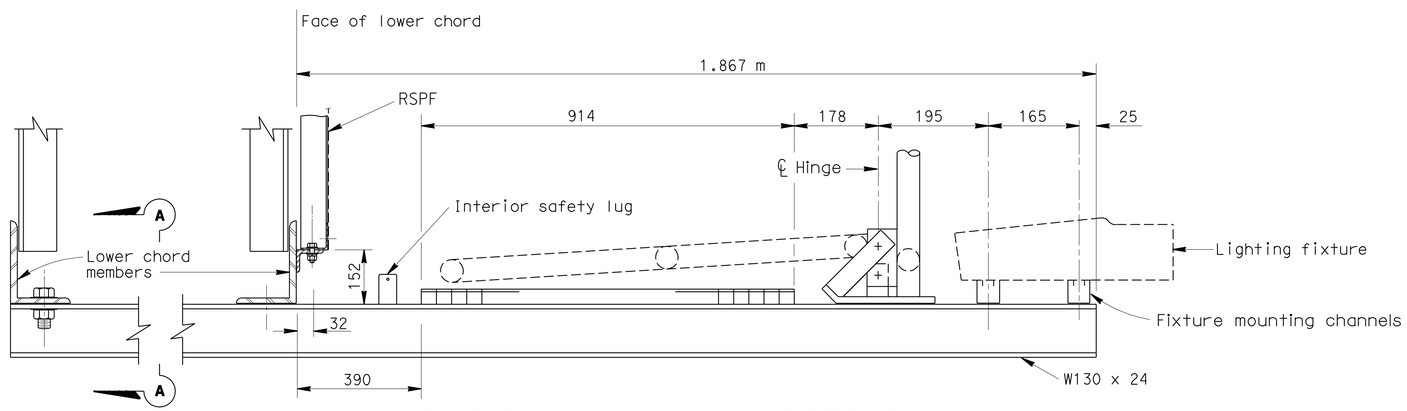

TRUSS

TYPICAL WALKWAY SECTION

NO SCALE

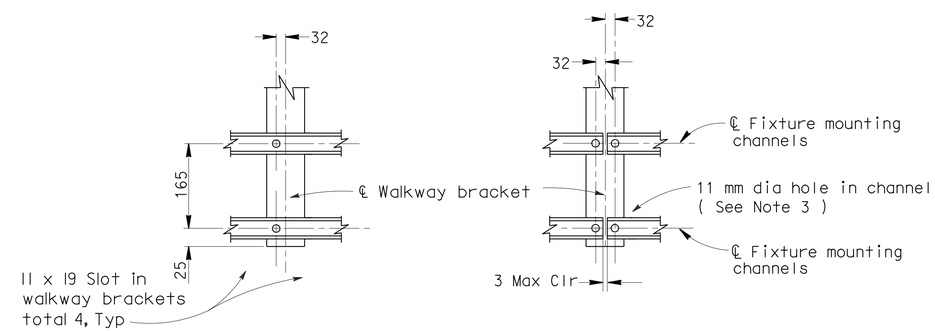

TYPICAL CONNECTION **CONNECTION AT SPLICE**

CHANNEL DETAILS 2 LIGHTING FIXTURE MOUNTING

NO SCALE

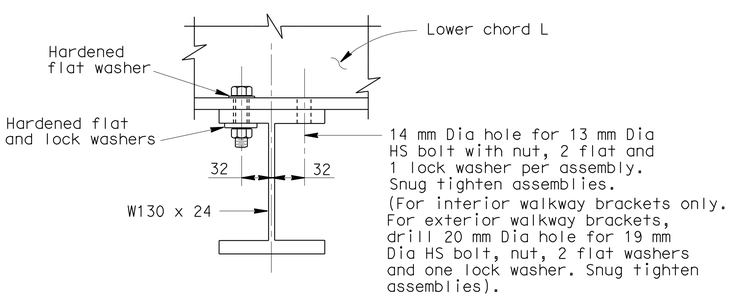

SECTION A-A

NO SCALE

NOTES:

1. For spacing of light fixtures, see Standard Plan ES-15A.
2. Contractor may substitute 41 x 41 x 2.753 cont-slot steel channel with pre-punched slots not larger than 10 mm x 77 mm. Slots shall be at bottom of channel and shall be parallel to channel. Slots shall be spaced not closer than 100 mm center to center

SIGN DETAILS

NO SCALE

SD-6

THIS SHEET ACCURATE FOR SIGN WORK ONLY

Caltrans Metric

	BY	CHECKED
DESIGN	GENARO DORIA	JOEL MAGANA
DETAILS	R. YEE	G DORIA
QUANTITIES	G DORIA	J MAGANA

STATE OF CALIFORNIA DEPARTMENT OF TRANSPORTATION

DIVISION OF ENGINEERING SERVICES STRUCTURE DESIGN SPECIAL DESIGNS BRANCH

BRIDGE NO.
KILOMETER POST 24.8/25.6

OH SIGN TRUSS ON RW/SW-250
DETAILS NO. 1

ALL DIMENSIONS ARE IN MILLIMETERS UNLESS OTHERWISE SHOWN

ORIGINAL SCALE IN MILLIMETERS FOR REDUCED PLANS 0 10 20 30 40 50 60 70 80 90 100

CU 07
EA 199631

DISREGARD PRINTS BEARING EARLIER REVISION DATES 10/26/07 10/30/07

SHEET 2 OF 6

FILE => 719963ob006.dgn

STRUCTURES DESIGN DETAIL SHEET (METRIC) (REV.03-17-04)

USERNAME => trmikest DATE PLOTTED => 21-SEP-2010 TIME PLOTTED => 11:34

DIST	COUNTY	ROUTE	KILOMETER POST TOTAL PROJECT	SHEET No	TOTAL SHEETS
07	LA	101	24.9/25.9	86	213

REGISTERED CIVIL ENGINEER — DATE 12/27/07

8-9-10
PLANS APPROVAL DATE

REGISTERED PROFESSIONAL ENGINEER GENARO M. DORIA No. C63583 Exp. 9/30/10 CIVIL STATE OF CALIFORNIA

The State of California or its officers or agents shall not be responsible for the accuracy or completeness of electronic copies of this plan sheet.

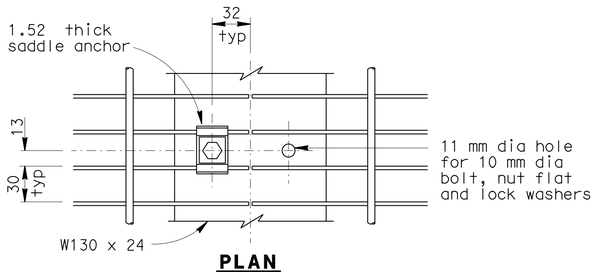

PLAN

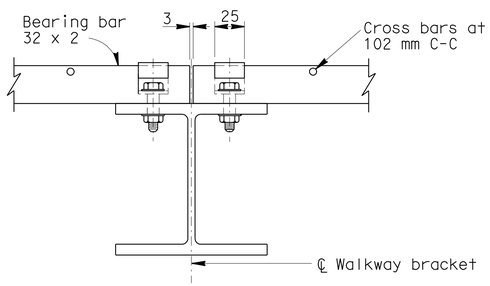

WALKWAY GRATING DETAILS

NO SCALE
(Shown at splice)

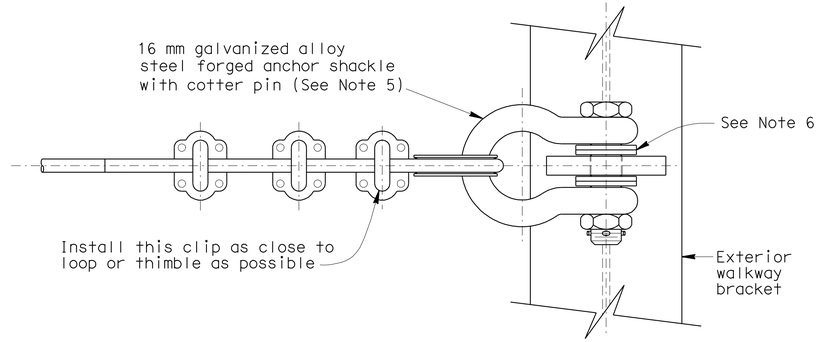

PLAN

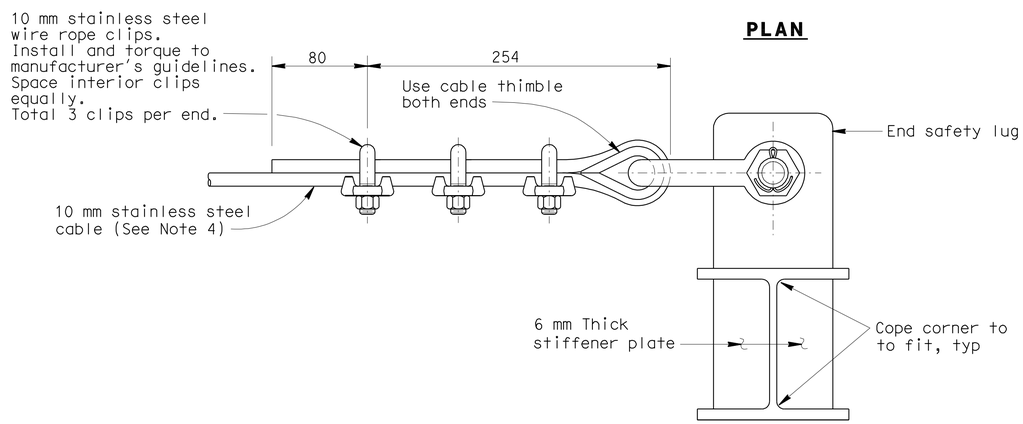

ELEVATION

END VIEW SAFETY CABLE

NO SCALE

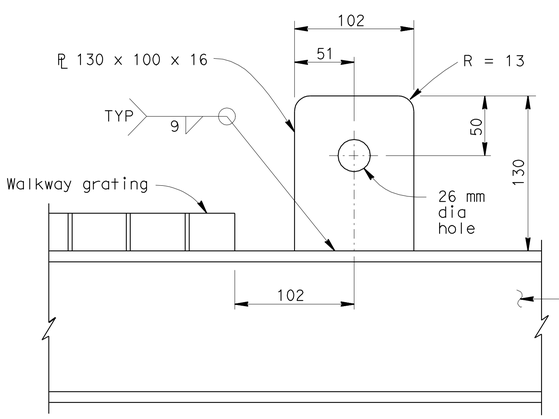

INTERIOR SAFETY LUG DETAIL

NO SCALE

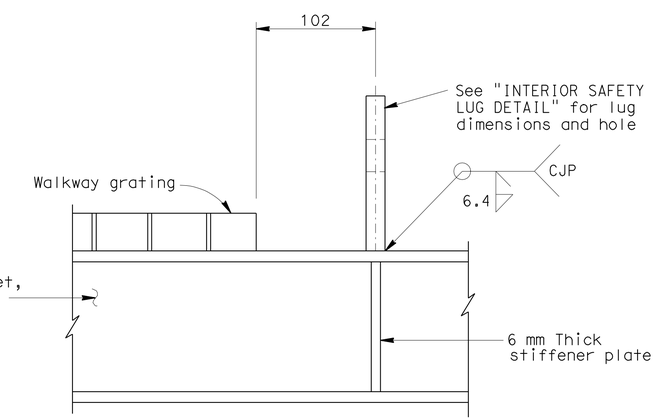

END SAFETY LUG DETAIL

NO SCALE

NOTES:

1. Welded type grating shall have 32 x 3 bearing bars at 30 mm centers with 6 mm diameter (or equal) cross bars at 102 mm centers. If mechanical lock grating is used, it shall be equal in strength to the welded type. Alternate hold-down clips may be submitted for approval.
2. Walkway grating and light fixture mounting channels to be continuous (no splices) over as many walkway brackets as practical and consistent with fabrication, ease of handling and assembly.
3. Stainless steel cable shall be 7 x 19 class strand core construction using Type 302 or 304 alloy stainless steel strands. Minimum cable breaking strength shall exceed 45 kN. Cable shall be free of kinks, knots or deformation and shall be continuous end lugs. Safety cable shall not be prestretched.
4. Shackle shall be galvanized steel with working load limit of 45 kN.
5. Place an equal amount of washers on each side to align cable with end lug without restricting shackle bolt rotation or contacting cable.
6. Cable shall be installed with a deflection not to exceed 25 mm, measured from taut position, when pulled with an upward force of 0.13 kN at midpoint between any two walkway brackets.
7. Prior to tightening cable clips at exterior anchorage, slack in cable shall be removed by the full effort of a typical construction worker.

SIGN DETAILS

NO SCALE

SD-7

THIS SHEET ACCURATE FOR SIGN WORK ONLY

Caltrans Metric

	BY	CHECKED
DESIGN	GENARO DORIA	JOEL MAGANA
DETAILS	R. YEE	G DORIA
QUANTITIES	G DORIA	J MAGANA

STATE OF CALIFORNIA
DEPARTMENT OF TRANSPORTATION

DIVISION OF ENGINEERING SERVICES
STRUCTURE DESIGN
SPECIAL DESIGNS BRANCH

BRIDGE NO.
KILOMETER POST 24.8/25.6

OH SIGN TRUSS ON RW/SW-250
DETAILS NO. 2

ALL DIMENSIONS ARE IN MILLIMETERS UNLESS OTHERWISE SHOWN

ORIGINAL SCALE IN MILLIMETERS FOR REDUCED PLANS 0 10 20 30 40 50 60 70 80 90 100

CU 07
EA 199631

DISREGARD PRINTS BEARING EARLIER REVISION DATES 10/26/07

REVISION DATES

SHEET 3 OF 6

FILE => 719963ob007.dgn

STRUCTURES DESIGN DETAIL SHEET (METRIC) (REV.03-17-04)

USERNAME => rtmikesi DATE PLOTTED => 21-SEP-2010 TIME PLOTTED => 11:34

DIST	COUNTY	ROUTE	KILOMETER POST TOTAL PROJECT	SHEET No	TOTAL SHEETS
07	LA	101	24.9/25.9	87	213

REGISTERED CIVIL ENGINEER DATE

8-9-10
PLANS APPROVAL DATE

REGISTERED PROFESSIONAL ENGINEER
ANDREW BUI
No. C63560
Exp. 9/30/08
CIVIL
STATE OF CALIFORNIA

The State of California or its officers or agents shall not be responsible for the accuracy or completeness of electronic copies of this plan sheet.

LEGEND

EXISTING STRUCTURE

INDICATES CONCRETE REMOVAL

NOTE:

Existing reinforcng bars to remain as shown on "MISCELANEOUS DETAILS NO. 1" sheet

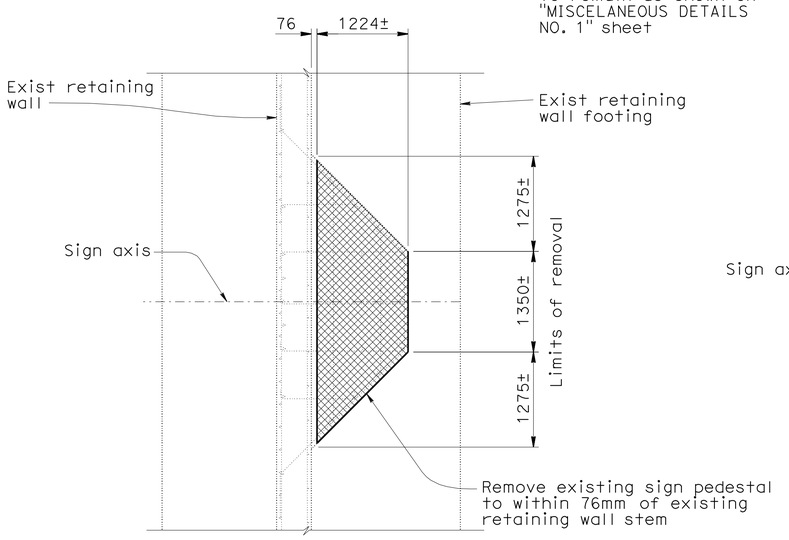

CONCRETE REMOVAL @ PEDESTAL

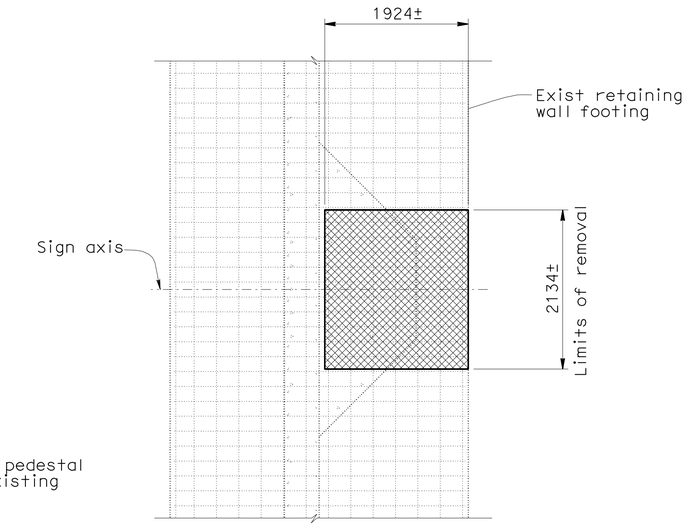

CONCRETE REMOVAL @ FOOTING

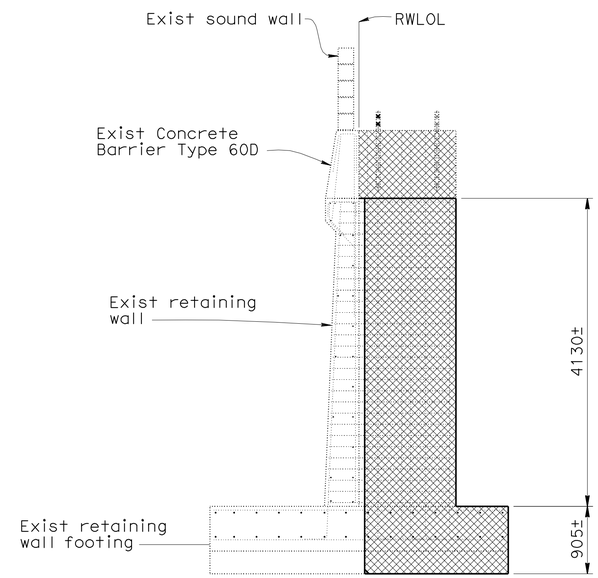

CONCRETE REMOVAL

SIGN DETAILS

NO SCALE

SD-8

DESIGN	BY ANDREW BUI	CHECKED V LOPEZ	
DETAILS	BY P C WELLS	CHECKED ANDREW BUI	
QUANTITIES	BY ANDREW BUI	CHECKED V LOPEZ	

STATE OF CALIFORNIA
DEPARTMENT OF TRANSPORTATION

DIVISION OF ENGINEERING SERVICES
STRUCTURE DESIGN
SPECIAL DESIGN BRANCH

BRIDGE NO.
POST MILE 24.8/25.6

OH SIGN PEDESTAL @ STA 252+43
LIMITS OF CONCRETE REMOVAL

Caltrans Metric

STRUCTURES DESIGN SPECIAL DESIGN SHEET (METRIC) (REV. 5-29-07)

ORIGINAL SCALE IN MILLIMETERS FOR REDUCED PLANS 0 10 20 30 40 50 60 70 80 90 100

CU 07
EA 199634

DISREGARD PRINTS BEARING EARLIER REVISION DATES 10/23/07 10/30/07

REVISION DATES

SHEET 4 OF 6

FILE => 719963ob008.dgn

USERNAME => trmikest DATE PLOTTED => 21-SEP-2010 TIME PLOTTED => 11:34

DIST	COUNTY	ROUTE	KILOMETER POST TOTAL PROJECT	SHEET No	TOTAL SHEETS
07	LA	101	24.9/25.9	88	213

REGISTERED CIVIL ENGINEER DATE

8-9-10
PLANS APPROVAL DATE

REGISTERED PROFESSIONAL ENGINEER ANDREW BUI No. C63560 Exp. 9/30/08 CIVIL STATE OF CALIFORNIA

The State of California or its officers or agents shall not be responsible for the accuracy or completeness of electronic copies of this plan sheet.

NOTES:

1. Reinforcing shall be centered from sign axis.
2. For location of Sign, see "Road Plans".
3. Provide temporary shoring for retaining wall prior to removal of concrete footing.
4. See STD Plan for details not shown.

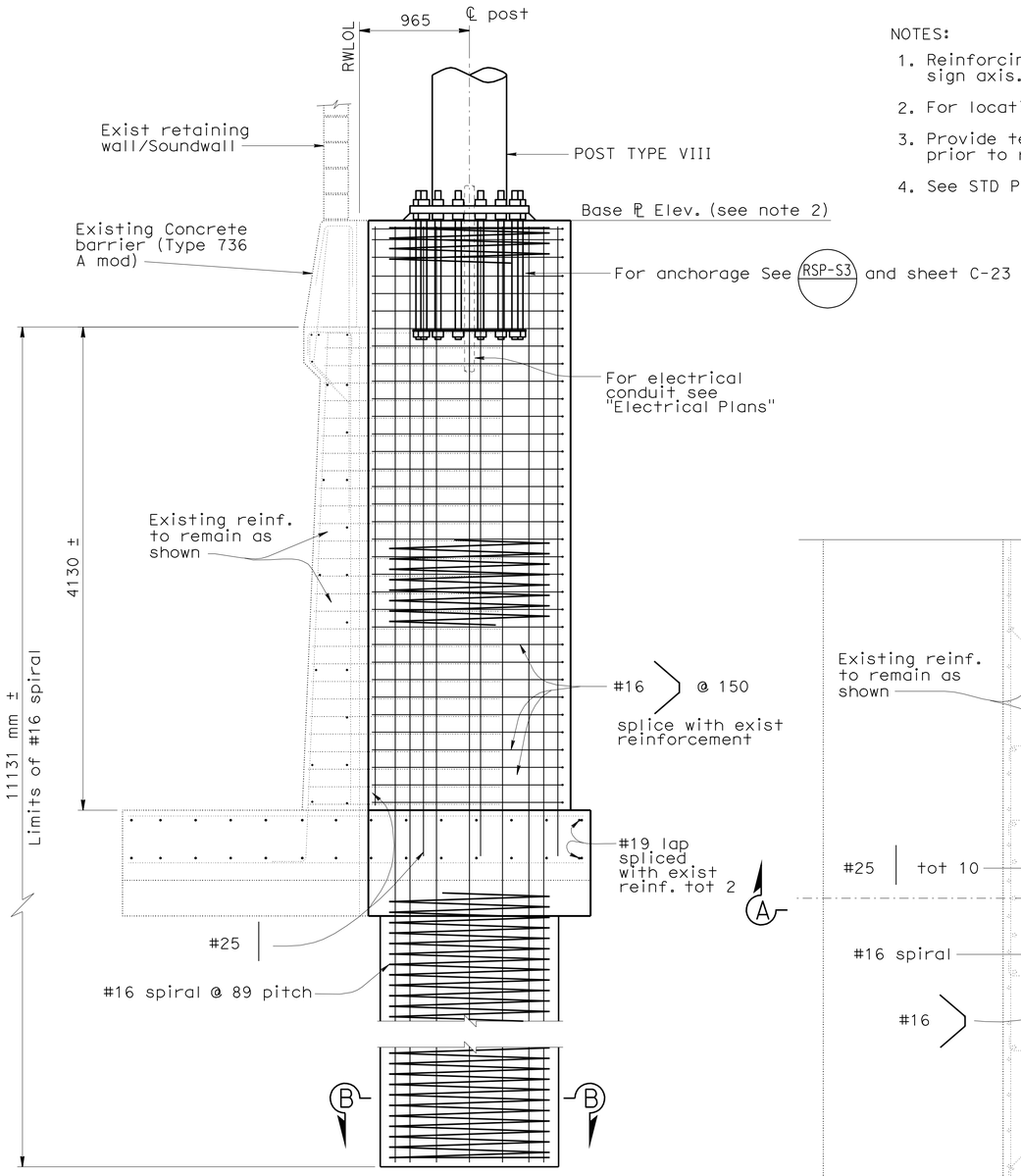

SECTION A-A

NO SCALE

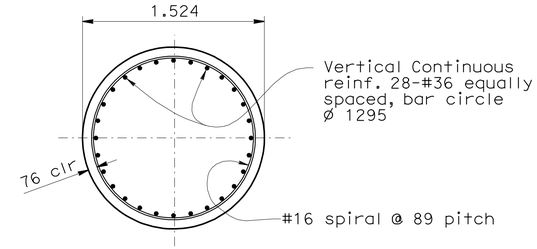

SECTION B-B

NO SCALE

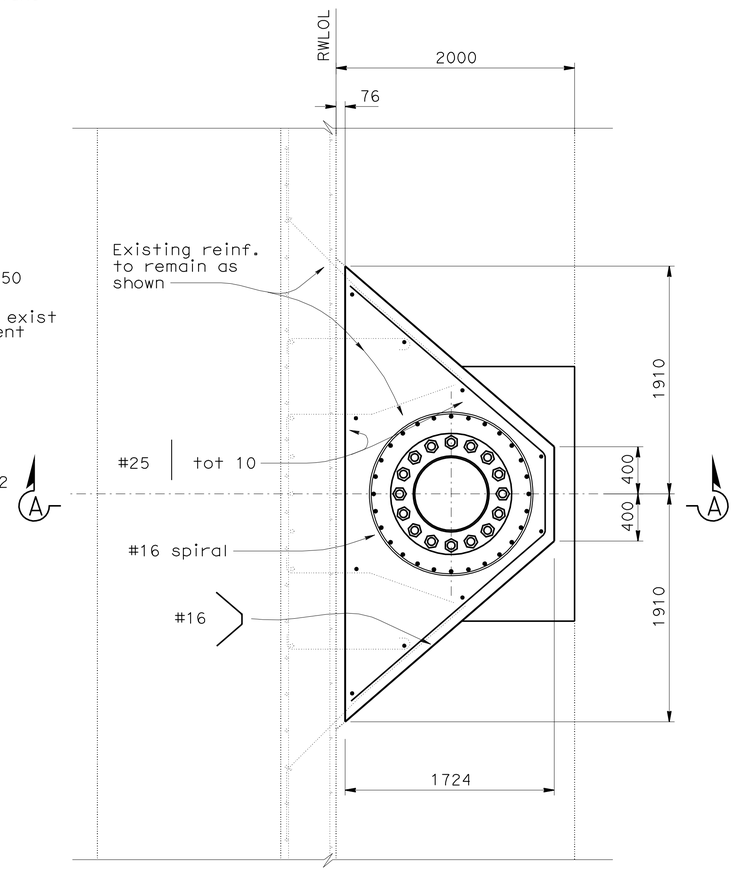

PLAN

NO SCALE

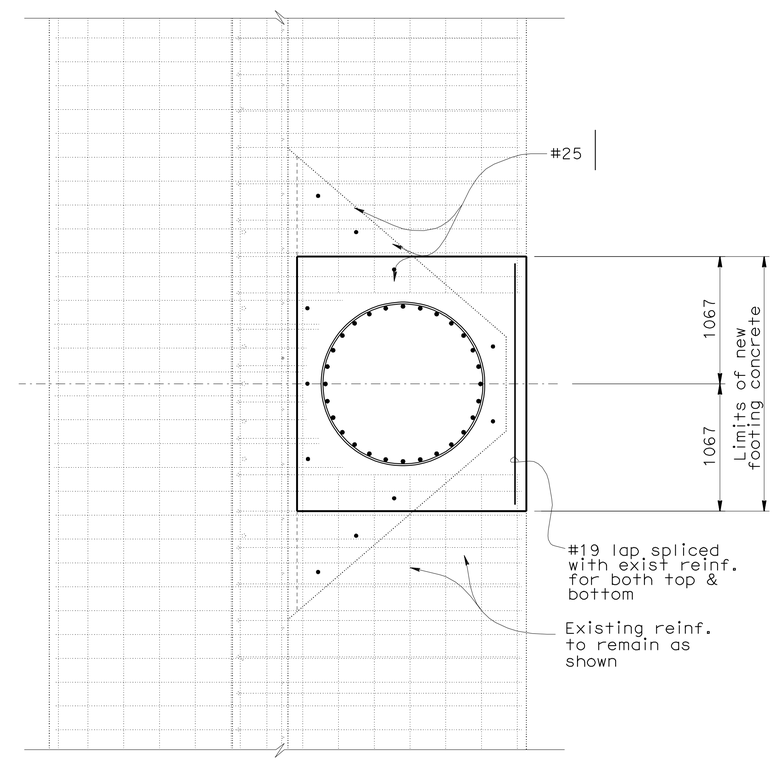

FOOTING REINFORCING PLAN

NO SCALE

THE CONTRACTOR SHALL VERIFY ALL CONTROLLING FIELD DIMENSIONS BEFORE ORDERING OR FABRICATING ANY MATERIAL.

SIGN DETAILS

NO SCALE

SD-9

Caltrans Metric

	BY	CHECKED
DESIGN	ANDREW BUI	V LOPEZ
DETAILS	P C WELLS	A BUI
QUANTITIES	A BUI	V LOPEZ

STATE OF CALIFORNIA DEPARTMENT OF TRANSPORTATION

DIVISION OF ENGINEERING SERVICES STRUCTURE DESIGN SPECIAL DESIGN BRANCH

BRIDGE NO.

POST MILE 24.8/25.6

OH SIGN PEDESTAL @ STA 252+43

MISCELLANEOUS DETAILS No. 1

STRUCTURES DESIGN SPECIAL DESIGN SHEET (METRIC) (REV. 5-29-07)

ORIGINAL SCALE IN MILLIMETERS FOR REDUCED PLANS 0 10 20 30 40 50 60 70 80 90 100

CU 07
EA 199631

DISREGARD PRINTS BEARING EARLIER REVISION DATES

REVISION DATES 10/23/07 12-17-07

SHEET 5 OF 6

FILE => 719963ob009.dgn

USERNAME => ttmikes1 DATE PLOTTED => 21-SEP-2010 TIME PLOTTED => 11:34

DIST	COUNTY	ROUTE	KILOMETER POST TOTAL PROJECT	SHEET No	TOTAL SHEETS
07	LA	101	24.9/25.9	89	213

REGISTERED CIVIL ENGINEER 12-03-07

8-9-10
PLANS APPROVAL DATE

REGISTERED PROFESSIONAL ENGINEER
Deepa Wathugala
No. C63838
Exp. 9-30-08
CIVIL
STATE OF CALIFORNIA

The State of California or its officers or agents shall not be responsible for the accuracy or completeness of electronic copies of this plan sheet.

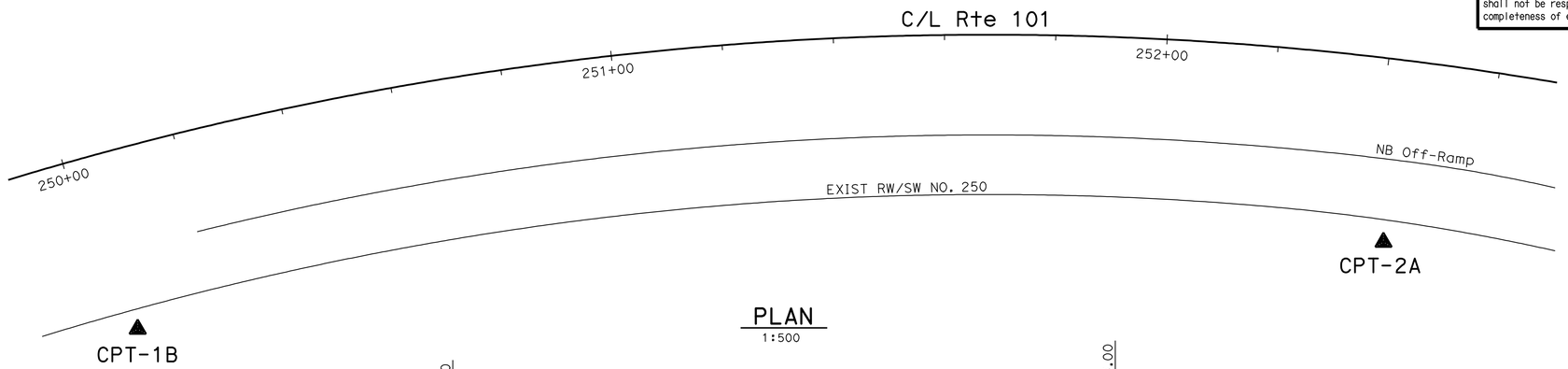

PLAN
1:500

BENCH MARK

BM No. PRHV 105 Elev=199.022 m

A chisled 'X' in the top of curb at the MPC in the CUL-DE-SAC at the south end of Tyrone St. southerly of Riverside Drive & on the north side of the Los Angeles River Flood Control Channel.

Note: Ground water was not measured during field investigation.

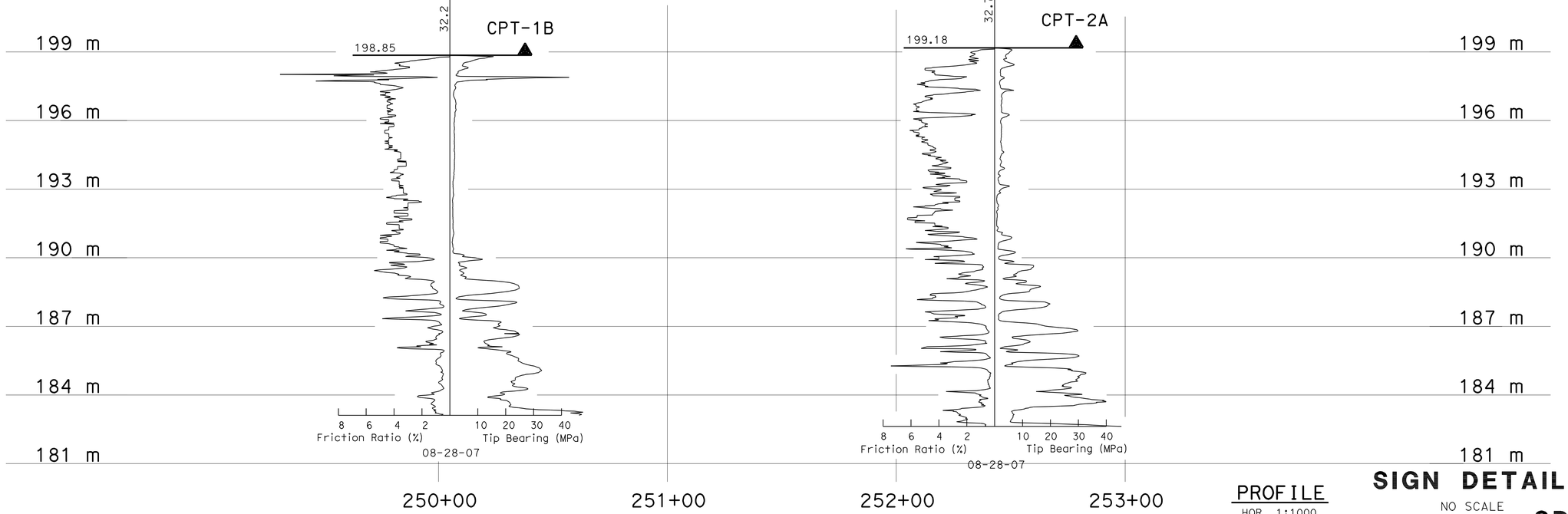

PROFILE
HOR. 1:1000
VER. 1:100

SIGN DETAILS

NO SCALE

SD-10

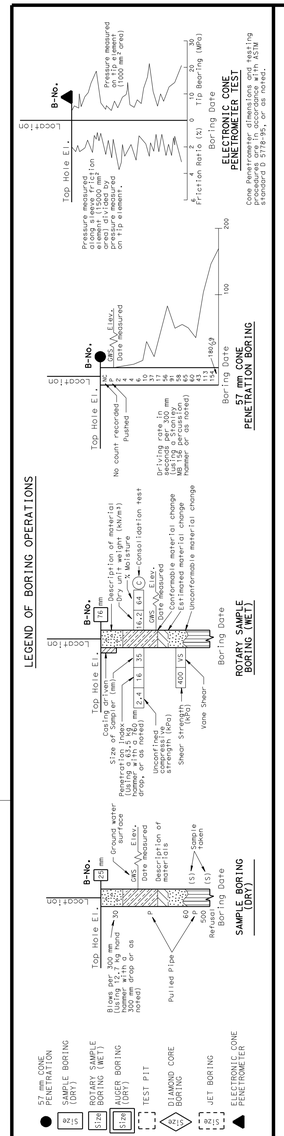

LEGEND OF EARTH MATERIALS

GRAVEL, SAND, SILT, CLAY, SANDY CLAY or CLAYEY SAND, SANDY SILT or SILTY SAND, SILTY CLAY, CLAYEY SILT, PEAT and/or ORGANIC MATTER, COBBLES and/or BOULDERS, IGNEOUS ROCK, SEDIMENTARY ROCK, METAMORPHIC

CONSISTENCY CLASSIFICATION FOR SOILS

According to the Standard Penetration Test

SPT N-Value (Blows/ 0.3m)	Granular	SPT N-Value (Blows/ 0.3m)	Cohesive
0-4	Very Loose	<2	Very Soft
5-10	Loose	2-4	Soft
11-30	Medium Dense	5-8	Firm
31-50	Dense	9-15	Stiff
>50	Very Dense	16-30	Very stiff
		>30	Hard

NOTE: Classification of earth material as shown on this sheet is based upon field inspection and is not to be construed to imply mechanical analysis.

OGS CIVIL LOG OF TEST BORINGS SHEET (METRIC) (REV. 4/04)

Caltrans Metric

ENGINEERING SERVICES	GEOTECHNICAL SERVICES
DRAWN BY	W. Tang 11/07
CHECKED BY	D. Wathugala

ALL DIMENSIONS ARE IN METERS UNLESS OTHERWISE SHOWN

FIELD INVESTIGATION BY: D. Wathugala

ORIGINAL SCALE IN MILLIMETERS FOR REDUCED PLANS 0 10 20 30 40 50 60 70 80 90 100

STATE OF CALIFORNIA
DEPARTMENT OF TRANSPORTATION

DIVISION OF ENGINEERING SERVICES
STRUCTURE DESIGN
DESIGN BRANCH

CU 07
EA 199631

BRIDGE NO.
KILOMETER POST 24.6/25.9

OVERHEAD SIGN STRUCTURES A AND B
LOG OF TEST BORINGS

DISREGARD PRINTS BEARING EARLIER REVISION DATES 12-03-07

REVISION DATES (PRELIMINARY STAGE ONLY)

SHEET 6 OF 6

FILE => 719963ob010.dgn

USERNAME => trmikest DATE PLOTTED => 21-SEP-2010 TIME PLOTTED => 11:34

Dist	COUNTY	ROUTE	KILOMETER POST TOTAL PROJECT	SHEET No.	TOTAL SHEETS
07	LA	101	24.9/25.9	90	213

REGISTERED CIVIL ENGINEER 7-17-10 DATE

8-9-10
PLANS APPROVAL DATE

REGISTERED PROFESSIONAL ENGINEER ANH D. NGUYEN No. C62370 Exp. 9/30/11 CIVIL STATE OF CALIFORNIA

THE STATE OF CALIFORNIA OR ITS OFFICERS OR AGENTS SHALL NOT BE RESPONSIBLE FOR THE ACCURACY OR COMPLETENESS OF ELECTRONIC COPIES OF THIS PLAN SHEET.

Caltrans Metric

G86-5 (CA)

METRIC DIMENSIONS (MILLIMETERS)

A	B	C	D	E	F	G	H	J
4572	2286	356	250E	356	330 & 250E(M)	406	51	305

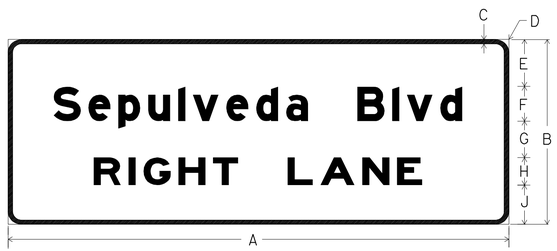

G86-1 (CA)

METRIC DIMENSIONS (MILLIMETERS)

A	B	C	D	E	F	G	H	J
5182	1372	51	305	305	338 & 254E(M)	279	254E	279

1 LINE Horiz ARROW

2 LINE Horiz ARROW

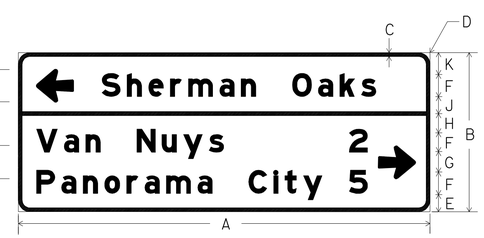

G1-10 (CA)

METRIC DIMENSIONS (MILLIMETERS)

A	B	C	D	E	F	G	H	J	K
2896	1219	25	152	165	152 & 114E(M)	152	191	165	203

813 X 559 Vert DOWN ARROW

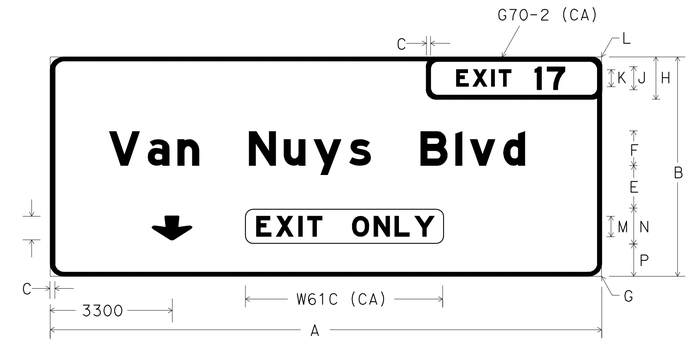

G83-5(MOD) (CA)

METRIC DIMENSIONS (MILLIMETERS)

A	B	C	D	E	F	G	H	J	K	L	M	N	P
7320	2540	51	864	305	406 & 305E(M)	305	610	305E	203E	152	254E	508	356

1 LINE 565 X 635 UP ARROW AT 45 Deg.

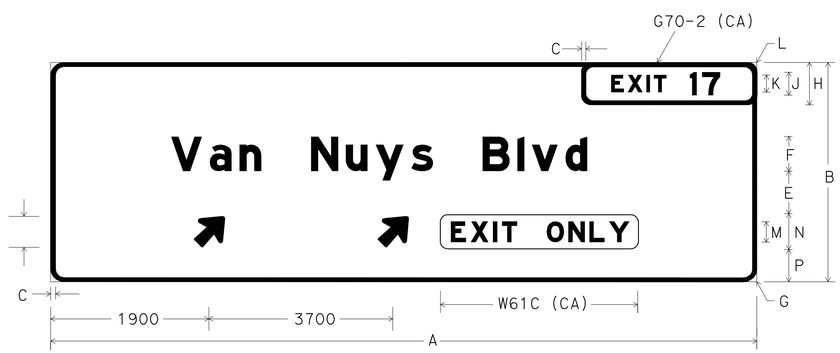

G85-11(MOD) (CA)

METRIC DIMENSIONS (MILLIMETERS)

A	B	C	D	E	F	G	H	J	K	L	M	N	P
9150	2540	51	864	305	406 & 305E(M)	305	610	305E	203E	152	254E	508	356

ALL DIMENSIONS ARE IN MILLIMETERS UNLESS OTHERWISE SHOWN

SIGN DETAILS

NO SCALE

SD-11

STATE OF CALIFORNIA - DEPARTMENT OF TRANSPORTATION
Caltrans **TRAFFIC DESIGN**

FUNCTIONAL SUPERVISOR: ALI ZAGHARI
CALCULATED-DESIGNED BY: JANE CHANG
CHECKED BY: ANH D. NGUYEN
REVISED BY: J.C.
DATE REVISED: 11/2007

LAST REVISION 00-00-00 | DATE PLOTTED => 21-SEP-2010 | TIME PLOTTED => 11:35

×719963ob011.dgn

Dist	COUNTY	ROUTE	KILOMETER POST TOTAL PROJECT	SHEET No.	TOTAL SHEETS
07	LA	101	24.9/25.9	91	213

REGISTERED CIVIL ENGINEER 7-17-10 DATE

8-9-10
PLANS APPROVAL DATE

REGISTERED PROFESSIONAL ENGINEER ANH D. NGUYEN No. C62370 Exp. 9/30/11 CIVIL STATE OF CALIFORNIA

THE STATE OF CALIFORNIA OR ITS OFFICERS OR AGENTS SHALL NOT BE RESPONSIBLE FOR THE ACCURACY OR COMPLETENESS OF ELECTRONIC COPIES OF THIS PLAN SHEET.

Caltrans Metric

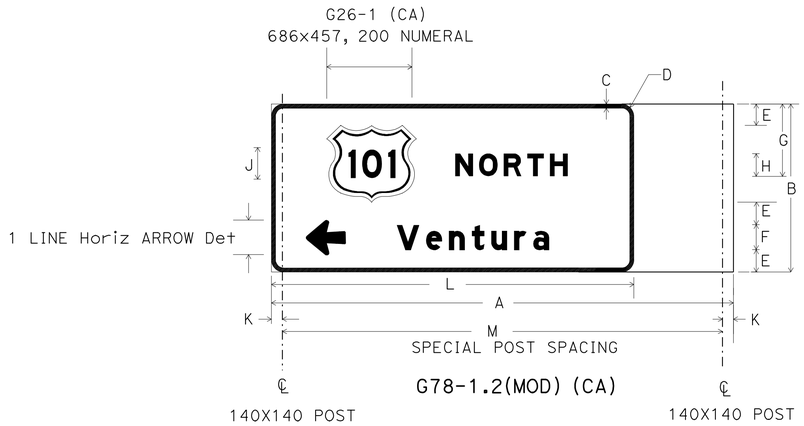

METRIC DIMENSIONS (MILLIMETERS)

A	B	C	D	E	F	G	H	J	K	L	M
2591	1067	25	152	152	152 & 114E(M)	457	152E(M)	200	70	2134	2451

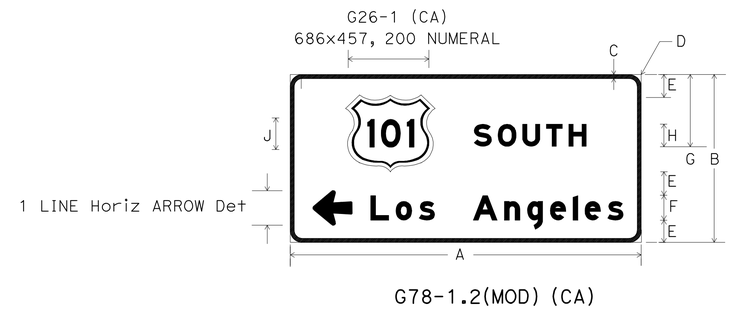

METRIC DIMENSIONS (MILLIMETERS)

A	B	C	D	E	F	G	H	J
2134	1067	25	152	152	152 & 114E(M)	457	152E(M)	200

ALL DIMENSIONS ARE IN MILLIMETERS UNLESS OTHERWISE SHOWN

SIGN DETAILS

NO SCALE

SD-12

FUNCTIONAL SUPERVISOR	ALI ZAGHARI		
CALCULATED-DESIGNED BY	JANE CHANG	REVISED BY	J.C.
CHECKED BY	ANH D. NGUYEN	DATE REVISED	11/2007

STATE OF CALIFORNIA - DEPARTMENT OF TRANSPORTATION
Caltrans **TRAFFIC DESIGN**

×719963ob012.dgn

LAST REVISION 00-00-00 DATE PLOTTED => 21-SEP-2010 TIME PLOTTED => 11:35

Dist	COUNTY	ROUTE	KILOMETER POST TOTAL PROJECT	SHEET No.	TOTAL SHEETS
07	LA	101	24.9/25.9	92	213

REGISTERED CIVIL ENGINEER 7-17-10 DATE

8-9-10
PLANS APPROVAL DATE

REGISTERED PROFESSIONAL ENGINEER ANH D. NGUYEN No. C62370 Exp. 9/30/11 CIVIL STATE OF CALIFORNIA

THE STATE OF CALIFORNIA OR ITS OFFICERS OR AGENTS SHALL NOT BE RESPONSIBLE FOR THE ACCURACY OR COMPLETENESS OF ELECTRONIC COPIES OF THIS PLAN SHEET.

Caltrans Metric

G26-1 (CA)
686x457, 200 NUMERAL

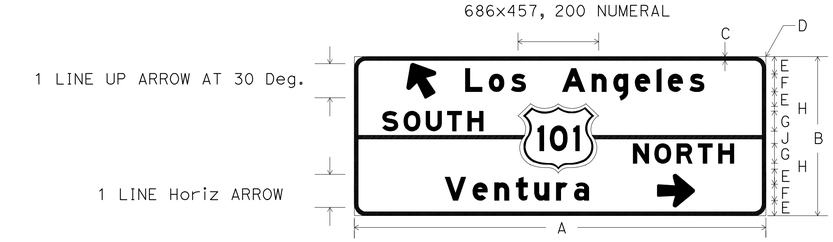

G77A (MOD) (CA)

METRIC DIMENSIONS (MILLIMETERS)

A	B	C	D	E	F	G	H	J
2743	1372	25	152	172	152 & 114E(M)	127	25	152

G26-1 (CA)
686x457, 200 NUMERAL

G77A (MOD) (CA)

METRIC DIMENSIONS (MILLIMETERS)

A	B	C	D	E	F	G	H	J
2743	1372	25	152	172	152 & 114E(M)	127	25	152

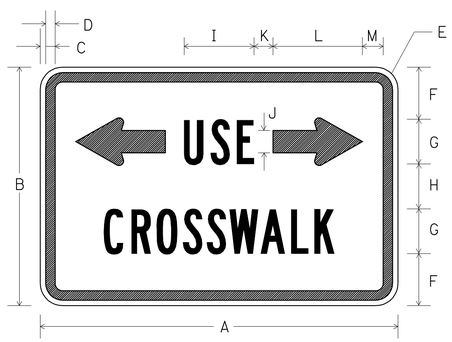

R96B (Mod) (CA)

METRIC DIMENSIONS (MILLIMETERS)

A	B	C	D	E	F
600	400	10	16	38	88

G	H	I	K	L	M
75B	75	117	32	150	35

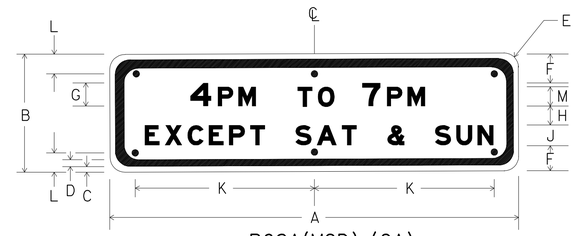

R82A(MOD) (CA)

METRIC DIMENSIONS (MILLIMETERS)

A	B	C	D	E	F
750	300	10	13	38	70

G	H	J	K	L	M
125C	38	50C	-	33	75D

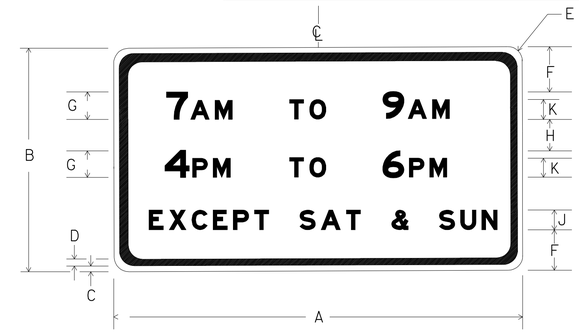

R82B(MOD) (CA)

METRIC DIMENSIONS (MILLIMETERS)

A	B	C	D	E	F
600	450	10	13	38	67

G	H	J	K
100D	50	30D	64E

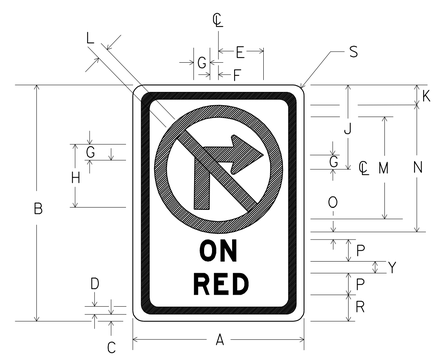

R13A(MOD) (CA)

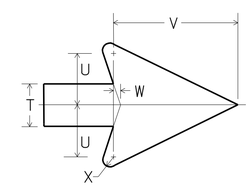

ARROWHEAD DETAIL

METRIC DIMENSIONS (MILLIMETERS)

A	B	C	D	E	F	G
610	914	9.5	16	190	38	60

H	J	K	L	M	N	O	P
254	298	38	51	406	508	12	127

R	S	T	U	V	W	X	Y
76	38	60	67	114	9.5	16	25

ALL DIMENSIONS ARE IN MILLIMETERS UNLESS OTHERWISE SHOWN

SIGN DETAILS

NO SCALE

SD-13

J.C.	11/2007	CALCULATED-DESIGNED BY
REVISED BY	DATE REVISED	CHECKED BY
JANE CHANG	ANH D. NGUYEN	FUNCTIONAL SUPERVISOR
ALI ZAGHARI		

STATE OF CALIFORNIA - DEPARTMENT OF TRANSPORTATION
Caltrans TRAFFIC DESIGN

LAST REVISION 00-00-00 DATE PLOTTED => 21-SEP-2010 TIME PLOTTED => 11:35

Dist	COUNTY	ROUTE	KILOMETER POST TOTAL PROJECT	SHEET No.	TOTAL SHEETS
07	LA	101	24.9/25.9	93	213

REGISTERED CIVIL ENGINEER 7-17-10 DATE

8-9-10
PLANS APPROVAL DATE

REGISTERED PROFESSIONAL ENGINEER ANH D. NGUYEN No. C62370 Exp. 9/30/11 CIVIL STATE OF CALIFORNIA

THE STATE OF CALIFORNIA OR ITS OFFICERS OR AGENTS SHALL NOT BE RESPONSIBLE FOR THE ACCURACY OR COMPLETENESS OF ELECTRONIC COPIES OF THIS PLAN SHEET.

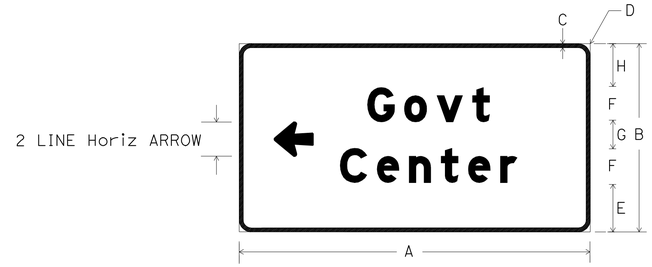

G8-4 (CA)

METRIC DIMENSIONS (MILLIMETERS)

A	B	C	D	E	F	G	H
2134	1067	32	152	254	200 & 150E(M)	254	259

G1-13 (CA)

METRIC DIMENSIONS (MILLIMETERS)

A	B	C	D	E	F	G	H	J	K
2896	1219	25	152	178	152 & 114E(M)	184	165	152	197

G86-5 (CA)

METRIC DIMENSIONS (MILLIMETERS)

A	B	C	D	E	F	G	H	J
4572	2286	356	250E	356	330 & 250E(M)	406	51	305

G27-1 (CA)
760x635, 200 NUMERAL

G23-3 (CA)

METRIC DIMENSIONS (MILLIMETERS)

A	B	C	D	E	F	G	H	J	K	L
7320	2540	51	356	508	338 & 254E(M)	508	406	338	508	254

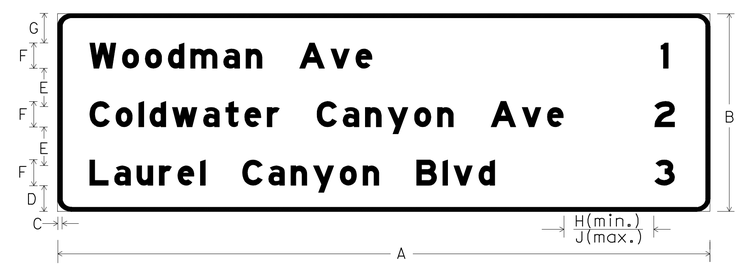

G23-1 (CA)

METRIC DIMENSIONS (MILLIMETERS)

A	B	C	D	E	F	G	H	J
7930	2286	51	356	381	338 & 254E(M)	406	338	508

ALL DIMENSIONS ARE IN MILLIMETERS UNLESS OTHERWISE SHOWN

SIGN DETAILS

NO SCALE

SD-14

REVISED BY	DATE REVISED
J.C.	11/2007

CALCULATED-DESIGNED BY: JANE CHANG
CHECKED BY: ANH D. NGUYEN
FUNCTIONAL SUPERVISOR: ALI ZAGHARI

STATE OF CALIFORNIA - DEPARTMENT OF TRANSPORTATION
Caltrans TRAFFIC DESIGN

LAST REVISION 00-00-00
DATE PLOTTED => 21-SEP-2010
TIME PLOTTED => 11:35

Dist	COUNTY	ROUTE	KILOMETER POST TOTAL PROJECT	SHEET No.	TOTAL SHEETS
07	LA	101	24.9/25.9	94	213

REGISTERED CIVIL ENGINEER 7-17-10 DATE

8-9-10
PLANS APPROVAL DATE

REGISTERED PROFESSIONAL ENGINEER ANH D. NGUYEN No. C62370 Exp. 9/30/11 CIVIL STATE OF CALIFORNIA

THE STATE OF CALIFORNIA OR ITS OFFICERS OR AGENTS SHALL NOT BE RESPONSIBLE FOR THE ACCURACY OR COMPLETENESS OF ELECTRONIC COPIES OF THIS PLAN SHEET.

Caltrans Metric

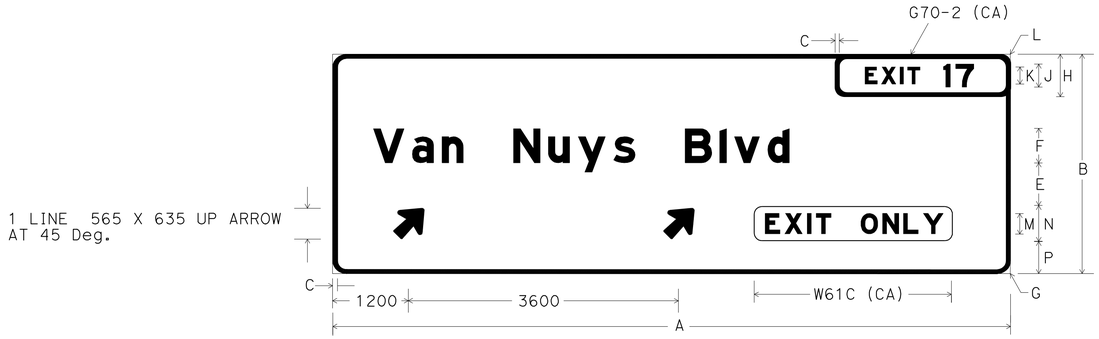

G85-11(MOD) (CA)

METRIC DIMENSIONS (MILLIMETERS)

A	B	C	D	E	F	G	H	J	K	L	M	N	P
8540	2540	51	864	305	406 & 305E(M)	305	610	305E	203E	152	254E	508	356

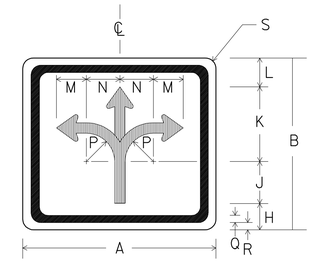

R60B(MOD) (CA)

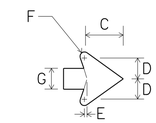

ARROWHEAD DETAIL

METRIC DIMENSIONS (MILLIMETERS)

A	B	C	D	E	F	G
1372	1219	165	95	13	19	89

H	J	K	L	M	N	P	Q	R	S
102	356	635	127	254	286	241	32	19	76

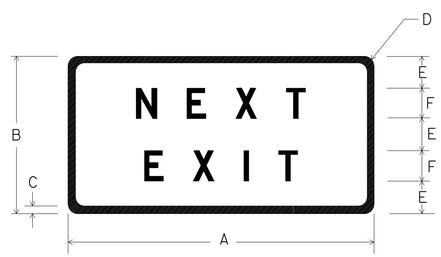

G58(MOD) (CA)

METRIC DIMENSIONS (MILLIMETERS)

A	B	C	D	E	F
900	750	16	38	150	150D

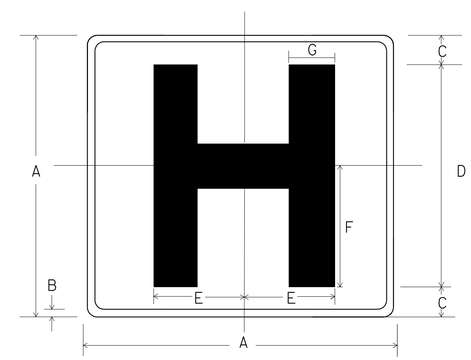

D9-2 (MOD)

METRIC DIMENSIONS (MILLIMETERS)

A	B	C	D	E	F	G
900	20	150	600	240	300	120

COLORS:

BORDER & SYMBOL -WHITE (RETROREFLECTIVE)

BACKGROUND -BLUE (RETROREFLECTIVE)

ALL DIMENSIONS ARE IN METERS UNLESS OTHERWISE SHOWN

SIGN DETAILS

NO SCALE

SD-15

STATE OF CALIFORNIA - DEPARTMENT OF TRANSPORTATION

Caltrans **TRAFFIC DESIGN**

FUNCTIONAL SUPERVISOR: ALI ZAGHARI

CALCULATED-DESIGNED BY: JANE CHANG

CHECKED BY: ANH D. NGUYEN

REVISED BY: J.C.

DATE REVISED: 11/2007

LAST REVISION 00-00-00 DATE PLOTTED => 21-SEP-2010 TIME PLOTTED => 11:36

×719963ob015.dgn

Dist	COUNTY	ROUTE	KILOMETER POST TOTAL PROJECT	SHEET No.	TOTAL SHEETS
07	LA	101	24.9/25.9	95	213

REGISTERED CIVIL ENGINEER 7-17-10 DATE

8-9-10
PLANS APPROVAL DATE

REGISTERED PROFESSIONAL ENGINEER ANH D. NGUYEN No. C62370 Exp. 9/30/11 CIVIL STATE OF CALIFORNIA

THE STATE OF CALIFORNIA OR ITS OFFICERS OR AGENTS SHALL NOT BE RESPONSIBLE FOR THE ACCURACY OR COMPLETENESS OF ELECTRONIC COPIES OF THIS PLAN SHEET.

Caltrans Metric

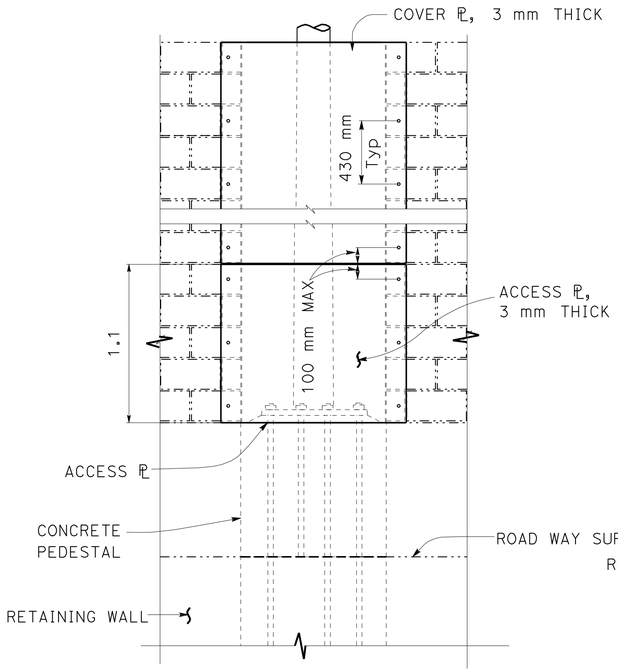

ELEVATION

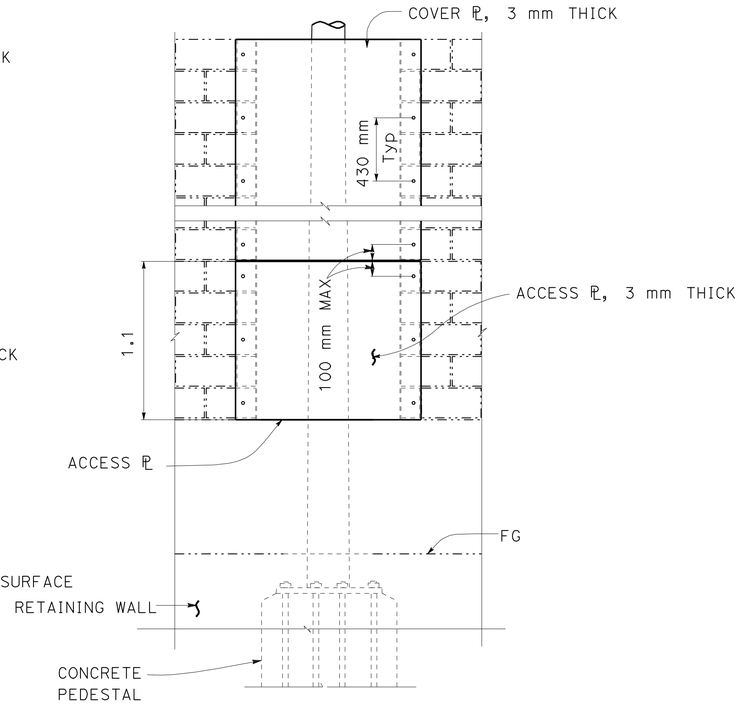

ELEVATION

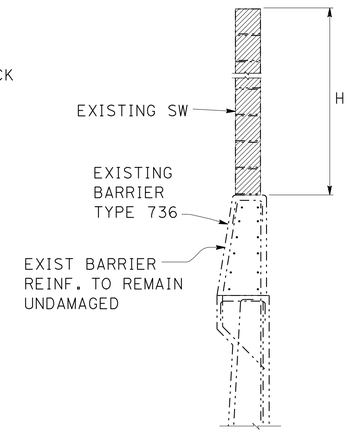

SECTION A-A

	SIGN 101	SIGN 102
H	3.5	2.9

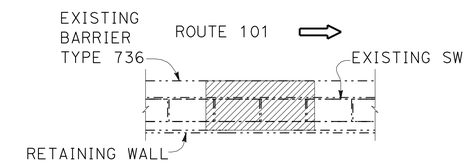

PLAN

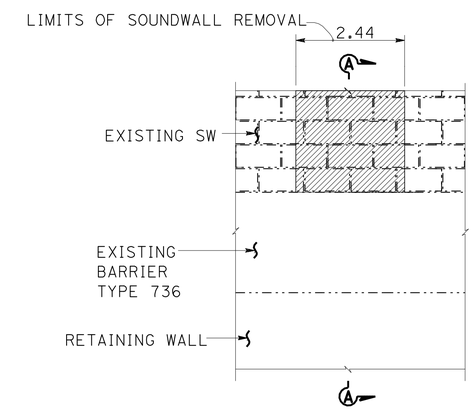

ELEVATION

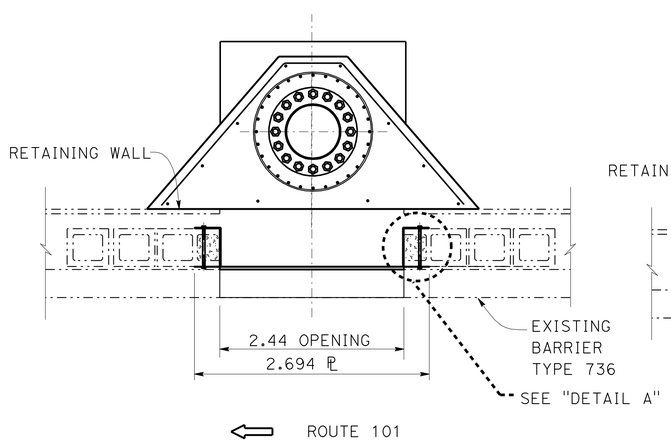

PLAN (SIGN 102)
FNBT AT STA. 250+00)

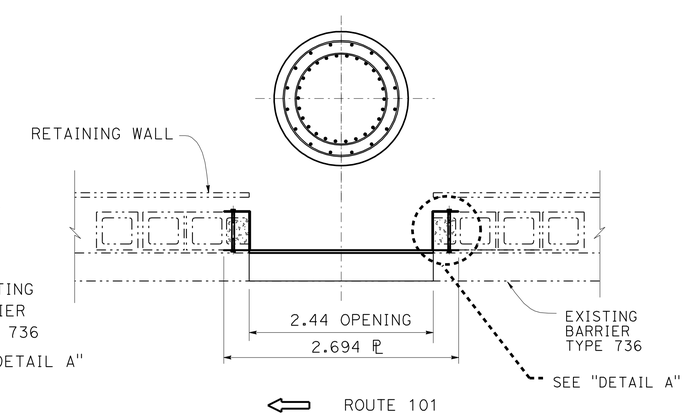

PLAN (SIGN 101)
FNBT AT STA 252+40

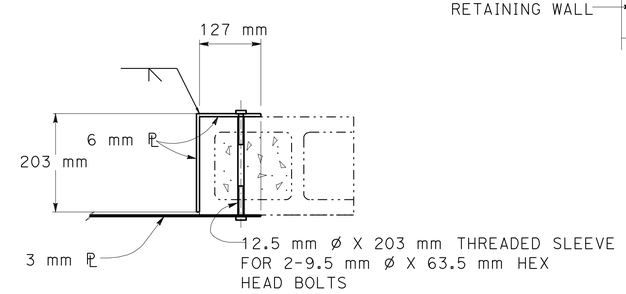

DETAIL A

ALL DIMENSIONS ARE IN METERS UNLESS OTHERWISE SHOWN

SIGN DETAILS (ACCESS PLATE)

NO SCALE

SD-16

REVISED BY	DATE REVISED

CALCULATED-DESIGNED BY: ANH D. NGUYEN
CHECKED BY: ANH D. NGUYEN

FUNCTIONAL SUPERVISOR: ALI ZAGHARI

STATE OF CALIFORNIA - DEPARTMENT OF TRANSPORTATION
Caltrans **TRAFFIC DESIGN**

719963ob016.dgn

LAST REVISION 00-00-00 | DATE PLOTTED => 21-SEP-2010 | TIME PLOTTED => 11:36

Dist	COUNTY	ROUTE	KILOMETER POST TOTAL PROJECT	SHEET No.	TOTAL SHEETS
07	LA	101	24.9/25.9	96	213

REGISTERED CIVIL ENGINEER 7-17-10 DATE

8-9-10
PLANS APPROVAL DATE

REGISTERED PROFESSIONAL ENGINEER ANH D. NGUYEN No. C62370 Exp. 9/30/11 CIVIL STATE OF CALIFORNIA

THE STATE OF CALIFORNIA OR ITS OFFICERS OR AGENTS SHALL NOT BE RESPONSIBLE FOR THE ACCURACY OR COMPLETENESS OF ELECTRONIC COPIES OF THIS PLAN SHEET.

Caltrans Metric

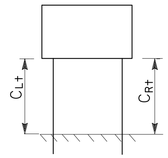

TYPICAL POST HEIGHT DETAIL

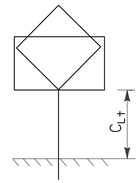

TYPICAL POST HEIGHT DETAIL

ROADSIDE SIGN QUANTITIES

SHEET No. 1	SIGN CODE	SIGN AREA	PANEL SIZE (L X D)	SINGLE FACED	POST DATA: CLEARANCE (C) L+	POST DATA: CLEARANCE (C) R+	POST DATA: SIZE	POST DATA: TOTAL LENGTH L+	POST DATA: TOTAL LENGTH R+	SIGN FACING MATERIAL: BACKGROUND SHEETING COLOR	SIGN FACING MATERIAL: BACKGROUND RETROREFLECTIVE ASTM TYPE	SIGN FACING MATERIAL: LEGEND SHEETING COLOR	SIGN FACING MATERIAL: LEGEND RETROREFLECTIVE ASTM TYPE	SIGN FACING MATERIAL: GRAFFITI FILM PREMIUM	FURNISH: SINGLE SHEET ALUMINUM SIGN (1.6 mm - UNFRAMED)	FURNISH: SINGLE SHEET ALUMINUM SIGN (2.0 mm - UNFRAMED)	FURNISH: SINGLE SHEET ALUMINUM SIGN (1.6 mm - FRAMED)	FURNISH: SINGLE SHEET ALUMINUM SIGN (2.0 mm - FRAMED)	FURNISH: LAMINATED PANEL SIGN (25.4 mm - TYPE B)	FURNISH: LAMINATED PANEL SIGN (63.5 mm - TYPE B)	ROADSIDE SIGN: REMOVE	ROADSIDE SIGN: ONE POST	ROADSIDE SIGN: TWO POST	METAL (SOUNDWALL MOUNTED SIGN)	INSTALL (STRAP & SADDLE BRACKET METHOD)	REMARKS
		m^2	mm X mm		m	m	mm X mm	m	m						m^2	m^2	m^2	m^2	m^2	m^2	EA	EA	EA	KG	EA	
PD-1	G86-5 (CA)	10.45	4572 X 2286	X	2.1	3.47	TYPE L	6.7	8.1	GREEN	III	WHITE	IV	X					10.45		1		1			NB RTE 101, LAMINATED WOOD BOX POST, (Sherman Oaks / Van Nuys / NEXT EXIT)
PD-2	W4-7(L+)	2.25	1500 X 1500	X	5.04		102 NPS X-S PIPE	6.58		YELLOW	III	BLACK		X				2.25						155		NB RTE 101
PD-2	R18A (CA)	2.04	1676 X 1219	X	5.04		102 NPS X-S PIPE	5.67		WHITE	III	BLACK		X			2.04							140		NB RTE 101
PD-3	W3-3	1.44	1200 X 1200	X	5.04		102 NPS X-S PIPE	7.16		YELLOW	VII	RED YELLOW GREEN	VII	X		2.88					2			300		@ EACH OFF-RAMP, 2 @ 150.3 KG
PD-3	R61-28 (CA)	0.93	1219 X 762	X	2.1		89 X 140	4.26		WHITE	III	BLACK		X		3.72					6	4				
PD-3	R61-28 (CA)																				2					
PD-3	R5-10c																									
PD-3	R5-1	0.84	914 X 914	X	1.22		89 X 140	3.50		RED	III	WHITE	IV	X	3.36						4	4				
PD-3	R5-1a	0.56	914 X 610	X	0.61					RED	III	WHITE	IV	X	2.24											
PD-3	R5-10c	0.18	600 X 300	X	1.50					WHITE	III	BLACK		X	0.36										2	MOUNTED ON LIGHTWEIGHT SIGNS 107&108
PD-3	R6-1(L+) (CA)	0.49	1219 X 406	X	0.46		89 X 89	2.0		WHITE	III	BLACK		X	0.98						2					BACK TO BACK
PD-3	R6-1(R+) (CA)	0.49	1219 X 406	X	0.46					WHITE	III	BLACK		X	0.98											
PD-3	R6-1(L+) (CA)	0.49	1219 X 406	X	0.46		89 X 89	2.0		WHITE	III	BLACK		X	0.49						1	1				
PD-3	R9-3a	0.36	600 X 600	X	1.41					WHITE	III	RED BLACK	III	X	2.16										6	BACK TO BACK
PD-3	R96B (B) (CA)	0.24	600 X 406	X	1.00					WHITE	III	BLACK		X	1.44										6	BACK TO BACK WEST CORNER, SB ON-RAMP BOTH LEFT & RIGHT ARROWS
PD-3	R13A (CA)	0.56	610 x 914	X	2.05					WHITE	III	RED BLACK	III	X	0.56										1	
PD-3	R82B (Mod)(CA)	0.27	600 X 450	X	1.60					WHITE	III	BLACK		X	0.27										1	"7AM-9PM, 4PM-6PM, EXCEPT SAT & SUN"
PD-3	R9-3a	0.36	600 X 600	X	1.00					WHITE	III	RED BLACK	III	X	0.72										2	BACK TO BACK
PD-3	R96B (Mod)(CA)	0.24	600 x 400	X	0.60					WHITE	III	BLACK		X	0.48										2	BACK TO BACK
SHEET TOTAL															14.04	6.6	2.04	2.25	10.45	0	18	9	1	595	20	

REVISED BY	DATE REVISED
J.C.	11/2007

CALCULATED-DESIGNED BY	CHECKED BY
JANE CHANG	ANH D. NGUYEN

FUNCTIONAL SUPERVISOR: ALI ZAGHARI

STATE OF CALIFORNIA - DEPARTMENT OF TRANSPORTATION
Caltrans TRAFFIC DESIGN

S:\projects\199631\Resubmit5\719963oc001.dgn

SIGN QUANTITIES

SQ-1

LAST REVISION 00-00-00 | DATE PLOTTED => 21-SEP-2010 | TIME PLOTTED => 11:36

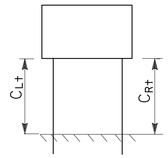

TYPICAL POST HEIGHT DETAIL

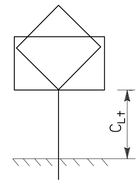

TYPICAL POST HEIGHT DETAIL

Dist	COUNTY	ROUTE	KILOMETER POST TOTAL PROJECT	SHEET No.	TOTAL SHEETS
07	LA	101	24.9/25.9	97	213

REGISTERED CIVIL ENGINEER 7-17-10 DATE

8-9-10
PLANS APPROVAL DATE

REGISTERED PROFESSIONAL ENGINEER ANH D. NGUYEN No. C62370 Exp. 9/30/11 CIVIL STATE OF CALIFORNIA

THE STATE OF CALIFORNIA OR ITS OFFICERS OR AGENTS SHALL NOT BE RESPONSIBLE FOR THE ACCURACY OR COMPLETENESS OF ELECTRONIC COPIES OF THIS PLAN SHEET.

Caltrans Metric

ROADSIDE SIGN QUANTITIES

SHEET No. 2	SIGN CODE	SIGN AREA	PANEL SIZE (L X D)	SINGLE FACED	POST DATA: CLEARANCE (C) L+	POST DATA: CLEARANCE (C) R+	POST DATA: SIZE	POST DATA: TOTAL LENGTH L+	POST DATA: TOTAL LENGTH R+	SIGN FACING MATERIAL: BACKGROUND: SHEETING COLOR	SIGN FACING MATERIAL: BACKGROUND: RETROREFLECTIVE ASTM TYPE	SIGN FACING MATERIAL: LEGEND: SHEETING COLOR	SIGN FACING MATERIAL: LEGEND: RETROREFLECTIVE ASTM TYPE	SIGN FACING MATERIAL: GRAFFITI FILM: PREMIUM	FURNISH: SINGLE SHEET ALUMINUM SIGN: (1.6 mm - UNFRAMED)	FURNISH: SINGLE SHEET ALUMINUM SIGN: (2.0 mm - UNFRAMED)	FURNISH: SINGLE SHEET ALUMINUM SIGN: (1.6 mm - FRAMED)	FURNISH: SINGLE SHEET ALUMINUM SIGN: (2.0 mm - FRAMED)	FURNISH: LAMINATED PANEL SIGN: (25.4 mm - TYPE B)	FURNISH: LAMINATED PANEL SIGN: (63.5 mm - TYPE B)	ROADSIDE SIGN: REMOVE	ROADSIDE SIGN: ONE POST	ROADSIDE SIGN: TWO POST	METAL (SOUNDWALL MOUNTED SIGN)	INSTALL (STRAP & SADDLE BRACKET METHOD)	REMARKS
		m^2	mm X mm		m	m	mm X mm	m	m						m^2	m^2	m^2	m^2	m^2	m^2	EA	EA	EA	KG	EA	
PD-3	R13A (CA)																				1					STRAP & SADDLE SIGN
	R82 (Mod)(CA)																				1					
	R96B (Mod)(CA)																				2					CITY OF LOS ANGELES COMBINATION MESSAGE SIGN
	R13A (CA)	0.56	610 X 914	X	1.05					WHITE	III	RED BLACK		X		0.56					1				1	EAST CORNER, SB ON-RAMP
	R82B (Mod)(CA)	0.27	600 X 450	X	0.6					WHITE	III	BLACK		X	0.27						1				1	
	G8-7 (CA)																				1					2-POST SIGN
	G77A (Mod)(CA)	3.76	2743 x 1372	X	2.7	2.7	140 X 184	5.9	5.9	GREEN	III	WHITE	IV	X					3.76				1			
	G78-1.2 (CA)	2.28	2134 x 1067	X	2.7	2.7	140 X 140	5.3	5.3	GREEN	III	WHITE	IV	X					2.28		1		1			EAST CORNER, SB ON-RAMP
	G1-13 (CA)	3.53	2896 X 1219	X	2.1	2.4	140 X 140	4.8	5.1	GREEN	III	WHITE	IV	X				3.53			1		1			SB OFF-RAMP (VAN NUYS/PANORAMA CITY/SHERMAN OAKS)
	G8-4 (CA)																									SB OFF-RAMP (GOVT CENTER)
	G66-16 (CA)																				1					
	G33-1 (L+)(CA)																									
	G8-4 (CA)	2.28	2134 X 1067	X	2.1	2.6				GREEN	III	WHITE	IV	X				2.28								SB OFF-RAMP (GOVT CENTER)
	D9-2	0.37	610 X 610	X		2.0	140 X 140	4.7	5.2	BLUE	III	WHITE	III	X	0.37								1			
	G33-1 (L+)(CA)	0.09	610 X 152	X		1.84				BLUE	III	WHITE	III	X	0.09											
	G1-10 (CA)																									NB OFF-RAMP (SHERMAN OAKS/VANNUYS/PANORAMA CITY/)
	G66-16 (CA)																				1					
	G33-1 (R+)(CA)																									
	R5-10c (CA)																									
	G1-10 (CA)	3.53	2896 X 1219	X	2.1	2.1				GREEN	III	WHITE	IV	X				3.53								NB OFF-RAMP (SHERMAN OAKS/VANNUYS/PANORAMA CITY/)
	D9-2	0.37	610 X 610	X	1.45		140 X 140	4.7	4.7	BLUE	III	WHITE	III	X	0.37								1			
	G33-1 (R+)(CA)	0.09	610 X 152	X	1.30					BLUE	III	WHITE	III	X	0.09											
	G8-7 (CA)																									NB OFF-RAMP (VENTURA FWY/WEST)
	R6-1 (L+)																				1					
	R6-1 (R+)																									
SHEET TOTAL															1.19	0.56	0	9.34	6.04	0	12	0	5	0	2	

STATE OF CALIFORNIA - DEPARTMENT OF TRANSPORTATION
Caltrans TRAFFIC DESIGN

FUNCTIONAL SUPERVISOR: ALI ZAGHARI
CALCULATED-DESIGNED BY: JANE CHANG
CHECKED BY: ANH D. NGUYEN
REVISED BY: J.C.
DATE REVISED: 11/2007

S:\projects\199631\Resubmit5\719963oc002.dgn

SIGN QUANTITIES

SQ-2

LAST REVISION 00-00-00
DATE PLOTTED => 21-SEP-2010
TIME PLOTTED => 11:36

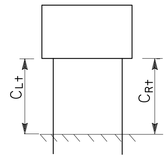

TYPICAL POST HEIGHT DETAIL

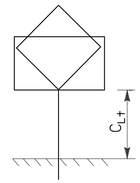

TYPICAL POST HEIGHT DETAIL

Dist	COUNTY	ROUTE	KILOMETER POST TOTAL PROJECT	SHEET No.	TOTAL SHEETS
07	LA	101	24.9/25.9	98	213

REGISTERED CIVIL ENGINEER 7-17-10 DATE

8-9-10
PLANS APPROVAL DATE

REGISTERED PROFESSIONAL ENGINEER ANH D. NGUYEN No. C62370 Exp. 9/30/11 CIVIL STATE OF CALIFORNIA

THE STATE OF CALIFORNIA OR ITS OFFICERS OR AGENTS SHALL NOT BE RESPONSIBLE FOR THE ACCURACY OR COMPLETENESS OF ELECTRONIC COPIES OF THIS PLAN SHEET.

Caltrans Metric

ROADSIDE SIGN QUANTITIES

SHEET No. 3	SIGN CODE	SIGN AREA	PANEL SIZE (L X D)	SINGLE FACED	POST DATA: CLEARANCE (C) L+	POST DATA: CLEARANCE (C) R+	POST DATA: SIZE	POST DATA: TOTAL LENGTH L+	POST DATA: TOTAL LENGTH R+	SIGN FACING MATERIAL: BACKGROUND SHEETING COLOR	BACKGROUND RETROREFLECTIVE ASTM TYPE	LEGEND SHEETING COLOR	LEGEND RETROREFLECTIVE ASTM TYPE	GRAFFITI FILM PREMIUM	FURNISH: SINGLE SHEET ALUMINUM SIGN (1.6 mm - UNFRAMED)	SINGLE SHEET ALUMINUM SIGN (2.0 mm - UNFRAMED)	SINGLE SHEET ALUMINUM SIGN (1.6 mm - FRAMED)	SINGLE SHEET ALUMINUM SIGN (2.0 mm - FRAMED)	LAMINATED PANEL SIGN (25.4 mm - TYPE B)	LAMINATED PANEL SIGN (63.5 mm - TYPE B)	ROADSIDE SIGN REMOVE	ROADSIDE SIGN ONE POST	ROADSIDE SIGN TWO POST	METAL (SOUNDWALL MOUNTED SIGN)	INSTALL (STRAP & SADDLE BRACKET METHOD)	REMARKS
		m^2	mm X mm		m	m	mm X mm	m	m						m^2	m^2	m^2	m^2	m^2	m^2	EA	EA	EA	KG	EA	
PD-3	G78-1.2 (CA)	2.76	2591 x 1067	X	2.1	2.1	140 X 140	4.7	4.7	GREEN	III	WHITE	IV	X					2.76							EB VAN NUYS BLVD @ NB OFF-RAMP
	R6-1(L+) (CA)	0.49	1219 x 406	X		0.46				WHITE	III	BLACK		X	0.49								1			
	R6-1(R+) (CA)	0.49	1219 x 406	X		0.46				WHITE	III	BLACK		X	0.49											
	G8-7 (CA)																									WEST CORNER-NB ON-RAMP (VENTURA FWY/EAST/WEST)
	R13A (Mod)(CA)																				1					
	R82A (Mod)(CA)																									
	G77A (Mod)(CA)	3.76	2743 x 1372	X	2.1	2.1	140 X 184	5.3	5.3	GREEN	III	WHITE	IV	X					3.76							WEST CORNER - NB ON-RAMP
	R13A (Mod)(CA)	0.56	610 X 914	X	1.18					WHITE	III	RED / BLACK	III	X	0.56								1			(LOS ANGELES/SOUTH/VENTURA/NORTH)
	R82A (Mod)(CA)	0.23	610 X 381	X	0.80					WHITE	III	BLACK		X	0.23											
	G86-1 (CA)	7.11	5182 X 1372	X	2.4	4.0	TYPE M	5.6	7.2	GREEN	III	WHITE	IV	X						7.11	1		1			LAMINATED, TYPE M POST FNBT ROUTE 101 (SEPULVEDA BLVD/RIGHT LANE)
PD-4	W13-2 (35)	1.80	1200 x 1500	X	5.04		102 NPS X-S PIPE	5.95		YELLOW	III	BLACK		X		1.80								145		SB OFF-RAMP (35 MPH)
	W13-2 (35)																				1					SB OFF-RAMP (35 MPH)
	R18A (CA)	2.04	1676 x 1219	X	5.04		102 NPS X-S PIPE	5.67		WHITE	III	BLACK		X	2.04									140		SB RTE 101
	R18A (CA)																				1					
PD-5	W4-7(L+)	2.25	1500 x 1500	X	5.04		102 NPS X-S PIPE	6.55		YELLOW	III	BLACK		X		2.25								155		SB RTE 101
	W4-7(L+)																				1					
	D5-1																				1					SB RTE 101 (HOSPITAL/NEXT RIGHT)
	D9-2 (Mod)	0.81	900 x 900	X	5.56		102 NPS X-S PIPE			BLUE	III	WHITE	III	X	0.81									145		SB RTE 101
	G58 (Mod)(CA)	0.68	900 x 750	X	5.04					BLUE	III	WHITE	III	X	0.68											
	G86-5 (CA)	10.45	4572 x 2286	X	4.57	5.0	TYPE L	9.2	9.6	GREEN	III	WHITE	IV	X					10.45		1		1			SB RTE 101 LAMINATED TYPE L POST (VAN NUYS/ SHERMAN OAKS/ NEXT EXIT)
SHEET TOTAL															5.30	4.05	0	0	16.97	7.11	7	0	4	585		
SHEET SQ-1 TOTAL															14.04	6.6	2.04	2.25	10.45	0	18	9	1	595	20	
SHEET SQ-2 TOTAL															1.19	0.56	0	9.34	6.04	0	12	0	5	0	2	
TOTAL															20.53	11.21	2.04	11.59	33.46	7.11	37	9	10	1180	22	

SIGN QUANTITIES

SQ-3

STATE OF CALIFORNIA - DEPARTMENT OF TRANSPORTATION
Caltrans TRAFFIC DESIGN

FUNCTIONAL SUPERVISOR: ALI ZAGHARI
CALCULATED-DESIGNED BY: JANE CHANG
CHECKED BY: ANH D. NGUYEN
REVISED BY: J.C.
DATE REVISED: 11/2007

LAST REVISION 00-00-00
DATE PLOTTED => 21-SEP-2010
TIME PLOTTED => 11:36

S:\projects\199631\Resubmit5\719963oc003.dgn

Dist	COUNTY	ROUTE	KILOMETER POST TOTAL PROJECT	SHEET No.	TOTAL SHEETS
07	LA	101	24.9/25.9	99	213

REGISTERED CIVIL ENGINEER 7-17-10 DATE

8-9-10
PLANS APPROVAL DATE

REGISTERED PROFESSIONAL ENGINEER ANH D. NGUYEN No. C62370 Exp. 9/30/11 CIVIL STATE OF CALIFORNIA

THE STATE OF CALIFORNIA OR ITS OFFICERS OR AGENTS SHALL NOT BE RESPONSIBLE FOR THE ACCURACY OR COMPLETENESS OF ELECTRONIC COPIES OF THIS PLAN SHEET.

Caltrans Metric

OVERHEAD SIGN QUANTITIES

SHEET No.	SIGN No.	LOCATION		SIGN CODE	SIGN AREA	PANEL SIZE (L X D)	SINGLE FACED	DOUBLE FACED	SIGN FACING MATERIAL						FURNISH			SIGN STRUCTURE						914 mm CIDH CONCRETE PILE (SIGN FOUNDATION)	1524 mm CIDH CONCRETE PILE (SIGN FOUNDATION)	POST TYPE	REMARKS
									BACKGROUND		LEGEND		GRAFFITI FILM					LIGHTWEIGHT			TRUSS						
		STATION	DIRECTION		m^2	mm x mm			SHEETING COLOR	RETROREFLECTIVE ASTM TYPE	SHEETING COLOR	RETROREFLECTIVE ASTM TYPE	STANDARD	PREMIUM	LAMINATED PANEL SIGN (25.4 mm - TYPE A)	FORMED PANEL SIGN	RSPF WITH SIGN PANELS ATTACHED	REMOVE	FURNISH	INSTALL	REMOVE	FURNISH	INSTALL				
															m^2	m^2	EA	EA	kg	kg	EA	kg	kg	m	m		
PD-1	101	250+00	FNBT	G83-5 (Mod) (CA)	18.6	7320 x 2540	X		GREEN	III	WHITE	IV		X		18.6						10720	10720		9.6	IX	
PD-2	102	252+40	FNBT	G85-11 (Mod) (CA)	23.2	9150 x 2540	X		GREEN	III	WHITE	IV		X		23.2						11585	11585		7.0	VIII	
PD-2	102a	252+40	FNBT	G83-1 (CA)					GREEN		WHITE										1						
				G85-5 (CA)					GREEN		WHITE																
PD-3	103	256+08	FNBT	G23-3 (CA)	18.6	7320 x 2540	X		GREEN	III	WHITE	IV		X		18.6						10128	10128		9.6	VII	
PD-3	103a	256+08	FSBT	G23-3 (CA)					GREEN		WHITE										1						
PD-3	104	255+25	FSBT	G23-1 (CA)	18.1	7930 x 2286	X		GREEN	III	WHITE	IV		X		18.1						7180	7180		6.7	VI	
PD-3	104a	255+25	FSBT	G23-1 (CA)					GREEN		WHITE										1						
PD-3	107	5+50	FNBT	R59L (CA)	1.3	1067 x 1219	X		WHITE	III	BLACK			X					3200	3200				8.0		NPS=10 "+"=12.7	TYPE A-2
				G60B (Mod) (CA)	1.7	1372 x 1219	X		WHITE	III	BLACK			X													
				R59R (CA)	1.3	1067 x 1219	X		WHITE	III	BLACK			X													
				R5-10c	0.18	600 x 300	X		WHITE	III	BLACK			X													
PD-3	108	5+94	FSBT	R59L (CA)	1.3	1067 x 1219	X		WHITE	III	BLACK			X					3100	3100				8.0		NPS=10 "+"=12.7	TYPE A-2
				G60B (Mod) (CA)	1.7	1372 x 1219	X		WHITE	III	BLACK			X													
				R59R (CA)	1.3	1067 x 1219	X		WHITE	III	BLACK			X													
				R5-10c	0.18	600 x 300	X		WHITE	III	BLACK			X													
PD-4	105	259+25	FSBT	G85-11 (Mod) (CA)	18.6	8540 x 2540	X		GREEN	III	WHITE	IV		X		18.6						8850	8850		7.0	VII	
PD-4	105a	258+72	FSBT	G85-5 (CA)					GREEN		WHITE										1						
TOTAL					106.06											97.1			6300	6300	4	48463	48463	16.0	39.9		

STATE OF CALIFORNIA - DEPARTMENT OF TRANSPORTATION
Caltrans TRAFFIC DESIGN

FUNCTIONAL SUPERVISOR: ALI ZAGHARI
CALCULATED-DESIGNED BY: JANE CHANG
CHECKED BY: ANH D. NGUYEN
REVISED BY: J.C.
DATE REVISED: 11/2007

S:\projects\199631\Resubmit8\Y719963oc004.dgn

SIGN QUANTITIES

SQ-4

LAST REVISION 00-00-00
DATE PLOTTED => 21-SEP-2010
TIME PLOTTED => 11:36

Dist	COUNTY	ROUTE	KILOMETER POST TOTAL PROJECT	SHEET No.	TOTAL SHEETS
07	LA	101	24.9/25.9	100	213

REGISTERED CIVIL ENGINEER 2-20-08 DATE

8-9-10
PLANS APPROVAL DATE

REGISTERED PROFESSIONAL ENGINEER BF VORREITER No. C 63128 Exp. 06/30/12 CIVIL STATE OF CALIFORNIA

THE STATE OF CALIFORNIA OR ITS OFFICERS OR AGENTS SHALL NOT BE RESPONSIBLE FOR THE ACCURACY OR COMPLETENESS OF ELECTRONIC COPIES OF THIS PLAN SHEET.

Caltrans Metric

ROADWAY ITEMS

SHEET NUMBER	LOCATION	REMOVE METAL BEAM GUARD RAILING	REMOVE CONCRETE PAVEMENT	REMOVE CONCRETE (CURB, GUTTER AND SIDEWALK)	RECONSTRUCT METAL BEAM GUARD RAILING (WOOD POST)	ROADWAY EXCAVATION	ROADWAY EXCAVATION (TYPE Z-2) AERIALLY DEPOSITED LEAD	CLASS 3 AGGREGATE BASE	LEAN CONCRETE BASE	LEAN CONCRETE BASE (RAPID SETTING)	HOT MIX ASPHALT (TYPE B)	JOINTED PLAIN CONCRETE PAVEMENT (JPCP)	REPLACE CONCRETE PAVEMENT (RSC)	SEAL PAVEMENT JOINT	SEAL LONGITUDINAL ISOLATION JOINT	MINOR CONCRETE (CURB, GUTTER AND CURB RAMP)	CHAIN LINK GATE	CABLE RAILING	CRASH CUSHION (TYPE CAT)	TACK COAT	GRIND EXITING CONCRETE PAVEMENT
	STATION	m	m^2	m^3	m	m^3	m^3	m^3	m^3	m^3	TONN	m^3	m^3	m	m	m^3	EA	m	EA	TONN	m^2
L-1	248+75.100 - 250+20.000 ROUTE 101 ℄					1030		330	230			455		400	290						1558
L-2	250+20.000 - 252+45.027 ROUTE 101 ℄	30				1570		510	345			715		620	450						2442
L-2	2+45.027 - 3+60.000 N/B OFF-RAMP ℄	115				1110		550	225		525									11	
L-3	3+60.000 - 5+30.000 N/B OFF-RAMP ℄	115		35		1810		910	475		1120					32				19	
L-3	5+30.000 - 5+84.990 N/B OFF-RAMP ℄		570	30		400		140		100			170	165	140	30					627
L-3	5+57.349 - 6+10.000 S/B OFF-RAMP ℄	20	570	20	20	385		130		95			170	170	135	25					610
L-3	6+10.000 - 7+15.694 S/B OFF-RAMP ℄			35		1020		510	145	125	620					22		50	1	11	
L-4	7+15.694 - 8+61.210 S/B OFF-RAMP ℄			10		1320		680	140	200	820					1	1	10		14	
L-4	258+70.854 - 259+24.594 ROUTE 101 ℄					160		50	35			70		65	55						236
C-1	3+85.000 - 5+73.000 N/B OFF-RAMP ℄						75														
TOTAL		280	1140	130	20	8805	75	3810	1595	520	3085	1240	340	1420	1070	110	1	60	1	55	5473

RETAINING WALL

SHEET NUMBER	LOCATION	RESIN CAPSULE ANCHOR	REMOVE CONCRETE	STRUCTURE EXCAVATION (RETAINING WALL)	STRUCTURE EXCAVATION (TYPE Z-2) (AERIALLY DEPOSITED LEAD)	STRUCTURE BACKFILL, RETAINING WALL (SOUND WALL)	STRUCTURAL CONCRETE	STRUCTURAL CONCRETE, RETAINING WALL	BAR REINFORCING STEEL, RETAINING WALL (SOUND WALL)	MISCELLANEOUS METAL
	STATION	EA	m^3	m^3	m^3	m^3	m^3	m^3	kg	kg
SW-1	10+70.714 - 11+00.000 SW LOL			70	150	200		60	2280	
SW-2	11+00.000 - 11+68.250 SW LOL			135	410	480		145	5310	
SW-2	11+68.250 - 12+00.000 SW LOL			25	185	175		52	1920	
SW-3	12+00.000 - 12+17.018 SW LOL			20	90	95		28	1030	
SW-18	252+00.000 - 254+00.000 ROUTE 101 ℄	25					4.1		2705	
SW-19	252+00.000 - 254+00.000 ROUTE 101 ℄		1.8							
SW-20	252+00.000 - 254+00.000 ROUTE 101 ℄									715
SD-8	SIGN 102		20	14						
SD-9	SIGN 102					6		16	3640	
SD-16	SIGN 101 & SIGN 102									615
TOTAL		25	21.8	264	835	956	4.1	301	16885	1330

SOUND WALL

SHEET NUMBER	LOCATION	REMOVE CONCRETE BARRIER	REMOVE SOUND WALL (MASONRY BLOCK)	STRUCTURE EXCAVATION (TYPE Z-2) (AERIALLY DEPOSITED LEAD)	STRUCTURE BACKFILL (SOUND WALL)	400 mm CIDH CONCRETE PILING (SOUND WALL)	SOUND WALL (BARRIER) (MASONRY BLOCK)	CONCRETE BARRIER (TYPE 736A)
	STATION	m	m^2	m^3	m^3	m	m^2	m
SW-1	10+00.000 - 10+70.714 SW LOL	71	115	90	55	315	244	71
SW-1	10+70.714 - 11+00.000 SW LOL	30	49				101	30
SW-2	11+00.000 - 11+68.250 SW LOL	68	111				230	68
SW-2	11+68.250 - 12+00.000 SW LOL	32	52				108	32
SW-3	12+00.000 - 12+17.018 SW LOL	17	28				57	17
SW-3	12+17.018 - 12+40.386 SW LOL	24	39	80	25	100	81	24
SW-3	12+40.386 - 12+63.754 SW LOL	23	37	45	15	85	81	23
SW-19	252+00.000 - 254+00.000 ROUTE 101 ℄		15					
SD-16	SIGN 101 & SIGN 102		16					
TOTAL		265	462	215	95	500	902	265

SUMMARY OF QUANTITIES
Q-1

STATE OF CALIFORNIA - DEPARTMENT OF TRANSPORTATION
Caltrans DESIGN

FUNCTIONAL SUPERVISOR: OC LEE
CALCULATED-DESIGNED BY
CHECKED BY
REVISED BY
DATE REVISED
BARNABAS F. VORREITER

LAST REVISION 04-10-08
DATE PLOTTED => 21-SEP-2010
TIME PLOTTED => 1:36