ACHSIMG-005-2(948)E

Dist	COUNTY	ROUTE	POST MILES TOTAL PROJECT	SHEET No.	TOTAL SHEETS
07	LA	5	15.8/16.9	1	145

STATE OF CALIFORNIA

DEPARTMENT OF TRANSPORTATION

PROJECT PLANS FOR CONSTRUCTION ON

STATE HIGHWAY

IN LOS ANGELES COUNTY
IN LOS ANGELES
FROM 0.1 MILE NORTH OF LORENA STREET OVERCROSSING TO ROUTE 10/5/101 SEPARATION

TO BE SUPPLEMENTED BY STANDARD PLANS DATED MAY 2006

INDEX OF PLANS

SHEET No.	DESCRIPTION
1	TITLE AND LOCATION MAP
2-4	TYPICAL CROSS SECTIONS
5-9	LAYOUTS
10-12	PROFILE DIAGRAMS
13-22	CONSTRUCTION DETAILS
23-53	DRAINAGE PLANS, PROFILES, DETAILS AND QUANTITIES
54-58	UTILITY PLANS
59	CONSTRUCTION AREA SIGNS
60-74	TRAFFIC HANDLING PLANS, DETAILS AND QUANTITIES
75-76	PAVEMENT DELINEATION QUANTITIES
77-80	SIGN PLANS, DETAILS AND QUANTITIES
81	SUMMARY OF QUANTITIES
82-86	HIGHWAY PLANTING
87-92	ELECTRICAL PLANS
93-130	REVISED AND NEW STANDARD PLANS
STRUCTURE PLANS	
131-133	SOTO STREET UC Br No. 53-0598
134-137	ROUTE 60/5 SEPARATION Br No. 53-0599
138-141	MARIETTA STREET UC Br No. 53-0600
142-145	EUCLID AVENUE UC Br No. 53-0601

THE STANDARD PLANS LIST APPLICABLE TO THIS CONTRACT IS INCLUDED IN THE NOTICE TO BIDDERS AND SPECIAL PROVISIONS BOOK.

LOCATION MAP

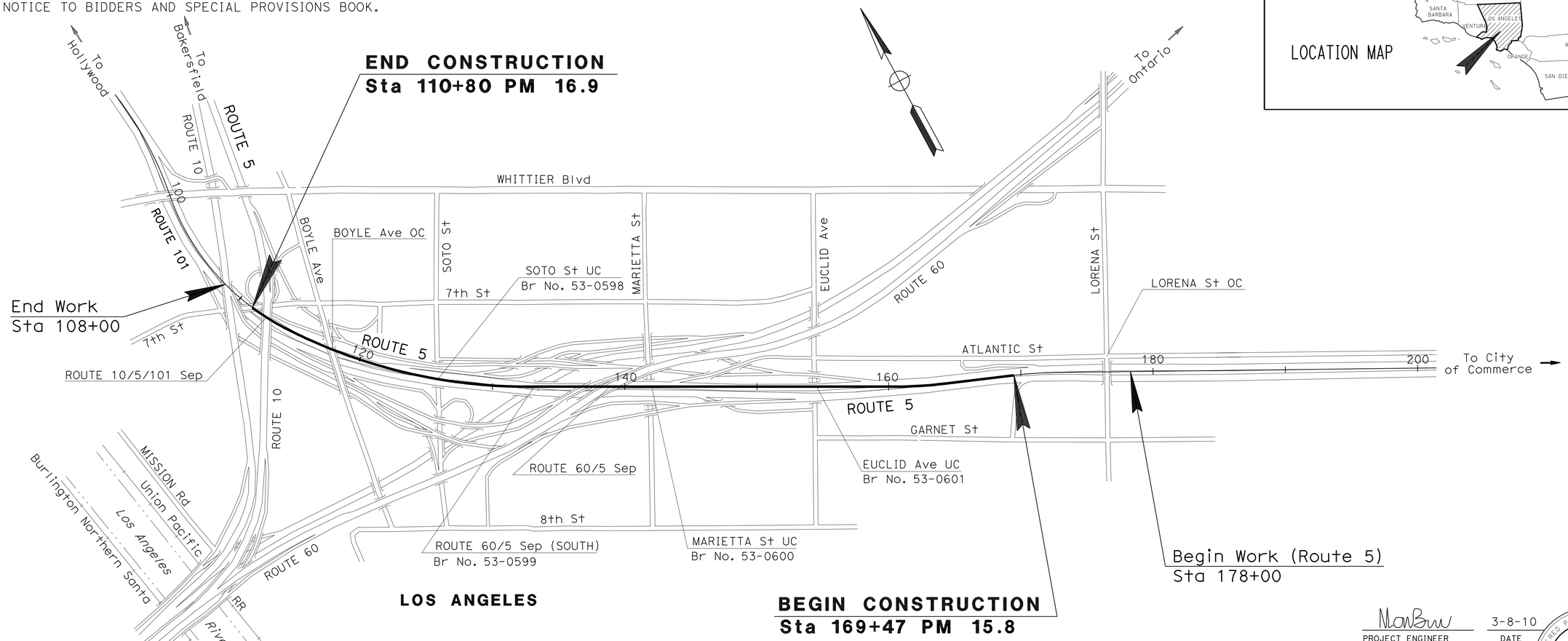

NO SCALE

THE CONTRACTOR SHALL POSSESS THE CLASS (OR CLASSES) OF LICENSE AS SPECIFIED IN THE "NOTICE TO BIDDERS".

PROJECT MANAGER HANY MESSIHA

DESIGN ENGINEER MAI BUI

PROJECT ENGINEER REGISTERED CIVIL ENGINEER — DATE 3-8-10

May 24, 2010
PLANS APPROVAL DATE

REGISTERED PROFESSIONAL ENGINEER — Mai P. Bui — No. C61280 — Exp. 6-30-11 — CIVIL — STATE OF CALIFORNIA

THE STATE OF CALIFORNIA OR ITS OFFICERS OR AGENTS SHALL NOT BE RESPONSIBLE FOR THE ACCURACY OR COMPLETENESS OF SCANNED COPIES OF THIS PLAN SHEET.

CONTRACT No.	07-184104
PROJECT ID	0700000183

LAST REVISION 00-00-00 — DATE PLOTTED => 17-AUG-2010 — TIME PLOTTED => 13:12

Dist	COUNTY	ROUTE	POST MILES TOTAL PROJECT	SHEET No.	TOTAL SHEETS
07	LA	5	15.8/16.9	2	145

REGISTERED CIVIL ENGINEER 3-8-10 DATE

5-24-10
PLANS APPROVAL DATE

REGISTERED PROFESSIONAL ENGINEER Mai P. Bui No. C61280 Exp. 6-30-11 CIVIL STATE OF CALIFORNIA

THE STATE OF CALIFORNIA OR ITS OFFICERS OR AGENTS SHALL NOT BE RESPONSIBLE FOR THE ACCURACY OR COMPLETENESS OF SCANNED COPIES OF THIS PLAN SHEET.

NOTES:

1. DIMENSIONS OF STRUCTURAL SECTIONS ARE SUBJECT TO TOLERANCES SPECIFIED IN THE STANDARD SPECIFICATIONS.
2. SUPERELEVATIONS AS SHOWN OR DIRECTED BY THE ENGINEER.

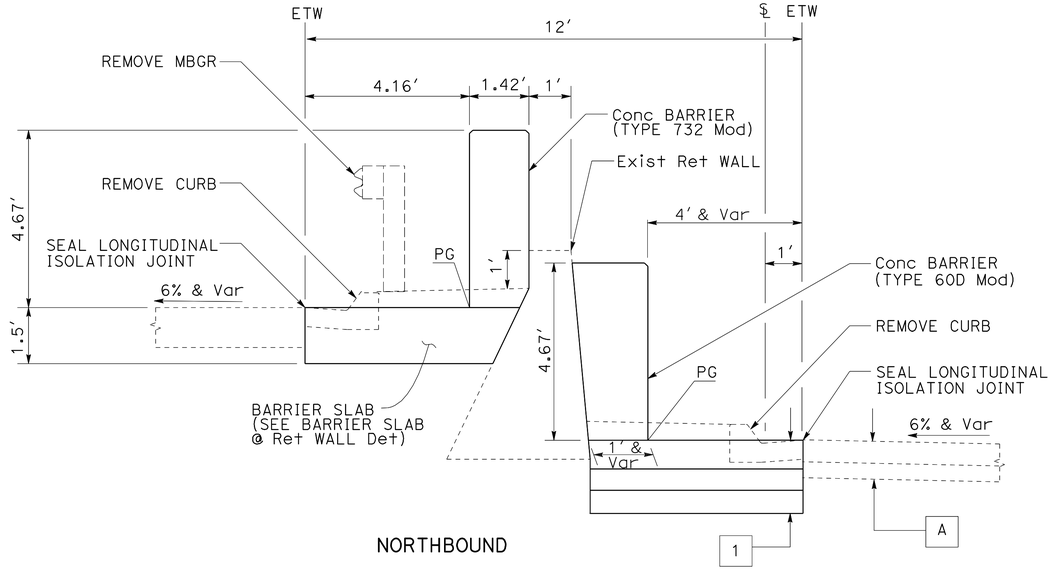

Sta 111+18.32 TO 112+87.52 (Trans AT BRIDGE COLUMN)

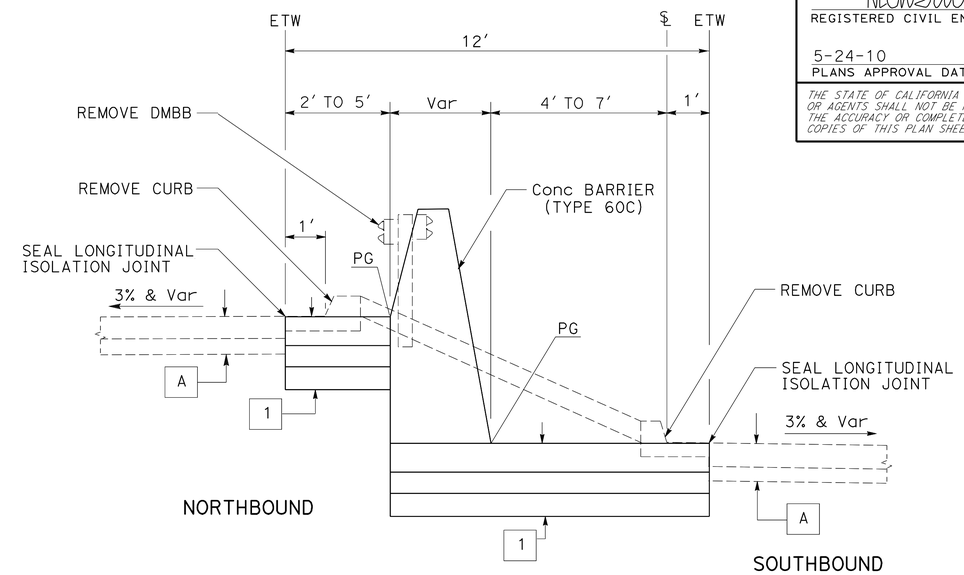

Sta 122+58.81 TO 124+08.64

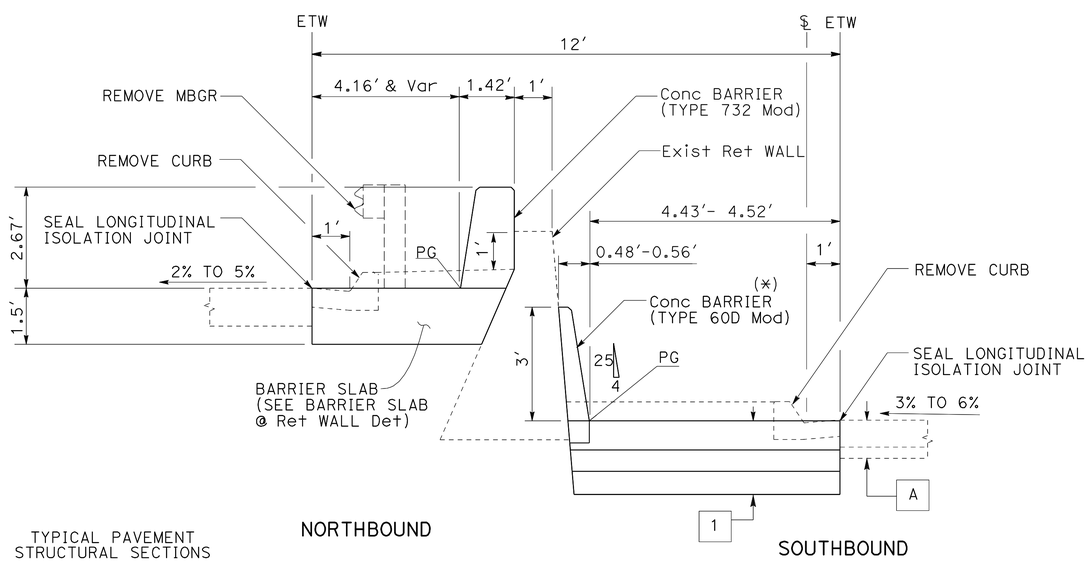

Sta 110+80.75 TO 111+18.32
Sta 112+87.52 TO 114+33.00
Sta 114+33.00 TO 115+16.57 (Trans AT SIGN POST)
Sta 115+16.57 TO 116+76.55
Sta 116+76.55 TO 118+62.30 (Trans AT BRIDGE COLUMN)
Sta 118+62.30 TO 122+00.00

(*) EXCEPT Sta 118+62.30 TO 122+00)

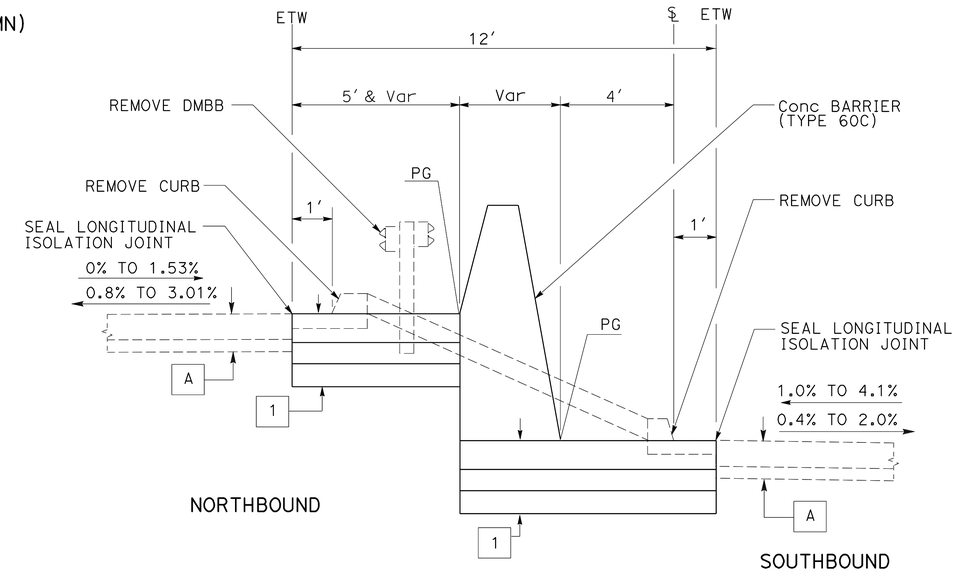

Sta 122+00.00 TO 122+58.81 (Conc BARRIER Trans)
Sta 136+10.86 TO 139+21.20 (Trans AT BRIDGE COLUMN)
Sta 139+21.20 TO 141+05.96
Sta 141+05.96 TO 141+45.96 (Trans AT Beg BRIDGE)
Sta 142+78.83 TO 143+18.93 (Trans AT End BRIDGE)
Sta 143+18.93 TO 146+84.00

TYPICAL PAVEMENT STRUCTURAL SECTIONS

1	1.00 PCC 0.50 LCB 0.70 Cl 3 AB
A	Exist 0.67 PCC 0.33 CTB
B	Exist 0.33 AC 0.67 PCC 0.33 CTB

ROUTE 5

TYPICAL CROSS SECTIONS

NO SCALE

X-1

STATE OF CALIFORNIA - DEPARTMENT OF TRANSPORTATION
Caltrans® OFFICE OF DESIGN A

FUNCTIONAL SUPERVISOR: SIMON KUO
CALCULATED-DESIGNED BY: MAI BUI
CHECKED BY
REVISED BY: STEWART STAHL
DATE REVISED

LAST REVISION 00-00-00
DATE PLOTTED => 27-MAY-2010
TIME PLOTTED => 11:22

NOTES:

1. DIMENSIONS OF STRUCTURAL SECTIONS ARE SUBJECT TO TOLERANCES SPECIFIED IN THE STANDARD SPECIFICATIONS.
2. SUPERELEVATIONS AS SHOWN OR DIRECTED BY THE ENGINEER.

Dist	COUNTY	ROUTE	POST MILES TOTAL PROJECT	SHEET No.	TOTAL SHEETS
07	LA	5	15.8/16.9	3	145

REGISTERED CIVIL ENGINEER 3-8-10 DATE

5-24-10
PLANS APPROVAL DATE

REGISTERED PROFESSIONAL ENGINEER Mai P. Bui No. C61280 Exp. 6-30-11 CIVIL STATE OF CALIFORNIA

THE STATE OF CALIFORNIA OR ITS OFFICERS OR AGENTS SHALL NOT BE RESPONSIBLE FOR THE ACCURACY OR COMPLETENESS OF SCANNED COPIES OF THIS PLAN SHEET.

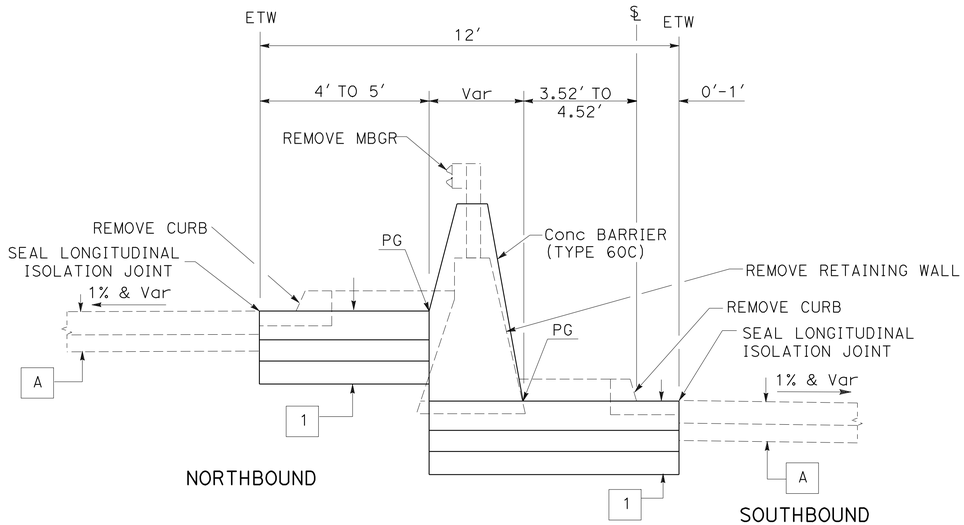

Sta 146+84.00 TO 148+00.00

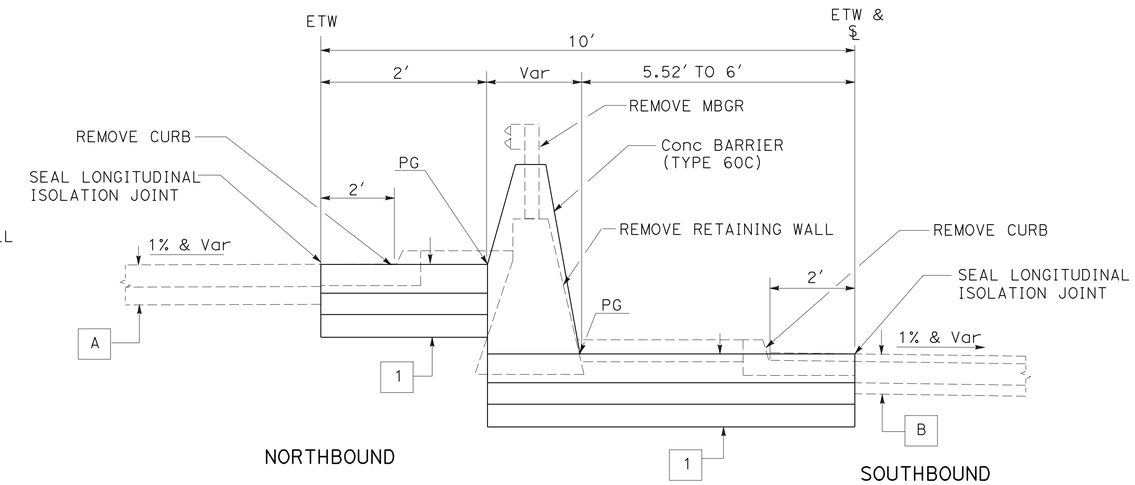

Sta 156+33.85 TO 160+40.00
Sta 160+40.00 TO 161+00.00 (Conc BARRIER Trans)

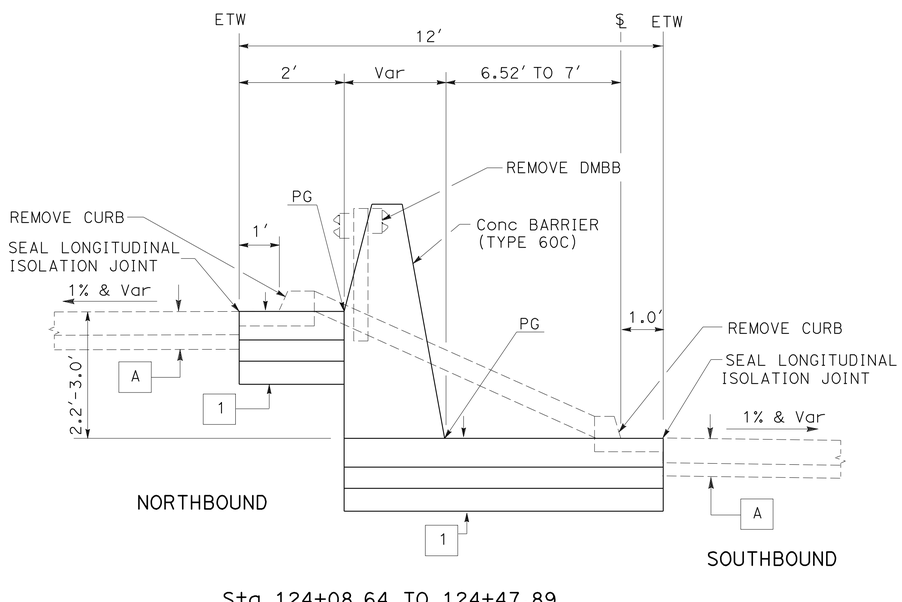

Sta 124+08.64 TO 124+47.89
Sta 124+47.89 TO 125+17.89 (Trans AT Beg BRIDGE)
Sta 126+82.55 TO 127+52.55 (Trans AT END BRIDGE)
Sta 127+52.55 TO 131+05.29
Sta 131+05.29 TO 131+65.29 (Trans AT Beg BRIDGE)
Sta 134+55.13 TO 135+15.65 (Trans AT END BRIDGE)
Sta 135+15.65 TO 136+10.86 (Conc BARRIER TAPER)

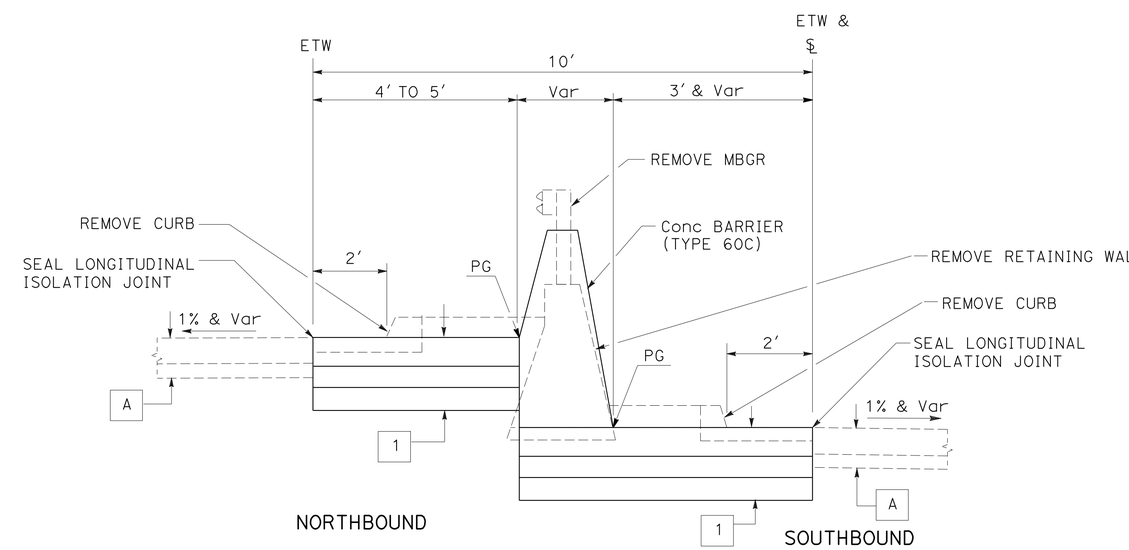

Sta 148+00.00 TO 153+53.19
Sta 153+49.19 TO 153+89.19 (Trans AT Beg BRIDGE)
Sta 155+22.63 TO 155+62.63 (Trans AT END BRIDGE)
Sta 155+62.63 TO 156+33.85 (Conc BARRIER TAPER)

ROUTE 5

TYPICAL CROSS SECTIONS

NO SCALE

X-2

STATE OF CALIFORNIA - DEPARTMENT OF TRANSPORTATION
Caltrans® OFFICE OF DESIGN A

FUNCTIONAL SUPERVISOR: SIMON KUO
CALCULATED-DESIGNED BY: STEWART STAHL
CHECKED BY: MAI BUI
REVISED BY
DATE REVISED

LAST REVISION 00-00-00
DATE PLOTTED => 27-MAY-2010
TIME PLOTTED => 11:22

Dist	COUNTY	ROUTE	POST MILES TOTAL PROJECT	SHEET No.	TOTAL SHEETS
07	LA	5	15.8/16.9	4	145

REGISTERED CIVIL ENGINEER 3-8-10 DATE

5-24-10
PLANS APPROVAL DATE

REGISTERED PROFESSIONAL ENGINEER Mai P. Bui No. C61280 Exp. 6-30-11 CIVIL STATE OF CALIFORNIA

THE STATE OF CALIFORNIA OR ITS OFFICERS OR AGENTS SHALL NOT BE RESPONSIBLE FOR THE ACCURACY OR COMPLETENESS OF SCANNED COPIES OF THIS PLAN SHEET.

NOTES:

1. DIMENSIONS OF STRUCTURAL SECTIONS ARE SUBJECT TO TOLERANCES SPECIFIED IN THE STANDARD SPECIFICATIONS
2. SUPERELEVATIONS AS SHOWN OR DIRECTED BY THE ENGINEER

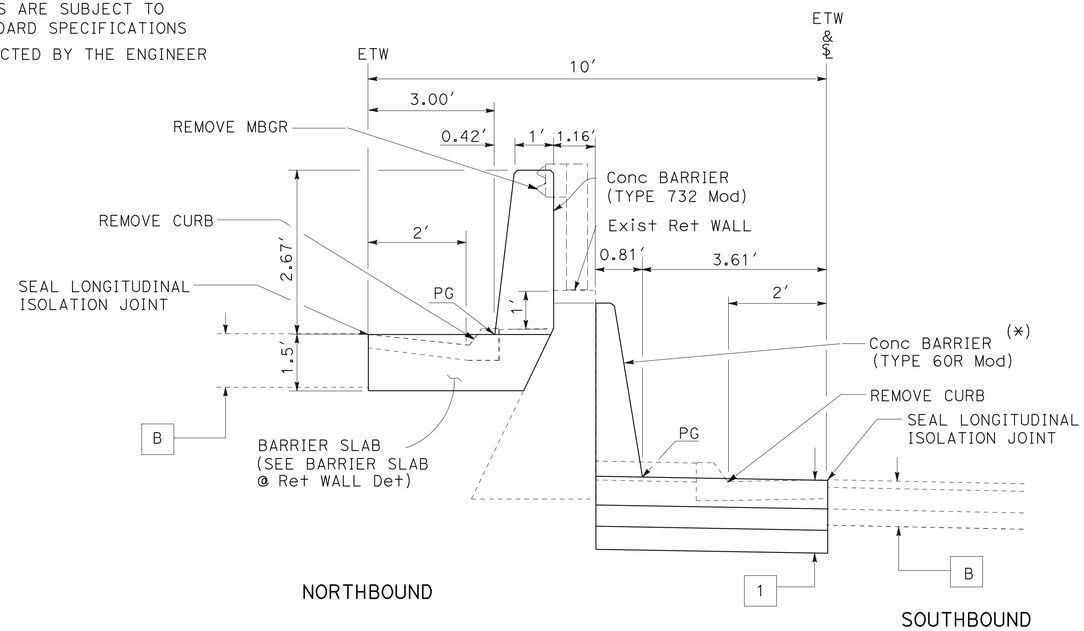

Sta 162+75.00 TO 164+01.27
Sta 164+01.27 TO 164+61.27 (Trans AT SIGN POST)

(*) EXCEPT Sta 162+75.00 TO Sta 164+01.27

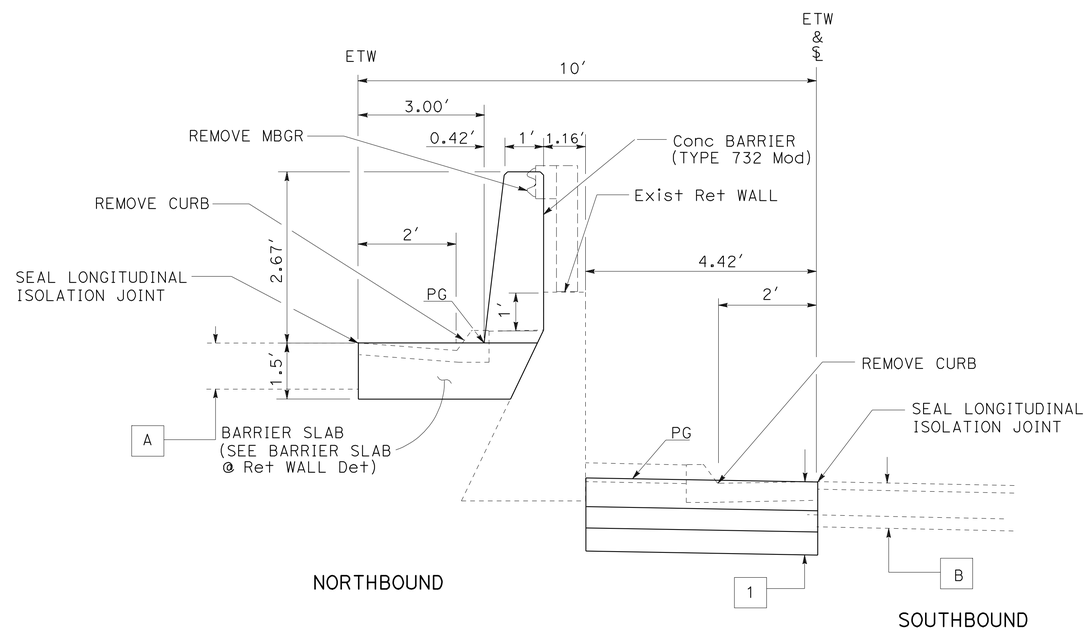

Sta 161+00 TO 162+75

ROUTE 5

TYPICAL CROSS SECTIONS

NO SCALE

X-3

STATE OF CALIFORNIA - DEPARTMENT OF TRANSPORTATION
Caltrans® OFFICE OF DESIGN A

FUNCTIONAL SUPERVISOR: SIMON KUO
CALCULATED-DESIGNED BY: STEWART STAHL
CHECKED BY: MAI BUI
REVISED BY / DATE REVISED

LAST REVISION 00-00-00
DATE PLOTTED => 27-MAY-2010
TIME PLOTTED => 11:22

Dist	COUNTY	ROUTE	POST MILES TOTAL PROJECT	SHEET No.	TOTAL SHEETS
07	LA	5	15.8/16.9	5	145

REGISTERED CIVIL ENGINEER 3-8-10 DATE

5-24-10
PLANS APPROVAL DATE

REGISTERED PROFESSIONAL ENGINEER Mai P. Bui No. C61280 Exp. 6-30-11 CIVIL STATE OF CALIFORNIA

THE STATE OF CALIFORNIA OR ITS OFFICERS OR AGENTS SHALL NOT BE RESPONSIBLE FOR THE ACCURACY OR COMPLETENESS OF SCANNED COPIES OF THIS PLAN SHEET.

NOTE:

FOR ACCURATE RIGHT OF WAY AND ACCESS DATA, CONTACT RIGHT OF WAY ENGINEERING AT THE DISTRICT OFFICE.

CURVE DATA

No. ⊕	R	Δ	T	L
1	1800.00′	43°37′36"	720.43′	1370.57′
2	4000.00′	27°5′34"	963.74′	1891.43′

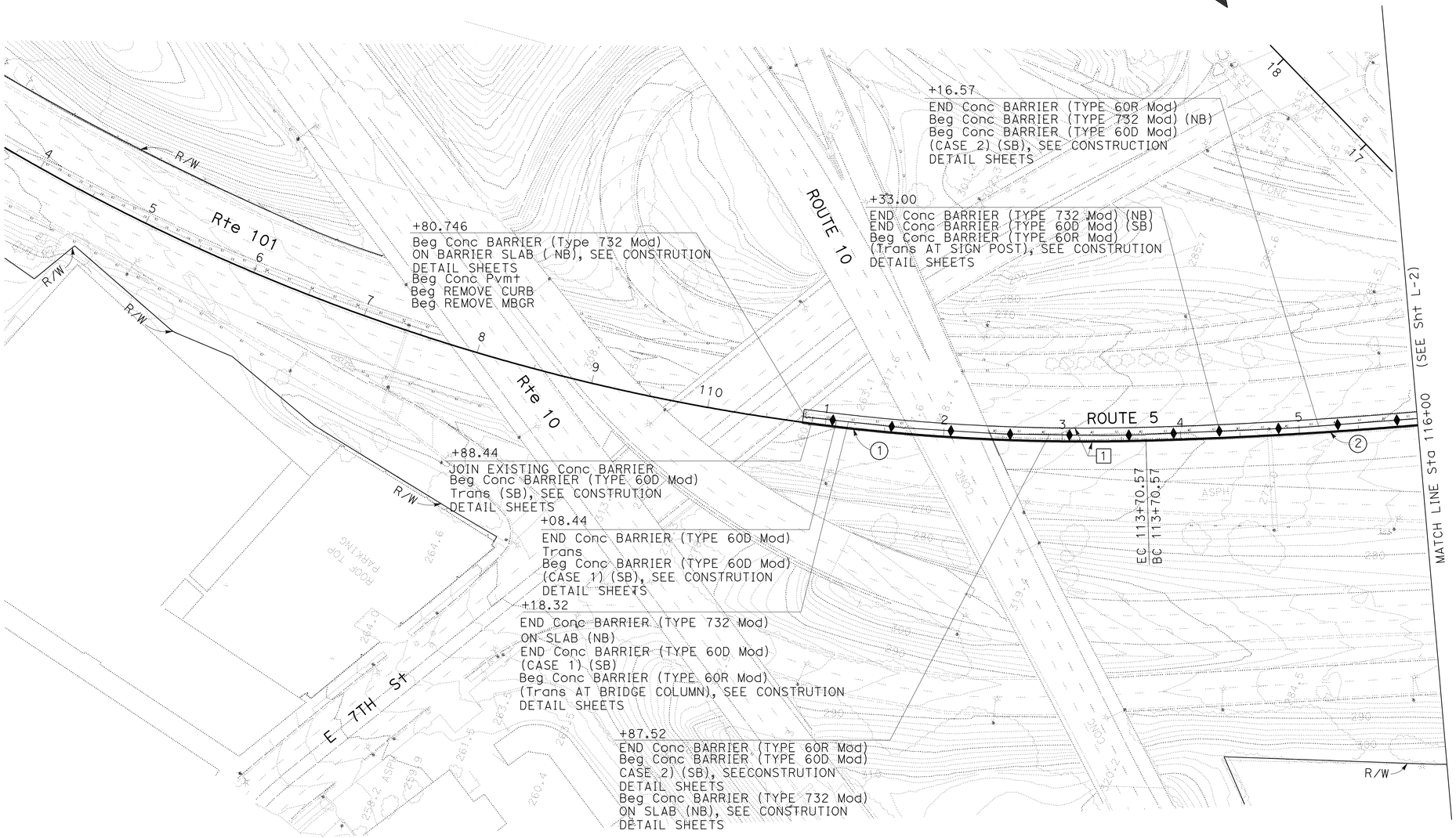

LAYOUT

SCALE: 1" = 50′

L-1

STATE OF CALIFORNIA - DEPARTMENT OF TRANSPORTATION
Caltrans® OFFICE OF DESIGN A

FUNCTIONAL SUPERVISOR: SIMON KUO
CALCULATED-DESIGNED BY: MAI BUI
CHECKED BY: SIMON KUO
REVISED BY
DATE REVISED

LAST REVISION 00-00-00
DATE PLOTTED => 27-MAY-2010
TIME PLOTTED => 11:22

Dist	COUNTY	ROUTE	POST MILES TOTAL PROJECT	SHEET No.	TOTAL SHEETS
07	LA	5	15.8/16.9	6	145

REGISTERED CIVIL ENGINEER 3-8-10 DATE

5-24-10
PLANS APPROVAL DATE

REGISTERED PROFESSIONAL ENGINEER Mai P. Bui No. C61280 Exp 6-30-11 CIVIL STATE OF CALIFORNIA

THE STATE OF CALIFORNIA OR ITS OFFICERS OR AGENTS SHALL NOT BE RESPONSIBLE FOR THE ACCURACY OR COMPLETENESS OF SCANNED COPIES OF THIS PLAN SHEET.

NOTE:

FOR ACCURATE RIGHT OF WAY AND ACCESS DATA, CONTACT RIGHT OF WAY ENGINEERING AT THE DISTRICT OFFICE.

CURVE DATA

No. ⊕	R	Δ	T	L
2	4000.00′	27°5′34″	963.74′	1891.43′

LAYOUT

SCALE: 1" = 50′

L-2

STATE OF CALIFORNIA - DEPARTMENT OF TRANSPORTATION

Caltrans® OFFICE OF DESIGN A

FUNCTIONAL SUPERVISOR: SIMON KUO

CALCULATED-DESIGNED BY: MAI BUI

CHECKED BY: SIMON KUO

REVISED BY

DATE REVISED

LAST REVISION 00-00-00

DATE PLOTTED => 27-MAY-2010

TIME PLOTTED => 11:22

BORDER LAST REVISED 4/11/2008

RELATIVE BORDER SCALE IS IN INCHES 0 1 2 3

USERNAME => trcarol

DGN FILE => 718410ea002.dgn

CU 07226

EA 184101

Dist	COUNTY	ROUTE	POST MILES TOTAL PROJECT	SHEET No.	TOTAL SHEETS
07	LA	5	15.8/16.9	7	145

REGISTERED CIVIL ENGINEER 3-8-10 DATE

5-24-10
PLANS APPROVAL DATE

REGISTERED PROFESSIONAL ENGINEER Mai P. Bui No. C61280 Exp. 6-30-11 CIVIL STATE OF CALIFORNIA

THE STATE OF CALIFORNIA OR ITS OFFICERS OR AGENTS SHALL NOT BE RESPONSIBLE FOR THE ACCURACY OR COMPLETENESS OF SCANNED COPIES OF THIS PLAN SHEET.

NOTE:

FOR ACCURATE RIGHT OF WAY AND ACCESS DATA, CONTACT RIGHT OF WAY ENGINEERING AT THE DISTRICT OFFICE.

CURVE DATA

No. ⊕	R	Δ	T	L
2	4000.00′	27°5′34″	963.74′	1891.43′

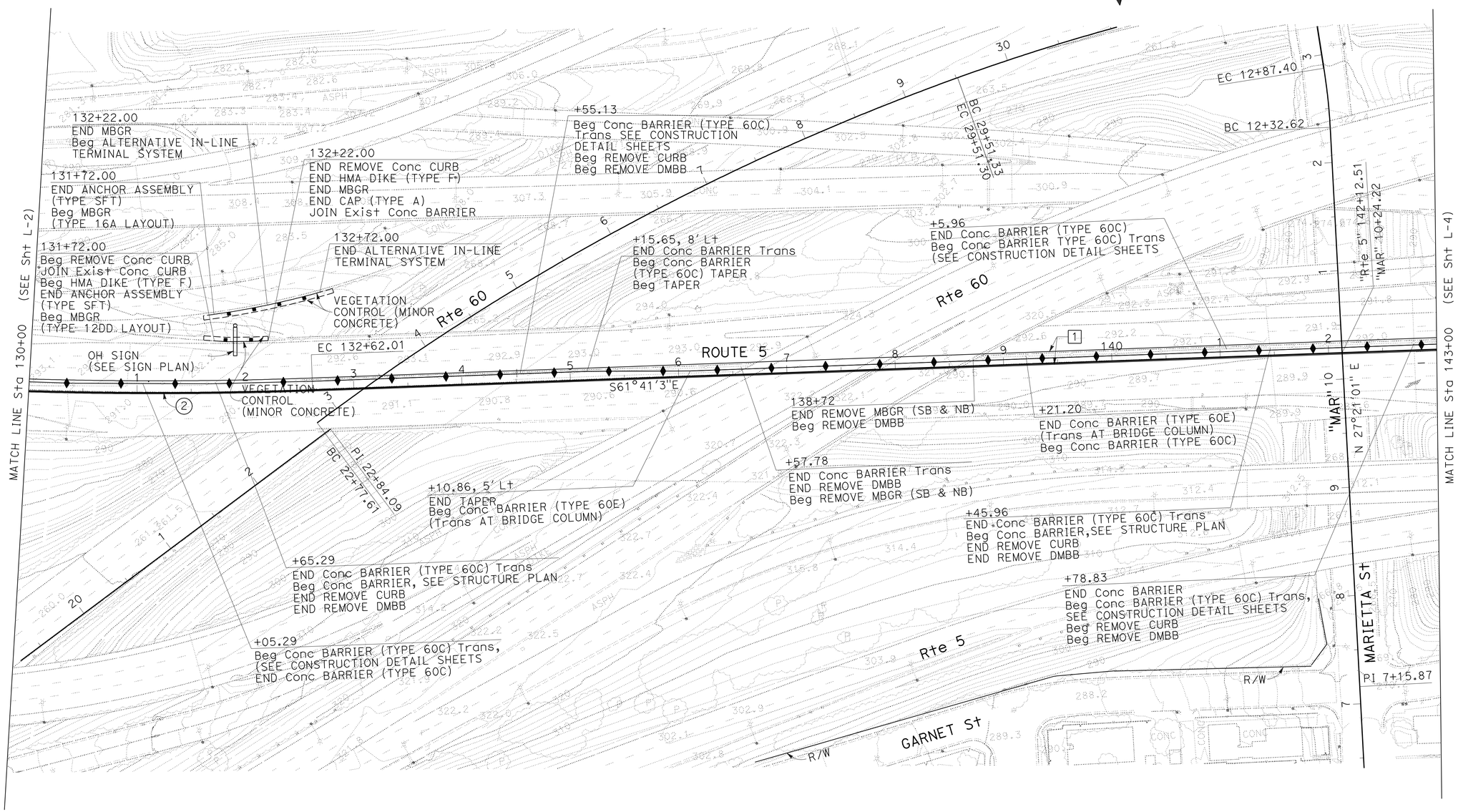

LAYOUT

SCALE: 1" = 50′

L-3

STATE OF CALIFORNIA - DEPARTMENT OF TRANSPORTATION
Caltrans® OFFICE OF DESIGN A

FUNCTIONAL SUPERVISOR: SIMON KUO
CALCULATED-DESIGNED BY: MAI BUI
CHECKED BY: SIMON KUO
REVISED BY
DATE REVISED

LAST REVISION 00-00-00
DATE PLOTTED => 27-MAY-2010
TIME PLOTTED => 11:22

Dist	COUNTY	ROUTE	POST MILES TOTAL PROJECT	SHEET No.	TOTAL SHEETS
07	LA	5	15.8/16.9	8	145

REGISTERED CIVIL ENGINEER — DATE: 3-8-10

5-24-10
PLANS APPROVAL DATE

REGISTERED PROFESSIONAL ENGINEER — Mai P. Bui — No. C61280 — Exp. 6-30-11 — CIVIL — STATE OF CALIFORNIA

THE STATE OF CALIFORNIA OR ITS OFFICERS OR AGENTS SHALL NOT BE RESPONSIBLE FOR THE ACCURACY OR COMPLETENESS OF SCANNED COPIES OF THIS PLAN SHEET.

NOTE:

FOR ACCURATE RIGHT OF WAY AND ACCESS DATA, CONTACT RIGHT OF WAY ENGINEERING AT THE DISTRICT OFFICE.

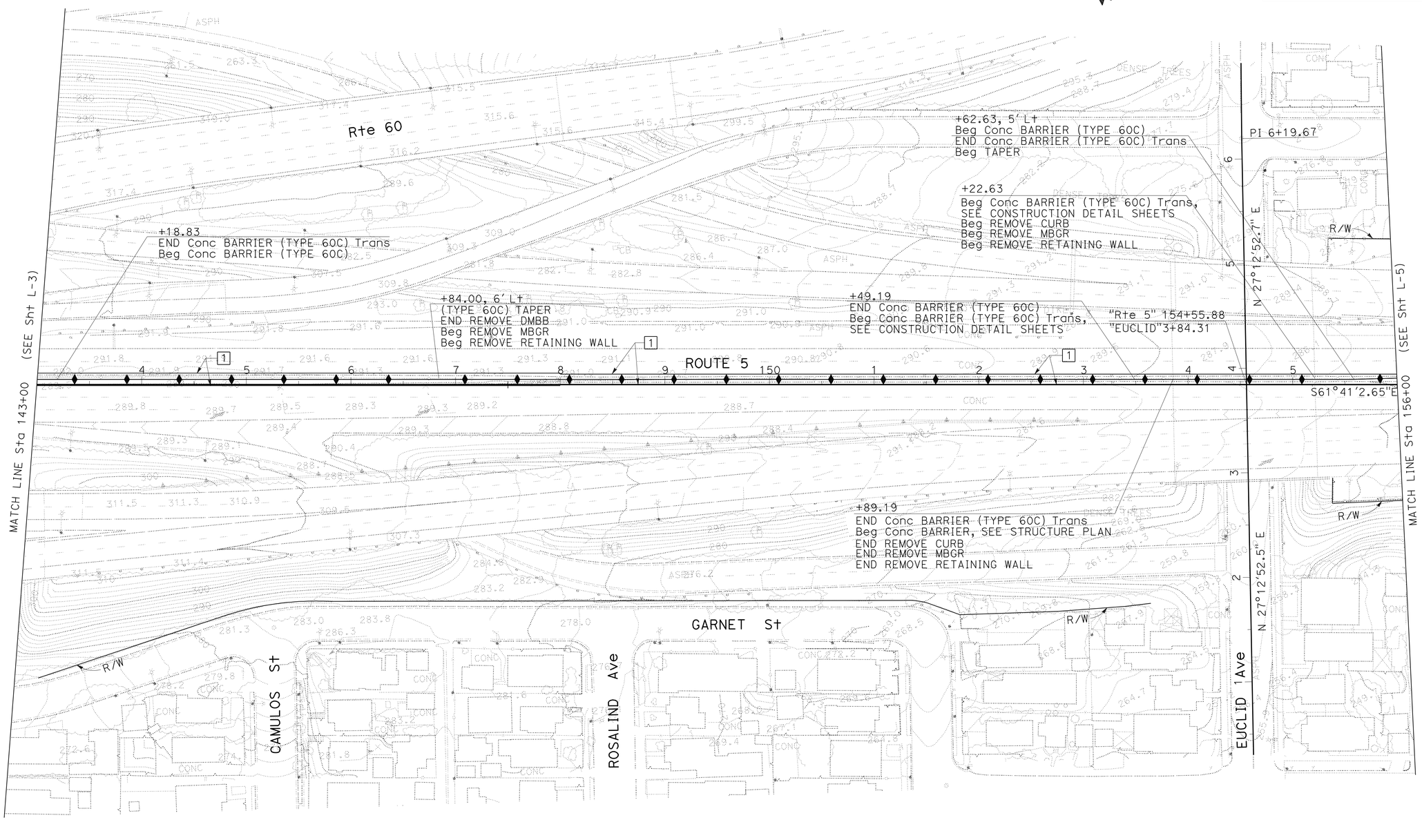

LAYOUT

SCALE: 1" = 50'

L-4

STATE OF CALIFORNIA - DEPARTMENT OF TRANSPORTATION
Caltrans® OFFICE OF DESIGN A

FUNCTIONAL SUPERVISOR: SIMON KUO

CALCULATED-DESIGNED BY: MAI BUI — CHECKED BY: SIMON KUO

REVISED BY — DATE REVISED

LAST REVISION 00-00-00 — DATE PLOTTED => 27-MAY-2010 — TIME PLOTTED => 11:23

Dist	COUNTY	ROUTE	POST MILES TOTAL PROJECT	SHEET No.	TOTAL SHEETS
07	LA	5	15.8/16.9	9	145

REGISTERED CIVIL ENGINEER 3-8-10 DATE

5-24-10
PLANS APPROVAL DATE

REGISTERED PROFESSIONAL ENGINEER Mai P. Bui No. C61280 Exp. 6-30-11 CIVIL STATE OF CALIFORNIA

THE STATE OF CALIFORNIA OR ITS OFFICERS OR AGENTS SHALL NOT BE RESPONSIBLE FOR THE ACCURACY OR COMPLETENESS OF SCANNED COPIES OF THIS PLAN SHEET.

CURVE DATA

No. ⊕	R	Δ	T	L
3	3000.03′	6°53′13″	180.52′	360.60′

NOTE:

FOR ACCURATE RIGHT OF WAY AND ACCESS DATA, CONTACT RIGHT OF WAY ENGINEERING AT THE DISTRICT OFFICE

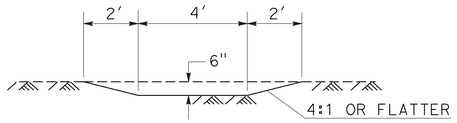

SECTION A-A
NO SCALE

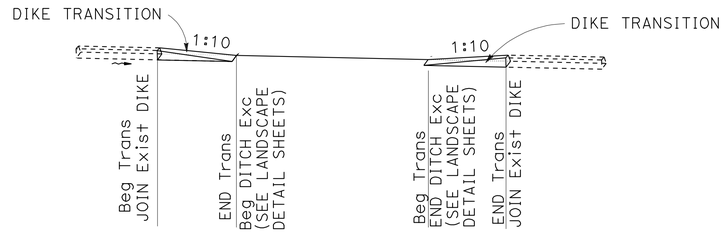

DIKE Trans AT BIOSWALE

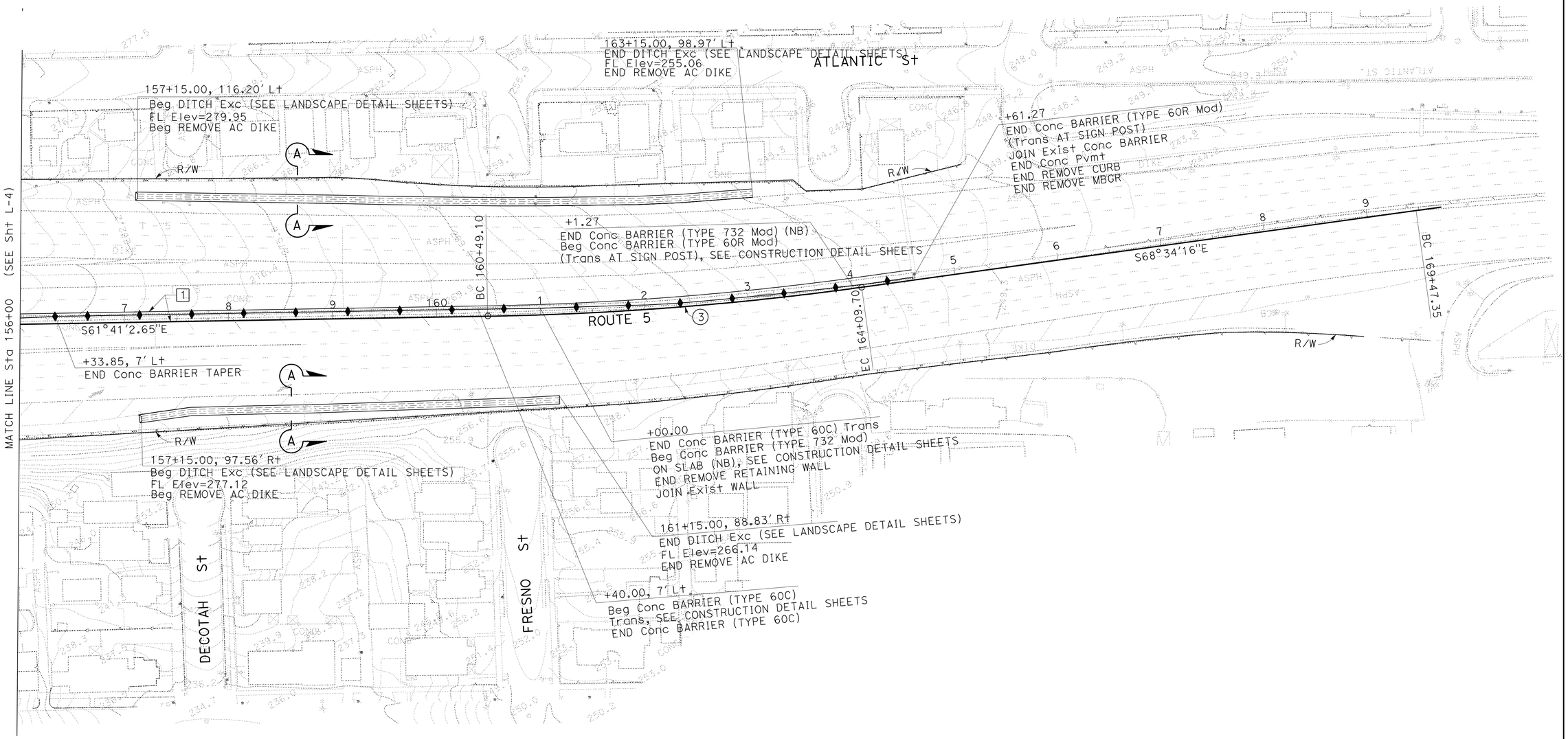

LAYOUT
SCALE: 1″ = 50′
L-5

STATE OF CALIFORNIA - DEPARTMENT OF TRANSPORTATION
Caltrans® OFFICE OF DESIGN A

FUNCTIONAL SUPERVISOR: SIMON KUO
CALCULATED-DESIGNED BY: MAI BUI
CHECKED BY: SIMON KUO
REVISED BY
DATE REVISED

LAST REVISION 00-00-00
DATE PLOTTED => 27-MAY-2010
TIME PLOTTED => 11:23

Dist	COUNTY	ROUTE	POST MILES TOTAL PROJECT	SHEET No.	TOTAL SHEETS
07	LA	5	15.8/16.9	10	145

REGISTERED CIVIL ENGINEER 3-8-10 DATE

5-24-10
PLANS APPROVAL DATE

REGISTERED PROFESSIONAL ENGINEER
Mai P. Bui
No. C61280
Exp. 6-30-11
CIVIL
STATE OF CALIFORNIA

THE STATE OF CALIFORNIA OR ITS OFFICERS OR AGENTS SHALL NOT BE RESPONSIBLE FOR THE ACCURACY OR COMPLETENESS OF SCANNED COPIES OF THIS PLAN SHEET.

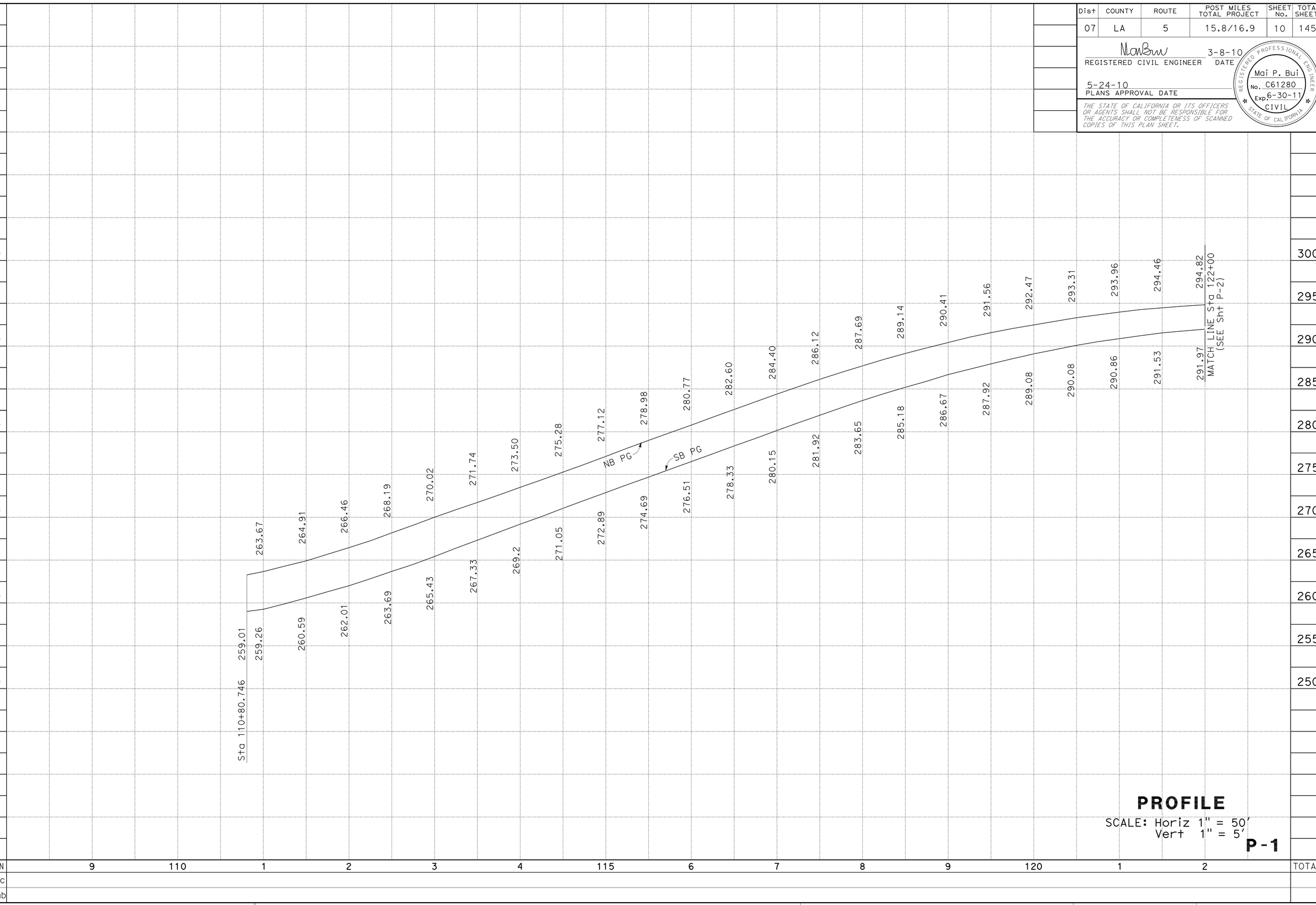

PROFILE

SCALE: Horiz 1" = 50'
Vert 1" = 5'

P-1

STATE OF CALIFORNIA - DEPARTMENT OF TRANSPORTATION
Caltrans® OFFICE OF DESIGN A

FUNCTIONAL SUPERVISOR: SIMON KUO
CALCULATED-DESIGNED BY: TJANDRA GUNAWAN
CHECKED BY: MAI BUI
REVISED BY
DATE REVISED

LAST REVISION 00-00-00
DATE PLOTTED => 27-MAY-2010
TIME PLOTTED => 11:23

Dist	COUNTY	ROUTE	POST MILES TOTAL PROJECT	SHEET No.	TOTAL SHEETS
07	LA	5	15.8/16.9	11	145

REGISTERED CIVIL ENGINEER 3-8-10 DATE

5-24-10
PLANS APPROVAL DATE

REGISTERED PROFESSIONAL ENGINEER
Mai P. Bui
No. C61280
Exp. 6-30-11
CIVIL
STATE OF CALIFORNIA

THE STATE OF CALIFORNIA OR ITS OFFICERS OR AGENTS SHALL NOT BE RESPONSIBLE FOR THE ACCURACY OR COMPLETENESS OF SCANNED COPIES OF THIS PLAN SHEET.

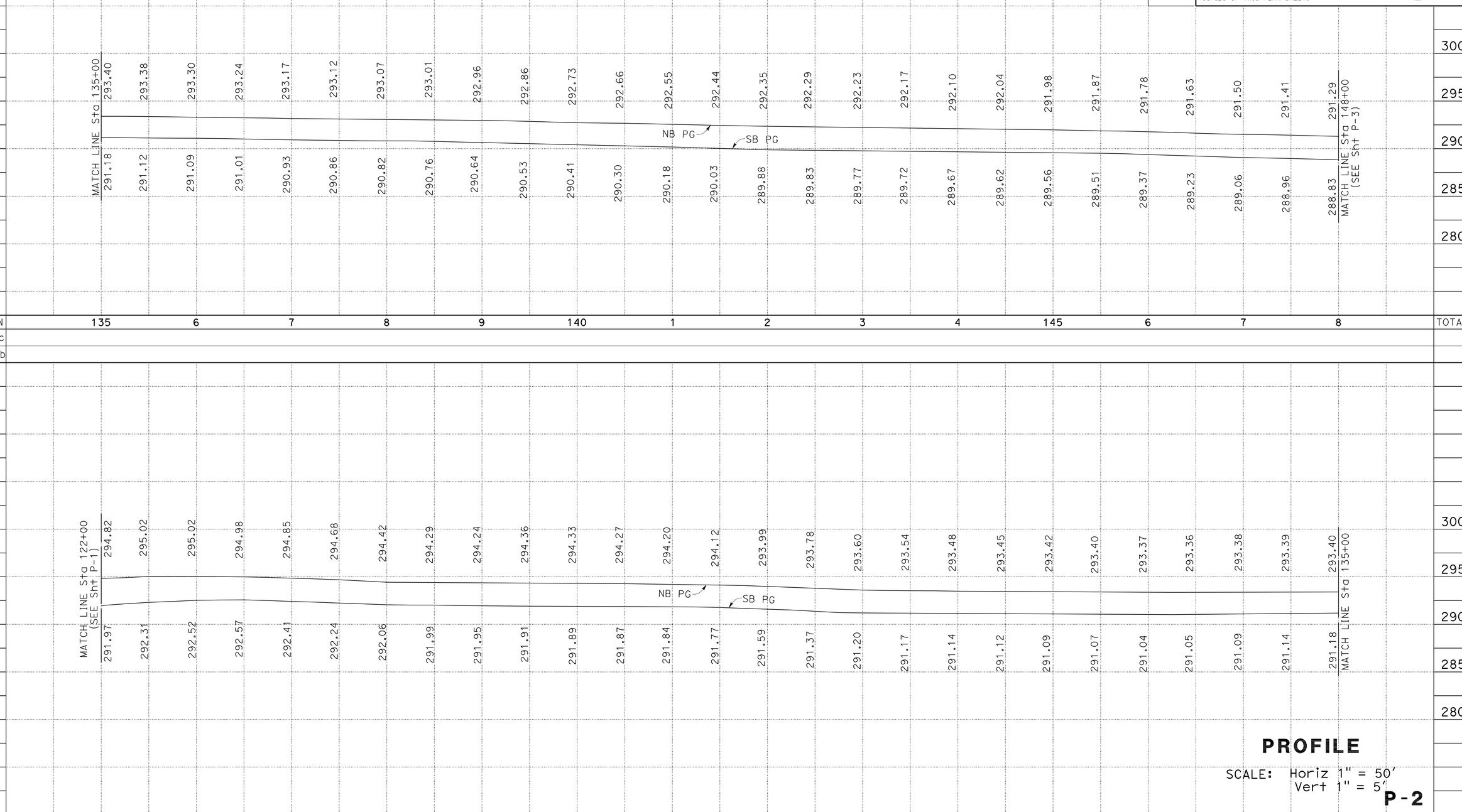

PROFILE

SCALE: Horiz 1" = 50'
Vert 1" = 5'

P-2

REVISED BY | DATE REVISED

TJANDRA GUNAWAN | MAI BUI

CALCULATED-DESIGNED BY | CHECKED BY

FUNCTIONAL SUPERVISOR: SIMON KUO

STATE OF CALIFORNIA - DEPARTMENT OF TRANSPORTATION
Caltrans® OFFICE OF DESIGN A

LAST REVISION 00-00-00 | DATE PLOTTED => 27-MAY-2010 | TIME PLOTTED => 11:23

Dist	COUNTY	ROUTE	POST MILES TOTAL PROJECT	SHEET No.	TOTAL SHEETS
07	LA	5	15.8/16.9	12	145

REGISTERED CIVIL ENGINEER 3-8-10 DATE

5-24-10
PLANS APPROVAL DATE

REGISTERED PROFESSIONAL ENGINEER
Mai P. Bui
No. C61280
Exp. 6-30-11
CIVIL
STATE OF CALIFORNIA

THE STATE OF CALIFORNIA OR ITS OFFICERS OR AGENTS SHALL NOT BE RESPONSIBLE FOR THE ACCURACY OR COMPLETENESS OF SCANNED COPIES OF THIS PLAN SHEET.

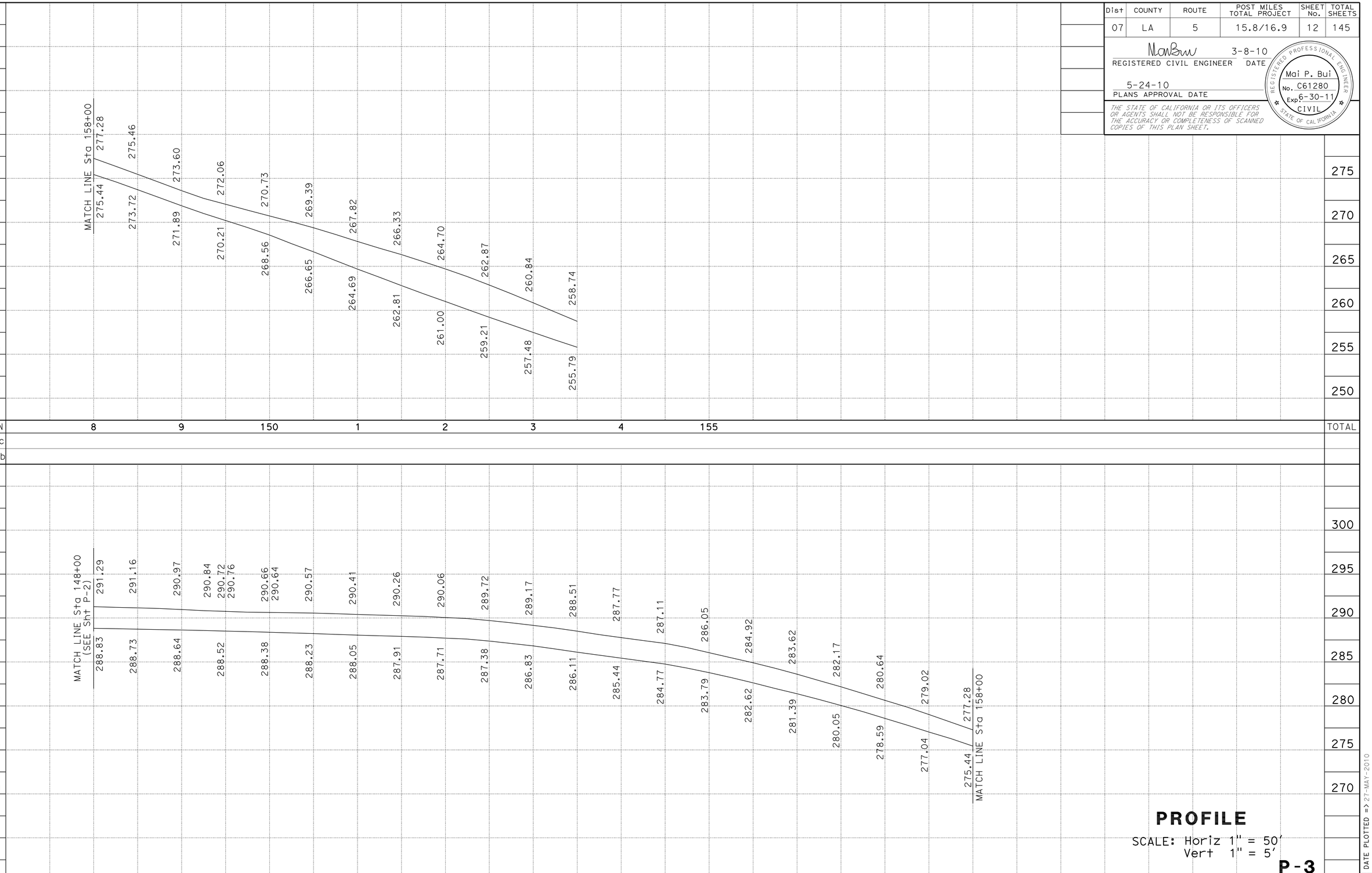

PROFILE

SCALE: Horiz 1" = 50'
Vert 1" = 5'

P-3

REVISED BY
DATE REVISED
TJANDRA GUNAWAN
SIMON KUO
CALCULATED-DESIGNED BY
CHECKED BY
FUNCTIONAL SUPERVISOR
SIMON KUO

STATE OF CALIFORNIA - DEPARTMENT OF TRANSPORTATION
Caltrans® OFFICE OF DESIGN A

LAST REVISION 00-00-00
DATE PLOTTED => 27-MAY-2010
TIME PLOTTED => 10:53

Dist	COUNTY	ROUTE	POST MILES TOTAL PROJECT	SHEET No.	TOTAL SHEETS
07	LA	5	15.8/16.9	13	145

REGISTERED CIVIL ENGINEER 3-8-10 DATE

5-24-10
PLANS APPROVAL DATE

REGISTERED PROFESSIONAL ENGINEER Mai P. Bui No. C61280 Exp. 6-30-11 CIVIL STATE OF CALIFORNIA

THE STATE OF CALIFORNIA OR ITS OFFICERS OR AGENTS SHALL NOT BE RESPONSIBLE FOR THE ACCURACY OR COMPLETENESS OF SCANNED COPIES OF THIS PLAN SHEET.

NOTES:

1. BARRIER SLAB AND CONCRETE PAVEMENT ARE NOT SHOWN ON PLAN VIEW.
2. FOR REINFORCEMENT AND DIMENSION OF CONCRETE BARRIER (TYPE 732 Mod), SEE SHEET C-7.

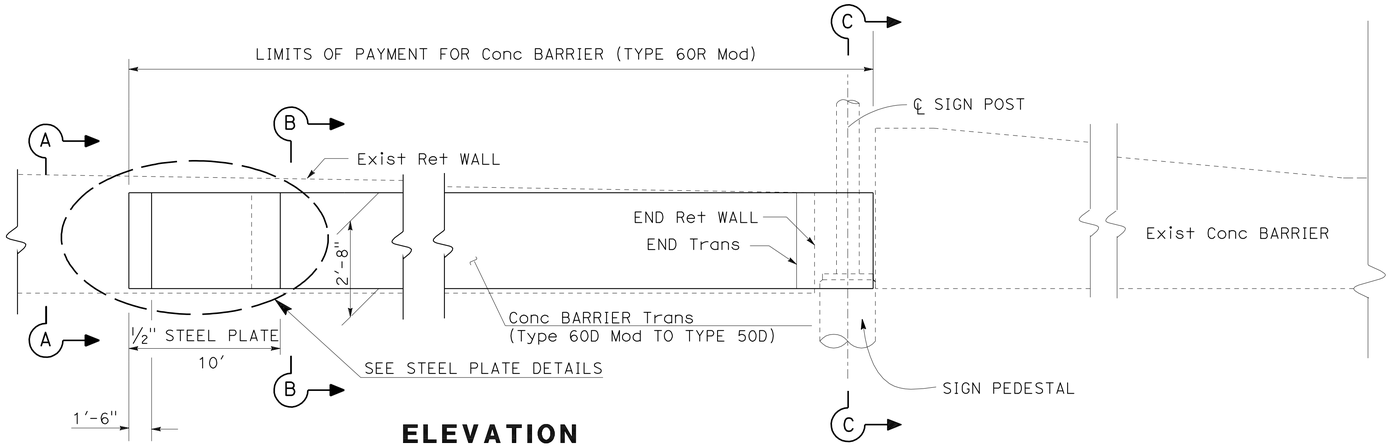

ELEVATION

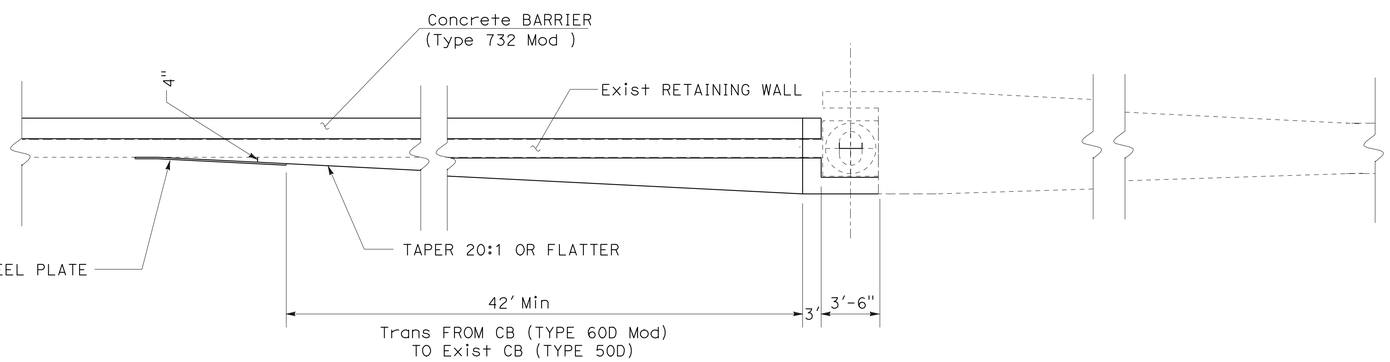

PLAN

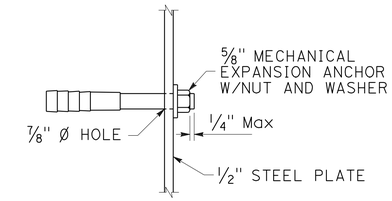

ANCHOR BOLT DETAIL

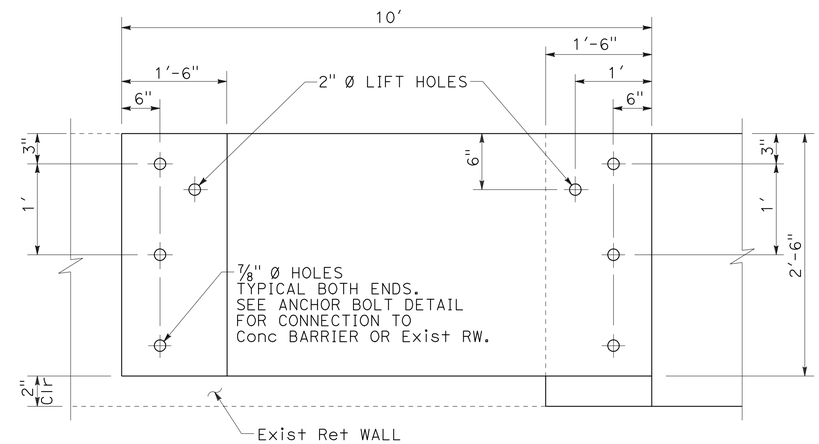

STEEL PLATE
(ELEVATION)

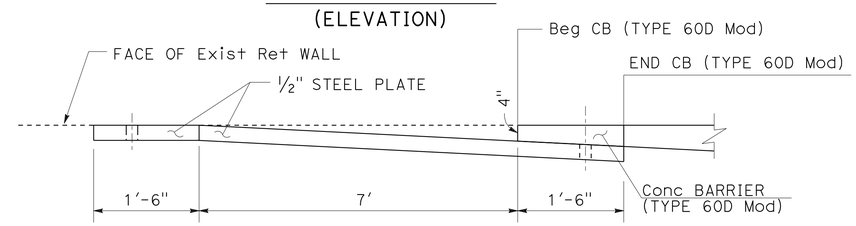

STEEL PLATE
(PLAN VIEW)

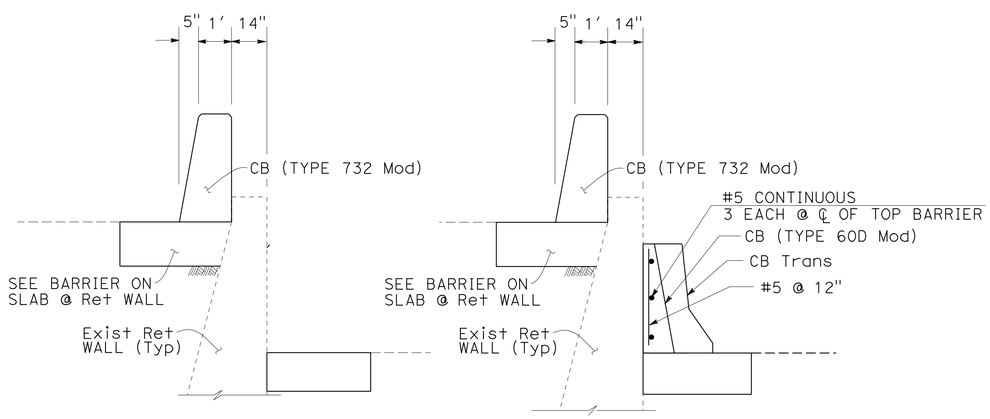

SECTION A-A SECTION B-B

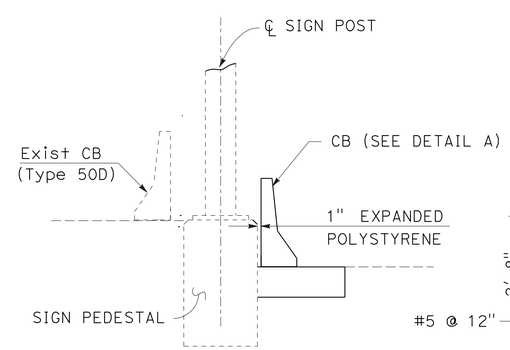

SECTION C-C

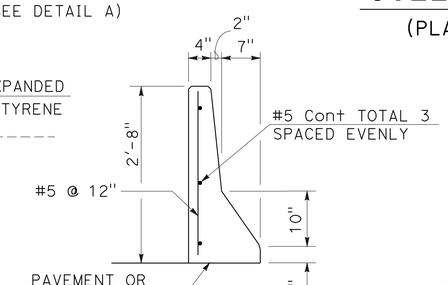

DETAIL A

CONCRETE BARRIER (TYPE 60R Mod) AT SIGN POST (Sta 164+61)

CONSTRUCTION DETAILS
NO SCALE

C-1

STATE OF CALIFORNIA - DEPARTMENT OF TRANSPORTATION
Caltrans OFFICE OF DESIGN A

FUNCTIONAL SUPERVISOR: SIMON KUO
CALCULATED-DESIGNED BY: MAI BUI
CHECKED BY: SIMON KUO
REVISED BY
DATE REVISED

LAST REVISION 00-00-00 DATE PLOTTED => 27-MAY-2010 TIME PLOTTED => 10:53

Dist	COUNTY	ROUTE	POST MILES TOTAL PROJECT	SHEET No.	TOTAL SHEETS
07	LA	5	15.8/16.9	14	145

REGISTERED CIVIL ENGINEER 3-8-10 DATE

5-24-10
PLANS APPROVAL DATE

REGISTERED PROFESSIONAL ENGINEER Mai P. Bui No. C61280 Exp 6-30-11 CIVIL STATE OF CALIFORNIA

THE STATE OF CALIFORNIA OR ITS OFFICERS OR AGENTS SHALL NOT BE RESPONSIBLE FOR THE ACCURACY OR COMPLETENESS OF SCANNED COPIES OF THIS PLAN SHEET.

NOTES:

1. THE CONTRACTOR SHALL VERIFY CONTROLLING FIELD DIMENSIONS BEFORE ORDERING OR FABRICATING MATERIAL.
2. FORMING MATERIAL FOR 4" CAP MAY REMAIN IN PLACE.
3. ENCLOSE COLUMN WITH 4" EXPANDED POLYSTYRENE WHERE CONCRETE OR CEMENT TREATED BASE ENCASES THE COLUMN.
4. RESIN CAPSULE ANCHORAGE IS SUBJECT TO APPROVAL OF THE ENGINEER. INSTALLATION PROCEDURES SHALL COMPLY WITH MANUFACTURER'S INSTRUCTIONS.
5. DETAIL B SIMILAR TO DETAIL A EXCEPT FOR ANCHORAGE DEVICES.

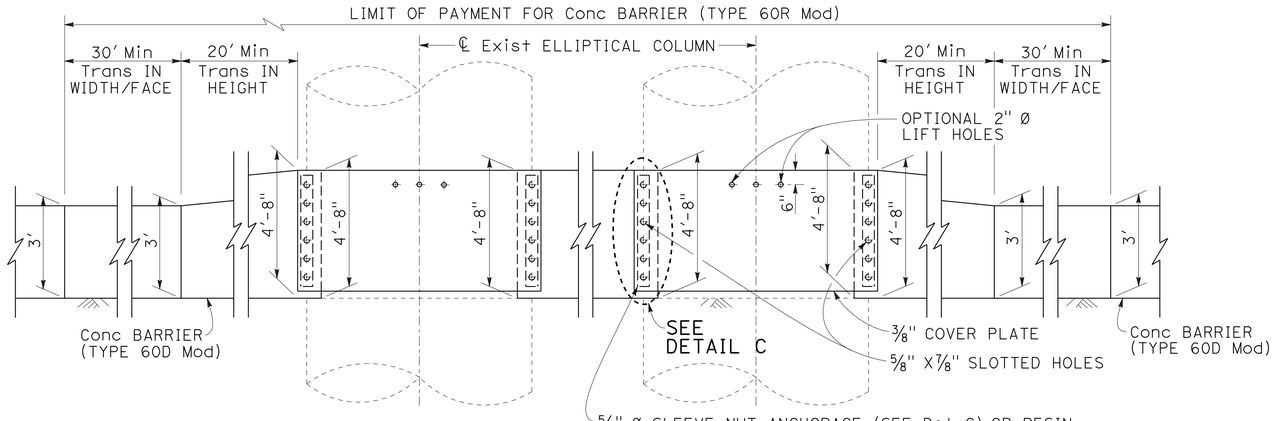

ELEVATION

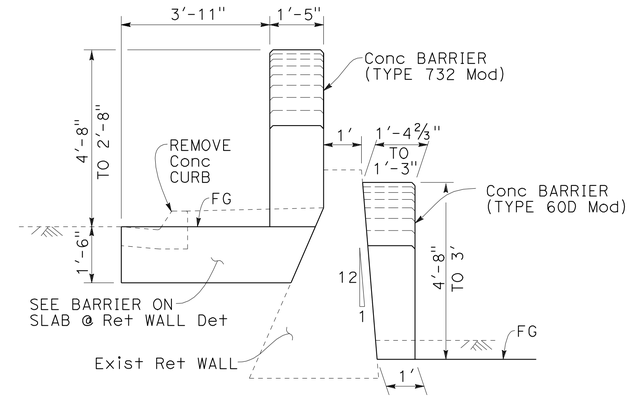

SECTION B-B

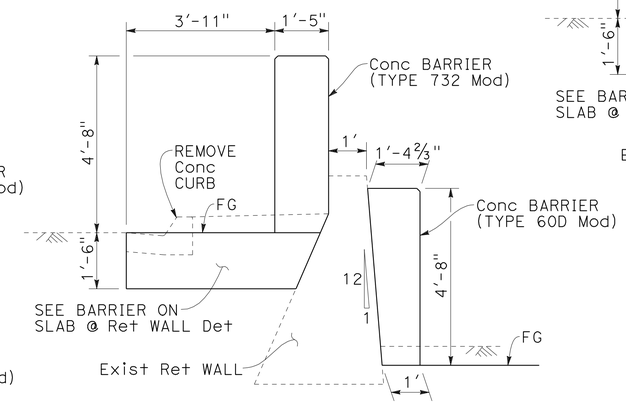

SECTION A-A

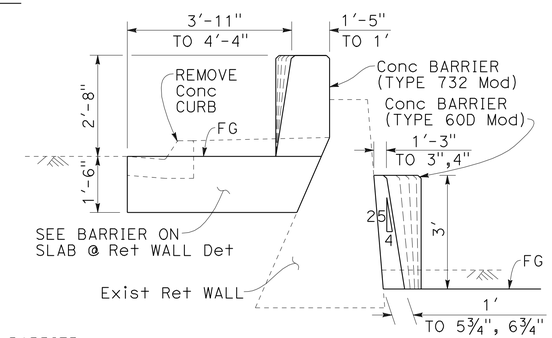

SECTION C-C

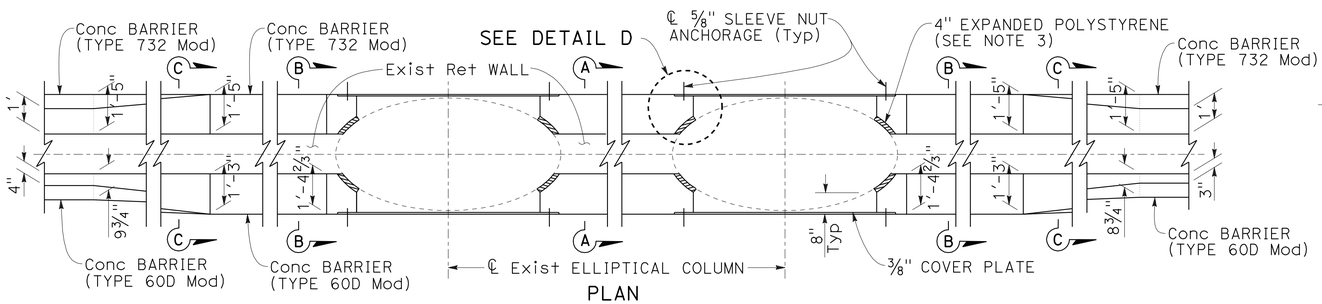

PLAN

CONCRETE BARRIER (TYPE 60R Mod)

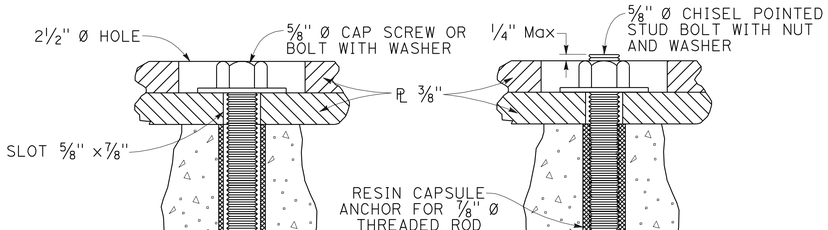

DETAIL A

DETAIL B

ALTERNATIVE ANCHORAGE

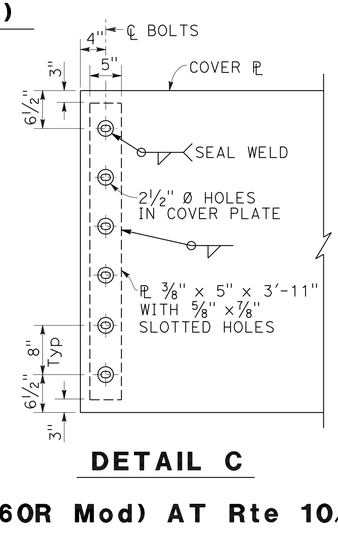

DETAIL C

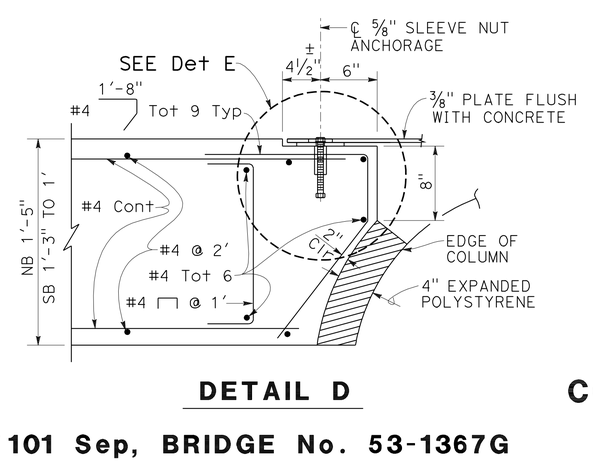

DETAIL D

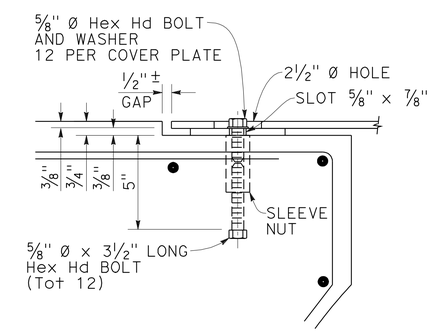

DETAIL E

CONSTRUCTION DETAILS

NO SCALE

CONCRETE BARRIER (TYPE 60R Mod) AT Rte 10/5/101 Sep, BRIDGE No. 53-1367G

C-2

STATE OF CALIFORNIA - DEPARTMENT OF TRANSPORTATION
Caltrans® OFFICE OF DESIGN A

CALCULATED-DESIGNED BY: HUAN NGUYEN
CHECKED BY: MAI BUI
FUNCTIONAL SUPERVISOR: SIMON KUO
REVISED BY / DATE REVISED

LAST REVISION 00-00-00
DATE PLOTTED => 27-MAY-2010
TIME PLOTTED => 10:53

Dist	COUNTY	ROUTE	POST MILES TOTAL PROJECT	SHEET No.	TOTAL SHEETS
07	LA	5	15.8/16.9	15	145

REGISTERED CIVIL ENGINEER — DATE 3-8-10

5-24-10
PLANS APPROVAL DATE

REGISTERED PROFESSIONAL ENGINEER — Mai P. Bui — No. C61280 — Exp. 6-30-11 — CIVIL — STATE OF CALIFORNIA

THE STATE OF CALIFORNIA OR ITS OFFICERS OR AGENTS SHALL NOT BE RESPONSIBLE FOR THE ACCURACY OR COMPLETENESS OF SCANNED COPIES OF THIS PLAN SHEET.

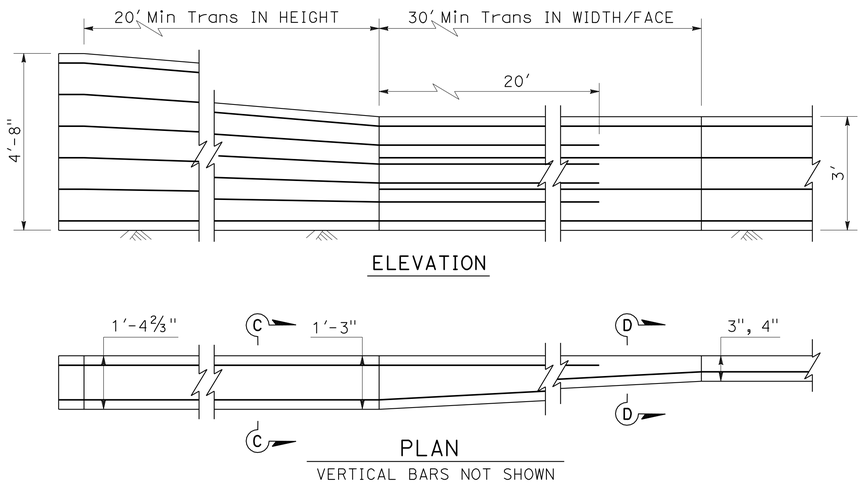

Conc BARRIER (TYPE 60D Mod) 3' TO 4'-8" Trans

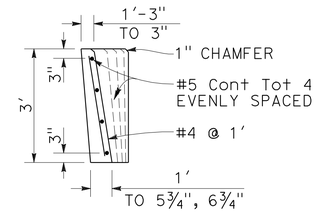

SECTION D-D

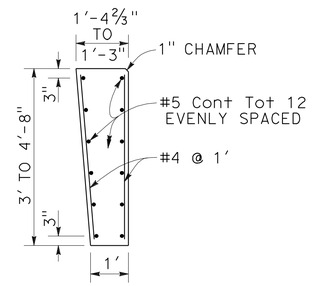

SECTION C-C

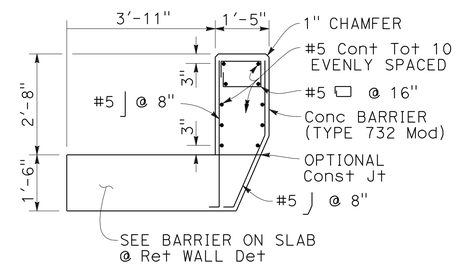

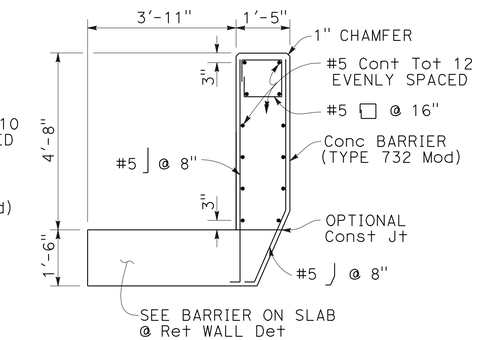

Conc BARRIER (TYPE 732 Mod) ON SLAB

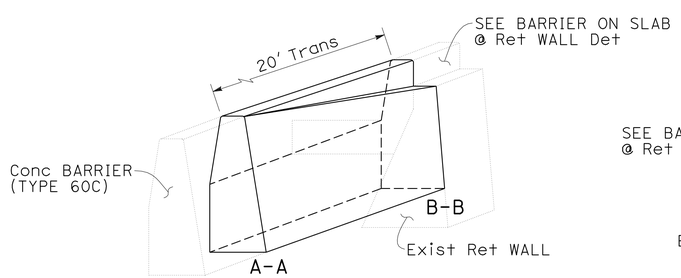

ISOMETRIC VIEW

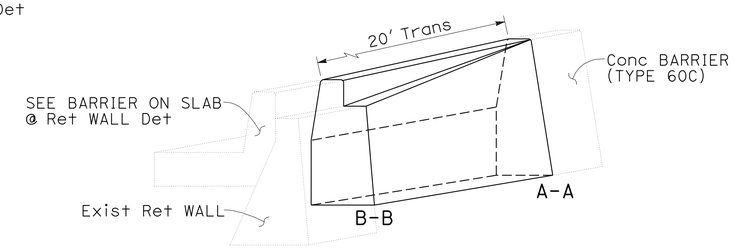

ISOMETRIC VIEW

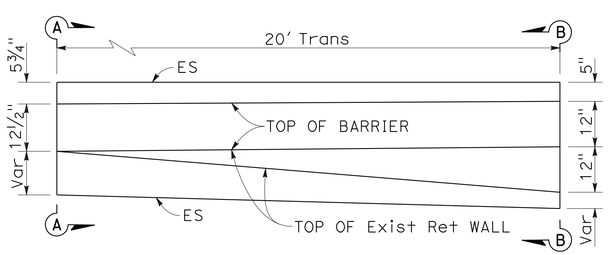

PLAN

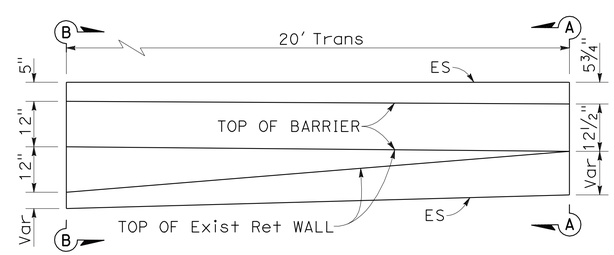

PLAN

NOTE:
FOR Conc BARRIER (TYPE 60C) DETAILS NOT SHOWN, SEE Std PLAN A76A.

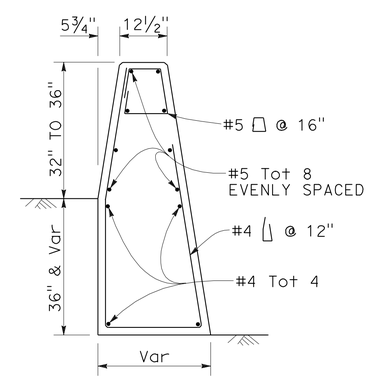

SECTION A-A

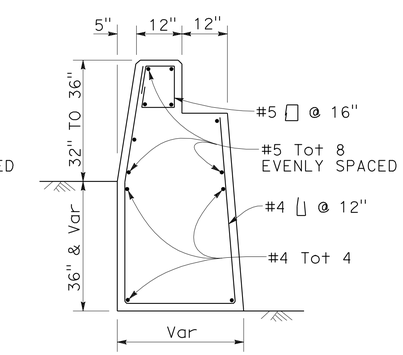

SECTION B-B

Conc BARRIER (TYPE 60C) TO Conc BARRIER (TYPE 732)/Ret WALL Trans

CONSTRUCTION DETAILS

NO SCALE

C-3

STATE OF CALIFORNIA - DEPARTMENT OF TRANSPORTATION
Caltrans® OFFICE OF DESIGN A

FUNCTIONAL SUPERVISOR: SIMON KUO
CALCULATED-DESIGNED BY: HUAN NGUYEN
CHECKED BY: MAI BUI
REVISED BY
DATE REVISED

LAST REVISION 00-00-00
DATE PLOTTED => 27-MAY-2010
TIME PLOTTED => 10:53

Dist	COUNTY	ROUTE	POST MILES TOTAL PROJECT	SHEET No.	TOTAL SHEETS
07	LA	5	15.8/16.9	16	145

REGISTERED CIVIL ENGINEER 3-8-10 DATE

5-24-10
PLANS APPROVAL DATE

REGISTERED PROFESSIONAL ENGINEER Mai P. Bui No. C61280 Exp 6-30-11 CIVIL STATE OF CALIFORNIA

THE STATE OF CALIFORNIA OR ITS OFFICERS OR AGENTS SHALL NOT BE RESPONSIBLE FOR THE ACCURACY OR COMPLETENESS OF SCANNED COPIES OF THIS PLAN SHEET.

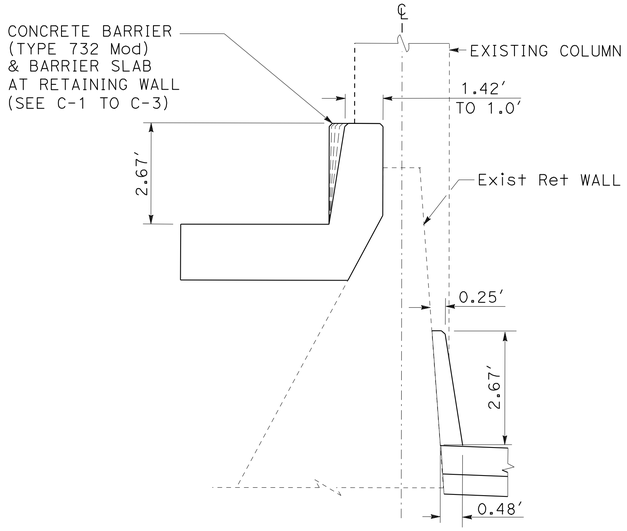

SECTION A-A

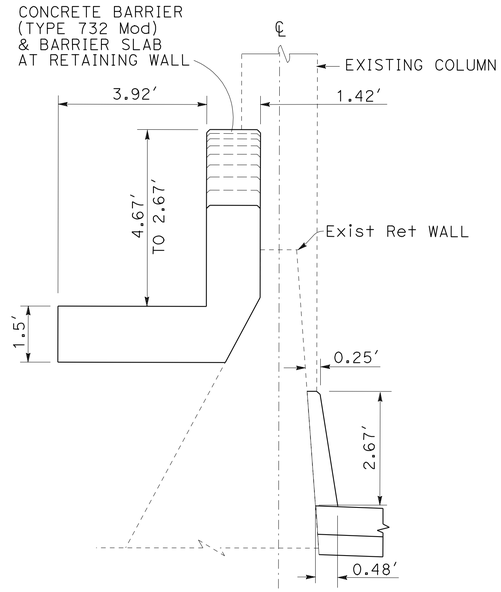

SECTION B-B

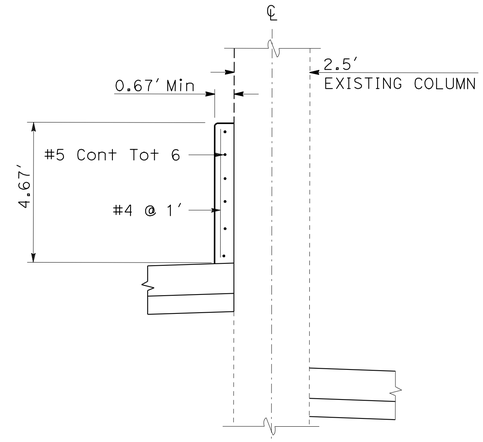

SECTION C-C

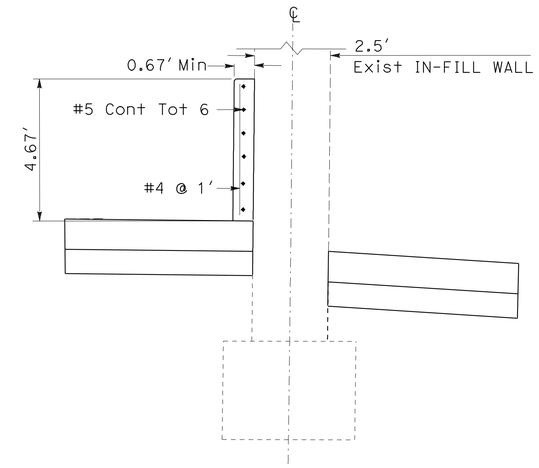

SECTION D-D

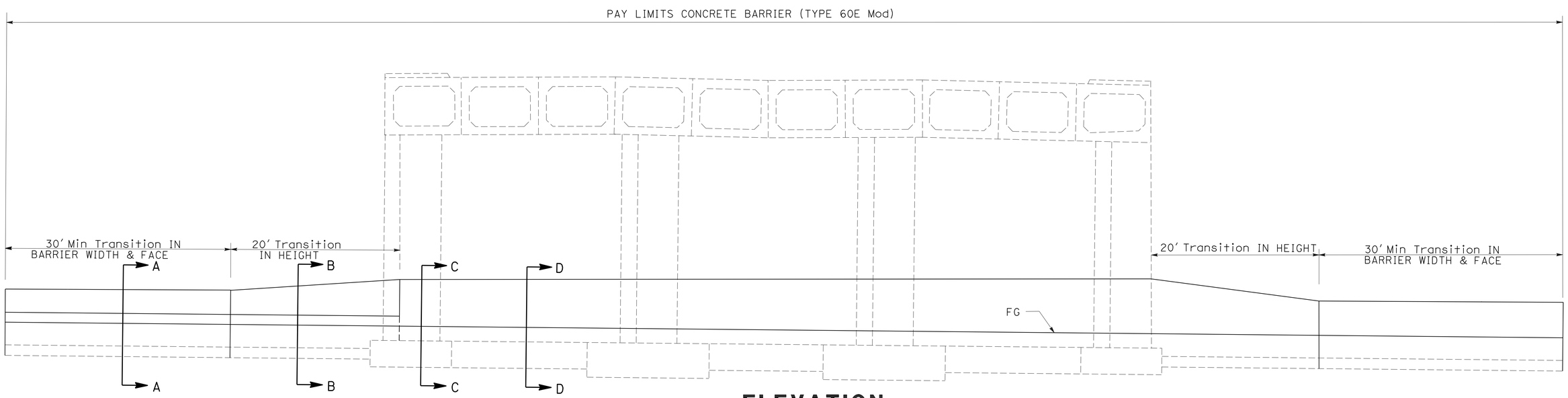

ELEVATION

CONCRETE BARRIER (TYPE 60E Mod)

BOYLE AVENUE OC
BRIDGE No. 53-0597

CONSTRUCTION DETAILS
NO SCALE

C-4

STATE OF CALIFORNIA - DEPARTMENT OF TRANSPORTATION
Caltrans® OFFICE OF DESIGN A

FUNCTIONAL SUPERVISOR: SIMON KUO
CALCULATED-DESIGNED BY: STEWART STAHL
CHECKED BY: SIMON KUO
REVISED BY
DATE REVISED

LAST REVISION 00-00-00
DATE PLOTTED => 27-MAY-2010
TIME PLOTTED => 10:53

Dist	COUNTY	ROUTE	POST MILES TOTAL PROJECT	SHEET No.	TOTAL SHEETS
07	LA	5	15.8/16.9	17	145

REGISTERED CIVIL ENGINEER 3-8-10 DATE

5-24-10
PLANS APPROVAL DATE

REGISTERED PROFESSIONAL ENGINEER Mai P. Bui No. C61280 Exp 6-30-11 CIVIL STATE OF CALIFORNIA

THE STATE OF CALIFORNIA OR ITS OFFICERS OR AGENTS SHALL NOT BE RESPONSIBLE FOR THE ACCURACY OR COMPLETENESS OF SCANNED COPIES OF THIS PLAN SHEET.

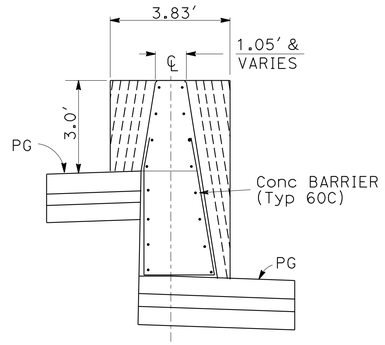

SECTION A-A

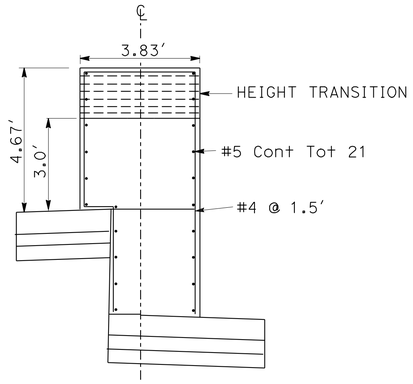

SECTION B-B

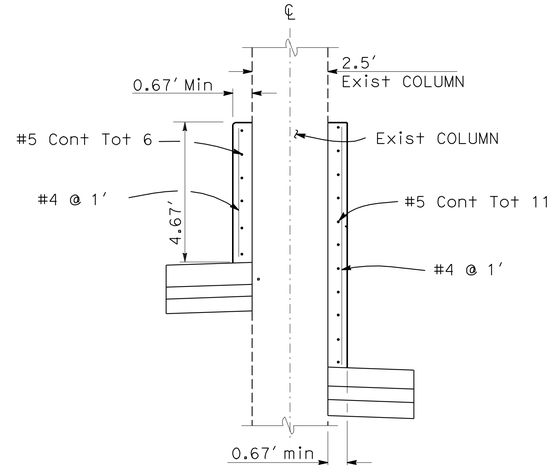

SECTION C-C

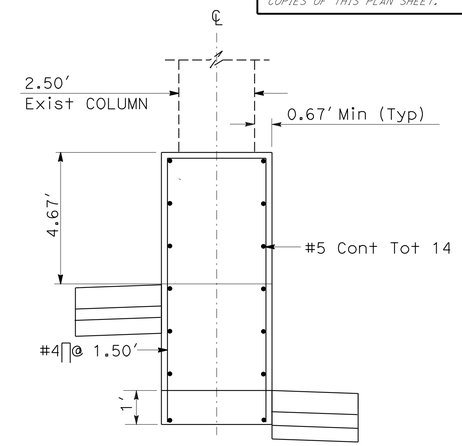

SECTION D-D

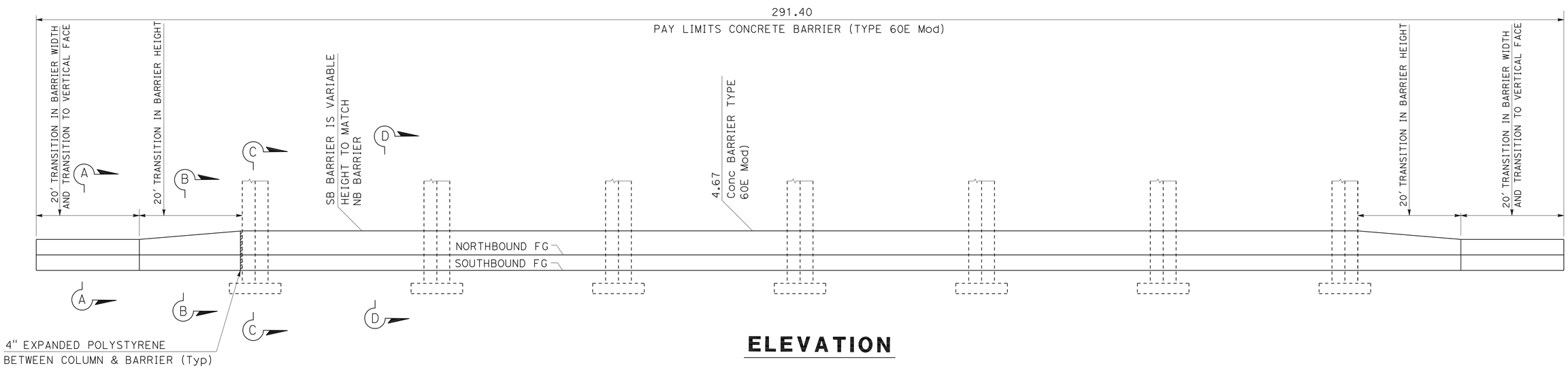

ELEVATION

CONCRETE BARRIER (TYPE 60E Mod)

ROUTE 5/60 SEPARATION
BRIDGE No. 53-1393R

CONSTRUCTION DETAILS
NO SCALE

C-5

STATE OF CALIFORNIA - DEPARTMENT OF TRANSPORTATION
Caltrans® OFFICE OF DESIGN A

FUNCTIONAL SUPERVISOR: SIMON KUO
CALCULATED-DESIGNED BY: STEWART STAHL
CHECKED BY: SIMON KUO
REVISED BY
DATE REVISED

LAST REVISION 00-00-00
DATE PLOTTED => 27-MAY-2010
TIME PLOTTED => 10:53

Dist	COUNTY	ROUTE	POST MILES TOTAL PROJECT	SHEET No.	TOTAL SHEETS
07	LA	5	15.8/16.9	18	145

REGISTERED CIVIL ENGINEER 3-8-10 DATE

5-24-10
PLANS APPROVAL DATE

REGISTERED PROFESSIONAL ENGINEER Mai P. Bui No. C61280 Exp. 6-30-11 CIVIL STATE OF CALIFORNIA

THE STATE OF CALIFORNIA OR ITS OFFICERS OR AGENTS SHALL NOT BE RESPONSIBLE FOR THE ACCURACY OR COMPLETENESS OF SCANNED COPIES OF THIS PLAN SHEET.

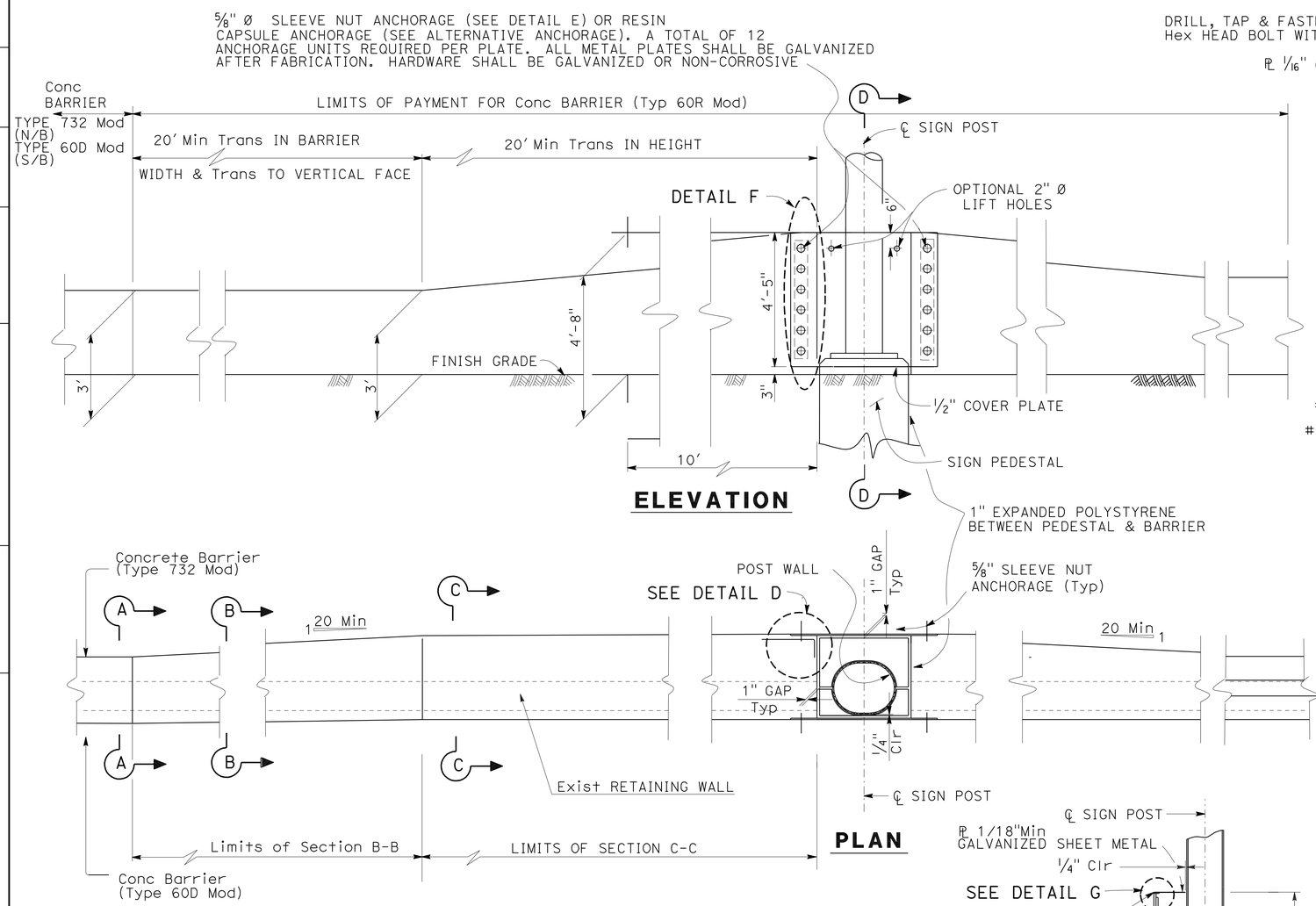

ELEVATION

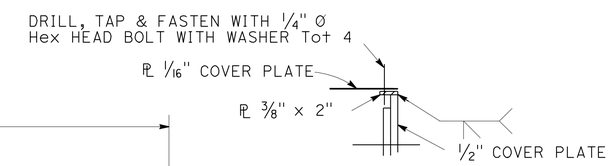

DETAIL G

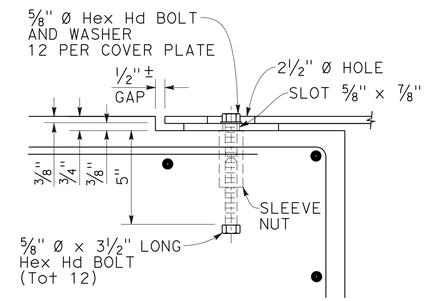

DETAIL E

PLAN

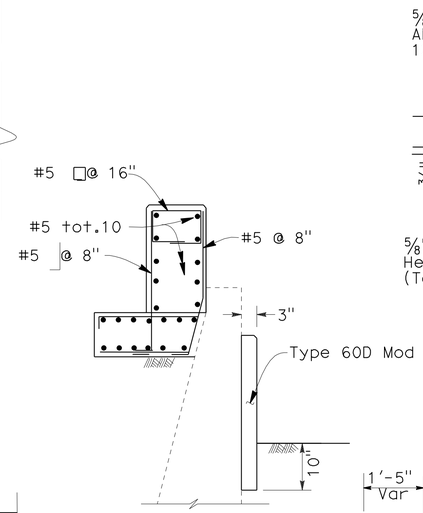

SECTION C-C

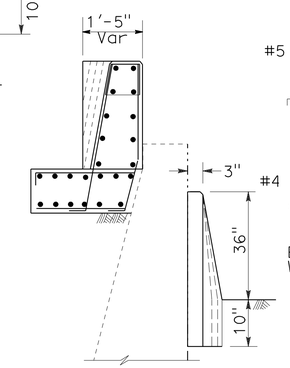

SECTION B-B

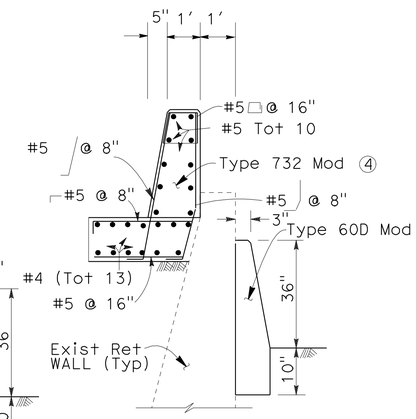

SECTION A-A

SECTIONS AT SIGN POST RETAINING WALL

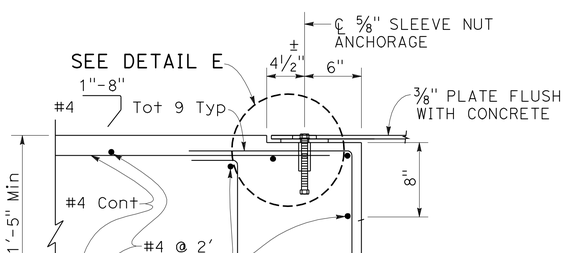

DETAIL D

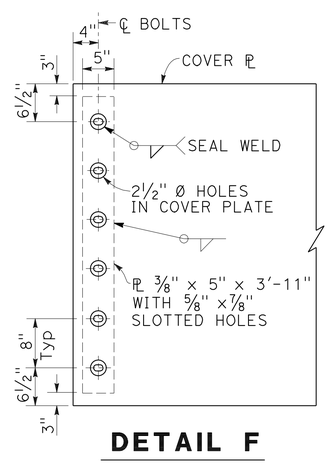

DETAIL F

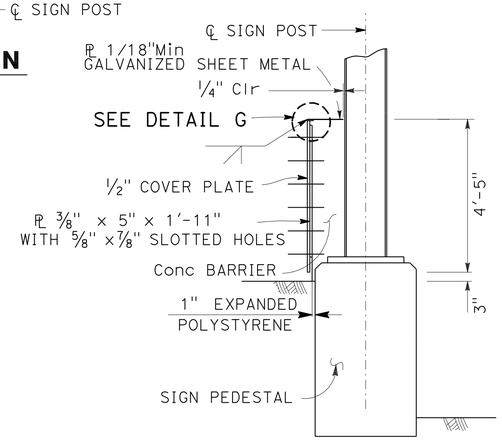

SECTION D-D

NOTE: Conc BARRIER (TYPE 60R Mod) IS SYMMETRICAL ABOUT CENTER LINE OF SIGN POST.

NOTES:

1. RESIN CAPSULE ANCHORAGE IS SUBJECT TO APPROVAL OF THE ENGINEER. INSTALLATION PROCEDURES SHALL COMPLY WITH MANUFACTURE'S INSTRUCTIONS.
2. SEE CONCRETE BARRIER (TYPE 732 Mod) PLAN.

CONCRETE BARRIER (TYPE 60R Mod) AT SIGN POST

CONSTRUCTION DETAILS

NO SCALE

C-6

REVISED BY | DATE REVISED
MAI BUI | SIMON KUO
CALCULATED-DESIGNED BY | CHECKED BY
FUNCTIONAL SUPERVISOR | SIMON KUO

STATE OF CALIFORNIA - DEPARTMENT OF TRANSPORTATION
Caltrans® OFFICE OF DESIGN A

LAST REVISION 00-00-00 | DATE PLOTTED => 27-MAY-2010 | TIME PLOTTED => 10:54

Dist	COUNTY	ROUTE	POST MILES TOTAL PROJECT	SHEET No.	TOTAL SHEETS
07	LA	5	15.8/16.9	19	145

REGISTERED CIVIL ENGINEER 3-8-10 DATE

5-24-10
PLANS APPROVAL DATE

REGISTERED PROFESSIONAL ENGINEER Mai P. Bui No. C61280 Exp. 6-30-11 CIVIL STATE OF CALIFORNIA

THE STATE OF CALIFORNIA OR ITS OFFICERS OR AGENTS SHALL NOT BE RESPONSIBLE FOR THE ACCURACY OR COMPLETENESS OF SCANNED COPIES OF THIS PLAN SHEET.

	Var *
BEGIN OF BRIDGE @ SOTO St UC END OF BRIDGE @ SOTO St UC	4'-5¾"
BEGIN OF BRIDGE @ Rte 60/5 SEPARATION END OF BRIDGE @ Rte 60/5 SEPARATION	4'-5¾"
BEGIN OF BRIDGE @ MARIETA St UC END OF BRIDGE @ MARIETA St UC	2'-5¾"
BEGIN OF BRIDGE @ EUCLID Ave UC END OF BRIDGE @ EUCLID Ave UC	2'-5¾"

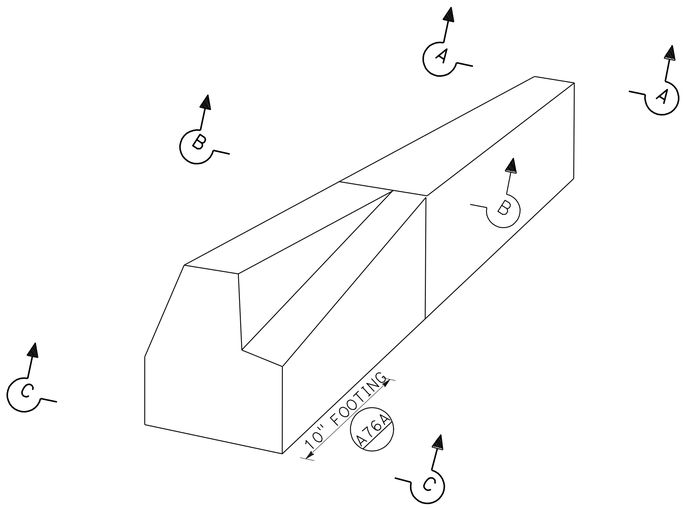

TRANSITION AT END OF BRIDGE

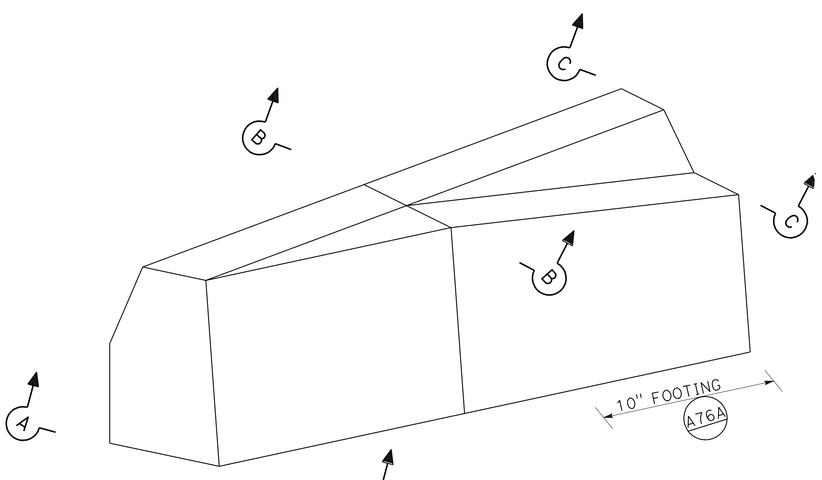

TRANSITION AT BEGINNING OF BRIDGE

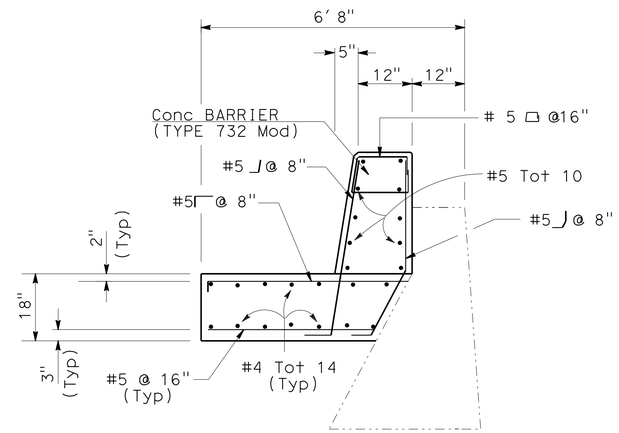

CONCRETE BARRIER (TYPE 732 Mod) ON SLAB AT RETAINING WALL

SEE Conc BARRIER TYPE 732 FOR ADDITIONAL INFORMATION (Std PLAN B11-55)

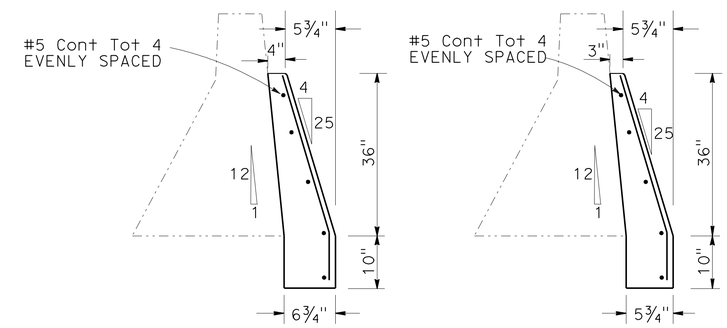

CASE 1 CASE 2

CONCRETE BARRIER (TYPE 60D Mod)

SEE Conc BARRIER TYPE 60D FOR ADDITIONAL INFORMATION (Std PLAN A76A)

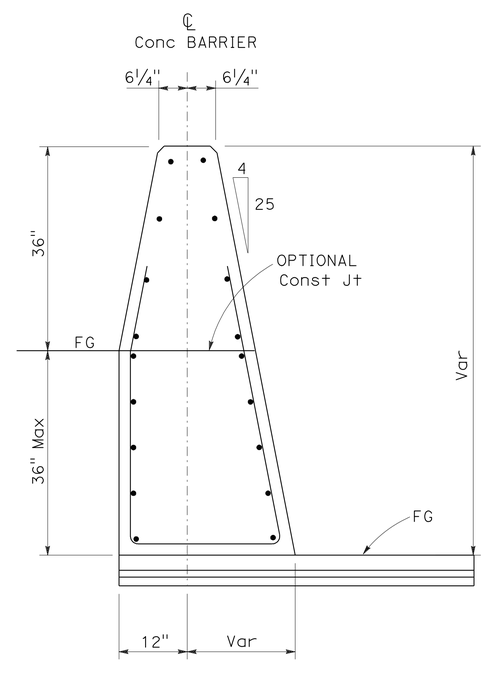

SECTION A-A

DETAIL SIMILAR TO TYPE 60C AS NOTED

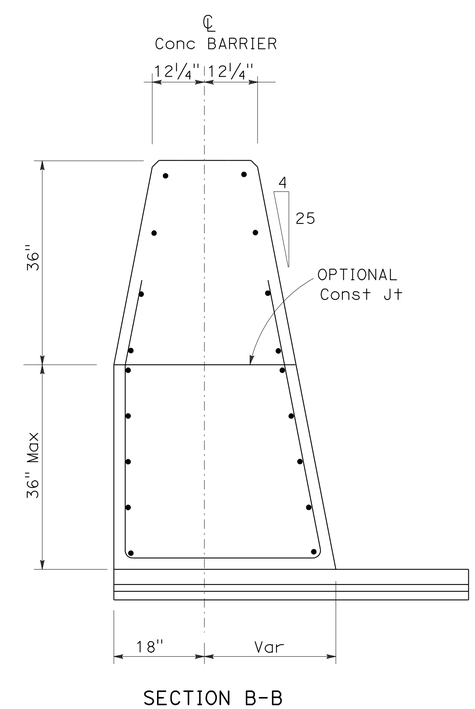

SECTION B-B

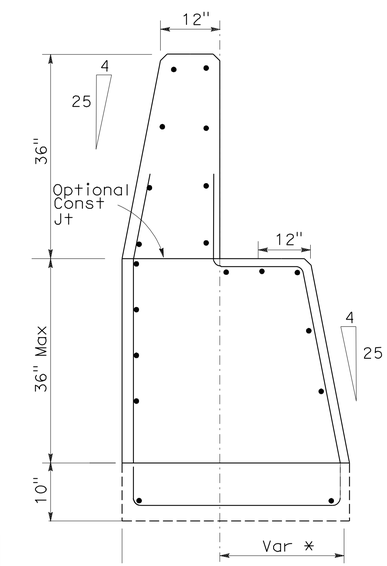

SECTION C-C

CONSTRUCTION DETAILS

NO SCALE

C-7

REVISED BY	DATE REVISED
MAI BUI	SIMON KUO
CALCULATED-DESIGNED BY	CHECKED BY
FUNCTIONAL SUPERVISOR	SIMON KUO

STATE OF CALIFORNIA - DEPARTMENT OF TRANSPORTATION
Caltrans® OFFICE OF DESIGN A

LAST REVISION 00-00-00 | DATE PLOTTED => 27-MAY-2010 | TIME PLOTTED => 10:54

Dist	COUNTY	ROUTE	POST MILES TOTAL PROJECT	SHEET No.	TOTAL SHEETS
07	LA	5	15.8/16.9	20	145

REGISTERED CIVIL ENGINEER 3-8-10 DATE

5-24-10
PLANS APPROVAL DATE

REGISTERED PROFESSIONAL ENGINEER Mai P. Bui No. C61280 Exp. 6-30-11 CIVIL STATE OF CALIFORNIA

THE STATE OF CALIFORNIA OR ITS OFFICERS OR AGENTS SHALL NOT BE RESPONSIBLE FOR THE ACCURACY OR COMPLETENESS OF SCANNED COPIES OF THIS PLAN SHEET.

NOTES:
1. SEE RSP P18 FOR ISOLATION JOINT DETAIL.
2. SEE RSP PLAN P20 FOR TYPE A1 COMPRESSION SEALS AT TRANSVERSE WEAKENED PLANE JOINTS AND LONGITUDINAL ISOLATION JOINTS.
3. SEE Std PLAN P10 FOR CONCRETE PAVEMENT DOWEL BAR DETAILS.
4. FOR CONCRETE SLAB DIMENSIONS NOT SHOWN THE WIDTH TO LENGTH RATIO IS 1:1.25 TO 1:1.35.

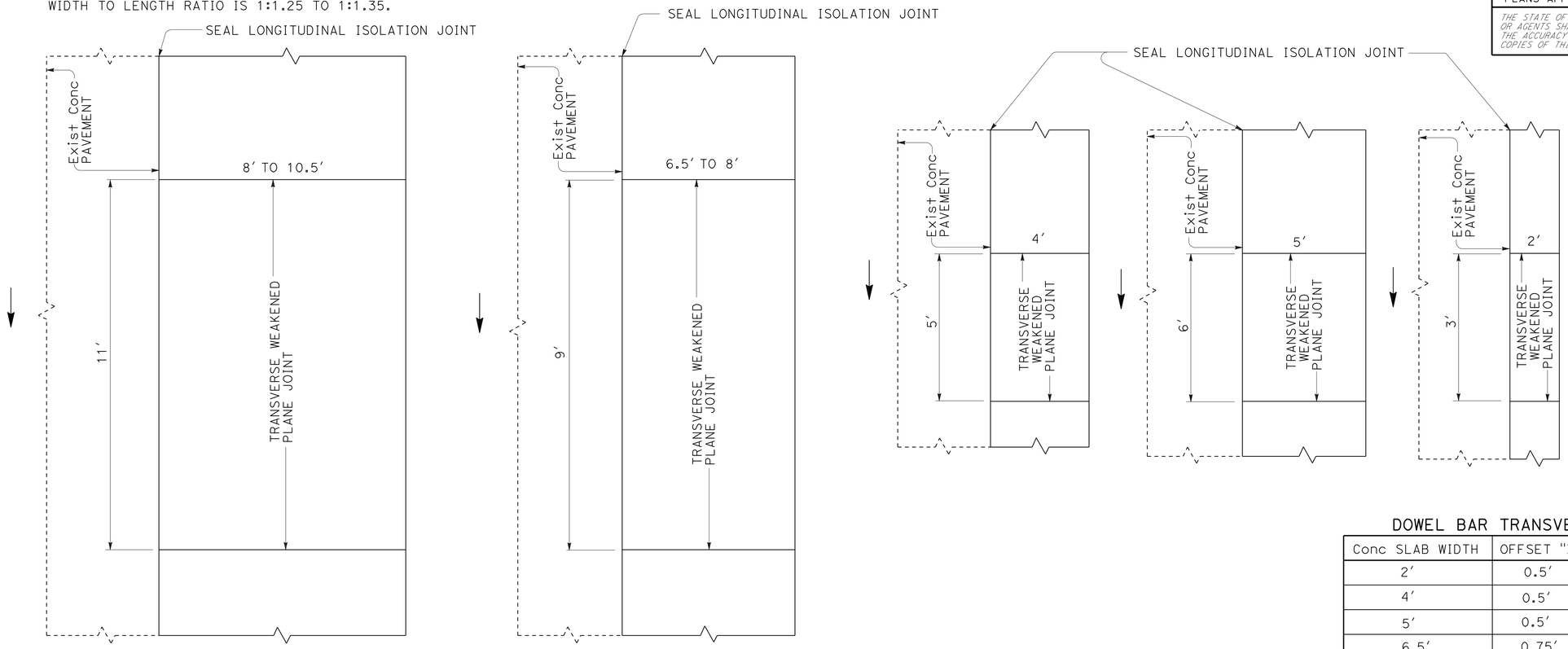

TYPICAL CONCRETE SLAB DIMENSIONS

DOWEL BAR TRANSVERSE SPACING

Conc SLAB WIDTH	OFFSET "X"	No. OF DOWELS
2′	0.5′	2
4′	0.5′	4
5′	0.5′	5
6.5′	0.75′	6
7′	0.75′	7
8′	0.5′	8
10.5′	0.75′	10

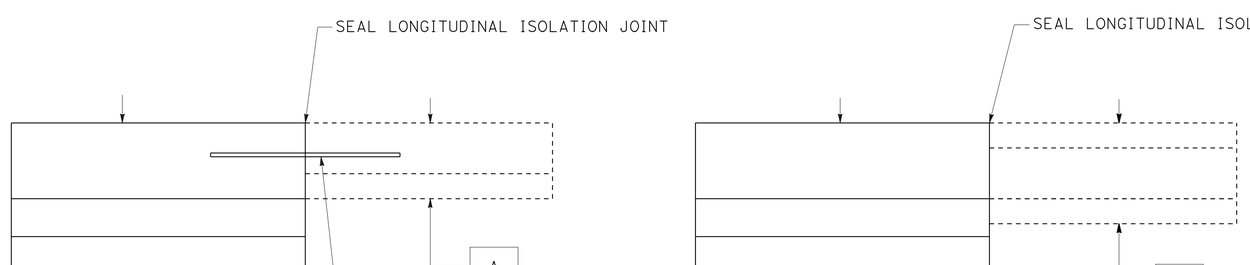

LEGEND:
DIRECTION OF TRAVEL

TIE BAR LOCATION

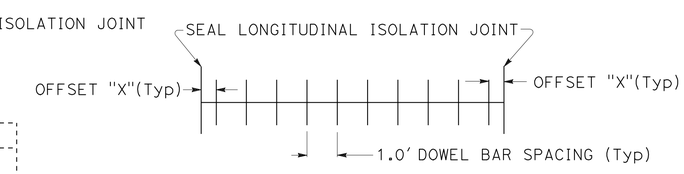

TYPICAL TRANSVERSE JOINT DOWEL BAR LAYOUT

NOTE: FOR ODD SIZE SLAB WIDTHS 0.5′ < "X" < 1.0′

CONSTRUCTION DETAILS

NO SCALE

C-8

STATE OF CALIFORNIA - DEPARTMENT OF TRANSPORTATION
Caltrans® OFFICE OF DESIGN A

FUNCTIONAL SUPERVISOR: SIMON KUO
CALCULATED-DESIGNED BY: STEWART STAHL
CHECKED BY: SIMON KUO
REVISED BY
DATE REVISED

LAST REVISION 00-00-00 | DATE PLOTTED => 27-MAY-2010 | TIME PLOTTED => 11:12

Dist	COUNTY	ROUTE	POST MILES TOTAL PROJECT	SHEET No.	TOTAL SHEETS
07	LA	5	15.8/16.9	21	145

George Olguin 3-8-10
LICENSED LANDSCAPE ARCHITECT

5-24-10
PLANS APPROVAL DATE

LICENSED LANDSCAPE ARCHITECT GEORGE OLGUIN No. 4331 STATE OF CALIFORNIA
George Olguin 08-31-10 Signature Date
Renewal Date 10-02-09 Date

THE STATE OF CALIFORNIA OR ITS OFFICERS OR AGENTS SHALL NOT BE RESPONSIBLE FOR THE ACCURACY OR COMPLETENESS OF SCANNED COPIES OF THIS PLAN SHEET.

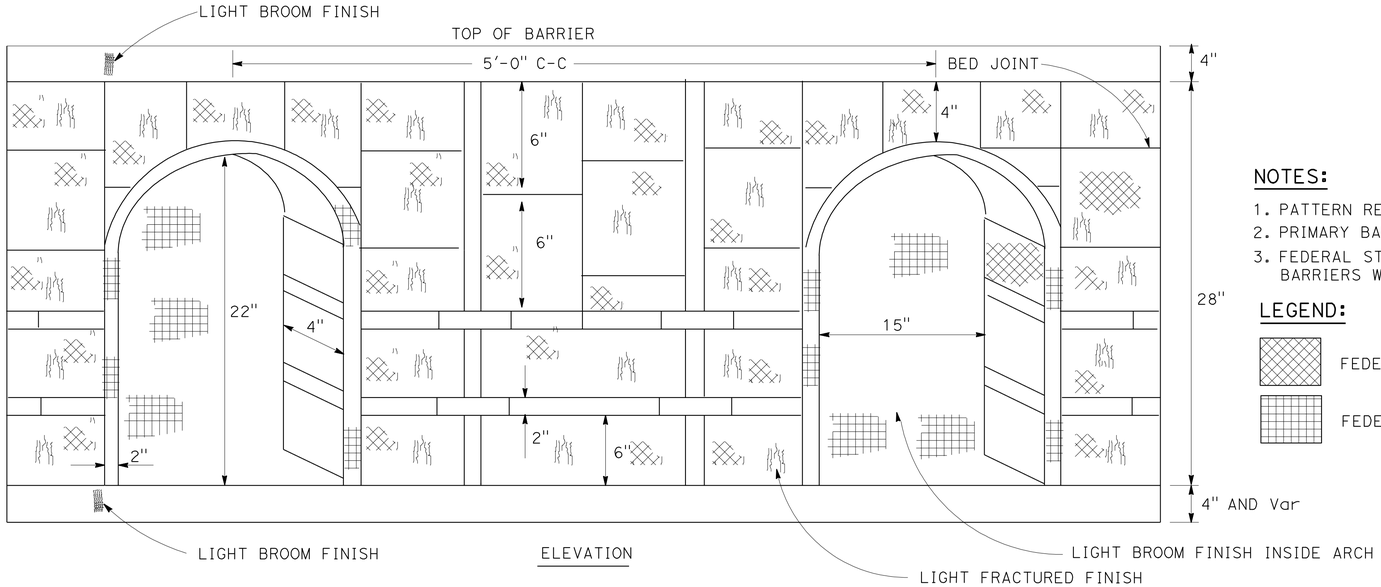

CONCRETE BARRIER

ARCHITECTURAL SURFACE TREATMENT
(MISSION ARCH PATTERN)

NOTES:

1. PATTERN REPEATS AS SHOWN.
2. PRIMARY BARRIER COLOR SHALL BE FEDERAL STANDARD COLOR No. 30318.
3. FEDERAL STANDARD COLOR No. 30318 INTEGRAL COLOR REQUIRED ON ALL BARRIERS WITH OR WITHOUT ARCHITECTURAL TREATMENT.

LEGEND:

FEDERAL STANDARD COLOR No. 30318

FEDERAL STANDARD COLOR No. 33448

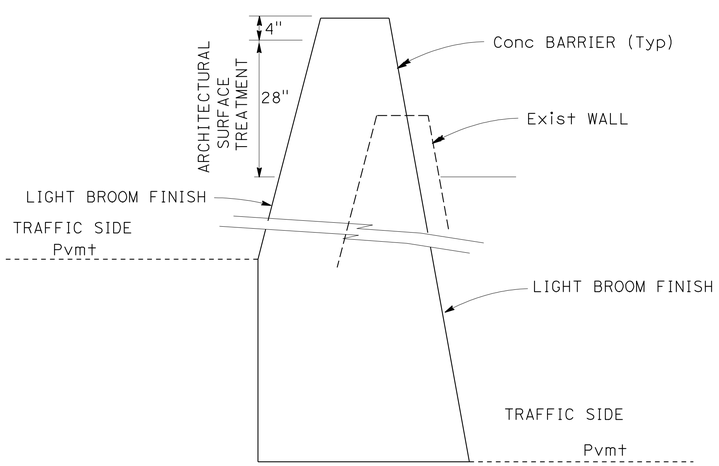

NOTE:
WHERE THE BARRIER ABUTS AN EXISTING WALL ARCHITECTURAL TREATMENT ONLY REQUIRED ON TRAFFIC SIDE.

ARCHITECTURAL SURFACE TREATMENT BARRIER

(BARRIER WITH MULTIPLE HEIGHTS)

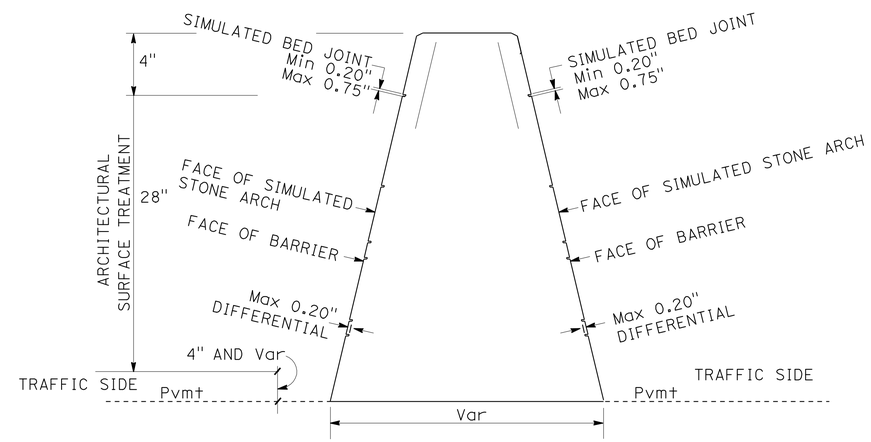

CONCRETE BARRIER (TYPE 60C)

(SIMULATED STONE DIFFERENTIAL)

CONCRETE BARRIER ARCHITECTURAL TREATMENT CONSTRUCTION DETAILS

NO SCALE

C-9

STATE OF CALIFORNIA - DEPARTMENT OF TRANSPORTATION
Caltrans® LANDSCAPE ARCHITECTURE
SENIOR LANDSCAPE ARCHITECT JENNIFER TAIRA
CALCULATED-DESIGNED BY
CHECKED BY
REVISED BY
DATE REVISED

LAST REVISION 00-00-00
DATE PLOTTED => 27-MAY-2010
TIME PLOTTED => 11:12

Dist	COUNTY	ROUTE	POST MILES TOTAL PROJECT	SHEET No.	TOTAL SHEETS
07	LA	5	15.8/16.9	22	145

REGISTERED CIVIL ENGINEER 3-8-10 DATE

5-24-10
PLANS APPROVAL DATE

REGISTERED PROFESSIONAL ENGINEER Mai P. Bui No. C61280 Exp. 6-30-11 CIVIL STATE OF CALIFORNIA

THE STATE OF CALIFORNIA OR ITS OFFICERS OR AGENTS SHALL NOT BE RESPONSIBLE FOR THE ACCURACY OR COMPLETENESS OF SCANNED COPIES OF THIS PLAN SHEET.

NOTES:

1. IF LIFTING HOLES ARE USED WITH THE CONCRETE CONNECTOR, THEY SHALL CONFORM TO THE LIFTING HOLE DETAILS SHOWN ON STANDARD PLAN T3.
2. PAINT CLOSURE PLATE WHITE.
3. WHEN THE TEMPORARY TERMINAL SECTION (TYPE K) (60D) (MODIFIED) IS NO LONGER REQUIRED AND IS TO BE REMOVED, THE ANCHOR BOLTS CONNECTING THE CLOSURE PLATE AND THE BARRIER SHALL BE REMOVED OR CUT FLUSH WITH THE FACE OF THE CONCRETE BARRIER. IF THE ANCHOR BOLTS ARE REMOVED, THE RESULTING HOLES SHALL BE FILLED WITH GROUT.

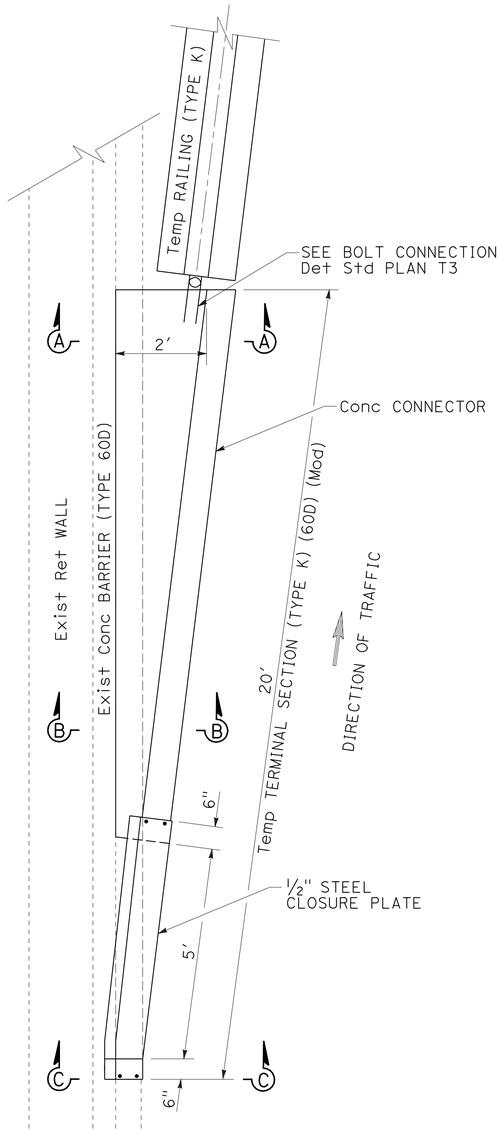

PLAN

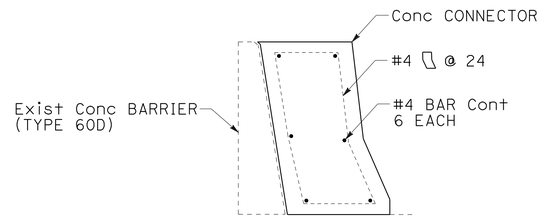

SECTION A-A

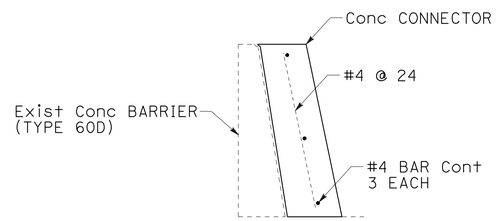

SECTION B-B

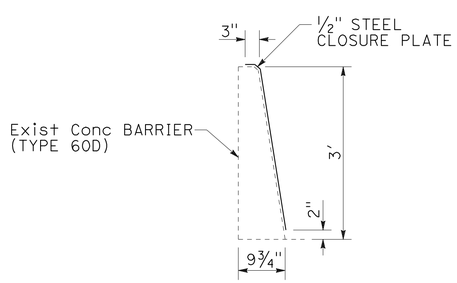

SECTION C-C

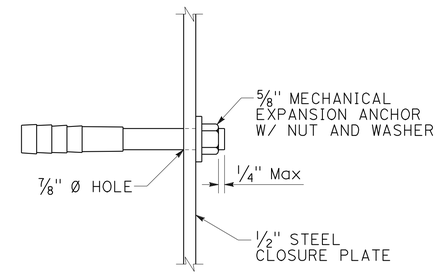

ANCHOR BOLT DETAIL
CLOSURE PLATE

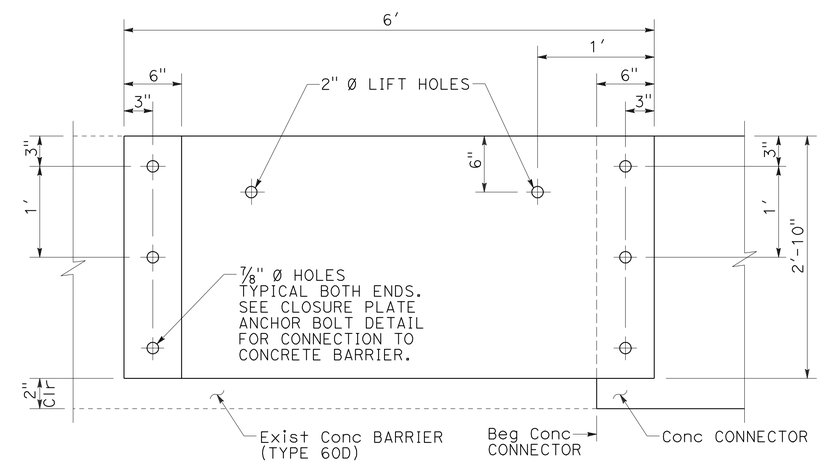

CLOSURE PLATE
(SIDE VIEW)

TEMPORARY TERMINAL SECTION (TYPE K) (60D) (MODIFIED)

CONSTRUCTION DETAILS

NO SCALE

C-10

STATE OF CALIFORNIA - DEPARTMENT OF TRANSPORTATION
Caltrans® OFFICE OF DESIGN A

FUNCTIONAL SUPERVISOR: SIMON KUO
CALCULATED-DESIGNED BY: HUAN NGUYEN
CHECKED BY: MAI BUI
REVISED BY
DATE REVISED

LAST REVISION 00-00-00
DATE PLOTTED => 27-MAY-2010
TIME PLOTTED => 12:25

Dist	COUNTY	ROUTE	POST MILES TOTAL PROJECT	SHEET No.	TOTAL SHEETS
07	LA	5	15.8/16.9	23	145

Edgardo A. Gata 3-8-10
REGISTERED CIVIL ENGINEER DATE

5-24-10
PLANS APPROVAL DATE

REGISTERED PROFESSIONAL ENGINEER
ED GATA
No. C40706
Exp. 3-31-11
CIVIL
STATE OF CALIFORNIA

THE STATE OF CALIFORNIA OR ITS OFFICERS OR AGENTS SHALL NOT BE RESPONSIBLE FOR THE ACCURACY OR COMPLETENESS OF SCANNED COPIES OF THIS PLAN SHEET.

NOTE:

1. THE CONTRACTOR SHALL VERIFY ELEVATIONS OF THE EXISTING DRAINAGE FACILTIES BEFORE COMMENCEMENT OF WORK.

LEGEND:

DRAINAGE SYSTEM No.

DRAINAGE UNIT

ABBREVIATIONS:

ASP - ALTERNATIVE SLOTTED PIPE
(Rev) - REVERSED

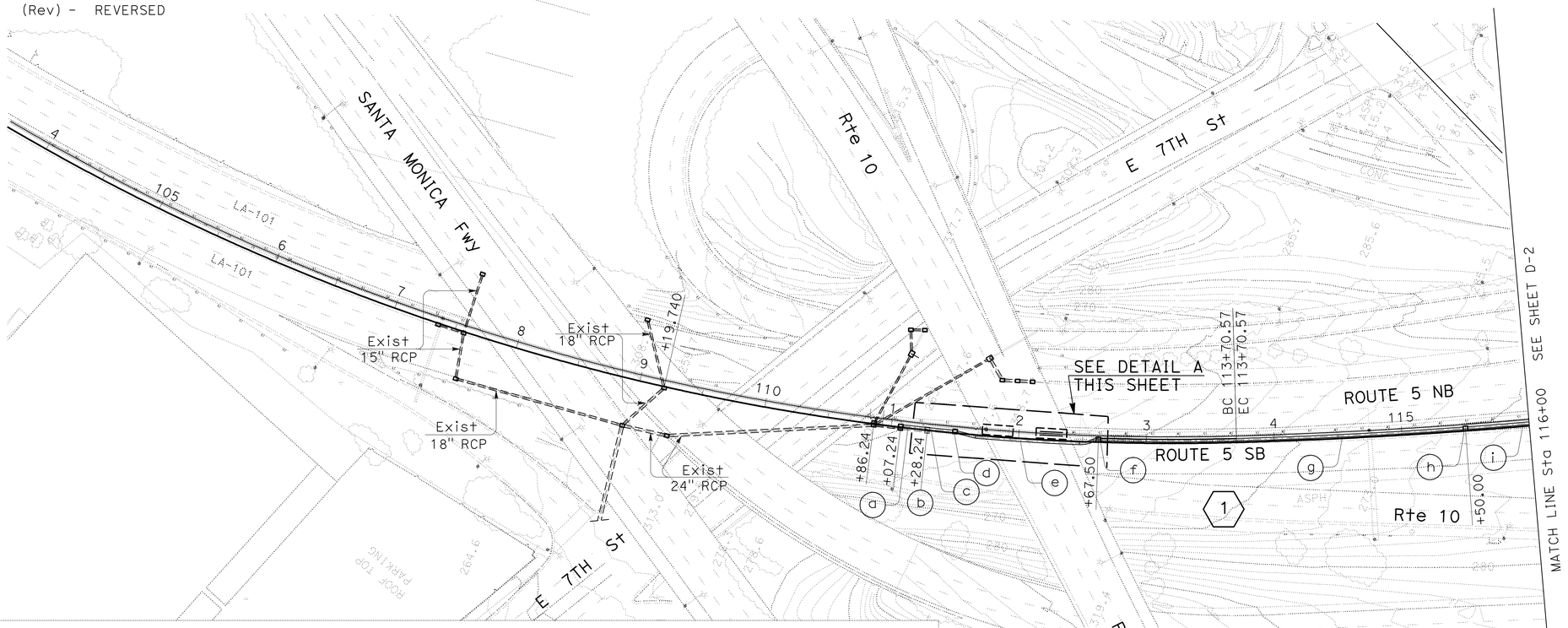

1 (a) REMOVE 15" RCP
(b) REMOVE CB No. 37-B (Mod)
(c) 24" RCP
(d) TYPE G2 INLET (Rev)
(e) 24" RCP
(f) TYPE G2 INLET (Rev)
(g) 24" RCP
(h) TYPE G2 INLET (Rev)
(i) 24" RCP

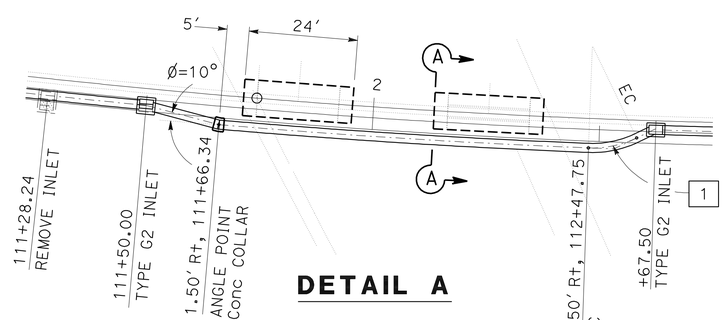

DETAIL A

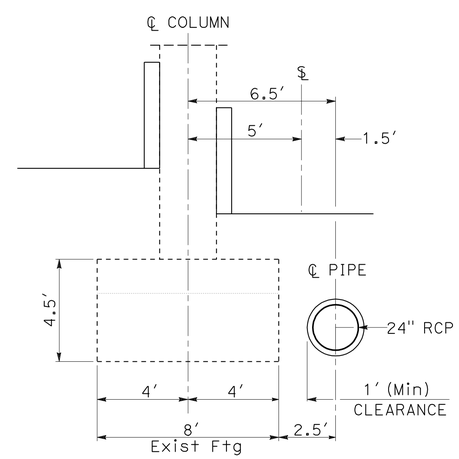

SECTION A-A

CURVE DATA

No.	R	Δ	T	L
1	22.5'	27°57'09"	11.23'	21.94'

THIS PLAN ACCURATE FOR DRAINAGE WORK ONLY

DRAINAGE PLAN

SCALE: 1" = 50'

D-1

STATE OF CALIFORNIA - DEPARTMENT OF TRANSPORTATION
Caltrans
HYDRAULICS

FUNCTIONAL SUPERVISOR: RALPH M. SASAKI
CALCULATED-DESIGNED BY: ED GATA
CHECKED BY: VIC VALIDO
REVISED BY
DATE REVISED

LAST REVISION 00-00-00
DATE PLOTTED => 27-MAY-2010
TIME PLOTTED => 12:25

Dist	COUNTY	ROUTE	POST MILES TOTAL PROJECT	SHEET No.	TOTAL SHEETS
07	LA	5	15.8/16.9	24	145

Edgardo A. Gata 3-8-10
REGISTERED CIVIL ENGINEER DATE

5-24-10
PLANS APPROVAL DATE

REGISTERED PROFESSIONAL ENGINEER
ED GATA
No. C40706
Exp. 3-31-11
CIVIL
STATE OF CALIFORNIA

THE STATE OF CALIFORNIA OR ITS OFFICERS OR AGENTS SHALL NOT BE RESPONSIBLE FOR THE ACCURACY OR COMPLETENESS OF SCANNED COPIES OF THIS PLAN SHEET.

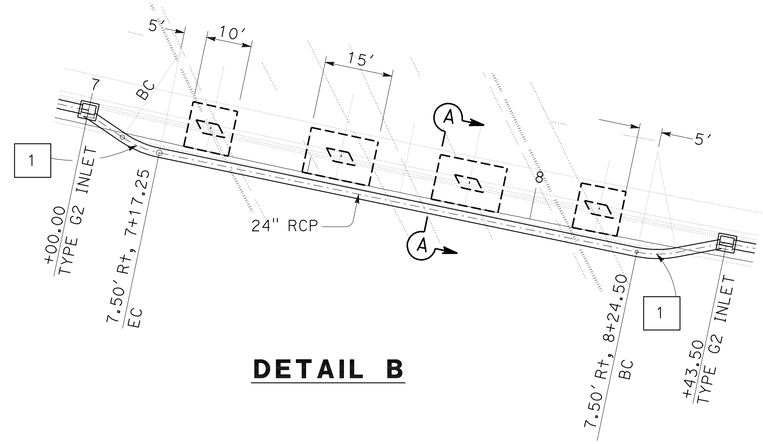

DETAIL B

CURVE DATA

No.	R	Δ	T	L
1	22.5'	27°57'09"	11.23'	21.94'

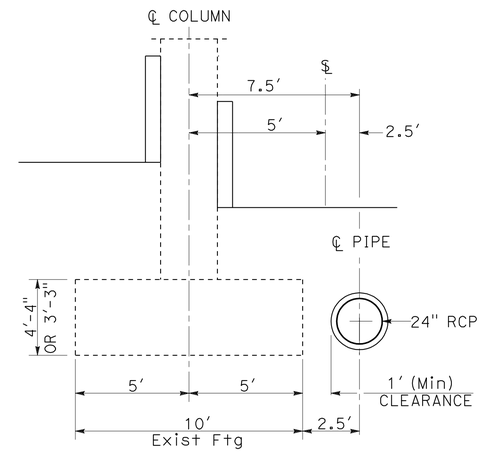

SECTION A-A

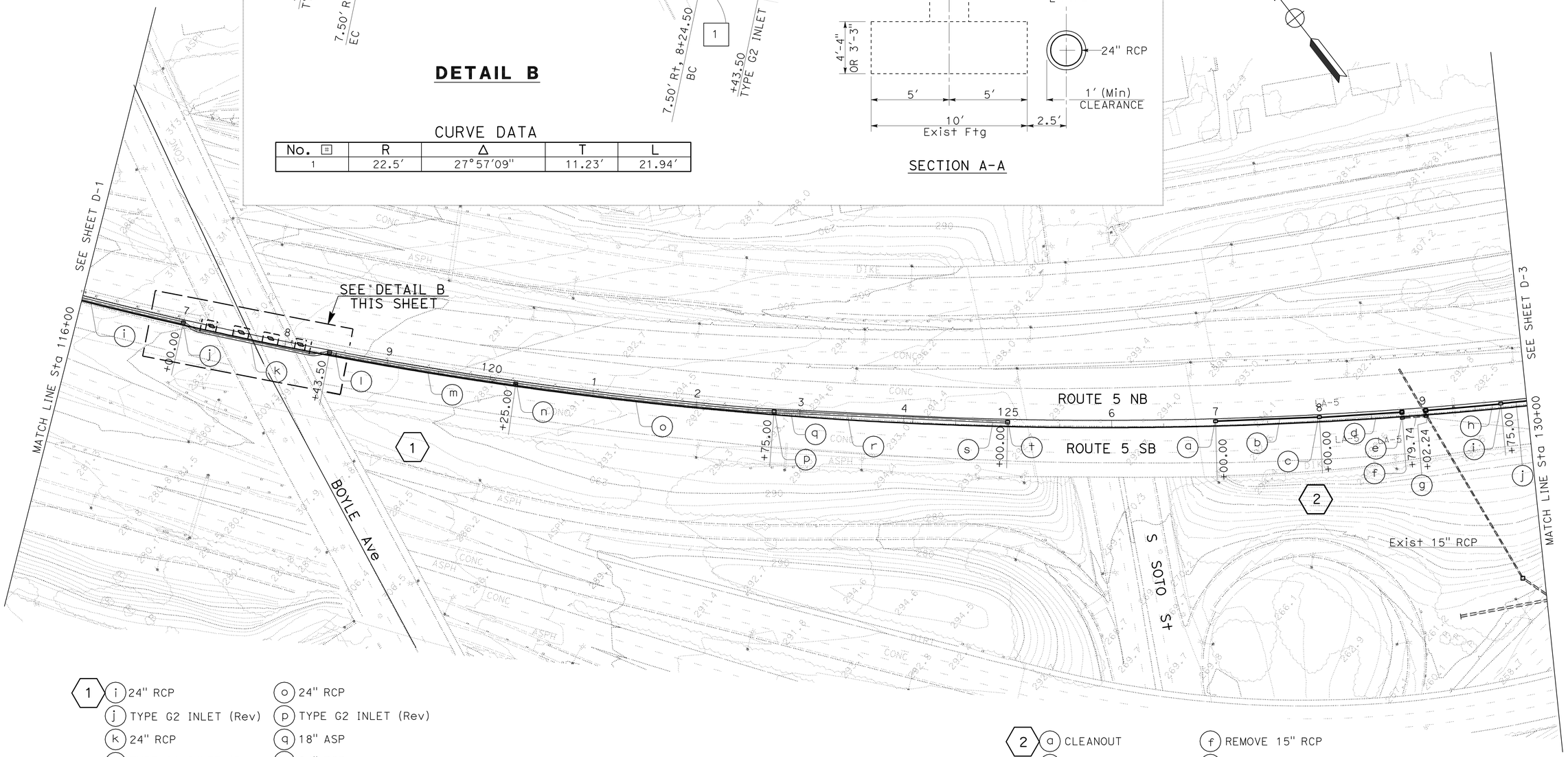

1
- (i) 24" RCP
- (j) TYPE G2 INLET (Rev)
- (k) 24" RCP
- (l) TYPE G2 INLET (Rev)
- (m) 24" RCP
- (n) TYPE G2 INLET (Rev)
- (o) 24" RCP
- (p) TYPE G2 INLET (Rev)
- (q) 18" ASP
- (r) 24" RCP
- (s) 18" ASP
- (t) TYPE G2 INLET (Rev)

2
- (a) CLEANOUT
- (b) 18" ASP
- (c) CLEANOUT
- (d) 18" ASP
- (e) REMOVE CB No. 37-C
- (f) REMOVE 15" RCP
- (g) MODIFY CB No. 37-B
- (h) 18" ASP
- (i) CLEANOUT
- (j) 18" ASP

DRAINAGE PLAN

SCALE: 1" = 50'

THIS PLAN ACCURATE FOR DRAINAGE WORK ONLY

D-2

STATE OF CALIFORNIA - DEPARTMENT OF TRANSPORTATION
Caltrans
HYDRAULICS

FUNCTIONAL SUPERVISOR: RALPH M. SASAKI
CALCULATED-DESIGNED BY: ED GATA
CHECKED BY: VIC VALIDO
REVISED BY
DATE REVISED

LAST REVISION 00-00-00
DATE PLOTTED => 27-MAY-2010
TIME PLOTTED => 12:25

Dist	COUNTY	ROUTE	POST MILES TOTAL PROJECT	SHEET No.	TOTAL SHEETS
07	LA	5	15.8/16.9	25	145

Edgardo A. Gata 3-8-10
REGISTERED CIVIL ENGINEER DATE

5-24-10
PLANS APPROVAL DATE

REGISTERED PROFESSIONAL ENGINEER
ED GATA
No. C40706
Exp. 3-31-11
CIVIL
STATE OF CALIFORNIA

THE STATE OF CALIFORNIA OR ITS OFFICERS OR AGENTS SHALL NOT BE RESPONSIBLE FOR THE ACCURACY OR COMPLETENESS OF SCANNED COPIES OF THIS PLAN SHEET.

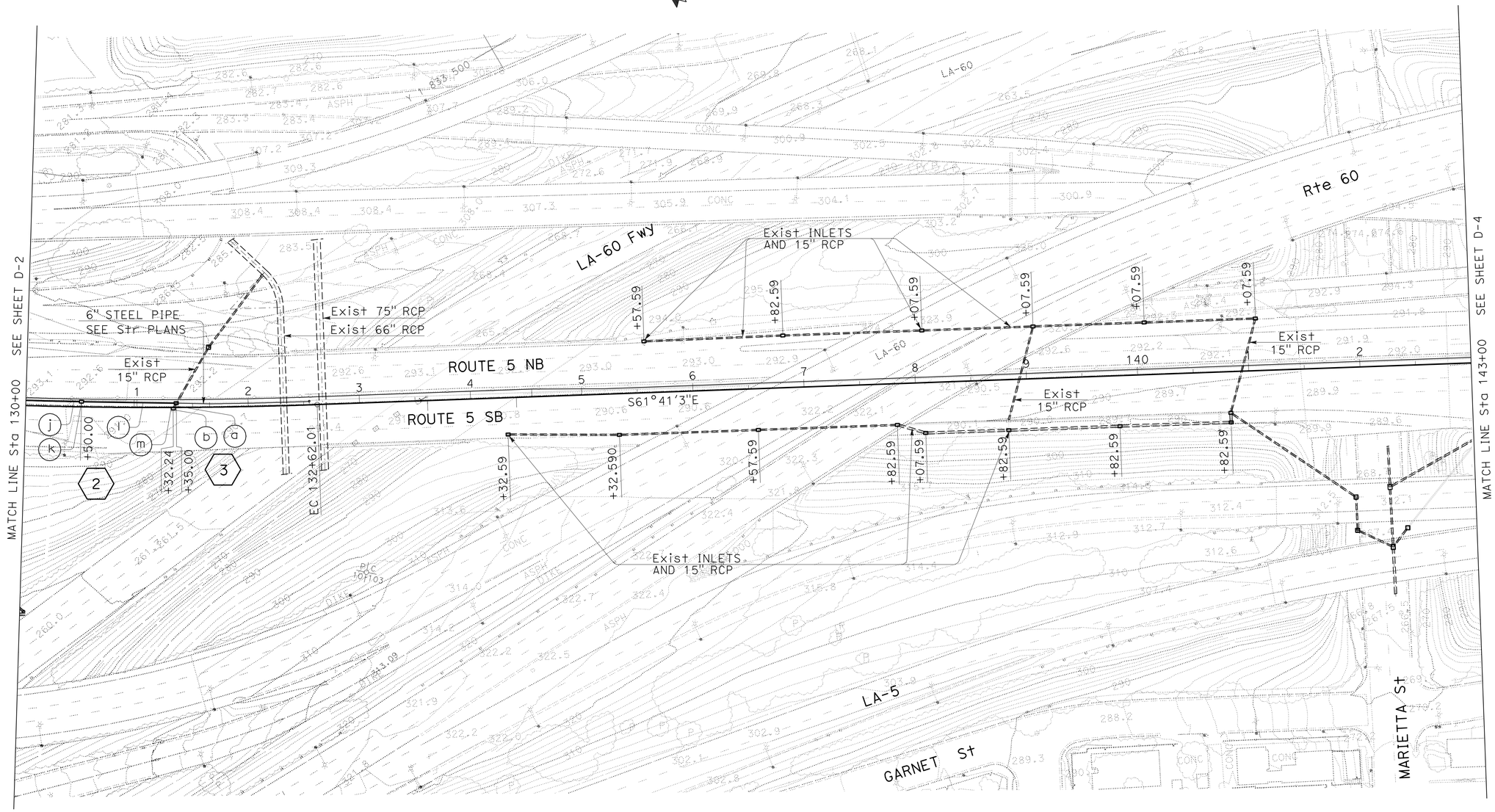

2 (j) 18" ASP
(k) CLEANOUT
(l) 18" ASP
(m) TYPE G2 INLET (Rev)

3 (a) REMOVE 15" RCP
(b) REMOVE CB No. 37-C

THIS PLAN ACCURATE FOR DRAINAGE WORK ONLY

DRAINAGE PLAN

SCALE: 1" = 50'

D-3

STATE OF CALIFORNIA - DEPARTMENT OF TRANSPORTATION
Caltrans
HYDRAULICS
FUNCTIONAL SUPERVISOR: RALPH M. SASAKI
CALCULATED-DESIGNED BY: ED GATA
CHECKED BY: VIC VALIDO
REVISED BY
DATE REVISED

LAST REVISION 00-00-00
DATE PLOTTED => 27-MAY-2010
TIME PLOTTED => 12:25

Dist	COUNTY	ROUTE	POST MILES TOTAL PROJECT	SHEET No.	TOTAL SHEETS
07	LA	5	15.8/16.9	26	145

Edgardo A. Gata 3-8-10
REGISTERED CIVIL ENGINEER DATE

5-24-10
PLANS APPROVAL DATE

REGISTERED PROFESSIONAL ENGINEER
ED GATA
No. C40706
Exp. 3-31-11
CIVIL
STATE OF CALIFORNIA

THE STATE OF CALIFORNIA OR ITS OFFICERS OR AGENTS SHALL NOT BE RESPONSIBLE FOR THE ACCURACY OR COMPLETENESS OF SCANNED COPIES OF THIS PLAN SHEET.

4
- a CLEANOUT
- b 18" ASP
- c 18" ASP
- d CLEANOUT
- e 18" ASP
- f CLEANOUT
- g 18" ASP
- h 18" ASP
- i CLEANOUT
- j 18" ASP
- k CLEANOUT
- l 18" ASP
- m 18" ASP
- n CLEANOUT
- o 18" ASP
- p 24" RCP
- q TYPE G2 INLET (Rev)

6
- a 18" RCP
- b TYPE G1 INLET

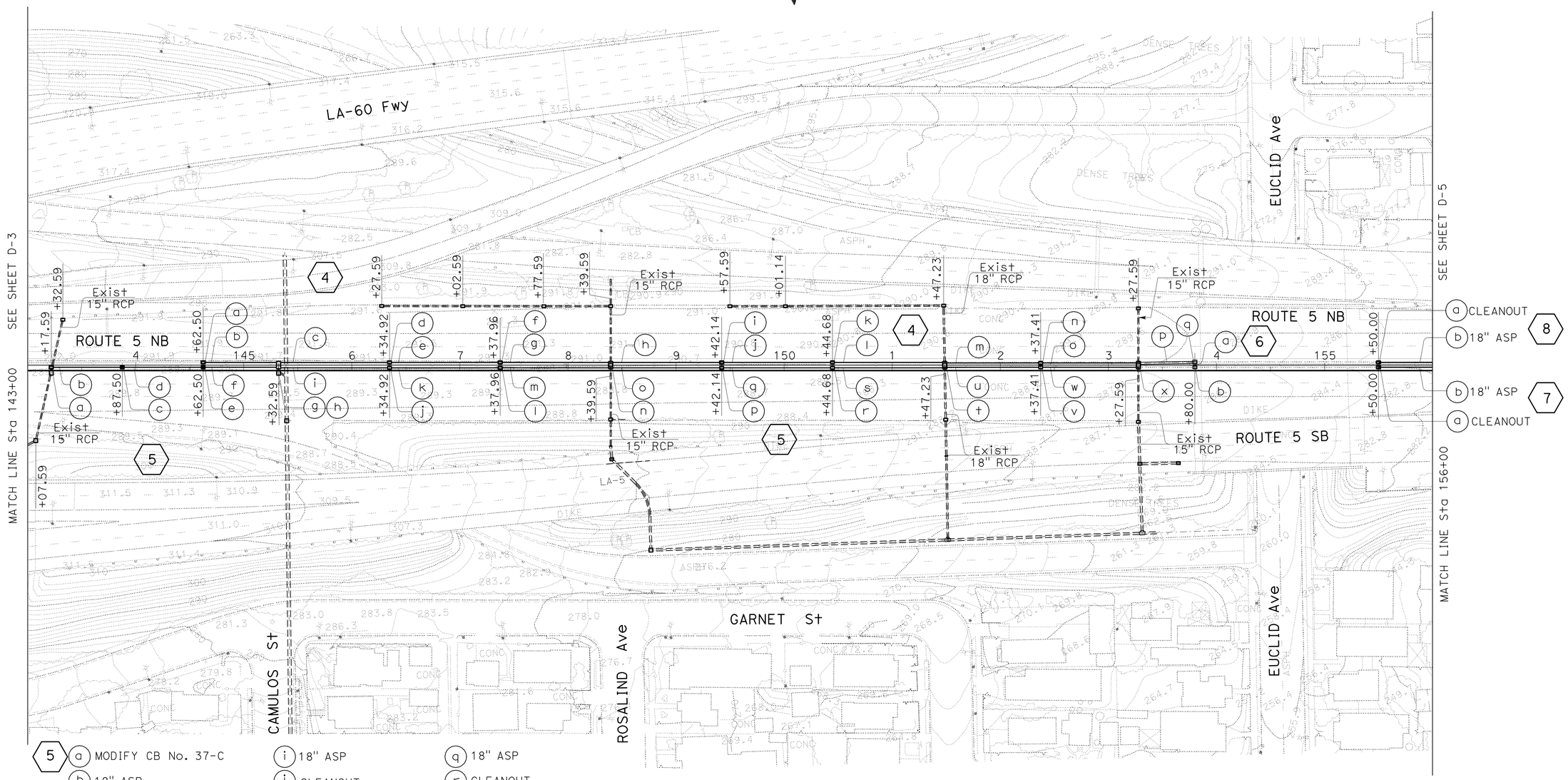

5
- a MODIFY CB No. 37-C
- b 18" ASP
- c CLEANOUT
- d 18" ASP
- e CLEANOUT
- f 18" ASP
- g REMOVE CB No. 37-C
- h MODIFIED TYPE G2 INLET
- i 18" ASP
- j CLEANOUT
- k 18" ASP
- l CLEANOUT
- m 18" ASP
- n MODIFY JC-3C (Mod)
- o 18" ASP
- p CLEANOUT
- q 18" ASP
- r CLEANOUT
- s 18" ASP
- t MODIFY JC-3C (Mod)
- u 18" ASP
- v CLEANOUT
- w 18" ASP
- x MODIFY JC-3C (Mod)

THIS PLAN ACCURATE FOR DRAINAGE WORK ONLY

DRAINAGE PLAN

SCALE: 1" = 50'

D-4

REVISED BY	DATE REVISED

CALCULATED-DESIGNED BY	CHECKED BY
ED GATA	VIC VALIDO

FUNCTIONAL SUPERVISOR: RALPH M. SASAKI

STATE OF CALIFORNIA - DEPARTMENT OF TRANSPORTATION
Caltrans
HYDRAULICS

LAST REVISION 00-00-00 | DATE PLOTTED => 27-MAY-2010 | TIME PLOTTED => 12:26

Dist	COUNTY	ROUTE	POST MILES TOTAL PROJECT	SHEET No.	TOTAL SHEETS
07	LA	5	15.8/16.9	27	145

Edgardo A. Gata 3-8-10
REGISTERED CIVIL ENGINEER DATE

5-24-10
PLANS APPROVAL DATE

REGISTERED PROFESSIONAL ENGINEER ED GATA No. C40706 Exp. 3-31-11 CIVIL STATE OF CALIFORNIA

THE STATE OF CALIFORNIA OR ITS OFFICERS OR AGENTS SHALL NOT BE RESPONSIBLE FOR THE ACCURACY OR COMPLETENESS OF SCANNED COPIES OF THIS PLAN SHEET.

8 (b) 18" ASP
(c) CLEANOUT
(d) 18" ASP
(e) CLEANOUT
(f) 18" ASP
(g) CLEANOUT
(h) 18" ASP

9 (a) REMOVE TYPE G1 INLET
(b) REMOVE 18" RCP

12 (a) REMOVE TYPE G1 INLET
(b) REMOVE 24" RCP

14 (a) CONCRETE TRANSITION
(b) REMOVE TYPE G1 INLET
(c) TYPE G1 INLET (MODIFIED)

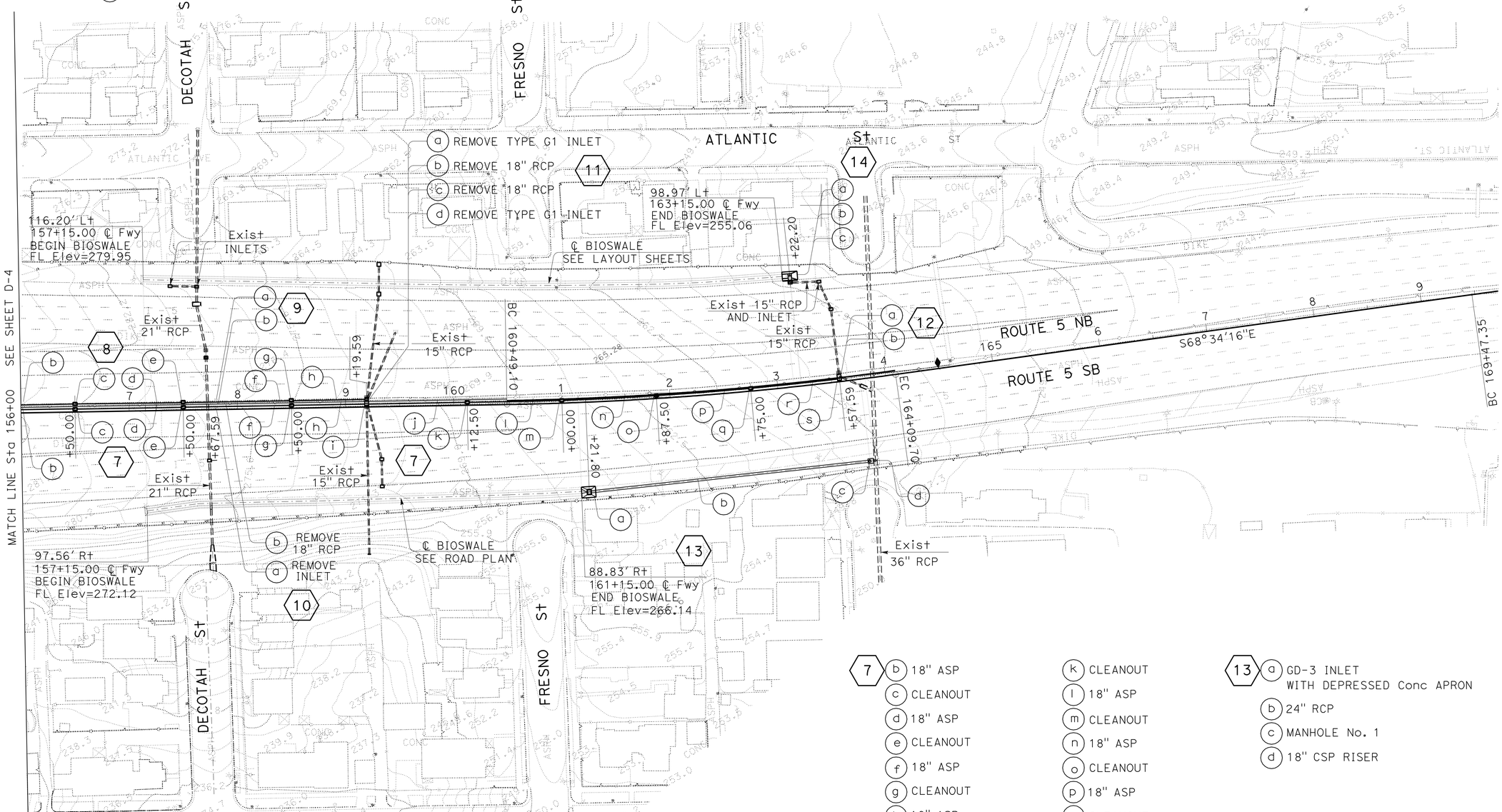

7 (b) 18" ASP
(c) CLEANOUT
(d) 18" ASP
(e) CLEANOUT
(f) 18" ASP
(g) CLEANOUT
(h) 18" ASP
(i) MODIFY JC-3C (Mod)
(j) 18" ASP
(k) CLEANOUT
(l) 18" ASP
(m) CLEANOUT
(n) 18" ASP
(o) CLEANOUT
(p) 18" ASP
(q) CLEANOUT
(r) 18" ASP
(s) MODIFY JC-3C (Mod)

13 (a) GD-3 INLET WITH DEPRESSED Conc APRON
(b) 24" RCP
(c) MANHOLE No. 1
(d) 18" CSP RISER

DRAINAGE PLAN

SCALE: 1" = 50'

D-5

THIS PLAN ACCURATE FOR DRAINAGE WORK ONLY

STATE OF CALIFORNIA - DEPARTMENT OF TRANSPORTATION
Caltrans
HYDRAULICS

FUNCTIONAL SUPERVISOR: RALPH M. SASAKI
CALCULATED-DESIGNED BY: ED GATA
CHECKED BY: VIC VALIDO
REVISED BY
DATE REVISED

LAST REVISION 00-00-00
DATE PLOTTED => 27-MAY-2010
TIME PLOTTED => 12:26

Dist	COUNTY	ROUTE	POST MILES TOTAL PROJECT	SHEET No.	TOTAL SHEETS
07	LA	5	15.8/16.9	28	145

Edgardo A. Gata 3-8-10
REGISTERED CIVIL ENGINEER DATE

5-24-10
PLANS APPROVAL DATE

REGISTERED PROFESSIONAL ENGINEER
ED GATA
No. C40706
Exp. 3-31-11
CIVIL
STATE OF CALIFORNIA

THE STATE OF CALIFORNIA OR ITS OFFICERS OR AGENTS SHALL NOT BE RESPONSIBLE FOR THE ACCURACY OR COMPLETENESS OF SCANNED COPIES OF THIS PLAN SHEET.

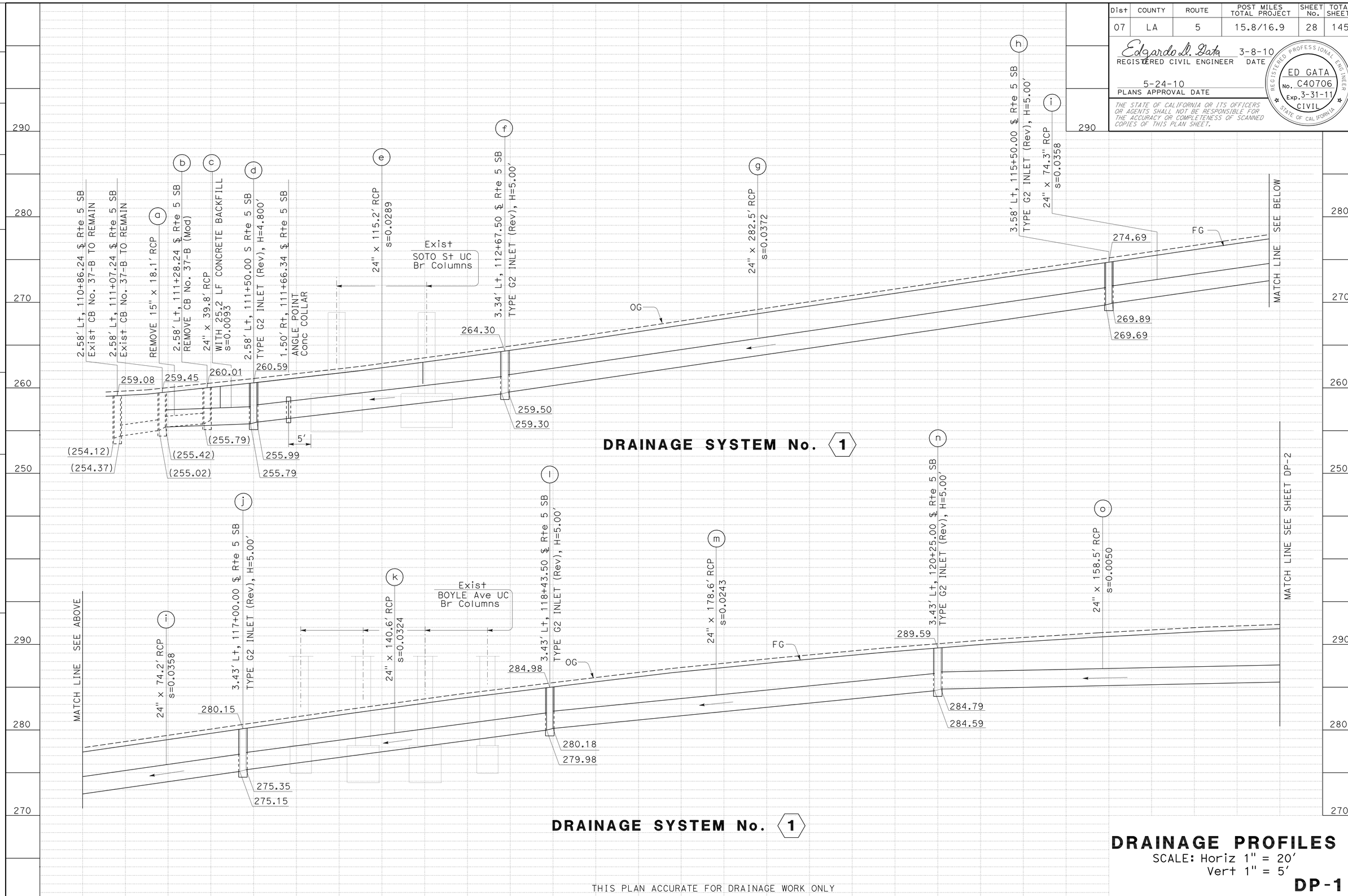

THIS PLAN ACCURATE FOR DRAINAGE WORK ONLY

DRAINAGE PROFILES

SCALE: Horiz 1" = 20'
Vert 1" = 5'

DP-1

REVISED BY	DATE REVISED

CALCULATED-DESIGNED BY: ED GATA
CHECKED BY: VIC VALIDO

FUNCTIONAL SUPERVISOR: RALPH M. SASAKI

STATE OF CALIFORNIA - DEPARTMENT OF TRANSPORTATION
Caltrans
HYDRAULICS

LAST REVISION 00-00-00 | DATE PLOTTED => 27-MAY-2010 | TIME PLOTTED => 12:26

BORDER LAST REVISED 4/11/2008

RELATIVE BORDER SCALE IS IN INCHES 0 1 2 3

USERNAME => trlim
DGN FILE => 718410ib001.dgn

CU 07312

EA 184101

Dist	COUNTY	ROUTE	POST MILES TOTAL PROJECT	SHEET No.	TOTAL SHEETS
07	LA	5	15.8/16.9	29	145

Edgardo A. Gata 3-8-10
REGISTERED CIVIL ENGINEER DATE

5-24-10
PLANS APPROVAL DATE

REGISTERED PROFESSIONAL ENGINEER
ED GATA
No. C40706
Exp. 3-31-11
CIVIL
STATE OF CALIFORNIA

THE STATE OF CALIFORNIA OR ITS OFFICERS OR AGENTS SHALL NOT BE RESPONSIBLE FOR THE ACCURACY OR COMPLETENESS OF SCANNED COPIES OF THIS PLAN SHEET.

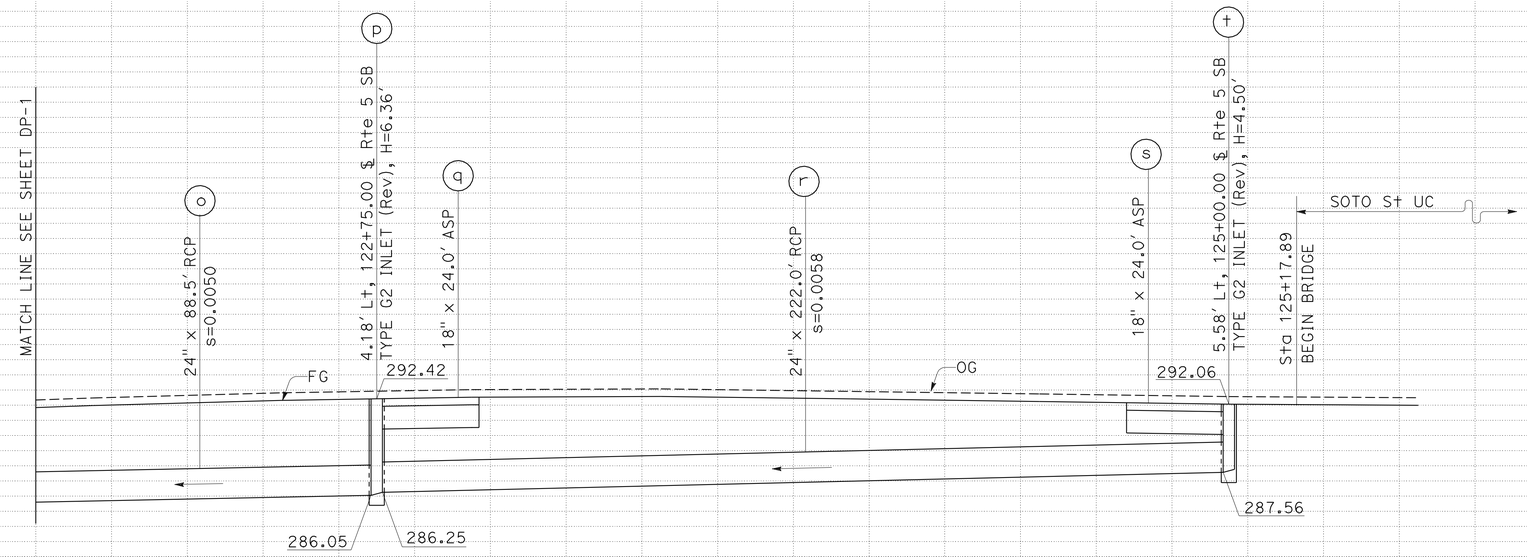

DRAINAGE SYSTEM No. 1

SCALE: Horiz 1" = 20'
Vert 1" = 5'

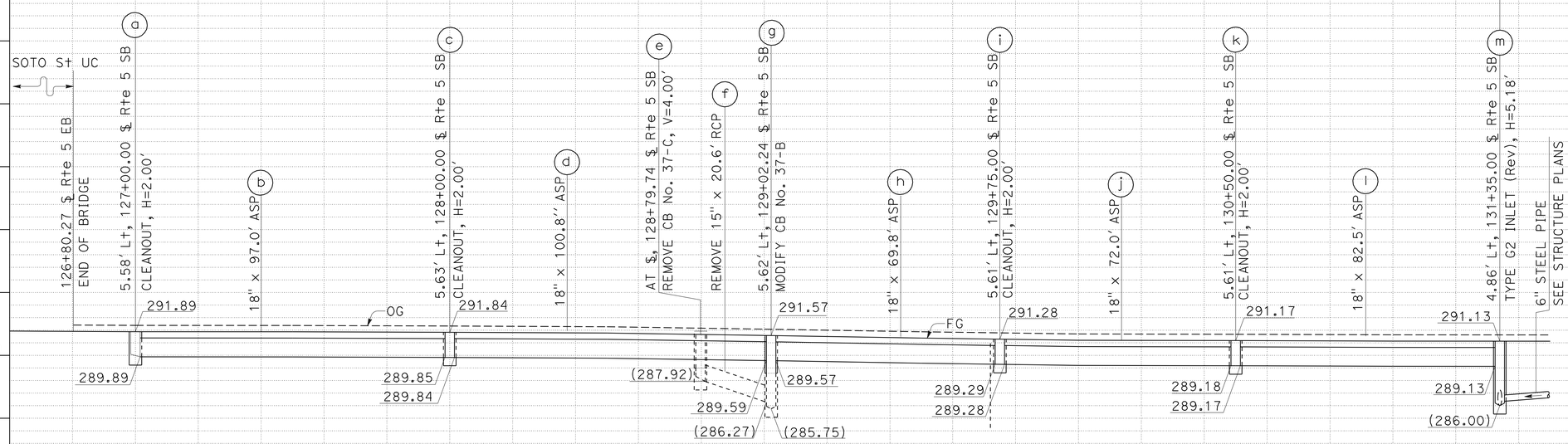

DRAINAGE SYSTEM No. 2

SCALE: Horiz 1" = 20'
Vert 1" = 5'

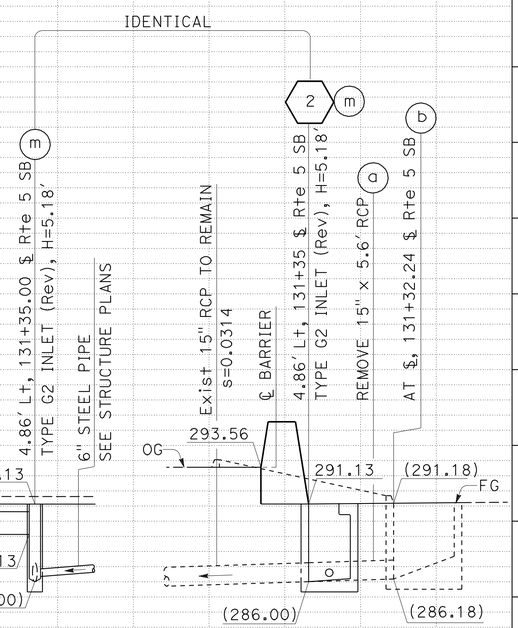

DRAINAGE SYSTEM No. 3

SCALE: Horiz 1" = 5'
Vert 1" = 5'

DRAINAGE PROFILES

SCALE AS SHOWN

DP-2

THIS PLAN ACCURATE FOR DRAINAGE WORK ONLY

STATE OF CALIFORNIA - DEPARTMENT OF TRANSPORTATION
Caltrans
HYDRAULICS
FUNCTIONAL SUPERVISOR: RALPH M. SASAKI
CALCULATED-DESIGNED BY: ED GATA
CHECKED BY: VIC VALIDO
REVISED BY
DATE REVISED

LAST REVISION 00-00-00
DATE PLOTTED => 27-MAY-2010
TIME PLOTTED => 12:26

Dist	COUNTY	ROUTE	POST MILES TOTAL PROJECT	SHEET No.	TOTAL SHEETS
07	LA	5	15.8/16.9	30	145

Edgardo A. Gata 3-8-10
REGISTERED CIVIL ENGINEER DATE

5-24-10
PLANS APPROVAL DATE

REGISTERED PROFESSIONAL ENGINEER
ED GATA
No. C40706
Exp. 3-31-11
CIVIL
STATE OF CALIFORNIA

THE STATE OF CALIFORNIA OR ITS OFFICERS OR AGENTS SHALL NOT BE RESPONSIBLE FOR THE ACCURACY OR COMPLETENESS OF SCANNED COPIES OF THIS PLAN SHEET.

THIS PLAN ACCURATE FOR DRAINAGE WORK ONLY

DRAINAGE PROFILES

SCALE: Horiz 1" = 20'
Vert 1" = 5'

DP-3

REVISED BY	DATE REVISED
ED GATA	VIC VALIDO
CALCULATED-DESIGNED BY	CHECKED BY
FUNCTIONAL SUPERVISOR	RALPH M. SASAKI

STATE OF CALIFORNIA - DEPARTMENT OF TRANSPORTATION
Caltrans HYDRAULICS

LAST REVISION 00-00-00 | DATE PLOTTED => 27-MAY-2010 | TIME PLOTTED => 12:26

Dist	COUNTY	ROUTE	POST MILES TOTAL PROJECT	SHEET No.	TOTAL SHEETS
07	LA	5	15.8/16.9	31	145

Edgardo A. Gata 3-8-10
REGISTERED CIVIL ENGINEER DATE

5-24-10
PLANS APPROVAL DATE

REGISTERED PROFESSIONAL ENGINEER
ED GATA
No. C40706
Exp. 3-31-11
CIVIL
STATE OF CALIFORNIA

THE STATE OF CALIFORNIA OR ITS OFFICERS OR AGENTS SHALL NOT BE RESPONSIBLE FOR THE ACCURACY OR COMPLETENESS OF SCANNED COPIES OF THIS PLAN SHEET.

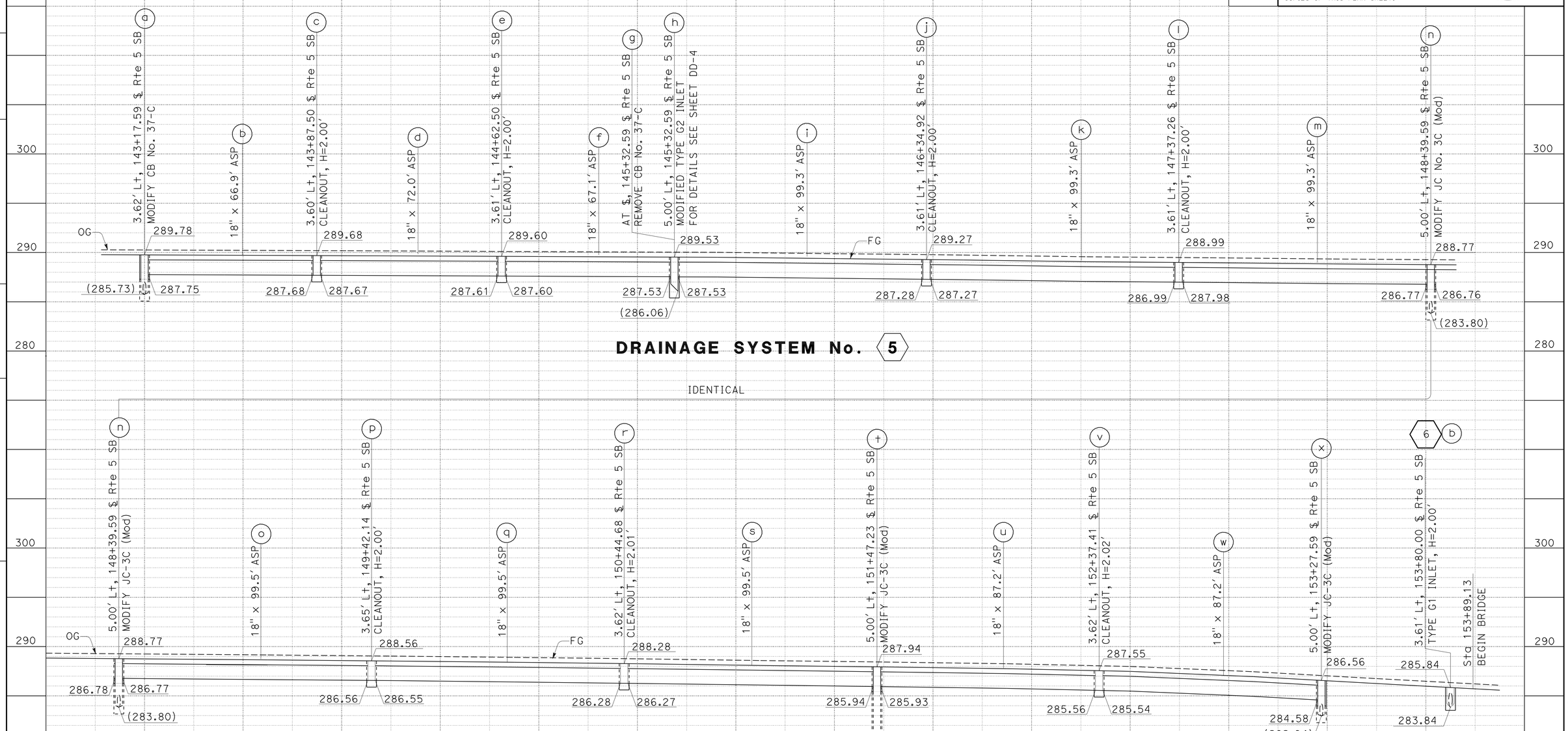

THIS PLAN IS ACCURATE FOR DRAINAGE WORK ONLY

DRAINAGE PROFILES

SCALE: Horiz 1" = 20'
Vert 1" = 5'

DP-4

STATE OF CALIFORNIA - DEPARTMENT OF TRANSPORTATION
Caltrans
HYDRAULICS

FUNCTIONAL SUPERVISOR: RALPH M. SASAKI
CALCULATED-DESIGNED BY: ED GATA
CHECKED BY: VIC VALIDO
REVISED BY
DATE REVISED

LAST REVISION 00-00-00
DATE PLOTTED => 27-MAY-2010
TIME PLOTTED => 12:26

Dist	COUNTY	ROUTE	POST MILES TOTAL PROJECT	SHEET No.	TOTAL SHEETS
07	LA	5	15.8/16.9	32	145

Edgardo A. Gata 3-8-10
REGISTERED CIVIL ENGINEER DATE

5-24-10
PLANS APPROVAL DATE

REGISTERED PROFESSIONAL ENGINEER
ED GATA
No. C40706
Exp. 3-31-11
CIVIL
STATE OF CALIFORNIA

THE STATE OF CALIFORNIA OR ITS OFFICERS OR AGENTS SHALL NOT BE RESPONSIBLE FOR THE ACCURACY OR COMPLETENESS OF SCANNED COPIES OF THIS PLAN SHEET.

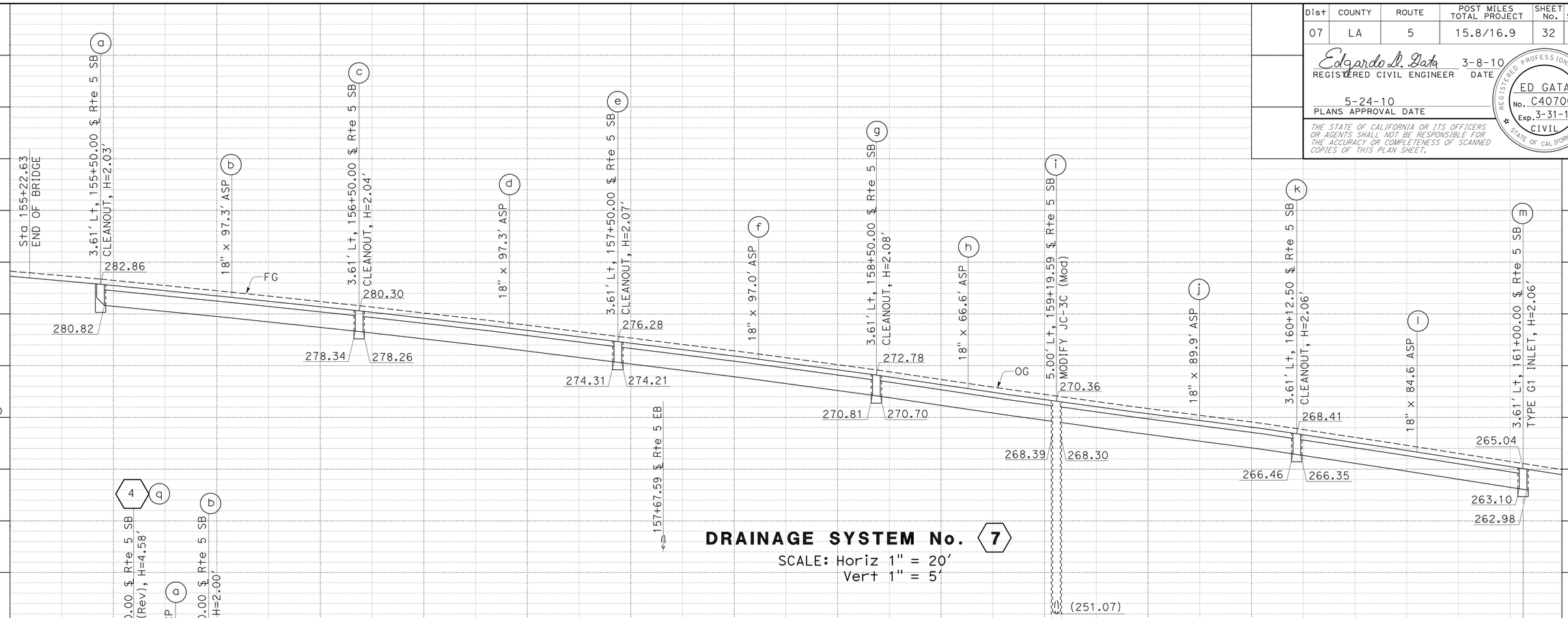

DRAINAGE SYSTEM No. 7
SCALE: Horiz 1" = 20'
Vert 1" = 5'

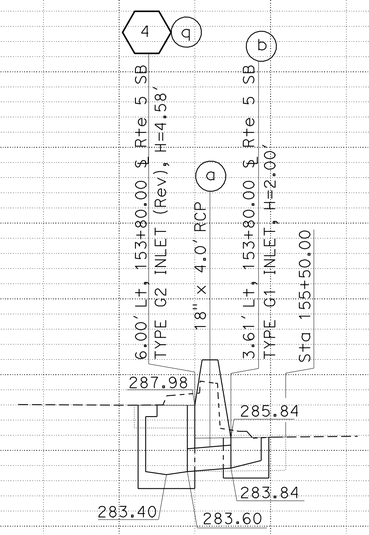

DRAINAGE SYSTEM No. 6
SCALE: Horiz 1" = 5'
Vert 1" = 5'

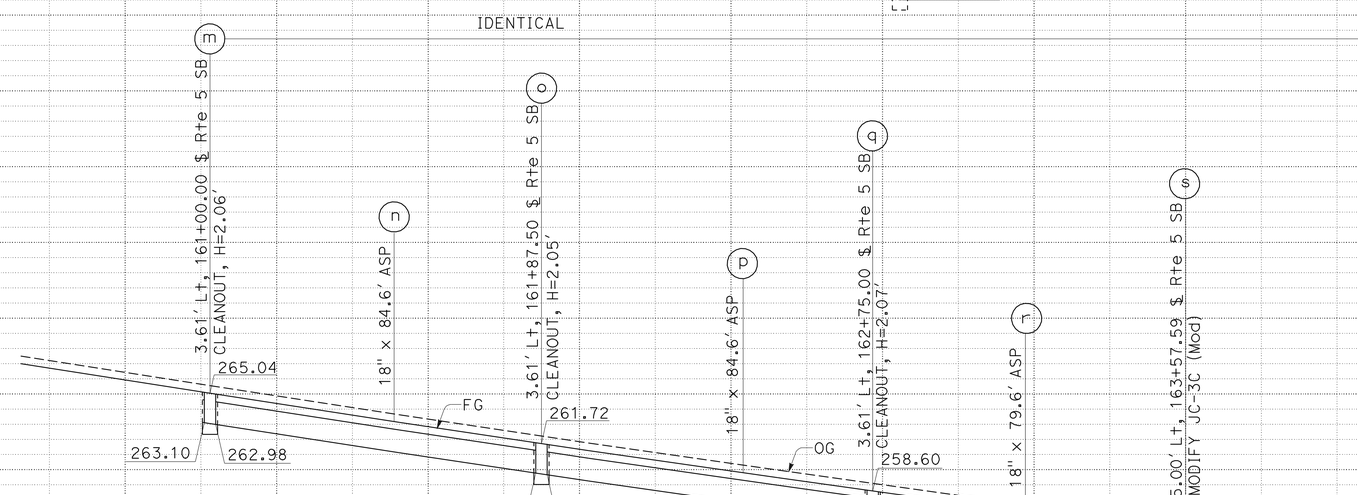

DRAINAGE SYSTEM No. 7
SCALE: Horiz 1" = 20'
Vert 1" = 5'

THIS PLAN IS ACCURATE FOR DRAINAGE WORK ONLY

DRAINAGE PROFILES
SCALE AS SHOWN

DP-5

REVISED BY	DATE REVISED
ED GATA	VIC VALIDO
CALCULATED-DESIGNED BY	CHECKED BY
FUNCTIONAL SUPERVISOR	RALPH M. SASAKI

STATE OF CALIFORNIA - DEPARTMENT OF TRANSPORTATION
Caltrans
HYDRAULICS

LAST REVISION 00-00-00
DATE PLOTTED => 27-MAY-2010
TIME PLOTTED => 12:27

Dist	COUNTY	ROUTE	POST MILES TOTAL PROJECT	SHEET No.	TOTAL SHEETS
07	LA	5	15.8/16.9	33	145

Edgardo A. Gata 3-8-10
REGISTERED CIVIL ENGINEER DATE

5-24-10
PLANS APPROVAL DATE

REGISTERED PROFESSIONAL ENGINEER
ED GATA
No. C40706
Exp. 3-31-11
CIVIL
STATE OF CALIFORNIA

THE STATE OF CALIFORNIA OR ITS OFFICERS OR AGENTS SHALL NOT BE RESPONSIBLE FOR THE ACCURACY OR COMPLETENESS OF SCANNED COPIES OF THIS PLAN SHEET.

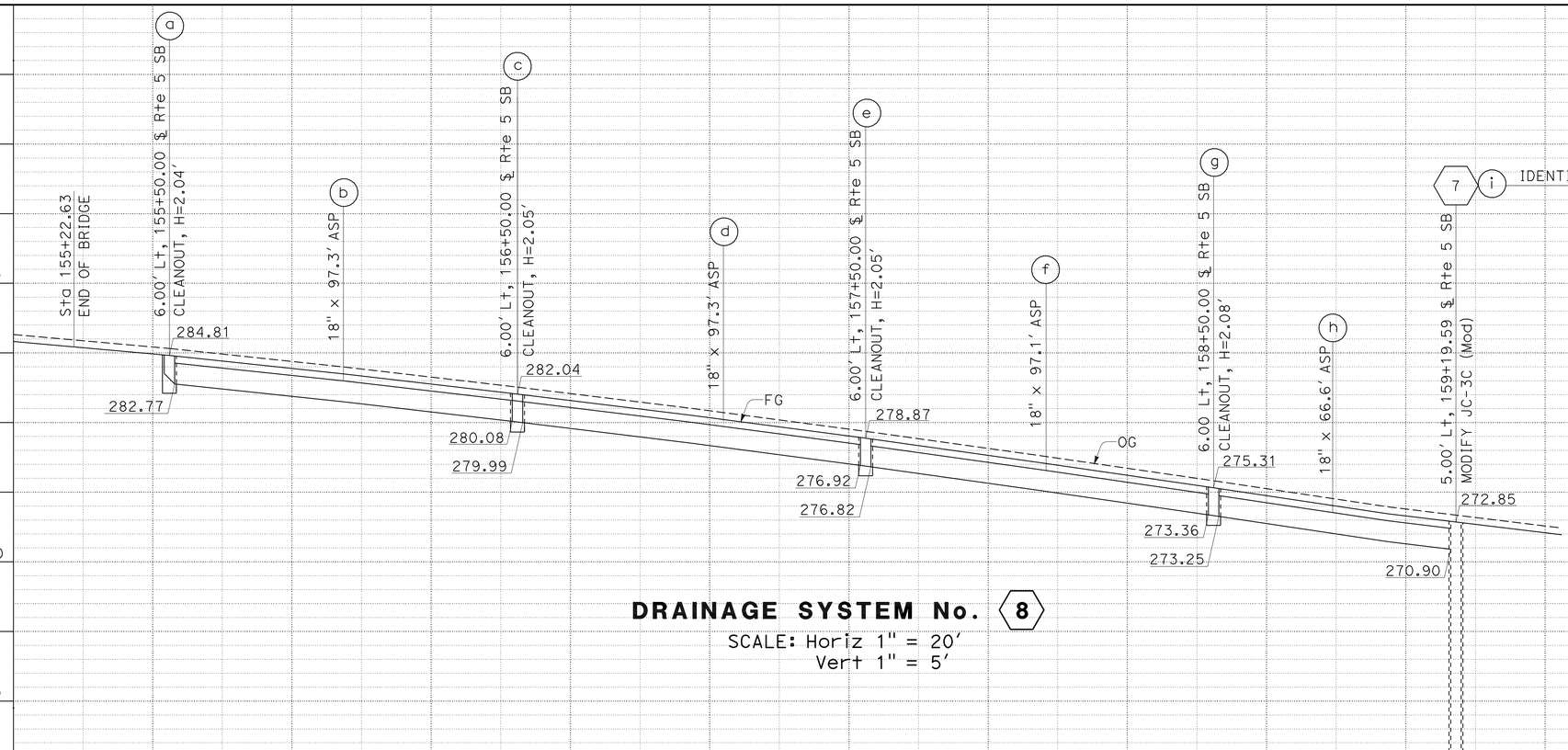

DRAINAGE SYSTEM No. 8

SCALE: Horiz 1" = 20'
Vert 1" = 5'

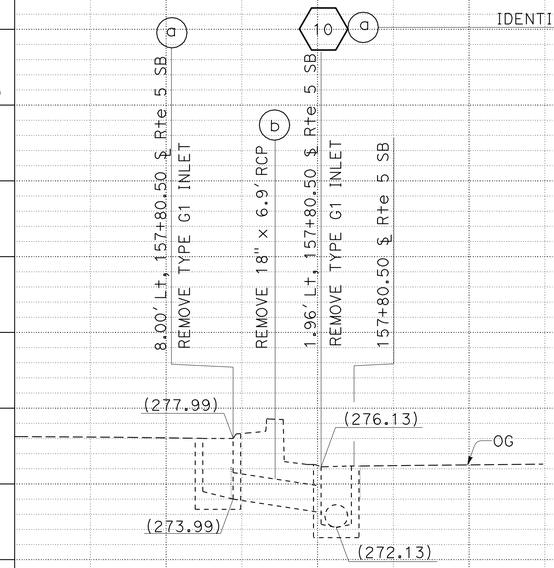

DRAINAGE SYSTEM No. 9

SCALE: Horiz 1" = 5'
Vert 1" = 5'

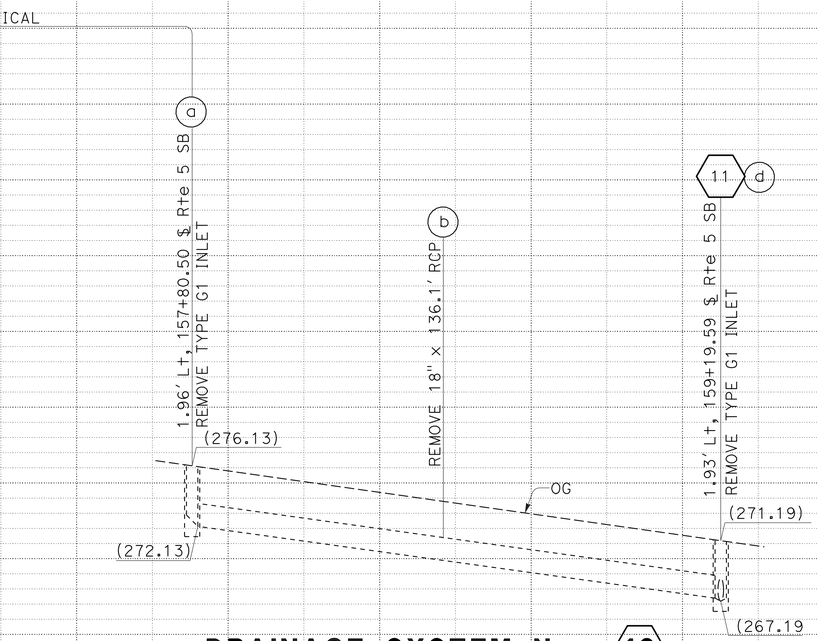

DRAINAGE SYSTEM No. 10

SCALE: Horiz 1" = 20'
Vert 1" = 5'

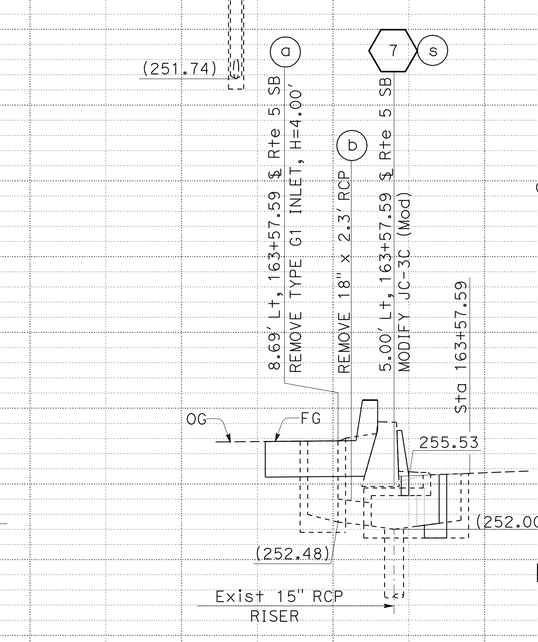

DRAINAGE SYSTEM No. 12

SCALE: Horiz 1" = 5'
Vert 1" = 5'

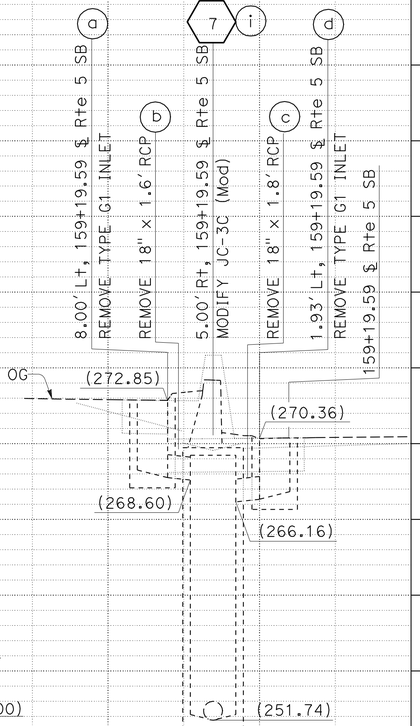

DRAINAGE SYSTEM No. 11

SCALE: Horiz 1" = 5'
Vert 1" = 5'

DRAINAGE PROFILES

SCALE AS SHOWN

DP-6

THIS PLAN IS ACCURATE FOR DRAINAGE WORK ONLY

STATE OF CALIFORNIA - DEPARTMENT OF TRANSPORTATION
Caltrans
HYDRAULICS
FUNCTIONAL SUPERVISOR: RALPH M. SASAKI
CALCULATED-DESIGNED BY: ED GATA
CHECKED BY: VIC VALIDO
REVISED BY
DATE REVISED

LAST REVISION 00-00-00
DATE PLOTTED => 27-MAY-2010
TIME PLOTTED => 12:27

Dist	COUNTY	ROUTE	POST MILES TOTAL PROJECT	SHEET No.	TOTAL SHEETS
07	LA	5	15.8/16.9	34	145

Edgardo A. Gata 3-8-10
REGISTERED CIVIL ENGINEER DATE

5-24-10
PLANS APPROVAL DATE

REGISTERED PROFESSIONAL ENGINEER
ED GATA
No. C40706
Exp. 3-31-11
CIVIL
STATE OF CALIFORNIA

THE STATE OF CALIFORNIA OR ITS OFFICERS OR AGENTS SHALL NOT BE RESPONSIBLE FOR THE ACCURACY OR COMPLETENESS OF SCANNED COPIES OF THIS PLAN SHEET.

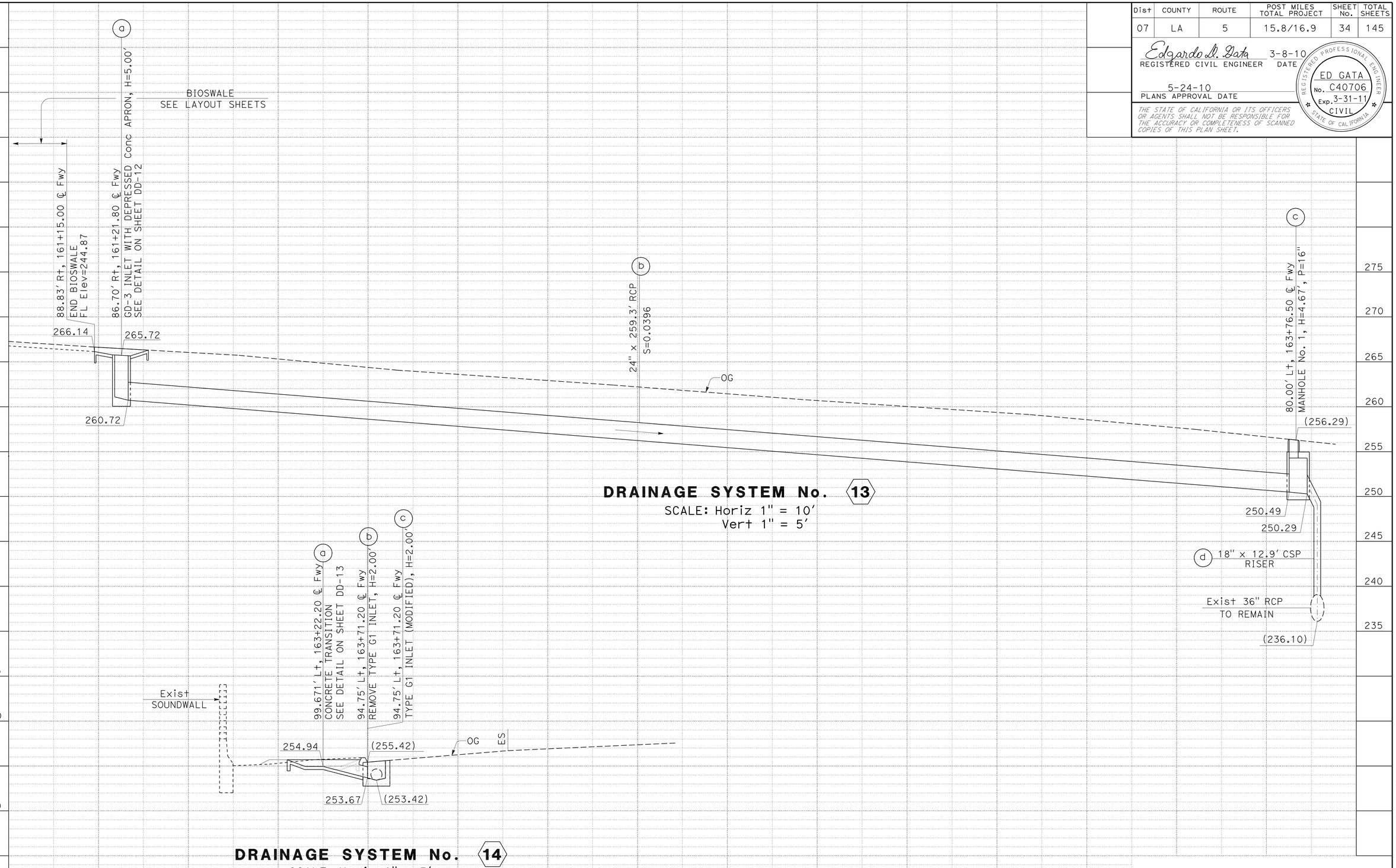

DRAINAGE SYSTEM No. 13
SCALE: Horiz 1" = 10'
Vert 1" = 5'

DRAINAGE SYSTEM No. 14
SCALE: Horiz 1" = 5'
Vert 1" = 5'

THIS PLAN IS ACCURATE FOR DRAINAGE WORK ONLY

DRAINAGE PROFILES
SCALE AS SHOWN

DP-7

REVISED BY | DATE REVISED
ED GATA | VIC VALIDO
CALCULATED-DESIGNED BY | CHECKED BY
FUNCTIONAL SUPERVISOR
RALPH M. SASAKI

STATE OF CALIFORNIA - DEPARTMENT OF TRANSPORTATION
Caltrans
HYDRAULICS

LAST REVISION 00-00-00
DATE PLOTTED => 27-MAY-2010
TIME PLOTTED => 12:27

Dist	COUNTY	ROUTE	POST MILES TOTAL PROJECT	SHEET No.	TOTAL SHEETS
07	LA	5	15.8/16.9	35	145

Edgardo A. Gata 3-8-10
REGISTERED CIVIL ENGINEER DATE

5-24-10
PLANS APPROVAL DATE

REGISTERED PROFESSIONAL ENGINEER
ED GATA
No. C40706
Exp. 3-31-11
CIVIL
STATE OF CALIFORNIA

THE STATE OF CALIFORNIA OR ITS OFFICERS OR AGENTS SHALL NOT BE RESPONSIBLE FOR THE ACCURACY OR COMPLETENESS OF SCANNED COPIES OF THIS PLAN SHEET.

LEGEND:

REMOVE INTERFERING PORTION OF EXISTING DRAINAGE INLET

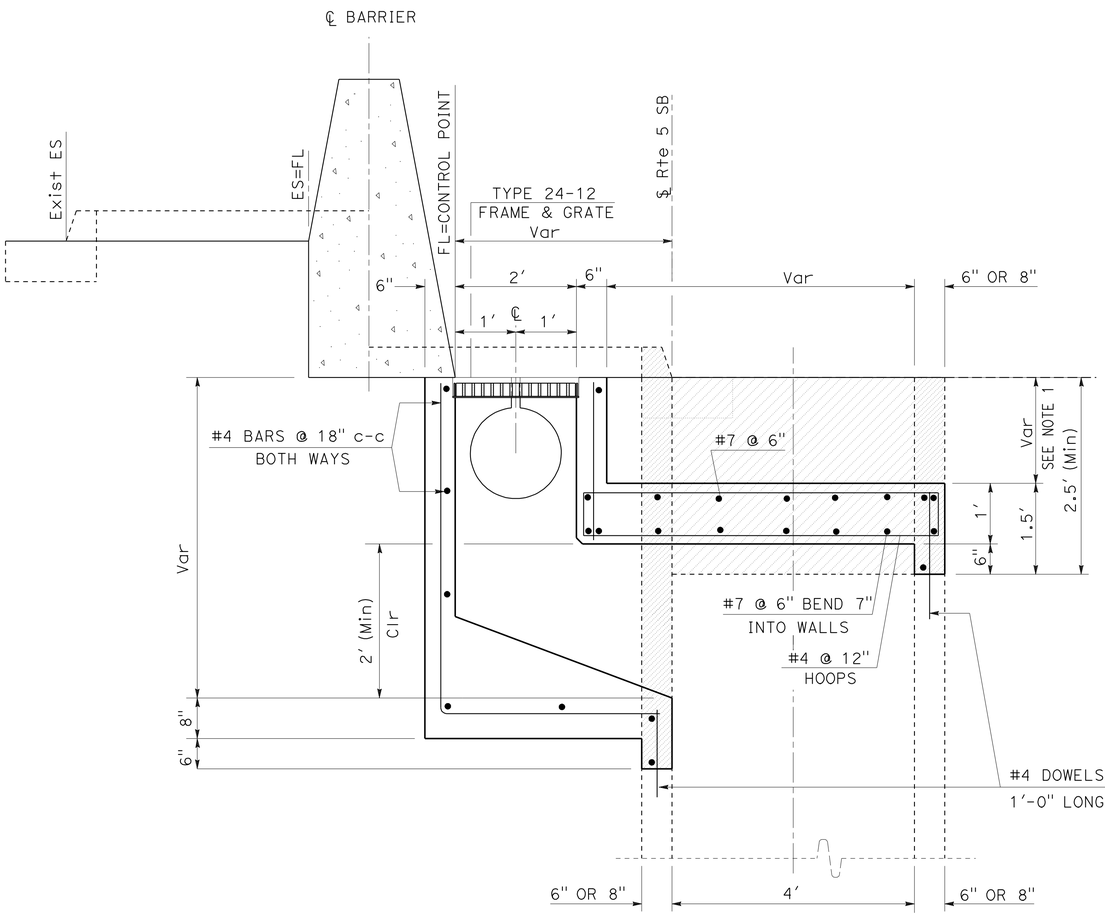

SECTION A-A

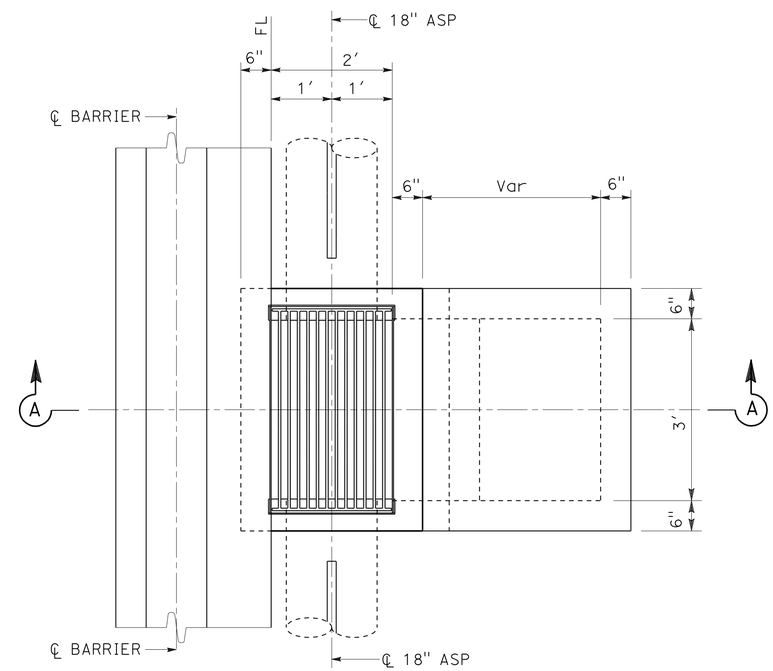

PLAN

MODIFY CB No. 37-C
(CASE 1)

5 a 3.62' Lt, 143+17.59 ℄ Rte 5 EB

NOTES:

1. FILL WITH CONCRETE (SAME TYPE AS ADJOINING PAVEMENT), IF LESS THAN 2'-6".
2. FOR DETAILS AND INFORMATION NOT SHOWN, SEE TYPE G2 INLET ON STANDARD PLAN D73.

(MODIFY INLET)
DRAINAGE DETAILS
NO SCALE

DD-1

STATE OF CALIFORNIA - DEPARTMENT OF TRANSPORTATION
Caltrans
HYDRAULICS

FUNCTIONAL SUPERVISOR: RALPH M. SASAKI
CALCULATED-DESIGNED BY: ED GATA
CHECKED BY: VIC VALIDO
REVISED BY
DATE REVISED

LAST REVISION 00-00-00
DATE PLOTTED => 27-MAY-2010
TIME PLOTTED => 12:27

Dist	COUNTY	ROUTE	POST MILES TOTAL PROJECT	SHEET No.	TOTAL SHEETS
07	LA	5	15.8/16.9	36	145

Edgardo A. Gata 3-8-10
REGISTERED CIVIL ENGINEER DATE

5-24-10
PLANS APPROVAL DATE

REGISTERED PROFESSIONAL ENGINEER
ED GATA
No. C40706
Exp. 3-31-11
CIVIL
STATE OF CALIFORNIA

THE STATE OF CALIFORNIA OR ITS OFFICERS OR AGENTS SHALL NOT BE RESPONSIBLE FOR THE ACCURACY OR COMPLETENESS OF SCANNED COPIES OF THIS PLAN SHEET.

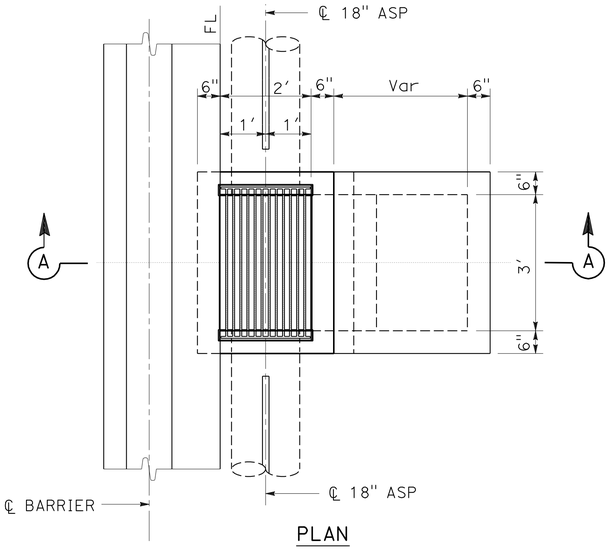

PLAN

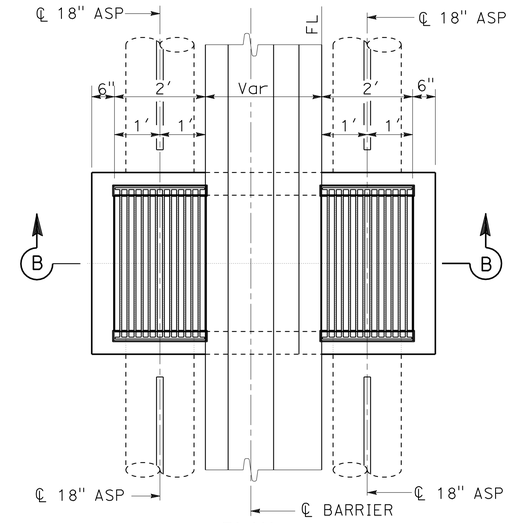

PLAN

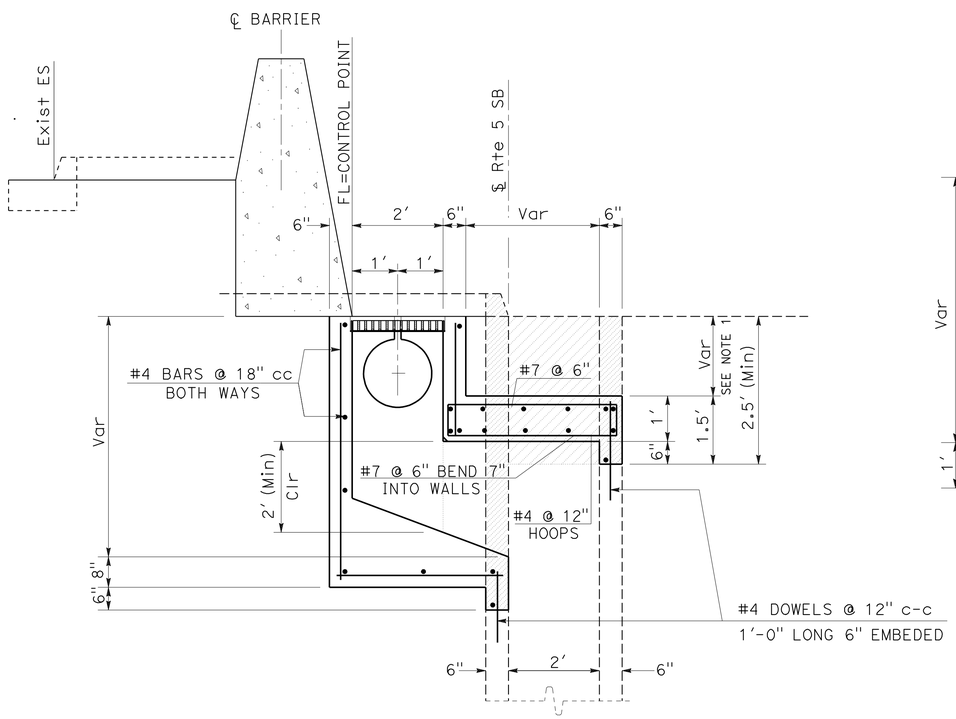

SECTION A-A

MODIFY CB No. 37-B (Mod)
(CASE 2)

NOTES:

1. FILL WITH CONCRETE (SAME TYPE AS ADJOINING PAVEMENT), IF LESS THAN 2′-6".
2. FOR DETAILS AND INFORMATION NOT SHOWN, SEE TYPE G2 INLET ON STANDARD PLAN D73.

(2) (g) 5.62′ Lt, 129+02.24 ℄ Rte 5 EB

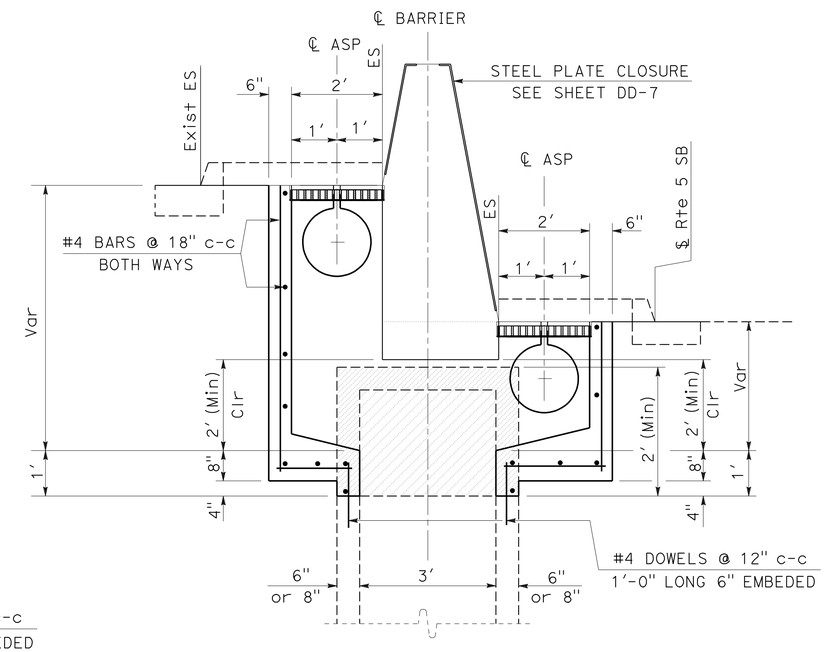

SECTION B-B

MODIFY JC-3C (Mod)
(CASE 3)

NOTE:

FOR DETAILS AND INFORMATION NOT SHOWN, SEE TYPE GO INLET ON STANDARD PLAN D74B.

(5) (n) 5.00′ Lt, 148+39.59 ℄ Rte 5 EB
(t) 5.00′ Lt, 151+47.23 ℄ Rte 5 EB
(x) 5.00′ Lt, 153+27.59 ℄ Rte 5 EB
(7) (i) 5.00′ Lt, 159+19.59 ℄ Rte 5 EB

(MODIFY INLET)

DRAINAGE DETAILS

NO SCALE

DD-2

STATE OF CALIFORNIA - DEPARTMENT OF TRANSPORTATION
Caltrans® HYDRAULICS
FUNCTIONAL SUPERVISOR: RALPH M. SASAKI
CALCULATED-DESIGNED BY: ED GATA
CHECKED BY: VIC VALIDO
REVISED BY
DATE REVISED

LAST REVISION 00-00-00
DATE PLOTTED => 27-MAY-2010
TIME PLOTTED => 12:27

Dist	COUNTY	ROUTE	POST MILES TOTAL PROJECT	SHEET No.	TOTAL SHEETS
07	LA	5	15.8/16.9	37	145

Edgardo A. Gata 3-8-10
REGISTERED CIVIL ENGINEER DATE

5-24-10
PLANS APPROVAL DATE

REGISTERED PROFESSIONAL ENGINEER
ED GATA
No. C40706
Exp. 3-31-11
CIVIL
STATE OF CALIFORNIA

THE STATE OF CALIFORNIA OR ITS OFFICERS OR AGENTS SHALL NOT BE RESPONSIBLE FOR THE ACCURACY OR COMPLETENESS OF SCANNED COPIES OF THIS PLAN SHEET.

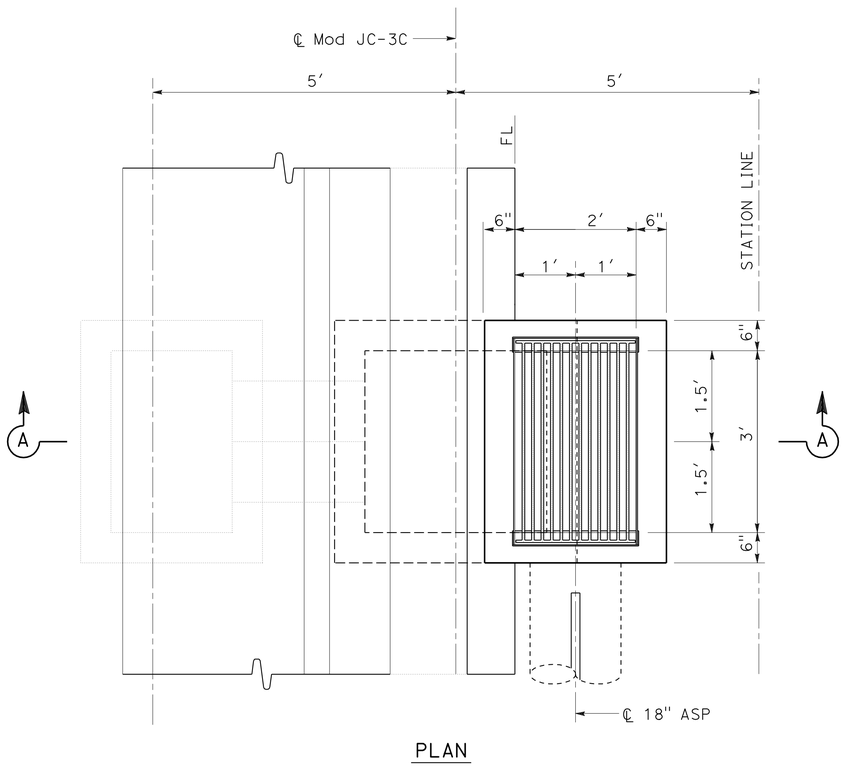

PLAN

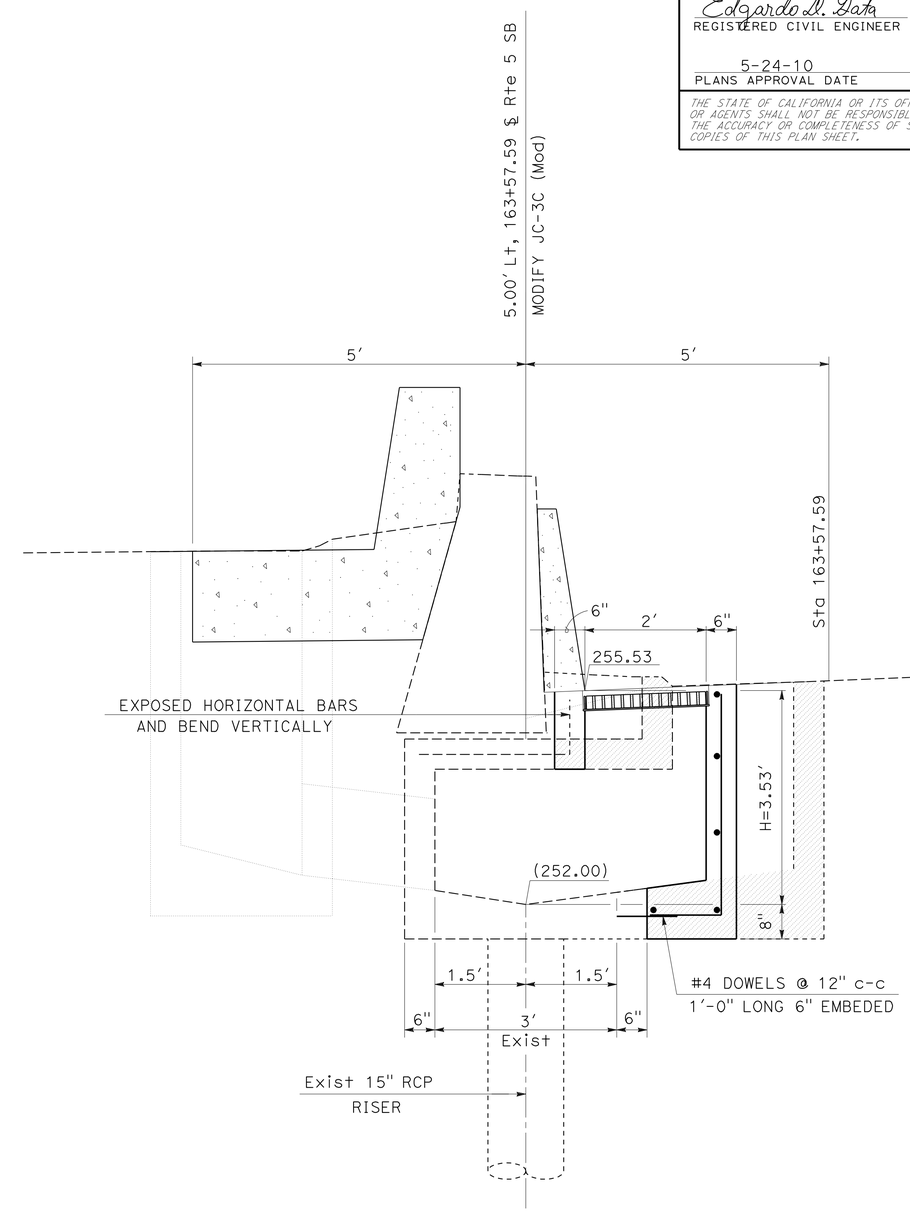

SECTION A-A

MODIFY JC-3C (Mod)
(CASE 5)

NOTE:

FOR DETAILS AND INFORMATION NOT SHOWN, SEE TYPE G2 INLET ON STANDARD PLAN D73.

7 s 5.00′ Lt, 163+57.19 ℄ Rte 5 EB

(MODIFY INLET)

DRAINAGE DETAILS

NO SCALE

DD-3

STATE OF CALIFORNIA - DEPARTMENT OF TRANSPORTATION
Caltrans
HYDRAULICS

FUNCTIONAL SUPERVISOR: RALPH M. SASAKI
CALCULATED-DESIGNED BY: ED GATA
CHECKED BY: VIC VALIDO
REVISED BY
DATE REVISED

LAST REVISION 00-00-00
DATE PLOTTED => 27-MAY-2010
TIME PLOTTED => 12:27

Dist	COUNTY	ROUTE	POST MILES TOTAL PROJECT	SHEET No.	TOTAL SHEETS
07	LA	5	15.8/16.9	38	145

Edgardo A. Gata 3-8-10
REGISTERED CIVIL ENGINEER DATE

5-24-10
PLANS APPROVAL DATE

REGISTERED PROFESSIONAL ENGINEER
ED GATA
No. C40706
Exp. 3-31-11
CIVIL
STATE OF CALIFORNIA

THE STATE OF CALIFORNIA OR ITS OFFICERS OR AGENTS SHALL NOT BE RESPONSIBLE FOR THE ACCURACY OR COMPLETENESS OF SCANNED COPIES OF THIS PLAN SHEET.

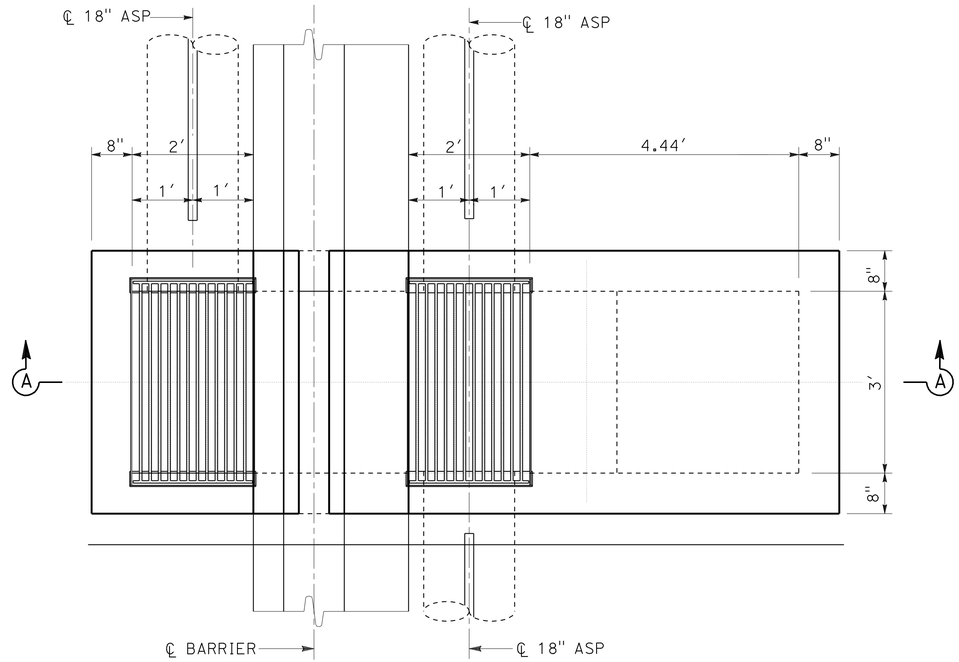

PLAN

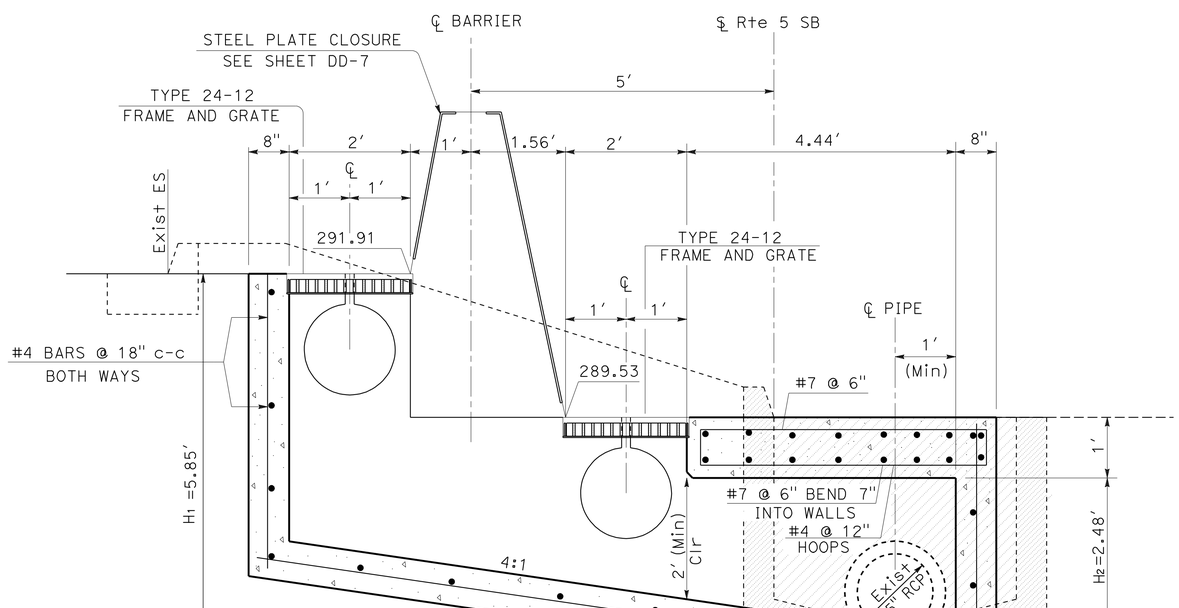

SECTION A-A

MODIFIED TYPE G2 INLET

NOTES:

1. FOR DETAILS AND INFORMATION NOT SHOWN, SEE TYPE G2 INLET ON STANDARD PLAN D73.
2. FOR STEEL PLATE CLOSURE SEE SHEET DD-7.

5 h 5.00' Lt, 145+32.59 ℄ Rte 5 EB

DRAINAGE DETAILS

NO SCALE

DD-4

STATE OF CALIFORNIA - DEPARTMENT OF TRANSPORTATION
Caltrans
HYDRAULICS

FUNCTIONAL SUPERVISOR: RALPH M. SASAKI
CALCULATED-DESIGNED BY: ED GATA
CHECKED BY: VIC VALIDO
REVISED BY
DATE REVISED

LAST REVISION 00-00-00
DATE PLOTTED => 27-MAY-2010
TIME PLOTTED => 12:27

Dist	COUNTY	ROUTE	POST MILES TOTAL PROJECT	SHEET No.	TOTAL SHEETS
07	LA	5	15.8/16.9	39	145

Edgardo A. Gata 3-8-10
REGISTERED CIVIL ENGINEER DATE

5-24-10
PLANS APPROVAL DATE

REGISTERED PROFESSIONAL ENGINEER
ED GATA
No. C40706
Exp. 3-31-11
CIVIL
STATE OF CALIFORNIA

THE STATE OF CALIFORNIA OR ITS OFFICERS OR AGENTS SHALL NOT BE RESPONSIBLE FOR THE ACCURACY OR COMPLETENESS OF SCANNED COPIES OF THIS PLAN SHEET.

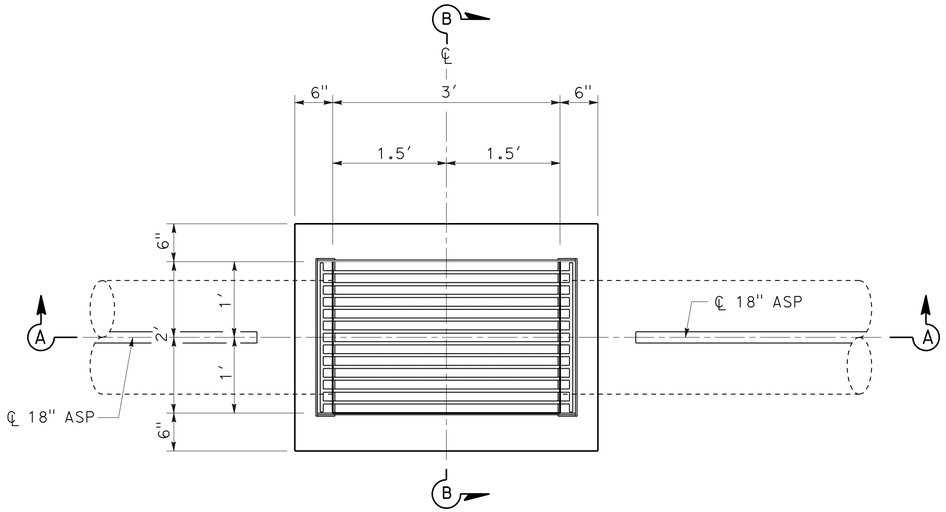

PLAN

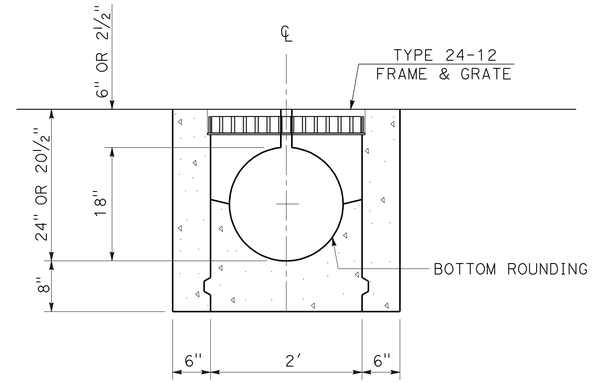

SECTION B-B

18" SLOTTED CORRUGATED STEEL PIPE
(CASE 1)

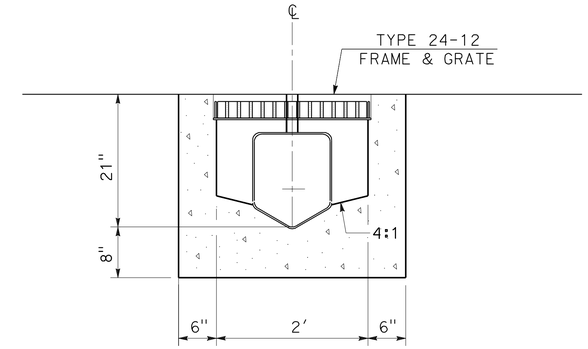

SECTION B-B

SLOTTED PLASTIC PIPE
(CASE 2)

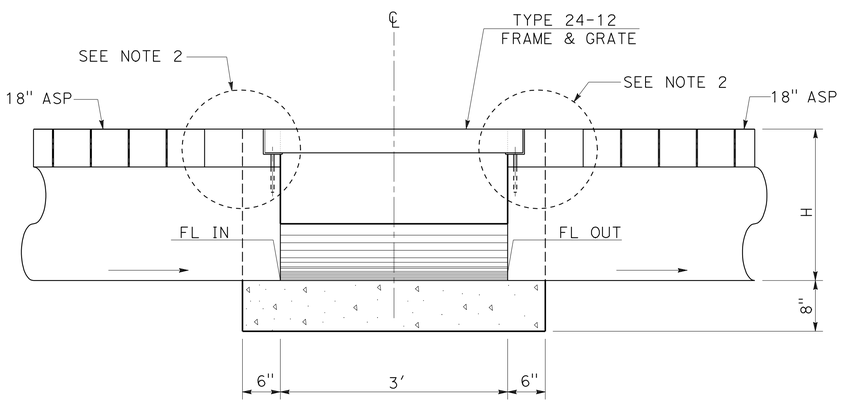

SECTION A-A

INTERMEDIATE CLEANOUT
(CASE 1)

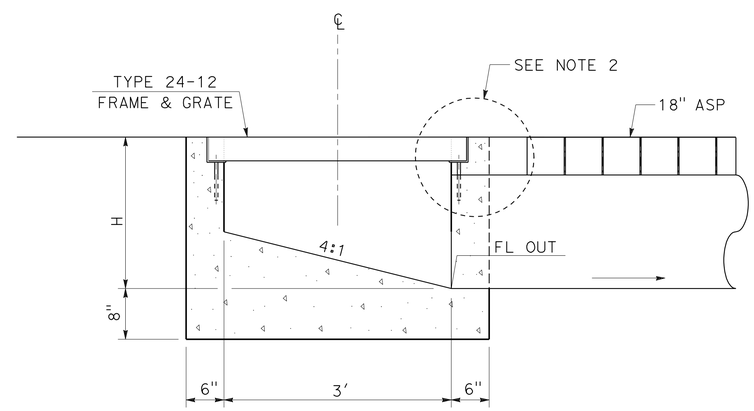

SECTION A-A

BEGINNING/ENDING CLEANOUT
(CASE 2)

NOTES:

1. FOR DETAILS AND INFORMATION NOT SHOWN, SEE TYPE G1 INLET ON STANDARD PLAN D73.
2. GRATE SLOT SHALL BE REMOVED TO A LIMIT NOT TO INTERFERE WITH THE CONSTRUCTION OF ASP CLEANOUTS, BUT NOT TO EXCEED TO A MAXIMUM DISTANCE OF 6" FROM THE CLEANOUT WALLS OR AS DIRECTED BY THE ENGINEER.

(CLEANOUT)
DRAINAGE DETAILS
NO SCALE

DD-5

STATE OF CALIFORNIA - DEPARTMENT OF TRANSPORTATION
Caltrans®
HYDRAULICS
FUNCTIONAL SUPERVISOR: RALPH M. SASAKI
CALCULATED-DESIGNED BY: ED GATA
CHECKED BY: VIC VALIDO
REVISED BY
DATE REVISED

LAST REVISION 00-00-00
DATE PLOTTED => 27-MAY-2010
TIME PLOTTED => 12:27

Dist	COUNTY	ROUTE	POST MILES TOTAL PROJECT	SHEET No.	TOTAL SHEETS
07	LA	5	15.8/16.9	40	145

Edgardo A. Gata 3-8-10
REGISTERED CIVIL ENGINEER DATE

5-24-10
PLANS APPROVAL DATE

REGISTERED PROFESSIONAL ENGINEER
ED GATA
No. C40706
Exp. 3-31-11
CIVIL
STATE OF CALIFORNIA

THE STATE OF CALIFORNIA OR ITS OFFICERS OR AGENTS SHALL NOT BE RESPONSIBLE FOR THE ACCURACY OR COMPLETENESS OF SCANNED COPIES OF THIS PLAN SHEET.

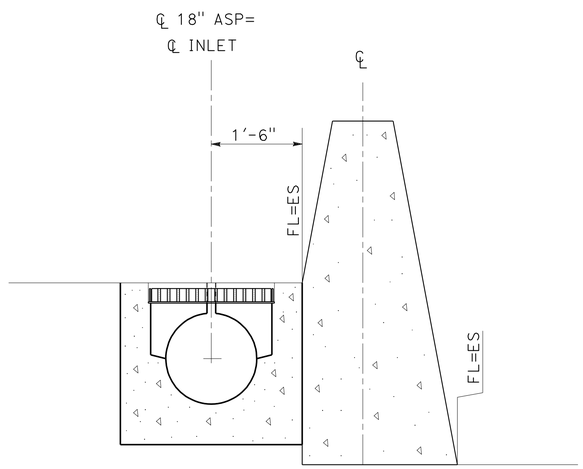

SECTION A-A

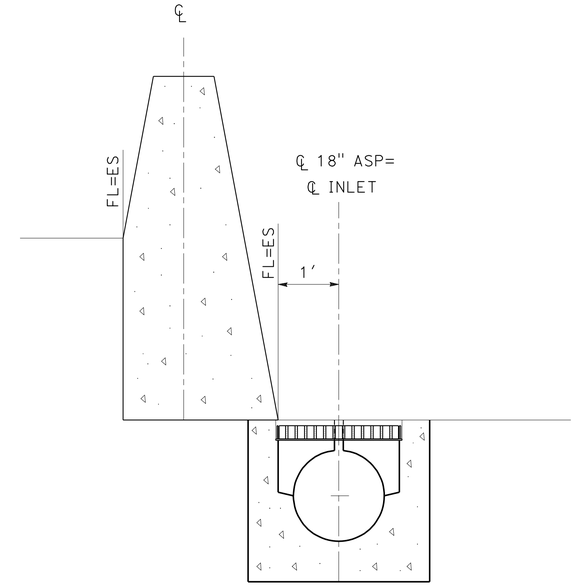

SECTION B-B

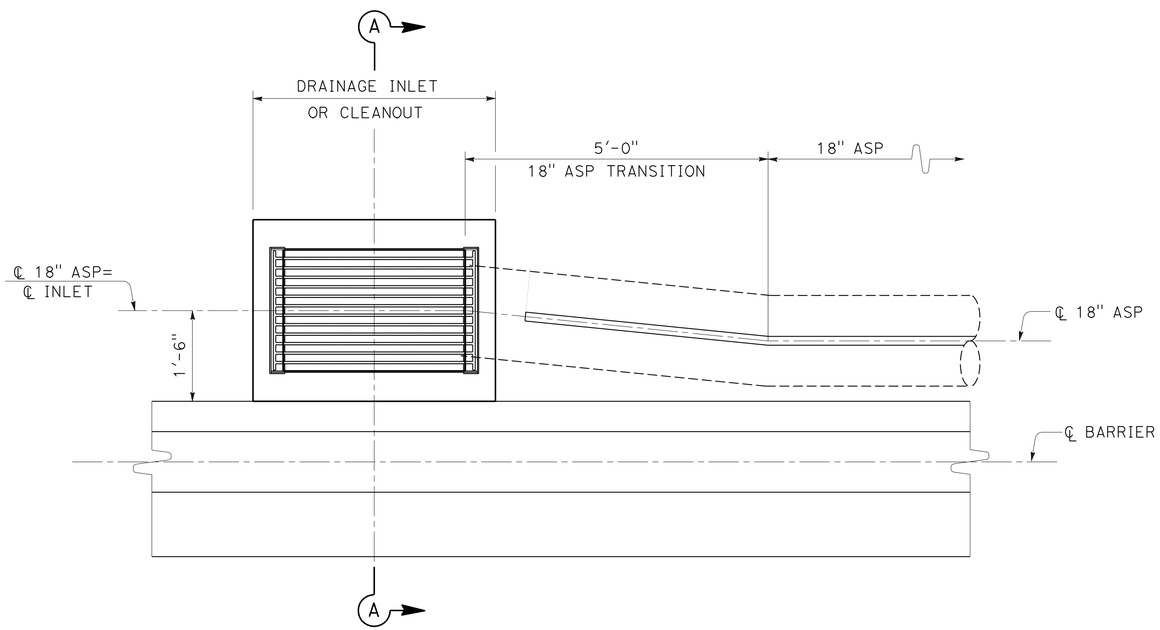

PLAN
(CASE 1)

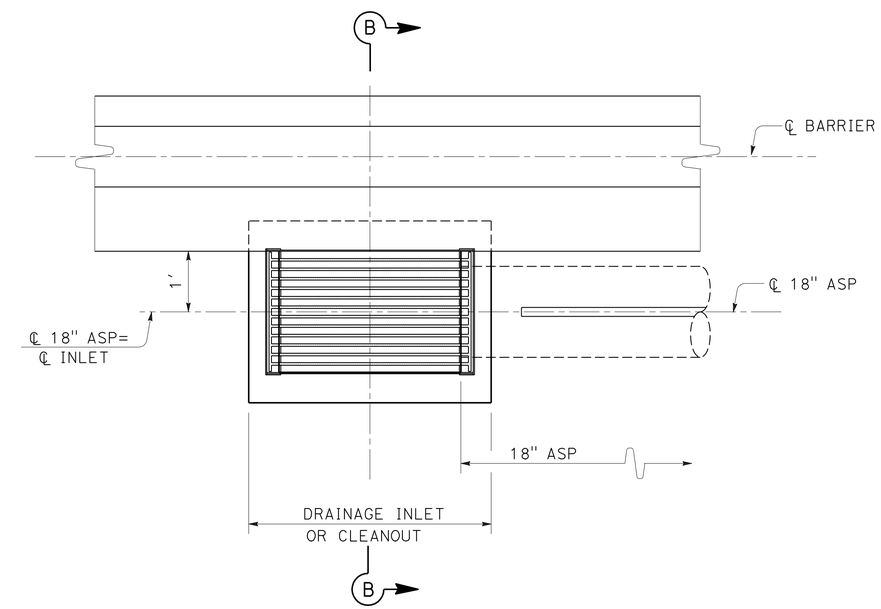

PLAN
(CASE 2)

DRAINAGE INLET AND 18" ASP ADJACENT TO CONCRETE BARRIER

DRAINAGE DETAILS

NO SCALE

DD-6

STATE OF CALIFORNIA - DEPARTMENT OF TRANSPORTATION
Caltrans
HYDRAULICS

FUNCTIONAL SUPERVISOR: RALPH M. SASAKI
CALCULATED-DESIGNED BY: ED GATA
CHECKED BY: VIC VALIDO
REVISED BY
DATE REVISED

LAST REVISION 00-00-00
DATE PLOTTED => 27-MAY-2010
TIME PLOTTED => 12:27

Dist	COUNTY	ROUTE	POST MILES TOTAL PROJECT	SHEET No.	TOTAL SHEETS
07	LA	5	15.8/16.9	41	145

Edgardo A. Gata 3-8-10
REGISTERED CIVIL ENGINEER DATE

5-24-10
PLANS APPROVAL DATE

REGISTERED PROFESSIONAL ENGINEER
ED GATA
No. C40706
Exp. 3-31-11
CIVIL
STATE OF CALIFORNIA

THE STATE OF CALIFORNIA OR ITS OFFICERS OR AGENTS SHALL NOT BE RESPONSIBLE FOR THE ACCURACY OR COMPLETENESS OF SCANNED COPIES OF THIS PLAN SHEET.

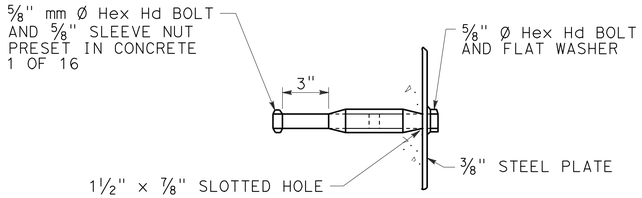

DETAIL "F"

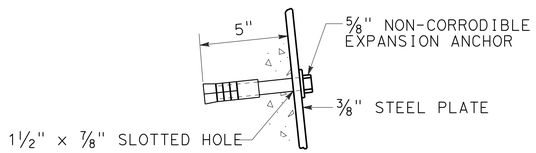

ALTERNATE DETAIL "F"

STEEL PLATE CLOSURE ANCHOR BOLT DETAILS

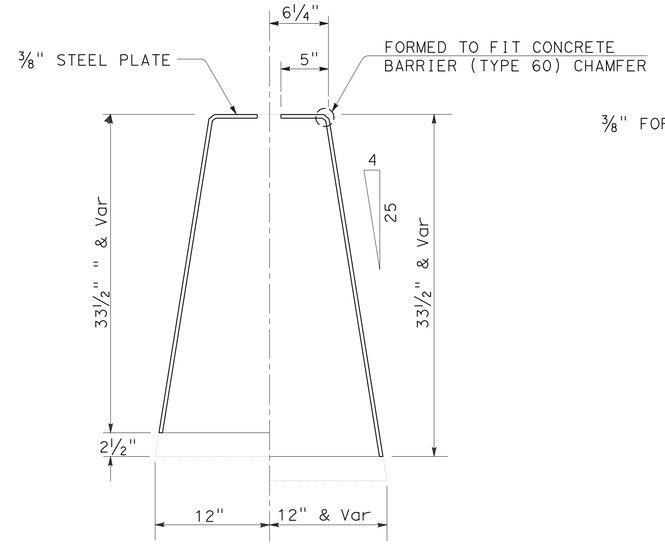

DETAIL "G"

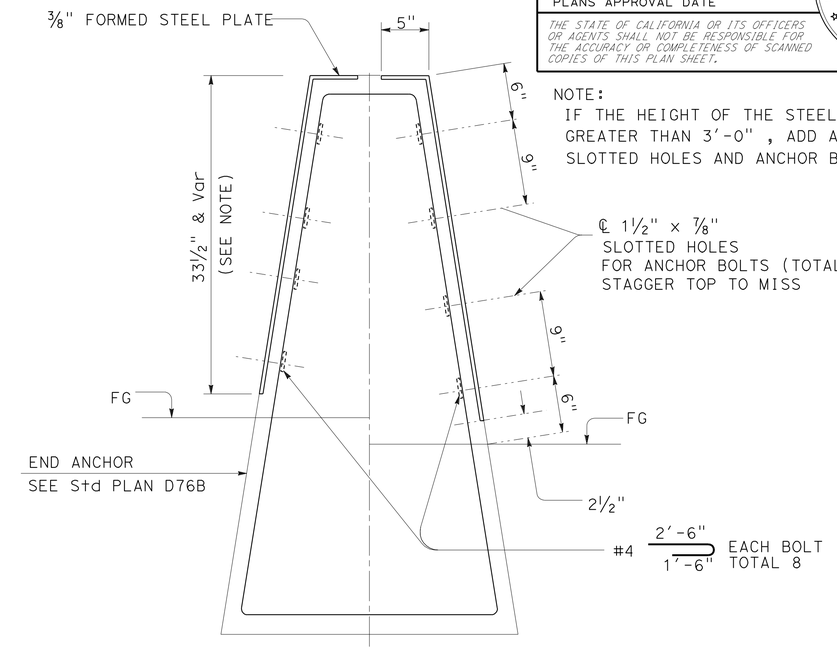

NOTE:
IF THE HEIGHT OF THE STEEL PLATE IS GREATER THAN 3'-0" , ADD ADDITIONAL SLOTTED HOLES AND ANCHOR BOLTS MIDWAY.

SECTION A-A

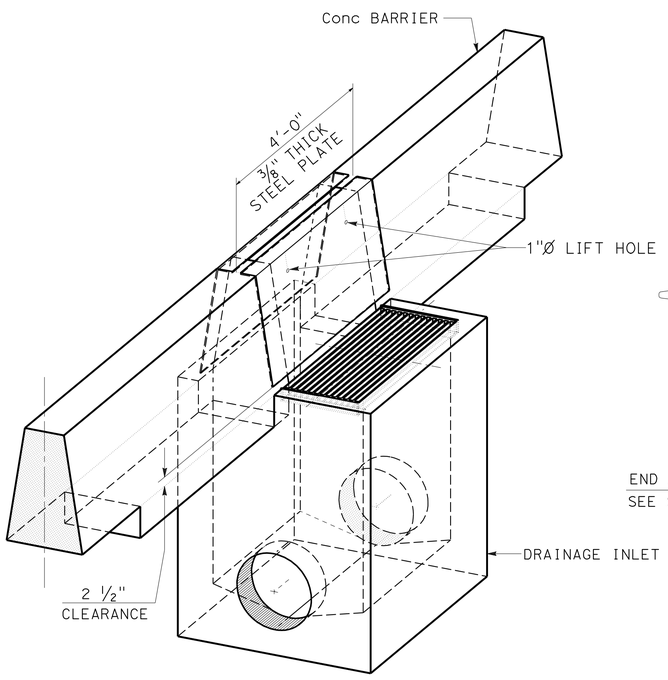

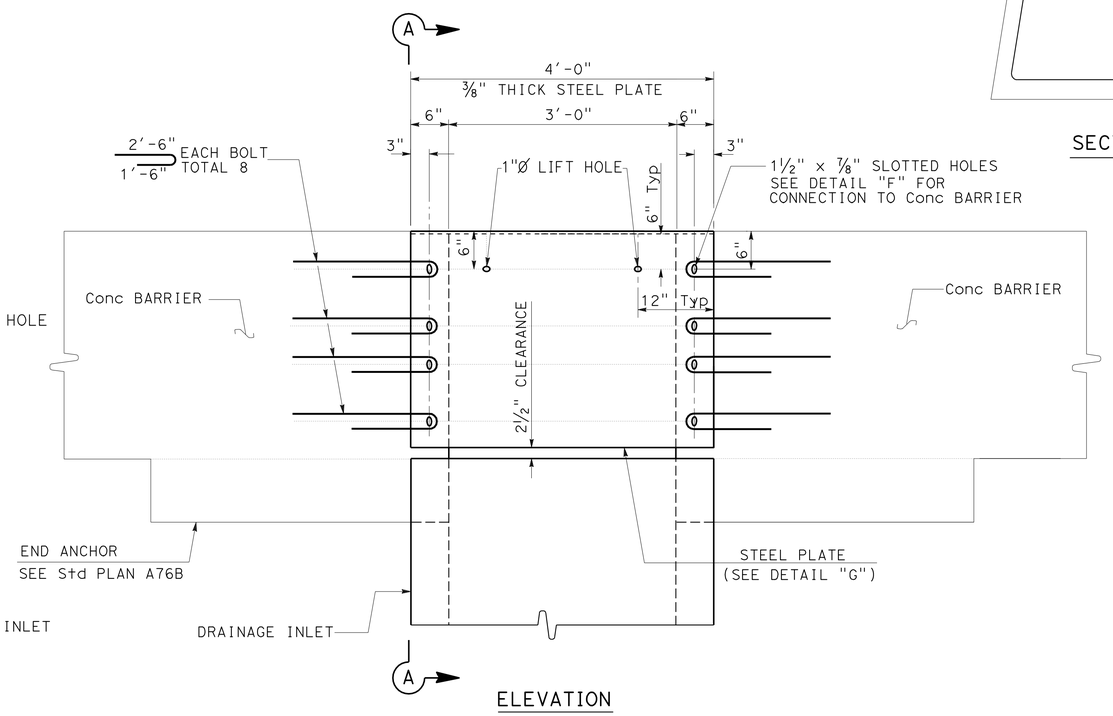

ELEVATION

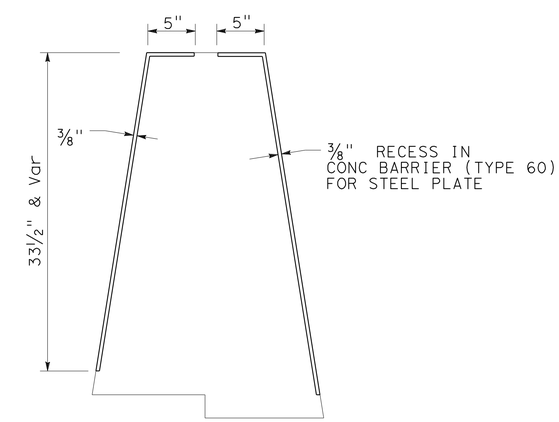

RECESS DETAIL

STEEL PLATE CLOSURE DETAIL

CONCRETE BARRIER (TYPE 60) OVER INLET

DRAINAGE DETAILS

NO SCALE

DD-7

REVISED BY	DATE REVISED

CALCULATED-DESIGNED BY: ED GATA
CHECKED BY: VIC VALIDO
FUNCTIONAL SUPERVISOR: RALPH M. SASAKI

STATE OF CALIFORNIA - DEPARTMENT OF TRANSPORTATION
Caltrans
HYDRAULICS

LAST REVISION 00-00-00
DATE PLOTTED => 27-MAY-2010
TIME PLOTTED => 12:27

Dist	COUNTY	ROUTE	POST MILES TOTAL PROJECT	SHEET No.	TOTAL SHEETS
07	LA	5	15.8/16.9	42	145

REGISTERED CIVIL ENGINEER 3-8-10 DATE

5-24-10
PLANS APPROVAL DATE

REGISTERED PROFESSIONAL ENGINEER ED GATA No. C40706 Exp. 3-31-11 CIVIL STATE OF CALIFORNIA

THE STATE OF CALIFORNIA OR ITS OFFICERS OR AGENTS SHALL NOT BE RESPONSIBLE FOR THE ACCURACY OR COMPLETENESS OF SCANNED COPIES OF THIS PLAN SHEET.

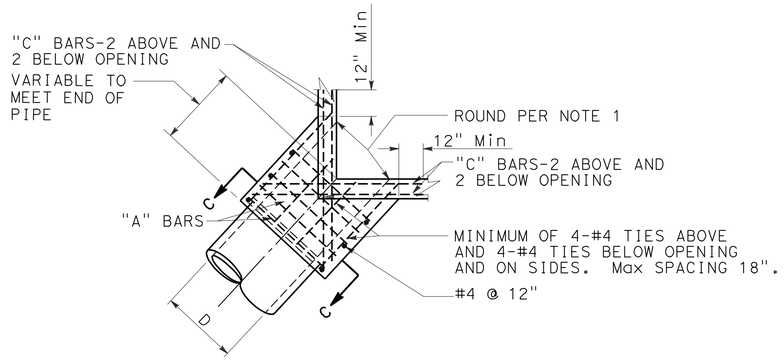

PLAN
CORNER CONNECTION

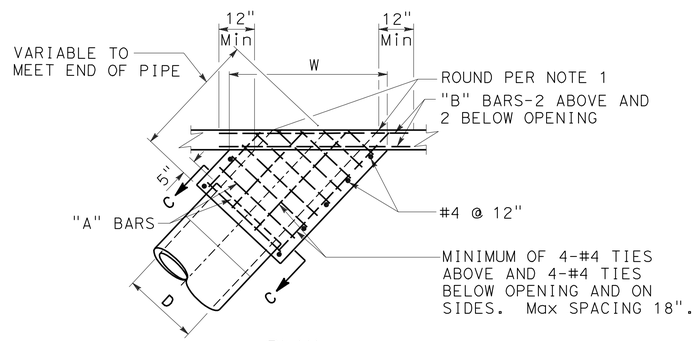

PLAN
SIDE CONNECTION

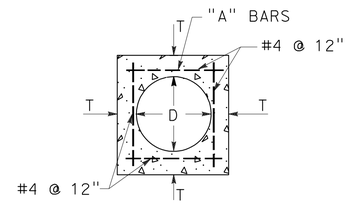

SECTION C-C

D	T	"A"	"B"-"C"
12"	4-½"	#4 @ 6"	#5
15"	4-½"		
18"	5"		
21"	5-½"		
24"	6"		
27"	6-½"		
30"	7"		
33"	7"		
36"	7-½"		
39"	8"		
42"	8"		
45"	8"	#5 @ 6"	#6
48"	8"		
51"	8"		
54"	8"		
57"	10"		
60"	10"		
63"	10"		
66"	11"		
69"	11"		
72"	11"		

NOTES:

1. ROUND EDGE OF OUTLET TO 3" RADIUS.
2. REINFORCEMENT SHALL BE 1½" CLEAR FROM THE FACE OF CONCRETE.
3. IN CONNECTING TO AN EXISTING STRUCTURE BREAK OUT PORTIONS OF THE EXISTING STRUCTURE SIX INCHES OUTSIDE ITS INTERSECTION WITH THE NEW CONNECTION. BEND ENDS OF #4 BARS OVER CONNECTION OPENING AS REQUIRED.

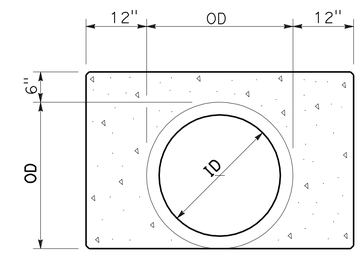

CONCRETE BACKFILL

MONOLITHIC CONNECTION FOR PIPES 12" TO 72" INCLUSIVE

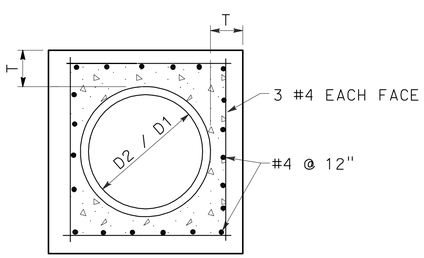

SECTION B-B

D	L	T
12"	1.0'	4"
18"	1.0'	5"
24"	1.0'	6"
36"	1.5'	8"
48"	1.5'	10"
54"	1.5'	10"
60"	1.75'	11"
66"	1.75'	11"
72"	2.0'	12"

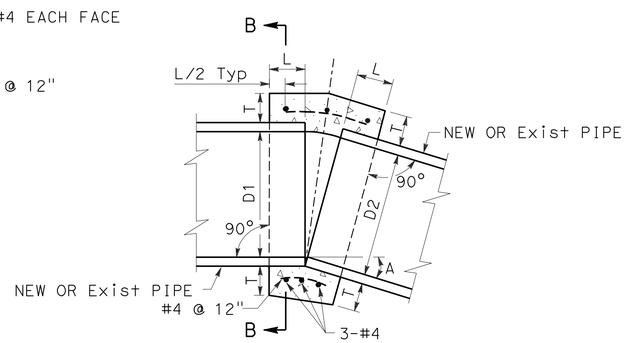

CONCRETE COLLAR

NOTES:

1. WHERE PIPES OF DIFFERENT DIAMETERS ARE JOINED WITH A CONCRETE COLLAR, `L' AND `T' SHALL BE THOSE OF THE LARGER PIPE. D=D1 OR D2, WHICHEVER IS GREATER.
2. FOR PIPE SIZE NOT LISTED USE NEXT SIZE LARGER.
3. OMIT REINFORCING ON PIPES 24" AND LESS IN DIAMETER AND ON ALL PIPES WHERE ANGLE A IS LESS THAN 10°.
4. JOIN PIPES AT INVERTS.
5. REINFORCEMENT SHALL BE PLACED 1½" CLEAR FROM OUTSIDE DIAMETER OF PIPE.

DRAINAGE DETAILS

NO SCALE

DD-8

STATE OF CALIFORNIA - DEPARTMENT OF TRANSPORTATION
Caltrans
HYDRAULICS

FUNCTIONAL SUPERVISOR: RALPH M. SASAKI
CALCULATED-DESIGNED BY: ED GATA
CHECKED BY: VIC VALIDO
REVISED BY
DATE REVISED

LAST REVISION 00-00-00
DATE PLOTTED => 27-MAY-2010
TIME PLOTTED => 12:27

Dist	COUNTY	ROUTE	POST MILES TOTAL PROJECT	SHEET No.	TOTAL SHEETS
07	LA	5	15.8/16.9	43	145

Edgardo A. Gata 3-8-10
REGISTERED CIVIL ENGINEER DATE

5-24-10
PLANS APPROVAL DATE

REGISTERED PROFESSIONAL ENGINEER ED GATA No. C40706 Exp. 3-31-11 CIVIL STATE OF CALIFORNIA

THE STATE OF CALIFORNIA OR ITS OFFICERS OR AGENTS SHALL NOT BE RESPONSIBLE FOR THE ACCURACY OR COMPLETENESS OF SCANNED COPIES OF THIS PLAN SHEET.

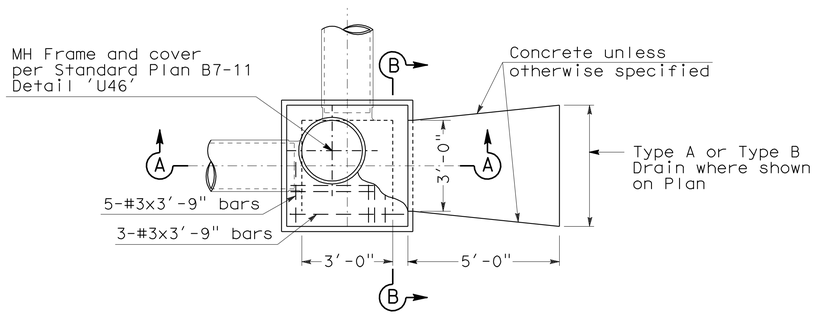

PLAN

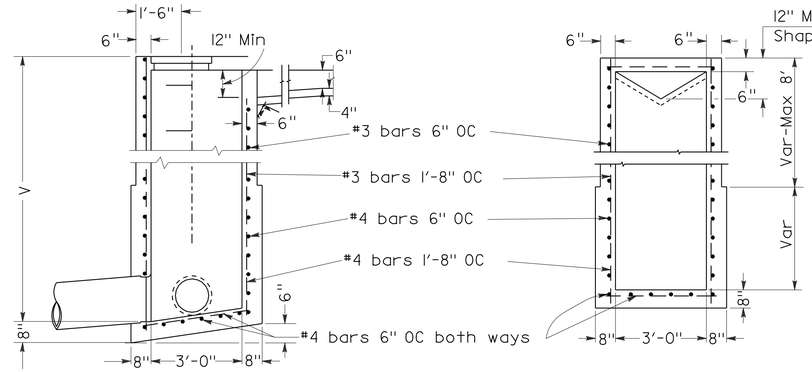

SECTION A-A

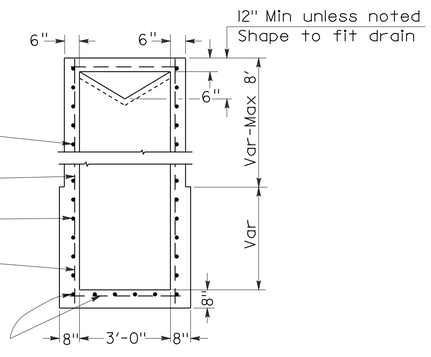

SECTION B-B

JUNCTION CHAMBER No. 3-C (JC-3C)

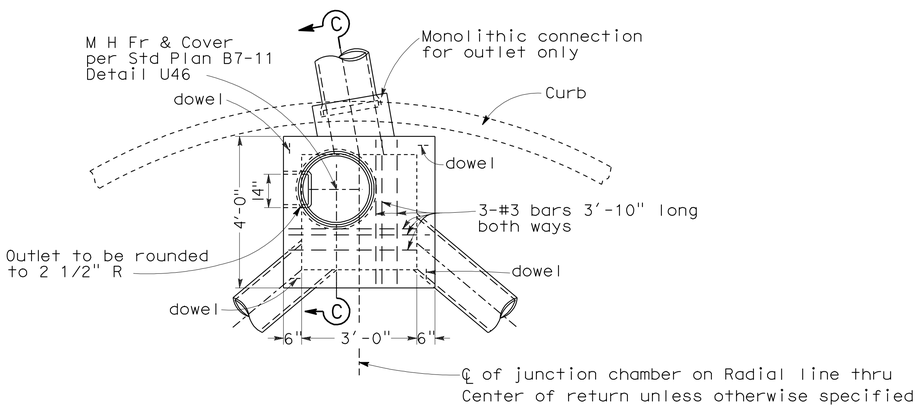

PLAN

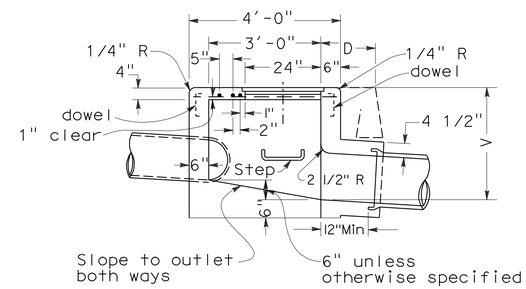

SECTION C-C

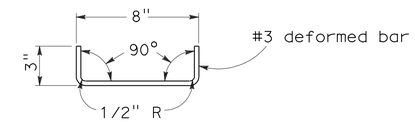

DETAIL OF DOWEL

One at each corner to be used when top is poured separate

JUNCTION CHAMBER No. 3 (JC-3)

NOTES:

1. CONNECTION pipes may be placed in any position around the walls provided they point in the proper direction and the position is otherwise consistent with the Drainage Plan.
2. DIMENSIONS: D=18" unless otherwise specified.
   V=3'-6" unless otherwise specified.
3. EXPOSED SURFACE of the Junction Chamber shall conform in slope, grade, color, finish and scoring to existing sidewalk adjacent to the Junction Chamber. Where no sidewalk exists, the top shall be finished to conform to standard sidewalk slope and finish, and scoring lines shall conform as nearly as possible to 20" squares.
4. FLOOR of chamber shall be given a steel-troweled finish and shall slope from all directions to outlet.
5. MANHOLE shall be placed in corner nearest outlet.
6. OUTLET pipe shall be connected to Junction Chamber with Monolithic Connection.
7. REINFORCING steel not required in walls when V=6' or less.
8. STEPS: None required where V=3'-6" or less.
   Install one step 16"± above floor when V is more than 3'-6" and less than 5'-0".
   Where V is more than 5'-0" steps shall be evenly spaced at 12"± intervals from 16"± above floor to within 12"± of the top of the box.

DRAINAGE DETAILS

NO SCALE

DD-9

STATE OF CALIFORNIA - DEPARTMENT OF TRANSPORTATION
Caltrans
HYDRAULICS

FUNCTIONAL SUPERVISOR: RALPH M. SASAKI
CALCULATED-DESIGNED BY: ED GATA
CHECKED BY: VIC VALIDO
REVISED BY
DATE REVISED

LAST REVISION 00-00-00
DATE PLOTTED => 27-MAY-2010
TIME PLOTTED => 12:28

Dist	COUNTY	ROUTE	POST MILES TOTAL PROJECT	SHEET No.	TOTAL SHEETS
07	LA	5	15.8/16.9	44	145

Edgardo A. Gata 3-8-10
REGISTERED CIVIL ENGINEER DATE

5-24-10
PLANS APPROVAL DATE

REGISTERED PROFESSIONAL ENGINEER
ED GATA
No. C40706
Exp. 3-31-11
CIVIL
STATE OF CALIFORNIA

THE STATE OF CALIFORNIA OR ITS OFFICERS OR AGENTS SHALL NOT BE RESPONSIBLE FOR THE ACCURACY OR COMPLETENESS OF SCANNED COPIES OF THIS PLAN SHEET.

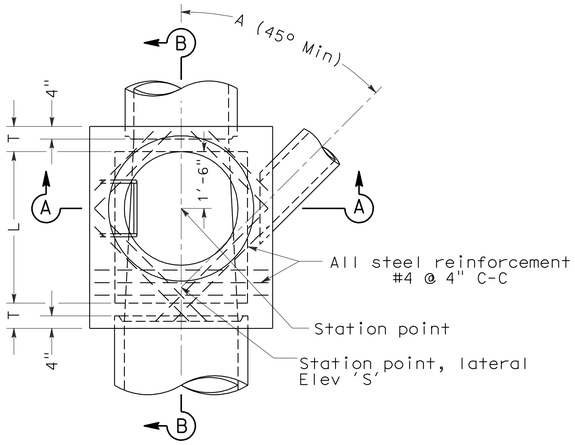

PLAN
(Shaft not shown)

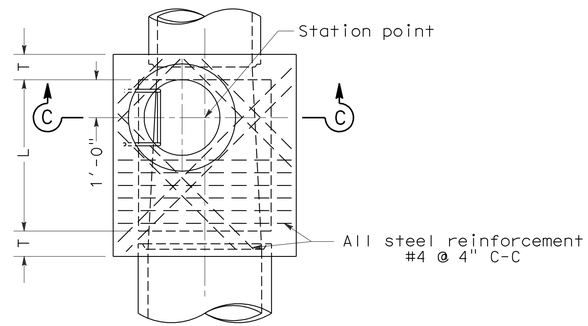

PLAN
DETAIL N
(Shaft not shown)

NOTES:

1. Height 'H' (in Sec A-A and Sec B-B) shall be not less than 4'-8", but may be increased provided that the value of 'M' shall be not less than the minimum specified and that the reducer shall be used. For 'H' (in Sec C-C) see Note 4.
2. Length 'L' shall be 4' unless otherwise shown on drainage plan.
3. Shaft shall be constructed as per Sec C-C and Detail N when depth 'M' from street grade to top of box is less than 2'-10 1/2" for paved streets or 3'-6" for unpaved streets.
4. Depth 'P' may be reduced to an absolute limit of 6" when larger values of 'P' would reduce 'H' (in Sec C-C) to 3'-6" or less.
5. 'T' shall be 8" for values of 'H' up to and including 8'. 'T' shall be 10" for values of 'H' over 8'.
6. Lowest step shall be not more than 16" above the ledge at the side of manhole floor.
7. Body of manhole shall be poured in one continuous operation, except that the Contractor shall have the option of placing at the spring line a construction joint with a longitudinal keyway.
8. Reinforcing steel shall be 1 1/2" clear from face of concrete.
9. Floor of manhole shall be steel-troweled to spring line.
10. Rings, reducer, and pipe for access shaft shall be seated in 1:2 cement mortar and neatly pointed or wiped inside shaft.
11. Manhole frame and cover per Standard Plan B7-11 detail 'U45'.
12. Step detail per Standard Plans D74C and D75C.

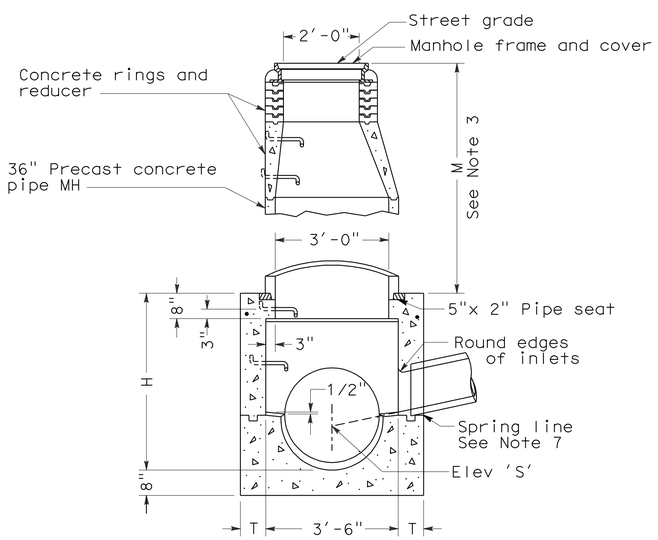

SECTION A-A

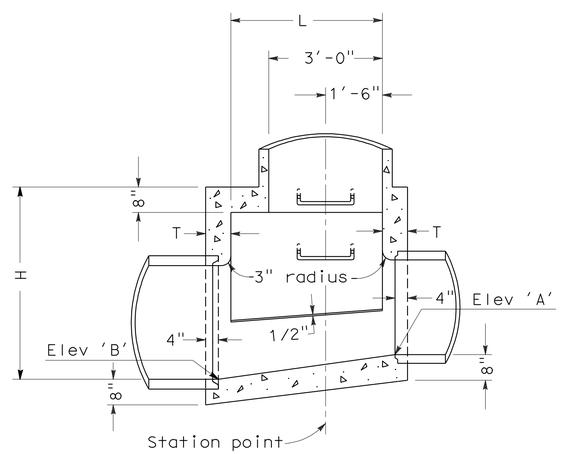

SECTION B-B

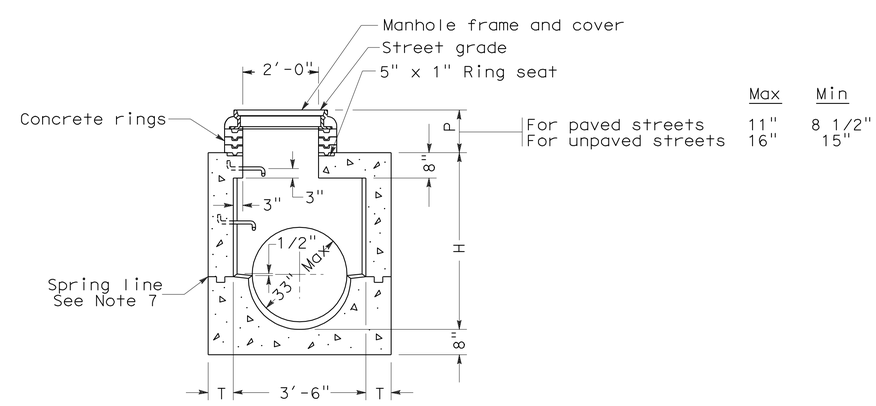

	Max	Min
For paved streets	11"	8 1/2"
For unpaved streets	16"	15"

SECTION C-C

MANHOLE No. 1 (MH No. 1)

DRAINAGE DETAILS

NO SCALE

DD-10

STATE OF CALIFORNIA - DEPARTMENT OF TRANSPORTATION
Caltrans
HYDRAULICS

FUNCTIONAL SUPERVISOR: RALPH M. SASAKI
CALCULATED-DESIGNED BY: ED GATA
CHECKED BY: VIC VALIDO
REVISED BY
DATE REVISED

LAST REVISION 00-00-00
DATE PLOTTED => 27-MAY-2010
TIME PLOTTED => 12:28

Dist	COUNTY	ROUTE	POST MILES TOTAL PROJECT	SHEET No.	TOTAL SHEETS
07	LA	5	15.8/16.9	45	145

Edgardo A. Gata 3-8-10
REGISTERED CIVIL ENGINEER DATE

5-24-10
PLANS APPROVAL DATE

REGISTERED PROFESSIONAL ENGINEER
ED GATA
No. C40706
Exp. 3-31-11
CIVIL
STATE OF CALIFORNIA

THE STATE OF CALIFORNIA OR ITS OFFICERS OR AGENTS SHALL NOT BE RESPONSIBLE FOR THE ACCURACY OR COMPLETENESS OF SCANNED COPIES OF THIS PLAN SHEET.

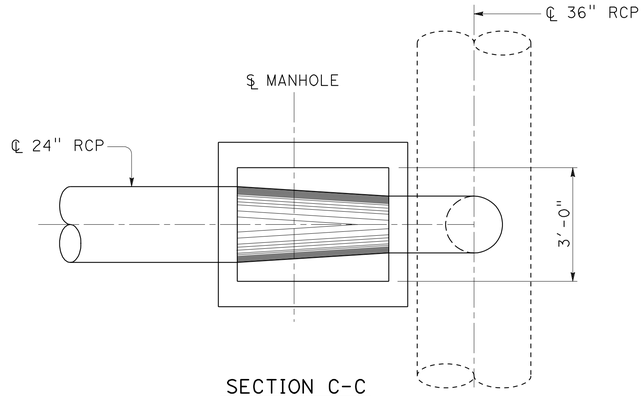

SECTION C-C
No Scale

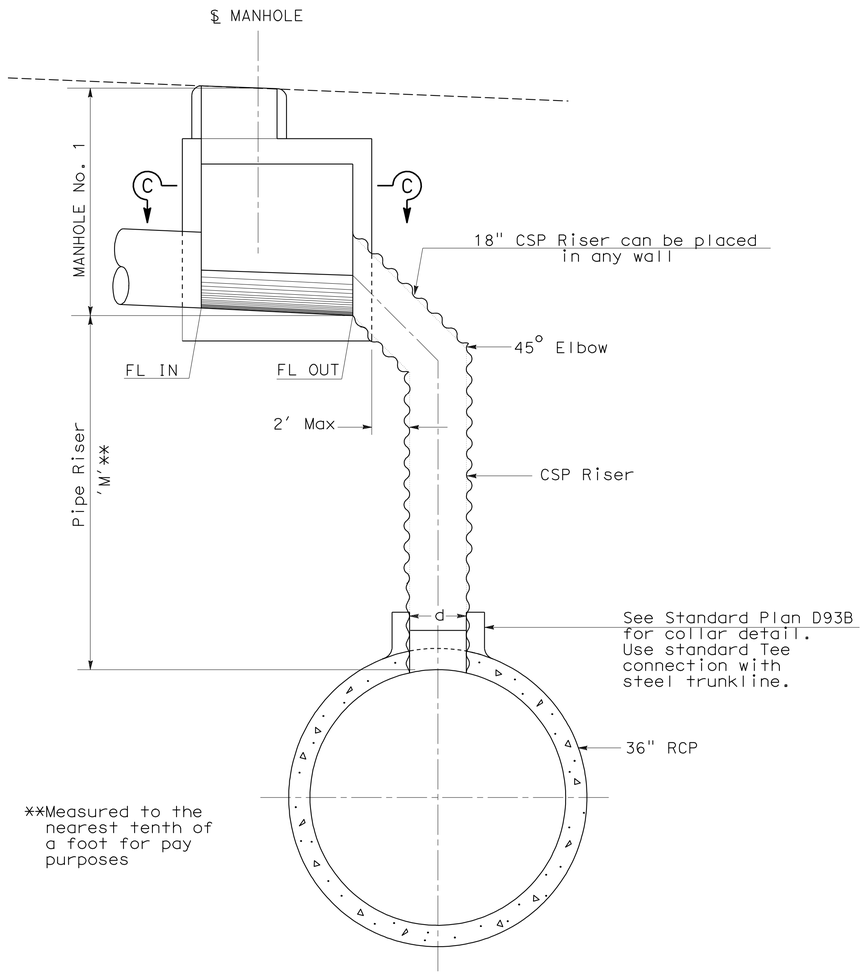

**Measured to the nearest tenth of a foot for pay purposes

ELEVATION

STORM DRAIN RISER CONNECTION

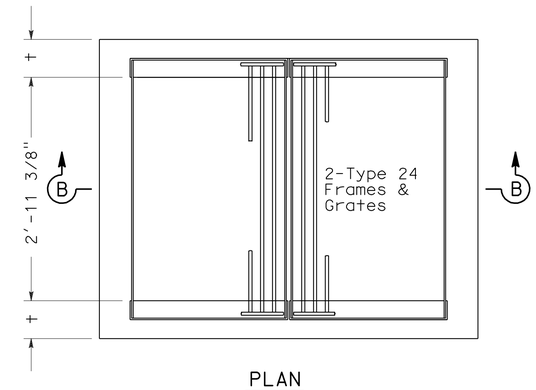

PLAN

For grate, frame and anchor placement details see Standard Plans D77-A and D77-B

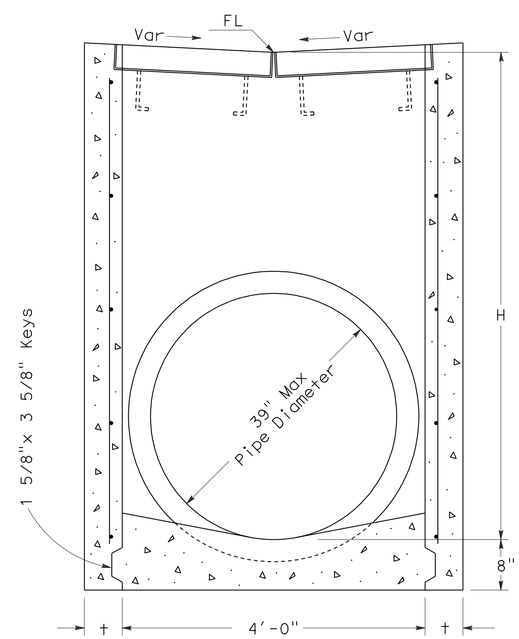

SECTION B-B
(For pipe diameters 39" or less)

GD-3 INLET

NOTES:

1. 'H' is the difference in elevation between the outlet pipe flow line and the flow line of the grates.
2. Steps - None required when 'H' is 3'-6" or less. Install one step 16"± above floor when 'H' is more than 3'-6" and less than 5'-0". Where 'H' is more than 5'-0" steps shall be evenly spaced @ 12"± intervals from 16"± above floor to within 12"± of the top of the box. Place steps in wall without pipe openings. See Standard Plan D74C for step detail.
3. Pipe(s) can be placed in any wall.
4. Reinforcing steel not required in walls when H=6' or less.
5. Reinforcing steel in walls shall be #4 bars @ 18"± centers placed 1 1/2" clear to inside of box.

MISCELLANEOUS IRON & STEEL

Inlet Type	Grate Type	Weight
GD-3	24 - 12	652

H	t
8'-0" or less	6"
8'1" to 20'- 0"	8"

DRAINAGE DETAILS

NO SCALE

DD-11

STATE OF CALIFORNIA - DEPARTMENT OF TRANSPORTATION
Caltrans
HYDRAULICS
FUNCTIONAL SUPERVISOR: RALPH M. SASAKI
CALCULATED-DESIGNED BY: ED GATA
CHECKED BY: VIC VALIDO
REVISED BY
DATE REVISED

LAST REVISION 00-00-00
DATE PLOTTED => 27-MAY-2010
TIME PLOTTED => 12:28

Dist	COUNTY	ROUTE	POST MILES TOTAL PROJECT	SHEET No.	TOTAL SHEETS
07	LA	5	15.8/16.9	46	145

Edgardo A. Gata 3-8-10
REGISTERED CIVIL ENGINEER DATE

5-24-10
PLANS APPROVAL DATE

REGISTERED PROFESSIONAL ENGINEER ED GATA No. C40706 Exp. 3-31-11 CIVIL STATE OF CALIFORNIA

THE STATE OF CALIFORNIA OR ITS OFFICERS OR AGENTS SHALL NOT BE RESPONSIBLE FOR THE ACCURACY OR COMPLETENESS OF SCANNED COPIES OF THIS PLAN SHEET.

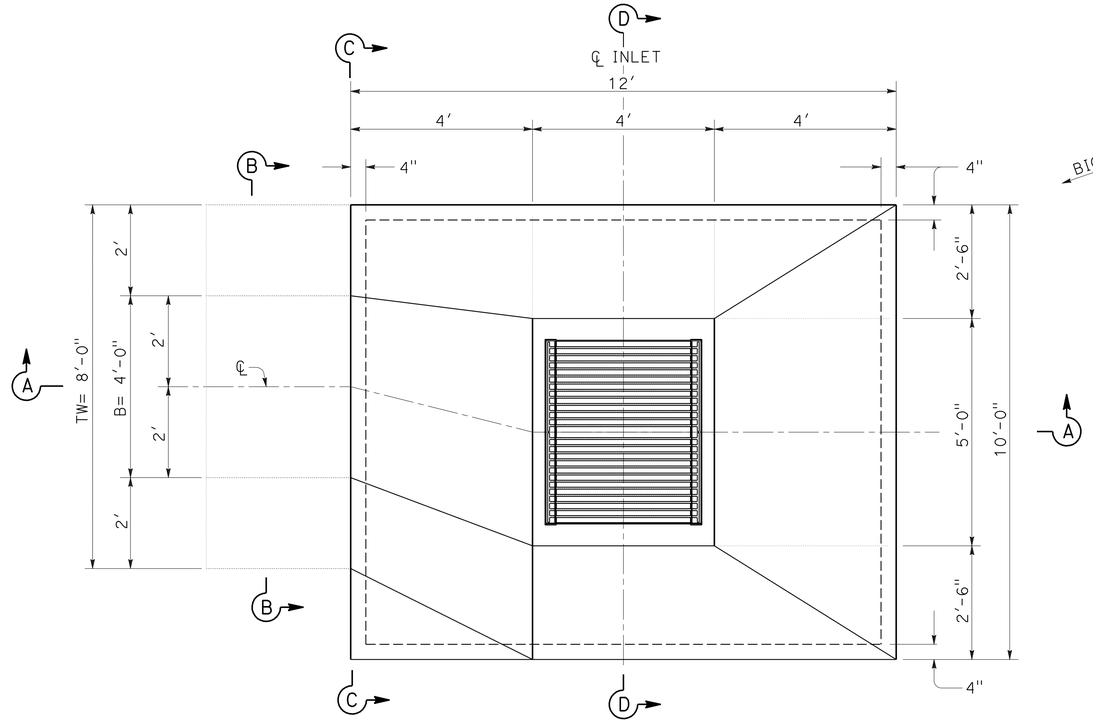

PLAN

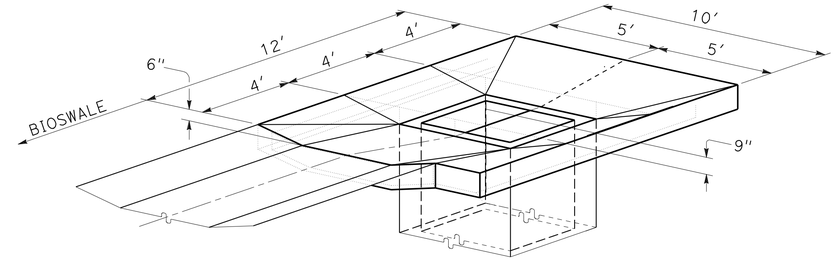

ISOMETRIC

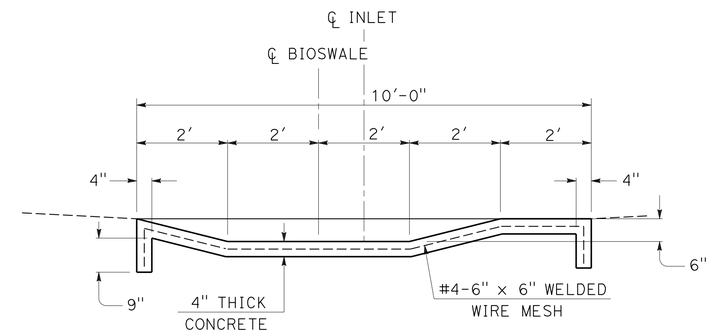

SECTION C-C

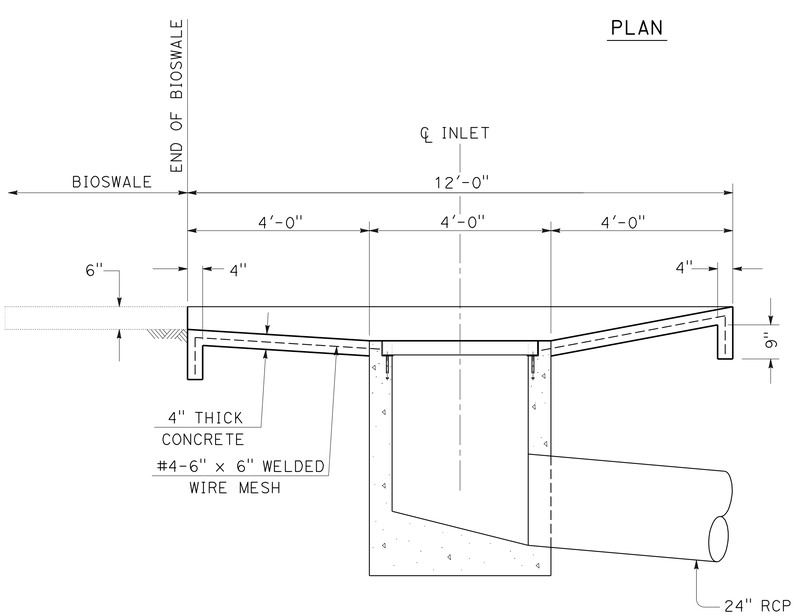

SECTION A-A

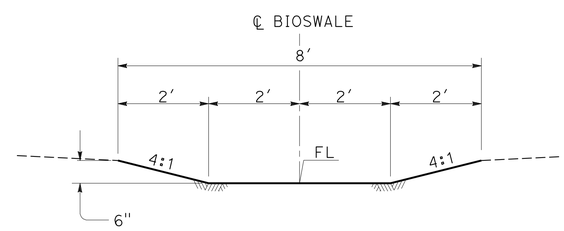

SECTION B-B

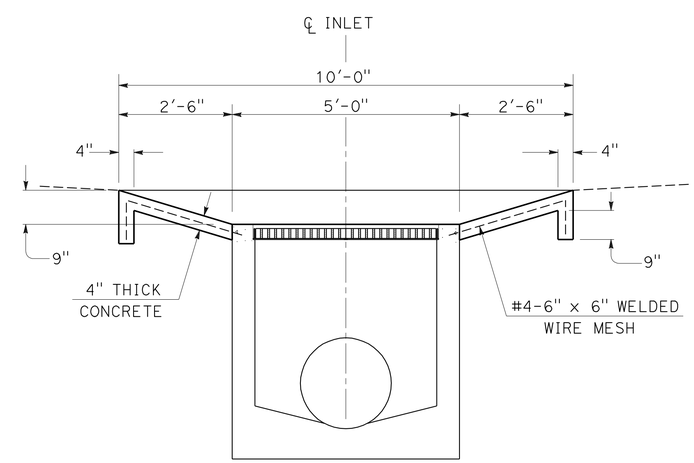

SECTION D-D

ABBREVIATIONS:

B = BASE OR BOTTOM WIDTH
TW= TOTAL WIDTH OR TOP WIDTH

CONCRETE TRANSITION

DRAINAGE SYSTEM No. 13 a

DRAINAGE DETAILS

NO SCALE

DD-12

REVISED BY	DATE REVISED
ED GATA	VIC VALIDO
CALCULATED-DESIGNED BY	CHECKED BY
FUNCTIONAL SUPERVISOR	RALPH M. SASAKI

STATE OF CALIFORNIA - DEPARTMENT OF TRANSPORTATION
Caltrans
HYDRAULICS

LAST REVISION 00-00-00 | DATE PLOTTED => 27-MAY-2010 | TIME PLOTTED => 09:59

Dist	COUNTY	ROUTE	POST MILES TOTAL PROJECT	SHEET No.	TOTAL SHEETS
07	LA	5	15.8/16.9	47	145

Edgardo A. Gata 3-8-10
REGISTERED CIVIL ENGINEER DATE

5-24-10
PLANS APPROVAL DATE

REGISTERED PROFESSIONAL ENGINEER ED GATA No. C40706 Exp. 3-31-11 CIVIL STATE OF CALIFORNIA

THE STATE OF CALIFORNIA OR ITS OFFICERS OR AGENTS SHALL NOT BE RESPONSIBLE FOR THE ACCURACY OR COMPLETENESS OF SCANNED COPIES OF THIS PLAN SHEET.

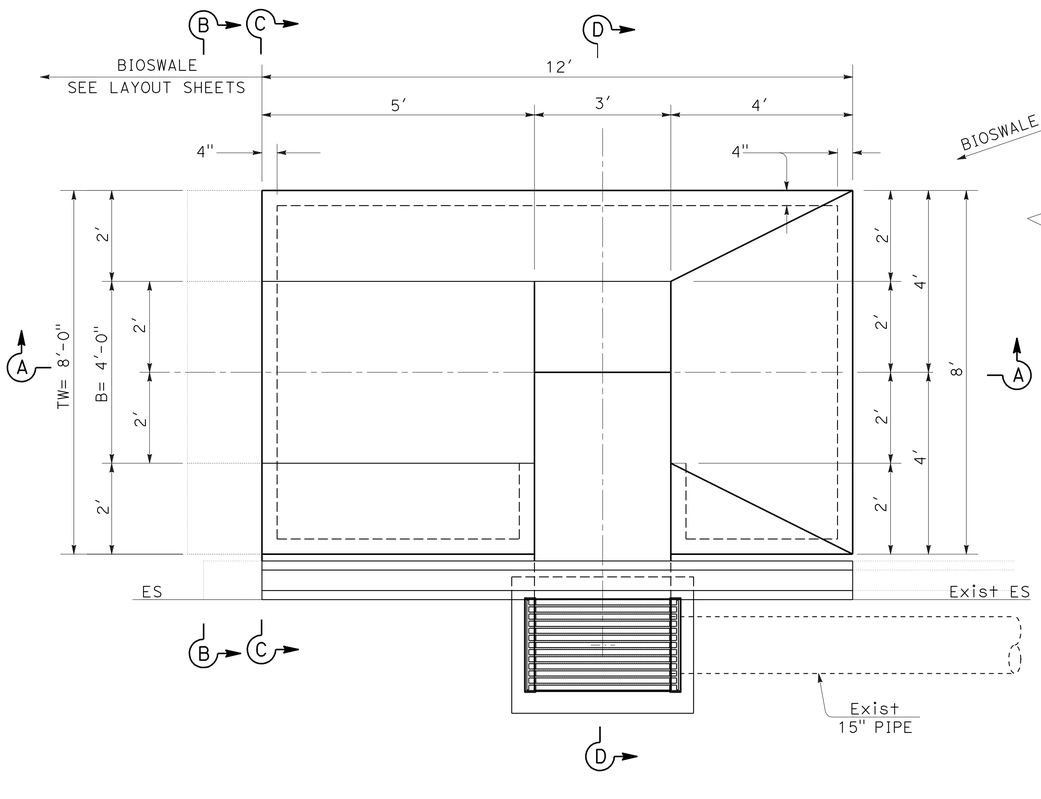

PLAN

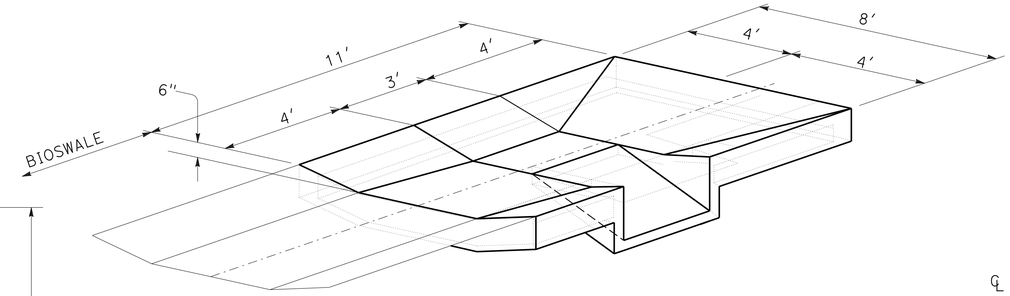

ISOMETRIC

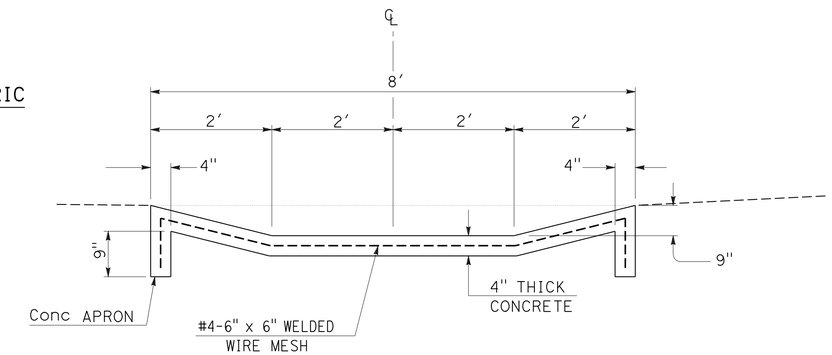

SECTION C-C

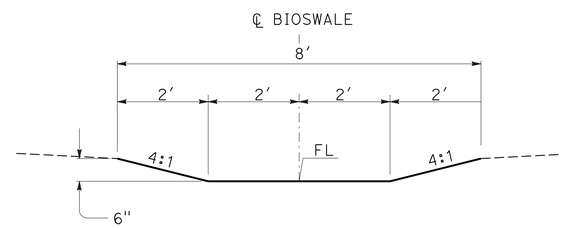

SECTION B-B

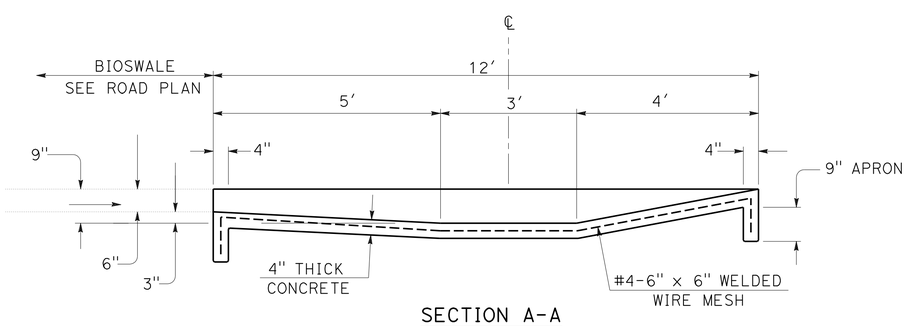

SECTION A-A

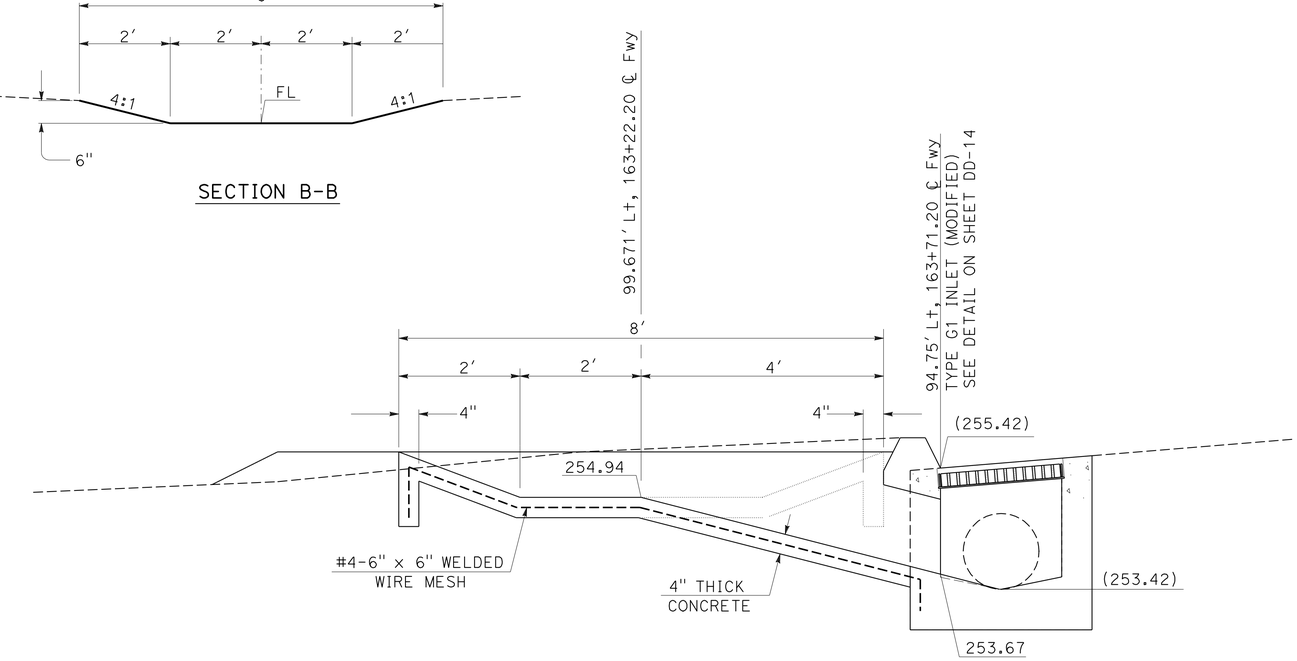

SECTION D-D

ABBREVIATIONS:

B = BASE OR BOTTOM WIDTH
TW= TOTAL WIDTH OR TOP WIDTH

CONCRETE TRANSITION

DRAINAGE SYSTEM No. 14 a

DRAINAGE DETAILS

NO SCALE

DD-13

STATE OF CALIFORNIA - DEPARTMENT OF TRANSPORTATION
Caltrans
HYDRAULICS

FUNCTIONAL SUPERVISOR: RALPH M. SASAKI
CALCULATED-DESIGNED BY: ED GATA
CHECKED BY: VIC VALIDO
REVISED BY
DATE REVISED

LAST REVISION 00-00-00
DATE PLOTTED => 27-MAY-2010
TIME PLOTTED => 09:59

Dist	COUNTY	ROUTE	POST MILES TOTAL PROJECT	SHEET No.	TOTAL SHEETS
07	LA	5	15.8/16.9	48	145

REGISTERED CIVIL ENGINEER 3-8-10 DATE

5-24-10
PLANS APPROVAL DATE

REGISTERED PROFESSIONAL ENGINEER ED GATA No. C40706 Exp. 3-31-11 CIVIL STATE OF CALIFORNIA

THE STATE OF CALIFORNIA OR ITS OFFICERS OR AGENTS SHALL NOT BE RESPONSIBLE FOR THE ACCURACY OR COMPLETENESS OF SCANNED COPIES OF THIS PLAN SHEET.

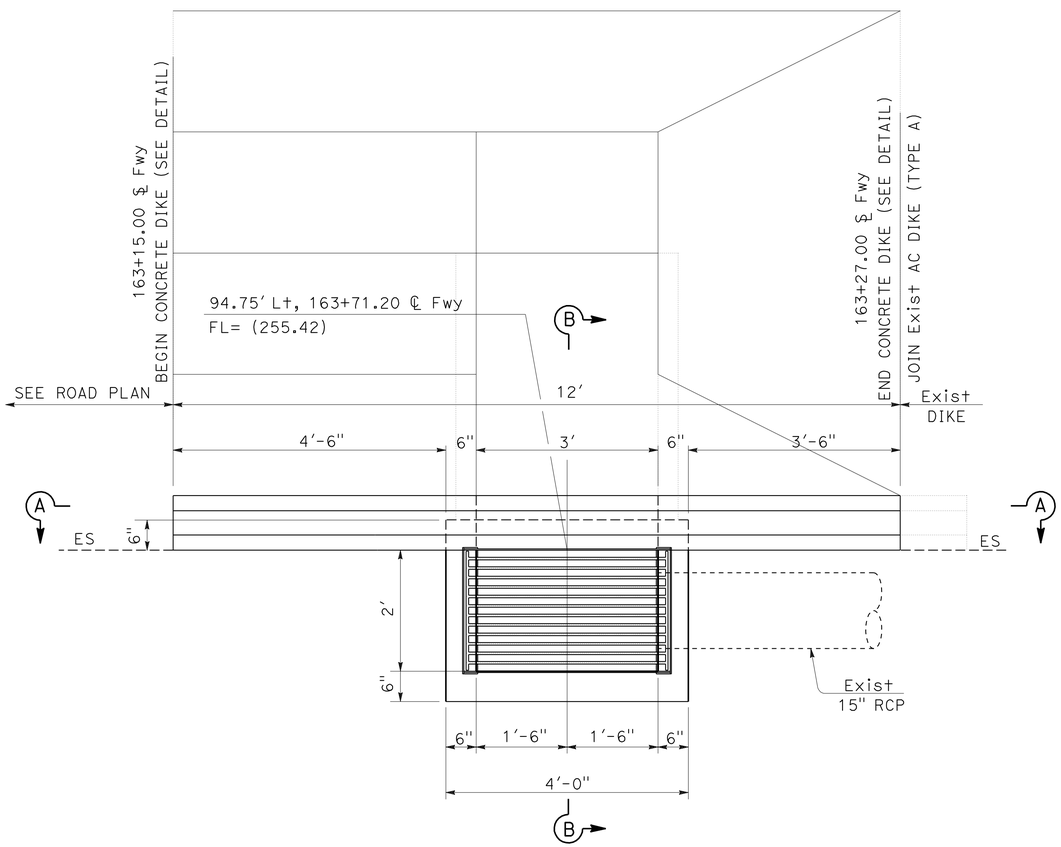

PLAN

TYPE G1 INLET (MODIFIED)

NOTE:
FOR INFORMATION AND DETAILS NOT SHOWN SEE TYPE G1 INLET ON Std PLAN D-73.

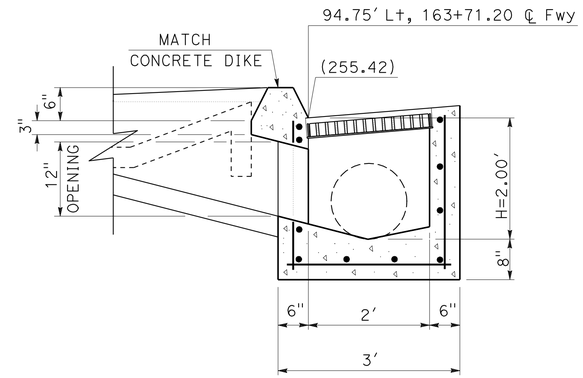

SECTION B-B

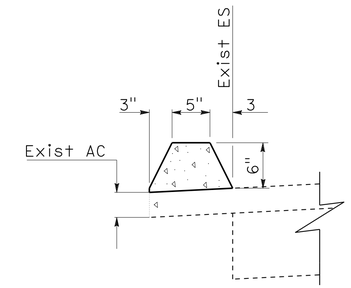

CONCRETE DIKE

NOTE:
FOR DETAILS AND INFORMATION NOT SHOWN, SEE HMA DIKE (TYPE A) ON Std PLAN A87B.

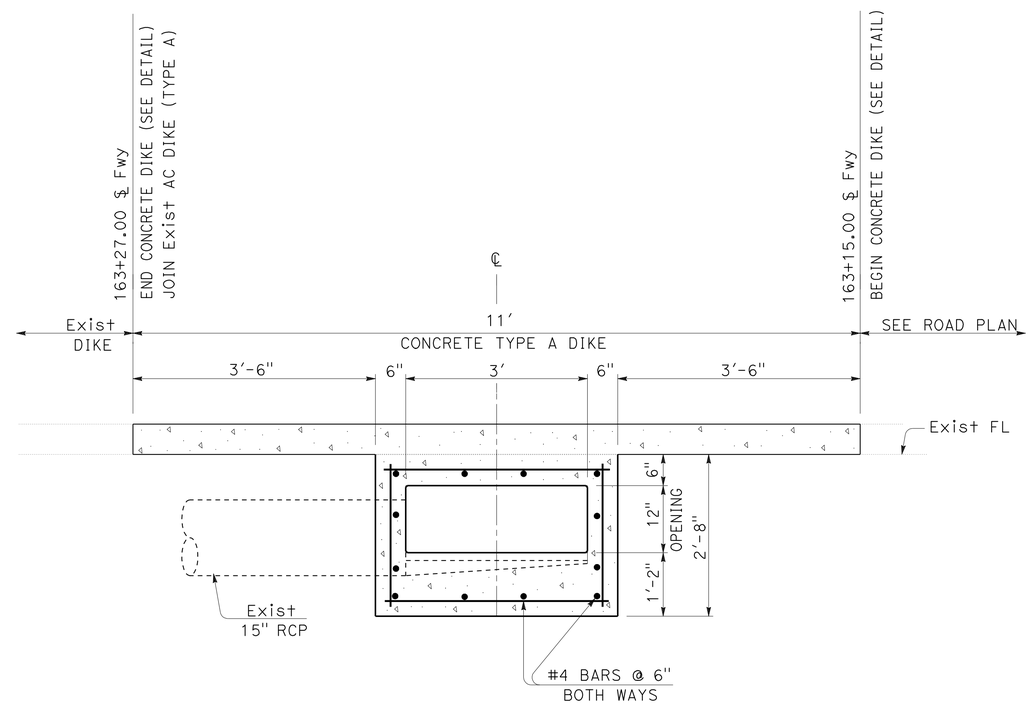

SECTION A-A

DRAINAGE DETAILS

NO SCALE

DD-14

STATE OF CALIFORNIA - DEPARTMENT OF TRANSPORTATION
Caltrans HYDRAULICS

FUNCTIONAL SUPERVISOR: RALPH M. SASAKI
CALCULATED-DESIGNED BY: ED GATA
CHECKED BY: VIC VALIDO
REVISED BY
DATE REVISED

LAST REVISION 00-00-00
DATE PLOTTED => 27-MAY-2010
TIME PLOTTED => 09:59

Dist	COUNTY	ROUTE	POST MILES TOTAL PROJECT	SHEET No.	TOTAL SHEETS
07	LA	5	15.8/16.9	49	145

Edgardo A. Gata 3-8-10
REGISTERED CIVIL ENGINEER DATE

5-24-10
PLANS APPROVAL DATE

REGISTERED PROFESSIONAL ENGINEER ED GATA No. C40706 Exp. 3-31-11 CIVIL STATE OF CALIFORNIA

THE STATE OF CALIFORNIA OR ITS OFFICERS OR AGENTS SHALL NOT BE RESPONSIBLE FOR THE ACCURACY OR COMPLETENESS OF SCANNED COPIES OF THIS PLAN SHEET.

ALTERNATIVE SLOTTED PIPE (ASP)

TYPE	HEIGHT	GAGE No.	THICKNESS (INCHES)	BITUMINOUS COATED
18" SCSP	24"	12	0.109	YES
18" SCSP	20½"	12	0.109	YES
PP	21"	N/A	N/A	N/A

NOTE:

PIPE JOINTS ARE STANDARD
OR AS NOTED ON PLANS

ABBREVIATIONS:

(N) INDICATES NOT A SEPARATE PAY ITEM,
FOR INFORMATION ONLY

SUMMARY OF DRAINAGE QUANTITIES

DRAINAGE SHEET No.	DRAINAGE SYSTEM No.	DRAINAGE UNIT	H OR V (HEIGHT) FT	MINOR CONCRETE (MINOR STRUCTURE) CY	MINOR CONCRETE (BACKFILL) CY	CONCRETE CHANNEL LINING CY	MISCELLANEOUS IRON AND STEEL LB	18" RCP LF	24" RCP LF	18" ALTERNATIVE SLOTTED PIPE LF	18" BITUMINOUS COATED CSP RISER (0.079" THICK) LF	24" PRECAST PIPE MANHOLE LF	REMOVE PIPE LF	REMOVE INLET EA	MODIFY INLET EA	(N) 24" MANHOLE FRAME AND COVER EA	(N) TYPE 24-12 FRAME AND GRATE EA	(N) MAXIMUM COVER FT	DESCRIPTION	LOCATION	DRAINAGE SHEET No.	DRAINAGE SYSTEM No.	DRAINAGE UNIT
1	1	a											18.1						REMOVE 15" RCP		1	1	a
↑		b												1					REMOVE CB No 37-B (Mod)	2.58′ Lt, 111+28.24 ℄ Rte 5 Fwy SB	↑		b
		c			8.02				39.8										24" RCP WITH 25.2 LF CONCRETE BACKFILL				c
		d	4.80	1.77			326										1		TYPE G2 INLET (Rev)	2.58′ Lt, 111+50.00 ℄ Rte 5 Fwy SB			d
↓		e							115.2									3.0	24" RCP		↓	1	e
1		f	5.00	1.82			326										1		TYPE G2 INLET (Rev)	3.34′ Lt, 112+67.50 ℄ Rte 5 Fwy SB	1		f
1-2		g							282.5									3.0	24" RCP		1-2		g
2		h	5.00	1.82			326										1		TYPE G2 INLET (Rev)	3.58′ Lt, 115+50.00 ℄ Rte 5 Fwy SB	2		h
↑		i							148.5									3.0	24" RCP		↑		i
		j	5.00	1.82			326										1		TYPE G2 INLET (Rev)	3.43′ Lt, 117+00.00 ℄ Rte 5 Fwy SB			j
		k							140.6									3.0	24" RCP				k
		l	5.00	1.82			326										1		TYPE G2 INLET (Rev)	3.43′ Lt, 118+43.50 ℄ Rte 5 Fwy SB			l
		m							178.6									3.0	24" RCP				m
		n	5.00	1.82			326										1		TYPE G2 INLET (Rev)	3.43′ Lt, 120+25.00 ℄ Rte 5 Fwy SB			n
		o							247.0									4.4	24" RCP				o
		p	6.36	2.17			326										1		TYPE G2 INLET (Rev)	4.18′ Lt, 122+75.00 ℄ Rte 5 Fwy SB			p
		q								24.0									18" ASP				q
		r							222.0									4.2	24" RCP				r
		s								24.0									18" ASP				s
		t	4.50	1.69			326										1		TYPE G2 INLET (Rev)	5.58′ Lt, 125+00.00 ℄ Rte 5 Fwy SB			t
	2	a	2.00	0.73			326										1		CLEANOUT	5.58′ Lt, 127+00.00 ℄ Rte 5 Fwy SB		2	a
		b								97.0									18" ASP				b
		c	2.00	0.73			326										1		CLEANOUT	5.63′ Lt, 128+00.00 ℄ Rte 5 Fwy SB			c
		d								100.8									18" ASP				d
		e												1					REMOVE CB No. 37-C	AT ℄, 128+79.74 ℄ Rte 5 Fwy SB			e
		f											20.6						REMOVE 15" RCP				f
		g					326								1		1		MODIFY CB No. 37-B	5.62′ Lt, 129+02.24 ℄ Rte 5 Fwy SB			g
↓		h								69.8									18" ASP		↓		h
2		i	2.00	0.73			326										1		CLEANOUT	5.61′ Lt, 129+75.00 ℄ Rte 5 Fwy SB	2		i
2-3		j								72.0									18" ASP		2-3		j
SHEET TOTAL				16.92	8.02		3912		1374.2	387.6			38.7	2	1		12						

STATE OF CALIFORNIA - DEPARTMENT OF TRANSPORTATION
Caltrans® HYDRAULICS

FUNCTIONAL SUPERVISOR: RALPH M. SASAKI
CALCULATED-DESIGNED BY: ED GATA
CHECKED BY: VIC VALIDO
REVISED BY
DATE REVISED

DRAINAGE QUANTITIES
DQ-1

LAST REVISION 00-00-00
DATE PLOTTED => 27-MAY-2010
TIME PLOTTED => 09:59

Dist	COUNTY	ROUTE	POST MILES TOTAL PROJECT	SHEET No.	TOTAL SHEETS
07	LA	5	15.8/16.9	50	145

Edgardo A. Gata 3-8-10
REGISTERED CIVIL ENGINEER DATE

5-24-10
PLANS APPROVAL DATE

REGISTERED PROFESSIONAL ENGINEER ED GATA No. C40706 Exp. 3-31-11 CIVIL STATE OF CALIFORNIA

THE STATE OF CALIFORNIA OR ITS OFFICERS OR AGENTS SHALL NOT BE RESPONSIBLE FOR THE ACCURACY OR COMPLETENESS OF SCANNED COPIES OF THIS PLAN SHEET.

SUMMARY OF DRAINAGE QUANTITIES

DRAINAGE SHEET No.	DRAINAGE SYSTEM No.	DRAINAGE UNIT	H OR V (HEIGHT) FT	MINOR CONCRETE (MINOR STRUCTURE) CY	MINOR CONCRETE (BACKFILL) CY	CONCRETE CHANNEL LINING CY	MISCELLANEOUS IRON AND STEEL LB	18" RCP LF	24" RCP LF	18" ALTERNATIVE SLOTTED PIPE LF	18" BITUMINOUS COATED CSP RISER (0.079" THICK) LF	24" PRECAST CONCRETE PIPE MANHOLE LF	REMOVE PIPE LF	REMOVE INLET EA	MODIFY INLET EA	(N) 24" MANHOLE FRAME AND COVER EA	(N) TYPE 24-12 FRAME AND GRATE EA	MAXIMUM COVER FT	DESCRIPTION	LOCATION	DRAINAGE SHEET No.	DRAINAGE SYSTEM No.	DRAINAGE UNIT
3	2	k	2.00	0.73			326										1		CLEANOUT	5.61' Lt, 130+50.00 ℄ Rte 5 Fwy SB	3	2	k
		l								82.5									18" ASP				l
		m	5.18	1.87			326										1		TYPE G2 INLET (Rev)	4.86' Lt, 131+35.00 ℄ Rte 5 Fwy SB			m
	3	a											5.6						REMOVE 15" RCP			3	a
3		b												1					REMOVE CB No. 37-C	AT ℄, 131+32.24 ℄ Rte 5 Fwy SB	3		b
4	4	a	2.00	0.73			326										1		CLEANOUT	6.00' Lt, 144+62.50 ℄ Rte 5 Fwy SB	4	4	a
		b								67.1									18" ASP				b
		c								99.3									18" ASP				c
		d	2.01	0.73			326										1		CLEANOUT	6.00' Lt, 146+34.92 ℄ Rte 5 Fwy SB			d
		e								99.3									18" ASP				e
		f	2.00	0.73			326										1		CLEANOUT	6.00' Lt, 147+37.26 ℄ Rte 5 Fwy SB			f
		g								99.3									18" ASP				g
		h								99.5									18" ASP				h
		i	2.01	0.73			326										1		CLEANOUT	6.00' Lt, 149+42.14 ℄ Rte 5 Fwy SB			i
		j								99.5									18" ASP				j
		k	2.00	0.73			326										1		CLEANOUT	6.00' Lt, 150+44.68 ℄ Rte 5 Fwy SB			k
		l								99.5									18" ASP				l
		m								87.2									18" ASP				m
		n	2.02	0.73			326										1		CLEANOUT	6.00' Lt, 152+37.41 ℄ Rte 5 Fwy SB			n
		o								87.2									18" ASP				o
		p							49.4									2.5	24" RCP				p
		q	4.38	1.67			326										1		TYPE G2 INLET (Rev)	6.00' Lt, 153+80.00 ℄ Rte 5 Fwy SB			q
	5	a					326								1		1		MODIFY CB No.37-C	3.62' Lt, 143+17.59 ℄ Rte 5 Fwy SB		5	a
		b								66.9									18" ASP				b
		c	2.00	0.73			326										1		CLEANOUT	3.60' Lt, 143+87.50 ℄ Rte 5 Fwy SB			c
		d								72.0									18" ASP				d
		e	2.00	0.73			326										1		CLEANOUT	3.61' Lt, 144+62.50 ℄ Rte 5 Fwy SB			e
		f								67.1									18" ASP				f
4		g												1					REMOVE CB No.37-C	AT ℄, 145+32.59 ℄ Rte 5 Fwy SB	4		g
SHEET TOTAL				10.11			39112		49.4	1126.4			5.6	2	1		12						

DRAINAGE QUANTITIES
DQ-2

STATE OF CALIFORNIA - DEPARTMENT OF TRANSPORTATION
Caltrans HYDRAULICS

FUNCTIONAL SUPERVISOR: RALPH M. SASAKI
CALCULATED-DESIGNED BY: ED GATA
CHECKED BY: VIC VALIDO
REVISED BY
DATE REVISED

LAST REVISION 00-00-00
DATE PLOTTED => 27-MAY-2010
TIME PLOTTED => 09:59

Dist	COUNTY	ROUTE	POST MILES TOTAL PROJECT	SHEET No.	TOTAL SHEETS
07	LA	5	15.8/16.9	51	145

Edgardo A. Gata 3-8-10
REGISTERED CIVIL ENGINEER DATE

5-24-10
PLANS APPROVAL DATE

REGISTERED PROFESSIONAL ENGINEER ED GATA No. C40706 Exp. 3-31-11 CIVIL STATE OF CALIFORNIA

THE STATE OF CALIFORNIA OR ITS OFFICERS OR AGENTS SHALL NOT BE RESPONSIBLE FOR THE ACCURACY OR COMPLETENESS OF SCANNED COPIES OF THIS PLAN SHEET.

SUMMARY OF DRAINAGE QUANTITIES

DRAINAGE SHEET No.	DRAINAGE SYSTEM No.	DRAINAGE UNIT	H OR V (HEIGHT) FT	MINOR CONCRETE (MINOR STRUCTURE) CY	MINOR CONCRETE (BACKFILL) CY	CONCRETE CHANNEL LINING CY	MISCELLANEOUS IRON AND STEEL LB	18" RCP LF	24" RCP LF	18" ALTERNATIVE SLOTTED PIPE LF	18" BITUMINOUS COATED CSP RISER (0.079" THICK) LF	24" PRECAST CONCRETE PIPE MANHOLE LF	REMOVE PIPE LF	REMOVE INLET EA	MODIFY INLET EA	(N) 24" MANHOLE FRAME AND COVER EA	(N) TYPE 24-12 FRAME AND GRATE EA	MAXIMUM COVER FT	DESCRIPTION	LOCATION	DRAINAGE SHEET No.	DRAINAGE SYSTEM No.	DRAINAGE UNIT
4	5	h	5.45	5.26			652										2		MODIFIED TYPE G2 INLET	5.00' Lt, 145+32.59 ℄ Rte 5 Fwy SB	4	5	h
		i								99.3									18" ASP				i
		j	2.00	0.73			326										1		CLEANOUT	3.61' Lt, 146+34.92 ℄ Rte 5 Fwy SB			j
		k								99.3									18" ASP				k
		l	2.00	0.73			326										1		CLEANOUT	3.61' Lt, 147+37.26 ℄ Rte 5 Fwy SB			l
		m								99.3									18" ASP				m
		n					652								1		2		MODIFY JC-3C (Mod)	5.00' Lt, 148+39.59 ℄ Rte 5 Fwy SB			n
		o								99.5									18" ASP				o
		p	2.00	0.73			326										1		CLEANOUT	3.65' Lt, 149+42.14 ℄ Rte 5 Fwy SB			p
		q								99.5									18" ASP				q
		r	2.01	0.73			326										1		CLEANOUT	3.62' Lt, 150+44.68 ℄ Rte 5 Fwy SB			r
		s								99.5									18" ASP				s
		t					652								1		2		MODIFY JC-3C (Mod)	5.00' Lt, 151+47.23 ℄ Rte 5 Fwy SB			t
		u								87.2									18" ASP				u
		v	2.02	0.73			326										1		CLEANOUT	3.62' Lt, 152+37.41 ℄ Rte 5 Fwy SB			v
		w								87.2									18" ASP				w
		x					652								1		2		MODIFY JC-3C (Mod)	5.00' Lt, 153+27.59 ℄ Rte 5 Fwy SB			x
	6	a						4.0										3.1	18" RCP			6	a
		b	2.0	0.73			326										1		TYPE G1 INLET	3.61' Lt, 153+80.00 ℄ Rte 5 Fwy SB			b
4	7	a	2.03	0.74			326										1		CLEANOUT	3.61' Lt, 155+50.00 ℄ Rte 5 Fwy SB	4	7	a
4-5		b								97.3									18" ASP		4-5		b
5		c	2.04	0.74			326										1		CLEANOUT	3.61' Lt, 156+50.00 ℄ Rte 5 Fwy SB	5		c
		d								97.3									18" ASP				d
		e	2.07	0.74			326										1		CLEANOUT	3.61' Lt, 157+50.00 ℄ Rte 5 Fwy SB			e
		f								97.0									18" ASP				f
		g	2.08	0.74			326										1		CLEANOUT	3.61' Lt, 158+50.00 ℄ Rte 5 Fwy SB			g
		h								66.6									18" ASP				h
5		i					652								1		2		MODIFY JC-3C (Mod)	5.00' Lt, 159+19.59 ℄ Rte 5 Fwy SB	5		i
SHEET TOTAL				12.60			6520	4.0		1129.0					4		20						

DRAINAGE QUANTITIES
DQ-3

STATE OF CALIFORNIA - DEPARTMENT OF TRANSPORTATION
Caltrans
HYDRAULICS

FUNCTIONAL SUPERVISOR: RALPH M. SASAKI
CALCULATED-DESIGNED BY: ED GATA
CHECKED BY: VIC VALIDO
REVISED BY
DATE REVISED

LAST REVISION 00-00-00
DATE PLOTTED => 27-MAY-2010
TIME PLOTTED => 10:00

Dist	COUNTY	ROUTE	POST MILES TOTAL PROJECT	SHEET No.	TOTAL SHEETS
07	LA	5	15.8/16.9	52	145

Edgardo A. Gata 3-8-10
REGISTERED CIVIL ENGINEER DATE

5-24-10
PLANS APPROVAL DATE

REGISTERED PROFESSIONAL ENGINEER
ED GATA
No. C40706
Exp. 3-31-11
CIVIL
STATE OF CALIFORNIA

THE STATE OF CALIFORNIA OR ITS OFFICERS OR AGENTS SHALL NOT BE RESPONSIBLE FOR THE ACCURACY OR COMPLETENESS OF SCANNED COPIES OF THIS PLAN SHEET.

SUMMARY OF DRAINAGE QUANTITIES

DRAINAGE SHEET No.	DRAINAGE SYSTEM No.	DRAINAGE UNIT	H OR V (HEIGHT) FT	MINOR CONCRETE (MINOR STRUCTURE) CY	MINOR CONCRETE (BACKFILL) CY	CONCRETE CHANNEL LINING CY	MISCELLANEOUS IRON AND STEEL LB	18" RCP LF	24" RCP LF	18" ALTERNATIVE SLOTTED PIPE LF	18" BITUMINOUS COATED CSP RISER (0.079" THICK) LF	24" PRECAST CONCRETE PIPE MANHOLE LF	REMOVE PIPE LF	REMOVE INLET EA	MODIFY INLET EA	(N) 24" MANHOLE FRAME AND COVER EA	(N) TYPE 24-12 FRAME AND GRATE EA	MAXIMUM COVER FT	DESCRIPTION	LOCATION	DRAINAGE SHEET No.	DRAINAGE SYSTEM No.	DRAINAGE UNIT
5	7	j								89.9									18" ASP		5	7	j
		k	2.06	0.74			326										1		CLEANOUT	3.61' Lt, 160+12.50 ℄ Rte 5 Fwy SB			k
		l								84.6									18" ASP				l
		m	2.06	0.74			326										1		CLEANOUT	3.61' Lt, 161+00.00 ℄ Rte 5 Fwy SB			m
		n								84.6									18" ASP				n
		o	2.05	0.74			326										1		CLEANOUT	3.61' Lt, 161+87.50 ℄ Rte 5 Fwy SB			o
		p								84.6									18" ASP				p
		q	2.07	0.74			326										1		CLEANOUT	3.61' Lt, 162+75.00 ℄ Rte 5 Fwy SB			q
		r								79.6									18" ASP				r
5		s					326								1		1		MODIFY JC-3C (Mod)	5.00' Lt, 163+57.59 ℄ Rte 5 Fwy SB	5		s
4	8	a	2.04	0.74			326										1		CLEANOUT	6.00' Lt, 155+50.00 ℄ Rte 5 Fwy SB	4	8	a
4-5		b								97.3									18" ASP		4-5		b
5		c	2.05	0.74			326										1		CLEANOUT	6.00' Lt, 156+50.00 ℄ Rte 5 Fwy SB	5		c
		d								97.3									18" ASP				d
		e	2.05	0.74			326										1		CLEANOUT	6.00' Lt, 157+50.00 ℄ Rte 5 Fwy SB			e
		f								97.1									18" ASP				f
		g	2.08	0.74			326										1		CLEANOUT	6.00' Lt, 158+50.00 ℄ Rte 5 Fwy SB			g
		h								66.6									18" ASP				h
	9	a												1					REMOVE TYPE G1 INLET	8.00' Lt, 157+80.50 ℄ Rte 5 Fwy SB		9	a
		b											6.9						REMOVE 18" RCP				b
	10	a												1					REMOVE TYPE G1 INLET	1.96' Lt, 157+80.50 ℄ Rte 5 Fwy SB		10	a
		b											136.1						REMOVE 18" RCP				b
	11	a												1					REMOVE TYPE G1 INLET	8.00' Lt, 159+19.59 ℄ Rte 5 Fwy SB		11	a
		b											1.6						REMOVE 18" RCP				b
		c											1.8						REMOVE 18" RCP				c
		d												1					REMOVE TYPE G1 INLET	1.93' Lt, 159+19.59 ℄ Rte 5 Fwy SB			d
	12	a												1					REMOVE TYPE G1 INLET	8.69' Lt, 163+57.59 ℄ Rte 5 Fwy SB		12	a
5		b											2.3						REMOVE 18" RCP		5		b
TOTAL THIS SHEET				5.92			2934			781.6			148.7	5	1		9						

DRAINAGE QUANTITIES
DQ-4

REVISED BY | DATE REVISED
ED GATA | VIC VALIDO
CALCULATED-DESIGNED BY | CHECKED BY
FUNCTIONAL SUPERVISOR: RALPH M. SASAKI
STATE OF CALIFORNIA - DEPARTMENT OF TRANSPORTATION
Caltrans
HYDRAULICS

LAST REVISION 00-00-00 | DATE PLOTTED => 27-MAY-2010 | TIME PLOTTED => 10:00

Dist	COUNTY	ROUTE	POST MILES TOTAL PROJECT	SHEET No.	TOTAL SHEETS
07	LA	5	15.8/16.9	53	145

Edgardo A. Gata 3-8-10
REGISTERED CIVIL ENGINEER DATE

5-24-10
PLANS APPROVAL DATE

REGISTERED PROFESSIONAL ENGINEER
ED GATA
No. C40706
Exp. 3-31-11
CIVIL
STATE OF CALIFORNIA

THE STATE OF CALIFORNIA OR ITS OFFICERS OR AGENTS SHALL NOT BE RESPONSIBLE FOR THE ACCURACY OR COMPLETENESS OF SCANNED COPIES OF THIS PLAN SHEET.

SUMMARY OF DRAINAGE QUANTITIES

DRAINAGE SHEET No.	DRAINAGE SYSTEM No.	DRAINAGE UNIT	H OR V (HEIGHT)	MINOR CONCRETE (MINOR STRUCTURE)	MINOR CONCRETE (BACKFILL)	CONCRETE CHANNEL LINING	MISCELLANEOUS IRON AND STEEL	18" RCP	24" RCP	18" ALTERNATIVE SLOTTED PIPE	18" BITUMINOUS COATED CSP RISER (0.079" THICK)	24" PRECAST CONCRETE PIPE MANHOLE	REMOVE PIPE	REMOVE INLET	MODIFY INLET	(N) 24" MANHOLE FRAME AND COVER	(N) TYPE 24-12 FRAME AND GRATE	MAXIMUM COVER	DESCRIPTION	LOCATION	DRAINAGE SHEET No.	DRAINAGE SYSTEM No.	DRAINAGE UNIT
			FT	CY	CY	CY	LB	LF	LF	LF	LF	LF	LF	EA	EA	EA	EA	FT					
5	13	a	5.00	1.98		1.64	652										2		GD-3 INLET WITH DEPRESSED Conc APRON	100.75' R+, 163+21.20 ℄ Fwy	5	13	a
		b							259.3									3.8	24" RPC				b
		c	4.67	2.87			435					1.4				1			MANHOLE No. 1	80.00' R+, 163+76.50 ℄ Fwy			c
		d									12.2								18" CSP RISER				d
	14	a				1.56													CONCRETE TRANSITION	99.761' L+, 163+22.20 ℄ Fwy		14	a
		b												1					REMOVE TYPE G1 INLET	94.75' L+, 163+71.20 ℄ Fwy			b
5		c	2.00	0.73			326										1		TYPE G1 INLET (MODIFIED)	94.75' L+, 163+71.20 ℄ Fwy	5		c
TOTAL THIS SHEET				5.58		3.20	1413		259.3		12.2	1.4		1		1	3						
GRAND TOTAL				51.13	8.02	3.20	18691	4.0	1682.9	3424.6	12.2	1.4	193.0	10	7	1	56						

DRAINAGE QUANTITIES
DQ-5

STATE OF CALIFORNIA - DEPARTMENT OF TRANSPORTATION
Caltrans
HYDRAULICS

FUNCTIONAL SUPERVISOR: RALPH M. SASAKI
CALCULATED-DESIGNED BY: ED GATA
CHECKED BY: VIC VALIDO
REVISED BY
DATE REVISED

LAST REVISION 00-00-00
DATE PLOTTED => 27-MAY-2010
TIME PLOTTED => 10:00

Dist	COUNTY	ROUTE	POST MILES TOTAL PROJECT	SHEET No.	TOTAL SHEETS
07	LA	5	15.8/16.9	54	145

REGISTERED CIVIL ENGINEER 3-8-10 DATE

5-24-10
PLANS APPROVAL DATE

REGISTERED PROFESSIONAL ENGINEER HAYKAZ AGHAJANIAN No. C53866 Exp. 12-31-11 CIVIL STATE OF CALIFORNIA

THE STATE OF CALIFORNIA OR ITS OFFICERS OR AGENTS SHALL NOT BE RESPONSIBLE FOR THE ACCURACY OR COMPLETENESS OF SCANNED COPIES OF THIS PLAN SHEET.

NOTES:

1. FOR COMPLETE RIGHT OF WAY AND ACCURATE ACCESS DATA, CONTACT RIGHT OF WAY ENGINEERING AT THE DISTRICT OFFICE.
2. LOCATION OF UTILITY FACILITIES SHOWN ON THIS PLAN ARE APPROXIMATE AND SHALL BE VERIFIED BY THE CONTRACTOR PRIOR TO CONSTRUCTION.
3. UTILITY OWNERSHIP ON THIS PROJECT:
   - GAS - SOUTHERN CALIFORNIA GAS COMPANY
   - ELECTRIC - LOS ANGELES DEPARTMENT OF WATER AND POWER
   - TELEPHONE - AT&T
   - WATER - LOS ANGELES DEPARTMENT OF WATER AND POWER
   - OIL - UNION OIL COMPANY
     TW OIL COMPANY

ABBREVIATIONS:

AT&T	AMERICAN TELEPHONE & TELEGRAPH
Bu Ca	BURIED CABLE
CL	CEMENT LINED
Csg	CASING
Del	DELEVON
Du	DUCT
FD	FIBER DUCT
LACFCD	LOS ANGELES COUNTY FLOOD CONTROL DISTRICT
LADW&P(W)	LOS ANGELES DEPARTMENTOF WATER AND POWER (WATER)
LADW&P(P)	LOS ANGELES DEPARTMENT OF WATER AND POWER (POWER)
M	MEDIUM PRESSURE
MTD	MULTIPLE TILE DUCTS
San Swr	SANITARY SEWER
SCG	SOUTHERN CALIFORNIA GAS
SP	STEEL PIPE
Tr	TRUNK
EW	EAST OF WEST PROPERTY LINE
WE	WEST OF EAST PROPERTY LINE

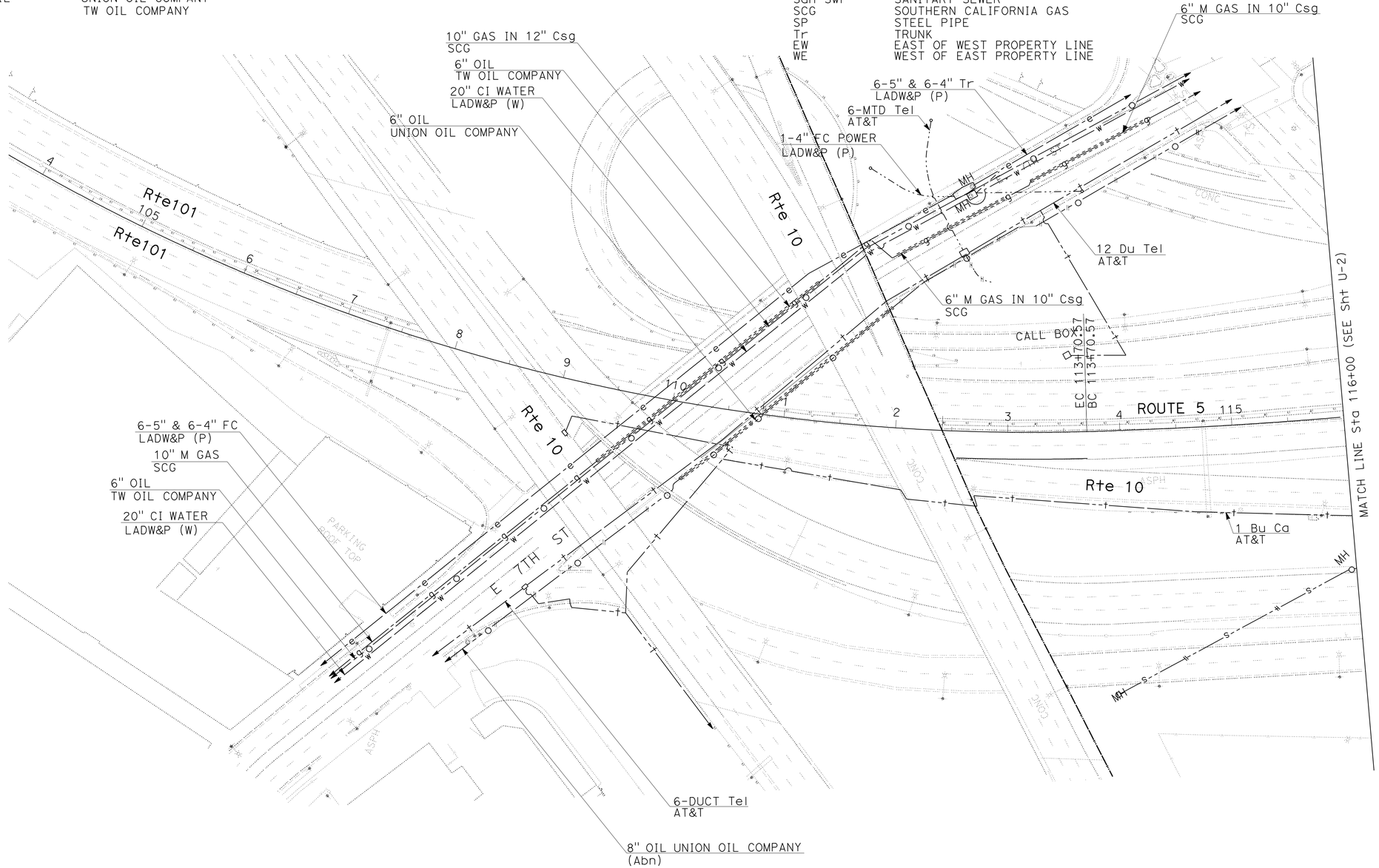

UTILITY PLAN

SCALE: 1" = 50'

U-1

THIS PLAN ACCURATE FOR UTILITY INFORMATION ONLY

STATE OF CALIFORNIA - DEPARTMENT OF TRANSPORTATION
Caltrans® OFFICE OF DESIGN A

FUNCTIONAL SUPERVISOR: UGO ANAKWENZE
CALCULATED-DESIGNED BY: HAYKAZ AGHAJANIAN
CHECKED BY: UGO ANAKWENZE
REVISED BY
DATE REVISED

LAST REVISION 00-00-00
DATE PLOTTED => 27-MAY-2010
TIME PLOTTED => 10:26

Dist	COUNTY	ROUTE	POST MILES TOTAL PROJECT	SHEET No.	TOTAL SHEETS
07	LA	5	15.8/16.9	55	145

REGISTERED CIVIL ENGINEER 3-8-10 DATE

5-24-10
PLANS APPROVAL DATE

REGISTERED PROFESSIONAL ENGINEER HAYKAZ AGHAJANIAN No. C53866 Exp. 12-31-11 CIVIL STATE OF CALIFORNIA

THE STATE OF CALIFORNIA OR ITS OFFICERS OR AGENTS SHALL NOT BE RESPONSIBLE FOR THE ACCURACY OR COMPLETENESS OF SCANNED COPIES OF THIS PLAN SHEET.

NOTES:

1. FOR COMPLETE RIGHT OF WAY AND ACCURATE ACCESS DATA, SEE RIGHT OF WAY ENGINEERING AT DISTRICT OFFICE.
2. REFER TO NOTES 2 AND 3 FROM UTILITY PLAN U-1

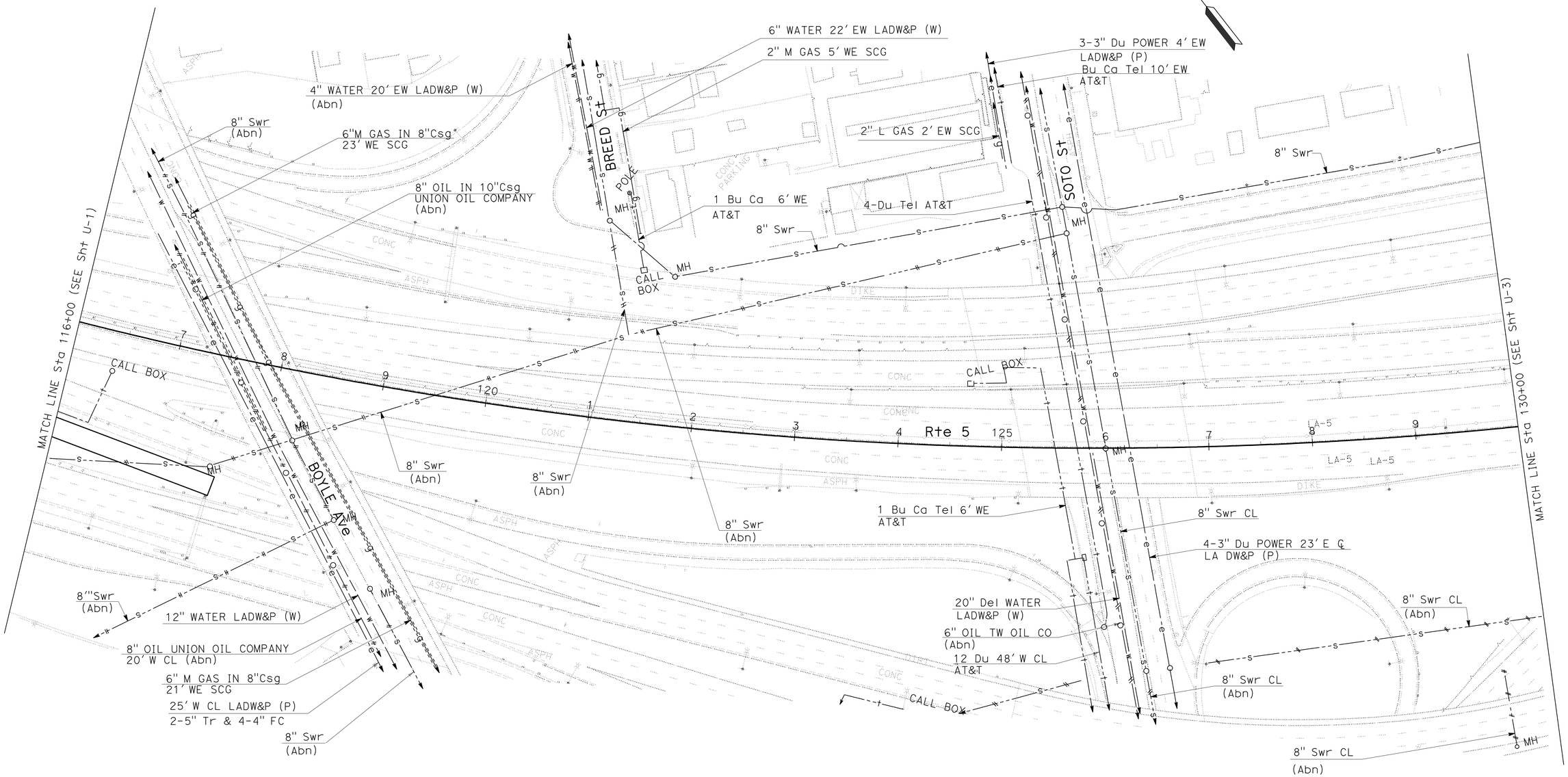

UTILITY PLAN

SCALE: 1" = 50'

U-2

THIS PLAN ACCURATE FOR UTILITY INFORMATION ONLY

STATE OF CALIFORNIA - DEPARTMENT OF TRANSPORTATION
Caltrans® OFFICE OF DESIGN A

FUNCTIONAL SUPERVISOR: UGO ANAKWENZE

CALCULATED-DESIGNED BY: HAYKAZ AGHAJANIAN
CHECKED BY: UGO ANAKWENZE

REVISED BY
DATE REVISED

LAST REVISION 00-00-00
DATE PLOTTED => 27-MAY-2010
TIME PLOTTED => 10:26

Dist	COUNTY	ROUTE	POST MILES TOTAL PROJECT	SHEET No.	TOTAL SHEETS
07	LA	5	15.8/16.9	56	145

REGISTERED CIVIL ENGINEER 3-8-10 DATE

5-24-10
PLANS APPROVAL DATE

REGISTERED PROFESSIONAL ENGINEER HAYKAZ AGHAJANIAN No. C53866 Exp. 12-31-11 CIVIL STATE OF CALIFORNIA

THE STATE OF CALIFORNIA OR ITS OFFICERS OR AGENTS SHALL NOT BE RESPONSIBLE FOR THE ACCURACY OR COMPLETENESS OF SCANNED COPIES OF THIS PLAN SHEET.

NOTES

1. FOR COMPLETE RIGHT OF WAY AND ACCURATE ACCESS DATA, SEE RIGHT OF WAY ENGINEERING AT THE DISTRICT OFFICE.
2. REFER TO NOTES 2 AND 3 FROM UTILITY PLAN U-1

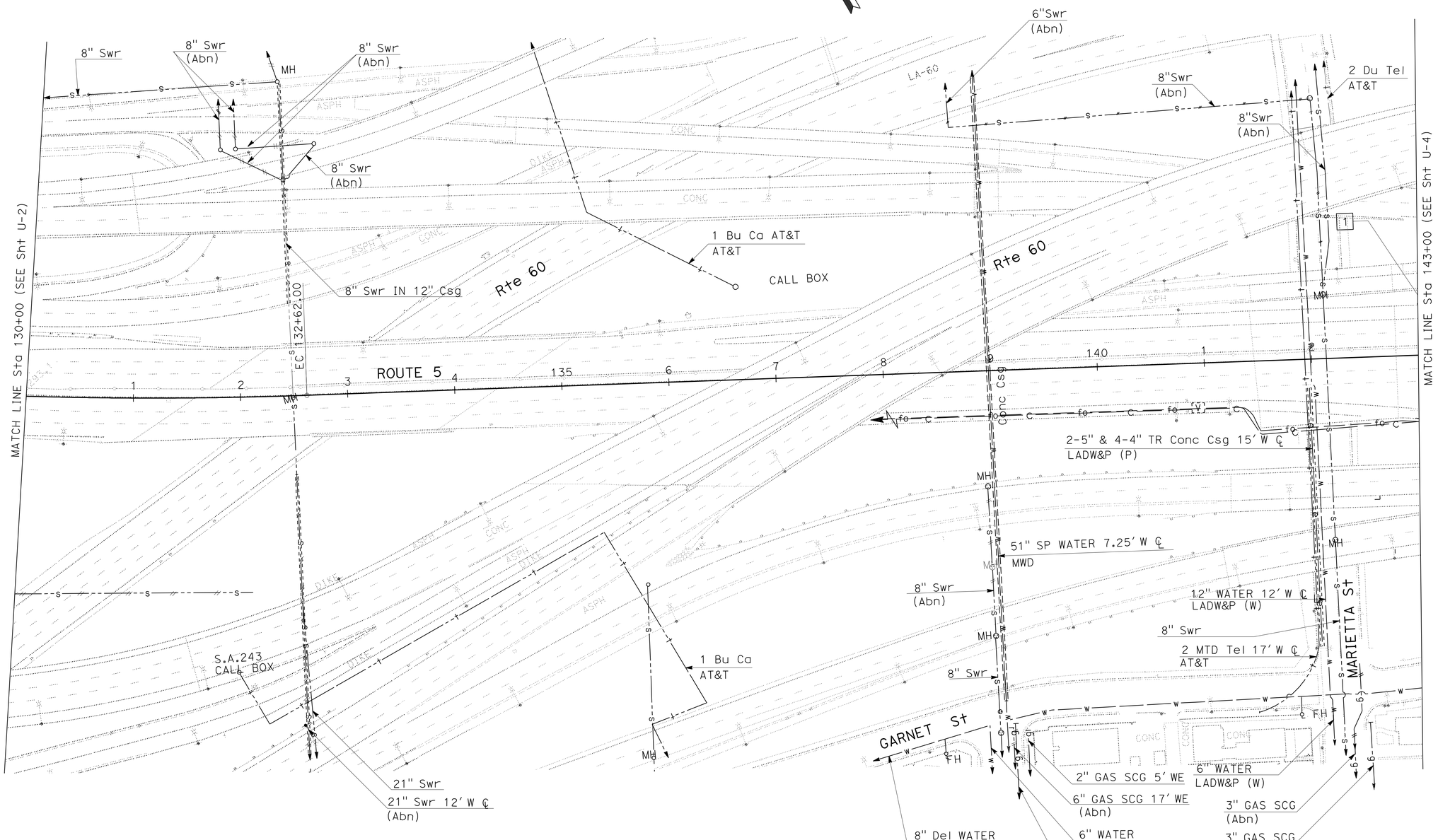

UTILITY PLAN

SCALE: 1" = 50'

U-3

THIS PLAN ACCURATE FOR UTILITY INFORMATION ONLY

STATE OF CALIFORNIA - DEPARTMENT OF TRANSPORTATION
Caltrans® OFFICE OF DESIGN A

FUNCTIONAL SUPERVISOR: UGO ANAKWENZE
CALCULATED-DESIGNED BY: HAYKAZ AGHAJANIAN
CHECKED BY: UGO ANAKWENZE
REVISED BY
DATE REVISED

LAST REVISION 00-00-00
DATE PLOTTED => 27-MAY-2010
TIME PLOTTED => 10:26

Dist	COUNTY	ROUTE	POST MILES TOTAL PROJECT	SHEET No.	TOTAL SHEETS
07	LA	5	15.8/16.9	57	145

REGISTERED CIVIL ENGINEER 3-8-10 DATE

5-24-10
PLANS APPROVAL DATE

REGISTERED PROFESSIONAL ENGINEER HAYKAZ AGHAJANIAN No. C53866 Exp. 12-31-11 CIVIL STATE OF CALIFORNIA

THE STATE OF CALIFORNIA OR ITS OFFICERS OR AGENTS SHALL NOT BE RESPONSIBLE FOR THE ACCURACY OR COMPLETENESS OF SCANNED COPIES OF THIS PLAN SHEET.

NOTES:

1. FOR COMPLETE RIGHT OF WAY AND ACCURATE ACCESS DATA, SEE RIGHT OF WAY ENGINEERING AT THE DISTRICT OFFICE.
2. REFER TO NOTES 2 AND 3 FROM UTILITY PLAN U-1

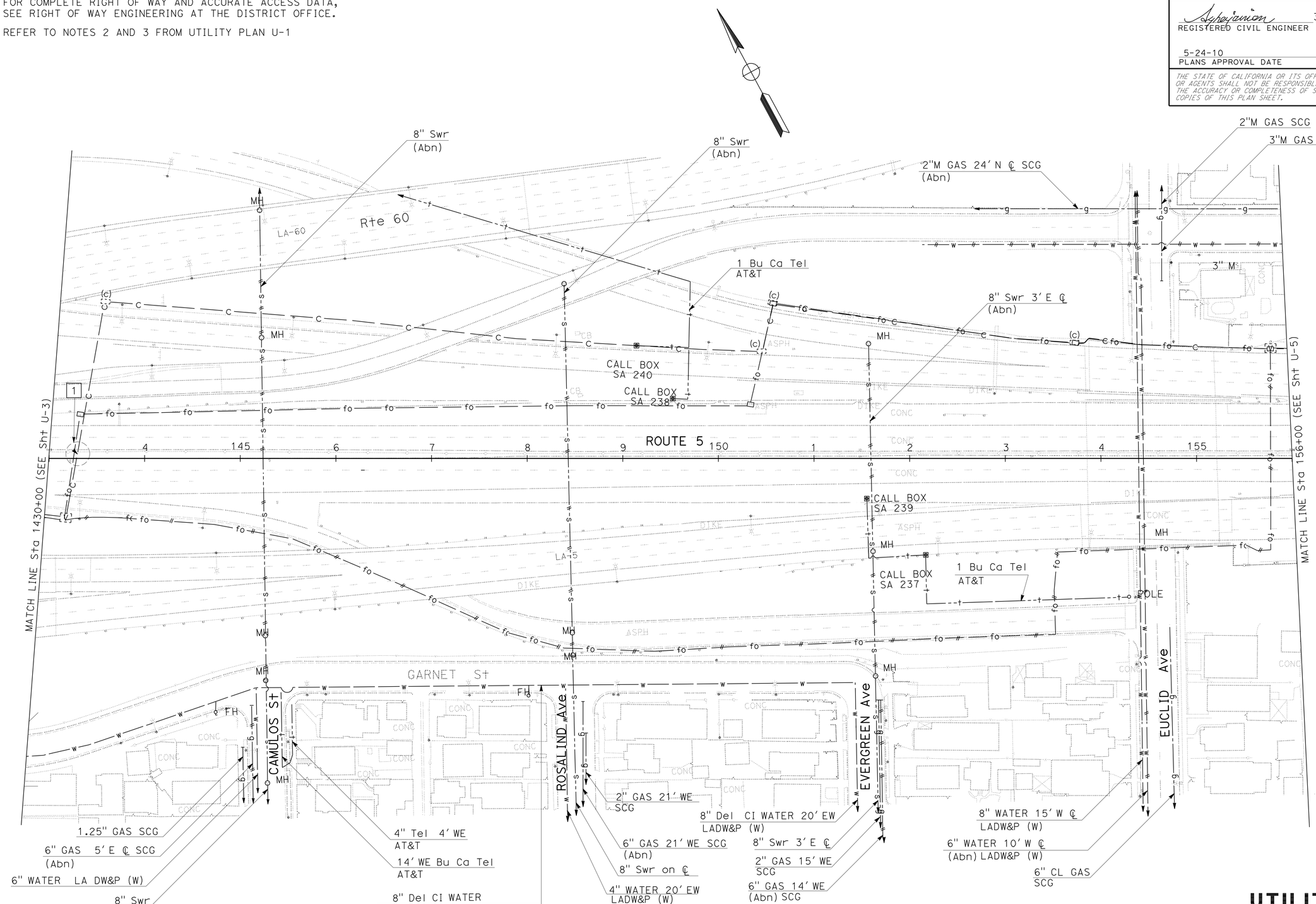

THIS PLAN ACCURATE FOR UTILITY INFORMATION ONLY

UTILITY PLAN

SCALE: 1" = 50'

U-4

STATE OF CALIFORNIA - DEPARTMENT OF TRANSPORTATION
Caltrans® OFFICE OF DESIGN A

FUNCTIONAL SUPERVISOR: UGO ANAKWENZE

CALCULATED-DESIGNED BY: HAYKAZ AGHAJANIAN
CHECKED BY: UGO ANAKWENZE

REVISED BY / DATE REVISED

LAST REVISION 00-00-00 | DATE PLOTTED => 27-MAY-2010 | TIME PLOTTED => 10:26

BORDER LAST REVISED 4/11/2008 | RELATIVE BORDER SCALE IS IN INCHES 0 1 2 3 | USERNAME => trcarol | DGN FILE => 718410ka004.dgn | CU 07328 | EA 184101

Dist	COUNTY	ROUTE	POST MILES TOTAL PROJECT	SHEET No.	TOTAL SHEETS
07	LA	5	15.8/16.9	58	145

REGISTERED CIVIL ENGINEER 3-8-10 DATE

5-24-10
PLANS APPROVAL DATE

REGISTERED PROFESSIONAL ENGINEER HAYKAZ AGHAJANIAN No. C53866 Exp. 12-31-11 CIVIL STATE OF CALIFORNIA

THE STATE OF CALIFORNIA OR ITS OFFICERS OR AGENTS SHALL NOT BE RESPONSIBLE FOR THE ACCURACY OR COMPLETENESS OF SCANNED COPIES OF THIS PLAN SHEET.

NOTES:

1. FOR COMPLETE RIGHT OF WAY AND ACCURATE ACCESS DATA, SEE RIGHT OF WAY ENGINEERING AT THE DISTRICT OFFICE.
2. SEE NOTES 2 AND 3 FROM UTILITY PLAN U-1.

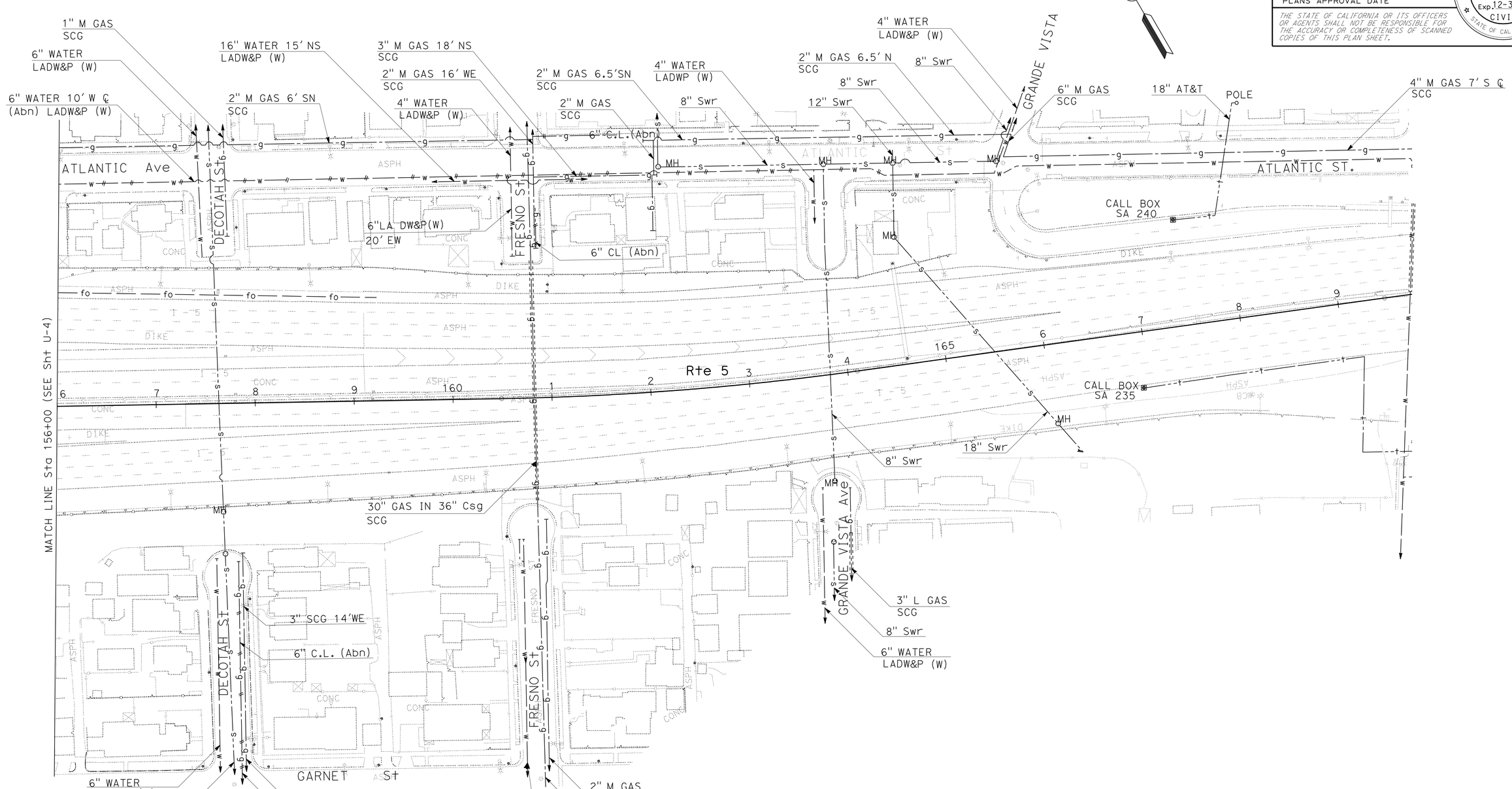

UTILITY PLAN

SCALE: 1" = 50'

U-5

THIS PLAN ACCURATE FOR UTILITY INFORMATION ONLY

STATE OF CALIFORNIA - DEPARTMENT OF TRANSPORTATION
Caltrans® OFFICE OF DESIGN A

FUNCTIONAL SUPERVISOR: UGO ANAKWENZE
CALCULATED-DESIGNED BY: HAYKAZ AGHAJANIAN
CHECKED BY: UGO ANAKWENZE
REVISED BY / DATE REVISED

LAST REVISION 00-00-00
DATE PLOTTED => 27-MAY-2010
TIME PLOTTED => 10:26

Dist	COUNTY	ROUTE	POST MILES TOTAL PROJECT	SHEET No.	TOTAL SHEETS
07	LA	5	15.8/16.9	59	145

REGISTERED CIVIL ENGINEER 3-8-10 DATE

5-24-10
PLANS APPROVAL DATE

REGISTERED PROFESSIONAL ENGINEER Mai P. Bui No. C61280 Exp. 6-30-11 CIVIL STATE OF CALIFORNIA

THE STATE OF CALIFORNIA OR ITS OFFICERS OR AGENTS SHALL NOT BE RESPONSIBLE FOR THE ACCURACY OR COMPLETENESS OF SCANNED COPIES OF THIS PLAN SHEET.

NOTES:

1. LOCATIONS OF CONSTRUCTION AREA SIGNS SHOWN ARE APPROXIMATE. EXACT LOCATIONS TO BE DETERMINED BY THE ENGINEER.
2. IN LIEU OF POSTS, SIGNS MAY BE MOUNTED ON EXISTING POWER POLES AND ELECTROLIERS BY STRAP AND SADDLE BRACKET METHOD AS APPROVED BY THE ENGINEER.
3. FOR ADDITIONAL CONSTRUCTION AREA SIGN LOCATIONS, DETAILS, AND QUANTITIES SEE DETOUR PLANS AND TRAFFIC HANDLING PLANS.

STATIONARY MOUNTED CONSTRUCTION AREA SIGNS

SIGN No.	SIGN CODE	PANEL SIZE (INCHES)	SIGN MESSAGE	No. OF POST AND SIZE	No. OF SIGNS (EA)
A	W20-1	48x48	ROAD WORK AHEAD	2-4" X 4"	5
B	G20-2	48x24	END ROAD WORK	2-4" X 4"	5
C	C40 (CA)	144x20	TRAFFIC FINES DOUBLED IN CONSTRUCTION ZONES	2-4" X 4"	5

SIGN CODE LEGEND

(CA): CALIFORNIA CODE

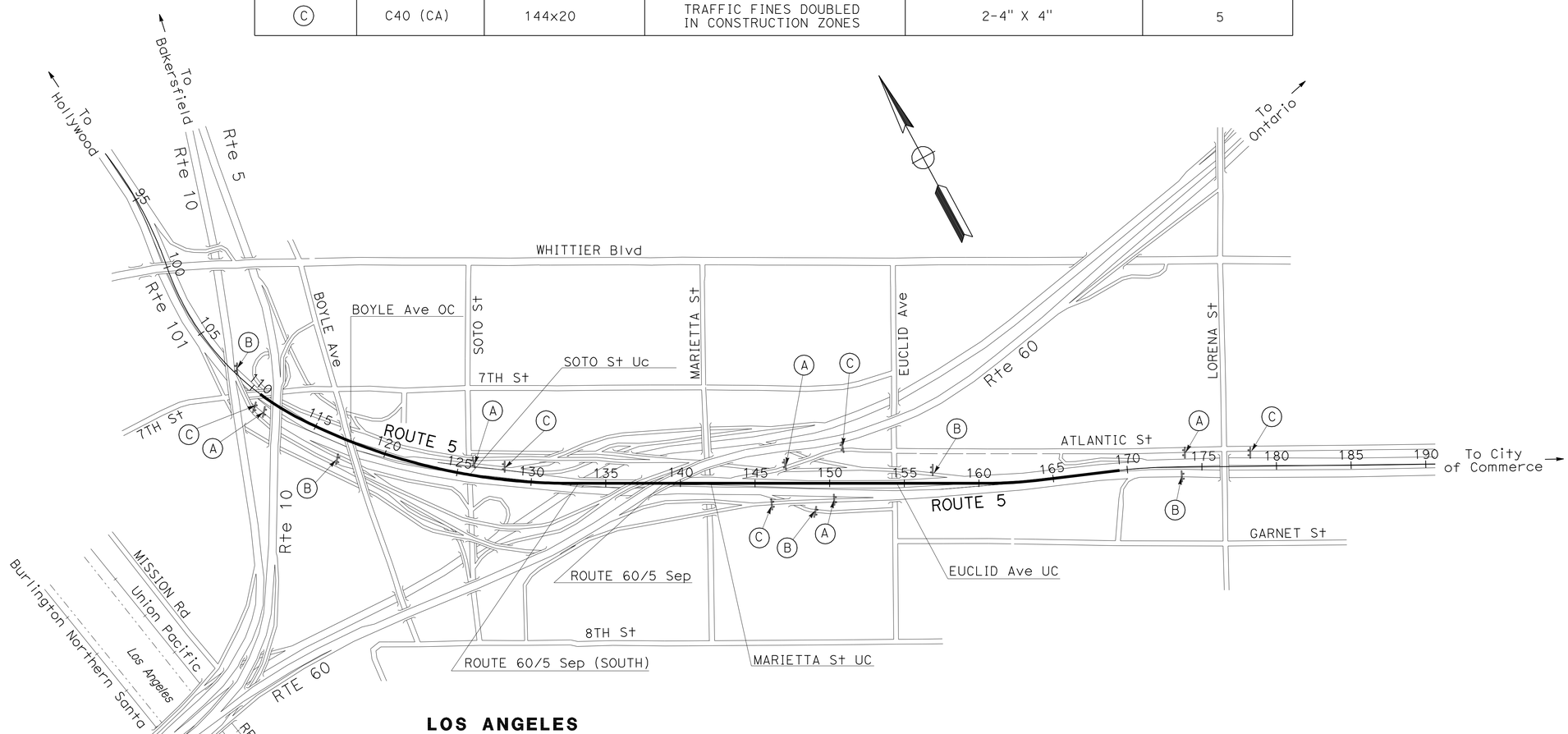

LOS ANGELES

CONSTRUCTION AREA SIGNS

NO SCALE

CS-1

STATE OF CALIFORNIA - DEPARTMENT OF TRANSPORTATION
Caltrans® OFFICE OF DESIGN A

FUNCTIONAL SUPERVISOR: SIMON KUO
CALCULATED-DESIGNED BY: STEWART STAHL
CHECKED BY: MAI BUI
REVISED BY
DATE REVISED

LAST REVISION 00-00-00
DATE PLOTTED => 27-MAY-2010
TIME PLOTTED => 10:27

Dist	COUNTY	ROUTE	POST MILES TOTAL PROJECT	SHEET No.	TOTAL SHEETS
07	LA	5	15.8/16.9	60	145

REGISTERED CIVIL ENGINEER 3-8-10 DATE

5-24-10
PLANS APPROVAL DATE

REGISTERED PROFESSIONAL ENGINEER Mai P. Bui No. C61280 Exp. 6-30-11 CIVIL STATE OF CALIFORNIA

THE STATE OF CALIFORNIA OR ITS OFFICERS OR AGENTS SHALL NOT BE RESPONSIBLE FOR THE ACCURACY OR COMPLETENESS OF SCANNED COPIES OF THIS PLAN SHEET.

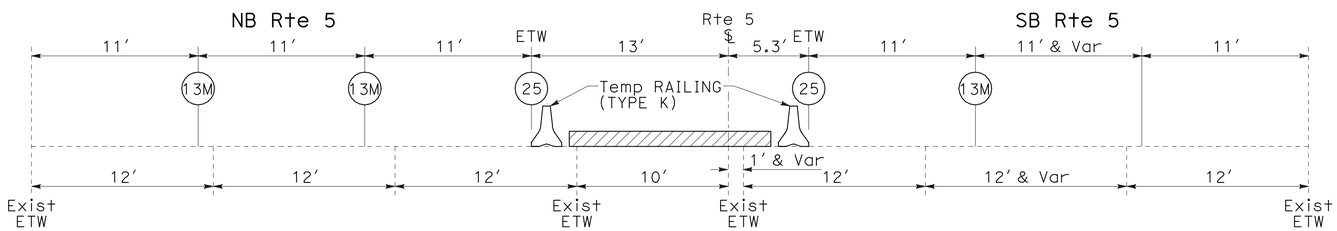

SECTION A-A

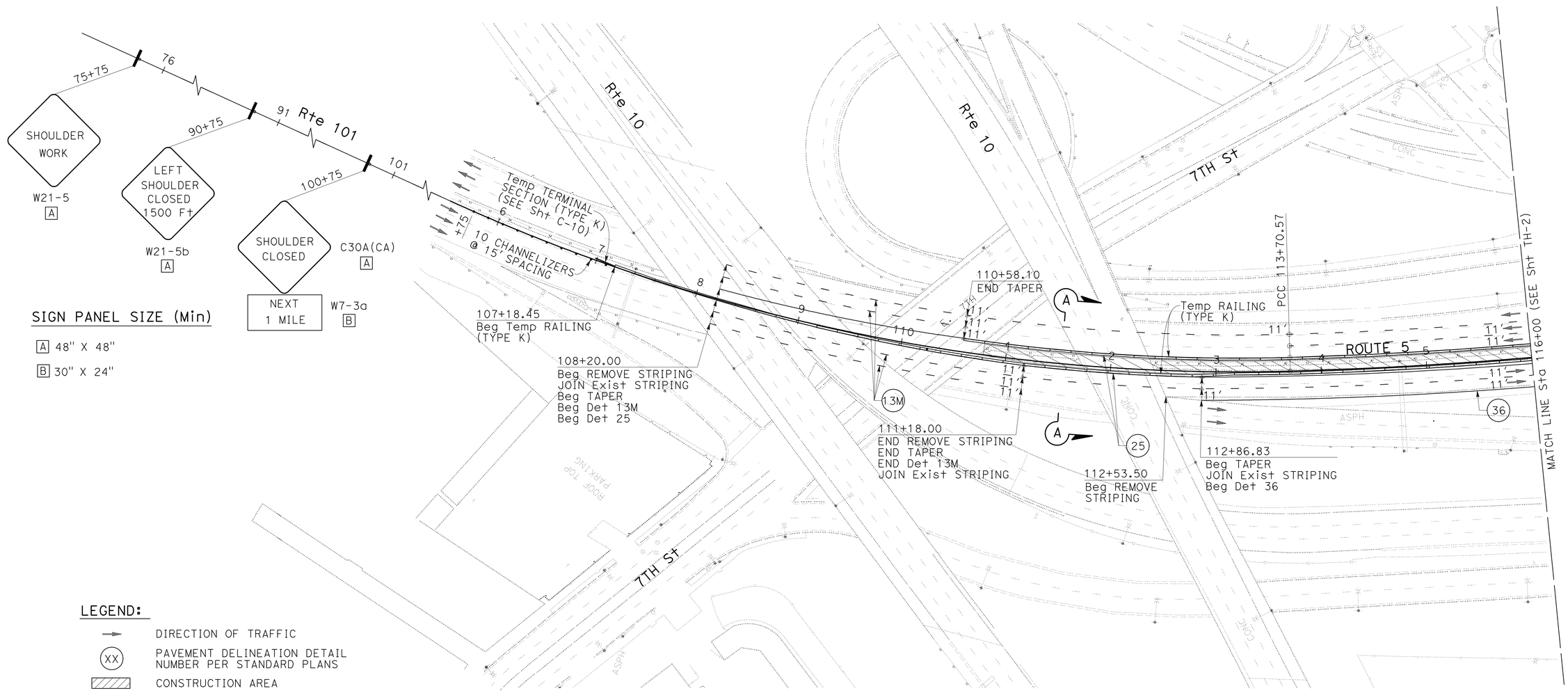

SIGN PANEL SIZE (Min)

A 48" X 48"

B 30" X 24"

LEGEND:

- → DIRECTION OF TRAFFIC
- (XX) PAVEMENT DELINEATION DETAIL NUMBER PER STANDARD PLANS
- CONSTRUCTION AREA
- YYYY (CA) CALIFORNIA SIGN CODE PER CALIFORNIA MUTCD
- ○ TYPE A WHITE NON-REFLECTIVE
- TYPE G ONE-WAY CLEAR RETRORELECTIVE
- 4" WHITE PAINT TRAFFIC STRIPE

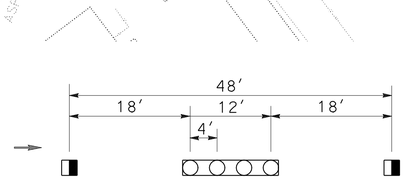

DETAIL 13M

THIS PLAN ACCURATE FOR TRAFFIC HANDLING ONLY.

TRAFFIC HANDLING PLAN

SCALE: 1" = 50′

TH-1

REVISED BY	DATE REVISED

CALCULATED-DESIGNED BY	CHECKED BY
HUAN NGUYEN	MAI BUI

FUNCTIONAL SUPERVISOR: SIMON KUO

STATE OF CALIFORNIA - DEPARTMENT OF TRANSPORTATION
Caltrans® OFFICE OF DESIGN A

LAST REVISION 00-00-00 | DATE PLOTTED => 27-MAY-2010 | TIME PLOTTED => 10:27

BORDER LAST REVISED 4/11/2008 | RELATIVE BORDER SCALE IS IN INCHES 0 1 2 3 | USERNAME => trcarol | DGN FILE => 718410md001.dgn | CU 07226 | EA 184101

Dist	COUNTY	ROUTE	POST MILES TOTAL PROJECT	SHEET No.	TOTAL SHEETS
07	LA	5	15.8/16.9	61	145

REGISTERED CIVIL ENGINEER 3-8-10 DATE

5-24-10
PLANS APPROVAL DATE

REGISTERED PROFESSIONAL ENGINEER Mai P. Bui No. C61280 Exp. 6-30-11 CIVIL STATE OF CALIFORNIA

THE STATE OF CALIFORNIA OR ITS OFFICERS OR AGENTS SHALL NOT BE RESPONSIBLE FOR THE ACCURACY OR COMPLETENESS OF SCANNED COPIES OF THIS PLAN SHEET.

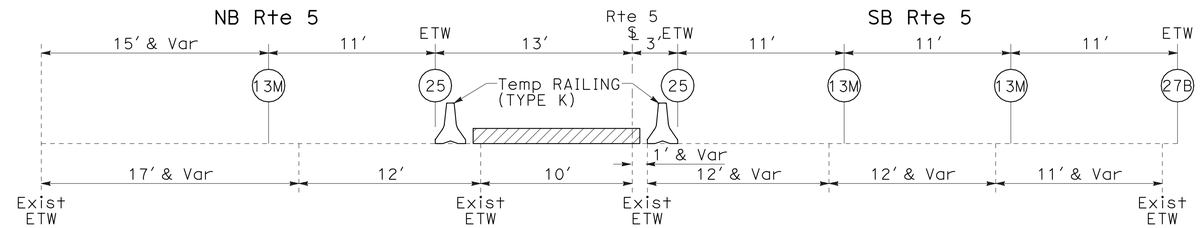

SECTION B-B

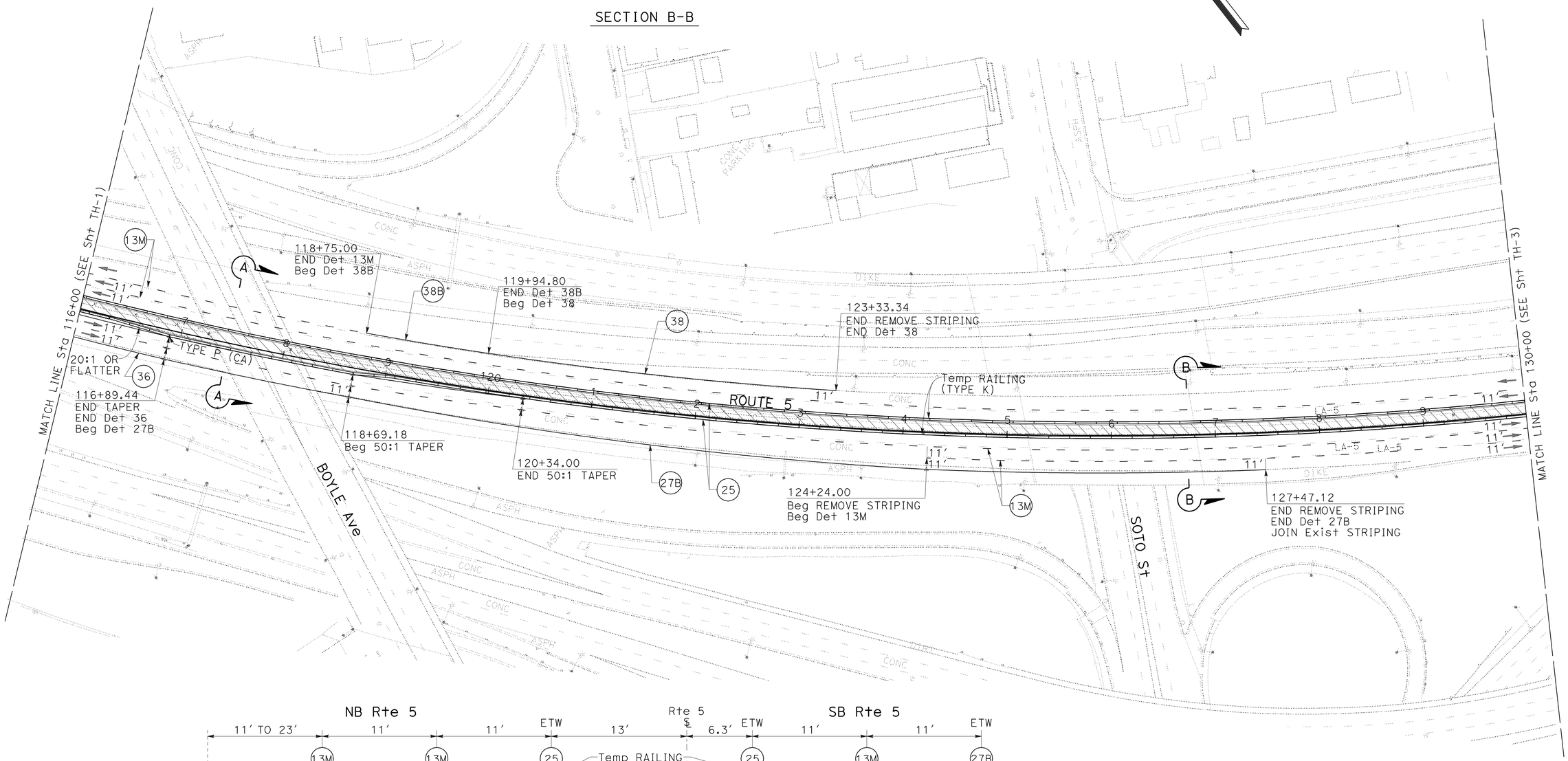

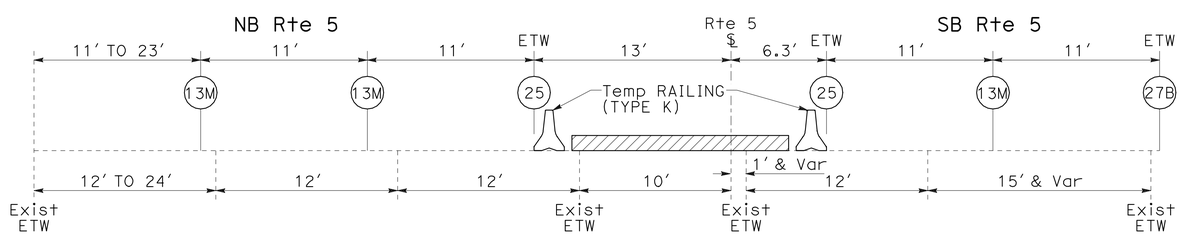

SECTION A-A

THIS PLAN ACCURATE FOR TRAFFIC HANDLING ONLY.

TRAFFIC HANDLING PLAN

SCALE: 1" = 50′

TH-2

STATE OF CALIFORNIA - DEPARTMENT OF TRANSPORTATION
Caltrans OFFICE OF DESIGN A

FUNCTIONAL SUPERVISOR: SIMON KUO
CALCULATED-DESIGNED BY: HUAN NGUYEN
CHECKED BY: MAI BUI
REVISED BY
DATE REVISED

LAST REVISION 00-00-00
DATE PLOTTED => 27-MAY-2010
TIME PLOTTED => 10:27

Dist	COUNTY	ROUTE	POST MILES TOTAL PROJECT	SHEET No.	TOTAL SHEETS
07	LA	5	15.8/16.9	62	145

REGISTERED CIVIL ENGINEER 3-8-10 DATE

5-24-10
PLANS APPROVAL DATE

REGISTERED PROFESSIONAL ENGINEER
Mai P. Bui
No. C61280
Exp. 6-30-11
CIVIL
STATE OF CALIFORNIA

THE STATE OF CALIFORNIA OR ITS OFFICERS OR AGENTS SHALL NOT BE RESPONSIBLE FOR THE ACCURACY OR COMPLETENESS OF SCANNED COPIES OF THIS PLAN SHEET.

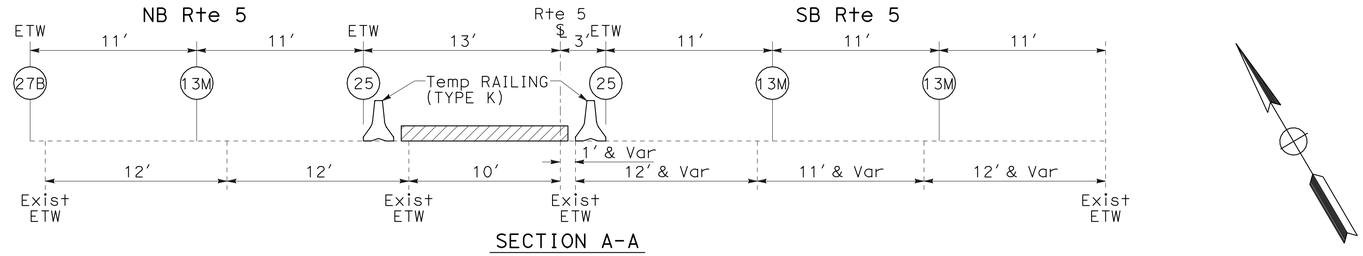

SECTION A-A

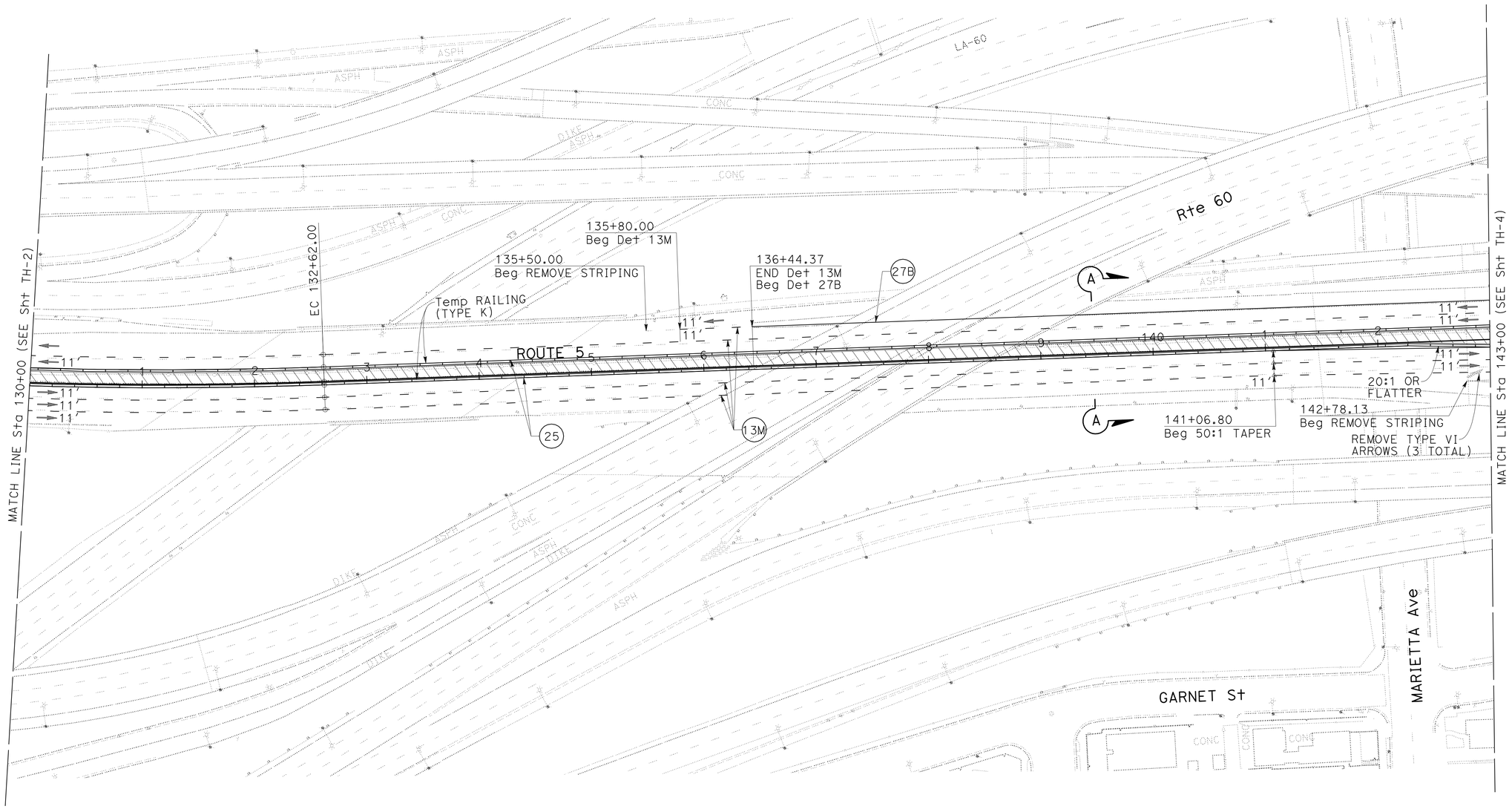

TRAFFIC HANDLING PLAN

SCALE: 1" = 50′

THIS PLAN ACCURATE FOR TRAFFIC HANDLING ONLY.

TH-3

STATE OF CALIFORNIA - DEPARTMENT OF TRANSPORTATION
Caltrans OFFICE OF DESIGN A

FUNCTIONAL SUPERVISOR: SIMON KUO
CALCULATED-DESIGNED BY: HUAN NGUYEN
CHECKED BY: MAI BUI
REVISED BY
DATE REVISED

LAST REVISION 00-00-00
DATE PLOTTED => 27-MAY-2010
TIME PLOTTED => 10:27

Dist	COUNTY	ROUTE	POST MILES TOTAL PROJECT	SHEET No.	TOTAL SHEETS
07	LA	5	15.8/16.9	63	145

REGISTERED CIVIL ENGINEER — DATE: 3-8-10

5-24-10
PLANS APPROVAL DATE

REGISTERED PROFESSIONAL ENGINEER — Mai P. Bui — No. C61280 — Exp. 6-30-11 — CIVIL — STATE OF CALIFORNIA

THE STATE OF CALIFORNIA OR ITS OFFICERS OR AGENTS SHALL NOT BE RESPONSIBLE FOR THE ACCURACY OR COMPLETENESS OF SCANNED COPIES OF THIS PLAN SHEET.

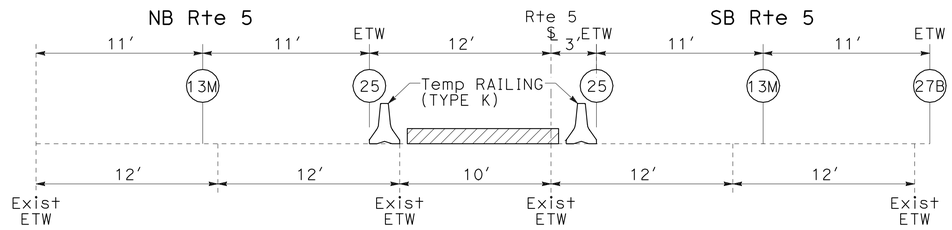

SECTION B-B

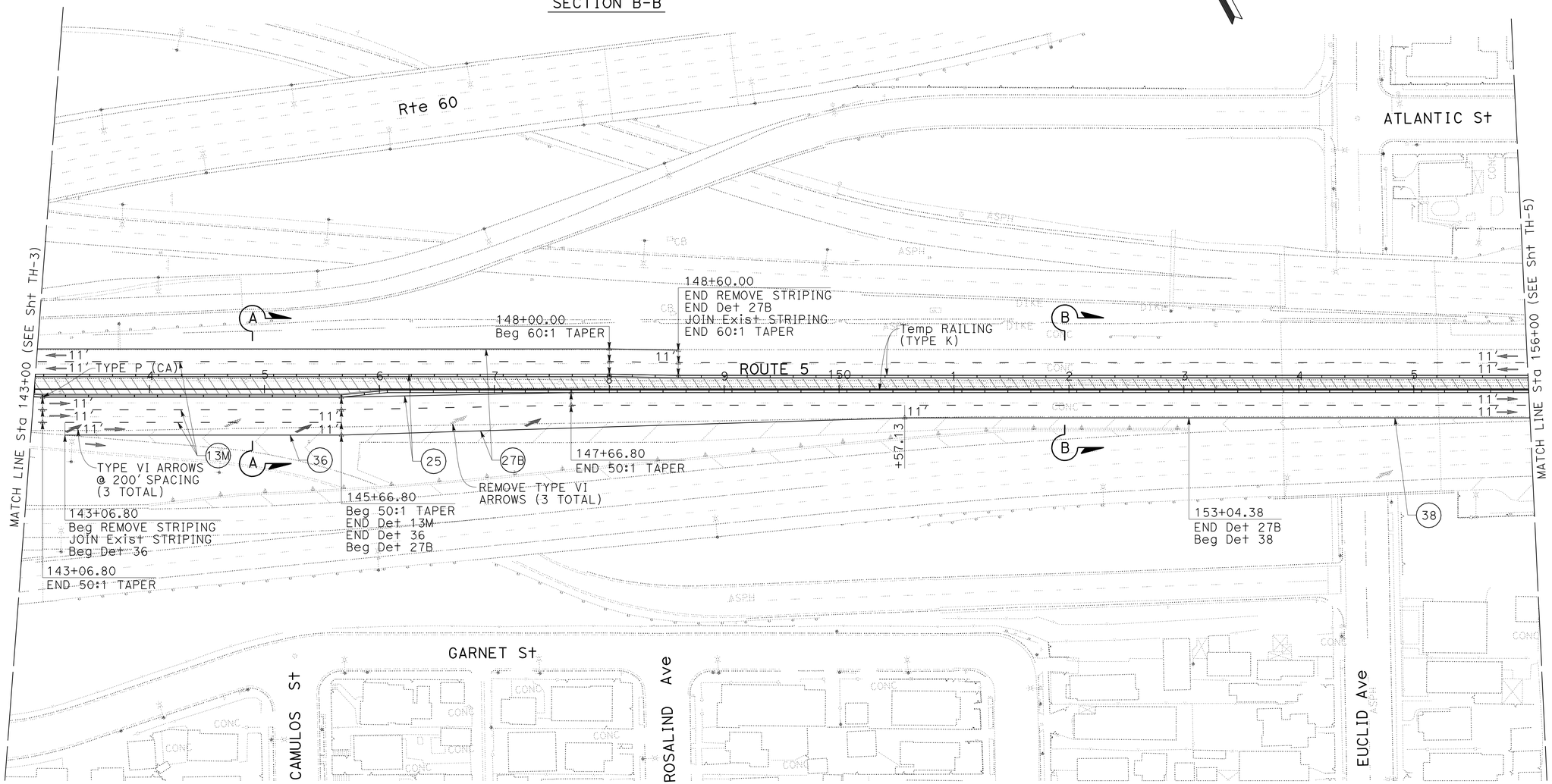

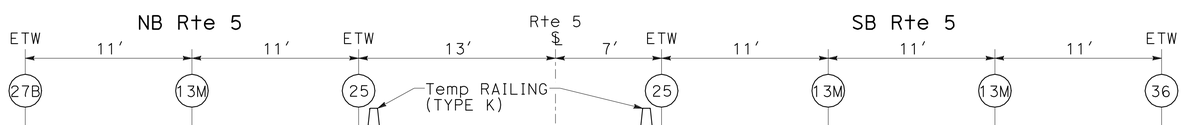

SECTION A-A

THIS PLAN ACCURATE FOR TRAFFIC HANDLING ONLY.

TRAFFIC HANDLING PLAN

SCALE: 1" = 50′

TH-4

REVISED BY	DATE REVISED
HUAN NGUYEN	MAI BUI

CALCULATED-DESIGNED BY / CHECKED BY

FUNCTIONAL SUPERVISOR: SIMON KUO

STATE OF CALIFORNIA - DEPARTMENT OF TRANSPORTATION — Caltrans® — OFFICE OF DESIGN A

LAST REVISION 00-00-00 — DATE PLOTTED => 27-MAY-2010 — TIME PLOTTED => 10:27

Dist	COUNTY	ROUTE	POST MILES TOTAL PROJECT	SHEET No.	TOTAL SHEETS
07	LA	5	15.8/16.9	64	145

REGISTERED CIVIL ENGINEER 3-8-10 DATE

5-24-10
PLANS APPROVAL DATE

REGISTERED PROFESSIONAL ENGINEER
Mai P. Bui
No. C61280
Exp. 6-30-11
CIVIL
STATE OF CALIFORNIA

THE STATE OF CALIFORNIA OR ITS OFFICERS OR AGENTS SHALL NOT BE RESPONSIBLE FOR THE ACCURACY OR COMPLETENESS OF SCANNED COPIES OF THIS PLAN SHEET.

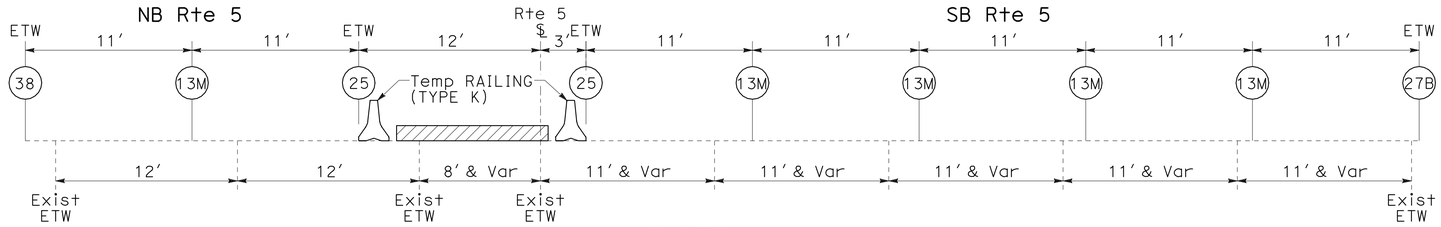

SECTION A-A

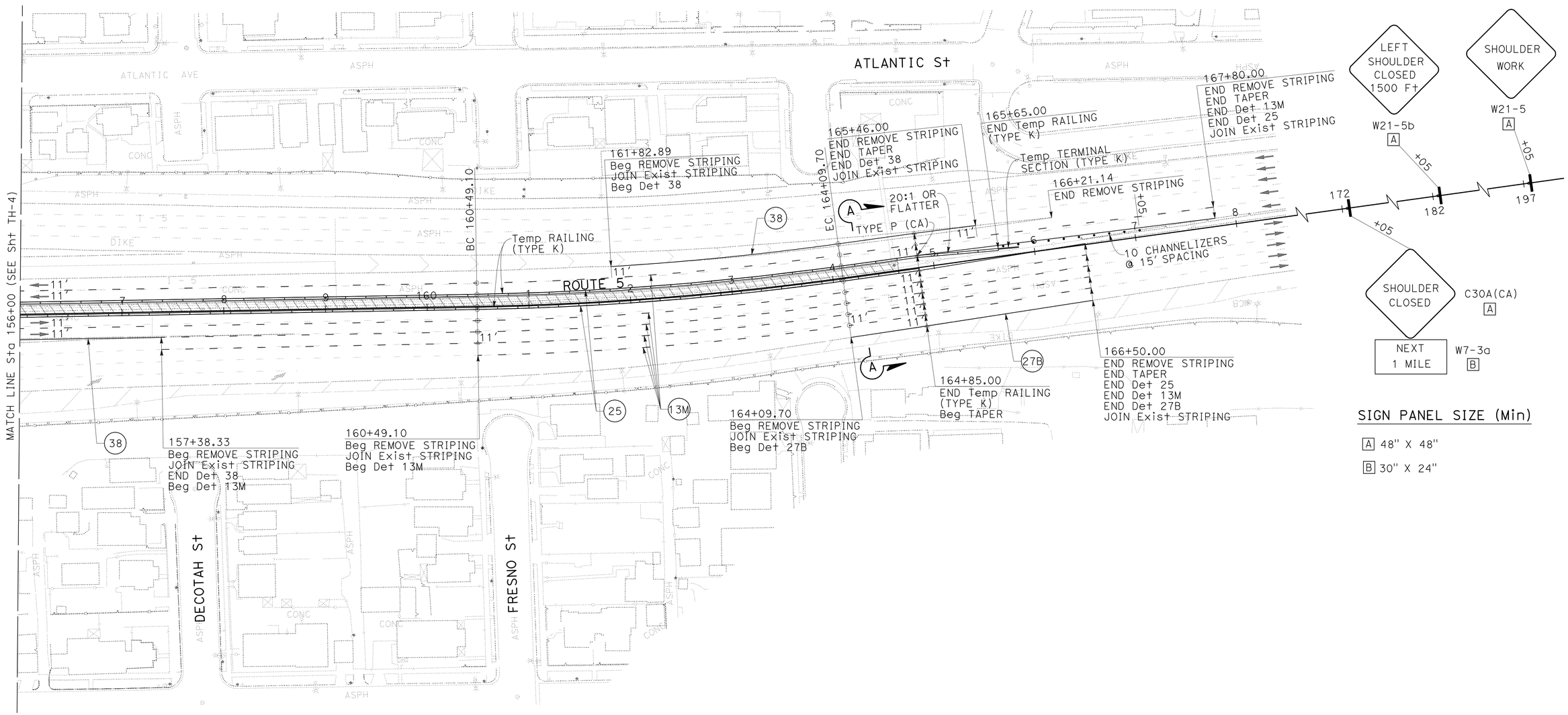

SIGN PANEL SIZE (Min)

A 48" X 48"

B 30" X 24"

TRAFFIC HANDLING PLAN

SCALE: 1" = 50′

THIS PLAN ACCURATE FOR TRAFFIC HANDLING ONLY.

TH-5

STATE OF CALIFORNIA - DEPARTMENT OF TRANSPORTATION
Caltrans® OFFICE OF DESIGN A

FUNCTIONAL SUPERVISOR: SIMON KUO
CALCULATED-DESIGNED BY: HUAN NGUYEN
CHECKED BY: MAI BUI
REVISED BY
DATE REVISED

LAST REVISION 00-00-00
DATE PLOTTED => 27-MAY-2010
TIME PLOTTED => 10:27

BORDER LAST REVISED 4/11/2008
RELATIVE BORDER SCALE IS IN INCHES 0 1 2 3
USERNAME => trcarol
DGN FILE => 718410md005.dgn
CU 07226
EA 184101

Dist	COUNTY	ROUTE	POST MILES TOTAL PROJECT	SHEET No.	TOTAL SHEETS
07	LA	5	15.8/16.9	65	145

REGISTERED CIVIL ENGINEER 03-03-09 DATE

5-24-10
PLANS APPROVAL DATE

REGISTERED PROFESSIONAL ENGINEER DUKE HUYNH No. 65591 Exp. 9-30-09 CIVIL STATE OF CALIFORNIA

THE STATE OF CALIFORNIA OR ITS OFFICERS OR AGENTS SHALL NOT BE RESPONSIBLE FOR THE ACCURACY OR COMPLETENESS OF SCANNED COPIES OF THIS PLAN SHEET.

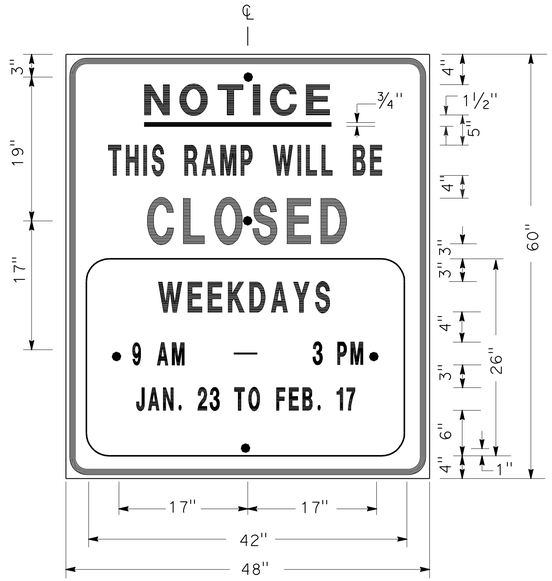

SIGN SP-1

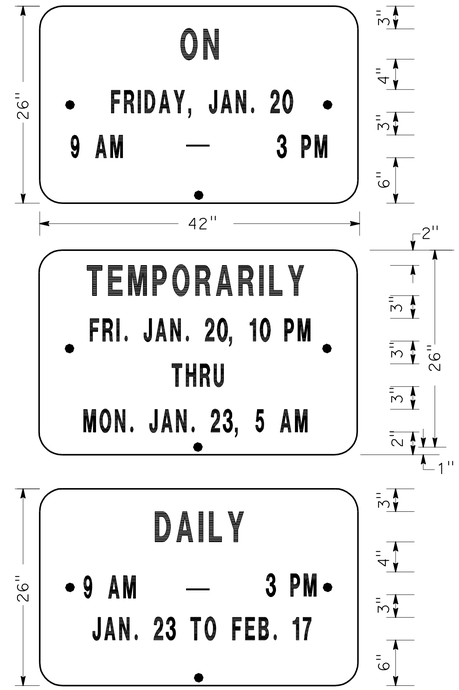

ALTERNATE OVERLAY PANELS (TYPICAL)

SPECIAL ADVANCE NOTICE PUBLICITY SIGN

NOTES: (SIGN SP-1)

1. SIGNS SHALL HAVE ORANGE RETROREFLECTORIZED BACKGROUND WITH BLACK BORDER AND LETTERS.
2. BOLT HOLES SHALL BE 3/8" DIAMETER.
3. BASE MATERIAL SHALL BE ALUMINUM (MINIMUM 0.06").
4. SIGNS SHALL BE MOUNTED WITH BOTTOMS OF SIGNS A MINIMUM OF 6' ABOVE GROUND.

SIZE	BORDER WIDTH	MARGIN WIDTH	LETTER SIZE					CORNER RADIUS
			LINE 1	LINE 2*	LINE 3	LINE 4	LINE 5,6 & 7*	
48"x60"	1 1/4"	3/4"	4E	4D	6E	4D		3"
42"x26"	OVERLAY						3D	1 1/2"
* CONDENSED SPACING IF NECESSARY								

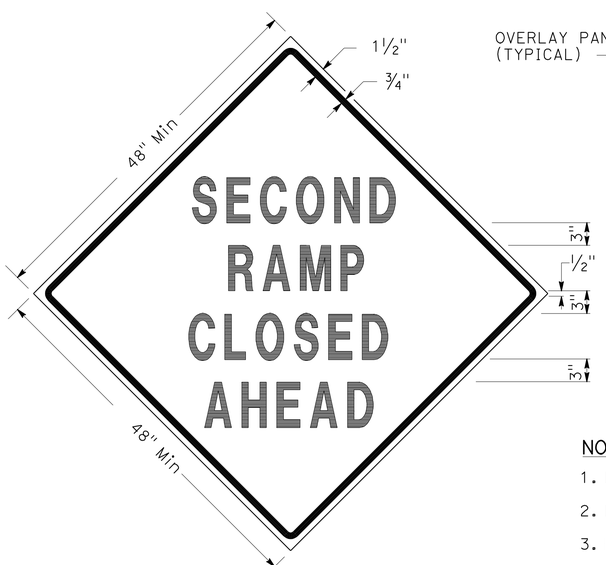

SIGN SP-3

SIGN SP-5

NOTES: (SIGNS SP-3 & SP-5)

1. LETTERS - 6" SERIES D.
2. LETTERS AND BORDERS - BLACK ON RETROREFLECTORIZED ORANGE BACKGROUND.
3. BASE MATERIAL SHALL BE ALUMINUM (MINIMUM 0.06").
4. SIGNS SHALL BE MOUNTED WITH BOTTOMS OF SIGNS A MINIMUM OF 6' ABOVE GROUND.

SPECIAL SIGN FOR EXIT RAMP CLOSURES

SIGN SP-4

NOTES: (SIGN SP-4)

1. LETTERS - 6" SERIES C.
2. LETTERS AND BORDERS - BLACK ON RETROREFLECTORIZED WHITE BACKGROUND.
3. BASE MATERIAL SHALL BE ALUMINUM (MINIMUM 0.06").
4. SIGNS SHALL BE PLACED AT RAMP ENTRANCES IN ADDITION TO SIGNS POSTED IN ACCORDANCE WITH STANDARD PLAN T14.

SPECIAL SIGN FOR ENTRANCE RAMP CLOSURES

TRAFFIC HANDLING DETAILS
TRAFFIC CONTROL SYSTEM FOR RAMP CLOSURES, DETOUR SIGNS AND MISCELLANEOUS DETAILS
SHEET 1 OF 2
NO SCALE

THD-1

JC	JC	JC
9/08	8/08	7/08

REVISED BY / DATE REVISED

ALBERT K YU / JOCELYN C CHIANG

CALCULATED-DESIGNED BY / CHECKED BY

FUNCTIONAL SUPERVISOR: DENIS S KATAYAMA

STATE OF CALIFORNIA - DEPARTMENT OF TRANSPORTATION

DTM

Caltrans

LAST REVISION 00-00-00 | DATE PLOTTED => 27-MAY-2010 | TIME PLOTTED => 10:24

Dist	COUNTY	ROUTE	POST MILES TOTAL PROJECT	SHEET No.	TOTAL SHEETS
07	LA	5	15.8/16.9	66	145

Duke M Huynh 03-03-09
REGISTERED CIVIL ENGINEER DATE

5-24-10
PLANS APPROVAL DATE

REGISTERED PROFESSIONAL ENGINEER
DUKE HUYNH
No. 65591
Exp. 9-30-09
CIVIL
STATE OF CALIFORNIA

THE STATE OF CALIFORNIA OR ITS OFFICERS OR AGENTS SHALL NOT BE RESPONSIBLE FOR THE ACCURACY OR COMPLETENESS OF SCANNED COPIES OF THIS PLAN SHEET.

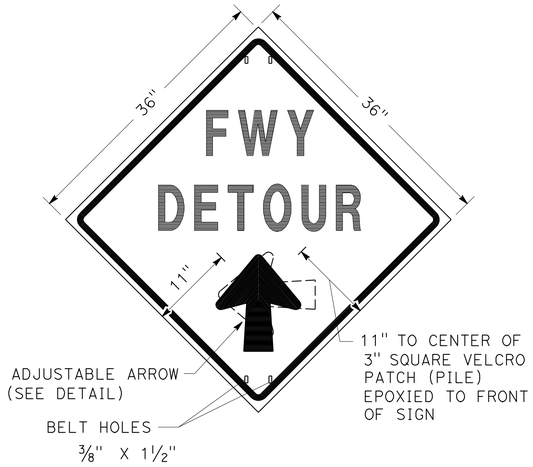

SIGN SP-2

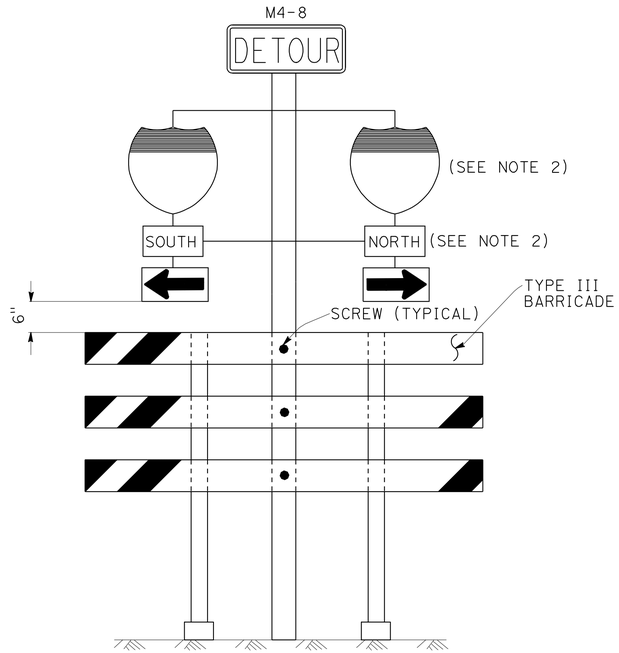

SIGN SP-6 (SEE NOTE 1)

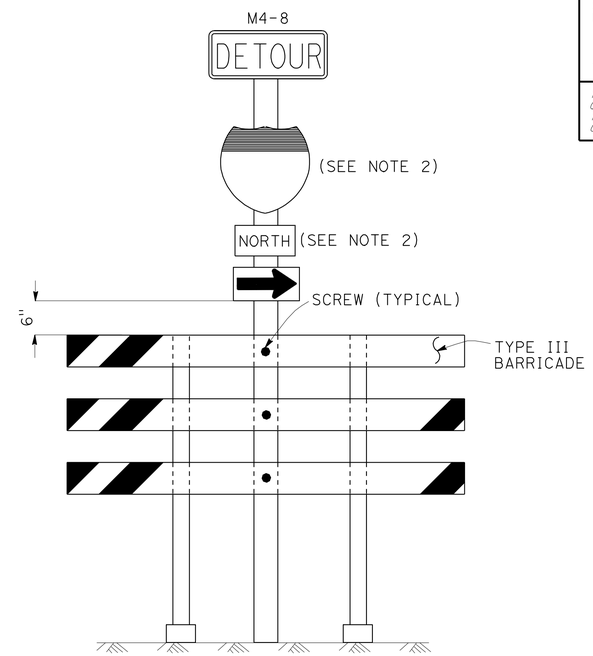

SIGN SP-7 (SEE NOTE 1)

NOTES: (SIGN SP-2)

1. LETTERS -6" SERIES E.
2. LETTERS, BORDER AND ARROW - BLACK ON RETROREFLECTORIZED ORANGE BACKGROUND.
3. BASE MATERIAL FOR SIGNS AND ARROWS SHALL BE ALUMINUM (MINIMUM 0.06").
4. BELTS (LUGGAGE STRAPS) SHALL BE 1" WIDE BY 48" LONG, MADE OF COTTON OR POLYPROPYLENE WEB MATERIAL.
5. SIGNS SHALL BE MOUNTED WITH BOTTOMS OF SIGNS A MINIMUM OF 6' ABOVE GROUND EXCEPT AS OTHERWISE SHOWN ON OTHER TRAFFIC HANDLING DETAILS PLANS.

ABBREVIATION

(CA) CALIFORNIA CODE

NOTES: (SIGNS SP-6 & SP-7)

1. IN LIEU OF PLACING SIGNS ON TYPE III BARRICADES, SIGNS, INCLUDING POSTS, MAY BE PLACED INTO THE GROUND OR FASTENED ONTO ELECTROLIERS.
2. USE APPROPRIATE ROUTE SHIELD [G26-2(CA), G27-2(CA), G28-2(CA)] AND CARDINAL DIRECTION [NORTH (M3-1), SOUTH (M3-3), EAST (M3-2), WEST (M3-4)]

SPECIAL PORTABLE FREEWAY DETOUR SIGNS

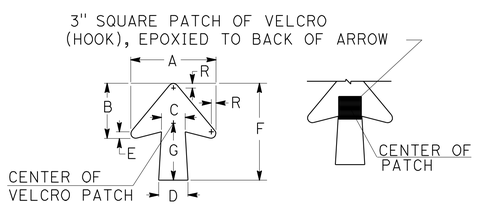

DIMENSIONS							
A	B	C	D	E	F	G	R
11 1/4"	7 1/4"	3 1/8"	4"	7/8"	13"	7 1/2"	5/8"

SPECIAL PORTABLE FREEWAY DETOUR SIGN

ADJUSTABLE ARROW DETAIL

TRAFFIC HANDLING DETAILS

TRAFFIC CONTROL SYSTEM FOR RAMP CLOSURES, DETOUR SIGNS AND MISCELLANEOUS DETAILS

SHEET 2 OF 2

NO SCALE

THD-2

REVISED BY	DATE REVISED
JC	9/08
JC	7/08

ALBERT K YU
JOCELYN C CHIANG

CALCULATED-DESIGNED BY
CHECKED BY

FUNCTIONAL SUPERVISOR
DENIS S KATAYAMA

STATE OF CALIFORNIA - DEPARTMENT OF TRANSPORTATION
Caltrans
DTM

LAST REVISION 00-00-00
DATE PLOTTED => 27-MAY-2010
TIME PLOTTED => 10:24

Dist	COUNTY	ROUTE	POST MILES TOTAL PROJECT	SHEET No.	TOTAL SHEETS
07	LA	5	15.8/16.9	67	145

Duke M Huynh 03-03-09
REGISTERED CIVIL ENGINEER DATE

5-24-10
PLANS APPROVAL DATE

REGISTERED PROFESSIONAL ENGINEER
DUKE HUYNH
No. 65591
Exp. 9-30-09
CIVIL
STATE OF CALIFORNIA

THE STATE OF CALIFORNIA OR ITS OFFICERS OR AGENTS SHALL NOT BE RESPONSIBLE FOR THE ACCURACY OR COMPLETENESS OF SCANNED COPIES OF THIS PLAN SHEET.

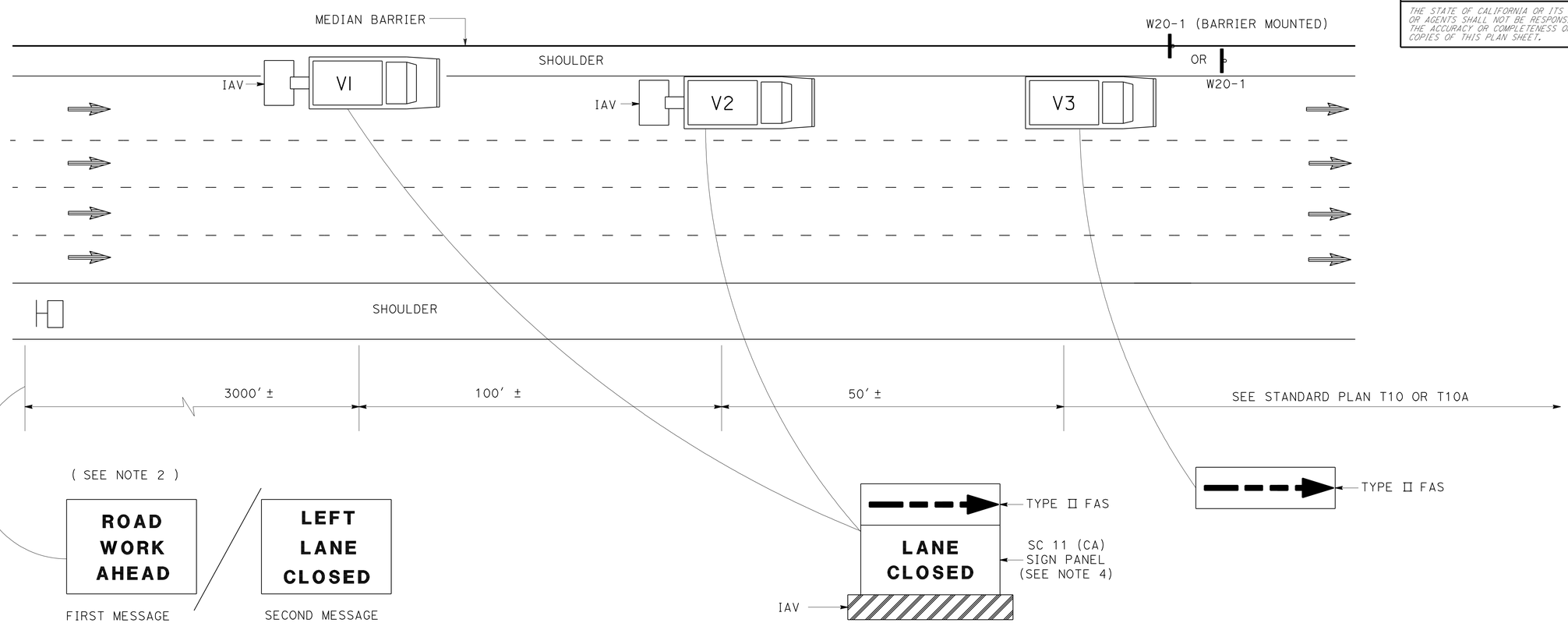

NOTES:

1. LANE CLOSURES SHALL NOT BE PLACED ON CREST VERTICAL CURVES OR ON HORIZONTAL CURVES.
2. PCMS SHALL BE ACTIVATED PRIOR TO TRAFFIC CONTROL ACTIVITIES ON THE LANE.
3. A MINIMUM SIGHT DISTANCE OF 1500′ SHALL BE PROVIDED IN ADVANCE OF PCMS.
4. VEHICLE-MOUNTED SIGN PANELS SHALL BE TYPE III OR IV RETROREFLECTORIZED SHEETING, BLACK ON WHITE OR BLACK ON ORANGE WITH 8" MINIMUM SERIES D LETTERS PER CALTRANS SIGN SPECIFICATIONS.

LEGEND

V1, V2	SHADOW VEHICLE
V3	WORK/APPLICATION VEHICLE
	PORTABLE CHANGEABLE MESSAGE SIGN (PCMS)
	DIRECTION OF TRAVEL
	CONSTRUCTION AREA SIGN

ABBREVIATIONS

FAS	FLASHING ARROW SIGN
IAV	IMPACT ATTENUATOR VEHICLE
CMS	CHANGEABLE MESSAGE SIGN
PCMS	PORTABLE CHANGEABLE MESSAGE SIGN
(CA)	CALIFORNIA CODE

TRAFFIC HANDLING DETAILS
TRAFFIC CONTROL SYSTEM FOR MEDIAN SHOULDERS LESS THAN 8 FEET

NO SCALE

THD-3

REVISED BY	DATE REVISED
JC	9/08
JC	7/08

ALBERT K YU
JOCELYN C CHIANG
CALCULATED-DESIGNED BY
CHECKED BY
FUNCTIONAL SUPERVISOR
DENIS S KATAYAMA

STATE OF CALIFORNIA - DEPARTMENT OF TRANSPORTATION
Caltrans
DTM

LAST REVISION 00-00-00
DATE PLOTTED => 27-MAY-2010
TIME PLOTTED => 10:24

Dist	COUNTY	ROUTE	POST MILES TOTAL PROJECT	SHEET No.	TOTAL SHEETS
07	LA	5	15.8/16.9	68	145

Duke M Huynh 03-03-09
REGISTERED CIVIL ENGINEER DATE

5-24-10
PLANS APPROVAL DATE

REGISTERED PROFESSIONAL ENGINEER
DUKE HUYNH
No. 65591
Exp. 9-30-09
CIVIL
STATE OF CALIFORNIA

THE STATE OF CALIFORNIA OR ITS OFFICERS OR AGENTS SHALL NOT BE RESPONSIBLE FOR THE ACCURACY OR COMPLETENESS OF SCANNED COPIES OF THIS PLAN SHEET.

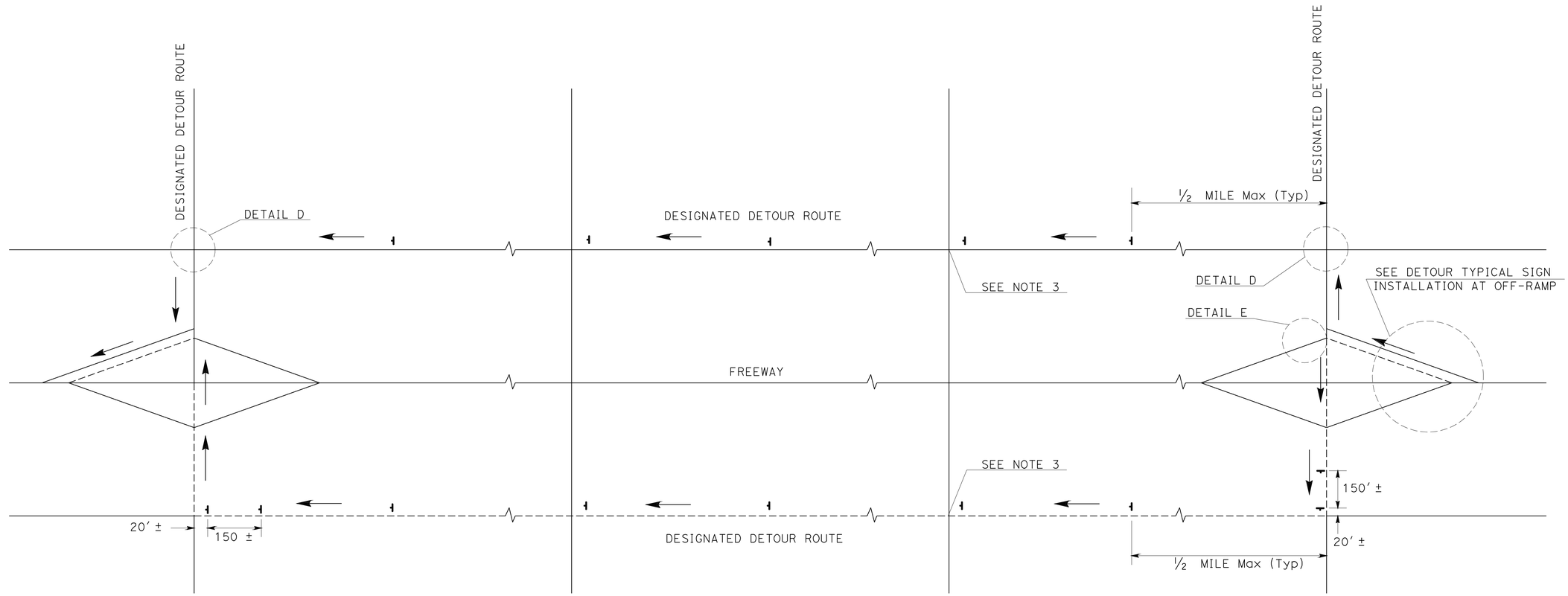

TYPICAL DETOUR SIGN INSTALLATION ALONG DESIGNATED DETOUR ROUTE

LEGEND

- SIGN SP-2
- AND/OR DESIGNATED DETOUR ROUTE
- DIRECTION OF TRAVEL

NOTES:

1. SP-2 SIGNS SHALL NOT BE INSTALLED ON BARRICADES EXCEPT AS OTHERWISE SHOWN.
2. SIGN LOCATIONS ARE APPROXIMATE. EXACT LOCATIONS WILL BE DETERMINED BY THE ENGINEER.
3. SP-2 SIGNS SHALL BE POSTED AT SIGNALIZED INTERSECTIONS ALONG THE DESIGNATED DETOUR ROUTE OR ½ MILE MAXIMUM APART.

TRAFFIC HANDLING DETAILS

TRAFFIC CONTROL SYSTEM FOR DETOUR SIGN INSTALLATION ALONG DESIGNATED DETOUR ROUTE

SHEET 1 OF 2

NO SCALE

THD-4

JC	9/08	ALBERT K YU	CALCULATED-DESIGNED BY
JC	7/08	JOCELYN C CHIANG	CHECKED BY
REVISED BY		DENIS S KATAYAMA	FUNCTIONAL SUPERVISOR
DATE REVISED			

STATE OF CALIFORNIA - DEPARTMENT OF TRANSPORTATION
Caltrans
DTM

LAST REVISION 00-00-00 | DATE PLOTTED => 27-MAY-2010 | TIME PLOTTED => 10:24

Dist	COUNTY	ROUTE	POST MILES TOTAL PROJECT	SHEET No.	TOTAL SHEETS
07	LA	5	15.8/16.9	69	145

Duke M Huynh 03-03-09
REGISTERED CIVIL ENGINEER DATE

5-24-10
PLANS APPROVAL DATE

REGISTERED PROFESSIONAL ENGINEER
DUKE HUYNH
No. 65591
Exp. 9-30-09
CIVIL
STATE OF CALIFORNIA

THE STATE OF CALIFORNIA OR ITS OFFICERS OR AGENTS SHALL NOT BE RESPONSIBLE FOR THE ACCURACY OR COMPLETENESS OF SCANNED COPIES OF THIS PLAN SHEET.

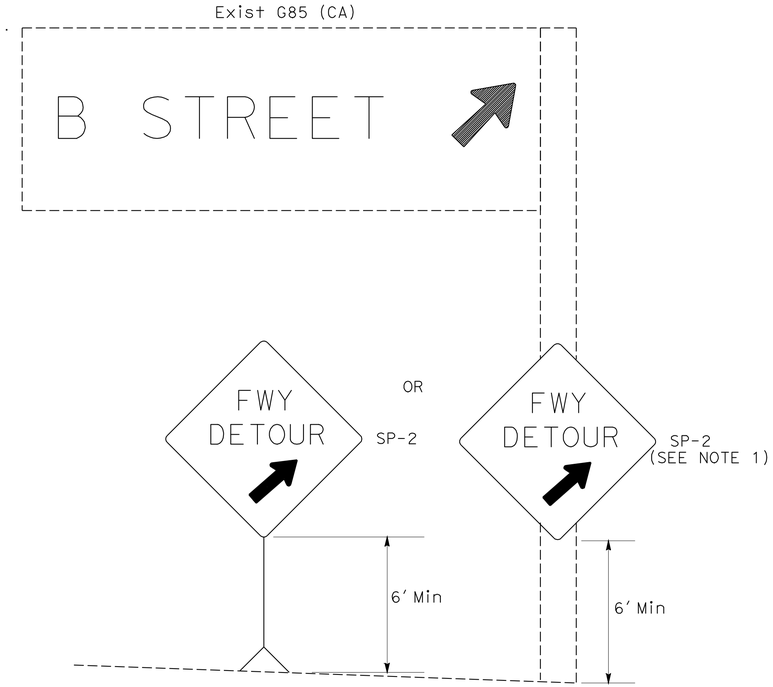

DETAIL A (SEE NOTE 2)

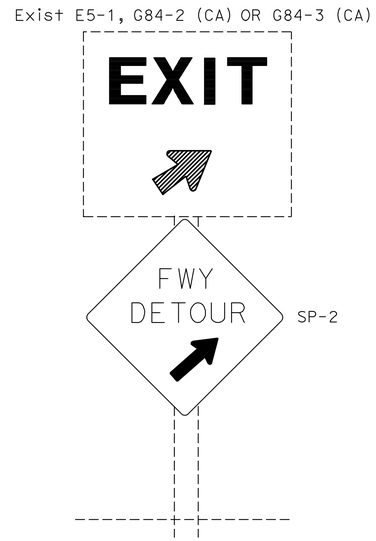

DETAIL B (SEE NOTE 2)

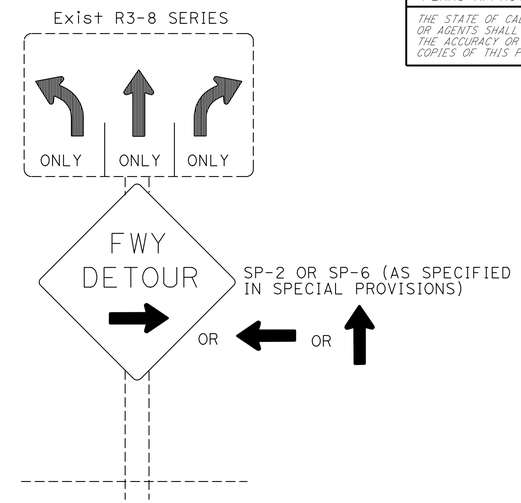

DETAIL C (SEE NOTE 3)

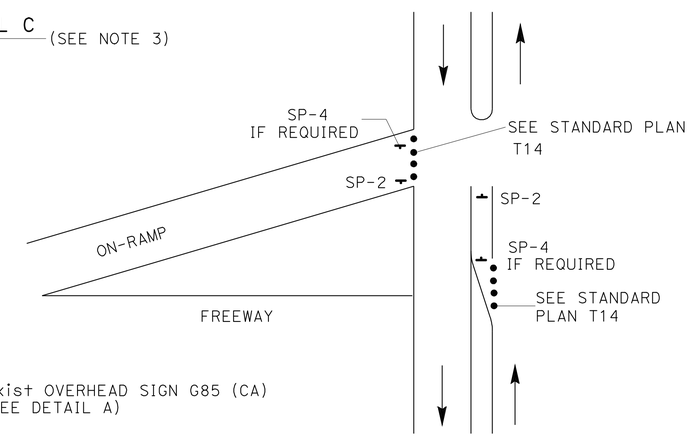

DETAIL E

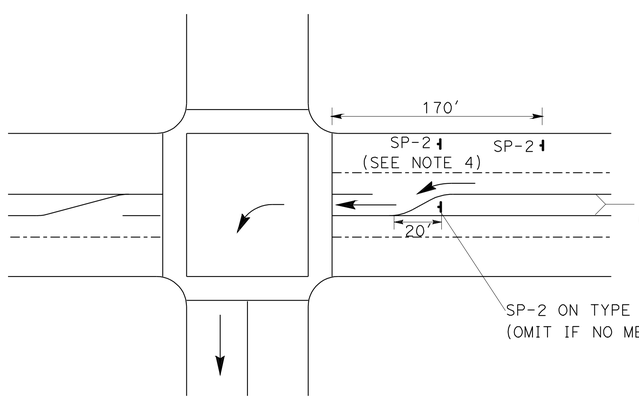

DETAIL D

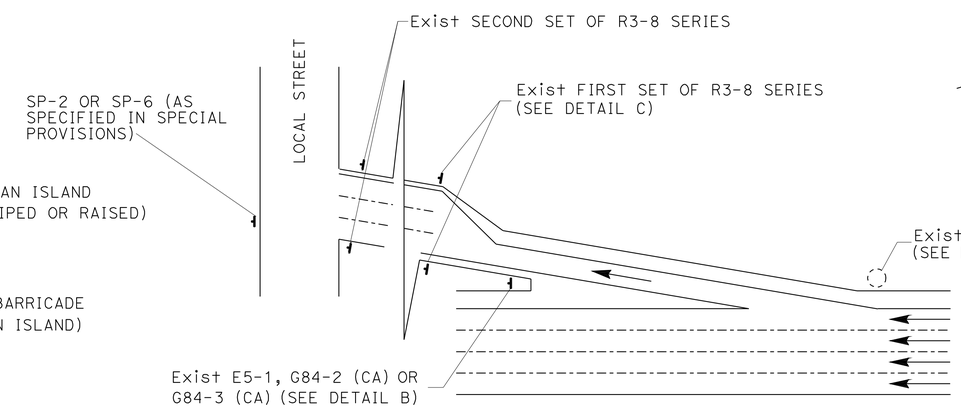

TYPICAL DETOUR SIGN INSTALLATION AT OFF-RAMP

NOTES:

1. SP-2 MAY BE STRAPPED ON EXISTING ELECTROLIER SIGNAL POSTS OR SIGN POSTS.
2. OMIT DETAIL A AND DETAIL B FOR FULL FREEWAY CLOSURES.
3. SEE TRAFFIC HANDLING DETAILS PLAN-TRAFFIC CONTROL SYSTEM FOR RAMP CLOSURES, DETOUR SIGNS AND MISCELLANEOUS DETAILS SHEET 2 OF 2 FOR SP-6.
4. OMIT IF MEDIAN ISLAND EXIST.

ABBREVIATIONS

(CA) CALIFORNIA CODE

LEGENDS

- CONE
- PORTABLE SIGN
- DIRECTION OF TRAVEL
- EXISTING OVERHEAD SIGN

TRAFFIC HANDLING DETAILS
TRAFFIC CONTROL SYSTEM FOR DETOUR SIGN INSTALLATION ALONG DESIGNATED DETOUR ROUTE
SHEET 2 OF 2
NO SCALE

THD-5

JC	9/08	ALBERT K YU	CALCULATED-DESIGNED BY
JC	7/08	JOCELYN C CHIANG	CHECKED BY
REVISED BY	DATE REVISED	DENIS S KATAYAMA	FUNCTIONAL SUPERVISOR

STATE OF CALIFORNIA - DEPARTMENT OF TRANSPORTATION
DTM
Caltrans

LAST REVISION 00-00-00 | DATE PLOTTED => 27-MAY-2010 | TIME PLOTTED => 10:25

Dist	COUNTY	ROUTE	POST MILES TOTAL PROJECT	SHEET No.	TOTAL SHEETS
07	LA	5	15.8/16.9	70	145

REGISTERED CIVIL ENGINEER 3-8-10 DATE

5-24-10
PLANS APPROVAL DATE

REGISTERED PROFESSIONAL ENGINEER Mai P. Bui No. C61280 Exp. 6-30-11 CIVIL STATE OF CALIFORNIA

THE STATE OF CALIFORNIA OR ITS OFFICERS OR AGENTS SHALL NOT BE RESPONSIBLE FOR THE ACCURACY OR COMPLETENESS OF SCANNED COPIES OF THIS PLAN SHEET.

NOTES:

1. SIGN LOCATIONS ARE APPROXIMATE. EXACT LOCATIONS WILL BE DETERMINED BY THE ENGINEER.
2. SEE CONSTRUCTION AREA SIGNS AND TRAFFIC HANDLING PLANS FOR ADDITIONAL CONSTRUCTION SIGNS.
3. IN LIEU OF WOOD POSTS, SIGNS MAY BE ATTACHED TO THE EXISTING POWER POLES AND ELECTROLIERS BY STRAP AND SADDLE BRACKET METHOD AS APPROVED BY THE ENGINEER.

LEGEND:

- ONE POST SIGN
- BARRICADE TYPE III
- ROAD CLOSED
- DIRECTION OF DETOUR TRAFFIC
- TWO POST SIGN
- (X) SIGN NUMBER

STATIONARY MOUNTED CONSTRUCTION AREA SIGNS

SIGN No.	2	3	4	5	6	7	A	B	C	D	E	G	H
CODE	M4-10L	M4-10R	SC3 (CA)	W20-2	R11-2	R11-4	W-SPECIAL	G7-1A(CA) SC3 (CA)	R3-2 R- SPECIAL	M1-4 M4-10L	R3-1 R-SPECIAL	W-SPECIAL	M1-4 G7-1A(CA) SC3 (CA)
SIGN MESSAGE	DETOUR (LEFT ARROW)	DETOUR (RIGHT ARROW)	DETOUR	DETOUR AHEAD	ROAD CLOSED	ROAD CLOSED TO THROUGH TRAFFIC	SEE PLAN	SEE PLAN	SEE PLAN	SEE PLAN	SEE PLAN	SEE PLAN	SEE PLAN
QUANTITY	5	8	10	8	2	2	4	4	3	1	2	2	3
PANEL SIZE	48" x 18"	48" x 18"	48" x 18"	48" x 48"	48" x 30"	60" x 30"	48" x 48"	36" x 18" 36" x 18"	24" x 24" 36" x 24"	28" x 24" 48" x 18"	24" x 24" 36" x 24"	48" x 48"	28" x 24" 36" x 18" 36" x 18"
No. of POSTS	1	1	1	1	BARRICADE TYPE III	1	1	1	1	1	1	1	1
POST SIZE	4" x 4"	4" x 4"	4" x 4"	4" x 6"		4" x 4"	4" x 4"	4" x 6"	4" x 4"	4" x 4"	4" x 4"	4" x 4"	4" x 4"

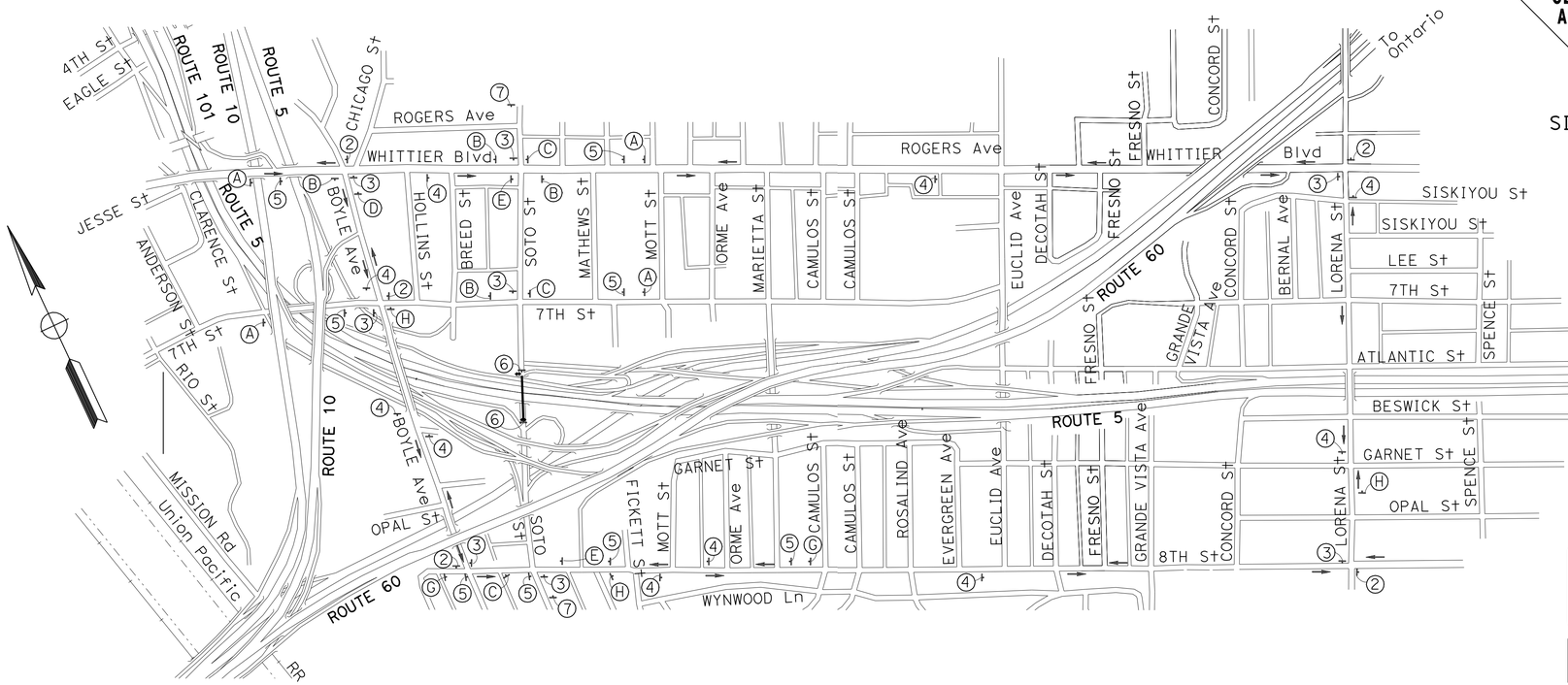

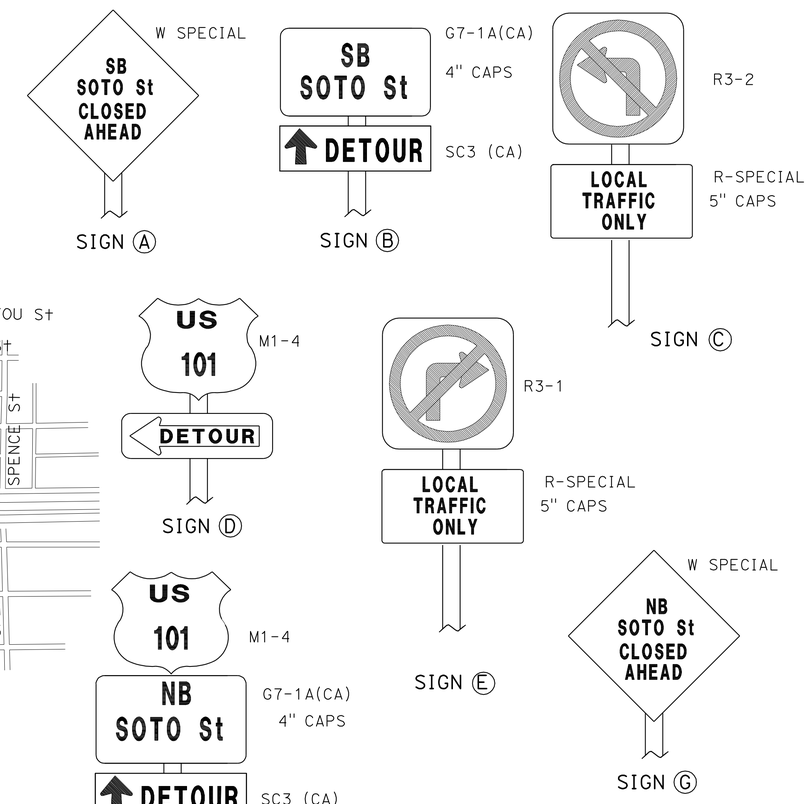

TRAFFIC HANDLING DETAILS
(DETOUR PLAN)
SOTO St CLOSURE

NO SCALE

THD-6

THIS PLAN ACCURATE FOR DETOURS ONLY.

STATE OF CALIFORNIA - DEPARTMENT OF TRANSPORTATION
Caltrans OFFICE OF DESIGN A

FUNCTIONAL SUPERVISOR: SIMON KUO
CALCULATED-DESIGNED BY: MAI BUI
CHECKED BY: HUAN NGUYEN
REVISED BY / DATE REVISED

LAST REVISION 00-00-00 DATE PLOTTED => 27-MAY-2010 TIME PLOTTED => 10:25

Dist	COUNTY	ROUTE	POST MILES TOTAL PROJECT	SHEET No.	TOTAL SHEETS
07	LA	5	15.8/16.9	71	145

REGISTERED CIVIL ENGINEER 3-8-10 DATE

5-24-10
PLANS APPROVAL DATE

REGISTERED PROFESSIONAL ENGINEER
Mai P. Bui
No. C61280
Exp. 6-30-11
CIVIL
STATE OF CALIFORNIA

THE STATE OF CALIFORNIA OR ITS OFFICERS OR AGENTS SHALL NOT BE RESPONSIBLE FOR THE ACCURACY OR COMPLETENESS OF SCANNED COPIES OF THIS PLAN SHEET.

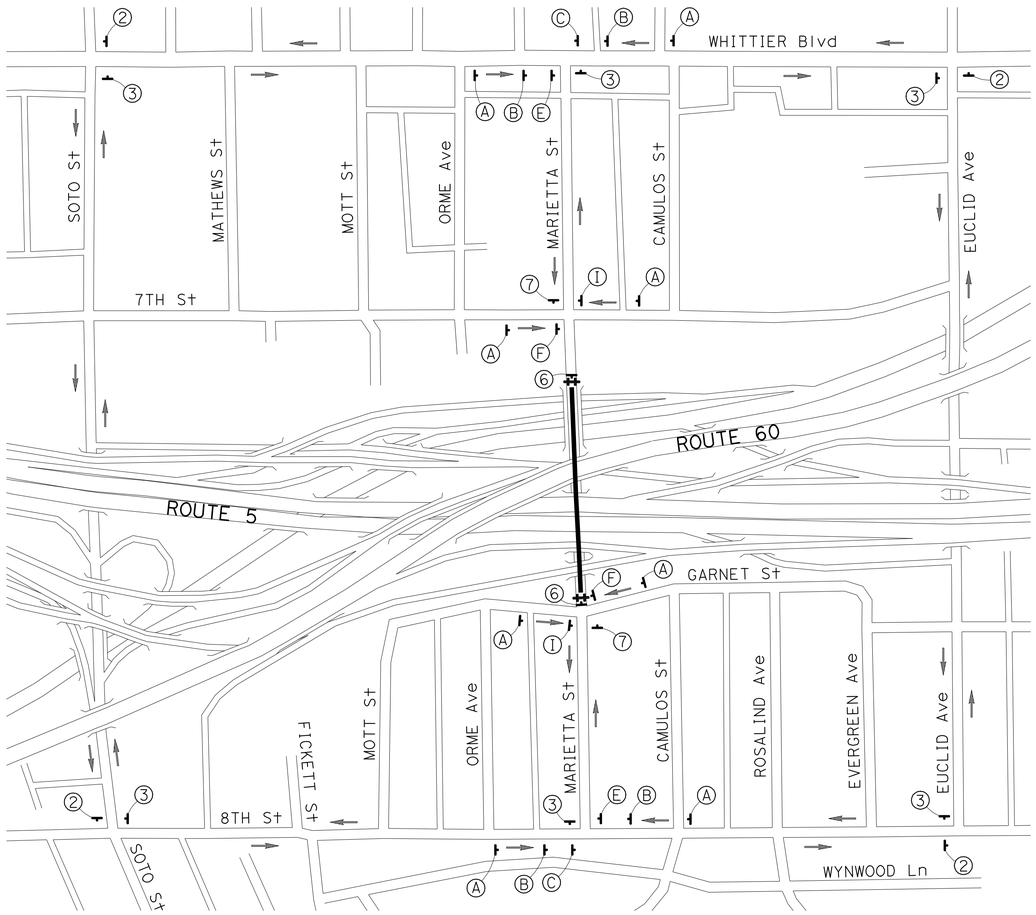

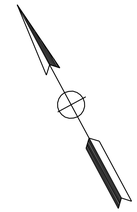

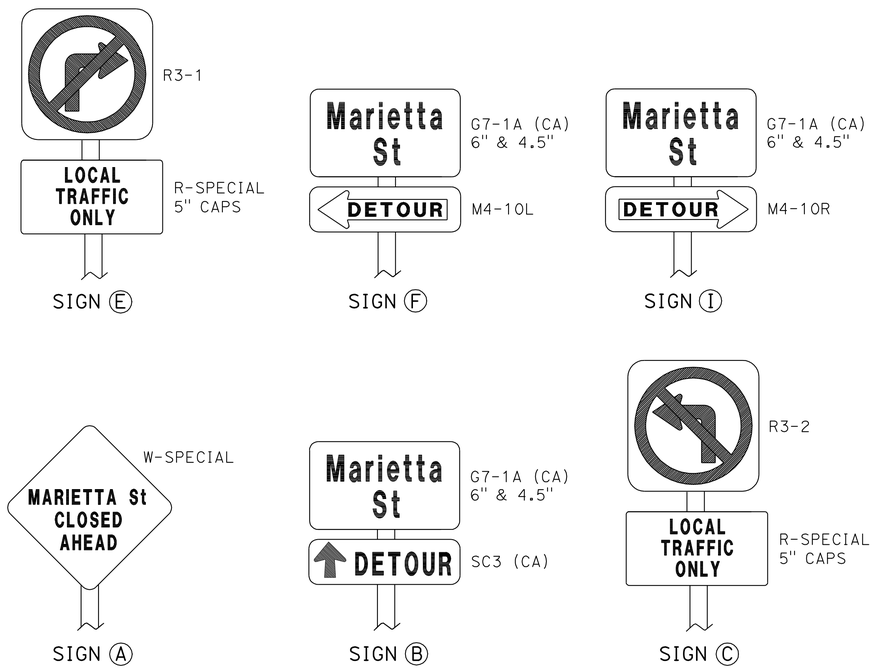

STATIONARY MOUNTED CONSTRUCTION AREA SIGNS

SIGN No.	②	③	⑥	⑦	Ⓐ	Ⓑ	Ⓒ	Ⓔ	Ⓕ	Ⓘ
SIGN CODE	M4-10L	M4-10R	R11-2	R11-4	W-SPECIAL	G7-1A (CA) SC3 (CA)	R3-2 R-SPECIAL	R3-1 R-SPECIAL	G7-1A (CA) M4-10L	G7-1A (CA) M4-10R
SIGN MESSAGE	DETOUR (LEFT ARROW)	DETOUR (RIGHT ARROW)	ROAD CLOSED	ROAD CLOSED TO THRU TRAFFIC	MARIETTA St CLOSED AHEAD	SEE PLAN	SEE PLAN	SEE PLAN	SEE PLAN	SEE PLAN
QUANTITY	4	6	2	2	8	8	4	4	4	4
PANEL SIZE	48" x 18"	48" x 18"	48" x 30"	60" x 30"	48" x 48"	48" x 30" 48" x 18"	24" x 24" 36" x 24"	24" x 24" 36" x 24"	48" x 30" 48" x 18"	48" x 30" 48" x 18"
No. OF POSTS	1	1	BARRICADE TYPE III	1	1	1	1	1	1	1
POST SIZE	4" x 4"	4" x 4"		4" x 6"	4" x 4"	4" x 6"	4" x 4"	4" x 4"	4" x 6"	4" x 6"

THIS PLAN ACCURATE FOR DETOURS ONLY.

TRAFFIC HANDLING DETAILS
(DETOUR PLAN)
MARIETTA St CLOSURE

NO SCALE

THD-7

STATE OF CALIFORNIA - DEPARTMENT OF TRANSPORTATION
Caltrans® OFFICE OF DESIGN A

FUNCTIONAL SUPERVISOR: SIMON KUO
CALCULATED-DESIGNED BY: HUAN NGUYEN
CHECKED BY: MAI BUI
REVISED BY
DATE REVISED

LAST REVISION 00-00-00
DATE PLOTTED => 27-MAY-2010
TIME PLOTTED => 10:25

Dist	COUNTY	ROUTE	POST MILES TOTAL PROJECT	SHEET No.	TOTAL SHEETS
07	LA	5	15.8/16.9	72	145

REGISTERED CIVIL ENGINEER 3-8-10 DATE

5-24-10
PLANS APPROVAL DATE

REGISTERED PROFESSIONAL ENGINEER Mai P. Bui No. C61280 Exp. 6-30-11 CIVIL STATE OF CALIFORNIA

THE STATE OF CALIFORNIA OR ITS OFFICERS OR AGENTS SHALL NOT BE RESPONSIBLE FOR THE ACCURACY OR COMPLETENESS OF SCANNED COPIES OF THIS PLAN SHEET.

STATIONARY MOUNTED CONSTRUCTION AREA SIGNS

SIGN No.	1	2	3	4	6	8
CODE	SC7	M4-10L	M4-10R	SC3 (CA)	R11-2	R3-2
SIGN MESSAGE	RAMP CLOSED USE RAMP AT WHITTER Blvd	DETOUR (LEFT ARROW)	DETOUR (RIGHT ARROW)	DETOUR	ROAD CLOSED	LEFT TURN PROHIBITION
QUANTITY	2	2	4	8	2	1
PANEL SIZE	84" x 42"	48" x 18"	48" x 18"	48" x 18"	48" x 30"	48" x 48"
No. of POSTS	2	1	1	1	BARRICADE TYPE III	1
POST SIZE	4" x 4"	4" x 4"	4" x 4"	4" x 4"		4" x 4"

SIGN No.	9	10	A	B	C	D	E	F	G
CODE	M4-8a	M4-8b	W-SPECIAL	G7-1A(CA) SC3 (CA)	R3-2 R- SPECIAL	M1-4 M4-10L	R3-1 R-SPECIAL	G7-1A (CA) M4-10L	G7-1A (CA) M4-10R
SIGN MESSAGE	END DETOUR	END	SEE PLAN	SEE PLAN	SEE PLAN	SEE PLAN	SEE PLAN	SEE PLAN	SEE PLAN
QUANTITY	1	1	9	2	3	5	2	2	6
PANEL SIZE	24" x 18"	24" x 12"	48" x 48"	36" x 18" 36" x 18"	24" x 24" 36" x 24"	28" x 24" 48" x 18"	24" x 24" 36" x 24"	48" x 30" 48" x 18"	48" x 30" 48" x 18"
No. of POSTS	1	1	1	1	1	1	1	1	1
POST SIZE	4" x 4"	4" x 4"	4" x 4"	4" x 6"	4" x 4"	4" x 4"	4" x 4"	4" x 6"	4" x 6"

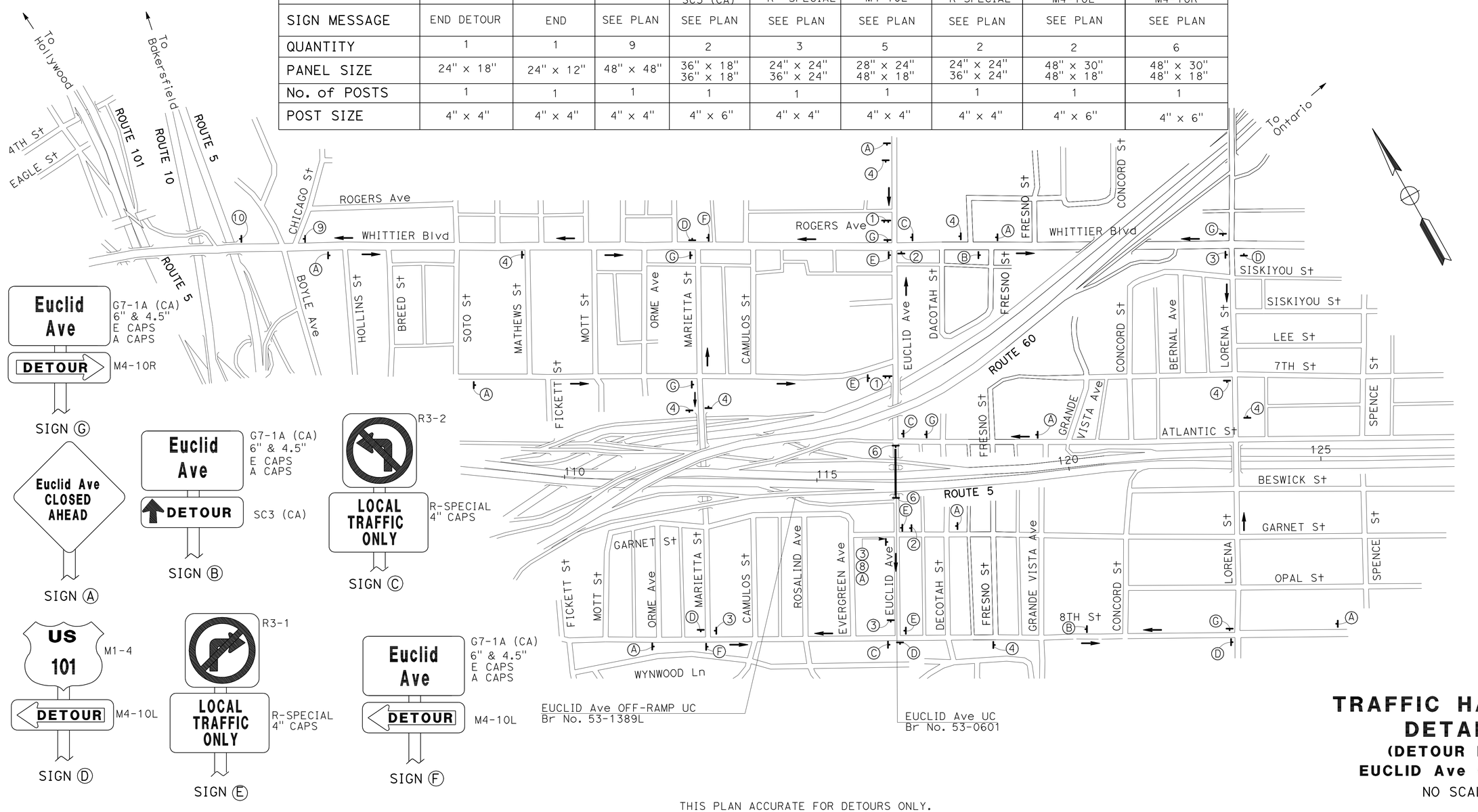

THIS PLAN ACCURATE FOR DETOURS ONLY.

TRAFFIC HANDLING DETAILS
(DETOUR PLAN)
EUCLID Ave CLOSURE

NO SCALE

THD-8

REVISED BY	DATE REVISED
KHANH NGUYEN	SIMON KUO
CALCULATED-DESIGNED BY	CHECKED BY
FUNCTIONAL SUPERVISOR	SIMON KUO

STATE OF CALIFORNIA - DEPARTMENT OF TRANSPORTATION
Caltrans® OFFICE OF DESIGN A

LAST REVISION 00-00-00 | DATE PLOTTED => 27-MAY-2010 | TIME PLOTTED => 10:25

Dist	COUNTY	ROUTE	POST MILES TOTAL PROJECT	SHEET No.	TOTAL SHEETS
07	LA	5	15.8/16.9	73	145

REGISTERED CIVIL ENGINEER 3-8-10 DATE

5-24-10
PLANS APPROVAL DATE

REGISTERED PROFESSIONAL ENGINEER Mai P. Bui No. C61280 Exp. 6-30-11 CIVIL STATE OF CALIFORNIA

THE STATE OF CALIFORNIA OR ITS OFFICERS OR AGENTS SHALL NOT BE RESPONSIBLE FOR THE ACCURACY OR COMPLETENESS OF SCANNED COPIES OF THIS PLAN SHEET.

SHEET No.	LOCATION	DETAIL No./ PAVEMENT MARKING	PAVEMENT MARKER* TYPE A (NON-REFLECTIVE)	PAVEMENT MARKER* RETROREFLECTIVE TYPE G	PAVEMENT MARKER* RETROREFLECTIVE TYPE H	PAINT TRAFFIC STRIPE (2-COAT) 4"	PAINT TRAFFIC STRIPE (2-COAT) 8"	PAINT PAVEMENT MARKING (2-COAT)	REMOVE PAVEMENT MARKER* TYPE A	REMOVE PAVEMENT MARKER* TYPE G	REMOVE PAVEMENT MARKER* TYPE H	REMOVE THERMOPLASTIC TRAFFIC STRIPE	REMOVE YELLOW THERMOPLASTIC TRAFFIC STRIPE (HAZARDOUS WASTE)	REMOVE THERMOPLASTIC PAVEMENT MARKING	TEMPORARY RAILING (TYPE K)	TEMPORARY TERMINAL SECTION (TYPE K)	CHANNELIZER (SURFACE MOUNTED)
			EA	EA	EA	LF	LF	SQFT	EA	EA	EA	LF	LF	SQFT	LF	EA	EA
TH-1	NB Rte 5	13M	134	34		1560			134	34		400					
		25			18	780					18		780				
															542		
	SB Rte 5	13M	94	24		1078			94	24		277					
		25			18	780					18		780				
		36		14			314			14		628**					
															882	1	10
TH-2	NB Rte 5	13M	144	36		1675			144	36		430					
		25			31	1400					31		1400				
		38		15			120			15		240**					
		38B		12			339			12		678**					
															1400		
	SB Rte 5	13M	167	43		1976			167	43		507					
		25			31	1400					31		1400				
		27B				879						879					
		36		5			90			5		180**					
															1400		
TH-3	NB Rte 5	13M	118	29		1365			121	30		358					
		25			28	1300					28		1300				
		27B				656						656					
															1300		
	SB Rte 5	13M	221	55		2600			221	55		667					
		25			28	1300					28		1300				
		36								4		88**					
		TYPE VI ARROW												42			
															1300		
SUBTOTAL			878	267	154	18749	863		881	272	154	5988	6960	42	6824	1	10
SHEET TOTAL			878	421		19612			1307			5988	6960	42	6824	1	10

* FOR ADDITIONAL QUANTITIES, SEE SHEET PDQ-1 AND PDQ-2.
** 8" WIDE STRIPES ARE MEASURED AS 2 TRAFFIC STRIPES.

TRAFFIC HANDLING QUANTITIES

THQ-1

STATE OF CALIFORNIA - DEPARTMENT OF TRANSPORTATION
Caltrans® OFFICE OF DESIGN A

FUNCTIONAL SUPERVISOR: SIMON KUO
CALCULATED-DESIGNED BY: HUAN NGUYEN
CHECKED BY: MAI BUI
REVISED BY / DATE REVISED

LAST REVISION 00-00-00 | DATE PLOTTED => 27-MAY-2010 | TIME PLOTTED => 10:25

Dist	COUNTY	ROUTE	POST MILES TOTAL PROJECT	SHEET No.	TOTAL SHEETS
07	LA	5	15.8/16.9	74	145

REGISTERED CIVIL ENGINEER 3-8-10 DATE

5-24-10
PLANS APPROVAL DATE

REGISTERED PROFESSIONAL ENGINEER Mai P. Bui No. C61280 Exp. 6-30-11 CIVIL STATE OF CALIFORNIA

THE STATE OF CALIFORNIA OR ITS OFFICERS OR AGENTS SHALL NOT BE RESPONSIBLE FOR THE ACCURACY OR COMPLETENESS OF SCANNED COPIES OF THIS PLAN SHEET.

SHEET No.	LOCATION	DETAIL No./ PAVEMENT MARKING	PAVEMENT MARKER* TYPE A (NON-REFLECTIVE)	PAVEMENT MARKER* RETROREFLECTIVE TYPE G	PAVEMENT MARKER* RETROREFLECTIVE TYPE H	PAINT TRAFFIC STRIPE (2-COAT) 4"	PAINT TRAFFIC STRIPE (2-COAT) 8"	PAINT PAVEMENT MARKING (2-COAT)	REMOVE PAVEMENT MARKER* TYPE A	REMOVE PAVEMENT MARKER* TYPE G	REMOVE PAVEMENT MARKER* TYPE H	REMOVE THERMOPLASTIC TRAFFIC STRIPE	REMOVE YELLOW THERMOPLASTIC TRAFFIC STRIPE (HAZARDOUS WASTE)	REMOVE THERMOPLASTIC PAVEMENT MARKING	TEMPORARY RAILING (TYPE K)	TEMPORARY TERMINAL SECTION (TYPE K)	CHANNELIZER (SURFACE MOUNTED)
			EA	EA	EA	LF	LF	SQFT	EA	EA	EA	LF	LF	SQFT	LF	EA	EA
TH-4	NB Rte 5	13M	113	28		1300			113	28		334					
		25			28	1300					28		1300				
		27B				560						560					
															1300		
	SB Rte 5	13M	135	34		1567			135	34		402					
		25			28	1300					28		1300				
		27B				739						739					
		36		12			260			12		520**					
		38		14			296			14		592**					
		1' WHITE												55			
		TYPE VI ARROW						126						84			
															1300		
TH-5	NB Rte 5	13M	103	26		1180			103	26		303					
		25			26	1180					26		1180				
		38		16			364			23		1028**					
		1' WHITE												15			
															965	1	10
	SB Rte 5	13M	294	74		3475			294	74		891					
		25			23	1050					23		1050				
		27B				241						241					
		38		7			139			7		278**					
		1' WHITE												5			
															885		
SUBTOTAL			645	211	105	13892	1059	126	645	218	105	5888	4830	159	4450	1	10
SHEET TOTAL			645	316		14951		126	968			5888	4830	159	4450	1	10
TOTAL (TH-1 TO TH-5)			1523	737		34563		126	2275			11876	11790	201	11274	2	20

* FOR ADDITIONAL QUANTITIES, SEE SHEET PDQ-1 AND PDQ-2.
** 8" WIDE STRIPES ARE MEASURED AS 2 TRAFFIC STRIPES.

TRAFFIC HANDLING QUANTITIES

THQ-2

REVISED BY | DATE REVISED
HUAN NGUYEN | MAI BUI
CALCULATED-DESIGNED BY | CHECKED BY
FUNCTIONAL SUPERVISOR: SIMON KUO

STATE OF CALIFORNIA - DEPARTMENT OF TRANSPORTATION
Caltrans® OFFICE OF DESIGN A

LAST REVISION 00-00-00 | DATE PLOTTED => 27-MAY-2010 | TIME PLOTTED => 10:25

Dist	COUNTY	ROUTE	POST MILES TOTAL PROJECT	SHEET No.	TOTAL SHEETS
07	LA	5	15.8/16.9	75	145

REGISTERED CIVIL ENGINEER 3-8-10 DATE

5-24-10
PLANS APPROVAL DATE

REGISTERED PROFESSIONAL ENGINEER Mai P. Bui No. C61280 Exp. 6-30-11 CIVIL STATE OF CALIFORNIA

THE STATE OF CALIFORNIA OR ITS OFFICERS OR AGENTS SHALL NOT BE RESPONSIBLE FOR THE ACCURACY OR COMPLETENESS OF SCANNED COPIES OF THIS PLAN SHEET.

SHEET No.	LOCATION	DETAIL No./ PAVEMENT MARKING	PAVEMENT MARKER*			THERMOPLASTIC TRAFFIC STRIPE		THERMOPLASTIC PAVEMENT MARKING	REMOVE				
									PAVEMENT MARKER*			PAINTED TRAFFIC STRIPE	PAINTED PAVEMENT MARKING
			TYPE A (NON-REFLECTIVE)	RETROREFLECTIVE TYPE G	RETROREFLECTIVE TYPE H	4"	8"		TYPE A	TYPE G	TYPE H		
			EA	EA	EA	LF	LF	SQFT	EA	EA	EA	LF	SQFT
TH-1	NB Rte 5	13M	134	34		1560			134	34		400	
		25			18	780					18	780	
	SB Rte 5	13M	94	24		1078			94	24		277	
		25			18	780					18	780	
		36		17			384			14		628**	
TH-2	NB Rte 5	13M	144	36		1675			144	36		430	
		25			31	1400					31	1400	
		38		15			120			15		240**	
		38B		12			339			12		678**	
	SB Rte 5	13M	167	43		1976			167	43		507	
		25			31	1400					31	1400	
		27B				879						879	
		36		5			90			5		180**	
TH-3	NB Rte 5	13M	121	30		1395			118	29		350	
		25			28	1300					28	1300	
		27B				656						656	
	SB Rte 5	13M	221	55		2600			221	55		171	
		25			28	1300					28	1300	
		36		4			44						
		TYPE VI ARROW						42					
SUBTOTAL			881	275	154	18779	977	42	878	267	154	12356	
SHEET TOTAL			881	429		18779	977	42	1299			12356	

* FOR ADDITIONAL QUANTITIES, SEE SHEET THQ-1 AND THQ-2.
** 8" WIDE STRIPES ARE MEASURED AS 2 TRAFFIC STRIPES.

PAVEMENT DELINEATION QUANTITIES

PDQ-1

HUAN NGUYEN — REVISED BY
MAI BUI — DATE REVISED
CALCULATED-DESIGNED BY
CHECKED BY
FUNCTIONAL SUPERVISOR
SIMON KUO

STATE OF CALIFORNIA - DEPARTMENT OF TRANSPORTATION
Caltrans® OFFICE OF DESIGN A

LAST REVISION 00-00-00
DATE PLOTTED => 27-MAY-2010
TIME PLOTTED => 10:42

Dist	COUNTY	ROUTE	POST MILES TOTAL PROJECT	SHEET No.	TOTAL SHEETS
07	LA	5	15.8/16.9	76	145

REGISTERED CIVIL ENGINEER 3-8-10 DATE

5-24-10
PLANS APPROVAL DATE

REGISTERED PROFESSIONAL ENGINEER Mai P. Bui No. C61280 Exp. 6-30-11 CIVIL STATE OF CALIFORNIA

THE STATE OF CALIFORNIA OR ITS OFFICERS OR AGENTS SHALL NOT BE RESPONSIBLE FOR THE ACCURACY OR COMPLETENESS OF SCANNED COPIES OF THIS PLAN SHEET.

SHEET No.	LOCATION	DETAIL No./ PAVEMENT MARKING	PAVEMENT MARKER*			THERMOPLASTIC TRAFFIC STRIPE		THERMOPLASTIC PAVEMENT MARKING	REMOVE				
									PAVEMENT MARKER*			PAINTED TRAFFIC STRIPE	PAINTED PAVEMENT MARKING
			TYPE A (NON-REFLECTIVE)	RETROREFLECTIVE									
				TYPE G	TYPE H	4"	8"		TYPE A	TYPE G	TYPE H		
			EA	EA	EA	LF	LF	SQFT	EA	EA	EA	LF	SQFT
TH-4	NB Rte 5	13M	113	28		1300			113	28		334	
		25			28	1300					28	1300	
		27B				560						560	
	SB Rte 5	13M	135	34		1567			135	34		402	
		25			28	1300					28	1300	
		27B				739						739	
		36		13			274			12		520**	
		38		14			296			14		592**	
		1′ WHITE						55					
		TYPE VI ARROW						84					126
TH-5	NB Rte 5	13M	103	26		1180			103	26		303	
		25			26	1180					26	1180	
		38		23			514			16		728**	
		1′ WHITE						15					
	SB Rte 5	13M	283	74		3342			294	74		891	
		25			23	1050					23	1050	
		27B				241						241	
		38		13			271			7		278**	
		1′ WHITE											5
SUBTOTAL			634	225	105	13759	1355	154	645	211	105	10418	131
SHEET TOTAL			634	330		13759	1355	154	961			10418	131
TOTAL (TH-1 TO TH-5)			1515	759		32538	2332	196	2260			22774	131

* FOR ADDITIONAL QUANTITIES, SEE SHEET THQ-1 AND THQ-2.
** 8" WIDE STRIPES ARE MEASURED AS 2 TRAFFIC STRIPES.

PAVEMENT DELINEATION QUANTITIES

PDQ-2

REVISED BY	DATE REVISED
HUAN NGUYEN	MAI BUI
CALCULATED-DESIGNED BY	CHECKED BY
FUNCTIONAL SUPERVISOR	SIMON KUO

STATE OF CALIFORNIA - DEPARTMENT OF TRANSPORTATION
Caltrans® OFFICE OF DESIGN A

LAST REVISION 00-00-00 | DATE PLOTTED => 27-MAY-2010 | TIME PLOTTED => 10:42

Dist	COUNTY	ROUTE	POST MILES TOTAL PROJECT	SHEET No.	TOTAL SHEETS
07	LA	5	15.8/16.9	77	145

REGISTERED CIVIL ENGINEER 2-3-10 DATE

5-24-10
PLANS APPROVAL DATE

REGISTERED PROFESSIONAL ENGINEER
AREG BASIL
No. 53079
Exp. 06/30/10
CIVIL
STATE OF CALIFORNIA

THE STATE OF CALIFORNIA OR ITS OFFICERS OR AGENTS SHALL NOT BE RESPONSIBLE FOR THE ACCURACY OR COMPLETENESS OF SCANNED COPIES OF THIS PLAN SHEET.

NOTES:

1. FOR ACCURATE R/W AND ACCESS DATA CONTACT R/W ENGINEERING AT THE DISTRICT OFFICE.
2. EXISTING UTILITIES HAVE NOT BEEN PLOTTED ON THESE PLANS.
3. SIGN LOCATIONS ARE APPROXIMATE, EXACT POSITIONS AND LOCATIONS WILL BE DETERMINED BY THE ENGINEER.

G23-1(CA)

Euclid Ave	1/4
Indiana St	1 1/2
Ditman Ave	1 3/4

BACK PANEL

BACK / FRONT

G86-1(CA)

Fourth St
NEXT RIGHT

FRONT PANEL

SIGN (1A) (RS)
FNBT Sta 129+28

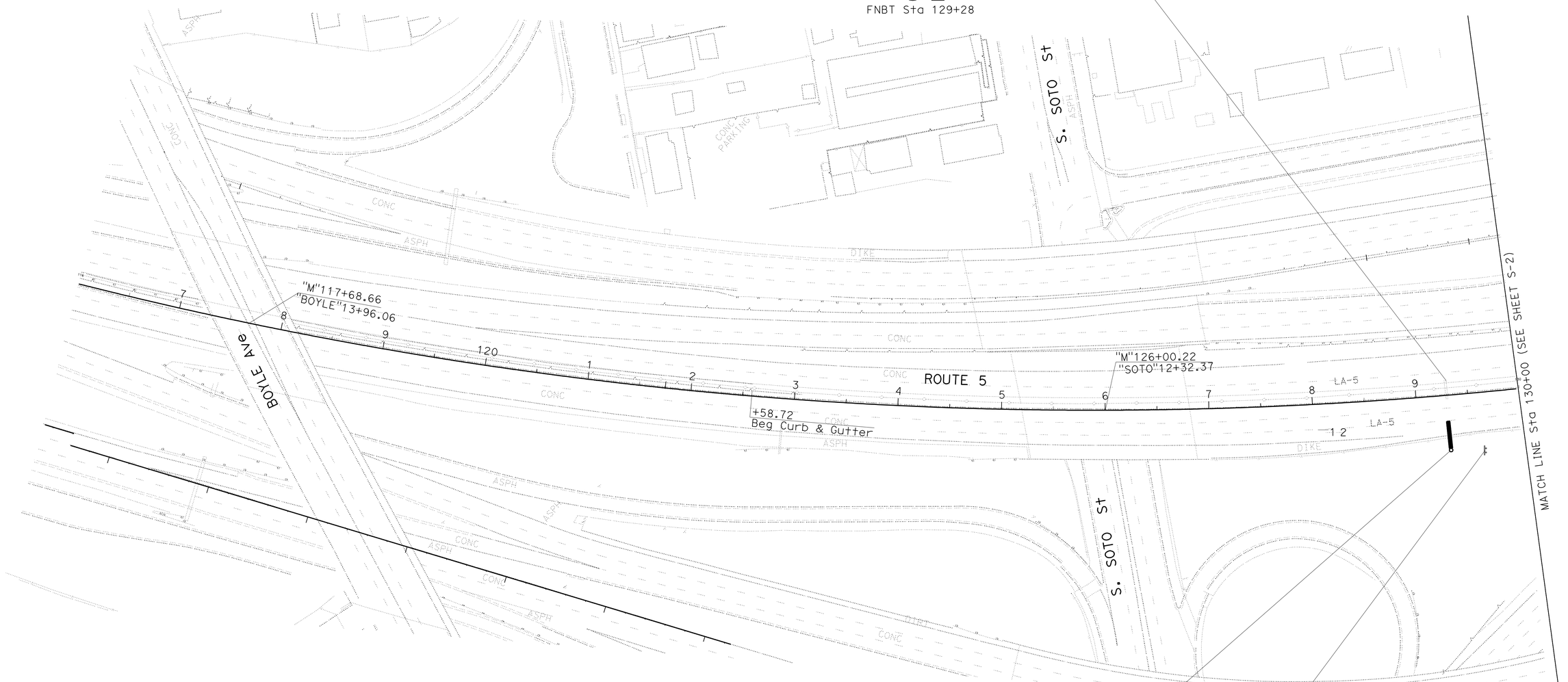

LEGENDS:

(RS) REMOVE SIGN

(1A) OVERHEAD SIGN NUMBER

(S1-1) ROADSIDE SIGN NUMBER

G23-1(CA) 20'-0"

90"

Euclid Ave	1/4
Indiana St	1 1/2
Ditman Ave	1 3/4

SIGN (1B)
FSBT Sta 129+30

THIS PLAN ACCURATE FOR SIGN WORK ONLY

G86(CA)

Euclid Ave
RIGHT LANE

(S1-1) (RS)

FSBT Sta 129+65

ALL DIMENSION ARE IN FEET UNLESS OTHERWISE SHOWN

SIGN PLAN

SCALE: 1" = 50'

S-1

STATE OF CALIFORNIA - DEPARTMENT OF TRANSPORTATION
Caltrans® TRAFFIC DESIGN

FUNCTIONAL SUPERVISOR: CRICORIS BIGLARIAN

CALCULATED-DESIGNED BY: MARISA MANDOCDOC
CHECKED BY: AREG BASIL

REVISED BY
DATE REVISED

LAST REVISION 00-00-00
DATE PLOTTED => 27-MAY-2010
TIME PLOTTED => 10:42

Dist	COUNTY	ROUTE	POST MILES TOTAL PROJECT	SHEET No.	TOTAL SHEETS
07	LA	5	15.8/16.9	78	145

REGISTERED CIVIL ENGINEER 2-3-10 DATE

5-24-10
PLANS APPROVAL DATE

REGISTERED PROFESSIONAL ENGINEER
AREG BASIL
No. 53079
Exp. 06/30/10
CIVIL
STATE OF CALIFORNIA

THE STATE OF CALIFORNIA OR ITS OFFICERS OR AGENTS SHALL NOT BE RESPONSIBLE FOR THE ACCURACY OR COMPLETENESS OF SCANNED COPIES OF THIS PLAN SHEET.

NOTE:

1. FOR ACCURATE R/W AND ACCESS DATA CONTACT R/W ENGINEERING AT THIS DISTRICT OFFICE.
2. EXISTING UTILITIES HAVE NOT BEEN PLOTTED ON THESE PLANS.
3. SIGN LOCATIONS ARE APPROXIMATE, EXACT POSITIONS AND LOCATIONS WILL BE DETERMINED BY THE ENGINEER.

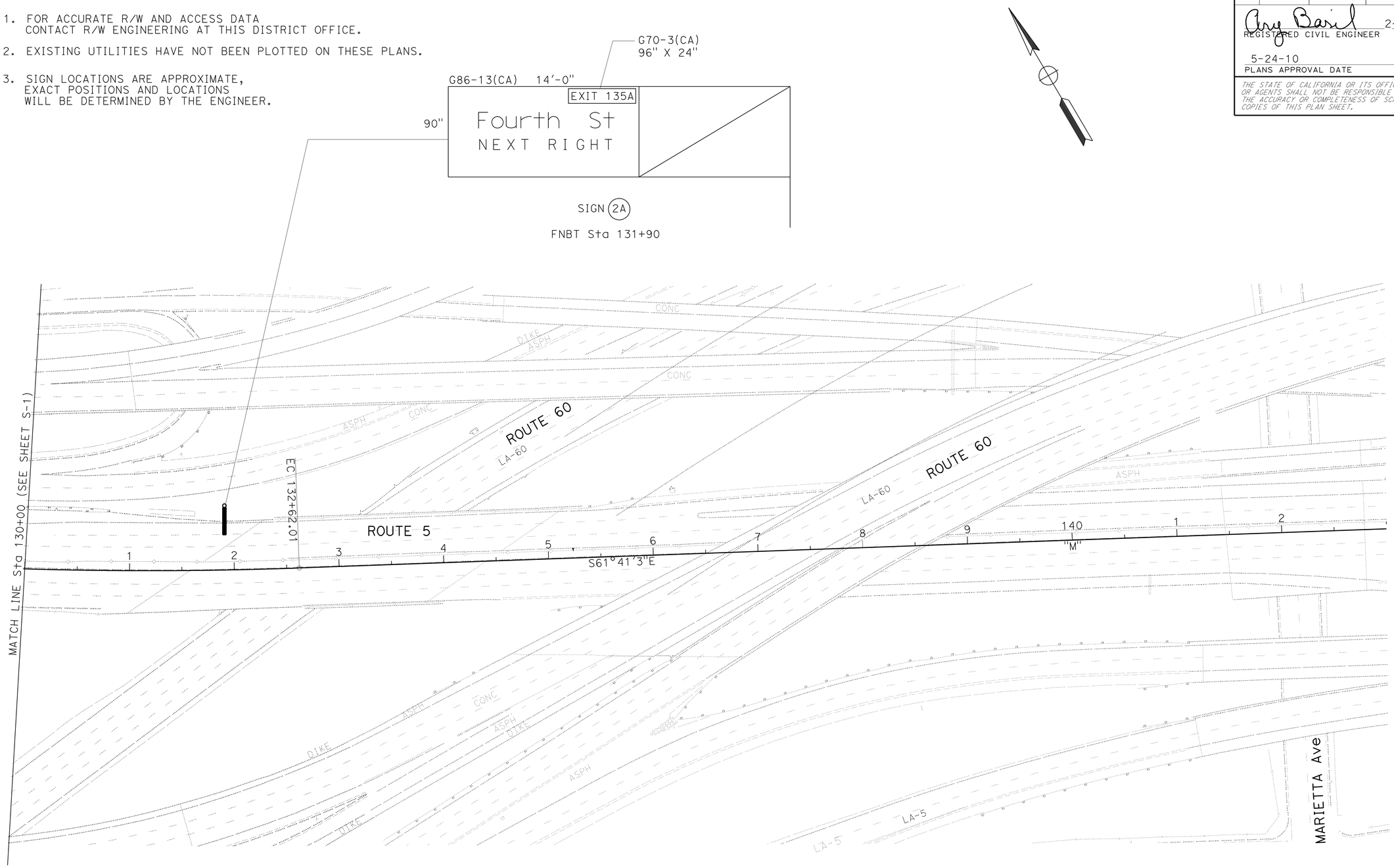

SIGN PLAN
SCALE: 1" = 50'

THIS PLAN ACCURATE FOR SIGN WORK ONLY

S-2

STATE OF CALIFORNIA - DEPARTMENT OF TRANSPORTATION
Caltrans® **TRAFFIC DESIGN**

FUNCTIONAL SUPERVISOR: CRICORIS BIGLARIAN
CALCULATED-DESIGNED BY: MARISA MANDOCDOC
CHECKED BY: AREG BASIL
REVISED BY
DATE REVISED

LAST REVISION 00-00-00
DATE PLOTTED => 27-MAY-2010
TIME PLOTTED => 10:42

BORDER LAST REVISED 4/11/2008
RELATIVE BORDER SCALE IS IN INCHES 0 1 2 3
USERNAME => trmikesl
DGN FILE => 718410oa002.dgn
CU 07380
EA 184101

Dist	COUNTY	ROUTE	POST MILES TOTAL PROJECT	SHEET No.	TOTAL SHEETS
07	LA	5	15.8/16.9	79	145

REGISTERED CIVIL ENGINEER 2-3-10 DATE

5-24-10
PLANS APPROVAL DATE

REGISTERED PROFESSIONAL ENGINEER AREG BASIL No. 53079 Exp. 06/30/10 CIVIL STATE OF CALIFORNIA

THE STATE OF CALIFORNIA OR ITS OFFICERS OR AGENTS SHALL NOT BE RESPONSIBLE FOR THE ACCURACY OR COMPLETENESS OF SCANNED COPIES OF THIS PLAN SHEET.

NOTES:

1. THE CONTRACTOR SHALL VERIFY DEPENDENT DIMENSIONS IN THE FIELD BEFORE ORDERING OR FABRICATING MATERIAL.
2. OVERHEAD SIGN INSTALLATIONS SHALL MAINTAIN A MINIMUM CLEARANCE OF 18'-5" BETWEEN THE HIGH POINT OF FINISHED SURFACE OF THE ROADBED AND THE BOTTOM OF THE WALKWAY.
3. SIGN PANELS FOR OVERHEAD SIGNS SHALL BE FORMED PANELS WITH REMOVABLE SIGN PANEL FRAME (RSPF), UNLESS OTHERWISE NOTED.
4. SIGN STRUCTURES SHALL BE TRUSS.
5. ILLUMINATE ALL OVERHEAD SIGN STRUCTURES.

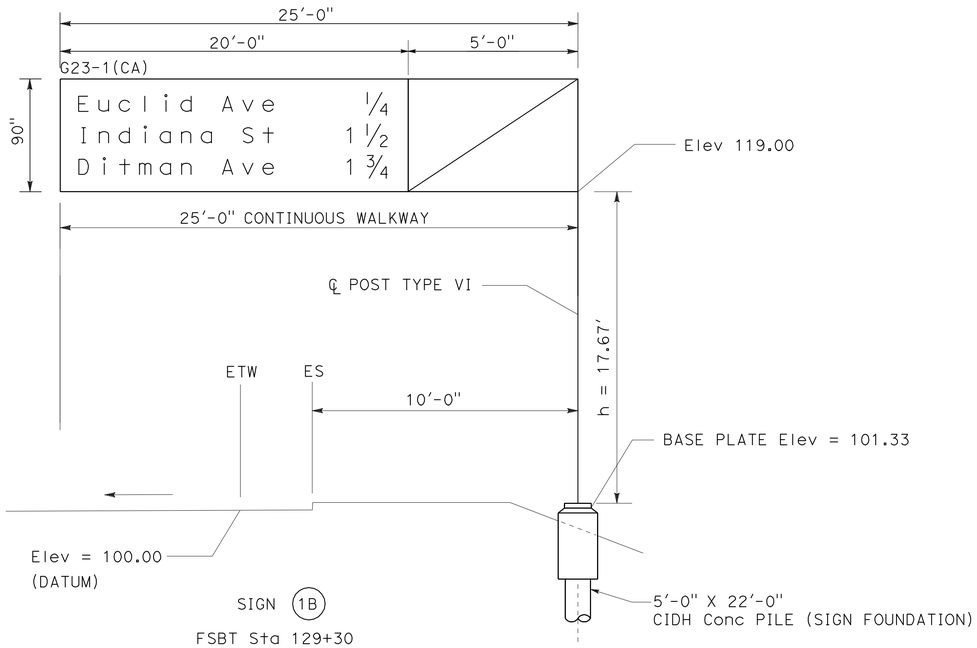

SIGN (1B)

FSBT Sta 129+30

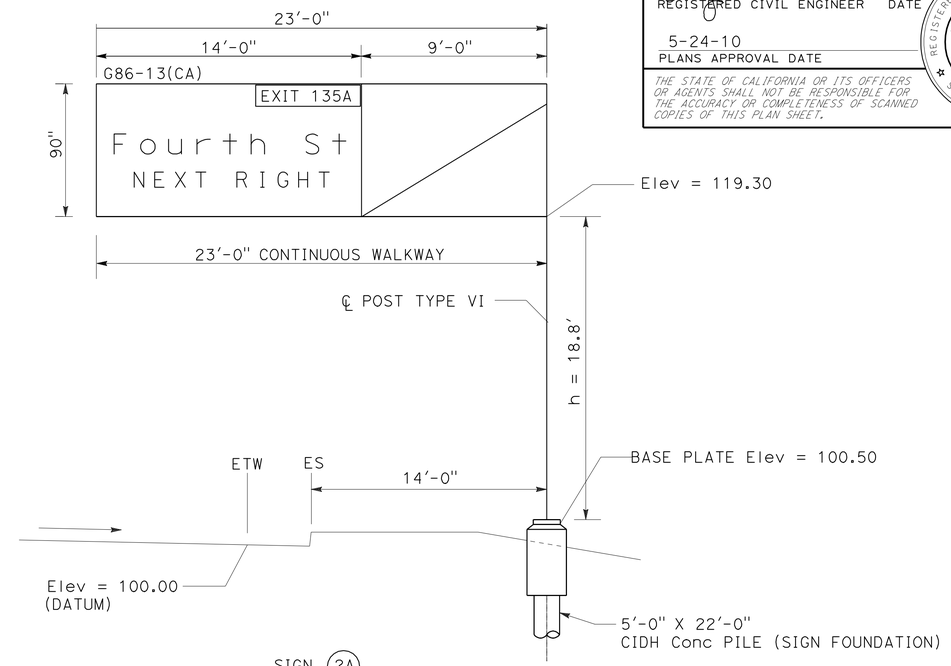

SIGN (2A)

FNBT Sta 131+90

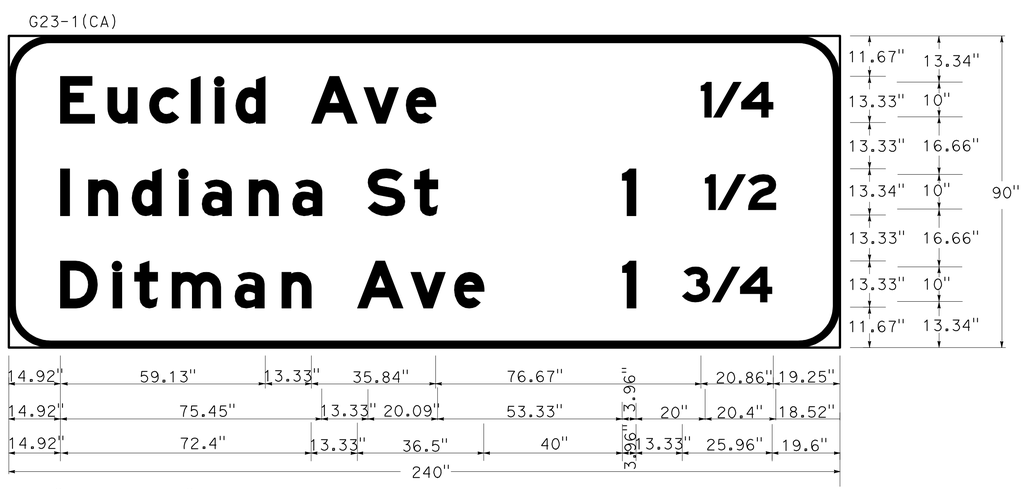

12.00" RADIUS, 2.00" BORDER, WHITE ON GREEN;
(Euclid Ave 1/4) E MOD 86% SPACING;
(Indiana St 1 1/2) E MOD;
(Ditman Ave 1 3/4) E MOD

SIGN DETAIL G23(CA)

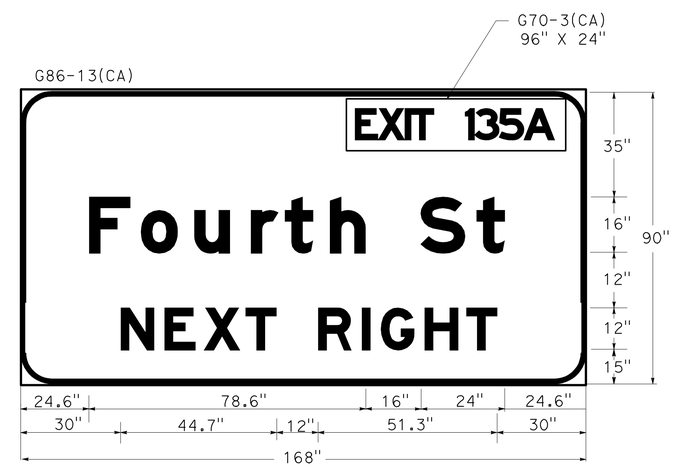

SIGN DETAIL G86-13(CA)

THIS PLAN ACCURATE FOR SIGN WORK ONLY

SIGN DETAILS
NO SCALE

SD-1

STATE OF CALIFORNIA - DEPARTMENT OF TRANSPORTATION
Caltrans® TRAFFIC DESIGN

FUNCTIONAL SUPERVISOR: CRICORIS BIGLARIAN
CALCULATED-DESIGNED BY: MARISA MANDOCDOC
CHECKED BY: AREG BASIL
REVISED BY
DATE REVISED

LAST REVISION 00-00-00
DATE PLOTTED => 27-MAY-2010
TIME PLOTTED => 10:42

Dist	COUNTY	ROUTE	POST MILES TOTAL PROJECT	SHEET No.	TOTAL SHEETS
07	LA	5	15.8/16.9	80	145

REGISTERED CIVIL ENGINEER 2-3-10 DATE

5-24-10
PLANS APPROVAL DATE

REGISTERED PROFESSIONAL ENGINEER AREG BASIL No. 53079 Exp. 06/30/10 CIVIL STATE OF CALIFORNIA

THE STATE OF CALIFORNIA OR ITS OFFICERS OR AGENTS SHALL NOT BE RESPONSIBLE FOR THE ACCURACY OR COMPLETENESS OF SCANNED COPIES OF THIS PLAN SHEET.

SUMMARY OF SIGNS

SHEET No.	OVERHEAD SIGN No. ○	ROADSIDE SIGN No. ⬭	STATION AND DIRECTION	SIGN CODE	PANEL SIZE INCHES	SIGN STRUCTURE (TRUSS) FURNISH LB	SIGN STRUCTURE (TRUSS) INSTALL LB	CIDH CONCRETE PILE (SIGN FOUNDATION) 60" LF	REMOVE SIGN STRUCTURE EA	REMOVE ROADSIDE SIGN
S-1	1A		129+28 FNBT	G23-1(CA)/ G86-1(CA)					1	
	1B		129+30 FSBT	G23-1(CA)	240" X 90"	13,979	13,979	22		
		S1-1	129+65 FSBT	G86(CA)						1
S-2	2A		131+90 FNBT	G86-13(CA)	168" X 90"	13,593	13,593	22		
				TOTAL		27,572	27,572	44	1	1

LEGEND:

FRP : FIBERGLASS REINFORCED PLASTIC
L : LENGTH OF SIGN
D : DEPTH OF SIGN
RSPF: REMOVEABLE SIGN PANEL FRAME

NOTES:

1. SIGNS ARE CA MUTCD (CALIFORNIA MANUAL ON UNIFORM TRAFFIC CONTROL DEVICES, SEP 2006 EDITION) CODED.
2. (CA) DENOTES CALIFORNIA CODED SIGNS.
3. FOR SIGN SPECIFICATIONS SEE CALTRANS WEBSITE: http:// www.dot.ca.gov/hq/traffops/signtech/signdel/specs.htm

CONTRACTOR FURNISHED OVERHEAD SIGNS

MATERIAL SUMMARY

SHEET No.	SIGN No.	SIGN CODE	SIGN SIZE L X D	SIGN AREA (SQFT)	SINGLE FACED	DOUBLE FACED	BACKGROUND SHEETING COLOR	BACKGROUND RETROREFLECTIVE ASTM TYPE	LEGEND SHEETING COLOR	LEGEND RETROREFLECTIVE ASTM TYPE	LEGEND NON-REFLECTIVE	GRAFFITI FILM STANDARD	GRAFFITI FILM PREMIUM	OVERHEAD LAMINATED (1" TYPE A)	OVERHEAD FORMED WITH OUT RSPF	OVERHEAD FORMED WITH RSPF	DESCRIPTION (REMARKS)
S-1	1B	G23-1(CA)	240" X 90"	150	X		GREEN	IV	WHITE	IV			X			X	
S-2	2A	G86-13(CA)	168" X 90"	105	X		GREEN	IV	WHITE	IV			X			X	
TOTAL				255													

SIGN QUANTITIES

THIS PLAN ACCURATE FOR SIGN WORK ONLY

SQ-1

STATE OF CALIFORNIA - DEPARTMENT OF TRANSPORTATION
Caltrans® TRAFFIC DESIGN

FUNCTIONAL SUPERVISOR: CRICORIS BIGLARIAN
CALCULATED-DESIGNED BY: MARISA MANDOCDOC
CHECKED BY: AREG BASIL
REVISED BY
DATE REVISED

LAST REVISION 00-00-00
DATE PLOTTED => 27-MAY-2010
TIME PLOTTED => 10:42

Dist	COUNTY	ROUTE	POST MILES TOTAL PROJECT	SHEET No.	TOTAL SHEETS
07	LA	5	15.8/16.9	81	145

REGISTERED CIVIL ENGINEER 3-8-10 DATE

5-24-10
PLANS APPROVAL DATE

REGISTERED PROFESSIONAL ENGINEER Mai P. Bui No. C61280 Exp 6-30-11 STATE OF CALIFORNIA

THE STATE OF CALIFORNIA OR ITS OFFICERS OR AGENTS SHALL NOT BE RESPONSIBLE FOR THE ACCURACY OR COMPLETENESS OF SCANNED COPIES OF THIS PLAN SHEET.

CONCRETE BARRIER

SHEET No.	STATION	CONCRETE BARRIER (TYPE 732 Mod)	CONCRETE BARRIER SLAB	CONCRETE BARRIER (TYPE 60R Mod)	CONCRETE BARRIER (TYPE 60C)	CONCRETE BARRIER (TYPE 60C Trans)	CONCRETE BARRIER (TYPE 60D Mod)	CONCRETE BARRIER (TYPE 60E Mod)
		LF	LF	LF	LF	LF	LF	LF
L-1	110+80.75 TO 116+00	267	267	253			267	
L-2	116+00 TO 130+00	414	414		437	199	77	186
L-3	130+00 TO 143+00				385	181		310
L-4	143+00 TO 156+00				1068	99		
L-5	156+00 TO 164+60	302	302	60	440	60		
SUBTOTAL					2330	539		
TOTAL		983	983	313	2869		344	496

ROADWAY ITEMS

SHEET NUMBER	ROADWAY EXCAVATION	JOINTED PLAIN CONCRETE PAVEMENT	LEAN CONCRETE BASE	CLASS 3 AGGREGATE BASE	VEGETATION CONTROL (MINOR CONCRETE)	MINOR HMA	DITCH EXCAVATION	REMOVE CURB	REMOVE MBGR	REMOVE DOUBLE METAL BEAM BARRIER	REMOVE RETAINING WALL	SEAL PAVEMENT JOINT	SEAL LONGITUDINAL ISOLATION JOINT	METAL BEAM GUARD RAILING (WOOD POST)	END ANCHOR ASSEMBLY (TYPE SFT)	ALTERNATIVE IN-LINE TERMINAL SYSTEM	REMOVE AC DIKE	PLACE HMA DIKE	END CAP (TYPE A)	TEMPORARY DRAINAGE INLET PROTECTION	TEMPORARY COVER
	CY	CY	CY	CY	SQYD	TON	CY	LF	LF	LF	LF	LF	LF	LF	EA	EA	LF	LF	EA	EA	SQYD
L-1	787	96	48	67				1039	519			366	1039							3	100
L-2	2189	394	197	275				2471	720	427	108	1475	2471							2	150
L-3	1723	390	195	273	82	0.4		1754	214	663		1117	1755	100	2	1		50	1	1	150
L-4	1662	443	222	310				2466	783	384	783	2047	2333							3	100
L-5	1218	234	117	164		0.1	75	1720	860		500	1220	1720				1000	13.3		3	100
TOTAL	7579	1557	778	1089	82	0.5	75	9450	3096	1474	1391	6225	9318	100	2	1	1000	63.3	1	12	600

SUMMARY OF QUANTITIES

Q-1

STATE OF CALIFORNIA - DEPARTMENT OF TRANSPORTATION
Caltrans® OFFICE OF DESIGN A

FUNCTIONAL SUPERVISOR: SIMON KUO
CALCULATED-DESIGNED BY: STEWART STAHL
CHECKED BY: MAI BUI
REVISED BY
DATE REVISED

LAST REVISION 00-00-00
DATE PLOTTED => 27-MAY-2010
TIME PLOTTED => 11:39

Dist	COUNTY	ROUTE	POST MILES TOTAL PROJECT	SHEET No.	TOTAL SHEETS
07	LA	5	15.8/16.9	82	145

George Olguin
LICENSED LANDSCAPE ARCHITECT

5-24-10
PLANS APPROVAL DATE

LICENSED LANDSCAPE ARCHITECT
GEORGE OLGUIN
NO. 4333
George Olguin
Signature
08-31-10
Renewal Date
09-02-09
Date
STATE OF CALIFORNIA

THE STATE OF CALIFORNIA OR ITS OFFICERS OR AGENTS SHALL NOT BE RESPONSIBLE FOR THE ACCURACY OR COMPLETENESS OF SCANNED COPIES OF THIS PLAN SHEET.

NOTES:

1. FOR ACCURATE RIGHT OF WAY AND ACCESS DATA, CONTACT RIGHT OF WAY ENGINEERING AT THE THE DISTRICT OFFICE.
2. EXISTING UTILITY FACILITIES HAVE NOT BEEN PLOTTED ON THESE PLANS.

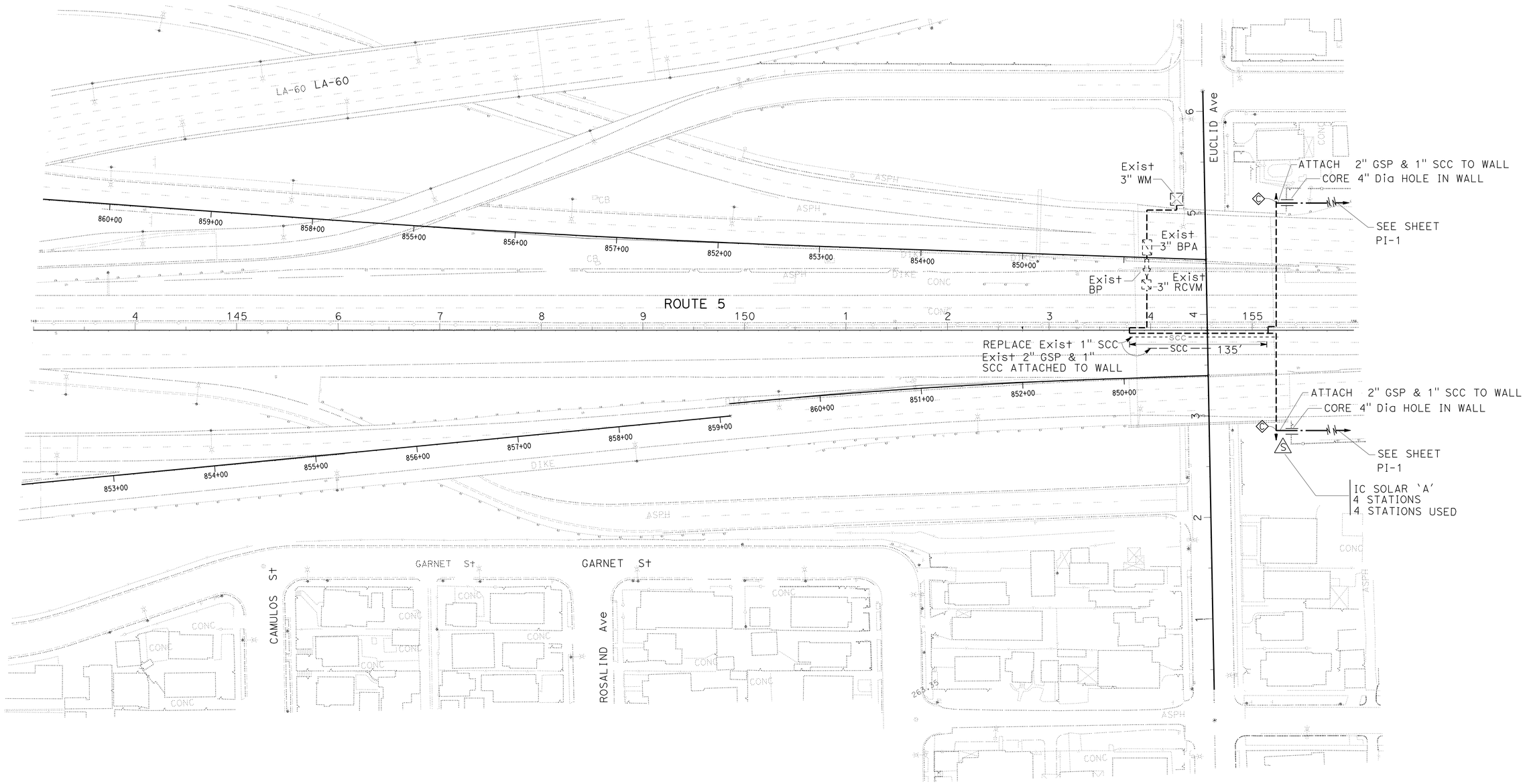

IRRIGATION PLAN

SCALE: 1" = 50'

IP-1

THIS PLAN ACCURATE FOR IRRIGATION WORK ONLY

REVISED BY	YI SU
DATE REVISED	01/19/2010
CALCULATED-DESIGNED BY	YI SU
CHECKED BY	GEORGE OLGUIN
SENIOR LANDSCAPE ARCHITECT	JENNIFER TAIRA

STATE OF CALIFORNIA - DEPARTMENT OF TRANSPORTATION
Caltrans® LANDSCAPE ARCHITECTURE

LAST REVISION 00-00-00
DATE PLOTTED => 27-MAY-2010
TIME PLOTTED => 11:39

Dist	COUNTY	ROUTE	POST MILES TOTAL PROJECT	SHEET No.	TOTAL SHEETS
07	LA	5	15.8/16.9	83	145

George Olguin
LICENSED LANDSCAPE ARCHITECT

5-24-10
PLANS APPROVAL DATE

LICENSED LANDSCAPE ARCHITECT
GEORGE OLGUIN
No. 4333
George Olguin
Signature
08-31-10
Renewal Date
09-09-09
Date
STATE OF CALIFORNIA

THE STATE OF CALIFORNIA OR ITS OFFICERS OR AGENTS SHALL NOT BE RESPONSIBLE FOR THE ACCURACY OR COMPLETENESS OF SCANNED COPIES OF THIS PLAN SHEET.

SPRINKLER SCHEDULE

SYMBOL	TYPE	DESCRIPTION	SPRAY PATTERN	OPERATING PRESSURE (PSI)	PRESSURE COMPENSATING	PLUS/MINUS 5% ② DISCHARGE: GALLONS PER MINUTE (GPM)	GALLONS PER HOUR (GPH)	RADIUS (Ft)	WIDTH x LENGTH (Ft)	MATERIAL	INLET CONNECTION (NPT INCH)	POSITIVE-LOCKING ADJ ARC STOP	BACKSPLASH PREVENTER	DIFFUSER PIN	DISTANCE CONTROL FLAP	ADJ DISCHARGE	RISER: TYPE	MATERIAL: PLASTIC	GALVANIZED	SIZE (IPS INCH)	HEIGHT (INCH)	FLOW SHUTOFF DEVICE	⑤ SWING JOINT (TYPE)	RISER SUPPORT	SPRINKLER PROTECTOR (TYPE)	REMARKS
/.-/	D-1	EMITTER	—	15/30	X	—	0.53/1	—	—	PL	5/8"	—	—	—	—	—	—	—	—	—	—	—	—	—	—	①

X IN BOX DENOTES REQUIREMENT

APPLICABLE WHEN CIRCLED BELOW:

① - See Special Provisions.
2 - If a pressure compensating device is specified, the discharge and radii shown reflect its use.
3 - Arc Stop shall be fitted with a nut and bolt.
4 - Vinyl-coated cast iron housing.
5 - Swing Joints required adjacent to shoulders, curbs, sidewalks, and dikes.
6 - Unless otherwise shown on plans.

ABBREVIATIONS

F	full circle	Ft	feet/foot
P	part circle	GPM	gallons per minute
F/P	full/part circle	GPH	gallons per hour
Q	quarter circle	Adj	adjustable
T	third circle	PL	plastic
H	half circle	B/B	brass/bronze
TT	two third circle	B/PL	brass/plastic
TQ	three quarter circle	B/B/PL	brass/bronze/plastic
CST	center strip	NPT	national pipe thread
SST	side strip	IPS	iron pipe size
EST	end strip	PSI	pounds per square inch

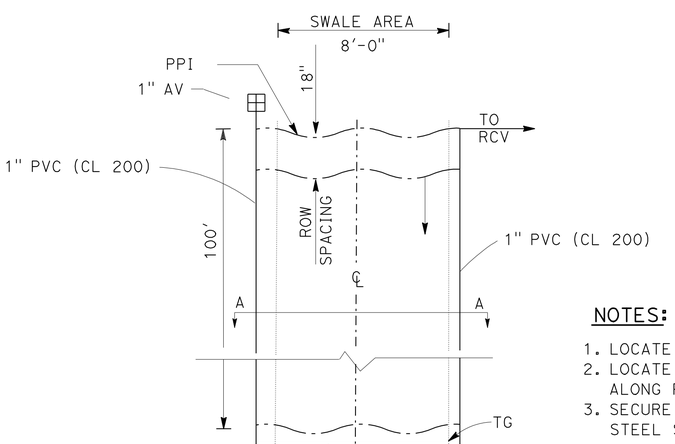

PLAN

IRRIGATION PLAN (BIO-SWALE)

NOTES:

1. LOCATE AV AT HIGHEST POINT.
2. LOCATE STEEL SOIL STAPLES ALONG PPI @ 3' O/C.
3. SECURE ALL FITTINGS WITH 2 STEEL SOIL STAPLES.

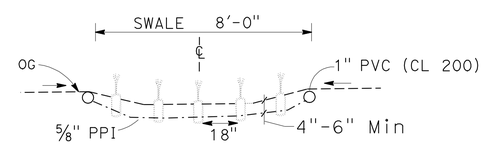

SECTION A

IRRIGATION PLAN (BIO-SWALE)

EXISTING	PROPOSED	ITEM DESCRIPTION
		AIR/VACUUM RELIEF VALVE (AV)
		PLASTIC PIPE IRRIGATION (LINE W/DRIP EMITTERS) (PPI)
		AUTOMATIC FLUSH VALVE (AFV)
	S	IRRIGATION CONTROLLER (IC) (SOLAR)
	P	REMOTE CONTROL VALVE (RCV) W/PRESSURE REGULATOR

SPRINKLER SCHEDULE
LANDSCAPE DETAILS

LD-1

REVISED BY	YI SU
DATE REVISED	12/21/2009
CALCULATED-DESIGNED BY	YI SU
CHECKED BY	GEORGE OLGUIN
SENIOR LANDSCAPE ARCHITECT	JENNIFER TAIRA

STATE OF CALIFORNIA - DEPARTMENT OF TRANSPORTATION
Caltrans® LANDSCAPE ARCHITECTURE

LAST REVISION 00-00-00
DATE PLOTTED => 27-MAY-2010
TIME PLOTTED => 11:39

Dist	COUNTY	ROUTE	POST MILES TOTAL PROJECT	SHEET No.	TOTAL SHEETS
07	LA	5	15.8/16.9	84	145

George Olguin
LICENSED LANDSCAPE ARCHITECT

5-24-10
PLANS APPROVAL DATE

LICENSED LANDSCAPE ARCHITECT
GEORGE OLGUIN
No. 4333
George Olguin
Signature
08-31-10
Renewal date
05-28-09
Date
STATE OF CALIFORNIA

THE STATE OF CALIFORNIA OR ITS OFFICERS OR AGENTS SHALL NOT BE RESPONSIBLE FOR THE ACCURACY OR COMPLETENESS OF SCANNED COPIES OF THIS PLAN SHEET.

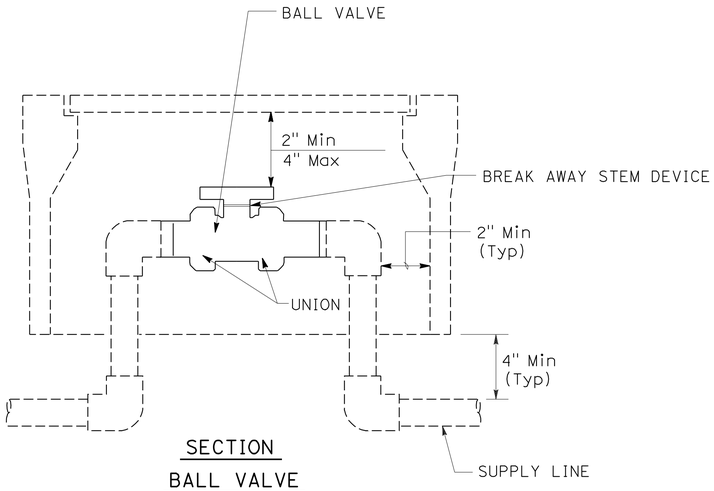

SECTION
BALL VALVE

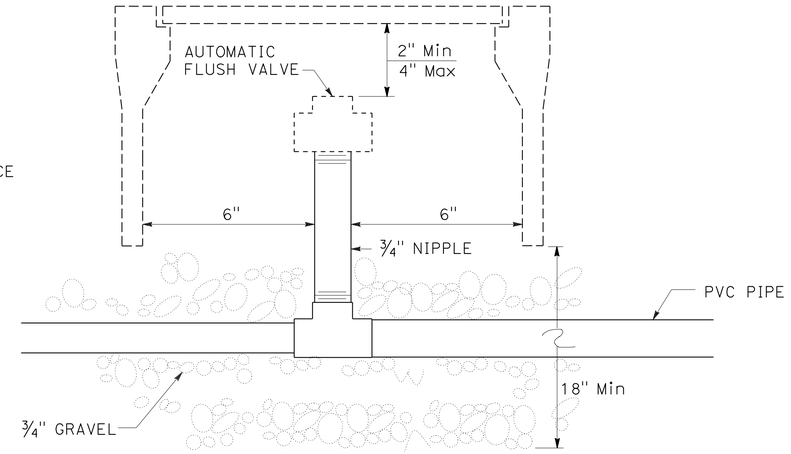

SECTION
AUTOMATIC FLUSH VALVE

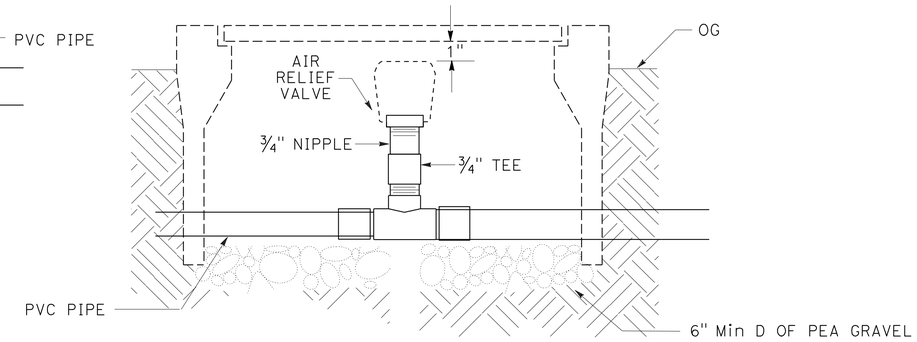

SECTION
AIR/VACUUM RELEASE VALVE

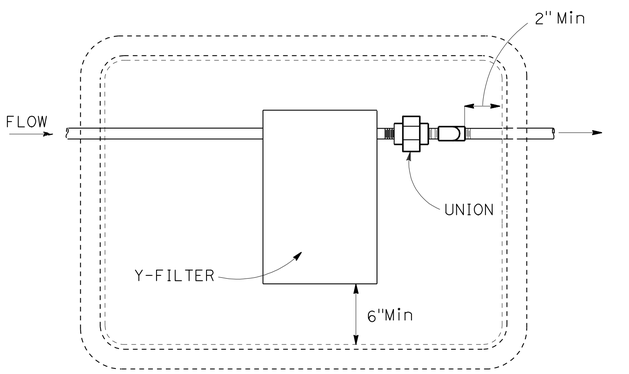

TOP OF FILTER ASSEMBLY UNIT SHALL BE 2" BELOW VALVE COVER

PLAN VIEW
FILTER ASSEMBLY UNIT

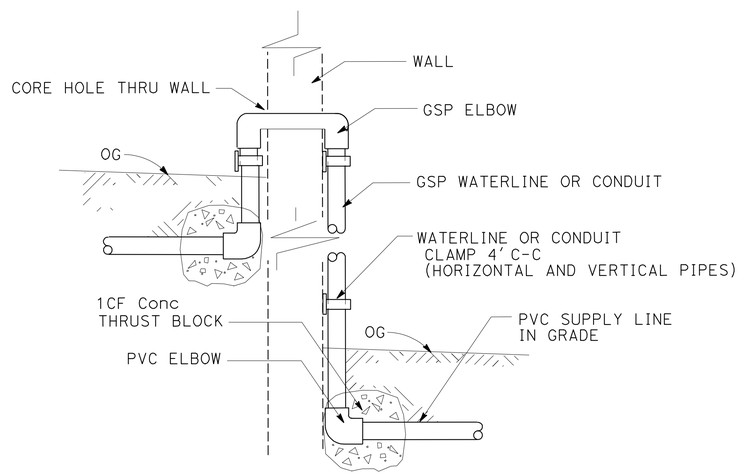

SECTION
SCC AND GSP ON WALL

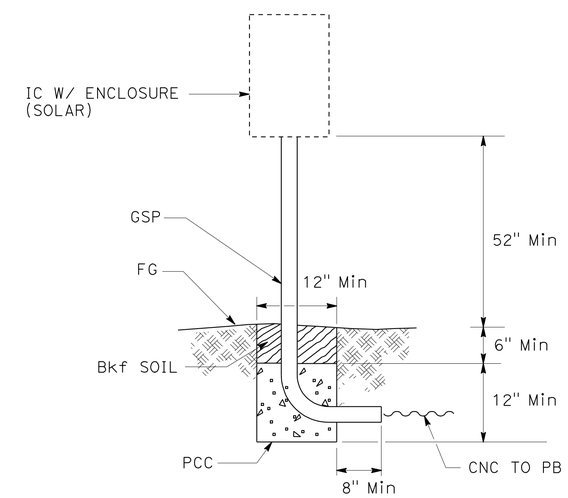

SECTION
SOLAR IRRIGATION CONTROLLER

LANDSCAPE DETAILS

LD-2

STATE OF CALIFORNIA - DEPARTMENT OF TRANSPORTATION
Caltrans® LANDSCAPE ARCHITECTURE

SENIOR LANDSCAPE ARCHITECT: JENNIFER TAIRA

CALCULATED-DESIGNED BY: YI SU
CHECKED BY: GEORGE OLGUIN

REVISED BY: YI SU
DATE REVISED: 09/16/2009

LAST REVISION: 00-00-00
DATE PLOTTED => 27-MAY-2010
TIME PLOTTED => 11:39

Dist	COUNTY	ROUTE	POST MILES TOTAL PROJECT	SHEET No.	TOTAL SHEETS
07	LA	5	15.8/16.9	85	145

George Olguin
LICENSED LANDSCAPE ARCHITECT

5-24-10
PLANS APPROVAL DATE

LICENSED LANDSCAPE ARCHITECT GEORGE OLGUIN No. 4333 STATE OF CALIFORNIA
Signature 08-31-10 Renewal date 08-28-09 Date

THE STATE OF CALIFORNIA OR ITS OFFICERS OR AGENTS SHALL NOT BE RESPONSIBLE FOR THE ACCURACY OR COMPLETENESS OF SCANNED COPIES OF THIS PLAN SHEET.

ABBREVIATIONS

AMEND — amendment
B & B — balled and burlapped
Dia — diameter
EA — each
LB — pound
Oz — ounce
Ft — foot/feet
SQFT — square feet
SQYD — square yard
CF — cubic feet
CY — cubic yard
Max — maximum
Min — minimum
NCN — no common name
No. — number
Pkt — packet
PLT ESTB — plant establishment
Pvmt — pavement
R/W — right of way
SF — state furnished
TRVD — traveled

PLANT LIST AND PLANTING SPECIFICATIONS

PLANT GROUP	PLANT No.	SYMBOL	BOTANICAL NAME	COMMON NAME	SIZE	QUANTITY EACH	HOLE SIZE (INCH) Dia	HOLE SIZE (INCH) DEPTH	BASIN TYPE	IRON SULFATE ①	SOIL AMEND ①	COMMERCIAL FERTILIZER ① PLANTING	COMMERCIAL FERTILIZER ① PLT ESTB	BASIN MULCH	STAKING	PLANTING LIMITS MINIMUM DISTANCE (Ft) FROM TRVD WAY	PVMT	FENCE	WALL	PAVED DITCH	EARTH DITCH	ON CENTER (Ft)	REMARKS
M	1	—	MULHLENBERGIA CAPILLARIS	REGAL MIST	1 5/8" x 8 1/4"	666	②		—	—	—	1/2 OZ	1 OZ	—	—	—	—	—	—	—	—	1.5	⑥
	2	—	MUHLENBERGIA RIGENS	DEER GRASS	1 5/8" x 8 1/4"	2667	②		—	—	—	1/2 OZ	1 OZ	—	—	—	—	—	—	—	—	1.5	⑥

APPLICABLE WHEN CIRCLED:

① - Quantities shown are "per plant" unless shown as SQFT or SQYD application rates.
② - Sufficient to receive root ball.
3 - Does not apply to mulch areas.
4 - As shown on plans.
5 - Unless otherwise shown on plans.
⑥ - See detail.
7 - See Special Provisions.

NOTE:

Underlined portions of botanical name indicate abbreviations used on Planting Plans.

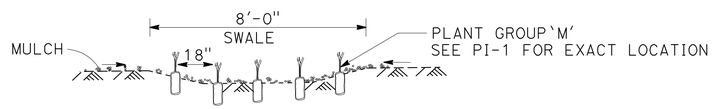

SECTION

PLANTING PLAN (BIO-SWALE)

LEGEND:

CY MULCH

RC — ROADSIDE CLEARING (REMOVE Exist PLANTS EXCEPT TREES) (UNLESS OTHERWISE NOTED)

PEW — PLANT ESTABLISHMENT WORK

PLANTING PLAN
PLANT LIST
PL-1

STATE OF CALIFORNIA - DEPARTMENT OF TRANSPORTATION
Caltrans® LANDSCAPE ARCHITECTURE

SENIOR LANDSCAPE ARCHITECT: JENNIFER TAIRA
CALCULATED-DESIGNED BY: YI SU
CHECKED BY: GEORGE OLGUIN
REVISED BY: YI SU
DATE REVISED: 01/19/2010

LAST REVISION 00-00-00
DATE PLOTTED => 27-MAY-2010
TIME PLOTTED => 11:39

Dist	COUNTY	ROUTE	POST MILES TOTAL PROJECT	SHEET No.	TOTAL SHEETS
07	LA	5	15.8/16.9	86	145

George Olguin
LICENSED LANDSCAPE ARCHITECT

5-24-10
PLANS APPROVAL DATE

LICENSED LANDSCAPE ARCHITECT
GEORGE OLGUIN
NO. 4335
George Olguin
Signature
08-31-10
Renewal Date
08-12-09
Date
STATE OF CALIFORNIA

THE STATE OF CALIFORNIA OR ITS OFFICERS OR AGENTS SHALL NOT BE RESPONSIBLE FOR THE ACCURACY OR COMPLETENESS OF SCANNED COPIES OF THIS PLAN SHEET.

NOTES:

1. FOR ACCURATE RIGHT OF WAY AND ACCESS DATA, CONTACT RIGHT OF WAY ENGINEERING AT THE THE DISTRICT OFFICE.
2. EXISTING UTILITY FACILITIES HAVE NOT BEEN PLOTTED ON THESE PLANS.

IRRIGATION NOTES:

1. SEE SHEET LD-1 FOR BIO-SWALE IRRIGATION PLAN.
2. RUN CNC FROM IC (SOLAR) TO RCVM,BOOSTER PUMP.

PLANTING NOTES:

1. SEE SHEET PL-1 FOR BIO-SWALE PLANTING PLAN.
2. MULCH TO COVER BIO-SWALE AND OUTSIDE PERIMETER.

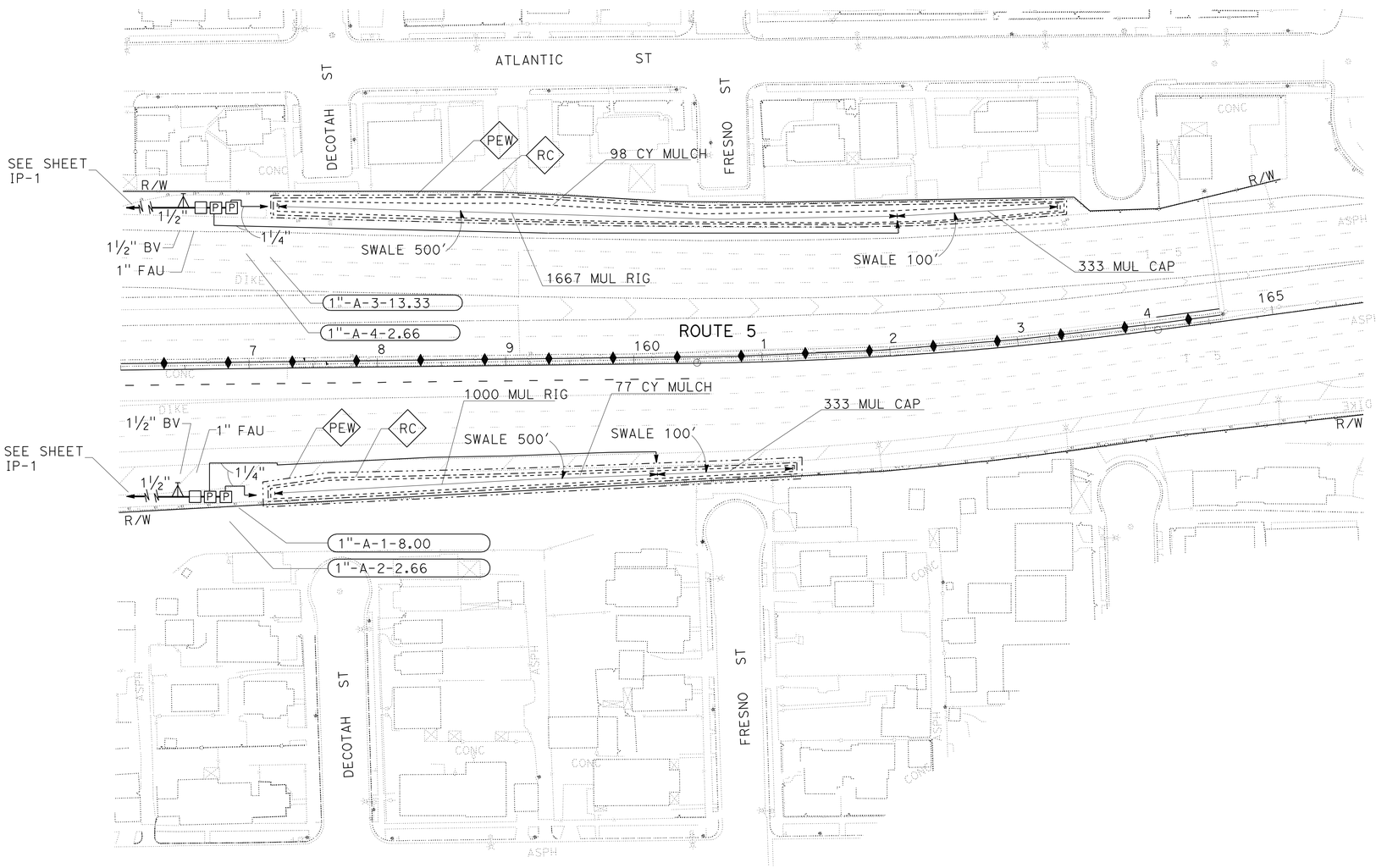

THIS PLAN ACCURATE FOR PLANTING AND IRRIGATION WORK ONLY

PLANTING AND IRRIGATION PLAN

SCALE: 1" = 50'

PI-1

STATE OF CALIFORNIA - DEPARTMENT OF TRANSPORTATION
Caltrans® LANDSCAPE ARCHITECTURE

SENIOR LANDSCAPE ARCHITECT: JENNIFER TAIRA

CALCULATED-DESIGNED BY: GEORGE OLGUIN — CHECKED BY: YI SU

REVISED BY: YI SU — DATE REVISED: 01/19/2010

LAST REVISION 00-00-00 — DATE PLOTTED => 27-MAY-2010 — TIME PLOTTED => 13:54

Dist	COUNTY	ROUTE	POST MILES TOTAL PROJECT	SHEET No.	TOTAL SHEETS
07	LA	5	15.8/16.9	87	145

REGISTERED ELECTRICAL ENGINEER 2/3/10 DATE

5-24-10
PLANS APPROVAL DATE

REGISTERED PROFESSIONAL ENGINEER C. BURCIAGA No. E015302 Exp. 3/31/11 ELECT STATE OF CALIFORNIA

THE STATE OF CALIFORNIA OR ITS OFFICERS OR AGENTS SHALL NOT BE RESPONSIBLE FOR THE ACCURACY OR COMPLETENESS OF ELECTRONIC COPIES OF THIS PLAN SHEET.

NOTE:
FOR ACCURATE RIGHT OF WAY AND ACCESS DATA, CONTACT RIGHT OF WAY ENGINEERING AT THE DISTRICT OFFICE.

PROJECT NOTES: (THIS SHEET ONLY)

1. INSTALL 8" x 6" x 4" NEMA TYPE 4 HINGED COVER JUNCTION BOX. (SEE DETAIL 'D' THIS SHEET FOR CONDUIT TERMINATION DETAILS)
2. INSTALL 2" CONDUIT.
3. INSTALL EXPANSION-DEFLECTION FITTING.
4. INSTALL RESIN CAPSULE TYPE BOLT ANCHORAGE. TYPICAL 4 PER JUNCTION BOX, SEE DETAIL "B" THIS SHEET.
5. EXISTING 120/240 V TYPE III-BF METERED SERVICE. ID No. 07-53-060-000.422 ADDRESS: 1021 ½ SOTO St
6. INSTALL TWO HOLE PIPE STRAP, SEE DETAIL "C" THIS SHEET.
7. RC 2#6. ADD 2#6, 1#8G.

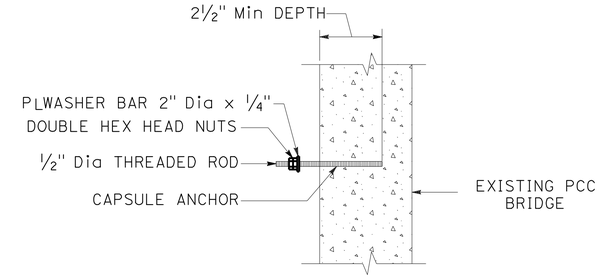

RESIN CAPSULE TYPE BOLT ANCHORAGE
DETAIL "B"
NO SCALE

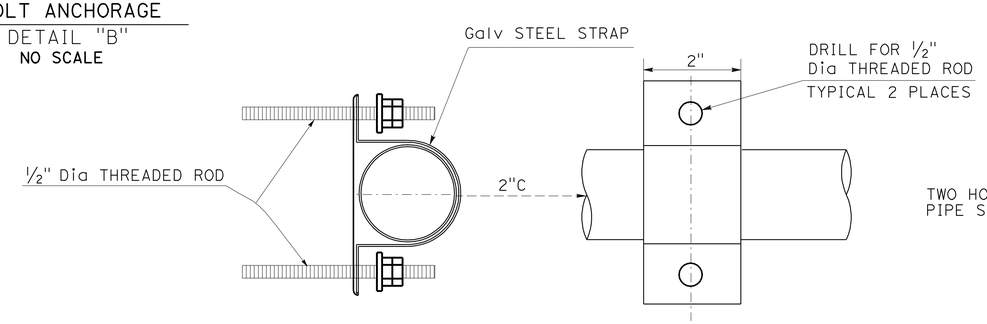

TWO HOLE PIPE STRAP
DETAIL "C"
NO SCALE

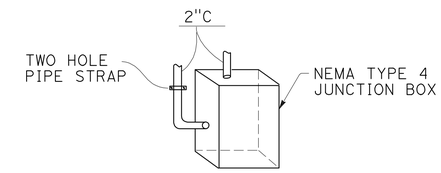

CONDUIT TERMINATION
DETAIL "D"
NO SCALE

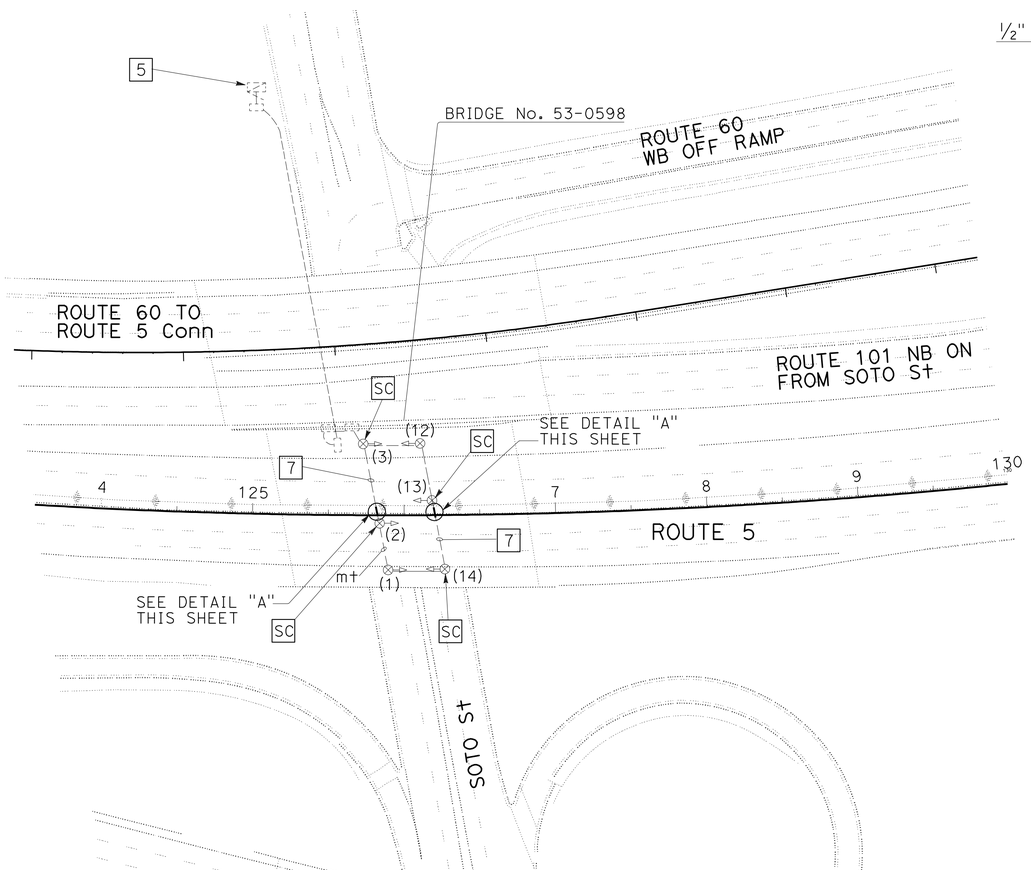

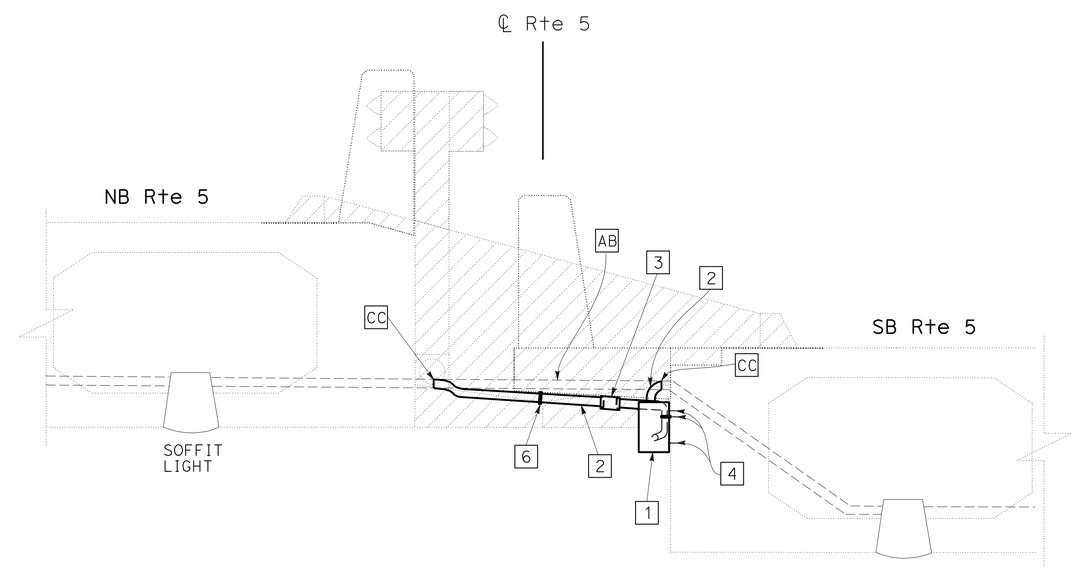

DETAIL "A"
TYPICAL
NO SCALE

MODIFY SOFFIT LIGHTING
(SOTO ST UC)

SCALE: 1" = 50'

E-1

FOR WIRING DIAGRAM AND LEGEND SEE SHEET E-6.
THIS PLAN IS ACCURATE FOR ELECTRICAL WORK ONLY.

STATE OF CALIFORNIA - DEPARTMENT OF TRANSPORTATION
Caltrans TRAFFIC DESIGN
FUNCTIONAL SUPERVISOR Y. TSAU
CALCULATED-DESIGNED BY QUINCIE TRAN
CHECKED BY CECILIO BURCIAGA
REVISED BY
DATE REVISED

LAST REVISION 02-03-10
DATE PLOTTED => 27-MAY-2010
TIME PLOTTED => 13:54

Dist	COUNTY	ROUTE	POST MILES TOTAL PROJECT	SHEET No.	TOTAL SHEETS
07	LA	5	15.8/16.9	88	145

REGISTERED ELECTRICAL ENGINEER 2/3/10 DATE

5-24-10
PLANS APPROVAL DATE

REGISTERED PROFESSIONAL ENGINEER C. BURCIAGA No. E015302 Exp. 3/31/11 ELECT STATE OF CALIFORNIA

THE STATE OF CALIFORNIA OR ITS OFFICERS OR AGENTS SHALL NOT BE RESPONSIBLE FOR THE ACCURACY OR COMPLETENESS OF ELECTRONIC COPIES OF THIS PLAN SHEET.

NOTE:

FOR ACCURATE RIGHT OF WAY AND ACCESS DATA, CONTACT RIGHT OF WAY ENGINEERING AT THE DISTRICT OFFICE.

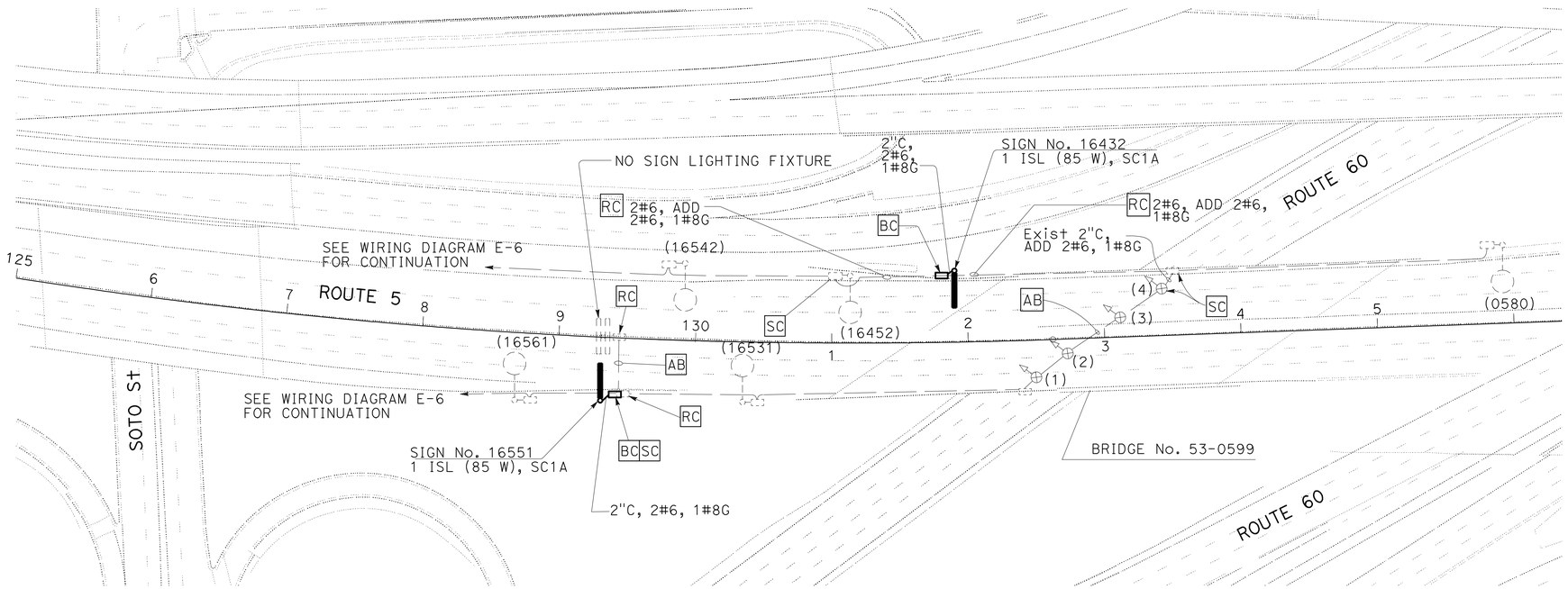

MODIFY LIGHTING AND SIGN ILLUMINATION
(ROUTE 5/60 INTERCHANGE)

SCALE: 1" = 50'

E-2

FOR WIRING DIAGRAM AND LEGEND SEE SHEET E-6.
THIS PLAN IS ACCURATE FOR ELECTRICAL WORK ONLY.

STATE OF CALIFORNIA - DEPARTMENT OF TRANSPORTATION
Caltrans TRAFFIC DESIGN

FUNCTIONAL SUPERVISOR: Y. TSAU
CALCULATED-DESIGNED BY: QUINCIE TRAN
CHECKED BY: CECILIO BURCIAGA
REVISED BY
DATE REVISED

LAST REVISION 12-29-09
DATE PLOTTED => 27-MAY-2010
TIME PLOTTED => 13:54

BORDER LAST REVISED 3/1/2007
RELATIVE BORDER SCALE IS IN INCHES 0 2 3
USERNAME => trlenard
DGN FILE => 718410ua002.dgn
CU 07383
EA 184101

Dist	COUNTY	ROUTE	POST MILES TOTAL PROJECT	SHEET No.	TOTAL SHEETS
07	LA	5	15.8/16.9	89	145

REGISTERED ELECTRICAL ENGINEER 2/3/10 DATE

5-24-10
PLANS APPROVAL DATE

REGISTERED PROFESSIONAL ENGINEER C. BURCIAGA No. E015302 Exp. 3/31/11 ELECT STATE OF CALIFORNIA

THE STATE OF CALIFORNIA OR ITS OFFICERS OR AGENTS SHALL NOT BE RESPONSIBLE FOR THE ACCURACY OR COMPLETENESS OF ELECTRONIC COPIES OF THIS PLAN SHEET.

NOTE:
FOR ACCURATE RIGHT OF WAY AND ACCESS DATA, CONTACT RIGHT OF WAY ENGINEERING AT THE DISTRICT OFFICE.

WIRING DIAGRAM LEGEND: (THIS SHEET ONLY)

- EXISTING SOFFIT LAMP AND BALLAST TO REMAIN.
- EXISTING CONDUCTOR TO REMAIN.
- INSTALL No. 8, 5 kV CONDUCTOR.
- RC CONDUCTOR.
- SPLICE CONDUCTORS.

PROJECT NOTES:

1. INSTALL 8" x 6" x 4" NEMA TYPE 4 HINGED COVER JUNCTION BOX. (SEE DETAIL "D" SHEET E-1 FOR CONDUIT TERMINATION DETAILS)
2. INSTALL 2" CONDUIT.
3. INSTALL EXPANSION-DEFLECTION FITTING.
4. INSTALL RESIN CAPSULE TYPE BOLT ANCHORAGE. TYPICAL 4 PER JUNCTION BOX, SEE DETAIL "B" SHEET E-1.
5. INSTALL TWO HOLE PIPE STRAP, SEE DETAIL "C" SHEET E-1.

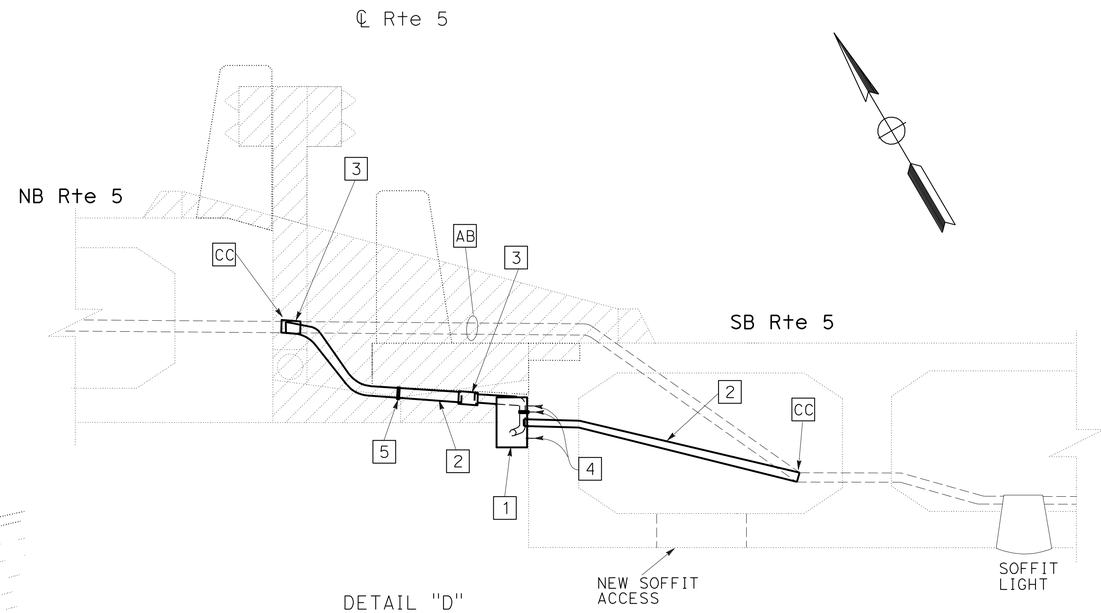

DETAIL "D"
NO SCALE

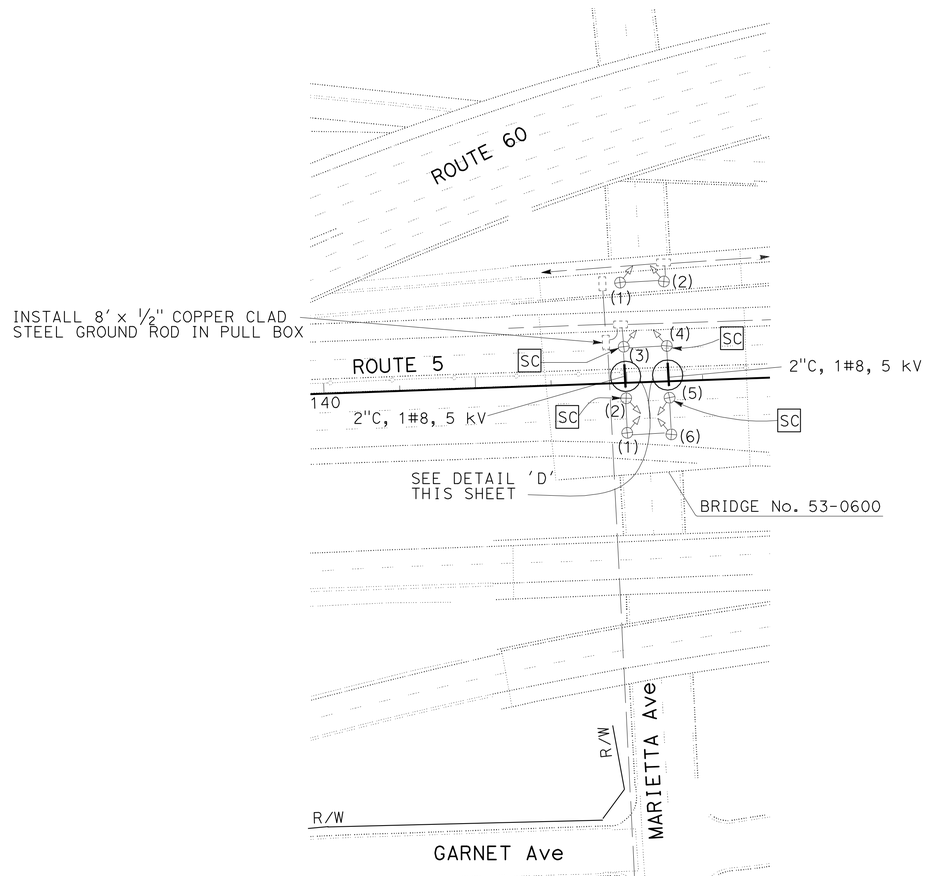

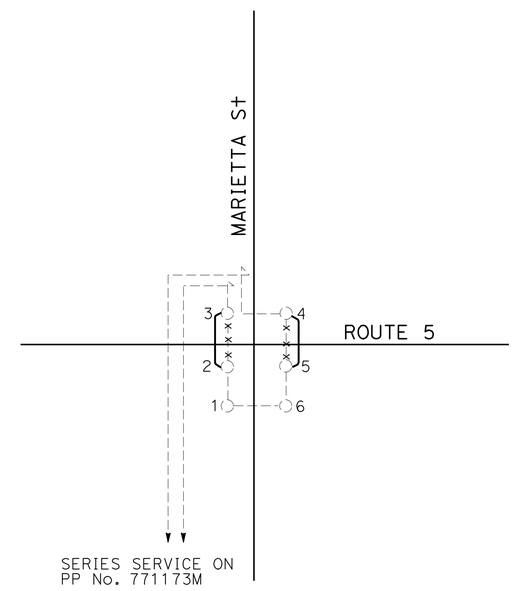

EXISTING WIRING DIAGRAM TO BE MODIFIED
NO SCALE

WARNING
BEFORE STARTING WORK ON EXISTING SERIES LIGHTING CIRCUITS THE CONTRACTOR SHALL OBTAIN DAILY SAFETY CIRCUIT CLEARANCE FROM SERVING COMPANIES, DISCONNECT CIRCUITS, AND PLACE "MEN AT WORK" SIGNS NEAR OPEN SWITCHES.

THIS PLAN IS ACCURATE FOR ELECTRICAL WORK ONLY.

MODIFY SOFFIT LIGHTING
(AT ROUTE 5 AND MARIETTA Ave)

SCALE: 1" = 50'

E-3

STATE OF CALIFORNIA - DEPARTMENT OF TRANSPORTATION
Caltrans TRAFFIC DESIGN
FUNCTIONAL SUPERVISOR: Y. TSAU
CALCULATED-DESIGNED BY: QUINCIE TRAN
CHECKED BY: CECILIO BURCIAGA
REVISED BY | DATE REVISED

LAST REVISION 02-03-10 | DATE PLOTTED => 27-MAY-2010 | TIME PLOTTED => 13:54

NOTE:
FOR ACCURATE RIGHT OF WAY AND ACCESS DATA, CONTACT RIGHT OF WAY ENGINEERING AT THE DISTRICT OFFICE.

NOTE: (THIS SHEET ONLY)

1. 3-WIRE SOFFIT LIGHT CIRCUIT COLOR CODED AS FOLLOWS: RED AND WHITE WIRES FOR ODD NUMBERED LIGHTS, BLACK AND WHITE WIRES FOR EVEN NUMBERED LIGHTS.

PROJECT NOTES:

1. INSTALL 8" x 6" x 4" NEMA TYPE 4 HINGED COVER JUNCTION BOX. (SEE DETAIL "D" SHEET E-1 FOR CONDUIT TERMINATION DETAILS)
2. INSTALL 2" CONDUIT.
3. INSTALL EXPANSION-DEFLECTION FITTING.
4. INSTALL RESIN CAPSULE TYPE BOLT ANCHORAGE. TYPICAL 4 PER JUNCTION BOX, SEE DETAIL "B" SHEET E-1.
5. INSTALL TWO HOLE PIPE STRAP, SEE DETAIL "C" SHEET E-1.

WIRING DIAGRAM LEGEND: (THIS SHEET ONLY)

- EXISTING SIGN LAMP AND BALLAST TO REMAIN.
- EXISTING LAMP AND BALLAST TO REMAIN.
- EXISTING SOFFIT LAMP AND BALLAST TO REMAIN.
- EXISTING CONDUCTOR TO REMAIN.
- INSTALL No. 6 CONDUCTORS.
- RC CONDUCTOR.
- SPLICE CONDUCTORS.

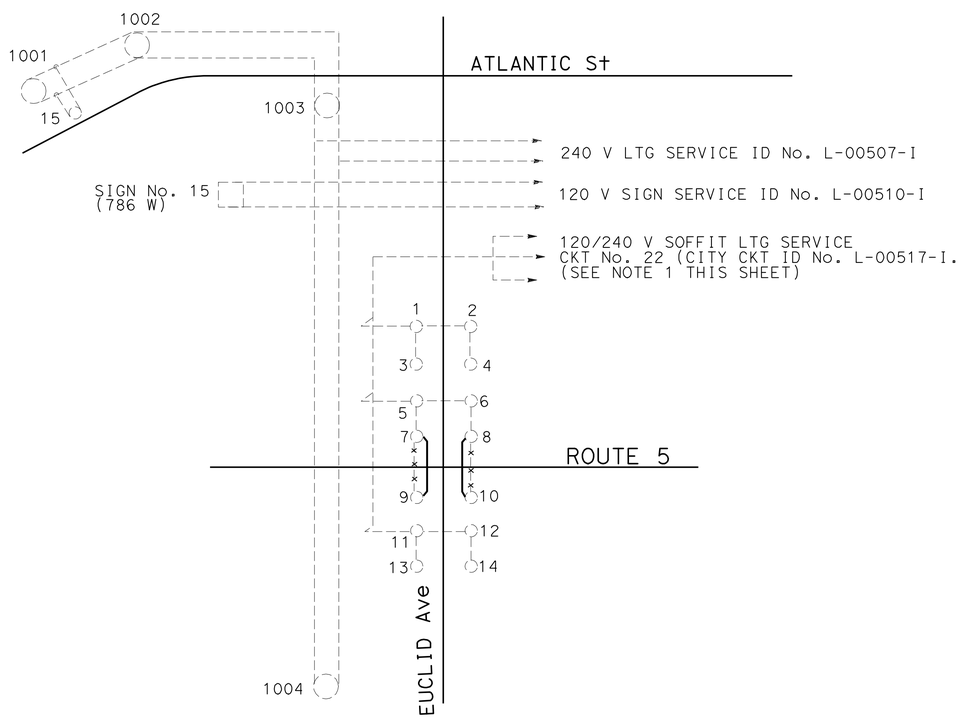

EXISTING WIRING DIAGRAM TO BE MODIFIED
NO SCALE

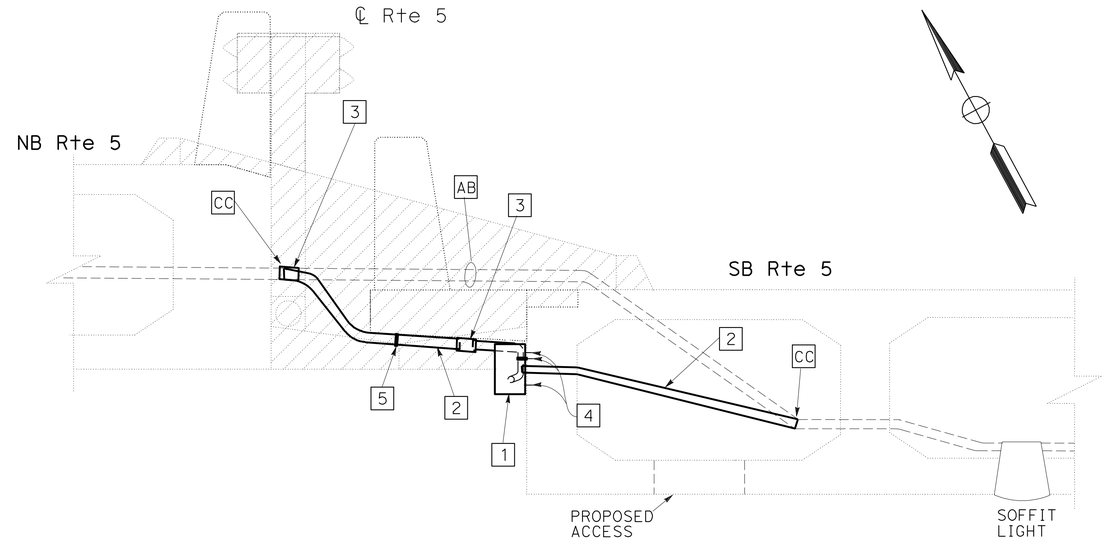

DETAIL "E"
NO SCALE

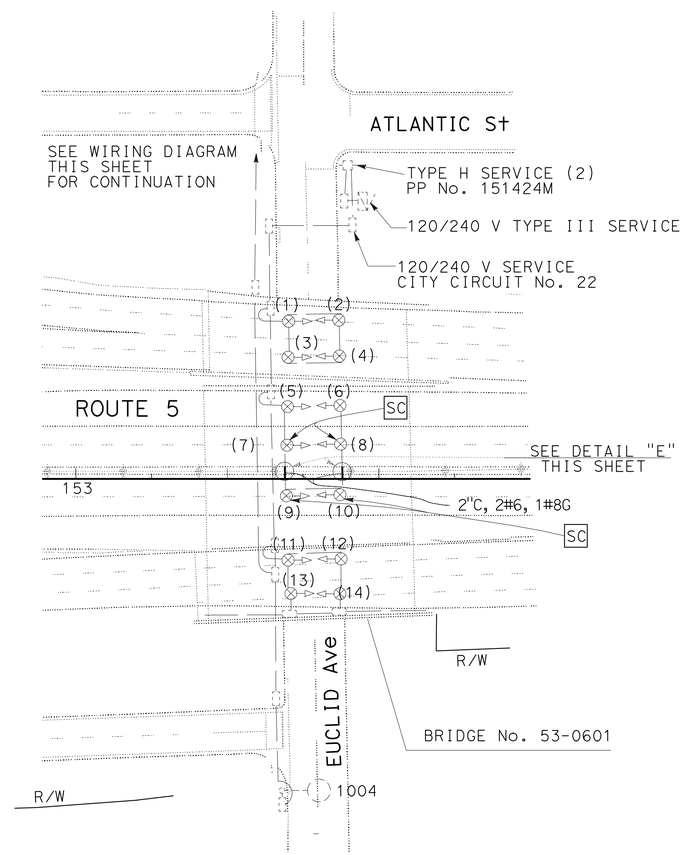

Dist	COUNTY	ROUTE	POST MILES TOTAL PROJECT	SHEET No.	TOTAL SHEETS
07	LA	5	15.8/16.9	90	145

REGISTERED ELECTRICAL ENGINEER — DATE 2/3/10

5-24-10
PLANS APPROVAL DATE

REGISTERED PROFESSIONAL ENGINEER C. BURCIAGA No. E015302 Exp. 3/31/11 ELECT STATE OF CALIFORNIA

THE STATE OF CALIFORNIA OR ITS OFFICERS OR AGENTS SHALL NOT BE RESPONSIBLE FOR THE ACCURACY OR COMPLETENESS OF ELECTRONIC COPIES OF THIS PLAN SHEET.

MODIFY SOFFIT LIGHTING
(AT ROUTE 5 AND EUCLID Ave)

SCALE: 1" = 50'

E-4

THIS PLAN IS ACCURATE FOR ELECTRICAL WORK ONLY.

STATE OF CALIFORNIA - DEPARTMENT OF TRANSPORTATION
Caltrans TRAFFIC DESIGN
FUNCTIONAL SUPERVISOR: Y. TSAU
CALCULATED-DESIGNED BY: QUINCIE TRAN
CHECKED BY: CECILIO BURCIAGA
REVISED BY / DATE REVISED

LAST REVISION 12-29-09
DATE PLOTTED => 27-MAY-2010
TIME PLOTTED => 13:54

Dist	COUNTY	ROUTE	POST MILES TOTAL PROJECT	SHEET No.	TOTAL SHEETS
07	LA	5	15.8/16.9	91	145

REGISTERED ELECTRICAL ENGINEER 2/3/10 DATE

5-24-10
PLANS APPROVAL DATE

REGISTERED PROFESSIONAL ENGINEER C. BURCIAGA No. E015302 Exp. 3/31/11 ELECT STATE OF CALIFORNIA

THE STATE OF CALIFORNIA OR ITS OFFICERS OR AGENTS SHALL NOT BE RESPONSIBLE FOR THE ACCURACY OR COMPLETENESS OF ELECTRONIC COPIES OF THIS PLAN SHEET.

NOTE:

FOR ACCURATE RIGHT OF WAY AND ACCESS DATA, CONTACT RIGHT OF WAY ENGINEERING AT THE DISTRICT OFFICE.

PROJECT NOTES: (THIS SHEET ONLY)

1. RC PULL BOX AND INSTALL No. 9 PULL BOX. INTERCEPT EXISTING CONDUIT AND EXTEND TO NEW No. 9 PULL BOX.
2. ABANDONED CONDUIT.
3. RC PULL BOX.

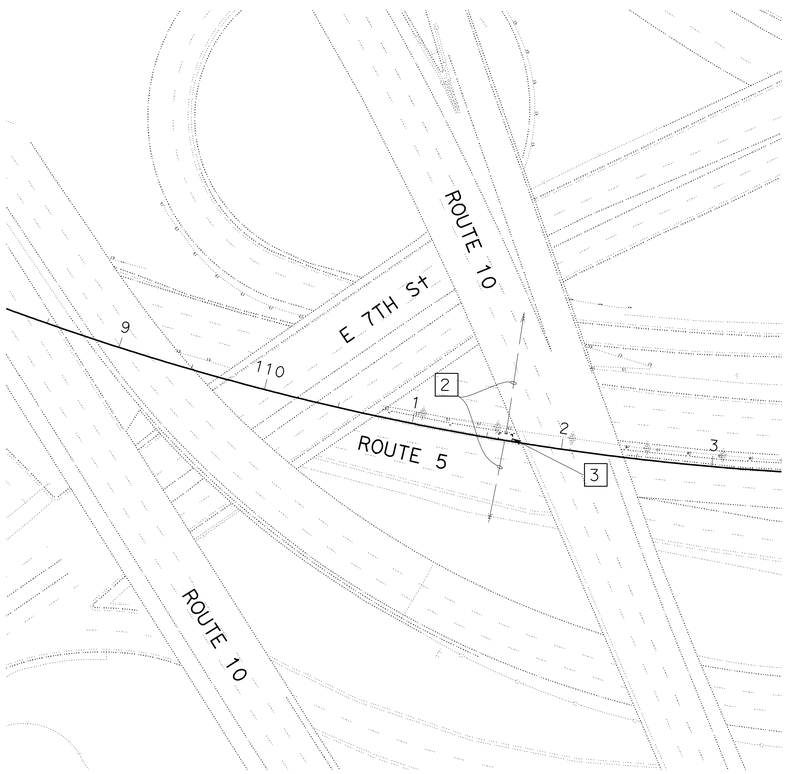

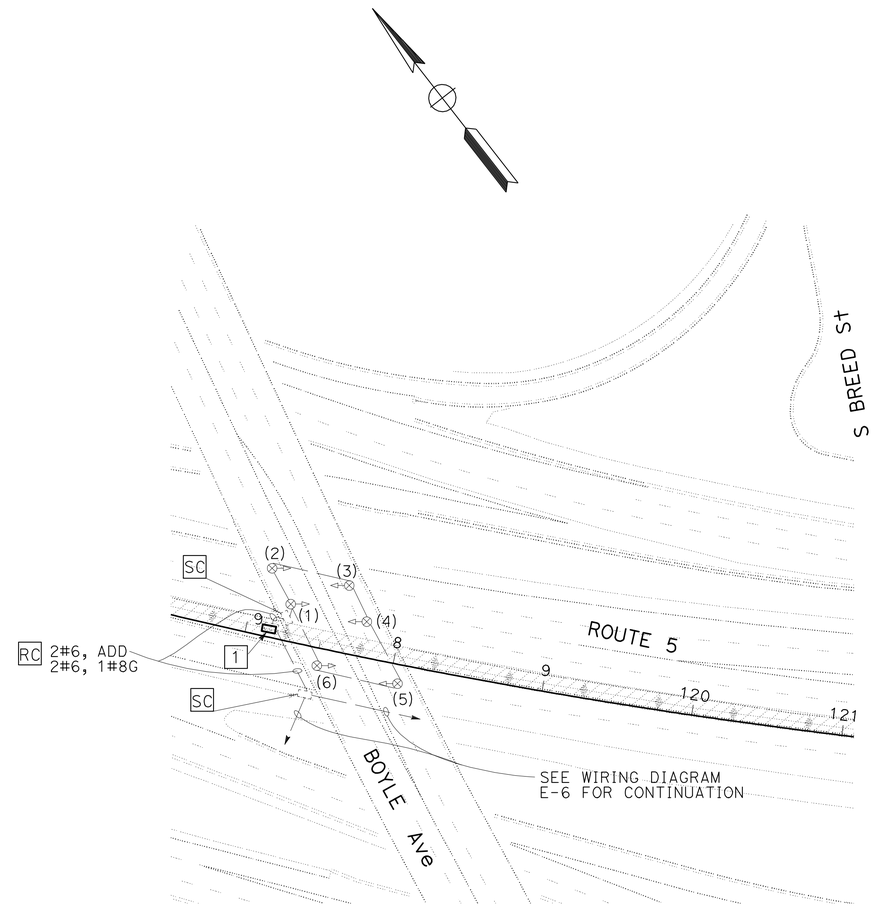

MODIFY SOFFIT LIGHTING
(AT ROUTE 5 AND BOYLE Ave)

SCALE: 1" = 50'

E-5

FOR WIRING DIAGRAM AND LEGEND SEE SHEE E-6.
THIS PLAN IS ACCURATE FOR ELECTRICAL WORK ONLY.

STATE OF CALIFORNIA - DEPARTMENT OF TRANSPORTATION
Caltrans TRAFFIC DESIGN

FUNCTIONAL SUPERVISOR: Y. TSAU
CALCULATED-DESIGNED BY: QUINCIE TRAN
CHECKED BY: CECILIO BURCIAGA
REVISED BY
DATE REVISED

LAST REVISION 02-03-10
DATE PLOTTED => 27-MAY-2010
TIME PLOTTED => 13:54

Dist	COUNTY	ROUTE	POST MILES TOTAL PROJECT	SHEET No.	TOTAL SHEETS
07	LA	5	15.8/16.9	92	145

REGISTERED ELECTRICAL ENGINEER — DATE 2/3/10

5-24-10
PLANS APPROVAL DATE

REGISTERED PROFESSIONAL ENGINEER C. BURCIAGA No. E015302 Exp. 3/31/11 ELECT STATE OF CALIFORNIA

THE STATE OF CALIFORNIA OR ITS OFFICERS OR AGENTS SHALL NOT BE RESPONSIBLE FOR THE ACCURACY OR COMPLETENESS OF ELECTRONIC COPIES OF THIS PLAN SHEET.

WIRING DIAGRAM LEGEND:

- EXISTING SIGN LAMP AND BALLAST TO REMAIN.
- EXISTING LAMP AND BALLAST TO REMAIN.
- EXISTING SOFFIT LAMP AND BALLAST TO REMAIN.
- EXISTING CONDUCTOR TO REMAIN.
- RC CONDUCTOR.
- SPLICE CONDUCTOR.
- INSTALL 85 W INDUCTIVE SIGN LIGHTING (ISL) LAMP AND INTEGRAL BALLAST AS NOTED.
- INSTALL No. 6 CONDUCTOR.

MULTIPLE CIRCUITS TO BE MODIFIED

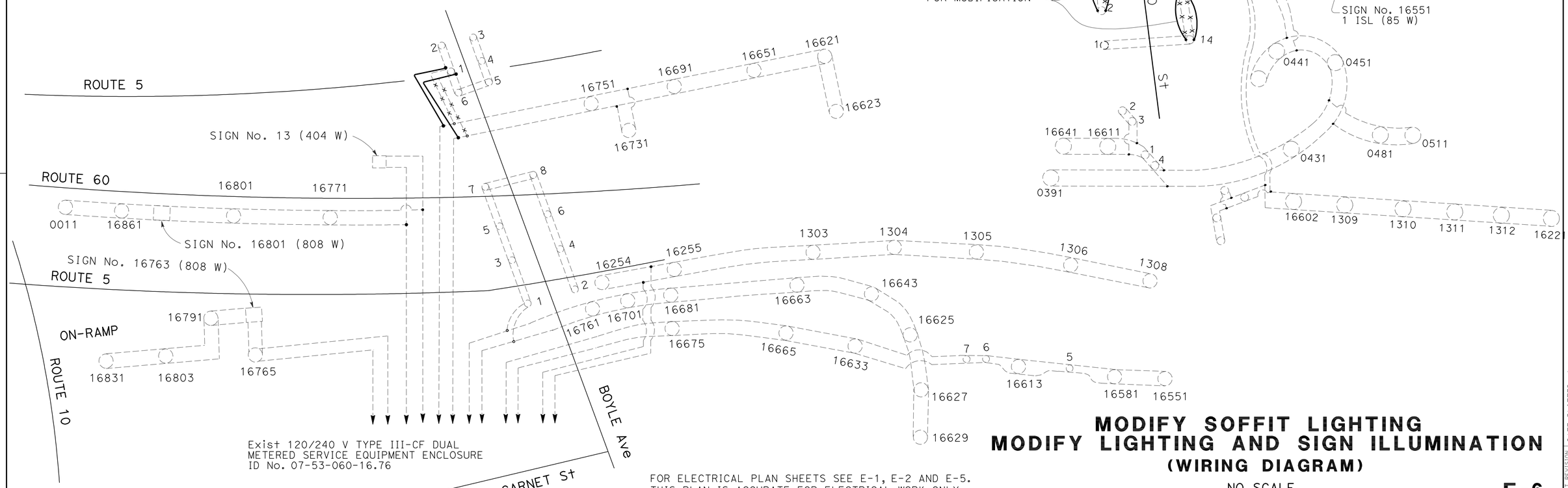

FOR ELECTRICAL PLAN SHEETS SEE E-1, E-2 AND E-5.
THIS PLAN IS ACCURATE FOR ELECTRICAL WORK ONLY.

MODIFY SOFFIT LIGHTING
MODIFY LIGHTING AND SIGN ILLUMINATION
(WIRING DIAGRAM)

NO SCALE

E-6

STATE OF CALIFORNIA - DEPARTMENT OF TRANSPORTATION
Caltrans TRAFFIC DESIGN

FUNCTIONAL SUPERVISOR: Y. TSAU
CALCULATED-DESIGNED BY: QUINCIE TRAN
CHECKED BY: CECILIO BURCIAGA
REVISED BY / DATE REVISED

LAST REVISION 12-09-09 | DATE PLOTTED => 27-MAY-2010 | TIME PLOTTED => 13:54

DIST	COUNTY	ROUTE	POST MILES TOTAL PROJECT	SHEET NO.	TOTAL SHEETS
07	LA	5	15.8/16.9	93	145

REGISTERED CIVIL ENGINEER

November 17, 2006
PLANS APPROVAL DATE

REGISTERED PROFESSIONAL ENGINEER Dallas Forester No. C37765 Exp. 12-31-06 CIVIL STATE OF CALIFORNIA

The State of California or its officers or agents shall not be responsible for the accuracy or completeness of electronic copies of this plan sheet.

To accompany plans dated 5-24-10

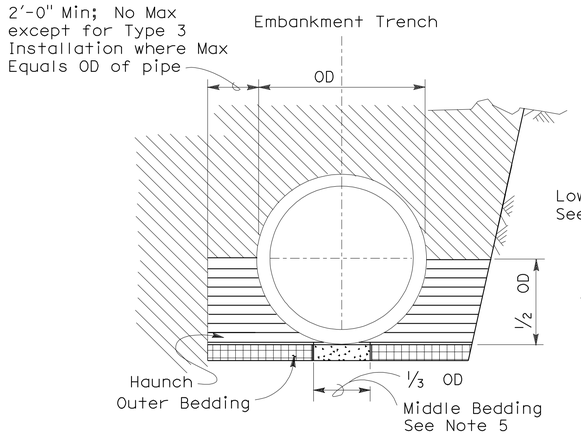

BACKFILL

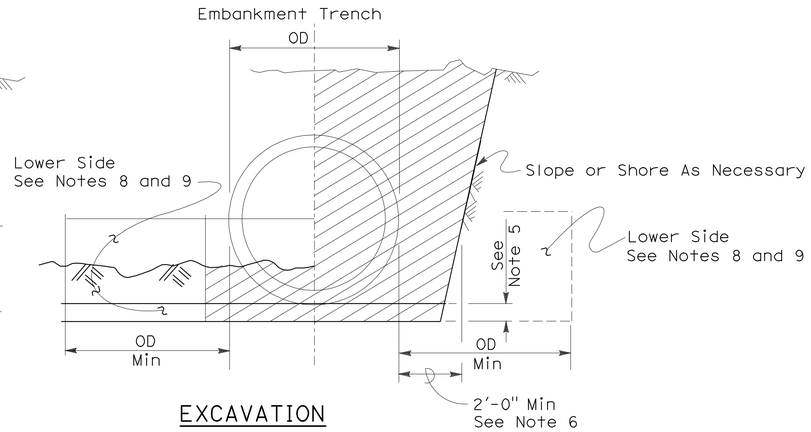

EXCAVATION

Roadway Embankment

Structure Backfill (Culvert) See Note 6

Structure Backfill (Culvert) See Note 6

Loose Backfill

Excavation Structure (Culvert)

TYPE 1 INSTALLATION:

The haunch and outer bedding shall be compacted to a minimum 90 percent relative compaction. In addition, the minimum sand equivalent in these areas shall be 30 and the maximum percentage passing the 75 μm sieve size shall be 12.

TYPE 2 INSTALLATION:

The haunch and outer bedding shall be compacted to a minimum 90 percent relative compaction. In addition, the minimum sand equivalent in these areas shall be 25.

TYPE 3 INSTALLATION:

The haunch and outer bedding shall be compacted to a minimum 85 percent relative compaction. 90 percent relative compaction will be required where the fill over the pipe is less than 4'-0" or 1/2 OD.

NOTES:

1. Unless otherwise shown on the plans or specified in the special provision, the Contractor shall have the option of selecting the class of RCP and the type of installation to be used, provided the height of cover does not exceed the value shown for the RCP selected.
   Example: 24" RCP culvert with maximum cover of 19'-0" the options are:
   a) Class III or stronger with Installation Type 1.
   b) Class III Special or stronger with Installation Type 2.
   c) Class IV Special or stronger with Installation Type 3.
   Cover is defined as the maximum vertical distance from top of the pipe to finished grade within the length of any given culvert.
2. The class of RCP and Installation Type selected shall be the same throughout the length of any given culvert.
3. The "length of any culvert" is defined as the culvert between:
   a) Successive drainage structure (inlets, junction boxes, headwalls, etc.).
   b) A drainage structure and the inlet or outlet end of the culvert.
   c) The inlet and outlet end of the culvert when there are no intervening drainage structures.
4. Oval and arch shaped RCP shall not be used.
5. 1/25 OD Min, not less than 3".
6. Slurry cement backfill may be substituted for backfill in the outer bedding and haunch areas. If slurry is used the outer and middle beddings shall be omitted. Prior to installation the soil under the middle 1/3 of the outside diameter of the pipe shall be softened by scarifying or other means to a minimum depth of 1/25 OD, but not less than 3". Where slurry cement backfill is used clear distance to trench wall may be reduced as set forth in Section 19-3.062 of the Standard Specifications.
7. Backfill shall be placed full width of excavation except where dimensions are shown for backfill width or thickness. Dimensions shown are minimums.
8. Lower side shall be suitable material as determined by the Engineer. Otherwise it shall be considered unsuitable as set forth in Section 19-2.02 of the Standard Specifications. See Note 9.
9. Where the pipe is placed in a trench, if the trench walls are sloped at 5 vertical to 1 horizontal or steeper for at least 90 percent of the trench height or up to not less than 12" from the grading plane, the firmness of the soil in the lower side need not be considered.
10. Non-reinforced precast concrete pipe sizes 3'-0" or smaller may be placed under installation Types 1, 2 or 3.

INSTALLATION TYPE 1

MINIMUM CLASS AND D-LOAD	COVER	
	108" Dia AND SMALLER	OVER 108" Dia
Class II 1000D	14.9'	12.9'
Class III 1350D	15.0' - 20.9'	13.0' - 18.9'
Class III Special 1700D	21.0' - 26.9'	19.0' - 24.9'
Class IV 2000D	27.0' - 31.9'	25.0' - 29.9'
Class IV Special 2500D	32.0' - 40.9'	30.0' - 38.9'
Class V 3000D	41.0' - 49.9'	39.0' - 46.9'
Class V Special 3600D	50.0' - 59.0'	47.0' - 58.0'

INSTALLATION TYPE 2

MINIMUM CLASS AND D-LOAD	COVER
Class II 1000D	9.9'
Class III 1350D	10.0'- 14.9'
Class III Special 1700D	15.0' - 19.9'
Class IV 2000D	20.0' - 24.9'
Class IV Special 2500D	25.0' - 31.9'
Class V 3000D	32.0' - 38.9'
Class V Special 3600D	39.0' - 47.0'

INSTALLATION TYPE 3

MINIMUM CLASS AND D-LOAD	COVER	
	48" Dia AND SMALLER	OVER 48" Dia
Class II 1000D	7.9'	5.9'
Class III 1350D	8.0' - 10.9'	6.0' - 8.9'
Class III Special 1700D	11.0' - 14.9'	9.0' - 12.9'
Class IV 2000D	15.0' - 17.9'	13.0' - 15.9'
Class IV Special 2500D	18.0' - 21.9'	16.0' - 19.9'
Class V 3000D	22.0' - 26.9'	20.0' - 24.9'
Class V Special 3600D	30.0' - 33.0'	25.0' - 31.0'

STATE OF CALIFORNIA
DEPARTMENT OF TRANSPORTATION

EXCAVATION AND BACKFILL CONCRETE PIPE CULVERTS

NO SCALE

RSP A62DA DATED NOVEMBER 17, 2006 SUPERSEDES STANDARD PLAN A62DA DATED MAY 1, 2006 - PAGE 20 OF THE STANDARD PLANS BOOK DATED MAY 2006.

REVISED STANDARD PLAN RSP A62DA

2006 REVISED STANDARD PLAN RSP A62DA

10-26-06

DIST	COUNTY	ROUTE	POST MILES TOTAL PROJECT	SHEET NO.	TOTAL SHEETS
07	LA	5	15.8/16.9	94	145

Randell D. Hiatt
REGISTERED CIVIL ENGINEER

June 6, 2008
PLANS APPROVAL DATE

REGISTERED PROFESSIONAL ENGINEER
Randell D. Hiatt
No. C50200
Exp. 6-30-09
CIVIL
STATE OF CALIFORNIA

The State of California or its officers or agents shall not be responsible for the accuracy or completeness of electronic copies of this plan sheet.

To accompany plans dated 5-24-10

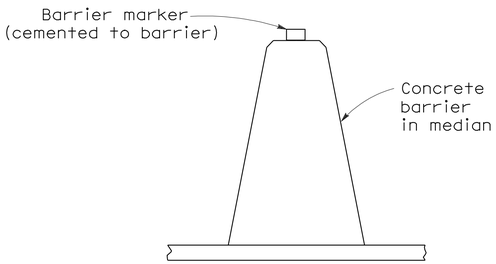

CONCRETE BARRIER TYPE 60 DELINEATION

See Notes 7 and 8

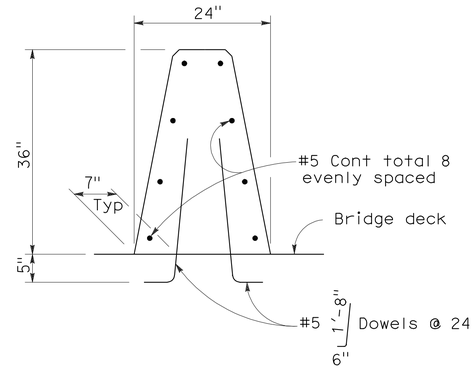

CONCRETE BARRIER TYPE 60A

Details similar to Type 60 except as noted.

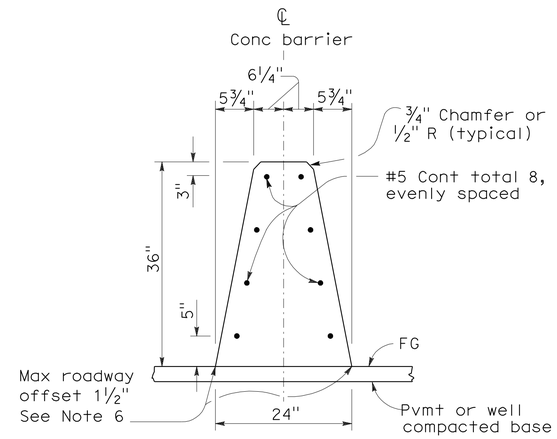

CONCRETE BARRIER TYPE 60

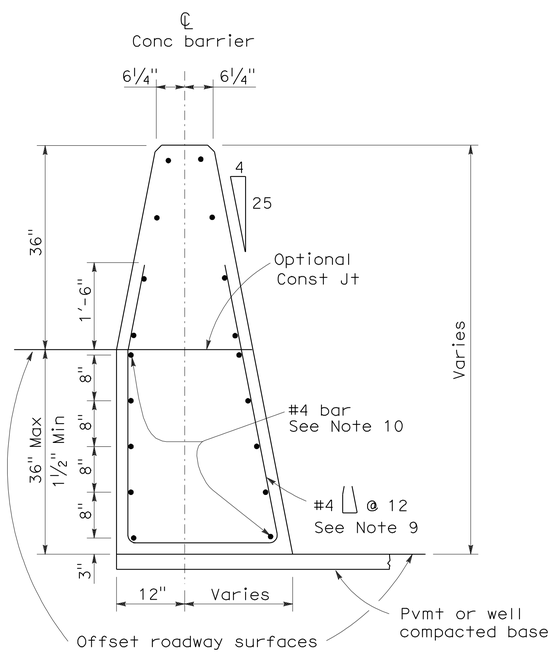

CONCRETE BARRIER TYPE 60C

Details similar to Type 60 except as noted.
Concrete barrier end anchor when necessary.
36" roadway surfaces offset shown.

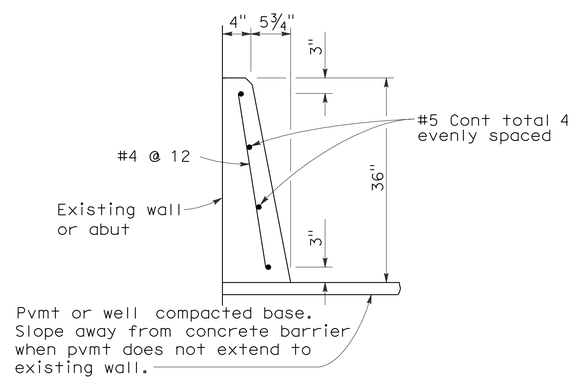

CONCRETE BARRIER TYPE 60D

NOTES:

1. See Standard Plan A76B for details of Concrete Barrier Type 60 end anchors, connection to structures and transitions to Concrete Barrier Type 50 and Concrete Barrier Type 60S.
2. See Standard Plan A76C for Concrete Barrier Type 60 transitions at bridge column and sign pedestals.
3. Where glare screen is required on Concrete Barrier Type 60, use Concrete Barrier Type 60G.
4. Where the concrete barrier is added to the face of existing concrete structure, match existing weep holes.
5. Expansion joints in concrete barrier shall be located at all deck, pavement and principal wall joints. Expansion joint filler material shall be the same size as joint or ½" minimum.
6. Where roadway offset is greater than 1½", see Concrete Barrier Type 60C.
7. Barrier delineation to be used when required by the Special Provisions.
8. Spacing of barrier markers to match spacing of raised pavement markers on the adjacent median edgeline pavement delineation.
9. Reinforcing stirrup not required for roadway offsets less than 1'-0".
10. For roadway surfaces offset greater than 1½" to 3", no rebars required. For roadway surfaces offset greater than 3" to 8" use two #4 rebars at 3" above the lower roadway surface. For roadway surfaces offset greater than 8" to 12", use two #4 rebars at 3" above the lower roadway surface and two #4 rebars at 8" above the lower roadway surface. For roadway surfaces offset greater than 12" to 36", use two #4 rebars at 3" above the lower roadway surface and two #4 rebars at every 8" increment vertical spacing above the first two #4 rebars.

STATE OF CALIFORNIA
DEPARTMENT OF TRANSPORTATION

CONCRETE BARRIER TYPE 60

NO SCALE

RSP A76A DATED JUNE 6, 2008 SUPERSEDES STANDARD PLAN A76A
DATED MAY 1, 2006 - PAGE 29 OF THE STANDARD PLANS BOOK DATED MAY 2006.

REVISED STANDARD PLAN RSP A76A

2006 REVISED STANDARD PLAN RSP A76A

DIST	COUNTY	ROUTE	POST MILES TOTAL PROJECT	SHEET NO.	TOTAL SHEETS
07	LA	5	15.8/16.9	95	145

Randell D. Hiatt
REGISTERED CIVIL ENGINEER

June 6, 2008
PLANS APPROVAL DATE

REGISTERED PROFESSIONAL ENGINEER
Randell D. Hiatt
No. C50200
Exp. 6-30-09
CIVIL
STATE OF CALIFORNIA

The State of California or its officers or agents shall not be responsible for the accuracy or completeness of electronic copies of this plan sheet.

To accompany plans dated 5-24-10

NOTES:

1. When necessary to place dike in front of face of guard railing, only Type C dike may be used. For dike details, see Standard Plan A87B.
2. For standard railing post embedment, see Standard Plans A77C3.
3. Guard railing delineation to be used where shown on the Project Plans.
4. When dike or curb is placed under guard railing, the maximum height of the dike or curb shall be 4". Mountable dike should not be used. For dike and curb details, see Revised Standard Plans RSP A87A and Standard Plan A87B.
5. For details of typical distance between the face of rail and hinge point, see Standard Plan A77C3.

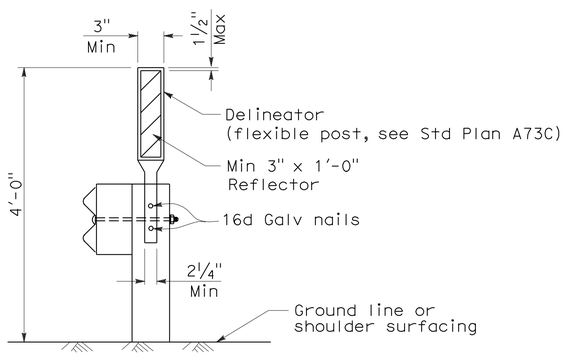

GUARD RAILING DELINEATION

See Note 3

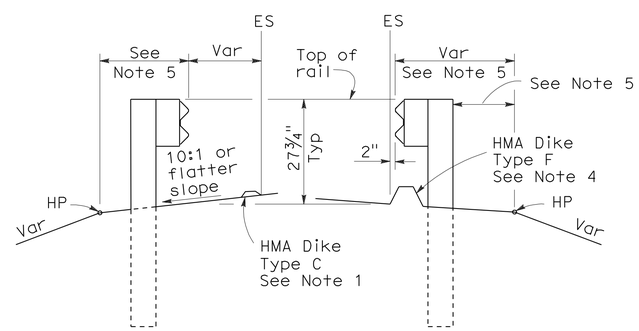

DIKE POSITIONING

See Note 1

STATE OF CALIFORNIA
DEPARTMENT OF TRANSPORTATION

METAL BEAM GUARD RAILING TYPICAL RAILING DELINEATION AND DIKE POSITIONING DETAILS

NO SCALE

RSP A77C4 DATED JUNE 6, 2008 SUPERSEDES STANDARD PLAN A77C4
DATED MAY 1, 2006 - PAGE 47 OF THE STANDARD PLANS BOOK DATED MAY 2006.

REVISED STANDARD PLAN RSP A77C4

2006 REVISED STANDARD PLAN RSP A77C4

12-10-07

DIST	COUNTY	ROUTE	POST MILES TOTAL PROJECT	SHEET NO.	TOTAL SHEETS
07	LA	5	15.8/16.9	96	145

Randell D. Hiatt
REGISTERED CIVIL ENGINEER

October 20, 2006
PLANS APPROVAL DATE

REGISTERED PROFESSIONAL ENGINEER
Randell D. Hiatt
No. C50200
Exp. 6-30-07
CIVIL
STATE OF CALIFORNIA

The State of California or its officers or agents shall not be responsible for the accuracy or completeness of electronic copies of this plan sheet.

To accompany plans dated 5-24-10

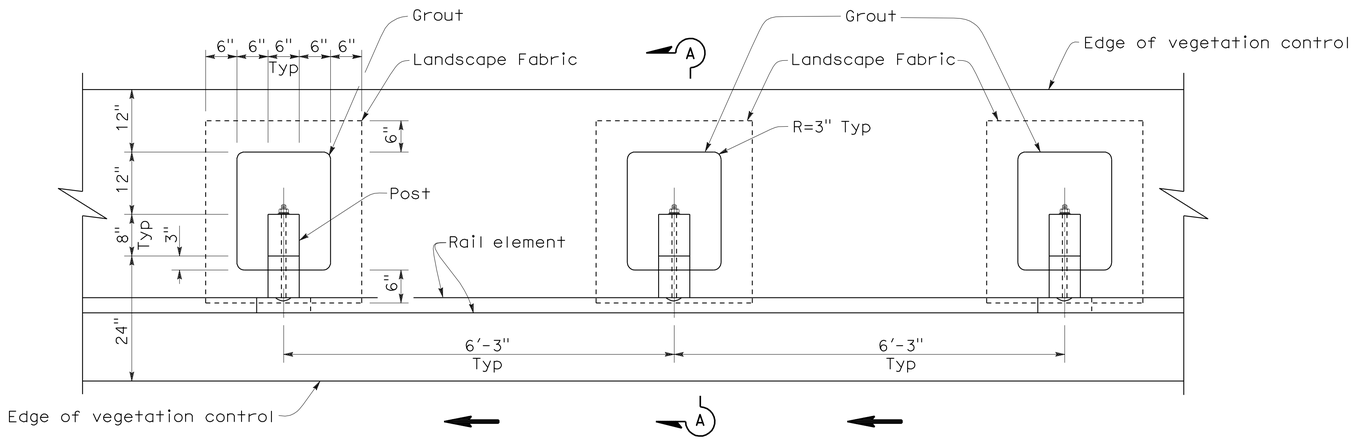

PLAN

NOTES:

1. Where the distance between back of post and hinge point is less than 24", vegetation control to be constructed flush with the back edge of the post.

2. Where dike is constructed under railing, construct vegetation control to back edge of dike. Where paved shoulder is constructed within 24" in front of the post, construct vegetation control to the edge of paved shoulder.

3. Direction of adjacent traffic indicated by ← .

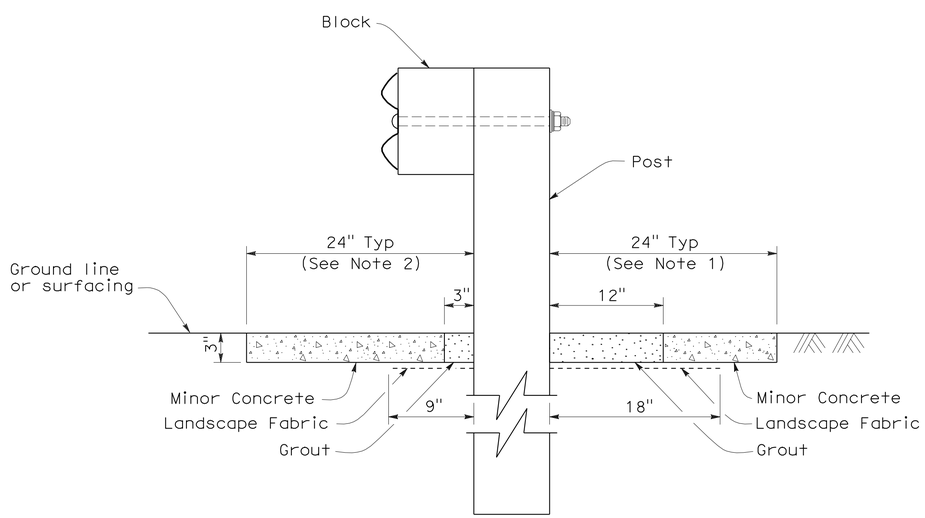

SECTION A-A

STATE OF CALIFORNIA
DEPARTMENT OF TRANSPORTATION

METAL BEAM GUARD RAILING TYPICAL VEGETATION CONTROL STANDARD RAILING SECTION

NO SCALE

NSP A77C5 DATED OCTOBER 20, 2006 SUPPLEMENTS THE STANDARD PLANS BOOK DATED MAY 2006.

NEW STANDARD PLAN NSP A77C5

2006 NEW STANDARD PLAN NSP A77C5

7-17-06

DIST	COUNTY	ROUTE	POST MILES TOTAL PROJECT	SHEET NO.	TOTAL SHEETS
07	LA	5	15.8/16.9	97	145

Randell D. Hiatt
REGISTERED CIVIL ENGINEER

October 20, 2006
PLANS APPROVAL DATE

REGISTERED PROFESSIONAL ENGINEER
Randell D. Hiatt
No. C50200
Exp. 6-30-07
CIVIL
STATE OF CALIFORNIA

The State of California or its officers or agents shall not be responsible for the accuracy or completeness of electronic copies of this plan sheet.

To accompany plans dated 5-24-10

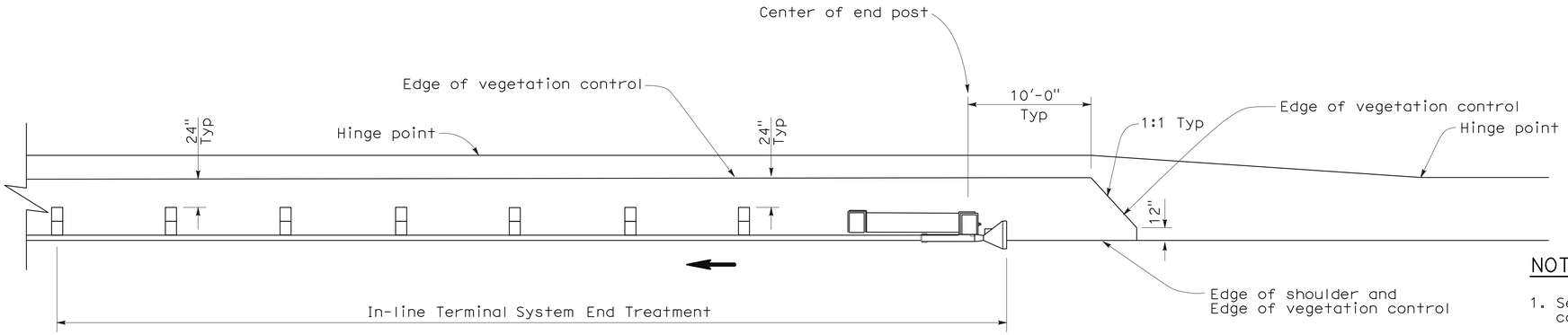

PLAN

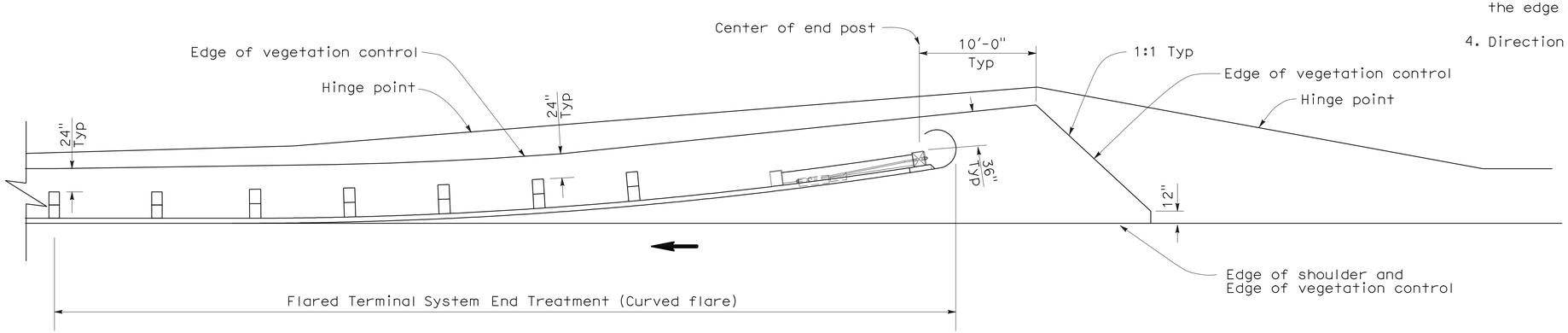

PLAN

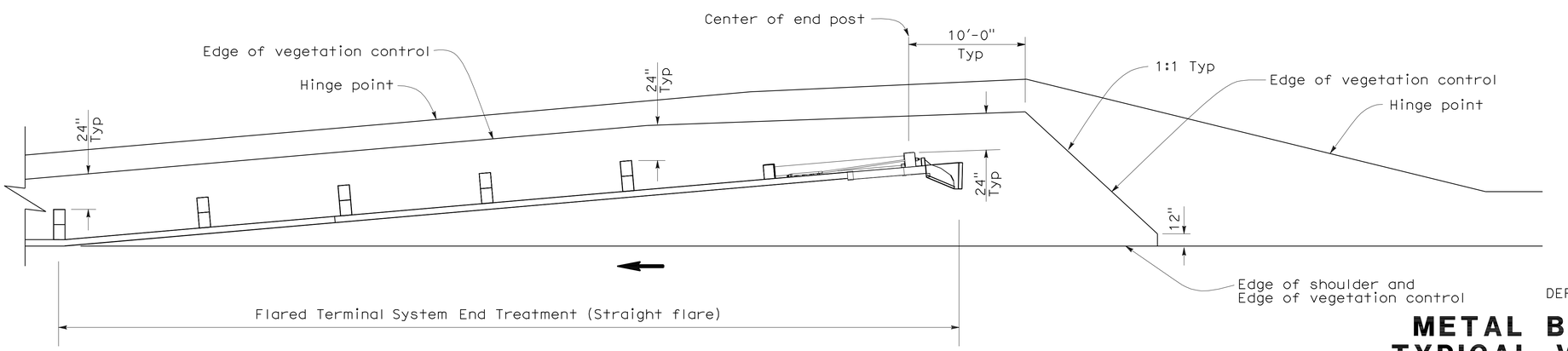

PLAN

NOTES:

1. See New Standard Plan NSP A77C5 for additional vegetation control details.
2. Where the distance between back of post and hinge point is less than 24", vegetation control to be constructed flush with the back edge of the post.
3. Where dike is constructed under railing, construct vegetation control to back edge of dike. Where paved shoulder is constructed within 24" in front of the post, construct vegetation control to the edge of paved shoulder.
4. Direction of adjacent traffic indicated by ←.

STATE OF CALIFORNIA
DEPARTMENT OF TRANSPORTATION

METAL BEAM GUARD RAILING TYPICAL VEGETATION CONTROL FOR TERMINAL SYSTEM END TREATMENTS

NO SCALE

NSP A77C6 DATED OCTOBER 20, 2006 SUPPLEMENTS THE STANDARD PLANS BOOK DATED MAY 2006.

NEW STANDARD PLAN NSP A77C6

2006 NEW STANDARD PLAN NSP A77C6

7-17-06

DIST	COUNTY	ROUTE	POST MILES TOTAL PROJECT	SHEET NO.	TOTAL SHEETS
07	LA	5	15.8/16.9	98	145

Randell D. Hiatt
REGISTERED CIVIL ENGINEER

October 20, 2006
PLANS APPROVAL DATE

REGISTERED PROFESSIONAL ENGINEER
Randell D. Hiatt
No. C50200
Exp. 6-30-07
CIVIL
STATE OF CALIFORNIA

The State of California or its officers or agents shall not be responsible for the accuracy or completeness of electronic copies of this plan sheet.

To accompany plans dated 5-24-10

NOTES:

1. See New Standard Plan NSP A77C5 for additional vegetation control details.
2. Where the distance between back of post and hinge point is less than 24", vegetation control to be constructed flush with the back edge of the post.
3. Where dike is constructed under railing, construct vegetation control to back edge of dike. Where paved shoulder is constructed within 24" in front of the post, construct vegetation control to the edge of paved shoulder.
4. Direction of adjacent traffic indicated by ←.

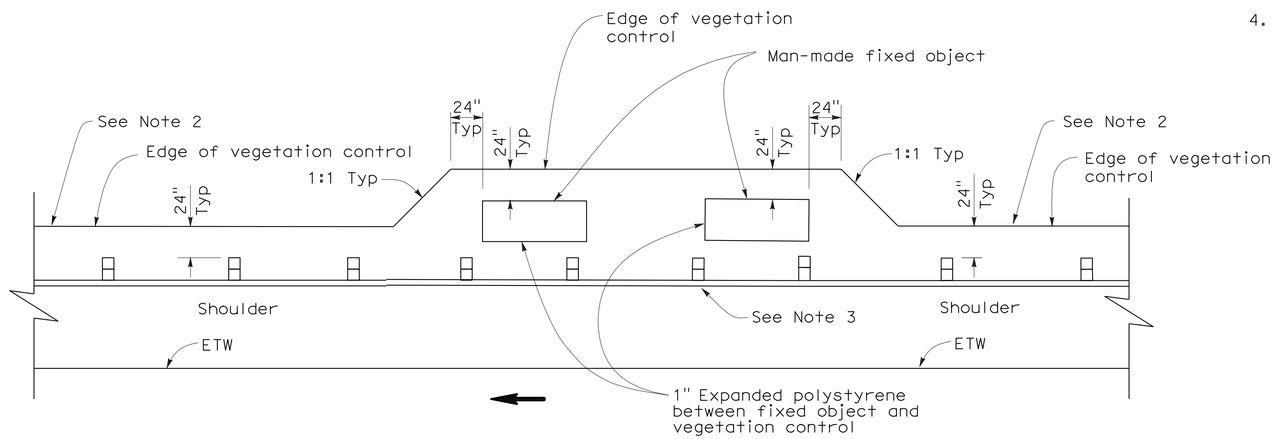

PLAN

FIXED OBJECT(S) ON SHOULDER

STATE OF CALIFORNIA
DEPARTMENT OF TRANSPORTATION

METAL BEAM GUARD RAILING TYPICAL VEGETATION CONTROL AT FIXED OBJECT

NO SCALE

NSP A77C8 DATED OCTOBER 20, 2006 SUPPLEMENTS THE STANDARD PLANS BOOK DATED MAY 2006.

NEW STANDARD PLAN NSP A77C8

2006 NEW STANDARD PLAN NSP A77C8

7-17-06

DIST	COUNTY	ROUTE	POST MILES TOTAL PROJECT	SHEET NO.	TOTAL SHEETS
07	LA	5	15.8/16.9	99	145

Randell D. Hiatt
REGISTERED CIVIL ENGINEER

June 6, 2008
PLANS APPROVAL DATE

REGISTERED PROFESSIONAL ENGINEER
Randell D. Hiatt
No. C50200
Exp. 6-30-09
CIVIL
STATE OF CALIFORNIA

The State of California or its officers or agents shall not be responsible for the accuracy or completeness of electronic copies of this plan sheet.

To accompany plans dated 5-24-10

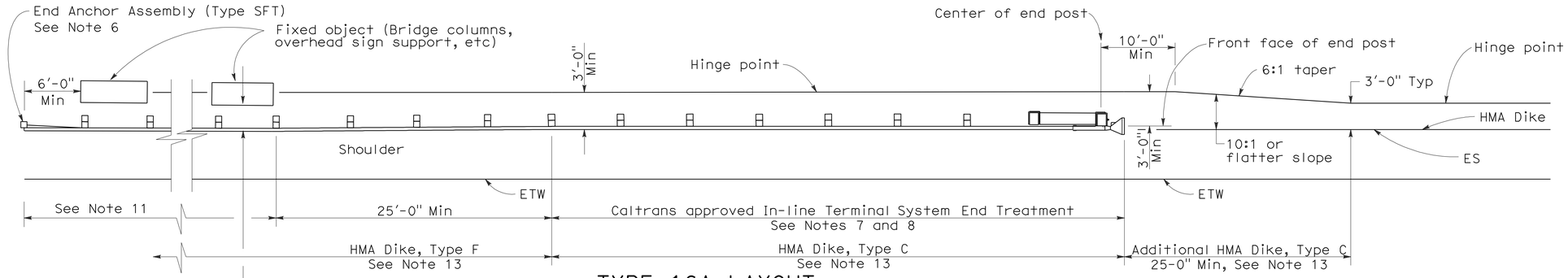

TYPE 16A LAYOUT

(GUARD RAILING INSTALLATION AT ROADSIDE FIXED OBJECT OR OBJECTS WITH AN IN-LINE END TREATMENT AT TRAFFIC APPROACH END OF RAILING)
See Notes 12 and 13

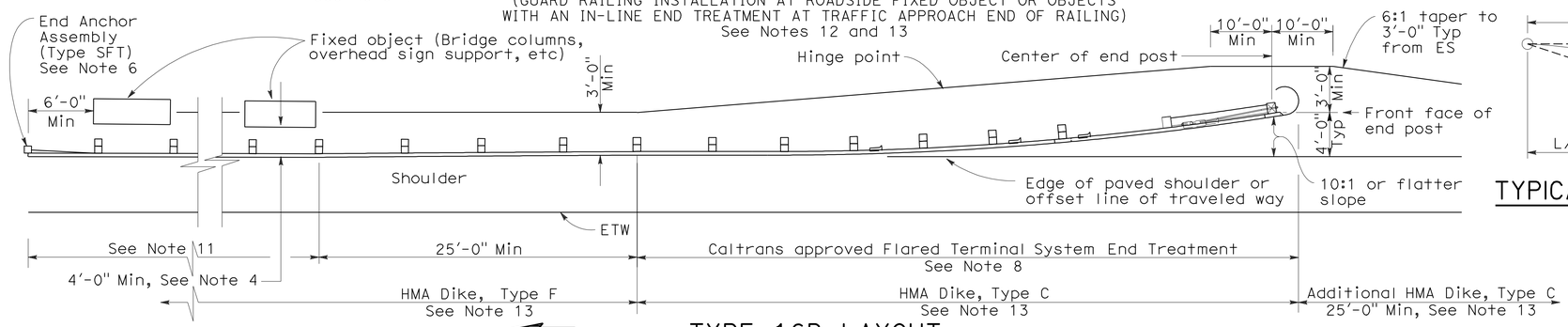

TYPE 16B LAYOUT

(GUARD RAILING INSTALLATION AT ROADSIDE FIXED OBJECT OR OBJECTS WITH A FLARED END TREATMENT AT TRAFFIC APPROACH END OF RAILING)
See Notes 12 and 13

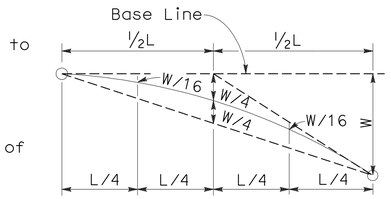

TYPICAL PARABOLIC LAYOUT

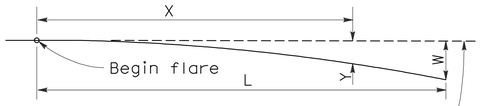

Base Line (Edge of paved shoulder or offset line of edge of traveled way)

$$Y = \frac{WX^2}{L^2}$$

Y = Offset from base line
W = Maximum offset
X = Distance along base line
L = Length of flare

PARABOLIC FLARE OFFSETS

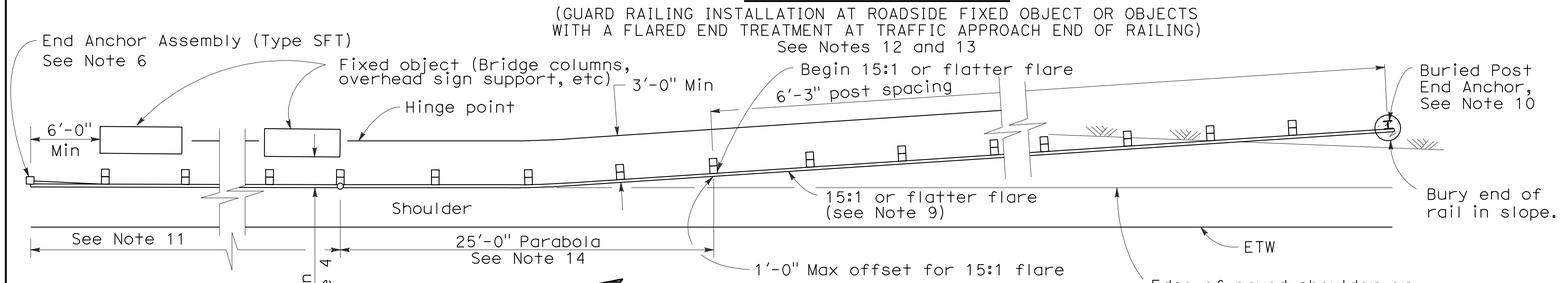

TYPE 16C LAYOUT

(GUARD RAILING INSTALLATION AT ROADSIDE FIXED OBJECT OR OBJECTS WITH A BURIED END ANCHOR TREATMENT AT TRAFFIC APPROACH END OF RAILING)
See Notes 12 and 13

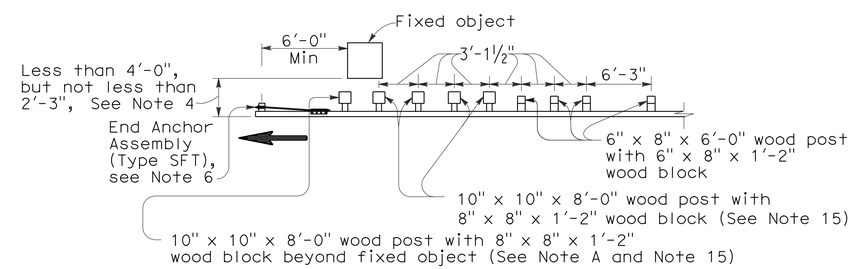

NOTE A: For a series of fixed objects (bridge columns, overhead sign supports, etc.) additional 10" x 10" x 8'-0" wood post with 8" x 8" x 1'-2" wood blocks at 3'-1½" center to center spacing are to be used between fixed objects.

STRENGTHENED RAILING SECTIONS FOR FIXED OBJECT

Use strengthened railing sections with Types 16A, 16B or 16C Layouts where minimum clearance between the face of the guard railing and fixed object(s) is less than 4'-0", but not less than 2'-3". See Note 4

NOTES:

1. Line post, blocks and hardware to be used are shown on Revised Standard Plans A77A1, A77A2, A77B1, A77C1 and A77C2.
2. Guard railing post spacing to be 6'-3" center to center, except as otherwise noted.
3. Except as noted, line posts are 6" x 8" x 6'-0" wood with 6" x 8" x 1'-2" wood blocks. W6 x 9 steel posts, 6'-0" in length, with 6" x 8" x 1'-2" notched wood blocks or notched recycled plastic blocks may be used for 6" x 8" x 6'-0" wood line posts with 6" x 8" x 1'-2" wood blocks where applicable and when specified.
4. A 4'-0" minimum clearance is required between the face of the railing and the face of a fixed object located directly behind standard guard railing sections with post spacing of 6'-3". Construct guard railing as shown in the detail "Strengthened Railing Sections for Fixed Objects" on this plan, where the clearance between the face of the railing and the face of a fixed object is less than 4'-0", but not less than 2'-3". Where the clearance is less than 2'-3", a concrete wall or barrier should be constructed to shield the fixed object(s).
5. Direction of adjacent traffic indicated by ⟶.
6. For End Anchor Assembly (Type SFT) details, see Standard Plan A77H1.
7. In-line Terminal System End Treatments are used where site conditions will not accommodate a flared end treatment.
8. The type of terminal system to be used will be shown on the Project Plans.
9. The 15:1 or flatter flare used with Type 16C Layout is based on the edge of the paved shoulder or offset line of edge of the traveled way. The length of guard railing within the 15:1 or flatter flare is based on site conditions and should be a length equal to multiples of 12'-6".
10. For details of the Buried Post End Anchor used with Type 16C Layout, see Standard Plan A77I2.
11. As site conditions dictate, construct additional guard railing to shield fixed object(s). Additional guard railing length equal to multiples of 12'-6". Post spacing at 6'-3" except as specified in Note 4.
12. Layout Types 16A, 16B or 16C are typically used where guard railing is recommended to shield roadside fixed object(s) and a crashworthy end treatment is required for only one direction of traffic.
13. Where placement of dike is required with guard railing, see Revised Standard Plan RSP A77C4 for dike positioning details.
14. For typical flare offsets for 25'-0" length parabola with maximum offset of 1'-0", see Revised Standard Plan RSP A77E1.
15. W6 x 15 steel post, 8'-0" in length, with 8" x 8" x 1'-2" notched wood block or notched recycled plastic blocks may be used in place of the 10" x 10" x 8'-0" wood post with 8" x 8" x 1'-2" wood block shown in the "Strengthened Railing Sections Detail".

STATE OF CALIFORNIA
DEPARTMENT OF TRANSPORTATION

METAL BEAM GUARD RAILING TYPICAL LAYOUTS FOR ROADSIDE FIXED OBJECTS

NO SCALE

RSP A77G3 DATED JUNE 6, 2008 SUPERSEDES STANDARD PLAN A77G3 DATED MAY 1, 2006 - PAGE 61 OF THE STANDARD PLANS BOOK DATED MAY 2006.

REVISED STANDARD PLAN RSP A77G3

2006 REVISED STANDARD PLAN RSP A77G3

12-10-07

DIST	COUNTY	ROUTE	POST MILES TOTAL PROJECT	SHEET NO.	TOTAL SHEETS
07	LA	5	15.8/16.9	100	145

REGISTERED CIVIL ENGINEER

May 15, 2009
PLANS APPROVAL DATE

REGISTERED PROFESSIONAL ENGINEER William K. Farnbach No. C49042 Exp. 9-30-10 CIVIL STATE OF CALIFORNIA

The State of California or its officers or agents shall not be responsible for the accuracy or completeness of electronic copies of this plan sheet.

To accompany plans dated 5-24-10

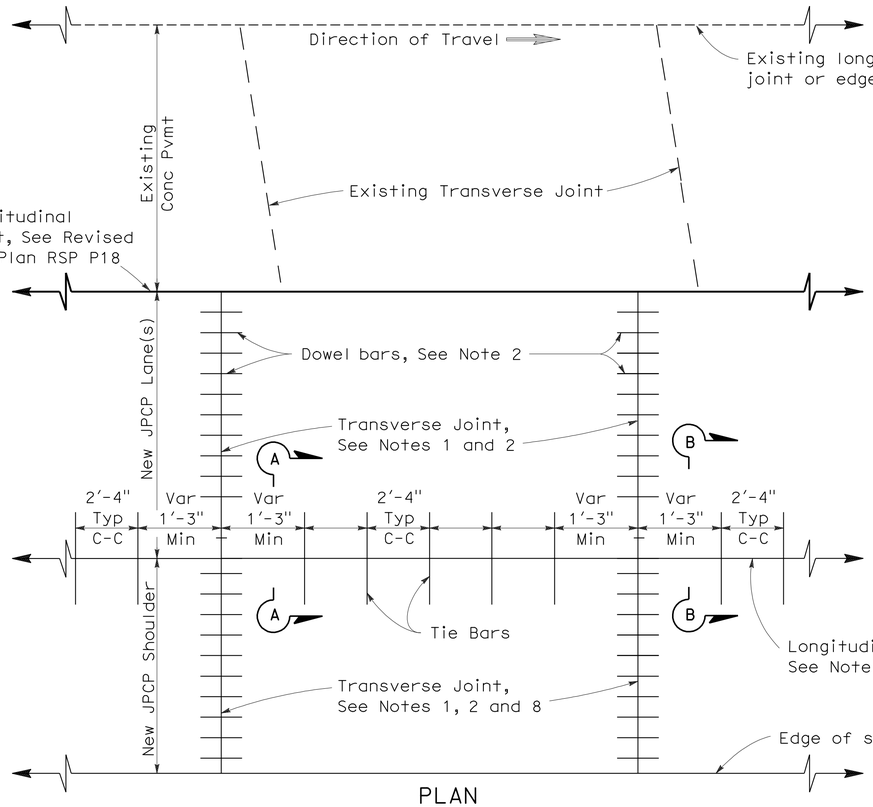

PLAN

LANE/SHOULDER ADDITION OR RECONSTRUCTION

See Notes 6 and 7

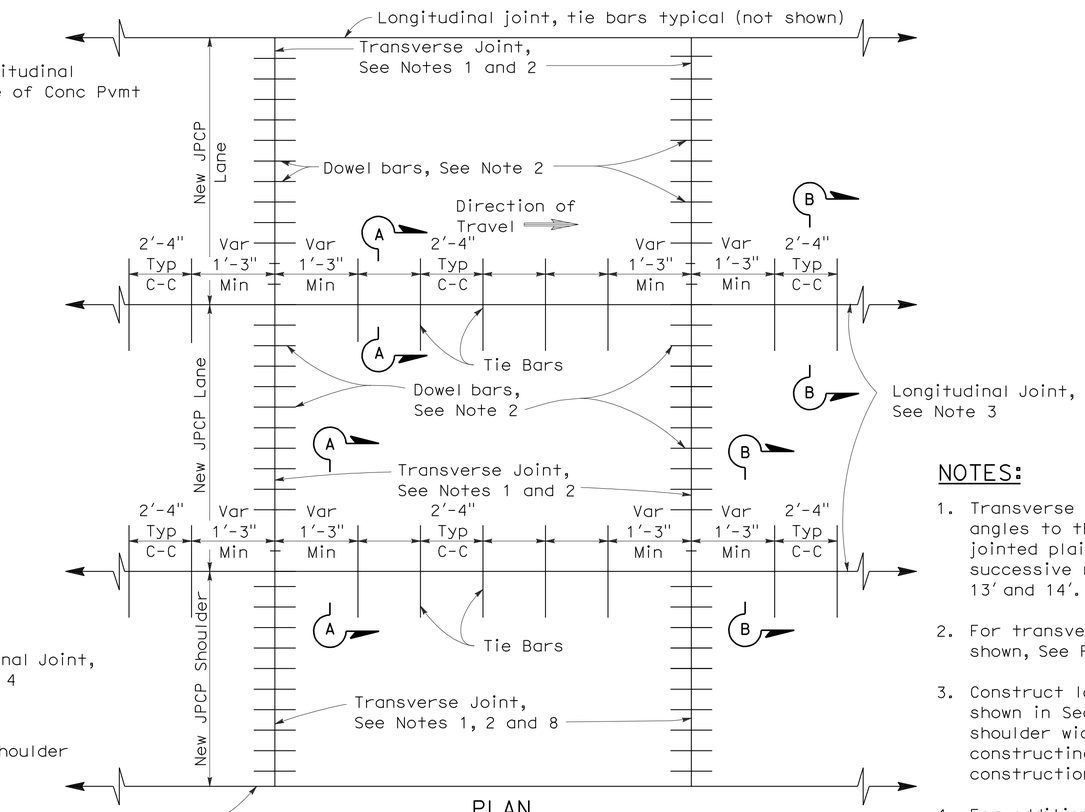

PLAN

NEW CONSTRUCTION

See Notes 6 and 7

NOTES:

1. Transverse joints shall be constructed at right angles to the longitudinal pavement joints in new jointed plain concrete pavement and spaced at successive repeated intervals of 12', 15', 13' and 14'.
2. For transverse joint and dowel bar details not shown, See Revised Standard Plan RSP P10.
3. Construct longitudinal contraction joints as shown in Section A-A when more than one lane or shoulder widths are placed at one time. If constructing one lane at a time, use longitudinal construction joint, as shown in Section B-B.
4. For additional longitudinal joint details, see Revised Standard Plan RSP P18.
5. If fresh concrete is placed adjacent to existing concrete, the top corner of the new hardened concrete does not need to be rounded to the 1/4" radius as shown.
6. Joint spacing patterns do not apply to intersections.
7. Details can also apply to inside widening.
8. Dowel bars may be omitted from shoulders when the shoulder cross slope is not the same as the adjacent traffic lane.

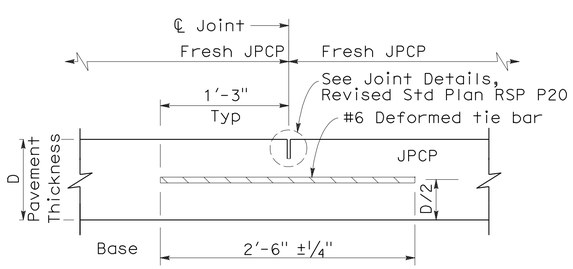

SECTION A-A

LONGITUDINAL CONTRACTION JOINT

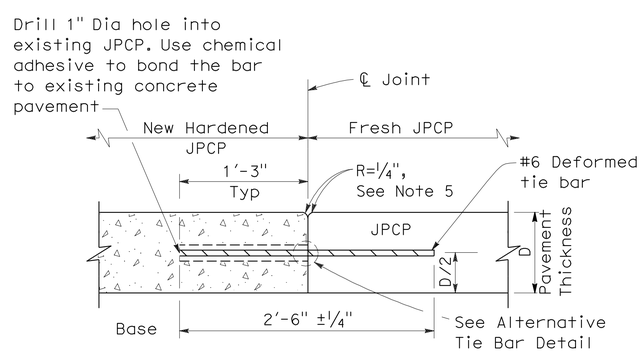

SECTION B-B

LONGITUDINAL CONSTRUCTION JOINT

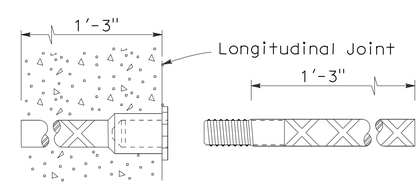

ALTERNATIVE TIE BAR SPLICE DETAIL

(Splice Coupler)

TIE BAR DETAILS

STATE OF CALIFORNIA
DEPARTMENT OF TRANSPORTATION

JOINTED PLAIN CONCRETE PAVEMENT

NO SCALE

RSP P1 DATED MAY 15, 2009 SUPERSEDES STANDARD PLAN P1
DATED MAY 1, 2006 - PAGE 119 OF THE STANDARD PLANS BOOK DATED MAY 2006.

REVISED STANDARD PLAN RSP P1

2006 REVISED STANDARD PLAN RSP P1

5-8-09