DIST	COUNTY	ROUTE	POST MILES TOTAL PROJECT	SHEET No	TOTAL SHEETS
07	LA	47,103	3.5/4.6, 0.0/1.1	901	1003

REGISTERED CIVIL ENGINEER 04/19/10 DATE

10-11-10
PLANS APPROVAL DATE

The State of California or its officers or agents shall not be responsible for the accuracy or completeness of electronic copies of this plan sheet.

REGISTERED PROFESSIONAL ENGINEER G.J.Gunaranjan No. C71758 Exp. 12-31-11 CIVIL STATE OF CALIFORNIA

ACTA
ONE CIVIC PLAZA. SUITE 350,
CARSON, CA 90745

EARTH MECHANICS, INC.
17660, NEWHOPE STREET, SUITE E
FOUNTAIN VALLEY, CA 92708

BENCHMARKS:

PT-503	PT-531065
REBAR	PK NAIL IN LEAD
18.51'Lt ℄ "A" Line	53.55'Lt ℄ "A" Line
Sta. 8+8.66	Sta. 4+24.53
N 1735350.13	N 1734960.02
E 6489075.70	E 6489051.67
Elev. = -0.53	Elev. = 17.75

NOTES:

(1) This LOTB sheet (Boring Record) was prepared in accordance with the Caltrans Soil and Rock Classification Logging, Classification and Presentation Manual (June 2007).
(2) 2.4" samples were taken using a California Modified Sampler.
(3) An automatic trip hammer system consisting of a hammer weight of 140 lbs falling a distance of 30" was used to advance the drive sampler.

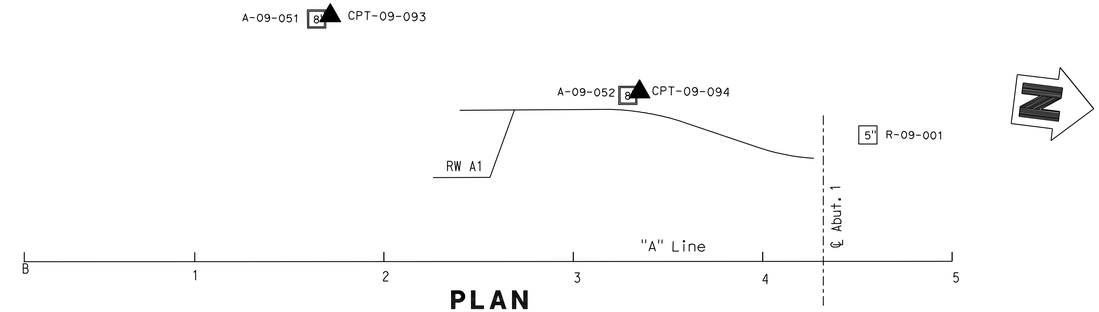

PLAN
1" = 40'

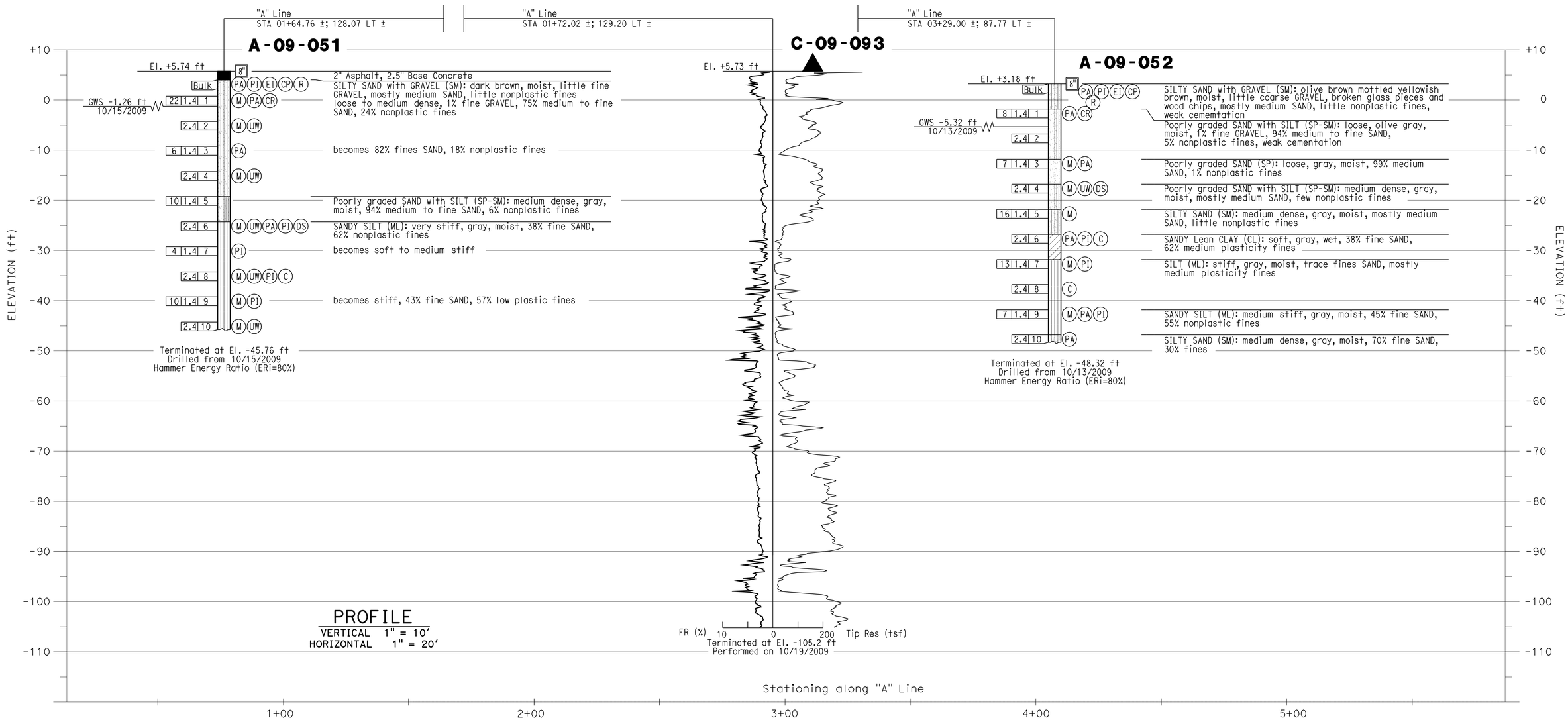

PROFILE
VERTICAL 1" = 10'
HORIZONTAL 1" = 20'

DESIGN OVERSIGHT	DRAWN BY: J.Fang	FIELD INVESTIGATION BY:	PREPARED FOR THE STATE OF CALIFORNIA DEPARTMENT OF TRANSPORTATION	G.J.Gunaranjan PROJECT ENGINEER	BRIDGE NO. 53E0147
SIGN OFF DATE	CHECKED BY: K.Pratheepan	K.Thant			POST MILE 3.55

MSE RETAINING WALL NO. A1

LOG OF TEST BORINGS NO. 1 OF 4

OGS CIVIL LOG OF TEST BORINGS SHEET (ENGLISH) (REV. 06-01-09)

ORIGINAL SCALE IN INCHES FOR REDUCED PLANS 0 1 2 3

CU 07-271
EA 138201

DISREGARD PRINTS BEARING EARLIER REVISION DATES

REVISION DATES (PRELIMINARY STAGE ONLY) 02/08/10 04/14/10 05/18/10 07/02/10

SHEET 15 OF 18

FILE => 53-rwa1_mse_fltb01.dgn

USERNAME => trlenard DATE PLOTTED => 14-OCT-2010 TIME PLOTTED => 10:13

DIST	COUNTY	ROUTE	POST MILES TOTAL PROJECT	SHEET No	TOTAL SHEETS
07	LA	47,103	3.5/4.6, 0.0/1.1	902	1003

REGISTERED CIVIL ENGINEER 04/19/10 DATE

10-11-10
PLANS APPROVAL DATE

The State of California or its officers or agents shall not be responsible for the accuracy or completeness of electronic copies of this plan sheet.

REGISTERED PROFESSIONAL ENGINEER G.J.Gunaranjan No. C71758 Exp. 12-31-11 CIVIL STATE OF CALIFORNIA

ACTA
ONE CIVIC PLAZA. SUITE 350,
CARSON, CA 90745

EARTH MECHANICS, INC.
17660, NEWHOPE STREET, SUITE E
FOUNTAIN VALLEY, CA 92708

BENCHMARKS:

PT-503	PT-531065
REBAR	PK NAIL IN LEAD
18.51'Lt ℄ "A" Line	53.55'Lt ℄ "A" Line
Sta. 8+8.66	Sta. 4+24.53
N 1735350.13	N 1734960.02
E 6489075.70	E 6489051.67
Elev. = -0.53	Elev. = 17.75

NOTES:

(1) This LOTB sheet (Boring Record) was prepared in accordance with the Caltrans Soil and Rock Classification Logging, Classification and Presentation Manual (June 2007).
(2) 2.4" samples were taken using a California Modified Sampler.
(3) A rope and cat-head hammer system consisting of a hammer weight of 140 lbs falling a distance of 30" was used to advance the drive sampler.

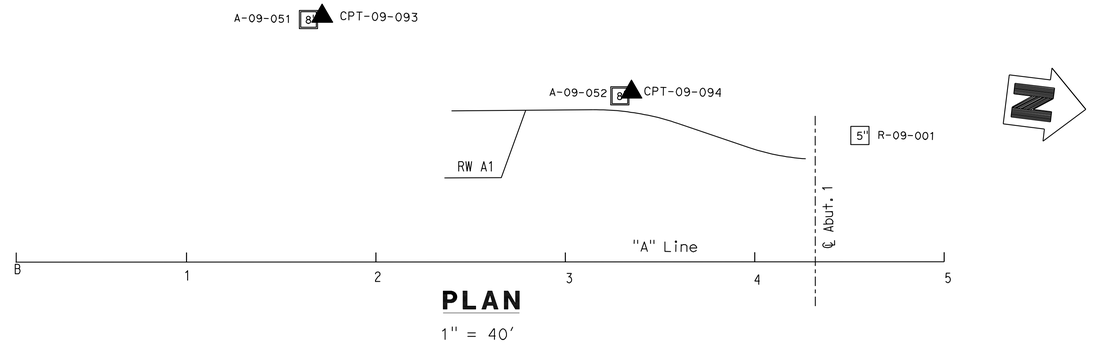

PLAN
1" = 40'

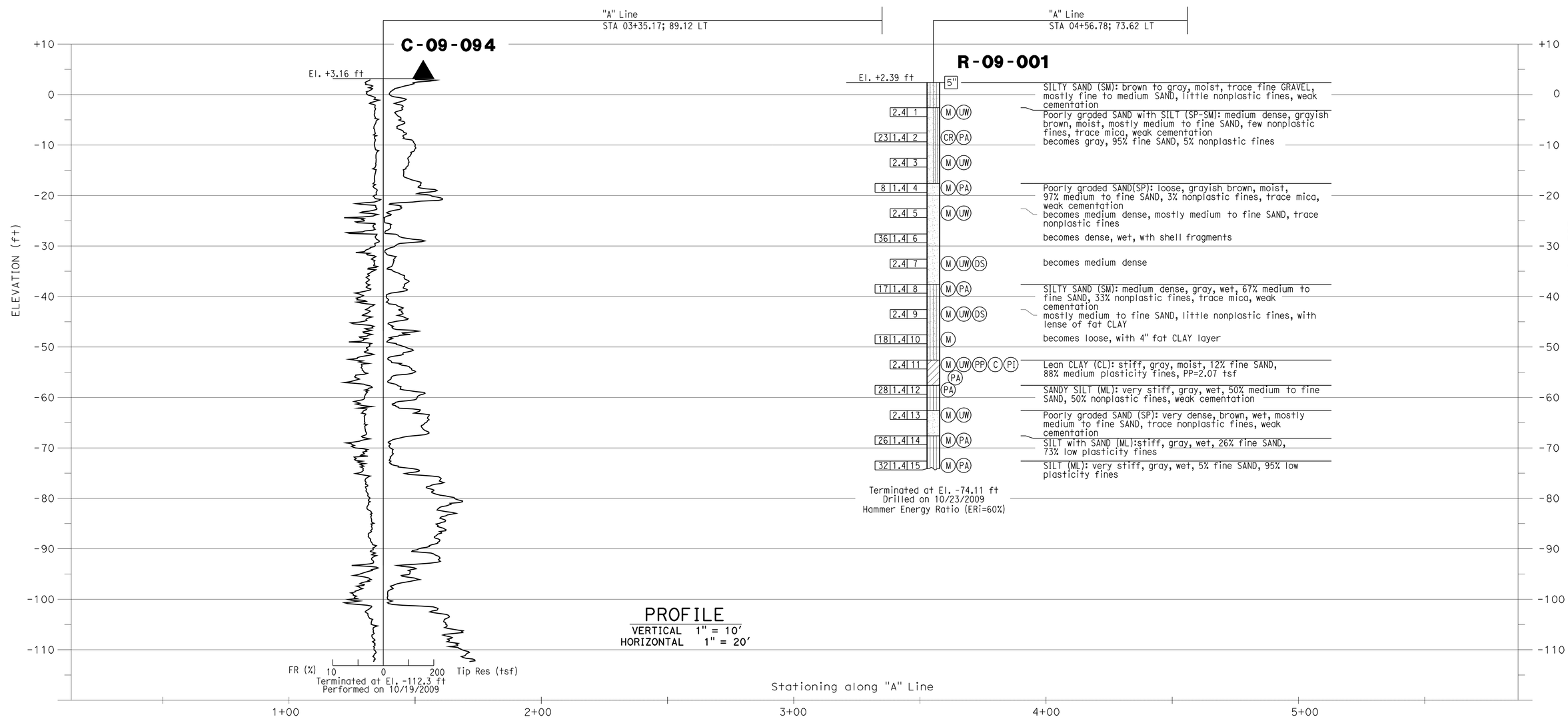

PROFILE
VERTICAL 1" = 10'
HORIZONTAL 1" = 20'

DESIGN OVERSIGHT	DRAWN BY: J.Fang	FIELD INVESTIGATION BY:	PREPARED FOR THE STATE OF CALIFORNIA DEPARTMENT OF TRANSPORTATION	G.J.Gunaranjan PROJECT ENGINEER	BRIDGE NO. 53E0147 POST MILE 3.55	MSE RETAINING WALL NO. A1
SIGN OFF DATE	CHECKED BY: K.Pratheepan	R.Jie				LOG OF TEST BORINGS NO. 2 OF 4

OGS CIVIL LOG OF TEST BORINGS SHEET (ENGLISH) (REV. 06-01-09)

ORIGINAL SCALE IN INCHES FOR REDUCED PLANS 0 1 2 3

CU 07-271
EA 138201

DISREGARD PRINTS BEARING EARLIER REVISION DATES

REVISION DATES (PRELIMINARY STAGE ONLY) 02/08/10 04/14/10 05/19/10 07/02/10

SHEET 16 OF 18

FILE => 53-rwa1_mse_fltb02.dgn

USERNAME => trlenard DATE PLOTTED => 14-OCT-2010 TIME PLOTTED => 10:13

REFERENCE: CALTRANS SOIL & ROCK LOGGING, CLASSIFICATION, AND PRESENTATION MANUAL (JUNE 2007)

DIST	COUNTY	ROUTE	POST MILES TOTAL PROJECT	SHEET No	TOTAL SHEETS
07	LA	47,103	3.5/4.6, 0.0/1.1	903	1003

REGISTERED ENGINEER 04/19/10 DATE

10-11-10
PLANS APPROVAL DATE

REGISTERED PROFESSIONAL ENGINEER G.J.Gunaranjan No. C71758 Exp. 12-31-11 CIVIL STATE OF CALIFORNIA

The State of California or its officers or agents shall not be responsible for the accuracy or completeness of electronic copies of this plan sheet.

ACTA
ONE CIVIC PLAZA. SUITE 350,
CARSON, CA 90745

EARTH MECHANICS, INC.
17660, NEWHOPE STREET, SUITE E
FOUNTAIN VALLEY, CA 92708

CEMENTATION

Description	Criteria
Weak	Crumbles or breaks with handling or little finger pressure.
Moderate	Crumbles or breaks with considerable finger pressure.
Strong	Will not crumble or break with finger pressure.

CONSISTENCY OF COHESIVE SOILS

Description	Unconfined Compressive Strength (tsf)	Pocket Penetrometer Measurement (tsf)	Torvane Measurement (tsf)	Field Approximation
Very Soft	< 0.25	< 0.25	< 0.12	Easily penetrated several inches by fist
Soft	0.25 to 0.50	0.25 to 0.50	0.12 to 0.25	Easily penetrated several inches by thumb
Medium Stiff	0.50 to 1.0	0.50 to 1.0	0.25 to 0.50	Penetrated several inches by thumb with moderate effort
Stiff	1 to 2	1 to 2	0.50 to 1.0	Readily indented by thumb but penetrated only with great effort
Very Stiff	2 to 4	2 to 4	1.0 to 2.0	Readily indented by thumbnail
Hard	> 4.0	> 4.0	> 2.0	Indented by thumbnail with difficulty

BOREHOLE IDENTIFICATION

Symbol	Hole Type	Description
Size	A	Auger Boring
Size	R P	Rotary drilled boring Rotary percussion boring (air)
Size	R	Rotary drilled diamond core
Size	HD HA	Hand driven (1-inch soil tube) Hand Auger
●	D	Dynamic Cone Penetration Boring
▲	CPT	Cone Penetration Test (ASTM D 5778-95)
⬚	O	Other

Note: Size in inches.

PLASTICITY OF FINE-GRAINED SOILS

Description	Criteria
Nonplastic	A 1/8-inch thread cannot be rolled at any water content.
Low	The thread can barely be rolled and the lump cannot be formed when drier than the plastic limit.
Medium	The thread is easy to roll and not much time is required to reach the plastic limit. The thread cannot be rerolled after reaching the plastic limit. The lump crumbles when drier than the plastic limit.
High	It takes considerable time rolling and kneading to reach the plastic limit. The thread can be rerolled several times after reaching the plastic limit. The lump can be formed without crumbling when drier than the plastic limit.

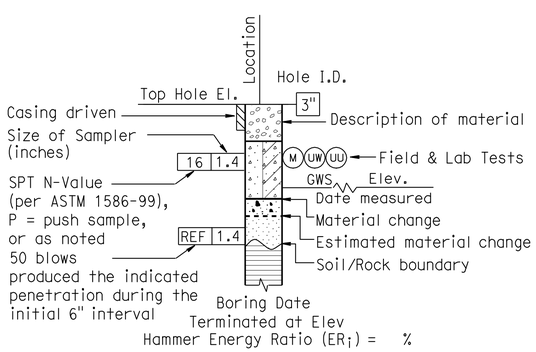

ROTARY BORING

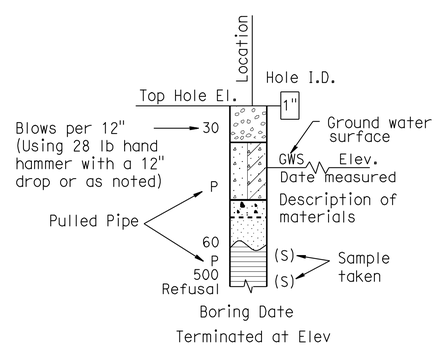

HAND BORING

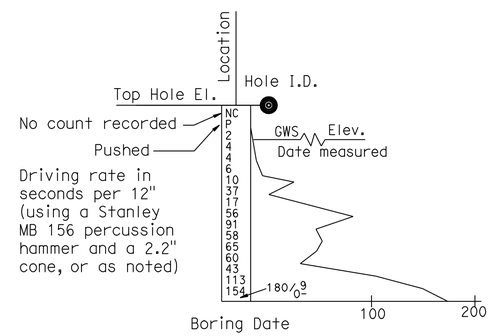

DYNAMIC CONE PENETRATION BORING

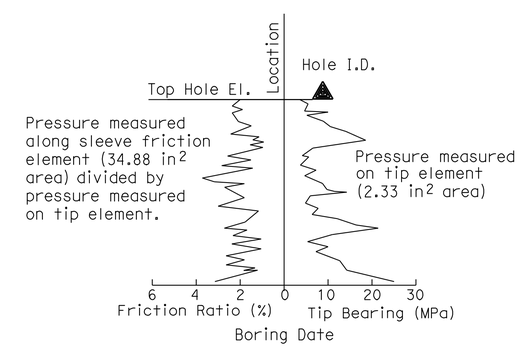

CONE PENETRATION TEST (CPT) SOUNDING

DESIGN OVERSIGHT SIGN OFF DATE	DRAWN BY: J.Fang CHECKED BY: K.Pratheepan	FIELD INVESTIGATION BY: R.Jie/K.Thant	PREPARED FOR THE STATE OF CALIFORNIA DEPARTMENT OF TRANSPORTATION	G.G.Gunaranjan PROJECT ENGINEER	BRIDGE NO. 53E0147 POST MILE 3.55

MSE RETAINING WALL NO. A1

LOG OF TEST BORINGS NO. 3 OF 4

OGS CIVIL LOG OF TEST BORINGS SHEET (ENGLISH) (REV. 06-01-09)

ORIGINAL SCALE IN INCHES FOR REDUCED PLANS 0 1 2 3

CU 07-271
EA 138201

DISREGARD PRINTS BEARING EARLIER REVISION DATES

REVISION DATES (PRELIMINARY STAGE ONLY) 04/06/09 04/14/10 05/19/10 07/02/10

SHEET 17 OF 18

FILE => 53-rwa1_mse_fltb03.dgn

USERNAME => trlenard DATE PLOTTED => 14-OCT-2010 TIME PLOTTED => 10:13

REFERENCE: CALTRANS SOIL & ROCK LOGGING, CLASSIFICATION, AND PRESENTATION MANUAL (JUNE 2007)

DIST	COUNTY	ROUTE	POST MILES TOTAL PROJECT	SHEET No	TOTAL SHEETS
07	LA	47,103	3.5/4.6, 0.0/1.1	904	1003

REGISTERED ENGINEER 04/19/10 DATE

10-11-10
PLANS APPROVAL DATE

REGISTERED PROFESSIONAL ENGINEER G.J.Gunaranjan No. C71758 Exp. 12-31-11 CIVIL STATE OF CALIFORNIA

The State of California or its officers or agents shall not be responsible for the accuracy or completeness of electronic copies of this plan sheet.

ACTA
ONE CIVIC PLAZA. SUITE 350,
CARSON, CA 90745

EARTH MECHANICS, INC.
17660, NEWHOPE STREET, SUITE E
FOUNTAIN VALLEY, CA 92708

GROUP SYMBOLS AND NAMES

Graphic/Symbol	Group Names	Graphic/Symbol	Group Names
GW	Well-graded GRAVEL Well-graded GRAVEL with SAND	CL	Lean CLAY Lean CLAY with SAND Lean CLAY with GRAVEL SANDY lean CLAY SANDY lean CLAY with GRAVEL GRAVELLY lean CLAY GRAVELLY lean CLAY with SAND
GP	Poorly graded GRAVEL Poorly graded GRAVEL with SAND		
GW-GM	Well-graded GRAVEL with SILT Well-graded GRAVEL with SILT and SAND	CL-ML	SILTY CLAY SILTY CLAY with SAND SILTY CLAY with GRAVEL SANDY SILTY CLAY SANDY SILTY CLAY with GRAVEL GRAVELLY SILTY CLAY GRAVELLY SILTY CLAY with SAND
GW-GC	Well-graded GRAVEL with CLAY (or SILTY CLAY) Well-graded GRAVEL with CLAY and SAND (or SILTY CLAY and SAND)		
GP-GM	Poorly graded GRAVEL with SILT Poorly graded GRAVEL with SILT and SAND	ML	SILT SILT with SAND SILT with GRAVEL SANDY SILT SANDY SILT with GRAVEL GRAVELLY SILT GRAVELLY SILT with SAND
GP-GC	Poorly graded GRAVEL with CLAY (or SILTY CLAY) Poorly graded GRAVEL with CLAY and SAND (or SILTY CLAY and SAND)		
GM	SILTY GRAVEL SILTY GRAVEL with SAND	OL	ORGANIC lean CLAY ORGANIC lean CLAY with SAND ORGANIC lean CLAY with GRAVEL SANDY ORGANIC lean CLAY SANDY ORGANIC lean CLAY with GRAVEL GRAVELLY ORGANIC lean CLAY GRAVELLY ORGANIC lean CLAY with SAND
GC	CLAYEY GRAVEL CLAYEY GRAVEL with SAND		
GC-GM	SILTY, CLAYEY GRAVEL SILTY, CLAYEY GRAVEL with SAND	OL	ORGANIC SILT ORGANIC SILT with SAND ORGANIC SILT with GRAVEL SANDY ORGANIC SILT SANDY ORGANIC SILT with GRAVEL GRAVELLY ORGANIC SILT GRAVELLY ORGANIC SILT with SAND
SW	Well-graded SAND Well-graded SAND with GRAVEL		
SP	Poorly graded SAND Poorly graded SAND with GRAVEL	CH	Fat CLAY Fat CLAY with SAND Fat CLAY with GRAVEL SANDY fat CLAY SANDY fat CLAY with GRAVEL GRAVELLY fat CLAY GRAVELLY fat CLAY with SAND
SW-SM	Well-graded SAND with SILT Well-graded SAND with SILT and GRAVEL		
SW-SC	Well-graded SAND with CLAY (or SILTY CLAY) Well-graded SAND with CLAY and GRAVEL (or SILTY CLAY and GRAVEL)	MH	Elastic SILT Elastic SILT with SAND Elastic SILT with GRAVEL SANDY elastic SILT SANDY elastic SILT with GRAVEL GRAVELLY elastic SILT GRAVELLY elastic SILT with SAND
SP-SM	Poorly graded SAND with SILT Poorly graded SAND with SILT and GRAVEL		
SP-SC	Poorly graded SAND with CLAY (or SILTY CLAY) Poorly graded SAND with CLAY and GRAVEL (or SILTY CLAY and GRAVEL)	OH	ORGANIC fat CLAY ORGANIC fat CLAY with SAND ORGANIC fat CLAY with GRAVEL SANDY ORGANIC fat CLAY SANDY ORGANIC fat CLAY with GRAVEL GRAVELLY ORGANIC fat CLAY GRAVELLY ORGANIC fat CLAY with SAND
SM	SILTY SAND SILTY SAND with GRAVEL		
SC	CLAYEY SAND CLAYEY SAND with GRAVEL	OH	ORGANIC elastic SILT ORGANIC elastic SILT with SAND ORGANIC elastic SILT with GRAVEL SANDY ORGANIC elastic SILT SANDY ORGANIC elastic SILT with GRAVEL GRAVELLY ORGANIC elastic SILT GRAVELLY ORGANIC elastic SILT with SAND
SC-SM	SILTY, CLAYEY SAND SILTY, CLAYEY SAND with GRAVEL		
PT	PEAT	OL/OH	ORGANIC SOIL ORGANIC SOIL with SAND ORGANIC SOIL with GRAVEL SANDY ORGANIC SOIL SANDY ORGANIC SOIL with GRAVEL GRAVELLY ORGANIC SOIL GRAVELLY ORGANIC SOIL with SAND
	COBBLES COBBLES and BOULDERS BOULDERS		

FIELD AND LABORATORY TESTING

- (C) Consolidation (ASTM D 2435)
- (CL) Collapse Potential (ASTM D 5333)
- (CP) Compaction Curve (CTM 216)
- (CR) Corrosivity Testing (CTM 643, CTM 422, CTM 417)
- (CU) Consolidated Undrained Triaxial (ASTM D 4767)
- (DS) Direct Shear (ASTM D 3080)
- (EI) Expansion Index (ASTM D 4829)
- (M) Moisture Content (ASTM D 2216)
- (OC) Organic Content-% (ASTM D 2974)
- (P) Permeability (CTM 220)
- (PA) Particle Size Analysis (ASTM D 422)
- (PI) Plasticity Index (AASHTO T 90) Liquid Limit (AASHTO T 89)
- (PL) Point Load Index (ASTM D 5731)
- (PM) Pressure Meter
- (PP) Pocket Penetrometer
- (R) R-Value (CTM 301)
- (SE) Sand Equivalent (CTM 217)
- (SG) Specific Gravity (AASHTO T 100)
- (SL) Shrinkage Limit (ASTM D 427)
- (SW) Swell Potential (ASTM D 4546)
- (TV) Pocket Torvane
- (UC) Unconfined Compression-Soil (ASTM D 2166) Unconfined Compression-Rock (ASTM D 2938)
- (UU) Unconsolidated Undrained Triaxial (ASTM D 2850)
- (UW) Unit Weight (ASTM D 4767)
- (VS) Vane Shear (AASHTO T 223)

APPARENT DENSITY OF COHESIONLESS SOILS

Description	SPT N_{60} (Blows / 12 inches)
Very loose	0 - 4
Loose	5 - 10
Medium Dense	11 - 30
Dense	31 - 50
Very Dense	> 50

MOISTURE

Description	Criteria
Dry	Absence of moisture, dusty, dry to the touch
Moist	Damp but no visible water
Wet	Visible free water, usually soil is below water table

PERCENT OR PROPORTION OF SOILS

Description	Criteria
Trace	Particles are present but estimated to be less than 5%
Few	5 to 10%
Little	15 to 25%
Some	30 to 45%
Mostly	50 to 100%

PARTICLE SIZE

Description		Size
Boulder		> 12"
Cobble		3" to 12"
Gravel	Coarse	3/4" to 3"
	Fine	No. 4 to 3/4"
Sand	Coarse	No. 10 to No. 4
	Medium	No. 40 to No. 10
	Fine	No. 200 to No. 40

DESIGN OVERSIGHT

SIGN OFF DATE

DRAWN BY: J.Fang

CHECKED BY: K.Pratheepan

FIELD INVESTIGATION BY:
R.Jie/K.Thant

PREPARED FOR THE STATE OF CALIFORNIA DEPARTMENT OF TRANSPORTATION

G.J.Gunaranjan
PROJECT ENGINEER

BRIDGE NO. 53E0147
POST MILE 3.55

MSE RETAINING WALL NO. A1

LOG OF TEST BORINGS NO. 4 OF 4

OGS CIVIL LOG OF TEST BORINGS SHEET (ENGLISH) (REV. 06-01-09)

ORIGINAL SCALE IN INCHES FOR REDUCED PLANS 0 1 2 3

CU 07-271
EA 138201

DISREGARD PRINTS BEARING EARLIER REVISION DATES

REVISION DATES (PRELIMINARY STAGE ONLY) 04/06/09 03/14/10 05/19/10 07/02/10

SHEET 18 OF 18

FILE => 53-rwa1_mse_fltb04.dgn

USERNAME => rfriehard DATE PLOTTED => 14-OCT-2010 TIME PLOTTED => 10:13

DIST	COUNTY	ROUTE	POST MILES TOTAL PROJECT	SHEET No	TOTAL SHEETS
07	LA	47,103	3.5/4.6, 0.0/1.1	905	1003

REGISTERED CIVIL ENGINEER — DATE 05-24-10

10-11-10
PLANS APPROVAL DATE

The State of California or its officers or agents shall not be responsible for the accuracy or completeness of electronic copies of this plan sheet.

REGISTERED PROFESSIONAL ENGINEER — FOUED ZAYATI — No. C57046 — Exp. 06-30-11 — CIVIL — STATE OF CALIFORNIA

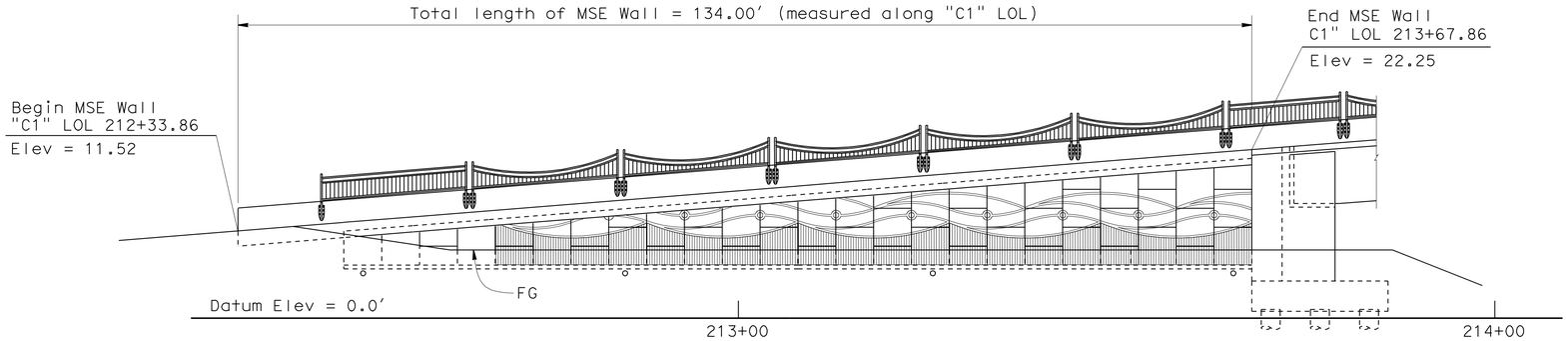

DEVELOPED ELEVATION

1" = 10′

INDEX TO PLANS

SHEET NO.	TITLE
1	GENERAL PLAN
2	STRUCTURE PLAN NO. 1
3	STRUCTURE PLAN NO. 2
4	FOUNDATION PLAN
5	MSE WALL DETAILS NO. 1 - TYPE A PANELS
6	MSE WALL DETAILS NO. 2 - TYPE B PANELS
7	MSE WALL DETAILS NO. 3
8	MSE WALL DETAILS NO. 4
9	MSE WALL DETAILS NO. 5
10	MSE WALL DETAILS NO. 6
11	MSE WALL DETAILS NO. 7
12	CONCRETE BARRIER DETAILS NO. 1
13	CONCRETE BARRIER DETAILS NO. 2
14	RAILING DETAILS NO. 1
15	RAILING DETAILS NO. 2
16	LOG OF TEST BORINGS NO. 1 OF 4
17	LOG OF TEST BORINGS NO. 2 OF 4
18	LOG OF TEST BORINGS NO. 3 OF 4
19	LOG OF TEST BORINGS NO. 4 OF 4

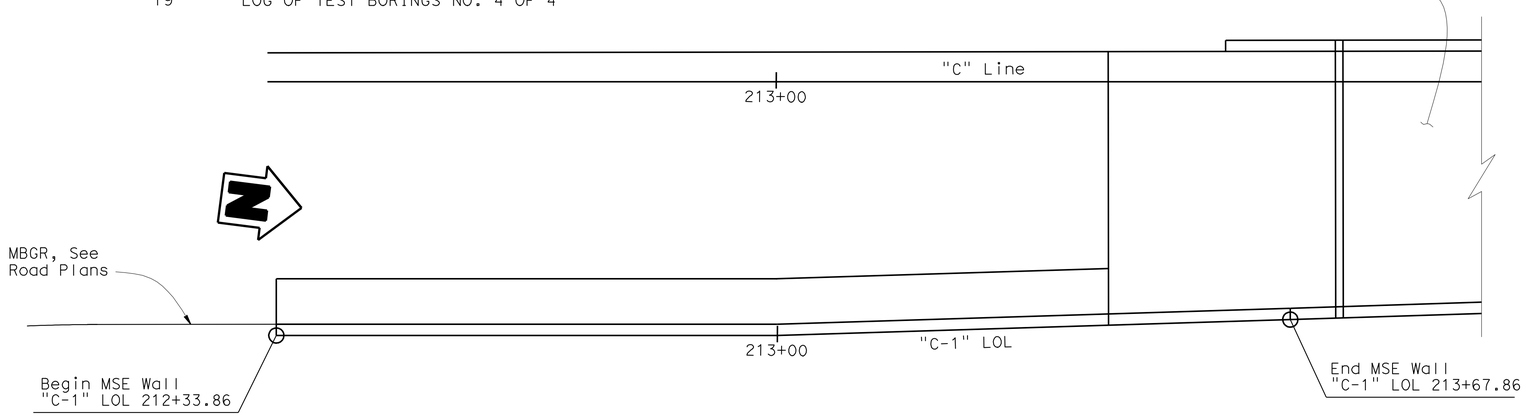

PLAN

1" = 10′

QUANTITIES

EARTH RETAINING STRUCTURE, LOCATION B	1,176	SQFT
STRUCTURAL CONCRETE, BARRIER SLAB	53	CY
BICYCLE RAILING	120	LF
CONCRETE BARRIER (TYPE 736 MODIFIED)	134	LF

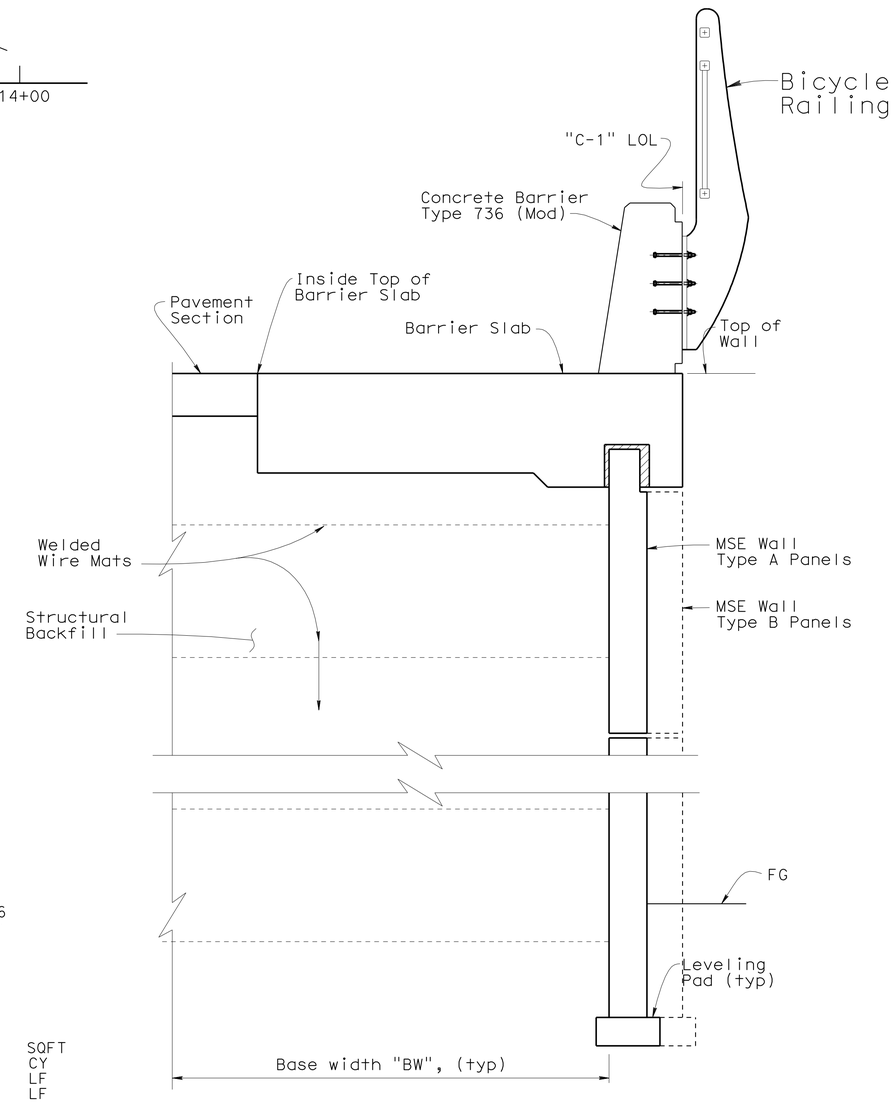

TYPICAL SECTION

3/4" = 1′

DESIGN ENGINEER

DESIGN	BY S. Galgiani	CHECKED F. Zayati	LOAD & RESISTANCE FACTOR DESIGN	LIVE LOADING: HL93 W/"LOW-BOY"; PERMIT DESIGN VEHICLE
DETAILS	BY K. Kubo	CHECKED S. Galgiani	LAYOUT BY S. Galgiani	CHECKED F. Zayati
QUANTITIES	BY S. Galgiani	CHECKED F. Zayati	SPECIFICATIONS BY J. Strootman	PLANS AND SPECS COMPARED J. Strootman

STATE OF CALIFORNIA
DEPARTMENT OF TRANSPORTATION

DIVISION OF ENGINEERING SERVICES
STRUCTURE DESIGN
DESIGN BRANCH 14

BRIDGE NO. 53E0147
POST MILE 3.72

MSE WALL NO. C1
GENERAL PLAN

STRUCTURES DESIGN GENERAL PLAN SHEET (ENGLISH) (REV. 10/25/05)

ORIGINAL SCALE IN INCHES FOR REDUCED PLANS 0 1 2 3

CU 07-271
EA 138201

DISREGARD PRINTS BEARING EARLIER REVISION DATES

REVISION DATES: 3-23-10 04-07-10 05-10-10 5-24-10 6-30-10 07-13-10

SHEET 1 OF 19

FILE => 53-rwc1_mse_agp.dgn

STRUCTURES DESIGN GENERAL PLAN SHEET (ENGLISH) (REV.07-24-06)

USERNAME => rlenard DATE PLOTTED => 14-OCT-2010 TIME PLOTTED => 10:14

DIST	COUNTY	ROUTE	POST MILES TOTAL PROJECT	SHEET No	TOTAL SHEETS
07	LA	47,103	3.5/4.6, 0.0/1.1	906	1003

REGISTERED CIVIL ENGINEER — DATE 05-24-10

10-11-10
PLANS APPROVAL DATE

REGISTERED PROFESSIONAL ENGINEER — FOUED ZAYATI — No. C57046 — Exp. 06-30-11 — CIVIL — STATE OF CALIFORNIA

The State of California or its officers or agents shall not be responsible for the accuracy or completeness of electronic copies of this plan sheet.

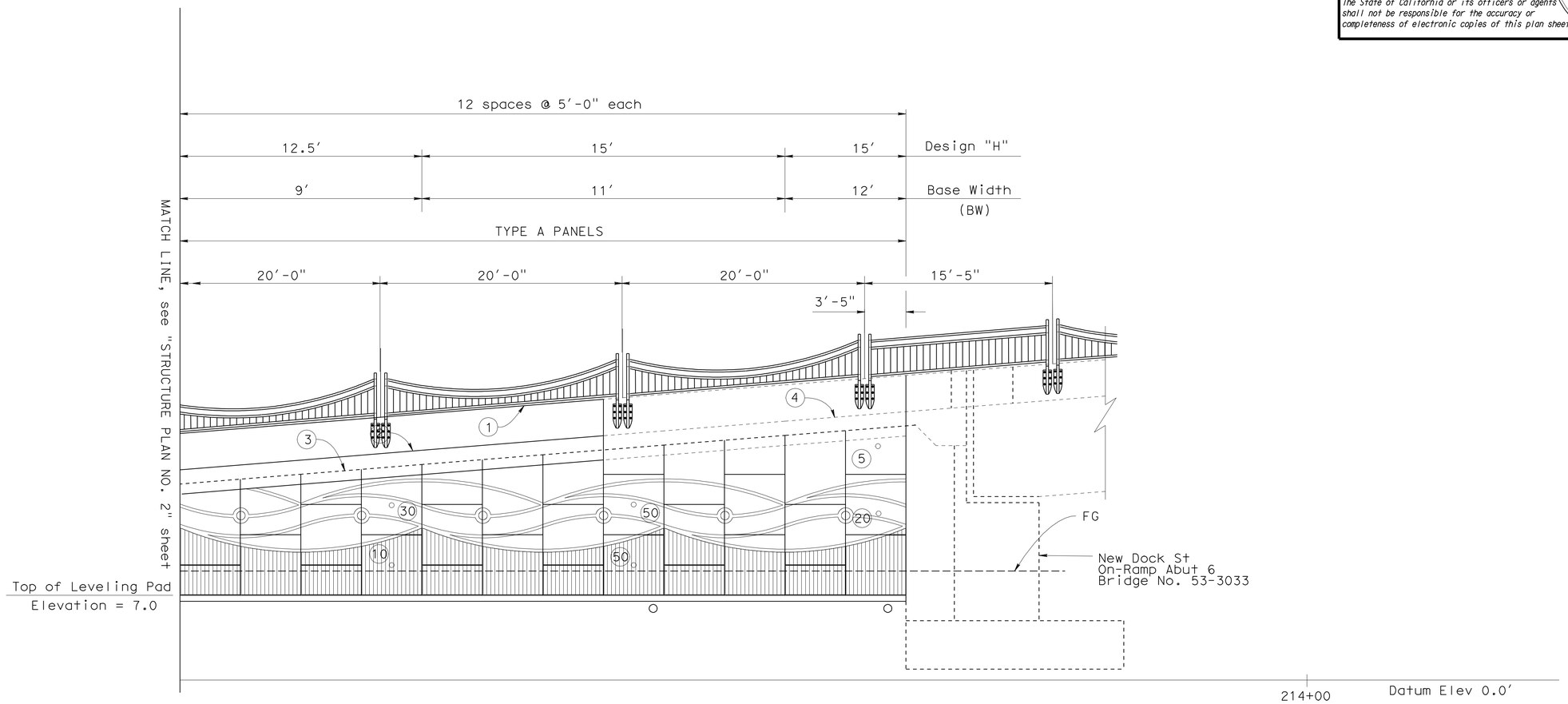

DEVELOPED ELEVATION

1" = 5'

1. Top of Concrete Barrier Type 736 Mod
2. Top of Wall
3. Top of Precast Concrete Panel
4. Top of Structure Approach Slab

○ Indicates location of Inspection Wire

O Indicates Underdrain Outlet Pipe, see "MSE WALL DETAILS No. 4" sheet.

◯ Interval in years from Construction to removal of Inspection Wire

NOTES:

1. Top two layers of wire mesh have a base width of 16'-0".
2. All panel spacing is 5'-0" along LOL.

	BY	CHECKED
DESIGN	S. Galgiani	F. Zayati
DETAILS	K. Kubo	S. Galgiani
QUANTITIES	S. Galgiani	F. Zayati

STATE OF CALIFORNIA
DEPARTMENT OF TRANSPORTATION

DIVISION OF ENGINEERING SERVICES
STRUCTURE DESIGN
DESIGN BRANCH 14

BRIDGE NO. 53E0148
POST MILE 3.72

MSE WALL NO. C1
STRUCTURE PLAN NO. 1

STRUCTURES DESIGN DETAIL SHEET (ENGLISH) (REV. 10/25/05)

ORIGINAL SCALE IN INCHES FOR REDUCED PLANS 0 1 2 3

CU 07
EA 138201

DISREGARD PRINTS BEARING EARLIER REVISION DATES

REVISION DATES: ~~03-22-10~~ ~~04-07-10~~ 04-20-10

SHEET 2 OF 19

FILE => 53-rwc1_mse_bsp01.dgn

USERNAME => friehard DATE PLOTTED => 14-OCT-2010 TIME PLOTTED => 10:14

DIST	COUNTY	ROUTE	POST MILES TOTAL PROJECT	SHEET No	TOTAL SHEETS
07	LA	47,103	3.5/4.6, 0.0/1.1	907	1003

REGISTERED CIVIL ENGINEER — DATE 05-24-10

10-11-10
PLANS APPROVAL DATE

REGISTERED PROFESSIONAL ENGINEER — FOUED ZAYATI — No. C57046 — Exp. 06-30-11 — CIVIL — STATE OF CALIFORNIA

The State of California or its officers or agents shall not be responsible for the accuracy or completeness of electronic copies of this plan sheet.

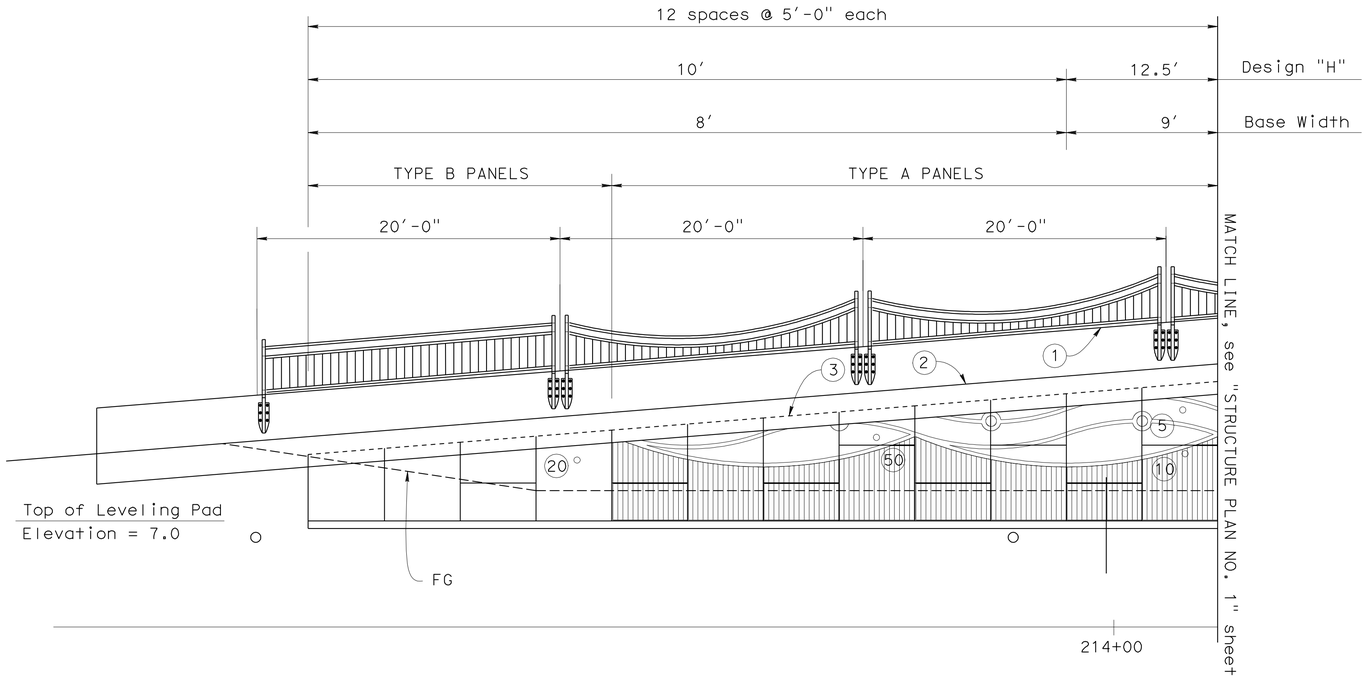

DEVELOPED ELEVATION

1" = 5'

(1) Top of Concrete Barrier Type 736 Mod

(2) Top of Wall

(3) Top of Precast Concrete Panel

○ Indicates location of Inspection Wire

O Indicates Underdrain Outlet Pipe, see "MSE WALL DETAILS No. 4" sheet.

◯ Interval in years from Construction to removal of Inspection Wire

NOTES:

1. Top two layers of wire mesh have a base width of 16'-0".
2. All panel spacing is 5'-0" along LOL.

	BY	CHECKED
DESIGN	S. Galgiani	F. Zayati
DETAILS	K. Kubo	S. Galgiani
QUANTITIES	S. Galgiani	F. Zayati

STATE OF CALIFORNIA
DEPARTMENT OF TRANSPORTATION

DIVISION OF ENGINEERING SERVICES
STRUCTURE DESIGN
DESIGN BRANCH 14

BRIDGE NO. 53E0148
POST MILE 3.72

MSE WALL NO. C1
STRUCTURE PLAN NO. 2

STRUCTURES DESIGN DETAIL SHEET (ENGLISH) (REV. 10/25/05)

ORIGINAL SCALE IN INCHES FOR REDUCED PLANS 0 1 2 3

CU 07
EA 138201

DISREGARD PRINTS BEARING EARLIER REVISION DATES → 03-22-10 04-07-10 04-20-10

REVISION DATES

SHEET 3 OF 19

FILE => 53-rwc1_mse_bsp02.dgn

USERNAME => rlenard DATE PLOTTED => 14-OCT-2010 TIME PLOTTED => 10:14

Dist	COUNTY	ROUTE	POST MILES TOTAL PROJECT	SHEET No.	TOTAL SHEETS
07	LA	47,103	3.5/4.6, 0.0/1.1	908	1003

REGISTERED CIVIL ENGINEER — DATE 05-24-10

10-11-10
PLANS APPROVAL DATE

REGISTERED PROFESSIONAL ENGINEER — FOUED ZAYATI — No. C57046 — Exp. 06-30-11 — CIVIL — STATE OF CALIFORNIA

THE STATE OF CALIFORNIA OR ITS OFFICERS OR AGENTS SHALL NOT BE RESPONSIBLE FOR THE ACCURACY OR COMPLETENESS OF SCANNED COPIES OF THIS PLAN SHEET.

SURVEY CONTROL

1008 (NOT SHOWN)
PK NAIL @ APPROX. CL INT. NEW DOCK ST. AND PIER S AVE.
1060.04' Lt ℄ "A" Line
Sta. 7+89.95
N 1735198.70
E 1735198.70
Elev. = -1.17

1007 (NOT SHOWN)
PK NAIL WITH "PSOMAS" IN AC AT SR-47 NB ON-RAMP AND NEW DOCK ST.
211.70' Rt ℄ "A" Line
Sta. 10+15.37
N 6489242.10
E 1735579.08
Elev. = 1.06

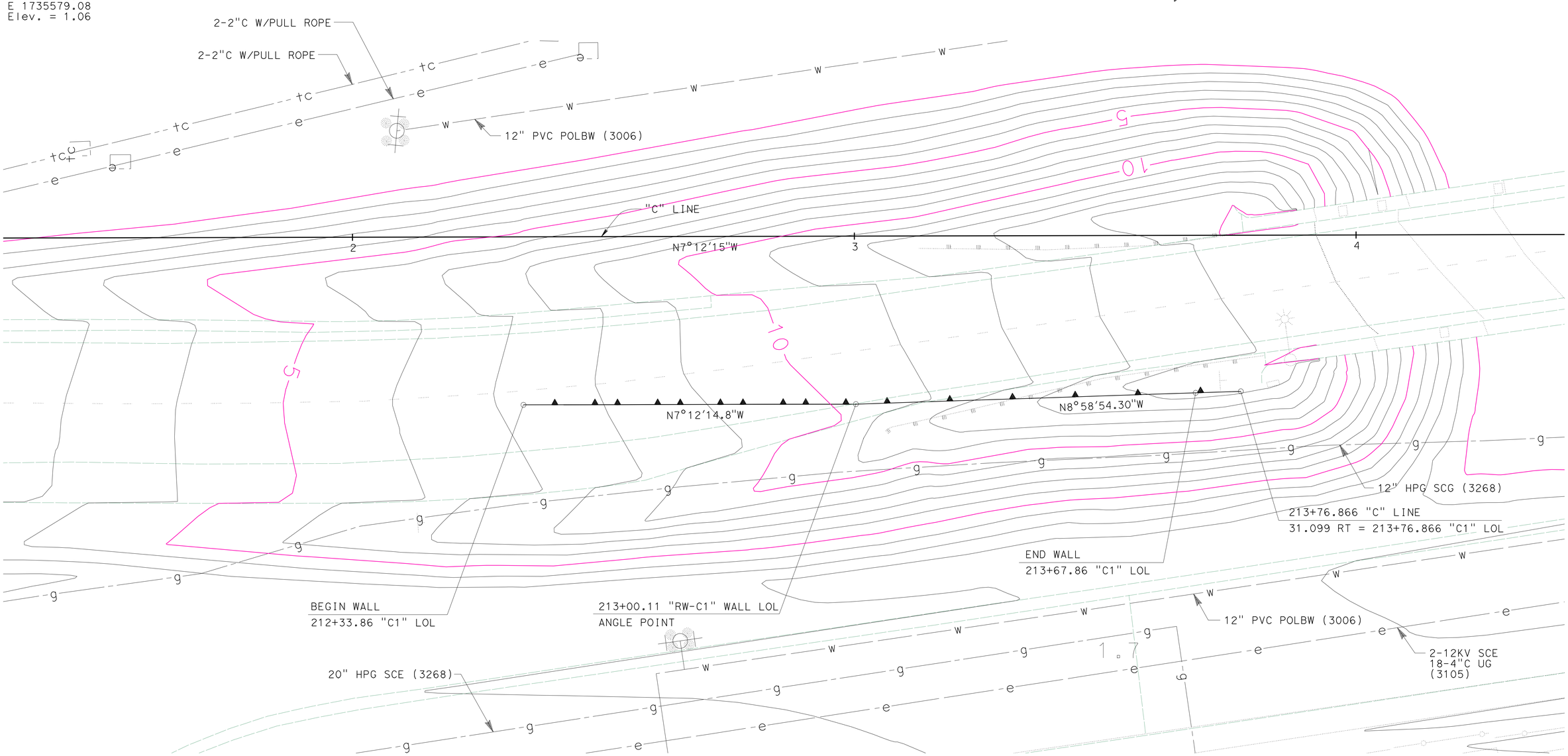

URS CORPORATION
915 WILSHIRE BOULEVARD
SUITE 700
LOS ANGELES, CA 90017

SCALE: 1"=10'	VERT.DATUM NAVD 88	HORZ.DATUM NAD 83	
PHOTOGRAMMETRY AS OF:	ALIGNMENT TIES XX		
SURVEYED BY XX	DRAFTED BY E. HANSEN		
FIELD CHECKED BY XX	CHECKED BY J. MILLS		

	BY	CHECKED
DESIGN	S. Galgiani	F. Zayati
DETAILS	E. Montevirgen	S. Galgiani
QUANTITIES	S. Galgiani	F. Zayati

PREPARED FOR THE STATE OF CALIFORNIA DEPARTMENT OF TRANSPORTATION

F. Zayati
PROJECT ENGINEER

BRIDGE NO. 53E0148
POST MILE 3.72

MSE WALL NO. C1
FOUNDATION PLAN

FOUNDATION PLAN SHEET (ENGLISH) (REV. 5/9/00)

ORIGINAL SCALE IN INCHES FOR REDUCED PLANS 0 1 2 3

CU 07-271
EA 138201

DISREGARD PRINTS BEARING EARLIER REVISION DATES

REVISION DATES (PRELIMINARY STAGE ONLY): 9-8-08 12-19-08 04-07-10 04-20-10

SHEET 4 OF 19

FILE => 53-rwc1_mse_cfp.dgn

USERNAME => friehard DATE PLOTTED => 14-OCT-2010 TIME PLOTTED => 10:14

DIST	COUNTY	ROUTE	POST MILES TOTAL PROJECT	SHEET No	TOTAL SHEETS
07	LA	47,103	3.5/4.6, 0.0/1.1	909	1003

REGISTERED CIVIL ENGINEER — DATE 05-24-10

10-11-10
PLANS APPROVAL DATE

REGISTERED PROFESSIONAL ENGINEER — FOUED ZAYATI — No. C57046 — Exp. 06-30-11 — CIVIL — STATE OF CALIFORNIA

The State of California or its officers or agents shall not be responsible for the accuracy or completeness of electronic copies of this plan sheet.

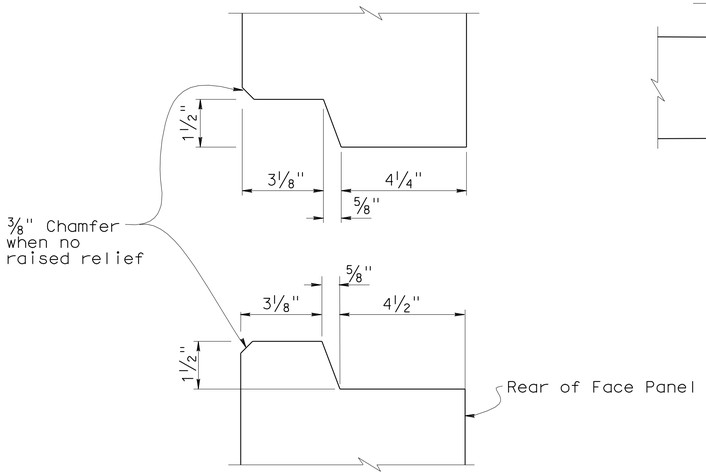

HORIZONTAL JOINT DETAIL

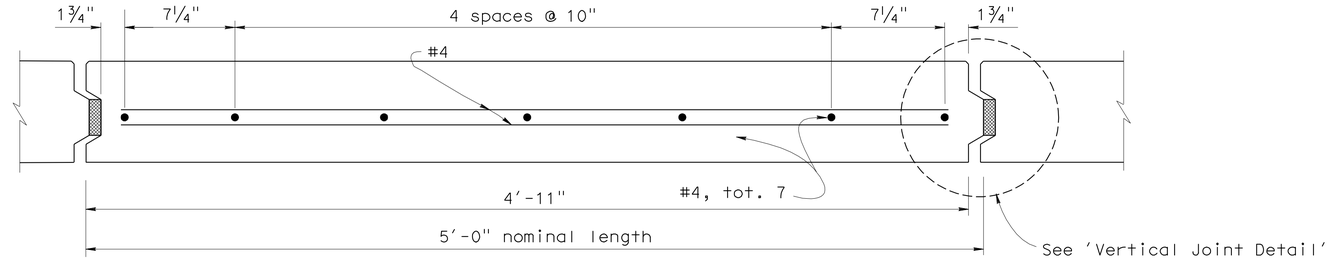

PLAN - FACE PANEL

NOTES:

1. Architectural treatment not shown.
2. Place reinforced Elastomeric Bearing Pads in all of the panel joints between the panels. Place one in each vertical joint where the horizontal joint intersects it. Place two per panel in each horizontal joint.
   ¾" x 2⅜" x 6" for vertical joints
   ¾" x 4" x 6" for horizontal joints.
3. Bond a strip of filter fabric, 1' - 0" wide, over the full length of all panel joints.

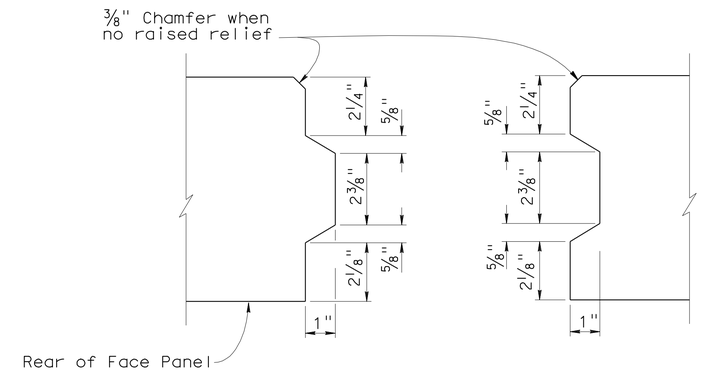

VERTICAL JOINT DETAIL

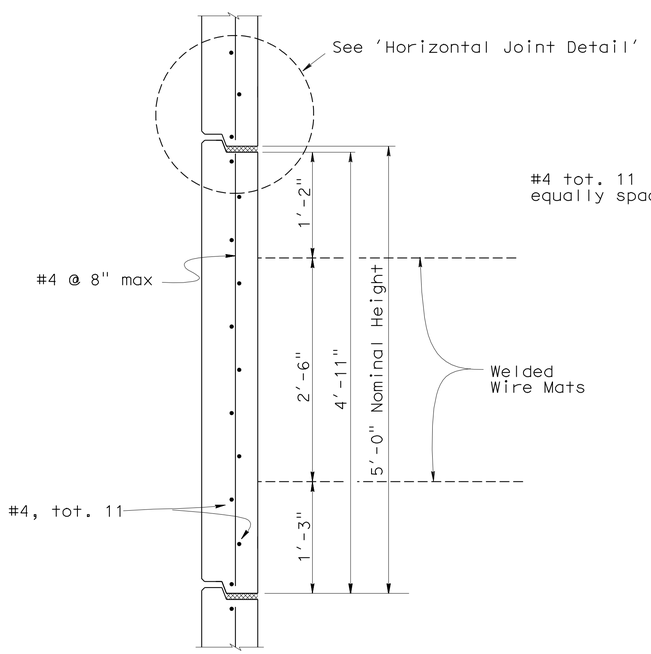

INTERMEDIATE PANEL

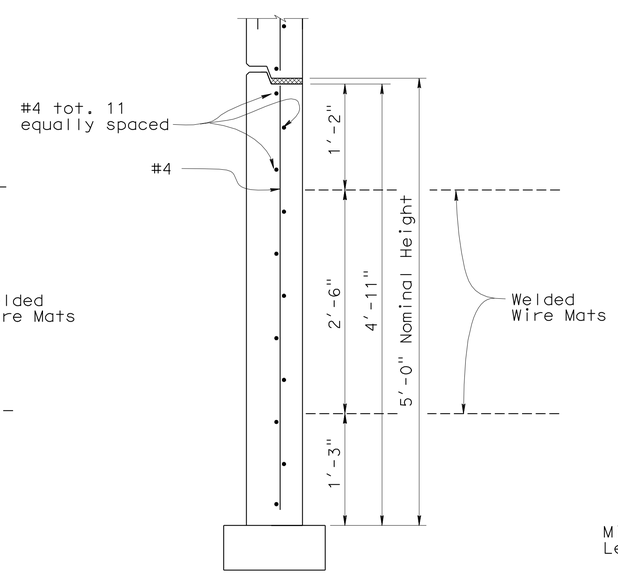

BOTTOM PANEL

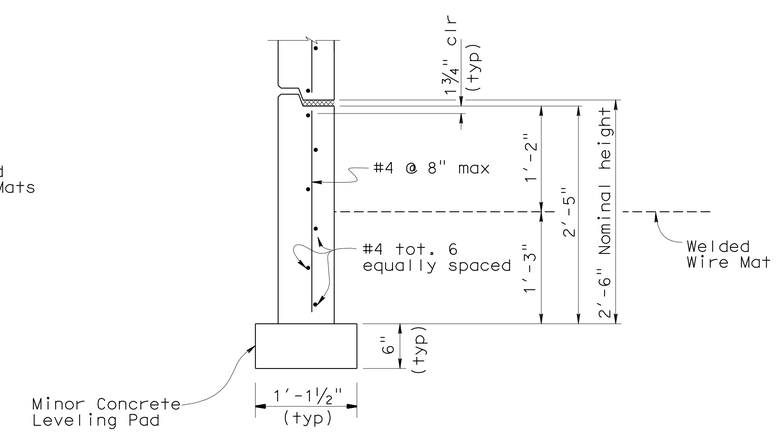

BOTTOM HALF PANEL

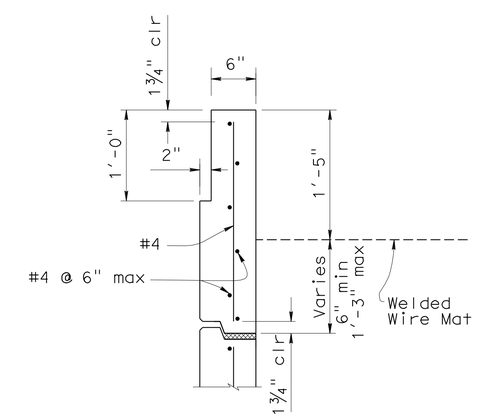

TOP PANEL

No Scale

	BY	CHECKED
DESIGN	S. Galgiani	F. Zayati
DETAILS	K. Kubo	S. Galgiani
QUANTITIES	S. Galgiani	F. Zayati

STATE OF CALIFORNIA
DEPARTMENT OF TRANSPORTATION

DIVISION OF ENGINEERING SERVICES
STRUCTURE DESIGN
DESIGN BRANCH 14

BRIDGE NO. 53E0148
POST MILE 3.72

MSE WALL NO. C1
MSE WALL DETAILS NO. 1 - TYPE A PANELS

STRUCTURES DESIGN DETAIL SHEET (ENGLISH) (REV. 10/25/05)

ORIGINAL SCALE IN INCHES FOR REDUCED PLANS 0 1 2 3

CU 07
EA 138201

DISREGARD PRINTS BEARING EARLIER REVISION DATES

REVISION DATES: 03-25-10 05-24-10 06-03-10

SHEET 5 OF 19

FILE => 53-rwc1_mse_edet01.dgn

USERNAME => trlehard DATE PLOTTED => 14-OCT-2010 TIME PLOTTED => 10:14

DIST	COUNTY	ROUTE	POST MILES TOTAL PROJECT	SHEET No	TOTAL SHEETS
07	LA	47,103	3.5/4.6, 0.0/1.1	910	1003

REGISTERED CIVIL ENGINEER — DATE 05-24-10

10-11-10
PLANS APPROVAL DATE

REGISTERED PROFESSIONAL ENGINEER — FOUED ZAYATI — No. C57046 — Exp. 06-30-11 — CIVIL — STATE OF CALIFORNIA

The State of California or its officers or agents shall not be responsible for the accuracy or completeness of electronic copies of this plan sheet.

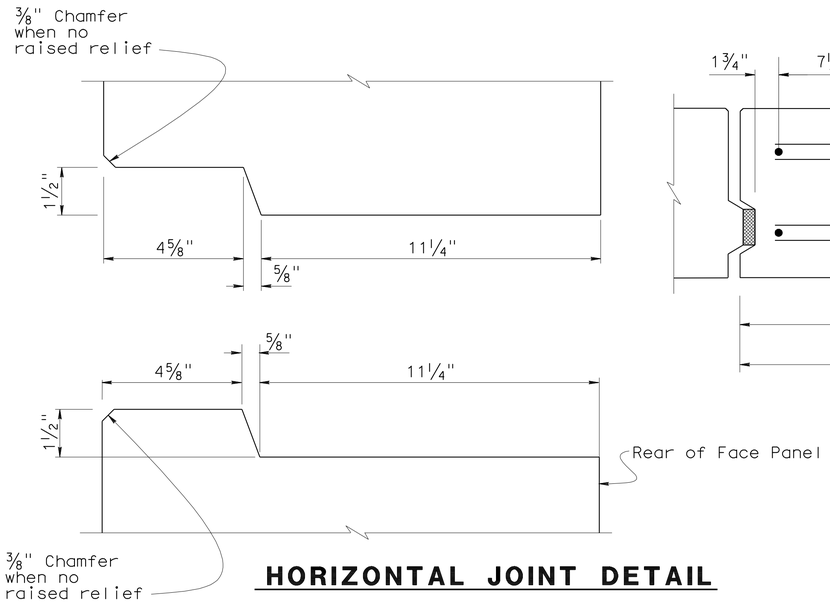

HORIZONTAL JOINT DETAIL

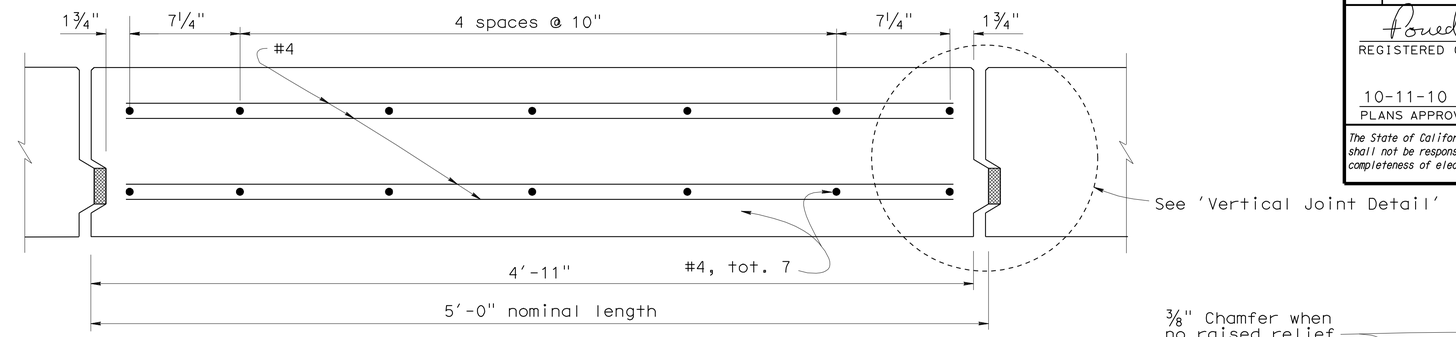

PLAN - FACE PANEL

NOTES:

1. Architectural treatment not shown.
2. Place reinforced Elastomeric Bearing Pads in all of the panel joints between the panels. Place one in each vertical joint where the horizontal joint intersects it. Place two per panel in each horizontal joint.
   3/4" x 2 3/8" x 6" for vertical joints
   3/4" x 6" x 6" for horizontal joints.
3. Bond a strip of filter fabric, 1' - 0" wide, over the full length of all panel joints.

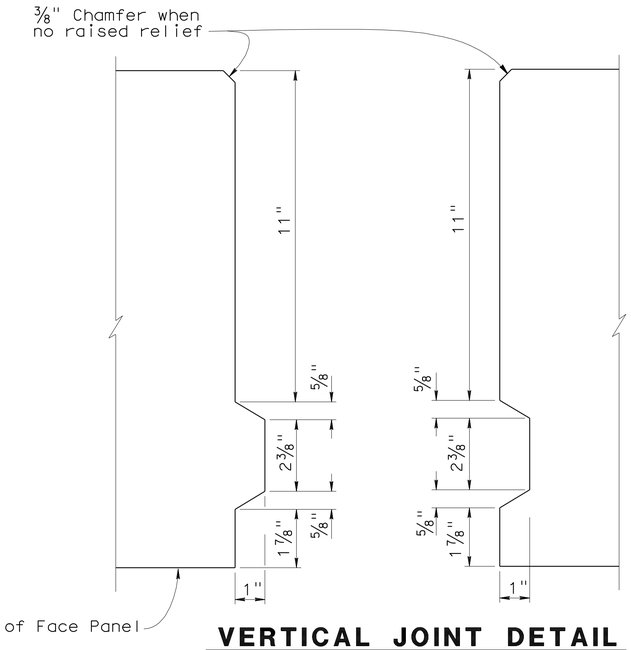

VERTICAL JOINT DETAIL

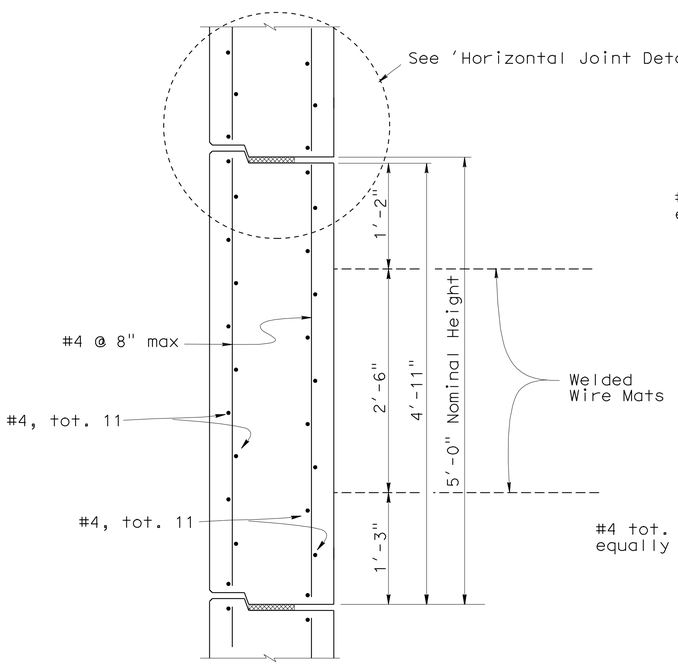

INTERMEDIATE PANEL

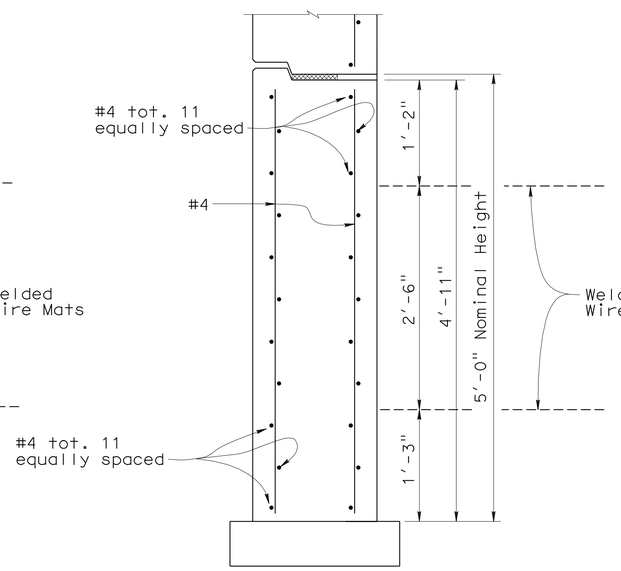

BOTTOM PANEL

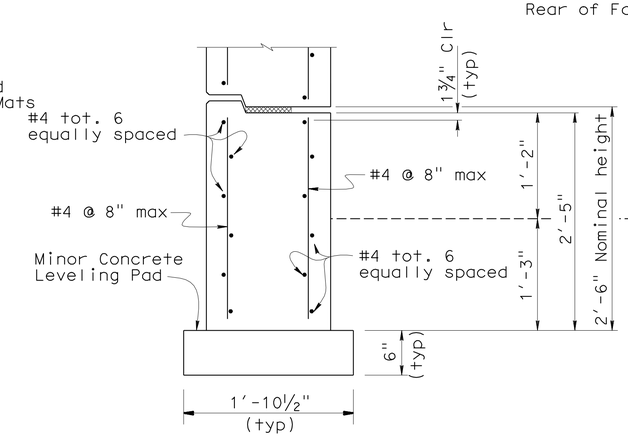

BOTTOM HALF PANEL

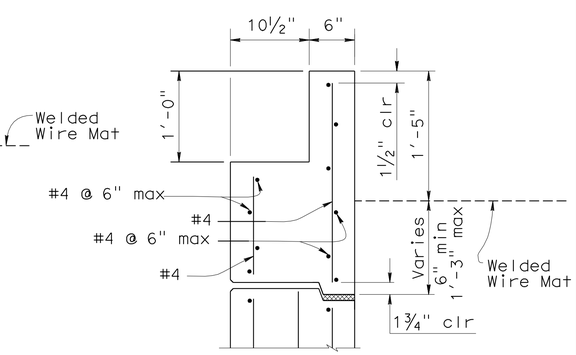

TOP PANEL

No Scale

DESIGN	BY S. Galgiani	CHECKED F. Zayati	
DETAILS	BY K. Kubo	CHECKED S. Galgiani	
QUANTITIES	BY S. Galgiani	CHECKED F. Zayati	

STATE OF CALIFORNIA
DEPARTMENT OF TRANSPORTATION

DIVISION OF ENGINEERING SERVICES
STRUCTURE DESIGN
DESIGN BRANCH 14

BRIDGE NO. 53E0148
POST MILE 3.72

MSE WALL NO. C1
MSE WALL DETAILS NO. 2 - TYPE B PANELS

STRUCTURES DESIGN DETAIL SHEET (ENGLISH) (REV. 10/25/05)

ORIGINAL SCALE IN INCHES FOR REDUCED PLANS 0 1 2 3

CU 07
EA 138201

DISREGARD PRINTS BEARING EARLIER REVISION DATES — REVISION DATES: 03-25-10, 05-21-10, 06-03-10

SHEET 6 OF 19

FILE => 53-rwc1_mse_edet02.dgn

USERNAME => friehard DATE PLOTTED => 14-OCT-2010 TIME PLOTTED => 10:14

DIST.	COUNTY	ROUTE	POST MILES TOTAL PROJECT	SHEET NO.	TOTAL SHEETS
07	LA	47,103	3.5/4.6, 0.0/1.1	911	1003

Foued Zayati 05-24-10
REGISTERED ENGINEER - CIVIL

10-11-10
PLANS APPROVAL DATE

REGISTERED PROFESSIONAL ENGINEER FOUED ZAYATI No. C57046 Exp. 06-30-11 CIVIL STATE OF CALIFORNIA

The State of California or its officers or agents shall not be responsible for the accuracy or completeness of electronic copies of this plan sheet.

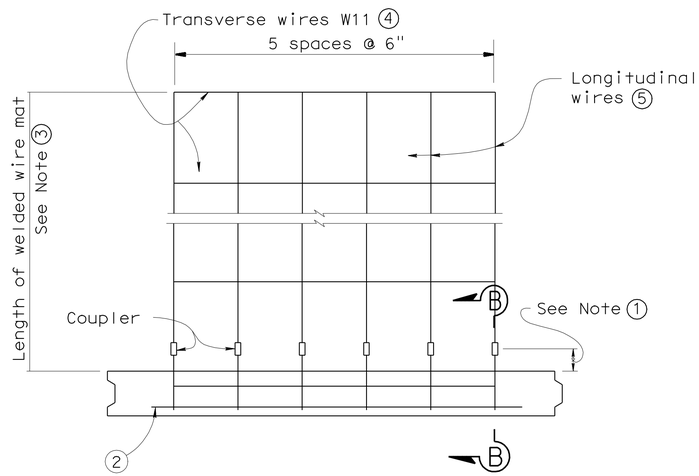

PLAN OF PANEL WITH WELDED WIRE MAT
No scale

GENERAL NOTES (MSE WALLS)

Live loading: Surcharge = 240 lb/ft^2

Soil parameters:

Internal design ϕ = 34°, γ = 120 lb/ft^3
External design ϕ(Backfill) = 34°, γ = 120 lb/ft^3
ϕ(Foundation) = 30°

Precast concrete panels:

f′c = 4,000 psi (Concrete compressive strength at 28 days)
fy = 60,000 psi (Yield strength of reinforcement)

Soil reinforcement:

Welded wire mats: fy = 65,000 psi (Yield strength)
Coupler: fy = 36,000 psi (Yield strength)
Corrosion rate = 1.1 mils/year

Reinforced concrete:

f′c = 3,600 psi, except as noted
(Concrete compressive strength at 28 days)

fy = 60,000 psi (Yield strength of reinforcement)

MSE = Mechanically stabilized embankment

Notes:

① Distance as required to permit coupler to be swaged.

② Place #4 bar, 3′ - 2" long, centered on connector mat, but not welded to it.

③ Length equals "Base width" of wall, except it shall not be less than 16′ for the top 2 levels of mats at the top of the wall.

④ All Transverse Wires size W11 at various spacings as shown elsewhere in plans.

⑤ All Longitudinal Wires at 6" spacing, of various sizes, as shown elsewhere in plans.

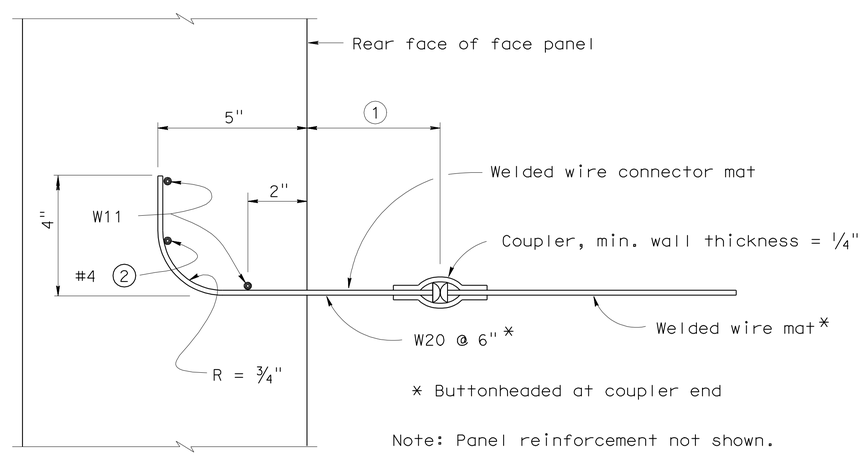

SECTION B-B
No scale

STANDARD DRAWING

FILE NO. xs13-020-3e

APPROVED BY K. GRISWELL
RESPONSIBLE TECHNICAL SPECIALIST
APPROVAL DATE 5-6-08

RELEASED BY ROBERTO LACALLE
RESPONSIBLE OFFICE CHIEF
RELEASE DATE 5-6-08

1 Modified Detail

STATE OF CALIFORNIA
DEPARTMENT OF TRANSPORTATION

DIVISION OF ENGINEERING SERVICES

BRIDGE NO. 53E0148
POST MILE 3.72

MSE WALL NO. C1
MSE WALL DETAILS NO. 3

DS OSD 2147A (ENGLISH STANDARD DRAWING "XS" BORDER REV. 01/11/08)

ORIGINAL SCALE IN INCHES FOR REDUCED PLANS 0 1 2 3

CU 07-271
EA 138201

DISREGARD PRINTS BEARING EARLIER REVISION DATES 05-19-10

REVISION DATES (PRELIMINARY STAGE ONLY)

SHEET 7 OF 19

USERNAME => trlenard

53-rwc1_mse_edet03.dgn

DATE PLOTTED => 14-OCT-2010 TIME PLOTTED => 10:14

DIST.	COUNTY	ROUTE	POST MILES TOTAL PROJECT	SHEET NO.	TOTAL SHEETS
07	LA	47,103	3.5/4.6, 0.0/1.1	912	1003

REGISTERED ENGINEER - CIVIL 05-24-10

10-11-10
PLANS APPROVAL DATE

REGISTERED PROFESSIONAL ENGINEER FOUED ZAYATI No. C57046 Exp. 06-30-11 CIVIL STATE OF CALIFORNIA

The State of California or its officers or agents shall not be responsible for the accuracy or completeness of electronic copies of this plan sheet.

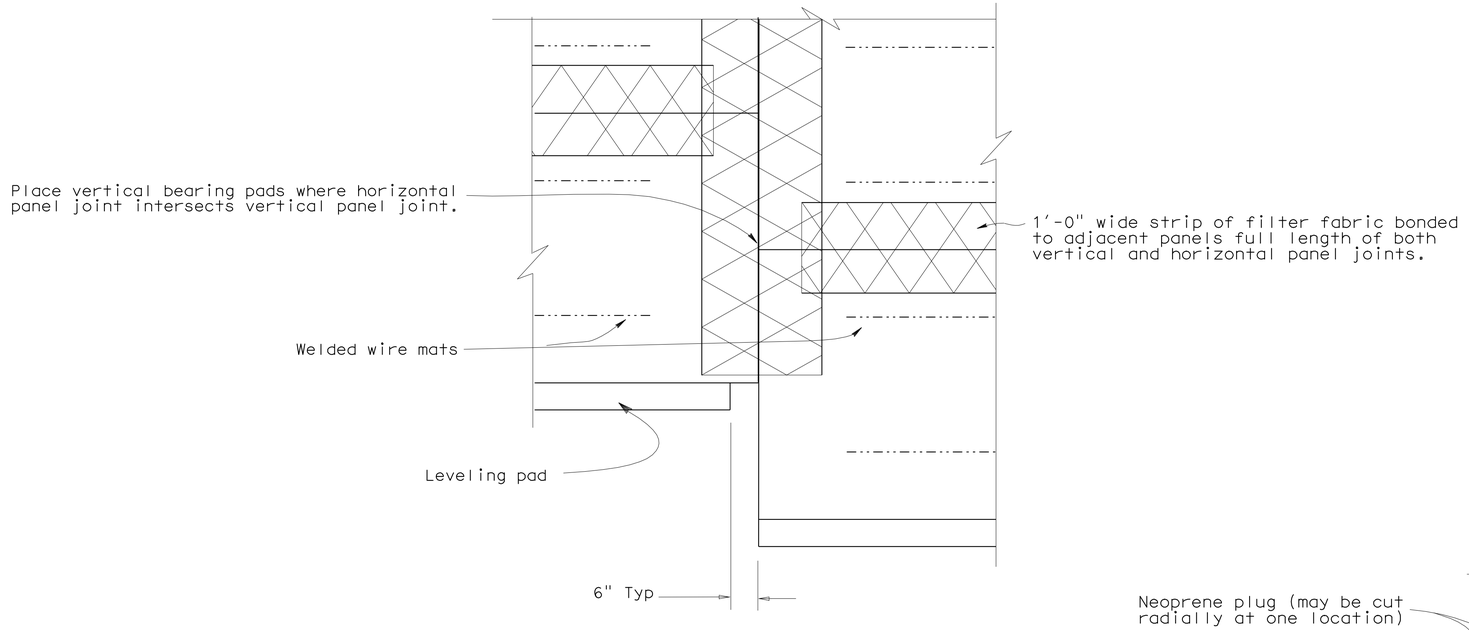

REAR ELEVATION

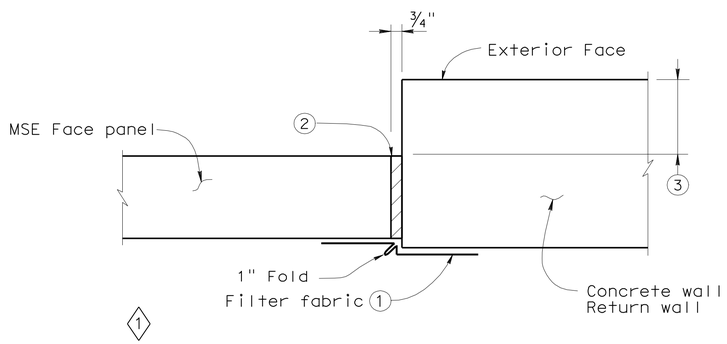

MSE FACE PANEL-TO-CONCRETE WALL JOINT DETAIL

LEGEND:

1. Bond a strip of filter fabric, 1'-6" wide, to back of MSE panels and the adjacent concrete wall for entire length of vertical joint.
2. Bond expansion joint material to the concrete wall.
3. Offset between face of MSE face panel and face of the concrete wall as dictated by location of layout lines shown elsewhere in Project Plans.

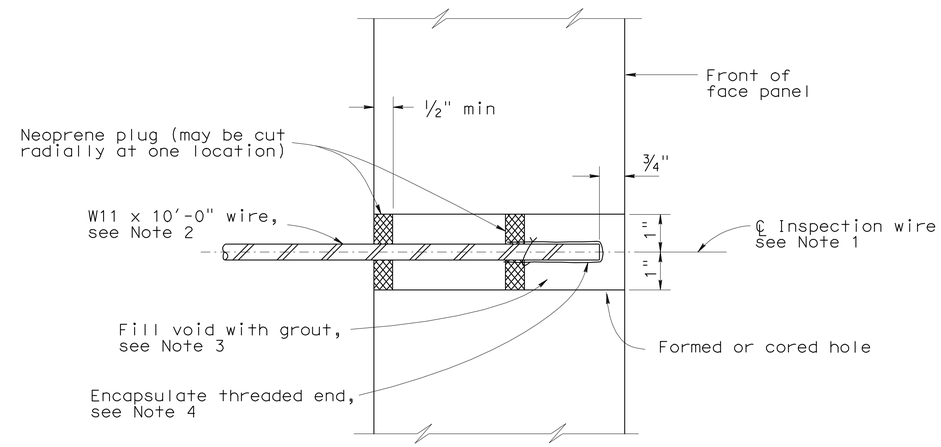

SECTION THRU INSPECTION WIRE

NOTES:

1. Center inspection wire in face panel.
2. Fabricate inspection wires from W11 wire representative of the welded wire mats, with 3/8" dia - 16 UNC threads for at least 1 1/2" of one end.
3. Place inspection wire horizontal and perpendicular to the wall panel prior to backfilling. After backfill placement to a level at least 2'-0" above the inspection wire, dry pack opening with 1000 to 1500 psi mortar. Trowel mortar smooth and flush with face of panel.
4. Encapsulate threaded end with corrosion inhibiting mastic, and secure round vinyl cover with nylon tie.

   UNC = Unified coarse threads

STANDARD DRAWING

FILE NO. xs13-020-3e

APPROVED BY K. GRISWELL
RESPONSIBLE TECHNICAL SPECIALIST
APPROVAL DATE 5-6-08

RELEASED BY ROBERTO LACALLE
RESPONSIBLE OFFICE CHIEF
RELEASE DATE 5-6-08

1 Modified Detail

STATE OF CALIFORNIA
DEPARTMENT OF TRANSPORTATION

DIVISION OF ENGINEERING SERVICES

BRIDGE NO. 53E0148
POST MILE 3.72

MSE WALL NO. C1
MSE WALL DETAILS NO. 4

DS OSD 2147A (ENGLISH STANDARD DRAWING "XS" BORDER REV. 01/11/08)

ORIGINAL SCALE IN INCHES FOR REDUCED PLANS 0 1 2 3

CU 07-271
EA 138201

DISREGARD PRINTS BEARING EARLIER REVISION DATES 3-23-10 5-19-10

REVISION DATES (PRELIMINARY STAGE ONLY)

SHEET 8 OF 19

USERNAME => trlenard

53-rwc1_mse_edet04.dgn

DATE PLOTTED => 14-OCT-2010 TIME PLOTTED => 10:14

DIST	COUNTY	ROUTE	POST MILES TOTAL PROJECT	SHEET No	TOTAL SHEETS
07	LA	47,103	3.5/4.6, 0.0/1.1	913	1003

REGISTERED CIVIL ENGINEER — DATE 05-24-10

10-11-10
PLANS APPROVAL DATE

REGISTERED PROFESSIONAL ENGINEER — FOUED ZAYATI — No. C57046 — Exp. 06-30-11 — CIVIL — STATE OF CALIFORNIA

The State of California or its officers or agents shall not be responsible for the accuracy or completeness of electronic copies of this plan sheet.

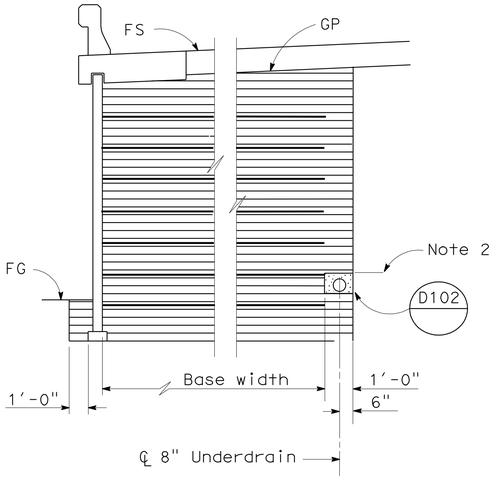

ROADWAY SECTION WITH BASE WIDTH 16' OR GREATER

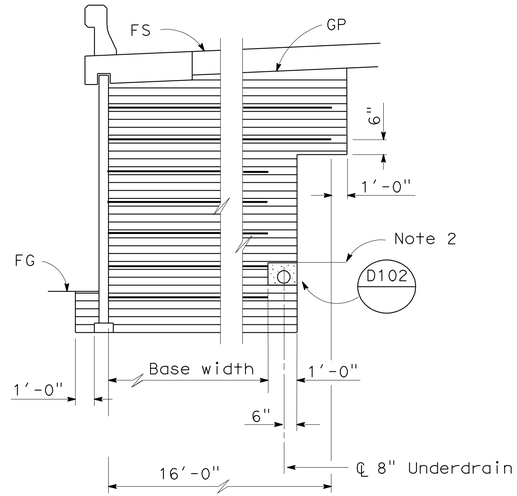

ROADWAY SECTION WITH BASE WIDTH LESS THAN 16'

No Scale

LIMITS OF BACKFILL

No Scale

MSE WALL DRAINAGE NOTES:

1. Locate 8" perforated underdrain 1.0' above FG adjacent to Face of Wall.
2. Maximum spacing of outlet pipes is 50 ft.
3. At sags in profile of underdrain, install outlet pipe for each direction of flow.

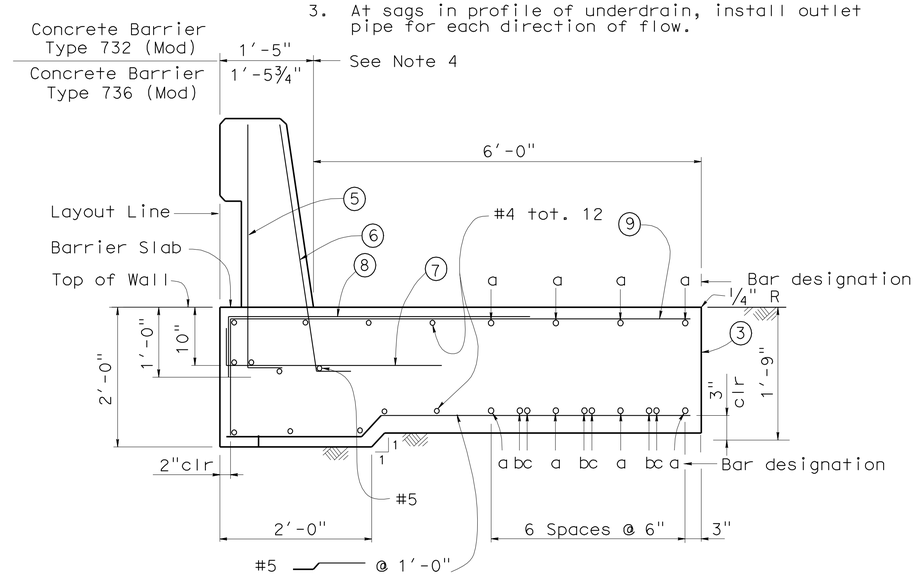

SECTION AT PAST MSE PANELS BARRIER SLAB AND CONCRETE BARRIER

No Scale

BARRIER SLAB NOTES:

1. Clearance to reinforcing steel in Concrete Barrier to be 1".
2. Not all Barrier Reinforcement shown.
3. No Expansion Joints in Concrete Barrier or Barrier Slab within MSE Wall limits.
4. Specific Concrete Barrier to be utilized as shown on typical section elsewhere in Project Plans.
5. Install cable railing or chain link fence when indicated in Project Plans.

"a" bar = #6 cont
"b" bar = #6 x 59'-0"
"c" bar = #6 49'-2"
Place "b" and "c" bars at beginning and ending ends of Barrier Slab.

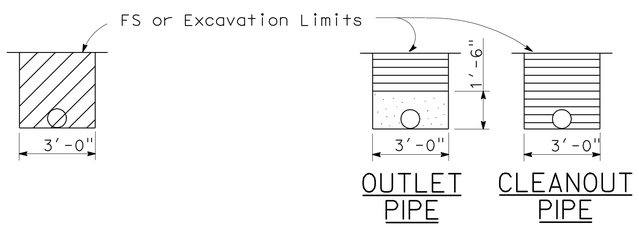

OUTLET OR CLEANOUT PIPE FOR UNDERDRAIN

No Scale

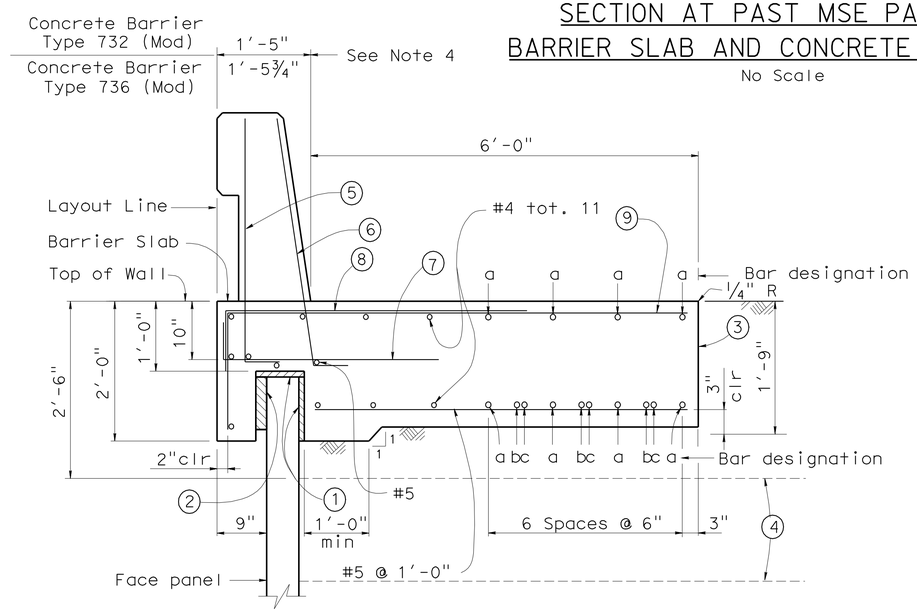

SECTION AT TOP OF WALL WITH BARRIER SLAB AND CONCRETE BARRIER

No Scale

ABBREVIATIONS

OG	Original Ground
FS	Planned Finished Surface
GP	Planned Grading Plane
FG	Finished Grade

LEGEND

- Limits of Structure Excavation
- Limits of Structure Backfill
- Limits of Permeable Material

LEGEND:

1. 1" Expanded polystyrene.
2. 2" Expanded polystyrene. Recess expanded polystyrene 2" into Barrier Slab.
3. Contact joint.
4. Welded Wire Mat Soil reinforcement.
5. #5 6¼" @ 1'-4" (To be in place prior to Barrier Slab concrete).
6. #5 6¼" @ 8" (To be in place prior to Barrier Slab concrete).
7. #5 6¼" 3'-4" @ 1'-0"
8. #5 4'-7" @ 1'-0" bundled with (9) bars.
9. #5 1'-9" 5'-9" @ 1'-0"

	BY	CHECKED
DESIGN	S. Galgiani	F. Zayati
DETAILS	K. Kubo	F. Zayati
QUANTITIES	S. Galgiani	F. Zayati

STATE OF CALIFORNIA
DEPARTMENT OF TRANSPORTATION

DIVISION OF ENGINEERING SERVICES
STRUCTURE DESIGN
DESIGN BRANCH 14

BRIDGE NO. 53E0147
POST MILE 3.55

MSE WALL NO. C1
MSE WALL DETAILS NO. 5

STRUCTURES DESIGN DETAIL SHEET (ENGLISH) (REV. 10/25/05)

ORIGINAL SCALE IN INCHES FOR REDUCED PLANS 0 1 2 3

CU 07-271
EA 138201

DISREGARD PRINTS BEARING EARLIER REVISION DATES

REVISION DATES: 02-03-10 04-02-10 04-14-10 05-19-10

SHEET 9 OF 19

FILE => 53-rwc1_mse_edet05.dgn

USERNAME => friehard DATE PLOTTED => 14-OCT-2010 TIME PLOTTED => 10:14

DIST	COUNTY	ROUTE	POST MILES TOTAL PROJECT	SHEET No	TOTAL SHEETS
07	LA	47,103	3.5/4.6, 0.0/1.1	914	1003

REGISTERED CIVIL ENGINEER — DATE 05-24-10

10-11-10
PLANS APPROVAL DATE

REGISTERED PROFESSIONAL ENGINEER — FOUED ZAYATI — No. C57046 — Exp. 06-30-11 — CIVIL — STATE OF CALIFORNIA

The State of California or its officers or agents shall not be responsible for the accuracy or completeness of electronic copies of this plan sheet.

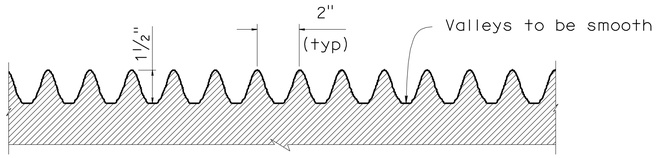

DETAIL A

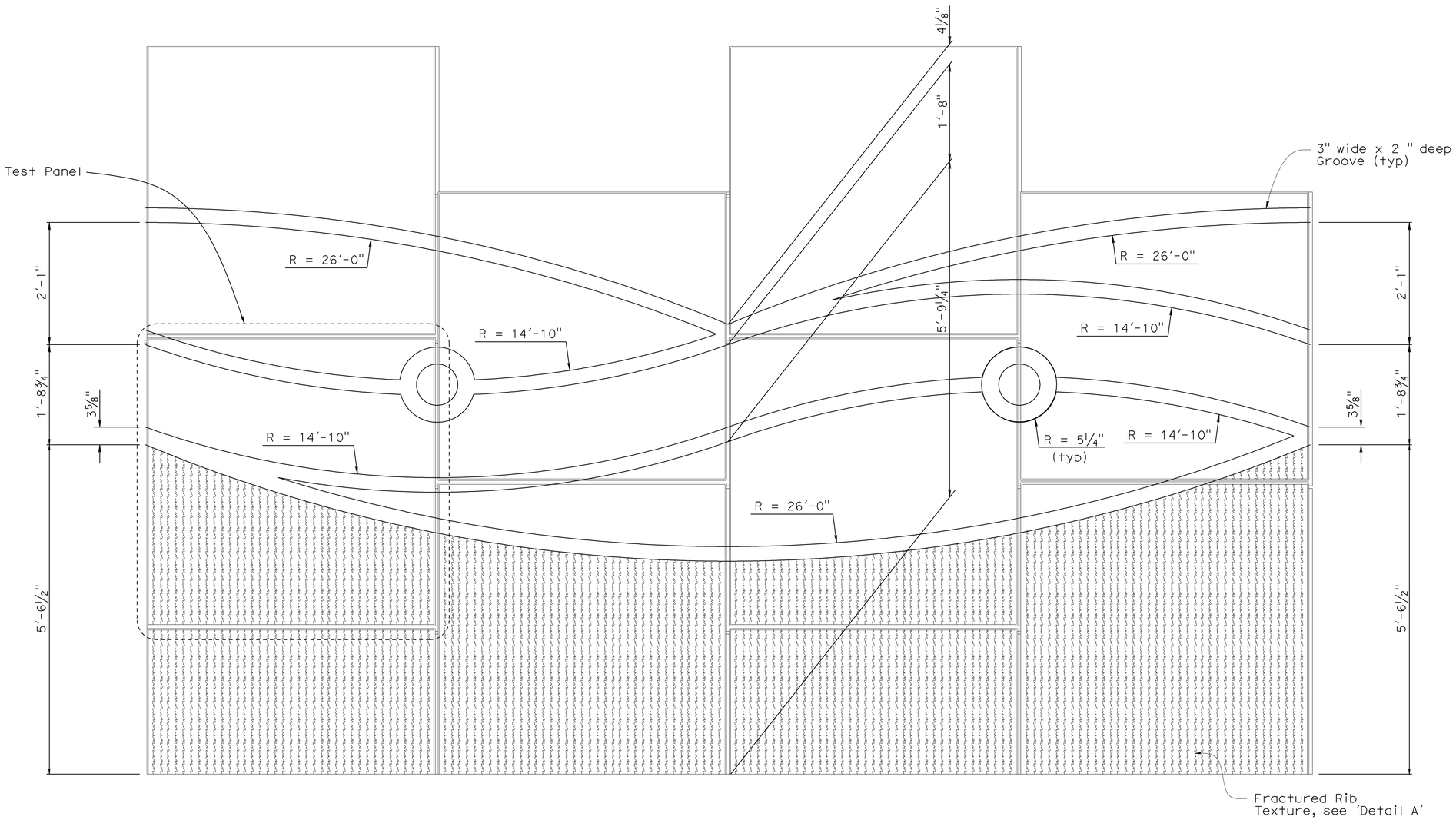

ARCHITECTURAL TREATMENT WAVE PATTERN

	BY	CHECKED
DESIGN	S. Galgiani	F. Zayati
DETAILS	K. Kubo	F. Zayati
QUANTITIES	S. Galgiani	F. Zayati

STATE OF CALIFORNIA
DEPARTMENT OF TRANSPORTATION

DIVISION OF ENGINEERING SERVICES
STRUCTURE DESIGN
DESIGN BRANCH 14

BRIDGE NO. 53E0148
POST MILE 3.72

MSE WALL NO. C1
MSE WALL DETAILS NO. 6

STRUCTURES DESIGN DETAIL SHEET (ENGLISH) (REV. 10/25/05)

ORIGINAL SCALE IN INCHES FOR REDUCED PLANS 0 1 2 3

CU 07-271
EA 138201

DISREGARD PRINTS BEARING EARLIER REVISION DATES → 05-10-10

REVISION DATES

SHEET 10 OF 19

FILE => 53-rwc1_mse_edet06.dgn

USERNAME => trlenard DATE PLOTTED => 14-OCT-2010 TIME PLOTTED => 10:14

DIST	COUNTY	ROUTE	POST MILES TOTAL PROJECT	SHEET No	TOTAL SHEETS
07	LA	47,103	3.5/4.6, 0.0/1.1	915	1003

REGISTERED CIVIL ENGINEER — DATE 05-24-10

10-11-10
PLANS APPROVAL DATE

REGISTERED PROFESSIONAL ENGINEER — FOUED ZAYATI — No. C57046 — Exp. 06-30-11 — CIVIL — STATE OF CALIFORNIA

The State of California or its officers or agents shall not be responsible for the accuracy or completeness of electronic copies of this plan sheet.

WIRE MESH SCHEDULE

Max Ht., Ft	10	12.5	15
Top Levels of Mesh over	2 @ WII x WII + 6" x 9" 2 @ WII x WII + 6" x 12"	2 @ WII x WII + 6" x 9" 2 @ WII x WII + 6" x 12" 1 @ WII x WII + 6" x 18"	2 @ WII x WII + 6" x 9" 2 @ WII x WII + 6" x 12" 1 @ WII x WII + 6" x 18" 1 @ WII x WII + 6" x 24"
Max Ht., Ft	17.5	20	22.5
Top Levels of Mesh over	2 @ WII x WII + 6" x 9" 2 @ WII x WII + 6" x 12" 1 @ WII x WII + 6" x 18" 2 @ WII x WII + 6" x 24"	2 @ WII x WII + 6" x 9" 3 @ WII x WII + 6" x 18" 3 @ WII x WII + 6" x 24"	5 @ WII x WII + 6" x 18" 4 @ WII x WII + 6" x 24"
Max Ht., Ft	25		
Top Levels of Mesh over	5 @ WII x WII + 6" x 18" 5 @ WII x WII + 6" x 24"		

NOTE: For heights less than 10'-0", all Mesh is WII x WII + 6" x 9". Mesh Configuration = Longitudinal Wire size x Transverse Wire size + Longitudinal Wire spacing x Transverse Wire spacing

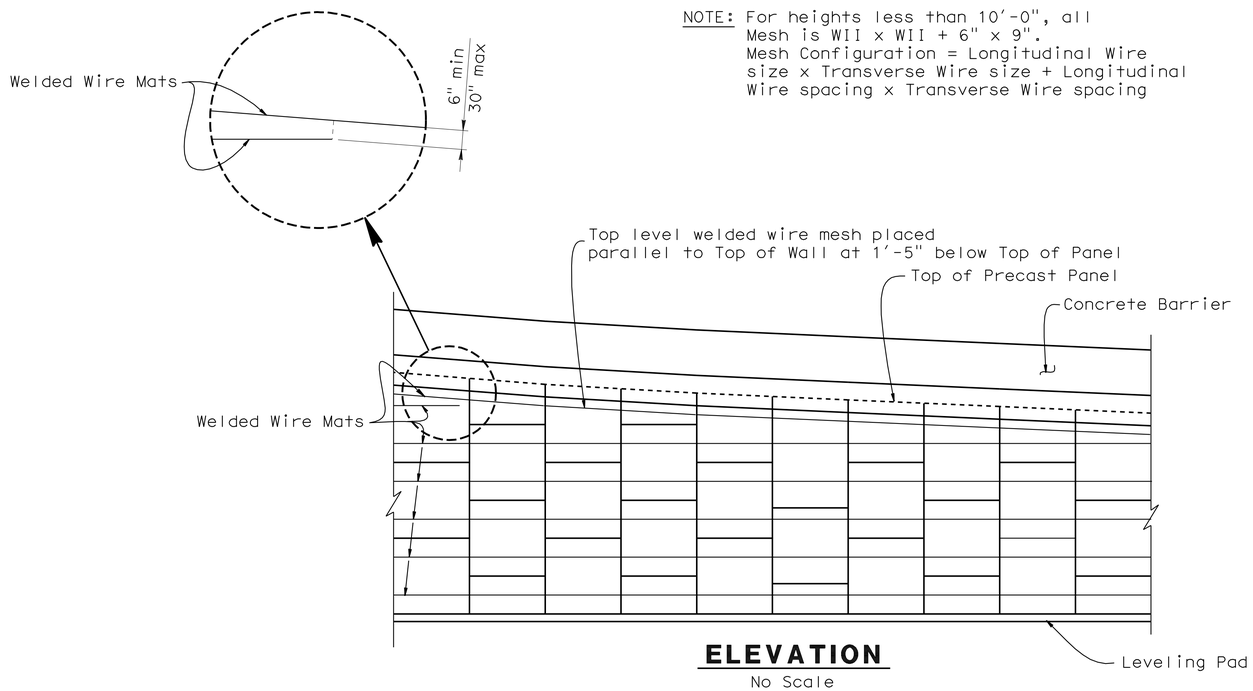

ELEVATION
No Scale

RETAINING WALL NO. C1

Wall LOL Sta.	Top of Wall Elevation	Elevation of Top of Leveling Pad
213+67.86	22.25	7.0
213+56.86	21.39	7.0
213+46.86	20.59	7.0
213+36.86	19.78	7.0
213+26.86	18.98	7.0
213+16.86	18.17	7.0
213+06.86	17.37	7.0
212+96.86	16.56	7.0
212+86.86	15.76	7.0
212+76.86	14.96	7.0
212+66.86	14.16	7.0
212+56.86	13.36	7.0
212+46.86	12.56	7.0
212+33.86	11.52	7.0

	BY	CHECKED
DESIGN	S. Galgiani	F. Zayati
DETAILS	E. Montevirgen	S. Galgiani
QUANTITIES	S. Galgiani	F. Zayati

STATE OF CALIFORNIA
DEPARTMENT OF TRANSPORTATION

DIVISION OF ENGINEERING SERVICES
STRUCTURE DESIGN
DESIGN BRANCH 14

BRIDGE NO. 53E0148
POST MILE 3.72

MSE WALL NO. C1
MSE WALL DETAILS NO. 7

STRUCTURES DESIGN DETAIL SHEET (ENGLISH) (REV. 10/25/05)

ORIGINAL SCALE IN INCHES FOR REDUCED PLANS 0 1 2 3

CU 07-271
EA 138201

DISREGARD PRINTS BEARING EARLIER REVISION DATES → 03-23-10 04-05-10

REVISION DATES

SHEET 11 OF 19

FILE => 53-rwc1_mse_edet07.dgn

USERNAME => trlenard DATE PLOTTED => 14-OCT-2010 TIME PLOTTED => 10:14

DIST	COUNTY	ROUTE	POST MILES TOTAL PROJECT	SHEET No	TOTAL SHEETS
07	LA	47,103	3.5/4.6, 0.0/1.1	916	1003

REGISTERED CIVIL ENGINEER — DATE 05-24-10

10-11-10
PLANS APPROVAL DATE

The State of California or its officers or agents shall not be responsible for the accuracy or completeness of electronic copies of this plan sheet.

REGISTERED PROFESSIONAL ENGINEER — FOUED ZAYATI — No. C57046 — Exp. 06-30-11 — CIVIL — STATE OF CALIFORNIA

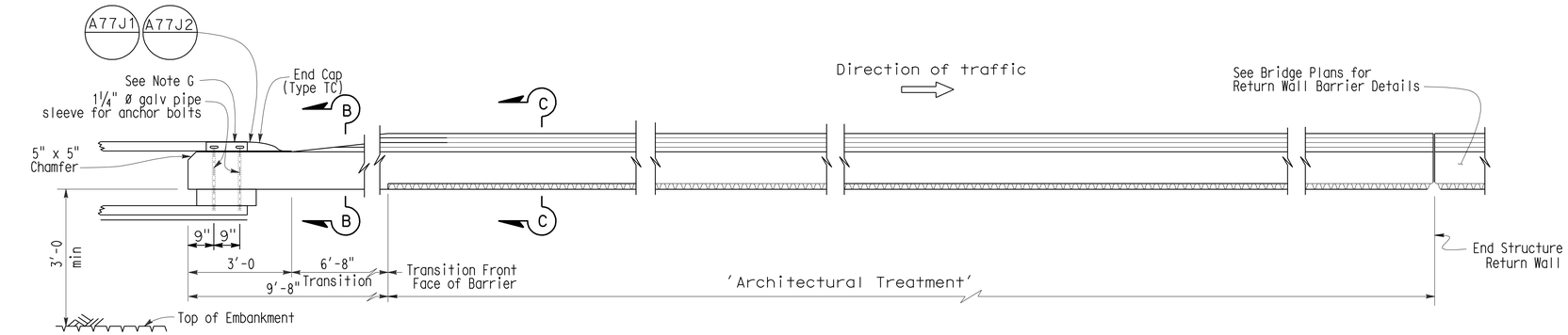

PLAN

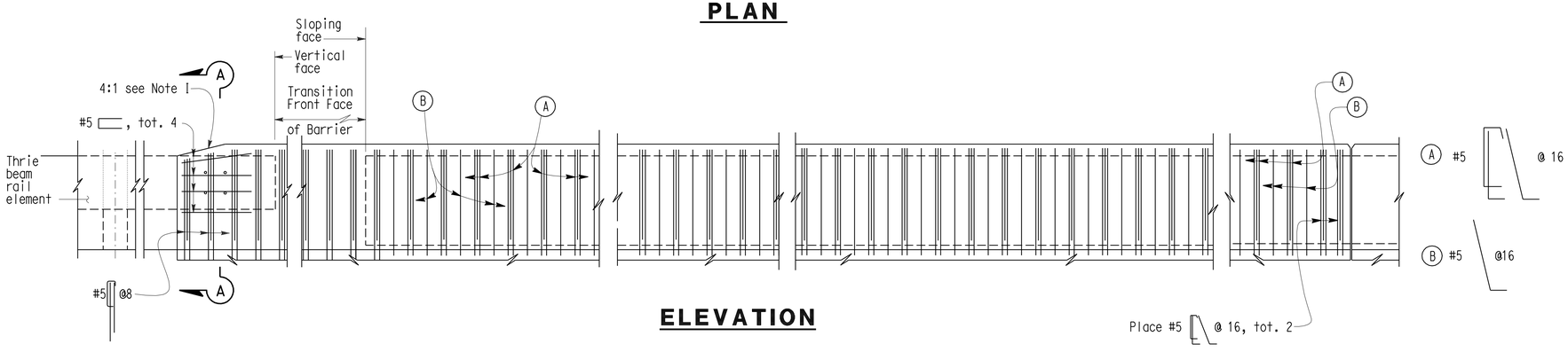

ELEVATION

NOTES:

A. Walls are to be backfilled before Barrier is placed.
B. Clearance to reinforcing steel in Barrier to be 1", except as noted. Longitudinal reinforcement to stop at all Expansion Joints.
C. See project plans for locations of Electroliers and Pull Boxes.
D. Dimensions may vary with roadway cross slope and with certain thickness of surfacing. See Project Plans.
E. Minimum concrete edge distance to reinforcing shown, shall be maintained, edge distance may be adjusted to accomodate increase in concrete cover for architectural treatment. See Typical Section.
F. For 'Architectural Treatment', see "CONCRETE BARRIER DETAILS NO. 2" sheet.
G. For Typical Metal Railing Connection details no shown, see Standard Plans A77J1 and A77JA.

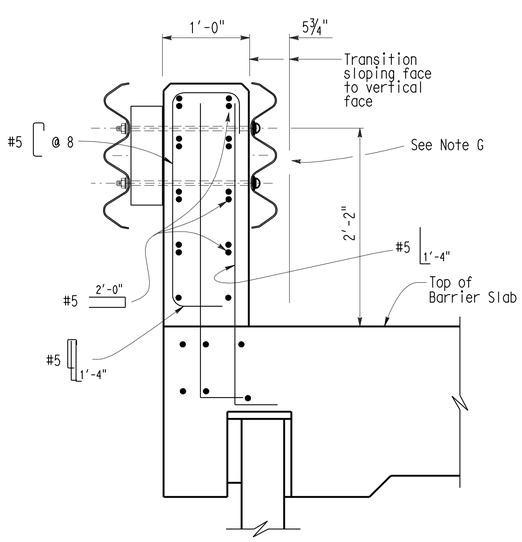

SECTION A-A

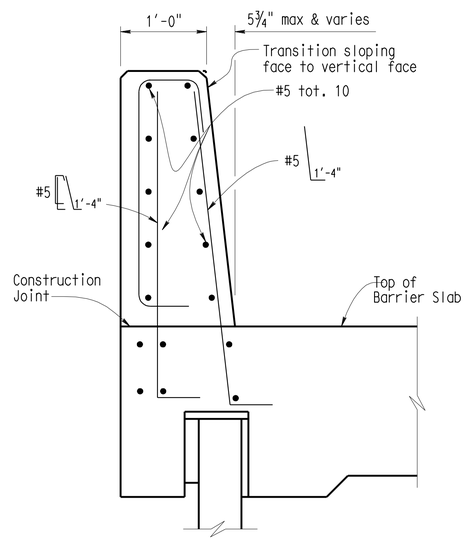

SECTION B-B

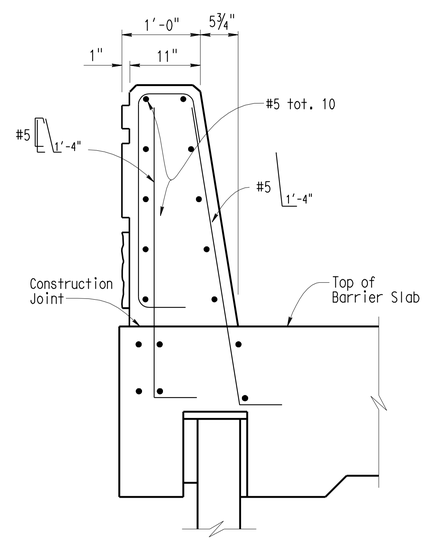

SECTION C-C

NO SCALE

DESIGN	BY F. Zayati	CHECKED S. Galgiani	
DETAILS	BY K. Kubo	CHECKED F. Zayati	
QUANTITIES	BY S. Galgiani	CHECKED F. Zayati	

STATE OF CALIFORNIA
DEPARTMENT OF TRANSPORTATION

DIVISION OF ENGINEERING SERVICES
STRUCTURE DESIGN
DESIGN BRANCH 14

BRIDGE NO. 53E0148
POST MILE 3.72

MSE WALL NO. C1
CONCRETE BARRIER DETAILS NO. 1

STRUCTURES DESIGN DETAIL SHEET (ENGLISH) (REV. 10/25/05)

ORIGINAL SCALE IN INCHES FOR REDUCED PLANS 0 1 2 3

CU 07
EA 138201

DISREGARD PRINTS BEARING EARLIER REVISION DATES

REVISION DATES: 03-25-10 05-24-10 06-23-10 06-25-10

SHEET 12 OF 19

FILE => 53-rwc1_mse_fbrdt01.dgn

USERNAME => trlenard DATE PLOTTED => 14-OCT-2010 TIME PLOTTED => 10:15

DIST	COUNTY	ROUTE	POST MILES TOTAL PROJECT	SHEET No	TOTAL SHEETS
07	LA	47,103	3.5/4.6, 0.0/1.1	917	1003

REGISTERED CIVIL ENGINEER — DATE 05-24-10

10-11-10
PLANS APPROVAL DATE

REGISTERED PROFESSIONAL ENGINEER — FOUED ZAYATI — No. C57046 — Exp. 06-30-11 — CIVIL — STATE OF CALIFORNIA

The State of California or its officers or agents shall not be responsible for the accuracy or completeness of electronic copies of this plan sheet.

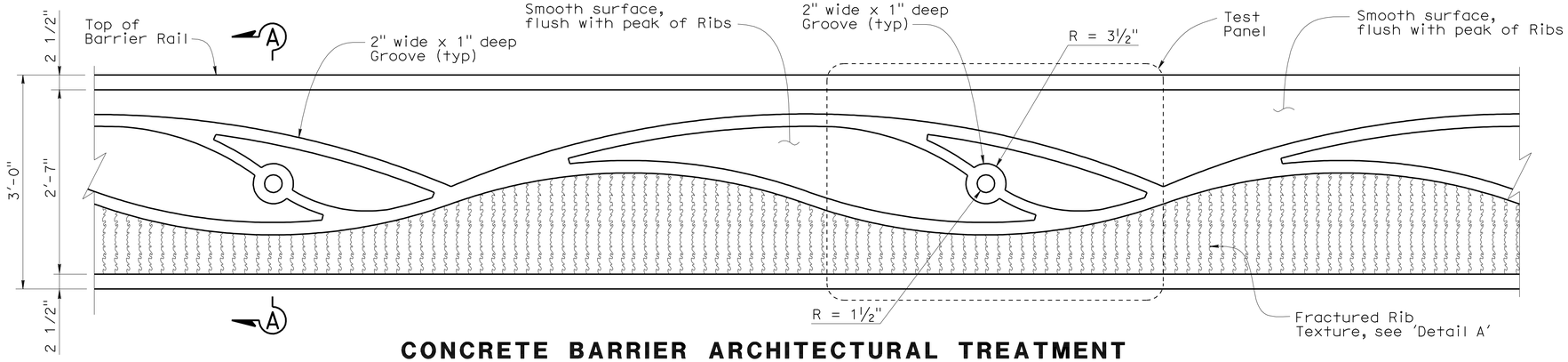

CONCRETE BARRIER ARCHITECTURAL TREATMENT

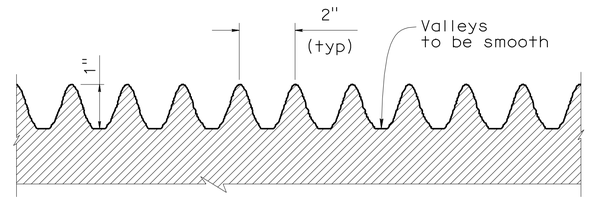

DETAIL A

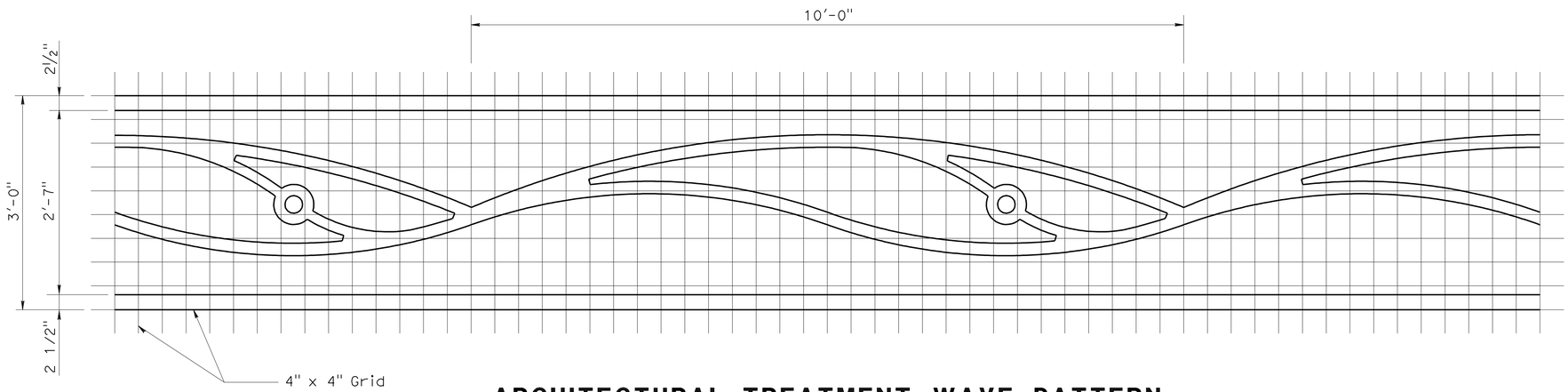

ARCHITECTURAL TREATMENT WAVE PATTERN

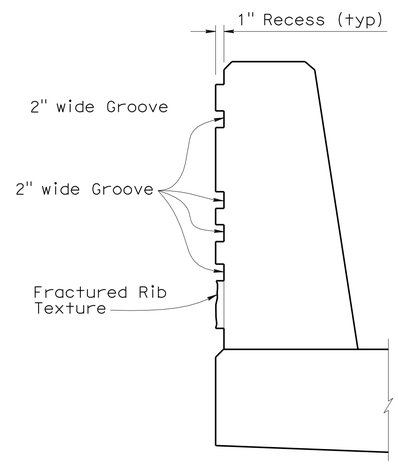

SECTION A-A

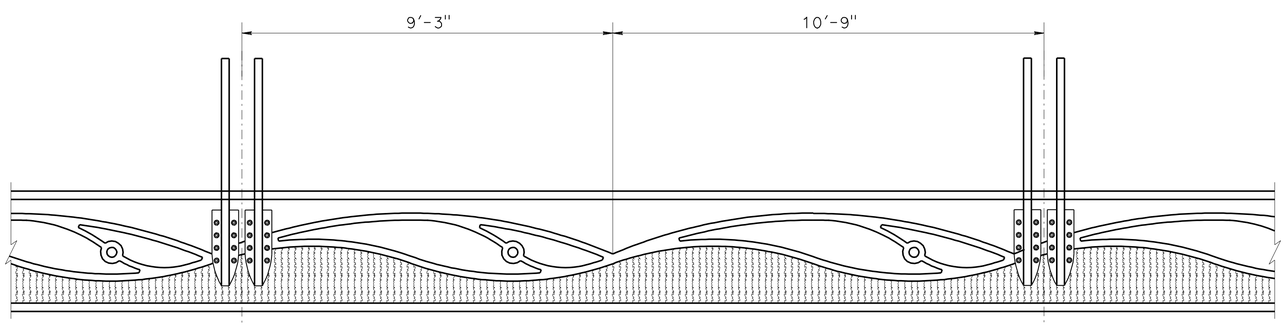

POST LOCATION ON BARRIER

NO SCALE

DESIGN	BY F. Zayati	CHECKED S. Galgiani	
DETAILS	BY K. Kubo	CHECKED F. Zayati	
QUANTITIES	BY S. Galgiani	CHECKED F. Zayati	

STATE OF CALIFORNIA
DEPARTMENT OF TRANSPORTATION

DIVISION OF ENGINEERING SERVICES
STRUCTURE DESIGN
DESIGN BRANCH 14

BRIDGE NO. 53E0148
POST MILE 3.72

MSE WALL NO. C1
CONCRETE BARRIER DETAILS NO. 2

STRUCTURES DESIGN DETAIL SHEET (ENGLISH) (REV. 10/25/05)

ORIGINAL SCALE IN INCHES FOR REDUCED PLANS 0 1 2 3

CU 07-271
EA 138201

DISREGARD PRINTS BEARING EARLIER REVISION DATES → 01-08-10 04-04-10 06-22-10

REVISION DATES

SHEET 13 OF 19

FILE => 53-rwc1_mse_fbrdt02.dgn

USERNAME => trlenard DATE PLOTTED => 14-OCT-2010 TIME PLOTTED => 10:15

DIST	COUNTY	ROUTE	POST MILES TOTAL PROJECT	SHEET No	TOTAL SHEETS
07	LA	47,103	3.5/4.6, 0.0/1.1	918	1003

REGISTERED CIVIL ENGINEER — 05-24-10 DATE

10-11-10
PLANS APPROVAL DATE

REGISTERED PROFESSIONAL ENGINEER — FOUED ZAYATI No. C57046 Exp. 06-30-11 CIVIL — STATE OF CALIFORNIA

The State of California or its officers or agents shall not be responsible for the accuracy or completeness of electronic copies of this plan sheet.

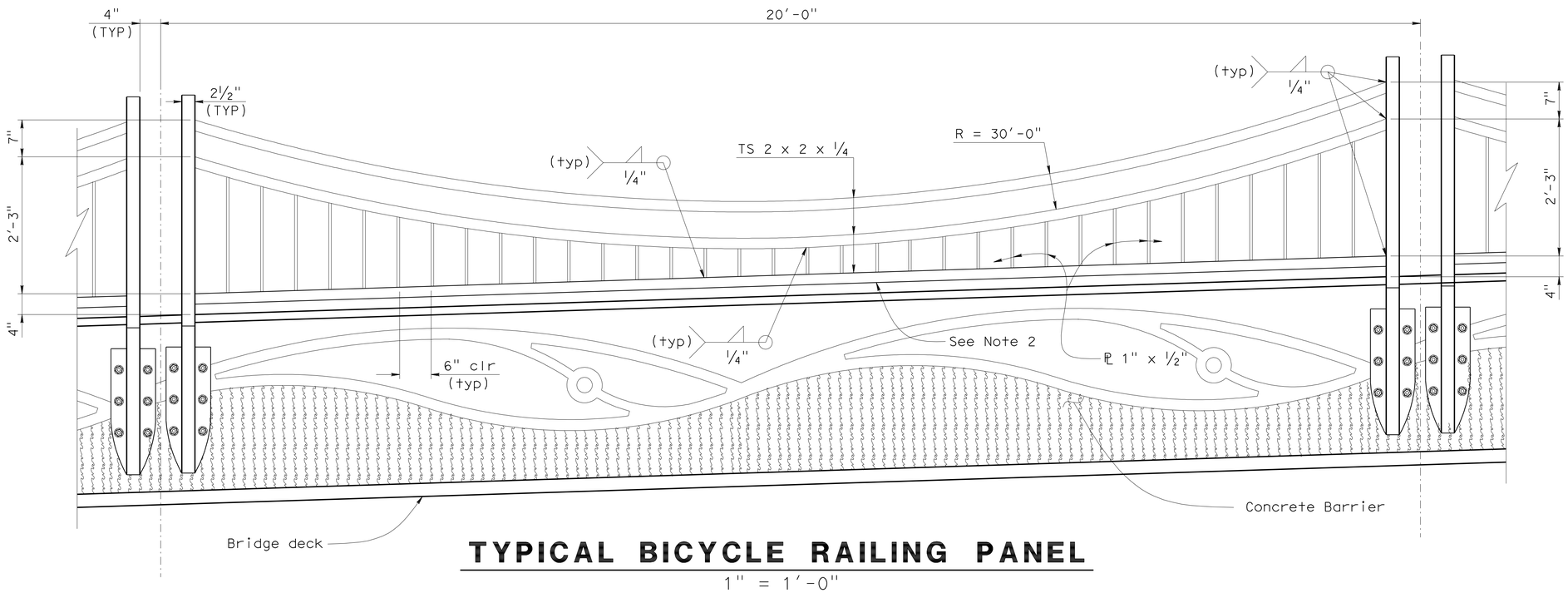

TYPICAL BICYCLE RAILING PANEL

1" = 1'-0"

NOTES:

1. Longitudinal deck slope varies.
2. Bottom rail is parallel to top of barrier.
3. See "RAILING DETAILS No. 2" sheet for typival post details.
4. See "RAILING DETAILS No. 2" sheet for post connection to barrier.
5. For railing expansion mechanism, see "RAILING DETAILS No. 2" sheet.

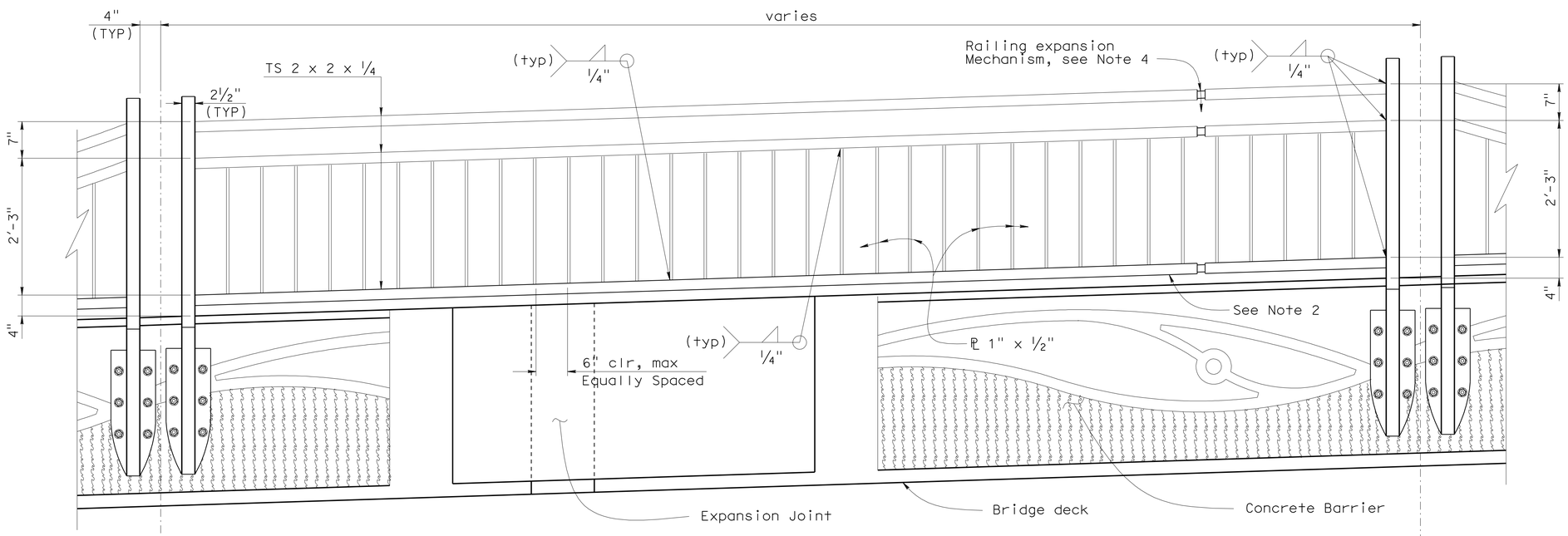

TYPICAL BICYCLE RAILING PANEL AT EXPANSION JOINTS

1" = 1'-0"

	BY	CHECKED
DESIGN	F. Zayati	R. Bromenschenkel
DETAILS	T. Nguyen	F. Zayati
QUANTITIES	P. Peterson	J. Peterson

STATE OF CALIFORNIA
DEPARTMENT OF TRANSPORTATION

DIVISION OF ENGINEERING SERVICES
STRUCTURE DESIGN
DESIGN BRANCH 14

BRIDGE NO. 53E0148
POST MILE 3.72

MSE WALL NO. C1
RAILING DETAILS NO. 1

STRUCTURES DESIGN DETAIL SHEET (ENGLISH) (REV. 10/25/05)

ORIGINAL SCALE IN INCHES FOR REDUCED PLANS 0 1 2 3

CU 07-271
EA 138201

DISREGARD PRINTS BEARING EARLIER REVISION DATES

REVISION DATES: ~~01-08-10~~ 04-01-10

SHEET 14 OF 19

FILE => 53-rwc1_mse_fraildt01.dgn

USERNAME => trienard DATE PLOTTED => 14-OCT-2010 TIME PLOTTED => 10:15

DIST	COUNTY	ROUTE	POST MILES TOTAL PROJECT	SHEET No	TOTAL SHEETS
07	LA	47,103	3.5/4.6, 0.0/1.1	919	1003

REGISTERED CIVIL ENGINEER — DATE 05-24-10

10-11-10
PLANS APPROVAL DATE

REGISTERED PROFESSIONAL ENGINEER — FOUED ZAYATI No. C57046 Exp. 06-30-11 CIVIL — STATE OF CALIFORNIA

The State of California or its officers or agents shall not be responsible for the accuracy or completeness of electronic copies of this plan sheet.

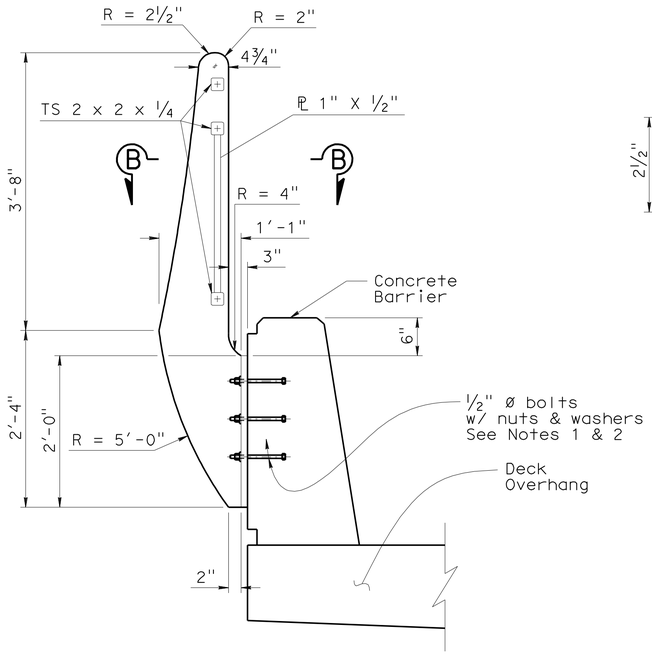

TYPICAL BICYCLE RAILING POST

1" = 1'-0"

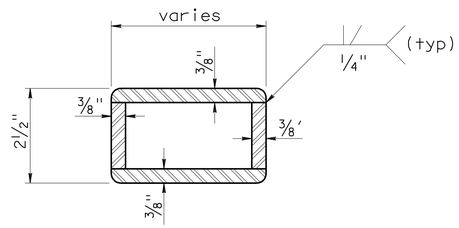

SECTION B-B

6" = 1'-0"

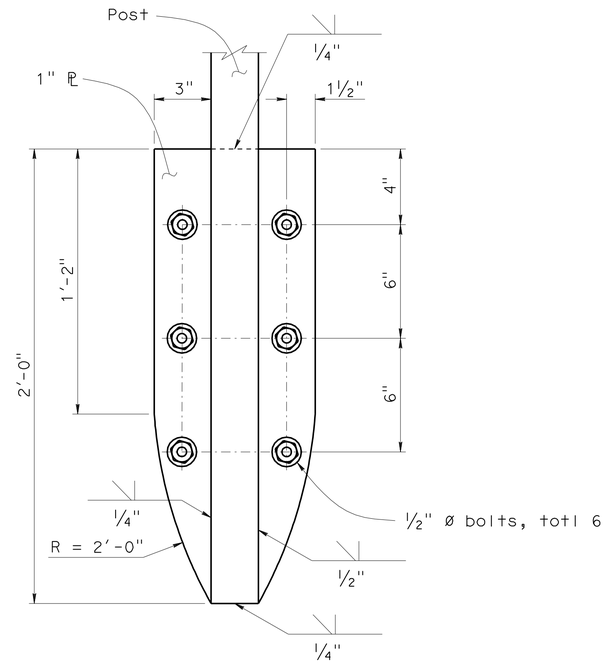

TYPICAL POST CONNECTION

3" = 1'-0"

NOTES:

1. 6" minimum bolt embedment into barrier.
2. Apply thread locking compound.

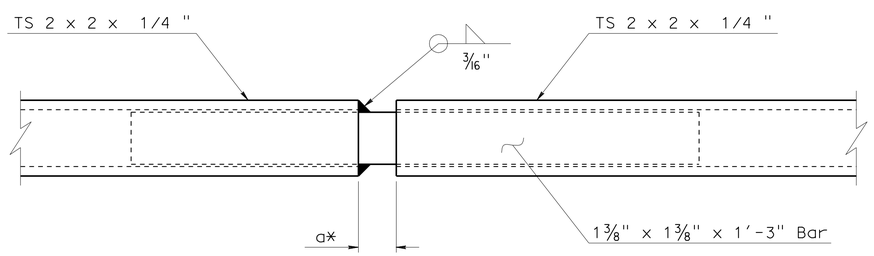

RAILING EXPANSION MECHANISM DETAIL

6" = 1'-0"

* Gap at time of Railing installation

Season	Gap a
Summer	1"
Winter	2½"
Fall/ Spring	1¾"

	BY	CHECKED
DESIGN	F. Zayati	R. Bromenschenkel
DETAILS	T. Nguyen	F. Zayati
QUANTITIES	P. Peterson	J. Peterson

STATE OF CALIFORNIA
DEPARTMENT OF TRANSPORTATION

DIVISION OF ENGINEERING SERVICES
STRUCTURE DESIGN
DESIGN BRANCH 14

BRIDGE NO. 53E0148
POST MILE 3.72

MSE WALL NO. C1
RAILING DETAILS NO. 2

STRUCTURES DESIGN DETAIL SHEET (ENGLISH) (REV. 10/25/05)

ORIGINAL SCALE IN INCHES FOR REDUCED PLANS 0 1 2 3

CU 07-271
EA 138201

DISREGARD PRINTS BEARING EARLIER REVISION DATES

REVISION DATES: 01-08-10 04-01-10

SHEET 15 OF 19

FILE => 53-rwc1_mse_fraildt02.dgn

USERNAME => trlenard DATE PLOTTED => 14-OCT-2010 TIME PLOTTED => 10:15

DIST	COUNTY	ROUTE	POST MILES TOTAL PROJECT	SHEET No	TOTAL SHEETS
07	LA	47,103	3.5/4.6, 0.0/1.1	920	1003

REGISTERED CIVIL ENGINEER 04/19/10 DATE

10-11-10
PLANS APPROVAL DATE

REGISTERED PROFESSIONAL ENGINEER ERIC BROWN NO. GE-2806 EXP. 06-30-2010 GEOTECHNICAL STATE OF CALIFORNIA

The State of California or its officers or agents shall not be responsible for the accuracy or completeness of electronic copies of this plan sheet.

ACTA
ONE CIVIC PLAZA. SUITE 350,
CARSON, CA 90745

EARTH MECHANICS, INC.
17660, NEWHOPE STREET, SUITE E
FOUNTAIN VALLEY, CA 92708

BENCHMARKS:

PT-501	PT-15001
SET + FOOTING 23.25'Rt ℄ "A" Line	STK601061 MAG NAIL IN LEAD CUT 113.09'Lt ℄ "A" Line
Sta. 10+59.08	Sta. 10+42.39
N 1735599.25	N 1735565.80
E 6489049.69	E 6488916.52
Elev. = -0.91	Elev. = 3.42

NOTES:

(1) This LOTB sheet (Boring Record) was prepared in accordance with the Caltrans Soil and Rock Classification Logging, Classification and Presentation Manual (June 2007).

(2) 2.4" samples were taken using a California Split-spoon Sampler.

(3) A rope and cat-head hammer system consisting of a hammer weight of 140 lbs falling a distance of 30" was used to advance the drive sampler.

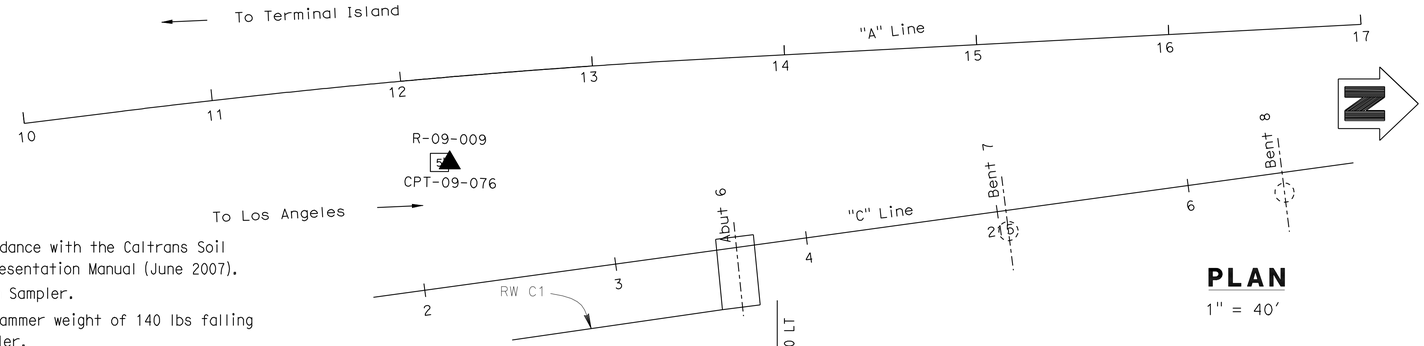

PLAN
1" = 40'

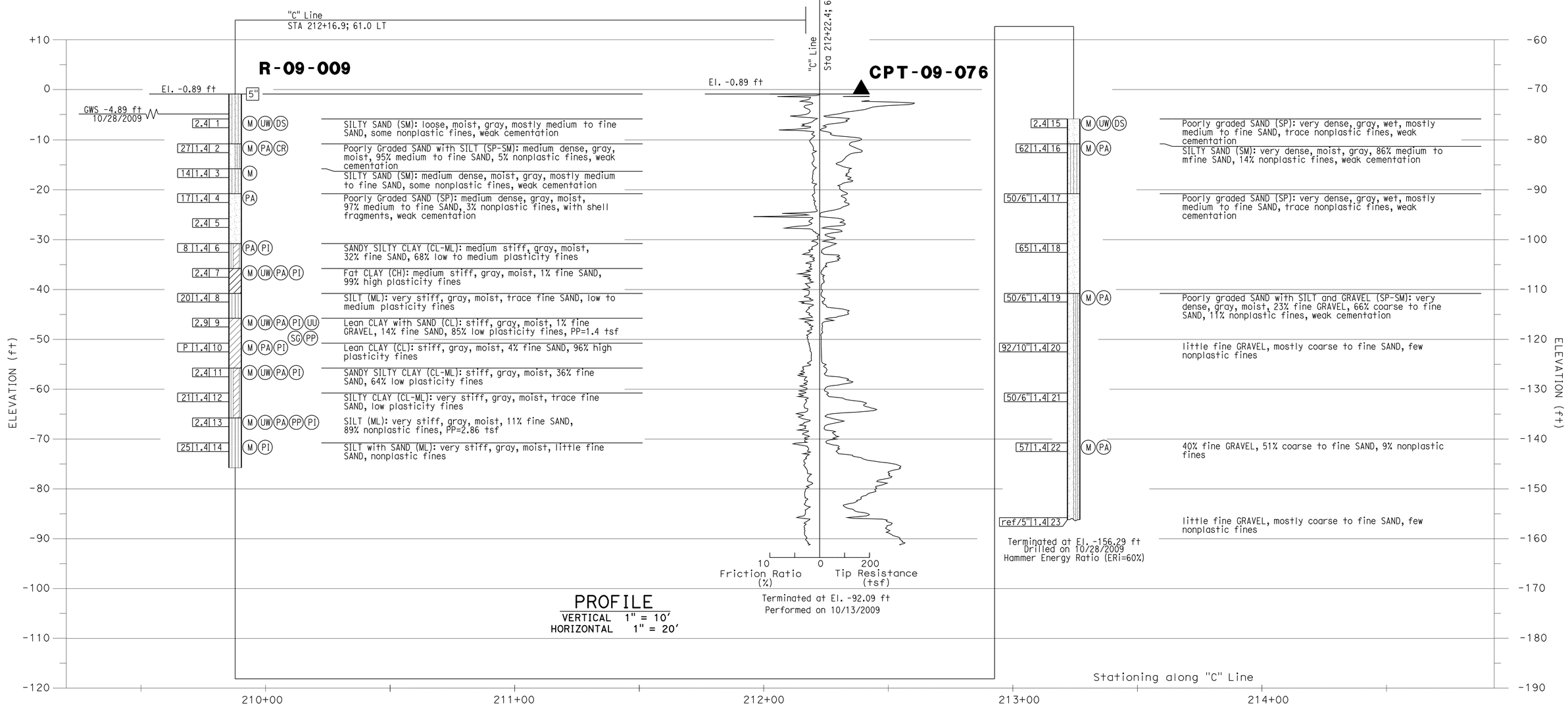

DESIGN OVERSIGHT	DRAWN BY: J. Fang	FIELD INVESTIGATION BY:	PREPARED FOR THE STATE OF CALIFORNIA DEPARTMENT OF TRANSPORTATION	E. Brown PROJECT ENGINEER	BRIDGE NO. 53E0148 POST MILE 3.72
SIGN OFF DATE	CHECKED BY: K. Pratheepan	R. Jie			

MSE RETAINING WALL NO. C1

LOG OF TEST BORINGS NO. 1 OF 4

OGS CIVIL LOG OF TEST BORINGS SHEET (ENGLISH) (REV. 06-01-09)

ORIGINAL SCALE IN INCHES FOR REDUCED PLANS 0 1 2 3

CU 07-271
EA 138201

DISREGARD PRINTS BEARING EARLIER REVISION DATES

REVISION DATES (PRELIMINARY STAGE ONLY) 03/01/10 04/19/10 07/02/10

SHEET 16 OF 19

FILE => 53-rwc1_mse_zltb01.dgn

USERNAME => rtrienard DATE PLOTTED => 14-OCT-2010 TIME PLOTTED => 10:15

DIST	COUNTY	ROUTE	POST MILES TOTAL PROJECT	SHEET No	TOTAL SHEETS
07	LA	47,103	3.5/4.6, 0.0/1.1	921	1003

REGISTERED CIVIL ENGINEER 04/19/10 DATE

10-11-10
PLANS APPROVAL DATE

REGISTERED PROFESSIONAL ENGINEER ERIC BROWN NO. GE-2806 EXP. 06-30-2010 GEOTECHNICAL STATE OF CALIFORNIA

The State of California or its officers or agents shall not be responsible for the accuracy or completeness of electronic copies of this plan sheet.

ACTA
ONE CIVIC PLAZA. SUITE 350,
CARSON, CA 90745

EARTH MECHANICS, INC.
17660, NEWHOPE STREET, SUITE E
FOUNTAIN VALLEY, CA 92708

BENCHMARKS:

PT-524	PT-525
SET REBAR	SET + VLT
19.536'Lt ℄ Line SR 47	34.81'Lt ℄ "A" Line
Sta. 16+00.56	Sta. 14+00.95
N 1736134.90	N 1735941.10
E 6488978.91	E 6489032.50
Elev. = -0.51	Elev. = 0.12

NOTES:

(1) This LOTB sheet (Boring Record) was prepared in accordance with the Caltrans Soil and Rock Classification Logging, Classification and Presentation Manual (June 2007).

(2) 2.4" samples were taken using a California Split-spoon Sampler.

(3) A rope and cat-head hammer system consisting of a hammer weight of 140 lbs falling a distance of 30" was used to advance the drive sampler.

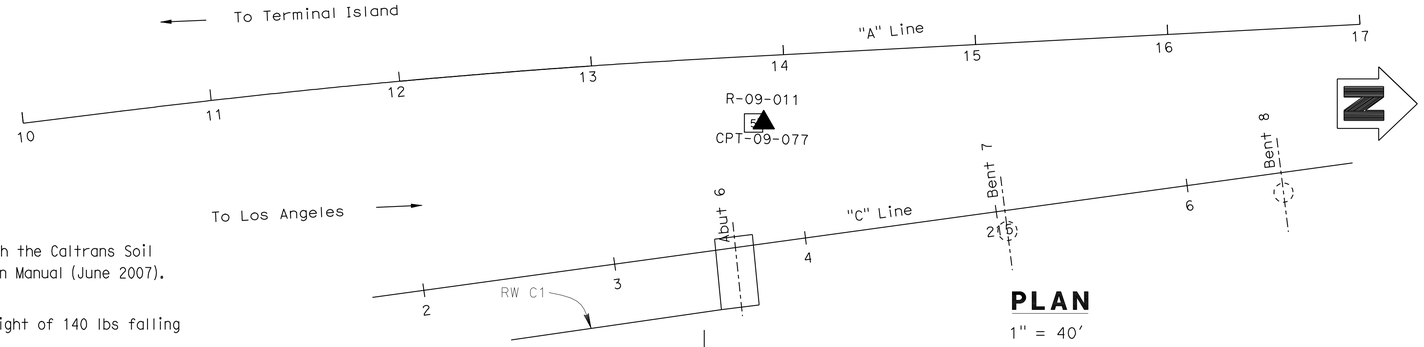

PLAN
1" = 40'

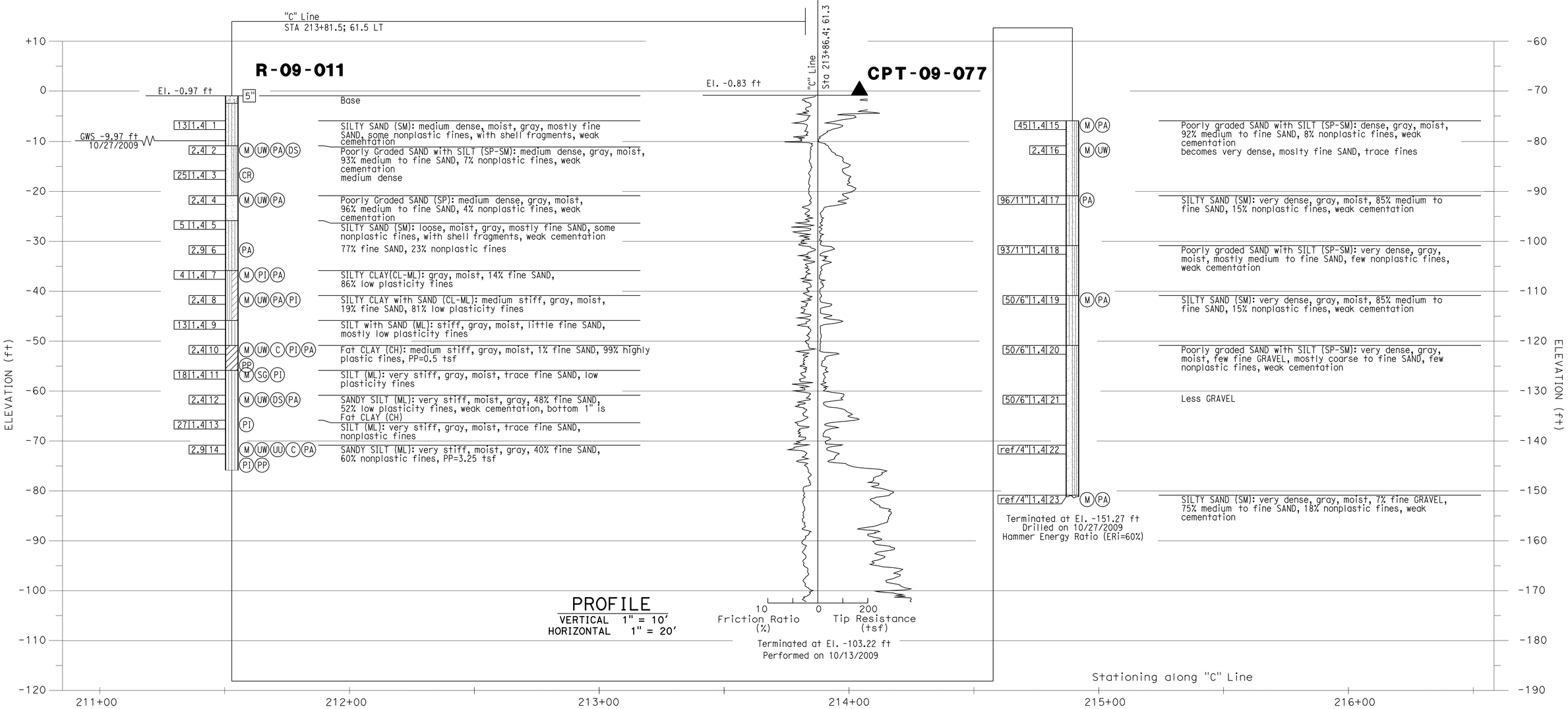

DESIGN OVERSIGHT	DRAWN BY: J. Fang	FIELD INVESTIGATION BY:	PREPARED FOR THE STATE OF CALIFORNIA DEPARTMENT OF TRANSPORTATION	E. Brown PROJECT ENGINEER	BRIDGE NO. 53E0148 POST MILE 3.72
SIGN OFF DATE	CHECKED BY: K. Pratheepan	R. Jie			

MSE RETAINING WALL NO. C1

LOG OF TEST BORINGS NO. 2 OF 4

OGS CIVIL LOG OF TEST BORINGS SHEET (ENGLISH) (REV. 06-01-09)

ORIGINAL SCALE IN INCHES FOR REDUCED PLANS 0 1 2 3

CU 07-271
EA 138201

DISREGARD PRINTS BEARING EARLIER REVISION DATES

REVISION DATES (PRELIMINARY STAGE ONLY) 03/04/10 04/14/10 07/02/10

SHEET 17 OF 19

FILE => 53-rwc1_mse_z1tb02.dgn

USERNAME => trlenard DATE PLOTTED => 14-OCT-2010 TIME PLOTTED => 10:15

REFERENCE: CALTRANS SOIL & ROCK LOGGING, CLASSIFICATION, AND PRESENTATION MANUAL (JUNE 2007)

DIST	COUNTY	ROUTE	POST MILES TOTAL PROJECT	SHEET No	TOTAL SHEETS
07	LA	47,103	3.5/4.6, 0.0/1.1	922	1003

REGISTERED ENGINEER 04/19/10 DATE

10-11-10
PLANS APPROVAL DATE

REGISTERED PROFESSIONAL ENGINEER ERIC BROWN NO. GE-2806 EXP. 06-30-2010 GEOTECHNICAL STATE OF CALIFORNIA

The State of California or its officers or agents shall not be responsible for the accuracy or completeness of electronic copies of this plan sheet.

ACTA
ONE CIVIC PLAZA. SUITE 350,
CARSON, CA 90745

EARTH MECHANICS, INC.
17660, NEWHOPE STREET, SUITE E
FOUNTAIN VALLEY, CA 92708

CEMENTATION

Description	Criteria
Weak	Crumbles or breaks with handling or little finger pressure.
Moderate	Crumbles or breaks with considerable finger pressure.
Strong	Will not crumble or break with finger pressure.

CONSISTENCY OF COHESIVE SOILS

Description	Unconfined Compressive Strength (tsf)	Pocket Penetrometer Measurement (tsf)	Torvane Measurement (tsf)	Field Approximation
Very Soft	< 0.25	< 0.25	< 0.12	Easily penetrated several inches by fist
Soft	0.25 to 0.50	0.25 to 0.50	0.12 to 0.25	Easily penetrated several inches by thumb
Medium Stiff	0.50 to 1.0	0.50 to 1.0	0.25 to 0.50	Penetrated several inches by thumb with moderate effort
Stiff	1 to 2	1 to 2	0.50 to 1.0	Readily indented by thumb but penetrated only with great effort
Very Stiff	2 to 4	2 to 4	1.0 to 2.0	Readily indented by thumbnail
Hard	> 4.0	> 4.0	> 2.0	Indented by thumbnail with difficulty

BOREHOLE IDENTIFICATION

Symbol	Hole Type	Description
Size	A	Auger Boring
Size	R P	Rotary drilled boring Rotary percussion boring (air)
Size	R	Rotary drilled diamond core
Size	HD HA	Hand driven (1-inch soil tube) Hand Auger
●	D	Dynamic Cone Penetration Boring
▲	CPT	Cone Penetration Test (ASTM D 5778-95)
⬚	O	Other

Note: Size in inches.

PLASTICITY OF FINE-GRAINED SOILS

Description	Criteria
Nonplastic	A 1/8-inch thread cannot be rolled at any water content.
Low	The thread can barely be rolled and the lump cannot be formed when drier than the plastic limit.
Medium	The thread is easy to roll and not much time is required to reach the plastic limit. The thread cannot be rerolled after reaching the plastic limit. The lump crumbles when drier than the plastic limit.
High	It takes considerable time rolling and kneading to reach the plastic limit. The thread can be rerolled several times after reaching the plastic limit. The lump can be formed without crumbling when drier than the plastic limit.

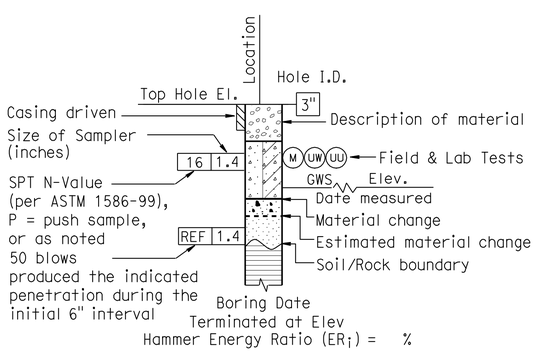

ROTARY BORING

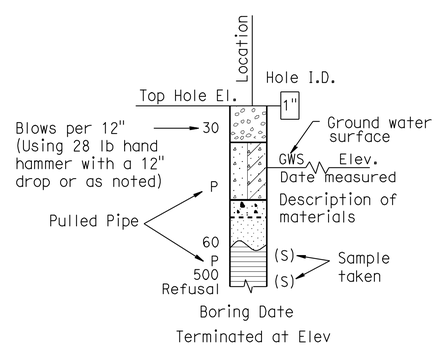

HAND BORING

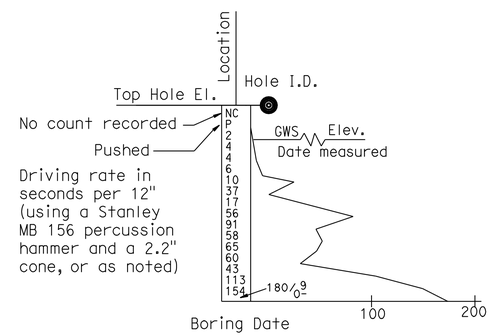

DYNAMIC CONE PENETRATION BORING

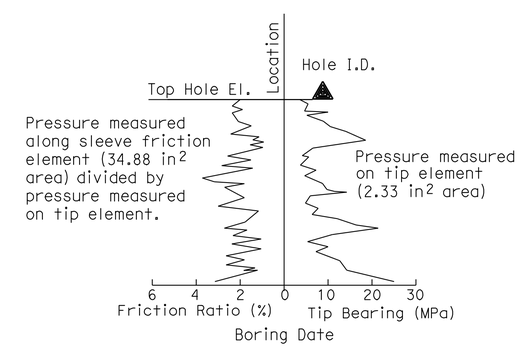

CONE PENETRATION TEST (CPT) SOUNDING

DESIGN OVERSIGHT SIGN OFF DATE	DRAWN BY: J.Fang CHECKED BY: K.Pratheepan	FIELD INVESTIGATION BY: E.Brown	PREPARED FOR THE STATE OF CALIFORNIA DEPARTMENT OF TRANSPORTATION	E. Brown PROJECT ENGINEER	BRIDGE NO. 53E0148 POST MILE 3.72

MSE RETAINING WALL NO. C1

LOG OF TEST BORINGS NO. 3 OF 4

OGS CIVIL LOG OF TEST BORINGS SHEET (ENGLISH) (REV. 06-01-09)

ORIGINAL SCALE IN INCHES FOR REDUCED PLANS 0 1 2 3

CU 07-271
EA 138201

DISREGARD PRINTS BEARING EARLIER REVISION DATES 03/01/10 04/14/10 07/02/10

REVISION DATES (PRELIMINARY STAGE ONLY)

SHEET 18 OF 19

FILE => 53-rwc1_mse_zltb03.dgn

USERNAME => trlenard DATE PLOTTED => 14-OCT-2010 TIME PLOTTED => 10:15

REFERENCE: CALTRANS SOIL & ROCK LOGGING, CLASSIFICATION, AND PRESENTATION MANUAL (JUNE 2007)

DIST	COUNTY	ROUTE	POST MILES TOTAL PROJECT	SHEET No	TOTAL SHEETS
07	LA	47,103	3.5/4.6, 0.0/1.1	923	1003

REGISTERED ENGINEER 04/19/10 DATE

10-11-10
PLANS APPROVAL DATE

REGISTERED PROFESSIONAL ENGINEER ERIC BROWN NO. GE-2806 EXP. 06-30-2010 GEOTECHNICAL STATE OF CALIFORNIA

The State of California or its officers or agents shall not be responsible for the accuracy or completeness of electronic copies of this plan sheet.

ACTA
ONE CIVIC PLAZA. SUITE 350,
CARSON, CA 90745

EARTH MECHANICS, INC.
17660, NEWHOPE STREET, SUITE E
FOUNTAIN VALLEY, CA 92708

GROUP SYMBOLS AND NAMES

Graphic/Symbol	Group Names	Graphic/Symbol	Group Names
GW	Well-graded GRAVEL Well-graded GRAVEL with SAND	CL	Lean CLAY Lean CLAY with SAND Lean CLAY with GRAVEL SANDY lean CLAY SANDY lean CLAY with GRAVEL GRAVELLY lean CLAY GRAVELLY lean CLAY with SAND
GP	Poorly graded GRAVEL Poorly graded GRAVEL with SAND		
GW-GM	Well-graded GRAVEL with SILT Well-graded GRAVEL with SILT and SAND	CL-ML	SILTY CLAY SILTY CLAY with SAND SILTY CLAY with GRAVEL SANDY SILTY CLAY SANDY SILTY CLAY with GRAVEL GRAVELLY SILTY CLAY GRAVELLY SILTY CLAY with SAND
GW-GC	Well-graded GRAVEL with CLAY (or SILTY CLAY) Well-graded GRAVEL with CLAY and SAND (or SILTY CLAY and SAND)		
GP-GM	Poorly graded GRAVEL with SILT Poorly graded GRAVEL with SILT and SAND	ML	SILT SILT with SAND SILT with GRAVEL SANDY SILT SANDY SILT with GRAVEL GRAVELLY SILT GRAVELLY SILT with SAND
GP-GC	Poorly graded GRAVEL with CLAY (or SILTY CLAY) Poorly graded GRAVEL with CLAY and SAND (or SILTY CLAY and SAND)		
GM	SILTY GRAVEL SILTY GRAVEL with SAND	OL	ORGANIC lean CLAY ORGANIC lean CLAY with SAND ORGANIC lean CLAY with GRAVEL SANDY ORGANIC lean CLAY SANDY ORGANIC lean CLAY with GRAVEL GRAVELLY ORGANIC lean CLAY GRAVELLY ORGANIC lean CLAY with SAND
GC	CLAYEY GRAVEL CLAYEY GRAVEL with SAND		
GC-GM	SILTY, CLAYEY GRAVEL SILTY, CLAYEY GRAVEL with SAND	OL	ORGANIC SILT ORGANIC SILT with SAND ORGANIC SILT with GRAVEL SANDY ORGANIC SILT SANDY ORGANIC SILT with GRAVEL GRAVELLY ORGANIC SILT GRAVELLY ORGANIC SILT with SAND
SW	Well-graded SAND Well-graded SAND with GRAVEL		
SP	Poorly graded SAND Poorly graded SAND with GRAVEL	CH	Fat CLAY Fat CLAY with SAND Fat CLAY with GRAVEL SANDY fat CLAY SANDY fat CLAY with GRAVEL GRAVELLY fat CLAY GRAVELLY fat CLAY with SAND
SW-SM	Well-graded SAND with SILT Well-graded SAND with SILT and GRAVEL		
SW-SC	Well-graded SAND with CLAY (or SILTY CLAY) Well-graded SAND with CLAY and GRAVEL (or SILTY CLAY and GRAVEL)	MH	Elastic SILT Elastic SILT with SAND Elastic SILT with GRAVEL SANDY elastic SILT SANDY elastic SILT with GRAVEL GRAVELLY elastic SILT GRAVELLY elastic SILT with SAND
SP-SM	Poorly graded SAND with SILT Poorly graded SAND with SILT and GRAVEL		
SP-SC	Poorly graded SAND with CLAY (or SILTY CLAY) Poorly graded SAND with CLAY and GRAVEL (or SILTY CLAY and GRAVEL)	OH	ORGANIC fat CLAY ORGANIC fat CLAY with SAND ORGANIC fat CLAY with GRAVEL SANDY ORGANIC fat CLAY SANDY ORGANIC fat CLAY with GRAVEL GRAVELLY ORGANIC fat CLAY GRAVELLY ORGANIC fat CLAY with SAND
SM	SILTY SAND SILTY SAND with GRAVEL		
SC	CLAYEY SAND CLAYEY SAND with GRAVEL	OH	ORGANIC elastic SILT ORGANIC elastic SILT with SAND ORGANIC elastic SILT with GRAVEL SANDY ORGANIC elastic SILT SANDY ORGANIC elastic SILT with GRAVEL GRAVELLY ORGANIC elastic SILT GRAVELLY ORGANIC elastic SILT with SAND
SC-SM	SILTY, CLAYEY SAND SILTY, CLAYEY SAND with GRAVEL		
PT	PEAT	OL/OH	ORGANIC SOIL ORGANIC SOIL with SAND ORGANIC SOIL with GRAVEL SANDY ORGANIC SOIL SANDY ORGANIC SOIL with GRAVEL GRAVELLY ORGANIC SOIL GRAVELLY ORGANIC SOIL with SAND
	COBBLES COBBLES and BOULDERS BOULDERS		

FIELD AND LABORATORY TESTING

- (C) Consolidation (ASTM D 2435)
- (CL) Collapse Potential (ASTM D 5333)
- (CP) Compaction Curve (CTM 216)
- (CR) Corrosivity Testing (CTM 643, CTM 422, CTM 417)
- (CU) Consolidated Undrained Triaxial (ASTM D 4767)
- (DS) Direct Shear (ASTM D 3080)
- (EI) Expansion Index (ASTM D 4829)
- (M) Moisture Content (ASTM D 2216)
- (OC) Organic Content-% (ASTM D 2974)
- (P) Permeability (CTM 220)
- (PA) Particle Size Analysis (ASTM D 422)
- (PI) Plasticity Index (AASHTO T 90) Liquid Limit (AASHTO T 89)
- (PL) Point Load Index (ASTM D 5731)
- (PM) Pressure Meter
- (PP) Pocket Penetrometer
- (R) R-Value (CTM 301)
- (SE) Sand Equivalent (CTM 217)
- (SG) Specific Gravity (AASHTO T 100)
- (SL) Shrinkage Limit (ASTM D 427)
- (SW) Swell Potential (ASTM D 4546)
- (TV) Pocket Torvane
- (UC) Unconfined Compression-Soil (ASTM D 2166) Unconfined Compression-Rock (ASTM D 2938)
- (UU) Unconsolidated Undrained Triaxial (ASTM D 2850)
- (UW) Unit Weight (ASTM D 4767)
- (VS) Vane Shear (AASHTO T 223)

APPARENT DENSITY OF COHESIONLESS SOILS

Description	SPT N_{60} (Blows / 12 inches)
Very loose	0 - 4
Loose	5 - 10
Medium Dense	11 - 30
Dense	31 - 50
Very Dense	> 50

MOISTURE

Description	Criteria
Dry	Absence of moisture, dusty, dry to the touch
Moist	Damp but no visible water
Wet	Visible free water, usually soil is below water table

PERCENT OR PROPORTION OF SOILS

Description	Criteria
Trace	Particles are present but estimated to be less than 5%
Few	5 to 10%
Little	15 to 25%
Some	30 to 45%
Mostly	50 to 100%

PARTICLE SIZE

Description		Size
Boulder		> 12"
Cobble		3" to 12"
Gravel	Coarse	3/4" to 3"
	Fine	No. 4 to 3/4"
Sand	Coarse	No. 10 to No. 4
	Medium	No. 40 to No. 10
	Fine	No. 200 to No. 40

DESIGN OVERSIGHT

SIGN OFF DATE

DRAWN BY: J.Fang

CHECKED BY: K.Pratheepan

FIELD INVESTIGATION BY:
E.Brown

PREPARED FOR THE STATE OF CALIFORNIA DEPARTMENT OF TRANSPORTATION

E. Brown
PROJECT ENGINEER

BRIDGE NO. 53E0148
POST MILE 3.72

MSE RETAINING WALL NO. C1
LOG OF TEST BORINGS NO. 4 OF 4

OGS CIVIL LOG OF TEST BORINGS SHEET (ENGLISH) (REV. 06-01-09)

ORIGINAL SCALE IN INCHES FOR REDUCED PLANS 0 1 2 3

CU 07-271
EA 138201

DISREGARD PRINTS BEARING EARLIER REVISION DATES

REVISION DATES (PRELIMINARY STAGE ONLY) 03/01/10 04/19/10 07/02/10

SHEET 19 OF 19

FILE => 53-rwc1_mse_zltb04.dgn

USERNAME => trienard DATE PLOTTED => 14-OCT-2010 TIME PLOTTED => 10:15

DIST	COUNTY	ROUTE	POST MILES TOTAL PROJECT	SHEET No	TOTAL SHEETS
07	LA	47,103	3.5/4.6, 0.0/1.1	924	1003

REGISTERED CIVIL ENGINEER 05-24-10 DATE

10-11-10
PLANS APPROVAL DATE

The State of California or its officers or agents shall not be responsible for the accuracy or completeness of electronic copies of this plan sheet.

REGISTERED PROFESSIONAL ENGINEER FOUED ZAYATI No. C57046 Exp. 06-30-11 CIVIL STATE OF CALIFORNIA

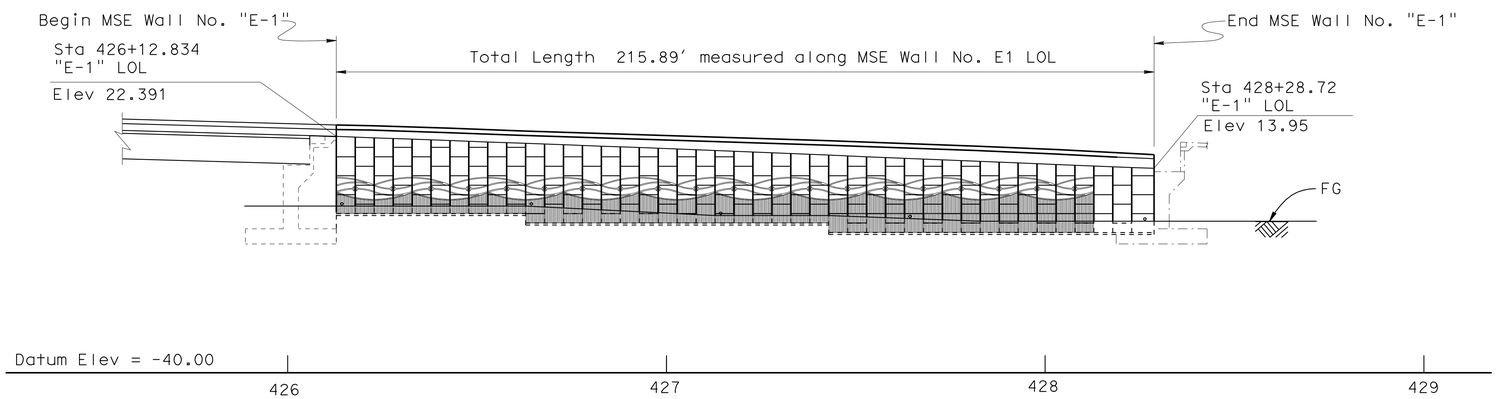

MIRRORED DEVELOPED ELEVATION

1" = 20'

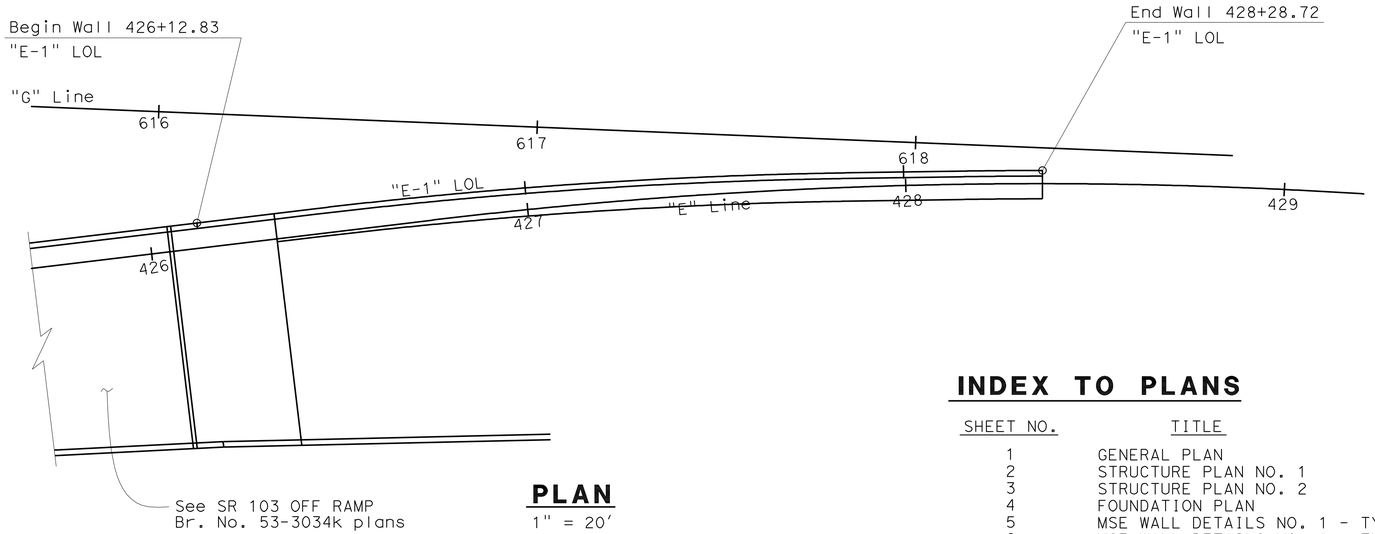

PLAN

1" = 20'

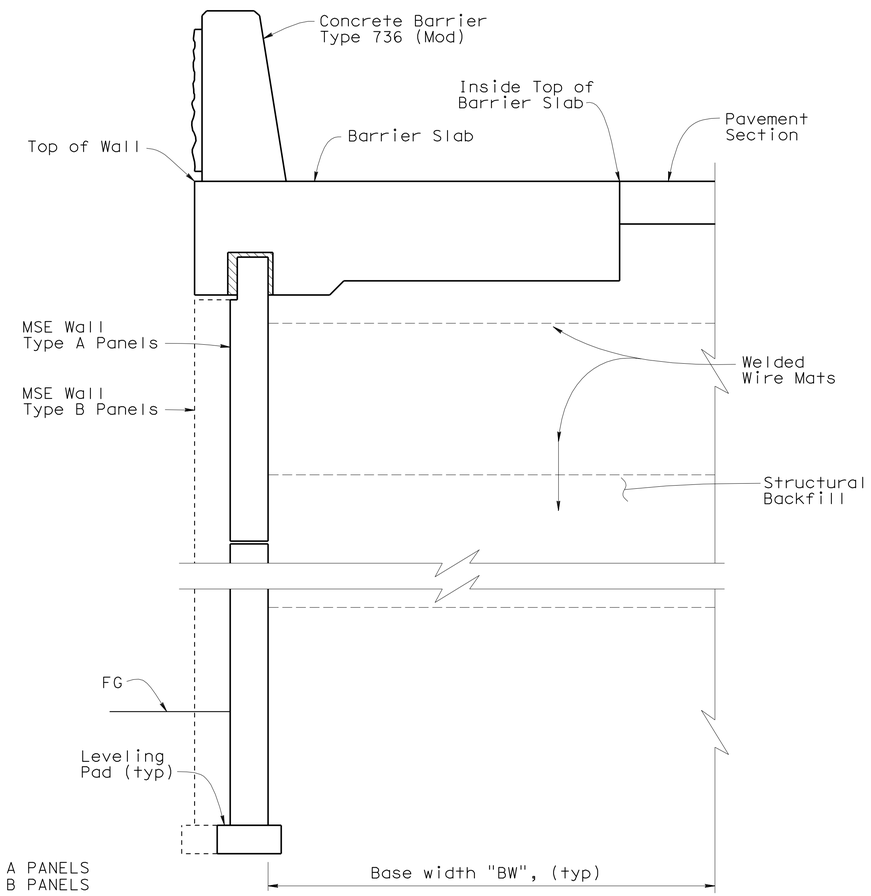

TYPICAL SECTION

3/4" = 1'

INDEX TO PLANS

SHEET NO.	TITLE
1	GENERAL PLAN
2	STRUCTURE PLAN NO. 1
3	STRUCTURE PLAN NO. 2
4	FOUNDATION PLAN
5	MSE WALL DETAILS NO. 1 - TYPE A PANELS
6	MSE WALL DETAILS NO. 2 - TYPE B PANELS
7	MSE WALL DETAILS NO. 3
8	MSE WALL DETAILS NO. 4
9	MSE WALL DETAILS NO. 5
10	MSE WALL DETAILS NO. 6
11	MSE WALL DETAILS NO. 7
12	CONCRETE BARRIER DETAILS NO. 1
13	CONCRETE BARRIER DETAILS NO. 2
14	LOG OF TEST BORINGS NO. 1 OF 4
15	LOG OF TEST BORINGS NO. 2 OF 4
16	LOG OF TEST BORINGS NO. 3 OF 4
17	LOG OF TEST BORINGS NO. 4 OF 4

QUANTITIES

EARTH RETAINING STRUCTURE, LOCATION C	4,150	SQFT
STRUCTURAL CONCRETE, BARRIER SLAB	92	CY
CONCRETE BARRIER (TYPE 736 MODIFIED)	215	LF

DESIGN ENGINEER

	BY	CHECKED
DESIGN	S. Galgiani	F. Zayati
DETAILS	L. Xiong	S. Galgiani
QUANTITIES	S. Galgiani	F. Zayati

LOAD & RESISTANCE FACTOR DESIGN — LIVE LOADING: HL93 W/"LOW-BOY"; PERMIT DESIGN VEHICLE

	BY	CHECKED
LAYOUT	S. galgiani	F. Zayati
SPECIFICATIONS	J. Strootman	PLANS AND SPECS COMPARED J. Strootman

STATE OF CALIFORNIA DEPARTMENT OF TRANSPORTATION

DIVISION OF ENGINEERING SERVICES STRUCTURE DESIGN DESIGN BRANCH 14

BRIDGE NO. 53E0149
POST MILE 0.10

MSE WALL NO. E1
GENERAL PLAN

STRUCTURES DESIGN GENERAL PLAN SHEET (ENGLISH) (REV. 10/25/05)

ORIGINAL SCALE IN INCHES FOR REDUCED PLANS 0 1 2 3

CU 07-271
EA 138201

DISREGARD PRINTS BEARING EARLIER REVISION DATES

REVISION DATES: 9-14-07 05-18-10 05-24-10 07-12-10 03-18-10 04-07-10 04-14-10

SHEET 1 OF 17

FILE => 53-rwe1_mse_agp.dgn

STRUCTURES DESIGN GENERAL PLAN SHEET (ENGLISH) (REV.07-24-06)

USERNAME => trlenard DATE PLOTTED => 14-OCT-2010 TIME PLOTTED => 10:15

DIST	COUNTY	ROUTE	POST MILES TOTAL PROJECT	SHEET No	TOTAL SHEETS
07	LA	47,103	3.5/4.6, 0.0/1.1	925	1003

REGISTERED CIVIL ENGINEER — DATE 05-24-10

10-11-10
PLANS APPROVAL DATE

REGISTERED PROFESSIONAL ENGINEER — FOUED ZAYATI — No. C57046 — Exp. 06-30-11 — CIVIL — STATE OF CALIFORNIA

The State of California or its officers or agents shall not be responsible for the accuracy or completeness of electronic copies of this plan sheet.

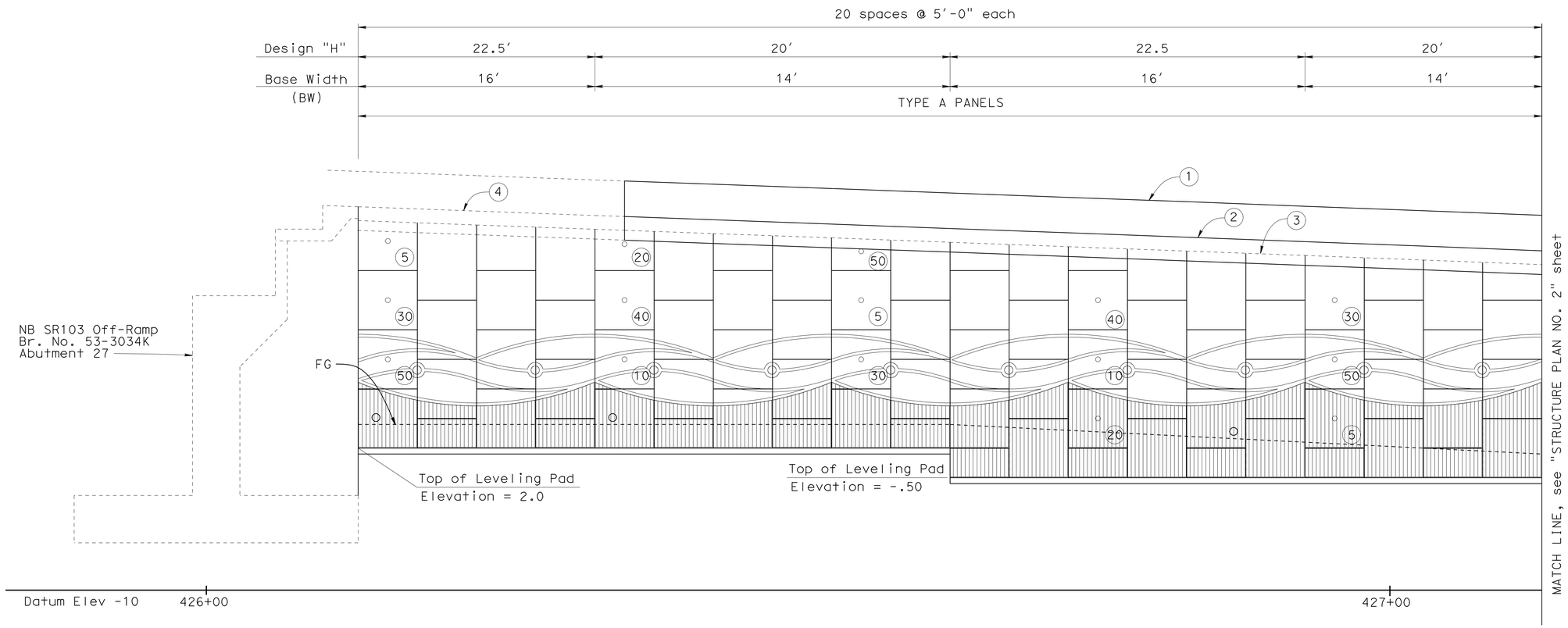

MIRRORED DEVELOPED ELEVATION

1" = 5'

1. Top of Concrete Barrier Type 736 Mod
2. Top of Wall
3. Top of Precast Concrete Panel
4. Top of Structure Approach Slab

○ Indicates location of Inspection Wire

O Indicates Underdrain Outlet Pipe, see "MSE WALL DETAILS No. 4" sheet.

◯ Interval in years from Construction to removal of Inspection Wire

NOTES:

1. Top two layers of wire mesh have a base width of 16'-0".
2. All panel spacing is 5'-0" along LOL.

	BY	CHECKED
DESIGN	S. Galgiani	F. Zayati
DETAILS	K. Kubo	S. Galgiani
QUANTITIES	S. Galgiani	F. Zayati

STATE OF CALIFORNIA
DEPARTMENT OF TRANSPORTATION

DIVISION OF ENGINEERING SERVICES
STRUCTURE DESIGN
DESIGN BRANCH 14

BRIDGE NO. 53E0149
POST MILE 0.10

MSE WALL NO. E1
STRUCTURE PLAN NO. 1

STRUCTURES DESIGN DETAIL SHEET (ENGLISH) (REV. 10/25/05)

ORIGINAL SCALE IN INCHES FOR REDUCED PLANS 0 1 2 3

CU 07-271
EA 138201

DISREGARD PRINTS BEARING EARLIER REVISION DATES → 01-26-10 03-16-10 04-07-10 04-19-10

REVISION DATES

SHEET 2 OF 17

FILE => 53-rwe1_mse_bsp01.dgn

USERNAME => trlenard DATE PLOTTED => 14-OCT-2010 TIME PLOTTED => 10:16

DIST	COUNTY	ROUTE	POST MILES TOTAL PROJECT	SHEET No	TOTAL SHEETS
07	LA	47,103	3.5/4.6, 0.0/1.1	926	1003

REGISTERED CIVIL ENGINEER — DATE 05-24-10

10-11-10
PLANS APPROVAL DATE

REGISTERED PROFESSIONAL ENGINEER — FOUED ZAYATI — No. C57046 — Exp. 06-30-11 — CIVIL — STATE OF CALIFORNIA

The State of California or its officers or agents shall not be responsible for the accuracy or completeness of electronic copies of this plan sheet.

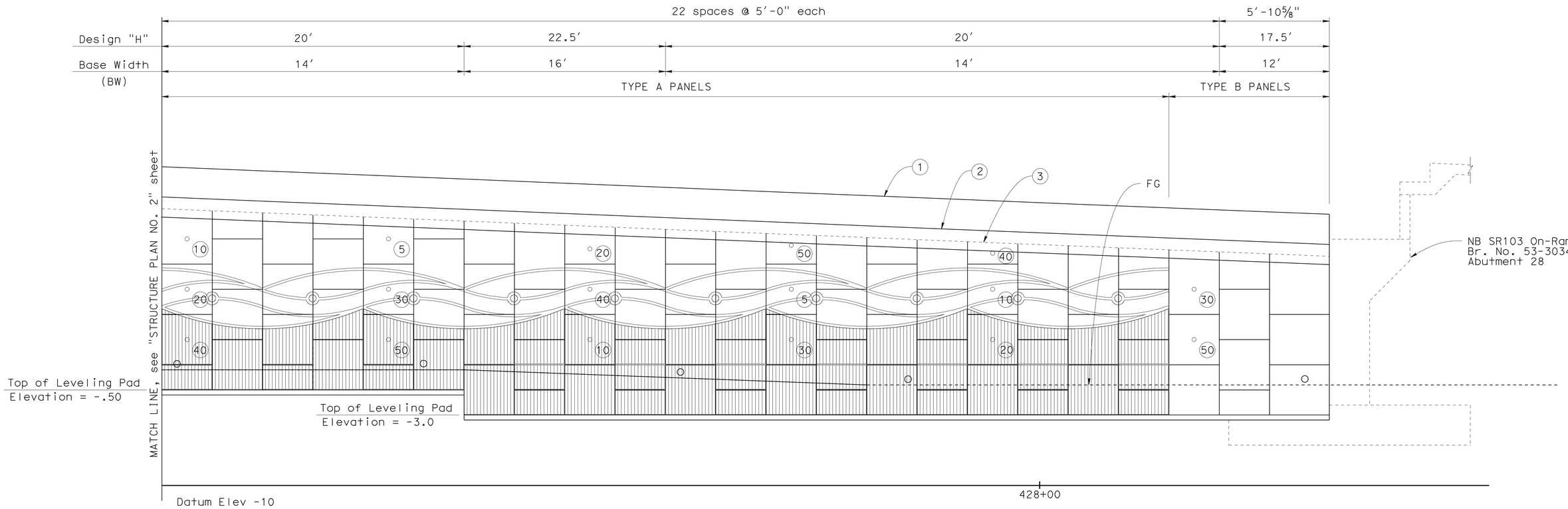

MIRRORED DEVELOPED ELEVATION

1" = 5'

(1) Top of Concrete Barrier Type 736 Mod

(2) Top of Wall

(3) Top of Precast Concrete Panel

○ Indicates location of Inspection Wire

O Indicates Underdrain Outlet Pipe, see "MSE WALL DETAILS No. 4" sheet.

◯ Interval in years from Construction to removal of Inspection Wire

NOTES:

1. Top two layers of wire mesh have a base width of 16'-0".
2. All panel spacing is 5'-0" along LOL.

	BY	CHECKED
DESIGN	S. Galgiani	F. zayati
DETAILS	K. Kubo	S. Galgiani
QUANTITIES	S. Galgiani	F. Zayati

STATE OF CALIFORNIA
DEPARTMENT OF TRANSPORTATION

DIVISION OF ENGINEERING SERVICES
STRUCTURE DESIGN
DESIGN BRANCH 14

BRIDGE NO. 53E0149
POST MILE 0.10

MSE WALL NO. E1
STRUCTURE PLAN NO. 2

STRUCTURES DESIGN DETAIL SHEET (ENGLISH) (REV. 10/25/05)

ORIGINAL SCALE IN INCHES FOR REDUCED PLANS 0 1 2 3

CU 07-271
EA 138201

DISREGARD PRINTS BEARING EARLIER REVISION DATES → 01-26-10 03-16-10 04-07-10 04-19-10

REVISION DATES

SHEET 3 OF 17

FILE => 53-rwe1_mse_bsp02.dgn

USERNAME => trlenard DATE PLOTTED => 14-OCT-2010 TIME PLOTTED => 10:16

DIST	COUNTY	ROUTE	POST MILES TOTAL PROJECT	SHEET No.	TOTAL SHEETS
07	LA	47,103	3.5/4.6, 0.0/1.1	927	1003

REGISTERED CIVIL ENGINEER 05-24-10

10-11-10
PLANS APPROVAL DATE

REGISTERED PROFESSIONAL ENGINEER FOUED ZAYATI No. C57046 Exp. 06-30-11 CIVIL STATE OF CALIFORNIA

The State of California or its officers or agents shall not be responsible for the accuracy or completeness of electronic copies of this plan sheet.

CURVE DATA				
No.	R	Δ	T	L
1	1350.48′	5°59′10.19"	70.612	141.0958′
2	1350.48′	0°33′32.20"	6.587	13.1745′

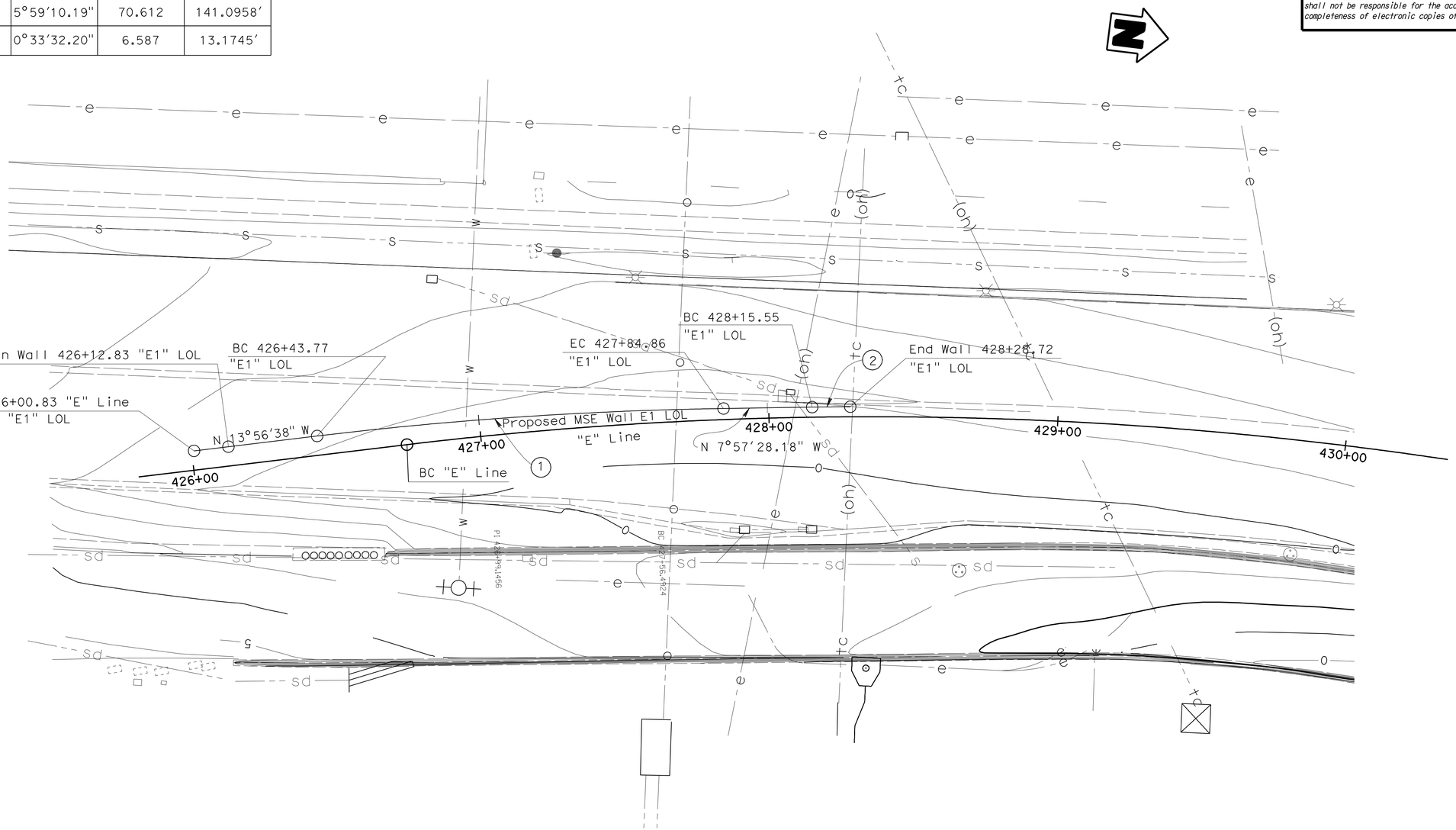

SURVEY CONTROL

PT-PMHV508 (NOT SHOWN)

SET MAG NAIL
59.862′ Rt ℄ "G" Line
Sta 611+10.34
N 1739008.13
E 6488683.32
Elev. = 12.18

PT-PMHV513 (NOT SHOWN)

SET PUN SPK
5.264′ Rt. ℄ "G" Line
Sta 609+51.88
N 1738843.39
E 6488642.44
Elev. = -3.62

HNTB *Corporation*
200 E. SANDPOINTE AVENUE, SUITE 200
SANTA ANA, CALIFORNIA 92707

SCALE: 1:20	VERT.DATUM NAVD 88	HORZ.DATUM NAD 83	
PHOTOGRAMMETRY AS OF:		ALIGNMENT TIES Dist. Trav. Sheet	
SURVEYED	BY COAST SURVEY 1207	DRAFTED	BY L. Zhang
FIELD CHECKED	BY D. Chang	CHECKED	BY D. Chang

DESIGN	BY S. Galgiani	CHECKED F. Zayati
DETAILS	BY J. D. Thorne	CHECKED S. Galgiani
QUANTITIES	BY S. Galgiani	CHECKED F. Zayati

PREPARED FOR THE
STATE OF CALIFORNIA
DEPARTMENT OF TRANSPORTATION

PROJECT ENGINEER

BRIDGE NO. 53E0150
POST MILE 0.10

MSE WALL NO. E1
FOUNDATION PLAN

FOUNDATION PLAN SHEET (ENGLISH) (REV. 5/9/00)

ORIGINAL SCALE IN INCHES FOR REDUCED PLANS 0 1 2 3

CU 07-271
EA 138201

DISREGARD PRINTS BEARING EARLIER REVISION DATES

REVISION DATES (PRELIMINARY STAGE ONLY): 08-13-08, 12-12-08, 3-4-09, 3-26-10, 04-12-10, 04-27-10, 5-20-10, 05-28-10

SHEET 4 OF 17

FILE => 53-rwe1_mse_cfp.dgn

USERNAME => trlenard DATE PLOTTED => 14-OCT-2010 TIME PLOTTED => 10:16

DIST	COUNTY	ROUTE	POST MILES TOTAL PROJECT	SHEET No	TOTAL SHEETS
07	LA	47,103	3.5/4.6, 0.0/1.1	928	1003

REGISTERED CIVIL ENGINEER — DATE 05-24-10

10-11-10
PLANS APPROVAL DATE

REGISTERED PROFESSIONAL ENGINEER — FOUED ZAYATI — No. C57046 — Exp. 06-30-11 — CIVIL — STATE OF CALIFORNIA

The State of California or its officers or agents shall not be responsible for the accuracy or completeness of electronic copies of this plan sheet.

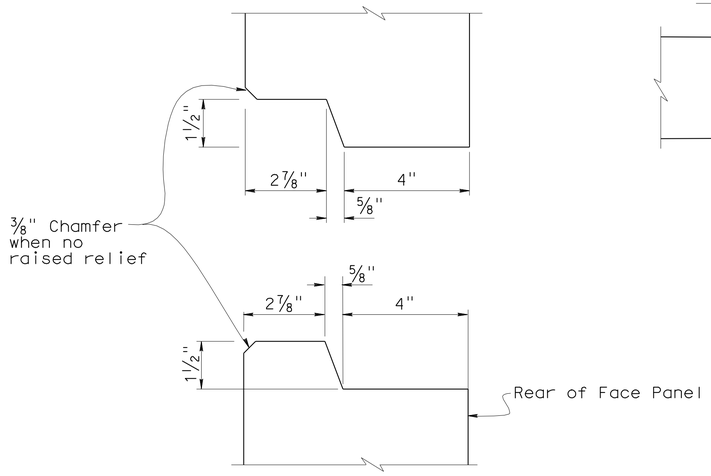

HORIZONTAL JOINT DETAIL

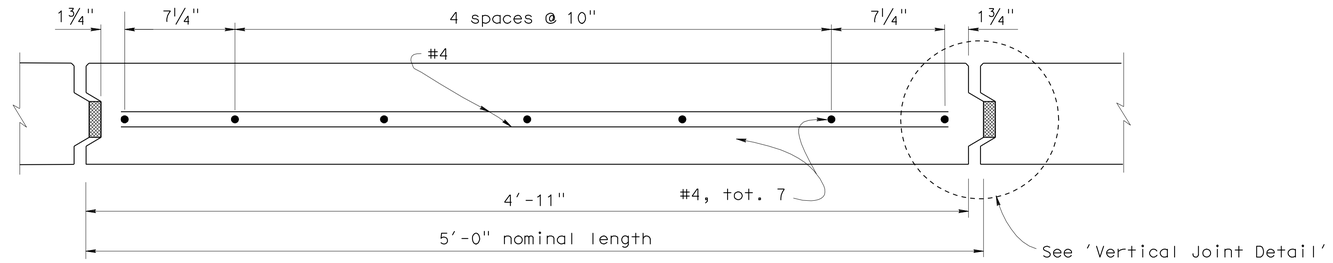

PLAN - FACE PANEL

NOTES:

1. Architectural treatment not shown.
2. Place reinforced Elastomeric Bearing Pads in all of the panel joints between the panels. Place one in each vertical joint where the horizontal joint intersects it. Place two per panel in each horizontal joint.
   ¾" x 2⅜" x 6" for vertical joints
   ¾" x 4" x 6" for horizontal joints.
3. Bond a strip of filter fabric, 1' - 0" wide, over the full length of all panel joints.

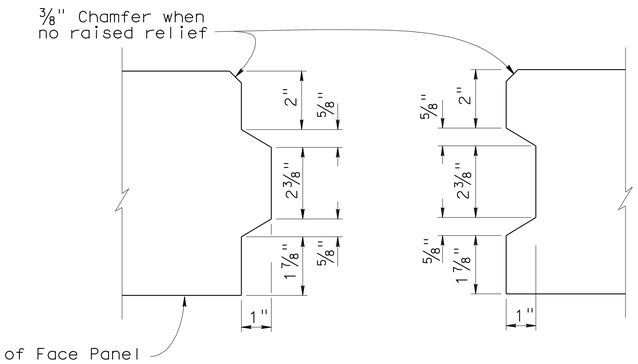

VERTICAL JOINT DETAIL

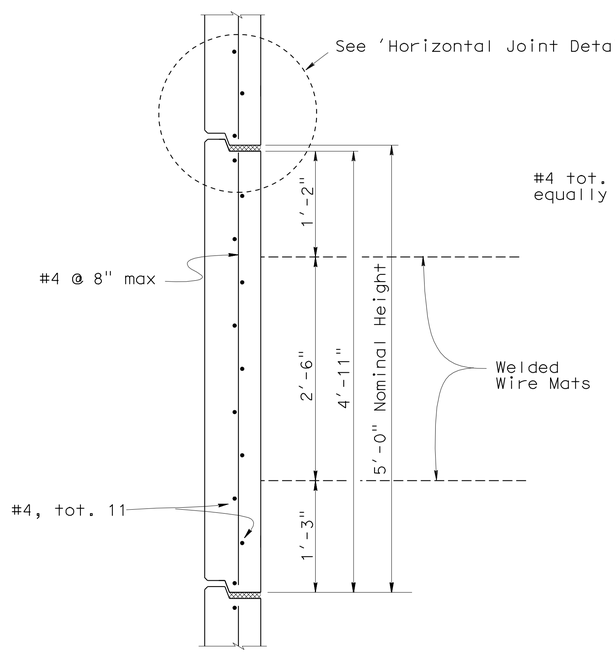

INTERMEDIATE PANEL

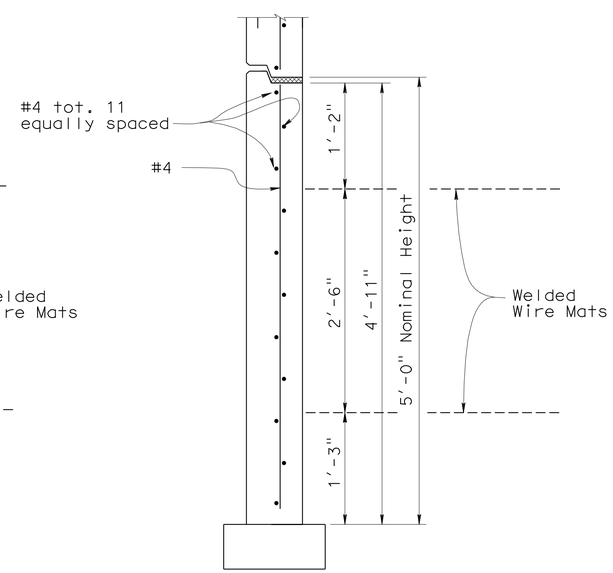

BOTTOM PANEL

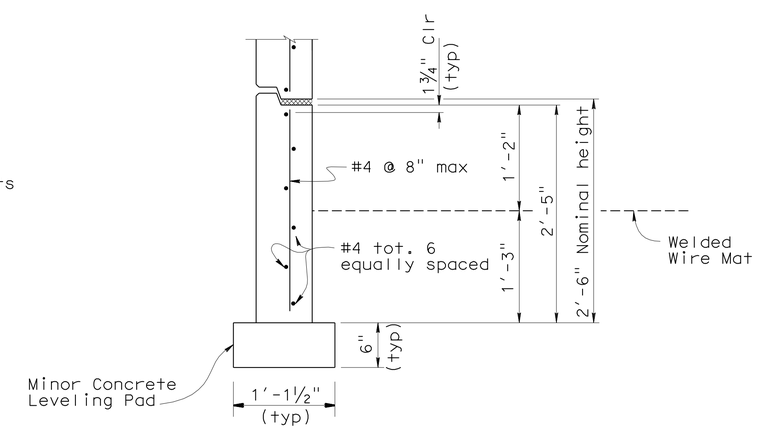

BOTTOM HALF PANEL

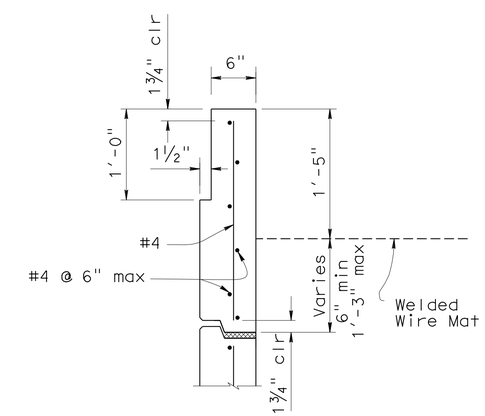

TOP PANEL

No Scale

	BY	CHECKED
DESIGN	S. Galgiani	F. Zayati
DETAILS	K. Kubo	S. Galgiani
QUANTITIES	S. Galgiani	F. Zayati

STATE OF CALIFORNIA
DEPARTMENT OF TRANSPORTATION

DIVISION OF ENGINEERING SERVICES
STRUCTURE DESIGN
DESIGN BRANCH 14

BRIDGE NO. 53E0149
POST MILE 0.10

MSE WALL NO. E1

MSE WALL DETAILS NO. 1 - TYPE A PANELS

STRUCTURES DESIGN DETAIL SHEET (ENGLISH) (REV. 10/25/05)

ORIGINAL SCALE IN INCHES FOR REDUCED PLANS 0 1 2 3

CU 07-271
EA 138201

DISREGARD PRINTS BEARING EARLIER REVISION DATES

REVISION DATES: 2-22-10 5-21-10 06-03-10

SHEET 5 OF 17

FILE => 53-rwe1_mse_edet01.dgn

USERNAME => trlenard DATE PLOTTED => 14-OCT-2010 TIME PLOTTED => 10:16

DIST	COUNTY	ROUTE	POST MILES TOTAL PROJECT	SHEET No	TOTAL SHEETS
07	LA	47,103	3.5/4.6, 0.0/1.1	929	1003

REGISTERED CIVIL ENGINEER — DATE 05-24-10

10-11-10
PLANS APPROVAL DATE

REGISTERED PROFESSIONAL ENGINEER — FOUED ZAYATI — No. C57046 — Exp. 06-30-11 — CIVIL — STATE OF CALIFORNIA

The State of California or its officers or agents shall not be responsible for the accuracy or completeness of electronic copies of this plan sheet.

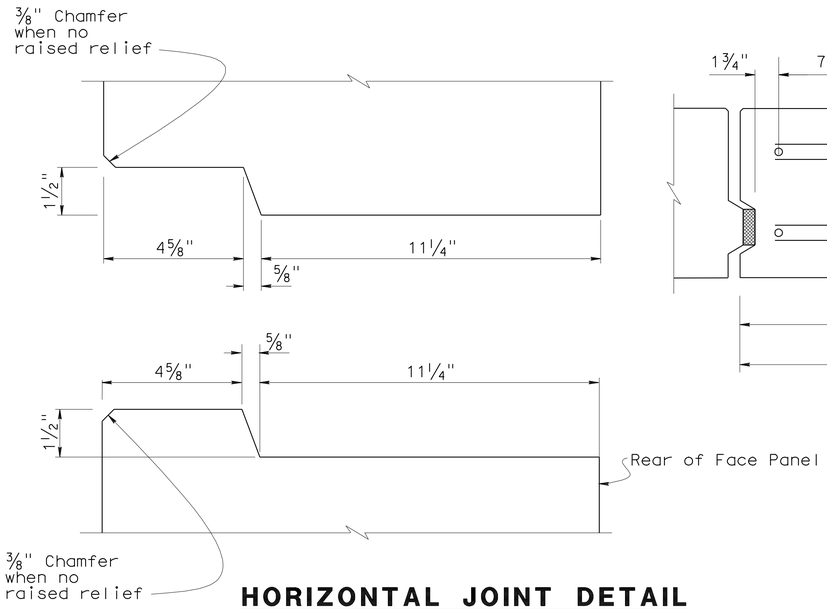

HORIZONTAL JOINT DETAIL

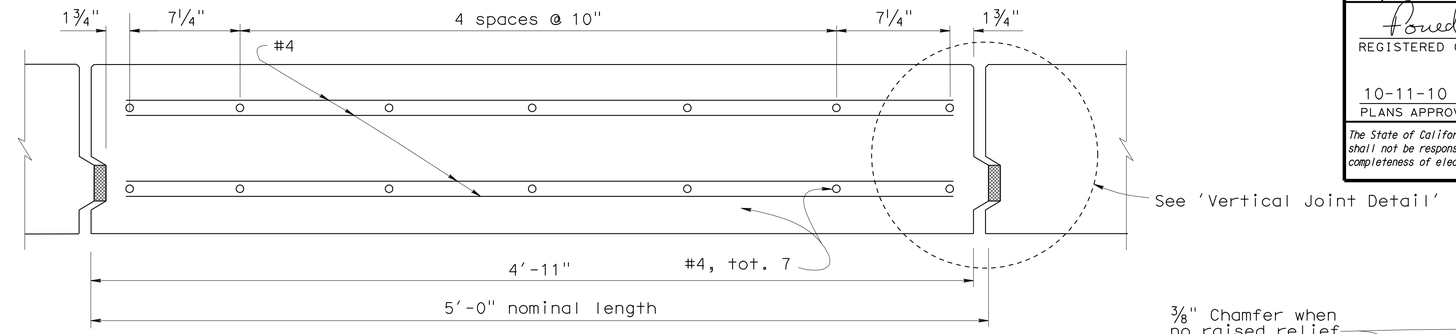

PLAN - FACE PANEL

NOTES:

1. Architectural treatment not shown.
2. Place reinforced Elastomeric Bearing Pads in all of the panel joints between the panels. Place one in each vertical joint where the horizontal joint intersects it. Place two per panel in each horizontal joint.
   3/4" x 2 3/8" x 6" for vertical joints
   3/4" x 6" x 6" for horizontal joints.
3. Bond a strip of filter fabric, 1' - 0" wide, over the full length of all panel joints.

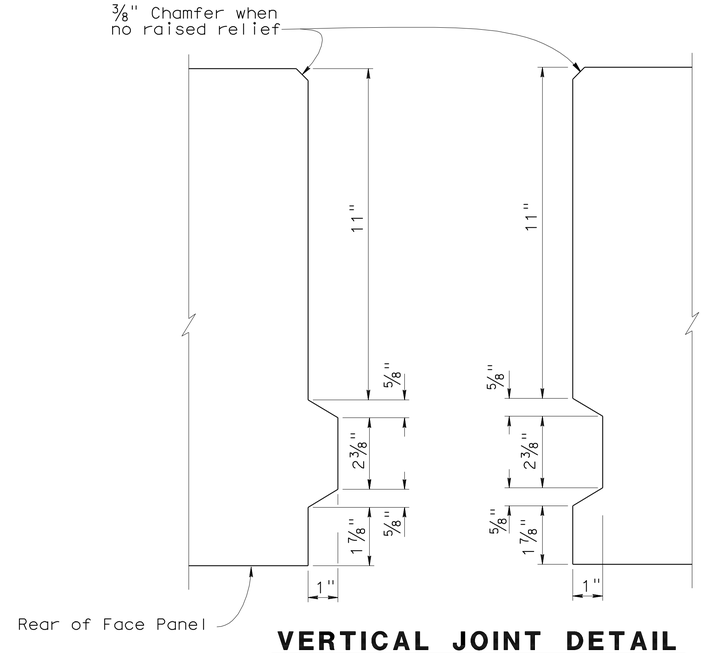

VERTICAL JOINT DETAIL

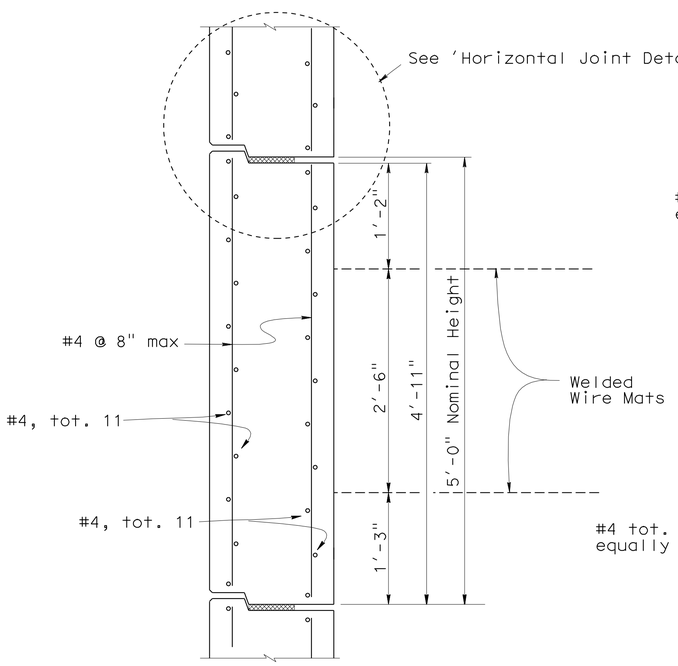

INTERMEDIATE PANEL

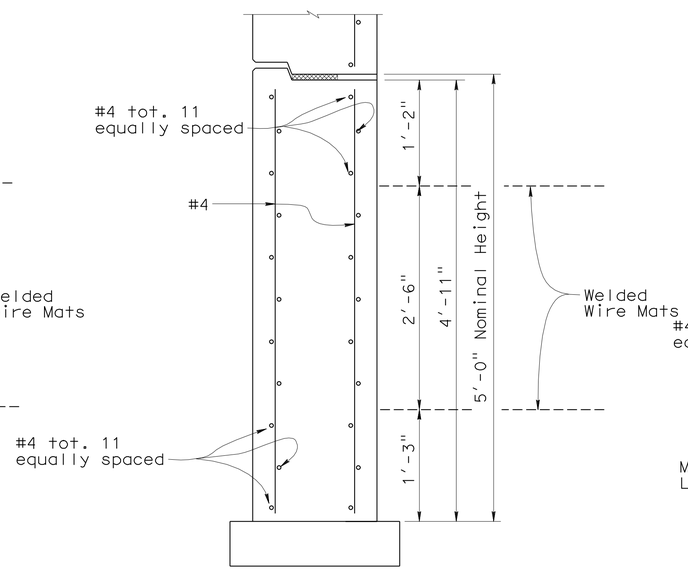

BOTTOM PANEL

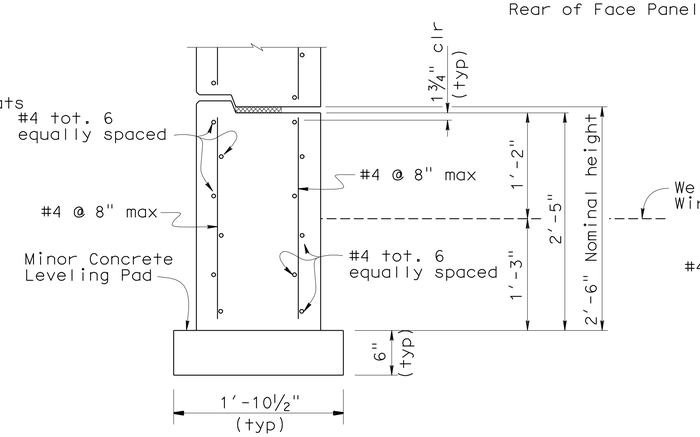

BOTTOM HALF PANEL

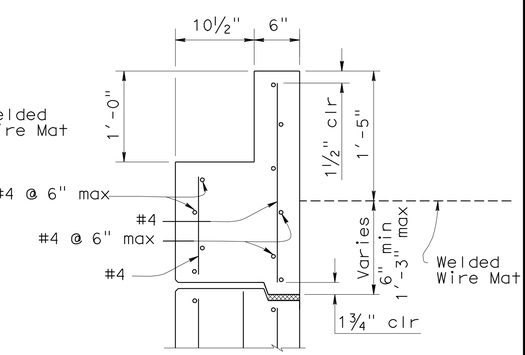

TOP PANEL

No Scale

DESIGN	BY S. Galgiani	CHECKED F. Zayati	
DETAILS	BY K. Kubo	CHECKED S. Galgiani	
QUANTITIES	BY S. Galgiani	CHECKED F. Zayati	

STATE OF CALIFORNIA
DEPARTMENT OF TRANSPORTATION

DIVISION OF ENGINEERING SERVICES
STRUCTURE DESIGN
DESIGN BRANCH 14

BRIDGE NO. 53E0149
POST MILE 0.10

MSE WALL NO. E1
MSE WALL DETAILS NO. 2 - TYPE B PANELS

STRUCTURES DESIGN DETAIL SHEET (ENGLISH) (REV. 10/25/05)

ORIGINAL SCALE IN INCHES FOR REDUCED PLANS 0 1 2 3

CU 07-271
EA 138201

DISREGARD PRINTS BEARING EARLIER REVISION DATES

REVISION DATES: 2-03-10, 5-21-10, 6-03-10

SHEET 6 OF 17

FILE => 53-rwe1_mse_edet02.dgn

USERNAME => trlenard DATE PLOTTED => 14-OCT-2010 TIME PLOTTED => 10:16

DIST.	COUNTY	ROUTE	POST MILES TOTAL PROJECT	SHEET NO.	TOTAL SHEETS
07	LA	47,103	3.5/4.6, 0.0/1.1	930	1003

Foued Zayati 05-24-10
REGISTERED ENGINEER - CIVIL

10-11-10
PLANS APPROVAL DATE

REGISTERED PROFESSIONAL ENGINEER FOUED ZAYATI No. C57046 Exp. 06-30-11 CIVIL STATE OF CALIFORNIA

The State of California or its officers or agents shall not be responsible for the accuracy or completeness of electronic copies of this plan sheet.

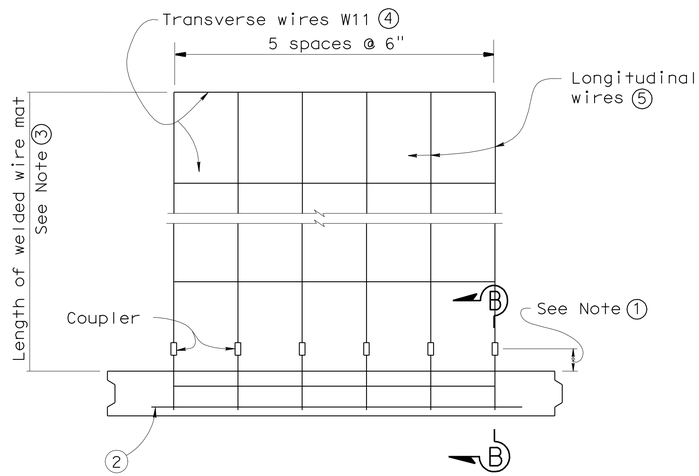

PLAN OF PANEL WITH WELDED WIRE MAT
No scale

GENERAL NOTES (MSE WALLS)

Live loading: Surcharge = 240 lb/ft^2

Soil parameters:

Internal design ϕ = 34°, γ = 120 lb/ft^3
External design ϕ(Backfill) = 34°, γ = 120 lb/ft^3
ϕ(Foundation) = 30°

Precast concrete panels:

f′c = 4,000 psi (Concrete compressive strength at 28 days)
fy = 60,000 psi (Yield strength of reinforcement)

Soil reinforcement:

Welded wire mats: fy = 65,000 psi (Yield strength)
Coupler: fy = 36,000 psi (Yield strength)
Corrosion rate = 1.1 mils/year

Reinforced concrete:

f′c = 3,600 psi, except as noted
(Concrete compressive strength at 28 days)

fy = 60,000 psi (Yield strength of reinforcement)

MSE = Mechanically stabilized embankment

Notes:

① Distance as required to permit coupler to be swaged.

② Place #4 bar, 3′ - 2" long, centered on connector mat, but not welded to it.

③ Length equals "Base width" of wall, except it shall not be less than 16′ for the top 2 levels of mats at the top of the wall.

④ All Transverse Wires size W11 at various spacings as shown elsewhere in plans.

⑤ All Longitudinal Wires at 6" spacing, of various sizes, as shown elsewhere in plans.

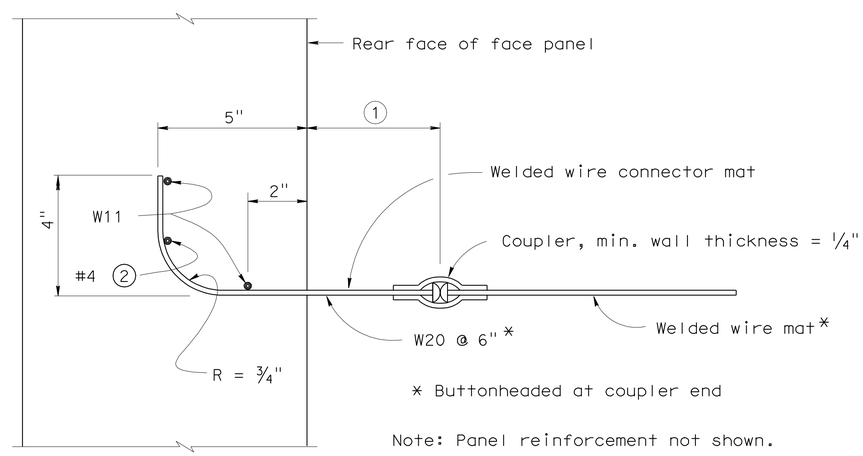

SECTION B-B
No scale

STANDARD DRAWING

FILE NO. xs13-020-3e

APPROVED BY K. GRISWELL
RESPONSIBLE TECHNICAL SPECIALIST
APPROVAL DATE 5-6-08

RELEASED BY ROBERTO LACALLE
RESPONSIBLE OFFICE CHIEF
RELEASE DATE 5-6-08

1 Modified Detail

STATE OF CALIFORNIA
DEPARTMENT OF TRANSPORTATION

DIVISION OF ENGINEERING SERVICES

BRIDGE NO. 53E0149
POST MILE 0.10

MSE WALL NO. E1
MSE WALL DETAILS NO. 3

DS OSD 2147A (ENGLISH STANDARD DRAWING "XS" BORDER REV. 01/11/08)

ORIGINAL SCALE IN INCHES FOR REDUCED PLANS 0 1 2 3

CU 07-271
EA 138201

DISREGARD PRINTS BEARING EARLIER REVISION DATES

REVISION DATES (PRELIMINARY STAGE ONLY) 2-03-10 3-22-10 05-19-10

SHEET 7 OF 17

USERNAME => trlenard

53-rwe1_mse_edet03.dgn

DATE PLOTTED => 14-OCT-2010 TIME PLOTTED => 10:16

DIST.	COUNTY	ROUTE	POST MILES TOTAL PROJECT	SHEET NO.	TOTAL SHEETS
07	LA	47,103	3.5/4.6, 0.0/1.1	931	1003

Foued Zayati 05-24-10
REGISTERED ENGINEER - CIVIL

10-11-10
PLANS APPROVAL DATE

REGISTERED PROFESSIONAL ENGINEER FOUED ZAYATI No. C57046 Exp. 06-30-11 CIVIL STATE OF CALIFORNIA

The State of California or its officers or agents shall not be responsible for the accuracy or completeness of electronic copies of this plan sheet.

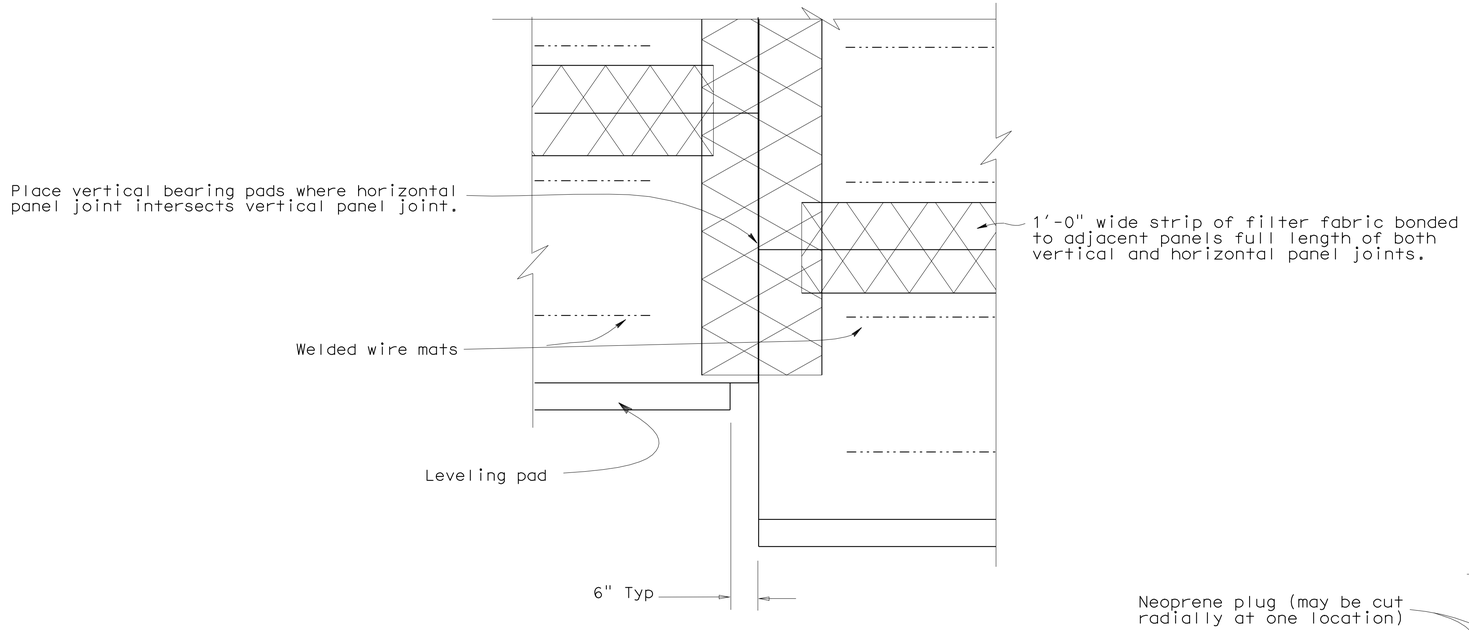

REAR ELEVATION

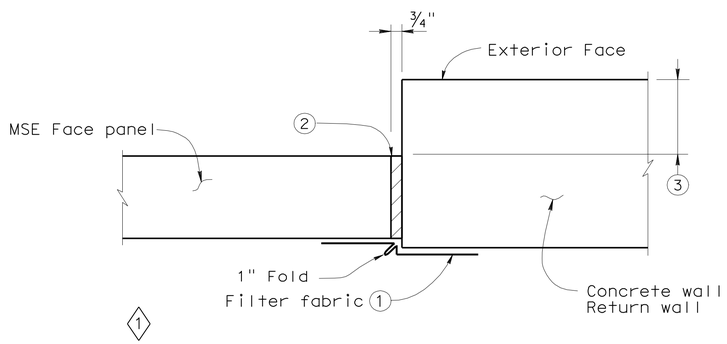

MSE FACE PANEL-TO-CONCRETE WALL JOINT DETAIL

LEGEND:

1. Bond a strip of filter fabric, 1'-6" wide, to back of MSE panels and the adjacent concrete wall for entire length of vertical joint.
2. Bond expansion joint material to the concrete wall.
3. Offset between face of MSE face panel and face of the concrete wall as dictated by location of layout lines shown elsewhere in Project Plans.

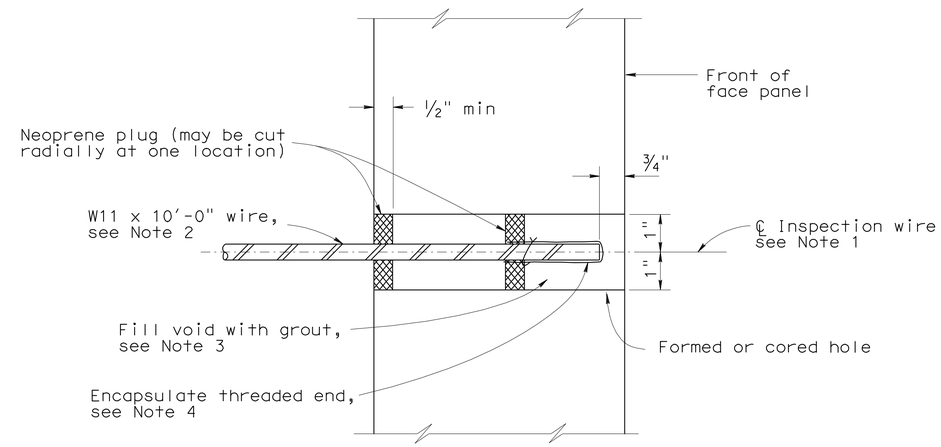

SECTION THRU INSPECTION WIRE

NOTES:

1. Center inspection wire in face panel.
2. Fabricate inspection wires from W11 wire representative of the welded wire mats, with ⅜" dia - 16 UNC threads for at least 1½" of one end.
3. Place inspection wire horizontal and perpendicular to the wall panel prior to backfilling. After backfill placement to a level at least 2'-0" above the inspection wire, dry pack opening with 1000 to 1500 psi mortar. Trowel mortar smooth and flush with face of panel.
4. Encapsulate threaded end with corrosion inhibiting mastic, and secure round vinyl cover with nylon tie.

   UNC = Unified coarse threads

STANDARD DRAWING

FILE NO. xs13-020-3e

APPROVED BY K. GRISWELL
RESPONSIBLE TECHNICAL SPECIALIST
APPROVAL DATE 5-6-08

RELEASED BY ROBERTO LACALLE
RESPONSIBLE OFFICE CHIEF
RELEASE DATE 5-6-08

1 Modified Detail

STATE OF CALIFORNIA
DEPARTMENT OF TRANSPORTATION

DIVISION OF ENGINEERING SERVICES

BRIDGE NO. 53E0149
POST MILE 0.10

MSE WALL NO. E1
MSE WALL DETAILS NO. 4

DS OSD 2147A (ENGLISH STANDARD DRAWING "XS" BORDER REV. 01/11/08)

ORIGINAL SCALE IN INCHES FOR REDUCED PLANS 0 1 2 3

CU 07-271
EA 138201

DISREGARD PRINTS BEARING EARLIER REVISION DATES 2-03-10 5-19-10

REVISION DATES (PRELIMINARY STAGE ONLY)

SHEET 8 OF 17

USERNAME => trlenard

53-rwe1_mse_edet04.dgn

DATE PLOTTED => 14-OCT-2010 TIME PLOTTED => 10:16

DIST	COUNTY	ROUTE	POST MILES TOTAL PROJECT	SHEET No	TOTAL SHEETS
07	LA	47,103	3.5/4.6, 0.0/1.1	932	1003

REGISTERED CIVIL ENGINEER 05-24-10 DATE

10-11-10
PLANS APPROVAL DATE

REGISTERED PROFESSIONAL ENGINEER FOUED ZAYATI No. C57046 Exp. 06-30-11 CIVIL STATE OF CALIFORNIA

The State of California or its officers or agents shall not be responsible for the accuracy or completeness of electronic copies of this plan sheet.

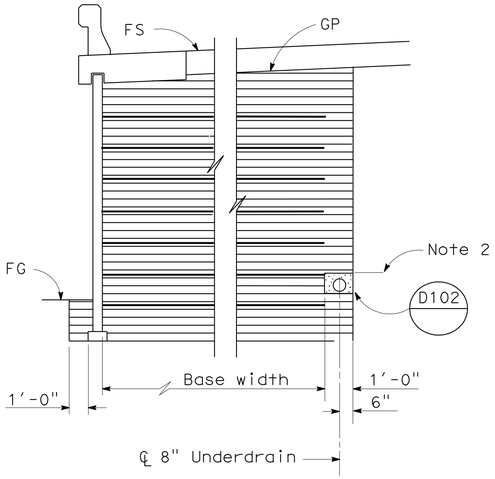

ROADWAY SECTION WITH BASE WIDTH 16' OR GREATER

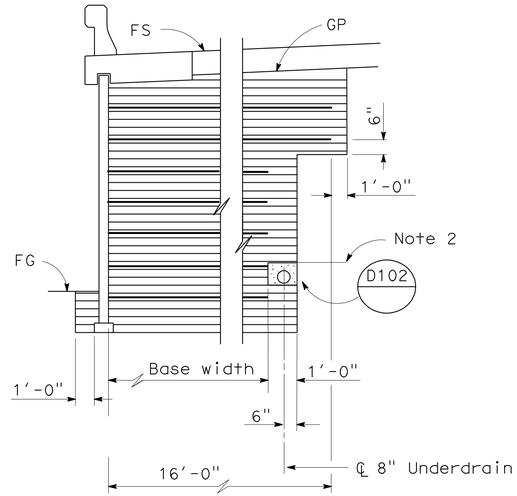

ROADWAY SECTION WITH BASE WIDTH LESS THAN 16'

No Scale

LIMITS OF BACKFILL

No Scale

MSE WALL DRAINAGE NOTES:

1. Locate 8" perforated underdrain 1.0' above FG adjacent to Face of Wall.
2. Maximum spacing of outlet pipes is 50 ft.
3. At sags in profile of underdrain, install outlet pipe for each direction of flow.

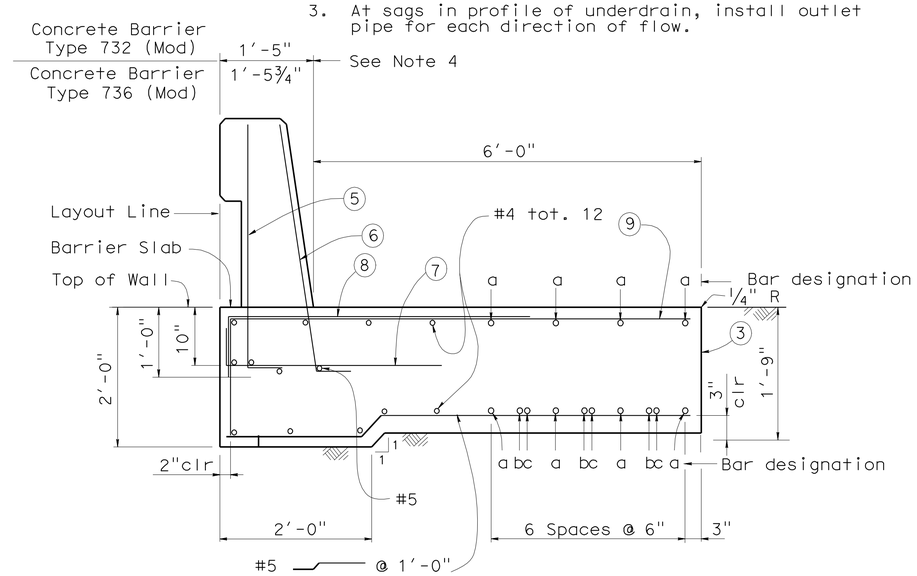

SECTION AT PAST MSE PANELS BARRIER SLAB AND CONCRETE BARRIER

No Scale

BARRIER SLAB NOTES:

1. Clearance to reinforcing steel in concrete barrier to be 1".
2. Not all barrier reinforcement shown.
3. No expansion joints in concrete barrier or barrier slab within MSE wall limits.
4. Specific concrete barrier to be utilized as shown on typical section elsewhere in Project Plans.
5. Install cable railing or chain link fence when indicated in Project Plans.

"a" bar = #6 cont
"b" bar = #6 x 59'-0"
"c" bar = #6 49'-2"
Place "b" and "c" bars at beginning and ending ends of Barrier Slab.

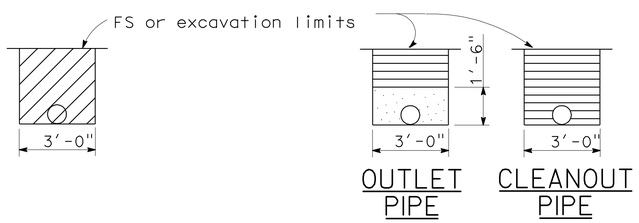

EXCAVATION BACKFILL

OUTLET OR CLEANOUT PIPE FOR UNDERDRAIN

No Scale

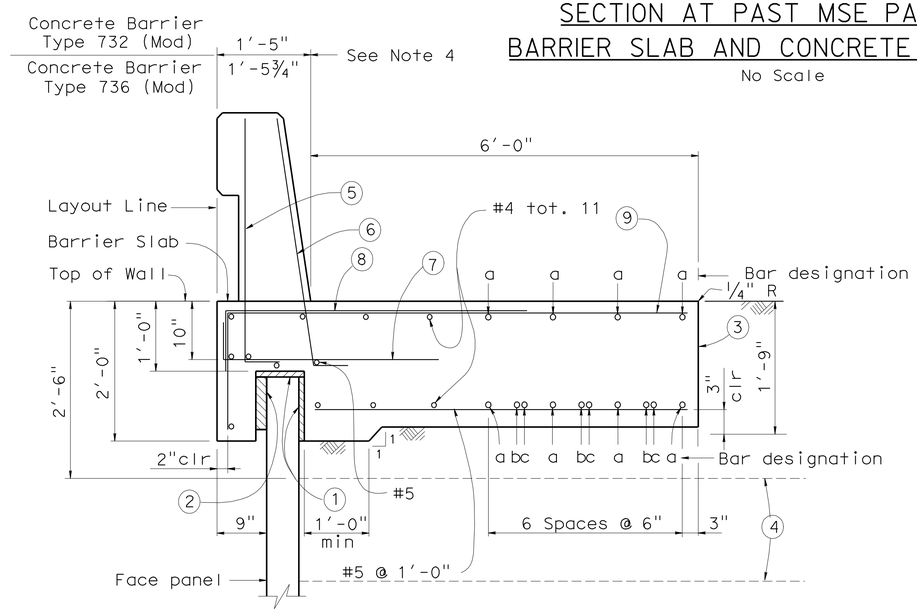

SECTION AT TOP OF WALL WITH BARRIER SLAB AND CONCRETE BARRIER

No Scale

ABBREVIATIONS

OG	Original ground
FS	Planned finished surface
GP	Planned grading plane
FG	Finished grade

LEGEND

- Limits of structure excavation
- Limits of structure backfill
- Limits of permeable material

LEGEND:

1. 1" Expanded polystyrene.
2. 2" Expanded polystyrene. Recess expanded polystyrene 2" into barrier slab.
3. Contact joint.
4. Welded Wire Mat Soil reinforcement.
5. #5 6¼" @ 1'-4" (To be in place prior to barrier slab concrete).
6. #5 6¼" @ 8" (To be in place prior to barrier slab concrete).
7. #5 6¼" 3'-4" @ 1'-0"
8. #5 4'-7" @ 1'-0" bundled with (9) bars.
9. #5 1'-9" 5'-9" @ 1'-0"

	BY	CHECKED
DESIGN	S. Galgiani	F. Zayati
DETAILS	K. Kubo	S. Galgiani
QUANTITIES	S. Galgiani	F. Zayati

STATE OF CALIFORNIA DEPARTMENT OF TRANSPORTATION

DIVISION OF ENGINEERING SERVICES STRUCTURE DESIGN DESIGN BRANCH 14

BRIDGE NO. 53E0149
POST MILE 0.10

MSE WALL NO. E1

MSE WALL DETAILS NO. 5

STRUCTURES DESIGN DETAIL SHEET (ENGLISH) (REV. 10/25/05)

ORIGINAL SCALE IN INCHES FOR REDUCED PLANS 0 1 2 3

CU 07-271
EA 138201

DISREGARD PRINTS BEARING EARLIER REVISION DATES

REVISION DATES 02-03-10 04-09-10 04-14-10 05-19-10

SHEET 9 OF 17

FILE => 53-rwe1_mse_edet05.dgn

USERNAME => friehard DATE PLOTTED => 14-OCT-2010 TIME PLOTTED => 10:16

DIST	COUNTY	ROUTE	POST MILES TOTAL PROJECT	SHEET No	TOTAL SHEETS
07	LA	47,103	3.5/4.6, 0.0/1.1	933	1003

REGISTERED CIVIL ENGINEER — DATE 05-24-10

10-11-10
PLANS APPROVAL DATE

REGISTERED PROFESSIONAL ENGINEER — FOUED ZAYATI — No. C57046 — Exp. 06-30-11 — CIVIL — STATE OF CALIFORNIA

The State of California or its officers or agents shall not be responsible for the accuracy or completeness of electronic copies of this plan sheet.

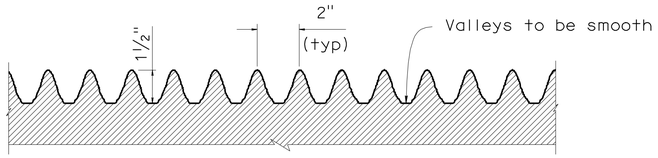

DETAIL A

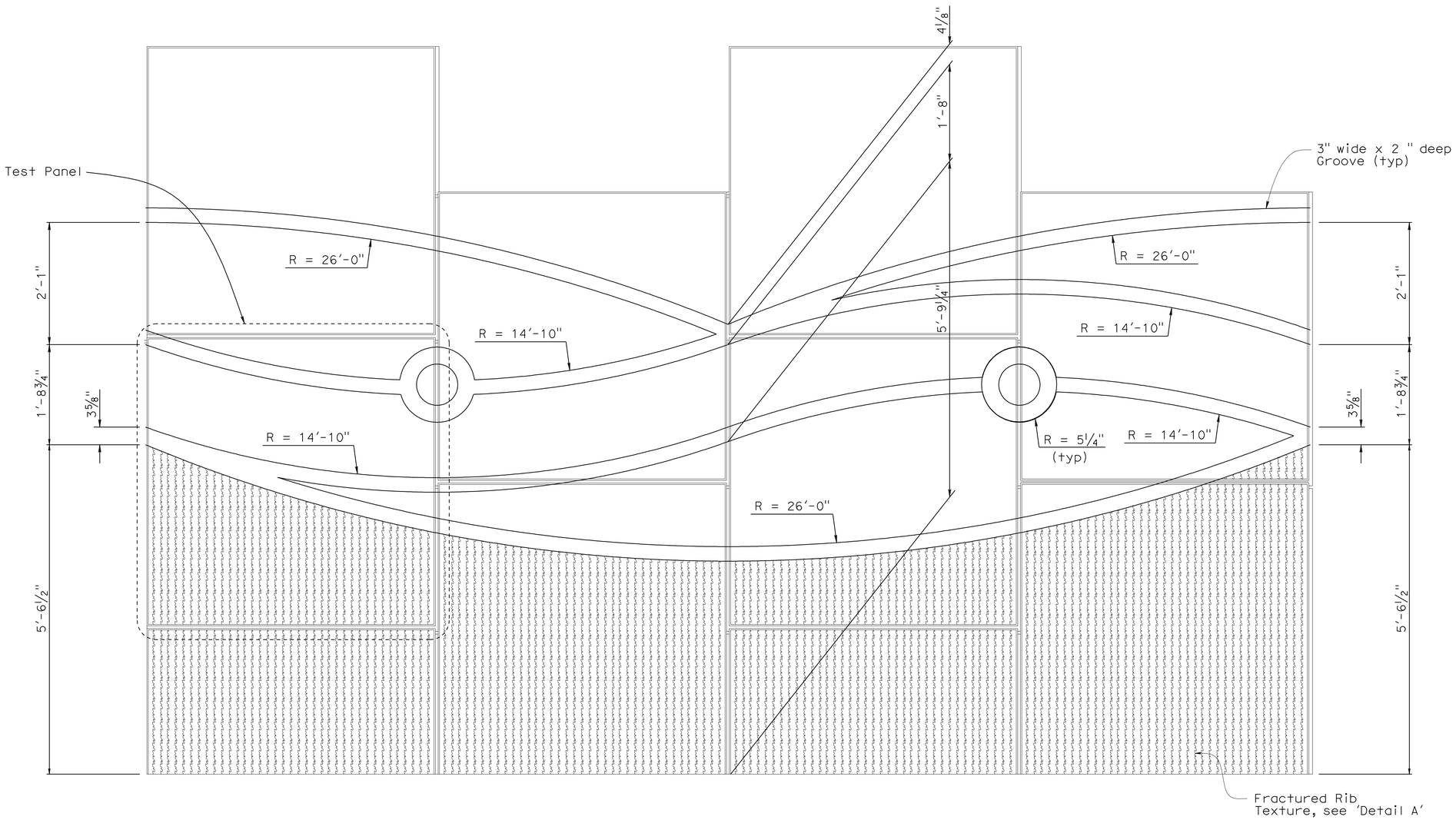

ARCHITECTURAL TREATMENT WAVE PATTERN

	BY	CHECKED
DESIGN	S. Galgiani	F. Zayati
DETAILS	K. Kubo	S. Galgiani
QUANTITIES	S. Galgiani	F. Zayati

STATE OF CALIFORNIA
DEPARTMENT OF TRANSPORTATION

DIVISION OF ENGINEERING SERVICES
STRUCTURE DESIGN
DESIGN BRANCH 14

BRIDGE NO. 53E0149
POST MILE 0.10

MSE WALL NO. E1
MSE WALL DETAILS NO. 6

STRUCTURES DESIGN DETAIL SHEET (ENGLISH) (REV. 10/25/05)

ORIGINAL SCALE IN INCHES FOR REDUCED PLANS 0 1 2 3

CU 07-271
EA 138201

DISREGARD PRINTS BEARING EARLIER REVISION DATES → 05-22-10 05-22-10

REVISION DATES

SHEET 10 OF 17

FILE => 53-rwe1_mse_edet06.dgn

USERNAME => trlenard DATE PLOTTED => 14-OCT-2010 TIME PLOTTED => 10:16

DIST	COUNTY	ROUTE	POST MILES TOTAL PROJECT	SHEET No	TOTAL SHEETS
07	LA	47,103	3.5/4.6, 0.0/1.1	934	1003

REGISTERED CIVIL ENGINEER — DATE 05-24-10

10-11-10
PLANS APPROVAL DATE

The State of California or its officers or agents shall not be responsible for the accuracy or completeness of electronic copies of this plan sheet.

REGISTERED PROFESSIONAL ENGINEER — FOUED ZAYATI — No. C57046 — Exp. 06-30-11 — CIVIL — STATE OF CALIFORNIA

WIRE MESH SCHEDULE

Max Ht., Ft	10	12.5	15
Top Levels of Mesh over	2 @ WII x WII + 6" x 9" 2 @ WII x WII + 6" x 12"	2 @ WII x WII + 6" x 9" 2 @ WII x WII + 6" x 12" 1 @ WII x WII + 6" x 18"	2 @ WII x WII + 6" x 9" 2 @ WII x WII + 6" x 12" 1 @ WII x WII + 6" x 18" 1 @ WII x WII + 6" x 24"
Max Ht., Ft	17.5	20	22.5
Top Levels of Mesh over	2 @ WII x WII + 6" x 9" 2 @ WII x WII + 6" x 12" 1 @ WII x WII + 6" x 18" 2 @ WII x WII + 6" x 24"	2 @ WII x WII + 6" x 9" 3 @ WII x WII + 6" x 18" 3 @ WII x WII + 6" x 24"	5 @ WII x WII + 6" x 18" 4 @ WII x WII + 6" x 24"
Max Ht., Ft	25		
Top Levels of Mesh over	5 @ WII x WII + 6" x 18" 5 @ WII x WII + 6" x 24"		

RETAINING WALL NO. E1

Wall LOL Sta.	Top of Wall Elevation	Elevation of Top of Leveling Pad
426+12.83	22.39	2.0
426+22.83	22.03	2.0
426+32.83	21.66	2.0
426+42.83	21.30	2.0
426+52.83	20.93	2.0
426+62.83	20.56	-0.5
426+72.83	20.19	-0.5
426+82.83	19.82	-0.5
426+92.83	19.44	-0.5
427+02.83	19.06	-0.5
427+12.83	18.67	-0.5
427+22.83	18.26	-0.5
427+32.83	17.85	-0.5
427+42.83	17.44	-3.0
427+52.83	17.03	-3.0
427+62.83	16.62	-3.0
427+72.83	16.21	-3.0
427+82.83	15.80	-3.0
427+92.83	15.39	-3.0
428+02.83	14.98	-3.0
428+12.83	14.58	-3.0
428+22.83	14.18	-3.0
428+28.72	13.95	-3.0

NOTE: For heights less than 10'-0", all Mesh is WII x WII + 6" x 9". Mesh Configuration = Longitudinal Wire size x Transverse Wire size + Longitudinal Wire spacing x Transverse Wire spacing

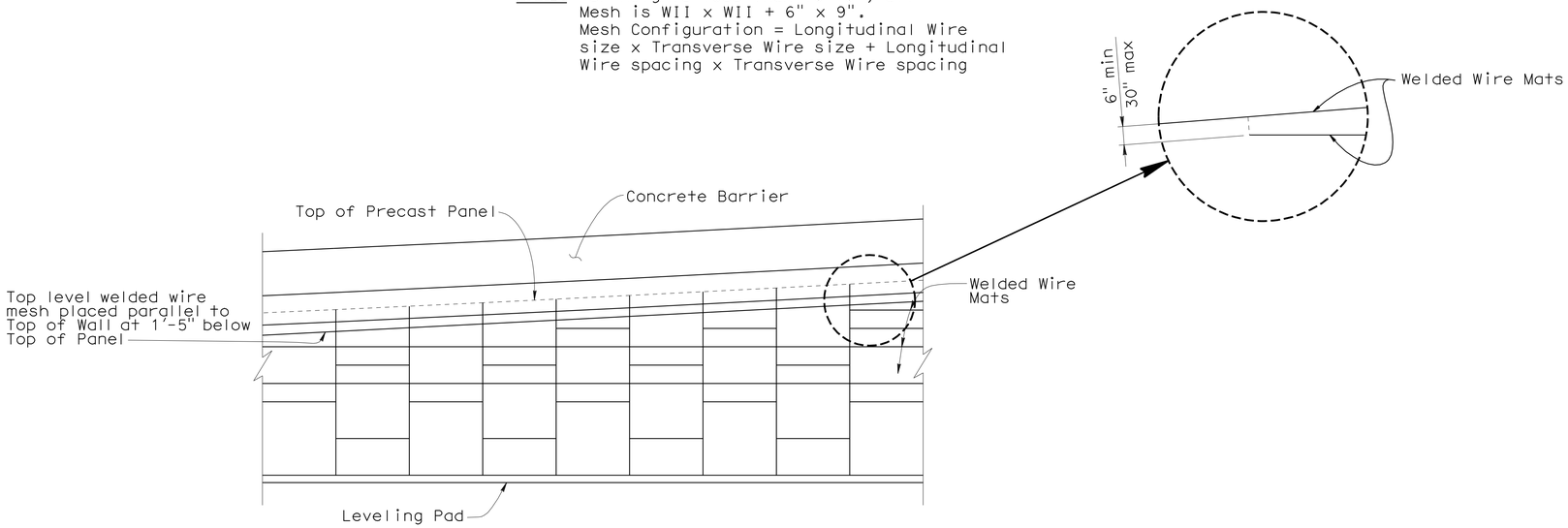

ELEVATION

1" = 5'-0"

	BY	CHECKED
DESIGN	S. Galgiani	F. Zayati
DETAILS	K. Kubo	S. Galgiani
QUANTITIES	S. Galgiani	F. Zayati

STATE OF CALIFORNIA
DEPARTMENT OF TRANSPORTATION

DIVISION OF ENGINEERING SERVICES
STRUCTURE DESIGN
DESIGN BRANCH 14

BRIDGE NO. 53E0149
POST MILE 0.10

MSE WALL NO. E1
MSE WALL DETAILS NO. 7

STRUCTURES DESIGN DETAIL SHEET (ENGLISH) (REV. 10/25/05)

ORIGINAL SCALE IN INCHES FOR REDUCED PLANS 0 1 2 3

CU 07-271
EA 138201

DISREGARD PRINTS BEARING EARLIER REVISION DATES

REVISION DATES: 01-26-10, 03-17-10, 04-05-10, 05-27-10, 05-28-10

SHEET 11 OF 17

FILE => 53-rwe1_mse_edet07.dgn

USERNAME => trlenard DATE PLOTTED => 14-OCT-2010 TIME PLOTTED => 10:16

DIST	COUNTY	ROUTE	POST MILES TOTAL PROJECT	SHEET No	TOTAL SHEETS
07	LA	47,103	3.5/4.6, 0.0/1.1	935	1003

REGISTERED CIVIL ENGINEER — DATE 05-24-10

10-11-10
PLANS APPROVAL DATE

REGISTERED PROFESSIONAL ENGINEER — FOUED ZAYATI — No. C57046 — Exp. 06-30-11 — CIVIL — STATE OF CALIFORNIA

The State of California or its officers or agents shall not be responsible for the accuracy or completeness of electronic copies of this plan sheet.

NOTES:

A. Walls are to be backfilled before barrier is placed.
B. Clearance to reinforcing steel in barrier to be 1", except as noted. Longitudinal reinforcement to stop at all expansion joints.
C. See project plans for locations of electroliers and pull boxes.
D. Dimensions may vary with roadway cross slope and with certain thickness of surfacing. See Project Plans.
E. Minimum concrete edge distance to reinforcing shown, shall be maintained, edge distance may be adjusted to accomodate increase in concrete cover for architectural treatment. See Typical Section.
F. For 'Architectural Treatment', see "CONCRETE BARRIER DETAILS NO. 2" sheet

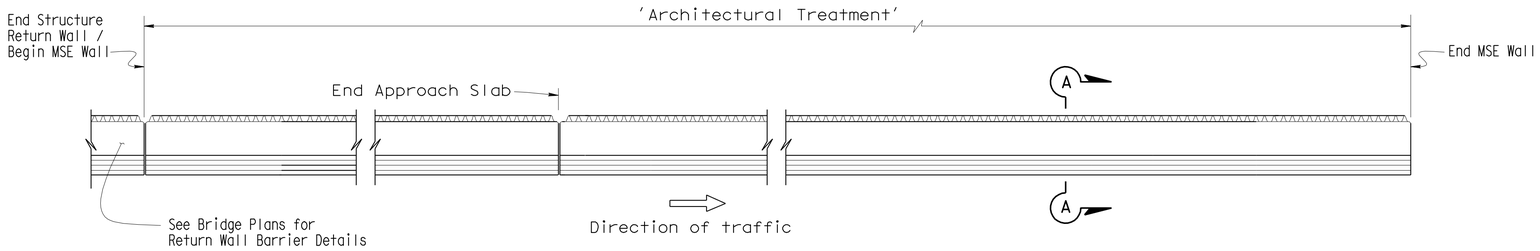

PLAN

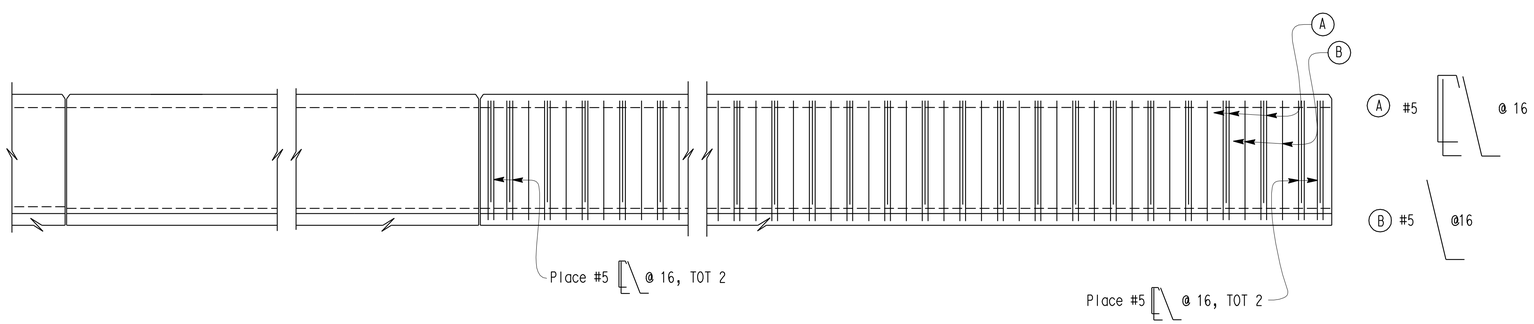

ELEVATION

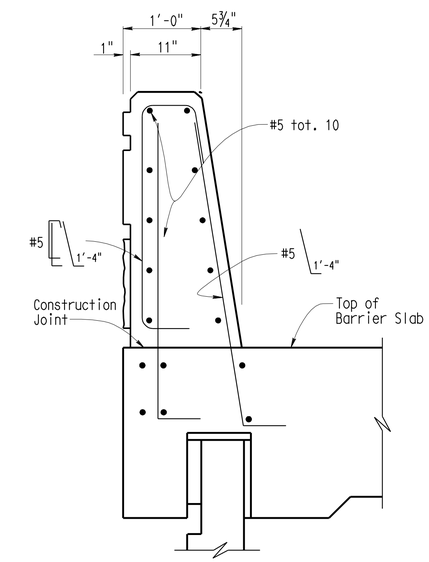

SECTION A-A

NO SCALE

DESIGN	BY F. Zayati	CHECKED S. Galgiani	
DETAILS	BY K. Kubo	CHECKED F. Zayati	
QUANTITIES	BY S. Galgiani	CHECKED F. Zayati	

STATE OF CALIFORNIA
DEPARTMENT OF TRANSPORTATION

DIVISION OF ENGINEERING SERVICES
STRUCTURE DESIGN
DESIGN BRANCH 14

BRIDGE NO. 53E0149
POST MILE 0.10

MSE WALL NO. E1
CONCRETE BARRIER DETAILS NO. 1

STRUCTURES DESIGN DETAIL SHEET (ENGLISH) (REV. 10/25/05)

ORIGINAL SCALE IN INCHES FOR REDUCED PLANS 0 1 2 3

CU 07-271
EA 138201

DISREGARD PRINTS BEARING EARLIER REVISION DATES

REVISION DATES: 12-30-09, 01-28-10, 05-24-10, 6-22-10, 6-23-10, 06-29-10

SHEET 12 OF 17

FILE => 53-rwe1_mse_fbrdt01.dgn

USERNAME => trlenard DATE PLOTTED => 14-OCT-2010 TIME PLOTTED => 10:16

DIST	COUNTY	ROUTE	POST MILES TOTAL PROJECT	SHEET No	TOTAL SHEETS
07	LA	47,103	3.5/4.6, 0.0/1.1	936	1003

REGISTERED CIVIL ENGINEER — DATE 05-24-10

10-11-10
PLANS APPROVAL DATE

REGISTERED PROFESSIONAL ENGINEER — FOUED ZAYATI — No. C57046 — Exp. 06-30-11 — CIVIL — STATE OF CALIFORNIA

The State of California or its officers or agents shall not be responsible for the accuracy or completeness of electronic copies of this plan sheet.

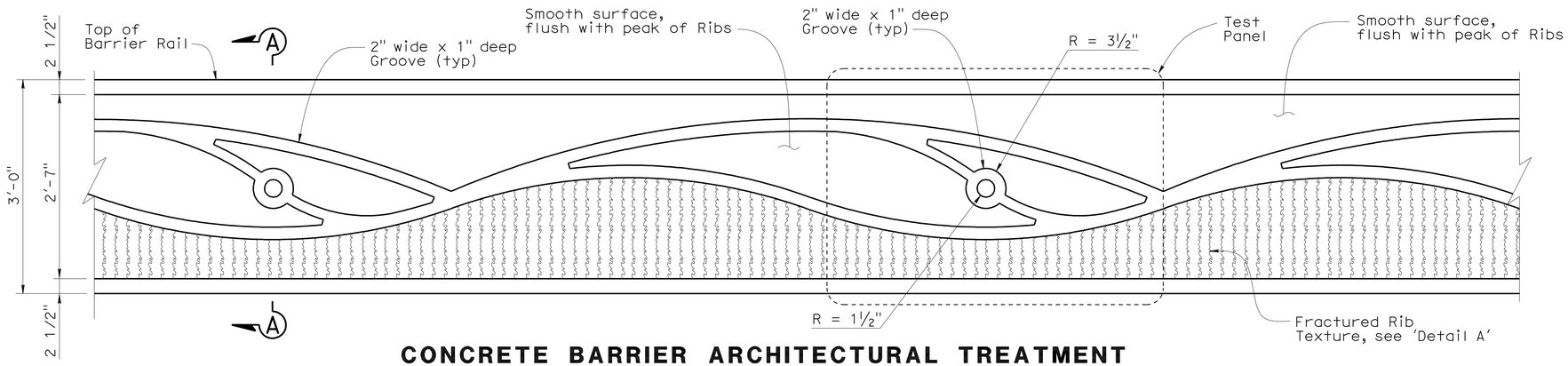

CONCRETE BARRIER ARCHITECTURAL TREATMENT

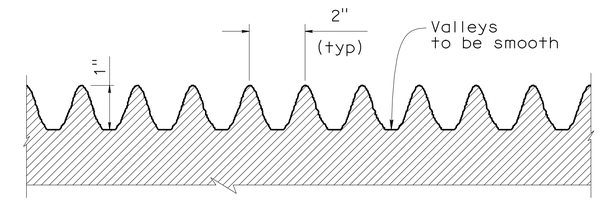

DETAIL A

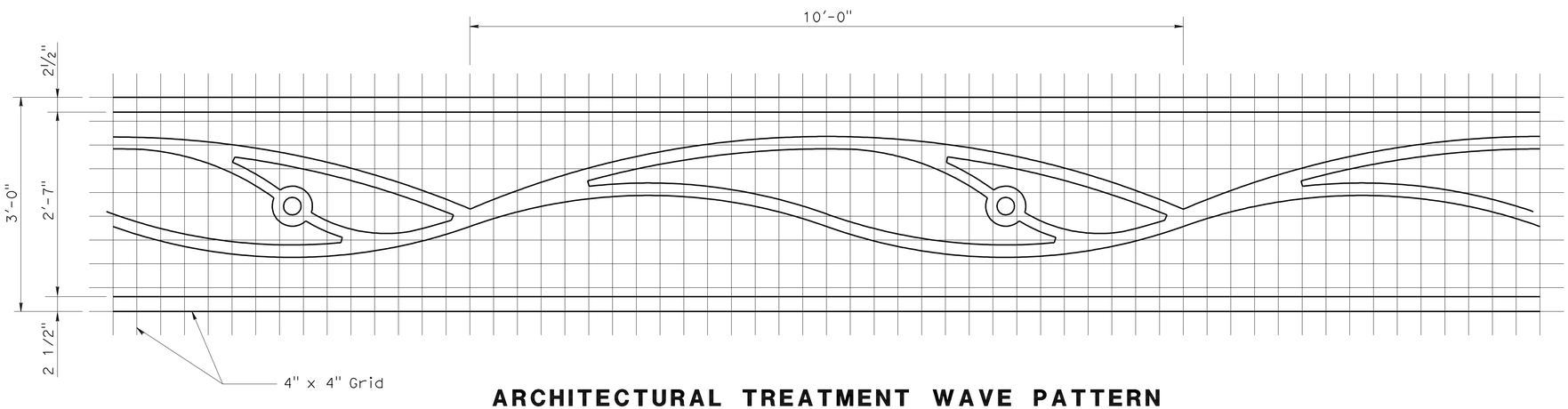

ARCHITECTURAL TREATMENT WAVE PATTERN

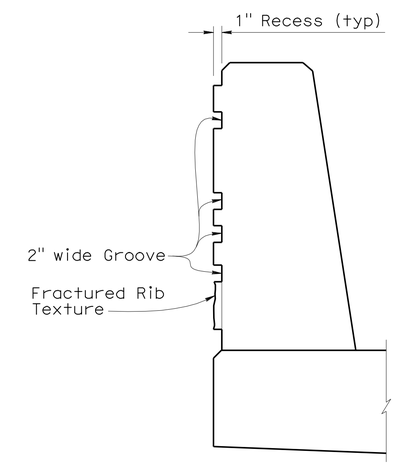

SECTION A-A

NO SCALE

DESIGN	BY F. Zayati	CHECKED F. Zayati	
DETAILS	BY K. Kubo	CHECKED F. Zayati	
QUANTITIES	BY S. Galgiani	CHECKED S. Galgiani	

STATE OF CALIFORNIA
DEPARTMENT OF TRANSPORTATION

DIVISION OF ENGINEERING SERVICES
STRUCTURE DESIGN
DESIGN BRANCH 14

BRIDGE NO. 53E0149
POST MILE 0.10

MSE WALL NO. E1
CONCRETE BARRIER DETAILS NO. 2

STRUCTURES DESIGN DETAIL SHEET (ENGLISH) (REV. 10/25/05)

ORIGINAL SCALE IN INCHES FOR REDUCED PLANS 0 1 2 3

CU 07-271
EA 138201

DISREGARD PRINTS BEARING EARLIER REVISION DATES → 01-08-10 04-01-10 6-22-10

REVISION DATES

SHEET 13 OF 17

FILE => 53-rwe1_mse_fbrdt02.dgn

USERNAME => trlenard DATE PLOTTED => 14-OCT-2010 TIME PLOTTED => 10:17

DIST	COUNTY	ROUTE	POST MILES TOTAL PROJECT	SHEET No	TOTAL SHEETS
07	LA	47,103	3.5/4.6, 0.0/1.1	937	1003

REGISTERED ENGINEER — DATE 04/19/10

REGISTERED PROFESSIONAL ENGINEER ERIC BROWN NO. GE-2806 EXP. 06-30-2010 GEOTECHNICAL STATE OF CALIFORNIA

10-11-10
PLANS APPROVAL DATE

The State of California or its officers or agents shall not be responsible for the accuracy or completeness of electronic copies of this plan sheet.

ACTA
ONE CIVIC PLAZA. SUITE 350,
CARSON, CA 90745

EARTH MECHANICS, INC.
17660, NEWHOPE STREET, SUITE E
FOUNTAIN VALLEY, CA 92708

BENCHMARKS:

PT-PMHV509	PT-PMHV515
SET MAG NAIL	SET MAG NAIL
26.671′ Lt ℄ "G"Line	28.517′ Rt ℄ "G" Line
Sta. 604+968.70	Sta. 600+995.50
N 1738366.89	N 1737997.51
E 6488728.36	E 6488779.52
Elev. = -3.61	Elev. = -2.21

NOTES:

(1) This LOTB sheet (Boring Record) was prepared in accordance with the Caltrans Soil and Rock Classification Logging, Classification and Presentation Manual (June 2007).

(2) 2.4" samples were taken using a California Split-spoon Sampler.

(3) For A-09-056, an automatic trip hammer system consisting of a hammer weight of 140 lbs falling a distance of 30" was used to advance the drive sampler.

(3) For R-09-033, a rope and cat-head hammer system consisting of a hammer weight of 140 lbs falling a distance of 30" was used to advance the drive sampler.

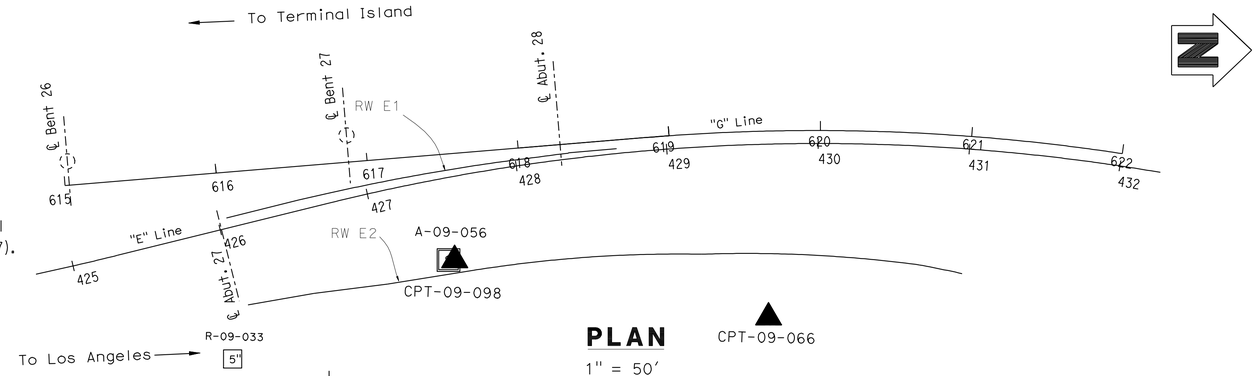

PLAN
1" = 50′

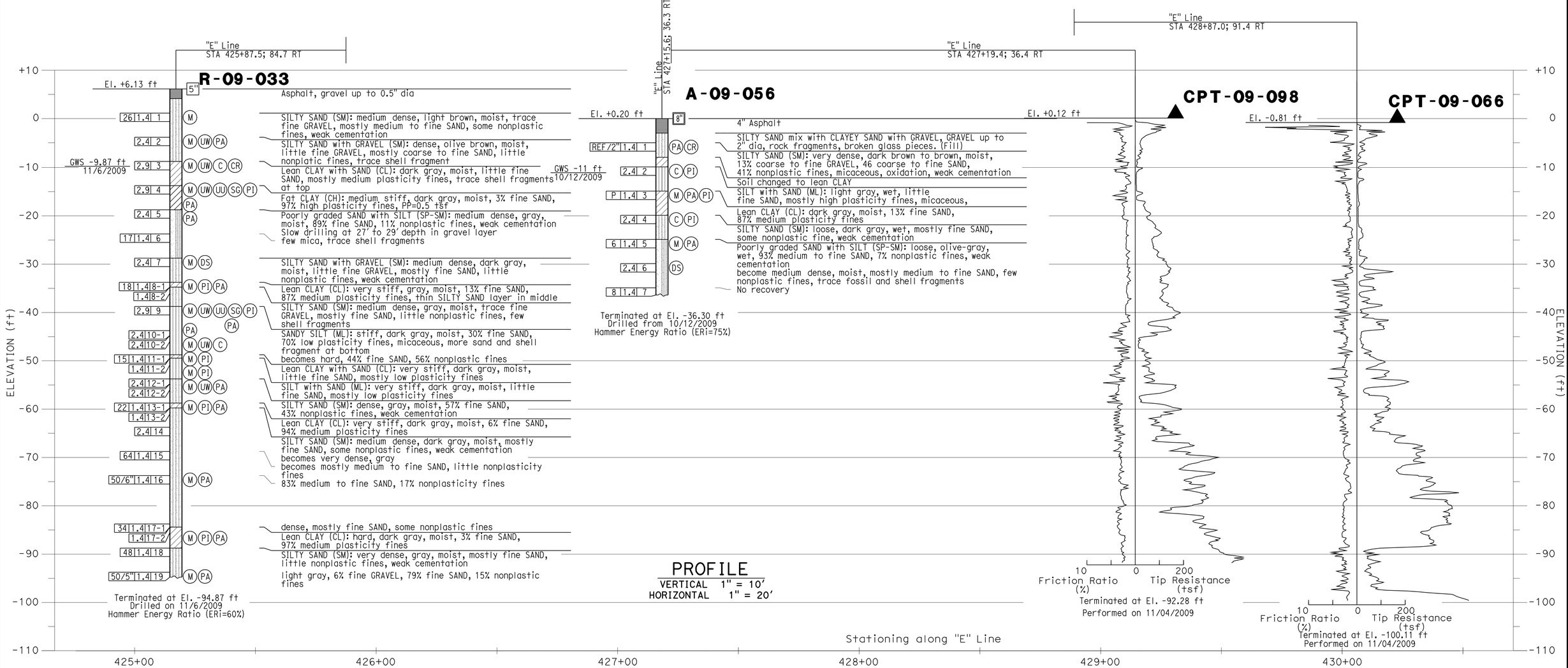

PROFILE
VERTICAL 1" = 10′
HORIZONTAL 1" = 20′

DESIGN OVERSIGHT	DRAWN BY: J.Fang	FIELD INVESTIGATION BY:	PREPARED FOR THE STATE OF CALIFORNIA DEPARTMENT OF TRANSPORTATION	E. Brown PROJECT ENGINEER	BRIDGE NO. 53E0149 / POST MILE 0.10
SIGN OFF DATE	CHECKED BY: K.Pratheepan	E.Brown			

MSE RETAINING WALL NO. E1

LOG OF TEST BORINGS NO. 1 OF 4

OGS CIVIL LOG OF TEST BORINGS SHEET (ENGLISH) (REV. 06-01-09)

ORIGINAL SCALE IN INCHES FOR REDUCED PLANS 0 1 2 3

CU 07-271
EA 138201

DISREGARD PRINTS BEARING EARLIER REVISION DATES — REVISION DATES (PRELIMINARY STAGE ONLY) 02/08/10 04/14/10 07/02/10

SHEET 14 OF 17

FILE => 53-rwe1_mse_fltb01.dgn

USERNAME => trlenard DATE PLOTTED => 14-OCT-2010 TIME PLOTTED => 10:17

DIST	COUNTY	ROUTE	POST MILES TOTAL PROJECT	SHEET No	TOTAL SHEETS
07	LA	47,103	3.5/4.6, 0.0/1.1	938	1003

REGISTERED ENGINEER — DATE 04/19/10

10-11-10
PLANS APPROVAL DATE

The State of California or its officers or agents shall not be responsible for the accuracy or completeness of electronic copies of this plan sheet.

REGISTERED PROFESSIONAL ENGINEER ERIC BROWN NO. GE-2806 EXP. 06-30-2010 GEOTECHNICAL STATE OF CALIFORNIA

ACTA
ONE CIVIC PLAZA. SUITE 350,
CARSON, CA 90745

EARTH MECHANICS, INC.
17660, NEWHOPE STREET, SUITE E
FOUNTAIN VALLEY, CA 92708

BENCHMARKS:

PT-PMHV509	PT-PMHV515
SET MAG NAIL	SET MAG NAIL
26.671′ Lt ℄ "G"Line	28.517′ Rt ℄ "G" Line
Sta. 604+968.70	Sta. 600+995.50
N 1738366.89	N 1737997.51
E 6488728.36	E 6488779.52
Elev. = -3.61	Elev. = -2.21

NOTES:

(1) This LOTB sheet (Boring Record) was prepared in accordance with the Caltrans Soil and Rock Classification Logging, Classification and Presentation Manual (June 2007).

(2) 2.4" samples were taken using a California Split-spoon Sampler.

(3) A rope and cat-head hammer system consisting of a hammer weight of 140 lbs falling a distance of 30" was used to advance the drive sampler.

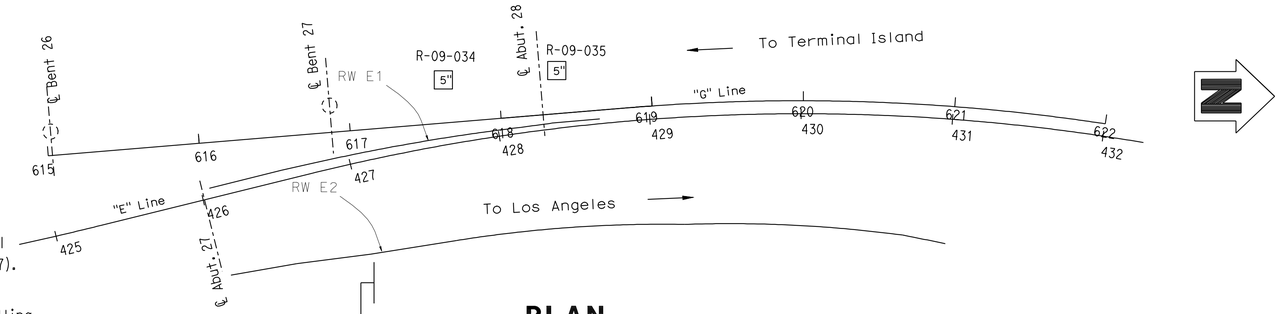

PLAN

1" = 50′

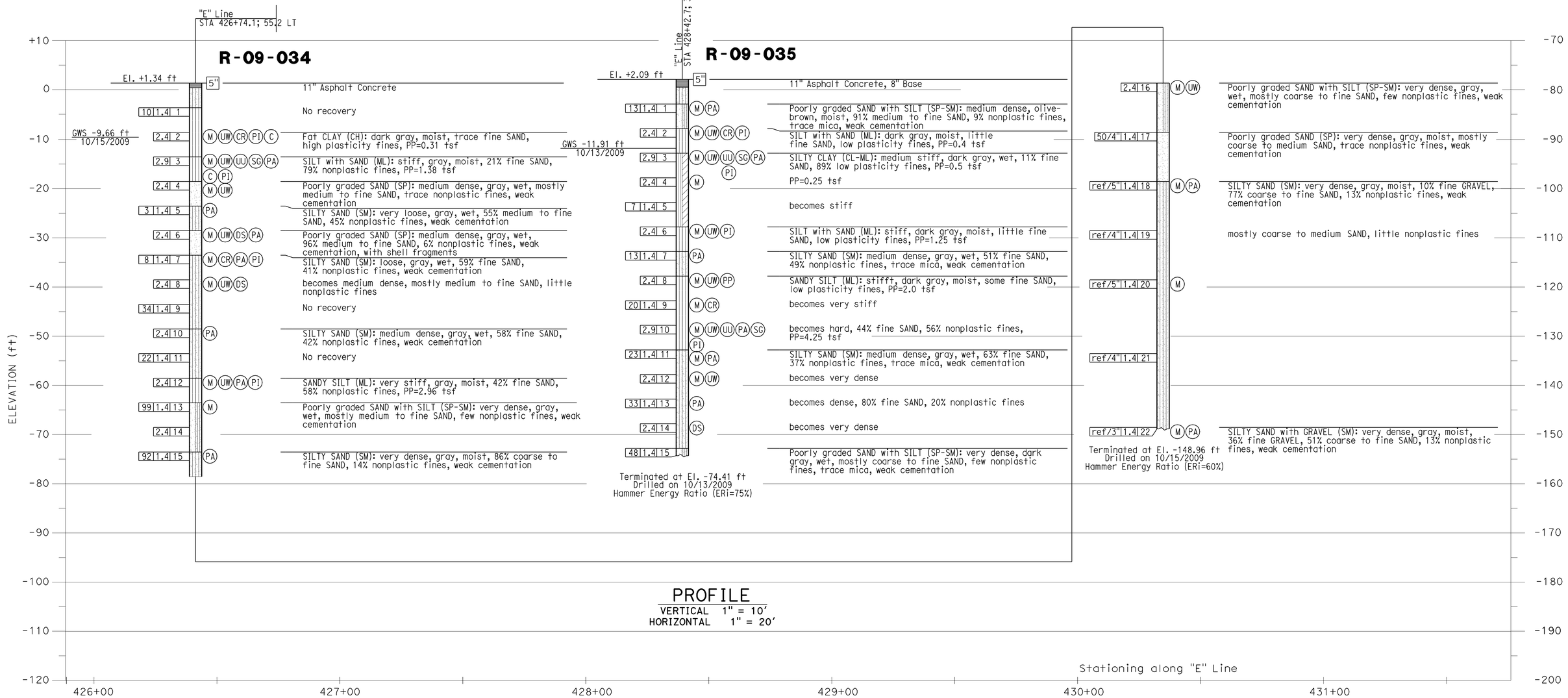

PROFILE

VERTICAL 1" = 10′
HORIZONTAL 1" = 20′

DESIGN OVERSIGHT	DRAWN BY: J.Fang	FIELD INVESTIGATION BY:	PREPARED FOR THE STATE OF CALIFORNIA DEPARTMENT OF TRANSPORTATION	E. Brown PROJECT ENGINEER	BRIDGE NO. 53E0149 / POST MILE 0.10
SIGN OFF DATE	CHECKED BY: K.Pratheepan	E.Brown			

MSE RETAINING WALL NO. E1

LOG OF TEST BORINGS NO. 2 OF 4

OGS CIVIL LOG OF TEST BORINGS SHEET (ENGLISH) (REV. 06-01-09)

ORIGINAL SCALE IN INCHES FOR REDUCED PLANS 0 1 2 3

CU 07-271
EA 138201

DISREGARD PRINTS BEARING EARLIER REVISION DATES

REVISION DATES (PRELIMINARY STAGE ONLY) 02/02/10 04/19/10 07/02/10

SHEET 15 OF 17

FILE => 53-rwe1_mse_fltb02.dgn

USERNAME => friehard DATE PLOTTED => 14-OCT-2010 TIME PLOTTED => 10:17

REFERENCE: CALTRANS SOIL & ROCK LOGGING, CLASSIFICATION, AND PRESENTATION MANUAL (JUNE 2007)

DIST	COUNTY	ROUTE	POST MILES TOTAL PROJECT	SHEET No	TOTAL SHEETS
07	LA	47,103	3.5/4.6, 0.0/1.1	939	1003

REGISTERED ENGINEER — DATE 04/19/10

10-11-10
PLANS APPROVAL DATE

REGISTERED PROFESSIONAL ENGINEER ERIC BROWN NO. GE-2806 EXP. 06-30-2010 GEOTECHNICAL STATE OF CALIFORNIA

The State of California or its officers or agents shall not be responsible for the accuracy or completeness of electronic copies of this plan sheet.

ACTA
ONE CIVIC PLAZA. SUITE 350,
CARSON, CA 90745

EARTH MECHANICS, INC.
17660, NEWHOPE STREET, SUITE E
FOUNTAIN VALLEY, CA 92708

CEMENTATION

Description	Criteria
Weak	Crumbles or breaks with handling or little finger pressure.
Moderate	Crumbles or breaks with considerable finger pressure.
Strong	Will not crumble or break with finger pressure.

CONSISTENCY OF COHESIVE SOILS

Description	Unconfined Compressive Strength (tsf)	Pocket Penetrometer Measurement (tsf)	Torvane Measurement (tsf)	Field Approximation
Very Soft	< 0.25	< 0.25	< 0.12	Easily penetrated several inches by fist
Soft	0.25 to 0.50	0.25 to 0.50	0.12 to 0.25	Easily penetrated several inches by thumb
Medium Stiff	0.50 to 1.0	0.50 to 1.0	0.25 to 0.50	Penetrated several inches by thumb with moderate effort
Stiff	1 to 2	1 to 2	0.50 to 1.0	Readily indented by thumb but penetrated only with great effort
Very Stiff	2 to 4	2 to 4	1.0 to 2.0	Readily indented by thumbnail
Hard	> 4.0	> 4.0	> 2.0	Indented by thumbnail with difficulty

BOREHOLE IDENTIFICATION

Symbol	Hole Type	Description
Size	A	Auger Boring
Size	R P	Rotary drilled boring Rotary percussion boring (air)
Size	R	Rotary drilled diamond core
Size	HD HA	Hand driven (1-inch soil tube) Hand Auger
●	D	Dynamic Cone Penetration Boring
▲	CPT	Cone Penetration Test (ASTM D 5778-95)
⬚	O	Other

Note: Size in inches.

PLASTICITY OF FINE-GRAINED SOILS

Description	Criteria
Nonplastic	A 1/8-inch thread cannot be rolled at any water content.
Low	The thread can barely be rolled and the lump cannot be formed when drier than the plastic limit.
Medium	The thread is easy to roll and not much time is required to reach the plastic limit. The thread cannot be rerolled after reaching the plastic limit. The lump crumbles when drier than the plastic limit.
High	It takes considerable time rolling and kneading to reach the plastic limit. The thread can be rerolled several times after reaching the plastic limit. The lump can be formed without crumbling when drier than the plastic limit.

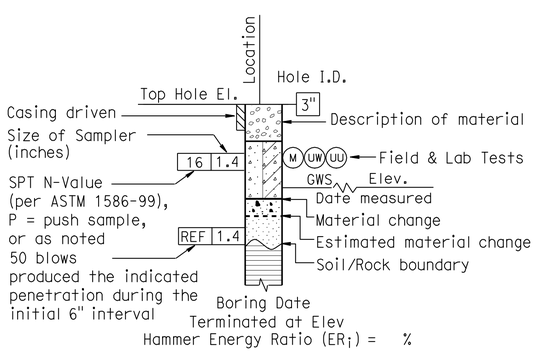

ROTARY BORING

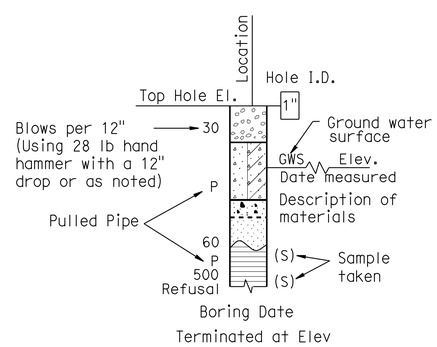

HAND BORING

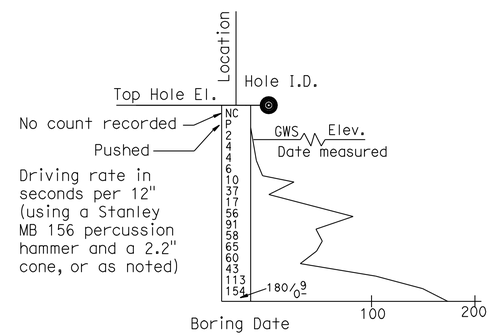

DYNAMIC CONE PENETRATION BORING

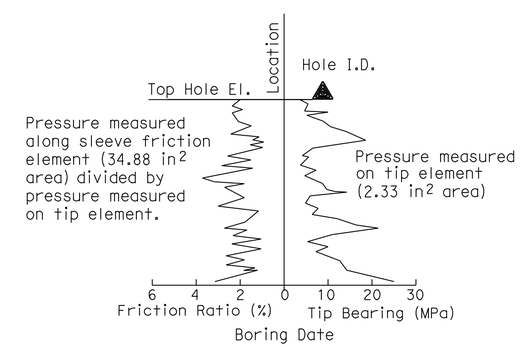

CONE PENETRATION TEST (CPT) SOUNDING

DESIGN OVERSIGHT SIGN OFF DATE	DRAWN BY: J.Fang CHECKED BY: K.Pratheepan	FIELD INVESTIGATION BY: E.Brown	PREPARED FOR THE STATE OF CALIFORNIA DEPARTMENT OF TRANSPORTATION	E. Brown PROJECT ENGINEER	BRIDGE NO. 53E0149 POST MILE 0.10

MSE RETAINING WALL NO. E1

LOG OF TEST BORINGS NO. 3 OF 4

OGS CIVIL LOG OF TEST BORINGS SHEET (ENGLISH) (REV. 06-01-09)

ORIGINAL SCALE IN INCHES FOR REDUCED PLANS 0 1 2 3

CU 07-271
EA 138201

DISREGARD PRINTS BEARING EARLIER REVISION DATES — REVISION DATES (PRELIMINARY STAGE ONLY) 02/26/10 04/19/10 07/02/10

SHEET 16 OF 17

FILE => 53-rwe1_mse_fltb03.dgn

USERNAME => trlenard DATE PLOTTED => 14-OCT-2010 TIME PLOTTED => 10:17

REFERENCE: CALTRANS SOIL & ROCK LOGGING, CLASSIFICATION, AND PRESENTATION MANUAL (JUNE 2007)

DIST	COUNTY	ROUTE	POST MILES TOTAL PROJECT	SHEET No	TOTAL SHEETS
07	LA	47,103	3.5/4.6, 0.0/1.1	940	1003

REGISTERED ENGINEER — DATE 04/19/10

REGISTERED PROFESSIONAL ENGINEER ERIC BROWN NO. GE-2806 EXP. 06-30-2010 GEOTECHNICAL STATE OF CALIFORNIA

10-11-10
PLANS APPROVAL DATE

The State of California or its officers or agents shall not be responsible for the accuracy or completeness of electronic copies of this plan sheet.

ACTA
ONE CIVIC PLAZA. SUITE 350,
CARSON, CA 90745

EARTH MECHANICS, INC.
17660, NEWHOPE STREET, SUITE E
FOUNTAIN VALLEY, CA 92708

GROUP SYMBOLS AND NAMES

Graphic/Symbol	Group Names
GW	Well-graded GRAVEL Well-graded GRAVEL with SAND
GP	Poorly graded GRAVEL Poorly graded GRAVEL with SAND
GW-GM	Well-graded GRAVEL with SILT Well-graded GRAVEL with SILT and SAND
GW-GC	Well-graded GRAVEL with CLAY (or SILTY CLAY) Well-graded GRAVEL with CLAY and SAND (or SILTY CLAY and SAND)
GP-GM	Poorly graded GRAVEL with SILT Poorly graded GRAVEL with SILT and SAND
GP-GC	Poorly graded GRAVEL with CLAY (or SILTY CLAY) Poorly graded GRAVEL with CLAY and SAND (or SILTY CLAY and SAND)
GM	SILTY GRAVEL SILTY GRAVEL with SAND
GC	CLAYEY GRAVEL CLAYEY GRAVEL with SAND
GC-GM	SILTY, CLAYEY GRAVEL SILTY, CLAYEY GRAVEL with SAND
SW	Well-graded SAND Well-graded SAND with GRAVEL
SP	Poorly graded SAND Poorly graded SAND with GRAVEL
SW-SM	Well-graded SAND with SILT Well-graded SAND with SILT and GRAVEL
SW-SC	Well-graded SAND with CLAY (or SILTY CLAY) Well-graded SAND with CLAY and GRAVEL (or SILTY CLAY and GRAVEL)
SP-SM	Poorly graded SAND with SILT Poorly graded SAND with SILT and GRAVEL
SP-SC	Poorly graded SAND with CLAY (or SILTY CLAY) Poorly graded SAND with CLAY and GRAVEL (or SILTY CLAY and GRAVEL)
SM	SILTY SAND SILTY SAND with GRAVEL
SC	CLAYEY SAND CLAYEY SAND with GRAVEL
SC-SM	SILTY, CLAYEY SAND SILTY, CLAYEY SAND with GRAVEL
PT	PEAT
	COBBLES COBBLES and BOULDERS BOULDERS

Graphic/Symbol	Group Names
CL	Lean CLAY Lean CLAY with SAND Lean CLAY with GRAVEL SANDY lean CLAY SANDY lean CLAY with GRAVEL GRAVELLY lean CLAY GRAVELLY lean CLAY with SAND
CL-ML	SILTY CLAY SILTY CLAY with SAND SILTY CLAY with GRAVEL SANDY SILTY CLAY SANDY SILTY CLAY with GRAVEL GRAVELLY SILTY CLAY GRAVELLY SILTY CLAY with SAND
ML	SILT SILT with SAND SILT with GRAVEL SANDY SILT SANDY SILT with GRAVEL GRAVELLY SILT GRAVELLY SILT with SAND
OL	ORGANIC lean CLAY ORGANIC lean CLAY with SAND ORGANIC lean CLAY with GRAVEL SANDY ORGANIC lean CLAY SANDY ORGANIC lean CLAY with GRAVEL GRAVELLY ORGANIC lean CLAY GRAVELLY ORGANIC lean CLAY with SAND
OL	ORGANIC SILT ORGANIC SILT with SAND ORGANIC SILT with GRAVEL SANDY ORGANIC SILT SANDY ORGANIC SILT with GRAVEL GRAVELLY ORGANIC SILT GRAVELLY ORGANIC SILT with SAND
CH	Fat CLAY Fat CLAY with SAND Fat CLAY with GRAVEL SANDY fat CLAY SANDY fat CLAY with GRAVEL GRAVELLY fat CLAY GRAVELLY fat CLAY with SAND
MH	Elastic SILT Elastic SILT with SAND Elastic SILT with GRAVEL SANDY elastic SILT SANDY elastic SILT with GRAVEL GRAVELLY elastic SILT GRAVELLY elastic SILT with SAND
OH	ORGANIC fat CLAY ORGANIC fat CLAY with SAND ORGANIC fat CLAY with GRAVEL SANDY ORGANIC fat CLAY SANDY ORGANIC fat CLAY with GRAVEL GRAVELLY ORGANIC fat CLAY GRAVELLY ORGANIC fat CLAY with SAND
OH	ORGANIC elastic SILT ORGANIC elastic SILT with SAND ORGANIC elastic SILT with GRAVEL SANDY ORGANIC elastic SILT SANDY ORGANIC elastic SILT with GRAVEL GRAVELLY ORGANIC elastic SILT GRAVELLY ORGANIC elastic SILT with SAND
OL/OH	ORGANIC SOIL ORGANIC SOIL with SAND ORGANIC SOIL with GRAVEL SANDY ORGANIC SOIL SANDY ORGANIC SOIL with GRAVEL GRAVELLY ORGANIC SOIL GRAVELLY ORGANIC SOIL with SAND

FIELD AND LABORATORY TESTING

- (C) Consolidation (ASTM D 2435)
- (CL) Collapse Potential (ASTM D 5333)
- (CP) Compaction Curve (CTM 216)
- (CR) Corrosivity Testing (CTM 643, CTM 422, CTM 417)
- (CU) Consolidated Undrained Triaxial (ASTM D 4767)
- (DS) Direct Shear (ASTM D 3080)
- (EI) Expansion Index (ASTM D 4829)
- (M) Moisture Content (ASTM D 2216)
- (OC) Organic Content-% (ASTM D 2974)
- (P) Permeability (CTM 220)
- (PA) Particle Size Analysis (ASTM D 422)
- (PI) Plasticity Index (AASHTO T 90) Liquid Limit (AASHTO T 89)
- (PL) Point Load Index (ASTM D 5731)
- (PM) Pressure Meter
- (PP) Pocket Penetrometer
- (R) R-Value (CTM 301)
- (SE) Sand Equivalent (CTM 217)
- (SG) Specific Gravity (AASHTO T 100)
- (SL) Shrinkage Limit (ASTM D 427)
- (SW) Swell Potential (ASTM D 4546)
- (TV) Pocket Torvane
- (UC) Unconfined Compression-Soil (ASTM D 2166) Unconfined Compression-Rock (ASTM D 2938)
- (UU) Unconsolidated Undrained Triaxial (ASTM D 2850)
- (UW) Unit Weight (ASTM D 4767)
- (VS) Vane Shear (AASHTO T 223)

APPARENT DENSITY OF COHESIONLESS SOILS

Description	SPT N_{60} (Blows / 12 inches)
Very loose	0 - 4
Loose	5 - 10
Medium Dense	11 - 30
Dense	31 - 50
Very Dense	> 50

MOISTURE

Description	Criteria
Dry	Absence of moisture, dusty, dry to the touch
Moist	Damp but no visible water
Wet	Visible free water, usually soil is below water table

PERCENT OR PROPORTION OF SOILS

Description	Criteria
Trace	Particles are present but estimated to be less than 5%
Few	5 to 10%
Little	15 to 25%
Some	30 to 45%
Mostly	50 to 100%

PARTICLE SIZE

Description		Size
Boulder		> 12"
Cobble		3" to 12"
Gravel	Coarse	3/4" to 3"
	Fine	No. 4 to 3/4"
Sand	Coarse	No. 10 to No. 4
	Medium	No. 40 to No. 10
	Fine	No. 200 to No. 40

DESIGN OVERSIGHT

SIGN OFF DATE

DRAWN BY: J.Fang

CHECKED BY: K.Pratheepan

FIELD INVESTIGATION BY:
E.Brown

PREPARED FOR THE STATE OF CALIFORNIA DEPARTMENT OF TRANSPORTATION

E. Brown
PROJECT ENGINEER

BRIDGE NO. 53E0149
POST MILE 0.10

MSE RETAINING WALL NO. E1

LOG OF TEST BORINGS NO. 4 OF 4

OGS CIVIL LOG OF TEST BORINGS SHEET (ENGLISH) (REV. 06-01-09)

ORIGINAL SCALE IN INCHES FOR REDUCED PLANS 0 1 2 3

CU 07-271
EA 138201

DISREGARD PRINTS BEARING EARLIER REVISION DATES

REVISION DATES (PRELIMINARY STAGE ONLY) 06/09/10 04/19/10 07/02/10

SHEET 17 OF 17

FILE => 53-rwe1_mse_fltb04.dgn

USERNAME => rfriehard DATE PLOTTED => 14-OCT-2010 TIME PLOTTED => 10:17

DIST	COUNTY	ROUTE	POST MILES TOTAL PROJECT	SHEET No	TOTAL SHEETS
07	LA	47,103	3.5/4.6, 0.0/1.1	941	1003

REGISTERED CIVIL ENGINEER — DATE 05-24-10

10-11-10
PLANS APPROVAL DATE

REGISTERED PROFESSIONAL ENGINEER — FOUED ZAYATI — No. C57046 — Exp. 06-30-11 — CIVIL — STATE OF CALIFORNIA

The State of California or its officers or agents shall not be responsible for the accuracy or completeness of electronic copies of this plan sheet.

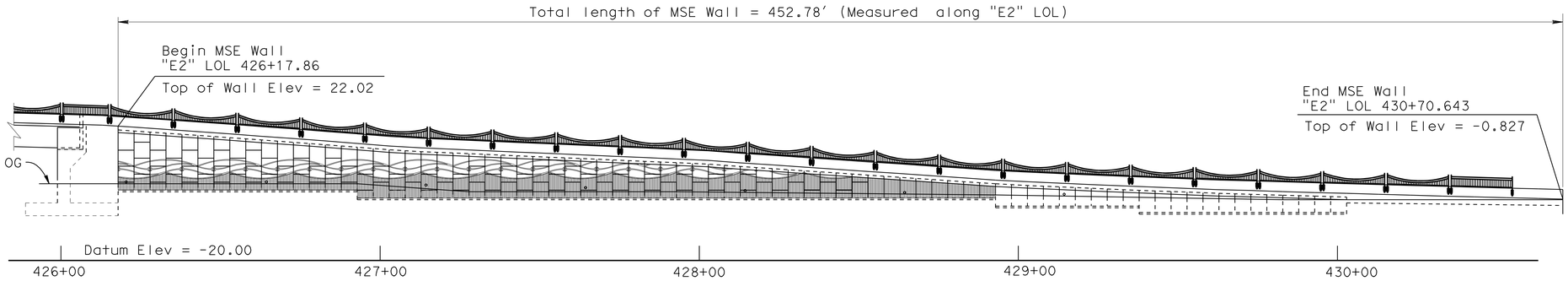

DEVELOPED ELEVATION

1" = 20′

INDEX TO PLANS

SHEET NO.	TITLE
1	GENERAL PLAN
2	STRUCTURE PLAN NO. 1
3	STRUCTURE PLAN NO. 2
4	STRUCTURE PLAN NO. 3
5	STRUCTURE PLAN NO. 4
6	STRUCTURE PLAN NO. 5
7	FOUNDATION PLAN
8	MSE WALL DETAILS NO. 1
9	MSE WALL DETAILS NO. 2
10	MSE WALL DETAILS NO. 3
11	MSE WALL DETAILS NO. 4
12	MSE WALL DETAILS NO. 5
13	MSE WALL DETAILS NO. 6
14	MSE WALL DETAILS NO. 7
15	MSE WALL DETAILS NO. 8
16	CONCRETE BARRIER DETAILS NO. 1
17	CONCRETE BARRIER DETAILS NO. 2
18	RAILING DETAILS NO. 1
19	RAILING DETAILS NO. 2
20	LOG OF TEST BORINGS NO. 1 OF 4
21	LOG OF TEST BORINGS NO. 2 OF 4
22	LOG OF TEST BORINGS NO. 3 OF 4
23	LOG OF TEST BORINGS NO. 4 OF 4

QUANTITIES

EARTH RETAINING STRUCTURE, LOCATION D	4,090	SQFT
STRUCTURAL CONCRETE, BARRIER SLAB	217	CY
BICYCLE RAILING	460	LF
CONCRETE BARRIER (TYPE 736 MODIFIED)	458	LF

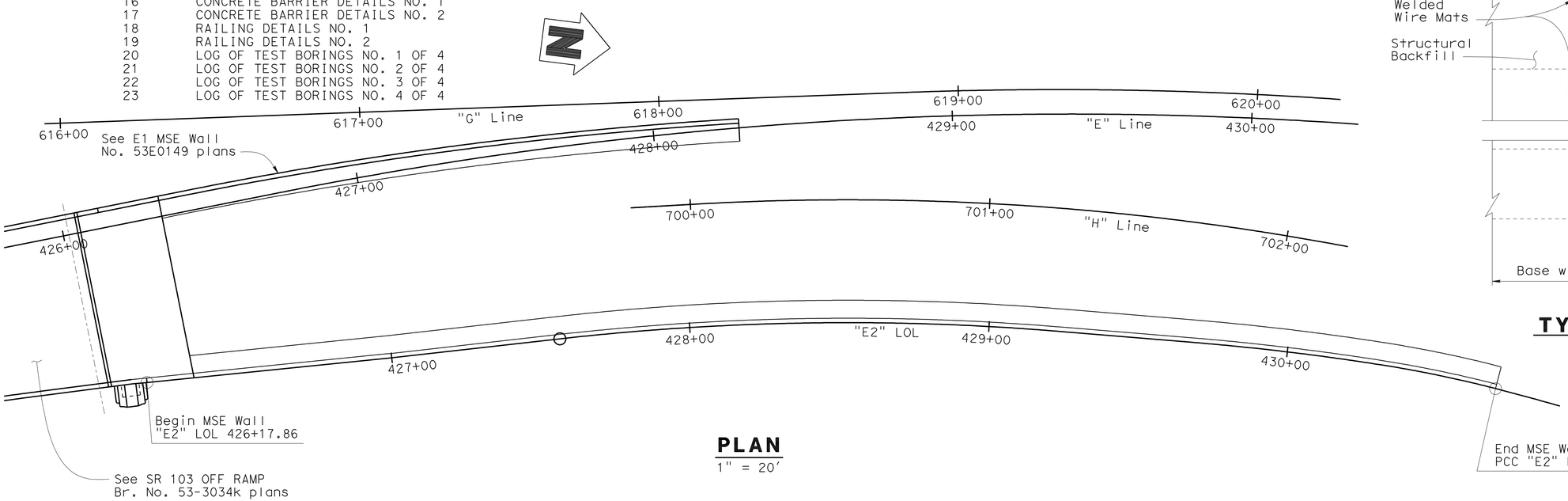

PLAN

1" = 20′

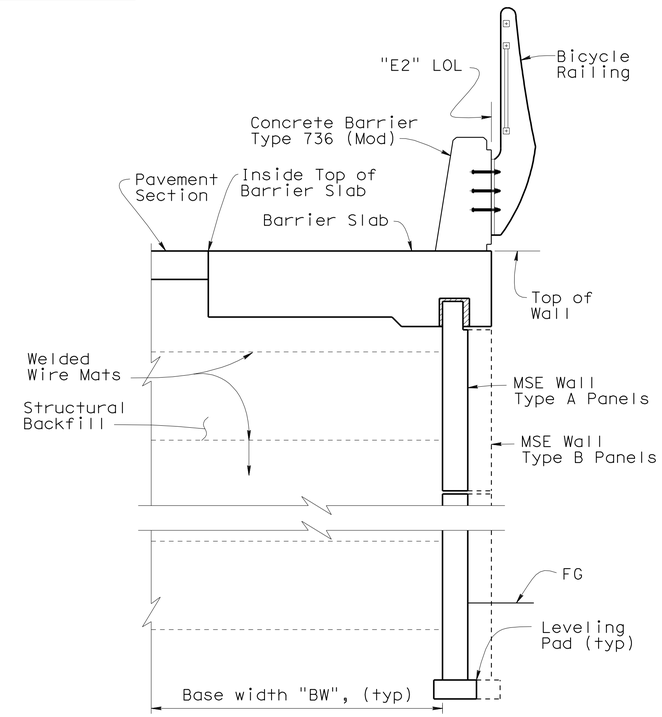

TYPICAL SECTION

½" = 1′

DESIGN	BY S. Galgiani	CHECKED F. Zayati	LOAD & RESISTANCE FACTOR DESIGN	LIVE LOADING: HL93 W/"LOW-BOY"; PERMIT DESIGN VEHICLE	
DETAILS	BY L. Xiong	CHECKED S. Galgiani	LAYOUT	BY S. Galgiani	CHECKED F. Zayati
QUANTITIES	BY S. Galgiani	CHECKED F. Zayati	SPECIFICATIONS	BY J. Strootman	PLANS AND SPECS COMPARED J. Strootman

X DESIGN ENGINEER

STATE OF CALIFORNIA
DEPARTMENT OF TRANSPORTATION

DIVISION OF ENGINEERING SERVICES
STRUCTURE DESIGN
DESIGN BRANCH 14

BRIDGE NO. 53E0150
POST MILE 0.10

MSE WALL NO. E2
GENERAL PLAN

STRUCTURES DESIGN GENERAL PLAN SHEET (ENGLISH) (REV. 10/25/05)

ORIGINAL SCALE IN INCHES FOR REDUCED PLANS 0 1 2 3

CU 07-271
EA 238501

DISREGARD PRINTS BEARING EARLIER REVISION DATES

REVISION DATES: 05-24-10 | 5-26-10 | 5-26-10 | 07-13-10 | | | 01-26-10 | 03-26-10 | 04-12-10 | 04-26-10

SHEET 1 OF 23

FILE => 53-rwe2_mse_agp.dgn

STRUCTURES DESIGN GENERAL PLAN SHEET (ENGLISH) (REV.07-24-06)

USERNAME => trlenard DATE PLOTTED => 14-OCT-2010 TIME PLOTTED => 10:17

DIST	COUNTY	ROUTE	POST MILES TOTAL PROJECT	SHEET No	TOTAL SHEETS
07	LA	47,103	3.5/4.6, 0.0/1.1	942	1003

REGISTERED CIVIL ENGINEER — DATE 05-24-10

10-11-10
PLANS APPROVAL DATE

REGISTERED PROFESSIONAL ENGINEER — FOUED ZAYATI — No. C57046 — Exp. 06-30-11 — CIVIL — STATE OF CALIFORNIA

The State of California or its officers or agents shall not be responsible for the accuracy or completeness of electronic copies of this plan sheet.

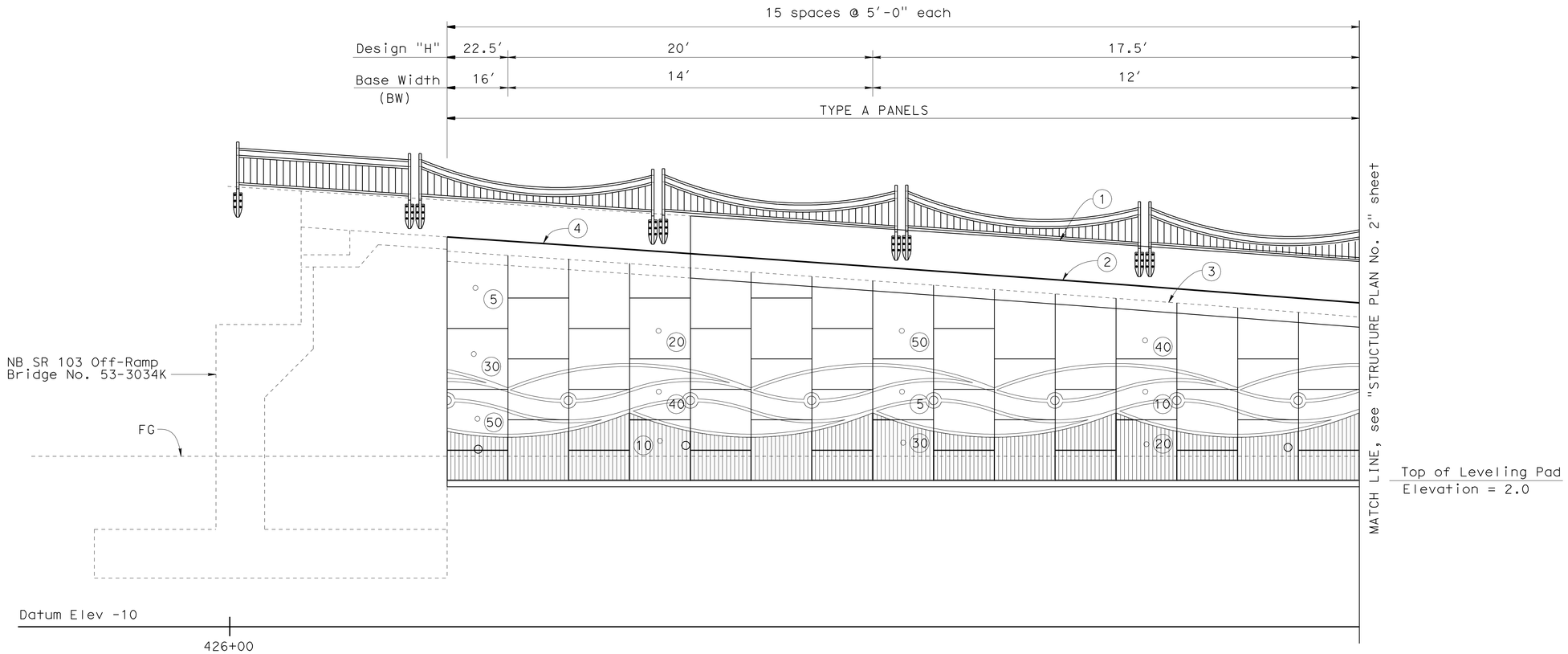

DEVELOPED ELEVATION

1" = 5'

1. Top of Concrete Barrier Type 736 Mod
2. Top of Wall
3. Top of Precast Concrete Panel
4. Top of Structure Approach Slab

○ Indicates location of Inspection Wire

O Indicates Underdrain Outlet Pipe, see "MSE WALL DETAILS No. 4" sheet.

◯ Interval in years from Construction to removal of Inspection Wire

NOTES:

1. Top two layers of wire mesh have a base width of 16'-0".
2. All panel spacing is 5'-0" along LOL.

	BY	CHECKED
DESIGN	S. Galgiani	F. Zayati
DETAILS	J. D. Thorne	S. Galgiani
QUANTITIES	S. Galgiani	F. Zayati

STATE OF CALIFORNIA
DEPARTMENT OF TRANSPORTATION

DIVISION OF ENGINEERING SERVICES
STRUCTURE DESIGN
DESIGN BRANCH 14

BRIDGE NO. 53E0150
POST MILE 0.10

MSE WALL NO. E2
STRUCTURE PLAN NO. 1

STRUCTURES DESIGN DETAIL SHEET (ENGLISH) (REV. 10/25/05)

ORIGINAL SCALE IN INCHES FOR REDUCED PLANS 0 1 2 3

CU 07-271
EA 138201

DISREGARD PRINTS BEARING EARLIER REVISION DATES

REVISION DATES: 01-25-10, 03-12-10, 03-26-10, 04-12-10, 04-26-10, 5-27-10

SHEET 2 OF 23

FILE => 53-rwe2_mse_bsp01.dgn

USERNAME => trlenard DATE PLOTTED => 14-OCT-2010 TIME PLOTTED => 10:17

DIST	COUNTY	ROUTE	POST MILES TOTAL PROJECT	SHEET No	TOTAL SHEETS
07	LA	47,103	3.5/4.6, 0.0/1.1	943	1003

REGISTERED CIVIL ENGINEER — DATE 05-24-10

10-11-10
PLANS APPROVAL DATE

REGISTERED PROFESSIONAL ENGINEER — FOUED ZAYATI — No. C57046 — Exp. 06-30-11 — CIVIL — STATE OF CALIFORNIA

The State of California or its officers or agents shall not be responsible for the accuracy or completeness of electronic copies of this plan sheet.

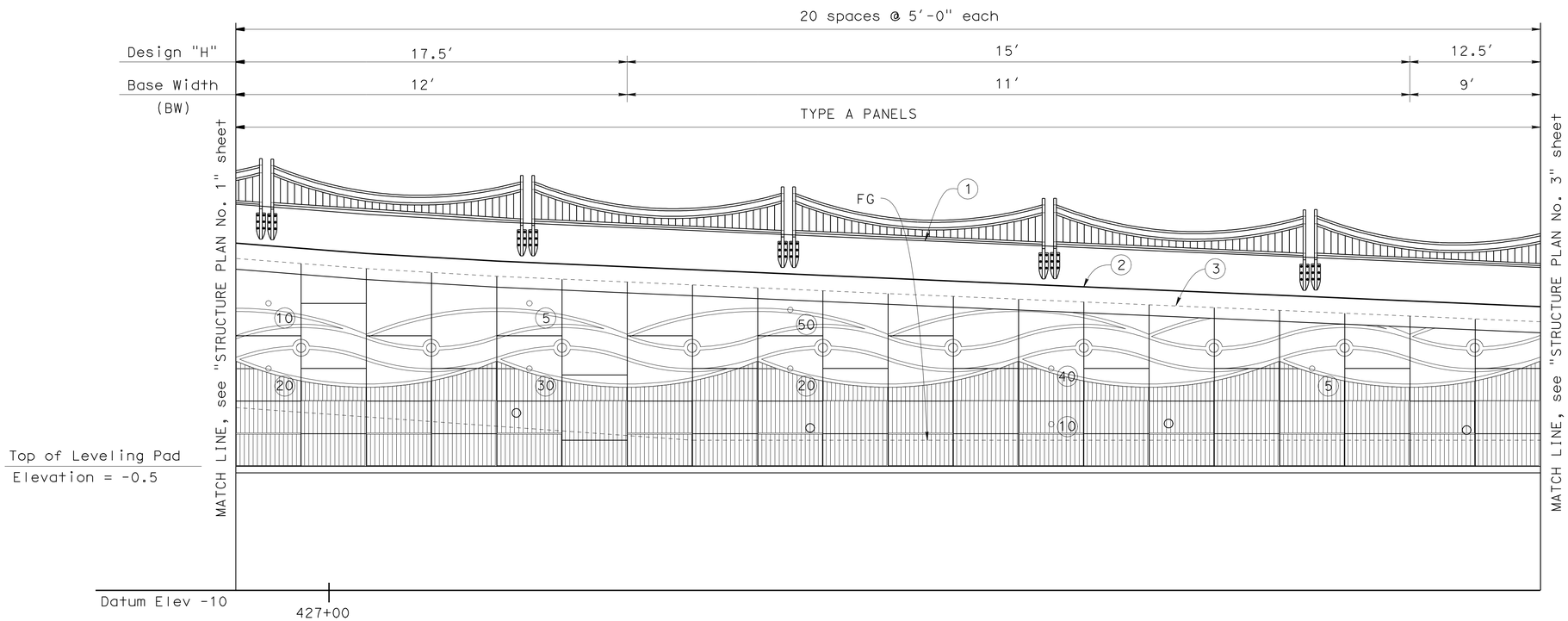

DEVELOPED ELEVATION

1" = 5'

1. Top of Concrete Barrier Type 736 Mod
2. Top of Wall
3. Top of Precast Concrete Panel

○ Indicates location of Inspection Wire

O Indicates Underdrain Outlet Pipe, see "MSE WALL DETAILS No. 4" sheet.

◯ Interval in years from Construction to removal of Inspection Wire

NOTES:

1. Top two layers of wire mesh have a base width of 16'-0".
2. All panel spacing is 5'-0" along LOL.

	BY	CHECKED
DESIGN	S. Galgiani	F. Zayati
DETAILS	J.D. Thorne	S. Galgiani
QUANTITIES	S. Galgiani	F. Zayati

STATE OF CALIFORNIA
DEPARTMENT OF TRANSPORTATION

DIVISION OF ENGINEERING SERVICES
STRUCTURE DESIGN
DESIGN BRANCH 14

BRIDGE NO. 53E0150
POST MILE 0.10

MSE WALL NO. E2
STRUCTURE PLAN NO. 2

STRUCTURES DESIGN DETAIL SHEET (ENGLISH) (REV. 10/25/05)

ORIGINAL SCALE IN INCHES FOR REDUCED PLANS 0 1 2 3

CU 07-271
EA 138201

DISREGARD PRINTS BEARING EARLIER REVISION DATES

REVISION DATES: 01-25-10, 03-12-10, 04-12-10, 04-20-10, 5-27-10

SHEET 3 OF 23

FILE => 53-rwe2_mse_bsp02.dgn

USERNAME => friehard DATE PLOTTED => 14-OCT-2010 TIME PLOTTED => 10:17

DIST	COUNTY	ROUTE	POST MILES TOTAL PROJECT	SHEET No	TOTAL SHEETS
07	LA	47,103	3.5/4.6, 0.0/1.1	944	1003

REGISTERED CIVIL ENGINEER — DATE 05-24-10

10-11-10
PLANS APPROVAL DATE

REGISTERED PROFESSIONAL ENGINEER — FOUED ZAYATI — No. C57046 — Exp. 06-30-11 — CIVIL — STATE OF CALIFORNIA

The State of California or its officers or agents shall not be responsible for the accuracy or completeness of electronic copies of this plan sheet.

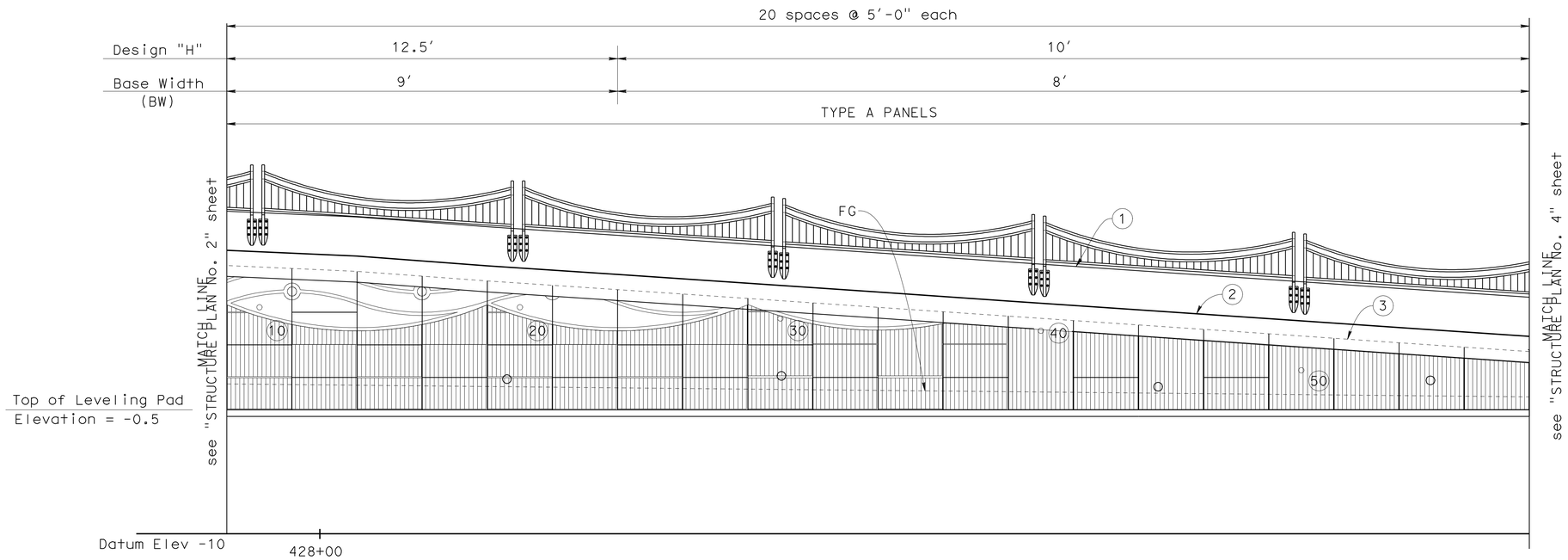

DEVELOPED ELEVATION

1" = 5'

1. Top of Concrete Barrier Type 736 Mod
2. Top of Wall
3. Top of Precast Concrete Panel

○ Indicates location of Inspection Wire

O Indicates Underdrain Outlet Pipe, see "MSE WALL DETAILS No. 4" sheet.

◯ Interval in years from Construction to removal of Inspection Wire

NOTES:

1. Top two layers of wire mesh have a base width of 16'-0".
2. All panel spacing is 5'-0" along LOL.

	BY	CHECKED
DESIGN	S. Galgiani	F. Zayati
DETAILS	J. D. Thorne	S. Galgiani
QUANTITIES	S. Galgiani	F. Zayati

STATE OF CALIFORNIA
DEPARTMENT OF TRANSPORTATION

DIVISION OF ENGINEERING SERVICES
STRUCTURE DESIGN
DESIGN BRANCH 14

BRIDGE NO. 53E0150
POST MILE 0.10

MSE WALL NO. E2
STRUCTURE PLAN NO. 3

STRUCTURES DESIGN DETAIL SHEET (ENGLISH) (REV. 10/25/05)

ORIGINAL SCALE IN INCHES FOR REDUCED PLANS 0 1 2 3

CU 07-271
EA 138201

DISREGARD PRINTS BEARING EARLIER REVISION DATES

REVISION DATES: 01-25-10, 04-12-10, 04-26-10, 05-14-10, 5-27-10

SHEET 4 OF 23

FILE => 53-rwe2_mse_bsp03.dgn

USERNAME => friehard DATE PLOTTED => 14-OCT-2010 TIME PLOTTED => 10:18

DIST	COUNTY	ROUTE	POST MILES TOTAL PROJECT	SHEET No	TOTAL SHEETS
07	LA	47,103	3.5/4.6, 0.0/1.1	945	1003

REGISTERED CIVIL ENGINEER — DATE 05-24-10

10-11-10
PLANS APPROVAL DATE

REGISTERED PROFESSIONAL ENGINEER — FOUED ZAYATI — No. C57046 — Exp. 06-30-11 — CIVIL — STATE OF CALIFORNIA

The State of California or its officers or agents shall not be responsible for the accuracy or completeness of electronic copies of this plan sheet.

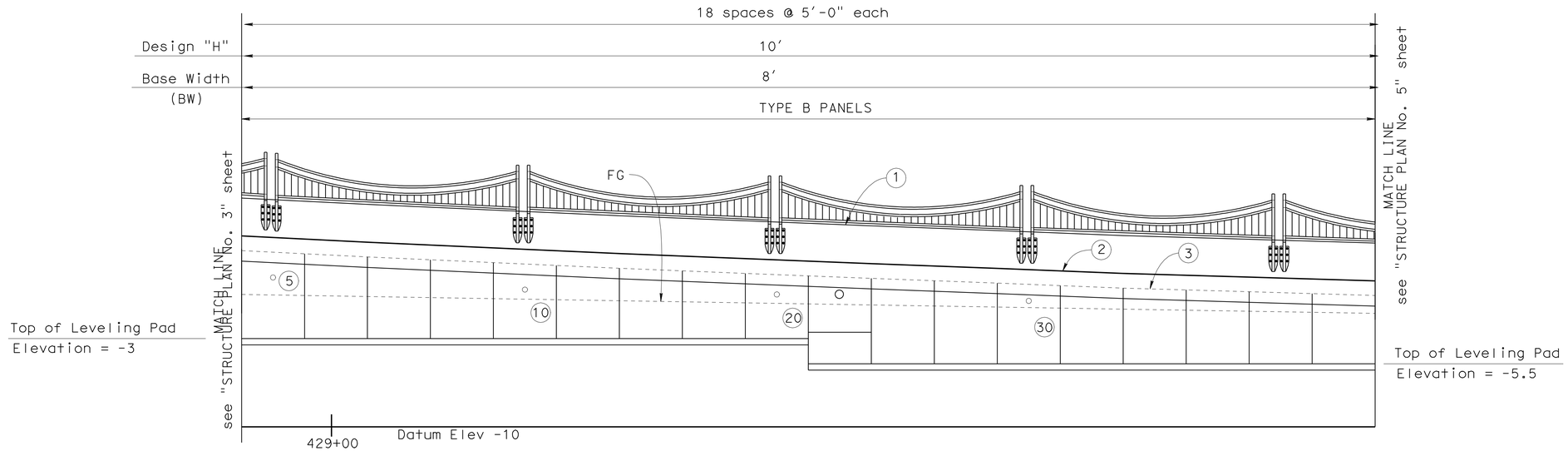

DEVELOPED ELEVATION

1" = 5'

(1) Top of Concrete Barrier Type 736 Mod

(2) Top of Wall

(3) Top of Precast Concrete Panel

○ Indicates location of Inspection Wire

O Indicates Underdrain Outlet Pipe, see "MSE WALL DETAILS No. 4" sheet.

◯ Interval in years from Construction to removal of Inspection Wire

NOTES:

1. Top two layers of wire mesh have a base width of 16'-0".
2. All panel spacing is 5'-0" along LOL.

DESIGN	BY S. Galgiani	CHECKED F. Zayati
DETAILS	BY J. D. Thorne	CHECKED S. Galgiani
QUANTITIES	BY S. Galgiani	CHECKED F. Zayati

STATE OF CALIFORNIA
DEPARTMENT OF TRANSPORTATION

DIVISION OF ENGINEERING SERVICES
STRUCTURE DESIGN
DESIGN BRANCH 14

BRIDGE NO. 53E0150
POST MILE 0.10

MSE WALL NO. E2
STRUCTURE PLAN NO. 4

STRUCTURES DESIGN DETAIL SHEET (ENGLISH) (REV. 10/25/05)

ORIGINAL SCALE IN INCHES FOR REDUCED PLANS 0 1 2 3

CU 07-271
EA 138201

DISREGARD PRINTS BEARING EARLIER REVISION DATES

REVISION DATES: 01-26-10, 03-12-10, 04-12-10, 04-20-10

SHEET 5 OF 23

FILE => 53-rwe2_mse_bsp04.dgn

USERNAME => rlenard DATE PLOTTED => 14-OCT-2010 TIME PLOTTED => 10:18

DIST	COUNTY	ROUTE	POST MILES TOTAL PROJECT	SHEET No	TOTAL SHEETS
07	LA	47,103	3.5/4.6, 0.0/1.1	946	1003

REGISTERED CIVIL ENGINEER — DATE: 05-24-10

10-11-10
PLANS APPROVAL DATE

REGISTERED PROFESSIONAL ENGINEER — FOUED ZAYATI — No. C57046 — Exp. 06-30-11 — CIVIL — STATE OF CALIFORNIA

The State of California or its officers or agents shall not be responsible for the accuracy or completeness of electronic copies of this plan sheet.

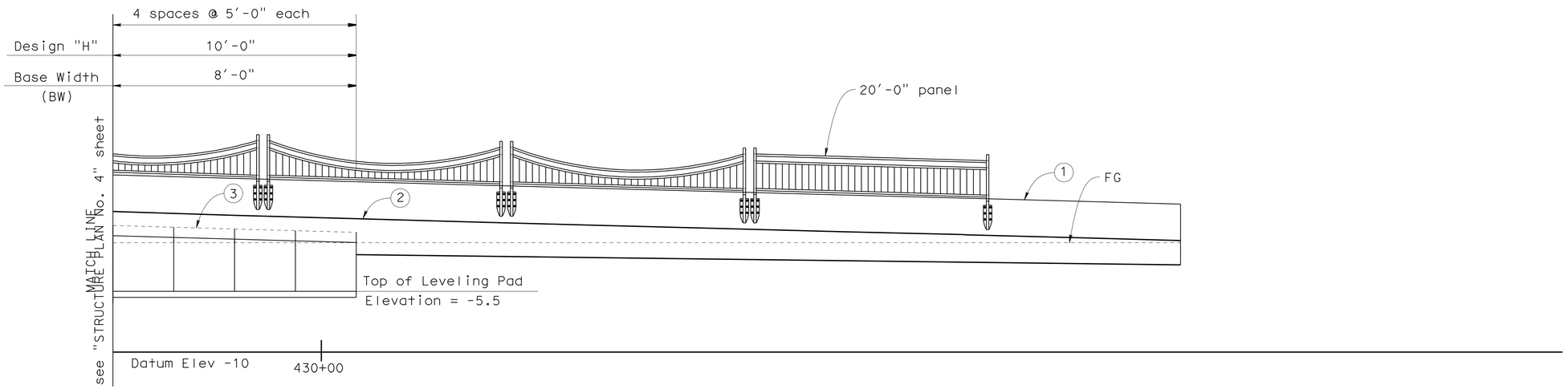

DEVELOPED ELEVATION

1" = 5'

1. Top of Concrete Barrier Type 736 Mod
2. Top of Wall
3. Top of Precast Concrete Panel

○ Indicates location of Inspection Wire

O Indicates Underdrain Outlet Pipe, see "MSE WALL DETAILS NO. 4" sheet.

◯ Interval in years from Construction to removal of Inspection Wire

NOTES:

1. Top two layers of wire mesh have a base width of 16'-0".
2. All panel spacing is 5'-0" along LOL.

	BY	CHECKED
DESIGN	S. Galgiani	F. Zayati
DETAILS	J. D. Thorne	S. Galgiani
QUANTITIES	S. Galgiani	F. Zayati

STATE OF CALIFORNIA
DEPARTMENT OF TRANSPORTATION

DIVISION OF ENGINEERING SERVICES
STRUCTURE DESIGN
DESIGN BRANCH 14

BRIDGE NO. 53E0150
POST MILE 0.10

MSE WALL NO. E2
STRUCTURE PLAN NO. 5

STRUCTURES DESIGN DETAIL SHEET (ENGLISH) (REV. 10/25/05)

ORIGINAL SCALE IN INCHES FOR REDUCED PLANS 0 1 2 3

CU 07-271
EA 138201

DISREGARD PRINTS BEARING EARLIER REVISION DATES

REVISION DATES: 03-12-10, 04-12-10, 04-20-10, 5-27-10

SHEET 6 OF 23

FILE => 53-rwe2_mse_bsp05.dgn

USERNAME => friehard DATE PLOTTED => 14-OCT-2010 TIME PLOTTED => 10:18

DIST	COUNTY	ROUTE	POST MILES TOTAL PROJECT	SHEET No.	TOTAL SHEETS
07	LA	47,103	3.5/4.6, 0.0/1.1	947	1003

Foued Zayati 05-24-10
REGISTERED CIVIL ENGINEER

10-11-10
PLANS APPROVAL DATE

REGISTERED PROFESSIONAL ENGINEER
FOUED ZAYATI
No. C57046
Exp. 06-30-11
CIVIL
STATE OF CALIFORNIA

The State of California or its officers or agents shall not be responsible for the accuracy or completeness of electronic copies of this plan sheet.

CURVE DATA				
No.	R	Δ	T	L
1	859.02′	11°7′52.02"	83.70′	166.8858′
2	860.00′	04°14′2.11"	31.789′	63.5504′
3	400′	05°32′58.19"	19.387′	38.7428′

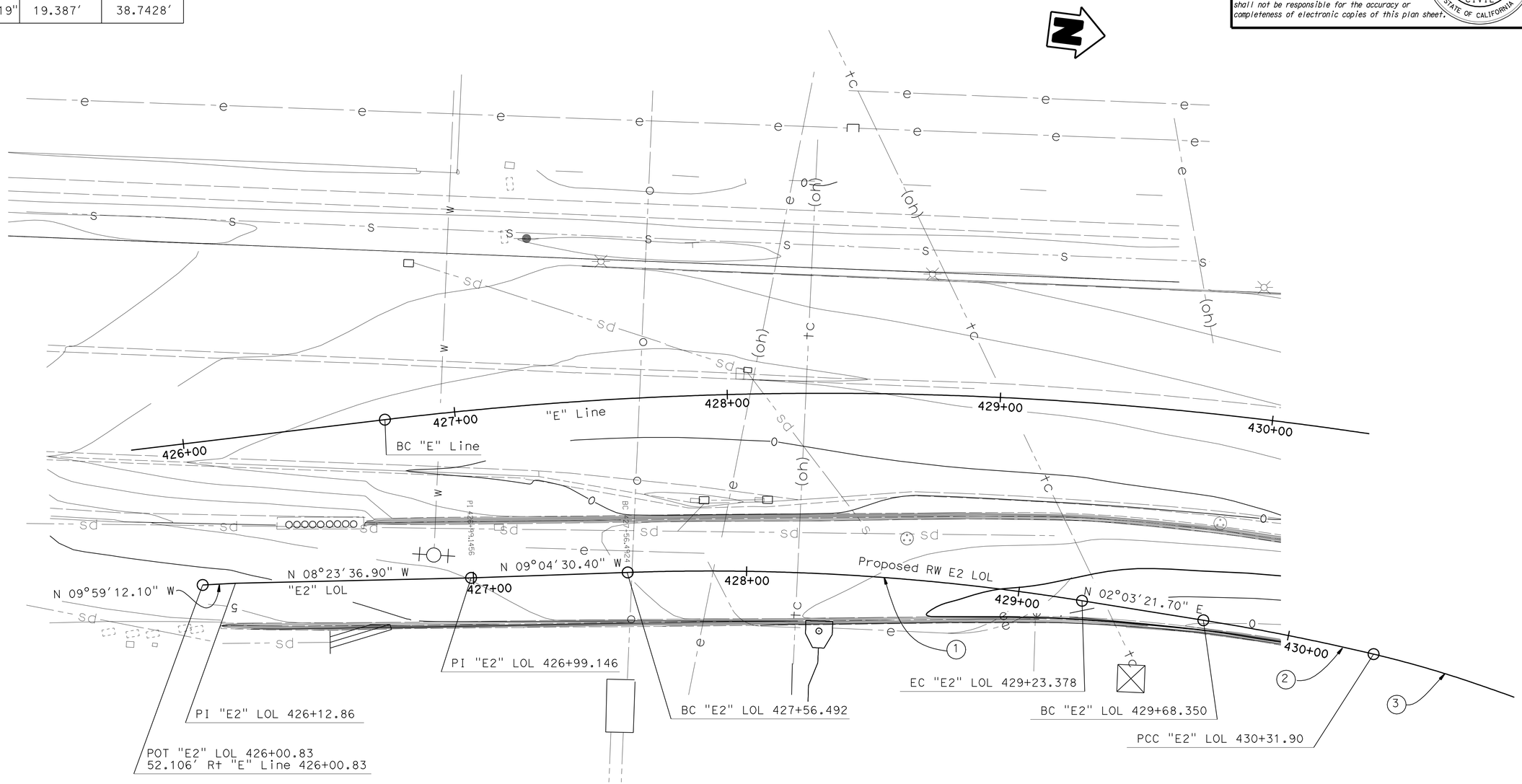

SURVEY CONTROL

PT-PMHV508 (NOT SHOWN)
SET MAG NAIL
59.862′ Rt ℄ "G" Line
Sta 611+10.34
N 1739008.13
E 6488683.32
Elev. = 12.18

PT-PMHV513 (NOT SHOWN)
SET PUN SPK
5.264′ Rt. ℄ "G" Line
Sta 609+51.88
N 1738843.39
E 6488642.44
Elev. = -3.62

HNTB *Corporation*
200 E. SANDPOINTE AVENUE, SUITE 200
SANTA ANA, CALIFORNIA 92707

SCALE: 1:20	VERT.DATUM NAVD 88		HORZ.DATUM NAD 83		
PHOTOGRAMMETRY AS OF:		ALIGNMENT TIES Dist. Trav. Sheet			
SURVEYED	BY COAST SURVEY 1207	DRAFTED	BY L. Zhang		
FIELD CHECKED	BY D. Chang	CHECKED	BY D. Chang		

	BY	CHECKED
DESIGN	S. Galgiani	F. Zayati
DETAILS	J. D. Thorne	S. Galgiani
QUANTITIES	S. Galgiani	F. Zayati

PREPARED FOR THE STATE OF CALIFORNIA DEPARTMENT OF TRANSPORTATION

PROJECT ENGINEER

BRIDGE NO. 53E0150
POST MILE 0.10

MSE WALL NO. E2
FOUNDATION PLAN

FOUNDATION PLAN SHEET (ENGLISH) (REV. 5/9/00)

ORIGINAL SCALE IN INCHES FOR REDUCED PLANS 0 1 2 3

CU 07-271
EA 138201

DISREGARD PRINTS BEARING EARLIER REVISION DATES

REVISION DATES (PRELIMINARY STAGE ONLY): ~~08-13-08~~ ~~12-12-08~~ ~~3-4-09~~ ~~3-26-10~~ ~~04-12-10~~ 06-29-10

SHEET 7 OF 23

FILE => 53-rwe2_mse_cfp.dgn

USERNAME => rtrienard DATE PLOTTED => 14-OCT-2010 TIME PLOTTED => 10:18

DIST	COUNTY	ROUTE	POST MILES TOTAL PROJECT	SHEET No	TOTAL SHEETS
07	LA	47,103	3.5/4.6, 0.0/1.1	948	1003

REGISTERED CIVIL ENGINEER — DATE 05-24-10

10-11-10
PLANS APPROVAL DATE

REGISTERED PROFESSIONAL ENGINEER — FOUED ZAYATI — No. C57046 — Exp. 06-30-11 — CIVIL — STATE OF CALIFORNIA

The State of California or its officers or agents shall not be responsible for the accuracy or completeness of electronic copies of this plan sheet.

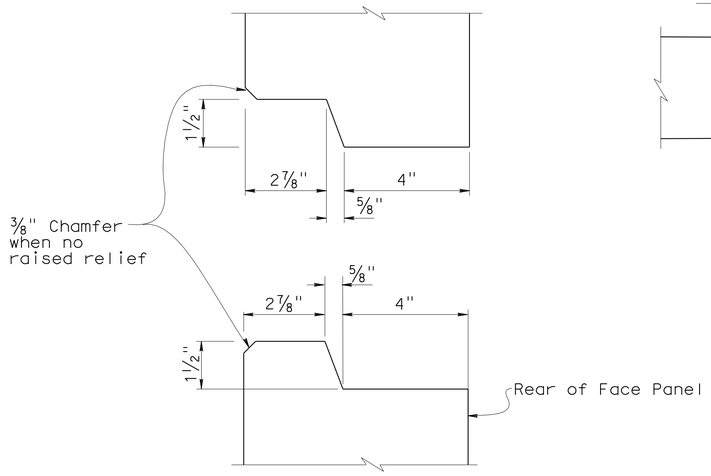

HORIZONTAL JOINT DETAIL

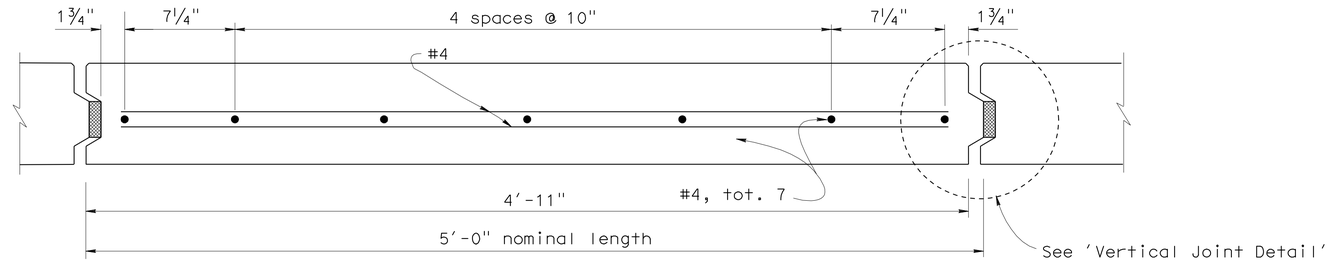

PLAN - FACE PANEL

NOTES:

1. Architectural treatment not shown.
2. Place reinforced Elastomeric Bearing Pads in all of the panel joints between the panels. Place one in each vertical joint where the horizontal joint intersects it. Place two per panel in each horizontal joint.
   ¾" x 2⅜" x 6" for vertical joints
   ¾" x 4" x 6" for horizontal joints.
3. Bond a strip of filter fabric, 1' - 0" wide, over the full length of all panel joints.

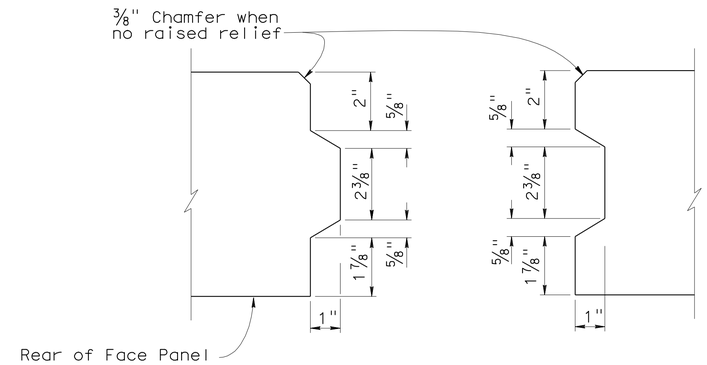

VERTICAL JOINT DETAIL

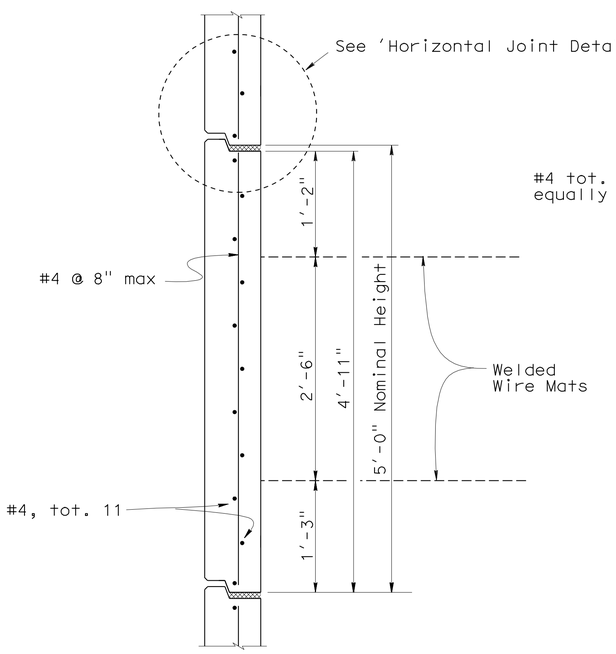

INTERMEDIATE PANEL

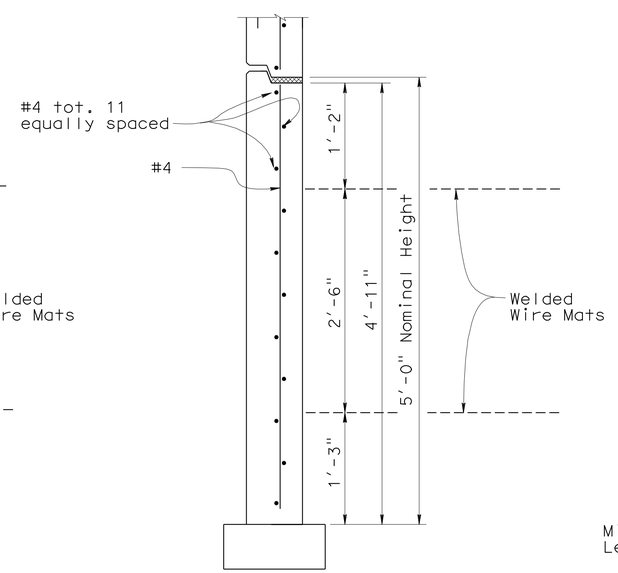

BOTTOM PANEL

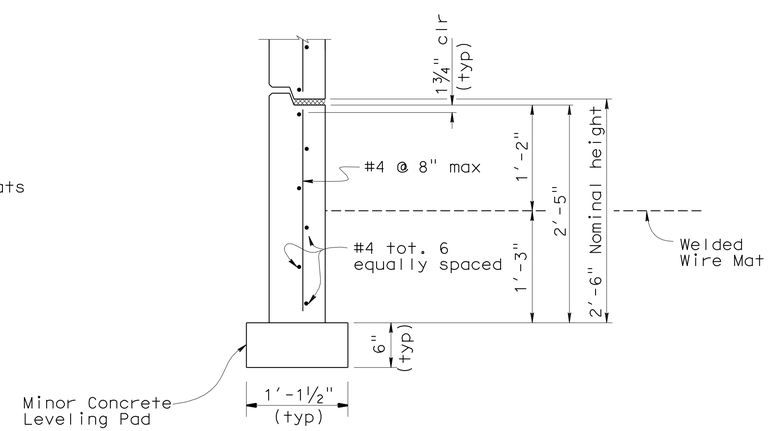

BOTTOM HALF PANEL

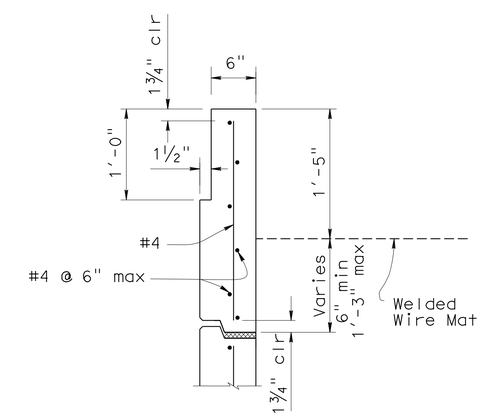

TOP PANEL

No Scale

	BY	CHECKED
DESIGN	S. Galgiani	F. Zayati
DETAILS	J. D. Thorne	S. Galgiani
QUANTITIES	S. Galgiani	F. Zayati

STATE OF CALIFORNIA
DEPARTMENT OF TRANSPORTATION

DIVISION OF ENGINEERING SERVICES
STRUCTURE DESIGN
DESIGN BRANCH 14

BRIDGE NO. 53E0150
POST MILE 0.10

MSE WALL NO. E2
MSE WALL DETAILS NO. 1 - TYPE A PANELS

STRUCTURES DESIGN DETAIL SHEET (ENGLISH) (REV. 10/25/05)

ORIGINAL SCALE IN INCHES FOR REDUCED PLANS 0 1 2 3

CU 07-271
EA 138201

DISREGARD PRINTS BEARING EARLIER REVISION DATES

REVISION DATES: 2-03-10 5-24-10 6-03-10

SHEET 8 OF 23

FILE => 53-rwe2_mse_edet01.dgn

USERNAME => trlenard DATE PLOTTED => 14-OCT-2010 TIME PLOTTED => 10:18

DIST	COUNTY	ROUTE	POST MILES TOTAL PROJECT	SHEET No	TOTAL SHEETS
07	LA	47,103	3.5/4.6, 0.0/1.1	949	1003

REGISTERED CIVIL ENGINEER — DATE 05-24-10

10-11-10
PLANS APPROVAL DATE

REGISTERED PROFESSIONAL ENGINEER — FOUED ZAYATI — No. C57046 — Exp. 06-30-11 — CIVIL — STATE OF CALIFORNIA

The State of California or its officers or agents shall not be responsible for the accuracy or completeness of electronic copies of this plan sheet.

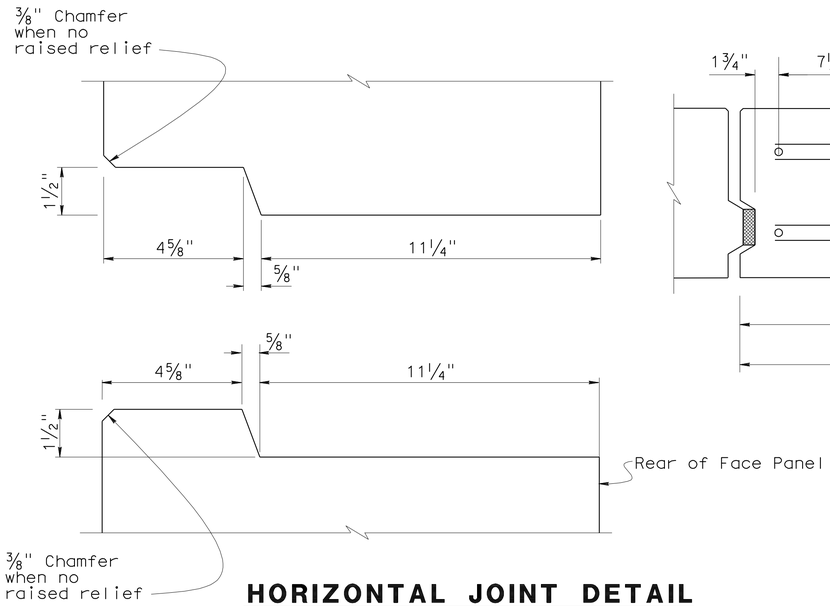

HORIZONTAL JOINT DETAIL

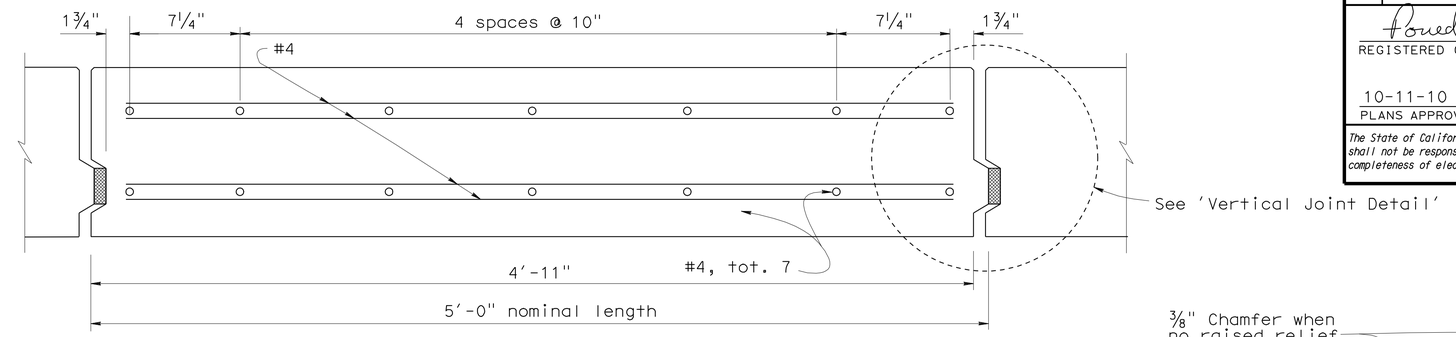

PLAN - FACE PANEL

NOTES:

1. Architectural treatment not shown.
2. Place reinforced Elastomeric Bearing Pads in all of the panel joints between the panels. Place one in each vertical joint where the horizontal joint intersects it. Place two per panel in each horizontal joint.
   3/4" x 2 3/8" x 6" for vertical joints
   3/4" x 6" x 6" for horizontal joints.
3. Bond a strip of filter fabric, 1' - 0" wide, over the full length of all panel joints.

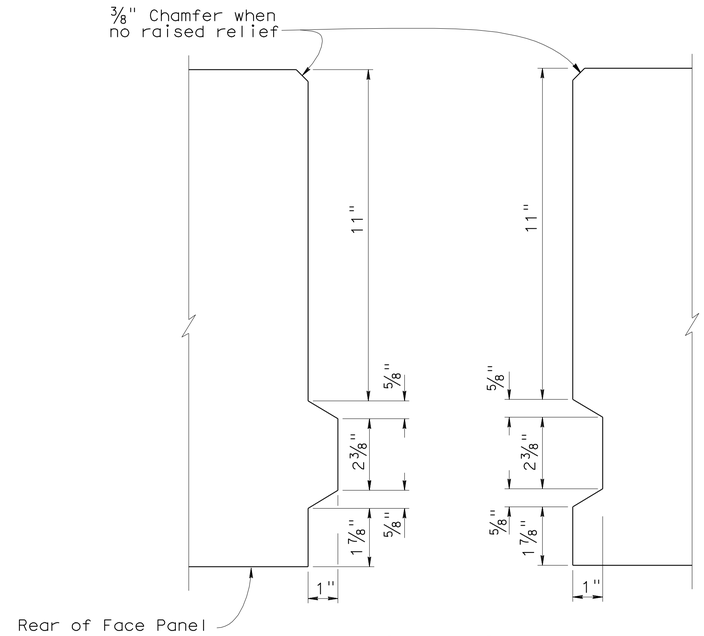

VERTICAL JOINT DETAIL

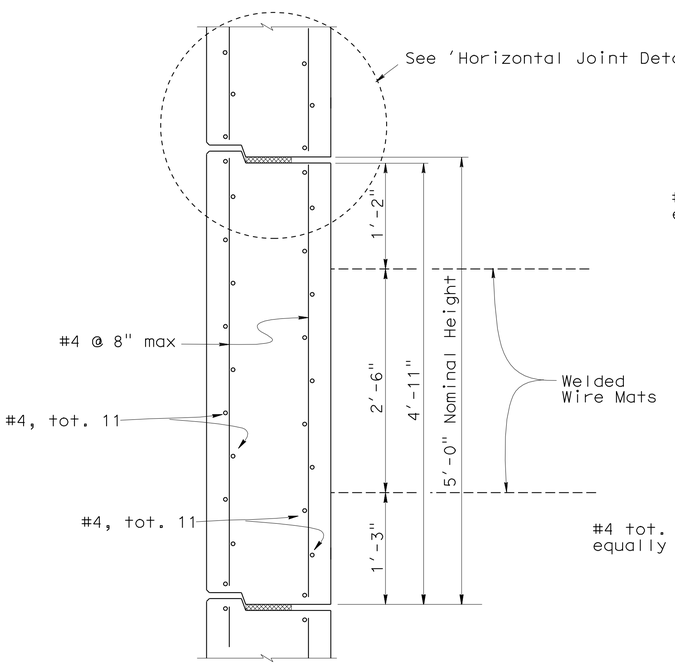

INTERMEDIATE PANEL

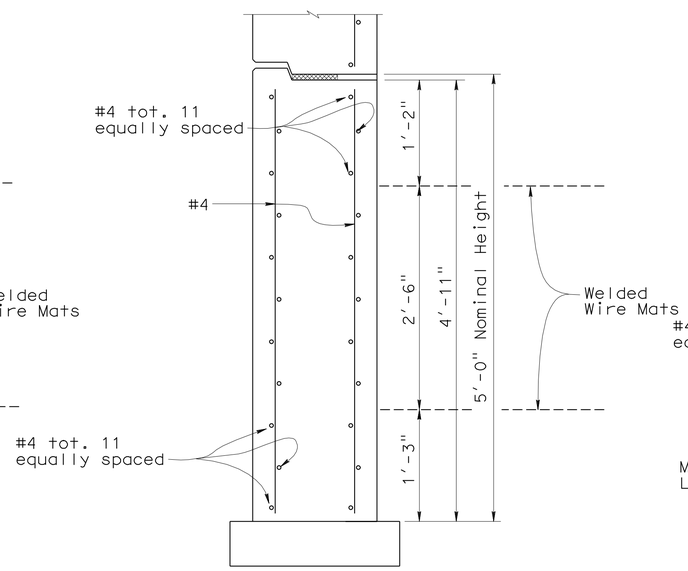

BOTTOM PANEL

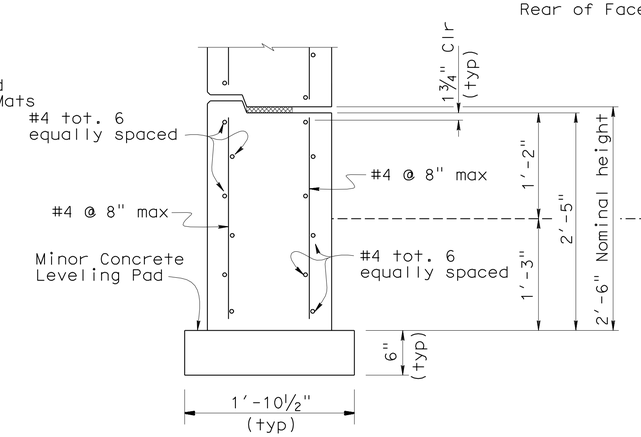

BOTTOM HALF PANEL

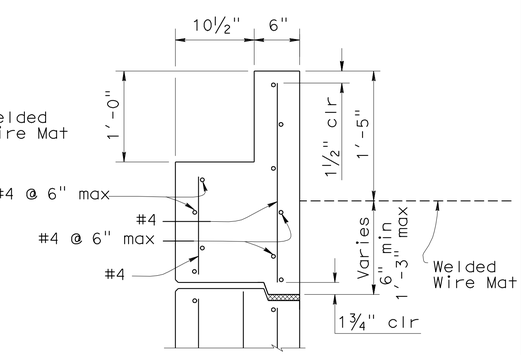

TOP PANEL

No Scale

DESIGN	BY S. Galgiani	CHECKED F. Zayati	
DETAILS	BY J. D. Thorne	CHECKED S. Galgiani	
QUANTITIES	BY S. Galgiani	CHECKED F. Zayati	

STATE OF CALIFORNIA
DEPARTMENT OF TRANSPORTATION

DIVISION OF ENGINEERING SERVICES
STRUCTURE DESIGN
DESIGN BRANCH 14

BRIDGE NO. 53E0150
POST MILE 0.10

MSE WALL NO. E2
MSE WALL DETAILS NO. 2 - TYPE B PANELS

STRUCTURES DESIGN DETAIL SHEET (ENGLISH) (REV. 10/25/05)

ORIGINAL SCALE IN INCHES FOR REDUCED PLANS 0 1 2 3

CU 07-271
EA 138201

DISREGARD PRINTS BEARING EARLIER REVISION DATES

REVISION DATES: 2-08-10, 3-23-10, 5-21-10, 6-03-10

SHEET 9 OF 23

FILE => 53-rwe2_mse_edet02.dgn

USERNAME => friehard DATE PLOTTED => 14-OCT-2010 TIME PLOTTED => 10:18

DIST.	COUNTY	ROUTE	POST MILES TOTAL PROJECT	SHEET NO.	TOTAL SHEETS
07	LA	47,103	3.5/4.6, 0.0/1.1	950	1003

Foued Zayati 05-24-10
REGISTERED ENGINEER - CIVIL

10-11-10
PLANS APPROVAL DATE

REGISTERED PROFESSIONAL ENGINEER FOUED ZAYATI No. C57046 Exp. 06-30-11 CIVIL STATE OF CALIFORNIA

The State of California or its officers or agents shall not be responsible for the accuracy or completeness of electronic copies of this plan sheet.

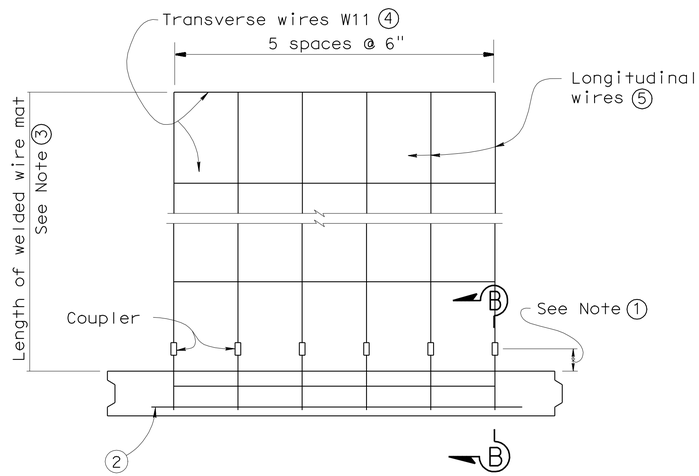

PLAN OF PANEL WITH WELDED WIRE MAT
No scale

GENERAL NOTES (MSE WALLS)

Live loading: Surcharge = 240 lb/ft^2

Soil parameters:

Internal design ϕ = 34°, γ = 120 lb/ft^3
External design ϕ(Backfill) = 34°, γ = 120 lb/ft^3
ϕ(Foundation) = 30°

Precast concrete panels:

f′c = 4,000 psi (Concrete compressive strength at 28 days)
fy = 60,000 psi (Yield strength of reinforcement)

Soil reinforcement:

Welded wire mats: fy = 65,000 psi (Yield strength)
Coupler: fy = 36,000 psi (Yield strength)
Corrosion rate = 1.1 mils/year

Reinforced concrete:

f′c = 3,600 psi, except as noted
(Concrete compressive strength at 28 days)

fy = 60,000 psi (Yield strength of reinforcement)

MSE = Mechanically stabilized embankment

Notes:

① Distance as required to permit coupler to be swaged.

② Place #4 bar, 3′ - 2" long, centered on connector mat, but not welded to it.

③ Length equals "Base width" of wall, except it shall not be less than 16′ for the top 2 levels of mats at the top of the wall.

④ All Transverse Wires size W11 at various spacings as shown elsewhere in plans.

⑤ All Longitudinal Wires at 6" spacing, of various sizes, as shown elsewhere in plans.

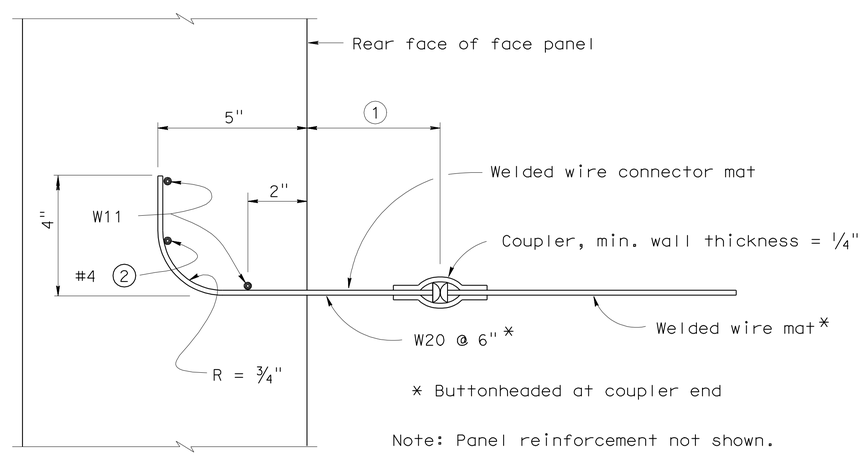

SECTION B-B
No scale

STANDARD DRAWING

FILE NO. xs13-020-3e

APPROVED BY K. GRISWELL
RESPONSIBLE TECHNICAL SPECIALIST
APPROVAL DATE 5-6-08

RELEASED BY ROBERTO LACALLE
RESPONSIBLE OFFICE CHIEF
RELEASE DATE 5-6-08

1 Modified Detail

STATE OF CALIFORNIA
DEPARTMENT OF TRANSPORTATION

DIVISION OF ENGINEERING SERVICES

BRIDGE NO. 53E0150
POST MILE 0.10

MSE WALL NO. E2
MSE WALL DETAILS NO. 3

DS OSD 2147A (ENGLISH STANDARD DRAWING "XS" BORDER REV. 01/11/08)

ORIGINAL SCALE IN INCHES FOR REDUCED PLANS 0 1 2 3

CU 07-271
EA 138201

DISREGARD PRINTS BEARING EARLIER REVISION DATES

REVISION DATES (PRELIMINARY STAGE ONLY) 2-03-10 3-22-10 05-19-10

SHEET 10 OF 23

USERNAME => trlenard

53-rwe2_mse_edet03.dgn

DATE PLOTTED => 14-OCT-2010 TIME PLOTTED => 10:18

DIST	COUNTY	ROUTE	POST MILES TOTAL PROJECT	SHEET No	TOTAL SHEETS
07	LA	47,103	3.5/4.6, 0.0/1.1	951	1003

REGISTERED CIVIL ENGINEER — DATE 05-24-10

10-11-10
PLANS APPROVAL DATE

REGISTERED PROFESSIONAL ENGINEER — FOUED ZAYATI — No. C57046 — Exp. 06-30-11 — CIVIL — STATE OF CALIFORNIA

The State of California or its officers or agents shall not be responsible for the accuracy or completeness of electronic copies of this plan sheet.

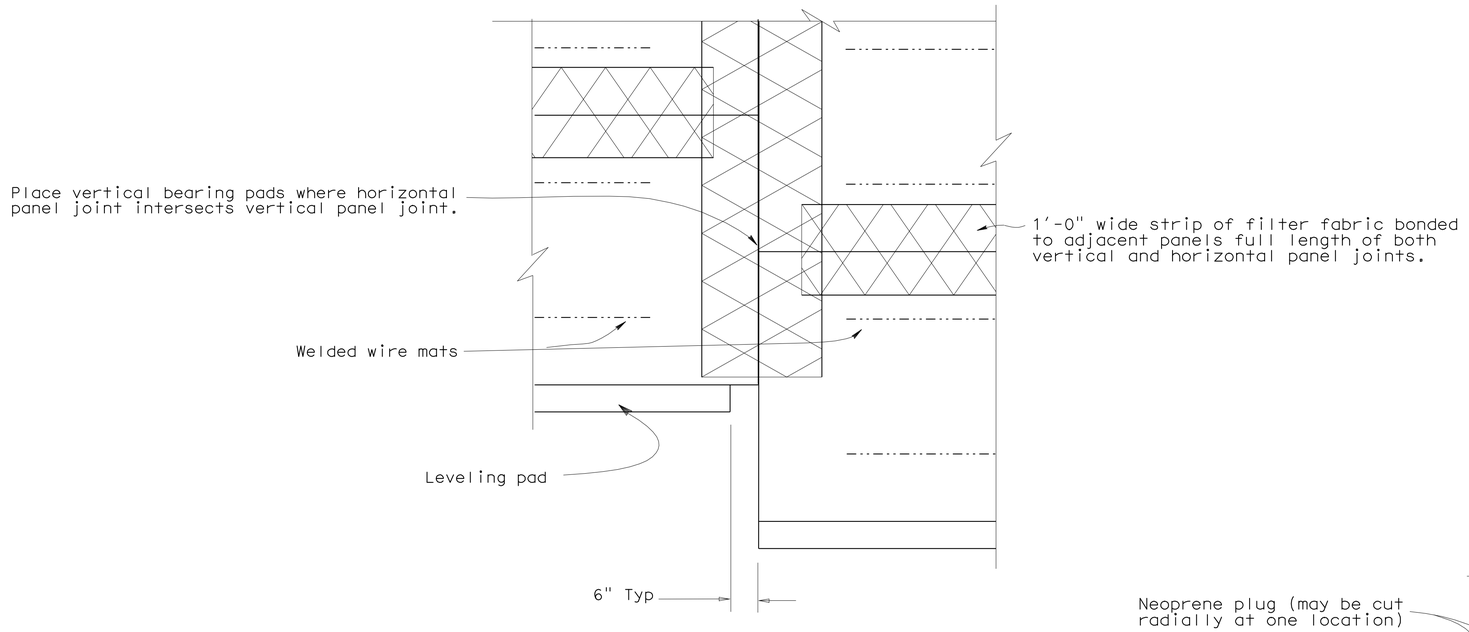

REAR ELEVATION

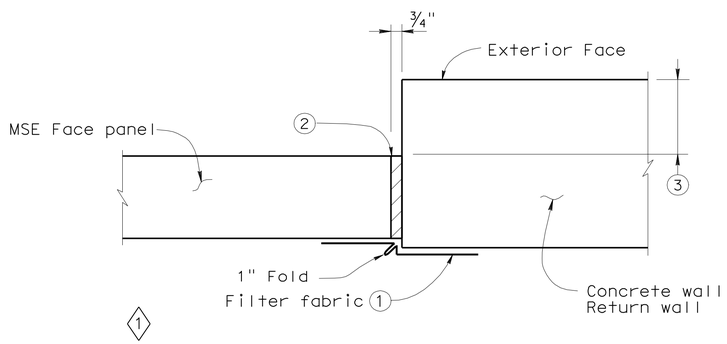

MSE FACE PANEL-TO-CONCRETE WALL JOINT DETAIL

LEGEND:

1. Bond a strip of filter fabric, 1'-6" wide, to back of MSE panels and the adjacent concrete wall for entire length of vertical joint.
2. Bond expansion joint material to the concrete wall.
3. Offset between face of MSE face panel and face of the concrete wall as dictated by location of layout lines shown elsewhere in Project Plans.

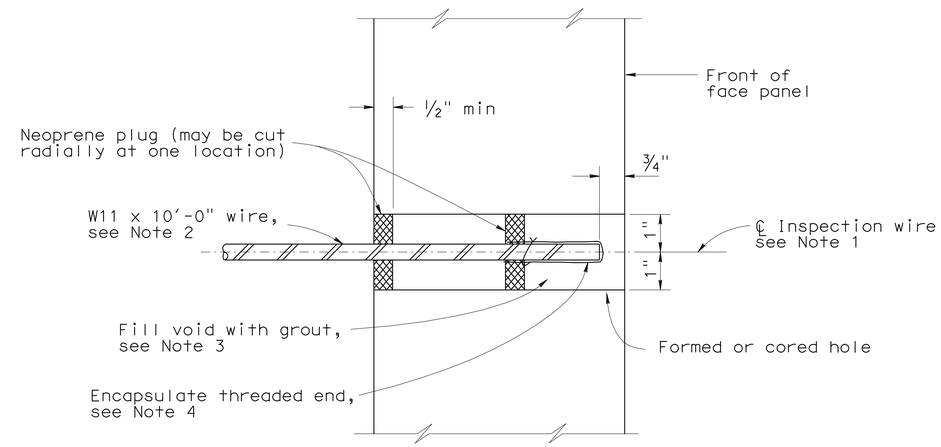

SECTION THRU INSPECTION WIRE

NOTES:

1. Center inspection wire in face panel.
2. Fabricate inspection wires from W11 wire representative of the welded wire mats, with ⅜" dia - 16 UNC threads for at least 1½" of one end.
3. Place inspection wire horizontal and perpendicular to the wall panel prior to backfilling. After backfill placement to a level at least 2'-0" above the inspection wire, dry pack opening with 1000 to 1500 psi mortar. Trowel mortar smooth and flush with face of panel.
4. Encapsulate threaded end with corrosion inhibiting mastic, and secure round vinyl cover with nylon tie.

   UNC = Unified coarse threads

	BY	CHECKED
DESIGN	S. Galgiani	J. Lane
DETAILS	K. Kubo	F. Zayati
QUANTITIES	S. Galgiani	S. Galgiani

STATE OF CALIFORNIA
DEPARTMENT OF TRANSPORTATION

DIVISION OF ENGINEERING SERVICES
STRUCTURE DESIGN
DESIGN BRANCH 14

BRIDGE NO. 53E0150
POST MILE 0.10

MSE WALL NO. E2
MSE WALL DETAILS NO. 4

STRUCTURES DESIGN DETAIL SHEET (ENGLISH) (REV. 10/25/05)

ORIGINAL SCALE IN INCHES FOR REDUCED PLANS 0 1 2 3

CU 07-271
EA 138201

DISREGARD PRINTS BEARING EARLIER REVISION DATES

REVISION DATES: 02-03-10 04-09-10 04-26-10 05-19-10

SHEET 11 OF 23

FILE => 53-rwe2_mse_edet04.dgn

USERNAME => friehard DATE PLOTTED => 14-Oct-2010 TIME PLOTTED => 13:17

DIST	COUNTY	ROUTE	POST MILES TOTAL PROJECT	SHEET No	TOTAL SHEETS
07	LA	47,103	3.5/4.6, 0.0/1.1	952	1003

REGISTERED CIVIL ENGINEER — DATE 05-24-10

10-11-10
PLANS APPROVAL DATE

REGISTERED PROFESSIONAL ENGINEER — FOUED ZAYATI — No. C57046 — Exp. 06-30-11 — CIVIL — STATE OF CALIFORNIA

The State of California or its officers or agents shall not be responsible for the accuracy or completeness of electronic copies of this plan sheet.

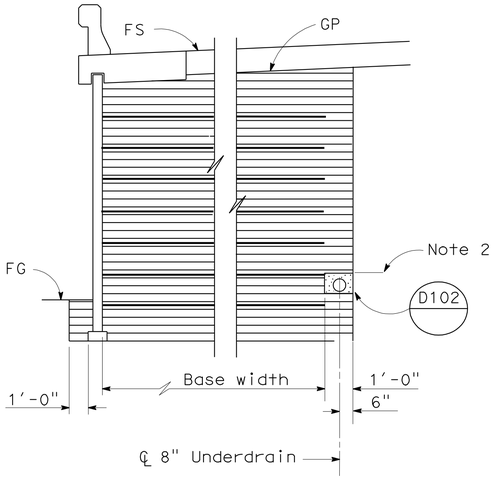

ROADWAY SECTION WITH BASE WIDTH 16' OR GREATER

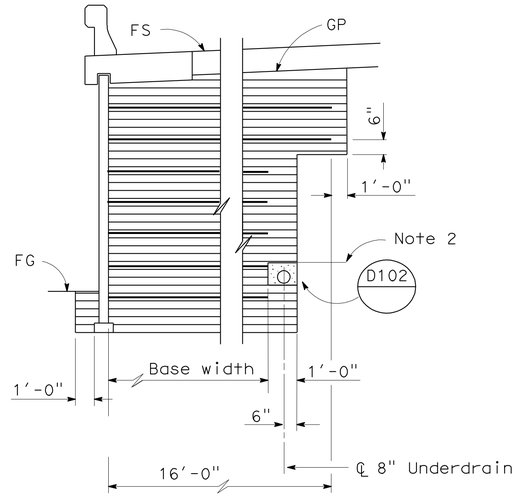

ROADWAY SECTION WITH BASE WIDTH LESS THAN 16'

No Scale

LIMITS OF BACKFILL

No Scale

MSE WALL DRAINAGE NOTES:

1. Locate 8" perforated underdrain 1.0' above FG adjacent to Face of Wall.
2. Maximum spacing of outlet pipes is 50 ft.
3. At sags in profile of underdrain, install outlet pipe for each direction of flow.

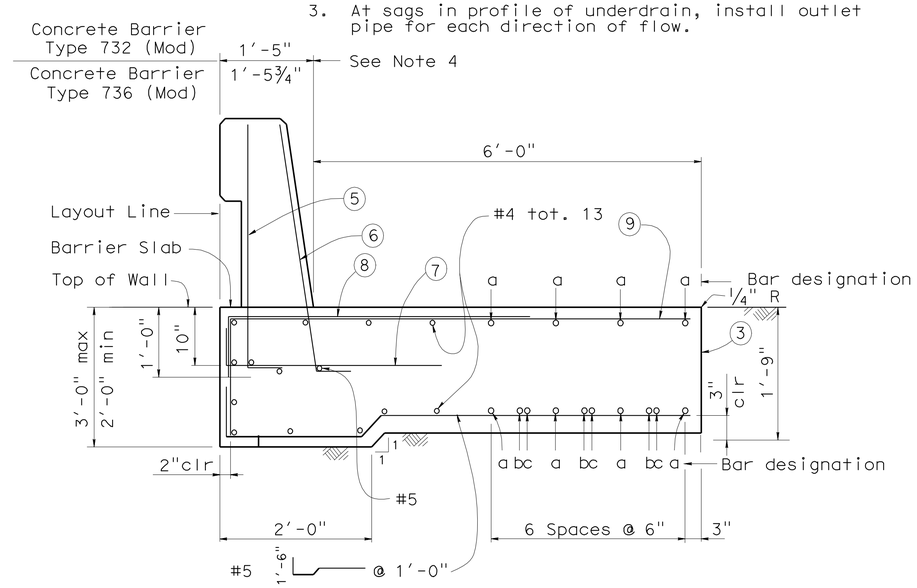

SECTION PAST MSE PANELS BARRIER SLAB AND CONCRETE BARRIER

No Scale

BARRIER SLAB NOTES:

1. Clearance to reinforcing steel in concrete barrier to be 1".
2. Not all barrier reinforcement shown.
3. No expansion joints in concrete barrier or barrier slab within MSE wall limits.
4. Specific concrete barrier to be utilized as shown on typical section elsewhere in Project Plans.
5. Install cable railing or chain link fence when indicated in Project Plans.

"a" bar = #6 cont
"b" bar = #6 x 59'-0"
"c" bar = #6 49'-2"
Place "b" and "c" bars at beginning and ending ends of Barrier Slab.

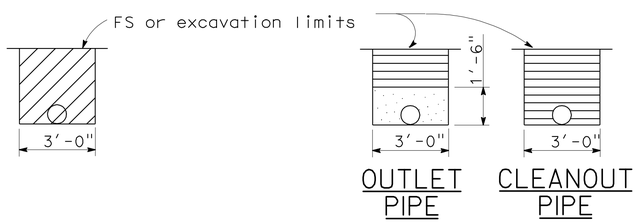

EXCAVATION — BACKFILL

OUTLET OR CLEANOUT PIPE FOR UNDERDRAIN

No Scale

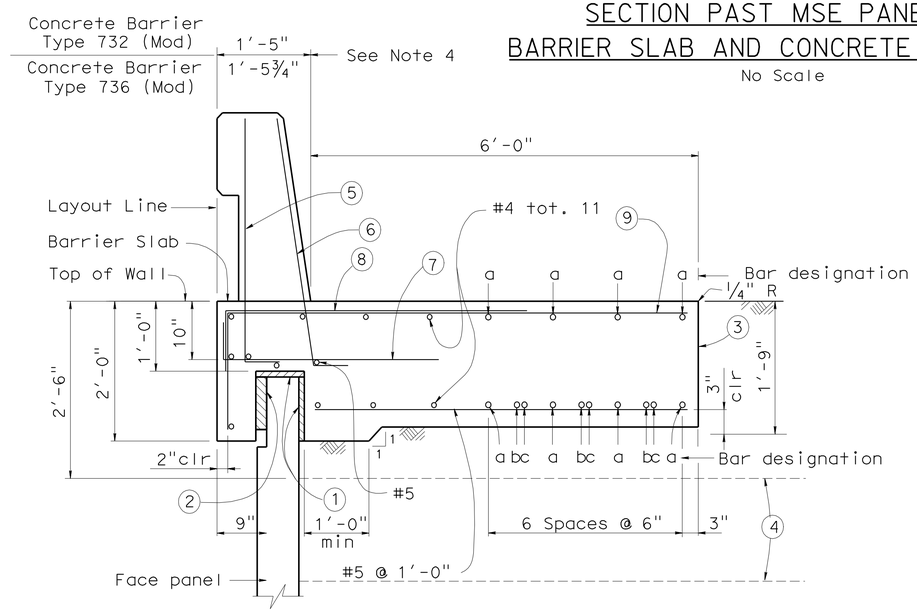

SECTION AT TOP OF WALL WITH BARRIER SLAB AND CONCRETE BARRIER

No Scale

LEGEND:

1. 1" Expanded polystyrene.
2. 2" Expanded polystyrene. Recess expanded polystyrene 2" into barrier slab.
3. Contact joint.
4. Welded Wire Mat Soil reinforcement.
5. #5 6¼" @ 1'-4" (To be in place prior to barrier slab concrete).
6. #5 6¼" @ 8" (To be in place prior to barrier slab concrete).
7. #5 6¼" 3'-4" @ 1'-0"
8. #5 4'-7" @ 1'-0" bundled with (9) bars.
9. #5 1'-9" 5'-9" @ 1'-0"

ABBREVIATIONS

OG	Original ground
FS	Planned finished surface
GP	Planned grading plane
FG	Finished grade

LEGEND

- Limits of structure excavation
- Limits of structure backfill
- Limits of permeable material

	BY	CHECKED
DESIGN	S. Galgiani	F. Zayati
DETAILS	K. Kubo	F. Zayati
QUANTITIES	S. Galgiani	F. Zayati

STATE OF CALIFORNIA
DEPARTMENT OF TRANSPORTATION

DIVISION OF ENGINEERING SERVICES
STRUCTURE DESIGN
DESIGN BRANCH 14

BRIDGE NO. 53E0150
POST MILE 0.10

MSE WALL NO. E2
MSE WALL DETAILS NO. 5

STRUCTURES DESIGN DETAIL SHEET (ENGLISH) (REV. 10/25/05)

ORIGINAL SCALE IN INCHES FOR REDUCED PLANS 0 1 2 3

CU 07-271
EA 138201

DISREGARD PRINTS BEARING EARLIER REVISION DATES

REVISION DATES: 02-03-10 04-09-10 04-19-10

SHEET 12 OF 23

FILE => 53-rwe2_mse_edet05.dgn

USERNAME => friehard DATE PLOTTED => 14-OCT-2010 TIME PLOTTED => 13:17

DIST	COUNTY	ROUTE	POST MILES TOTAL PROJECT	SHEET No	TOTAL SHEETS
07	LA	47,103	3.5/4.6, 0.0/1.1	953	1003

REGISTERED CIVIL ENGINEER 05-24-10 DATE

10-11-10
PLANS APPROVAL DATE

REGISTERED PROFESSIONAL ENGINEER
FOUED ZAYATI
No. C57046
Exp. 06-30-11
CIVIL
STATE OF CALIFORNIA

The State of California or its officers or agents shall not be responsible for the accuracy or completeness of electronic copies of this plan sheet.

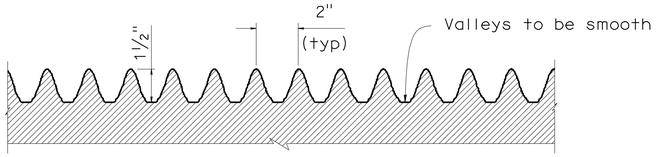

DETAIL A

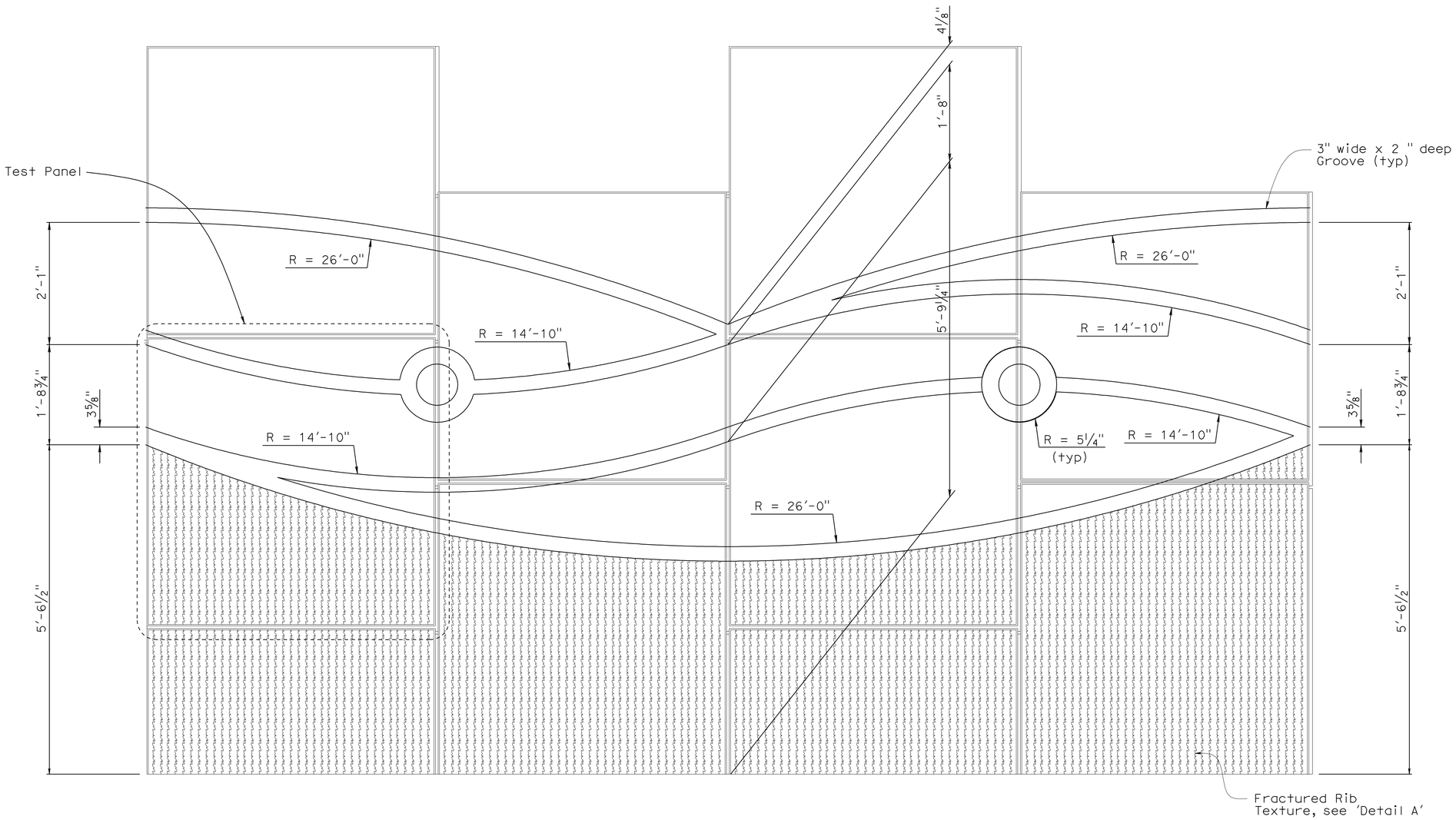

ARCHITECTURAL TREATMENT WAVE PATTERN

	BY	CHECKED
DESIGN	S. Galgiani	J. Lane
DETAILS	K. Kubo	F. Zayati
QUANTITIES	S. Galgiani	S. Galgiani

STATE OF CALIFORNIA
DEPARTMENT OF TRANSPORTATION

DIVISION OF ENGINEERING SERVICES
STRUCTURE DESIGN
DESIGN BRANCH 14

BRIDGE NO. 53E0150
POST MILE 0.10

MSE WALL NO. E2
MSE WALL DETAILS NO. 6

STRUCTURES DESIGN DETAIL SHEET (ENGLISH) (REV. 10/25/05)

ORIGINAL SCALE IN INCHES FOR REDUCED PLANS 0 1 2 3

CU 07-271
EA 138201

DISREGARD PRINTS BEARING EARLIER REVISION DATES → 05-10-10

REVISION DATES

SHEET 13 OF 23

FILE => 53-rwe2_mse_edet06.dgn

USERNAME => trlenard DATE PLOTTED => 14-OCT-2010 TIME PLOTTED => 13:17

DIST	COUNTY	ROUTE	POST MILES TOTAL PROJECT	SHEET No	TOTAL SHEETS
07	LA	47,103	3.5/4.6, 0.0/1.1	954	1003

REGISTERED CIVIL ENGINEER 05-24-10 DATE

10-11-10
PLANS APPROVAL DATE

REGISTERED PROFESSIONAL ENGINEER FOUED ZAYATI No. C57046 Exp. 06-30-11 CIVIL STATE OF CALIFORNIA

The State of California or its officers or agents shall not be responsible for the accuracy or completeness of electronic copies of this plan sheet.

WIRE MESH SCHEDULE

Max Ht., Ft	10	12.5	15
Top Levels of Mesh over	2 @ WII x WII + 6" x 9" 2 @ WII x WII + 6" x 12"	2 @ WII x WII + 6" x 9" 2 @ WII x WII + 6" x 12" 1 @ WII x WII + 6" x 18"	2 @ WII x WII + 6" x 9" 2 @ WII x WII + 6" x 12" 1 @ WII x WII + 6" x 18" 1 @ WII x WII + 6" x 24"
Max Ht., Ft	17.5	20	22.5
Top Levels of Mesh over	2 @ WII x WII + 6" x 9" 2 @ WII x WII + 6" x 12" 1 @ WII x WII + 6" x 18" 2 @ WII x WII + 6" x 24"	2 @ WII x WII + 6" x 9" 3 @ WII x WII + 6" x 18" 3 @ WII x WII + 6" x 24"	5 @ WII x WII + 6" x 18" 4 @ WII x WII + 6" x 24"
Max Ht., Ft	25		
Top Levels of Mesh over	5 @ WII x WII + 6" x 18" 5 @ WII x WII + 6" x 24"		

NOTE: For heights less than 10'-0", all Mesh is WII x WII + 6" x 9".
Mesh Configuration = Longitudinal Wire size x Transverse Wire size + Longitudinal Wire spacing x Transverse Wire spacing

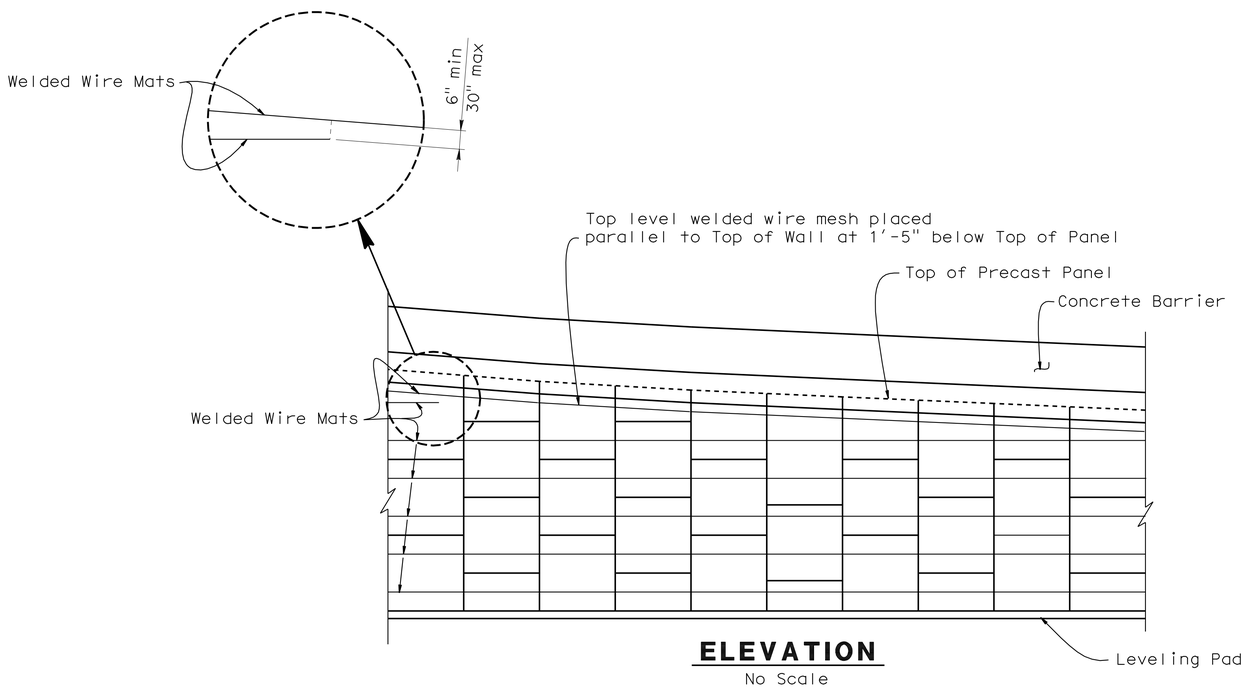

ELEVATION
No Scale

RETAINING WALL NO. E2

Wall LOL Sta.	Top of Wall Elevation	Elevation of Top of Leveling Pad
426+17.86	22.02	2.0
426+22.86	21.68	2.0
426+32.86	20.99	2.0
426+42.86	20.29	2.0
426+52.86	19.59	2.0
426+62.86	18.87	2.0
426+72.86	18.14	2.0
426+82.86	17.38	2.0
426+92.86	16.60	2.0
427+02.86	15.82	-0.5
427+12.86	15.24	-0.5
427+22.86	14.79	-0.5
427+32.86	14.35	-0.5
427+42.86	13.91	-0.5
427+52.86	13.48	-0.5
427+62.86	13.05	-0.5
427+72.86	12.62	-0.5
427+82.86	12.18	-0.5
427+92.86	11.75	-0.5
428+02.86	11.31	-0.5
428+12.86	10.57	-0.5
428+22.86	9.90	-0.5
428+32.86	9.22	-0.5
428+42.86	8.54	-0.5
428+52.86	7.86	-0.5
428+62.86	7.19	-0.5
428+72.86	6.51	-0.5
428+82.86	5.83	-0.5
428+92.86	5.14	-0.5
429+02.86	4.64	-3.0
429+12.86	4.19	-3.0
429+22.86	3.74	-3.0
429+32.86	3.33	-3.0
429+42.86	2.94	-3.0
429+52.86	2.57	-5.50
429+62.86	2.21	-5.50
429+72.86	1.88	-5.50
429+82.86	1.57	-5.50
429+92.86	1.26	-5.50
430+02.86	0.97	-5.50
430+12.86	0.69	-5.50
430+22.86	0.42	-5.50
430+32.86	0.17	-5.50
430+42.86	-0.09	-5.50
430+52.86	-0.35	-5.50
430+62.86	-0.61	-5.50
430+70.64	-0.83	-5.50

	BY	CHECKED
DESIGN	S. Galgiani	F. Zayati
DETAILS	J.D. Thorne	S. Galgiani
QUANTITIES	S. Galgiani	F. Zayati

STATE OF CALIFORNIA
DEPARTMENT OF TRANSPORTATION

DIVISION OF ENGINEERING SERVICES
STRUCTURE DESIGN
DESIGN BRANCH 14

BRIDGE NO. 53E0150
POST MILE 0.10

MSE WALL NO. E2
MSE WALL DETAIL NO. 7

STRUCTURES DESIGN DETAIL SHEET (ENGLISH) (REV. 10/25/05)

ORIGINAL SCALE IN INCHES FOR REDUCED PLANS 0 1 2 3

CU 07-271
EA 138201

DISREGARD PRINTS BEARING EARLIER REVISION DATES

REVISION DATES: 01-21-10, 03-18-10, 3-24-10, 04-06-10, 04-12-10, 04-20-10

SHEET 14 OF 23

FILE => 53-rwe2_mse_edet07.dgn

USERNAME => trlenard DATE PLOTTED => 14-OCT-2010 TIME PLOTTED => 13:17

DIST	COUNTY	ROUTE	POST MILES TOTAL PROJECT	SHEET No	TOTAL SHEETS
07	LA	47,103	3.5/4.6, 0.0/1.1	955	1003

REGISTERED CIVIL ENGINEER — DATE 05-24-10

10-11-10
PLANS APPROVAL DATE

REGISTERED PROFESSIONAL ENGINEER — FOUED ZAYATI — No. C57046 — Exp. 06-30-11 — CIVIL — STATE OF CALIFORNIA

The State of California or its officers or agents shall not be responsible for the accuracy or completeness of electronic copies of this plan sheet.

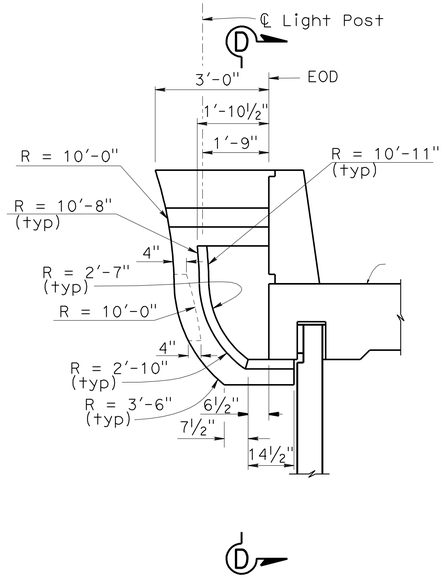

VIEW A-A
½"=1'-0"

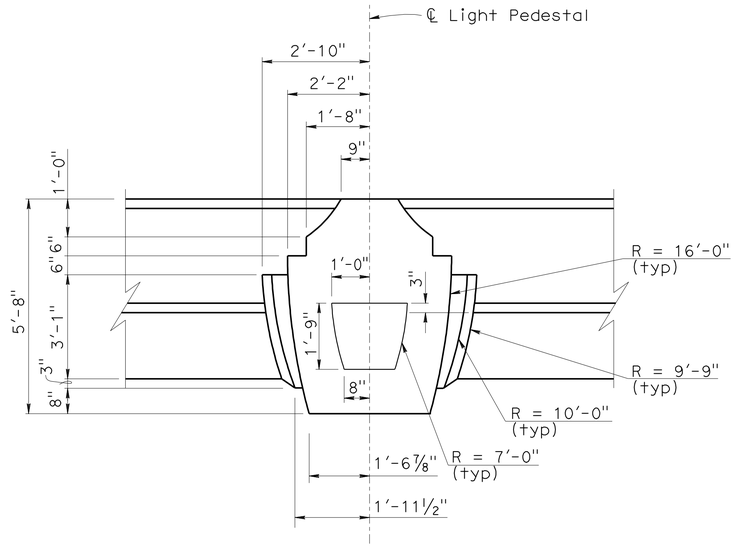

VIEW B-B
½"=1'-0"

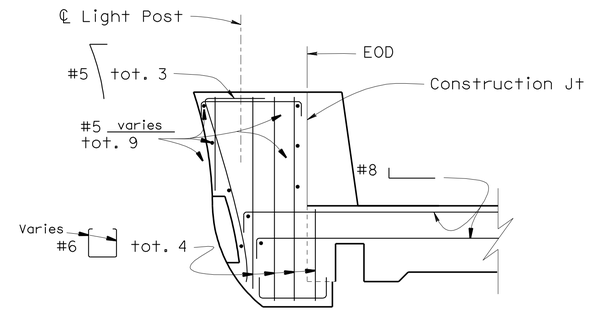

SECTION C-C
½"=1'-0"

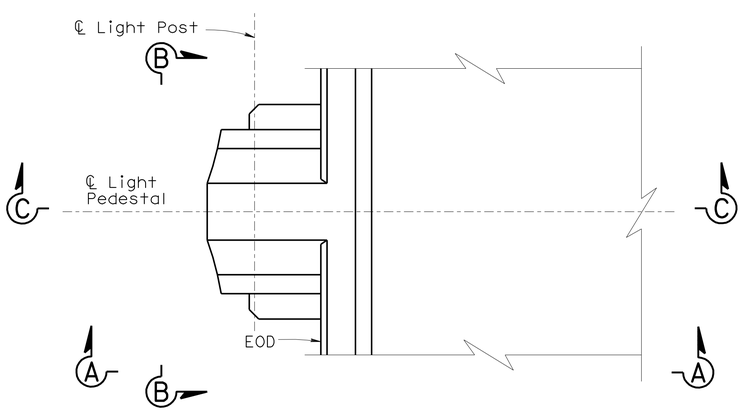

PLAN
½"=1'-0"

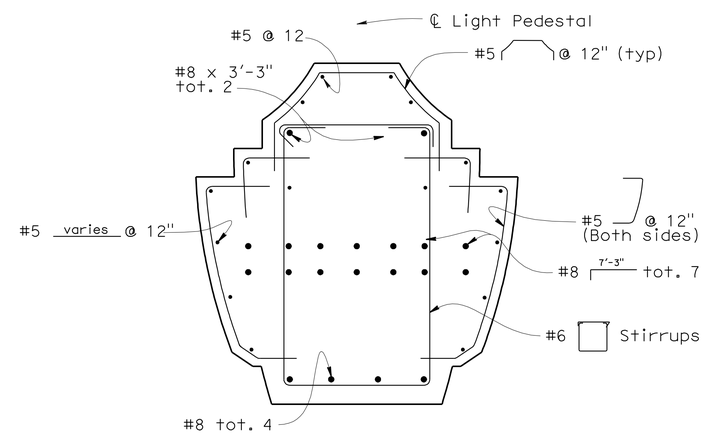

SECTION D-D
¾"=1'-0"

NOTE:

For locations of the Light Pedestals, see 'Electrical Plans'

DESIGN	BY S. Galgiani	CHECKED F. Zayati	
DETAILS	BY T. Nguyen	CHECKED S. Galgiani	
QUANTITIES	BY S. Galgiani	CHECKED F. Zayati	

STATE OF CALIFORNIA
DEPARTMENT OF TRANSPORTATION

DIVISION OF ENGINEERING SERVICES
STRUCTURE DESIGN
DESIGN BRANCH 14

BRIDGE NO. 53E0150
POST MILE 0.10

MSE WALL NO. E2
MSE WALL DETAIL NO. 8

STRUCTURES DESIGN DETAIL SHEET (ENGLISH) (REV. 10/25/05)

ORIGINAL SCALE IN INCHES FOR REDUCED PLANS 0 1 2 3

CU 07-271
EA 138201

DISREGARD PRINTS BEARING EARLIER REVISION DATES 05-24-10

REVISION DATES

SHEET 15 OF 23

FILE => 53-rwe2_mse_edet08.dgn

USERNAME => friehard DATE PLOTTED => 14-OCT-2010 TIME PLOTTED => 13:17

DIST	COUNTY	ROUTE	POST MILES TOTAL PROJECT	SHEET No	TOTAL SHEETS
07	LA	47,103	3.5/4.6, 0.0/1.1	956	1003

REGISTERED CIVIL ENGINEER — DATE 05-24-10

10-11-10
PLANS APPROVAL DATE

The State of California or its officers or agents shall not be responsible for the accuracy or completeness of electronic copies of this plan sheet.

REGISTERED PROFESSIONAL ENGINEER — FOUED ZAYATI — No. C57046 — Exp. 06-30-11 — CIVIL — STATE OF CALIFORNIA

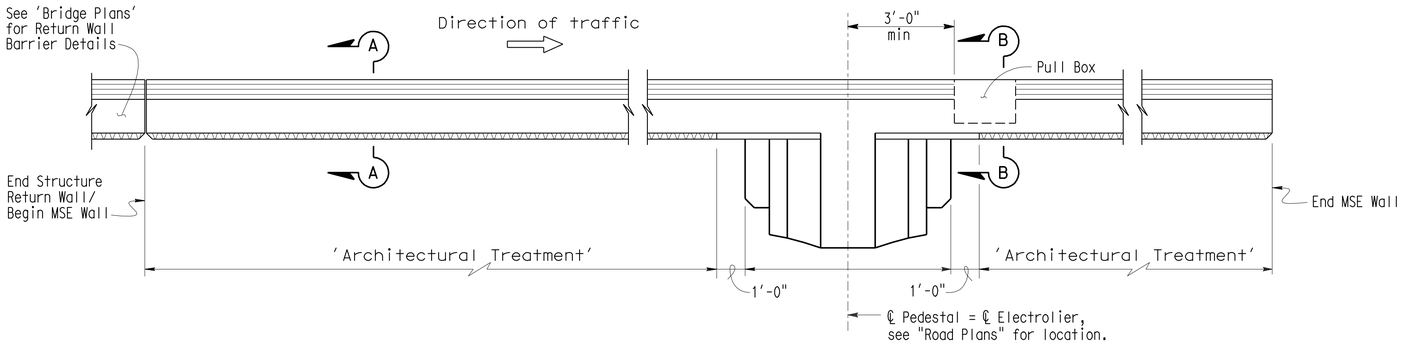

PLAN

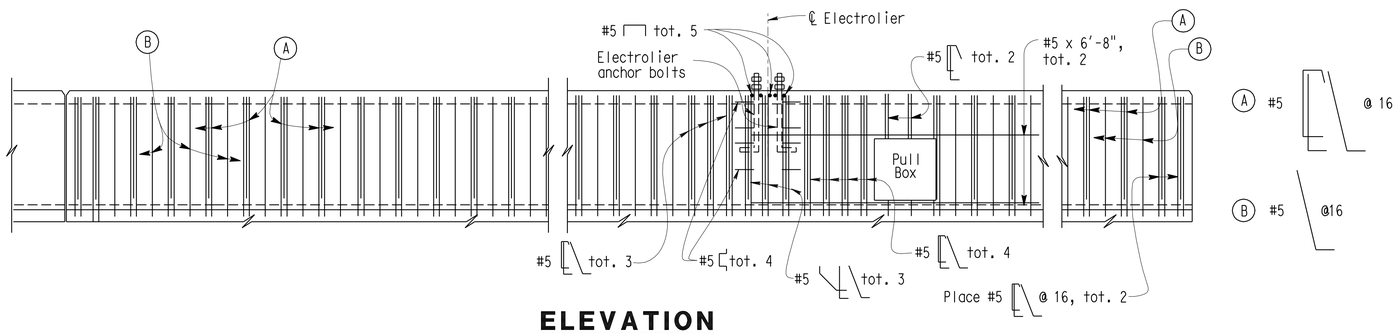

ELEVATION

NOTES:

A. Walls are to be backfilled before Barrier is placed.
B. Clearance to reinforcing steel in Barrier to be 1", except as noted. Longitudinal reinforcement to stop at all Expansion Joints.
C. See project plans for locations of Electroliers and Pull Boxes.
D. Dimensions may vary with roadway cross slope and with certain thickness of surfacing. See Project Plans.
E. Minimum concrete edge distance to reinforcing shown, shall be maintained, edge distance may be adjusted to accomodate increase in concrete cover for architectural treatment. See Typical Section.
F. For 'Architectural Treatment' see, "CONCRETE BARRIER DETAILS NO. 2" sheet.

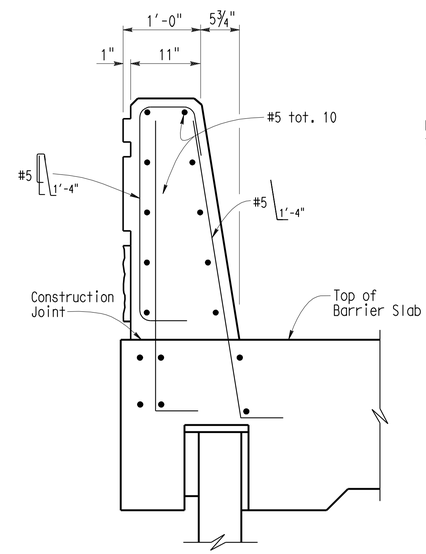

SECTION A-A

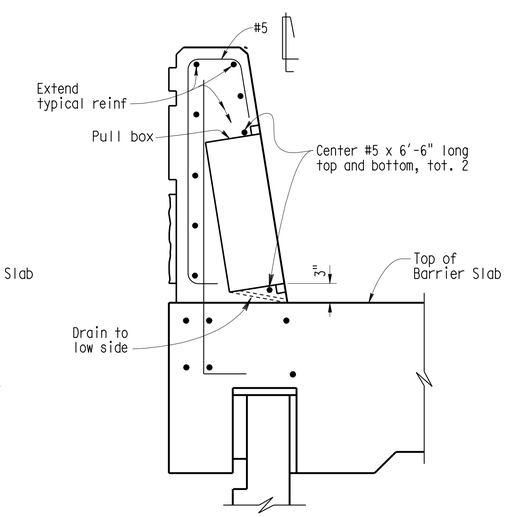

SECTION B-B

NO SCALE

	BY	CHECKED
DESIGN	F. Zayati	S. Galgiani
DETAILS	K. Kubo	F. Zayati
QUANTITIES	S. Galgiani	F. Zayati

STATE OF CALIFORNIA
DEPARTMENT OF TRANSPORTATION

DIVISION OF ENGINEERING SERVICES
STRUCTURE DESIGN
DESIGN BRANCH 14

BRIDGE NO. 53E0150
POST MILE 0.10

MSE WALL NO. E2
CONCRETE BARRIER DETAILS NO. 1

STRUCTURES DESIGN DETAIL SHEET (ENGLISH) (REV. 10/25/05)

ORIGINAL SCALE IN INCHES FOR REDUCED PLANS 0 1 2 3

CU 07-271
EA 138201

DISREGARD PRINTS BEARING EARLIER REVISION DATES

REVISION DATES: 01-28-10, 3-21-10, 06-22-10, 06-24-10, 06-28-10, 06-29-10, 07-07-10

SHEET 16 OF 23

FILE => 53-rwe2_mse_fbrdt01.dgn

USERNAME => trlenard DATE PLOTTED => 14-OCT-2010 TIME PLOTTED => 13:18

DIST	COUNTY	ROUTE	POST MILES TOTAL PROJECT	SHEET No	TOTAL SHEETS
07	LA	47,103	3.5/4.6, 0.0/1.1	957	1003

REGISTERED CIVIL ENGINEER — DATE 05-24-10

10-11-10
PLANS APPROVAL DATE

REGISTERED PROFESSIONAL ENGINEER — FOUED ZAYATI — No. C57046 — Exp. 06-30-11 — CIVIL — STATE OF CALIFORNIA

The State of California or its officers or agents shall not be responsible for the accuracy or completeness of electronic copies of this plan sheet.

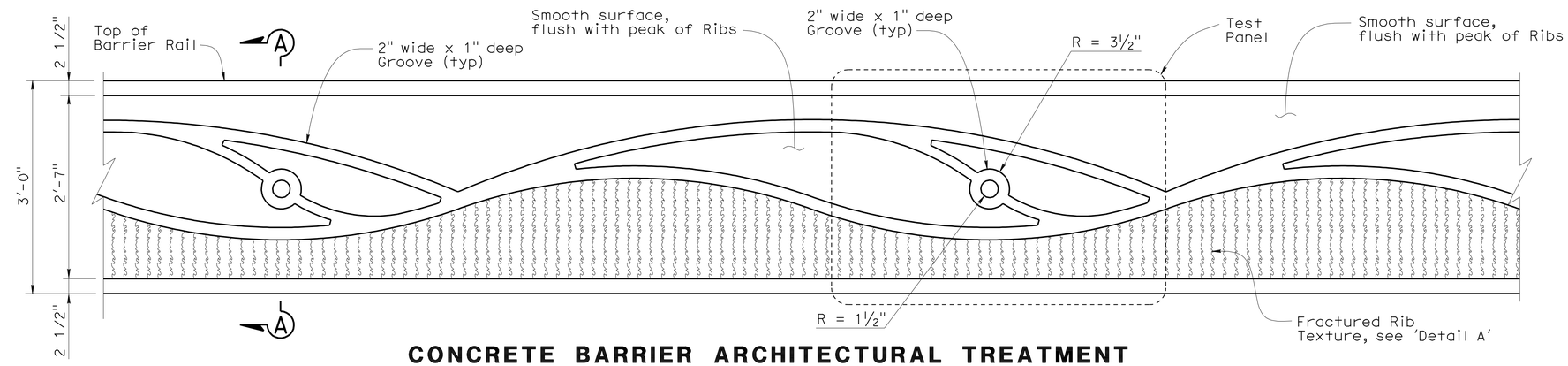

CONCRETE BARRIER ARCHITECTURAL TREATMENT

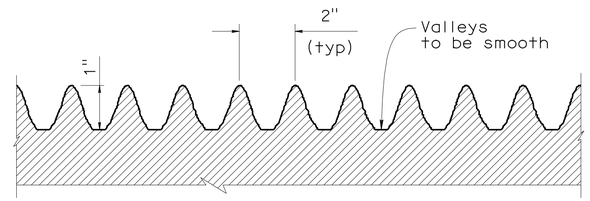

DETAIL A

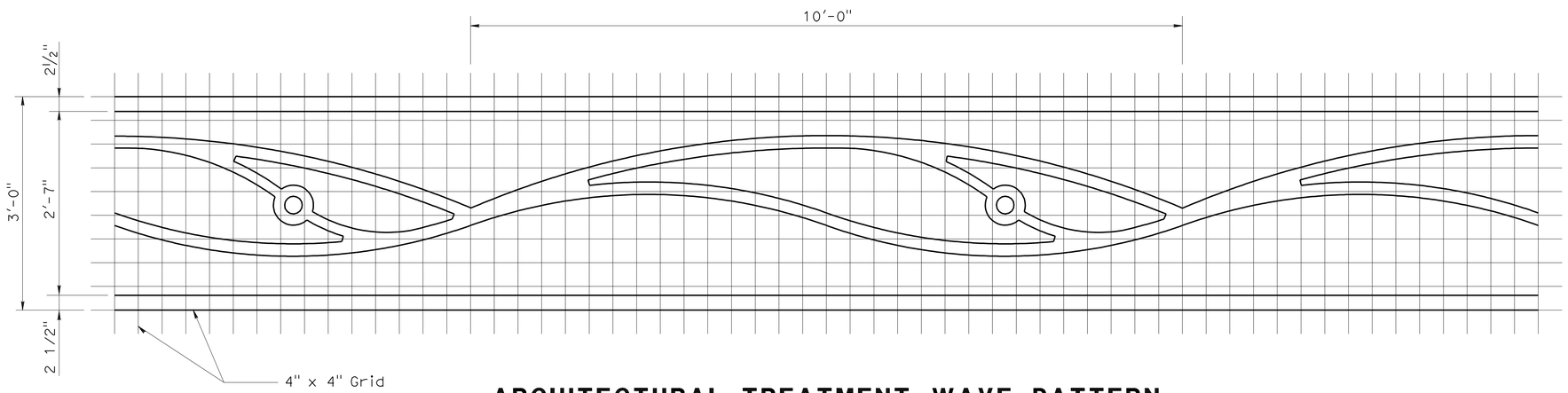

ARCHITECTURAL TREATMENT WAVE PATTERN

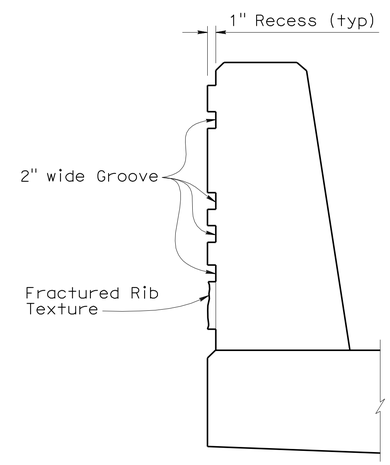

SECTION A-A

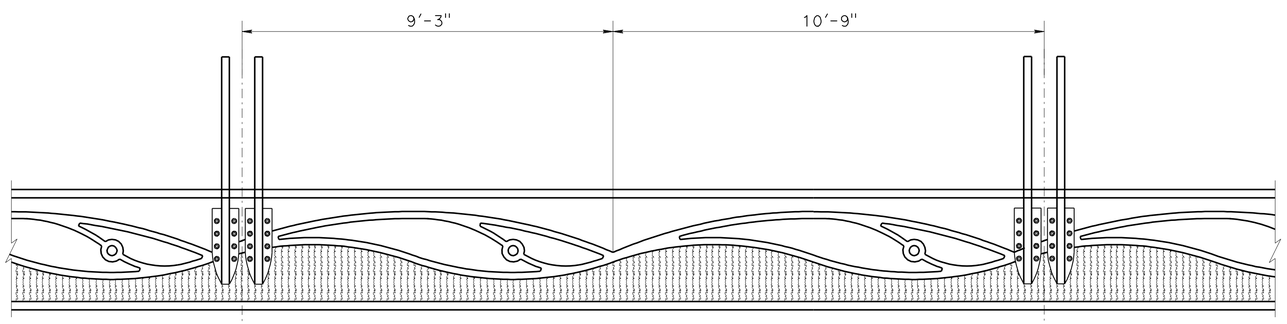

POST LOCATION ON BARRIER

NO SCALE

DESIGN	BY F. Zayati	CHECKED S. Galgiani	
DETAILS	BY K. Kubo	CHECKED F. Zayati	
QUANTITIES	BY S. Galgiani	CHECKED F. Zayati	

STATE OF CALIFORNIA
DEPARTMENT OF TRANSPORTATION

DIVISION OF ENGINEERING SERVICES
STRUCTURE DESIGN
DESIGN BRANCH 14

BRIDGE NO. 53E0150
POST MILE 0.10

MSE WALL NO. E2
CONCRETE BARRIER DETAILS NO. 2

STRUCTURES DESIGN DETAIL SHEET (ENGLISH) (REV. 10/25/05)

ORIGINAL SCALE IN INCHES FOR REDUCED PLANS 0 1 2 3

CU 07-271
EA 138201

DISREGARD PRINTS BEARING EARLIER REVISION DATES → 01-08-10 04-01-10 06-22-10

REVISION DATES

SHEET 17 OF 23

FILE => 53-rwe2_mse_fbrdt02.dgn

USERNAME => trlenard DATE PLOTTED => 14-OCT-2010 TIME PLOTTED => 13:18

DIST	COUNTY	ROUTE	POST MILES TOTAL PROJECT	SHEET No	TOTAL SHEETS
07	LA	47,103	3.5/4.6, 0.0/1.1	958	1003

REGISTERED CIVIL ENGINEER — 05-24-10 DATE

10-11-10
PLANS APPROVAL DATE

REGISTERED PROFESSIONAL ENGINEER — FOUED ZAYATI No. C57046 Exp. 06-30-11 CIVIL — STATE OF CALIFORNIA

The State of California or its officers or agents shall not be responsible for the accuracy or completeness of electronic copies of this plan sheet.

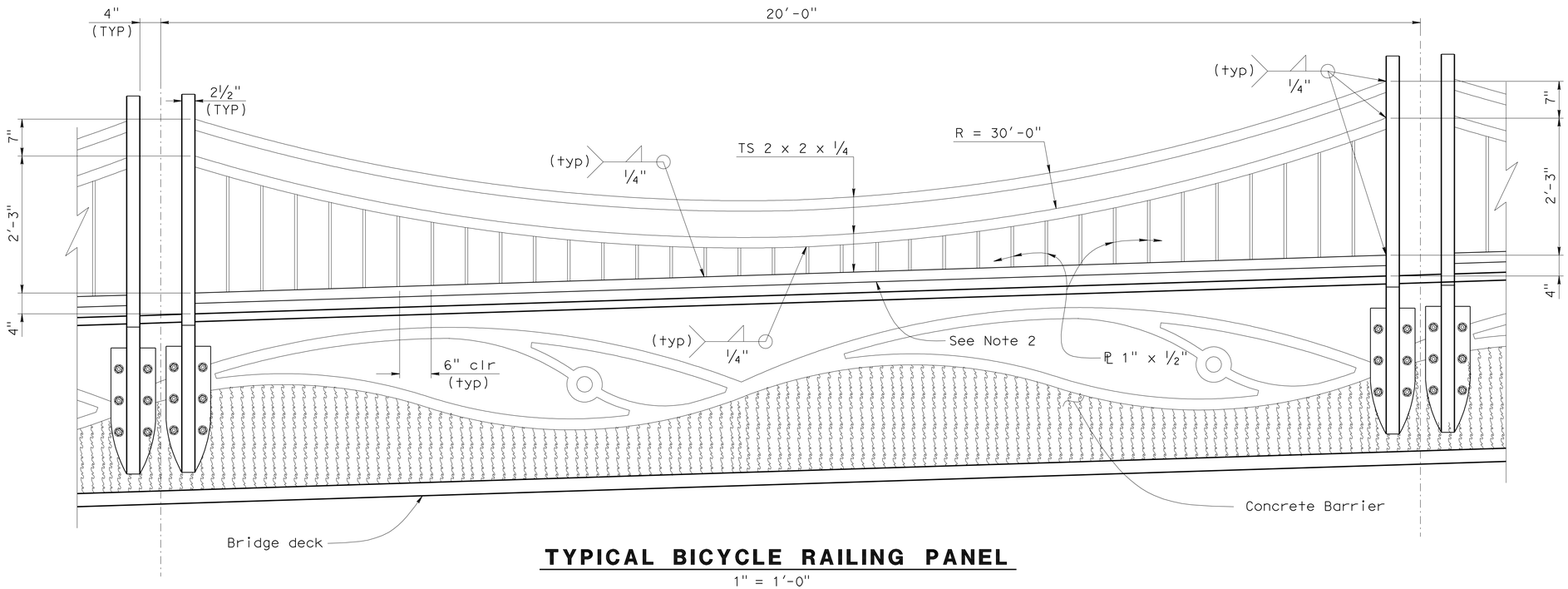

TYPICAL BICYCLE RAILING PANEL

1" = 1'-0"

NOTES:

1. Longitudinal deck slope varies.
2. Bottom rail is parallel to top of barrier.
3. See "RAILING DETAILS No. 2" sheet for typival post details.
4. See "RAILING DETAILS No. 2" sheet for post connection to barrier.
5. For railing expansion mechanism, see "RAILING DETAILS No. 2" sheet.

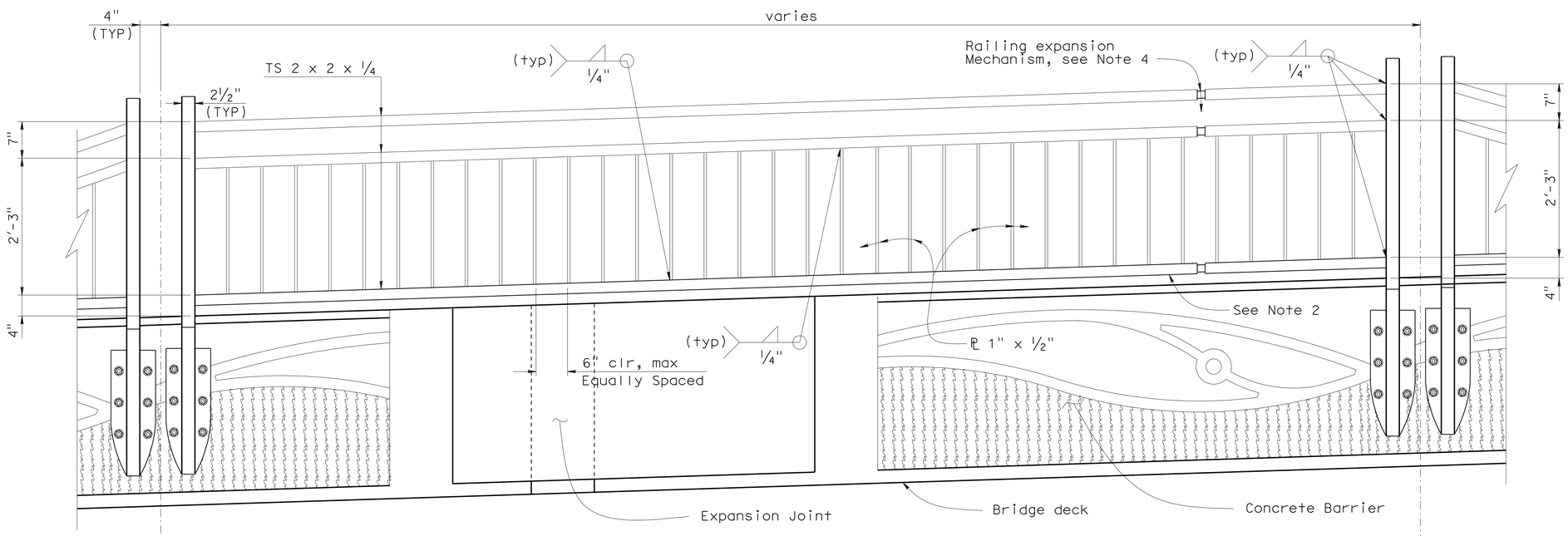

TYPICAL BICYCLE RAILING PANEL AT EXPANSION JOINTS

1" = 1'-0"

DESIGN	BY F. Zayati	CHECKED R. Bromenschenkel	
DETAILS	BY T. M. nguyen	CHECKED F. Zayati	
QUANTITIES	BY P. Peterson	CHECKED J. Peterson	

STATE OF CALIFORNIA
DEPARTMENT OF TRANSPORTATION

DIVISION OF ENGINEERING SERVICES
STRUCTURE DESIGN
DESIGN BRANCH 14

BRIDGE NO. 53E0150
POST MILE 0.10

MSE WALL NO. E2
RAILING DETAILS NO. 1

STRUCTURES DESIGN DETAIL SHEET (ENGLISH) (REV. 10/25/05)

ORIGINAL SCALE IN INCHES FOR REDUCED PLANS 0 1 2 3

CU 07-271
EA 138201

DISREGARD PRINTS BEARING EARLIER REVISION DATES

REVISION DATES: 01-08-10 04-01-10 07-19-10

SHEET 18 OF 23

FILE => 53-rwe2_mse_fraildt01.dgn

USERNAME => friehard DATE PLOTTED => 14-OCT-2010 TIME PLOTTED => 13:18

DIST	COUNTY	ROUTE	POST MILES TOTAL PROJECT	SHEET No	TOTAL SHEETS
07	LA	47,103	3.5/4.6, 0.0/1.1	959	1003

REGISTERED CIVIL ENGINEER — 05-24-10 DATE

10-11-10
PLANS APPROVAL DATE

REGISTERED PROFESSIONAL ENGINEER — FOUED ZAYATI No. C57046 Exp. 06-30-11 CIVIL — STATE OF CALIFORNIA

The State of California or its officers or agents shall not be responsible for the accuracy or completeness of electronic copies of this plan sheet.

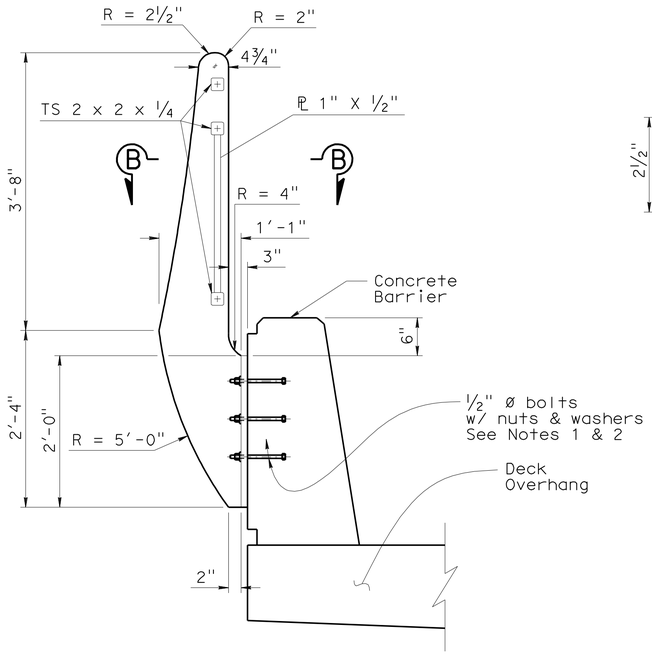

TYPICAL BICYCLE RAILING POST

1" = 1'-0"

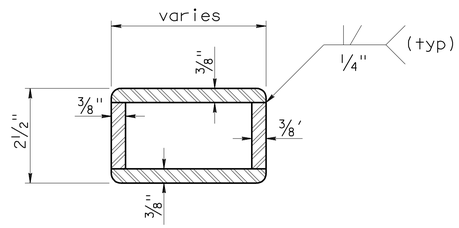

SECTION B-B

6" = 1'-0"

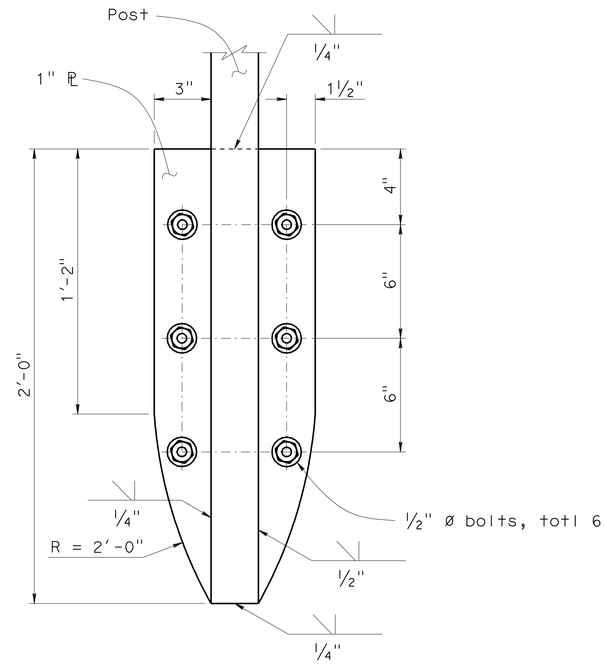

TYPICAL POST CONNECTION

3" = 1'-0"

NOTES:

1. 6" minimum bolt embedment into barrier.
2. Apply thread locking compound.

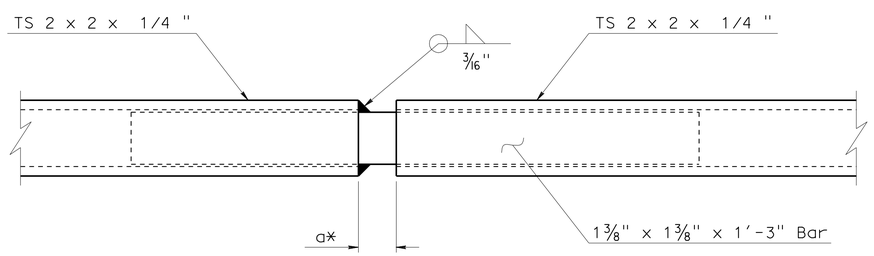

RAILING EXPANSION MECHANISM DETAIL

6" = 1'-0"

* Gap at time of Railing installation

Season	Gap a
Summer	1"
Winter	2½"
Fall/ Spring	1¾"

	BY	CHECKED
DESIGN	F. Zayati	R. Bromenschenkel
DETAILS	T. M. Nguyen	F. Zayati
QUANTITIES	P. peterson	J. Peterson

STATE OF CALIFORNIA
DEPARTMENT OF TRANSPORTATION

DIVISION OF ENGINEERING SERVICES
STRUCTURE DESIGN
DESIGN BRANCH 14

BRIDGE NO. 53E0150
POST MILE 0.10

MSE WALL NO. E2
RAILING DETAILS NO. 2

STRUCTURES DESIGN DETAIL SHEET (ENGLISH) (REV. 10/25/05)

ORIGINAL SCALE IN INCHES FOR REDUCED PLANS 0 1 2 3

CU 07-271
EA 138201

DISREGARD PRINTS BEARING EARLIER REVISION DATES

REVISION DATES: 01-08-10 04-01-10 07-19-10

SHEET 19 OF 23

FILE => 53-rwe2_mse_fraildt02.dgn

USERNAME => friehard DATE PLOTTED => 14-OCT-2010 TIME PLOTTED => 13:18

DIST	COUNTY	ROUTE	POST MILES TOTAL PROJECT	SHEET No	TOTAL SHEETS
07	LA	47,103	3.5/4.6, 0.0/1.1	960	1003

REGISTERED ENGINEER — DATE 04/19/10

REGISTERED PROFESSIONAL ENGINEER ERIC BROWN NO. GE-2806 EXP. 06-30-2010 GEOTECHNICAL STATE OF CALIFORNIA

10-11-10
PLANS APPROVAL DATE

The State of California or its officers or agents shall not be responsible for the accuracy or completeness of electronic copies of this plan sheet.

ACTA
ONE CIVIC PLAZA. SUITE 350,
CARSON, CA 90745

EARTH MECHANICS, INC.
17660, NEWHOPE STREET, SUITE E
FOUNTAIN VALLEY, CA 92708

BENCHMARKS:

PT-PMHV509	PT-PMHV515
SET MAG NAIL	SET MAG NAIL
26.671′ Lt ℄ "G"Line	28.517′ Rt ℄ "G" Line
Sta. 604+968.70	Sta. 600+995.50
N 1738366.89	N 1737997.51
E 6488728.36	E 6488779.52
Elev. = -3.61	Elev. = -2.21

NOTES:

(1) This LOTB sheet (Boring Record) was prepared in accordance with the Caltrans Soil and Rock Classification Logging, Classification and Presentation Manual (June 2007).

(2) 2.4" samples were taken using a California Split-spoon Sampler.

(3) For A-09-056, an automatic trip hammer system consisting of a hammer weight of 140 lbs falling a distance of 30" was used to advance the drive sampler.

(3) For R-09-033, a rope and cat-head hammer system consisting of a hammer weight of 140 lbs falling a distance of 30" was used to advance the drive sampler.

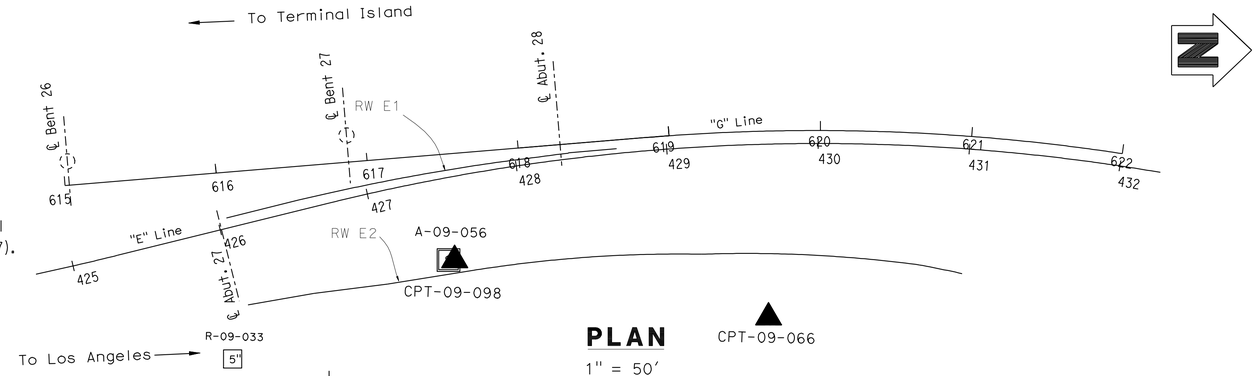

PLAN
1" = 50′

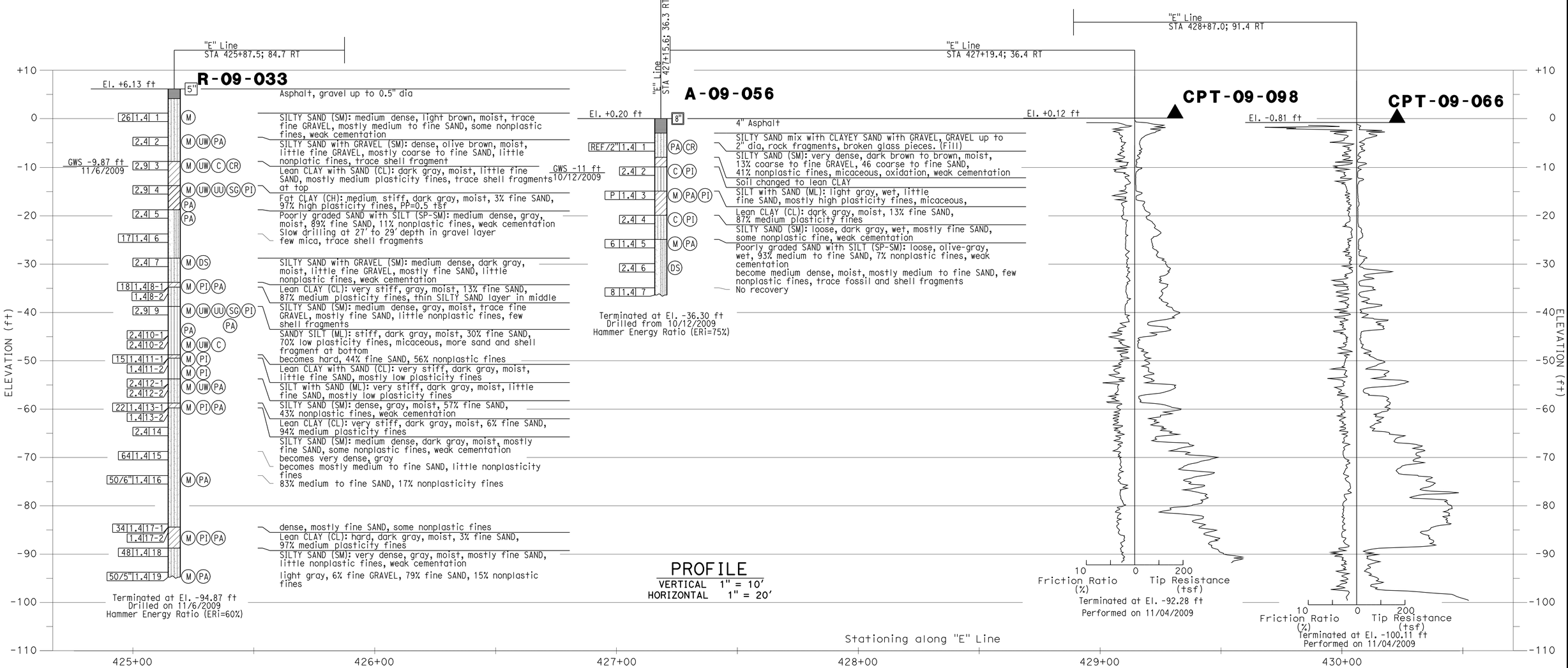

PROFILE
VERTICAL 1" = 10′
HORIZONTAL 1" = 20′

DESIGN OVERSIGHT	DRAWN BY: J.Fang	FIELD INVESTIGATION BY:	PREPARED FOR THE STATE OF CALIFORNIA DEPARTMENT OF TRANSPORTATION	E. Brown PROJECT ENGINEER	BRIDGE NO. 53E0150 / POST MILE 0.10
SIGN OFF DATE	CHECKED BY: K.Pratheepan	E.Brown			

MSE RETAINING WALL NO. E2

LOG OF TEST BORINGS NO. 1 OF 4

OGS CIVIL LOG OF TEST BORINGS SHEET (ENGLISH) (REV. 06-01-09)

ORIGINAL SCALE IN INCHES FOR REDUCED PLANS 0 1 2 3

CU 07-271
EA 138201

DISREGARD PRINTS BEARING EARLIER REVISION DATES — REVISION DATES (PRELIMINARY STAGE ONLY) 02/08/10 04/14/10 07/02/10

SHEET 20 OF 23

FILE => 53-rwe2_mse_zltb01.dgn

USERNAME => trlenard DATE PLOTTED => 14-OCT-2010 TIME PLOTTED => 13:18

DIST	COUNTY	ROUTE	POST MILES TOTAL PROJECT	SHEET No	TOTAL SHEETS
07	LA	47,103	3.5/4.6, 0.0/1.1	961	1003

REGISTERED ENGINEER — DATE 04/19/10

10-11-10
PLANS APPROVAL DATE

The State of California or its officers or agents shall not be responsible for the accuracy or completeness of electronic copies of this plan sheet.

REGISTERED PROFESSIONAL ENGINEER ERIC BROWN NO. GE-2806 EXP. 06-30-2010 GEOTECHNICAL STATE OF CALIFORNIA

ACTA
ONE CIVIC PLAZA. SUITE 350,
CARSON, CA 90745

EARTH MECHANICS, INC.
17660, NEWHOPE STREET, SUITE E
FOUNTAIN VALLEY, CA 92708

BENCHMARKS:

PT-PMHV509	PT-PMHV515
SET MAG NAIL	SET MAG NAIL
26.671′ Lt ℄ "G"Line	28.517′ Rt ℄ "G" Line
Sta. 604+968.70	Sta. 600+995.50
N 1738366.89	N 1737997.51
E 6488728.36	E 6488779.52
Elev. = -3.61	Elev. = -2.21

NOTES:

(1) This LOTB sheet (Boring Record) was prepared in accordance with the Caltrans Soil and Rock Classification Logging, Classification and Presentation Manual (June 2007).

(2) 2.4" samples were taken using a California Split-spoon Sampler.

(3) A rope and cat-head hammer system consisting of a hammer weight of 140 lbs falling a distance of 30" was used to advance the drive sampler.

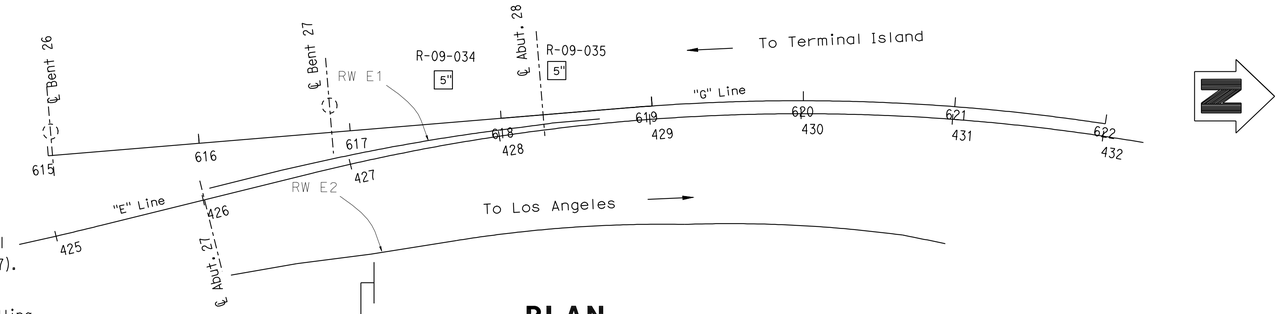

PLAN

1" = 50′

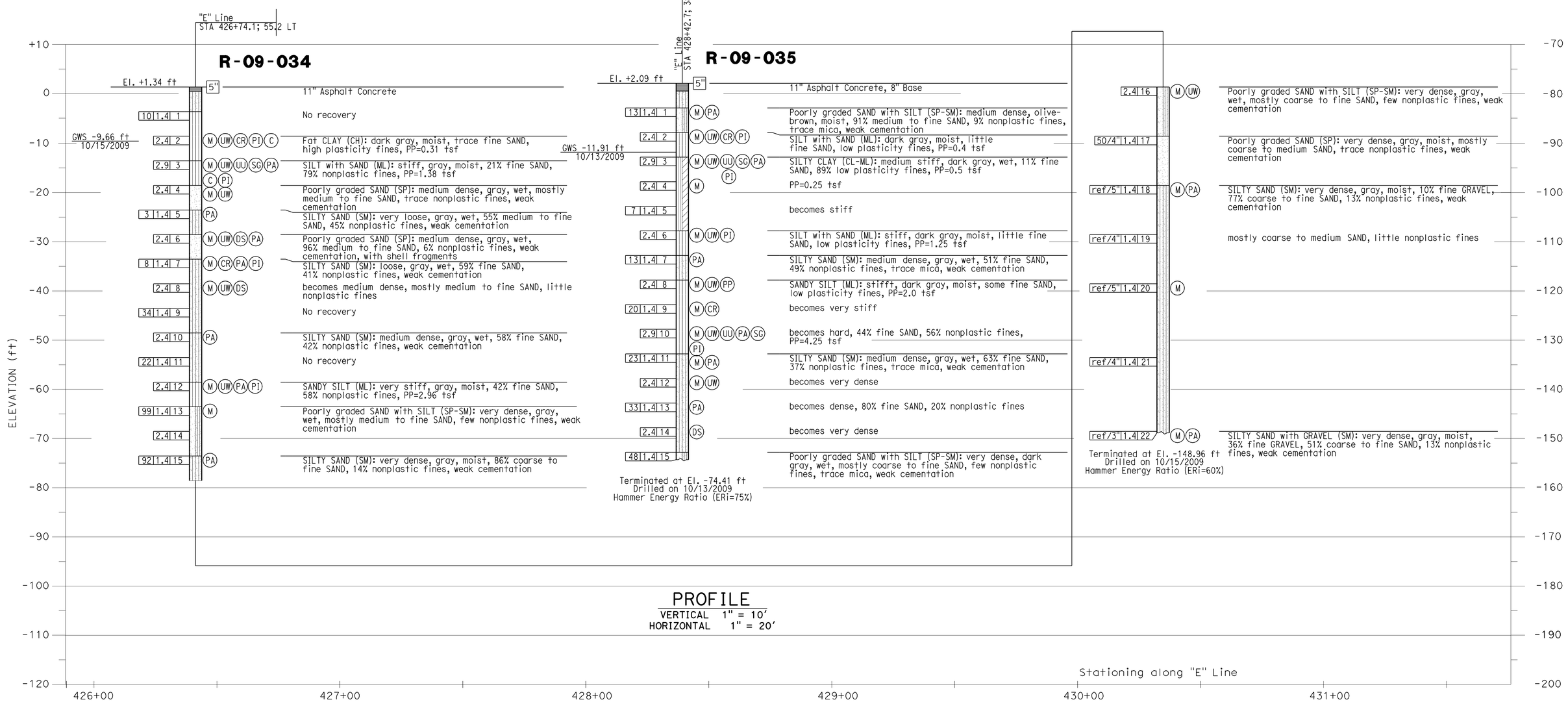

PROFILE

VERTICAL 1" = 10′
HORIZONTAL 1" = 20′

DESIGN OVERSIGHT	DRAWN BY: J.Fang	FIELD INVESTIGATION BY:	PREPARED FOR THE STATE OF CALIFORNIA DEPARTMENT OF TRANSPORTATION	E. Brown PROJECT ENGINEER	BRIDGE NO. 53E0150 POST MILE 0.10
SIGN OFF DATE	CHECKED BY: K.Pratheepan	E.Brown			

MSE RETAINING WALL NO. E2

LOG OF TEST BORINGS NO. 2 OF 4

OGS CIVIL LOG OF TEST BORINGS SHEET (ENGLISH) (REV. 06-01-09)

ORIGINAL SCALE IN INCHES FOR REDUCED PLANS 0 1 2 3

CU 07-271
EA 138201

DISREGARD PRINTS BEARING EARLIER REVISION DATES

REVISION DATES (PRELIMINARY STAGE ONLY) 02/02/10 04/14/10 07/02/10

SHEET 21 OF 23

FILE => 53-rwe2_mse_zltb02.dgn

USERNAME => rtrenford DATE PLOTTED => 14-OCT-2010 TIME PLOTTED => 13:18

REFERENCE: CALTRANS SOIL & ROCK LOGGING, CLASSIFICATION, AND PRESENTATION MANUAL (JUNE 2007)

DIST	COUNTY	ROUTE	POST MILES TOTAL PROJECT	SHEET No	TOTAL SHEETS
07	LA	47,103	3.5/4.6, 0.0/1.1	962	1003

REGISTERED ENGINEER — DATE 04/19/10

10-11-10
PLANS APPROVAL DATE

REGISTERED PROFESSIONAL ENGINEER ERIC BROWN NO. GE-2806 EXP. 06-30-2010 GEOTECHNICAL STATE OF CALIFORNIA

The State of California or its officers or agents shall not be responsible for the accuracy or completeness of electronic copies of this plan sheet.

ACTA
ONE CIVIC PLAZA. SUITE 350,
CARSON, CA 90745

EARTH MECHANICS, INC.
17660, NEWHOPE STREET, SUITE E
FOUNTAIN VALLEY, CA 92708

CEMENTATION

Description	Criteria
Weak	Crumbles or breaks with handling or little finger pressure.
Moderate	Crumbles or breaks with considerable finger pressure.
Strong	Will not crumble or break with finger pressure.

CONSISTENCY OF COHESIVE SOILS

Description	Unconfined Compressive Strength (tsf)	Pocket Penetrometer Measurement (tsf)	Torvane Measurement (tsf)	Field Approximation
Very Soft	< 0.25	< 0.25	< 0.12	Easily penetrated several inches by fist
Soft	0.25 to 0.50	0.25 to 0.50	0.12 to 0.25	Easily penetrated several inches by thumb
Medium Stiff	0.50 to 1.0	0.50 to 1.0	0.25 to 0.50	Penetrated several inches by thumb with moderate effort
Stiff	1 to 2	1 to 2	0.50 to 1.0	Readily indented by thumb but penetrated only with great effort
Very Stiff	2 to 4	2 to 4	1.0 to 2.0	Readily indented by thumbnail
Hard	> 4.0	> 4.0	> 2.0	Indented by thumbnail with difficulty

BOREHOLE IDENTIFICATION

Symbol	Hole Type	Description
Size	A	Auger Boring
Size	R P	Rotary drilled boring Rotary percussion boring (air)
Size	R	Rotary drilled diamond core
Size	HD HA	Hand driven (1-inch soil tube) Hand Auger
●	D	Dynamic Cone Penetration Boring
▲	CPT	Cone Penetration Test (ASTM D 5778-95)
⬚	O	Other

Note: Size in inches.

PLASTICITY OF FINE-GRAINED SOILS

Description	Criteria
Nonplastic	A 1/8-inch thread cannot be rolled at any water content.
Low	The thread can barely be rolled and the lump cannot be formed when drier than the plastic limit.
Medium	The thread is easy to roll and not much time is required to reach the plastic limit. The thread cannot be rerolled after reaching the plastic limit. The lump crumbles when drier than the plastic limit.
High	It takes considerable time rolling and kneading to reach the plastic limit. The thread can be rerolled several times after reaching the plastic limit. The lump can be formed without crumbling when drier than the plastic limit.

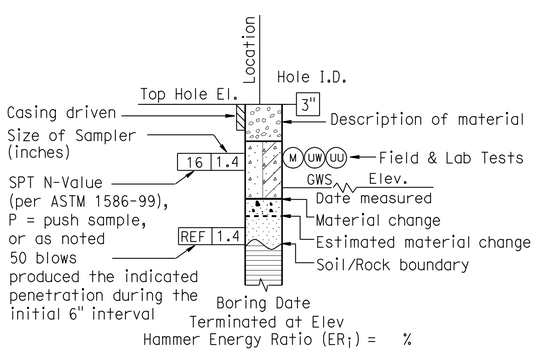

ROTARY BORING

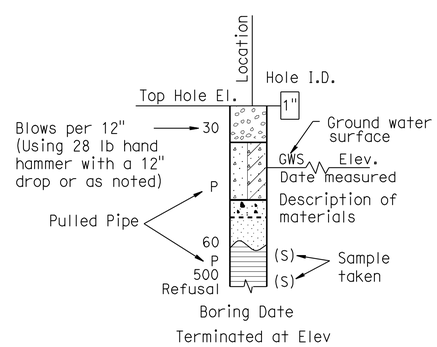

HAND BORING

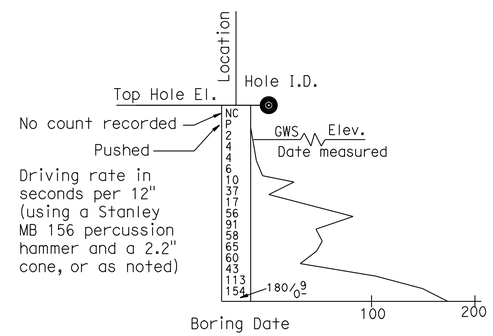

DYNAMIC CONE PENETRATION BORING

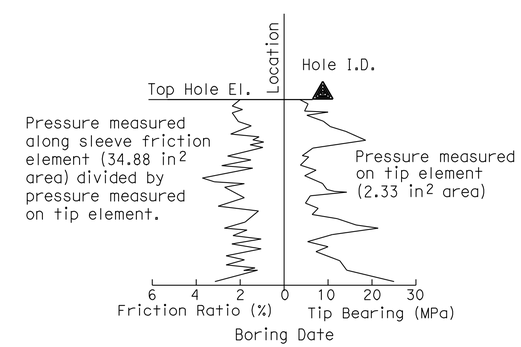

CONE PENETRATION TEST (CPT) SOUNDING

DESIGN OVERSIGHT SIGN OFF DATE	DRAWN BY: J.Fang CHECKED BY: K.Pratheepan	FIELD INVESTIGATION BY: E.Brown	PREPARED FOR THE STATE OF CALIFORNIA DEPARTMENT OF TRANSPORTATION	E. Brown PROJECT ENGINEER	BRIDGE NO. 53E0150 POST MILE 0.10

MSE RETAINING WALL NO. E2

LOG OF TEST BORINGS NO. 3 OF 4

OGS CIVIL LOG OF TEST BORINGS SHEET (ENGLISH) (REV. 06-01-09)

ORIGINAL SCALE IN INCHES FOR REDUCED PLANS 0 1 2 3

CU 07-271
EA 138201

DISREGARD PRINTS BEARING EARLIER REVISION DATES — REVISION DATES (PRELIMINARY STAGE ONLY) 09/08/10 04/19/10 07/02/10

SHEET 22 OF 23

FILE => 53-rwe2_mse_zltb03.dgn

USERNAME => trlenard DATE PLOTTED => 14-OCT-2010 TIME PLOTTED => 13:18

REFERENCE: CALTRANS SOIL & ROCK LOGGING, CLASSIFICATION, AND PRESENTATION MANUAL (JUNE 2007)

GROUP SYMBOLS AND NAMES

Graphic/Symbol	Group Names
GW	Well-graded GRAVEL Well-graded GRAVEL with SAND
GP	Poorly graded GRAVEL Poorly graded GRAVEL with SAND
GW-GM	Well-graded GRAVEL with SILT Well-graded GRAVEL with SILT and SAND
GW-GC	Well-graded GRAVEL with CLAY (or SILTY CLAY) Well-graded GRAVEL with CLAY and SAND (or SILTY CLAY and SAND)
GP-GM	Poorly graded GRAVEL with SILT Poorly graded GRAVEL with SILT and SAND
GP-GC	Poorly graded GRAVEL with CLAY (or SILTY CLAY) Poorly graded GRAVEL with CLAY and SAND (or SILTY CLAY and SAND)
GM	SILTY GRAVEL SILTY GRAVEL with SAND
GC	CLAYEY GRAVEL CLAYEY GRAVEL with SAND
GC-GM	SILTY, CLAYEY GRAVEL SILTY, CLAYEY GRAVEL with SAND
SW	Well-graded SAND Well-graded SAND with GRAVEL
SP	Poorly graded SAND Poorly graded SAND with GRAVEL
SW-SM	Well-graded SAND with SILT Well-graded SAND with SILT and GRAVEL
SW-SC	Well-graded SAND with CLAY (or SILTY CLAY) Well-graded SAND with CLAY and GRAVEL (or SILTY CLAY and GRAVEL)
SP-SM	Poorly graded SAND with SILT Poorly graded SAND with SILT and GRAVEL
SP-SC	Poorly graded SAND with CLAY (or SILTY CLAY) Poorly graded SAND with CLAY and GRAVEL (or SILTY CLAY and GRAVEL)
SM	SILTY SAND SILTY SAND with GRAVEL
SC	CLAYEY SAND CLAYEY SAND with GRAVEL
SC-SM	SILTY, CLAYEY SAND SILTY, CLAYEY SAND with GRAVEL
PT	PEAT
	COBBLES COBBLES and BOULDERS BOULDERS

Graphic/Symbol	Group Names
CL	Lean CLAY Lean CLAY with SAND Lean CLAY with GRAVEL SANDY lean CLAY SANDY lean CLAY with GRAVEL GRAVELLY lean CLAY GRAVELLY lean CLAY with SAND
CL-ML	SILTY CLAY SILTY CLAY with SAND SILTY CLAY with GRAVEL SANDY SILTY CLAY SANDY SILTY CLAY with GRAVEL GRAVELLY SILTY CLAY GRAVELLY SILTY CLAY with SAND
ML	SILT SILT with SAND SILT with GRAVEL SANDY SILT SANDY SILT with GRAVEL GRAVELLY SILT GRAVELLY SILT with SAND
OL	ORGANIC lean CLAY ORGANIC lean CLAY with SAND ORGANIC lean CLAY with GRAVEL SANDY ORGANIC lean CLAY SANDY ORGANIC lean CLAY with GRAVEL GRAVELLY ORGANIC lean CLAY GRAVELLY ORGANIC lean CLAY with SAND
OL	ORGANIC SILT ORGANIC SILT with SAND ORGANIC SILT with GRAVEL SANDY ORGANIC SILT SANDY ORGANIC SILT with GRAVEL GRAVELLY ORGANIC SILT GRAVELLY ORGANIC SILT with SAND
CH	Fat CLAY Fat CLAY with SAND Fat CLAY with GRAVEL SANDY fat CLAY SANDY fat CLAY with GRAVEL GRAVELLY fat CLAY GRAVELLY fat CLAY with SAND
MH	Elastic SILT Elastic SILT with SAND Elastic SILT with GRAVEL SANDY elastic SILT SANDY elastic SILT with GRAVEL GRAVELLY elastic SILT GRAVELLY elastic SILT with SAND
OH	ORGANIC fat CLAY ORGANIC fat CLAY with SAND ORGANIC fat CLAY with GRAVEL SANDY ORGANIC fat CLAY SANDY ORGANIC fat CLAY with GRAVEL GRAVELLY ORGANIC fat CLAY GRAVELLY ORGANIC fat CLAY with SAND
OH	ORGANIC elastic SILT ORGANIC elastic SILT with SAND ORGANIC elastic SILT with GRAVEL SANDY ORGANIC elastic SILT SANDY ORGANIC elastic SILT with GRAVEL GRAVELLY ORGANIC elastic SILT GRAVELLY ORGANIC elastic SILT with SAND
OL/OH	ORGANIC SOIL ORGANIC SOIL with SAND ORGANIC SOIL with GRAVEL SANDY ORGANIC SOIL SANDY ORGANIC SOIL with GRAVEL GRAVELLY ORGANIC SOIL GRAVELLY ORGANIC SOIL with SAND

FIELD AND LABORATORY TESTING

- (C) Consolidation (ASTM D 2435)
- (CL) Collapse Potential (ASTM D 5333)
- (CP) Compaction Curve (CTM 216)
- (CR) Corrosivity Testing (CTM 643, CTM 422, CTM 417)
- (CU) Consolidated Undrained Triaxial (ASTM D 4767)
- (DS) Direct Shear (ASTM D 3080)
- (EI) Expansion Index (ASTM D 4829)
- (M) Moisture Content (ASTM D 2216)
- (OC) Organic Content-% (ASTM D 2974)
- (P) Permeability (CTM 220)
- (PA) Particle Size Analysis (ASTM D 422)
- (PI) Plasticity Index (AASHTO T 90) Liquid Limit (AASHTO T 89)
- (PL) Point Load Index (ASTM D 5731)
- (PM) Pressure Meter
- (PP) Pocket Penetrometer
- (R) R-Value (CTM 301)
- (SE) Sand Equivalent (CTM 217)
- (SG) Specific Gravity (AASHTO T 100)
- (SL) Shrinkage Limit (ASTM D 427)
- (SW) Swell Potential (ASTM D 4546)
- (TV) Pocket Torvane
- (UC) Unconfined Compression-Soil (ASTM D 2166) Unconfined Compression-Rock (ASTM D 2938)
- (UU) Unconsolidated Undrained Triaxial (ASTM D 2850)
- (UW) Unit Weight (ASTM D 4767)
- (VS) Vane Shear (AASHTO T 223)

DIST	COUNTY	ROUTE	POST MILES TOTAL PROJECT	SHEET No	TOTAL SHEETS
07	LA	47,103	3.5/4.6, 0.0/1.1	963	1003

REGISTERED ENGINEER — DATE 04/19/10

10-11-10
PLANS APPROVAL DATE

REGISTERED PROFESSIONAL ENGINEER ERIC BROWN NO. GE-2806 EXP. 06-30-2010 GEOTECHNICAL STATE OF CALIFORNIA

The State of California or its officers or agents shall not be responsible for the accuracy or completeness of electronic copies of this plan sheet.

ACTA
ONE CIVIC PLAZA. SUITE 350,
CARSON, CA 90745

EARTH MECHANICS, INC.
17660, NEWHOPE STREET, SUITE E
FOUNTAIN VALLEY, CA 92708

APPARENT DENSITY OF COHESIONLESS SOILS

Description	SPT N_{60} (Blows / 12 inches)
Very loose	0 - 4
Loose	5 - 10
Medium Dense	11 - 30
Dense	31 - 50
Very Dense	> 50

MOISTURE

Description	Criteria
Dry	Absence of moisture, dusty, dry to the touch
Moist	Damp but no visible water
Wet	Visible free water, usually soil is below water table

PERCENT OR PROPORTION OF SOILS

Description	Criteria
Trace	Particles are present but estimated to be less than 5%
Few	5 to 10%
Little	15 to 25%
Some	30 to 45%
Mostly	50 to 100%

PARTICLE SIZE

Description		Size
Boulder		> 12"
Cobble		3" to 12"
Gravel	Coarse	3/4" to 3"
	Fine	No. 4 to 3/4"
Sand	Coarse	No. 10 to No. 4
	Medium	No. 40 to No. 10
	Fine	No. 200 to No. 40

DESIGN OVERSIGHT

SIGN OFF DATE

DRAWN BY: J.Fang

CHECKED BY: K.Pratheepan

FIELD INVESTIGATION BY:
E.Brown

PREPARED FOR THE STATE OF CALIFORNIA DEPARTMENT OF TRANSPORTATION

E. Brown
PROJECT ENGINEER

BRIDGE NO. 53E0150
POST MILE 0.10

MSE RETAINING WALL NO. E2
LOG OF TEST BORINGS NO. 4 OF 4

OGS CIVIL LOG OF TEST BORINGS SHEET (ENGLISH) (REV. 06-01-09)

ORIGINAL SCALE IN INCHES FOR REDUCED PLANS 0 1 2 3

CU 07-271
EA 138201

DISREGARD PRINTS BEARING EARLIER REVISION DATES

REVISION DATES (PRELIMINARY STAGE ONLY) 06/08/10 04/19/10 07/02/10

SHEET 23 OF 23

FILE => 53-rwe2_mse_zltb04.dgn

USERNAME => trienard DATE PLOTTED => 14-OCT-2010 TIME PLOTTED => 13:18

DIST	COUNTY	ROUTE	POST MILES TOTAL PROJECT	SHEET No	TOTAL SHEETS
07	LA	47,103	3.5/4.6, 0.0/1.1	964	1003

REGISTERED CIVIL ENGINEER — DATE 05-24-10

10-11-10
PLANS APPROVAL DATE

REGISTERED PROFESSIONAL ENGINEER — FOUED ZAYATI — No. C57046 — Exp. 06-30-11 — CIVIL — STATE OF CALIFORNIA

The State of California or its officers or agents shall not be responsible for the accuracy or completeness of electronic copies of this plan sheet.

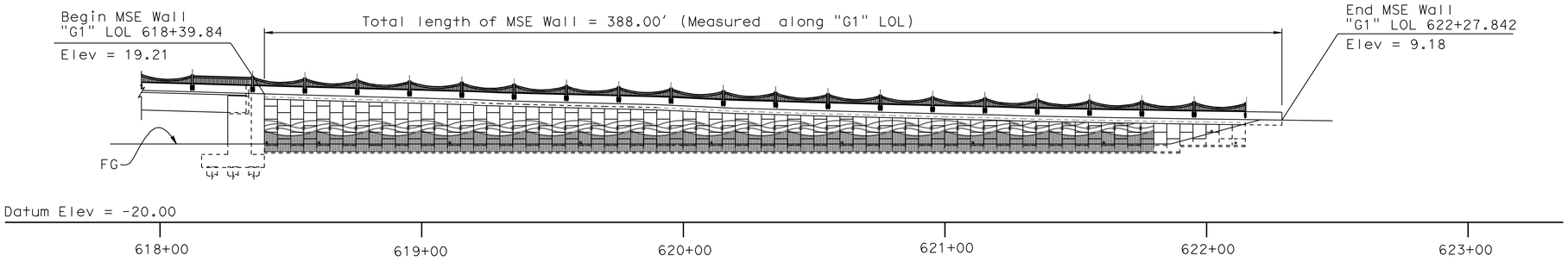

DEVELOPED MIRRORED ELEVATION

1" = 250'

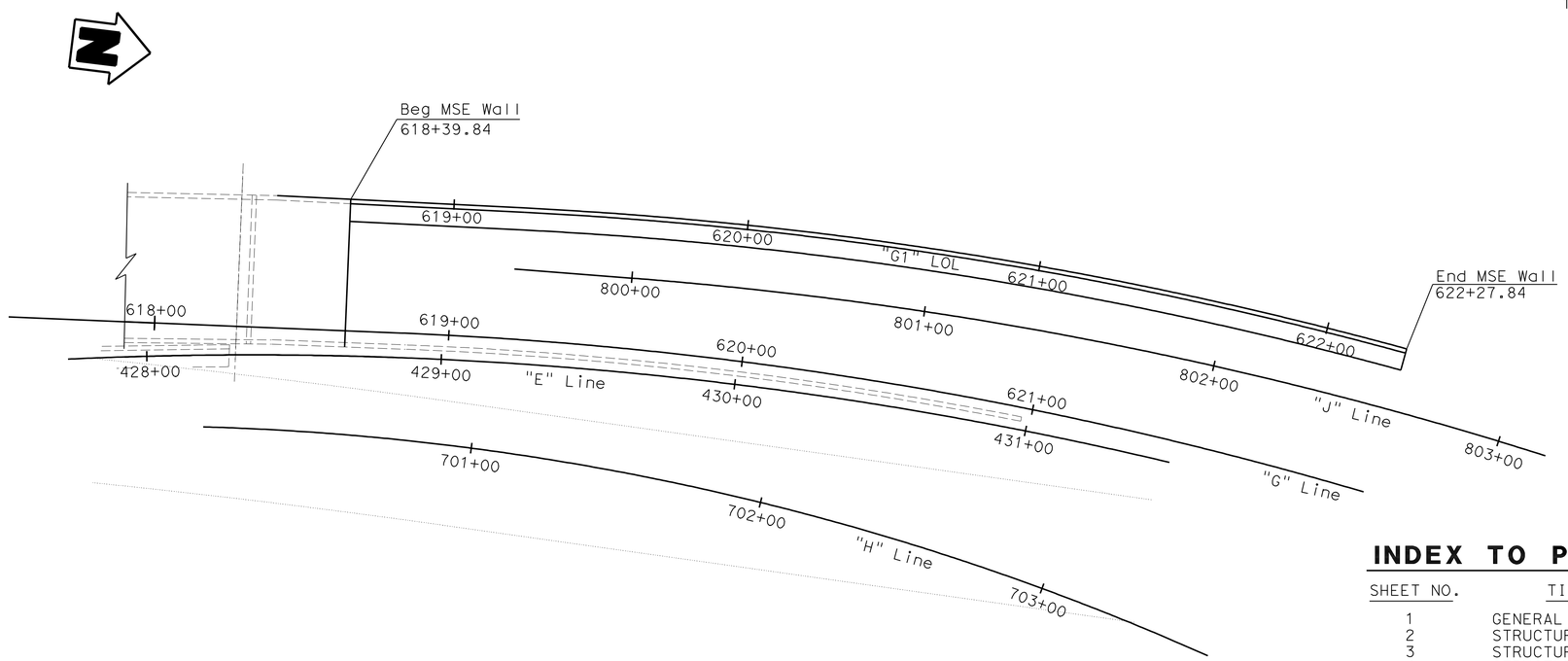

PLAN

1" = 250'

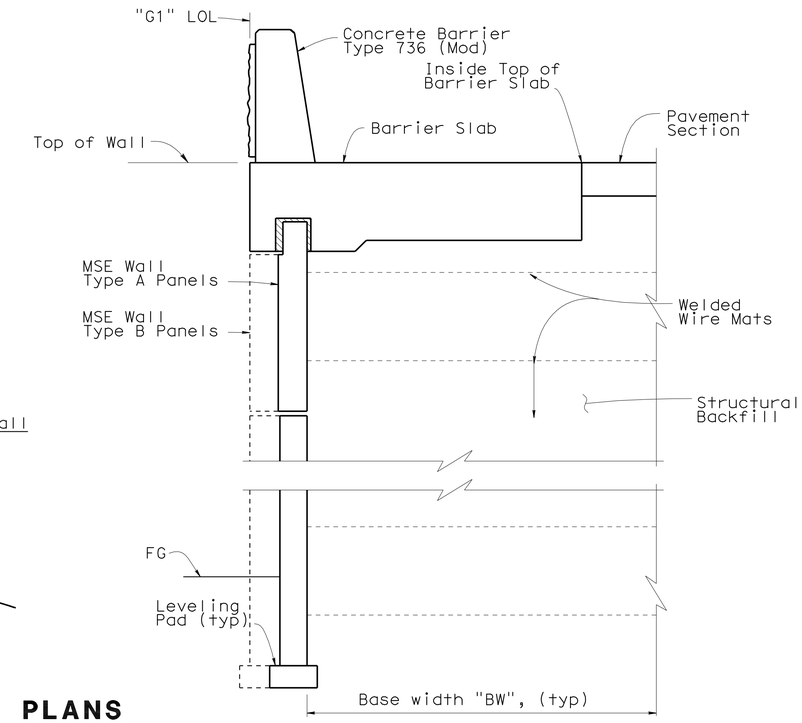

TYPICAL SECTION

No Scale

INDEX TO PLANS

SHEET NO.	TITLE
1	GENERAL PLAN
2	STRUCTURE PLAN No. 1
3	STRUCTURE PLAN No. 2
4	STRUCTURE PLAN No. 3
5	STRUCTURE PLAN No. 4
6	FOUNDATION PLAN
7	MSE WALL DETAILS No. 1 - TYPE A PANELS
8	MSE WALL DETAILS No. 2 - TYPE B PANELS
9	MSE WALL DETAILS No. 3
10	MSE WALL DETAILS No. 4
11	MSE WALL DETAILS No. 5
12	MSE WALL DETAILS No. 6
13	MSE WALL DETAILS No. 7
14	MSE WALL DETAILS No. 8
15	CONCRETE BARRIER DETAILS No. 1
16	CONCRETE BARRIER DETAILS No. 2
17	LOG OF TEST BORINGS No. 1 OF 4
18	LOG OF TEST BORINGS No. 2 OF 4
19	LOG OF TEST BORINGS No. 3 OF 4
20	LOG OF TEST BORINGS No. 4 OF 4

QUANTITIES

EARTH RETAINING STRUCTURE, LOCATION E	6,050	SQFT
STRUCTURAL CONCRETE, BARRIER SLAB	175	CY
BICYCLE RAILING	380	LF
CONCRETE BARRIER (TYPE 736 MODIFIED)	388	LF

DESIGN ENGINEER

	BY	CHECKED
DESIGN	S. Galgiani	F. Zayati
DETAILS	K. Kubo	S. Galgiani
QUANTITIES	S. Galgiani	F. Zayati

LOAD & RESISTANCE FACTOR DESIGN — LIVE LOADING: HL93 W/"LOW-BOY"; PERMIT DESIGN VEHICLE

LAYOUT — BY S. Galgiani — CHECKED F. Zayati
SPECIFICATIONS — BY J. Strootman — PLANS AND SPECS COMPARED J. Strootman

STATE OF CALIFORNIA
DEPARTMENT OF TRANSPORTATION

DIVISION OF ENGINEERING SERVICES
STRUCTURE DESIGN
DESIGN BRANCH 14

BRIDGE NO. 53E0151
POST MILE 0.17

MSE WALL NO. G1
GENERAL PLAN

STRUCTURES DESIGN GENERAL PLAN SHEET (ENGLISH) (REV. 10/25/05)

ORIGINAL SCALE IN INCHES FOR REDUCED PLANS 0 1 2 3

CU 07-271
EA 138201

DISREGARD PRINTS BEARING EARLIER REVISION DATES

REVISION DATES: 11-24-08 01-30-10 03-30-10 03-30-10 04-06-10 04-30-10 05-10-10 05-24-10 06-30-10

SHEET 1 OF 20

FILE => 53-rwg1_mse_agp.dgn

STRUCTURES DESIGN GENERAL PLAN SHEET (ENGLISH) (REV.07-24-06)

USERNAME => frmnguye DATE PLOTTED => 21-OCT-2010 TIME PLOTTED => 14:53

DIST	COUNTY	ROUTE	POST MILES TOTAL PROJECT	SHEET No	TOTAL SHEETS
07	LA	47,103	3.5/4.6, 0.0/1.1	965	1003

REGISTERED CIVIL ENGINEER — DATE 05-24-10

10-11-10
PLANS APPROVAL DATE

REGISTERED PROFESSIONAL ENGINEER — FOUED ZAYATI — No. C57046 — Exp. 06-30-11 — CIVIL — STATE OF CALIFORNIA

The State of California or its officers or agents shall not be responsible for the accuracy or completeness of electronic copies of this plan sheet.

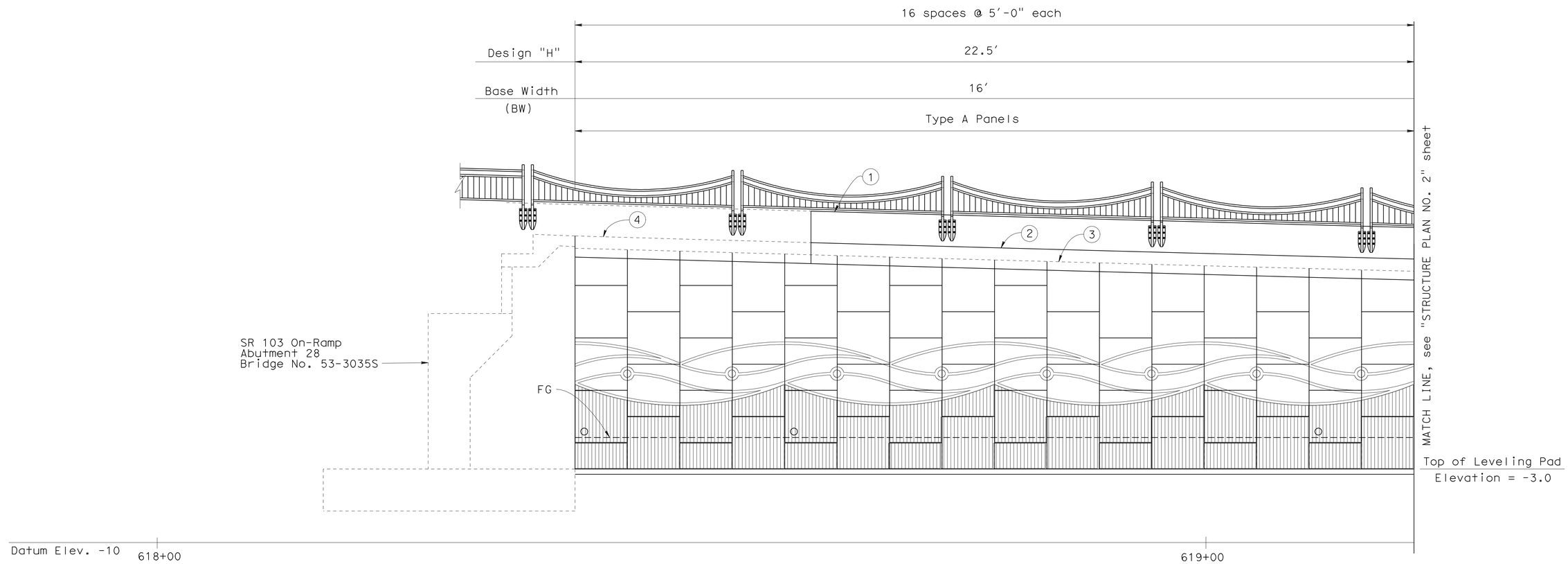

DEVELOPED MIRRORED ELEVATION

1" = 5'

1. Top of Concrete Barrier Type 736 Mod
2. Top of Wall
3. Top of Precast Concrete Panel
4. Top of Structure Approach Slab

○ Indicates location of Inspection Wire

O Indicates Underdrain Outlet Pipe, see "DETAILS No. 4" sheet.

◯ Interval in years from Construction to removal of Inspection Wire

NOTES:

1. Top two layers of wire mesh have a base width of 16'-0".
2. All panel spacing is 5'-0" along LOL.

	BY	CHECKED
DESIGN	S. Galgiani	F. Zayati
DETAILS	K. Kubo	S. Galgiani
QUANTITIES	S. Galgiani	F. Zayati

STATE OF CALIFORNIA
DEPARTMENT OF TRANSPORTATION

DIVISION OF ENGINEERING SERVICES
STRUCTURE DESIGN
DESIGN BRANCH 14

BRIDGE NO. 53E0151
POST MILE 0.17

MSE WALL NO. G1
STRUCTURE PLAN NO. 1

STRUCTURES DESIGN DETAIL SHEET (ENGLISH) (REV. 10/25/05)

ORIGINAL SCALE IN INCHES FOR REDUCED PLANS 0 1 2 3

CU 07-271
EA 138201

DISREGARD PRINTS BEARING EARLIER REVISION DATES → 01-20-10 | 2-19-10 | 04-06-10 | 5-24-10

REVISION DATES

SHEET 2 OF 20

FILE => 53-rwg1_mse_bsp01.dgn

USERNAME => trlenard DATE PLOTTED => 14-OCT-2010 TIME PLOTTED => 13:19

DIST	COUNTY	ROUTE	POST MILES TOTAL PROJECT	SHEET No	TOTAL SHEETS
07	LA	47,103	3.5/4.6, 0.0/1.1	966	1003

REGISTERED CIVIL ENGINEER — DATE 05-24-10

10-11-10
PLANS APPROVAL DATE

REGISTERED PROFESSIONAL ENGINEER — FOUED ZAYATI — No. C57046 — Exp. 06-30-11 — CIVIL — STATE OF CALIFORNIA

The State of California or its officers or agents shall not be responsible for the accuracy or completeness of electronic copies of this plan sheet.

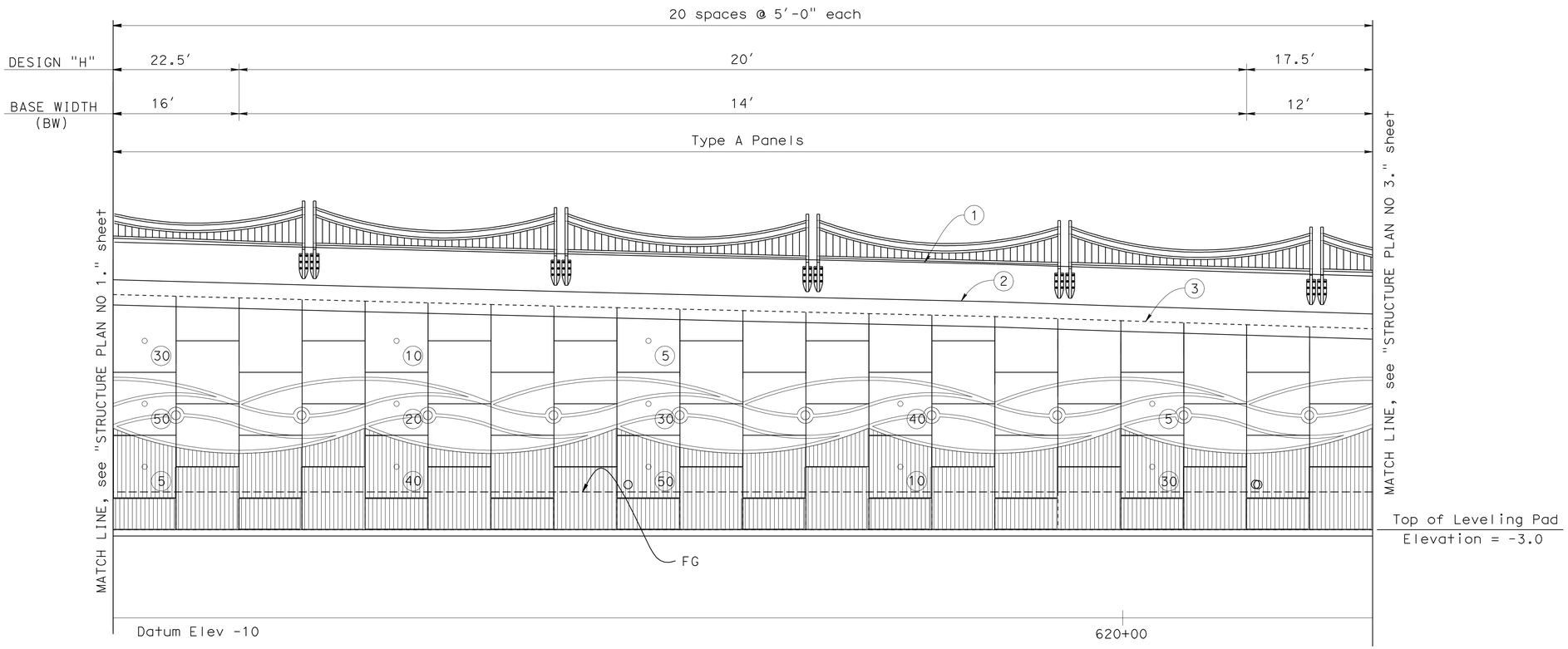

DEVELOPED MIRROR ELEVATION

1" = 5'

(1) Top of Concrete Barrier Type 736 Mod

(2) Top of Wall

(3) Top of Precast Concrete Panel

○ Indicates location of Inspection Wire

O Indicates Underdrain Outlet Pipe, see "DETAILS No. 4" sheet.

◯ Interval in years from Construction to removal of Inspection Wire

NOTES:

1. Top two layers of wire mesh have a base width of 16'-0".
2. All panel spacing is 5'-0" along LOL.

	BY	CHECKED
DESIGN	S. Galgiani	F. Zayati
DETAILS	K. Kubo	S. Galgiani
QUANTITIES	S. Galgiani	F. Zayati

STATE OF CALIFORNIA
DEPARTMENT OF TRANSPORTATION

DIVISION OF ENGINEERING SERVICES
STRUCTURE DESIGN
DESIGN BRANCH 14

BRIDGE NO. 53E0151
POST MILE 0.17

MSE WALL NO. G1
STRUCTURE PLAN NO. 2

STRUCTURES DESIGN DETAIL SHEET (ENGLISH) (REV. 10/25/05)

ORIGINAL SCALE IN INCHES FOR REDUCED PLANS 0 1 2 3

CU 07-271
EA 138201

DISREGARD PRINTS BEARING EARLIER REVISION DATES

REVISION DATES: 01-19-10 2-19-10 04-06-10 5-24-10

SHEET 3 OF 20

FILE => 53-rwg1_mse_bsp02.dgn

USERNAME => trmikest DATE PLOTTED => 20-OCT-2010 TIME PLOTTED => 08:45

DIST	COUNTY	ROUTE	POST MILES TOTAL PROJECT	SHEET No	TOTAL SHEETS
07	LA	47,103	3.5/4.6, 0.0/1.1	967	1003

REGISTERED CIVIL ENGINEER — DATE 05-24-10

10-11-10
PLANS APPROVAL DATE

REGISTERED PROFESSIONAL ENGINEER — FOUED ZAYATI — No. C57046 — Exp. 06-30-11 — CIVIL — STATE OF CALIFORNIA

The State of California or its officers or agents shall not be responsible for the accuracy or completeness of electronic copies of this plan sheet.

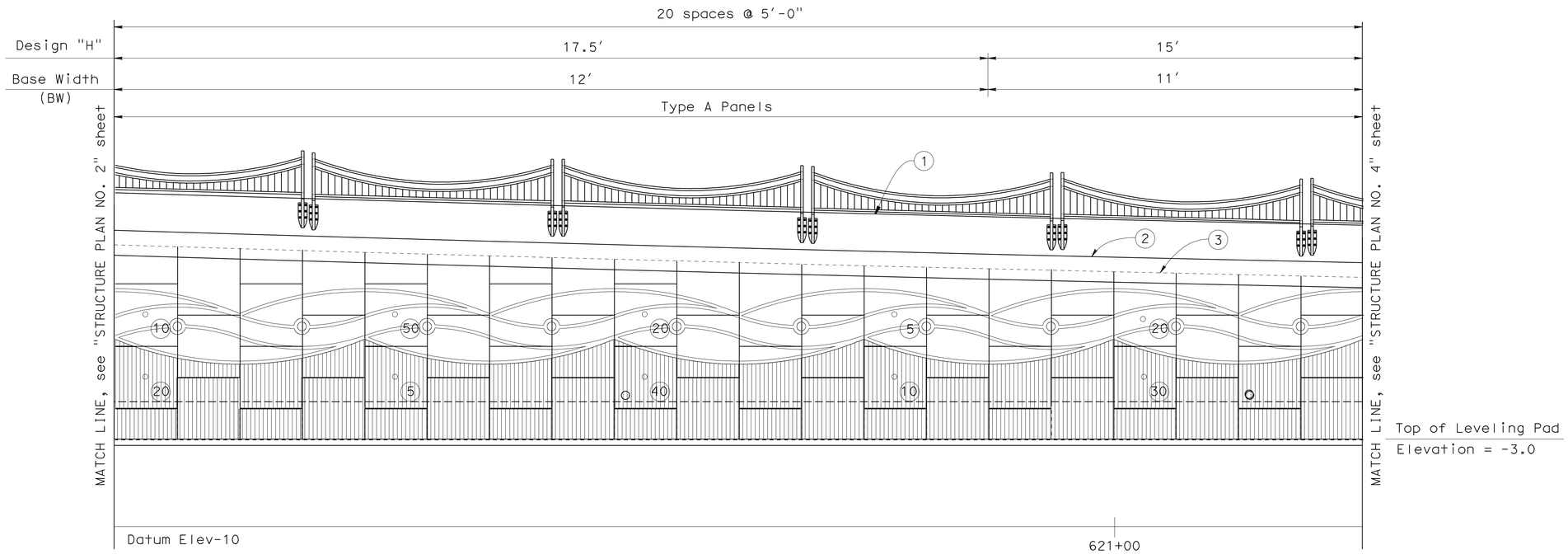

DEVELOPED MIRROR ELEVATION

1" = 5'

1. Top of Concrete Barrier Type 736 Mod
2. Top of Wall
3. Top of Precast Concrete Panel

○ Indicates location of Inspection Wire

O Indicates Underdrain Outlet Pipe, see "DETAILS No. 4" sheet.

◯ Interval in years from Construction to removal of Inspection Wire

NOTES:

1. Top two layers of wire mesh have a base width of 16'-0".
2. All panel spacing is 5'-0" along LOL.

	BY	CHECKED
DESIGN	S. Galgiani	F. Zayati
DETAILS	K. Kubo	S. Galgiani
QUANTITIES	S. Galgiani	F. Zayati

STATE OF CALIFORNIA
DEPARTMENT OF TRANSPORTATION

DIVISION OF ENGINEERING SERVICES
STRUCTURE DESIGN
DESIGN BRANCH 14

BRIDGE NO. 53E0151
POST MILE 0.17

MSE WALL NO. G1
STRUCTURE PLAN NO. 3

STRUCTURES DESIGN DETAIL SHEET (ENGLISH) (REV. 10/25/05)

ORIGINAL SCALE IN INCHES FOR REDUCED PLANS 0 1 2 3

CU 07-271
EA 138201

DISREGARD PRINTS BEARING EARLIER REVISION DATES

REVISION DATES: 01-25-10, 3-19-10, 04-06-10, 5-24-10

SHEET 4 OF 20

FILE => 53-rwg1_mse_bsp03.dgn

USERNAME => trlenard DATE PLOTTED => 14-OCT-2010 TIME PLOTTED => 13:19

DIST	COUNTY	ROUTE	POST MILES TOTAL PROJECT	SHEET No	TOTAL SHEETS
07	LA	47,103	3.5/4.6, 0.0/1.1	968	1003

REGISTERED CIVIL ENGINEER — DATE 05-24-10

10-11-10
PLANS APPROVAL DATE

REGISTERED PROFESSIONAL ENGINEER — FOUED ZAYATI — No. C57046 — Exp. 06-30-11 — CIVIL — STATE OF CALIFORNIA

The State of California or its officers or agents shall not be responsible for the accuracy or completeness of electronic copies of this plan sheet.

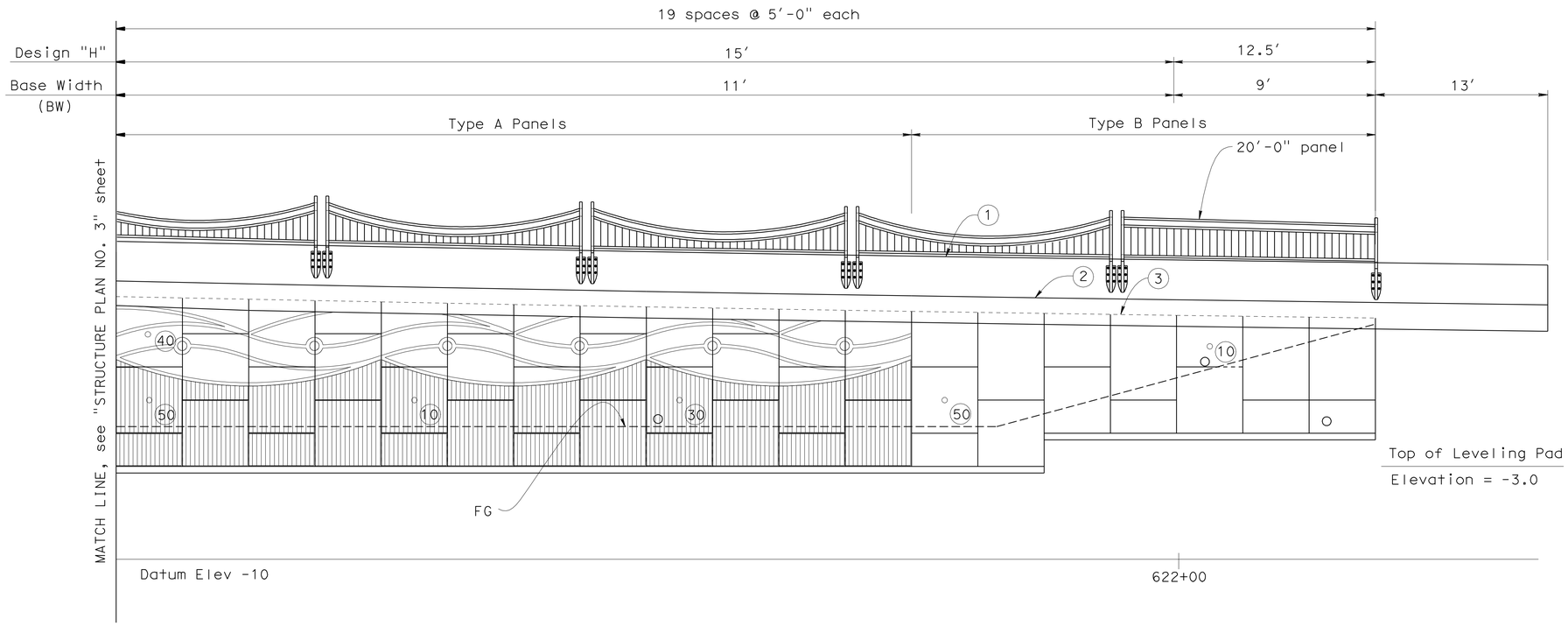

DEVELOPED MIRROR ELEVATION

1" = 5'

(1) Top of Concrete Barrier Type 736 Mod

(2) Top of Wall

(3) Top of Precast Concrete Panel

○ Indicates location of Inspection Wire

O Indicates Underdrain Outlet Pipe, see "DETAILS No. 4" sheet.

◯ Interval in years from Construction to removal of Inspection Wire

NOTES:

1. Top two layers of wire mesh have a base width of 16'-0".
2. All panel spacing is 5'-0" along LOL.

	BY	CHECKED
DESIGN	S. Galgiani	F. Zayati
DETAILS	K. Kubo	S. Galgiani
QUANTITIES	S. Galgiani	F. Zayati

STATE OF CALIFORNIA
DEPARTMENT OF TRANSPORTATION

DIVISION OF ENGINEERING SERVICES
STRUCTURE DESIGN
DESIGN BRANCH 14

BRIDGE NO. 53E0151
POST MILE 0.17

MSE WALL NO. G1
STRUCTURE PLAN NO. 4

STRUCTURES DESIGN DETAIL SHEET (ENGLISH) (REV. 10/25/05)

ORIGINAL SCALE IN INCHES FOR REDUCED PLANS 0 1 2 3

CU 07-271
EA 138201

DISREGARD PRINTS BEARING EARLIER REVISION DATES

REVISION DATES: 01-24-10, 3-19-10, 04-06-10, 04-30-10, 5-24-10

SHEET 5 OF 20

FILE => 53-rwg1_mse_bsp04.dgn

USERNAME => friehard DATE PLOTTED => 14-OCT-2010 TIME PLOTTED => 13:13

DIST	COUNTY	ROUTE	POST MILES TOTAL PROJECT	SHEET No.	TOTAL SHEETS
07	LA	47,103	3.5/4.6, 0.0/1.1	969	1003

Foued Zayati 05-24-10
REGISTERED CIVIL ENGINEER

10-11-10
PLANS APPROVAL DATE

REGISTERED PROFESSIONAL ENGINEER FOUED ZAYATI No. C57046 Exp. 06-30-11 CIVIL STATE OF CALIFORNIA

The State of California or its officers or agents shall not be responsible for the accuracy or completeness of electronic copies of this plan sheet.

CURVE DATA				
No.	R	Δ	T	L
1	1398.48′	12°26′46.34"	152.497′	303.788′

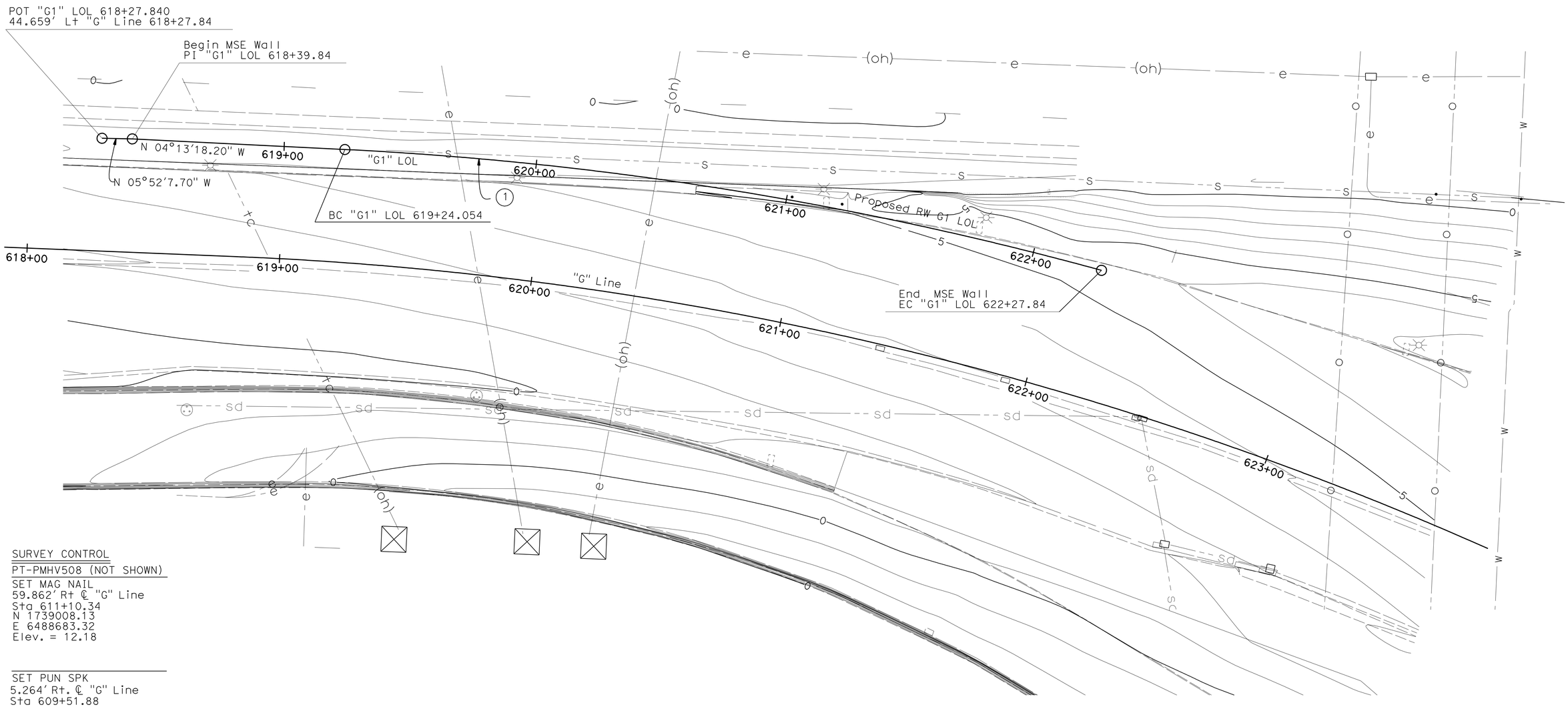

SURVEY CONTROL

PT-PMHV508 (NOT SHOWN)

SET MAG NAIL
59.862′ Rt ℄ "G" Line
Sta 611+10.34
N 1739008.13
E 6488683.32
Elev. = 12.18

SET PUN SPK
5.264′ Rt. ℄ "G" Line
Sta 609+51.88
N 1738843.39
E 6488642.44
Elev. = -3.62

HNTB *Corporation*
200 E. SANDPOINTE AVENUE, SUITE 200
SANTA ANA, CALIFORNIA 92707

SCALE: 1:20	VERT.DATUM NAVD 88		HORZ.DATUM NAD 83		
PHOTOGRAMMETRY AS OF:		ALIGNMENT TIES	Dist. Trav. Sheet		
SURVEYED	BY COAST SURVEY 1207	DRAFTED	BY L. Zhang		
FIELD CHECKED	BY D. Chang	CHECKED	BY D. Chang		

DESIGN	BY S. Galgiani	CHECKED F. Zayati
DETAILS	BY K. Kubo	CHECKED S. Galgiani
QUANTITIES	BY S. Galgiani	CHECKED F. Zayati

PREPARED FOR THE STATE OF CALIFORNIA DEPARTMENT OF TRANSPORTATION

PROJECT ENGINEER

BRIDGE NO. 53E0151
POST MILE 0.17

MSE WALL NO. G1
FOUNDATION PLAN

FOUNDATION PLAN SHEET (ENGLISH) (REV. 5/9/00)

ORIGINAL SCALE IN INCHES FOR REDUCED PLANS 0 1 2 3

CU 07-271
EA 138201

DISREGARD PRINTS BEARING EARLIER REVISION DATES

REVISION DATES (PRELIMINARY STAGE ONLY) 08-29-08 12-12-08 03-26-10 04-20-10

SHEET 6 OF 20

FILE => 53-rwg1_mse_cfp.dgn

USERNAME => trlenard DATE PLOTTED => 14-OCT-2010 TIME PLOTTED => 13:19

DIST	COUNTY	ROUTE	POST MILES TOTAL PROJECT	SHEET No	TOTAL SHEETS
07	LA	47,103	3.5/4.6, 0.0/1.1	970	1003

REGISTERED CIVIL ENGINEER — DATE 05-24-10

10-11-10
PLANS APPROVAL DATE

REGISTERED PROFESSIONAL ENGINEER — FOUED ZAYATI No. C57046 Exp. 06-30-11 CIVIL — STATE OF CALIFORNIA

The State of California or its officers or agents shall not be responsible for the accuracy or completeness of electronic copies of this plan sheet.

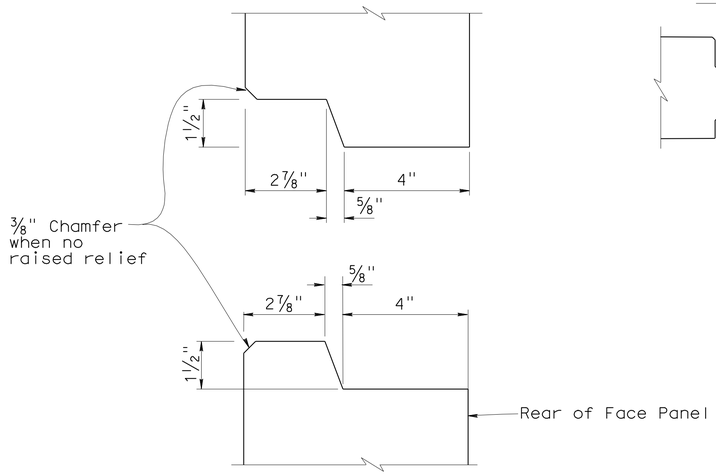

HORIZONTAL JOINT DETAIL

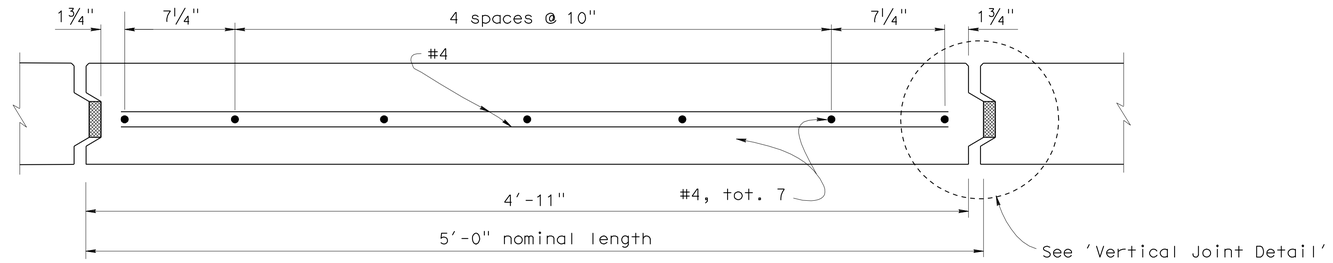

PLAN - FACE PANEL

NOTES:

1. Architectural treatment not shown.
2. Place reinforced Elastomeric Bearing Pads in all of the panel joints between the panels. Place one in each vertical joint where the horizontal joint intersects it. Place two per panel in each horizontal joint.
   ¾" x 2⅜" x 6" for vertical joints
   ¾" x 4" x 6" for horizontal joints.
3. Bond a strip of filter fabric, 1'-0" wide, over the full length of all panel joints.

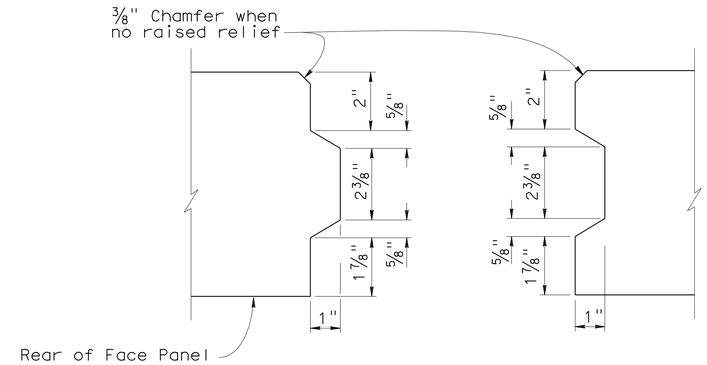

VERTICAL JOINT DETAIL

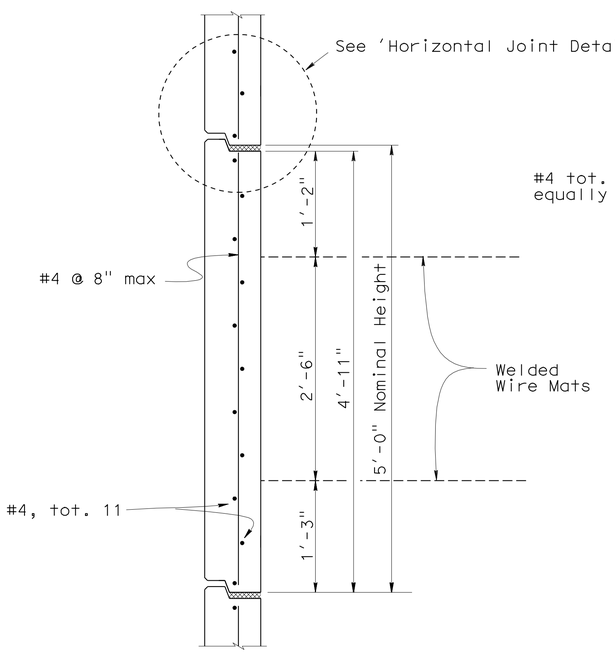

INTERMEDIATE PANEL

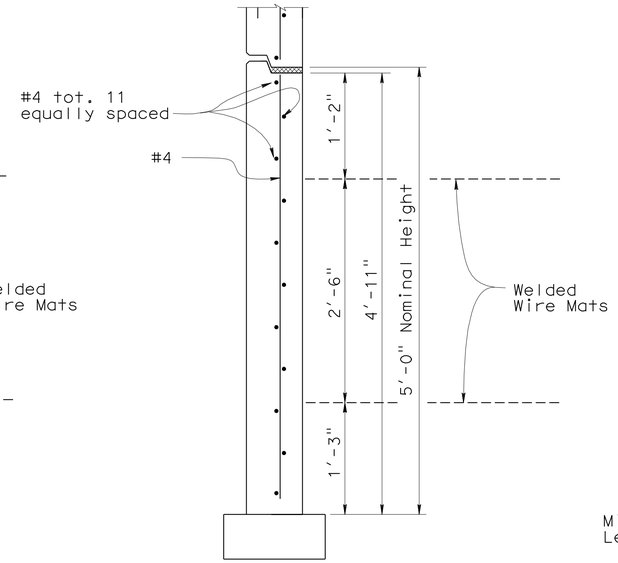

BOTTOM PANEL

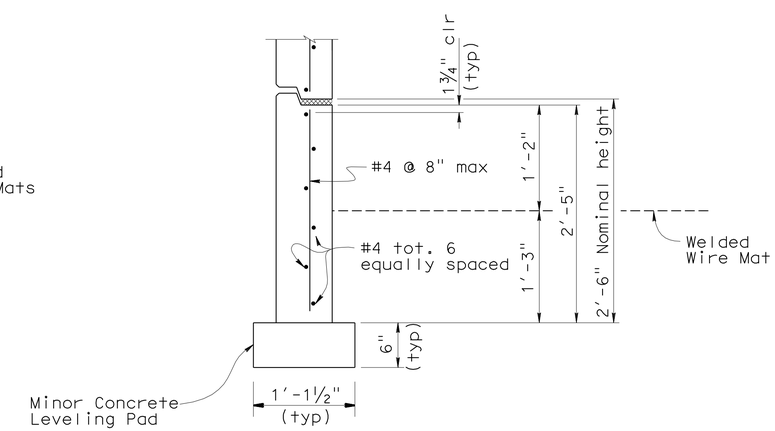

BOTTOM HALF PANEL

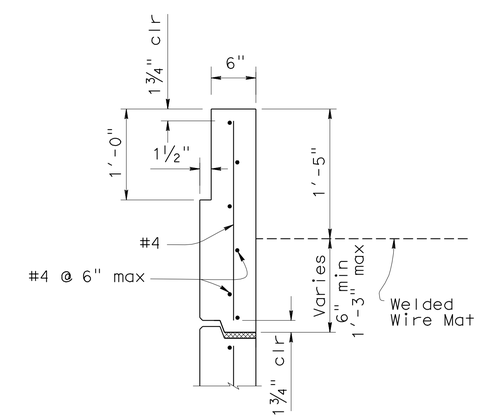

TOP PANEL

No Scale

	BY	CHECKED
DESIGN	S. Galgiani	F. Zayati
DETAILS	K. Kubo	S. Galgiani
QUANTITIES	S. Galgiani	F. Zayati

STATE OF CALIFORNIA
DEPARTMENT OF TRANSPORTATION

DIVISION OF ENGINEERING SERVICES
STRUCTURE DESIGN
DESIGN BRANCH 14

BRIDGE NO. 53E0151
POST MILE 0.17

MSE WALL NO. G1
MSE WALL DETAILS NO. 1 - TYPE A PANELS

STRUCTURES DESIGN DETAIL SHEET (ENGLISH) (REV. 10/25/05)

ORIGINAL SCALE IN INCHES FOR REDUCED PLANS 0 1 2 3

CU 07-271
EA 138201

DISREGARD PRINTS BEARING EARLIER REVISION DATES

REVISION DATES: 2-05-10 3-19-10 5-24-10 06-02-10

SHEET 7 OF 20

FILE => 53-rwg1_mse_edet01.dgn

USERNAME => trlenard DATE PLOTTED => 14-OCT-2010 TIME PLOTTED => 13:19

DIST	COUNTY	ROUTE	POST MILES TOTAL PROJECT	SHEET No	TOTAL SHEETS
07	LA	47,103	3.5/4.6, 0.0/1.1	971	1003

REGISTERED CIVIL ENGINEER — DATE 05-24-10

10-11-10
PLANS APPROVAL DATE

REGISTERED PROFESSIONAL ENGINEER — FOUED ZAYATI — No. C57046 — Exp. 06-30-11 — CIVIL — STATE OF CALIFORNIA

The State of California or its officers or agents shall not be responsible for the accuracy or completeness of electronic copies of this plan sheet.

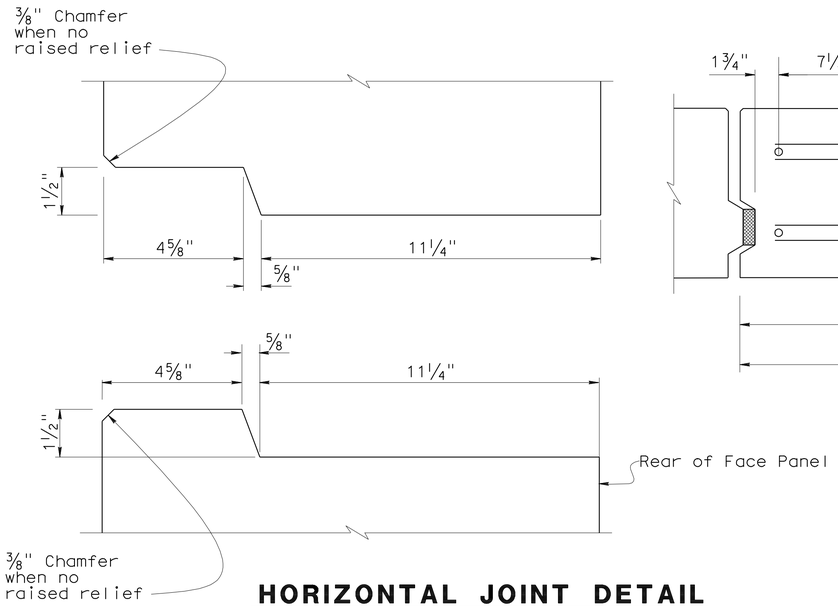

HORIZONTAL JOINT DETAIL

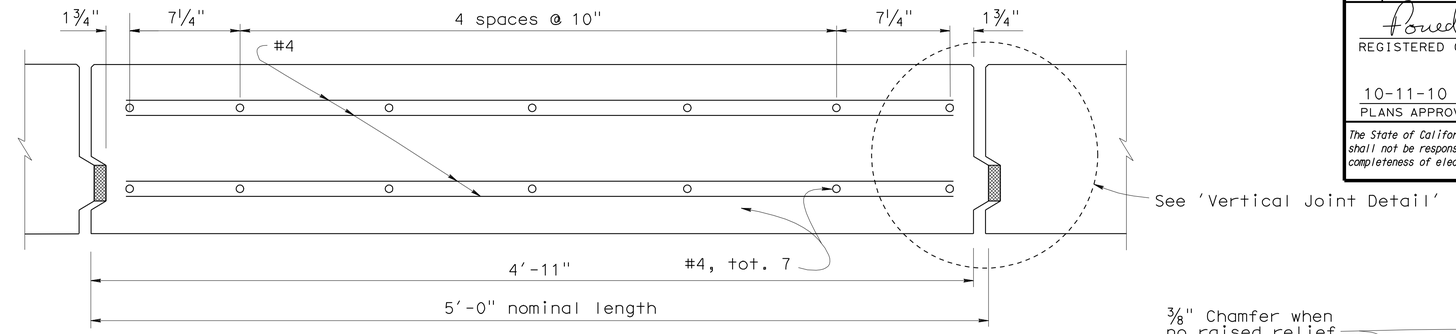

PLAN - FACE PANEL

NOTES:

1. Architectural treatment not shown.
2. Place reinforced Elastomeric Bearing Pads in all of the panel joints between the panels. Place one in each vertical joint where the horizontal joint intersects it. Place two per panel in each horizontal joint.
   3/4" x 2 3/8" x 6" for vertical joints
   3/4" x 6" x 6" for horizontal joints.
3. Bond a strip of filter fabric, 1' - 0" wide, over the full length of all panel joints.

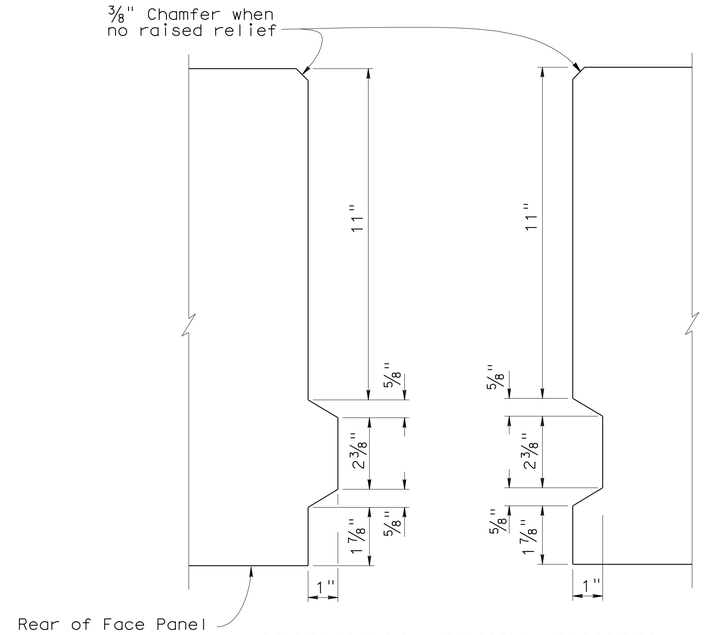

VERTICAL JOINT DETAIL

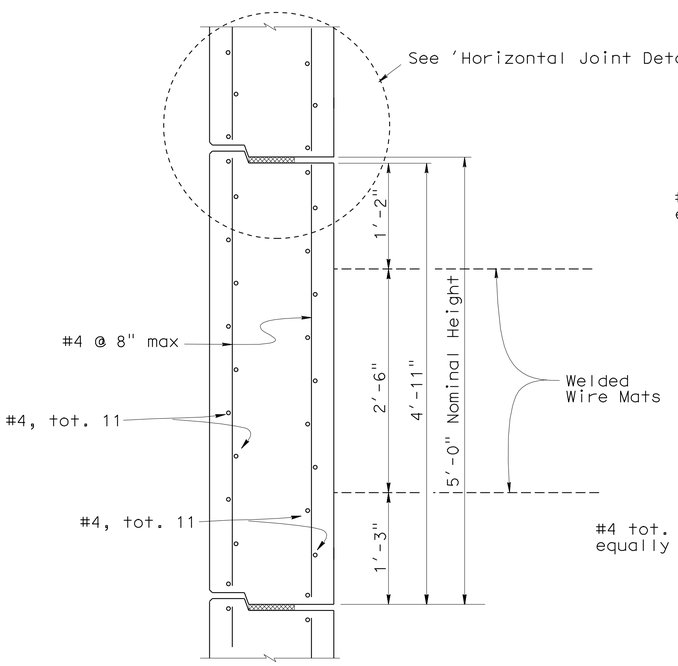

INTERMEDIATE PANEL

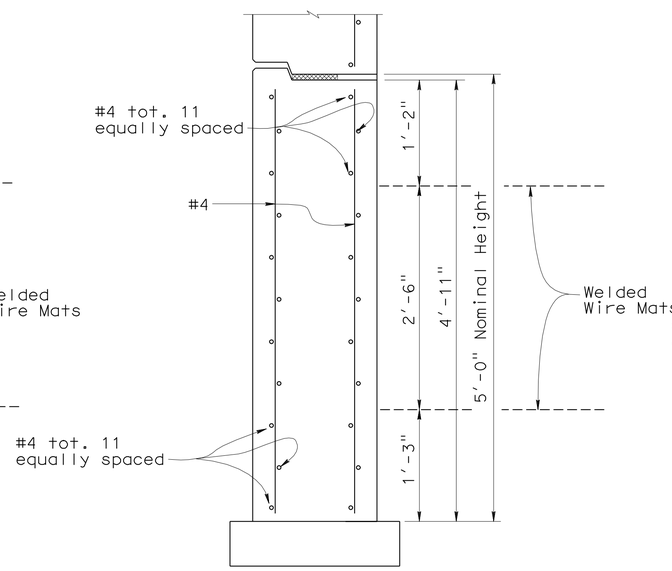

BOTTOM PANEL

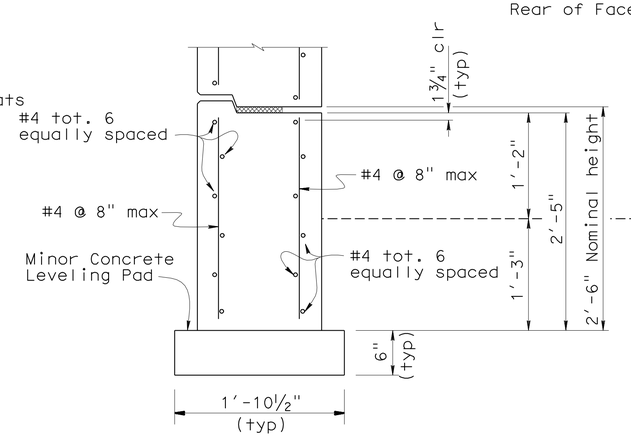

BOTTOM HALF PANEL

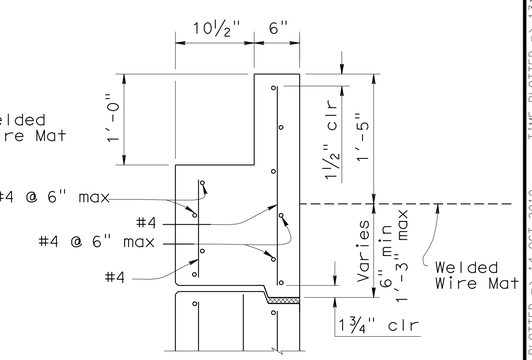

TOP PANEL

No Scale

DESIGN	BY S. Galgiani	CHECKED F. Zayati	
DETAILS	BY K. Kubo	CHECKED S. Galgiani	
QUANTITIES	BY S. Galgiani	CHECKED F. Zayati	

STATE OF CALIFORNIA
DEPARTMENT OF TRANSPORTATION

DIVISION OF ENGINEERING SERVICES
STRUCTURE DESIGN
DESIGN BRANCH 14

BRIDGE NO. 53E0151
POST MILE 0.17

MSE WALL NO. G1
MSE WALL DETAILS NO. 2 - TYPE B PANELS

STRUCTURES DESIGN DETAIL SHEET (ENGLISH) (REV. 10/25/05)

ORIGINAL SCALE IN INCHES FOR REDUCED PLANS 0 1 2 3

CU 07-271
EA 138201

DISREGARD PRINTS BEARING EARLIER REVISION DATES

REVISION DATES: 2-05-10 3-19-10 5-21-10 06-02-10

SHEET 8 OF 20

FILE => 53-rwg1_mse_edet02.dgn

USERNAME => trlenard DATE PLOTTED => 14-OCT-2010 TIME PLOTTED => 13:13

DIST.	COUNTY	ROUTE	POST MILES TOTAL PROJECT	SHEET NO.	TOTAL SHEETS
07	LA	47,103	3.5/4.6, 0.0/1.1	972	1003

Foued Zayati 05-24-10
REGISTERED ENGINEER - CIVIL

10-11-10
PLANS APPROVAL DATE

REGISTERED PROFESSIONAL ENGINEER FOUED ZAYATI No. C57046 Exp. 06-30-11 CIVIL STATE OF CALIFORNIA

The State of California or its officers or agents shall not be responsible for the accuracy or completeness of electronic copies of this plan sheet.

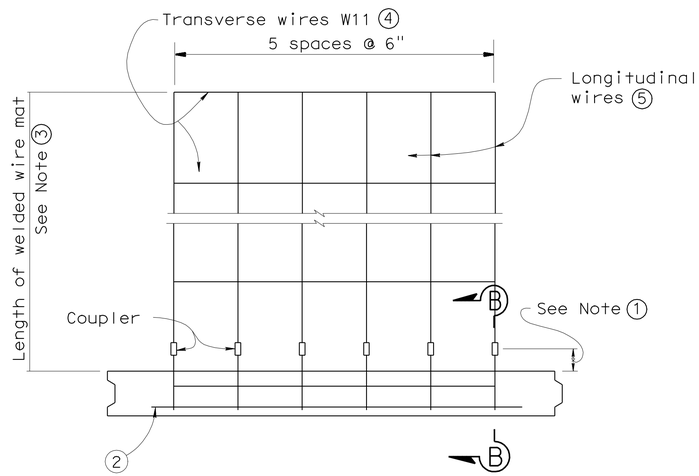

PLAN OF PANEL WITH WELDED WIRE MAT
No scale

GENERAL NOTES (MSE WALLS)

Live loading: Surcharge = 240 lb/ft^2

Soil parameters:

Internal design ϕ = 34°, γ = 120 lb/ft^3
External design ϕ(Backfill) = 34°, γ = 120 lb/ft^3
ϕ(Foundation) = 30°

Precast concrete panels:

f′c = 4,000 psi (Concrete compressive strength at 28 days)
fy = 60,000 psi (Yield strength of reinforcement)

Soil reinforcement:

Welded wire mats: fy = 65,000 psi (Yield strength)
Coupler: fy = 36,000 psi (Yield strength)
Corrosion rate = 1.1 mils/year

Reinforced concrete:

f′c = 3,600 psi, except as noted
(Concrete compressive strength at 28 days)

fy = 60,000 psi (Yield strength of reinforcement)

MSE = Mechanically stabilized embankment

Notes:

① Distance as required to permit coupler to be swaged.

② Place #4 bar, 3′ - 2" long, centered on connector mat, but not welded to it.

③ Length equals "Base width" of wall, except it shall not be less than 16′ for the top 2 levels of mats at the top of the wall.

④ All Transverse Wires size W11 at various spacings as shown elsewhere in plans.

⑤ All Longitudinal Wires at 6" spacing, of various sizes, as shown elsewhere in plans.

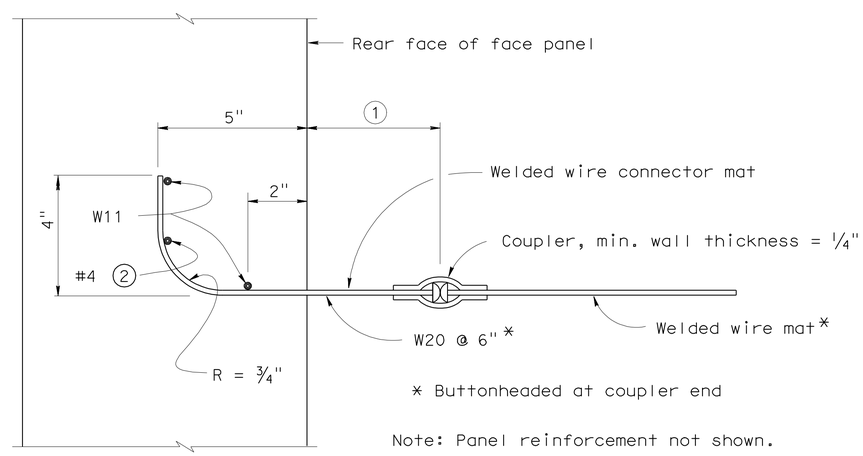

SECTION B-B
No scale

STANDARD DRAWING

FILE NO. xs13-020-3e

APPROVED BY K. GRISWELL
RESPONSIBLE TECHNICAL SPECIALIST
APPROVAL DATE 5-6-08

RELEASED BY ROBERTO LACALLE
RESPONSIBLE OFFICE CHIEF
RELEASE DATE 5-6-08

1 Modified Detail

STATE OF CALIFORNIA
DEPARTMENT OF TRANSPORTATION

DIVISION OF ENGINEERING SERVICES

BRIDGE NO. 53E0151
POST MILE 0.17

MSE WALL NO. G1
MSE WALL DETAILS NO. 3

DS OSD 2147A (ENGLISH STANDARD DRAWING "XS" BORDER REV. 01/11/08)

ORIGINAL SCALE IN INCHES FOR REDUCED PLANS 0 1 2 3

CU 07-271
EA 138201

DISREGARD PRINTS BEARING EARLIER REVISION DATES

REVISION DATES (PRELIMINARY STAGE ONLY) 2-03-10 3-22-10 05-19-10

SHEET 9 OF 20

DATE PLOTTED => 14-OCT-2010 TIME PLOTTED => 13:19

USERNAME => trlenard

53-rwg1_mse_edet03.dgn

DIST.	COUNTY	ROUTE	POST MILES TOTAL PROJECT	SHEET NO.	TOTAL SHEETS
07	LA	47,103	3.5/4.6, 0.0/1.1	973	1003

REGISTERED ENGINEER - CIVIL 05-24-10

10-11-10
PLANS APPROVAL DATE

REGISTERED PROFESSIONAL ENGINEER FOUED ZAYATI No. C57046 Exp. 06-30-11 CIVIL STATE OF CALIFORNIA

The State of California or its officers or agents shall not be responsible for the accuracy or completeness of electronic copies of this plan sheet.

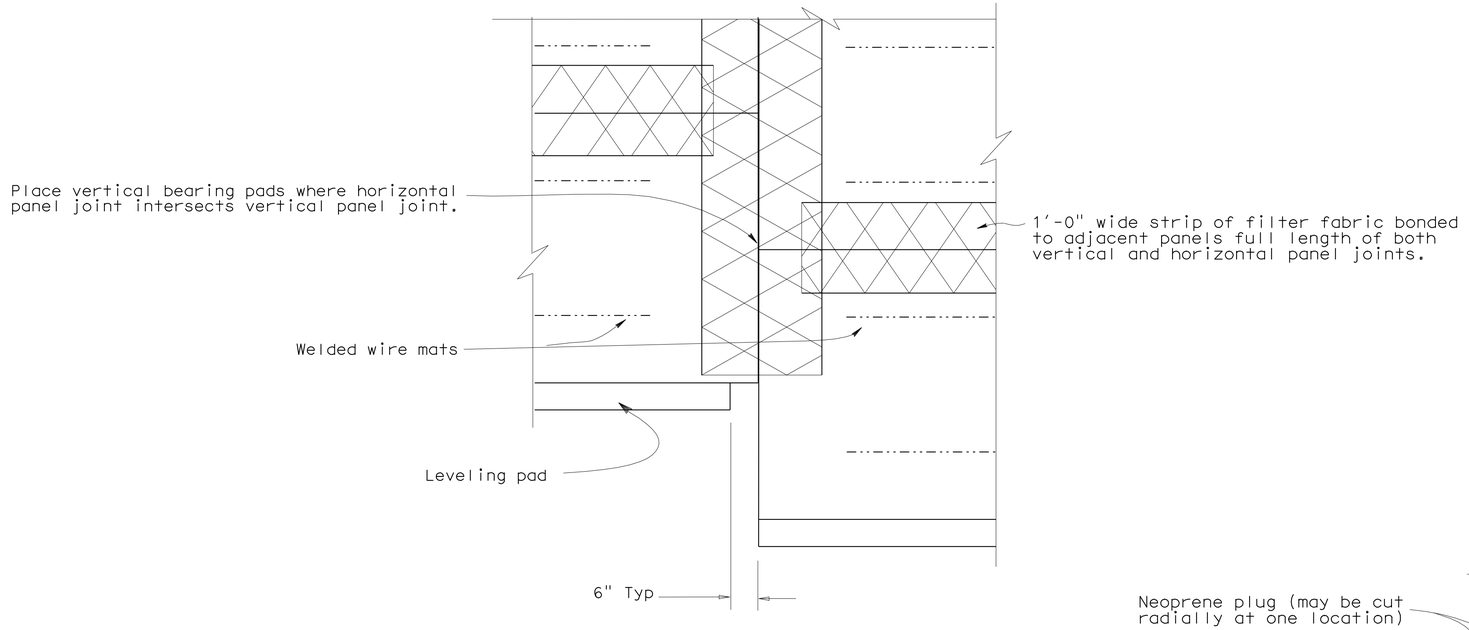

REAR ELEVATION

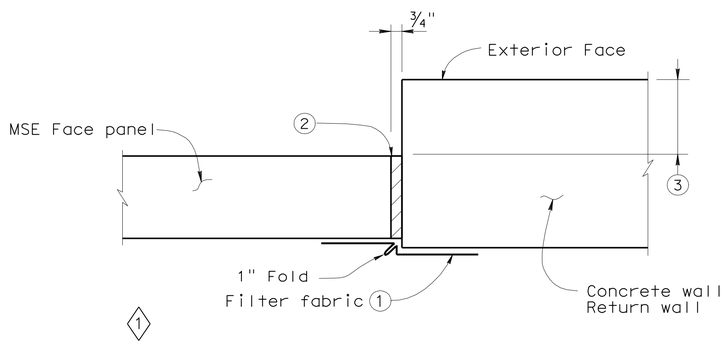

MSE FACE PANEL-TO-CONCRETE WALL JOINT DETAIL

LEGEND:

1. Bond a strip of filter fabric, 1'-6" wide, to back of MSE panels and the adjacent concrete wall for entire length of vertical joint.
2. Bond expansion joint material to the concrete wall.
3. Offset between face of MSE face panel and face of the concrete wall as dictated by location of layout lines shown elsewhere in Project Plans.

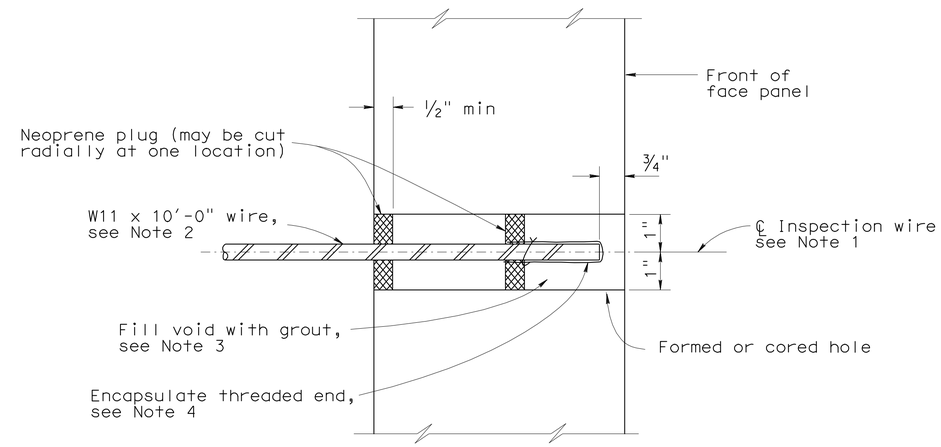

SECTION THRU INSPECTION WIRE

NOTES:

1. Center inspection wire in face panel.
2. Fabricate inspection wires from W11 wire representative of the welded wire mats, with ⅜" dia - 16 UNC threads for at least 1½" of one end.
3. Place inspection wire horizontal and perpendicular to the wall panel prior to backfilling. After backfill placement to a level at least 2'-0" above the inspection wire, dry pack opening with 1000 to 1500 psi mortar. Trowel mortar smooth and flush with face of panel.
4. Encapsulate threaded end with corrosion inhibiting mastic, and secure round vinyl cover with nylon tie.

   UNC = Unified coarse threads

STANDARD DRAWING

FILE NO. xs13-020-3e

APPROVED BY K. GRISWELL
RESPONSIBLE TECHNICAL SPECIALIST
APPROVAL DATE 5-6-08

RELEASED BY ROBERTO LACALLE
RESPONSIBLE OFFICE CHIEF
RELEASE DATE 5-6-08

1 Modified Detail

STATE OF CALIFORNIA
DEPARTMENT OF TRANSPORTATION

DIVISION OF ENGINEERING SERVICES

BRIDGE NO. 53E0151
POST MILE 0.17

MSE WALL NO. G1
MSE WALL DETAILS NO. 4

DS OSD 2147A (ENGLISH STANDARD DRAWING "XS" BORDER REV. 01/11/08)

ORIGINAL SCALE IN INCHES FOR REDUCED PLANS 0 1 2 3

CU 07-271
EA 138201

DISREGARD PRINTS BEARING EARLIER REVISION DATES 2-03-10

REVISION DATES (PRELIMINARY STAGE ONLY)

SHEET 10 OF 20

USERNAME => trlenard

53-rwg1_mse_edet04.dgn

DATE PLOTTED => 14-OCT-2010 TIME PLOTTED => 13:19

DIST	COUNTY	ROUTE	POST MILES TOTAL PROJECT	SHEET No	TOTAL SHEETS
07	LA	47,103	3.5/4.6, 0.0/1.1	974	1003

REGISTERED CIVIL ENGINEER — DATE 05-24-10

10-11-10
PLANS APPROVAL DATE

The State of California or its officers or agents shall not be responsible for the accuracy or completeness of electronic copies of this plan sheet.

REGISTERED PROFESSIONAL ENGINEER — FOUED ZAYATI — No. C57046 — Exp. 06-30-11 — CIVIL — STATE OF CALIFORNIA

MSE WALL DRAINAGE NOTES:

1. Locate 8" perforated underdrain 1.0' above FG adjacent to Face of Wall.
2. Maximum spacing of outlet pipes is 50 ft.
3. At sags in profile of underdrain, install outlet pipe for each direction of flow.

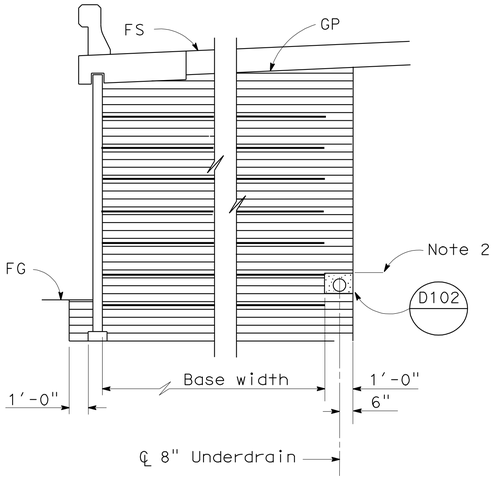

ROADWAY SECTION WITH BASE WIDTH 16' OR GREATER

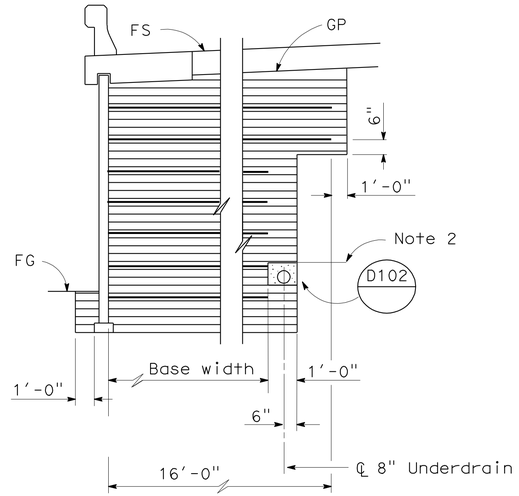

ROADWAY SECTION WITH BASE WIDTH LESS THAN 16'

No Scale

LIMITS OF BACKFILL

No Scale

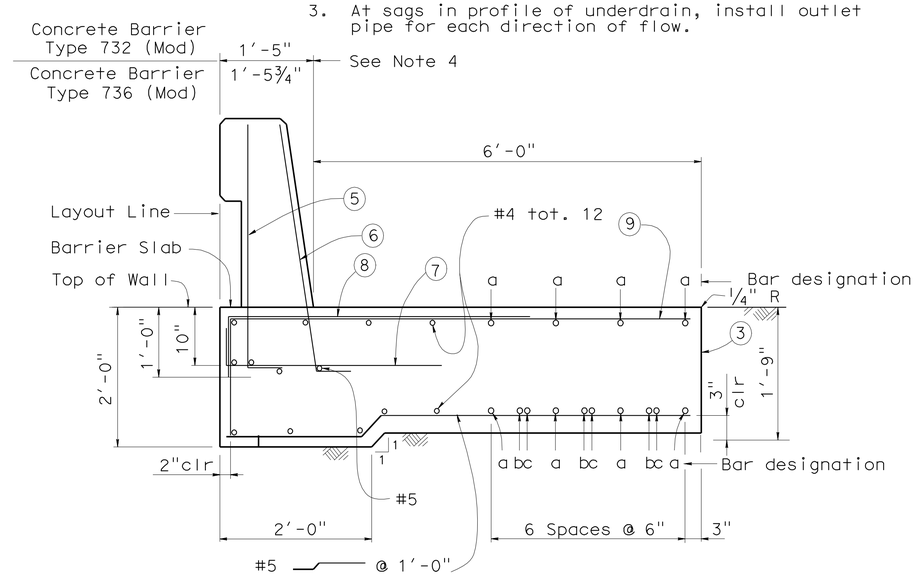

SECTION AT PAST MSE PANELS BARRIER SLAB AND CONCRETE BARRIER

No Scale

BARRIER SLAB NOTES:

1. Clearance to reinforcing steel in concrete barrier to be 1".
2. Not all barrier reinforcement shown.
3. No expansion joints in concrete barrier or barrier slab within MSE wall limits.
4. Specific concrete barrier to be utilized as shown on typical section elsewhere in Project Plans.
5. Install cable railing or chain link fence when indicated in Project Plans.

"a" bar = #6 cont
"b" bar = #6 x 59'-0"
"c" bar = #6 49'-2"
Place "b" and "c" bars at beginning and ending ends of Barrier Slab.

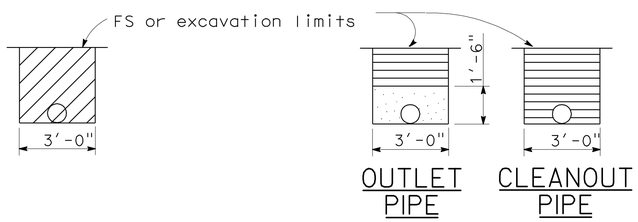

EXCAVATION

BACKFILL

OUTLET OR CLEANOUT PIPE FOR UNDERDRAIN

No Scale

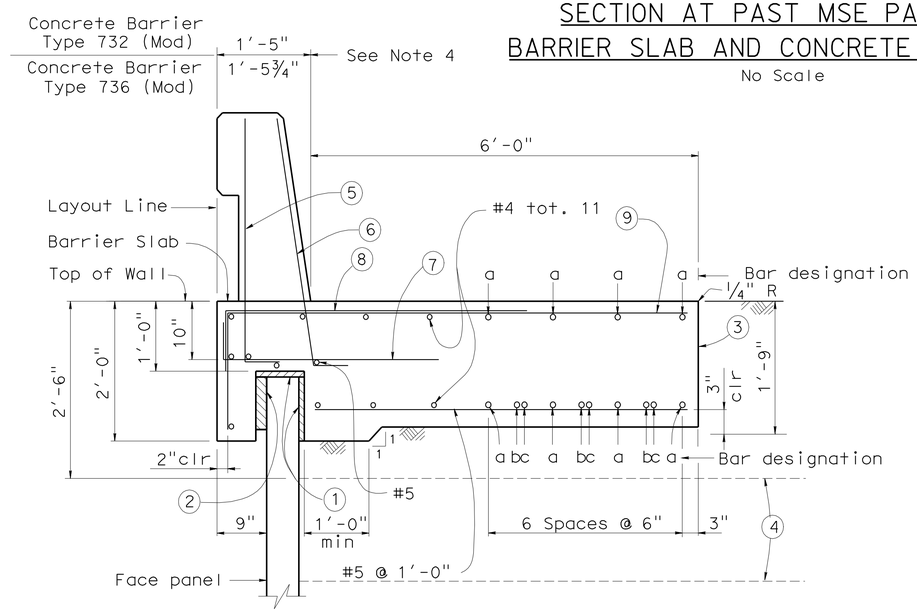

SECTION AT TOP OF WALL WITH BARRIER SLAB AND CONCRETE BARRIER

No Scale

LEGEND:

1. 1" Expanded polystyrene.
2. 2" Expanded polystyrene. Recess expanded polystyrene 2" into barrier slab.
3. Contact joint.
4. Welded Wire Mat Soil reinforcement.
5. #5 6¼" @ 1'-4" (To be in place prior to barrier slab concrete).
6. #5 6¼" @ 8" (To be in place prior to barrier slab concrete).
7. #5 6¼" 3'-4" @ 1'-0"
8. #5 4'-7" @ 1'-0" bundled with (9) bars.
9. #5 1'-9" 5'-9" @ 1'-0"

ABBREVIATIONS

OG	Original ground
FS	Planned finished surface
GP	Planned grading plane
FG	Finished grade

LEGEND

- Limits of structure excavation
- Limits of structure backfill
- Limits of permeable material

	BY	CHECKED
DESIGN	S. Galgiani	F. Zayati
DETAILS	K. Kubo	S. Galgiani
QUANTITIES	S. Galgiani	F. Zayati

STATE OF CALIFORNIA
DEPARTMENT OF TRANSPORTATION

DIVISION OF ENGINEERING SERVICES
STRUCTURE DESIGN
DESIGN BRANCH 14

BRIDGE NO. 53E0151
POST MILE 0.17

MSE WALL NO. G1

MSE WALL DETAILS NO. 5

STRUCTURES DESIGN DETAIL SHEET (ENGLISH) (REV. 10/25/05)

ORIGINAL SCALE IN INCHES FOR REDUCED PLANS 0 1 2 3

CU 07-271
EA 138201

DISREGARD PRINTS BEARING EARLIER REVISION DATES

REVISION DATES: 02-03-10 04-02-10 04-14-10 05-19-10

SHEET 11 OF 20

FILE => 53-rwg1_mse_edet05.dgn

USERNAME => friehard DATE PLOTTED => 14-OCT-2010 TIME PLOTTED => 13:19

DIST	COUNTY	ROUTE	POST MILES TOTAL PROJECT	SHEET No	TOTAL SHEETS
07	LA	47,103	3.5/4.6, 0.0/1.1	975	1003

REGISTERED CIVIL ENGINEER — DATE 05-24-10

10-11-10
PLANS APPROVAL DATE

REGISTERED PROFESSIONAL ENGINEER — FOUED ZAYATI — No. C57046 — Exp. 06-30-11 — CIVIL — STATE OF CALIFORNIA

The State of California or its officers or agents shall not be responsible for the accuracy or completeness of electronic copies of this plan sheet.

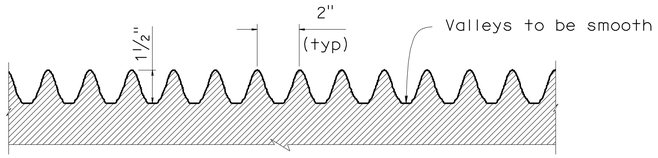

DETAIL A

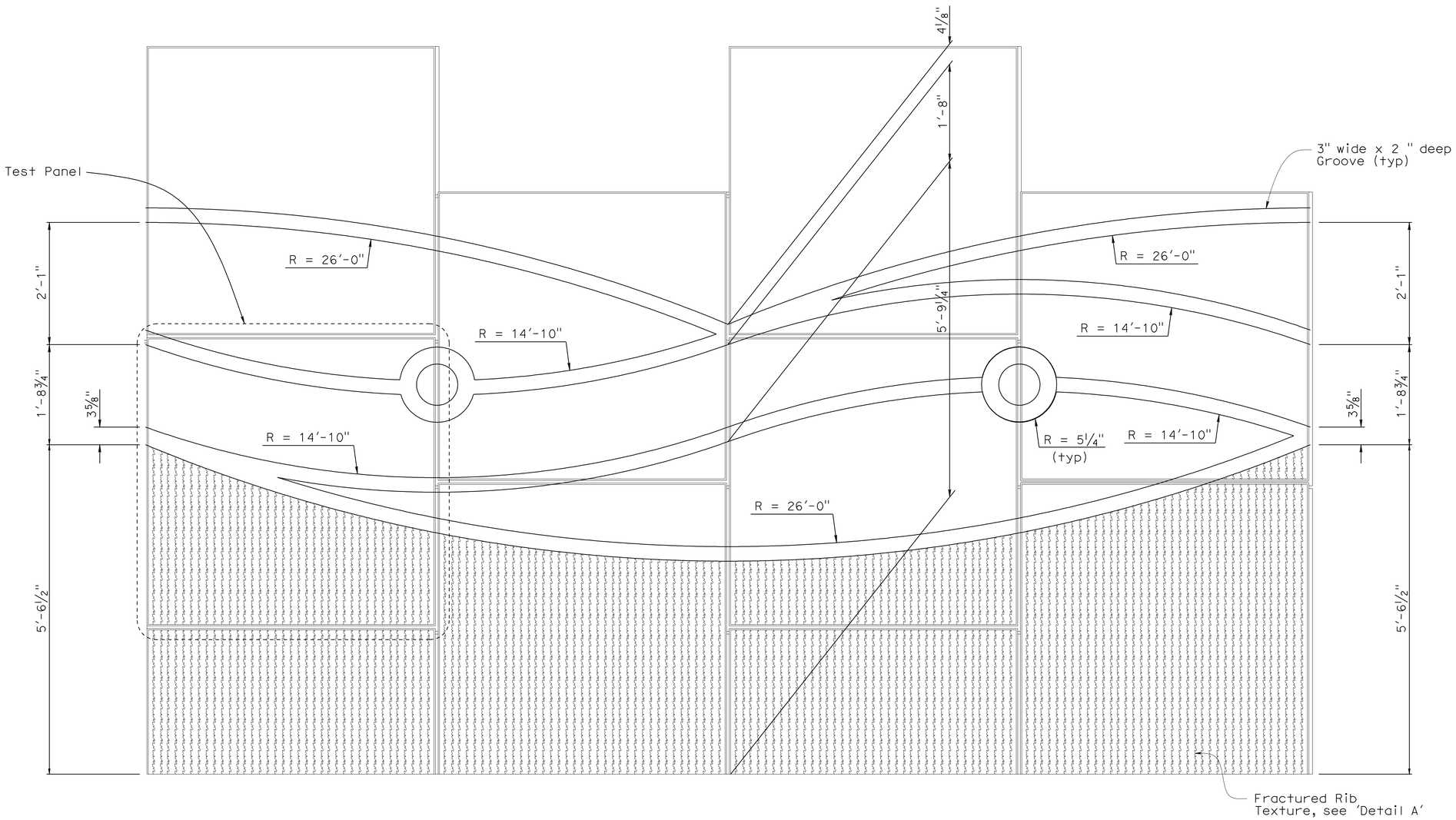

ARCHITECTURAL TREATMENT WAVE PATTERN

	BY	CHECKED
DESIGN	S. Galgiani	F. Zayati
DETAILS	K. Kubo	F. Zayati
QUANTITIES	S. Galgiani	F. Zayati

STATE OF CALIFORNIA
DEPARTMENT OF TRANSPORTATION

DIVISION OF ENGINEERING SERVICES
STRUCTURE DESIGN
DESIGN BRANCH 14

BRIDGE NO. 53E0151
POST MILE 0.17

MSE WALL NO. G1
MSE WALL DETAILS NO. 6

STRUCTURES DESIGN DETAIL SHEET (ENGLISH) (REV. 10/25/05)

ORIGINAL SCALE IN INCHES FOR REDUCED PLANS 0 1 2 3

CU 07-271
EA 138201

DISREGARD PRINTS BEARING EARLIER REVISION DATES → 05-10-10

REVISION DATES

SHEET 12 OF 20

FILE => 53-rwg1_mse_edet06.dgn

USERNAME => trlenard DATE PLOTTED => 14-OCT-2010 TIME PLOTTED => 13:19

DIST	COUNTY	ROUTE	POST MILES TOTAL PROJECT	SHEET No	TOTAL SHEETS
07	LA	47,103	3.5/4.6, 0.0/1.1	976	1003

REGISTERED CIVIL ENGINEER — DATE 05-24-10

10-11-10
PLANS APPROVAL DATE

REGISTERED PROFESSIONAL ENGINEER — FOUED ZAYATI — No. C57046 — Exp. 06-30-11 — CIVIL — STATE OF CALIFORNIA

The State of California or its officers or agents shall not be responsible for the accuracy or completeness of electronic copies of this plan sheet.

WIRE MESH SCHEDULE

Max Ht., Ft	10	12.5	15
Top Levels of Mesh over	2 @ WII x WII + 6" x 9" 2 @ WII x WII + 6" x 12"	2 @ WII x WII + 6" x 9" 2 @ WII x WII + 6" x 12" 1 @ WII x WII + 6" x 18"	2 @ WII x WII + 6" x 9" 2 @ WII x WII + 6" x 12" 1 @ WII x WII + 6" x 18" 1 @ WII x WII + 6" x 24"
Max Ht., Ft	17.5	20	22.5
Top Levels of Mesh over	2 @ WII x WII + 6" x 9" 2 @ WII x WII + 6" x 12" 1 @ WII x WII + 6" x 18" 2 @ WII x WII + 6" x 24"	2 @ WII x WII + 6" x 9" 3 @ WII x WII + 6" x 18" 3 @ WII x WII + 6" x 24"	5 @ WII x WII + 6" x 18" 4 @ WII x WII + 6" x 24"
Max Ht., Ft	25		
Top Levels of Mesh over	5 @ WII x WII + 6" x 18" 5 @ WII x WII + 6" x 24"		

NOTE: For heights less than 10'-0", all Mesh is WII x WII + 6" x 9". Mesh Configuration = Longitudinal Wire size x Transverse Wire size + Longitudinal Wire spacing x Transverse Wire spacing

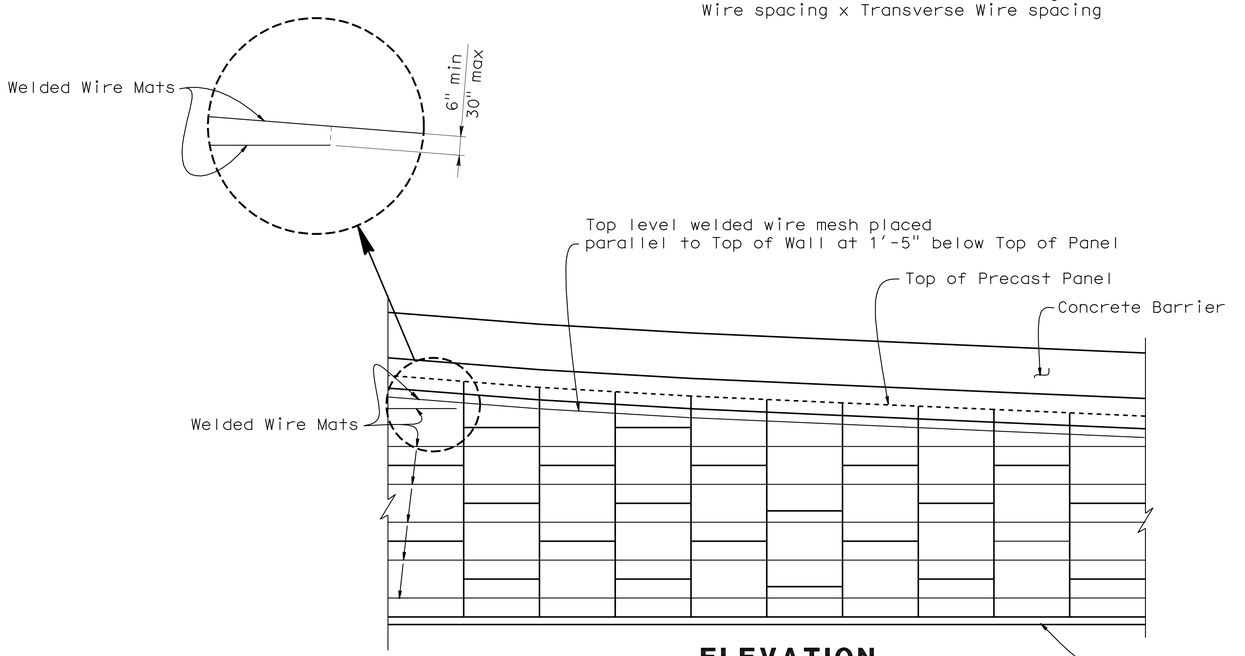

ELEVATION
No Scale

MSE RETAINING WALL NO. G1

"G1" LOL Sta	Top of Wall Elevation	Elevation of Top of Leveling Pad
618+39.84	19.21	-3.0
618+49.84	18.93	-3.0
618+59.84	18.65	-3.0
618+69.84	18.37	-3.0
618+79.84	18.09	-3.0
618+89.84	17.81	-3.0
618+99.84	17.54	-3.0
619+09.84	17.28	-3.0
619+19.84	17.01	-3.0
619+29.84	16.75	-3.0
619+39.84	16.49	-3.0
619+49.84	16.20	-3.0
619+59.84	15.83	-3.0
619+69.84	15.51	-3.0
619+79.84	15.25	-3.0
619+89.84	14.98	-3.0
619+99.84	14.72	-3.0
620+09.84	14.45	-3.0
620+19.84	14.20	-3.0
620+29.84	13.83	-3.0
620+39.84	13.48	-3.0
620+49.84	13.15	-3.0
620+59.84	12.82	-3.0
620+69.84	12.51	-3.0
620+79.84	12.21	-3.0
620+89.84	11.92	-3.0
620+99.84	11.65	-3.0
621+09.84	11.38	-3.0
621+19.84	11.13	-3.0
621+29.84	10.89	-3.0
621+39.84	10.66	-3.0
621+49.84	10.46	-3.0
621+59.84	10.26	-3.0
621+69.84	10.07	-3.0
621+79.84	9.89	-3.0
621+89.84	9.71	-3.0
621+99.84	9.57	-3.0
622+09.84	9.43	-3.0
622+27.84	9.18	-3.0

	BY	CHECKED
DESIGN	S. Galgiani	F. Zayati
DETAILS	K. Kubo	S. Galgiani
QUANTITIES	S. Galgiani	F. Zayati

STATE OF CALIFORNIA
DEPARTMENT OF TRANSPORTATION

DIVISION OF ENGINEERING SERVICES
STRUCTURE DESIGN
DESIGN BRANCH 14

BRIDGE NO. 53E0151
POST MILE 0.17

MSE WALL NO. G1
MSE WALL DETAIL NO. 7

STRUCTURES DESIGN DETAIL SHEET (ENGLISH) (REV. 10/25/05)

ORIGINAL SCALE IN INCHES FOR REDUCED PLANS 0 1 2 3

CU 07-271
EA 138201

DISREGARD PRINTS BEARING EARLIER REVISION DATES

REVISION DATES: 01-25-10, 3-19-10, 04-06-10, 04-22-10, 04-20-10

SHEET 13 OF 20

FILE => 53-rwg1_mse_edet07.dgn

USERNAME => trlenard DATE PLOTTED => 14-OCT-2010 TIME PLOTTED => 13:20

DIST	COUNTY	ROUTE	POST MILES TOTAL PROJECT	SHEET No	TOTAL SHEETS
07	LA	47,103	3.5/4.6, 0.0/1.1	977	1003

REGISTERED CIVIL ENGINEER — DATE 05-24-10

10-11-10
PLANS APPROVAL DATE

REGISTERED PROFESSIONAL ENGINEER — FOUED ZAYATI — No. C57046 — Exp. 06-30-11 — CIVIL — STATE OF CALIFORNIA

The State of California or its officers or agents shall not be responsible for the accuracy or completeness of electronic copies of this plan sheet.

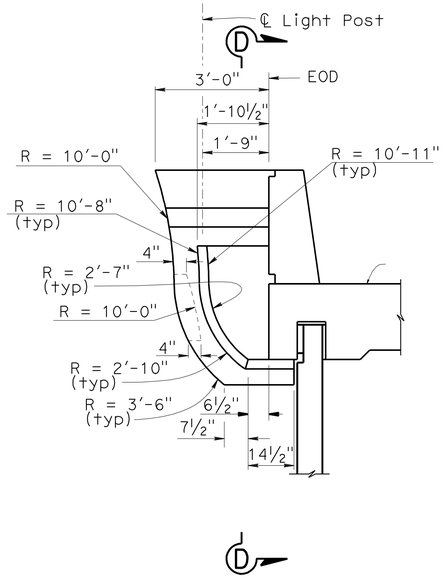

VIEW A-A

½"=1'-0"

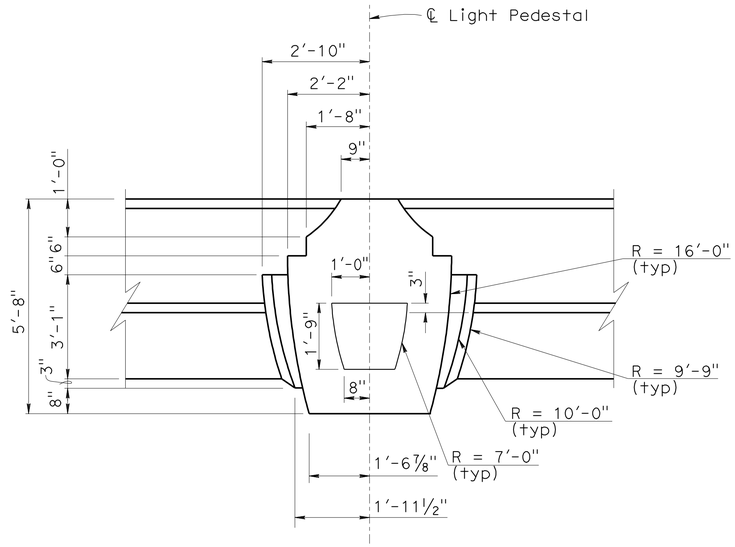

VIEW B-B

½"=1'-0"

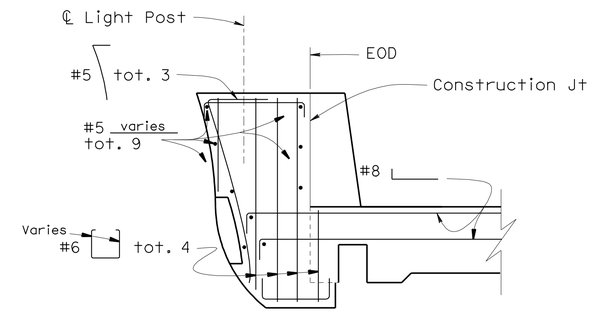

SECTION C-C

½"=1'-0"

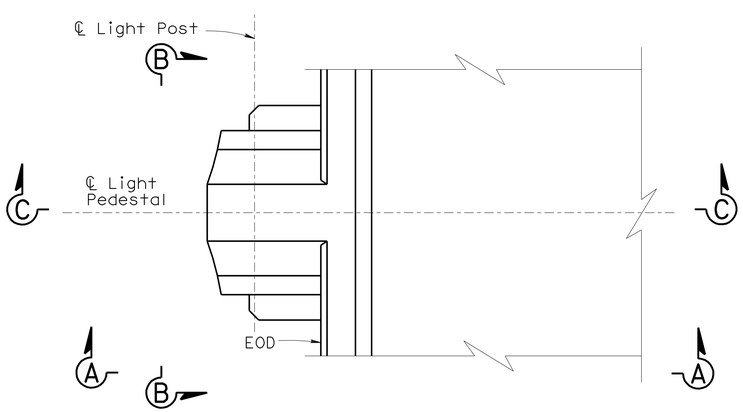

PLAN

½"=1'-0"

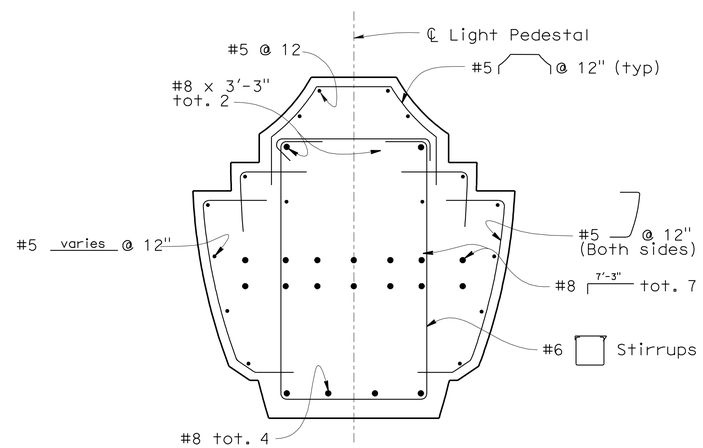

SECTION D-D

¾"=1'-0"

NOTE:

For locations of the Light Pedestals, see 'Electrical Plans'

DESIGN	BY S. Galgiani	CHECKED F. Zayati	
DETAILS	BY K. Kubo	CHECKED S. Galgiani	
QUANTITIES	BY S. Galgiani	CHECKED F. Zayati	

STATE OF CALIFORNIA
DEPARTMENT OF TRANSPORTATION

DIVISION OF ENGINEERING SERVICES
STRUCTURE DESIGN
DESIGN BRANCH 14

BRIDGE NO. 53E0151
POST MILE 0.17

MSE WALL NO. G1
MSE WALL DETAIL NO. 8

STRUCTURES DESIGN DETAIL SHEET (ENGLISH) (REV. 10/25/05)

ORIGINAL SCALE IN INCHES FOR REDUCED PLANS 0 1 2 3

CU 07-271
EA 138201

DISREGARD PRINTS BEARING EARLIER REVISION DATES 05-24-10

REVISION DATES

SHEET 14 OF 20

FILE => 53-rwg1_mse_edet08.dgn

USERNAME => trlenard DATE PLOTTED => 14-OCT-2010 TIME PLOTTED => 13:20

DIST	COUNTY	ROUTE	POST MILES TOTAL PROJECT	SHEET No	TOTAL SHEETS
07	LA	47,103	3.5/4.6, 0.0/1.1	978	1003

REGISTERED CIVIL ENGINEER — DATE 05-24-10

10-11-10
PLANS APPROVAL DATE

REGISTERED PROFESSIONAL ENGINEER — FOUED ZAYATI — No. C57046 — Exp. 06-30-11 — CIVIL — STATE OF CALIFORNIA

The State of California or its officers or agents shall not be responsible for the accuracy or completeness of electronic copies of this plan sheet.

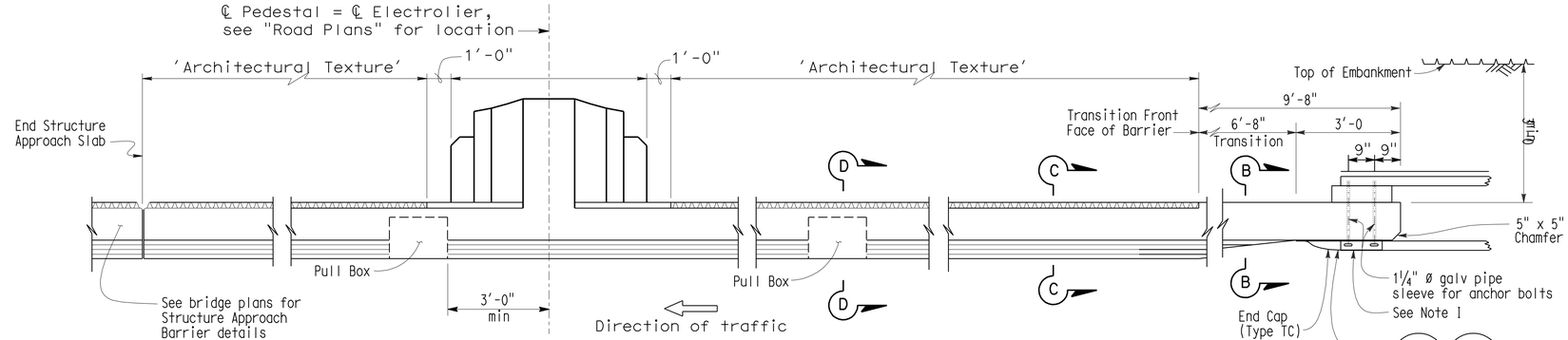

PLAN

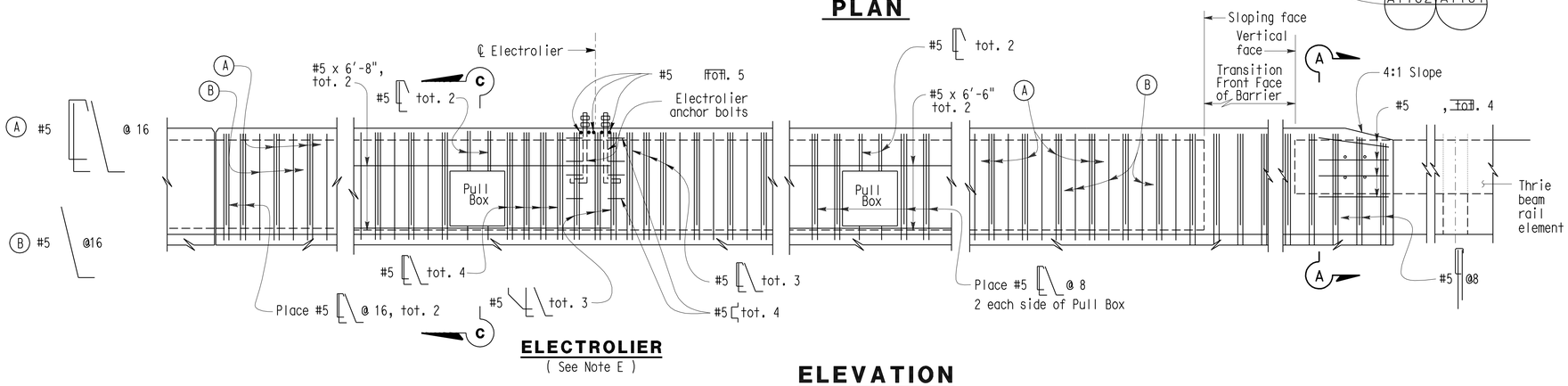

ELECTROLIER
(See Note E)

ELEVATION

NOTES:

A. Walls are to be backfilled before Barrier is placed.
B. Clearance to reinforcing steel in Barrier to be 1", except as noted. Longitudinal reinforcement to stop at all Expansion Joints.
C. See project plans for locations of Electroliers and Pull Boxes.
D. Dimensions may vary with roadway cross slope and with certain thickness of surfacing. See Project Plans.
E. Refer to Project Plans and Standard Plan Sheets ES-9A, 9C, ES-9D for electrical details concerning Barriers. The maximum number of conduits in a Barrier is limited to two (2) 2" conduits (max.) along with one (1) 3" conduit. When a 3½" conduit is used, it is restricted to the base of Barrier.
F. Minimum concrete edge distance to reinforcing shown, shall be maintained, edge distance may be adjusted to accomodate increase in concrete cover for architectural treatment. See Typical Section.
G. For Electrolier Pedestal Details, see "MSE WALL DETAILS NO. 8" sheet.
H. For 'Architectural Treatment', see "CONCRETE BARRIER DETAILS NO. 2" sheet.
I. For Typical Metal Railing Connection details not shown, see Standard Plans A77J1 and A77J2.

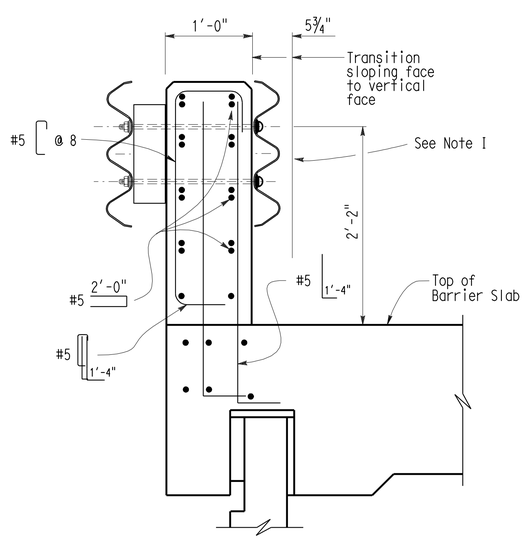

SECTION A-A

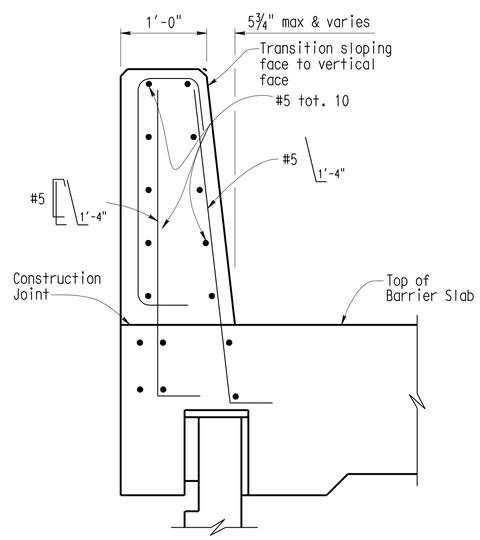

SECTION B-B

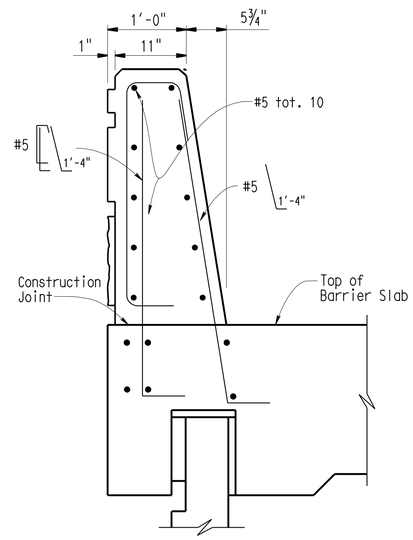

SECTION C-C

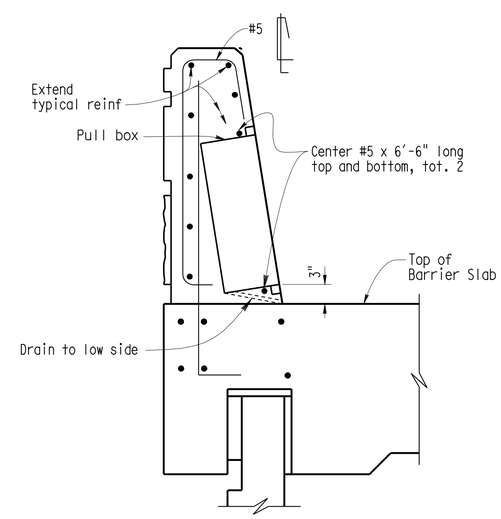

SECTION D-D

NO SCALE

	BY	CHECKED
DESIGN	F. Zayati	S. Galgiani
DETAILS	K. Kubo	F. Zayati
QUANTITIES	S. Galgiani	F. Zayati

STATE OF CALIFORNIA
DEPARTMENT OF TRANSPORTATION

DIVISION OF ENGINEERING SERVICES
STRUCTURE DESIGN
DESIGN BRANCH 14

BRIDGE NO. 53E0151
POST MILE 0.17

MSE WALL NO. G1
CONCRETE BARRIER DETAILS NO. 1

STRUCTURES DESIGN DETAIL SHEET (ENGLISH) (REV. 10/25/05)

ORIGINAL SCALE IN INCHES FOR REDUCED PLANS 0 1 2 3

CU 07-271
EA 138201

DISREGARD PRINTS BEARING EARLIER REVISION DATES

REVISION DATES: 12-30-09 01-28-10 06-22-10 06-24-10 06-28-10 06-29-10 07-07-10

SHEET 15 OF 20

FILE => 53-rwg1_mse_fbrdt01.dgn

USERNAME => trlenard DATE PLOTTED => 14-OCT-2010 TIME PLOTTED => 13:20

DIST	COUNTY	ROUTE	POST MILES TOTAL PROJECT	SHEET No	TOTAL SHEETS
07	LA	47,103	3.5/4.6, 0.0/1.1	979	1003

REGISTERED CIVIL ENGINEER — DATE 05-24-10

10-11-10
PLANS APPROVAL DATE

REGISTERED PROFESSIONAL ENGINEER — FOUED ZAYATI — No. C57046 — Exp. 06-30-11 — CIVIL — STATE OF CALIFORNIA

The State of California or its officers or agents shall not be responsible for the accuracy or completeness of electronic copies of this plan sheet.

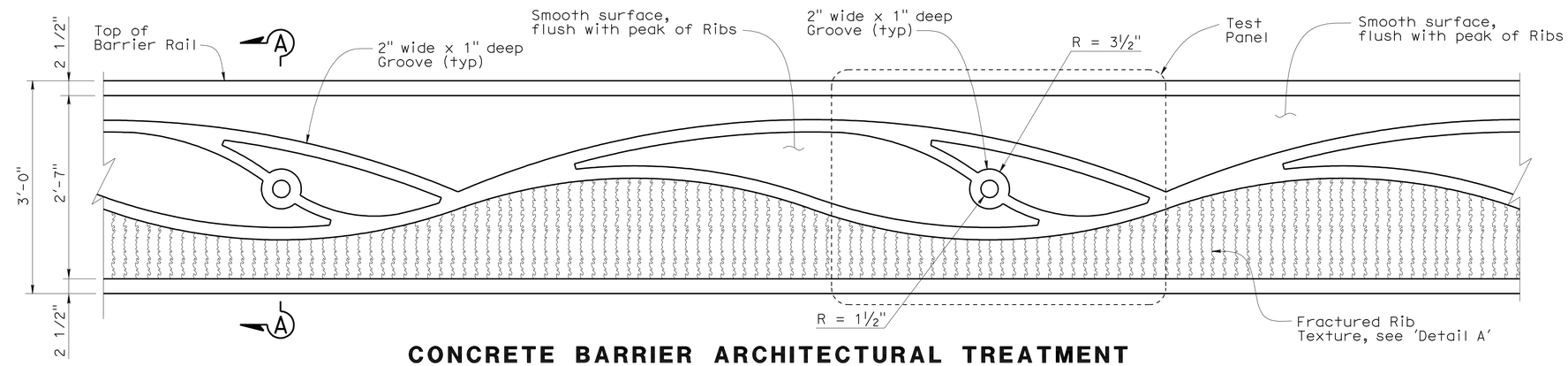

CONCRETE BARRIER ARCHITECTURAL TREATMENT

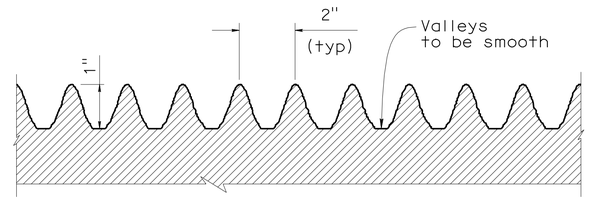

DETAIL A

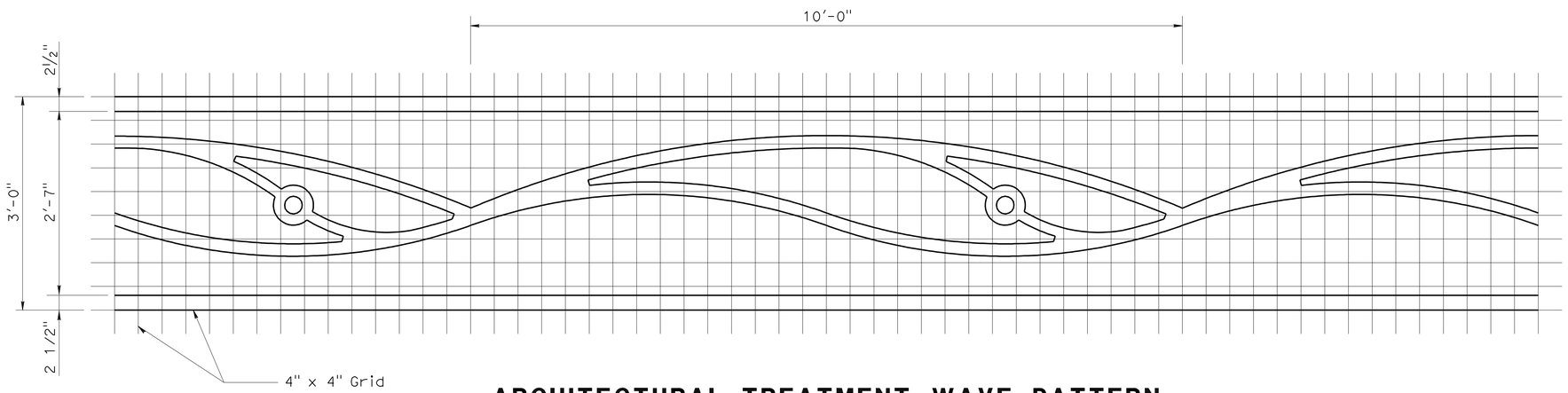

ARCHITECTURAL TREATMENT WAVE PATTERN

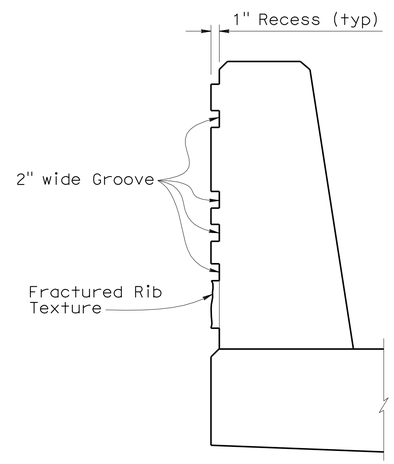

SECTION A-A

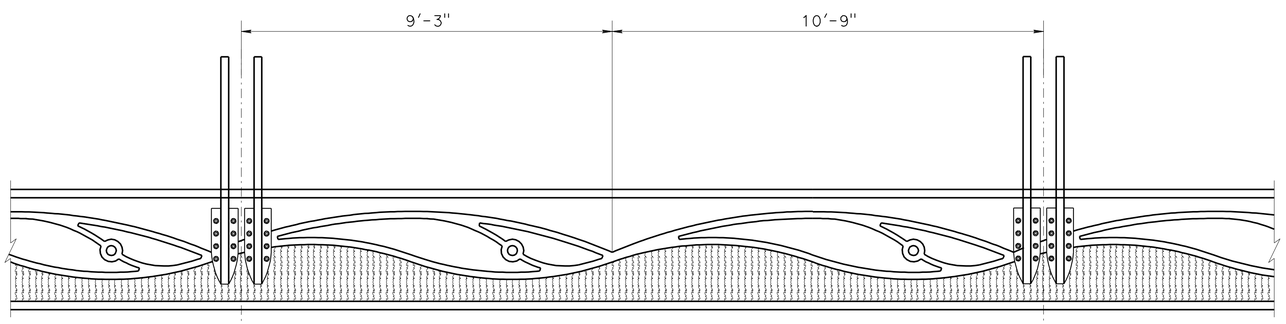

POST LOCATION ON BARRIER

NO SCALE

DESIGN	BY F. Zayati	CHECKED S. galgiani	
DETAILS	BY K. Kubo	CHECKED F. Zayati	
QUANTITIES	BY S. Galgiani	CHECKED F. Zayati	

STATE OF CALIFORNIA
DEPARTMENT OF TRANSPORTATION

DIVISION OF ENGINEERING SERVICES
STRUCTURE DESIGN
DESIGN BRANCH 14

BRIDGE NO. 53E0151
POST MILE 0.17

MSE WALL NO. G1
CONCRETE BARRIER DETAILS NO. 2

STRUCTURES DESIGN DETAIL SHEET (ENGLISH) (REV. 10/25/05)

ORIGINAL SCALE IN INCHES FOR REDUCED PLANS 0 1 2 3

CU 07-271
EA 138201

DISREGARD PRINTS BEARING EARLIER REVISION DATES → 01-08-10 04-01-10 06-22-10

REVISION DATES

SHEET 16 OF 20

FILE => 53-rwg1_mse_fbrdt02.dgn

USERNAME => trlenard DATE PLOTTED => 14-OCT-2010 TIME PLOTTED => 13:20

DIST	COUNTY	ROUTE	POST MILES TOTAL PROJECT	SHEET No	TOTAL SHEETS
07	LA	47,103	3.5/4.6, 0.0/1.1	980	1003

REGISTERED ENGINEER — DATE 04/19/10

10-11-10
PLANS APPROVAL DATE

The State of California or its officers or agents shall not be responsible for the accuracy or completeness of electronic copies of this plan sheet.

REGISTERED PROFESSIONAL ENGINEER ERIC BROWN NO. GE-2806 EXP. 06-30-2010 GEOTECHNICAL STATE OF CALIFORNIA

ACTA
ONE CIVIC PLAZA. SUITE 350,
CARSON, CA 90745

EARTH MECHANICS, INC.
17660, NEWHOPE STREET, SUITE E
FOUNTAIN VALLEY, CA 92708

BENCHMARKS:

PT-PMHV509	PT-PMHV515
SET MAG NAIL	SET MAG NAIL
26.671′ Lt ℄ "G"Line	28.517′ Rt ℄ "G" Line
Sta. 604+968.70	Sta. 600+995.50
N 1738366.89	N 1737997.51
E 6488728.36	E 6488779.52
Elev. = -3.61	Elev. = -2.21

NOTES:

(1) This LOTB sheet (Boring Record) was prepared in accordance with the Caltrans Soil and Rock Classification Logging, Classification and Presentation Manual (June 2007).

(2) 2.4" samples were taken using a California Split-spoon Sampler.

(3) For R-09-036, a rope and cat-head hammer system consisting of a hammer weight of 140 lbs falling a distance of 30" was used to advance the drive sampler.

(4) For A-09-035, an automatic trip hammer system consisting of a hammer weight of 140 lbs falling a distance of 30" was used to advance the drive sampler.

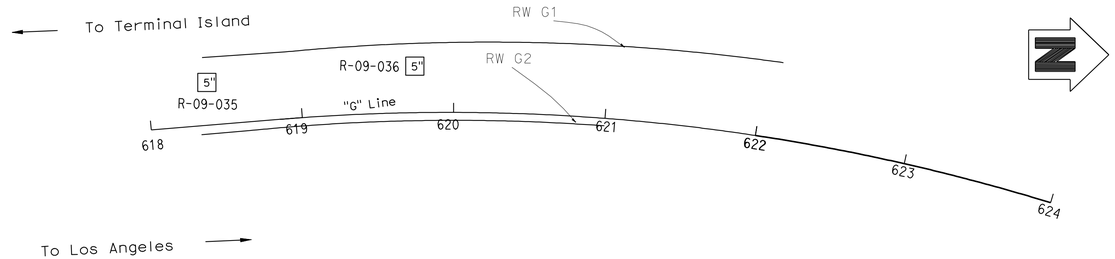

PLAN

1" = 50′

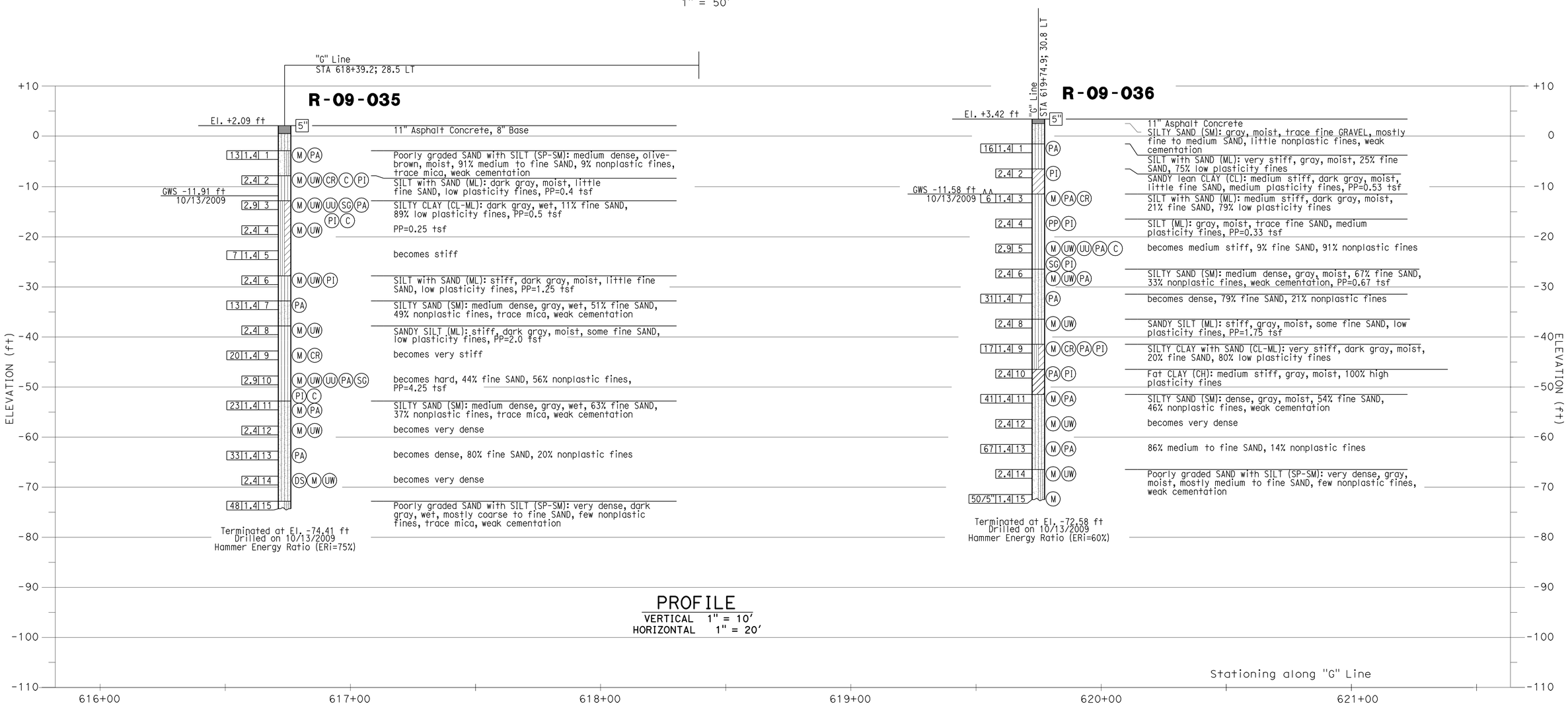

PROFILE

VERTICAL 1" = 10′
HORIZONTAL 1" = 20′

DESIGN OVERSIGHT	DRAWN BY: J.Fang	FIELD INVESTIGATION BY:	PREPARED FOR THE STATE OF CALIFORNIA DEPARTMENT OF TRANSPORTATION	E. Brown PROJECT ENGINEER	BRIDGE NO. 53E0151 / POST MILE 0.17	MSE RETAINING WALL NO. G1
SIGN OFF DATE	CHECKED BY: K.Pratheepan	E.Brown				LOG OF TEST BORINGS NO. 1 OF 4

OGS CIVIL LOG OF TEST BORINGS SHEET (ENGLISH) (REV. 06-01-09)

ORIGINAL SCALE IN INCHES FOR REDUCED PLANS 0 1 2 3

CU 07-271
EA 138201

DISREGARD PRINTS BEARING EARLIER REVISION DATES

REVISION DATES (PRELIMINARY STAGE ONLY) 06/08/10 04/14/10 07/02/10

SHEET 17 OF 20

FILE => 53-rwg1_mse_fltb01.dgn

USERNAME => trrichard DATE PLOTTED => 14-OCT-2010 TIME PLOTTED => 13:20

DIST	COUNTY	ROUTE	POST MILES TOTAL PROJECT	SHEET No	TOTAL SHEETS
07	LA	47,103	3.5/4.6, 0.0/1.1	981	1003

REGISTERED ENGINEER 04/19/10 DATE

10-11-10
PLANS APPROVAL DATE

REGISTERED PROFESSIONAL ENGINEER ERIC BROWN NO. GE-2806 EXP. 06-30-2010 GEOTECHNICAL STATE OF CALIFORNIA

The State of California or its officers or agents shall not be responsible for the accuracy or completeness of electronic copies of this plan sheet.

ACTA
ONE CIVIC PLAZA. SUITE 350,
CARSON, CA 90745

EARTH MECHANICS, INC.
17660, NEWHOPE STREET, SUITE E
FOUNTAIN VALLEY, CA 92708

BENCHMARKS:

PT-PMHV509	PT-PMHV515
SET MAG NAIL	SET MAG NAIL
26.671' Lt ℄ "G"Line	28.517' Rt ℄ "G" Line
Sta. 604+968.70	Sta. 600+995.50
N 1738366.89	N 1737997.51
E 6488728.36	E 6488779.52
Elev. = -3.61	Elev. = -2.21

NOTES:

(1) This LOTB sheet (Boring Record) was prepared in accordance with the Caltrans Soil and Rock Classification Logging, Classification and Presentation Manual (June 2007).

(2) 2.4" samples were taken using a California Split-spoon Sampler.

(3) An automatic trip hammer system consisting of a hammer weight of 140 lbs falling a distance of 30" was used to advance the drive sampler.

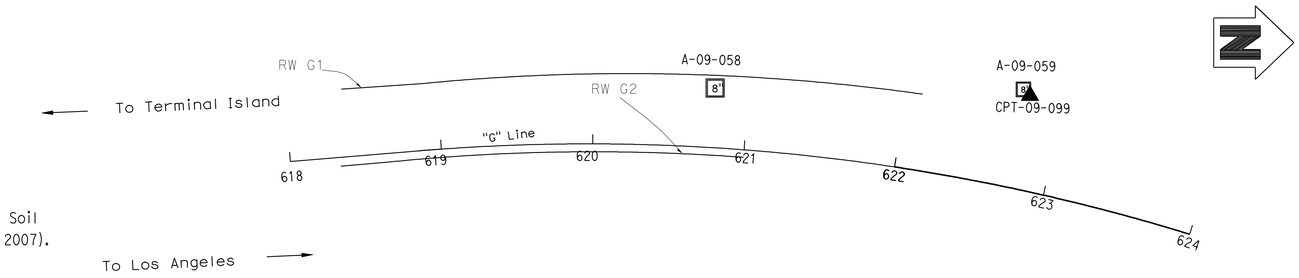

PLAN

1" = 50'

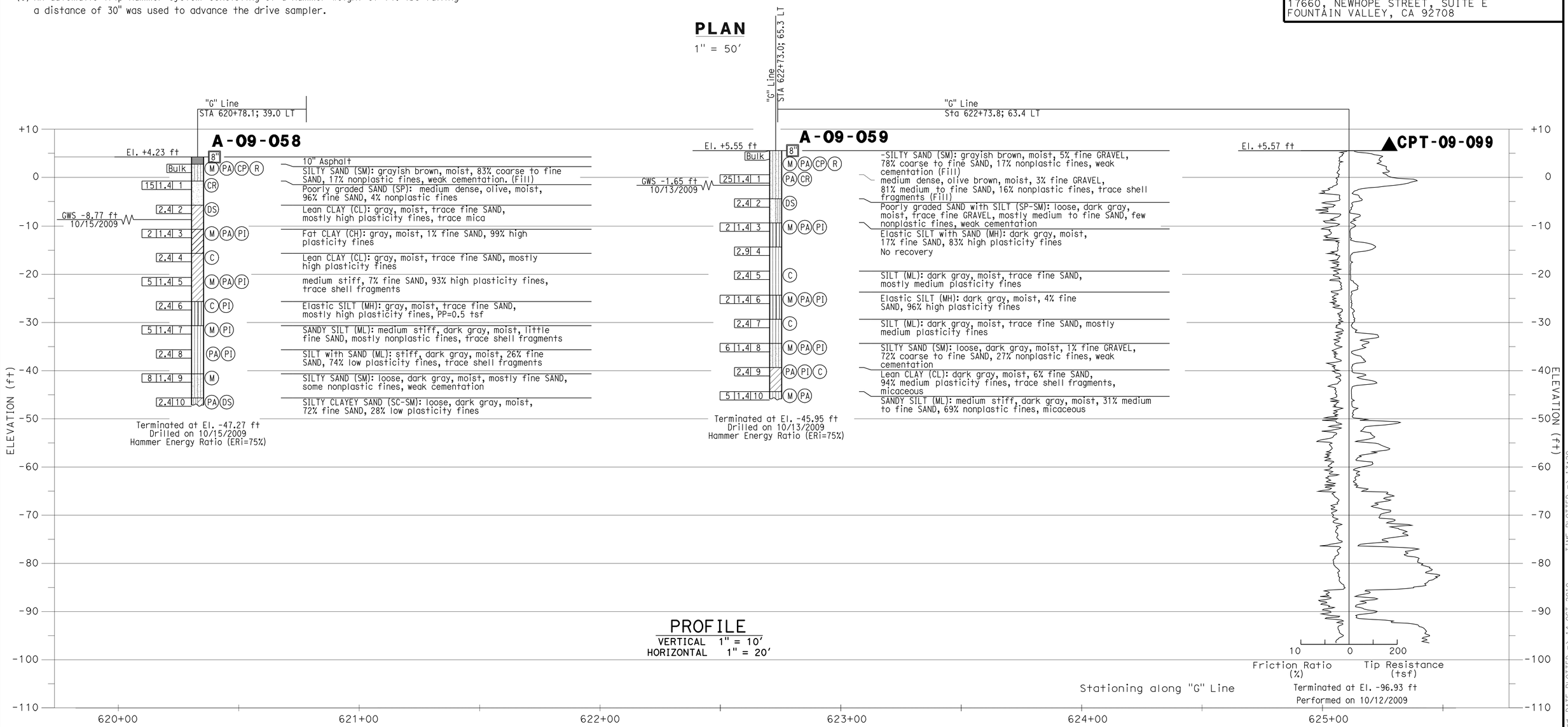

PROFILE

VERTICAL 1" = 10'
HORIZONTAL 1" = 20'

DESIGN OVERSIGHT	DRAWN BY: J.Fang	FIELD INVESTIGATION BY:	PREPARED FOR THE STATE OF CALIFORNIA DEPARTMENT OF TRANSPORTATION	E. Brown PROJECT ENGINEER	BRIDGE NO. 53E0151 POST MILE 0.17
SIGN OFF DATE	CHECKED BY: K.Pratheepan	E.Brown			

MSE RETAINING WALL NO. G1

LOG OF TEST BORINGS NO. 2 OF 4

OGS CIVIL LOG OF TEST BORINGS SHEET (ENGLISH) (REV. 06-01-09)

ORIGINAL SCALE IN INCHES FOR REDUCED PLANS 0 1 2 3

CU 07-271
EA 138201

DISREGARD PRINTS BEARING EARLIER REVISION DATES

REVISION DATES (PRELIMINARY STAGE ONLY) 02/26/10 04/19/10 07/02/10

SHEET 18 OF 20

FILE => 53-rwg1_mse_fltb02.dgn

USERNAME => trienard DATE PLOTTED => 14-OCT-2010 TIME PLOTTED => 13:20

REFERENCE: CALTRANS SOIL & ROCK LOGGING, CLASSIFICATION, AND PRESENTATION MANUAL (JUNE 2007)

DIST	COUNTY	ROUTE	POST MILES TOTAL PROJECT	SHEET No	TOTAL SHEETS
07	LA	47,103	3.5/4.6, 0.0/1.1	982	1003

REGISTERED ENGINEER — DATE 04/19/10

10-11-10
PLANS APPROVAL DATE

REGISTERED PROFESSIONAL ENGINEER ERIC BROWN NO. GE-2806 EXP. 06-30-2010 GEOTECHNICAL STATE OF CALIFORNIA

The State of California or its officers or agents shall not be responsible for the accuracy or completeness of electronic copies of this plan sheet.

ACTA
ONE CIVIC PLAZA. SUITE 350,
CARSON, CA 90745

EARTH MECHANICS, INC.
17660, NEWHOPE STREET, SUITE E
FOUNTAIN VALLEY, CA 92708

CEMENTATION

Description	Criteria
Weak	Crumbles or breaks with handling or little finger pressure.
Moderate	Crumbles or breaks with considerable finger pressure.
Strong	Will not crumble or break with finger pressure.

CONSISTENCY OF COHESIVE SOILS

Description	Unconfined Compressive Strength (tsf)	Pocket Penetrometer Measurement (tsf)	Torvane Measurement (tsf)	Field Approximation
Very Soft	< 0.25	< 0.25	< 0.12	Easily penetrated several inches by fist
Soft	0.25 to 0.50	0.25 to 0.50	0.12 to 0.25	Easily penetrated several inches by thumb
Medium Stiff	0.50 to 1.0	0.50 to 1.0	0.25 to 0.50	Penetrated several inches by thumb with moderate effort
Stiff	1 to 2	1 to 2	0.50 to 1.0	Readily indented by thumb but penetrated only with great effort
Very Stiff	2 to 4	2 to 4	1.0 to 2.0	Readily indented by thumbnail
Hard	> 4.0	> 4.0	> 2.0	Indented by thumbnail with difficulty

BOREHOLE IDENTIFICATION

Symbol	Hole Type	Description
Size	A	Auger Boring
Size	R P	Rotary drilled boring Rotary percussion boring (air)
Size	R	Rotary drilled diamond core
Size	HD HA	Hand driven (1-inch soil tube) Hand Auger
●	D	Dynamic Cone Penetration Boring
▲	CPT	Cone Penetration Test (ASTM D 5778-95)
⬚	O	Other

Note: Size in inches.

PLASTICITY OF FINE-GRAINED SOILS

Description	Criteria
Nonplastic	A 1/8-inch thread cannot be rolled at any water content.
Low	The thread can barely be rolled and the lump cannot be formed when drier than the plastic limit.
Medium	The thread is easy to roll and not much time is required to reach the plastic limit. The thread cannot be rerolled after reaching the plastic limit. The lump crumbles when drier than the plastic limit.
High	It takes considerable time rolling and kneading to reach the plastic limit. The thread can be rerolled several times after reaching the plastic limit. The lump can be formed without crumbling when drier than the plastic limit.

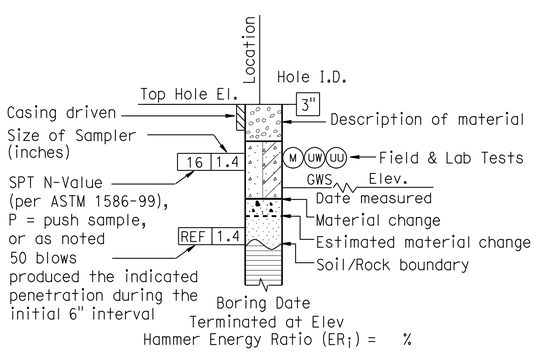

ROTARY BORING

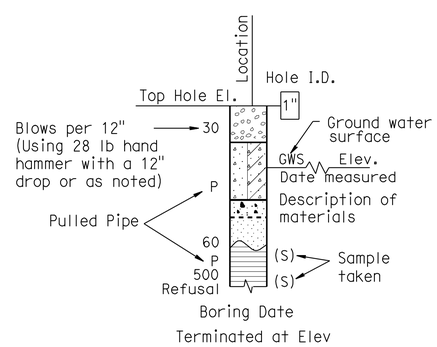

HAND BORING

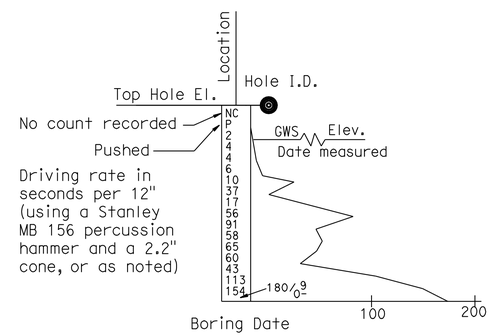

DYNAMIC CONE PENETRATION BORING

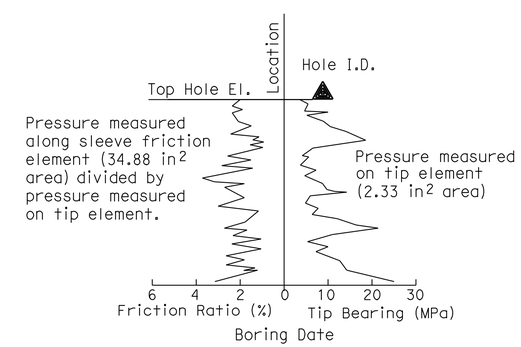

CONE PENETRATION TEST (CPT) SOUNDING

DESIGN OVERSIGHT SIGN OFF DATE	DRAWN BY: J.Fang CHECKED BY: K.Pratheepan	FIELD INVESTIGATION BY: E.Brown	PREPARED FOR THE STATE OF CALIFORNIA DEPARTMENT OF TRANSPORTATION	E. Brown PROJECT ENGINEER	BRIDGE NO. 53E0151 POST MILE 0.17

MSE RETAINING WALL NO. G1

LOG OF TEST BORINGS NO. 3 OF 4

OGS CIVIL LOG OF TEST BORINGS SHEET (ENGLISH) (REV. 06-01-09)

ORIGINAL SCALE IN INCHES FOR REDUCED PLANS 0 1 2 3

CU 07-271
EA 138201

DISREGARD PRINTS BEARING EARLIER REVISION DATES — REVISION DATES (PRELIMINARY STAGE ONLY) 09/08/10 04/19/10 07/02/10

SHEET 19 OF 20

FILE => 53-rwg1_mse_fltb03.dgn

USERNAME => trlenard DATE PLOTTED => 14-OCT-2010 TIME PLOTTED => 13:20

REFERENCE: CALTRANS SOIL & ROCK LOGGING, CLASSIFICATION, AND PRESENTATION MANUAL (JUNE 2007)

GROUP SYMBOLS AND NAMES

Graphic/Symbol	Group Names
GW	Well-graded GRAVEL Well-graded GRAVEL with SAND
GP	Poorly graded GRAVEL Poorly graded GRAVEL with SAND
GW-GM	Well-graded GRAVEL with SILT Well-graded GRAVEL with SILT and SAND
GW-GC	Well-graded GRAVEL with CLAY (or SILTY CLAY) Well-graded GRAVEL with CLAY and SAND (or SILTY CLAY and SAND)
GP-GM	Poorly graded GRAVEL with SILT Poorly graded GRAVEL with SILT and SAND
GP-GC	Poorly graded GRAVEL with CLAY (or SILTY CLAY) Poorly graded GRAVEL with CLAY and SAND (or SILTY CLAY and SAND)
GM	SILTY GRAVEL SILTY GRAVEL with SAND
GC	CLAYEY GRAVEL CLAYEY GRAVEL with SAND
GC-GM	SILTY, CLAYEY GRAVEL SILTY, CLAYEY GRAVEL with SAND
SW	Well-graded SAND Well-graded SAND with GRAVEL
SP	Poorly graded SAND Poorly graded SAND with GRAVEL
SW-SM	Well-graded SAND with SILT Well-graded SAND with SILT and GRAVEL
SW-SC	Well-graded SAND with CLAY (or SILTY CLAY) Well-graded SAND with CLAY and GRAVEL (or SILTY CLAY and GRAVEL)
SP-SM	Poorly graded SAND with SILT Poorly graded SAND with SILT and GRAVEL
SP-SC	Poorly graded SAND with CLAY (or SILTY CLAY) Poorly graded SAND with CLAY and GRAVEL (or SILTY CLAY and GRAVEL)
SM	SILTY SAND SILTY SAND with GRAVEL
SC	CLAYEY SAND CLAYEY SAND with GRAVEL
SC-SM	SILTY, CLAYEY SAND SILTY, CLAYEY SAND with GRAVEL
PT	PEAT
	COBBLES COBBLES and BOULDERS BOULDERS

Graphic/Symbol	Group Names
CL	Lean CLAY Lean CLAY with SAND Lean CLAY with GRAVEL SANDY lean CLAY SANDY lean CLAY with GRAVEL GRAVELLY lean CLAY GRAVELLY lean CLAY with SAND
CL-ML	SILTY CLAY SILTY CLAY with SAND SILTY CLAY with GRAVEL SANDY SILTY CLAY SANDY SILTY CLAY with GRAVEL GRAVELLY SILTY CLAY GRAVELLY SILTY CLAY with SAND
ML	SILT SILT with SAND SILT with GRAVEL SANDY SILT SANDY SILT with GRAVEL GRAVELLY SILT GRAVELLY SILT with SAND
OL	ORGANIC lean CLAY ORGANIC lean CLAY with SAND ORGANIC lean CLAY with GRAVEL SANDY ORGANIC lean CLAY SANDY ORGANIC lean CLAY with GRAVEL GRAVELLY ORGANIC lean CLAY GRAVELLY ORGANIC lean CLAY with SAND
OL	ORGANIC SILT ORGANIC SILT with SAND ORGANIC SILT with GRAVEL SANDY ORGANIC SILT SANDY ORGANIC SILT with GRAVEL GRAVELLY ORGANIC SILT GRAVELLY ORGANIC SILT with SAND
CH	Fat CLAY Fat CLAY with SAND Fat CLAY with GRAVEL SANDY fat CLAY SANDY fat CLAY with GRAVEL GRAVELLY fat CLAY GRAVELLY fat CLAY with SAND
MH	Elastic SILT Elastic SILT with SAND Elastic SILT with GRAVEL SANDY elastic SILT SANDY elastic SILT with GRAVEL GRAVELLY elastic SILT GRAVELLY elastic SILT with SAND
OH	ORGANIC fat CLAY ORGANIC fat CLAY with SAND ORGANIC fat CLAY with GRAVEL SANDY ORGANIC fat CLAY SANDY ORGANIC fat CLAY with GRAVEL GRAVELLY ORGANIC fat CLAY GRAVELLY ORGANIC fat CLAY with SAND
OH	ORGANIC elastic SILT ORGANIC elastic SILT with SAND ORGANIC elastic SILT with GRAVEL SANDY ORGANIC elastic SILT SANDY ORGANIC elastic SILT with GRAVEL GRAVELLY ORGANIC elastic SILT GRAVELLY ORGANIC elastic SILT with SAND
OL/OH	ORGANIC SOIL ORGANIC SOIL with SAND ORGANIC SOIL with GRAVEL SANDY ORGANIC SOIL SANDY ORGANIC SOIL with GRAVEL GRAVELLY ORGANIC SOIL GRAVELLY ORGANIC SOIL with SAND

FIELD AND LABORATORY TESTING

- (C) Consolidation (ASTM D 2435)
- (CL) Collapse Potential (ASTM D 5333)
- (CP) Compaction Curve (CTM 216)
- (CR) Corrosivity Testing (CTM 643, CTM 422, CTM 417)
- (CU) Consolidated Undrained Triaxial (ASTM D 4767)
- (DS) Direct Shear (ASTM D 3080)
- (EI) Expansion Index (ASTM D 4829)
- (M) Moisture Content (ASTM D 2216)
- (OC) Organic Content-% (ASTM D 2974)
- (P) Permeability (CTM 220)
- (PA) Particle Size Analysis (ASTM D 422)
- (PI) Plasticity Index (AASHTO T 90) Liquid Limit (AASHTO T 89)
- (PL) Point Load Index (ASTM D 5731)
- (PM) Pressure Meter
- (PP) Pocket Penetrometer
- (R) R-Value (CTM 301)
- (SE) Sand Equivalent (CTM 217)
- (SG) Specific Gravity (AASHTO T 100)
- (SL) Shrinkage Limit (ASTM D 427)
- (SW) Swell Potential (ASTM D 4546)
- (TV) Pocket Torvane
- (UC) Unconfined Compression-Soil (ASTM D 2166) Unconfined Compression-Rock (ASTM D 2938)
- (UU) Unconsolidated Undrained Triaxial (ASTM D 2850)
- (UW) Unit Weight (ASTM D 4767)
- (VS) Vane Shear (AASHTO T 223)

DIST	COUNTY	ROUTE	POST MILES TOTAL PROJECT	SHEET No	TOTAL SHEETS
07	LA	47,103	3.5/4.6, 0.0/1.1	983	1003

REGISTERED ENGINEER — DATE 04/19/10

PLANS APPROVAL DATE 10-11-10

REGISTERED PROFESSIONAL ENGINEER ERIC BROWN NO. GE-2806 EXP. 06-30-2010 GEOTECHNICAL STATE OF CALIFORNIA

The State of California or its officers or agents shall not be responsible for the accuracy or completeness of electronic copies of this plan sheet.

ACTA
ONE CIVIC PLAZA. SUITE 350,
CARSON, CA 90745

EARTH MECHANICS, INC.
17660, NEWHOPE STREET, SUITE E
FOUNTAIN VALLEY, CA 92708

APPARENT DENSITY OF COHESIONLESS SOILS

Description	SPT N_{60} (Blows / 12 inches)
Very loose	0 - 4
Loose	5 - 10
Medium Dense	11 - 30
Dense	31 - 50
Very Dense	> 50

MOISTURE

Description	Criteria
Dry	Absence of moisture, dusty, dry to the touch
Moist	Damp but no visible water
Wet	Visible free water, usually soil is below water table

PERCENT OR PROPORTION OF SOILS

Description	Criteria
Trace	Particles are present but estimated to be less than 5%
Few	5 to 10%
Little	15 to 25%
Some	30 to 45%
Mostly	50 to 100%

PARTICLE SIZE

Description		Size
Boulder		> 12"
Cobble		3" to 12"
Gravel	Coarse	3/4" to 3"
	Fine	No. 4 to 3/4"
Sand	Coarse	No. 10 to No. 4
	Medium	No. 40 to No. 10
	Fine	No. 200 to No. 40

DESIGN OVERSIGHT

SIGN OFF DATE

DRAWN BY: J.Fang

CHECKED BY: K.Pratheepan

FIELD INVESTIGATION BY: E.Brown

PREPARED FOR THE STATE OF CALIFORNIA DEPARTMENT OF TRANSPORTATION

E. Brown
PROJECT ENGINEER

BRIDGE NO. 53E0151
POST MILE 0.17

MSE RETAINING WALL NO. G1

LOG OF TEST BORINGS NO. 4 OF 4

OGS CIVIL LOG OF TEST BORINGS SHEET (ENGLISH) (REV. 06-01-09)

ORIGINAL SCALE IN INCHES FOR REDUCED PLANS 0 1 2 3

CU 07-271
EA 138201

DISREGARD PRINTS BEARING EARLIER REVISION DATES

REVISION DATES (PRELIMINARY STAGE ONLY) 02/05/10 04/19/10 07/02/10

SHEET 20 OF 20

FILE => 53-rwg1_mse_fltb04.dgn

USERNAME => trienard DATE PLOTTED => 14-OCT-2010 TIME PLOTTED => 13:20

DIST	COUNTY	ROUTE	POST MILES TOTAL PROJECT	SHEET No	TOTAL SHEETS
07	LA	47,103	3.5/4.6, 0.0/1.1	984	1003

REGISTERED CIVIL ENGINEER — DATE 05-24-10

10-11-10
PLANS APPROVAL DATE

REGISTERED PROFESSIONAL ENGINEER — FOUED ZAYATI — No. C57046 — Exp. 06-30-11 — CIVIL — STATE OF CALIFORNIA

The State of California or its officers or agents shall not be responsible for the accuracy or completeness of electronic copies of this plan sheet.

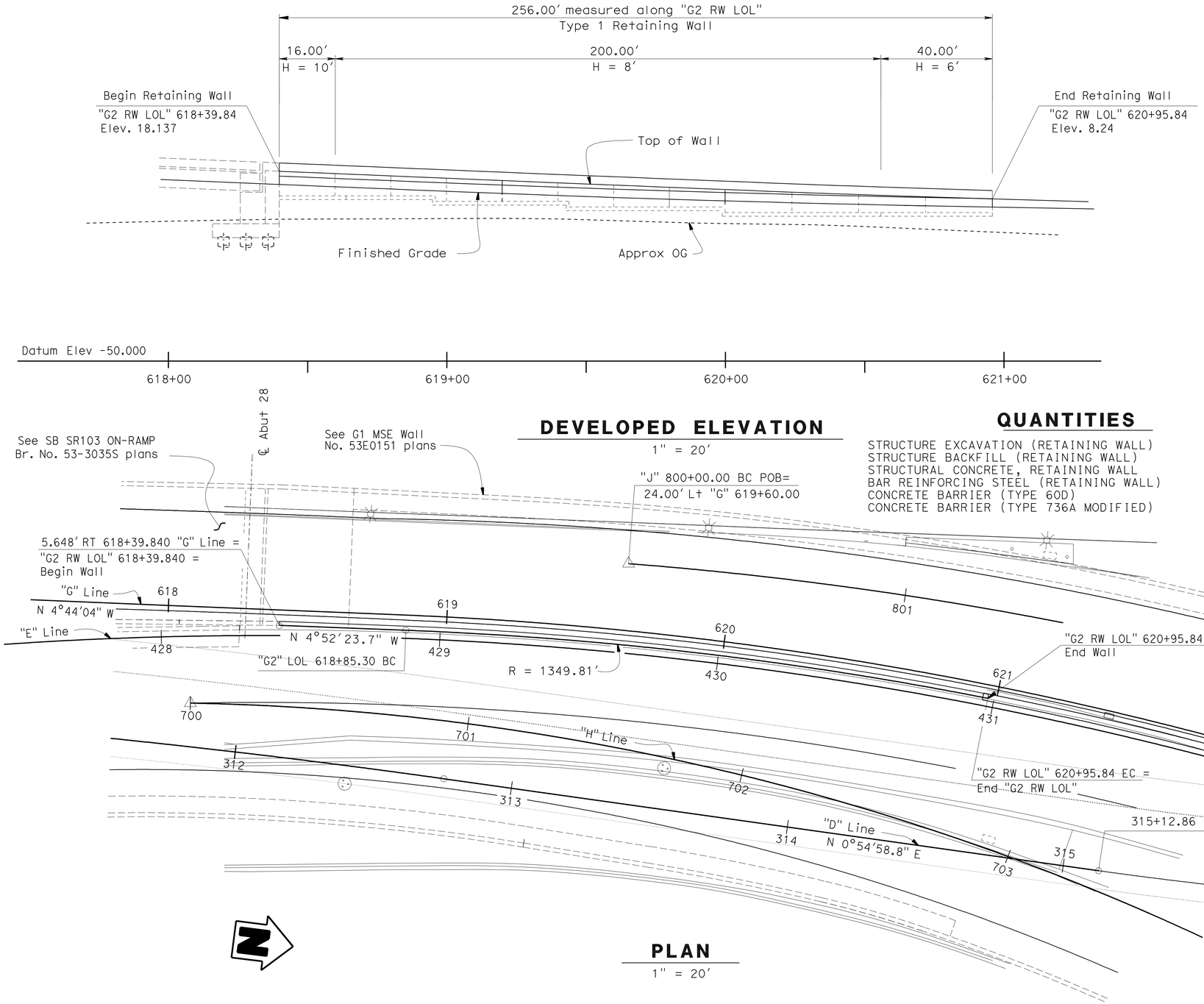

DEVELOPED ELEVATION

1" = 20′

QUANTITIES

STRUCTURE EXCAVATION (RETAINING WALL)	463	CY
STRUCTURE BACKFILL (RETAINING WALL)	304	CY
STRUCTURAL CONCRETE, RETAINING WALL	187	CY
BAR REINFORCING STEEL (RETAINING WALL)	11,670	LB
CONCRETE BARRIER (TYPE 60D)	288	LF
CONCRETE BARRIER (TYPE 736A MODIFIED)	288	LF

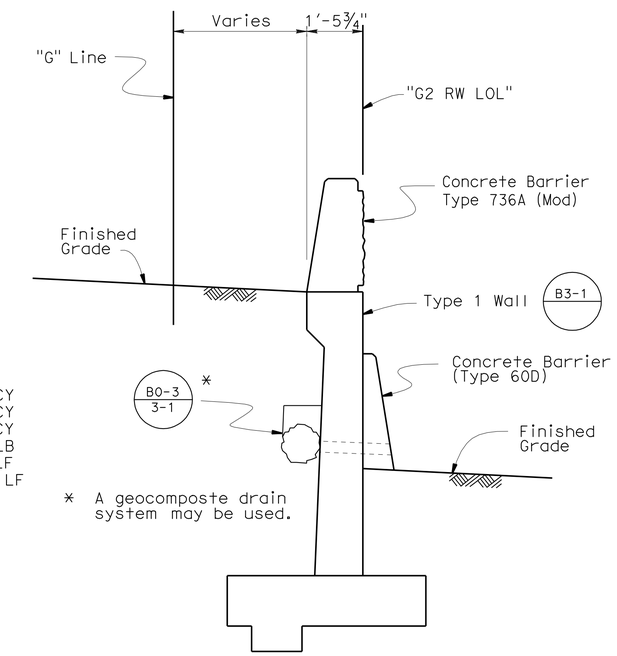

* A geocomposite drain system may be used.

TYPICAL SECTION

½" = 1′-0"

PLAN

1" = 20′

INDEX TO PLANS

SHEET NO.	TITLE
1	GENERAL PLAN
2	STRUCTURE PLAN No. 1
3	STRUCTURE PLAN No. 2
4	FOUNDATION PLAN
5	CONCRETE BARRIER DETAILS No. 1
6	CONCRETE BARRIER DETAILS No. 2
7	LOG OF TEST BORINGS No. 1 OF 4
8	LOG OF TEST BORINGS No. 2 OF 4
9	LOG OF TEST BORINGS No. 3 OF 4
10	LOG OF TEST BORINGS No. 4 OF 4

X
DESIGN ENGINEER

	BY	CHECKED
DESIGN	S. Galgiani	S. Galgiani
DETAILS	J.D. Thorne	S. Galgiani
QUANTITIES	S. Galgiani	J. Lane

LOAD & RESISTANCE FACTOR DESIGN — LIVE LOADING: HL93 W/"LOW-BOY"; PERMIT DESIGN VEHICLE
LAYOUT — BY S. Galgiani — CHECKED X
SPECIFICATIONS — BY X — PLANS AND SPECS COMPARED X

ORIGINAL SCALE IN INCHES FOR REDUCED PLANS 0 1 2 3

STATE OF CALIFORNIA
DEPARTMENT OF TRANSPORTATION

DIVISION OF ENGINEERING SERVICES
STRUCTURE DESIGN
DESIGN BRANCH 14

CU 07-271
EA 138201

BRIDGE NO. 53-RWG2
POST MILE 0.17

RETAINING WALL G2
GENERAL PLAN

DISREGARD PRINTS BEARING EARLIER REVISION DATES
REVISION DATES: 03-18-10 04-18-10 07-08-10
SHEET 1 OF 10

STRUCTURES DESIGN GENERAL PLAN SHEET (ENGLISH) (REV.07-24-06)

FILE => 53-rwg2-a-gp.dgn

USERNAME => trlemard DATE PLOTTED => 14-OCT-2010 TIME PLOTTED => 13:20

DIST	COUNTY	ROUTE	POST MILES TOTAL PROJECT	SHEET No	TOTAL SHEETS
07	LA	47,103	3.5/4.6, 0.0/1.1	985	1003

REGISTERED CIVIL ENGINEER 05-24-10 DATE

10-11-10
PLANS APPROVAL DATE

REGISTERED PROFESSIONAL ENGINEER FOUED ZAYATI No. C57046 Exp. 06-30-11 CIVIL STATE OF CALIFORNIA

The State of California or its officers or agents shall not be responsible for the accuracy or completeness of electronic copies of this plan sheet.

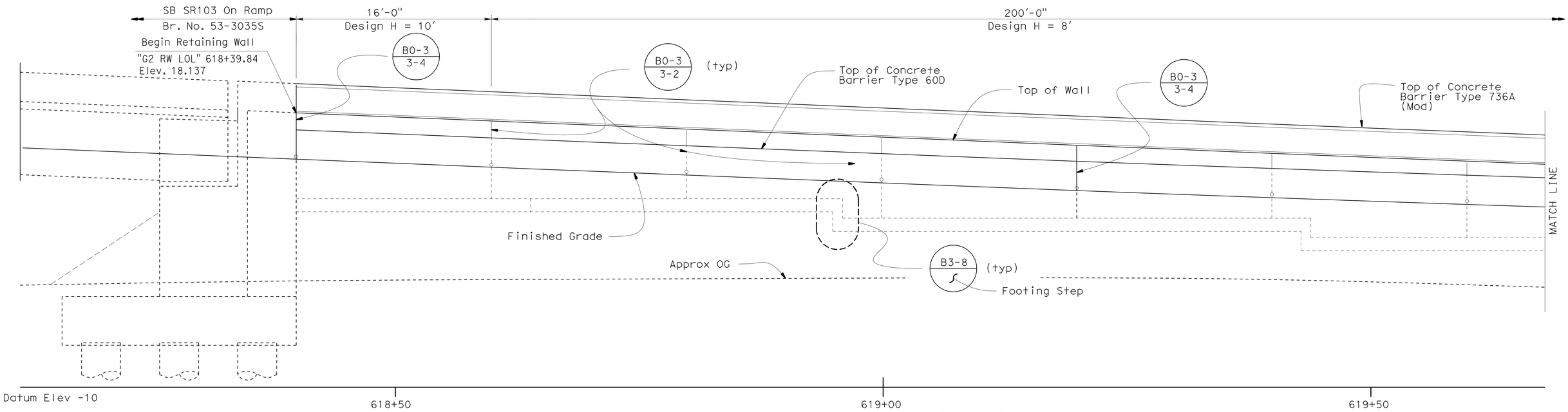

DEVELOPED ELEVATION

1" = 5'

B0-3 / 3-1 B0-3 / 3-3

NOTE:
Top of Wall elevations given at 8'-0" intervals.
See 'Table' on "STRUCTURE PLAN NO. 2" sheet.

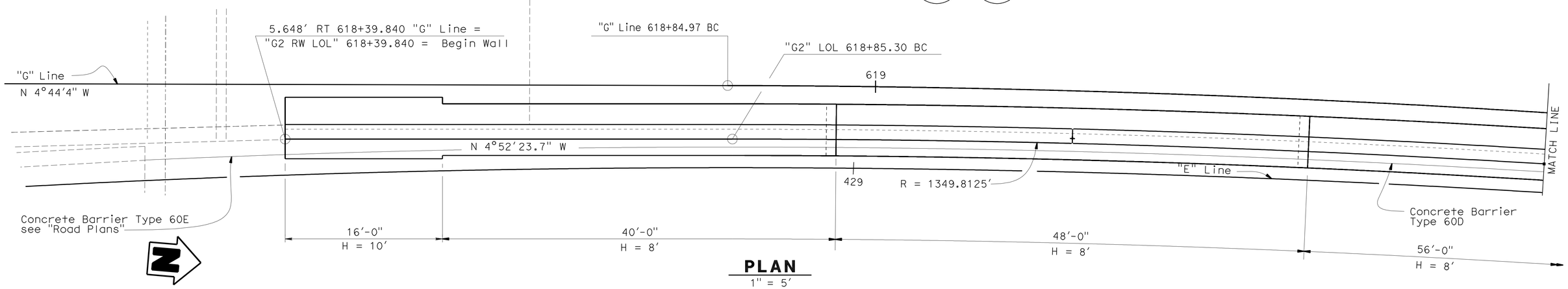

PLAN

1" = 5'

DESIGN	BY S. Galgiani	CHECKED S. Galgiani	
DETAILS	BY Jeff Thorne	CHECKED S. Galgiani	
QUANTITIES	BY S. Galgiani	CHECKED J. Lane	

STATE OF CALIFORNIA
DEPARTMENT OF TRANSPORTATION

DIVISION OF ENGINEERING SERVICES
STRUCTURE DESIGN
DESIGN BRANCH 14

BRIDGE NO. 53-RWG2
POST MILE 0.17

RETAINING WALL G2
STRUCTURE PLAN NO. 1

STRUCTURES DESIGN DETAIL SHEET (ENGLISH) (REV. 10/25/05)

ORIGINAL SCALE IN INCHES FOR REDUCED PLANS 0 1 2 3

CU 07-271
EA 138201

DISREGARD PRINTS BEARING EARLIER REVISION DATES

REVISION DATES: 01-15-10 03-16-10 04-15-10

SHEET 2 OF 10

FILE => 53-rwg2-b-sp01.dgn

USERNAME => friehard DATE PLOTTED => 14-OCT-2010 TIME PLOTTED => 13:20

DIST	COUNTY	ROUTE	POST MILES TOTAL PROJECT	SHEET No	TOTAL SHEETS
07	LA	47,103	3.5/4.6, 0.0/1.1	986	1003

REGISTERED CIVIL ENGINEER — DATE 05-24-10

10-11-10
PLANS APPROVAL DATE

REGISTERED PROFESSIONAL ENGINEER — FOUED ZAYATI — No. C57046 — Exp. 06-30-11 — CIVIL — STATE OF CALIFORNIA

The State of California or its officers or agents shall not be responsible for the accuracy or completeness of electronic copies of this plan sheet.

RETAINING WALL NO. G2

Wall LOL Sta.	Top of Wall Elevation	Wall LOL Sta.	Top of Wall Elevation
618+39.84	18.137	619+11.84	15.149
618+47.84	17.805	619+19.84	14.817
618+55.84	17.473	619+27.84	14.485
618+63.84	17.141	619+35.84	14.153
618+71.84	16.810	619+43.84	13.822
618+79.84	16.478	619+51.84	13.500
618+87.84	16.146	619+59.84	13.181
618+95.84	15.814	619+67.84	12.861
619+03.84	15.481		

RETAINING WALL NO. G2

Wall LOL Sta.	Top of Wall Elevation	Wall LOL Sta.	Top of Wall Elevation
619+75.84	12.541	620+39.84	10.038
619+83.84	12.221	620+47.84	9.756
619+91.84	11.901	620+55.84	9.482
619+99.84	11.582	620+63.84	9.217
620+07.84	11.262	620+71.84	8.961
620+15.84	10.936	620+79.84	8.712
620+23.84	10.628	620+87.84	8.473
620+31.84	10.329	620+95.84	8.242

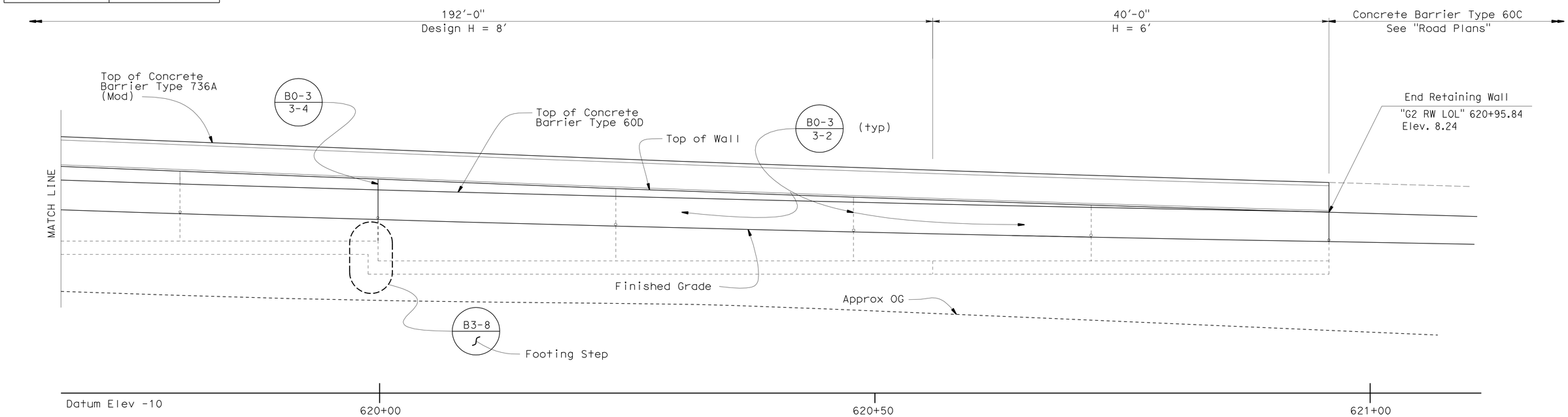

NOTE:
Top of Wall elevations given at 8'-0" intervals. See 'Table'

DEVELOPED ELEVATION

1" = 5'

B0-3 / 3-1 B0-3 / 3-3

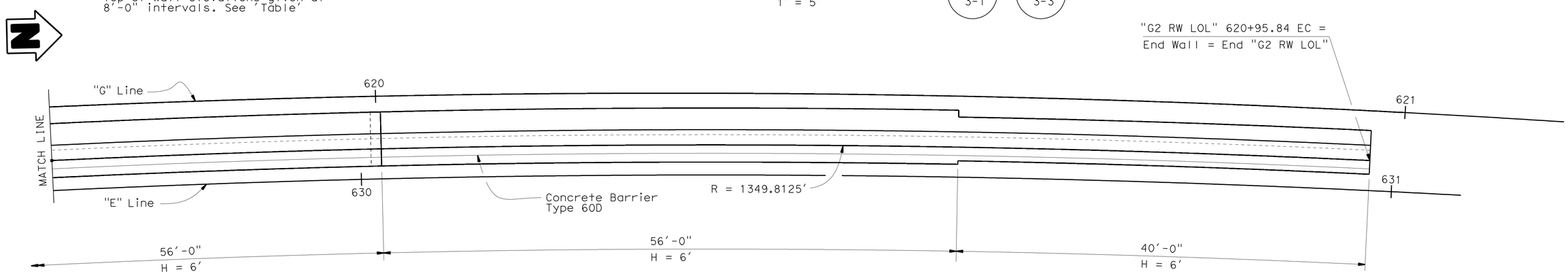

PLAN

1" = 5'

	BY	CHECKED
DESIGN	S. Galgiani	S. Galgiani
DETAILS	K. Kubo	S. Galgiani
QUANTITIES	S. Galgiani	J. Lane

STATE OF CALIFORNIA
DEPARTMENT OF TRANSPORTATION

DIVISION OF ENGINEERING SERVICES
STRUCTURE DESIGN
DESIGN BRANCH 14

BRIDGE NO. 53-RWG2
POST MILE 0.17

RETAINING WALL G2
STRUCTURE PLAN NO. 2

STRUCTURES DESIGN DETAIL SHEET (ENGLISH) (REV. 10/25/05)

ORIGINAL SCALE IN INCHES FOR REDUCED PLANS 0 1 2 3

CU 07-271
EA 138201

DISREGARD PRINTS BEARING EARLIER REVISION DATES — REVISION DATES: ~~3-22-10~~ 04-15-10

SHEET 3 OF 10

FILE => 53-rwg2-b-sp02.dgn

USERNAME => friehard DATE PLOTTED => 14-OCT-2010 TIME PLOTTED => 13:21

DIST	COUNTY	ROUTE	POST MILES TOTAL PROJECT	SHEET No.	TOTAL SHEETS
07	LA	47,103	3.5/4.6, 0.0/1.1	987	1003

REGISTERED CIVIL ENGINEER 05-24-10

10-11-10
PLANS APPROVAL DATE

REGISTERED PROFESSIONAL ENGINEER FOUED ZAYATI No. C57046 Exp. 06-30-11 CIVIL STATE OF CALIFORNIA

The State of California or its officers or agents shall not be responsible for the accuracy or completeness of electronic copies of this plan sheet.

CURVE DATA				
No.	R	Δ	T	L
1	1349.8125′	8°56′13.19"	105.49′	210.5438′

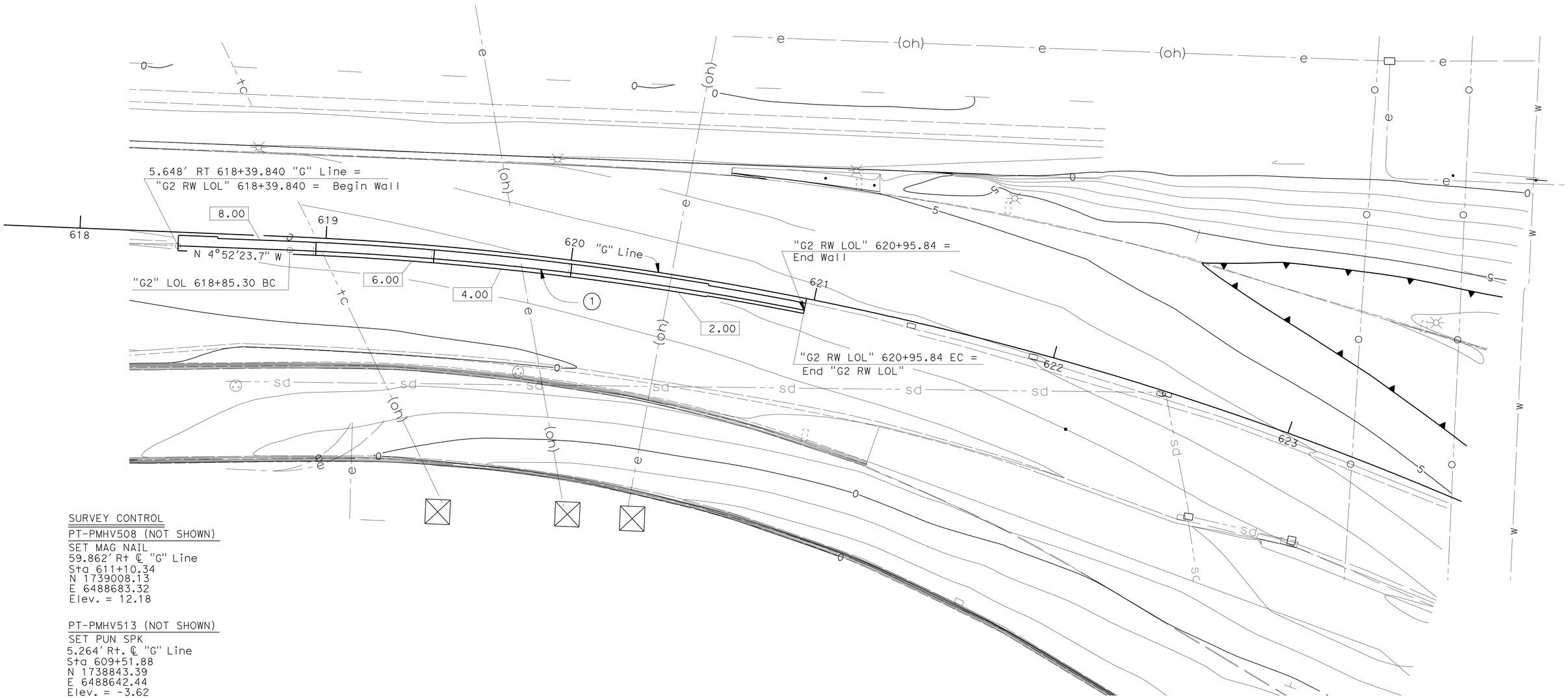

SURVEY CONTROL

PT-PMHV508 (NOT SHOWN)
SET MAG NAIL
59.862′ Rt ℄ "G" Line
Sta 611+10.34
N 1739008.13
E 6488683.32
Elev. = 12.18

PT-PMHV513 (NOT SHOWN)
SET PUN SPK
5.264′ Rt. ℄ "G" Line
Sta 609+51.88
N 1738843.39
E 6488642.44
Elev. = -3.62

HNTB *Corporation*
200 E. SANDPOINTE AVENUE, SUITE 200
SANTA ANA, CALIFORNIA 92707

SCALE: 1:20	VERT.DATUM NAVD 88	HORZ.DATUM NAD 83
PHOTOGRAMMETRY AS OF:	ALIGNMENT TIES Dist. Trav. Sheet	
SURVEYED BY COAST SURVEY 1207	DRAFTED BY L. Zhang	
FIELD CHECKED BY D. Chang	CHECKED BY D. Chang	

	BY	CHECKED
DESIGN	S. Galgiani	S. Galgiani
DETAILS	J.D. Thorne	S. Galgiani
QUANTITIES	S. Galgiani	J. Lane

PREPARED FOR THE STATE OF CALIFORNIA DEPARTMENT OF TRANSPORTATION

PROJECT ENGINEER

BRIDGE NO. 53-RWG2
POST MILE 0.x17

RETAINING WALL G2
FOUNDATION PLAN

FOUNDATION PLAN SHEET (ENGLISH) (REV. 5/9/00)

ORIGINAL SCALE IN INCHES FOR REDUCED PLANS 0 1 2 3

CU 07-271
EA 138201

DISREGARD PRINTS BEARING EARLIER REVISION DATES

REVISION DATES (PRELIMINARY STAGE ONLY): 08-20-08 09-30-08 01-13-10 03-19-10 03-26-10 03-26-10 04-15-10

SHEET 4 OF 10

FILE => 53-rwg2-c-fp.dgn

USERNAME => trlenord DATE PLOTTED => 14-OCT-2010 TIME PLOTTED => 13:21

DIST	COUNTY	ROUTE	POST MILES TOTAL PROJECT	SHEET No	TOTAL SHEETS
07	LA	47,103	3.5/4.6, 0.0/1.1	988	1003

REGISTERED CIVIL ENGINEER — DATE 05-24-10

10-11-10
PLANS APPROVAL DATE

REGISTERED PROFESSIONAL ENGINEER — FOUED ZAYATI — No. C57046 — Exp. 06-30-11 — CIVIL — STATE OF CALIFORNIA

The State of California or its officers or agents shall not be responsible for the accuracy or completeness of electronic copies of this plan sheet.

NOTES:

A. Walls are to be backfilled before barrier is placed.
B. Clearance to reinforcing steel in barrier to be 1", except as noted. Longitudinal reinforcement to stop at all expansion joints.
C. See project plans for locations of electroliers and pull boxes.
D. Dimensions may vary with roadway cross slope and with certain thickness of surfacing. See Project Plans.
E. Minimum concrete edge distance to reinforcing shown, shall be maintained, edge distance may be adjusted to accomodate increase in concrete cover for architectural treatment. See Typical Section.
F. For 'Architectural Treatment', see "CONCRETE BARRIER DETAILS NO. 2" sheet

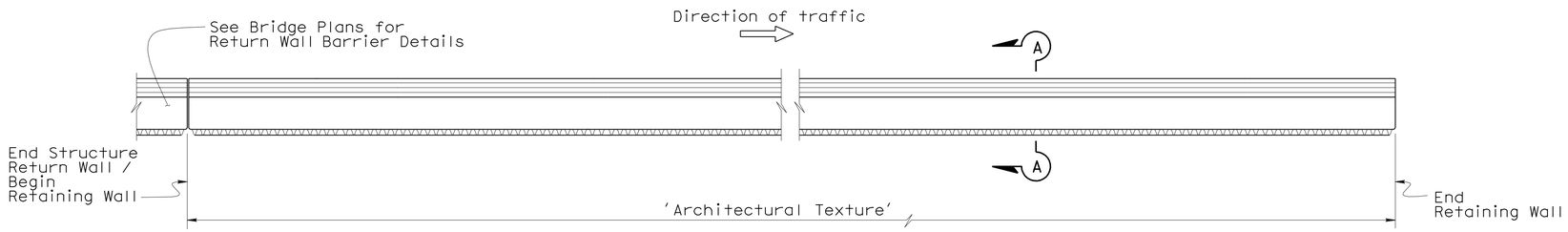

PLAN

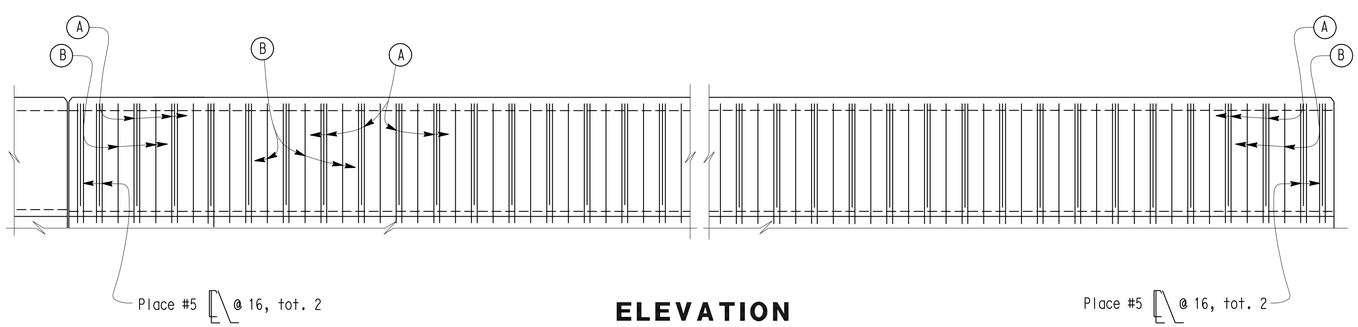

ELEVATION

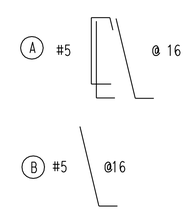

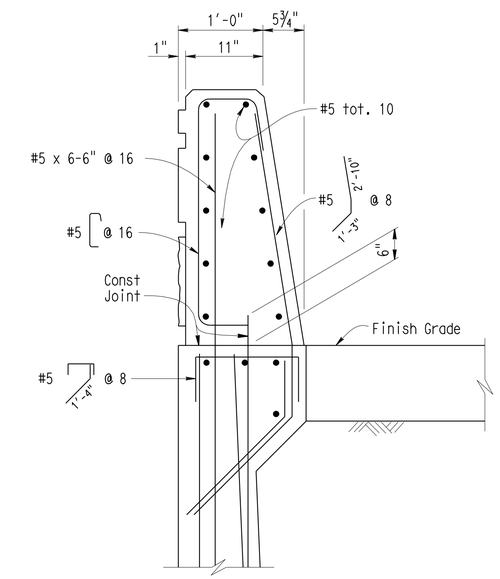

SECTION A-A

DESIGN	BY S. Galgiani	CHECKED J. Lane	
DETAILS	BY Jeff Thorne	CHECKED S. Galgiani	
QUANTITIES	BY J. Peterson	CHECKED P. Peterson	

STATE OF CALIFORNIA
DEPARTMENT OF TRANSPORTATION

DIVISION OF ENGINEERING SERVICES
STRUCTURE DESIGN
DESIGN BRANCH 14

BRIDGE NO. 53-RWG2
POST MILE 0.17

RETAINING WALL NO. G2
CONCRETE BARRIER DETAILS NO. 1

STRUCTURES DESIGN DETAIL SHEET (ENGLISH) (REV. 10/25/05)

ORIGINAL SCALE IN INCHES FOR REDUCED PLANS 0 1 2 3

CU 07-271
EA 138201

DISREGARD PRINTS BEARING EARLIER REVISION DATES

REVISION DATES: 01-14-10 | 03-16-10 | 05-18-10 | 06-28-10 | 06-29-10

SHEET 5 OF 10

FILE => 53-rwg2-f-brdt01.dgn

USERNAME => trlenard DATE PLOTTED => 14-OCT-2010 TIME PLOTTED => 13:21

DIST	COUNTY	ROUTE	POST MILES TOTAL PROJECT	SHEET No	TOTAL SHEETS
07	LA	47,103	3.5/4.6, 0.0/1.1	989	1003

REGISTERED CIVIL ENGINEER — 05-24-10 DATE

10-11-10
PLANS APPROVAL DATE

REGISTERED PROFESSIONAL ENGINEER — FOUED ZAYATI — No. C57046 — Exp. 06-30-11 — CIVIL — STATE OF CALIFORNIA

The State of California or its officers or agents shall not be responsible for the accuracy or completeness of electronic copies of this plan sheet.

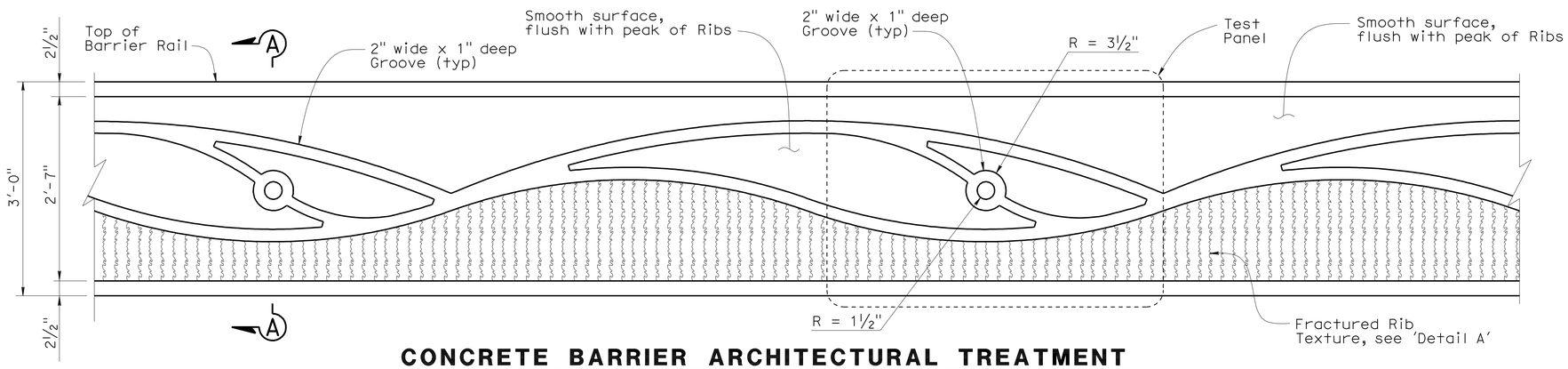

CONCRETE BARRIER ARCHITECTURAL TREATMENT

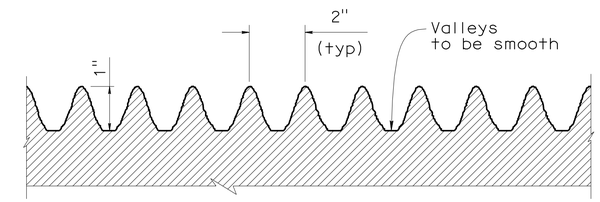

DETAIL A

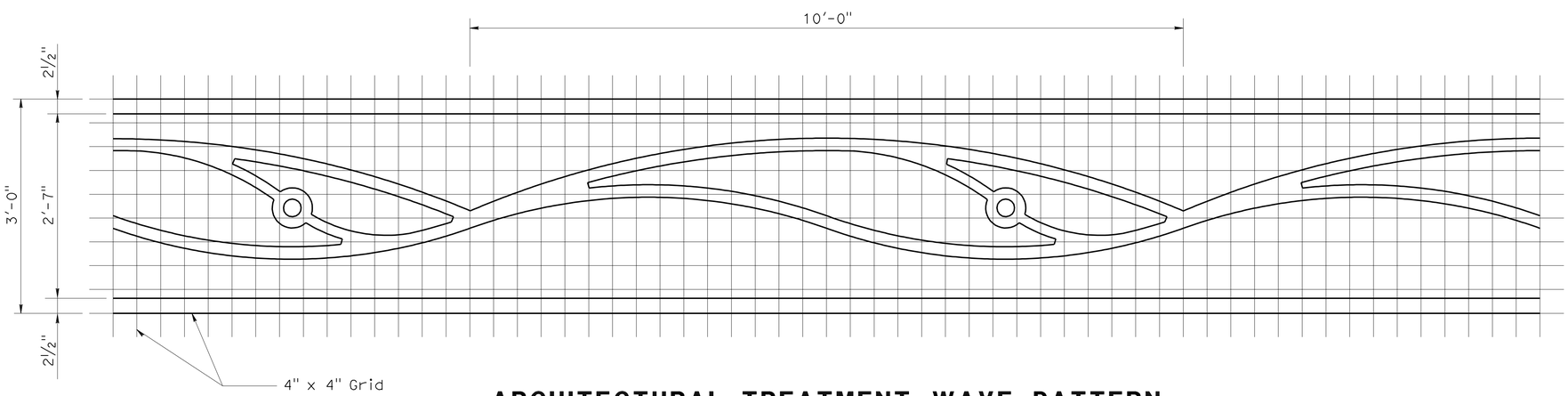

ARCHITECTURAL TREATMENT WAVE PATTERN

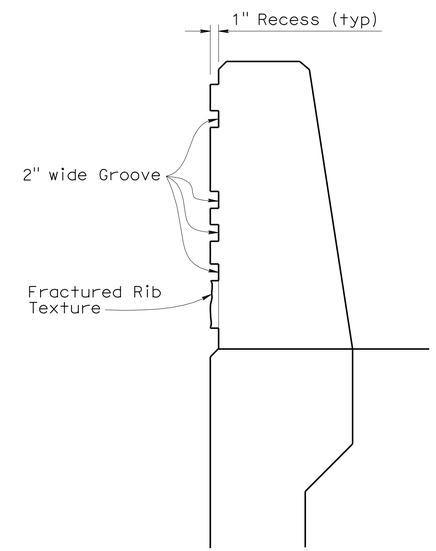

SECTION A-A

NO SCALE

DESIGN	BY S. Galgiani	CHECKED J. Lane	
DETAILS	BY Jeff Thorne	CHECKED S. Galgiani	
QUANTITIES	BY J. Peterson	CHECKED P. Peterson	

STATE OF CALIFORNIA
DEPARTMENT OF TRANSPORTATION

DIVISION OF ENGINEERING SERVICES
STRUCTURE DESIGN
DESIGN BRANCH 14

BRIDGE NO. 53-RWG2
POST MILE 0.17

RETAINING WALL NO. G2
CONCRETE BARRIER DETAILS NO. 2

STRUCTURES DESIGN DETAIL SHEET (ENGLISH) (REV. 10/25/05)

ORIGINAL SCALE IN INCHES FOR REDUCED PLANS 0 1 2 3

CU 07-271
EA 138201

DISREGARD PRINTS BEARING EARLIER REVISION DATES → 01-13-10 03-16-10 05-18-10 05-24-10 06-22-10

REVISION DATES

SHEET 6 OF 10

FILE => 53-rwg2-f-brdt02.dgn

USERNAME => trlenard DATE PLOTTED => 14-OCT-2010 TIME PLOTTED => 13:21

DIST	COUNTY	ROUTE	POST MILES TOTAL PROJECT	SHEET No	TOTAL SHEETS
07	LA	47,103	3.5/4.6, 0.0/1.1	990	1003

REGISTERED ENGINEER — DATE 04/19/10

10-11-10
PLANS APPROVAL DATE

REGISTERED PROFESSIONAL ENGINEER ERIC BROWN NO. GE-2806 EXP. 06-30-2010 GEOTECHNICAL STATE OF CALIFORNIA

The State of California or its officers or agents shall not be responsible for the accuracy or completeness of electronic copies of this plan sheet.

ACTA
ONE CIVIC PLAZA. SUITE 350,
CARSON, CA 90745

EARTH MECHANICS, INC.
17660, NEWHOPE STREET, SUITE E
FOUNTAIN VALLEY, CA 92708

BENCHMARKS:

PT-PMHV509	PT-PMHV515
SET MAG NAIL	SET MAG NAIL
26.671' Lt ℄ "G"Line	28.517' Rt ℄ "G" Line
Sta. 604+968.70	Sta. 600+995.50
N 1738366.89	N 1737997.51
E 6488728.36	E 6488779.52
Elev. = -3.61	Elev. = -2.21

NOTES:

(1) This LOTB sheet (Boring Record) was prepared in accordance with the Caltrans Soil and Rock Classification Logging, Classification and Presentation Manual (June 2007).

(2) 2.4" samples were taken using a California Split-spoon Sampler.

(3) For R-09-036, a rope and cat-head hammer system consisting of a hammer weight of 140 lbs falling a distance of 30" was used to advance the drive sampler.

(4) For A-09-035, an automatic trip hammer system consisting of a hammer weight of 140 lbs falling a distance of 30" was used to advance the drive sampler.

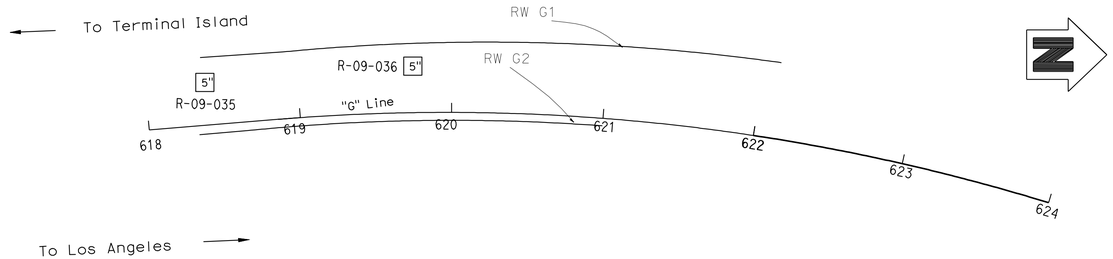

PLAN

1" = 50'

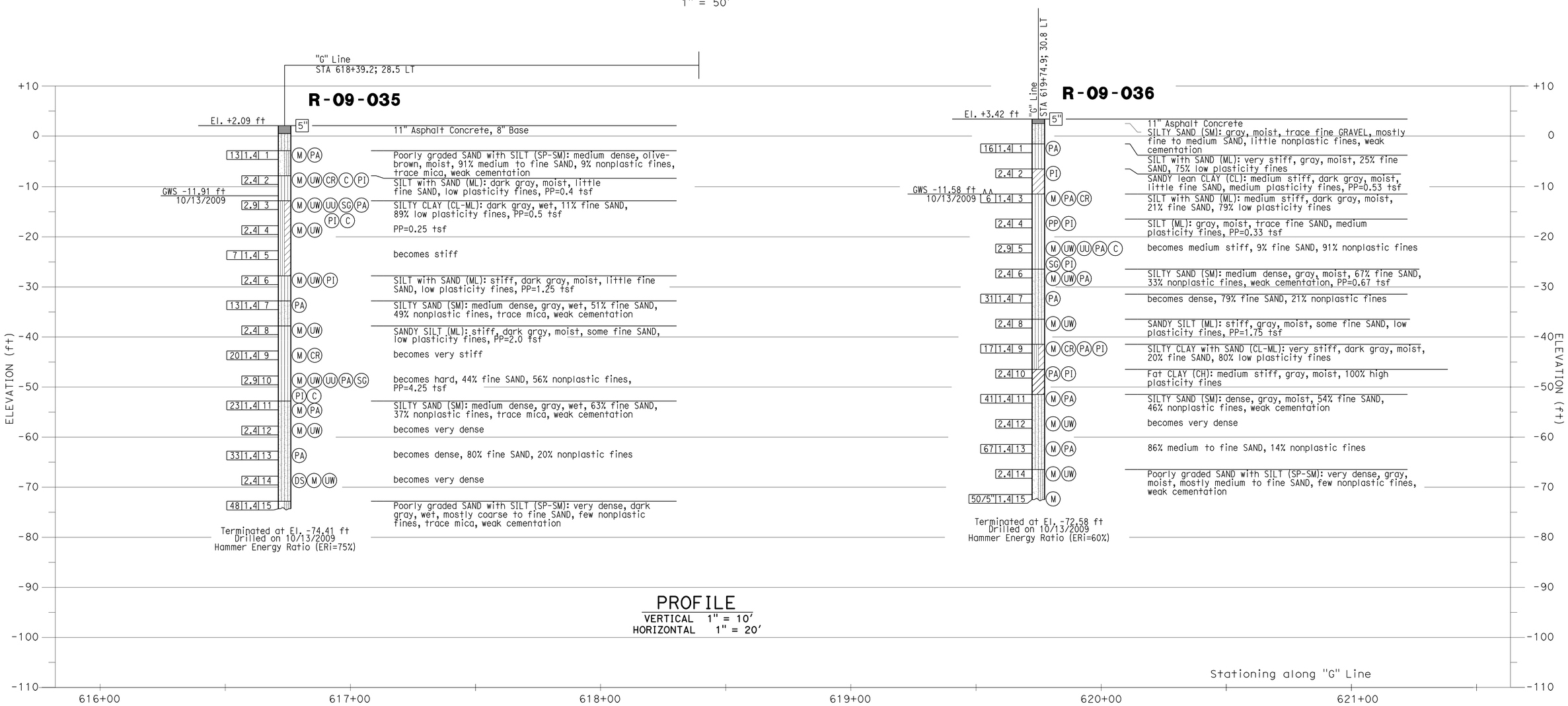

DESIGN OVERSIGHT	DRAWN BY: J.Fang	FIELD INVESTIGATION BY:	PREPARED FOR THE STATE OF CALIFORNIA DEPARTMENT OF TRANSPORTATION	E. Brown PROJECT ENGINEER	BRIDGE NO. 53-RWG2 / POST MILE 0.17	MSE RETAINING WALL NO. G2
SIGN OFF DATE	CHECKED BY: K.Pratheepan	E.Brown				LOG OF TEST BORINGS NO. 1 OF 4

OGS CIVIL LOG OF TEST BORINGS SHEET (ENGLISH) (REV. 06-01-09)

ORIGINAL SCALE IN INCHES FOR REDUCED PLANS 0 1 2 3

CU 07-271
EA 138201

DISREGARD PRINTS BEARING EARLIER REVISION DATES

REVISION DATES (PRELIMINARY STAGE ONLY) 02/05/10 04/14/10 05/14/10 07/02/10

SHEET 7 OF 10

FILE => 53-rwg2-f-1tb01.dgn

USERNAME => trrichard DATE PLOTTED => 14-OCT-2010 TIME PLOTTED => 13:21

DIST	COUNTY	ROUTE	POST MILES TOTAL PROJECT	SHEET No	TOTAL SHEETS
07	LA	47,103	3.5/4.6, 0.0/1.1	991	1003

REGISTERED ENGINEER 04/19/10 DATE

10-11-10
PLANS APPROVAL DATE

REGISTERED PROFESSIONAL ENGINEER ERIC BROWN NO. GE-2806 EXP. 06-30-2010 GEOTECHNICAL STATE OF CALIFORNIA

The State of California or its officers or agents shall not be responsible for the accuracy or completeness of electronic copies of this plan sheet.

ACTA
ONE CIVIC PLAZA. SUITE 350,
CARSON, CA 90745

EARTH MECHANICS, INC.
17660, NEWHOPE STREET, SUITE E
FOUNTAIN VALLEY, CA 92708

BENCHMARKS:

PT-PMHV509	PT-PMHV515
SET MAG NAIL	SET MAG NAIL
26.671' Lt ℄ "G"Line	28.517' Rt ℄ "G" Line
Sta. 604+968.70	Sta. 600+995.50
N 1738366.89	N 1737997.51
E 6488728.36	E 6488779.52
Elev. = -3.61	Elev. = -2.21

NOTES:

(1) This LOTB sheet (Boring Record) was prepared in accordance with the Caltrans Soil and Rock Classification Logging, Classification and Presentation Manual (June 2007).

(2) 2.4" samples were taken using a California Split-spoon Sampler.

(3) An automatic trip hammer system consisting of a hammer weight of 140 lbs falling a distance of 30" was used to advance the drive sampler.

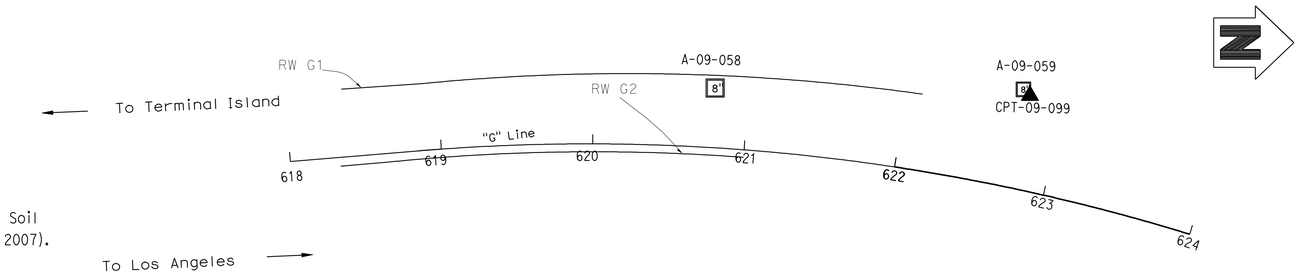

PLAN

1" = 50'

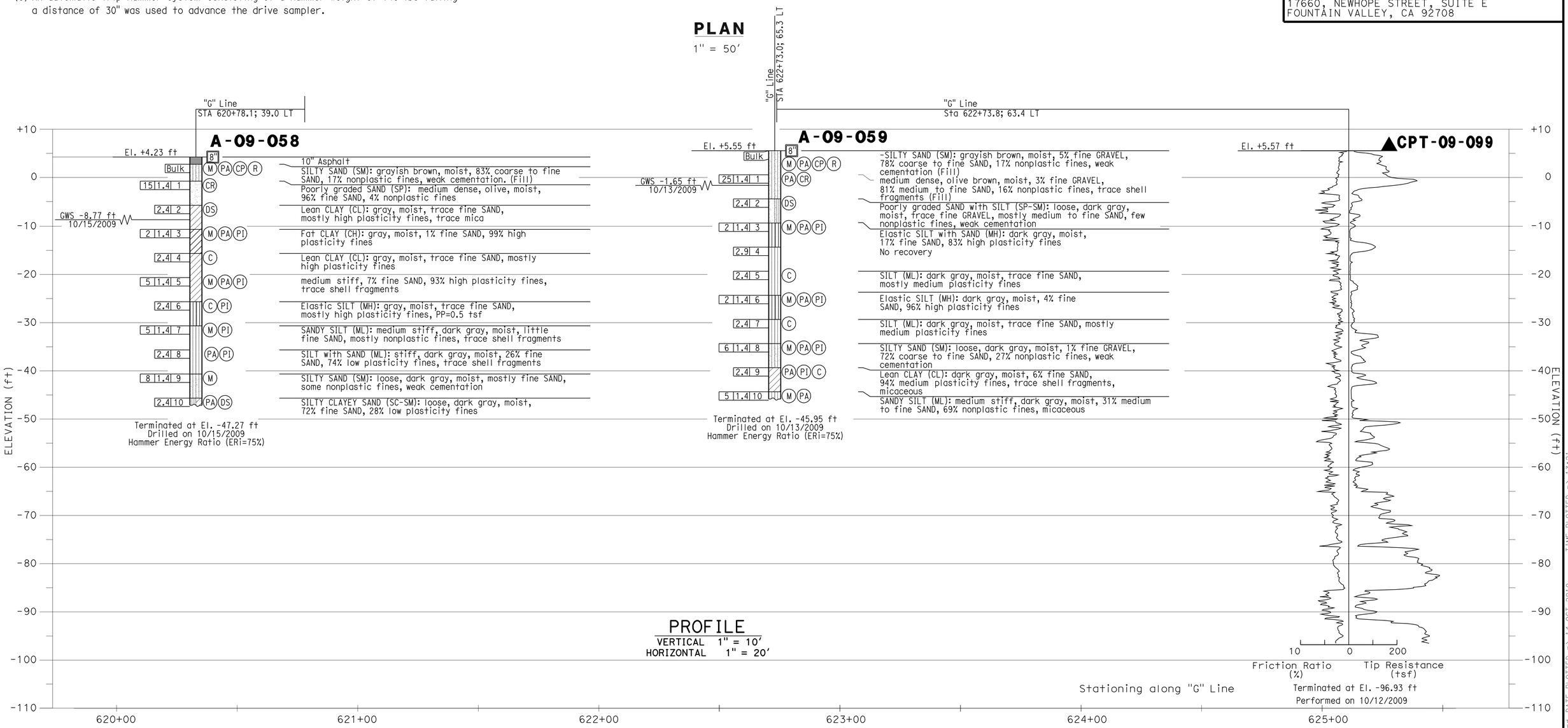

PROFILE

VERTICAL 1" = 10'
HORIZONTAL 1" = 20'

DESIGN OVERSIGHT	DRAWN BY: J.Fang	FIELD INVESTIGATION BY:	PREPARED FOR THE STATE OF CALIFORNIA DEPARTMENT OF TRANSPORTATION	E. Brown PROJECT ENGINEER	BRIDGE NO. 53-RWG2 POST MILE 0.17
SIGN OFF DATE	CHECKED BY: K.Pratheepan	E.Brown			

MSE RETAINING WALL NO. G2

LOG OF TEST BORINGS NO. 2 OF 4

OGS CIVIL LOG OF TEST BORINGS SHEET (ENGLISH) (REV. 06-01-09)

ORIGINAL SCALE IN INCHES FOR REDUCED PLANS 0 1 2 3

CU 07-271
EA 138201

DISREGARD PRINTS BEARING EARLIER REVISION DATES

REVISION DATES (PRELIMINARY STAGE ONLY) 02/26/10 04/14/10 05/24/10 07/02/10

SHEET 8 OF 10

FILE => 53-rwg2-f-1tb02.dgn

USERNAME => trienard DATE PLOTTED => 14-OCT-2010 TIME PLOTTED => 13:21

REFERENCE: CALTRANS SOIL & ROCK LOGGING, CLASSIFICATION, AND PRESENTATION MANUAL (JUNE 2007)

DIST	COUNTY	ROUTE	POST MILES TOTAL PROJECT	SHEET No	TOTAL SHEETS
07	LA	47,103	3.5/4.6, 0.0/1.1	992	1003

REGISTERED ENGINEER — DATE 04/19/10

10-11-10
PLANS APPROVAL DATE

REGISTERED PROFESSIONAL ENGINEER ERIC BROWN NO. GE-2806 EXP. 06-30-2010 GEOTECHNICAL STATE OF CALIFORNIA

The State of California or its officers or agents shall not be responsible for the accuracy or completeness of electronic copies of this plan sheet.

ACTA
ONE CIVIC PLAZA. SUITE 350,
CARSON, CA 90745

EARTH MECHANICS, INC.
17660, NEWHOPE STREET, SUITE E
FOUNTAIN VALLEY, CA 92708

CEMENTATION

Description	Criteria
Weak	Crumbles or breaks with handling or little finger pressure.
Moderate	Crumbles or breaks with considerable finger pressure.
Strong	Will not crumble or break with finger pressure.

CONSISTENCY OF COHESIVE SOILS

Description	Unconfined Compressive Strength (tsf)	Pocket Penetrometer Measurement (tsf)	Torvane Measurement (tsf)	Field Approximation
Very Soft	< 0.25	< 0.25	< 0.12	Easily penetrated several inches by fist
Soft	0.25 to 0.50	0.25 to 0.50	0.12 to 0.25	Easily penetrated several inches by thumb
Medium Stiff	0.50 to 1.0	0.50 to 1.0	0.25 to 0.50	Penetrated several inches by thumb with moderate effort
Stiff	1 to 2	1 to 2	0.50 to 1.0	Readily indented by thumb but penetrated only with great effort
Very Stiff	2 to 4	2 to 4	1.0 to 2.0	Readily indented by thumbnail
Hard	> 4.0	> 4.0	> 2.0	Indented by thumbnail with difficulty

BOREHOLE IDENTIFICATION

Symbol	Hole Type	Description
Size	A	Auger Boring
Size	R P	Rotary drilled boring Rotary percussion boring (air)
Size	R	Rotary drilled diamond core
Size	HD HA	Hand driven (1-inch soil tube) Hand Auger
●	D	Dynamic Cone Penetration Boring
▲	CPT	Cone Penetration Test (ASTM D 5778-95)
⬚	O	Other

Note: Size in inches.

PLASTICITY OF FINE-GRAINED SOILS

Description	Criteria
Nonplastic	A 1/8-inch thread cannot be rolled at any water content.
Low	The thread can barely be rolled and the lump cannot be formed when drier than the plastic limit.
Medium	The thread is easy to roll and not much time is required to reach the plastic limit. The thread cannot be rerolled after reaching the plastic limit. The lump crumbles when drier than the plastic limit.
High	It takes considerable time rolling and kneading to reach the plastic limit. The thread can be rerolled several times after reaching the plastic limit. The lump can be formed without crumbling when drier than the plastic limit.

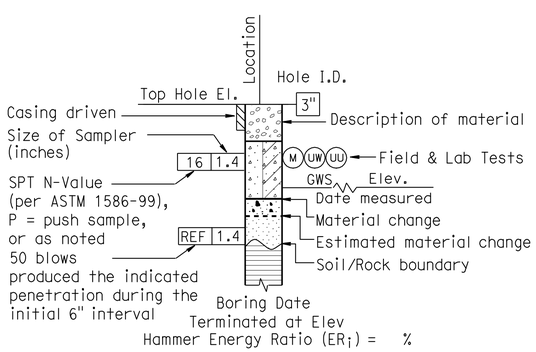

ROTARY BORING

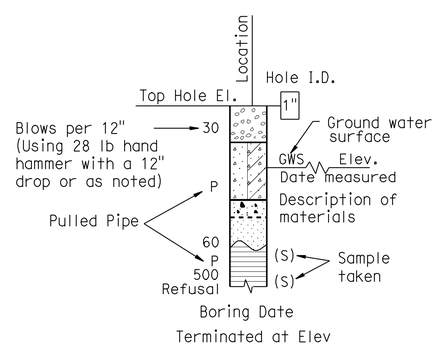

HAND BORING

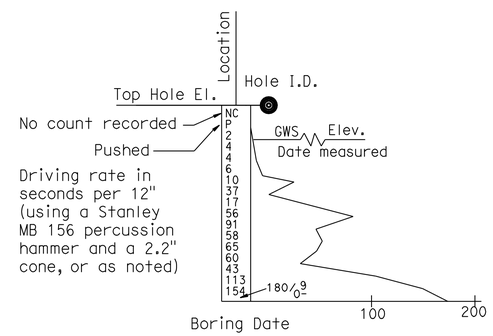

DYNAMIC CONE PENETRATION BORING

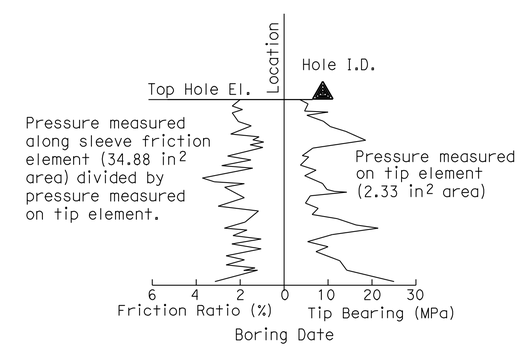

CONE PENETRATION TEST (CPT) SOUNDING

DESIGN OVERSIGHT SIGN OFF DATE	DRAWN BY: J.Fang CHECKED BY: K.Pratheepan	FIELD INVESTIGATION BY: E.Brown	PREPARED FOR THE STATE OF CALIFORNIA DEPARTMENT OF TRANSPORTATION	E. Brown PROJECT ENGINEER	BRIDGE NO. 53-RWG2 POST MILE 0.17

MSE RETAINING WALL NO. G2

LOG OF TEST BORINGS NO. 3 OF 4

OGS CIVIL LOG OF TEST BORINGS SHEET (ENGLISH) (REV. 06-01-09)

ORIGINAL SCALE IN INCHES FOR REDUCED PLANS 0 1 2 3

CU 07-271
EA 138201

DISREGARD PRINTS BEARING EARLIER REVISION DATES

REVISION DATES (PRELIMINARY STAGE ONLY) 09/08/10 04/14/10 05/18/10 07/02/10

SHEET 9 OF 10

FILE => 53-rwg2-f-ltb03.dgn

USERNAME => trlenard DATE PLOTTED => 14-OCT-2010 TIME PLOTTED => 13:21

REFERENCE: CALTRANS SOIL & ROCK LOGGING, CLASSIFICATION, AND PRESENTATION MANUAL (JUNE 2007)

DIST	COUNTY	ROUTE	POST MILES TOTAL PROJECT	SHEET No	TOTAL SHEETS
07	LA	47,103	3.5/4.6, 0.0/1.1	993	1003

REGISTERED ENGINEER — DATE 04/19/10

PLANS APPROVAL DATE 10-11-10

REGISTERED PROFESSIONAL ENGINEER ERIC BROWN NO. GE-2806 EXP. 06-30-2010 GEOTECHNICAL STATE OF CALIFORNIA

The State of California or its officers or agents shall not be responsible for the accuracy or completeness of electronic copies of this plan sheet.

ACTA
ONE CIVIC PLAZA. SUITE 350,
CARSON, CA 90745

EARTH MECHANICS, INC.
17660, NEWHOPE STREET, SUITE E
FOUNTAIN VALLEY, CA 92708

GROUP SYMBOLS AND NAMES

Graphic/Symbol	Group Names	Graphic/Symbol	Group Names
GW	Well-graded GRAVEL Well-graded GRAVEL with SAND	CL	Lean CLAY Lean CLAY with SAND Lean CLAY with GRAVEL SANDY lean CLAY SANDY lean CLAY with GRAVEL GRAVELLY lean CLAY GRAVELLY lean CLAY with SAND
GP	Poorly graded GRAVEL Poorly graded GRAVEL with SAND		
GW-GM	Well-graded GRAVEL with SILT Well-graded GRAVEL with SILT and SAND	CL-ML	SILTY CLAY SILTY CLAY with SAND SILTY CLAY with GRAVEL SANDY SILTY CLAY SANDY SILTY CLAY with GRAVEL GRAVELLY SILTY CLAY GRAVELLY SILTY CLAY with SAND
GW-GC	Well-graded GRAVEL with CLAY (or SILTY CLAY) Well-graded GRAVEL with CLAY and SAND (or SILTY CLAY and SAND)		
GP-GM	Poorly graded GRAVEL with SILT Poorly graded GRAVEL with SILT and SAND	ML	SILT SILT with SAND SILT with GRAVEL SANDY SILT SANDY SILT with GRAVEL GRAVELLY SILT GRAVELLY SILT with SAND
GP-GC	Poorly graded GRAVEL with CLAY (or SILTY CLAY) Poorly graded GRAVEL with CLAY and SAND (or SILTY CLAY and SAND)		
GM	SILTY GRAVEL SILTY GRAVEL with SAND	OL	ORGANIC lean CLAY ORGANIC lean CLAY with SAND ORGANIC lean CLAY with GRAVEL SANDY ORGANIC lean CLAY SANDY ORGANIC lean CLAY with GRAVEL GRAVELLY ORGANIC lean CLAY GRAVELLY ORGANIC lean CLAY with SAND
GC	CLAYEY GRAVEL CLAYEY GRAVEL with SAND		
GC-GM	SILTY, CLAYEY GRAVEL SILTY, CLAYEY GRAVEL with SAND	OL	ORGANIC SILT ORGANIC SILT with SAND ORGANIC SILT with GRAVEL SANDY ORGANIC SILT SANDY ORGANIC SILT with GRAVEL GRAVELLY ORGANIC SILT GRAVELLY ORGANIC SILT with SAND
SW	Well-graded SAND Well-graded SAND with GRAVEL		
SP	Poorly graded SAND Poorly graded SAND with GRAVEL	CH	Fat CLAY Fat CLAY with SAND Fat CLAY with GRAVEL SANDY fat CLAY SANDY fat CLAY with GRAVEL GRAVELLY fat CLAY GRAVELLY fat CLAY with SAND
SW-SM	Well-graded SAND with SILT Well-graded SAND with SILT and GRAVEL		
SW-SC	Well-graded SAND with CLAY (or SILTY CLAY) Well-graded SAND with CLAY and GRAVEL (or SILTY CLAY and GRAVEL)	MH	Elastic SILT Elastic SILT with SAND Elastic SILT with GRAVEL SANDY elastic SILT SANDY elastic SILT with GRAVEL GRAVELLY elastic SILT GRAVELLY elastic SILT with SAND
SP-SM	Poorly graded SAND with SILT Poorly graded SAND with SILT and GRAVEL		
SP-SC	Poorly graded SAND with CLAY (or SILTY CLAY) Poorly graded SAND with CLAY and GRAVEL (or SILTY CLAY and GRAVEL)	OH	ORGANIC fat CLAY ORGANIC fat CLAY with SAND ORGANIC fat CLAY with GRAVEL SANDY ORGANIC fat CLAY SANDY ORGANIC fat CLAY with GRAVEL GRAVELLY ORGANIC fat CLAY GRAVELLY ORGANIC fat CLAY with SAND
SM	SILTY SAND SILTY SAND with GRAVEL		
SC	CLAYEY SAND CLAYEY SAND with GRAVEL	OH	ORGANIC elastic SILT ORGANIC elastic SILT with SAND ORGANIC elastic SILT with GRAVEL SANDY ORGANIC elastic SILT SANDY ORGANIC elastic SILT with GRAVEL GRAVELLY ORGANIC elastic SILT GRAVELLY ORGANIC elastic SILT with SAND
SC-SM	SILTY, CLAYEY SAND SILTY, CLAYEY SAND with GRAVEL		
PT	PEAT	OL/OH	ORGANIC SOIL ORGANIC SOIL with SAND ORGANIC SOIL with GRAVEL SANDY ORGANIC SOIL SANDY ORGANIC SOIL with GRAVEL GRAVELLY ORGANIC SOIL GRAVELLY ORGANIC SOIL with SAND
	COBBLES COBBLES and BOULDERS BOULDERS		

FIELD AND LABORATORY TESTING

- (C) Consolidation (ASTM D 2435)
- (CL) Collapse Potential (ASTM D 5333)
- (CP) Compaction Curve (CTM 216)
- (CR) Corrosivity Testing (CTM 643, CTM 422, CTM 417)
- (CU) Consolidated Undrained Triaxial (ASTM D 4767)
- (DS) Direct Shear (ASTM D 3080)
- (EI) Expansion Index (ASTM D 4829)
- (M) Moisture Content (ASTM D 2216)
- (OC) Organic Content-% (ASTM D 2974)
- (P) Permeability (CTM 220)
- (PA) Particle Size Analysis (ASTM D 422)
- (PI) Plasticity Index (AASHTO T 90) Liquid Limit (AASHTO T 89)
- (PL) Point Load Index (ASTM D 5731)
- (PM) Pressure Meter
- (PP) Pocket Penetrometer
- (R) R-Value (CTM 301)
- (SE) Sand Equivalent (CTM 217)
- (SG) Specific Gravity (AASHTO T 100)
- (SL) Shrinkage Limit (ASTM D 427)
- (SW) Swell Potential (ASTM D 4546)
- (TV) Pocket Torvane
- (UC) Unconfined Compression-Soil (ASTM D 2166) Unconfined Compression-Rock (ASTM D 2938)
- (UU) Unconsolidated Undrained Triaxial (ASTM D 2850)
- (UW) Unit Weight (ASTM D 4767)
- (VS) Vane Shear (AASHTO T 223)

APPARENT DENSITY OF COHESIONLESS SOILS

Description	SPT N_{60} (Blows / 12 inches)
Very loose	0 - 4
Loose	5 - 10
Medium Dense	11 - 30
Dense	31 - 50
Very Dense	> 50

MOISTURE

Description	Criteria
Dry	Absence of moisture, dusty, dry to the touch
Moist	Damp but no visible water
Wet	Visible free water, usually soil is below water table

PERCENT OR PROPORTION OF SOILS

Description	Criteria
Trace	Particles are present but estimated to be less than 5%
Few	5 to 10%
Little	15 to 25%
Some	30 to 45%
Mostly	50 to 100%

PARTICLE SIZE

Description		Size
Boulder		> 12"
Cobble		3" to 12"
Gravel	Coarse	3/4" to 3"
	Fine	No. 4 to 3/4"
Sand	Coarse	No. 10 to No. 4
	Medium	No. 40 to No. 10
	Fine	No. 200 to No. 40

DESIGN OVERSIGHT

SIGN OFF DATE

DRAWN BY: J.Fang

CHECKED BY: K.Pratheepan

FIELD INVESTIGATION BY: E.Brown

PREPARED FOR THE STATE OF CALIFORNIA DEPARTMENT OF TRANSPORTATION

E. Brown
PROJECT ENGINEER

BRIDGE NO. 53-RWG2
POST MILE 0.17

MSE RETAINING WALL NO. G2

LOG OF TEST BORINGS NO. 4 OF 4

OGS CIVIL LOG OF TEST BORINGS SHEET (ENGLISH) (REV. 06-01-09)

ORIGINAL SCALE IN INCHES FOR REDUCED PLANS 0 1 2 3

CU 07-271
EA 138201

DISREGARD PRINTS BEARING EARLIER REVISION DATES

REVISION DATES (PRELIMINARY STAGE ONLY) 02/05/10 04/19/10 05/18/10 07/02/10

SHEET 10 OF 10

FILE => 53-rwg2-f-ltb04.dgn

USERNAME => trmikes1 DATE PLOTTED => 20-OCT-2010 TIME PLOTTED => 08:47

DIST	COUNTY	ROUTE	POST MILES TOTAL PROJECT	SHEET No	TOTAL SHEETS
07	LA	47,103	3.5/4.6, 0.0/1.1	994	1003

REGISTERED CIVIL ENGINEER — DATE 05-24-10

10-11-10
PLANS APPROVAL DATE

REGISTERED PROFESSIONAL ENGINEER — FOUED ZAYATI — No. C57046 — Exp. 06-30-11 — CIVIL — STATE OF CALIFORNIA

The State of California or its officers or agents shall not be responsible for the accuracy or completeness of electronic copies of this plan sheet.

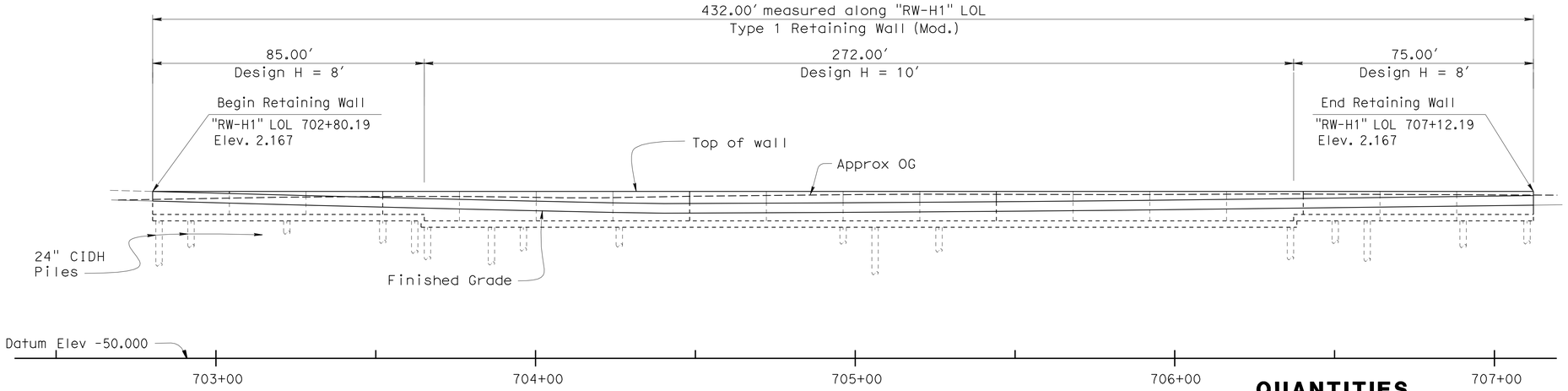

MIRRORED DEVELOPED ELEVATION

1" = 20′

NOTE:
Top of wall elevation consistent at 2.167′ for entire wall length.

PILE DATA TABLE						
Location	Pile Type	Design Loading (Service)	Nominal Resistance (kip)		Design Tip Elevation (ft)	Specified Tip Elevation (ft)
			Compression	Tension		
Retaining Wall "H1"	24" CIDH	90 kips	180	0	-56 (1) -42 (4)	-56

(1) - Compression (4) - Lateral

QUANTITIES

STRUCTURE EXCAVATION (TYPE A)	1,565	CY
STRUCTURE EXCAVATION (TYPE DC)	251	CY
STRUCTURE EXCAVATION (TYPE GC)	651,000	GAL
STRUCTURE EXCAVATION (TYPE Z-2)	32	CY
(AERIALLY DEPOSITED LEAD)		
STRUCTURE BACKFILL (RETAINING WALL)	600	CY
24" CAST-IN-DRILLED-HOLE CONCRETE PILING	4,175	LF
SEAL COURSE CONCRETE	964	CY
STRUCTURAL CONCRETE, RETAINING WALL	410	CY
BAR REINFORCING STEEL (RETAINING WALL)	159,000	LB
CONCRETE BARRIER (TYPE 60D)	432	LF

* A geocomposite drain system may be used.

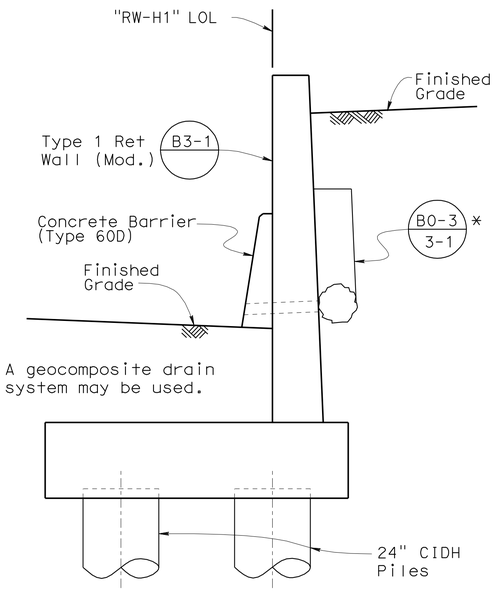

TYPICAL SECTION

½" = 1′-0"

HAZARDOUS SOIL DATA

DEPTH OF CONTAMINATED SOIL	CONTAMINANTS	EXCAVATION TYPE
0′ to 1′	Lead	TYPE Z-2
1′ to 3′	DRO & ORO	TYPE DC
3′ +	Non-Haz	TYPE A

LEGEND:

0′ = Existing ground Surface
3′ + = Soil more than 3′ Below Exisisting Ground Surface
DRO = Diesel Range Organics
ORO = Oil Range Organics
Non-Haz = Non-Hazardous material

INDEX TO PLANS

SHEET NO.	TITLE
1	GENERAL PLAN
2	STRUCTURE PLAN NO. 1
3	STRUCTURE PLAN NO. 2
4	STRUCTURE PLAN NO. 3
5	FOUNDATION PLAN
6	WALL DETAILS
7	LOG OF TEST BORINGS NO. 1 OF 4
8	LOG OF TEST BORINGS NO. 2 OF 4
9	LOG OF TEST BORINGS NO. 3 OF 4
10	LOG OF TEST BORINGS NO. 4 OF 4

STANDARD PLANS DATED MAY 2006

A62C	LIMITS OF PAYMENT FOR EXCAVATION AND BACKFILL BRIDGE
B0-3	BRIDGE DETAILS
B3-1	RETAINING WALL TYPE 1
B3-8	RETAINING WALL DETAILS NO. 1

STANDARD PLAN SHEET NO.
DETAIL NO.

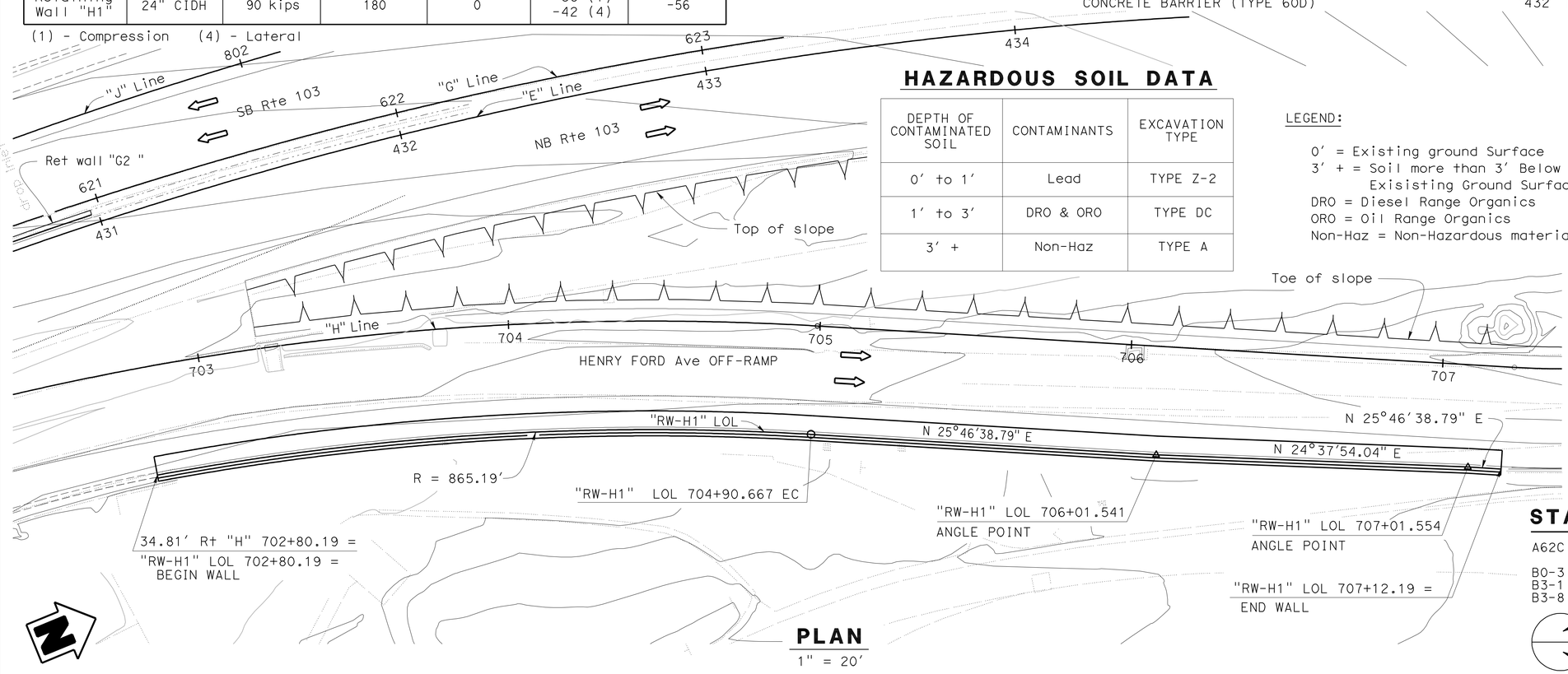

PLAN

1" = 20′

DESIGN	BY S. Galgiani	CHECKED F. Zayati	LOAD & RESISTANCE FACTOR DESIGN	LIVE LOADING: HL93 W/"LOW-BOY"; PERMIT DESIGN VEHICLE	
DETAILS	BY J.D. Thorne	CHECKED S. Galgiani	LAYOUT	BY S. Galgiani	CHECKED F. Zayati
QUANTITIES	BY J. Lane	CHECKED V. Ramakrishnan	SPECIFICATIONS	BY J. Strootman	PLANS AND SPECS COMPARED J. Strootman

X DESIGN ENGINEER

ORIGINAL SCALE IN INCHES FOR REDUCED PLANS 0 1 2 3

STATE OF CALIFORNIA
DEPARTMENT OF TRANSPORTATION

DIVISION OF ENGINEERING SERVICES
STRUCTURE DESIGN
DESIGN BRANCH 14

CU 07
EA 138201

BRIDGE NO. 53-RWH1
POST MILE 0.14

RETAINING WALL H1
GENERAL PLAN

DISREGARD PRINTS BEARING EARLIER REVISION DATES

REVISION DATES: 04-09-10 | 5-18-10 | 05-17-10 | 05-18-10 | 05-25-10 | 06-22-10 | 07-06-10 | 08-26-10

SHEET 1 OF 10

STRUCTURES DESIGN GENERAL PLAN SHEET (ENGLISH) (REV.07-24-06)

FILE => 53-rwh1-a-gp.dgn

USERNAME => trlenard DATE PLOTTED => 14-OCT-2010 TIME PLOTTED => 13:21

DIST	COUNTY	ROUTE	POST MILES TOTAL PROJECT	SHEET No	TOTAL SHEETS
07	LA	47,103	3.5/4.6, 0.0/1.1	995	1003

REGISTERED CIVIL ENGINEER — DATE 05-24-10

10-11-10
PLANS APPROVAL DATE

REGISTERED PROFESSIONAL ENGINEER — FOUED ZAYATI — No. C57046 — Exp. 06-30-11 — CIVIL — STATE OF CALIFORNIA

The State of California or its officers or agents shall not be responsible for the accuracy or completeness of electronic copies of this plan sheet.

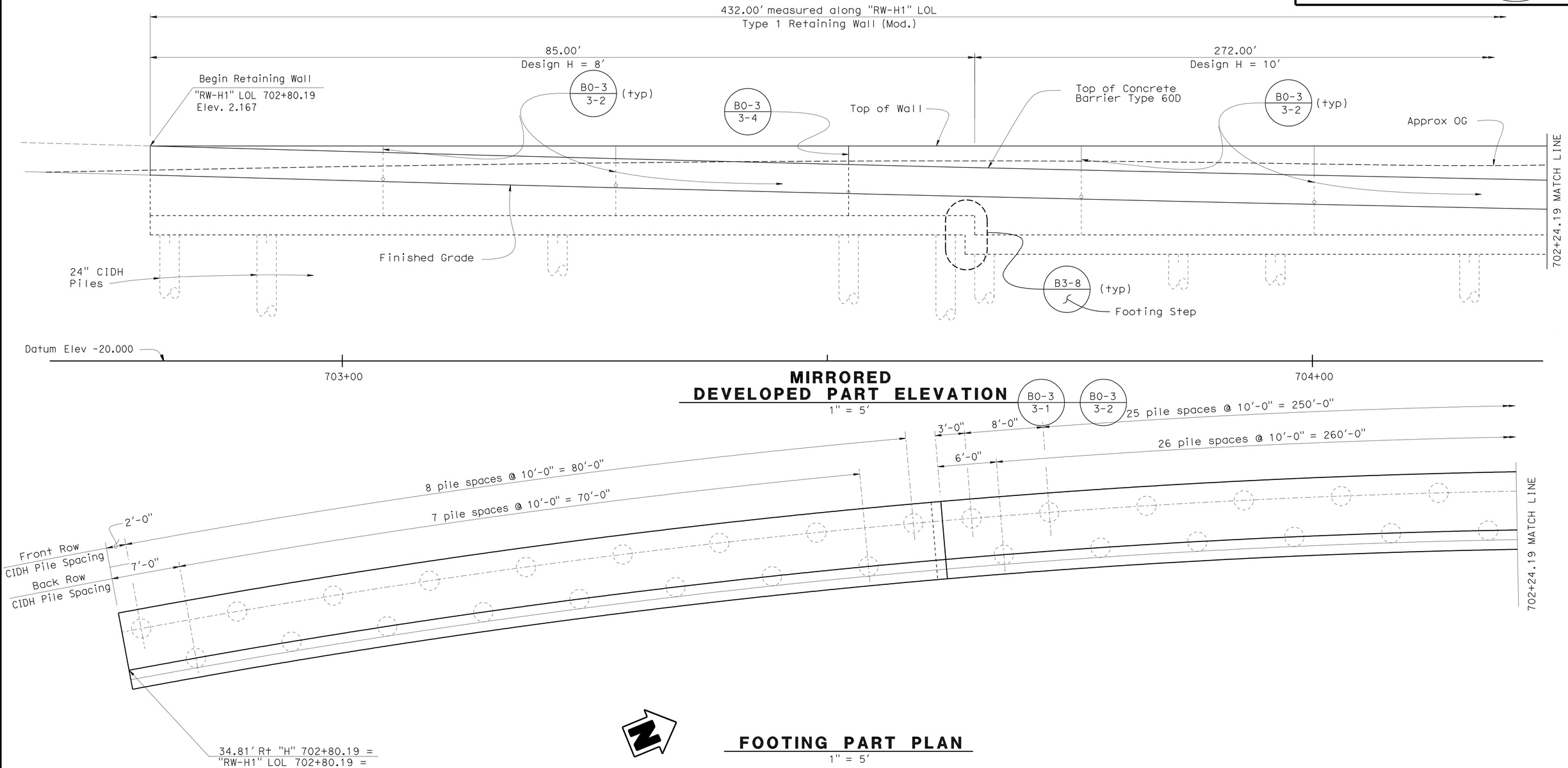

MIRRORED DEVELOPED PART ELEVATION

1" = 5'

FOOTING PART PLAN

1" = 5'

	BY	CHECKED
DESIGN	S. Galgiani	F. Zayati
DETAILS	Jeff Thorne	S. Galgiani
QUANTITIES	J. Lane	V. Ramakrishnan

STATE OF CALIFORNIA
DEPARTMENT OF TRANSPORTATION

DIVISION OF ENGINEERING SERVICES
STRUCTURE DESIGN
DESIGN BRANCH 14

BRIDGE NO. 53-RWH1
POST MILE 0.14

RETAINING WALL H1
STRUCTURE PLAN NO. 1

STRUCTURES DESIGN DETAIL SHEET (ENGLISH) (REV. 10/25/05)

ORIGINAL SCALE IN INCHES FOR REDUCED PLANS 0 1 2 3

CU 07-271
EA 138201

DISREGARD PRINTS BEARING EARLIER REVISION DATES

REVISION DATES: 04-14-10 05-14-10 05-18-10 06-22-10

SHEET 2 OF 10

FILE => 53-rwh1-a-sp01.dgn

USERNAME => trlenard DATE PLOTTED => 14-OCT-2010 TIME PLOTTED => 13:22

DIST	COUNTY	ROUTE	POST MILES TOTAL PROJECT	SHEET No	TOTAL SHEETS
07	LA	47,103	3.5/4.6, 0.0/1.1	996	1003

REGISTERED CIVIL ENGINEER 05-24-10 DATE

10-11-10
PLANS APPROVAL DATE

REGISTERED PROFESSIONAL ENGINEER FOUED ZAYATI No. C57046 Exp. 06-30-11 CIVIL STATE OF CALIFORNIA

The State of California or its officers or agents shall not be responsible for the accuracy or completeness of electronic copies of this plan sheet.

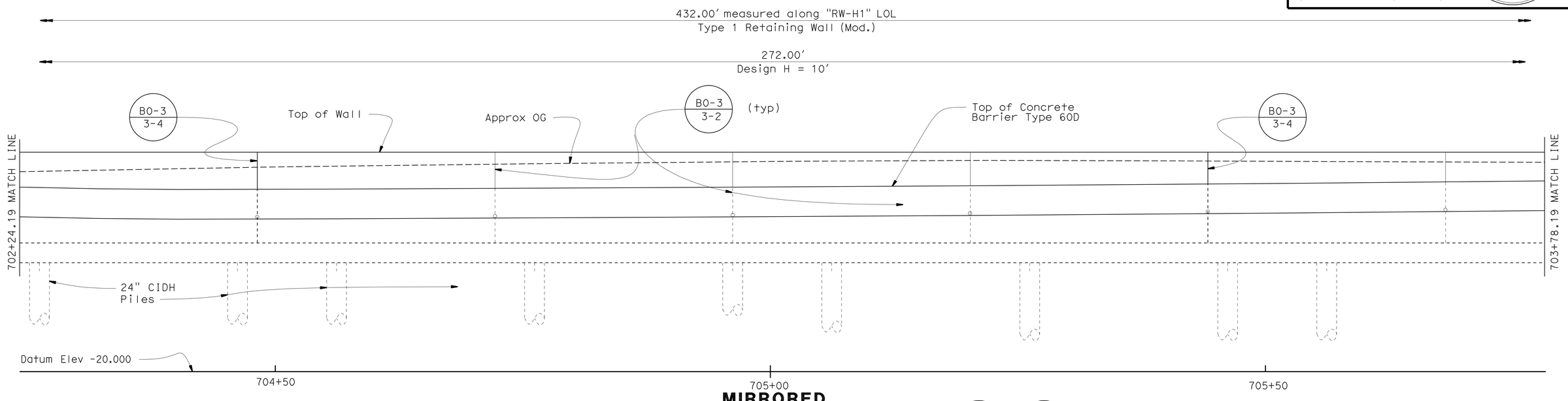

MIRRORED DEVELOPED PART ELEVATION

1" = 5'

B0-3 / 3-1 B0-3 / 3-3

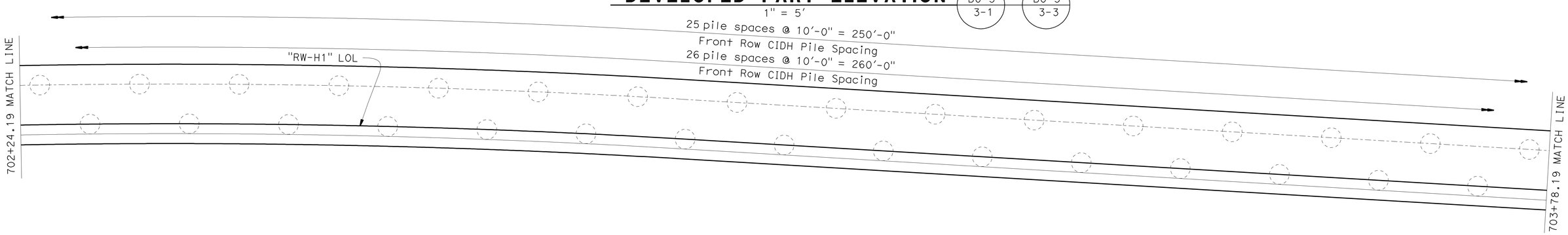

FOOTING PART PLAN

1" = 5'

DESIGN	BY S. Galgiani	CHECKED F. Zayati	
DETAILS	BY Jeff Thorne	CHECKED S. Galgiani	
QUANTITIES	BY J. Lane	CHECKED V. Ramakrishnan	

STATE OF CALIFORNIA
DEPARTMENT OF TRANSPORTATION

DIVISION OF ENGINEERING SERVICES
STRUCTURE DESIGN
DESIGN BRANCH 14

BRIDGE NO. 53-RWH1
POST MILE 0.14

RETAINING WALL H1
STRUCTURE PLAN NO. 2

STRUCTURES DESIGN DETAIL SHEET (ENGLISH) (REV. 10/25/05)

ORIGINAL SCALE IN INCHES FOR REDUCED PLANS 0 1 2 3

CU 07-271
EA 138201

DISREGARD PRINTS BEARING EARLIER REVISION DATES

REVISION DATES: ~~04-12-10~~ ~~5-10-10~~ ~~05-17-10~~ ~~05-18-10~~ 06-22-10

SHEET 3 OF 10

FILE => 53-rwh1-a-sp02.dgn

USERNAME => friehard DATE PLOTTED => 14-OCT-2010 TIME PLOTTED => 13:22

DIST	COUNTY	ROUTE	POST MILES TOTAL PROJECT	SHEET No	TOTAL SHEETS
07	LA	47,103	3.5/4.6, 0.0/1.1	997	1003

REGISTERED CIVIL ENGINEER — DATE 05-24-10

10-11-10
PLANS APPROVAL DATE

REGISTERED PROFESSIONAL ENGINEER — FOUED ZAYATI — No. C57046 — Exp. 06-30-11 — CIVIL — STATE OF CALIFORNIA

The State of California or its officers or agents shall not be responsible for the accuracy or completeness of electronic copies of this plan sheet.

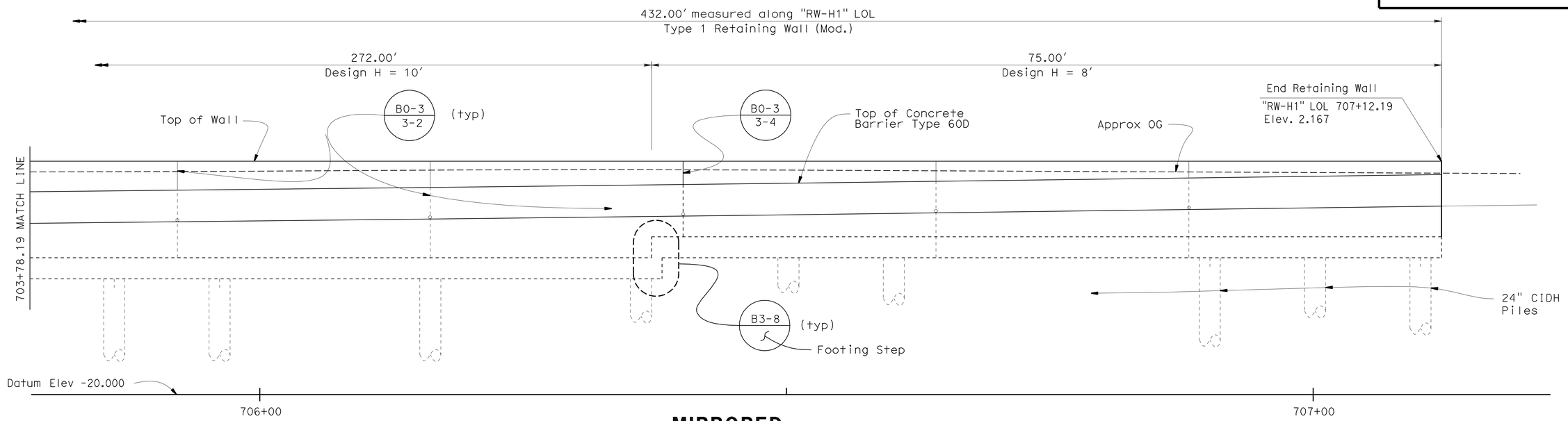

MIRRORED
DEVELOPED PART ELEVATION

1" = 5'

B0-3 / 3-1 B0-3 / 3-2

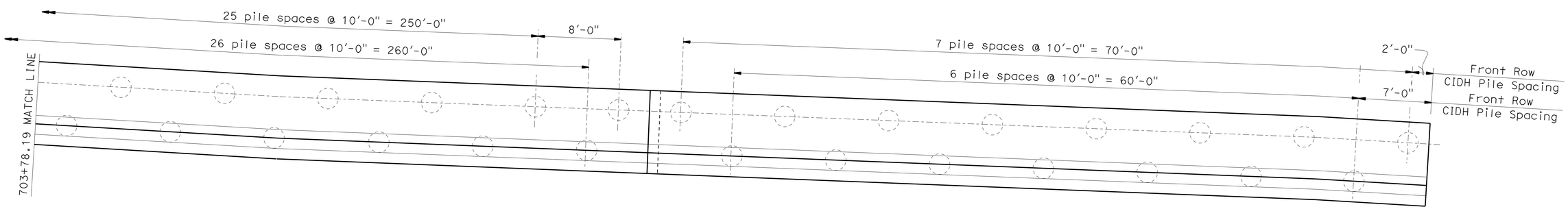

FOOTING PART PLAN

1" = 5'

	BY	CHECKED
DESIGN	S. Galgiani	F. Zayati
DETAILS	Jeff Thorne	S. Galgiani
QUANTITIES	V. Ramakrishnan	J. Lane

STATE OF CALIFORNIA
DEPARTMENT OF TRANSPORTATION

DIVISION OF ENGINEERING SERVICES
STRUCTURE DESIGN
DESIGN BRANCH 14

BRIDGE NO. 53-RWH1
POST MILE 0.14

RETAINING WALL H1
STRUCTURE PLAN NO. 3

STRUCTURES DESIGN DETAIL SHEET (ENGLISH) (REV. 10/25/05)

ORIGINAL SCALE IN INCHES FOR REDUCED PLANS 0 1 2 3

CU 07-271
EA 138201

DISREGARD PRINTS BEARING EARLIER REVISION DATES

REVISION DATES: 04-14-10 5-10-10 05-12-10 05-14-10 06-22-10

SHEET 4 OF 10

FILE => 53-rwh1-a-sp03.dgn

USERNAME => trlenard DATE PLOTTED => 14-OCT-2010 TIME PLOTTED => 13:22

Dist	COUNTY	ROUTE	POST MILES TOTAL PROJECT	SHEET No.	TOTAL SHEETS
07	LA	47,103	3.5/4.6, 0.0/1.1	998	1003

REGISTERED CIVIL ENGINEER — DATE 05-24-10

10-11-10
PLANS APPROVAL DATE

REGISTERED PROFESSIONAL ENGINEER — FOUED ZAYATI — No. C57046 — Exp. 06-30-11 — CIVIL — STATE OF CALIFORNIA

THE STATE OF CALIFORNIA OR ITS OFFICERS OR AGENTS SHALL NOT BE RESPONSIBLE FOR THE ACCURACY OR COMPLETENESS OF SCANNED COPIES OF THIS PLAN SHEET.

CURVE DATA				
No.	R	Δ	T	L
1	865.19′	13°56′18.33″	105.76′	210.476′

SURVEY CONTROL

1015 (NOT SHOWN)
PK NAIL WITH "PSOMAS" IN SLY END DRWY TO PIER "A" PLAZA
106.44′ Rt ℄ "E" Line
Sta. 425+74.92
N 1739492.60
E 6488730.35
Elev. = 6.95

1020 (NOT SHOWN)
PK NAIL WITH "PSOMAS" IN AC ON PIER "A" WAY
648.65′ Rt ℄ "E" Line
Sta. 440+48.26
N 1740374.64
E 6489412.28
Elev. = 1.50

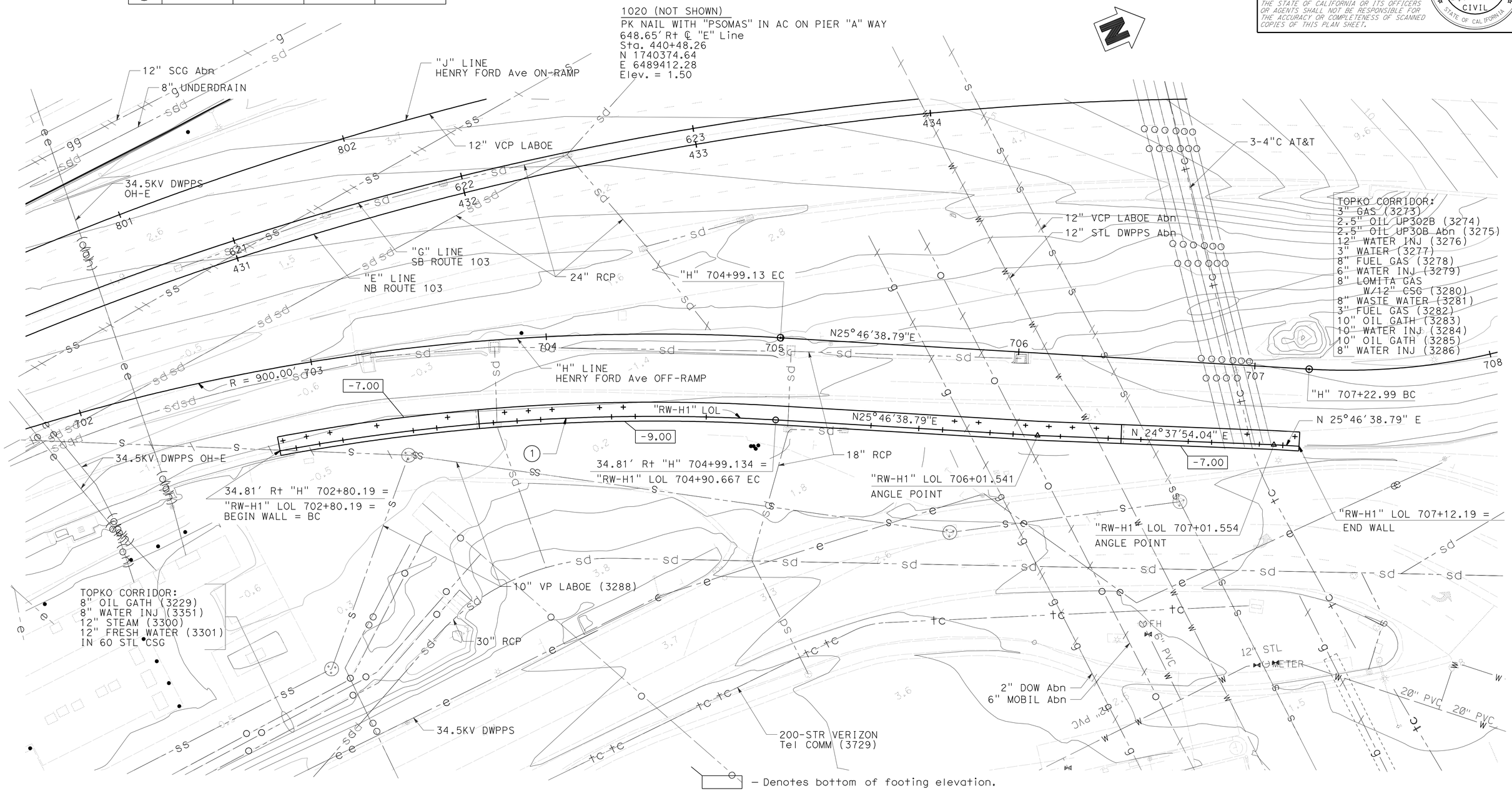

— Denotes bottom of footing elevation.

URS CORPORATION
915 WILSHIRE BOULEVARD
SUITE 700
LOS ANGELES, CA 90017

SCALE: 1"=10′	VERT.DATUM NAVD 88	HORZ.DATUM NAD 83	
PHOTOGRAMMETRY AS OF:		ALIGNMENT TIES XX	
SURVEYED	BY XX	DRAFTED	BY E. HANSEN
FIELD CHECKED	BY XX	CHECKED	BY J. MILLS

	BY	CHECKED
DESIGN	S. Galgiani	F. Zayati
DETAILS	J. Thorne	S. Galgiani
QUANTITIES	V. Ramakrishnan	J. Lane

PREPARED FOR THE STATE OF CALIFORNIA DEPARTMENT OF TRANSPORTATION

PROJECT ENGINEER

BRIDGE NO. 53-RWH1
POST MILE 0.14

RETAINING WALL H1
FOUNDATION PLAN

FOUNDATION PLAN SHEET (ENGLISH) (REV. 5/9/00)

ORIGINAL SCALE IN INCHES FOR REDUCED PLANS 0 1 2 3

CU 07271
EA 138201

DISREGARD PRINTS BEARING EARLIER REVISION DATES

REVISION DATES (PRELIMINARY STAGE ONLY): 9-8-08, 12-08-08, 04-08-10, 05-17-10, 05-18-10, 06-22-10

SHEET 5 OF 10

FILE => 53-rwh1-c-fp.dgn

USERNAME => rtrenord DATE PLOTTED => 14-OCT-2010 TIME PLOTTED => 13:22

DIST	COUNTY	ROUTE	POST MILES TOTAL PROJECT	SHEET No	TOTAL SHEETS
07	LA	47,103	3.5/4.6, 0.0/1.1	999	1003

REGISTERED CIVIL ENGINEER — DATE 05-24-10

10-11-10
PLANS APPROVAL DATE

The State of California or its officers or agents shall not be responsible for the accuracy or completeness of electronic copies of this plan sheet.

REGISTERED PROFESSIONAL ENGINEER — FOUED ZAYATI No. C57046 Exp. 06-30-11 CIVIL — STATE OF CALIFORNIA

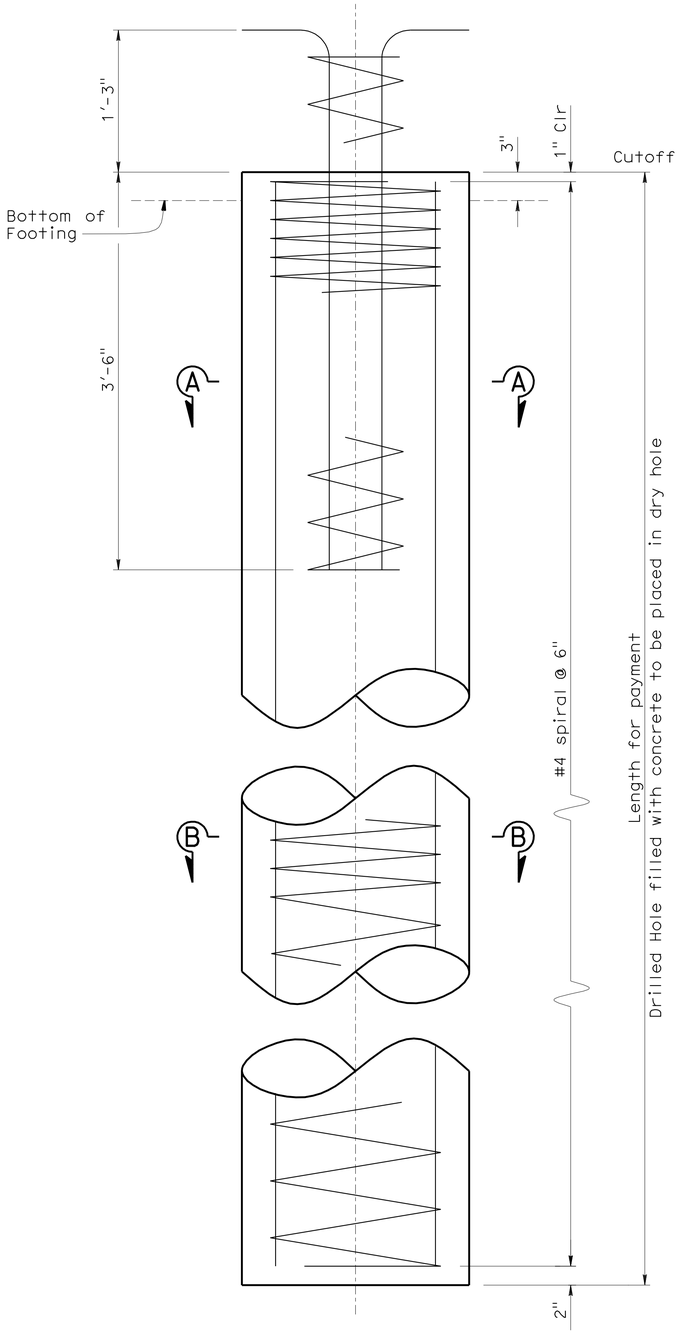

PILE ELEVATION
1½" = 1'-0"

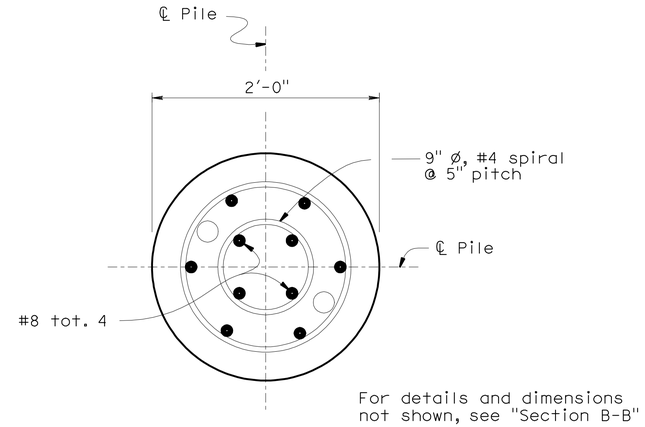

SECTION A-A
1½" = 1'-0"

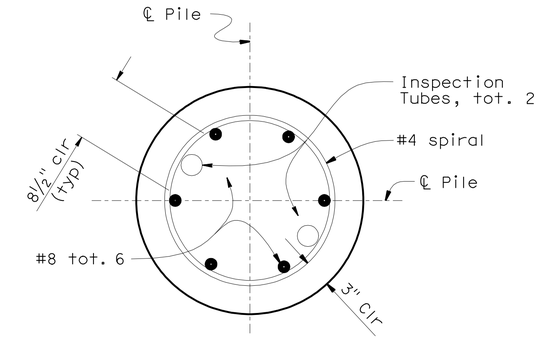

SECTION B-B
1½" = 1'-0"

NOTE:

Lap splices in spiral pile reinforcement shall be lapped at least 80 bar diameters. Spiral pile reinforcement at splices and at ends shall be terminated with 135° hook with a 6" tail hooked around a longitudinal bar.

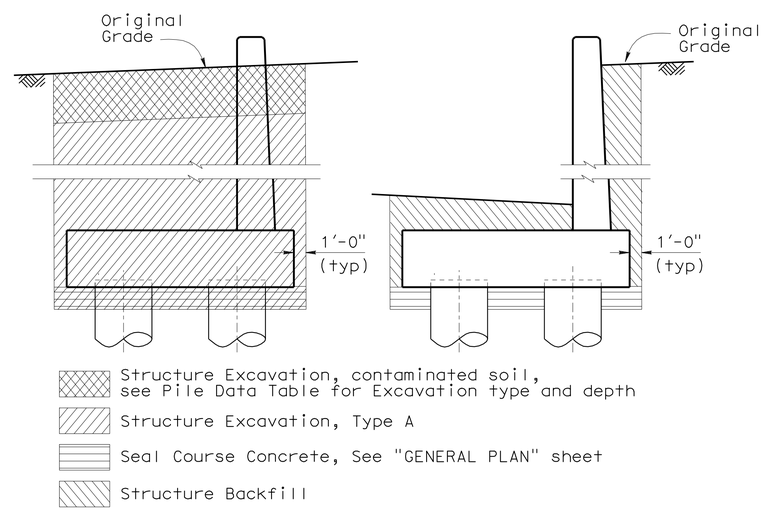

LIMITS OF PAYMENT FOR EXCAVATION AND BACKFILL
No Scale

* – Supercedes dimensions shown on Standard Plan B3-1, page 246 of Standard Plans, dated May 2006

DESIGN NOTES:

fy = 60,000 psi
f'c = 4,000 psi

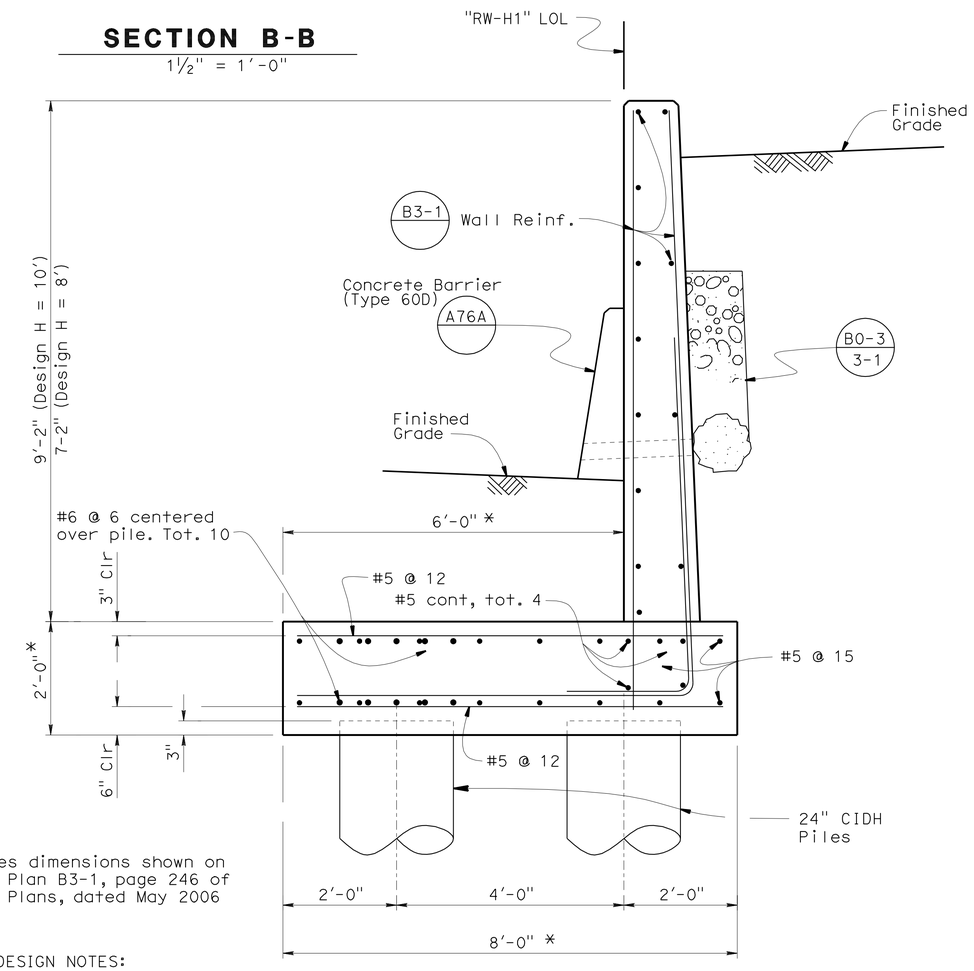

TYPICAL SECTION (B3-1)
¾" = 1'-0"

DESIGN	BY S. Galgiani	CHECKED F. Zayati	
DETAILS	BY J. Thorne	CHECKED S. Galgiani	
QUANTITIES	BY V. Ramakrishnan	CHECKED J. Lane	

STATE OF CALIFORNIA
DEPARTMENT OF TRANSPORTATION

DIVISION OF ENGINEERING SERVICES
STRUCTURE DESIGN
DESIGN BRANCH 14

BRIDGE NO. 53-RWH1
POST MILE 0.14

RETAINING WALL H1
WALL DETAILS

STRUCTURES DESIGN DETAIL SHEET (ENGLISH) (REV. 10/25/05)

ORIGINAL SCALE IN INCHES FOR REDUCED PLANS 0 1 2 3

CU 07-271
EA 138201

DISREGARD PRINTS BEARING EARLIER REVISION DATES

REVISION DATES: 04-28-10 05-24-10 05-28-10 06-25-10 07-12-10 08-26-10

SHEET 6 OF 10

FILE => 53-rwh1-d-walldts01.dgn

USERNAME => trlenard DATE PLOTTED => 14-OCT-2010 TIME PLOTTED => 13:22

DIST	COUNTY	ROUTE	POST MILES TOTAL PROJECT	SHEET No	TOTAL SHEETS
07	LA	47,103	3.5/4.6, 0.0/1.1	1000	1003

REGISTERED ENGINEER — DATE 04/19/10

10-11-10
PLANS APPROVAL DATE

REGISTERED PROFESSIONAL ENGINEER ERIC BROWN NO. GE-2806 EXP. 06-30-2010 GEOTECHNICAL STATE OF CALIFORNIA

The State of California or its officers or agents shall not be responsible for the accuracy or completeness of electronic copies of this plan sheet.

ACTA
ONE CIVIC PLAZA. SUITE 350,
CARSON, CA 90745

EARTH MECHANICS, INC.
17660, NEWHOPE STREET, SUITE E
FOUNTAIN VALLEY, CA 92708

BENCHMARKS:

PT-PMHV509	PT-PMHV515
SET MAG NAIL	SET MAG NAIL
26.671′ Lt ℄ "G"Line	28.517′ Rt ℄ "G" Line
Sta. 604+968.70	Sta. 600+995.50
N 1738366.89	N 1737997.51
E 6488728.36	E 6488779.52
Elev. = -3.61	Elev. = -2.21

NOTES:

(1) This LOTB sheet (Boring Record) was prepared in accordance with the Caltrans Soil and Rock Classification Logging, Classification and Presentation Manual (June 2007).

(2) 2.4" samples were taken using a California Split-spoon Sampler.

(3) A rope and cat-head hammer system consisting of a hammer weight of 140 lbs falling a distance of 30" was used to advance the drive sampler.

(4) An automatic trip hammer system consisting of a hammer weight of 140 lbs falling a distance of 30" was used to advance the drive sampler.

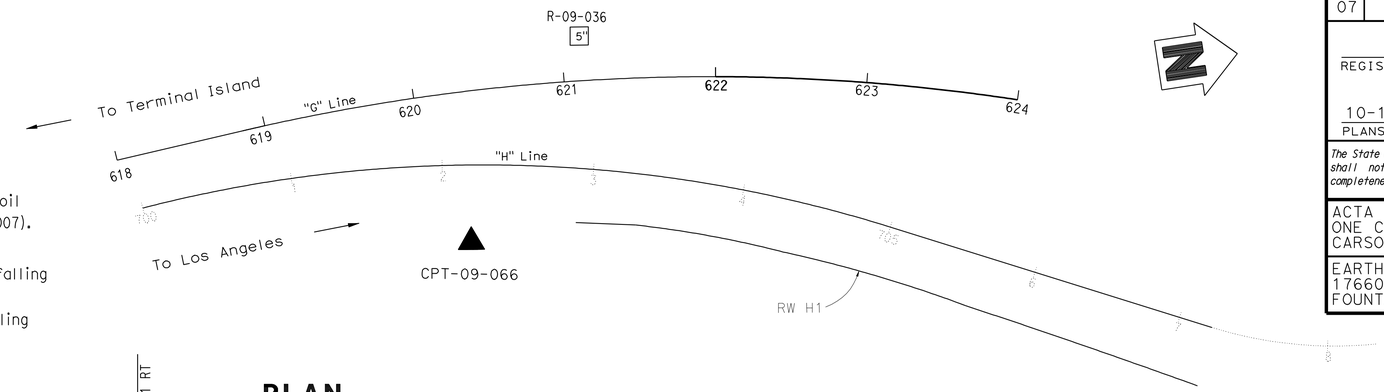

PLAN

1" = 50′

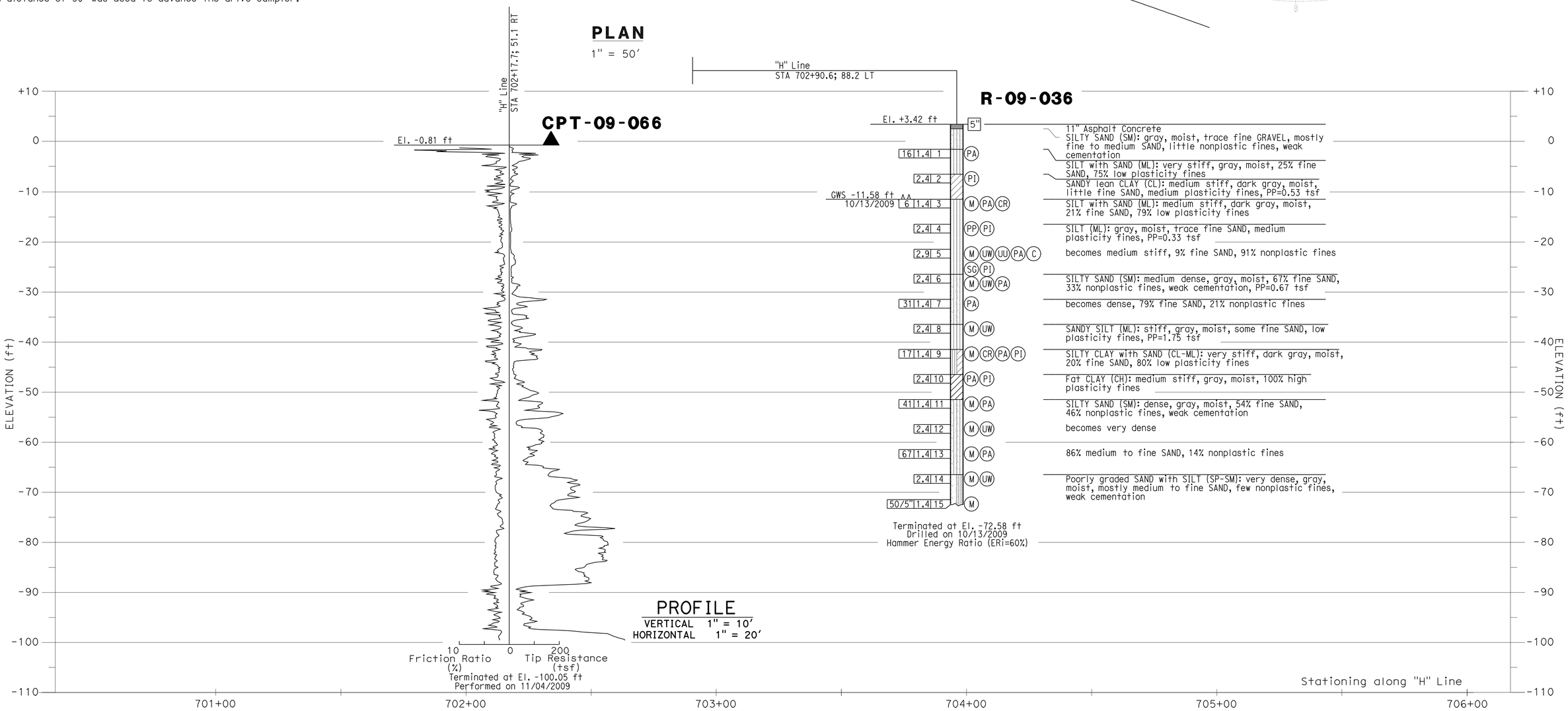

DESIGN OVERSIGHT	DRAWN BY: J.Fang	FIELD INVESTIGATION BY:	PREPARED FOR THE STATE OF CALIFORNIA DEPARTMENT OF TRANSPORTATION	E. Brown PROJECT ENGINEER	BRIDGE NO. 53-RWH1 / POST MILE 0.14
SIGN OFF DATE	CHECKED BY: K.Pratheepan	E.Brown			

RETAINING WALL NO. H1

LOG OF TEST BORINGS NO. 1 OF 4

OGS CIVIL LOG OF TEST BORINGS SHEET (ENGLISH) (REV. 06-01-09)

ORIGINAL SCALE IN INCHES FOR REDUCED PLANS 0 1 2 3

CU 07-271
EA 138201

DISREGARD PRINTS BEARING EARLIER REVISION DATES

REVISION DATES (PRELIMINARY STAGE ONLY): ~~03/01/10~~ ~~04/14/10~~ ~~05/13/10~~ 07/02/10

SHEET 7 OF 10

FILE => 53-rwh1-f-ltb01.dgn

USERNAME => trrenard DATE PLOTTED => 14-OCT-2010 TIME PLOTTED => 13:22

DIST	COUNTY	ROUTE	POST MILES TOTAL PROJECT	SHEET No	TOTAL SHEETS
07	LA	47,103	3.5/4.6, 0.0/1.1	1001	1003

REGISTERED ENGINEER — DATE 04/19/10

PLANS APPROVAL DATE 10-11-10

The State of California or its officers or agents shall not be responsible for the accuracy or completeness of electronic copies of this plan sheet.

REGISTERED PROFESSIONAL ENGINEER ERIC BROWN NO. GE-2806 EXP. 06-30-2010 GEOTECHNICAL STATE OF CALIFORNIA

ACTA
ONE CIVIC PLAZA. SUITE 350,
CARSON, CA 90745

EARTH MECHANICS, INC.
17660, NEWHOPE STREET, SUITE E
FOUNTAIN VALLEY, CA 92708

BENCHMARKS:

PT-PMHV509	PT-PMHV515
SET MAG NAIL	SET MAG NAIL
26.671' Lt ℄ "G"Line	28.517' Rt ℄ "G" Line
Sta. 604+968.70	Sta. 600+995.50
N 1738366.89	N 1737997.51
E 6488728.36	E 6488779.52
Elev. = -3.61	Elev. = -2.21

NOTES:

(1) This LOTB sheet (Boring Record) was prepared in accordance with the Caltrans Soil and Rock Classification Logging, Classification and Presentation Manual (June 2007).

(2) 2.4" samples were taken using a California Split-spoon Sampler.

(3) A rope and cat-head hammer system consisting of a hammer weight of 140 lbs falling a distance of 30" was used to advance the drive sampler.

(4) An automatic trip hammer system consisting of a hammer weight of 140 lbs falling a distance of 30" was used to advance the drive sampler.

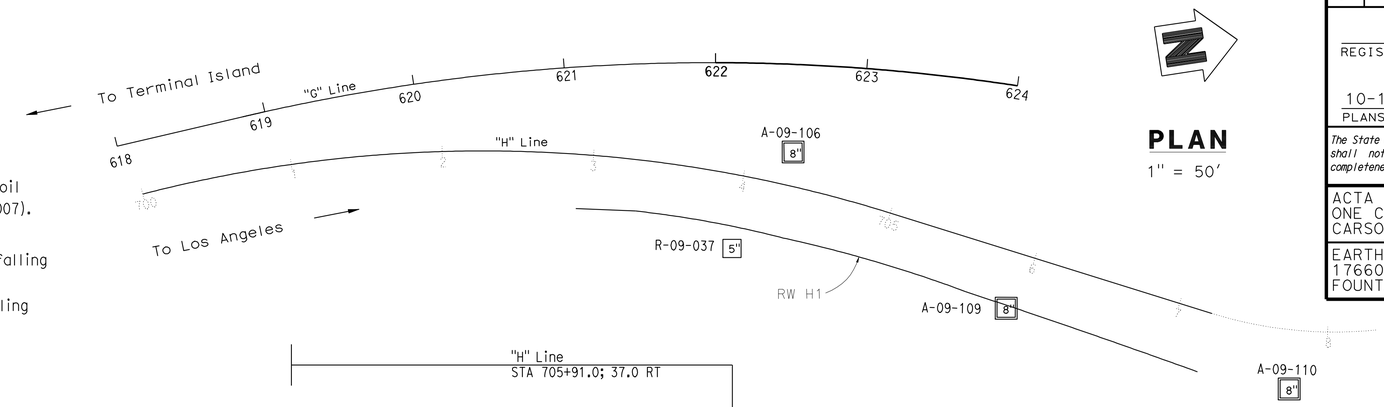

PLAN

1" = 50'

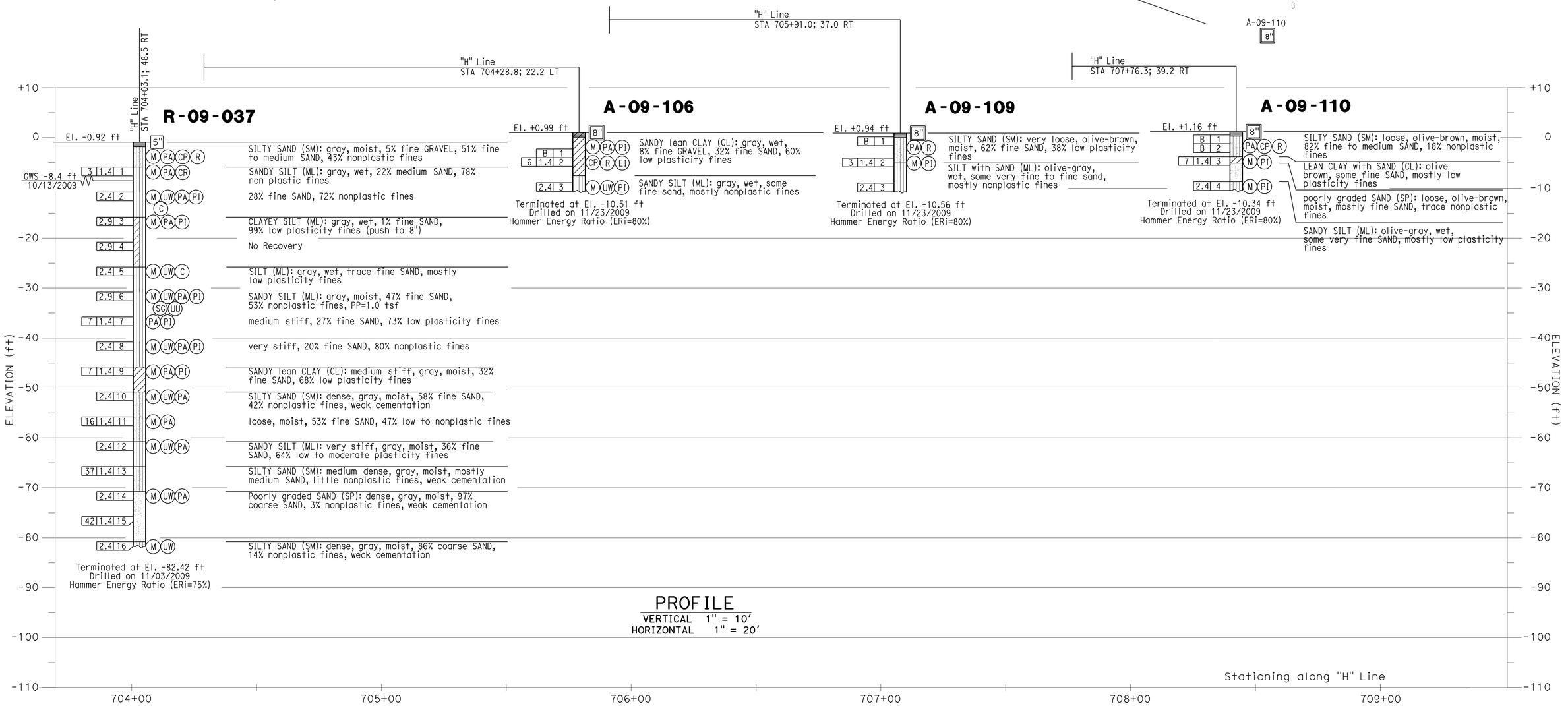

PROFILE

VERTICAL 1" = 10'
HORIZONTAL 1" = 20'

DESIGN OVERSIGHT	DRAWN BY: J.Fang	FIELD INVESTIGATION BY:	PREPARED FOR THE STATE OF CALIFORNIA DEPARTMENT OF TRANSPORTATION	E. Brown PROJECT ENGINEER	BRIDGE NO. 53-RWH1 / POST MILE 0.14	RETAINING WALL NO. H1
SIGN OFF DATE	CHECKED BY: K.Pratheepan	E.Brown				LOG OF TEST BORINGS NO. 2 OF 4

OGS CIVIL LOG OF TEST BORINGS SHEET (ENGLISH) (REV. 06-01-09)

ORIGINAL SCALE IN INCHES FOR REDUCED PLANS 0 1 2 3

CU 07-271
EA 138201

DISREGARD PRINTS BEARING EARLIER REVISION DATES

REVISION DATES (PRELIMINARY STAGE ONLY) 03/01/10 04/14/10 05/24/10 07/02/10

SHEET 8 OF 10

FILE => 53-rwh1-f-ltb02.dgn

USERNAME => friehard DATE PLOTTED => 14-OCT-2010 TIME PLOTTED => 13:22

REFERENCE: CALTRANS SOIL & ROCK LOGGING, CLASSIFICATION, AND PRESENTATION MANUAL (JUNE 2007)

DIST	COUNTY	ROUTE	POST MILES TOTAL PROJECT	SHEET No	TOTAL SHEETS
07	LA	47,103	3.5/4.6, 0.0/1.1	1002	1003

REGISTERED ENGINEER — DATE 04/19/10

10-11-10
PLANS APPROVAL DATE

REGISTERED PROFESSIONAL ENGINEER ERIC BROWN NO. GE-2806 EXP. 06-30-2010 GEOTECHNICAL STATE OF CALIFORNIA

The State of California or its officers or agents shall not be responsible for the accuracy or completeness of electronic copies of this plan sheet.

ACTA
ONE CIVIC PLAZA. SUITE 350,
CARSON, CA 90745

EARTH MECHANICS, INC.
17660, NEWHOPE STREET, SUITE E
FOUNTAIN VALLEY, CA 92708

CEMENTATION

Description	Criteria
Weak	Crumbles or breaks with handling or little finger pressure.
Moderate	Crumbles or breaks with considerable finger pressure.
Strong	Will not crumble or break with finger pressure.

CONSISTENCY OF COHESIVE SOILS

Description	Unconfined Compressive Strength (tsf)	Pocket Penetrometer Measurement (tsf)	Torvane Measurement (tsf)	Field Approximation
Very Soft	< 0.25	< 0.25	< 0.12	Easily penetrated several inches by fist
Soft	0.25 to 0.50	0.25 to 0.50	0.12 to 0.25	Easily penetrated several inches by thumb
Medium Stiff	0.50 to 1.0	0.50 to 1.0	0.25 to 0.50	Penetrated several inches by thumb with moderate effort
Stiff	1 to 2	1 to 2	0.50 to 1.0	Readily indented by thumb but penetrated only with great effort
Very Stiff	2 to 4	2 to 4	1.0 to 2.0	Readily indented by thumbnail
Hard	> 4.0	> 4.0	> 2.0	Indented by thumbnail with difficulty

BOREHOLE IDENTIFICATION

Symbol	Hole Type	Description
Size	A	Auger Boring
Size	R P	Rotary drilled boring Rotary percussion boring (air)
Size	R	Rotary drilled diamond core
Size	HD HA	Hand driven (1-inch soil tube) Hand Auger
●	D	Dynamic Cone Penetration Boring
▲	CPT	Cone Penetration Test (ASTM D 5778-95)
⬚	O	Other

Note: Size in inches.

PLASTICITY OF FINE-GRAINED SOILS

Description	Criteria
Nonplastic	A 1/8-inch thread cannot be rolled at any water content.
Low	The thread can barely be rolled and the lump cannot be formed when drier than the plastic limit.
Medium	The thread is easy to roll and not much time is required to reach the plastic limit. The thread cannot be rerolled after reaching the plastic limit. The lump crumbles when drier than the plastic limit.
High	It takes considerable time rolling and kneading to reach the plastic limit. The thread can be rerolled several times after reaching the plastic limit. The lump can be formed without crumbling when drier than the plastic limit.

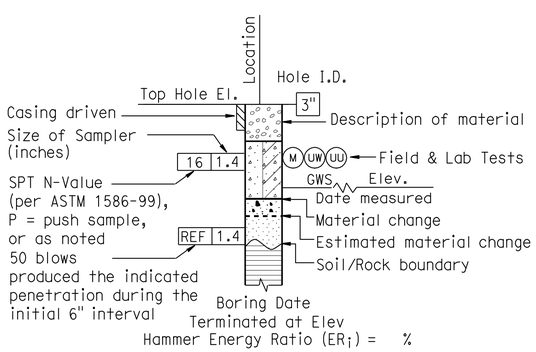

ROTARY BORING

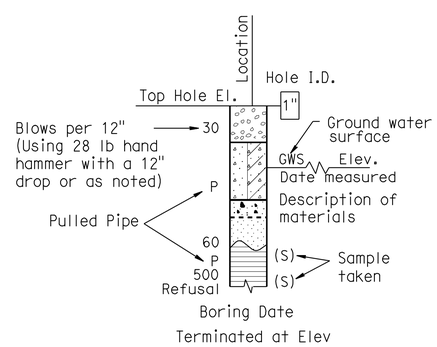

HAND BORING

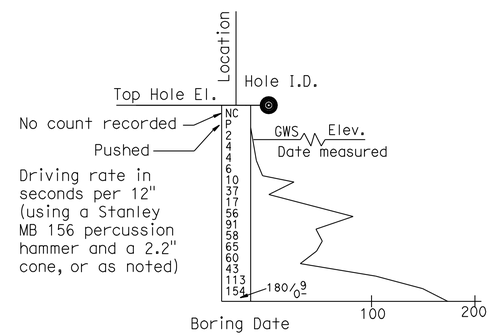

DYNAMIC CONE PENETRATION BORING

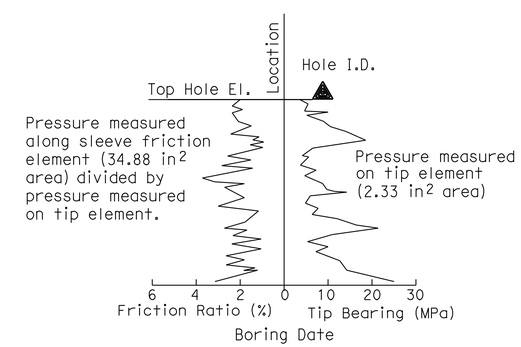

CONE PENETRATION TEST (CPT) SOUNDING

DESIGN OVERSIGHT SIGN OFF DATE	DRAWN BY: J.Fang CHECKED BY: K.Pratheepan	FIELD INVESTIGATION BY: E.Brown	PREPARED FOR THE STATE OF CALIFORNIA DEPARTMENT OF TRANSPORTATION	E. Brown PROJECT ENGINEER	BRIDGE NO. 53-RWH1 POST MILE 0.14

RETAINING WALL NO. H1

LOG OF TEST BORINGS NO. 3 OF 4

OGS CIVIL LOG OF TEST BORINGS SHEET (ENGLISH) (REV. 06-01-09)

ORIGINAL SCALE IN INCHES FOR REDUCED PLANS 0 1 2 3

CU 07-271
EA 138201

DISREGARD PRINTS BEARING EARLIER REVISION DATES — REVISION DATES (PRELIMINARY STAGE ONLY) 03/01/10 04/14/10 05/14/10 07/02/10

SHEET 9 OF 10

FILE => 53-rwh1-f-ltb03.dgn

USERNAME => trlenard DATE PLOTTED => 14-OCT-2010 TIME PLOTTED => 13:22

REFERENCE: CALTRANS SOIL & ROCK LOGGING, CLASSIFICATION, AND PRESENTATION MANUAL (JUNE 2007)

DIST	COUNTY	ROUTE	POST MILES TOTAL PROJECT	SHEET No	TOTAL SHEETS
07	LA	47,103	3.5/4.6, 0.0/1.1	1003	1003

REGISTERED ENGINEER — DATE 04/19/10

10-11-10
PLANS APPROVAL DATE

REGISTERED PROFESSIONAL ENGINEER ERIC BROWN NO. GE-2806 EXP. 06-30-2010 GEOTECHNICAL STATE OF CALIFORNIA

The State of California or its officers or agents shall not be responsible for the accuracy or completeness of electronic copies of this plan sheet.

ACTA
ONE CIVIC PLAZA. SUITE 350,
CARSON, CA 90745

EARTH MECHANICS, INC.
17660, NEWHOPE STREET, SUITE E
FOUNTAIN VALLEY, CA 92708

GROUP SYMBOLS AND NAMES

Graphic/Symbol	Group Names	Graphic/Symbol	Group Names
GW	Well-graded GRAVEL Well-graded GRAVEL with SAND	CL	Lean CLAY Lean CLAY with SAND Lean CLAY with GRAVEL SANDY lean CLAY SANDY lean CLAY with GRAVEL GRAVELLY lean CLAY GRAVELLY lean CLAY with SAND
GP	Poorly graded GRAVEL Poorly graded GRAVEL with SAND		
GW-GM	Well-graded GRAVEL with SILT Well-graded GRAVEL with SILT and SAND	CL-ML	SILTY CLAY SILTY CLAY with SAND SILTY CLAY with GRAVEL SANDY SILTY CLAY SANDY SILTY CLAY with GRAVEL GRAVELLY SILTY CLAY GRAVELLY SILTY CLAY with SAND
GW-GC	Well-graded GRAVEL with CLAY (or SILTY CLAY) Well-graded GRAVEL with CLAY and SAND (or SILTY CLAY and SAND)		
GP-GM	Poorly graded GRAVEL with SILT Poorly graded GRAVEL with SILT and SAND	ML	SILT SILT with SAND SILT with GRAVEL SANDY SILT SANDY SILT with GRAVEL GRAVELLY SILT GRAVELLY SILT with SAND
GP-GC	Poorly graded GRAVEL with CLAY (or SILTY CLAY) Poorly graded GRAVEL with CLAY and SAND (or SILTY CLAY and SAND)		
GM	SILTY GRAVEL SILTY GRAVEL with SAND	OL	ORGANIC lean CLAY ORGANIC lean CLAY with SAND ORGANIC lean CLAY with GRAVEL SANDY ORGANIC lean CLAY SANDY ORGANIC lean CLAY with GRAVEL GRAVELLY ORGANIC lean CLAY GRAVELLY ORGANIC lean CLAY with SAND
GC	CLAYEY GRAVEL CLAYEY GRAVEL with SAND		
GC-GM	SILTY, CLAYEY GRAVEL SILTY, CLAYEY GRAVEL with SAND	OL	ORGANIC SILT ORGANIC SILT with SAND ORGANIC SILT with GRAVEL SANDY ORGANIC SILT SANDY ORGANIC SILT with GRAVEL GRAVELLY ORGANIC SILT GRAVELLY ORGANIC SILT with SAND
SW	Well-graded SAND Well-graded SAND with GRAVEL		
SP	Poorly graded SAND Poorly graded SAND with GRAVEL	CH	Fat CLAY Fat CLAY with SAND Fat CLAY with GRAVEL SANDY fat CLAY SANDY fat CLAY with GRAVEL GRAVELLY fat CLAY GRAVELLY fat CLAY with SAND
SW-SM	Well-graded SAND with SILT Well-graded SAND with SILT and GRAVEL		
SW-SC	Well-graded SAND with CLAY (or SILTY CLAY) Well-graded SAND with CLAY and GRAVEL (or SILTY CLAY and GRAVEL)	MH	Elastic SILT Elastic SILT with SAND Elastic SILT with GRAVEL SANDY elastic SILT SANDY elastic SILT with GRAVEL GRAVELLY elastic SILT GRAVELLY elastic SILT with SAND
SP-SM	Poorly graded SAND with SILT Poorly graded SAND with SILT and GRAVEL		
SP-SC	Poorly graded SAND with CLAY (or SILTY CLAY) Poorly graded SAND with CLAY and GRAVEL (or SILTY CLAY and GRAVEL)	OH	ORGANIC fat CLAY ORGANIC fat CLAY with SAND ORGANIC fat CLAY with GRAVEL SANDY ORGANIC fat CLAY SANDY ORGANIC fat CLAY with GRAVEL GRAVELLY ORGANIC fat CLAY GRAVELLY ORGANIC fat CLAY with SAND
SM	SILTY SAND SILTY SAND with GRAVEL		
SC	CLAYEY SAND CLAYEY SAND with GRAVEL	OH	ORGANIC elastic SILT ORGANIC elastic SILT with SAND ORGANIC elastic SILT with GRAVEL SANDY ORGANIC elastic SILT SANDY ORGANIC elastic SILT with GRAVEL GRAVELLY ORGANIC elastic SILT GRAVELLY ORGANIC elastic SILT with SAND
SC-SM	SILTY, CLAYEY SAND SILTY, CLAYEY SAND with GRAVEL		
PT	PEAT	OL/OH	ORGANIC SOIL ORGANIC SOIL with SAND ORGANIC SOIL with GRAVEL SANDY ORGANIC SOIL SANDY ORGANIC SOIL with GRAVEL GRAVELLY ORGANIC SOIL GRAVELLY ORGANIC SOIL with SAND
	COBBLES COBBLES and BOULDERS BOULDERS		

FIELD AND LABORATORY TESTING

- (C) Consolidation (ASTM D 2435)
- (CL) Collapse Potential (ASTM D 5333)
- (CP) Compaction Curve (CTM 216)
- (CR) Corrosivity Testing (CTM 643, CTM 422, CTM 417)
- (CU) Consolidated Undrained Triaxial (ASTM D 4767)
- (DS) Direct Shear (ASTM D 3080)
- (EI) Expansion Index (ASTM D 4829)
- (M) Moisture Content (ASTM D 2216)
- (OC) Organic Content-% (ASTM D 2974)
- (P) Permeability (CTM 220)
- (PA) Particle Size Analysis (ASTM D 422)
- (PI) Plasticity Index (AASHTO T 90) Liquid Limit (AASHTO T 89)
- (PL) Point Load Index (ASTM D 5731)
- (PM) Pressure Meter
- (PP) Pocket Penetrometer
- (R) R-Value (CTM 301)
- (SE) Sand Equivalent (CTM 217)
- (SG) Specific Gravity (AASHTO T 100)
- (SL) Shrinkage Limit (ASTM D 427)
- (SW) Swell Potential (ASTM D 4546)
- (TV) Pocket Torvane
- (UC) Unconfined Compression-Soil (ASTM D 2166) Unconfined Compression-Rock (ASTM D 2938)
- (UU) Unconsolidated Undrained Triaxial (ASTM D 2850)
- (UW) Unit Weight (ASTM D 4767)
- (VS) Vane Shear (AASHTO T 223)

APPARENT DENSITY OF COHESIONLESS SOILS

Description	SPT N_{60} (Blows / 12 inches)
Very loose	0 - 4
Loose	5 - 10
Medium Dense	11 - 30
Dense	31 - 50
Very Dense	> 50

MOISTURE

Description	Criteria
Dry	Absence of moisture, dusty, dry to the touch
Moist	Damp but no visible water
Wet	Visible free water, usually soil is below water table

PERCENT OR PROPORTION OF SOILS

Description	Criteria
Trace	Particles are present but estimated to be less than 5%
Few	5 to 10%
Little	15 to 25%
Some	30 to 45%
Mostly	50 to 100%

PARTICLE SIZE

Description		Size
Boulder		> 12"
Cobble		3" to 12"
Gravel	Coarse	3/4" to 3"
	Fine	No. 4 to 3/4"
Sand	Coarse	No. 10 to No. 4
	Medium	No. 40 to No. 10
	Fine	No. 200 to No. 40

DESIGN OVERSIGHT

SIGN OFF DATE

DRAWN BY: J.Fang

CHECKED BY: K.Pratheepan

FIELD INVESTIGATION BY:
E.Brown

PREPARED FOR THE STATE OF CALIFORNIA DEPARTMENT OF TRANSPORTATION

E. Brown
PROJECT ENGINEER

BRIDGE NO. 53-RWH1
POST MILE 0.14

RETAINING WALL NO. H1

LOG OF TEST BORINGS NO. 4 OF 4

OGS CIVIL LOG OF TEST BORINGS SHEET (ENGLISH) (REV. 06-01-09)

ORIGINAL SCALE IN INCHES FOR REDUCED PLANS 0 1 2 3

CU 07-271
EA 138201

DISREGARD PRINTS BEARING EARLIER REVISION DATES

REVISION DATES (PRELIMINARY STAGE ONLY) 03/01/10 04/14/10 05/13/10 07/02/10

SHEET 10 OF 10

FILE => 53-rwh1-f-ltb04.dgn

USERNAME => trienard DATE PLOTTED => 14-OCT-2010 TIME PLOTTED => 13:23