| DIST | COUNTY | ROUTE | POST MILES TOTAL PROJECT | SHEET No | TOTAL SHEETS |
|---|---|---|---|---|---|
| 07 | LA | 47,103 | 3.5/4.6, 0.0/1.1 | 701 | 1003 |

REGISTERED CIVIL ENGINEER — DATE 05-24-10

10-11-10
PLANS APPROVAL DATE

*The State of California or its officers or agents shall not be responsible for the accuracy or completeness of electronic copies of this plan sheet.*

REGISTERED PROFESSIONAL ENGINEER — FOUED ZAYATI — No. C57046 — Exp. 06-30-11 — CIVIL — STATE OF CALIFORNIA

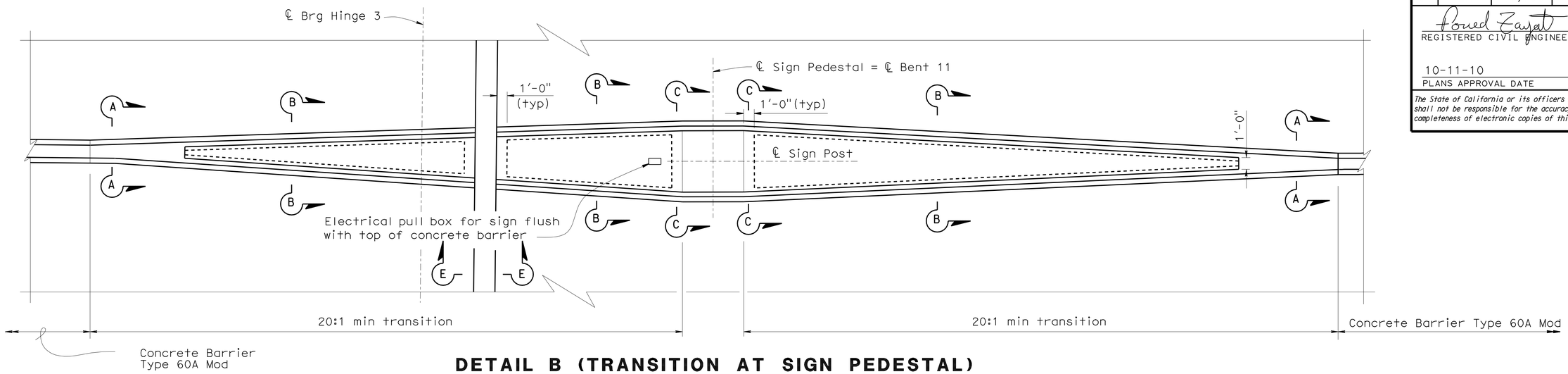


## DETAIL B (TRANSITION AT SIGN PEDESTAL)

1" = 5'

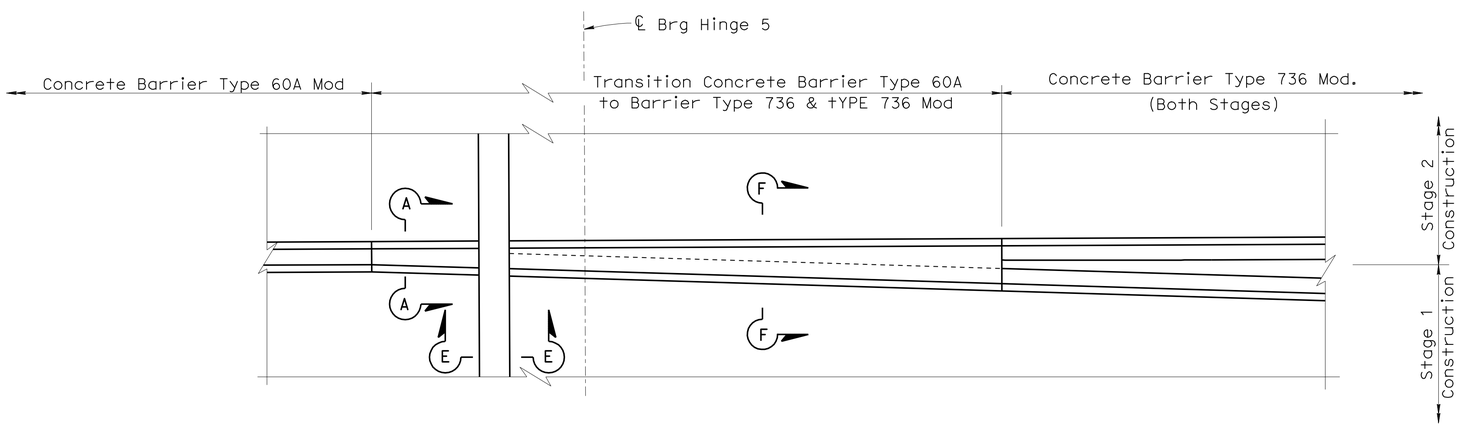


## DETAIL C

1" = 5'

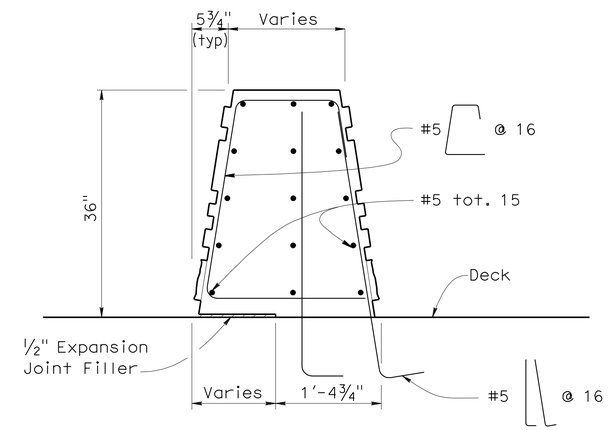


## SECTION F-F

1" = 1'

NOTES:

1. For location of 'Detail B', see "STRUCTURE PLAN NO.4" sheet
2. For location of 'Detail C', see "STRUCTURE PLAN NO.5" sheet
3. For 'Section A-A' thru 'Section C-C' and 'View E-E', see "CONCRETE BARRIER DETAILS NO. 5" sheet
4. For 'Detail C', Concrete Barrier Rail Transition limits, see "STRUCTURE PLAN NO. 5" sheet
5. For 'Concrete Barrier Architectural Treatment', see "CONCRETE BARRIER DETAILS NO. 7" sheet
6. For Sign Pedestal details, see "BENT 11 LAYOUT NO. 2" sheet

| | BY | CHECKED |
|---|---|---|
| DESIGN | F. Zayati | R. Bromenschenkel |
| DETAILS | K. Kubo | F. Zayati |
| QUANTITIES | J/P Peterson | J/P Peterson |

STATE OF CALIFORNIA
DEPARTMENT OF TRANSPORTATION

DIVISION OF ENGINEERING SERVICES
STRUCTURE DESIGN
DESIGN BRANCH 14

BRIDGE NO. 53-3032
POST MILE 3.58

# SCHUYLER HEIM BRIDGE (REPLACE)
# CONCRETE BARRIER DETAILS NO. 6

STRUCTURES DESIGN DETAIL SHEET (ENGLISH) (REV. 10/25/05)

ORIGINAL SCALE IN INCHES FOR REDUCED PLANS 0 1 2 3

CU 07-271
EA 138201

DISREGARD PRINTS BEARING EARLIER REVISION DATES

REVISION DATES: 01-08-10 | 5-21-10 | 05-22-10 | 5-23-10 | 06-16-10 | 07-15-10

SHEET 199 OF 247

FILE => 53-3032-1-t-brdt06.dgn

USERNAME => trlehard DATE PLOTTED => 18-OCT-2010 TIME PLOTTED => 14:39

| DIST | COUNTY | ROUTE | POST MILES TOTAL PROJECT | SHEET No | TOTAL SHEETS |
|---|---|---|---|---|---|
| 07 | LA | 47,103 | 3.5/4.6, 0.0/1.1 | 702 | 1003 |

REGISTERED CIVIL ENGINEER — DATE 05-24-10

10-11-10
PLANS APPROVAL DATE

REGISTERED PROFESSIONAL ENGINEER — FOUED ZAYATI — No. C57046 — Exp. 06-30-11 — CIVIL — STATE OF CALIFORNIA

*The State of California or its officers or agents shall not be responsible for the accuracy or completeness of electronic copies of this plan sheet.*

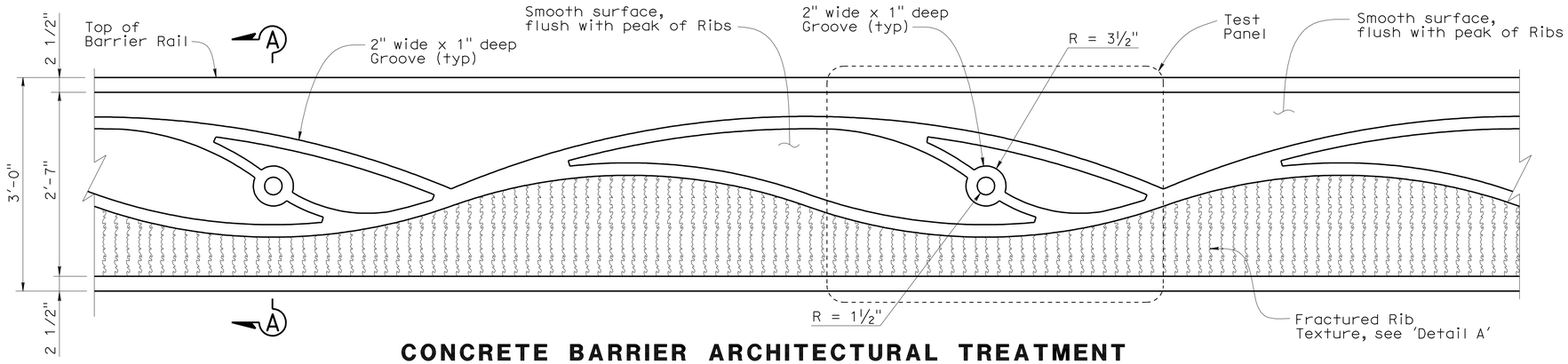


## CONCRETE BARRIER ARCHITECTURAL TREATMENT

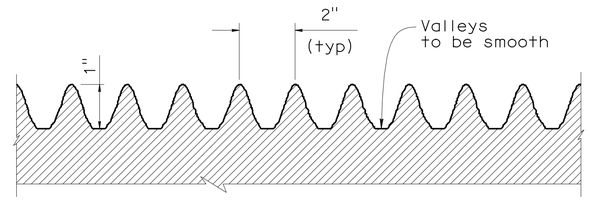


## DETAIL A

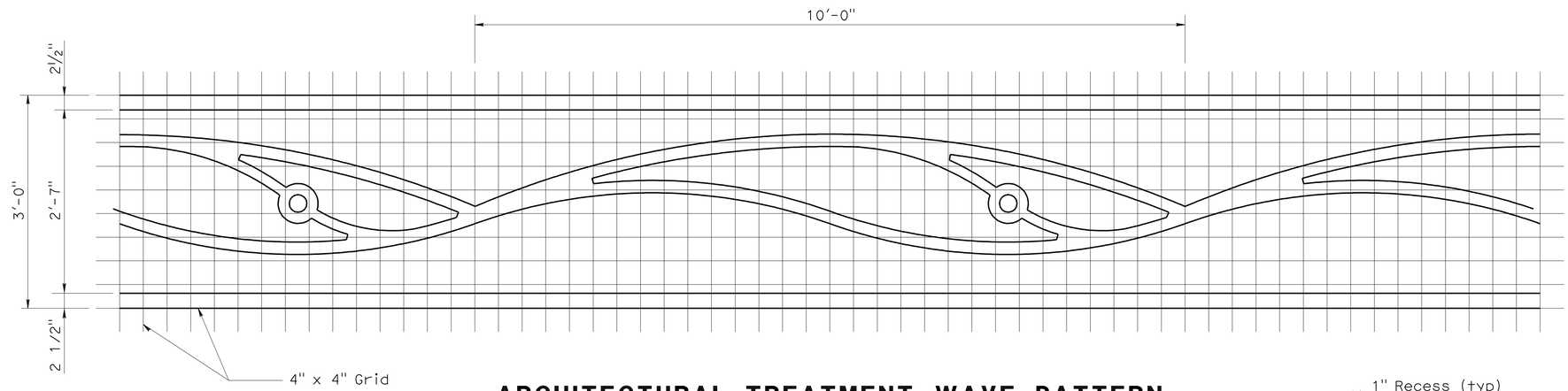


## ARCHITECTURAL TREATMENT WAVE PATTERN

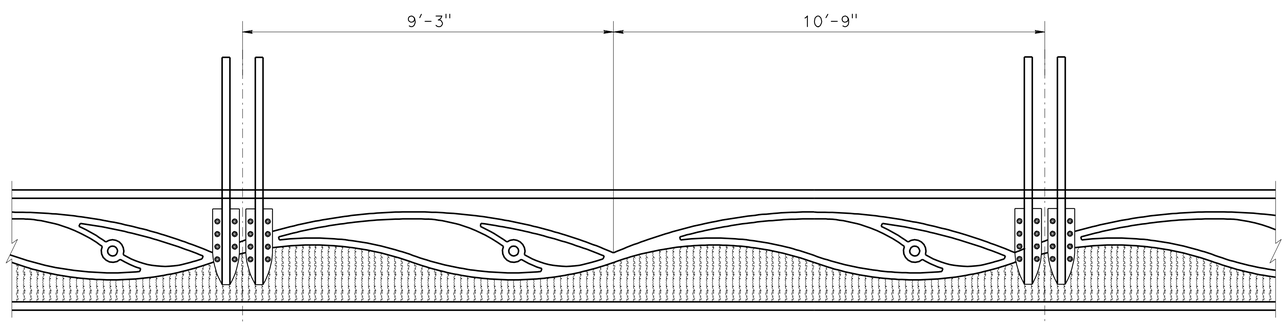


## POST LOCATION ON BARRIER

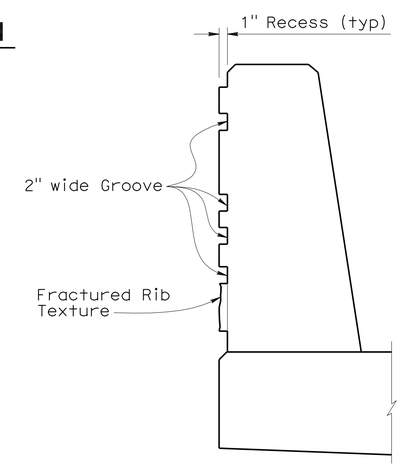


## CONCRETE BARRIER TYPE 736 MOD.

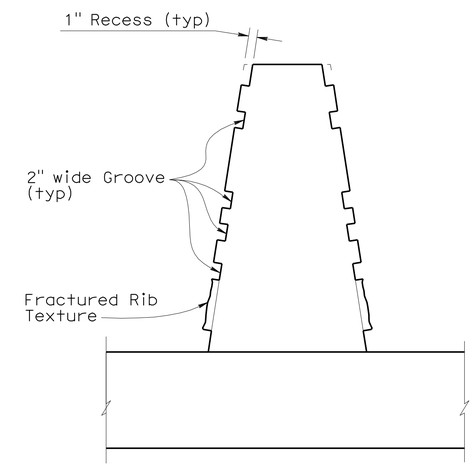


## CONCRETE BARRIER TYPE 60A MOD.

## SECTION A-A

NO SCALE

| | BY | CHECKED |
|---|---|---|
| DESIGN | F. Zayati | R. Bromenschenkel |
| DETAILS | K. Kubo | F. Zayati |
| QUANTITIES | | |

STATE OF CALIFORNIA
DEPARTMENT OF TRANSPORTATION

DIVISION OF ENGINEERING SERVICES
STRUCTURE DESIGN
DESIGN BRANCH 14

BRIDGE NO. 53-3032
POST MILE 3.58

# SCHUYLER HEIM BRIDGE (REPLACE)
# CONCRETE BARRIER DETAILS NO. 7

STRUCTURES DESIGN DETAIL SHEET (ENGLISH) (REV. 10/25/05)

ORIGINAL SCALE IN INCHES FOR REDUCED PLANS 0 1 2 3

CU 07-271
EA 138201

DISREGARD PRINTS BEARING EARLIER REVISION DATES

REVISION DATES: 01-08-10, 04-01-10, 05-17-10, 06-16-10, 06-22-10

SHEET 200 OF 247

FILE => 53-3032-1-t-brdt07.dgn

USERNAME => trlenard DATE PLOTTED => 18-OCT-2010 TIME PLOTTED => 14:39

| DIST | COUNTY | ROUTE | POST MILES TOTAL PROJECT | SHEET No | TOTAL SHEETS |
|---|---|---|---|---|---|
| 07 | LA | 47,103 | 3.5/4.6, 0.0/1.1 | 703 | 1003 |

REGISTERED CIVIL ENGINEER — DATE 05-24-10

10-11-10
PLANS APPROVAL DATE

REGISTERED PROFESSIONAL ENGINEER — FOUED ZAYATI — No. C57046 — Exp. 06-30-11 — CIVIL — STATE OF CALIFORNIA

*The State of California or its officers or agents shall not be responsible for the accuracy or completeness of electronic copies of this plan sheet.*

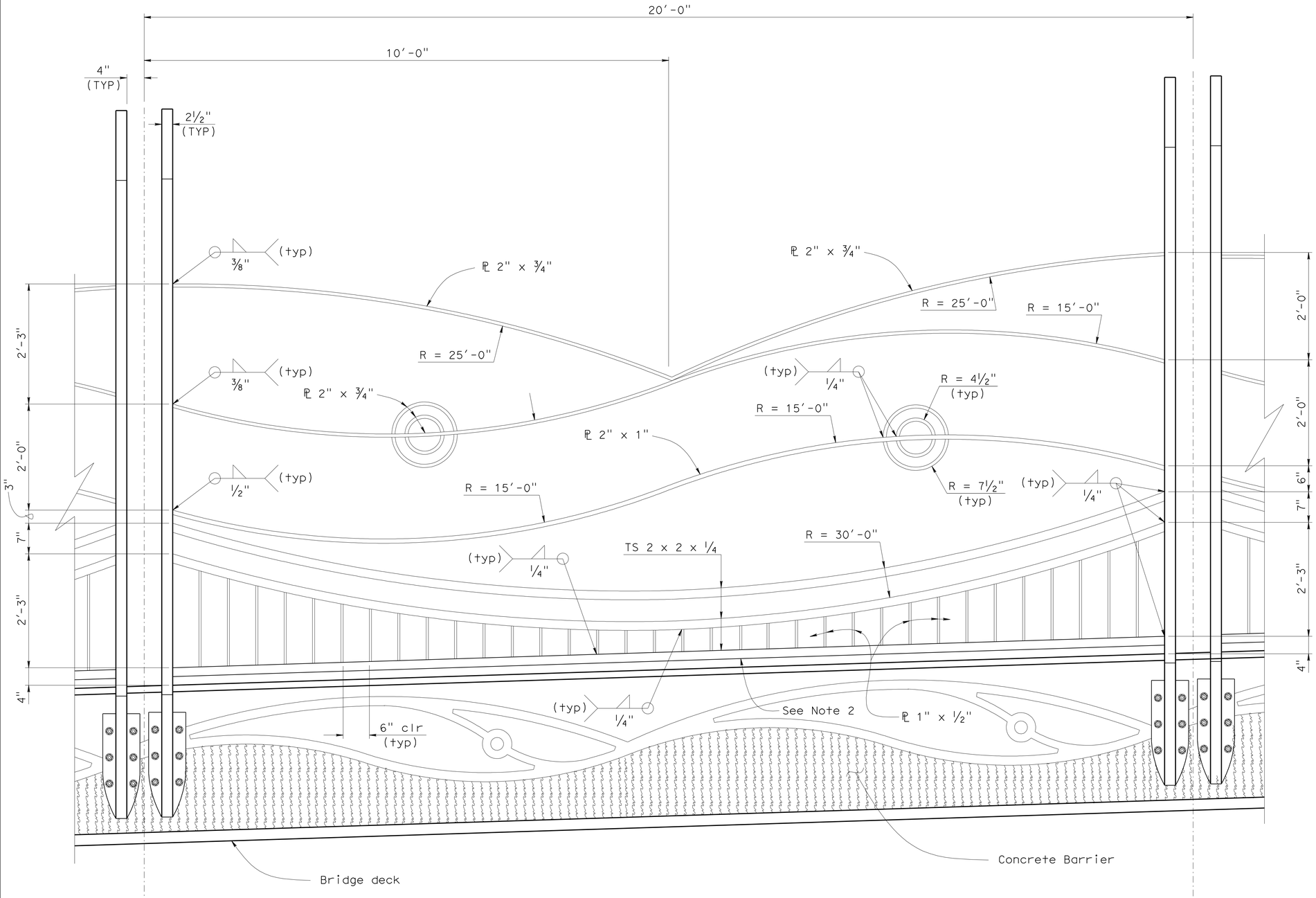


NOTES:

1. Longitudinal deck slope varies
2. Bottom rail is parallel to top of barrier.
3. See "RAILING DETAILS NO. 3" sheet for post details.
4. See "RAILING DETAILS NO. 3" sheet for connection to barrier details.

# TYPICAL BIRD RAILING PANEL

1" = 1'-0"

| | | |
|---|---|---|
| DESIGN | BY F. Zayati | CHECKED R. bromenschenkel |
| DETAILS | BY T. M. Nguyen | CHECKED F. Zayati |
| QUANTITIES | BY P. peterson | CHECKED J. Peterson |

STATE OF CALIFORNIA
DEPARTMENT OF TRANSPORTATION

DIVISION OF ENGINEERING SERVICES
STRUCTURE DESIGN
DESIGN BRANCH 14

BRIDGE NO. 53-3032
POST MILE 3.58

SCHUYLER HEIM BRIDGE (REPLACE)
RAILING DETAILS NO. 1

STRUCTURES DESIGN DETAIL SHEET (ENGLISH) (REV. 10/25/05)

ORIGINAL SCALE IN INCHES FOR REDUCED PLANS 0 1 2 3

CU 07-271
EA 138201

DISREGARD PRINTS BEARING EARLIER REVISION DATES → 05-04-10

REVISION DATES

SHEET 201 OF 247

FILE => 53-3032-1-t-raildt01.dgn

USERNAME => trlenard DATE PLOTTED => 18-OCT-2010 TIME PLOTTED => 14:40

| DIST | COUNTY | ROUTE | POST MILES TOTAL PROJECT | SHEET No | TOTAL SHEETS |
|---|---|---|---|---|---|
| 07 | LA | 47,103 | 3.5/4.6, 0.0/1.1 | 704 | 1003 |

REGISTERED CIVIL ENGINEER — 05-24-10 DATE

10-11-10
PLANS APPROVAL DATE

REGISTERED PROFESSIONAL ENGINEER — FOUED ZAYATI — No. C57046 — Exp. 06-30-11 — CIVIL — STATE OF CALIFORNIA

*The State of California or its officers or agents shall not be responsible for the accuracy or completeness of electronic copies of this plan sheet.*

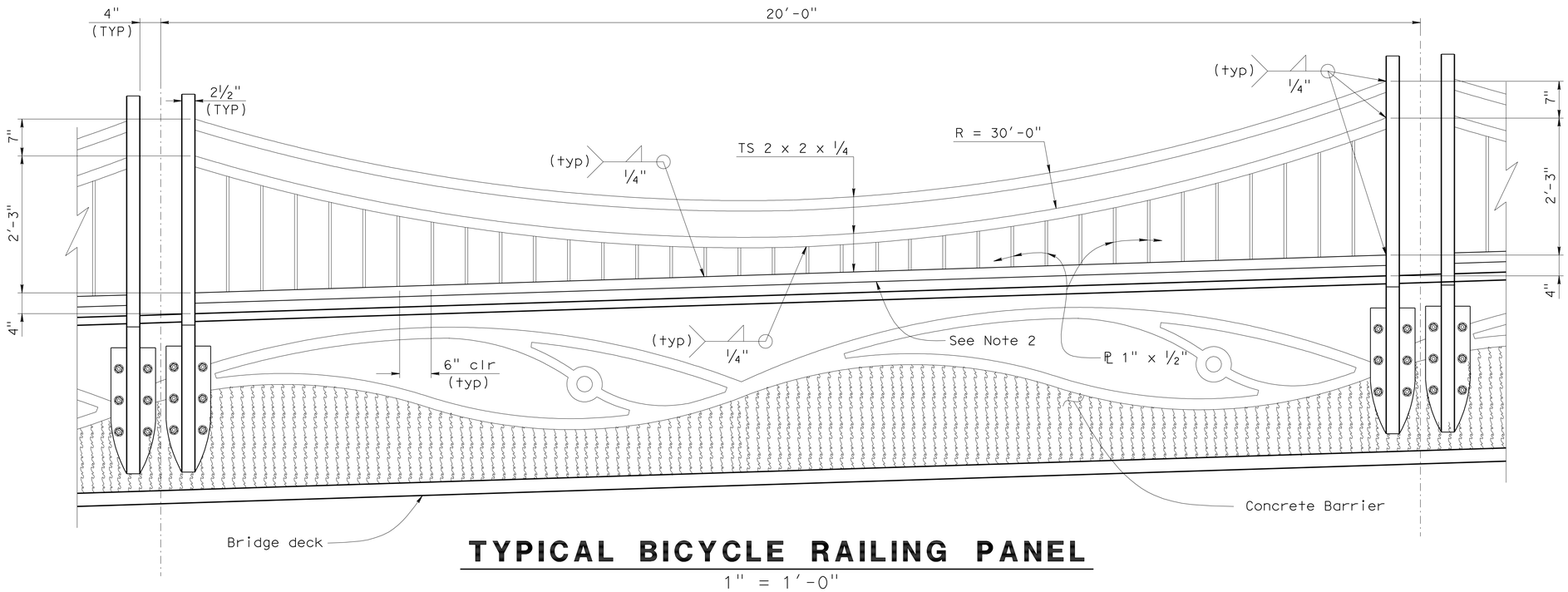


# TYPICAL BICYCLE RAILING PANEL

1" = 1'-0"

NOTES:

1. Longitudinal deck slope varies.
2. Bottom rail is parallel to top of barrier.
3. See "RAILING DETAILS NO. 3" sheet for typival post details.
4. See "RAILING DETAILS NO. 4" sheet for post connection to barrier.
5. For railing expansion mechanism, see "RAILING DETAILS NO. 4" sheet.

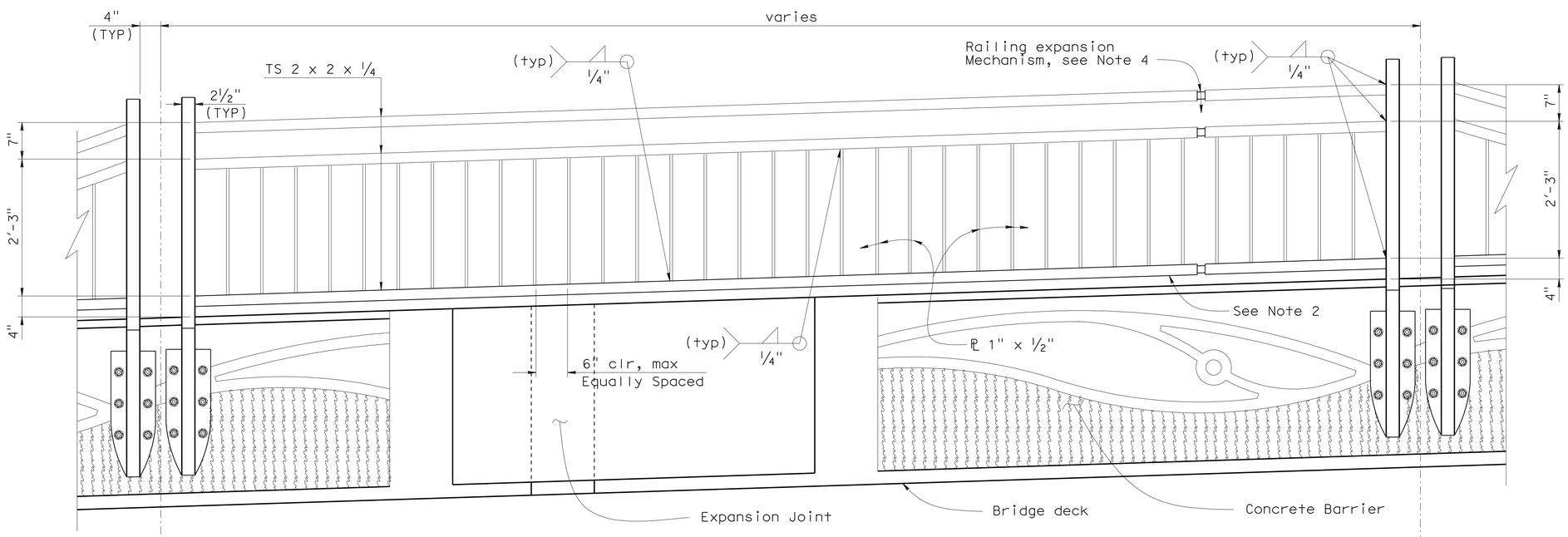


# TYPICAL BICYCLE RAILING PANEL AT EXPANSION JOINTS

1" = 1'-0"

| | | | |
|---|---|---|---|
| DESIGN | BY F. Zayati | CHECKED R. Bromenschenkel | |
| DETAILS | BY T. Nguyen | CHECKED F. Zayati | |
| QUANTITIES | BY J. Peterson | CHECKED P. peterson | |

STATE OF CALIFORNIA
DEPARTMENT OF TRANSPORTATION

DIVISION OF ENGINEERING SERVICES
STRUCTURE DESIGN
DESIGN BRANCH 14

BRIDGE NO. 53-3032
POST MILE 3.58

SCHUYLER HEIM BRIDGE (REPLACE)
RAILING DETAILS NO. 2

STRUCTURES DESIGN DETAIL SHEET (ENGLISH) (REV. 10/25/05)

ORIGINAL SCALE IN INCHES FOR REDUCED PLANS 0 1 2 3

CU 07-271
EA 138201

DISREGARD PRINTS BEARING EARLIER REVISION DATES

REVISION DATES: 05-05-10

SHEET 202 OF 247

FILE => 53-3032-1-t-raildt02.dgn

USERNAME => trienard DATE PLOTTED => 18-OCT-2010 TIME PLOTTED => 14:40

| DIST | COUNTY | ROUTE | POST MILES TOTAL PROJECT | SHEET No | TOTAL SHEETS |
|---|---|---|---|---|---|
| 07 | LA | 47,103 | 3.5/4.6, 0.0/1.1 | 705 | 1003 |

REGISTERED CIVIL ENGINEER — DATE 05-24-10

10-11-10
PLANS APPROVAL DATE

REGISTERED PROFESSIONAL ENGINEER — FOUED ZAYATI No. C57046 Exp. 06-30-11 CIVIL — STATE OF CALIFORNIA

*The State of California or its officers or agents shall not be responsible for the accuracy or completeness of electronic copies of this plan sheet.*

NOTES:

1. 6" minimum bolt embedment into barrier.
2. Apply thread locking compound.

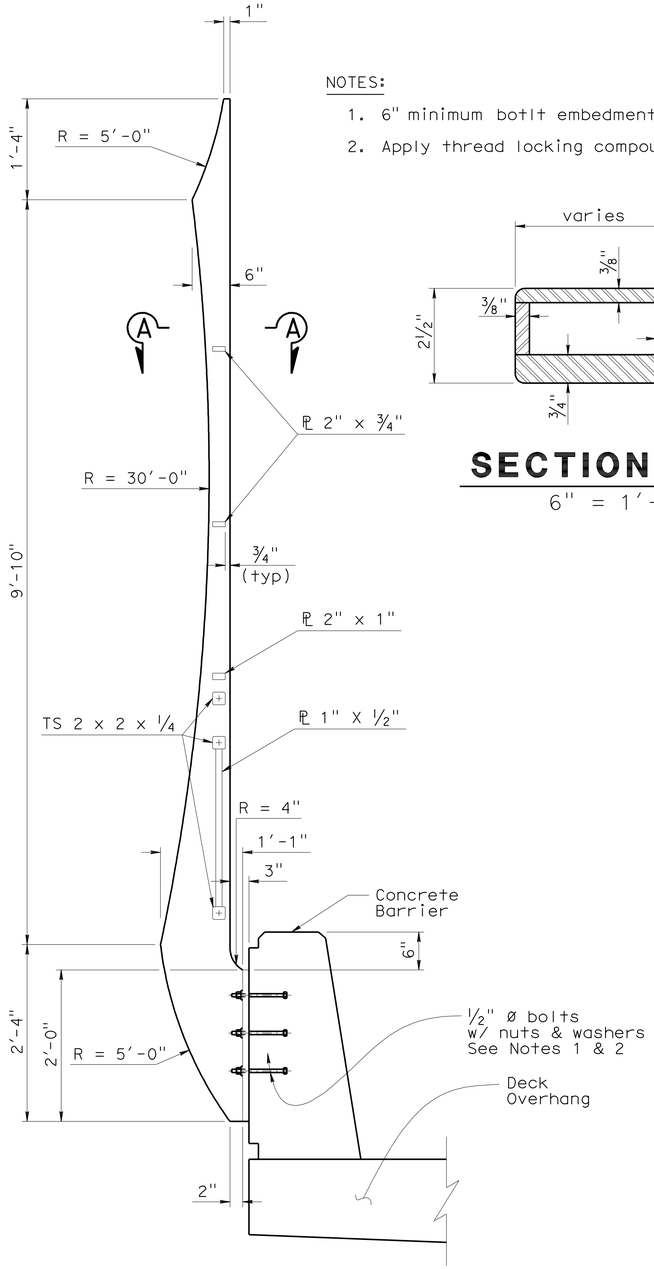


## TYPICAL BIRD RAILING POST

1" = 1'-0"

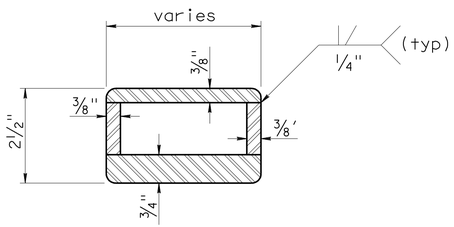


## SECTION A-A

6" = 1'-0"

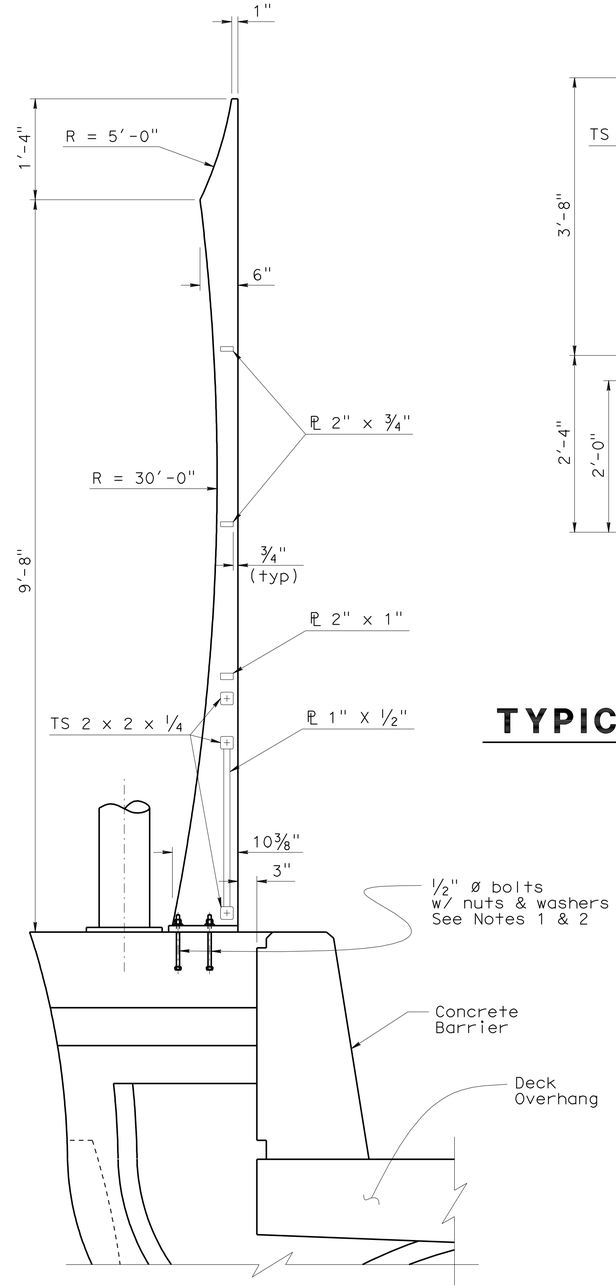


## BIRD RAILING POST @ LIGHT PEDESTAL

1" = 1'-0"

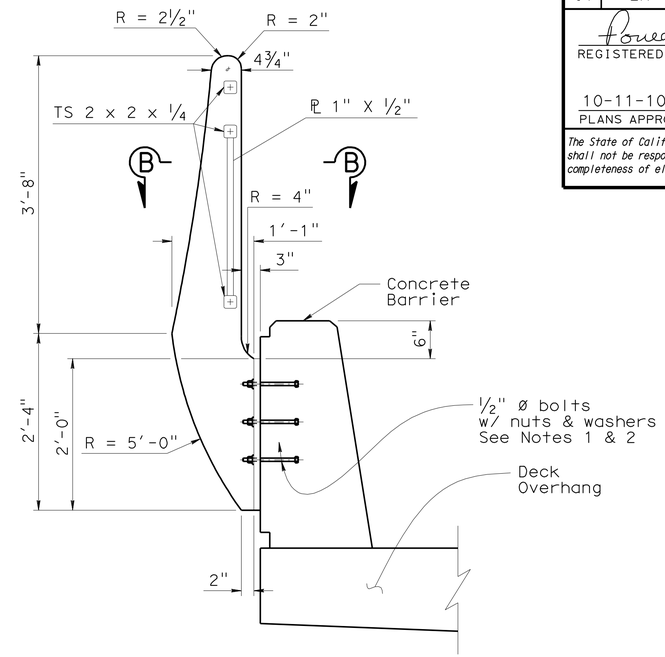


## TYPICAL BICYCLE RAILING POST

1" = 1'-0"

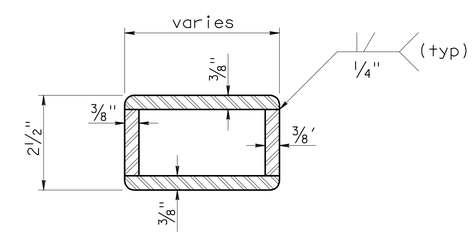


## SECTION B-B

6" = 1'-0"

| | | | |
|---|---|---|---|
| DESIGN | BY F. Zayati | CHECKED R. bromenschenkel | |
| DETAILS | BY T. M. Knuyen | CHECKED F. Zayati | |
| QUANTITIES | BY P. Peterson | CHECKED J. peterson | |

STATE OF CALIFORNIA
DEPARTMENT OF TRANSPORTATION

DIVISION OF ENGINEERING SERVICES
STRUCTURE DESIGN
DESIGN BRANCH 14

BRIDGE NO. 53-3032
POST MILE 3.58

# SCHUYLER HEIM BRIDGE (REPLACE)

## RAILING DETAILS NO. 3

STRUCTURES DESIGN DETAIL SHEET (ENGLISH) (REV. 10/25/05)

ORIGINAL SCALE IN INCHES FOR REDUCED PLANS 0 1 2 3

CU 07-271
EA 138201

DISREGARD PRINTS BEARING EARLIER REVISION DATES

REVISION DATES: 05-05-10

SHEET 203 OF 247

FILE => 53-3032-1-t-raildt03.dgn

USERNAME => trlenard DATE PLOTTED => 18-OCT-2010 TIME PLOTTED => 14:40

| DIST | COUNTY | ROUTE | POST MILES TOTAL PROJECT | SHEET No | TOTAL SHEETS |
|---|---|---|---|---|---|
| 07 | LA | 47,103 | 3.5/4.6, 0.0/1.1 | 706 | 1003 |

REGISTERED CIVIL ENGINEER 05-24-10 DATE

10-11-10
PLANS APPROVAL DATE

REGISTERED PROFESSIONAL ENGINEER FOUED ZAYATI No. C57046 Exp. 06-30-11 CIVIL STATE OF CALIFORNIA

*The State of California or its officers or agents shall not be responsible for the accuracy or completeness of electronic copies of this plan sheet.*

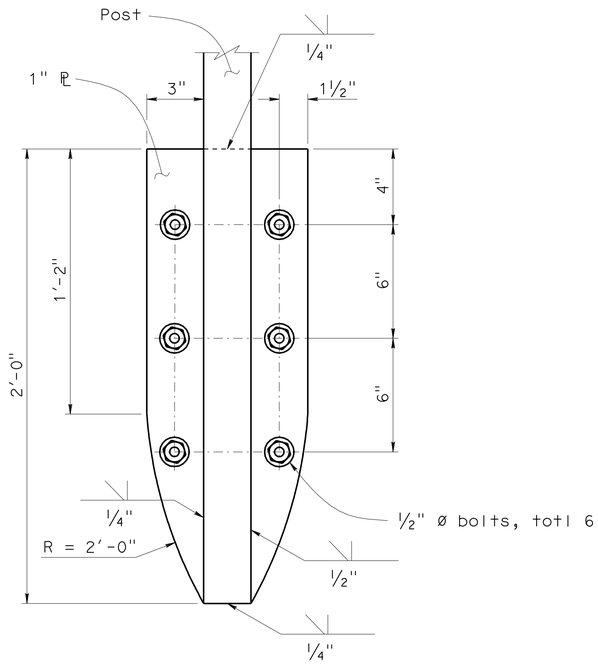


## TYPICAL POST CONNECTION

3" = 1'-0"

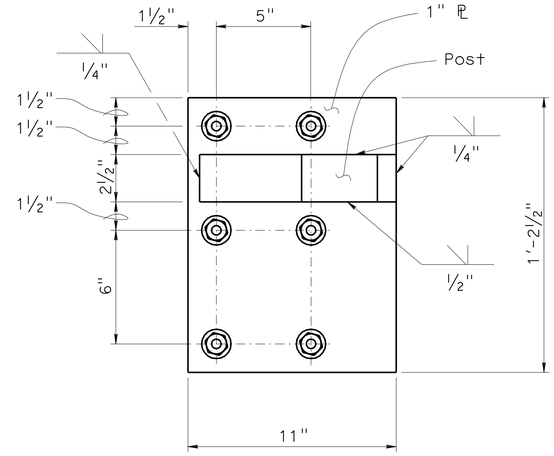


## POST CONNECTION @ LIGHT PEDESTAL

3" = 1'-0"

NOTES:

1. 6" minimum botlt embedment into barrier.
2. Apply thread locking compound.

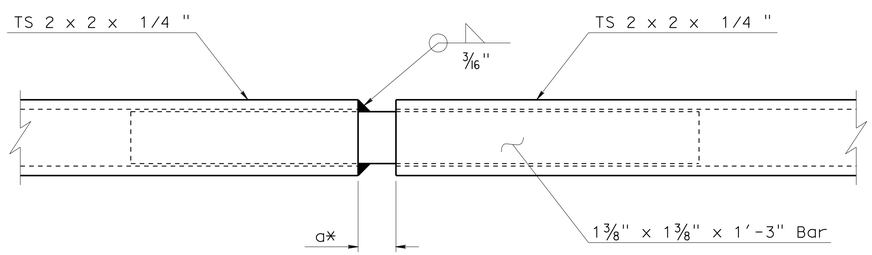


## RAILING EXPANSION MECHANISM DETAIL

6" = 1'-0"

* Gap at time of Railing installation

| Season | Gap a |
|---|---|
| Summer | 1" |
| Winter | 2 1/2" |
| Fall/ Spring | 1 3/4" |

| | | | |
|---|---|---|---|
| DESIGN | BY F. Zayati | CHECKED R. Bromenschenkel | |
| DETAILS | BY T. M. nguyen | CHECKED F. Zayati | |
| QUANTITIES | BY P. Peterson | CHECKED J. Peterson | |

STATE OF CALIFORNIA DEPARTMENT OF TRANSPORTATION

DIVISION OF ENGINEERING SERVICES STRUCTURE DESIGN DESIGN BRANCH 14

BRIDGE NO. 53-3032
POST MILE 3.58

# SCHUYLER HEIM BRIDGE (REPLACE)

## RAILING DETAILS NO. 4

STRUCTURES DESIGN DETAIL SHEET (ENGLISH) (REV. 10/25/05)

ORIGINAL SCALE IN INCHES FOR REDUCED PLANS 0 1 2 3

CU 07-271
EA 138201

DISREGARD PRINTS BEARING EARLIER REVISION DATES

REVISION DATES: 05-05-10

SHEET 204 OF 247

FILE => 53-3032-1-t-raildt04.dgn

USERNAME => trlenard DATE PLOTTED => 18-OCT-2010 TIME PLOTTED => 14:40

| DIST. | COUNTY | ROUTE | POST MILES TOTAL PROJECT | SHEET NO. | TOTAL SHEETS |
|---|---|---|---|---|---|
| 07 | LA | 47,103 | 3.5/4.6, 0.0/1.1 | 707 | 1003 |

REGISTERED ELECTRICAL ENGINEER — 4-13-10 DATE

REGISTERED PROFESSIONAL ENGINEER — CHI WU — No. E 10773 — Exp. 6-30-11 — ELEC — STATE OF CALIFORNIA

10-11-10
PLANS APPROVAL DATE

The State of California or its officers or agents shall not be responsible for the accuracy or completeness of electronic copies of this plan sheet.

## LEGEND

| SYMBOL | DESCRIPTION |
|---|---|
| S 2 | SEISMIC SENSOR ENCLOSURE, ADJACENT NUMBER INDICATES LOCATION NUMBER |
| □ | No. 5 PULL BOX, TRAFFIC RATED TYPE |
| T | TELEPHONE DEMARCATION CABINET |
| 3 | SHEET NOTE |
| 3 | CONDUIT NUMBER, SEE CONDUIT SCHEDULE SHEET EE-8 |
| J | JUNCTION BOX |
| 1 / EE-2 | DETAIL NUMBER / SHEET NUMBER |
| (2) 1/2"C, PVC, 2#12 | CONDUCTOR INFO (PER CONDUIT); CONDUIT TYPE; CONDUIT SIZE; NUMBER OF CONDUITS (NO NUMBER INDICATES ONE CONDUIT) |
| MC | CONDUIT, RIGID STEEL, UNDERGROUND |
| ∿∿∿ | CONDUIT, FLEXIBLE |
| —×—×— | CONDUIT EXPOSED |
| ——○ | CONDUIT, TURN UP |
| ——● | CONDUIT, TURN DOWN |
| ——▶— | ADAPTER, ONE TYPE CONDUIT TO ANOTHER |

## ABBREVIATIONS

| | |
|---|---|
| BB | BEGIN BRIDGE |
| BRG | BEARING |
| C | CONDUIT |
| CGS | CALIFORNIA GEOLOGICAL SURVEY |
| CIDH | CAST-IN-DRILLED-HOLE |
| CIP | CAST-IN-PLACE |
| DIA | DIAMETER |
| DP | DUPLEX RECEPTACLE |
| (E) | EXISTING |
| EB | END BRIDGE |
| FBA | FORCED BALANCED ACCELERATOR |
| FG | FINISH GRADE |
| FLEX | FLEXIBLE |
| G | GROUND |
| GALV | GALVANIZED |
| GB | GROUND BUS |
| ISDN | INTEGRATED SERVICE DIGITAL NETWORK |
| JB | JUNCTION BOX |
| LOC | LOCATION |
| (MOD) | MODIFIED |
| NB | NEUTRAL BUS |
| OG | ORIGINAL GROUND |
| PB | PULL BOX |
| PC | PRECAST |
| PL | PLATE |
| PVC | POLYVINYL CHLORIDE |
| SCH | SCHEDULE |
| SS | SEISMIC SENSOR |
| SSC | SEISMIC SENSOR CABLE |
| SSE | SEISMIC SENSOR ENCLOSURE |
| SST | STAINLESS STEEL |
| TDC | TELEPHONE DEMARCATION CABINET |
| TYP | TYPICAL |

## STANDARD PLANS

DATED MAY, 2006

- ES-3A
- ES-8
- RSP ES-9C

| | BY | CHECKED |
|---|---|---|
| DESIGN | Johnny Wu | Tech Ngov |
| DETAILS | LInda Monson | Johnny Wu |
| QUANTITIES | Johnny Wu | Tech Ngov |

STATE OF CALIFORNIA
DEPARTMENT OF TRANSPORTATION

DIVISION OF ENGINEERING SERVICES
ELECTRICAL-MECHANICAL-WATER AND WASTEWATER DESIGN

BRIDGE NO. 53-3032
POST MILE 3.58

SCHUYLER HEIM BRIDGE (REPLACE)
LEGEND AND ABBREVIATIONS

SHEET EE-0

DOES SD Imperial Rev.1/07

ORIGINAL SCALE IN INCHES FOR REDUCED PLANS 0 1 2 3

CU 07271
EA 138201

DISREGARD PRINTS BEARING EARLIER REVISION DATES → 3/26/10 3/26/10 4/13/10

REVISION DATES (PRELIMINARY STAGE ONLY) SHEET 205 OF 247

18-OCT-2010 14:40

53-3032-z-ee_00.dgn

| DIST. | COUNTY | ROUTE | POST MILES TOTAL PROJECT | SHEET NO. | TOTAL SHEETS |
|---|---|---|---|---|---|
| 07 | LA | 47,103 | 3.5/4.6, 0.0/1.1 | 708 | 1003 |

REGISTERED ELECTRICAL ENGINEER — 4-13-10 DATE

REGISTERED PROFESSIONAL ENGINEER — CHI WU — No. E 10773 — Exp. 6-30-11 — ELEC — STATE OF CALIFORNIA

10-11-10
PLANS APPROVAL DATE

The State of California or its officers or agents shall not be responsible for the accuracy or completeness of electronic copies of this plan sheet.

*Project General Notes:*

A. For description of seismic sensor enclosure mounting location, see Table, sheet EE-8.

B. Install seismic sensor cables continuous without splices from seismic sensor enclosure to the seismic recorder location. No splices or taps are permitted.

C. Provide 6 feet of slack, for each seismic sensor cable, inside each seismic sensor enclosure.

D. Provide 20 feet of slack, for each seismic sensor cable, inside each Seismic Sensor Recorder Cabinet.

E. Where conduit crosses a hinge, expansion joint or similar locations, install liquidtight flexible metal conduit to accommodate bridge structure movement. For conduit mounting detail across bridge movement area, see sheet EE-6.

F. Unless otherwise shown or specified, all seismic junction boxes along bridge railing shall be SST NEMA Type 4X, Caltrans Type 9A modified as shown on the plans.

G. All conduits exposed to the weather, terminated in seismic sensor enclosures, junction boxes, and pull boxes shall be terminated via weatherproof conduit hubs.

H. Conduit used shall be threaded rigid steel conduit, unless otherwise noted.

I. All flexible conduit shall be liquidtight flexible metallic conduit.

J. Identify each seismic cable with the cable number at each termination, and inside each junction and pull box. See "Seismic Monitoring Sensor Identification Table" on sheet EE-8 for cable numbers, enclosure type, and sensor number.

K. All seismic sensors and recorders are State furnished and installed. Refer to the Special Provisions for required work by the Contractor to assist the California Geological Survey (CGS) in the installation of sensors and recorders.

L. Installed equipment location shown is diagrammatic.

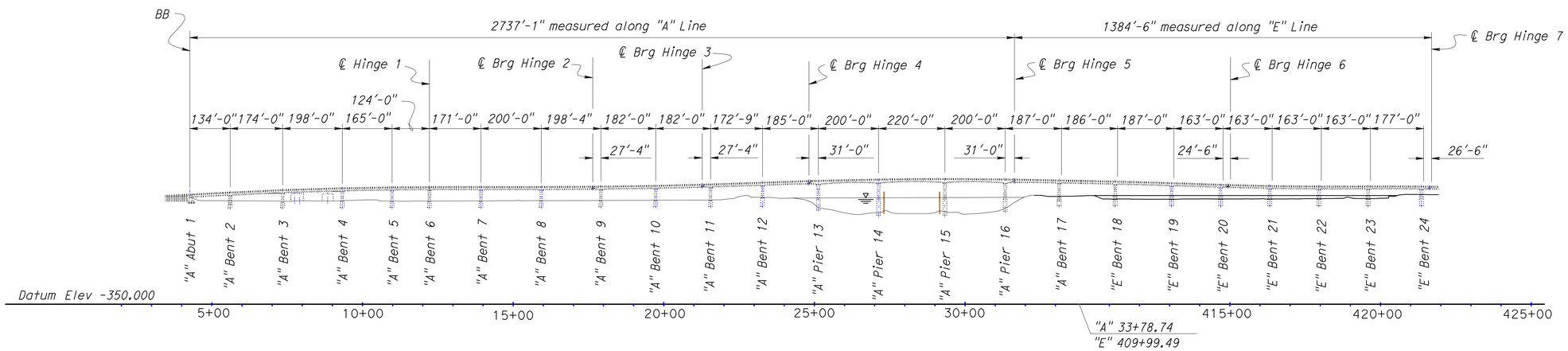


## ELEVATION

SCALE 1" = 200'-0"

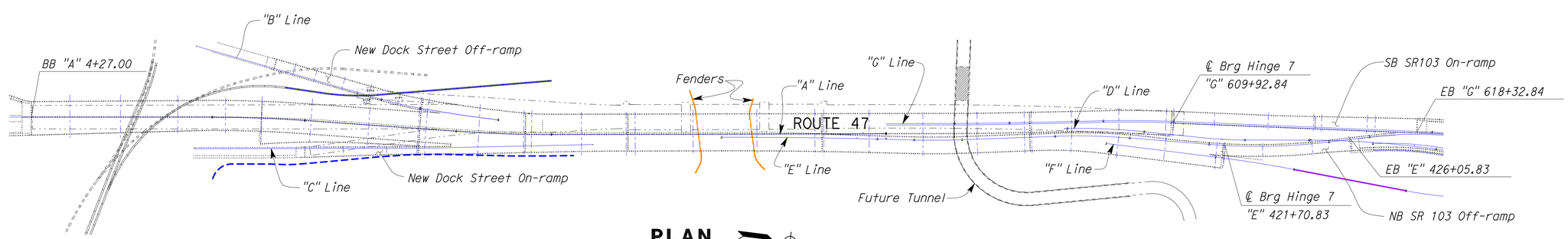


## PLAN

SCALE 1" = 200'-0"

| | | | |
|---|---|---|---|
| DESIGN SUPERVISOR | DESIGN | BY Johnny Wu | CHECKED Tech Ngov |
| DESIGN ENGINEER | DETAILS | BY Linda Monson | CHECKED Johnny Wu |
| | QUANTITIES | BY Johnny Wu | CHECKED Tech Ngov |

STATE OF CALIFORNIA
DEPARTMENT OF TRANSPORTATION

DIVISION OF ENGINEERING SERVICES
ELECTRICAL-MECHANICAL-WATER AND WASTEWATER DESIGN

BRIDGE NO. 53-3032
POST MILE 3.58

**SCHUYLER HEIM BRIDGE (REPLACE)**

SEISMIC SITE PLAN

SHEET **EE-1**

DOES SD Imperial Rev.1/07

ORIGINAL SCALE IN INCHES FOR REDUCED PLANS 0 1 2 3

CU 07271
EA 138201

DISREGARD PRINTS BEARING EARLIER REVISION DATES → 3/23/10 3/24/10 4/13/10

REVISION DATES (PRELIMINARY STAGE ONLY) SHEET 206 OF 247

18-OCT-2010 14:40

53-3032-z-ee_01.dgn

| DIST. | COUNTY | ROUTE | POST MILES TOTAL PROJECT | SHEET NO. | TOTAL SHEETS |
|---|---|---|---|---|---|
| 07 | LA | 47,103 | 3.5/4.6, 0.0/1.1 | 709 | 1003 |

REGISTERED ELECTRICAL ENGINEER — 4-13-10 DATE

REGISTERED PROFESSIONAL ENGINEER — CHI WU — No. E 10773 — Exp. 6-30-11 — ELEC — STATE OF CALIFORNIA

10-11-10
PLANS APPROVAL DATE

The State of California or its officers or agents shall not be responsible for the accuracy or completeness of electronic copies of this plan sheet.

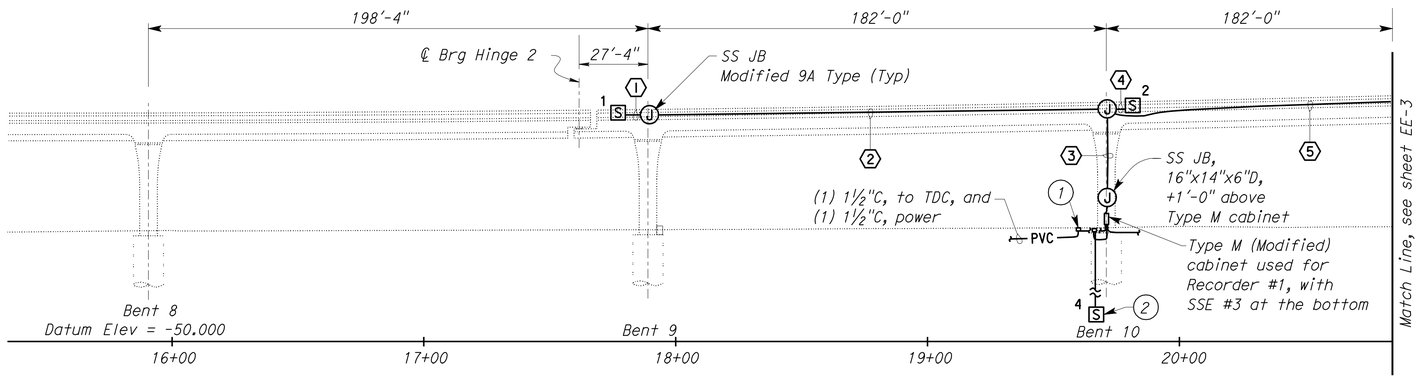


## ELEVATION

SCALE 1" = 30'-0"

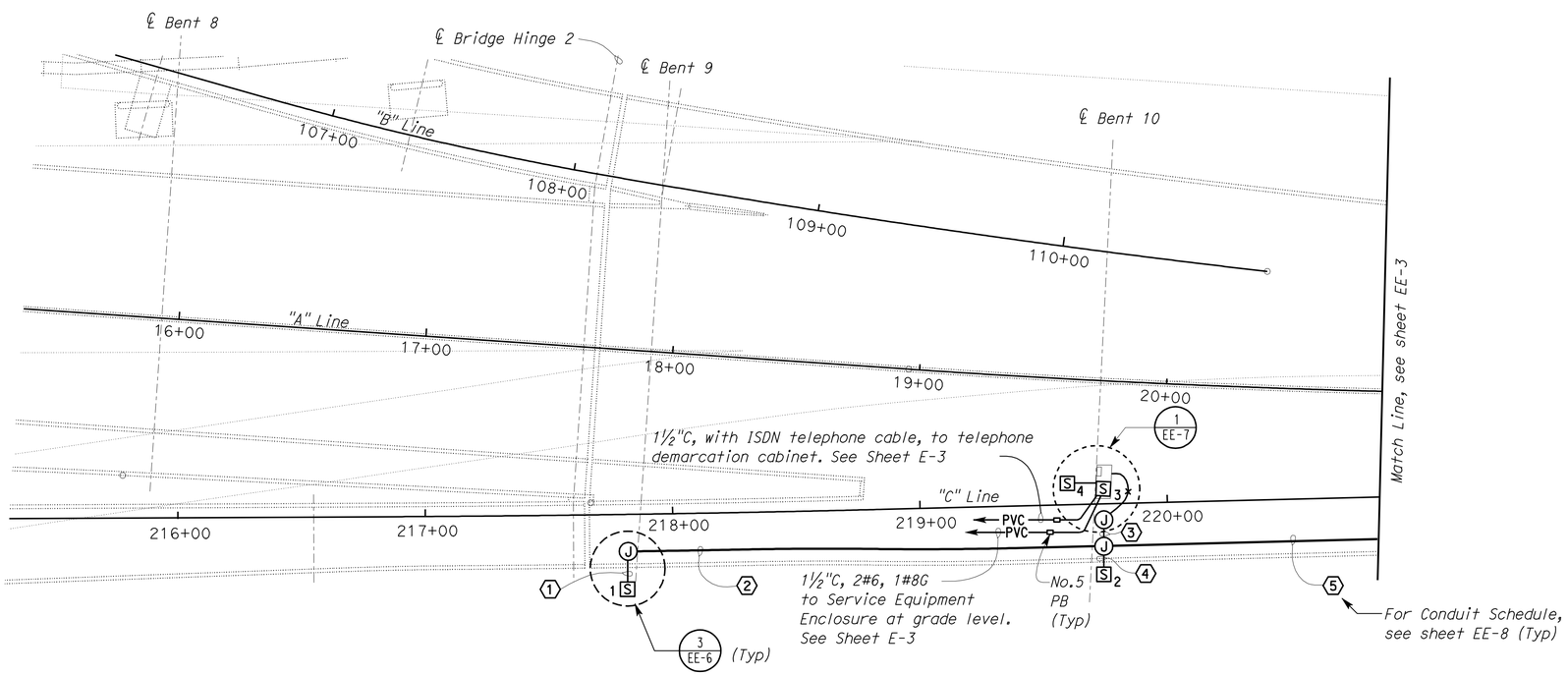


## PLAN

SCALE 1" = 30'-0"

THIS DRAWING ACCURATE FOR ELECTRICAL WORK ONLY.

Notes:

1. One pull box is shown for clarity, see Plan below.
2. See Specifications for seismic sensor steel pipe in the caissons, for downhole sensors and cables installation.

| | BY | CHECKED |
|---|---|---|
| DESIGN | Johnny Wu | Tech Ngov |
| DETAILS | Linda Monson | Johnny Wu |
| QUANTITIES | Johnny Wu | Tech Ngov |

STATE OF CALIFORNIA
DEPARTMENT OF TRANSPORTATION

DIVISION OF ENGINEERING SERVICES
ELECTRICAL-MECHANICAL-WATER AND WASTEWATER DESIGN

BRIDGE NO. 53-3032
POST MILE 3.58

SCHUYLER HEIM BRIDGE (REPLACE)

SEISMIC MONITORING SYSTEM

ENLARGED LAYOUT NO. 1
BENT 8 TO BENT 10

SHEET EE-2

DOES SD Imperial Rev. 1/07

ORIGINAL SCALE IN INCHES FOR REDUCED PLANS 0 1 2 3

CU 07271
EA 138201

DISREGARD PRINTS BEARING EARLIER REVISION DATES → 3/22/10 3/16/10 3/23/10 3/24/10 3/26/10 4/13/10

REVISION DATES (PRELIMINARY STAGE ONLY)

SHEET 207 OF 247

21-OCT-2010 14:58

53-3032-z-ee_02.dgn

| DIST. | COUNTY | ROUTE | POST MILES TOTAL PROJECT | SHEET NO. | TOTAL SHEETS |
|---|---|---|---|---|---|
| 07 | LA | 47,103 | 3.5/4.6, 0.0/1.1 | 710 | 1003 |

REGISTERED ELECTRICAL ENGINEER — 4-13-10 DATE

REGISTERED PROFESSIONAL ENGINEER — CHI WU — No. E 10773 — Exp. 6-30-11 — ELEC — STATE OF CALIFORNIA

10-11-10
PLANS APPROVAL DATE

The State of California or its officers or agents shall not be responsible for the accuracy or completeness of electronic copies of this plan sheet.

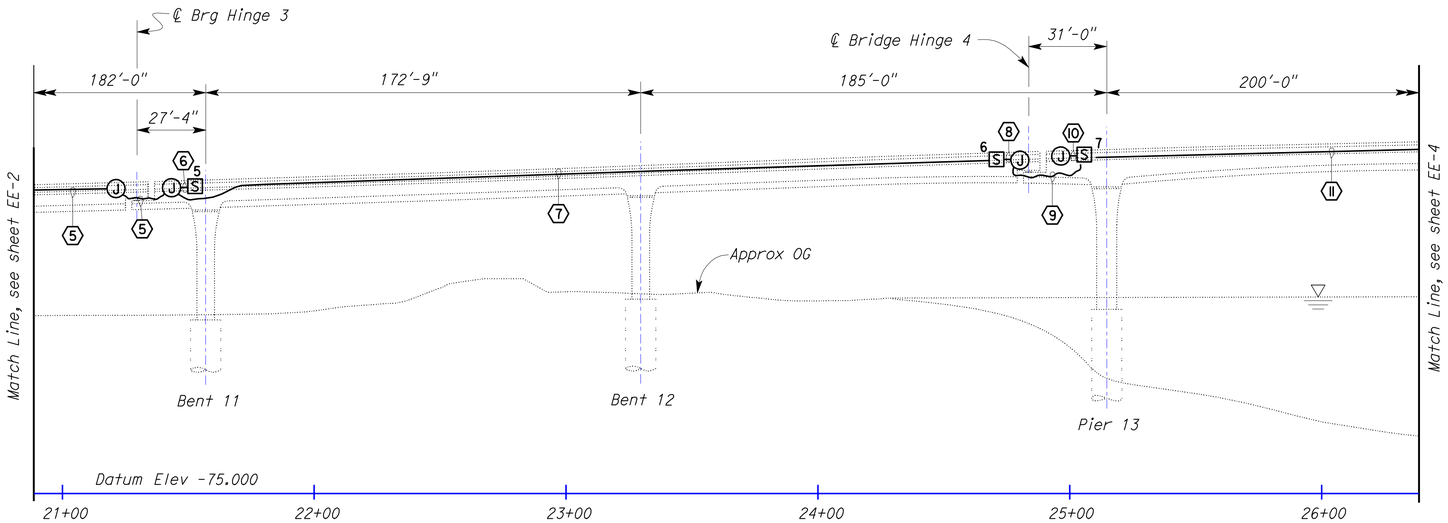


## ELEVATION

SCALE 1" = 30'-0"

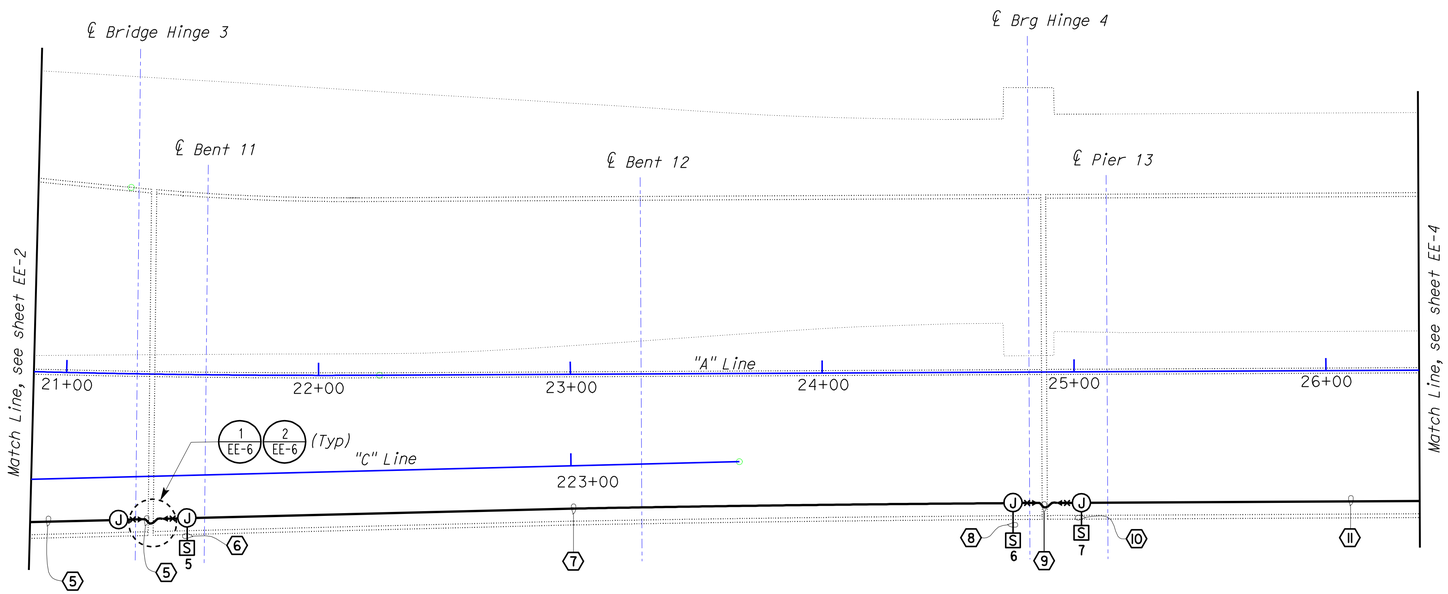


## PLAN

SCALE 1" = 30'-0"

THIS DRAWING ACCURATE FOR ELECTRICAL WORK ONLY.

| | BY | CHECKED |
|---|---|---|
| DESIGN | Johnny Wu | Tech Ngov |
| DETAILS | Linda Monson | Johnny Wu |
| QUANTITIES | Johnny Wu | Tech Ngov |

STATE OF CALIFORNIA
DEPARTMENT OF TRANSPORTATION

DIVISION OF ENGINEERING SERVICES
ELECTRICAL-MECHANICAL-WATER AND WASTEWATER DESIGN

BRIDGE NO. 53-3032
POST MILE 3.58

**SCHUYLER HEIM BRIDGE (REPLACE)**

SEISMIC MONITORING SYSTEM

ENLARGED LAYOUT NO. 2
BENT 11 TO PIER 13

SHEET **EE-3**

DOES SD Imperial Rev. 1/07

ORIGINAL SCALE IN INCHES FOR REDUCED PLANS 0 1 2 3

CU 07271
EA 138201

DISREGARD PRINTS BEARING EARLIER REVISION DATES → 3/5/10 3/11/10 3/23/10 3/24/10 3/26/10 4/13/10

REVISION DATES (PRELIMINARY STAGE ONLY)

SHEET 208 OF 247

18-OCT-2010 14:40

53-3032-z-ee_03.dgn

| DIST. | COUNTY | ROUTE | POST MILES TOTAL PROJECT | SHEET NO. | TOTAL SHEETS |
|---|---|---|---|---|---|
| 07 | LA | 47,103 | 3.5/4.6, 0.0/1.1 | 711 | 1003 |

REGISTERED ELECTRICAL ENGINEER — 4-13-10 DATE

REGISTERED PROFESSIONAL ENGINEER — CHI WU — No. E 10773 — Exp. 6-30-11 — ELEC — STATE OF CALIFORNIA

10-11-10
PLANS APPROVAL DATE

The State of California or its officers or agents shall not be responsible for the accuracy or completeness of electronic copies of this plan sheet.

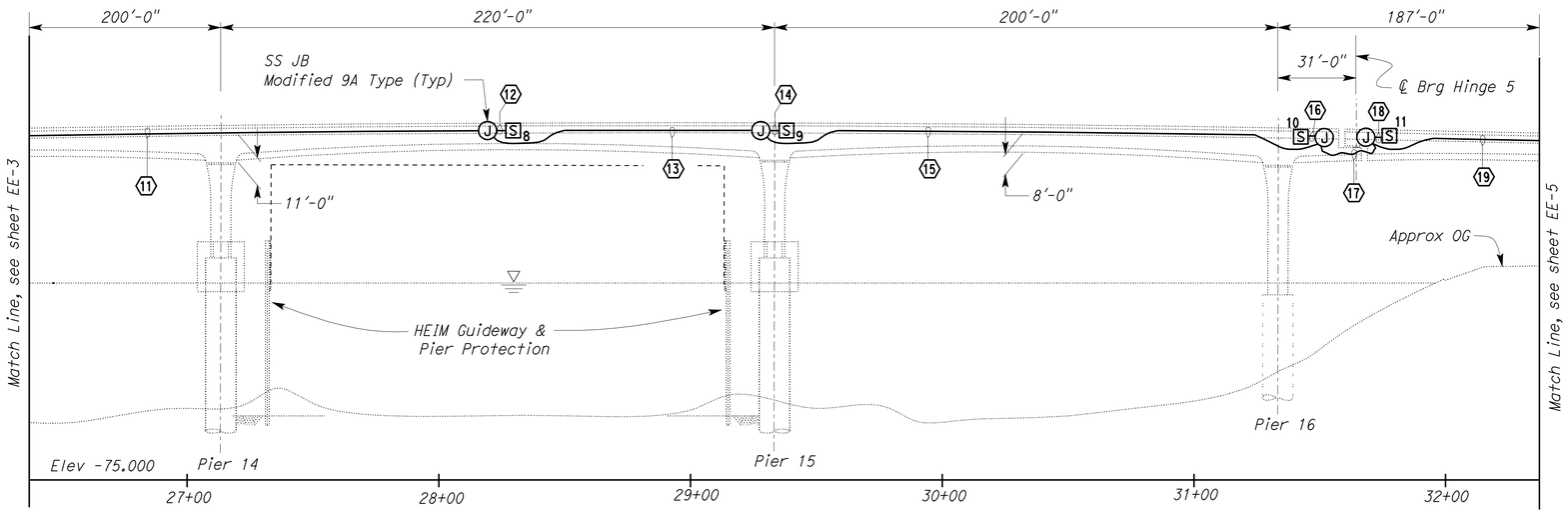


## ELEVATION

SCALE 1" = 30'-0"

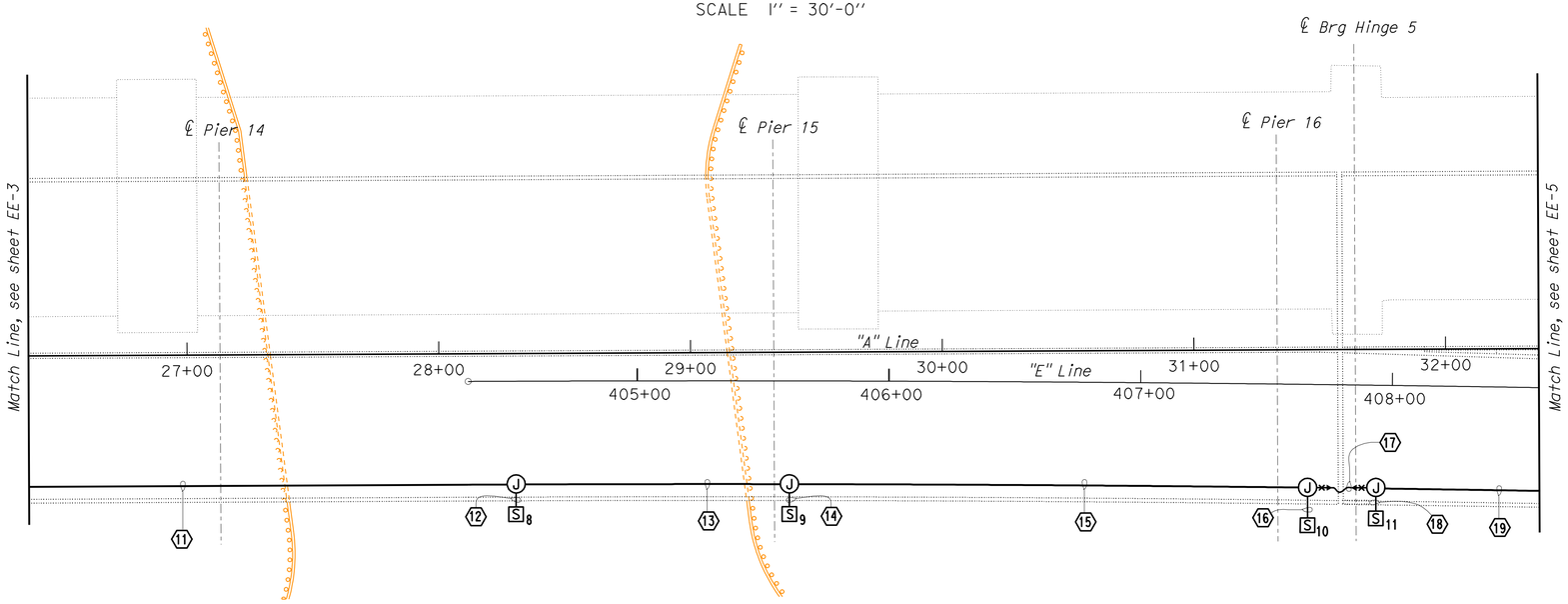


## PLAN

SCALE 1" = 30'-0"

THIS DRAWING ACCURATE FOR ELECTRICAL WORK ONLY.

| | BY | CHECKED |
|---|---|---|
| DESIGN | Johnny Wu | Tech Ngov |
| DETAILS | Linda Monson | Johnny Wu |
| QUANTITIES | Johnny Wu | Tech Ngov |

STATE OF CALIFORNIA
DEPARTMENT OF TRANSPORTATION

DIVISION OF ENGINEERING SERVICES
ELECTRICAL-MECHANICAL-WATER AND WASTEWATER DESIGN

BRIDGE NO. 53-3032
POST MILE 3.58

**SCHUYLER HEIM BRIDGE (REPLACE)**

SEISMIC MONITORING SYSTEM

ENLARGED LAYOUT NO. 3
PIER 14 TO PIER 16

SHEET **EE-4**

DOES SD Imperial Rev. 1/07

ORIGINAL SCALE IN INCHES FOR REDUCED PLANS 0 1 2 3

CU 07271
EA 138201

DISREGARD PRINTS BEARING EARLIER REVISION DATES → 3/23/10 3/25/10 3/24/10 3/26/10

REVISION DATES (PRELIMINARY STAGE ONLY)

SHEET 209 OF 247

18-OCT-2010 14:40

53-3032-z-ee_04.dgn

| DIST. | COUNTY | ROUTE | POST MILES TOTAL PROJECT | SHEET NO. | TOTAL SHEETS |
|---|---|---|---|---|---|
| 07 | LA | 47,103 | 3.5/4.6, 0.0/1.1 | 712 | 1003 |

REGISTERED ELECTRICAL ENGINEER — 4-13-10 DATE

REGISTERED PROFESSIONAL ENGINEER CHI WU No. E 10773 Exp. 6-30-11 ELEC STATE OF CALIFORNIA

10-11-10
PLANS APPROVAL DATE

The State of California or its officers or agents shall not be responsible for the accuracy or completeness of electronic copies of this plan sheet.

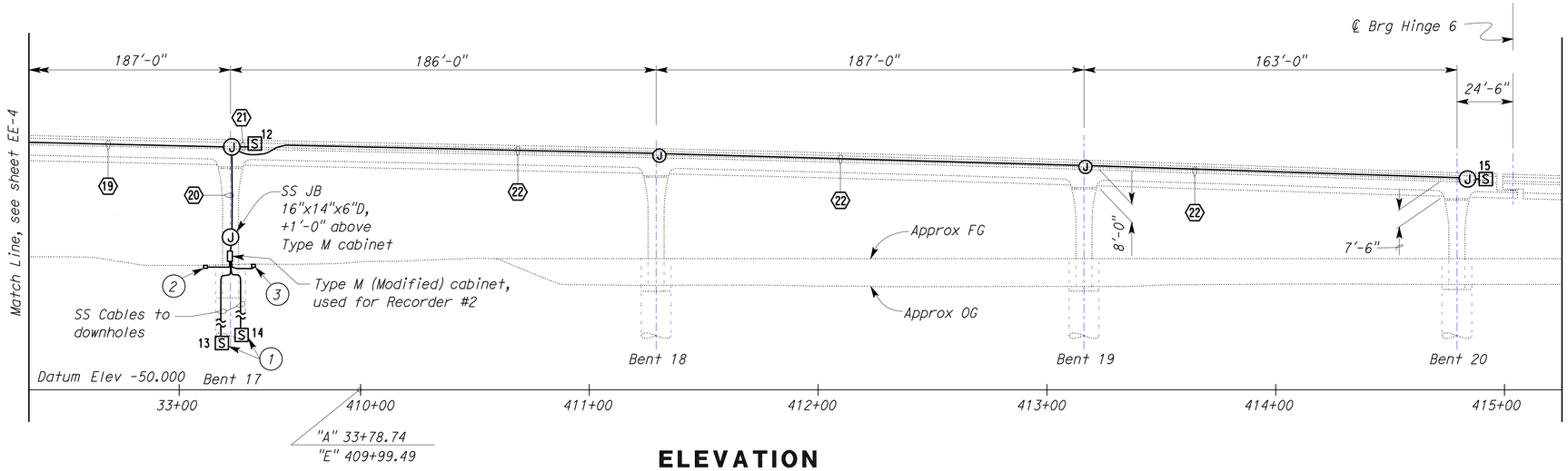


## ELEVATION

SCALE 1" = 30'-0"

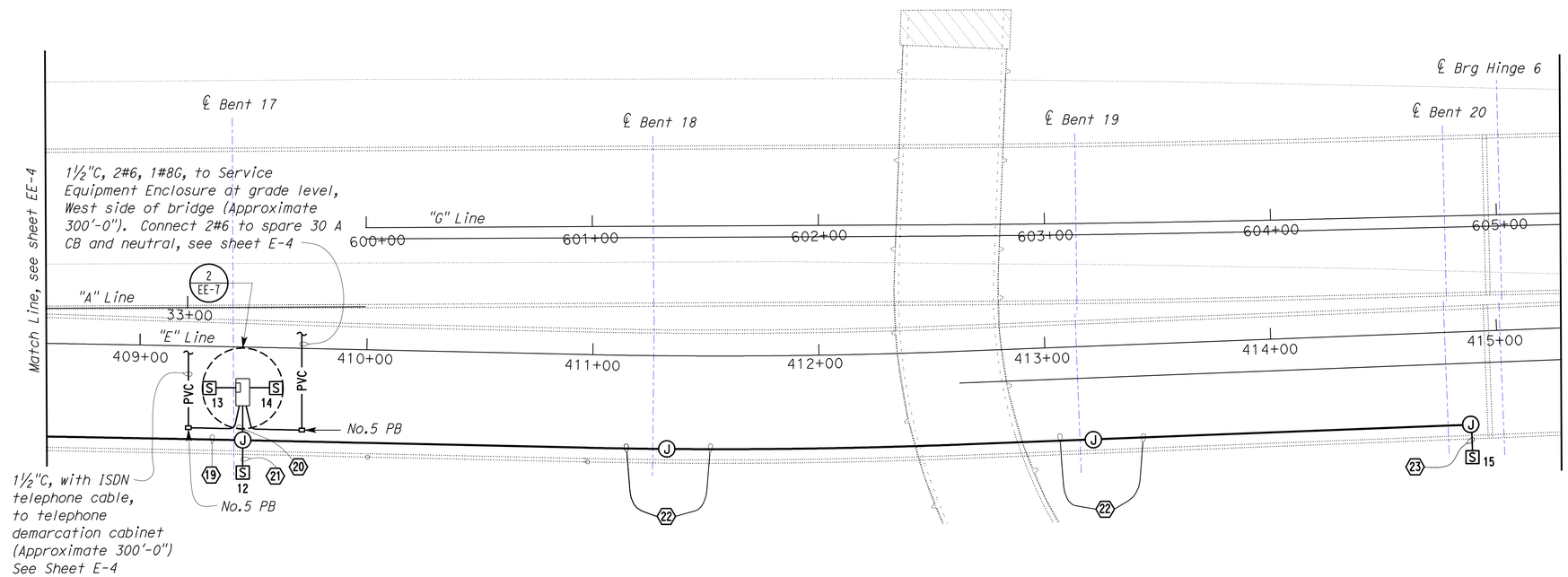


## PLAN

SCALE 1" = 30'-0"

Notes:

1. See Specifications for seismic sensor steel pipe in the caissons, for downhole sensors and cables (deep and shallow downholes) installation.
2. No. 5 traffic rated pull box for telephone.
3. No. 5 traffic rated pull box for 120-volt power.

THIS DRAWING ACCURATE FOR ELECTRICAL WORK ONLY.

| | BY | CHECKED |
|---|---|---|
| DESIGN | Johnny Wu | Tech Ngov |
| DETAILS | Linda Monson | Johnny Wu |
| QUANTITIES | Johnny Wu | Tech Ngov |

STATE OF CALIFORNIA DEPARTMENT OF TRANSPORTATION

DIVISION OF ENGINEERING SERVICES
ELECTRICAL-MECHANICAL-WATER AND WASTEWATER DESIGN

BRIDGE NO. 53-3032
POST MILE 3.58

SCHUYLER HEIM BRIDGE (REPLACE)
SEISMIC MONITORING SYSTEM
ENLARGED LAYOUT NO. 4
BENT 17 TO BENT 20

SHEET EE-5

DOES SD Imperial Rev.1/07

ORIGINAL SCALE IN INCHES FOR REDUCED PLANS 0 1 2 3

CU 07271
EA 138201

DISREGARD PRINTS BEARING EARLIER REVISION DATES → 3/4/10 3/11/10 3/23/10 3/26/10 4/13/10

REVISION DATES (PRELIMINARY STAGE ONLY) SHEET 210 OF 247

18-OCT-2010 14:40

53-3032-z-ee_05.dgn

| DIST. | COUNTY | ROUTE | POST MILES TOTAL PROJECT | SHEET NO. | TOTAL SHEETS |
|---|---|---|---|---|---|
| 07 | LA | 47,103 | 3.5/4.6, 0.0/1.1 | 713 | 1003 |

REGISTERED ELECTRICAL ENGINEER — 4-13-10 DATE

REGISTERED PROFESSIONAL ENGINEER — CHI WU — No. E 10773 — Exp. 6-30-11 — ELEC — STATE OF CALIFORNIA

10-11-10
PLANS APPROVAL DATE

The State of California or its officers or agents shall not be responsible for the accuracy or completeness of electronic copies of this plan sheet.

*Notes:*

1. *Barrier and reinforcing bars not shown.*
2. *LB conduit body may be used for transition of rigid steel conduit to liquidtight flexible conduit.*
3. *Use medium duty stainless steel wire mesh, with expansion anchor and hook, to secure the flexible conduit, yet it can easily break away during earthquake motion.*

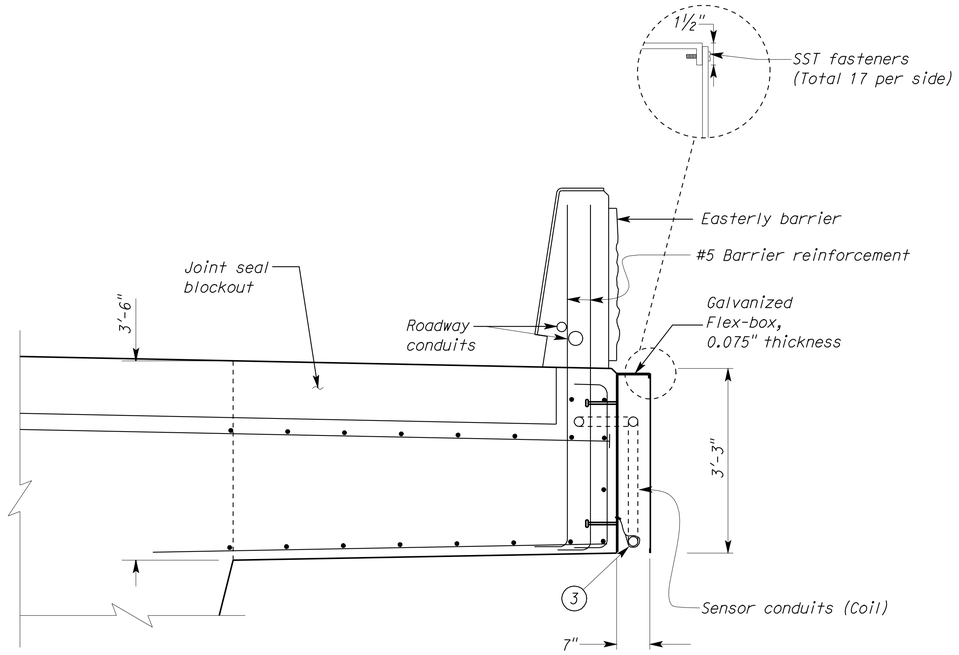


## 1 CONDUIT TRANSITION DETAILS-AT HINGE

NO SCALE

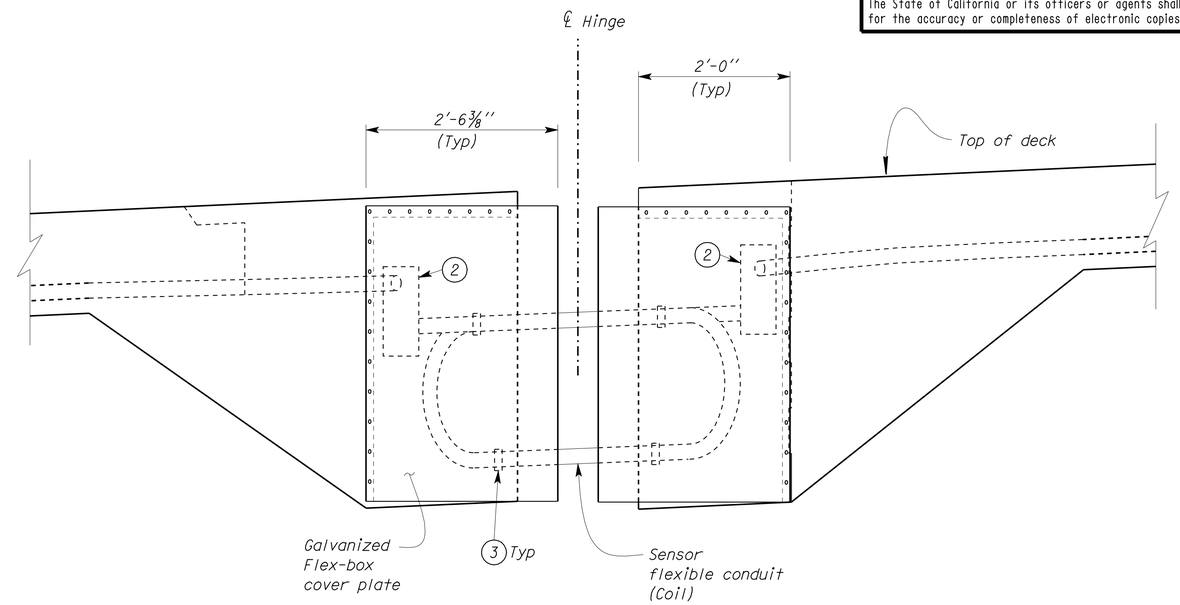


## 2 CONDUIT TRANSITION DETAILS-FLEX BOX 1

NO SCALE

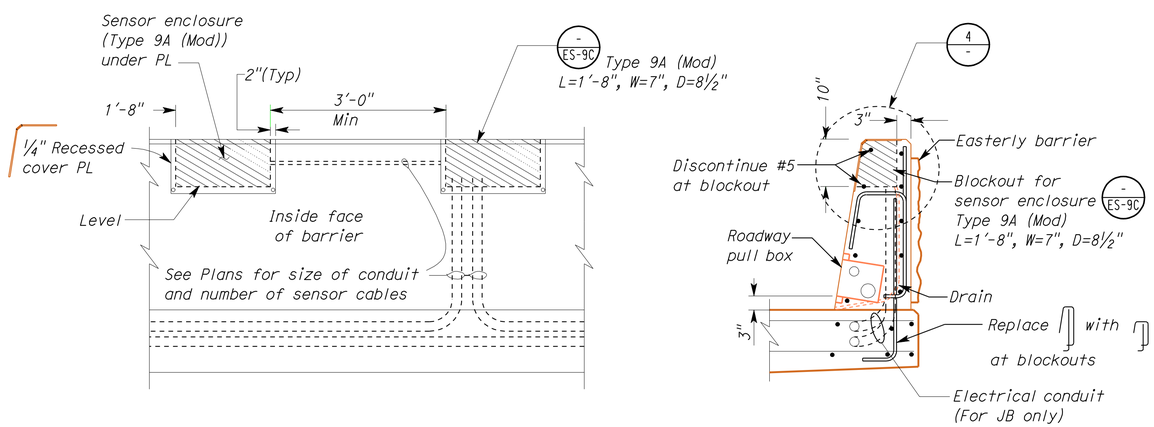


## 3 SENSOR ENCLOSURE DETAILS-AT OVERHANG

NO SCALE

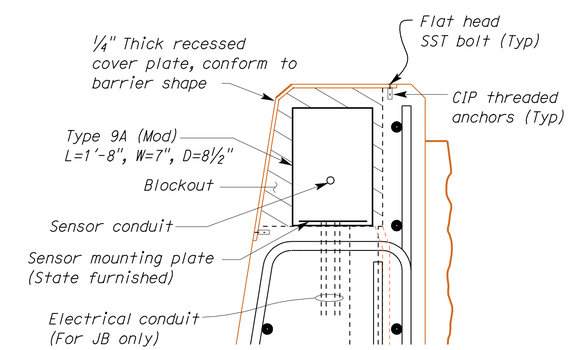


## 4 SENSOR ENCLOSURE DETAILS-ENLARGED

NO SCALE

THIS DRAWING ACCURATE FOR ELECTRICAL WORK ONLY.

| | BY | CHECKED |
|---|---|---|
| DESIGN | Johnny Wu | Tech Ngov |
| DETAILS | LInda Monson | Johnny Wu |
| QUANTITIES | Johnny Wu | Tech Ngov |

STATE OF CALIFORNIA
DEPARTMENT OF TRANSPORTATION

DIVISION OF ENGINEERING SERVICES
ELECTRICAL-MECHANICAL-WATER AND WASTEWATER DESIGN

BRIDGE NO. 53-3032
POST MILE 3.58

**SCHUYLER HEIM BRIDGE (REPLACE)**

SEISMIC SENSOR ENCLOSURE DETAILS

SHEET **EE-6**

DOES SD Imperial Rev. 1/07

ORIGINAL SCALE IN INCHES FOR REDUCED PLANS 0 1 2 3

CU 07271
EA 138201

DISREGARD PRINTS BEARING EARLIER REVISION DATES → 3/8/10 3/16/10 3/24/10 3/26/10 4/13/10

REVISION DATES (PRELIMINARY STAGE ONLY) SHEET 211 OF 247

18-OCT-2010 14:40

53-3032-z-ee_06.dgn

| DIST. | COUNTY | ROUTE | POST MILES TOTAL PROJECT | SHEET NO. | TOTAL SHEETS |
|---|---|---|---|---|---|
| 07 | LA | 47,103 | 3.5/4.6, 0.0/1.1 | 714 | 1003 |

REGISTERED ELECTRICAL ENGINEER — 4-13-10 DATE

REGISTERED PROFESSIONAL ENGINEER CHI WU No. E 10773 Exp. 6-30-11 ELEC STATE OF CALIFORNIA

10-11-10
PLANS APPROVAL DATE

The State of California or its officers or agents shall not be responsible for the accuracy or completeness of electronic copies of this plan sheet.

Notes:

1. Install duplex and telephone outlet inside lower 12" of cabinet.
2. Install drain fitting in bottom of junction box.
3. Install pull rope in conduits.

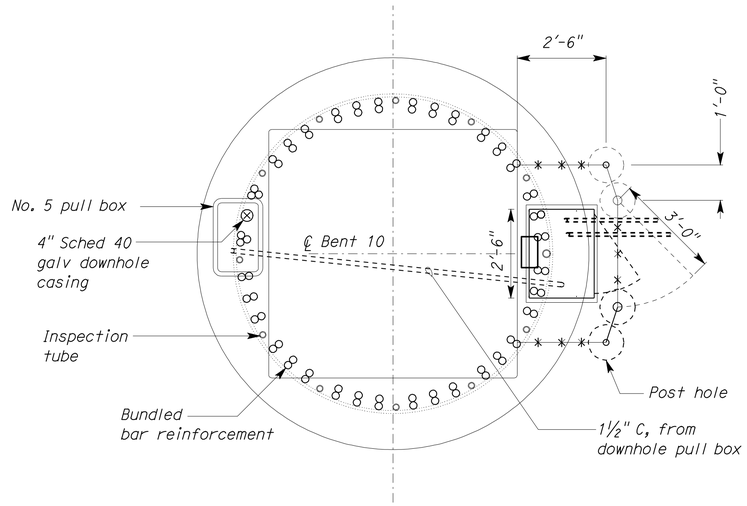


**PLAN**
NO SCALE

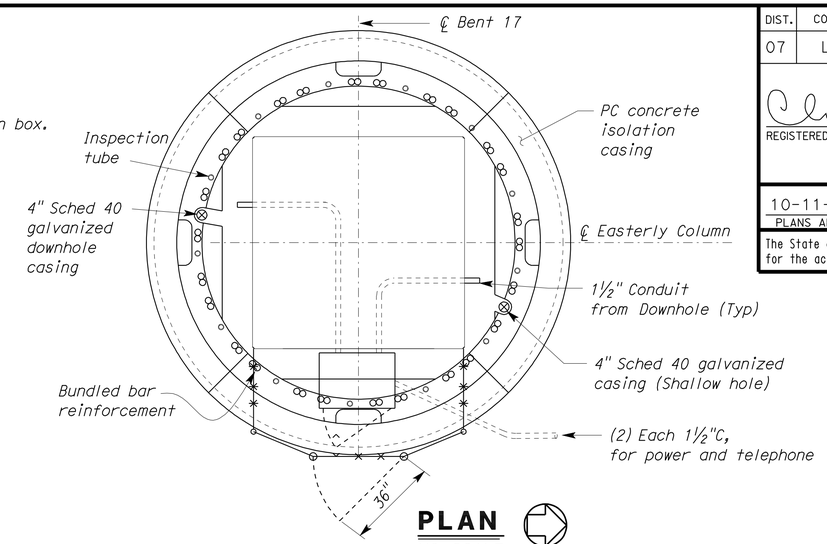


**PLAN**
NO SCALE

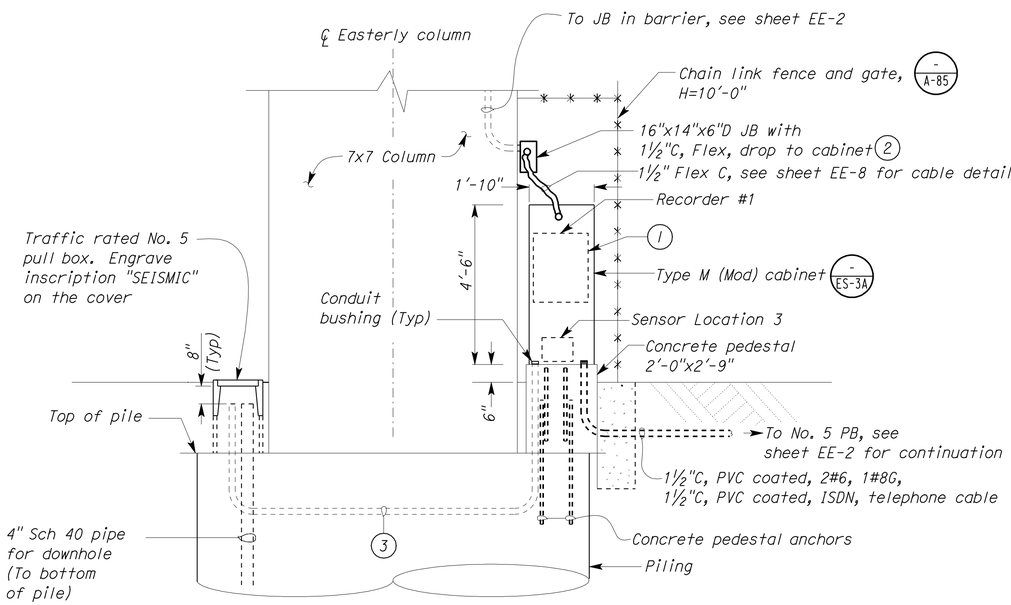


**(1) BENT 10 ELEVATION**
NO SCALE

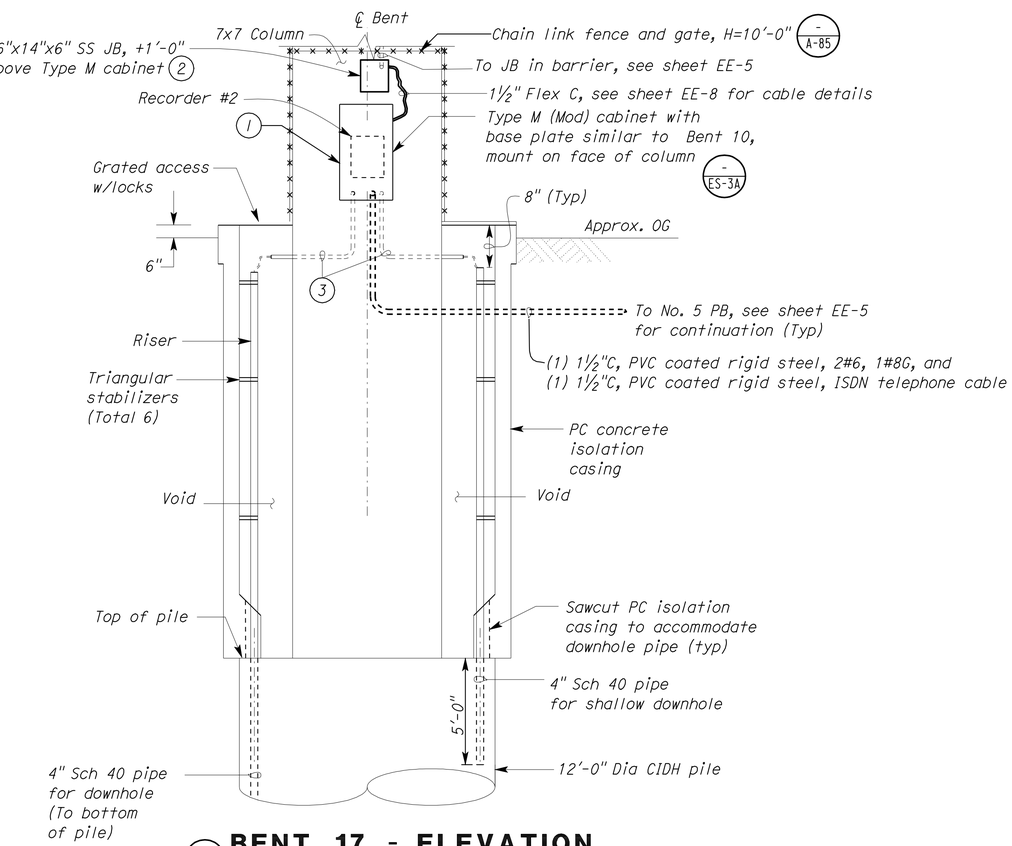


**(2) BENT 17 - ELEVATION**
NO SCALE

THIS DRAWING ACCURATE FOR ELECTRICAL WORK ONLY.

| | BY | CHECKED |
|---|---|---|
| DESIGN | Johnny Wu | Tech Ngov |
| DETAILS | Linda Monson | Johnny Wu |
| QUANTITIES | Johnny Wu | Tech Ngov |

STATE OF CALIFORNIA
DEPARTMENT OF TRANSPORTATION

DIVISION OF ENGINEERING SERVICES
ELECTRICAL-MECHANICAL-WATER AND WASTEWATER DESIGN

BRIDGE NO. 53-3032
POST MILE 3.58

**SCHUYLER HEIM BRIDGE (REPLACE)**
SEISMIC MONTORING SYSTEM
RECORDER DETAILS

SHEET **EE-7**

DOES SD Imperial Rev. 1/07

ORIGINAL SCALE IN INCHES FOR REDUCED PLANS 0 1 2 3

CU 07271
EA 138201

DISREGARD PRINTS BEARING EARLIER REVISION DATES → 3/8/10 3/16/10 3/24/10 3/26/10 4/13/10

REVISION DATES (PRELIMINARY STAGE ONLY) — SHEET 212 OF 247

21-OCT-2010 14:59
53-3032-z-ee_07.dgn

| DIST. | COUNTY | ROUTE | POST MILES TOTAL PROJECT | SHEET NO. | TOTAL SHEETS |
|---|---|---|---|---|---|
| 07 | LA | 47,103 | 3.5/4.6, 0.0/1.1 | 715 | 1003 |

REGISTERED ELECTRICAL ENGINEER — 4-13-10 DATE

REGISTERED PROFESSIONAL ENGINEER — CHI WU — No. E 10773 — Exp. 6-30-11 — ELEC — STATE OF CALIFORNIA

10-11-10
PLANS APPROVAL DATE

The State of California or its officers or agents shall not be responsible for the accuracy or completeness of electronic copies of this plan sheet.

| Location No. | No. of Sensors | Cable No. | Recorder No. | Location Description | Enclosure Type No. | Comments |
|---|---|---|---|---|---|---|
| 1 | 1 | 1.1-1 | 1 | Hinge 2 (South of Bent 9), in the east barrier, north of the hinge. | Mod. Type 9A | |
| 2 | 2 | 2.1-1 | 1 | Bent 10, in the east barrier. | Mod. Type 9A | |
| | | 2.1-2 | 1 | | | |
| 3 | 2 | N/A | 1 | Bent 10, on the built-up pedestal above top of east pile. On east side of bent. | See plan | Sensors in base of recorder cabinet. Sensor pigtail cables will go directly to recorder. |
| | | N/A | 1 | | | |
| 4 | 3 | N/A | 1 | Bent 10, bottom of east pile. On west side of bent. | See plan | Downhole sensors in pile. Downhole cable assembly will go directly to the recorder cabinet. |
| | | N/A | 1 | | | |
| | | N/A | 1 | | | |
| 5 | 1 | 5.1-1 | 1 | Hinge 3 (South of Bent 11), in the east barrier, north of the hinge. | Mod. Type 9A | |
| 6 | 2 | 6.1-1 | 1 | Hinge 4 (South of Pier 13), in the east barrier, south of the hinge. | Mod. Type 9A | |
| | | 6.1-2 | 1 | | | |
| 7 | 1 | 7.1-1 | 1 | Hinge 4 (South of Pier 13), in the east barrier, north of the hinge. | Mod. Type 9A | |
| 8 | 2 | 8.2-1 | 2 | Mid-span between Piers 14 and 15, in the east barrier. | Mod. Type 9A | |
| | | 8.2-2 | 2 | | | |
| 9 | 2 | 9.2-1 | 2 | Pier 15, in the east barrier. | Mod. Type 9A | |
| | | 9.2-2 | 2 | | | |
| 10 | 2 | 10.2-1 | 2 | Hinge 5 (North of Pier 16), in the east barrier, south of the hinge. | Mod. Type 9A | |
| | | 10.2-2 | 2 | | | |
| 11 | 1 | 11.2-1 | 2 | Hinge 5 (North of Pier 16), in the east barrier, north of the hinge. | Mod. Type 9A | |
| 12 | 2 | 12.2-1 | 2 | Bent 17, in the east barrier. | Mod. Type 9A | 12.2-3 and 12.2-4 are spare cables |
| | | 12.2-2 | 2 | | | |
| | | 12.2-3 | 2 | | | |
| | | 12.2-4 | 2 | | | |
| 13 | 2 | N/A | 2 | Bent 17, in top portion of east pile. On south side of bent. | See plan | Downhole sensors in pile. Downhole cable assembly will go directly to recorder cabinet. |
| | | N/A | 2 | | | |
| 14 | 3 | N/A | 2 | Bent 17, bottom of east pile. On north side of bent. | See plan | Downhole sensors in pile. Downhole cable assembly will go directly to recorder cabinet. |
| | | N/A | 2 | | | |
| | | N/A | 2 | | | |
| 15 | 1 | 15.2-1 | 2 | Hinge 6 (North of Bent 20), in the east barrier, south of the hinge. | Mod. Type 9A | |
| Total | 27 | | | | | |

## SEISMIC SENSOR LOCATION TABLE

Legend for cable identification:
(This sheet only)

1 . 1 -1
- Sensor #1
- Recorder #1
- Sensor Location #1

R1-R2= Seismic recorder (RS 485) interconnect cable from Recorder #1 to Recorder #2.

Label "Spare SSC" as 0.1.2.0

| Conduit No. | Conduit Size (Inch) | No. of Sensor Cable | Cable Identification |
|---|---|---|---|
| 1 | 1 | 1 | 1.1-1 |
| 2 | 1 | 1 | 1.1-1 |
| 3 | 1.5 | 9 | 1.1-1, 2.1-1, 2.1-2, 5.1-1, 6.1-1, 6.1-2, 7.1-1, R1-R2, Spare SSC |
| 4 | 1 | 2 | 2.1-1, 2.1-2 |
| 5 | 1.5 | 6 | 5.1-1, 6.1-1, 6.1-2, 7.1-1, R1-R2, Spare SSC |
| 6 | 1 | 1 | 5.1-1 |
| 7 | 1.5 | 5 | 6.1-1, 6.1-2, 7.1-1, R1-R2, Spare SSC |
| 8 | 1 | 2 | 6.1-1, 6.1-2 |
| 9 | 1.5 | 3 | 7.1-1, R1-R2, Spare SSC |
| 10 | 1 | 1 | 7.1-1 |
| 11 | 1.5 | 2 | R1-R2, Spare SSC |
| 12 | 1 | 2 | 8.2-1, 8.2-2 |
| 13 | 1.5 | 4 | 8.2-1, 8.2-2, R1-R2, Spare SSC |
| 14 | 1 | 2 | 9.2-1, 9.2-2 |
| 15 | 1.5 | 6 | 8.2-1, 8.2-2, 9.2-1, 9.2-2, R1-R2, Spare SSC |
| 16 | 1 | 2 | 10.2-1, 10.2-2 |
| 17 | 1.5 | 8 | 8.2-1, 8.2-2, 9.2-1, 9.2-2, 10.2-1, 10.2-2, R1-R2, Spare SSC |
| 18 | 1 | 1 | 11.2-1 |
| 19 | 1.5 | 9 | 8.2-1, 8.2-2, 9.2-1, 9.2-2, 10.2-1, 10.2-2, 11.2-1, R1-R2, Spare SSC |
| 20 | 2 | 14 | 8.2-1, 8.2-2, 9.2-1, 9.2-2, 10.2-1, 10.2-2, 11.2-1, 12.2-1, 12.2-2, 12.2-3, 12.2-4, 15.2-1, R1-R2, Spare SSC |
| 21 | 1.5 | 4 | 12.2-1, 12.2-2, 12.2-3, 12.2-4 |
| 22 | 1.5 | 1 | 15.2-1 |
| 23 | 1 | 1 | 15.2-1 |

## CONDUIT SCHEDULE

| | BY | CHECKED |
|---|---|---|
| DESIGN | Johnny Wu | Tech Ngov |
| DETAILS | Linda Monson | Johnny Wu |
| QUANTITIES | Johnny Wu | Tech Ngov |

STATE OF CALIFORNIA
DEPARTMENT OF TRANSPORTATION

DIVISION OF ENGINEERING SERVICES
ELECTRICAL-MECHANICAL-WATER AND WASTEWATER DESIGN

BRIDGE NO. 53-3032
POST MILE 3.58

SCHUYLER HEIM BRIDGE (REPLACE)
SEISMIC SENSOR ENCLOSURE LOCATION TABLE

SHEET EE-8

DOES SD Imperial Rev.1/07

ORIGINAL SCALE IN INCHES FOR REDUCED PLANS 0 1 2 3

CU 07271
EA 138201

DISREGARD PRINTS BEARING EARLIER REVISION DATES → 3/9/10 3/16/10 3/23/10 3/24/10 3/26/10 4/13/10

REVISION DATES (PRELIMINARY STAGE ONLY) SHEET 213 OF 247

18-OCT-2010 14:41

53-3032-z-ee_08.dgn

| DIST | COUNTY | ROUTE | POST MILES TOTAL PROJECT | SHEET No | TOTAL SHEETS |
|---|---|---|---|---|---|
| 07 | LA | 47,103 | 3.5/4.6, 0.0/1.1 | 716 | 1003 |

REGISTERED CIVIL ENGINEER 04/19/10 DATE

10-11-10
PLANS APPROVAL DATE

REGISTERED PROFESSIONAL ENGINEER G.J.Gunaranjan No. C71758 Exp.12-31-11 CIVIL STATE OF CALIFORNIA

*The State of California or its officers or agents shall not be responsible for the accuracy or completeness of electronic copies of this plan sheet.*

ACTA
ONE CIVIC PLAZA. SUITE 350,
CARSON, CA 90745

EARTH MECHANICS, INC.
17660, NEWHOPE STREET, SUITE E
FOUNTAIN VALLEY, CA 92708

BENCHMARKS:

| PT-503 | PT-531065 |
|---|---|
| REBAR | PK NAIL IN LEAD |
| 18.51'Lt ℄ "A" Line | 53.55'Lt ℄ "A" Line |
| Sta. 8+8.66 | Sta. 4+24.53 |
| N 1735350.13 | N 1734960.02 |
| E 6489075.70 | E 6489051.67 |
| Elev. = -0.53 | Elev. = 17.75 |

NOTES:

(1) This LOTB sheet (Boring Record) was prepared in accordance with the Caltrans Soil and Rock Classification Logging, Classification and Presentation Manual (June 2007).

(2) 2.4" samples were taken using a California Split-spoon Sampler.

(3) A rope and cat-head hammer system consisting of a hammer weight of 140 lbs falling a distance of 30" was used to advance the drive sampler.

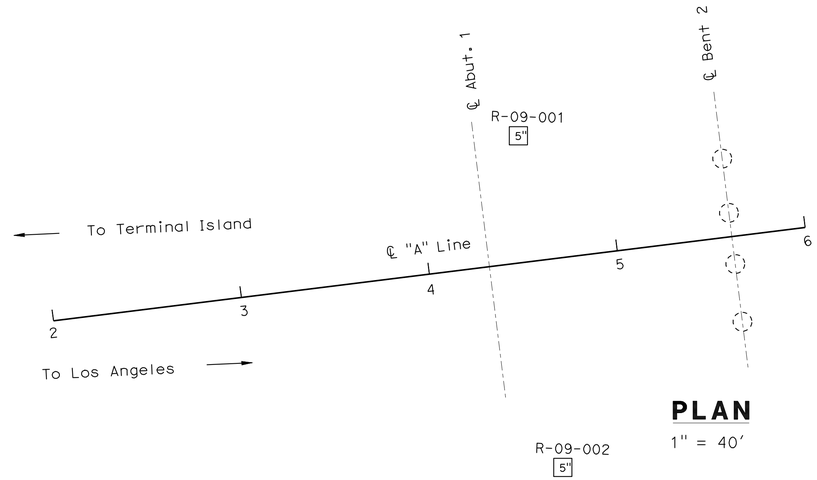


**PLAN**
1" = 40'

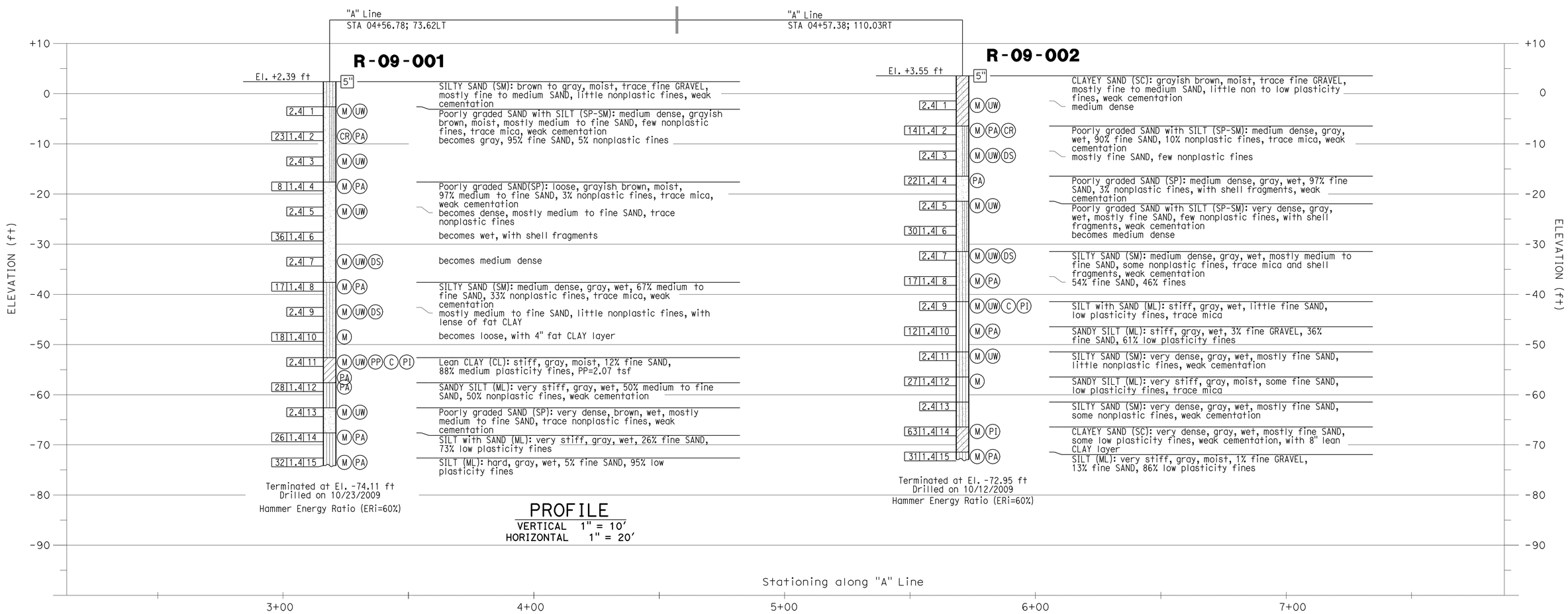


**PROFILE**
VERTICAL 1" = 10'
HORIZONTAL 1" = 20'

| | | | | | |
|---|---|---|---|---|---|
| DESIGN OVERSIGHT | DRAWN BY: J. Fang | FIELD INVESTIGATION BY: | PREPARED FOR THE STATE OF CALIFORNIA DEPARTMENT OF TRANSPORTATION | G. J. Gunaranjan PROJECT ENGINEER | BRIDGE NO. 53-3032 |
| SIGN OFF DATE | CHECKED BY: K. Pratheepan | R. Jie | | | POST MILE 3.58 |

**SCHUYLER HEIM BRIDGE (REPLACE)**

**LOG OF TEST BORINGS NO. 1 OF 34**

OGS CIVIL LOG OF TEST BORINGS SHEET (ENGLISH) (REV. 06-01-09)

ORIGINAL SCALE IN INCHES FOR REDUCED PLANS 0 1 2 3

CU 07-271
EA 138201

DISREGARD PRINTS BEARING EARLIER REVISION DATES

REVISION DATES (PRELIMINARY STAGE ONLY) 02/08/10 03/24/10 05/28/10 07/07/10 07/02/10

SHEET 214 OF 247

FILE => 53-3032-z-1tb01.dgn

USERNAME => trlenard DATE PLOTTED => 18-OCT-2010 TIME PLOTTED => 14:41

| DIST | COUNTY | ROUTE | POST MILES TOTAL PROJECT | SHEET No | TOTAL SHEETS |
|---|---|---|---|---|---|
| 07 | LA | 47,103 | 3.5/4.6, 0.0/1.1 | 717 | 1003 |

REGISTERED CIVIL ENGINEER 04/19/10 DATE

10-11-10
PLANS APPROVAL DATE

REGISTERED PROFESSIONAL ENGINEER G.J.Gunaranjan No. C71758 Exp.12-31-11 CIVIL STATE OF CALIFORNIA

*The State of California or its officers or agents shall not be responsible for the accuracy or completeness of electronic copies of this plan sheet.*

ACTA
ONE CIVIC PLAZA. SUITE 350,
CARSON, CA 90745

EARTH MECHANICS, INC.
17660, NEWHOPE STREET, SUITE E
FOUNTAIN VALLEY, CA 92708

BENCHMARKS:

Monument: 1A-144-04

| PT-503 | PT-531065 |
|---|---|
| REBAR | PK NAIL IN LEAD |
| 18.51'Lt ℄ "A" Line | 53.55'Lt ℄ "A" Line |
| Sta. 8+8.66 | Sta. 4+24.53 |
| N 1735350.13 | N 1734960.02 |
| E 6489075.70 | E 6489051.67 |
| Elev. = -0.53 | Elev. = 17.75 |

NOTES:

(1) This LOTB sheet (Boring Record) was prepared in accordance with the Caltrans Soil and Rock Classification Logging, Classification and Presentation Manual (June 2007).

(2) 2.4" samples were taken using a California Split-spoon Sampler.

(3) A rope and cat-head hammer system consisting of a hammer weight of 140 lbs falling a distance of 30" was used to advance the drive sampler.

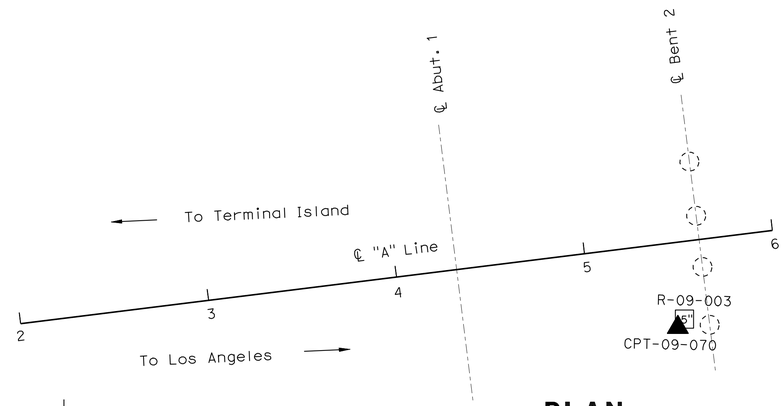


## PLAN

1" = 40'

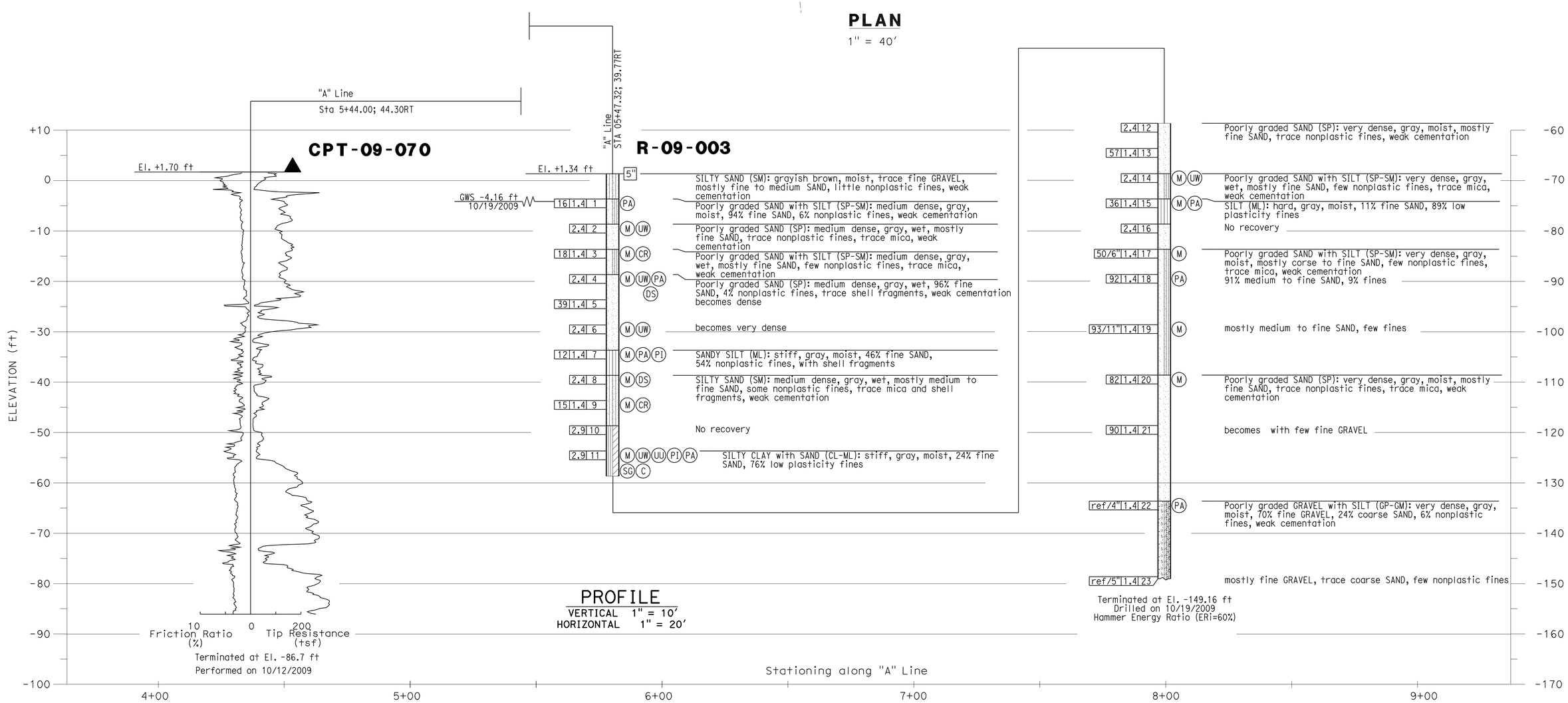


## PROFILE

VERTICAL 1" = 10'
HORIZONTAL 1" = 20'

| | | | | | |
|---|---|---|---|---|---|
| DESIGN OVERSIGHT | DRAWN BY: J. Fang | FIELD INVESTIGATION BY: | PREPARED FOR THE STATE OF CALIFORNIA DEPARTMENT OF TRANSPORTATION | G. J. Gunaranjan PROJECT ENGINEER | BRIDGE NO. 53-3032 POST MILE 3.58 | SCHUYLER HEIM BRIDGE (REPLACE) |
| SIGN OFF DATE | CHECKED BY: K. Pratheepan | R. Jie | | | | LOG OF TEST BORINGS NO. 2 OF 34 |

OGS CIVIL LOG OF TEST BORINGS SHEET (ENGLISH) (REV. 06-01-09)

ORIGINAL SCALE IN INCHES FOR REDUCED PLANS 0 1 2 3

CU 07-271
EA 138201

DISREGARD PRINTS BEARING EARLIER REVISION DATES

REVISION DATES (PRELIMINARY STAGE ONLY) 02/08/10 03/17/10 05/28/10 01/01/10 01/02/10

SHEET 215 OF 247

FILE => 53-3032-z-1tb02.dgn

USERNAME => trienard DATE PLOTTED => 18-OCT-2010 TIME PLOTTED => 14:41

| DIST | COUNTY | ROUTE | POST MILES TOTAL PROJECT | SHEET No | TOTAL SHEETS |
|---|---|---|---|---|---|
| 07 | LA | 47,103 | 3.5/4.6, 0.0/1.1 | 718 | 1003 |

REGISTERED CIVIL ENGINEER 04/19/10 DATE

10-11-10
PLANS APPROVAL DATE

REGISTERED PROFESSIONAL ENGINEER G.J.Gunaranjan No. C71758 Exp.12-31-11 CIVIL STATE OF CALIFORNIA

*The State of California or its officers or agents shall not be responsible for the accuracy or completeness of electronic copies of this plan sheet.*

ACTA
ONE CIVIC PLAZA. SUITE 350,
CARSON, CA 90745

EARTH MECHANICS, INC.
17660, NEWHOPE STREET, SUITE E
FOUNTAIN VALLEY, CA 92708

BENCHMARKS:

| PT-503 | PT-531065 |
|---|---|
| REBAR | PK NAIL IN LEAD |
| 18.51'Lt ℄ "A" Line | 53.55'Lt ℄ "A" Line |
| Sta. 8+8.66 | Sta. 4+24.53 |
| N 1735350.13 | N 1734960.02 |
| E 6489075.70 | E 6489051.67 |
| Elev. = -0.53 | Elev. = 17.75 |

NOTES:

(1) This LOTB sheet (Boring Record) was prepared in accordance with the Caltrans Soil and Rock Classification Logging, Classification and Presentation Manual (June 2007).

(2) 2.4" samples were taken using a California Split-spoon Sampler.

(3) An automatic trip hammer system consisting of a hammer weight of 140 lbs falling a distance of 30" was used to advance the drive sampler.

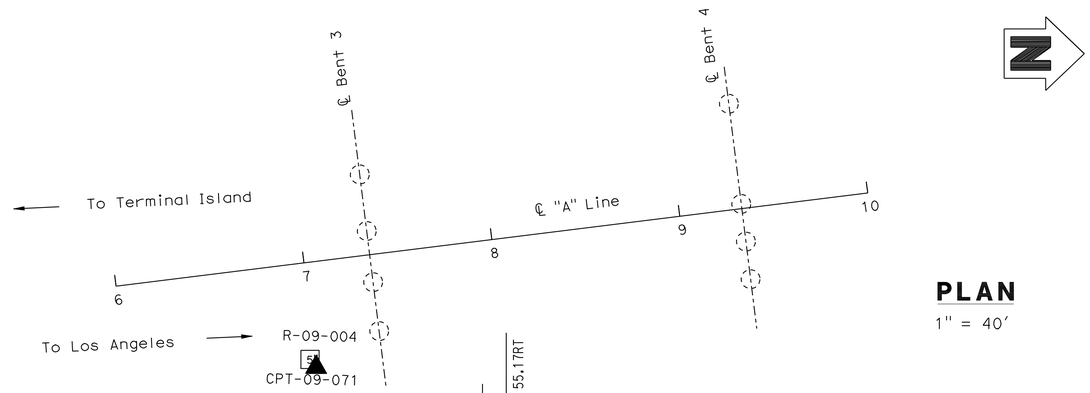


## PLAN

1" = 40'

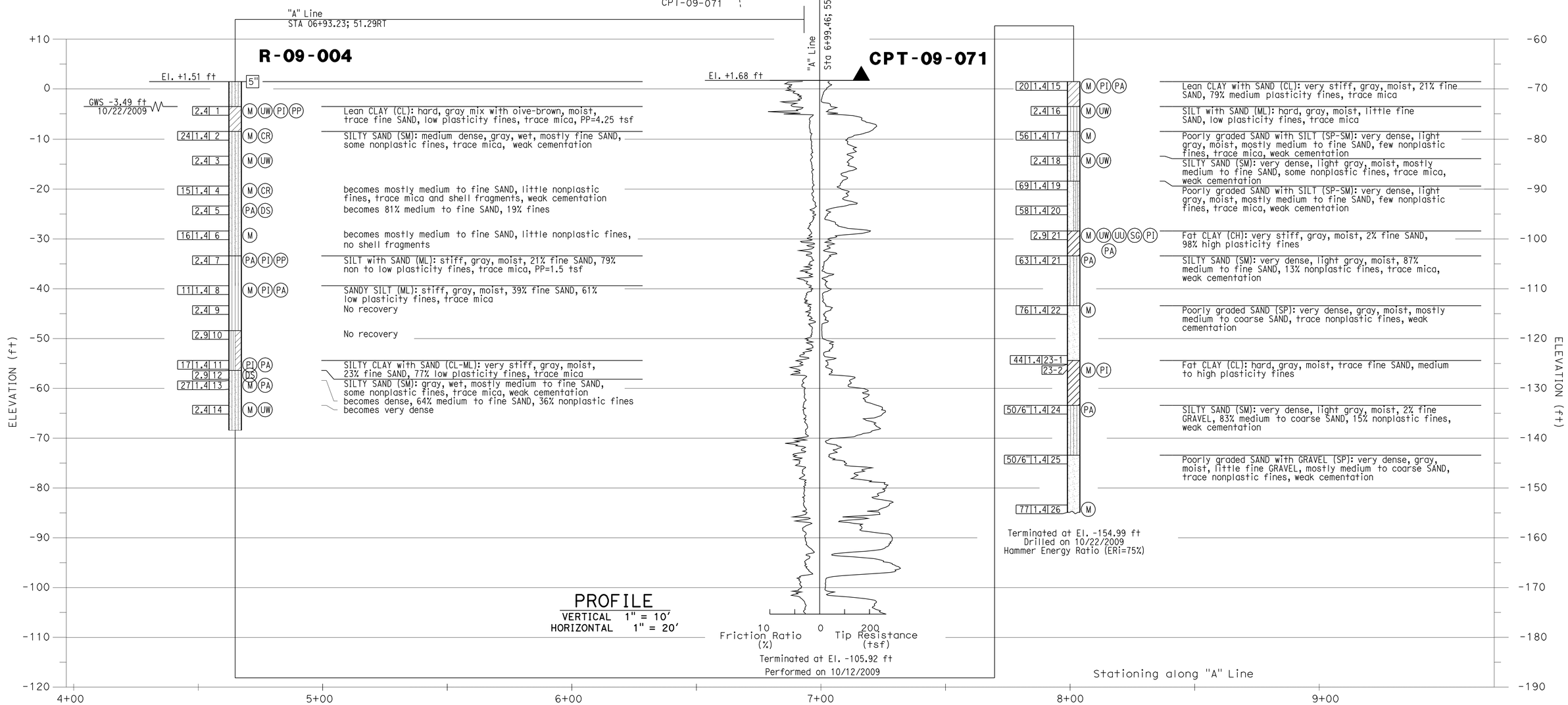


## PROFILE

VERTICAL 1" = 10'
HORIZONTAL 1" = 20'

| | | | | | |
|---|---|---|---|---|---|
| DESIGN OVERSIGHT | DRAWN BY: J. Fang | FIELD INVESTIGATION BY: | PREPARED FOR THE STATE OF CALIFORNIA DEPARTMENT OF TRANSPORTATION | G. J. Gunaranjan PROJECT ENGINEER | BRIDGE NO. 53-3032 / POST MILE 3.58 | SCHUYLER HEIM BRIDGE (REPLACE) |
| SIGN OFF DATE | CHECKED BY: K. Pratheepan | E. Brown | | | | LOG OF TEST BORINGS NO. 3 OF 34 |

OGS CIVIL LOG OF TEST BORINGS SHEET (ENGLISH) (REV. 06-01-09)

ORIGINAL SCALE IN INCHES FOR REDUCED PLANS 0 1 2 3

CU 07-271
EA 138201

DISREGARD PRINTS BEARING EARLIER REVISION DATES

REVISION DATES (PRELIMINARY STAGE ONLY) 02/08/10 03/17/10 05/28/10 07/01/10 07/02/10

SHEET 216 OF 247

FILE => 53-3032-z-1tb03.dgn

USERNAME => trhenard DATE PLOTTED => 18-OCT-2010 TIME PLOTTED => 14:41

| DIST | COUNTY | ROUTE | POST MILES TOTAL PROJECT | SHEET No | TOTAL SHEETS |
|---|---|---|---|---|---|
| 07 | LA | 47,103 | 3.5/4.6, 0.0/1.1 | 719 | 1003 |

REGISTERED CIVIL ENGINEER 04/19/10 DATE

10-11-10
PLANS APPROVAL DATE

REGISTERED PROFESSIONAL ENGINEER G.J.Gunaranjan No. C71758 Exp.12-31-11 CIVIL STATE OF CALIFORNIA

*The State of California or its officers or agents shall not be responsible for the accuracy or completeness of electronic copies of this plan sheet.*

ACTA
ONE CIVIC PLAZA. SUITE 350,
CARSON, CA 90745

EARTH MECHANICS, INC.
17660, NEWHOPE STREET, SUITE E
FOUNTAIN VALLEY, CA 92708

BENCHMARKS:

| PT-501 | PT-15001 |
|---|---|
| SET + FOOTING 23.25'Rt ℄ "A" Line | STK601061 MAG NAIL IN LEAD CUT 113.09'Lt ℄ "A" Line |
| Sta. 10+59.08 | Sta. 10+42.39 |
| N 1735599.25 | N 1735565.80 |
| E 6489049.69 | E 6488916.52 |
| Elev. = -0.91 | Elev. = 3.42 |

NOTES:

(1) This LOTB sheet (Boring Record) was prepared in accordance with the Caltrans Soil and Rock Classification Logging, Classification and Presentation Manual (June 2007).

(2) 2.4" samples were taken using a California Split-spoon Sampler.

(3) A rope and cat-head hammer system consisting of a hammer weight of 140 lbs falling a distance of 30" was used to advance the drive sampler.

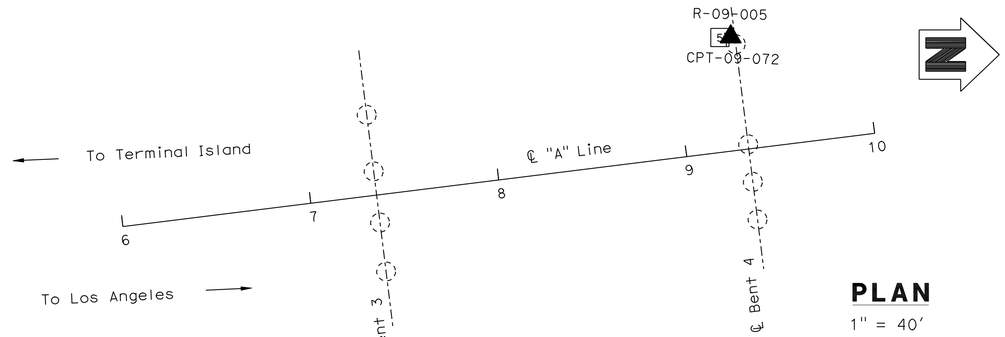


**PLAN**
1" = 40'

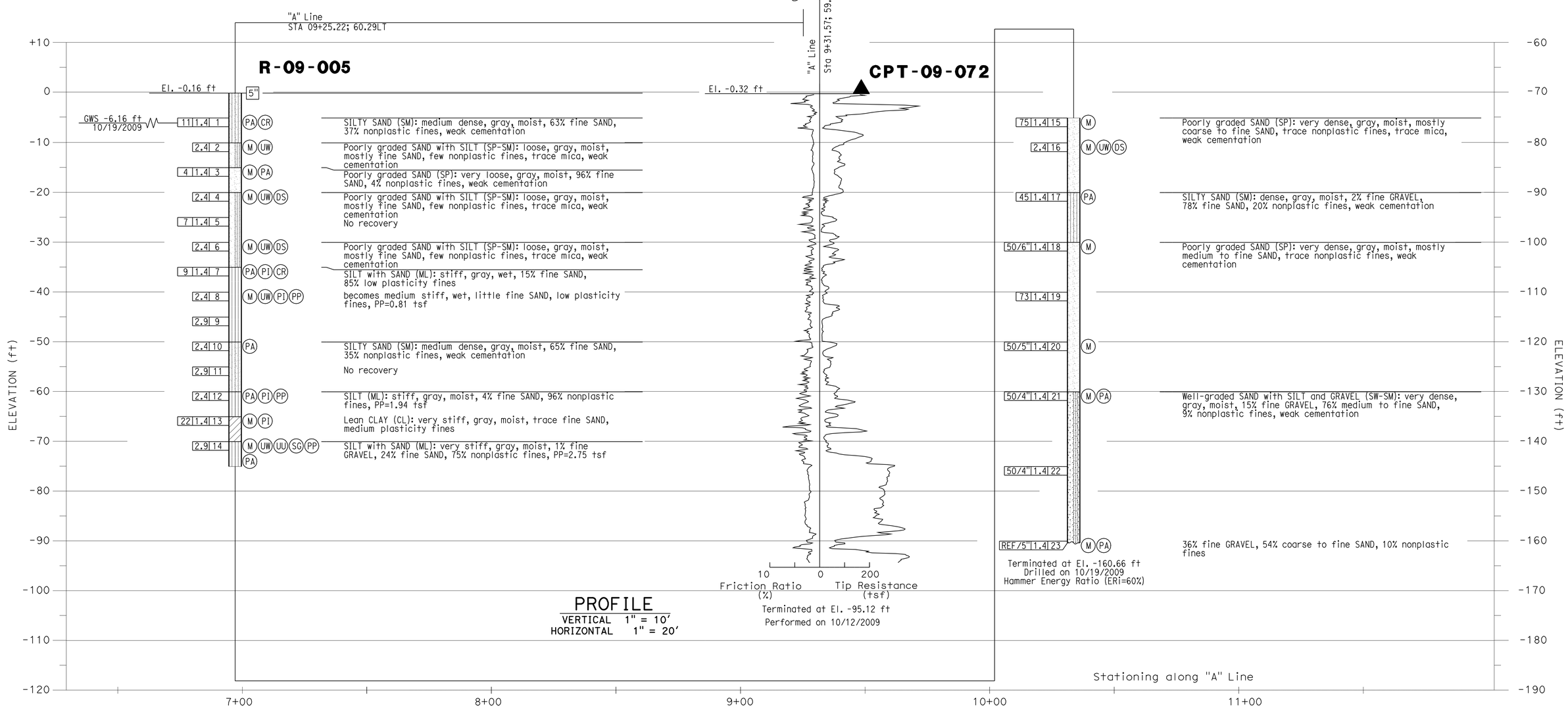


**PROFILE**
VERTICAL 1" = 10'
HORIZONTAL 1" = 20'

| | | | | | |
|---|---|---|---|---|---|
| DESIGN OVERSIGHT | DRAWN BY: J. Fang | FIELD INVESTIGATION BY: | PREPARED FOR THE STATE OF CALIFORNIA DEPARTMENT OF TRANSPORTATION | G. J. Gunaranjan PROJECT ENGINEER | BRIDGE NO. 53-3032 POST MILE 3.58 |
| SIGN OFF DATE | CHECKED BY: K. Pratheepan | R. Jie | | | |

**SCHUYLER HEIM BRIDGE (REPLACE)**

**LOG OF TEST BORINGS NO. 4 OF 34**

OGS CIVIL LOG OF TEST BORINGS SHEET (ENGLISH) (REV. 06-01-09)

ORIGINAL SCALE IN INCHES FOR REDUCED PLANS 0 1 2 3

CU 07-271
EA 138201

DISREGARD PRINTS BEARING EARLIER REVISION DATES

REVISION DATES (PRELIMINARY STAGE ONLY) 02/08/10 03/12/10 05/28/10 07/01/10 07/02/10

SHEET 217 OF 247

FILE => 53-3032-z-1tb04.dgn

USERNAME => trlenard DATE PLOTTED => 18-OCT-2010 TIME PLOTTED => 14:41

| DIST | COUNTY | ROUTE | POST MILES TOTAL PROJECT | SHEET No | TOTAL SHEETS |
|---|---|---|---|---|---|
| 07 | LA | 47,103 | 3.5/4.6, 0.0/1.1 | 720 | 1003 |

REGISTERED CIVIL ENGINEER 04/19/10 DATE

10-11-10
PLANS APPROVAL DATE

REGISTERED PROFESSIONAL ENGINEER G.J.Gunaranjan No. C71758 Exp.12-31-11 CIVIL STATE OF CALIFORNIA

*The State of California or its officers or agents shall not be responsible for the accuracy or completeness of electronic copies of this plan sheet.*

ACTA
ONE CIVIC PLAZA. SUITE 350,
CARSON, CA 90745

EARTH MECHANICS, INC.
17660, NEWHOPE STREET, SUITE E
FOUNTAIN VALLEY, CA 92708

BENCHMARKS:

| PT-501 | PT-15001 |
|---|---|
| SET + FOOTING 23.25'Rt ℄ "A" Line | STK601061 MAG NAIL IN LEAD CUT 113.09'Lt ℄ "A" Line |
| Sta. 10+59.08 | Sta. 10+42.39 |
| N 1735599.25 | N 1735565.80 |
| E 6489049.69 | E 6488916.52 |
| Elev. = -0.91 | Elev. = 3.42 |

NOTES:

(1) This LOTB sheet (Boring Record) was prepared in accordance with the Caltrans Soil and Rock Classification Logging, Classification and Presentation Manual (June 2007).

(2) 2.4" samples were taken using a California Split-spoon Sampler.

(3) An automatic trip hammer system consisting of a hammer weight of 140 lbs falling a distance of 30" was used to advance the drive sampler.

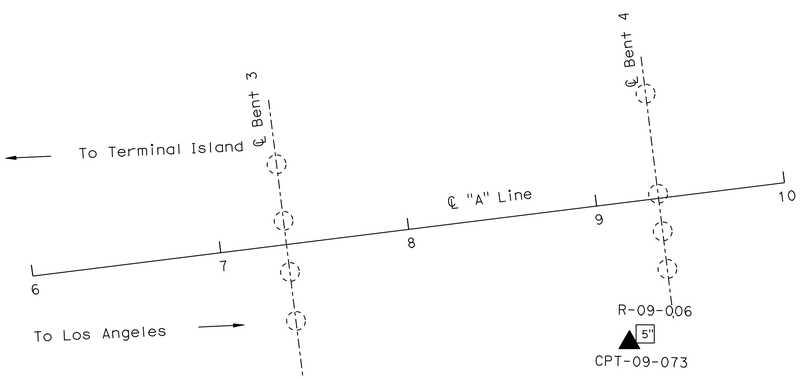


**PLAN**
1" = 40'

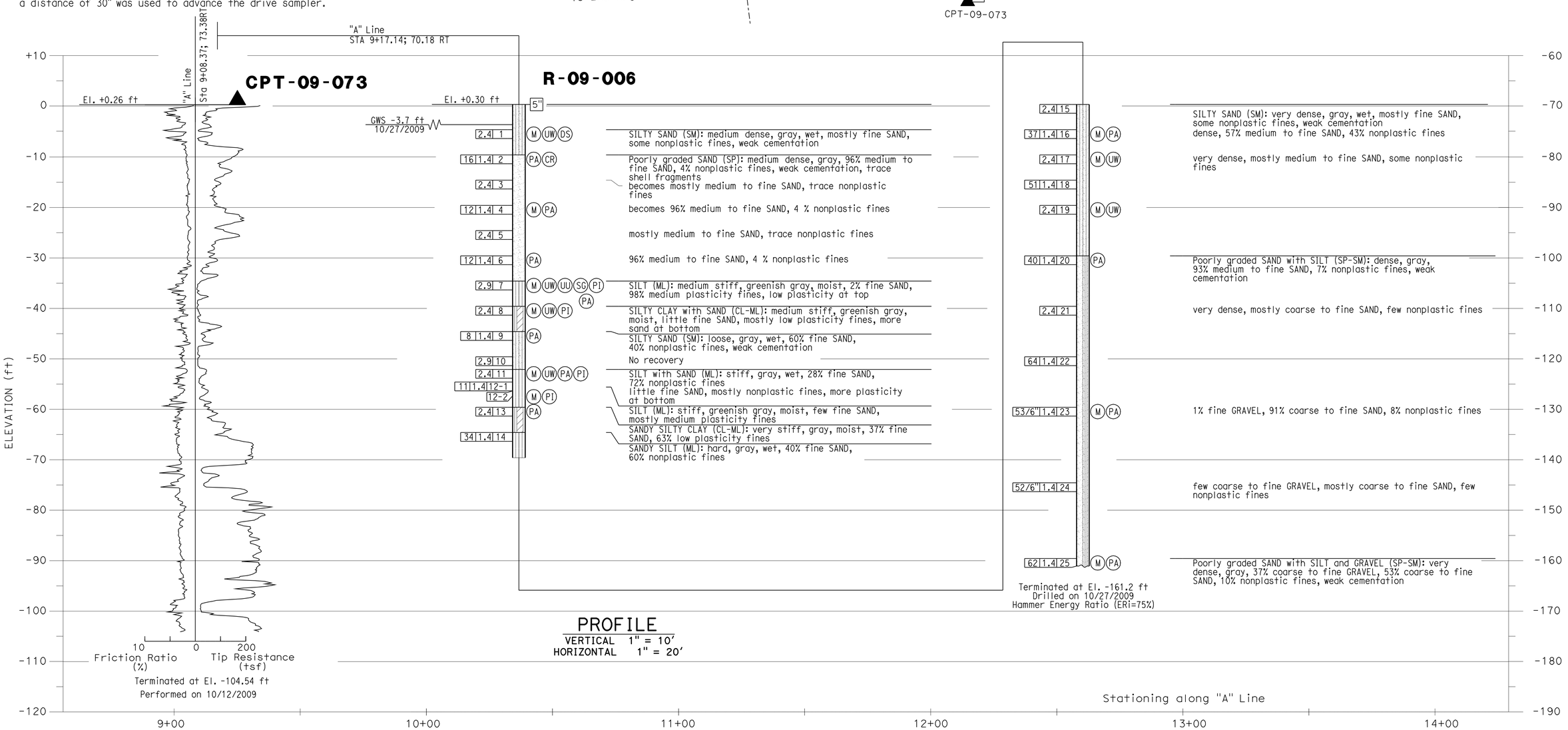


**PROFILE**
VERTICAL 1" = 10'
HORIZONTAL 1" = 20'

| | | | | | |
|---|---|---|---|---|---|
| DESIGN OVERSIGHT | DRAWN BY: J. Fang | FIELD INVESTIGATION BY: | PREPARED FOR THE STATE OF CALIFORNIA DEPARTMENT OF TRANSPORTATION | G. J. Gunaranjan PROJECT ENGINEER | BRIDGE NO. 53-3032 |
| SIGN OFF DATE | CHECKED BY: K. Pratheepan | K. Thant | | | POST MILE 3.58 |

**SCHUYLER HEIM BRIDGE (REPLACE)**

**LOG OF TEST BORINGS NO. 5 OF 34**

OGS CIVIL LOG OF TEST BORINGS SHEET (ENGLISH) (REV. 06-01-09)

ORIGINAL SCALE IN INCHES FOR REDUCED PLANS 0 1 2 3

CU 07-271
EA 138201

DISREGARD PRINTS BEARING EARLIER REVISION DATES

REVISION DATES (PRELIMINARY STAGE ONLY) 02/08/10 03/24/10 05/28/10 07/09/10 01/02/10

SHEET 218 OF 247

FILE => 53-3032-z-1tb05.dgn

USERNAME => trlenard DATE PLOTTED => 18-OCT-2010 TIME PLOTTED => 14:41

| DIST | COUNTY | ROUTE | POST MILES TOTAL PROJECT | SHEET No | TOTAL SHEETS |
|---|---|---|---|---|---|
| 07 | LA | 47,103 | 3.5/4.6, 0.0/1.1 | 721 | 1003 |

REGISTERED CIVIL ENGINEER 04/19/10 DATE

10-11-10
PLANS APPROVAL DATE

*The State of California or its officers or agents shall not be responsible for the accuracy or completeness of electronic copies of this plan sheet.*

REGISTERED PROFESSIONAL ENGINEER G.J.Gunaranjan No. C71758 Exp. 12-31-11 CIVIL STATE OF CALIFORNIA

ACTA
ONE CIVIC PLAZA. SUITE 350,
CARSON, CA 90745

EARTH MECHANICS, INC.
17660, NEWHOPE STREET, SUITE E
FOUNTAIN VALLEY, CA 92708

BENCHMARKS:

| PT-501 | PT-15001 |
|---|---|
| SET + FOOTING 23.25'Rt ℄ "A" Line | STK601061 MAG NAIL IN LEAD CUT 113.09'Lt ℄ "A" Line |
| Sta. 10+59.08 | Sta. 10+42.39 |
| N 1735599.25 | N 1735565.80 |
| E 6489049.69 | E 6488916.52 |
| Elev. = -0.91 | Elev. = 3.42 |

NOTES:

(1) This LOTB sheet (Boring Record) was prepared in accordance with the Caltrans Soil and Rock Classification Logging, Classification and Presentation Manual (June 2007).

(2) 2.4" samples were taken using a California Split-spoon Sampler.

(3) An automatic trip hammer system consisting of a hammer weight of 140 lbs falling a distance of 30" was used to advance the drive sampler.

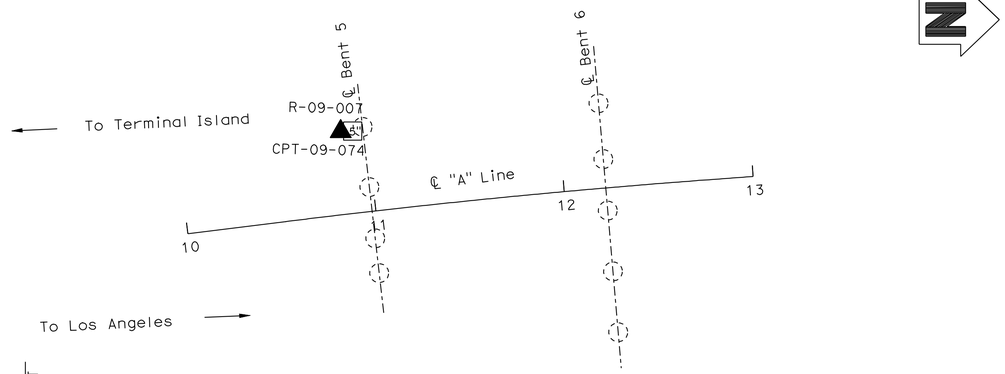


**PLAN**
1" = 40'

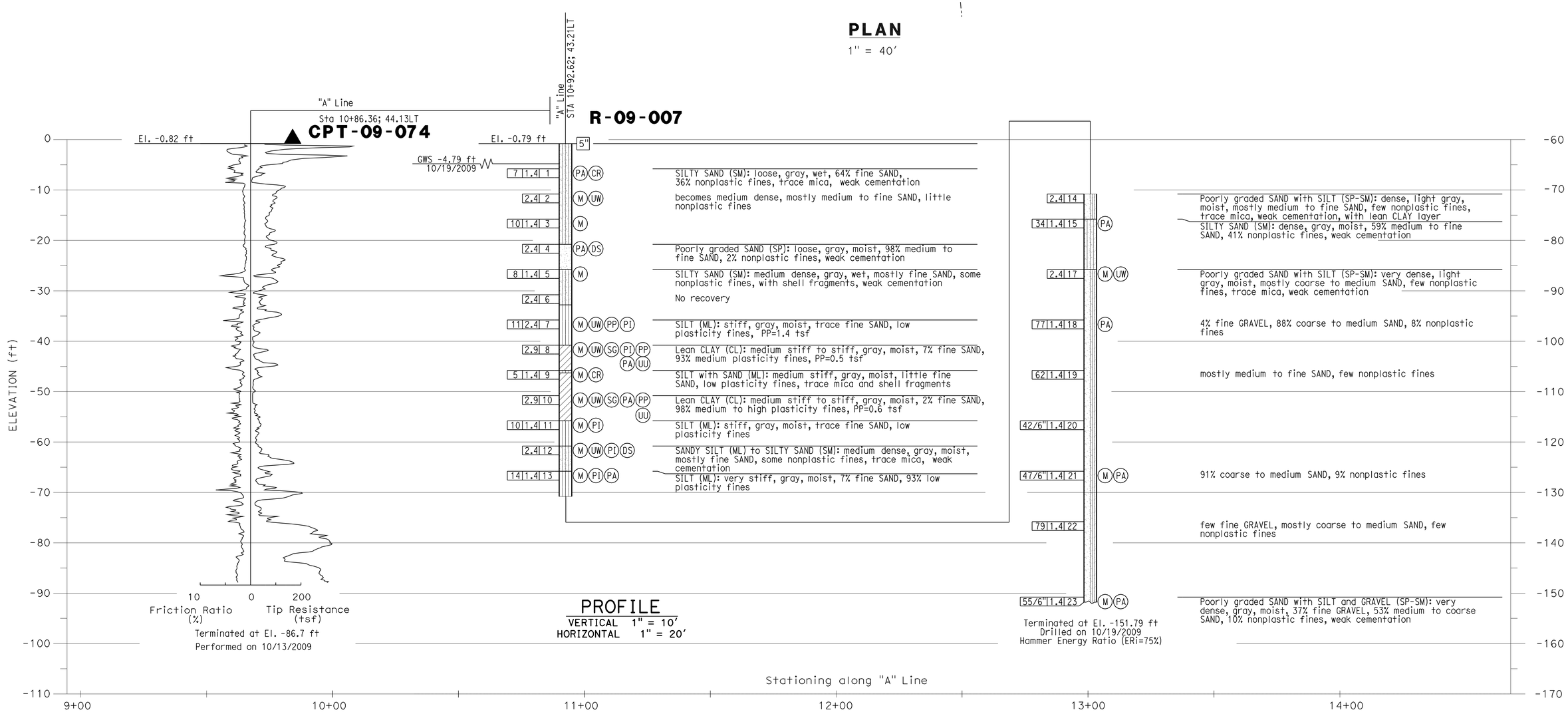


| | | | | | |
|---|---|---|---|---|---|
| DESIGN OVERSIGHT | DRAWN BY: J. Fang | FIELD INVESTIGATION BY: | PREPARED FOR THE STATE OF CALIFORNIA DEPARTMENT OF TRANSPORTATION | G. J. Gunaranjan PROJECT ENGINEER | BRIDGE NO. 53-3032 / POST MILE 3.58 | SCHUYLER HEIM BRIDGE (REPLACE) |
| SIGN OFF DATE | CHECKED BY: K. Pratheepan | E. Brown | | | | LOG OF TEST BORINGS NO. 6 OF 34 |

OGS CIVIL LOG OF TEST BORINGS SHEET (ENGLISH) (REV. 06-01-09)

ORIGINAL SCALE IN INCHES FOR REDUCED PLANS 0 1 2 3

CU 07-271
EA 138201

DISREGARD PRINTS BEARING EARLIER REVISION DATES

REVISION DATES (PRELIMINARY STAGE ONLY) 02/09/10 03/29/10 05/28/10 06/09/10 07/02/10

SHEET 219 OF 247

FILE => 53-3032-z-ltb06.dgn

USERNAME => trienard DATE PLOTTED => 18-OCT-2010 TIME PLOTTED => 14:41

| DIST | COUNTY | ROUTE | POST MILES TOTAL PROJECT | SHEET No | TOTAL SHEETS |
|---|---|---|---|---|---|
| 07 | LA | 47,103 | 3.5/4.6, 0.0/1.1 | 722 | 1003 |

REGISTERED CIVIL ENGINEER 04/19/10 DATE

10-11-10
PLANS APPROVAL DATE

REGISTERED PROFESSIONAL ENGINEER G.J.Gunaranjan No. C71758 Exp.12-31-11 CIVIL STATE OF CALIFORNIA

*The State of California or its officers or agents shall not be responsible for the accuracy or completeness of electronic copies of this plan sheet.*

ACTA
ONE CIVIC PLAZA. SUITE 350,
CARSON, CA 90745

EARTH MECHANICS, INC.
17660, NEWHOPE STREET, SUITE E
FOUNTAIN VALLEY, CA 92708

BENCHMARKS:

| PT-501 | PT-15001 |
|---|---|
| SET + FOOTING | STK601061 MAG NAIL IN LEAD CUT |
| 23.25'Rt ℄ "A" Line | 113.09'Lt ℄ "A" Line |
| Sta. 10+59.08 | Sta. 10+42.39 |
| N 1735599.25 | N 1735565.80 |
| E 6489049.69 | E 6488916.52 |
| Elev. = -0.91 | Elev. = 3.42 |

NOTES:

(1) This LOTB sheet (Boring Record) was prepared in accordance with the Caltrans Soil and Rock Classification Logging, Classification and Presentation Manual (June 2007).

(2) 2.4" samples were taken using a California Split-spoon Sampler.

(3) A rope and cat-head hammer system consisting of a hammer weight of 140 lbs falling a distance of 30" was used to advance the drive sampler.

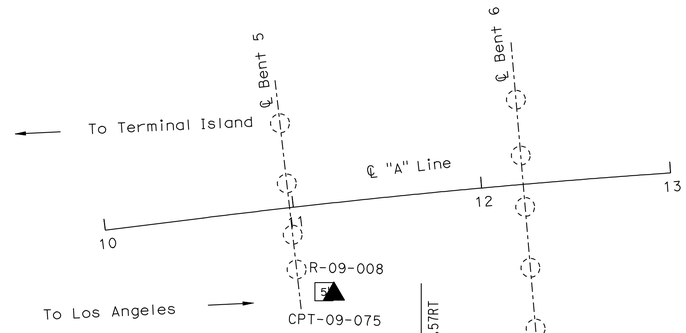


**PLAN**
1" = 40'

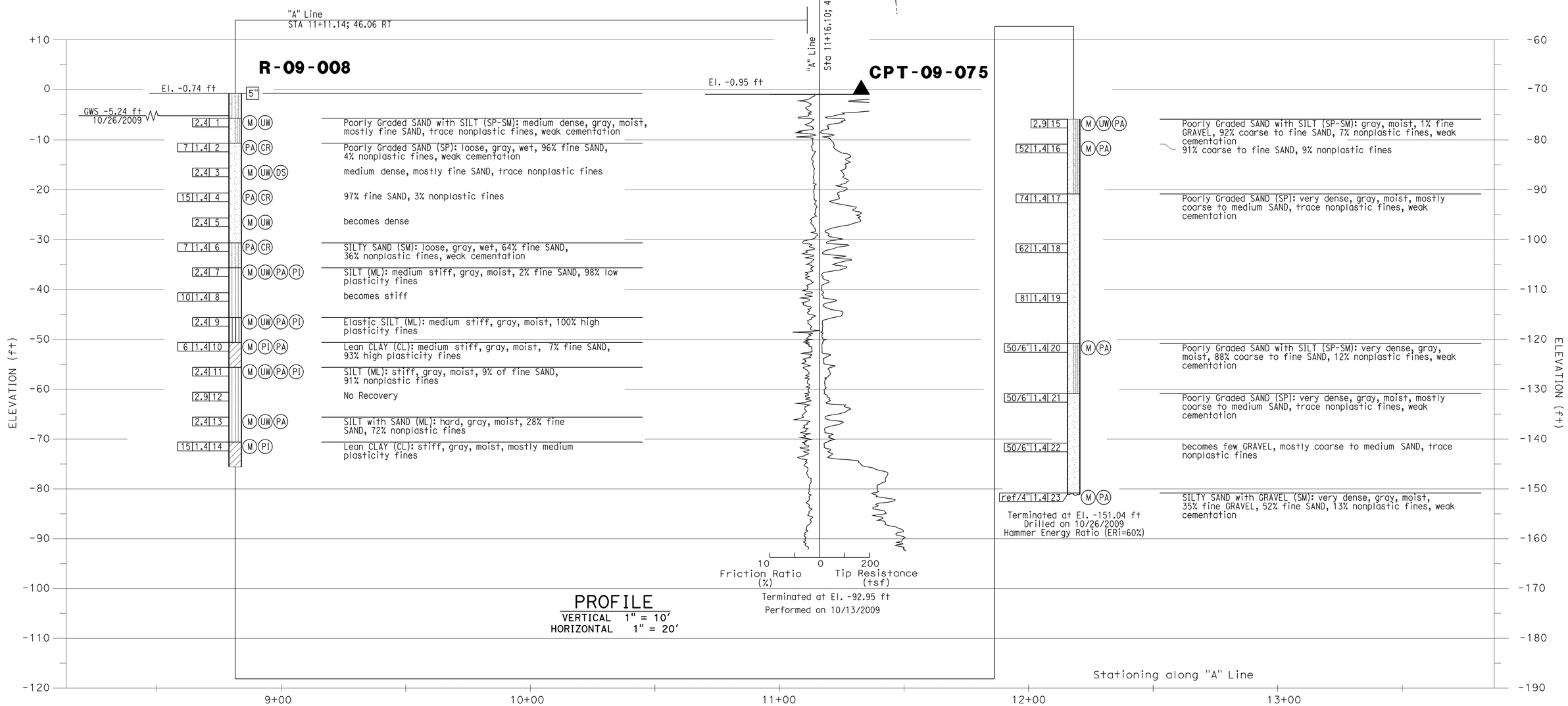


| | | | | | |
|---|---|---|---|---|---|
| DESIGN OVERSIGHT | DRAWN BY: J. Fang | FIELD INVESTIGATION BY: | PREPARED FOR THE STATE OF CALIFORNIA DEPARTMENT OF TRANSPORTATION | G. J. Gunaranjan PROJECT ENGINEER | BRIDGE NO. 53-3032 |
| SIGN OFF DATE | CHECKED BY: K. Pratheepan | R. Jie | | | POST MILE 3.58 |

**SCHUYLER HEIM BRIDGE (REPLACE)**

**LOG OF TEST BORINGS NO. 7 OF 34**

OGS CIVIL LOG OF TEST BORINGS SHEET (ENGLISH) (REV. 06-01-09)

ORIGINAL SCALE IN INCHES FOR REDUCED PLANS 0 1 2 3

CU 07-271
EA 138201

DISREGARD PRINTS BEARING EARLIER REVISION DATES

REVISION DATES (PRELIMINARY STAGE ONLY) 02/09/10 03/23/10 05/25/10 07/01/10 07/02/10

SHEET 220 OF 247

FILE => 53-3032-z-1tb07.dgn

USERNAME => rtrienard DATE PLOTTED => 18-OCT-2010 TIME PLOTTED => 14:41

| DIST | COUNTY | ROUTE | POST MILES TOTAL PROJECT | SHEET No | TOTAL SHEETS |
|---|---|---|---|---|---|
| 07 | LA | 47,103 | 3.5/4.6, 0.0/1.1 | 723 | 1003 |

REGISTERED CIVIL ENGINEER 04/19/10 DATE

10-11-10
PLANS APPROVAL DATE

REGISTERED PROFESSIONAL ENGINEER G.J.Gunaranjan No. C71758 Exp.12-31-11 CIVIL STATE OF CALIFORNIA

*The State of California or its officers or agents shall not be responsible for the accuracy or completeness of electronic copies of this plan sheet.*

ACTA
ONE CIVIC PLAZA. SUITE 350,
CARSON, CA 90745

EARTH MECHANICS, INC.
17660, NEWHOPE STREET, SUITE E
FOUNTAIN VALLEY, CA 92708

BENCHMARKS:

| PT-501 | PT-15001 |
|---|---|
| SET + FOOTING 23.25'Rt ℄ "A" Line | STK601061 MAG NAIL IN LEAD CUT 113.09'Lt ℄ "A" Line |
| Sta. 10+59.08 | Sta. 10+42.39 |
| N 1735599.25 | N 1735565.80 |
| E 6489049.69 | E 6488916.52 |
| Elev. = -0.91 | Elev. = 3.42 |

NOTES:

(1) This LOTB sheet (Boring Record) was prepared in accordance with the Caltrans Soil and Rock Classification Logging, Classification and Presentation Manual (June 2007).

(2) 2.4" samples were taken using a California Split-spoon Sampler.

(3) A rope and cat-head hammer system consisting of a hammer weight of 140 lbs falling a distance of 30" was used to advance the drive sampler.

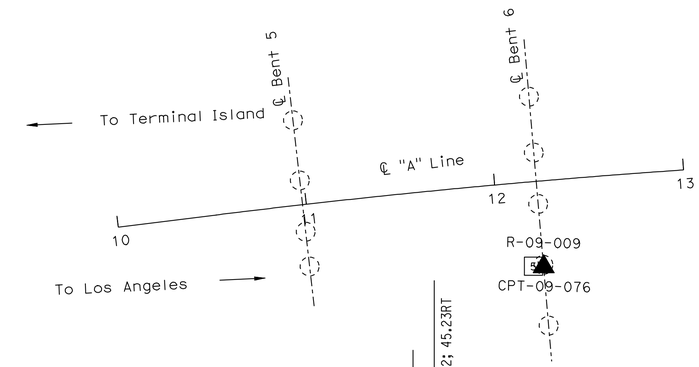


## PLAN

1" = 40'

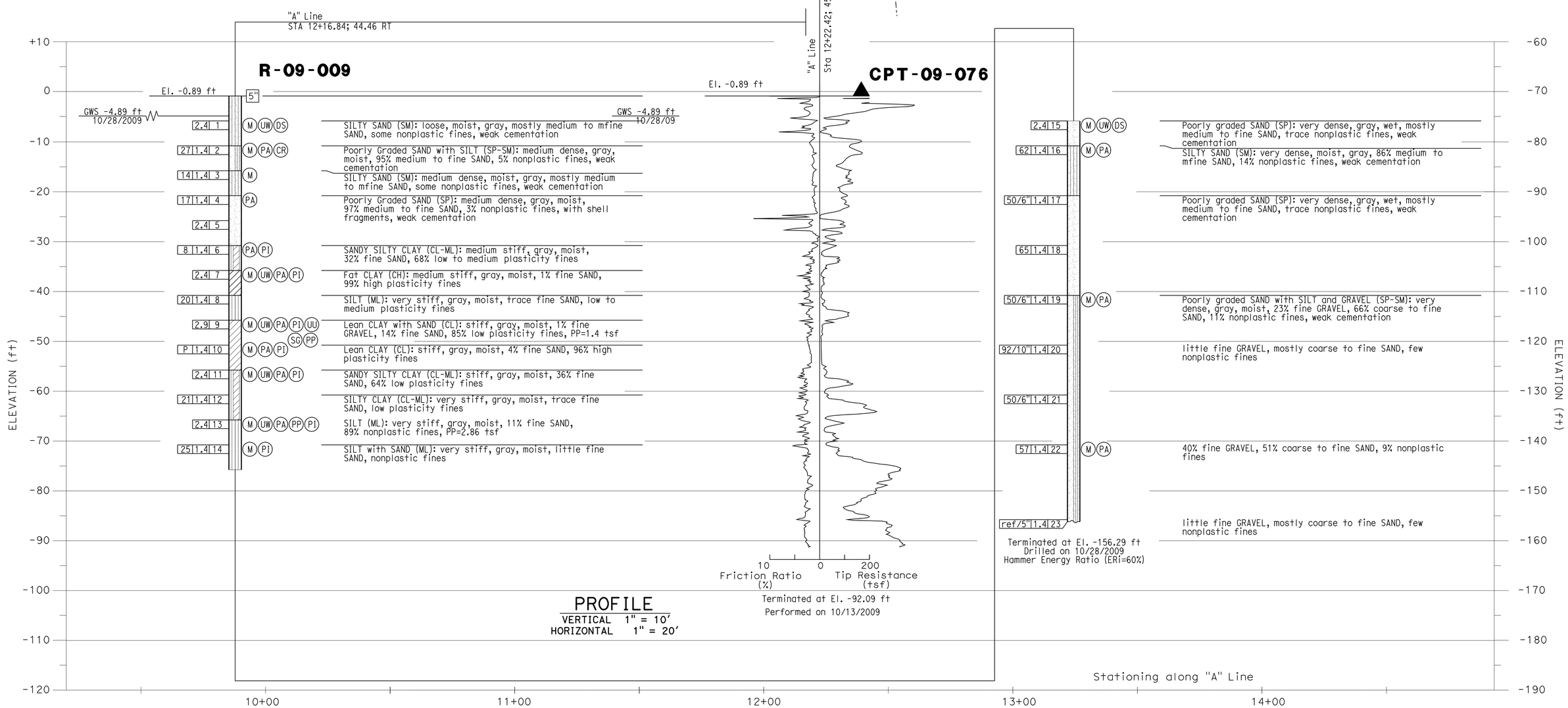


| | | | | | |
|---|---|---|---|---|---|
| DESIGN OVERSIGHT | DRAWN BY: J. Fang | FIELD INVESTIGATION BY: | PREPARED FOR THE STATE OF CALIFORNIA DEPARTMENT OF TRANSPORTATION | G. J. Gunaranjan PROJECT ENGINEER | BRIDGE NO. 53-3032 POST MILE 3.58 |
| SIGN OFF DATE | CHECKED BY: K. Pratheepan | R. Jie | | | |

# SCHUYLER HEIM BRIDGE (REPLACE)

# LOG OF TEST BORINGS NO. 8 OF 34

OGS CIVIL LOG OF TEST BORINGS SHEET (ENGLISH) (REV. 06-01-09)

ORIGINAL SCALE IN INCHES FOR REDUCED PLANS 0 1 2 3

CU 07-271
EA 138201

DISREGARD PRINTS BEARING EARLIER REVISION DATES

REVISION DATES (PRELIMINARY STAGE ONLY) 02/02/10 03/02/10 05/03/10 07/01/10 07/02/10

SHEET 221 OF 247

FILE => 53-3032-z-ltb08.dgn

USERNAME => trienard DATE PLOTTED => 18-OCT-2010 TIME PLOTTED => 14:42

| DIST | COUNTY | ROUTE | POST MILES TOTAL PROJECT | SHEET No | TOTAL SHEETS |
|---|---|---|---|---|---|
| 07 | LA | 47,103 | 3.5/4.6, 0.0/1.1 | 724 | 1003 |

REGISTERED CIVIL ENGINEER 04/19/10 DATE

10-11-10
PLANS APPROVAL DATE

*The State of California or its officers or agents shall not be responsible for the accuracy or completeness of electronic copies of this plan sheet.*

REGISTERED PROFESSIONAL ENGINEER G.J.Gunaranjan No. C71758 Exp. 12-31-11 CIVIL STATE OF CALIFORNIA

ACTA
ONE CIVIC PLAZA. SUITE 350,
CARSON, CA 90745

EARTH MECHANICS, INC.
17660, NEWHOPE STREET, SUITE E
FOUNTAIN VALLEY, CA 92708

BENCHMARKS:

| PT-524 | PT-525 |
|---|---|
| SET REBAR | SET + VLT |
| 19.536'Lt ℄ Line SR 47 | 34.81'Lt ℄ "A" Line |
| Sta. 16+00.56 | Sta. 14+00.95 |
| N 1736134.90 | N 1735941.10 |
| E 6488978.91 | E 6489032.50 |
| Elev. = -0.51 | Elev. = 0.12 |

NOTES:

(1) This LOTB sheet (Boring Record) was prepared in accordance with the Caltrans Soil and Rock Classification Logging, Classification and Presentation Manual (June 2007).

(2) 2.4" samples were taken using a California Split-spoon Sampler.

(3) An automatic trip hammer system consisting of a hammer weight of 140 lbs falling a distance of 30" was used to advance the drive sampler.

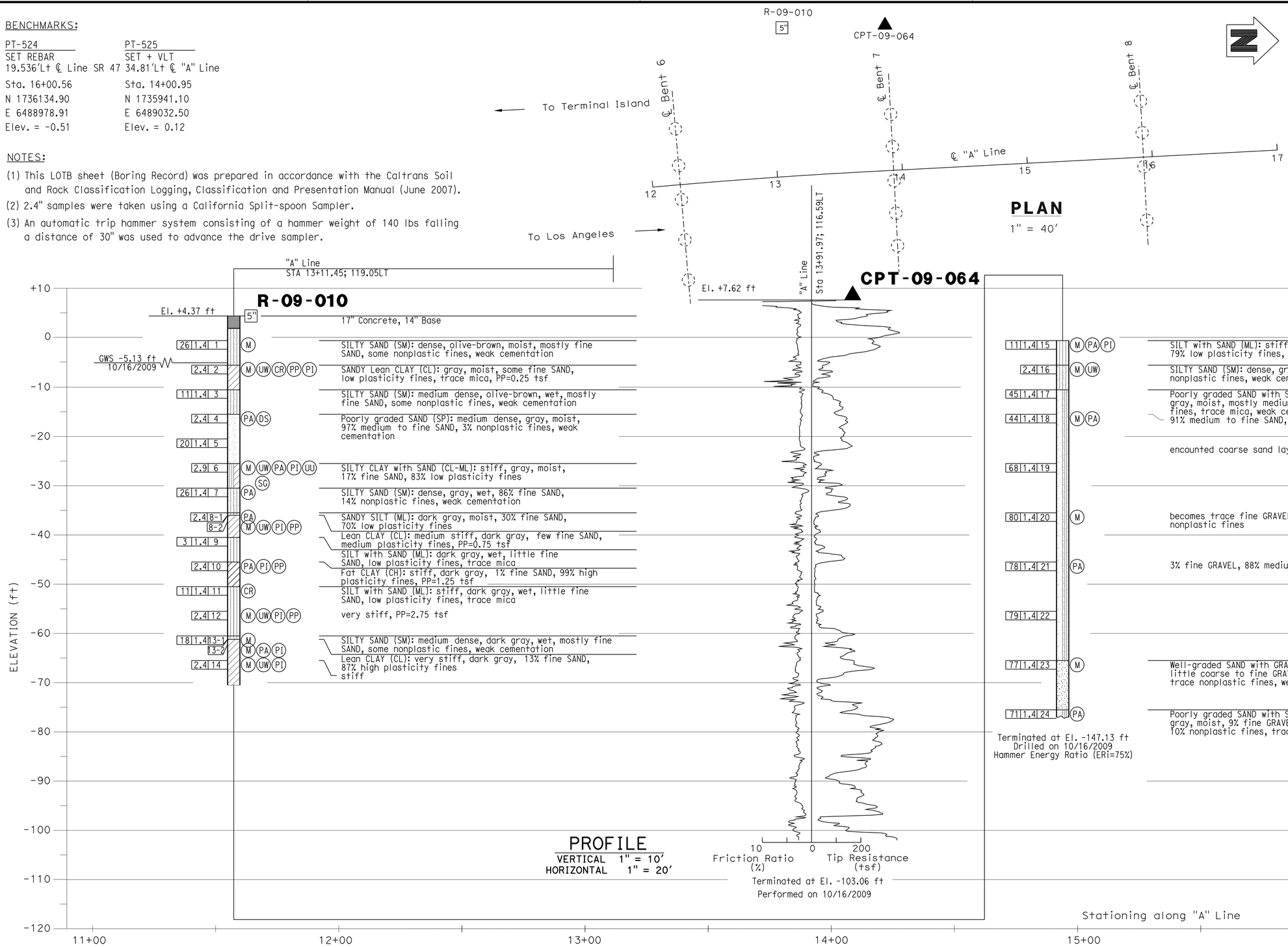


| | | | | | |
|---|---|---|---|---|---|
| DESIGN OVERSIGHT | DRAWN BY: J. Fang | FIELD INVESTIGATION BY: | PREPARED FOR THE STATE OF CALIFORNIA DEPARTMENT OF TRANSPORTATION | G. J. Gunaranjan PROJECT ENGINEER | BRIDGE NO. 53-3032 POST MILE 3.58 |
| SIGN OFF DATE | CHECKED BY: K. Pratheepan | R. Jie | | | |

# SCHUYLER HEIM BRIDGE (REPLACE)

# LOG OF TEST BORINGS NO. 9 OF 34

OGS CIVIL LOG OF TEST BORINGS SHEET (ENGLISH) (REV. 06-01-09)

ORIGINAL SCALE IN INCHES FOR REDUCED PLANS 0 1 2 3

CU 07-271
EA 138201

DISREGARD PRINTS BEARING EARLIER REVISION DATES

REVISION DATES (PRELIMINARY STAGE ONLY) 02/09/10 03/24/10 05/26/10 07/01/10 07/02/10

SHEET 222 OF 247

FILE => 53-3032-z-ltb09.dgn

USERNAME => trenard DATE PLOTTED => 18-OCT-2010 TIME PLOTTED => 14:42

| DIST | COUNTY | ROUTE | POST MILES TOTAL PROJECT | SHEET No | TOTAL SHEETS |
|---|---|---|---|---|---|
| 07 | LA | 47,103 | 3.5/4.6, 0.0/1.1 | 725 | 1003 |

REGISTERED CIVIL ENGINEER 04/19/10 DATE

10-11-10
PLANS APPROVAL DATE

*The State of California or its officers or agents shall not be responsible for the accuracy or completeness of electronic copies of this plan sheet.*

REGISTERED PROFESSIONAL ENGINEER G.J.Gunaranjan No. C71758 Exp. 12-31-11 CIVIL STATE OF CALIFORNIA

ACTA
ONE CIVIC PLAZA. SUITE 350,
CARSON, CA 90745

EARTH MECHANICS, INC.
17660, NEWHOPE STREET, SUITE E
FOUNTAIN VALLEY, CA 92708

BENCHMARKS:

| PT-524 | PT-525 |
|---|---|
| SET REBAR | SET + VLT |
| 19.536'Lt ℄ Line SR 47 | 34.81'Lt ℄ "A" Line |
| Sta. 16+00.56 | Sta. 14+00.95 |
| N 1736134.90 | N 1735941.10 |
| E 6488978.91 | E 6489032.50 |
| Elev. = -0.51 | Elev. = 0.12 |

NOTES:

(1) This LOTB sheet (Boring Record) was prepared in accordance with the Caltrans Soil and Rock Classification Logging, Classification and Presentation Manual (June 2007).

(2) 2.4" samples were taken using a California Split-spoon Sampler.

(3) A rope and cat-head hammer system consisting of a hammer weight of 140 lbs falling a distance of 30" was used to advance the drive sampler.

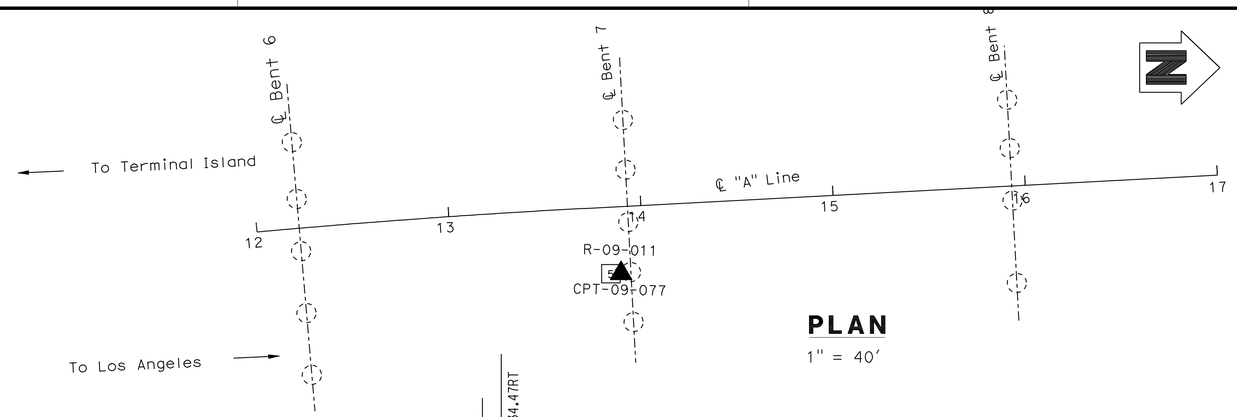


PLAN
1" = 40'

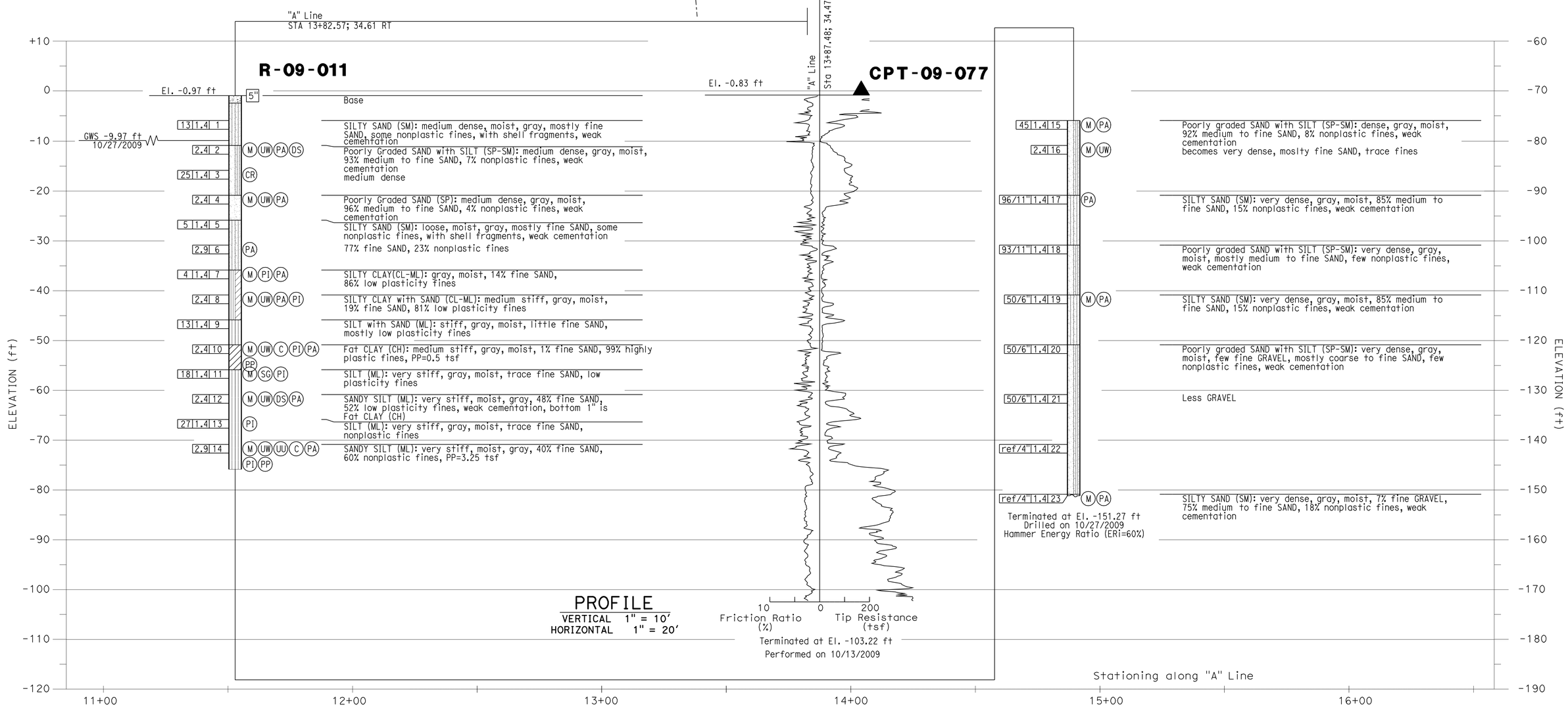


PROFILE
VERTICAL 1" = 10'
HORIZONTAL 1" = 20'

| | | | | | |
|---|---|---|---|---|---|
| DESIGN OVERSIGHT | DRAWN BY: J. Fang | FIELD INVESTIGATION BY: | PREPARED FOR THE STATE OF CALIFORNIA DEPARTMENT OF TRANSPORTATION | G. J. Gunaranjan PROJECT ENGINEER | BRIDGE NO. 53-3032 / POST MILE 3.58 |
| SIGN OFF DATE | CHECKED BY: K. Pratheepan | R. Jie | | | |

SCHUYLER HEIM BRIDGE (REPLACE)

LOG OF TEST BORINGS NO. 10 OF 34

OGS CIVIL LOG OF TEST BORINGS SHEET (ENGLISH) (REV. 06-01-09)

ORIGINAL SCALE IN INCHES FOR REDUCED PLANS 0 1 2 3

CU 07-271
EA 138201

DISREGARD PRINTS BEARING EARLIER REVISION DATES → 02/08/10 03/24/10 05/28/10 07/01/10 07/02/10

REVISION DATES (PRELIMINARY STAGE ONLY)

SHEET 223 OF 247

FILE => 53-3032-z-ltb10.dgn

USERNAME => trlenard DATE PLOTTED => 18-OCT-2010 TIME PLOTTED => 14:42

| DIST | COUNTY | ROUTE | POST MILES TOTAL PROJECT | SHEET No | TOTAL SHEETS |
|---|---|---|---|---|---|
| 07 | LA | 47,103 | 3.5/4.6, 0.0/1.1 | 726 | 1003 |

REGISTERED CIVIL ENGINEER 04/19/10 DATE

10-11-10
PLANS APPROVAL DATE

REGISTERED PROFESSIONAL ENGINEER G.J.Gunaranjan No. C71758 Exp. 12-31-11 CIVIL STATE OF CALIFORNIA

*The State of California or its officers or agents shall not be responsible for the accuracy or completeness of electronic copies of this plan sheet.*

ACTA
ONE CIVIC PLAZA. SUITE 350,
CARSON, CA 90745

EARTH MECHANICS, INC.
17660, NEWHOPE STREET, SUITE E
FOUNTAIN VALLEY, CA 92708

BENCHMARKS:

| PT-524 | PT-525 |
|---|---|
| SET REBAR | SET + VLT |
| 19.536'Lt ℄ Line SR 47 | 34.81'Lt ℄ "A" Line |
| Sta. 16+00.56 | Sta. 14+00.95 |
| N 1736134.90 | N 1735941.10 |
| E 6488978.91 | E 6489032.50 |
| Elev. = -0.51 | Elev. = 0.12 |

NOTES:

(1) This LOTB sheet (Boring Record) was prepared in accordance with the Caltrans Soil and Rock Classification Logging, Classification and Presentation Manual (June 2007).

(2) 2.4" samples were taken using a California Split-spoon Sampler.

(3) A rope and cat-head hammer system consisting of a hammer weight of 140 lbs falling a distance of 30" was used to advance the drive sampler.

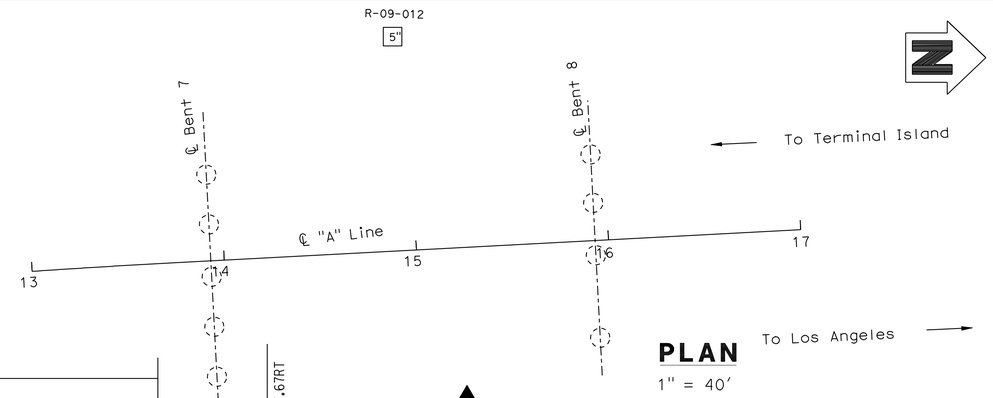


PLAN
1" = 40'

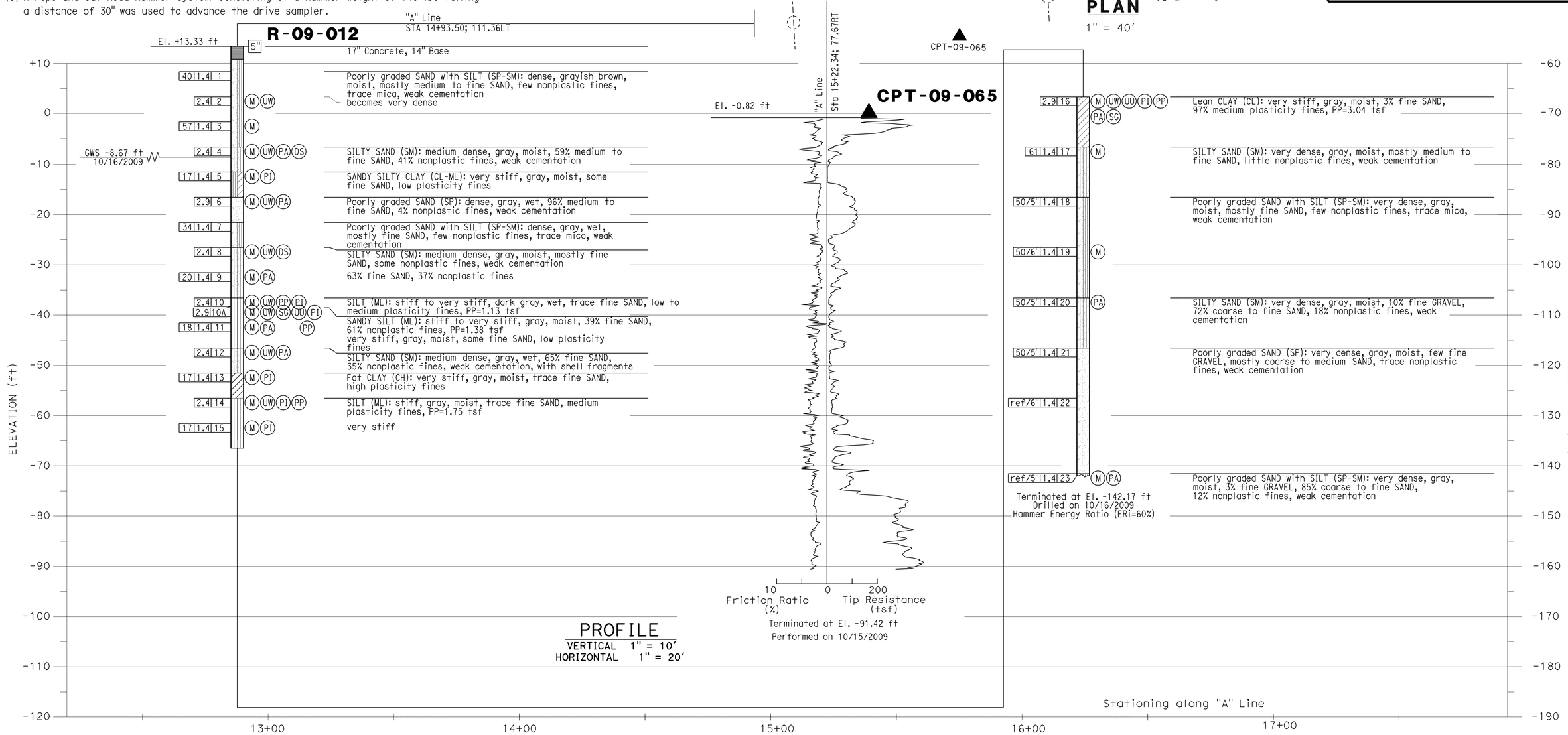


| | | | | | |
|---|---|---|---|---|---|
| DESIGN OVERSIGHT | DRAWN BY: J. Fang | FIELD INVESTIGATION BY: | PREPARED FOR THE STATE OF CALIFORNIA DEPARTMENT OF TRANSPORTATION | G. J. Gunaranjan PROJECT ENGINEER | BRIDGE NO. 53-3032 |
| SIGN OFF DATE | CHECKED BY: K. Pratheepan | R. Jie | | | POST MILE 3.58 |

SCHUYLER HEIM BRIDGE (REPLACE)

LOG OF TEST BORINGS NO. 11 OF 34

OGS CIVIL LOG OF TEST BORINGS SHEET (ENGLISH) (REV. 06-01-09)

ORIGINAL SCALE IN INCHES FOR REDUCED PLANS 0 1 2 3

CU 07-271
EA 138201

DISREGARD PRINTS BEARING EARLIER REVISION DATES

REVISION DATES (PRELIMINARY STAGE ONLY) 07/02/10 07/02/10 05/28/10 07/02/10 07/02/10

SHEET 224 OF 247

FILE => 53-3032-z-1tb11.dgn

USERNAME => trienard DATE PLOTTED => 18-OCT-2010 TIME PLOTTED => 14:42

| DIST | COUNTY | ROUTE | POST MILES TOTAL PROJECT | SHEET No | TOTAL SHEETS |
|---|---|---|---|---|---|
| 07 | LA | 47,103 | 3.5/4.6, 0.0/1.1 | 727 | 1003 |

REGISTERED CIVIL ENGINEER 04/19/10 DATE

10-11-10
PLANS APPROVAL DATE

REGISTERED PROFESSIONAL ENGINEER G.J.Gunaranjan No. C71758 Exp.12-31-11 CIVIL STATE OF CALIFORNIA

*The State of California or its officers or agents shall not be responsible for the accuracy or completeness of electronic copies of this plan sheet.*

ACTA
ONE CIVIC PLAZA. SUITE 350,
CARSON, CA 90745

EARTH MECHANICS, INC.
17660, NEWHOPE STREET, SUITE E
FOUNTAIN VALLEY, CA 92708

BENCHMARKS:

| PT-524 | PT-525 |
|---|---|
| SET REBAR | SET + VLT |
| 19.536'Lt ℄ Line SR 47 | 34.81'Lt ℄ "A" Line |
| Sta. 16+00.56 | Sta. 14+00.95 |
| N 1736134.90 | N 1735941.10 |
| E 6488978.91 | E 6489032.50 |
| Elev. = -0.51 | Elev. = 0.12 |

NOTES:

(1) This LOTB sheet (Boring Record) was prepared in accordance with the Caltrans Soil and Rock Classification Logging, Classification and Presentation Manual (June 2007).

(2) 2.4" samples were taken using a California Split-spoon Sampler.

(3) An automatic trip hammer system consisting of a hammer weight of 140 lbs falling a distance of 30" was used to advance the drive sampler.

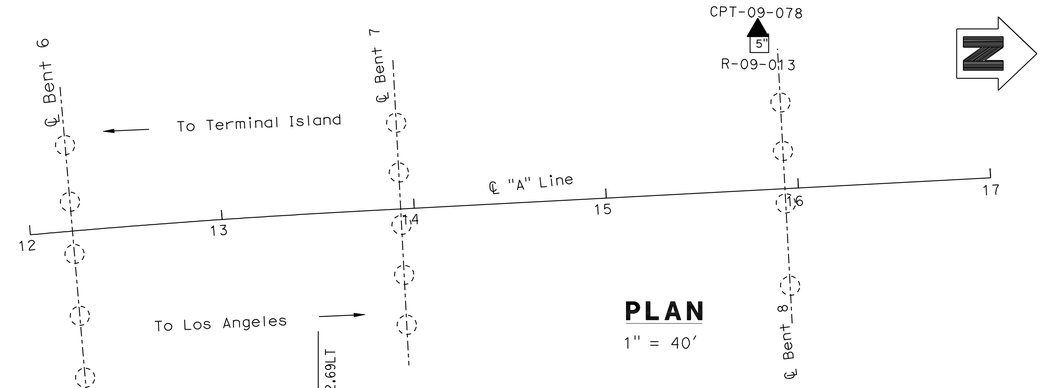


## PLAN

1" = 40'

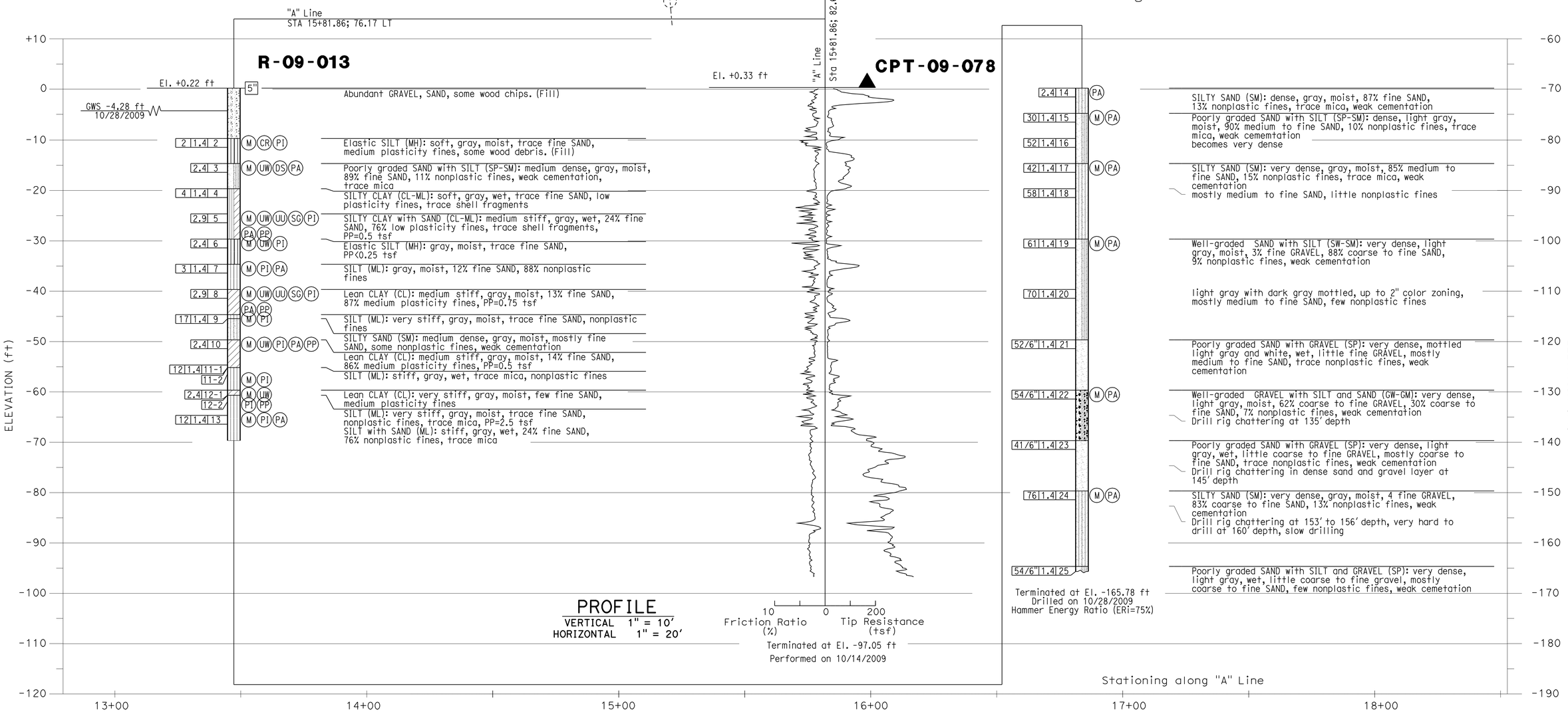


| | | | | | |
|---|---|---|---|---|---|
| DESIGN OVERSIGHT | DRAWN BY: J. Fang | FIELD INVESTIGATION BY: | PREPARED FOR THE STATE OF CALIFORNIA DEPARTMENT OF TRANSPORTATION | G. J. Gunaranjan PROJECT ENGINEER | BRIDGE NO. 53-3032 |
| SIGN OFF DATE | CHECKED BY: K. Pratheepan | E.Brown | | | POST MILE 3.58 |

# SCHUYLER HEIM BRIDGE (REPLACE)

# LOG OF TEST BORINGS NO. 12 OF 34

OGS CIVIL LOG OF TEST BORINGS SHEET (ENGLISH) (REV. 06-01-09)

ORIGINAL SCALE IN INCHES FOR REDUCED PLANS 0 1 2 3

CU 07-271
EA 138201

DISREGARD PRINTS BEARING EARLIER REVISION DATES

REVISION DATES (PRELIMINARY STAGE ONLY) 02/08/10 03/25/10 05/25/10 07/01/10 07/02/10

SHEET 225 OF 247

FILE => 53-3032-z-1tb12.dgn

USERNAME => trhenard DATE PLOTTED => 18-OCT-2010 TIME PLOTTED => 14:42

| DIST | COUNTY | ROUTE | POST MILES TOTAL PROJECT | SHEET No | TOTAL SHEETS |
|---|---|---|---|---|---|
| 07 | LA | 47,103 | 3.5/4.6, 0.0/1.1 | 728 | 1003 |

REGISTERED CIVIL ENGINEER 04/19/10 DATE

10-11-10
PLANS APPROVAL DATE

*The State of California or its officers or agents shall not be responsible for the accuracy or completeness of electronic copies of this plan sheet.*

REGISTERED PROFESSIONAL ENGINEER G.J.Gunaranjan No. C71758 Exp.12-31-11 CIVIL STATE OF CALIFORNIA

ACTA
ONE CIVIC PLAZA. SUITE 350,
CARSON, CA 90745

EARTH MECHANICS, INC.
17660, NEWHOPE STREET, SUITE E
FOUNTAIN VALLEY, CA 92708

BENCHMARKS:

| PT-524 | PT-525 |
|---|---|
| SET REBAR | SET + VLT |
| 19.536'Lt ℄ Line SR 47 | 34.81'Lt ℄ "A" Line |
| Sta. 16+00.56 | Sta. 14+00.95 |
| N 1736134.90 | N 1735941.10 |
| E 6488978.91 | E 6489032.50 |
| Elev. = -0.51 | Elev. = 0.12 |

NOTES:

(1) This LOTB sheet (Boring Record) was prepared in accordance with the Caltrans Soil and Rock Classification Logging, Classification and Presentation Manual (June 2007).

(2) 2.4" samples were taken using a California Split-spoon Sampler.

(3) An automatic trip hammer system consisting of a hammer weight of 140 lbs falling a distance of 30" was used to advance the drive sampler.

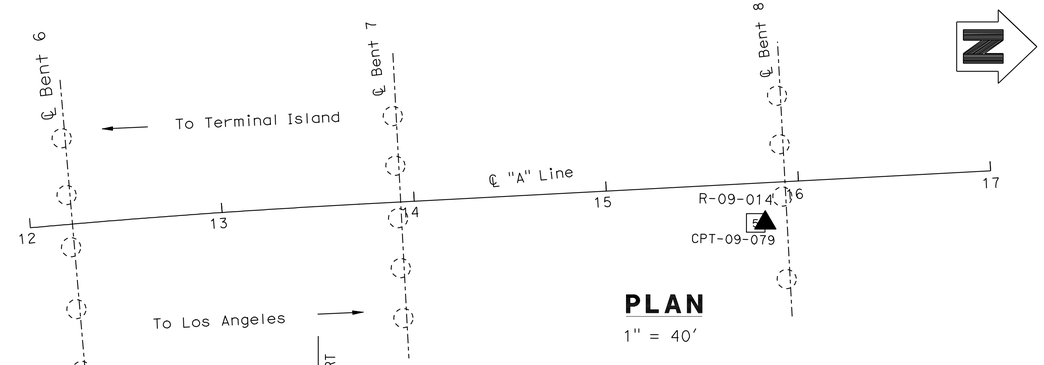


## PLAN

1" = 40'

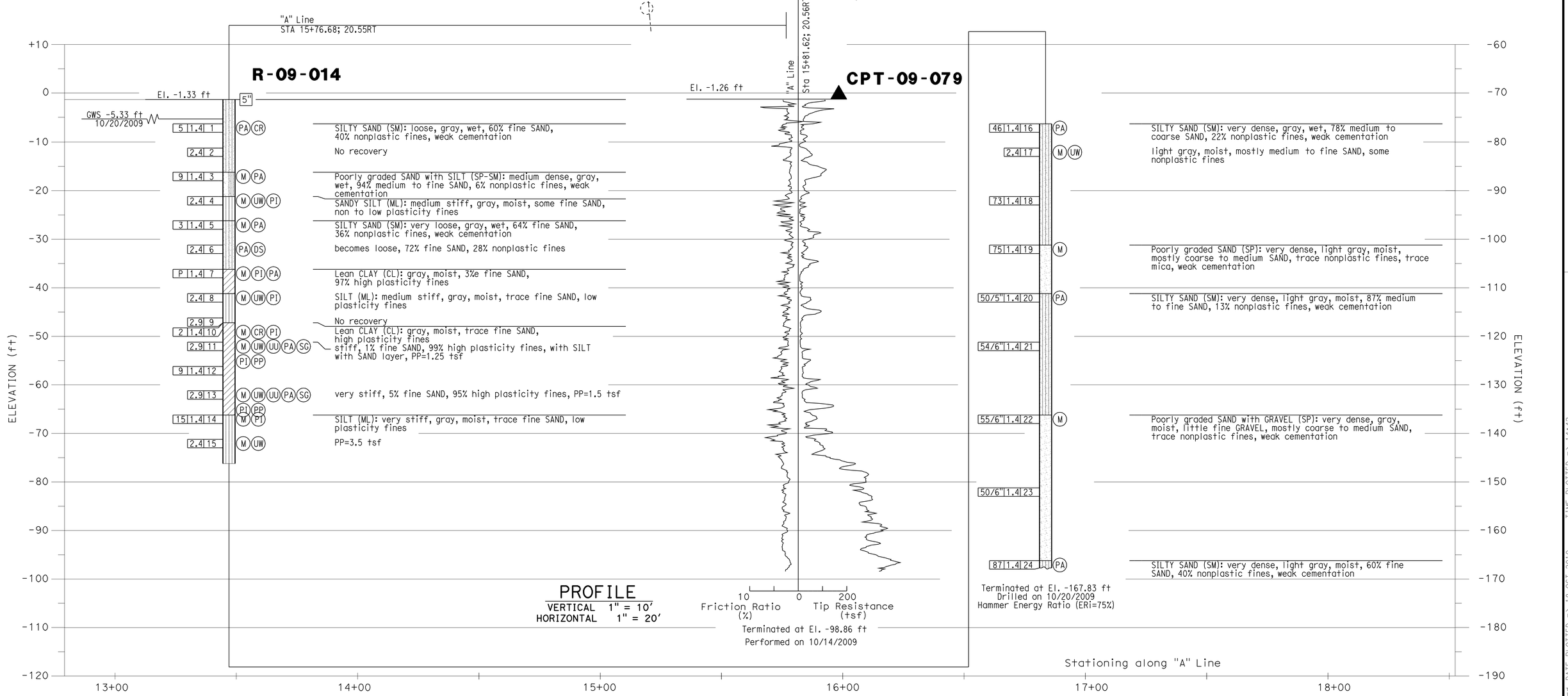


| | | | | | |
|---|---|---|---|---|---|
| DESIGN OVERSIGHT | DRAWN BY: J. Fang | FIELD INVESTIGATION BY: | PREPARED FOR THE STATE OF CALIFORNIA DEPARTMENT OF TRANSPORTATION | G. J. Gunaranjan PROJECT ENGINEER | BRIDGE NO. 53-3032 |
| SIGN OFF DATE | CHECKED BY: K. Pratheepan | E. Brown | | | POST MILE 3.58 |

# SCHUYLER HEIM BRIDGE (REPLACE)

# LOG OF TEST BORINGS NO. 13 OF 34

OGS CIVIL LOG OF TEST BORINGS SHEET (ENGLISH) (REV. 06-01-09)

ORIGINAL SCALE IN INCHES FOR REDUCED PLANS 0 1 2 3

CU 07-271
EA 138201

DISREGARD PRINTS BEARING EARLIER REVISION DATES

REVISION DATES (PRELIMINARY STAGE ONLY) 02/09/10 03/24/10 05/28/10 07/01/10 07/02/10

SHEET 226 OF 247

FILE => 53-3032-z-ltb13.dgn

USERNAME => trenard DATE PLOTTED => 18-OCT-2010 TIME PLOTTED => 14:42

| DIST | COUNTY | ROUTE | POST MILES TOTAL PROJECT | SHEET No | TOTAL SHEETS |
|---|---|---|---|---|---|
| 07 | LA | 47,103 | 3.5/4.6, 0.0/1.1 | 729 | 1003 |

REGISTERED CIVIL ENGINEER 04/19/10 DATE

10-11-10
PLANS APPROVAL DATE

REGISTERED PROFESSIONAL ENGINEER G.J.Gunaranjan No. C71758 Exp. 12-31-11 CIVIL STATE OF CALIFORNIA

*The State of California or its officers or agents shall not be responsible for the accuracy or completeness of electronic copies of this plan sheet.*

ACTA
ONE CIVIC PLAZA. SUITE 350,
CARSON, CA 90745

EARTH MECHANICS, INC.
17660, NEWHOPE STREET, SUITE E
FOUNTAIN VALLEY, CA 92708

BENCHMARKS:

| PT-524 | PT-525 |
|---|---|
| SET REBAR | SET + VLT |
| 19.536'Lt ℄ Line SR 47 | 34.81'Lt ℄ "A" Line |
| Sta. 16+00.56 | Sta. 14+00.95 |
| N 1736134.90 | N 1735941.10 |
| E 6488978.91 | E 6489032.50 |
| Elev. = -0.51 | Elev. = 0.12 |

NOTES:

(1) This LOTB sheet (Boring Record) was prepared in accordance with the Caltrans Soil and Rock Classification Logging, Classification and Presentation Manual (June 2007).

(2) 2.4" samples were taken using a California Split-spoon Sampler.

(3) A rope and cat-head hammer system consisting of a hammer weight of 140 lbs falling a distance of 30" was used to advance the drive sampler.

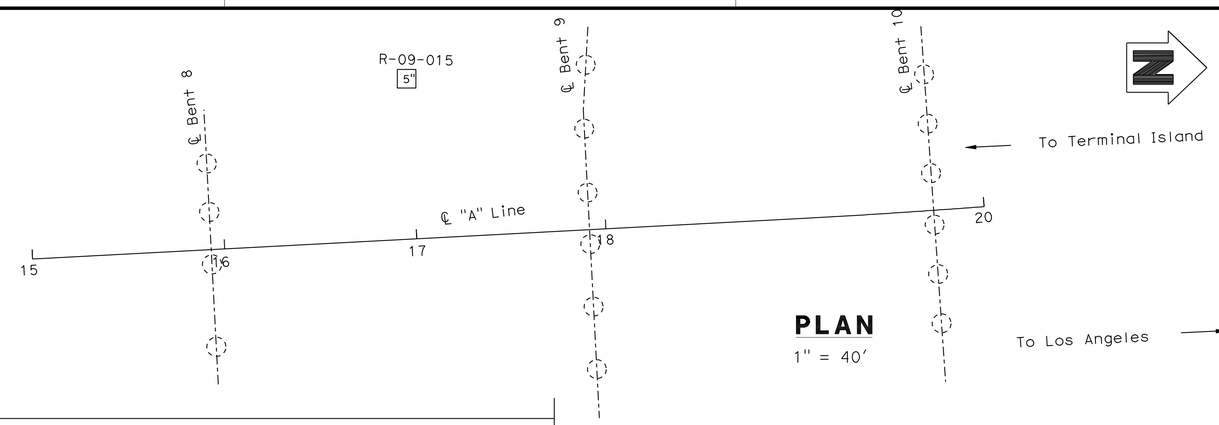


**PLAN**
1" = 40'

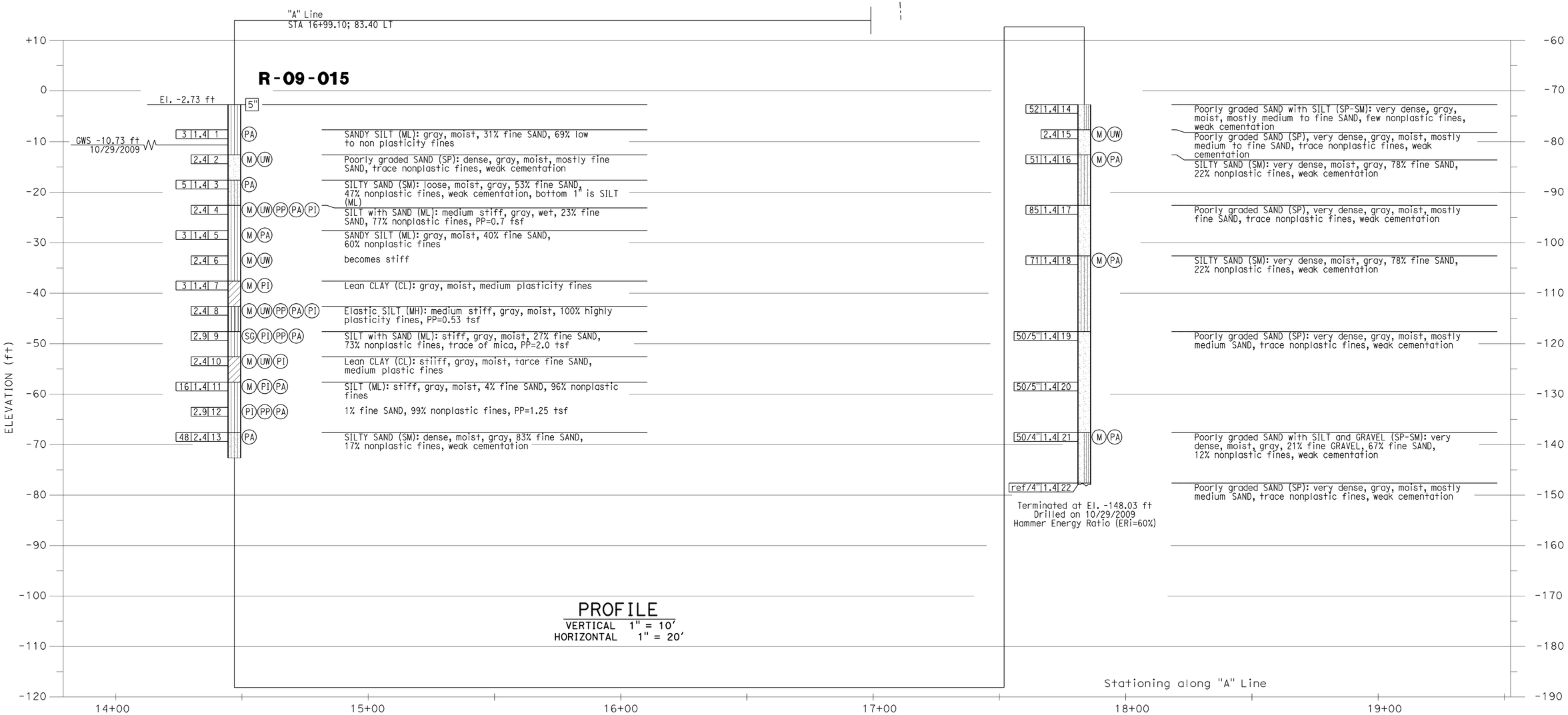


| | | | | | |
|---|---|---|---|---|---|
| DESIGN OVERSIGHT | DRAWN BY: J. Fang | FIELD INVESTIGATION BY: | PREPARED FOR THE STATE OF CALIFORNIA DEPARTMENT OF TRANSPORTATION | G. J. Gunaranjan PROJECT ENGINEER | BRIDGE NO. 53-3032 |
| SIGN OFF DATE | CHECKED BY: K. Pratheepan | R. Jie | | | POST MILE 3.58 |

**SCHUYLER HEIM BRIDGE (REPLACE)**

**LOG OF TEST BORINGS NO. 14 OF 34**

OGS CIVIL LOG OF TEST BORINGS SHEET (ENGLISH) (REV. 06-01-09)

ORIGINAL SCALE IN INCHES FOR REDUCED PLANS 0 1 2 3

CU 07-271
EA 138201

DISREGARD PRINTS BEARING EARLIER REVISION DATES

REVISION DATES (PRELIMINARY STAGE ONLY) 02/08/10 03/17/10 05/25/10 07/09/10 07/02/10

SHEET 227 OF 247

FILE => 53-3032-z-ltb14.dgn

USERNAME => trlenard DATE PLOTTED => 18-OCT-2010 TIME PLOTTED => 14:42

| DIST | COUNTY | ROUTE | POST MILES TOTAL PROJECT | SHEET No | TOTAL SHEETS |
|---|---|---|---|---|---|
| 07 | LA | 47,103 | 3.5/4.6, 0.0/1.1 | 730 | 1003 |

REGISTERED CIVIL ENGINEER 04/19/10 DATE

10-11-10
PLANS APPROVAL DATE

*The State of California or its officers or agents shall not be responsible for the accuracy or completeness of electronic copies of this plan sheet.*

REGISTERED PROFESSIONAL ENGINEER G.J.Gunaranjan No. C71758 Exp.12-31-11 CIVIL STATE OF CALIFORNIA

ACTA
ONE CIVIC PLAZA. SUITE 350,
CARSON, CA 90745

EARTH MECHANICS, INC.
17660, NEWHOPE STREET, SUITE E
FOUNTAIN VALLEY, CA 92708

BENCHMARKS:

| PT-524 | PT-525 |
|---|---|
| SET REBAR | SET + VLT |
| 19.536'Lt ℄ Line SR 47 | 34.81'Lt ℄ "A" Line |
| Sta. 16+00.56 | Sta. 14+00.95 |
| N 1736134.90 | N 1735941.10 |
| E 6488978.91 | E 6489032.50 |
| Elev. = -0.51 | Elev. = 0.12 |

NOTES:

(1) This LOTB sheet (Boring Record) was prepared in accordance with the Caltrans Soil and Rock Classification Logging, Classification and Presentation Manual (June 2007).

(2) 2.4" samples were taken using a California Split-spoon Sampler.

(3) A rope and cat-head hammer system consisting of a hammer weight of 140 lbs falling a distance of 30" was used to advance the drive sampler.

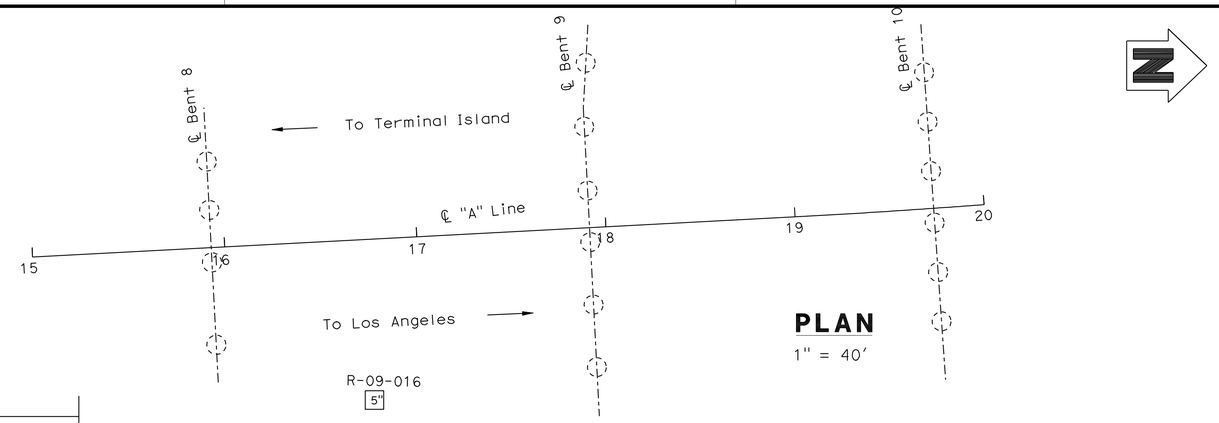


PLAN
1" = 40'

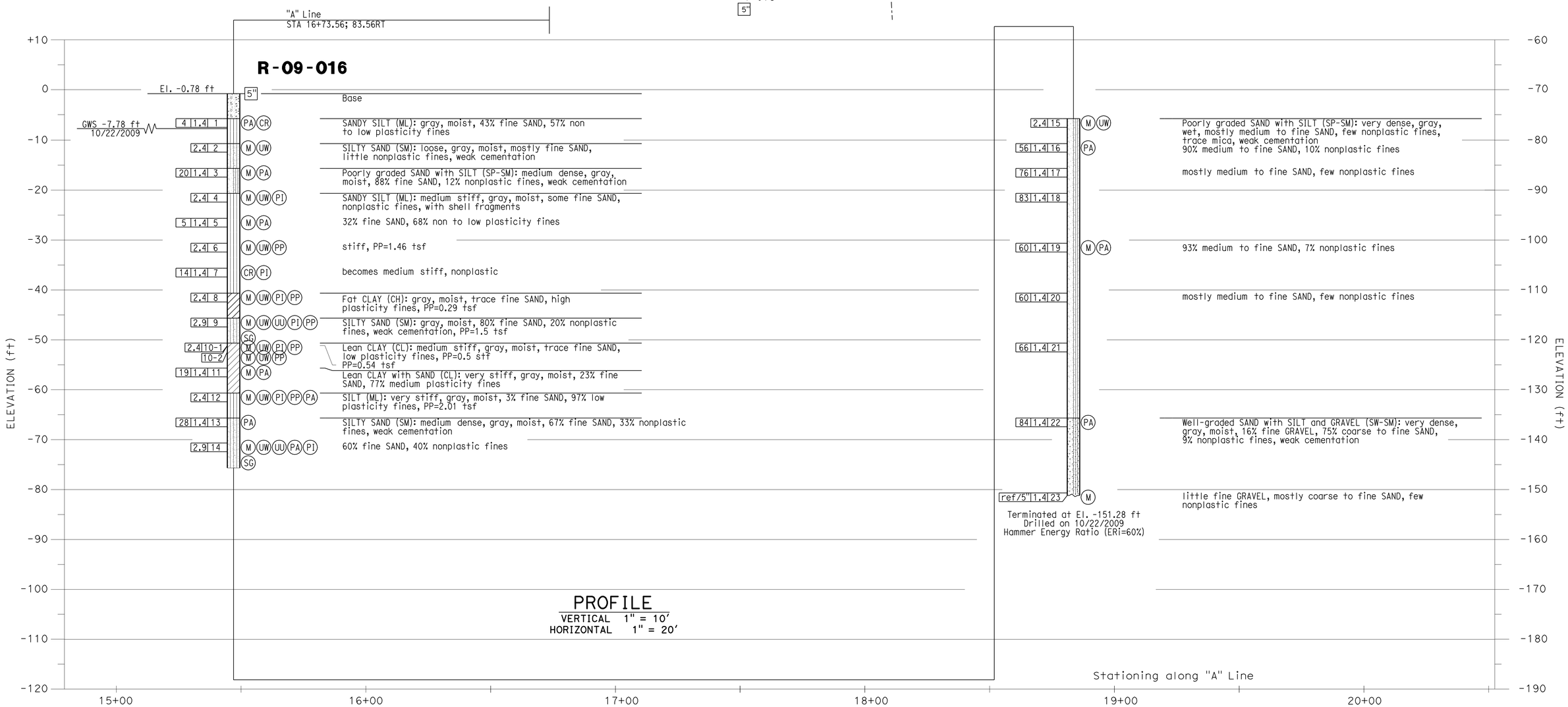


| | | | | | |
|---|---|---|---|---|---|
| DESIGN OVERSIGHT | DRAWN BY: J. Fang | FIELD INVESTIGATION BY: | PREPARED FOR THE STATE OF CALIFORNIA DEPARTMENT OF TRANSPORTATION | G. J. Gunaranjan PROJECT ENGINEER | BRIDGE NO. 53-3032 POST MILE 3.58 |
| SIGN OFF DATE | CHECKED BY: K. Pratheepan | R. Jie | | | |

SCHUYLER HEIM BRIDGE (REPLACE)

LOG OF TEST BORINGS NO. 15 OF 34

OGS CIVIL LOG OF TEST BORINGS SHEET (ENGLISH) (REV. 06-01-09)

ORIGINAL SCALE IN INCHES FOR REDUCED PLANS 0 1 2 3

CU 07-271
EA 138201

DISREGARD PRINTS BEARING EARLIER REVISION DATES

REVISION DATES (PRELIMINARY STAGE ONLY) 02/02/10 03/02/10 05/02/10 07/01/10 07/02/10

SHEET 228 OF 247

FILE => 53-3032-z-ltb15.dgn

USERNAME => friehard DATE PLOTTED => 18-OCT-2010 TIME PLOTTED => 14:42

| DIST | COUNTY | ROUTE | POST MILES TOTAL PROJECT | SHEET No | TOTAL SHEETS |
|---|---|---|---|---|---|
| 07 | LA | 47,103 | 3.5/4.6, 0.0/1.1 | 731 | 1003 |

8.88 04/19/10
REGISTERED CIVIL ENGINEER DATE

10-11-10
PLANS APPROVAL DATE

REGISTERED PROFESSIONAL ENGINEER G.J.Gunaranjan No. C71758 Exp.12-31-11 CIVIL STATE OF CALIFORNIA

*The State of California or its officers or agents shall not be responsible for the accuracy or completeness of electronic copies of this plan sheet.*

ACTA
ONE CIVIC PLAZA. SUITE 350,
CARSON, CA 90745

EARTH MECHANICS, INC.
17660, NEWHOPE STREET, SUITE E
FOUNTAIN VALLEY, CA 92708

BENCHMARKS:

| PT-524 | PT-525 |
|---|---|
| SET REBAR | SET + VLT |
| 19.536'Lt ℄ Line SR 47 | 34.81'Lt ℄ "A" Line |
| Sta. 16+00.56 | Sta. 14+00.95 |
| N 1736134.90 | N 1735941.10 |
| E 6488978.91 | E 6489032.50 |
| Elev. = -0.51 | Elev. = 0.12 |

NOTES:

(1) This LOTB sheet (Boring Record) was prepared in accordance with the Caltrans Soil and Rock Classification Logging, Classification and Presentation Manual (June 2007).

(2) 2.4" samples were taken using a California Split-spoon Sampler.

(3) A rope and cat-head hammer system consisting of a hammer weight of 140 lbs falling a distance of 30" was used to advance the drive sampler.

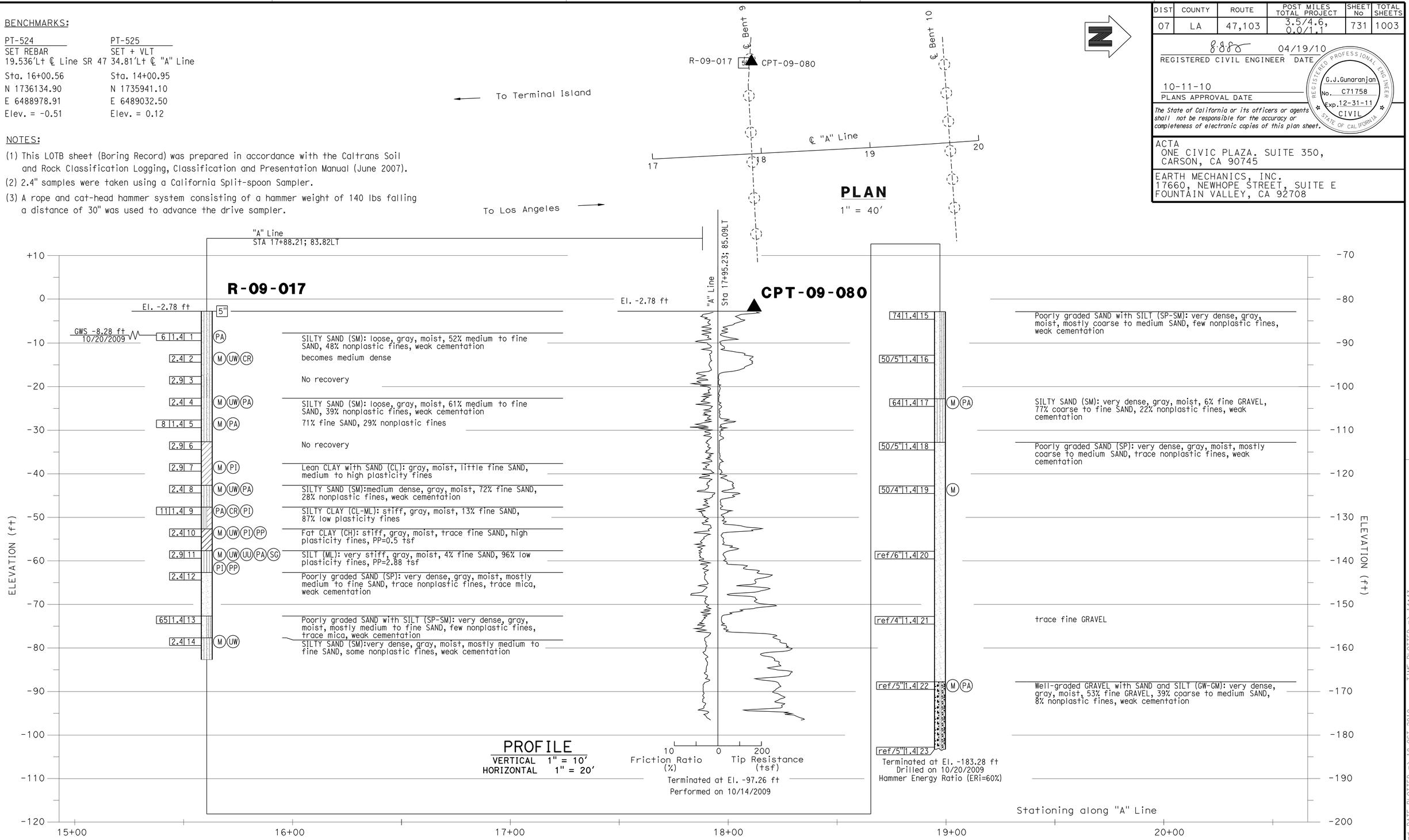


| | | | | | |
|---|---|---|---|---|---|
| DESIGN OVERSIGHT | DRAWN BY: J. Fang | FIELD INVESTIGATION BY: | PREPARED FOR THE STATE OF CALIFORNIA DEPARTMENT OF TRANSPORTATION | G. J. Gunaranjan PROJECT ENGINEER | BRIDGE NO. 53-3032 / POST MILE 3.58 | SCHUYLER HEIM BRIDGE (REPLACE) |
| SIGN OFF DATE | CHECKED BY: K. Pratheepan | R. Jie | | | | LOG OF TEST BORINGS NO. 16 OF 34 |

OGS CIVIL LOG OF TEST BORINGS SHEET (ENGLISH) (REV. 06-01-09)

ORIGINAL SCALE IN INCHES FOR REDUCED PLANS 0 1 2 3

CU 07-271
EA 138201

DISREGARD PRINTS BEARING EARLIER REVISION DATES

REVISION DATES (PRELIMINARY STAGE ONLY) 02/08/10 03/24/10 05/28/10 07/01/10 07/02/10

SHEET 229 OF 247

FILE => 53-3032-z-ltb16.dgn

USERNAME => friehard DATE PLOTTED => 18-OCT-2010 TIME PLOTTED => 14:43

| DIST | COUNTY | ROUTE | POST MILES TOTAL PROJECT | SHEET No | TOTAL SHEETS |
|---|---|---|---|---|---|
| 07 | LA | 47,103 | 3.5/4.6, 0.0/1.1 | 732 | 1003 |

REGISTERED CIVIL ENGINEER 04/19/10 DATE

10-11-10
PLANS APPROVAL DATE

REGISTERED PROFESSIONAL ENGINEER G.J.Gunaranjan No. C71758 Exp.12-31-11 CIVIL STATE OF CALIFORNIA

*The State of California or its officers or agents shall not be responsible for the accuracy or completeness of electronic copies of this plan sheet.*

ACTA
ONE CIVIC PLAZA. SUITE 350,
CARSON, CA 90745

EARTH MECHANICS, INC.
17660, NEWHOPE STREET, SUITE E
FOUNTAIN VALLEY, CA 92708

BENCHMARKS:

| PT-524 | PT-525 |
|---|---|
| SET REBAR | SET + VLT |
| 19.536'Lt ℄ Line SR 47 | 34.81'Lt ℄ "A" Line |
| Sta. 16+00.56 | Sta. 14+00.95 |
| N 1736134.90 | N 1735941.10 |
| E 6488978.91 | E 6489032.50 |
| Elev. = -0.51 | Elev. = 0.12 |

NOTES:

(1) This LOTB sheet (Boring Record) was prepared in accordance with the Caltrans Soil and Rock Classification Logging, Classification and Presentation Manual (June 2007).

(2) 2.4" samples were taken using a California Split-spoon Sampler.

(3) An automatic trip hammer system consisting of a hammer weight of 140 lbs falling a distance of 30" was used to advance the drive sampler.

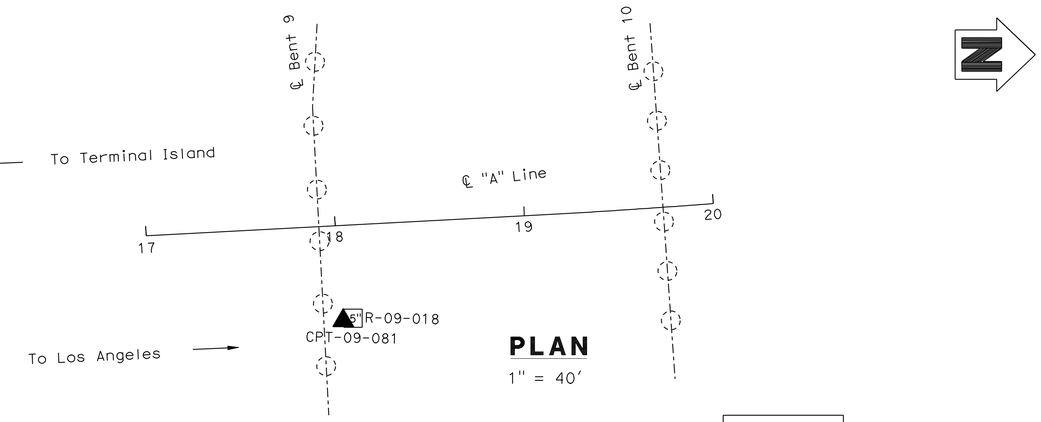


PLAN
1" = 40'

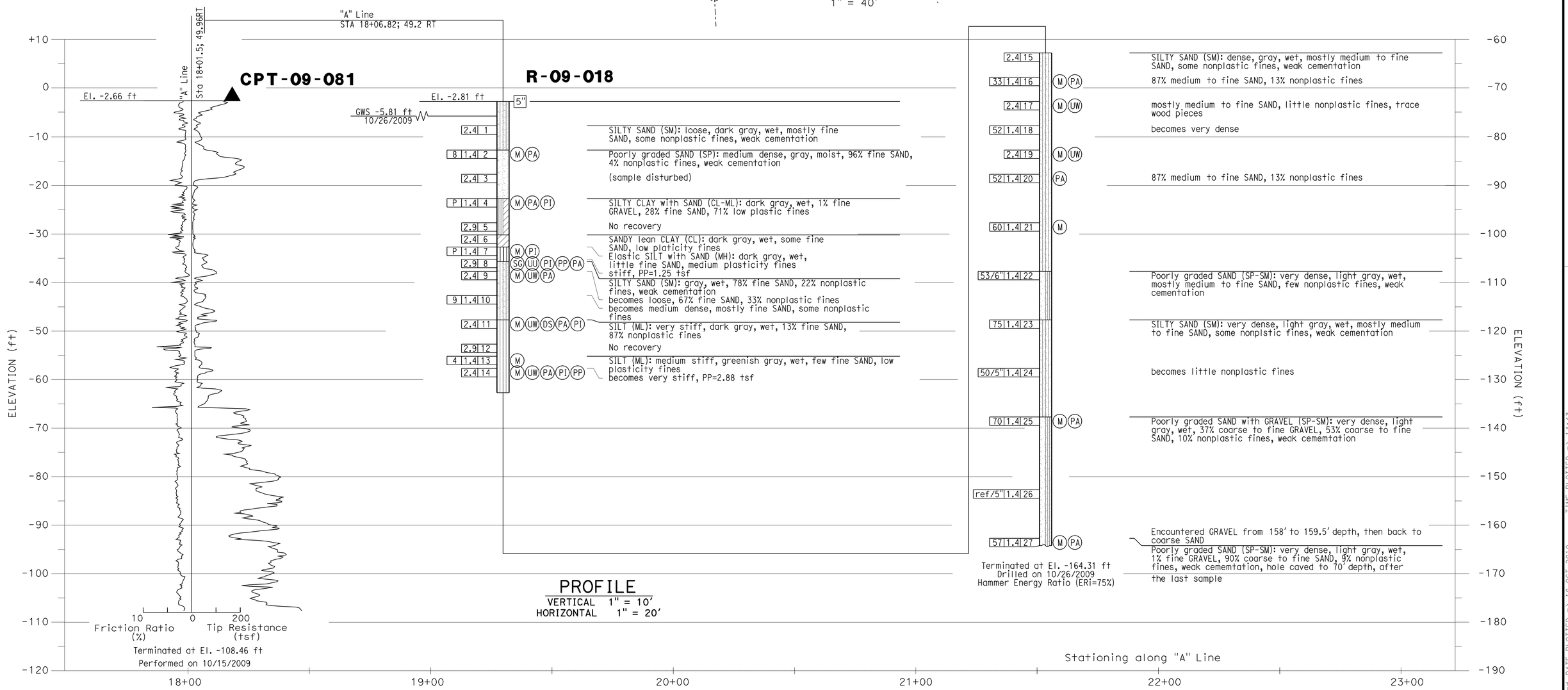


PROFILE
VERTICAL 1" = 10'
HORIZONTAL 1" = 20'

| | | | | | |
|---|---|---|---|---|---|
| DESIGN OVERSIGHT | DRAWN BY: J. Fang | FIELD INVESTIGATION BY: | PREPARED FOR THE STATE OF CALIFORNIA DEPARTMENT OF TRANSPORTATION | G. J. Gunaranjan PROJECT ENGINEER | BRIDGE NO. 53-3032 POST MILE 3.58 |
| SIGN OFF DATE | CHECKED BY: K. Pratheepan | K. Thant | | | |

# SCHUYLER HEIM BRIDGE (REPLACE)

# LOG OF TEST BORINGS NO. 17 OF 34

OGS CIVIL LOG OF TEST BORINGS SHEET (ENGLISH) (REV. 06-01-09)

ORIGINAL SCALE IN INCHES FOR REDUCED PLANS 0 1 2 3

CU 07-271
EA 138201

DISREGARD PRINTS BEARING EARLIER REVISION DATES

REVISION DATES (PRELIMINARY STAGE ONLY) 02/02/10 03/02/10 05/02/10 07/02/10 07/02/10

SHEET 230 OF 247

FILE => 53-3032-z-ltb17.dgn

USERNAME => trlenard DATE PLOTTED => 18-OCT-2010 TIME PLOTTED => 14:43

| DIST | COUNTY | ROUTE | POST MILES TOTAL PROJECT | SHEET No | TOTAL SHEETS |
|---|---|---|---|---|---|
| 07 | LA | 47,103 | 3.5/4.6, 0.0/1.1 | 733 | 1003 |

REGISTERED CIVIL ENGINEER 04/19/10 DATE

10-11-10
PLANS APPROVAL DATE

REGISTERED PROFESSIONAL ENGINEER G.J.Gunaranjan No. C71758 Exp.12-31-11 CIVIL STATE OF CALIFORNIA

*The State of California or its officers or agents shall not be responsible for the accuracy or completeness of electronic copies of this plan sheet.*

ACTA
ONE CIVIC PLAZA. SUITE 350,
CARSON, CA 90745

EARTH MECHANICS, INC.
17660, NEWHOPE STREET, SUITE E
FOUNTAIN VALLEY, CA 92708

BENCHMARKS:

| PT-523 | PT-533 |
|---|---|
| SET + WALK | SET REBAR |
| 86.853'Rt ℄ "A"Line | 85.280'Lt ℄ "A" Line |
| Sta. 29+3.99 | Sta. 22+43.67 |
| N 1736450.01 | N 1736766.95 |
| E 6489057.72 | E 6488855.46 |
| Elev. = 1.26 | Elev. = 11.56 |

NOTES:

(1) This LOTB sheet (Boring Record) was prepared in accordance with the Caltrans Soil and Rock Classification Logging, Classification and Presentation Manual (June 2007).

(2) 2.4" samples were taken using a California Split-spoon Sampler.

(3) A rope and cat-head hammer system consisting of a hammer weight of 140 lbs falling a distance of 30" was used to advance the drive sampler.

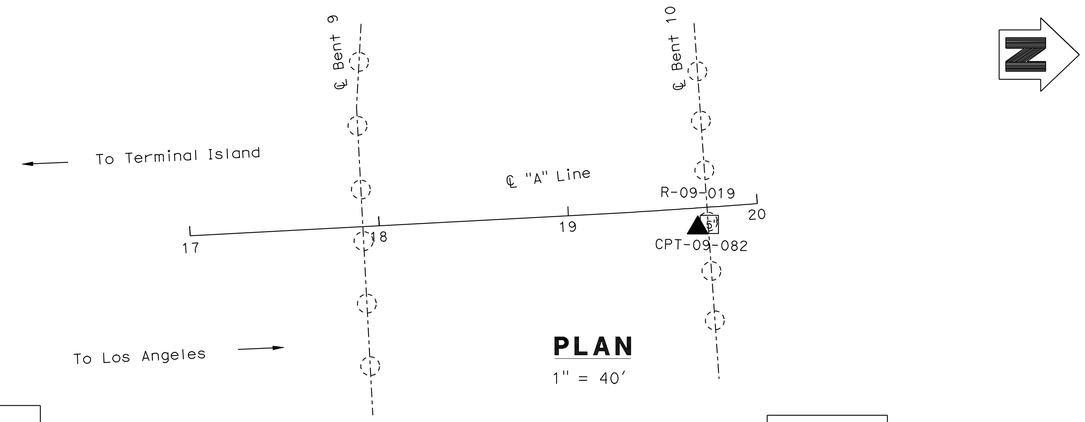


PLAN
1" = 40'

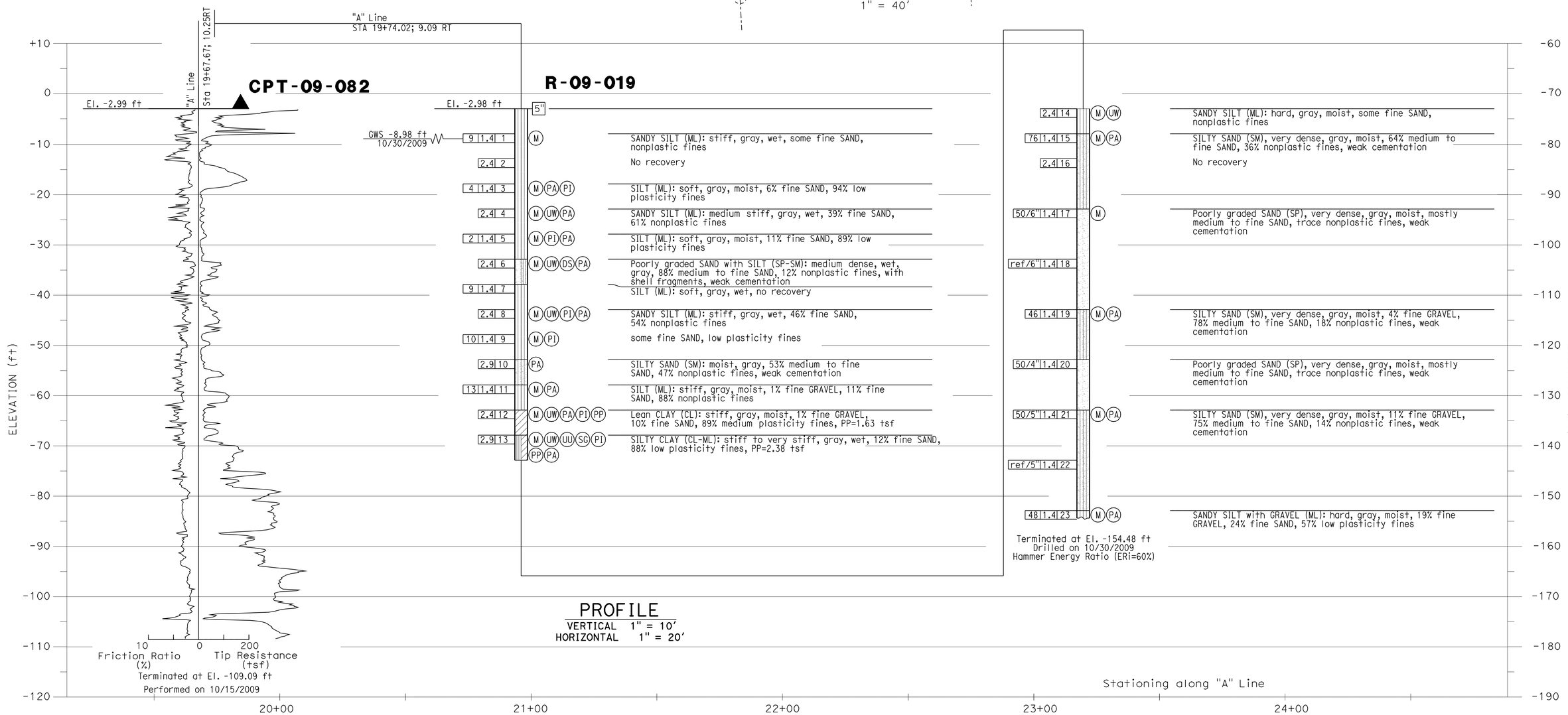


PROFILE
VERTICAL 1" = 10'
HORIZONTAL 1" = 20'

| | | | | | |
|---|---|---|---|---|---|
| DESIGN OVERSIGHT | DRAWN BY: J. Fang | FIELD INVESTIGATION BY: | PREPARED FOR THE STATE OF CALIFORNIA DEPARTMENT OF TRANSPORTATION | G. J. Gunaranjan PROJECT ENGINEER | BRIDGE NO. 53-3032 / POST MILE 3.58 | SCHUYLER HEIM BRIDGE (REPLACE) |
| SIGN OFF DATE | CHECKED BY: K. Pratheepan | R. Jie | | | | LOG OF TEST BORINGS NO. 18 OF 34 |

OGS CIVIL LOG OF TEST BORINGS SHEET (ENGLISH) (REV. 06-01-09)

ORIGINAL SCALE IN INCHES FOR REDUCED PLANS 0 1 2 3

CU 07-271
EA 138201

DISREGARD PRINTS BEARING EARLIER REVISION DATES

REVISION DATES (PRELIMINARY STAGE ONLY) 02/08/10 03/24/10 05/28/10 07/01/10 07/02/10

SHEET 231 OF 247

FILE => 53-3032-z-1tb18.dgn

USERNAME => trlenard DATE PLOTTED => 18-OCT-2010 TIME PLOTTED => 14:43

| DIST | COUNTY | ROUTE | POST MILES TOTAL PROJECT | SHEET No | TOTAL SHEETS |
|---|---|---|---|---|---|
| 07 | LA | 47,103 | 3.5/4.6, 0.0/1.1 | 734 | 1003 |

REGISTERED CIVIL ENGINEER 04/19/10 DATE

10-11-10
PLANS APPROVAL DATE

REGISTERED PROFESSIONAL ENGINEER G.J.Gunaranjan No. C71758 Exp.12-31-11 CIVIL STATE OF CALIFORNIA

*The State of California or its officers or agents shall not be responsible for the accuracy or completeness of electronic copies of this plan sheet.*

ACTA
ONE CIVIC PLAZA. SUITE 350,
CARSON, CA 90745

EARTH MECHANICS, INC.
17660, NEWHOPE STREET, SUITE E
FOUNTAIN VALLEY, CA 92708

BENCHMARKS:

| PT-523 | PT-533 |
|---|---|
| SET + WALK | SET REBAR |
| 86.853'Rt ℄ "A"Line | 85.280'Lt ℄ "A" Line |
| Sta. 29+3.99 | Sta. 22+43.67 |
| N 1736450.01 | N 1736766.95 |
| E 6489057.72 | E 6488855.46 |
| Elev. = 1.26 | Elev. = 11.56 |

NOTES:

(1) This LOTB sheet (Boring Record) was prepared in accordance with the Caltrans Soil and Rock Classification Logging, Classification and Presentation Manual (June 2007).

(2) 2.4" samples were taken using a California Split-spoon Sampler.

(3) An automatic trip hammer system consisting of a hammer weight of 140 lbs falling a distance of 30" was used to advance the drive sampler.

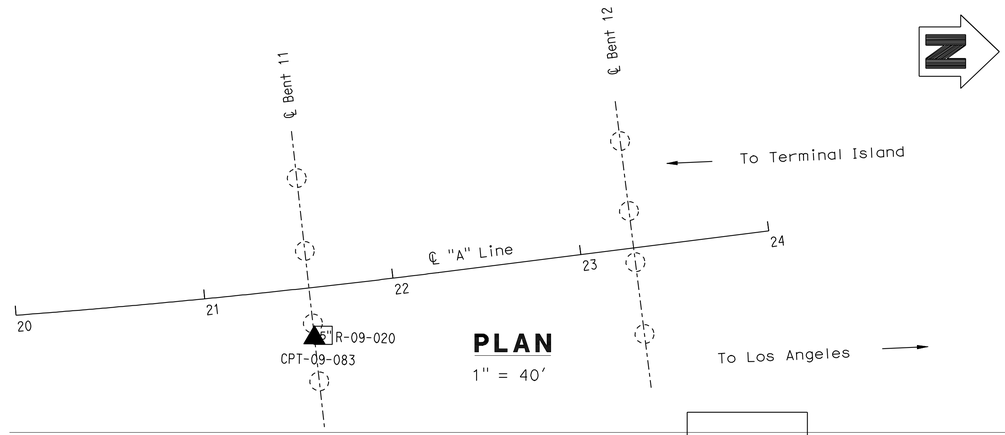


PLAN
1" = 40'

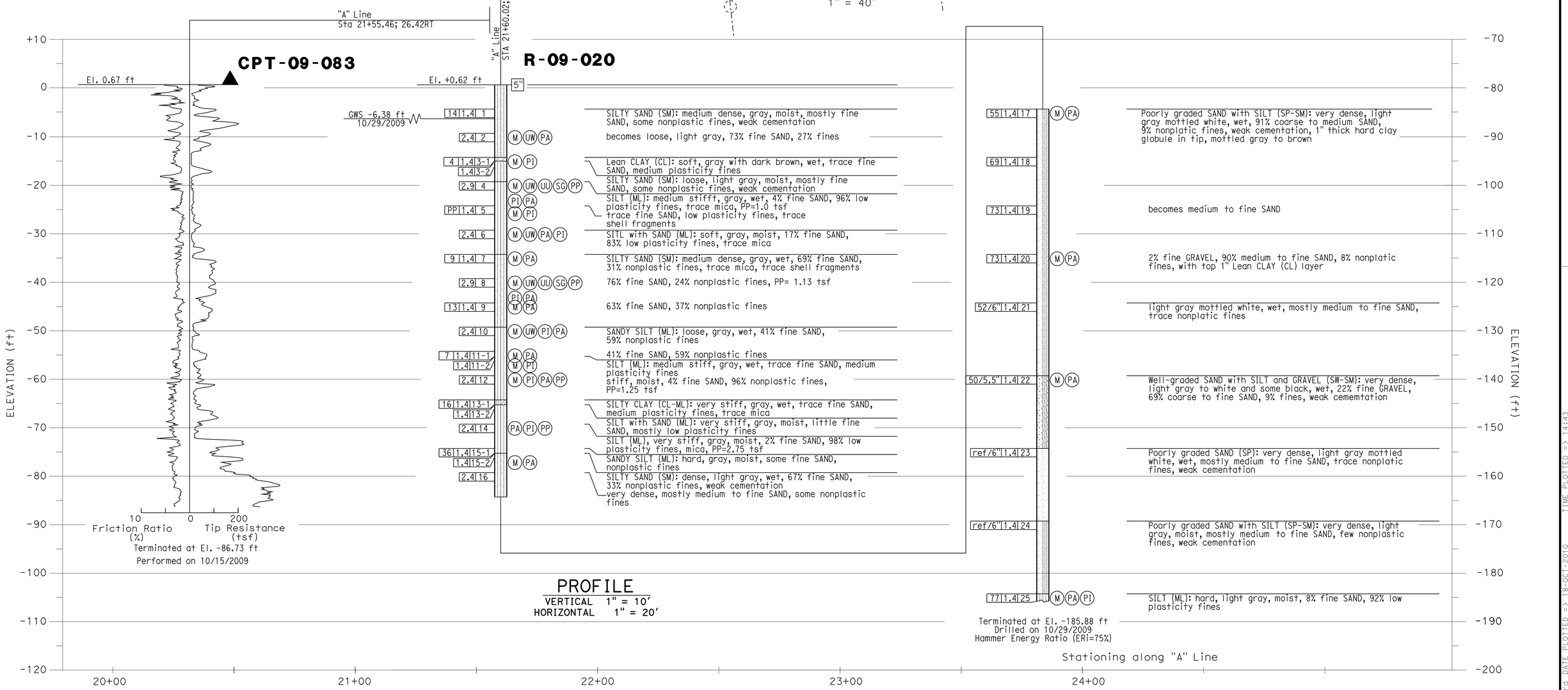


| | | | | | |
|---|---|---|---|---|---|
| DESIGN OVERSIGHT | DRAWN BY: J. Fang | FIELD INVESTIGATION BY: R. jie | PREPARED FOR THE STATE OF CALIFORNIA DEPARTMENT OF TRANSPORTATION | G. J. Gunaranjan, PROJECT ENGINEER | BRIDGE NO. 53-3032 / POST MILE 3.58 |
| SIGN OFF DATE | CHECKED BY: K. Pratheepan | | | | |

SCHUYLER HEIM BRIDGE (REPLACE)

LOG OF TEST BORINGS NO. 19 OF 34

OGS CIVIL LOG OF TEST BORINGS SHEET (ENGLISH) (REV. 06-01-09)

ORIGINAL SCALE IN INCHES FOR REDUCED PLANS 0 1 2 3

CU 07-271
EA 138201

DISREGARD PRINTS BEARING EARLIER REVISION DATES — REVISION DATES (PRELIMINARY STAGE ONLY) 02/05/10 03/12/10 05/20/10 07/01/10 07/02/10

SHEET 232 OF 247

FILE => 53-3032-z-ltb19.dgn

USERNAME => trienard DATE PLOTTED => 18-OCT-2010 TIME PLOTTED => 14:43

| DIST | COUNTY | ROUTE | POST MILES TOTAL PROJECT | SHEET No | TOTAL SHEETS |
|---|---|---|---|---|---|
| 07 | LA | 47,103 | 3.5/4.6, 0.0/1.1 | 735 | 1003 |

REGISTERED CIVIL ENGINEER 04/19/10 DATE

10-11-10
PLANS APPROVAL DATE

REGISTERED PROFESSIONAL ENGINEER G.J.Gunaranjan No. C71758 Exp.12-31-11 CIVIL STATE OF CALIFORNIA

*The State of California or its officers or agents shall not be responsible for the accuracy or completeness of electronic copies of this plan sheet.*

ACTA
ONE CIVIC PLAZA. SUITE 350,
CARSON, CA 90745

EARTH MECHANICS, INC.
17660, NEWHOPE STREET, SUITE E
FOUNTAIN VALLEY, CA 92708

BENCHMARKS:

| PT-523 | PT-533 |
|---|---|
| SET + WALK | SET REBAR |
| 86.853'Rt ℄ "A"Line | 85.280'Lt ℄ "A" Line |
| Sta. 29+3.99 | Sta. 22+43.67 |
| N 1736450.01 | N 1736766.95 |
| E 6489057.72 | E 6488855.46 |
| Elev. = 1.26 | Elev. = 11.56 |

NOTES:

(1) This LOTB sheet (Boring Record) was prepared in accordance with the Caltrans Soil and Rock Classification Logging, Classification and Presentation Manual (June 2007).

(2) 2.4" samples were taken using a California Split-spoon Sampler.

(3) An automatic trip hammer system consisting of a hammer weight of 140 lbs falling a distance of 30" was used to advance the drive sampler.

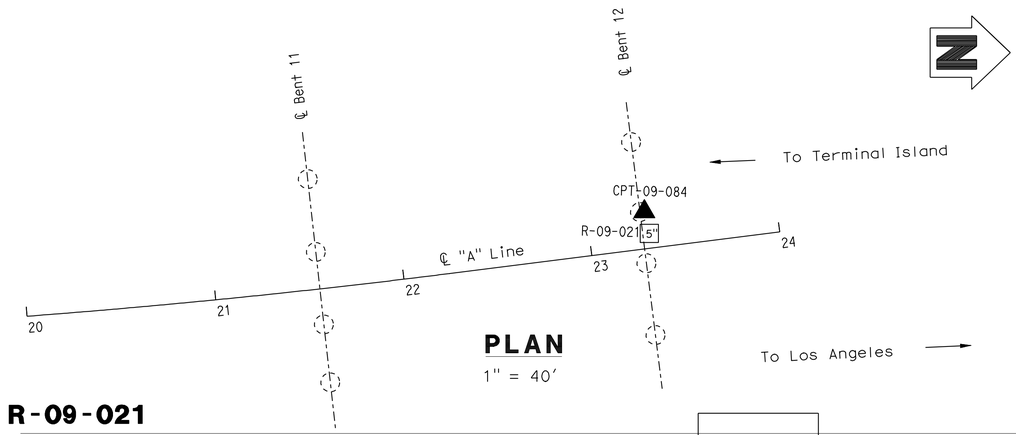


## PLAN

1" = 40'

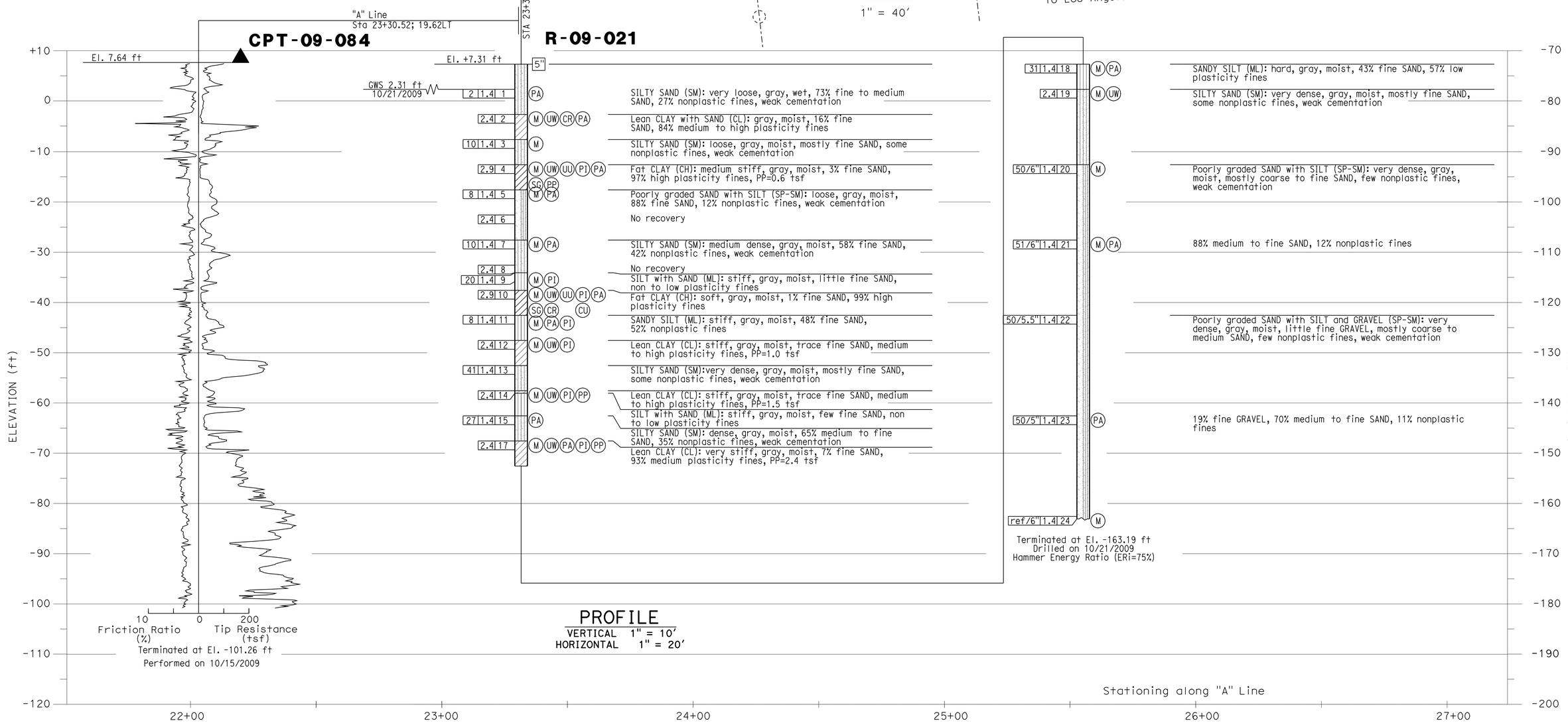


## PROFILE

VERTICAL 1" = 10'
HORIZONTAL 1" = 20'

| | | | | | |
|---|---|---|---|---|---|
| DESIGN OVERSIGHT | DRAWN BY: J. Fang | FIELD INVESTIGATION BY: | PREPARED FOR THE STATE OF CALIFORNIA DEPARTMENT OF TRANSPORTATION | G. J. Gunaranjan PROJECT ENGINEER | BRIDGE NO. 53-3032 POST MILE 3.58 |
| SIGN OFF DATE | CHECKED BY: K. Pratheepan | E. Brown | | | |

**SCHUYLER HEIM BRIDGE (REPLACE)**

**LOG OF TEST BORINGS NO. 20 OF 34**

OGS CIVIL LOG OF TEST BORINGS SHEET (ENGLISH) (REV. 06-01-09)

ORIGINAL SCALE IN INCHES FOR REDUCED PLANS 0 1 2 3

CU 07-271
EA 138201

DISREGARD PRINTS BEARING EARLIER REVISION DATES

REVISION DATES (PRELIMINARY STAGE ONLY) 02/09/10 03/24/10 05/28/10 07/01/10 07/02/10

SHEET 233 OF 247

FILE => 53-3032-z-lttb20.dgn

USERNAME => trlenard DATE PLOTTED => 18-OCT-2010 TIME PLOTTED => 14:43

| DIST | COUNTY | ROUTE | POST MILES TOTAL PROJECT | SHEET No | TOTAL SHEETS |
|---|---|---|---|---|---|
| 07 | LA | 47,103 | 3.5/4.6, 0.0/1.1 | 736 | 1003 |

REGISTERED CIVIL ENGINEER 04/19/10 DATE

10-11-10
PLANS APPROVAL DATE

REGISTERED PROFESSIONAL ENGINEER G.J.Gunaranjan No. C71758 Exp.12-31-11 CIVIL STATE OF CALIFORNIA

*The State of California or its officers or agents shall not be responsible for the accuracy or completeness of electronic copies of this plan sheet.*

ACTA
ONE CIVIC PLAZA. SUITE 350,
CARSON, CA 90745

EARTH MECHANICS, INC.
17660, NEWHOPE STREET, SUITE E
FOUNTAIN VALLEY, CA 92708

BENCHMARKS:

| PT-535 | PT-86000 |
|---|---|
| SET REBAR | TBM SOUTH SIDE |
| 52.253' Lt ℄ "A"Line | 121.813' Lt ℄ "A" Line |
| Sta. 24+66.03 | Sta. 24+66.03 |
| N 1736991.65 | N 1736960.63 |
| E 6488860.38 | E 6488794.18 |
| Elev. = 8.08 | Elev. = 13.38 |

NOTES:

(1) This LOTB sheet (Boring Record) was prepared in accordance with the Caltrans Soil and Rock Classification Logging, Classification and Presentation Manual (June 2007).

(2) 2.4" samples were taken using a California Split-spoon Sampler.

(3) An automatic trip hammer system consisting of a hammer weight of 140 lbs falling a distance of 30" was used to advance the drive sampler.

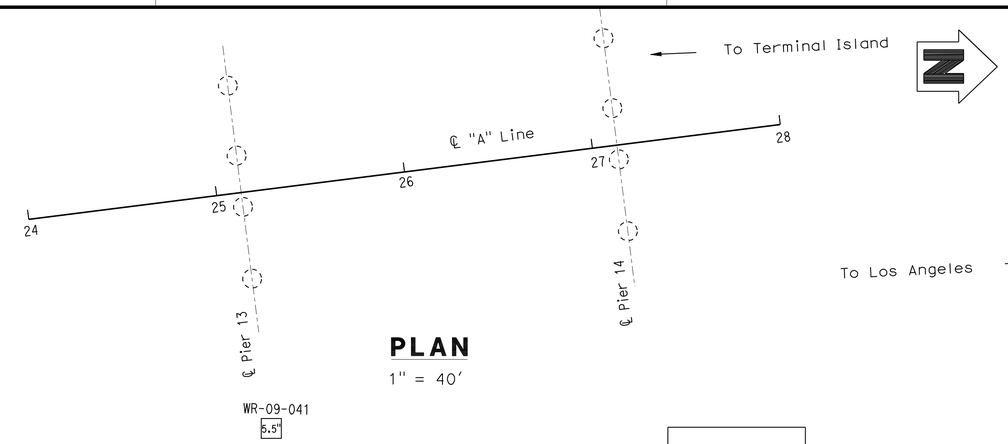


PLAN
1" = 40'

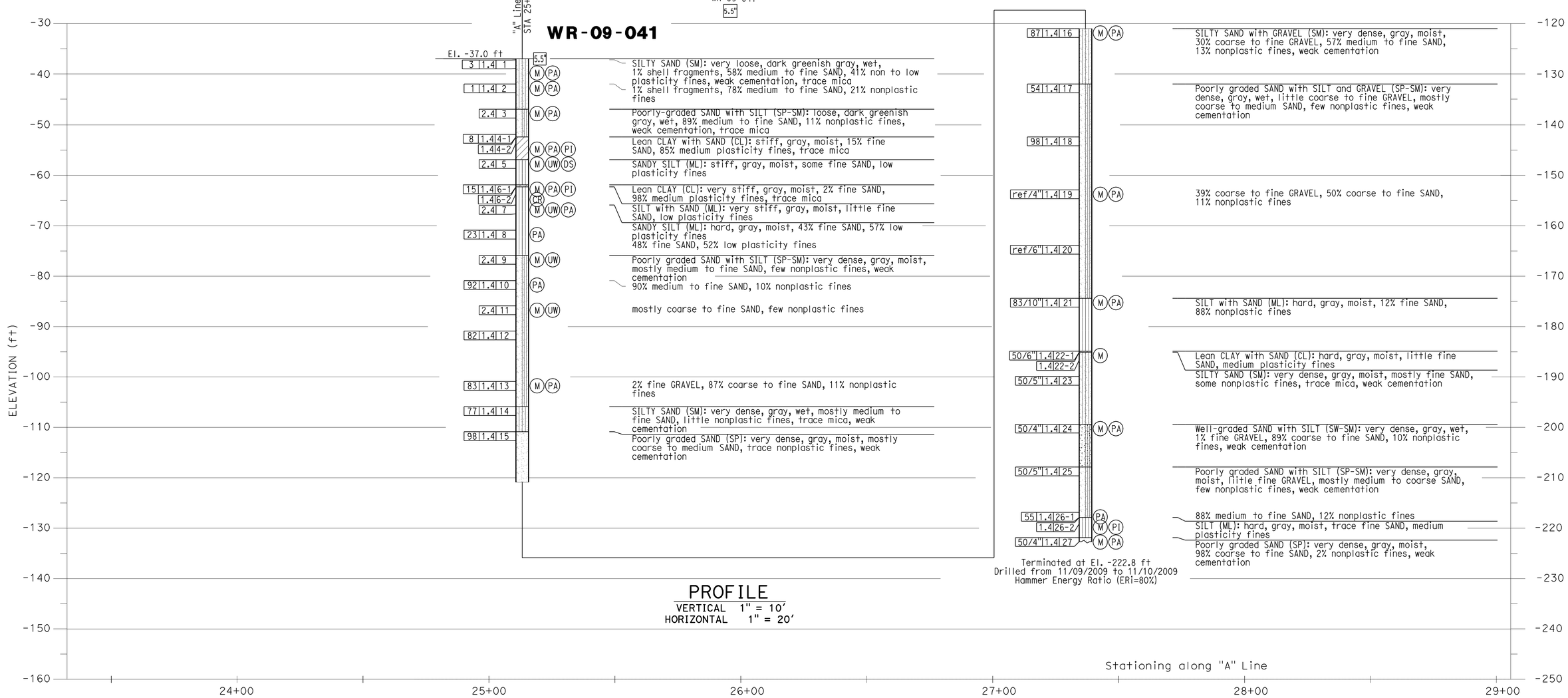


PROFILE
VERTICAL 1" = 10'
HORIZONTAL 1" = 20'

| | | | | | |
|---|---|---|---|---|---|
| DESIGN OVERSIGHT | DRAWN BY: J. Fang | FIELD INVESTIGATION BY: | PREPARED FOR THE STATE OF CALIFORNIA DEPARTMENT OF TRANSPORTATION | G. J. Gunaranjan PROJECT ENGINEER | BRIDGE NO. 53-3032 POST MILE 3.58 |
| SIGN OFF DATE | CHECKED BY: K. Pratheepan | K. Thant | | | |

SCHUYLER HEIM BRIDGE (REPLACE)

LOG OF TEST BORINGS NO. 21 OF 34

OGS CIVIL LOG OF TEST BORINGS SHEET (ENGLISH) (REV. 06-01-09)

ORIGINAL SCALE IN INCHES FOR REDUCED PLANS 0 1 2 3

CU 07-271
EA 138201

DISREGARD PRINTS BEARING EARLIER REVISION DATES

REVISION DATES (PRELIMINARY STAGE ONLY) 02/08/10 03/24/10 05/20/10 07/01/10 07/02/10

SHEET 234 OF 247

FILE => 53-3032-z-ltb21.dgn

USERNAME => friehard DATE PLOTTED => 18-OCT-2010 TIME PLOTTED => 14:43

| DIST | COUNTY | ROUTE | POST MILES TOTAL PROJECT | SHEET No | TOTAL SHEETS |
|---|---|---|---|---|---|
| 07 | LA | 47,103 | 3.5/4.6, 0.0/1.1 | 737 | 1003 |

REGISTERED CIVIL ENGINEER 04/19/10 DATE

10-11-10
PLANS APPROVAL DATE

*The State of California or its officers or agents shall not be responsible for the accuracy or completeness of electronic copies of this plan sheet.*

REGISTERED PROFESSIONAL ENGINEER G.J.Gunaranjan No. C71758 Exp.12-31-11 CIVIL STATE OF CALIFORNIA

ACTA
ONE CIVIC PLAZA. SUITE 350,
CARSON, CA 90745

EARTH MECHANICS, INC.
17660, NEWHOPE STREET, SUITE E
FOUNTAIN VALLEY, CA 92708

BENCHMARKS:

| PT-535 | PT-86000 |
|---|---|
| SET REBAR | TBM SOUTH SIDE |
| 52.253' Lt ℄ "A"Line | 121.813' Lt ℄ "A" Line |
| Sta. 24+66.03 | Sta. 24+66.03 |
| N 1736991.65 | N 1736960.63 |
| E 6488860.38 | E 6488794.18 |
| Elev. = 8.08 | Elev. = 13.38 |

NOTES:

(1) This LOTB sheet (Boring Record) was prepared in accordance with the Caltrans Soil and Rock Classification Logging, Classification and Presentation Manual (June 2007).

(2) 2.4" samples were taken using a California Split-spoon Sampler.

(3) An automatic trip hammer system consisting of a hammer weight of 140 lbs falling a distance of 30" was used to advance the drive sampler.

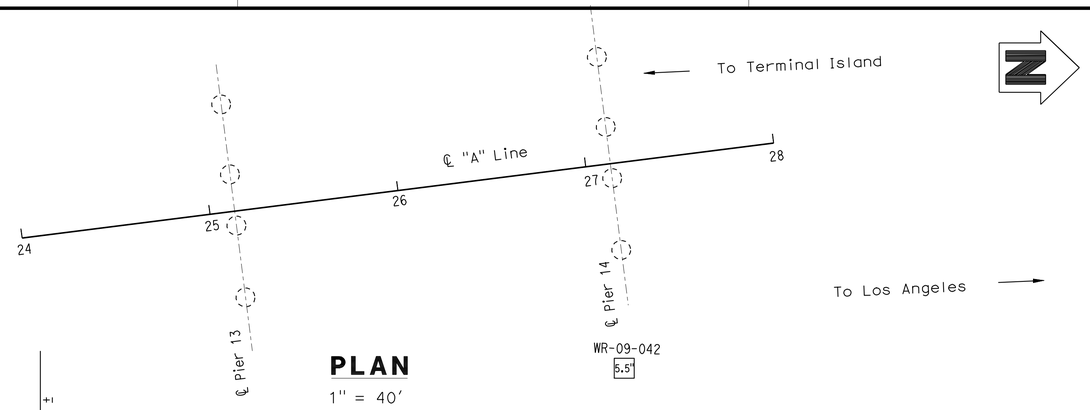


**PLAN**
1" = 40'

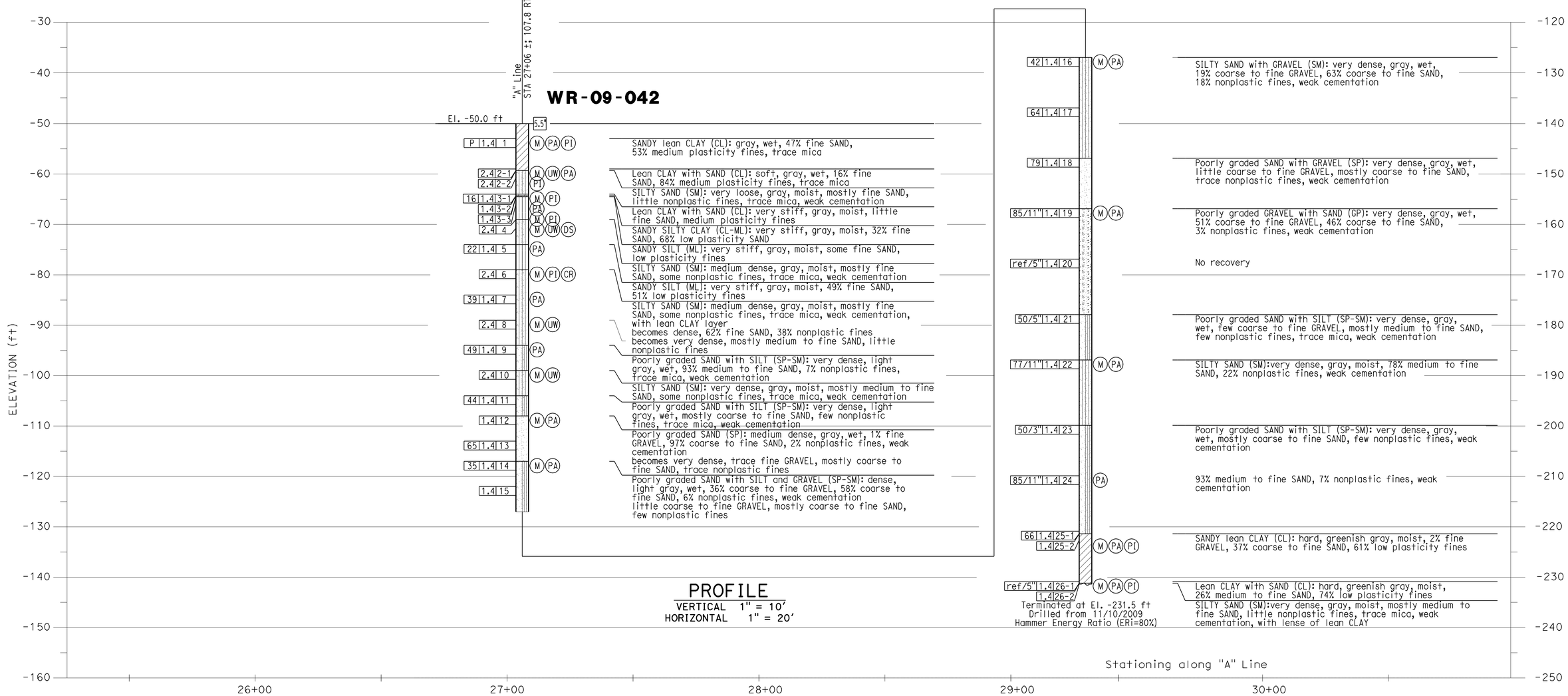


**PROFILE**
VERTICAL 1" = 10'
HORIZONTAL 1" = 20'

| | | | | | |
|---|---|---|---|---|---|
| DESIGN OVERSIGHT | DRAWN BY: J. Fang | FIELD INVESTIGATION BY: | PREPARED FOR THE STATE OF CALIFORNIA DEPARTMENT OF TRANSPORTATION | G. J. Gunaranjan PROJECT ENGINEER | BRIDGE NO. 53-3032 / POST MILE 3.58 |
| SIGN OFF DATE | CHECKED BY: K. Pratheepan | K. Thant | | | |

**SCHUYLER HEIM BRIDGE (REPLACE)**

**LOG OF TEST BORINGS NO. 22 OF 34**

OGS CIVIL LOG OF TEST BORINGS SHEET (ENGLISH) (REV. 06-01-09)

ORIGINAL SCALE IN INCHES FOR REDUCED PLANS 0 1 2 3

CU 07-271
EA 138201

DISREGARD PRINTS BEARING EARLIER REVISION DATES

REVISION DATES (PRELIMINARY STAGE ONLY) 02/08/10 03/24/10 05/25/10 07/01/10 07/02/10

SHEET 235 OF 247

FILE => 53-3032-z-1tb22.dgn

USERNAME => trlenard DATE PLOTTED => 18-OCT-2010 TIME PLOTTED => 14:43

| DIST | COUNTY | ROUTE | POST MILES TOTAL PROJECT | SHEET No | TOTAL SHEETS |
|---|---|---|---|---|---|
| 07 | LA | 47,103 | 3.5/4.6, 0.0/1.1 | 738 | 1003 |

REGISTERED CIVIL ENGINEER 04/19/10 DATE

10-11-10
PLANS APPROVAL DATE

*The State of California or its officers or agents shall not be responsible for the accuracy or completeness of electronic copies of this plan sheet.*

REGISTERED PROFESSIONAL ENGINEER G.J.Gunaranjan No. C71758 Exp.12-31-11 CIVIL STATE OF CALIFORNIA

ACTA
ONE CIVIC PLAZA. SUITE 350,
CARSON, CA 90745

EARTH MECHANICS, INC.
17660, NEWHOPE STREET, SUITE E
FOUNTAIN VALLEY, CA 92708

BENCHMARKS:

| PT-516 | PT-517 |
|---|---|
| SET REBAR | SET MAG NAIL |
| 116.456′ Lt ℄ "A"Line | 63.606′ Lt ℄ "A" Line |
| Sta. 33+50.41 | Sta. 32+19.25 |
| N 1737861.02 | N 1737737.54 |
| E 6488685.90 | E 6488754.76 |
| Elev. = -2.56 | Elev. = 9.21 |

NOTES:

(1) This LOTB sheet (Boring Record) was prepared in accordance with the Caltrans Soil and Rock Classification Logging, Classification and Presentation Manual (June 2007).

(2) 2.4" samples were taken using a California Split-spoon Sampler.

(3) An automatic trip hammer system consisting of a hammer weight of 140 lbs falling a distance of 30" was used to advance the drive sampler.

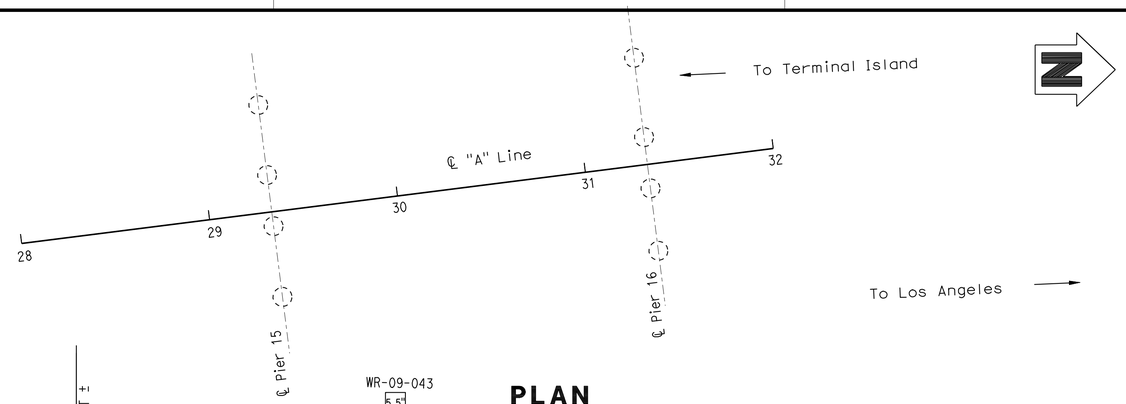


## PLAN

1" = 40′

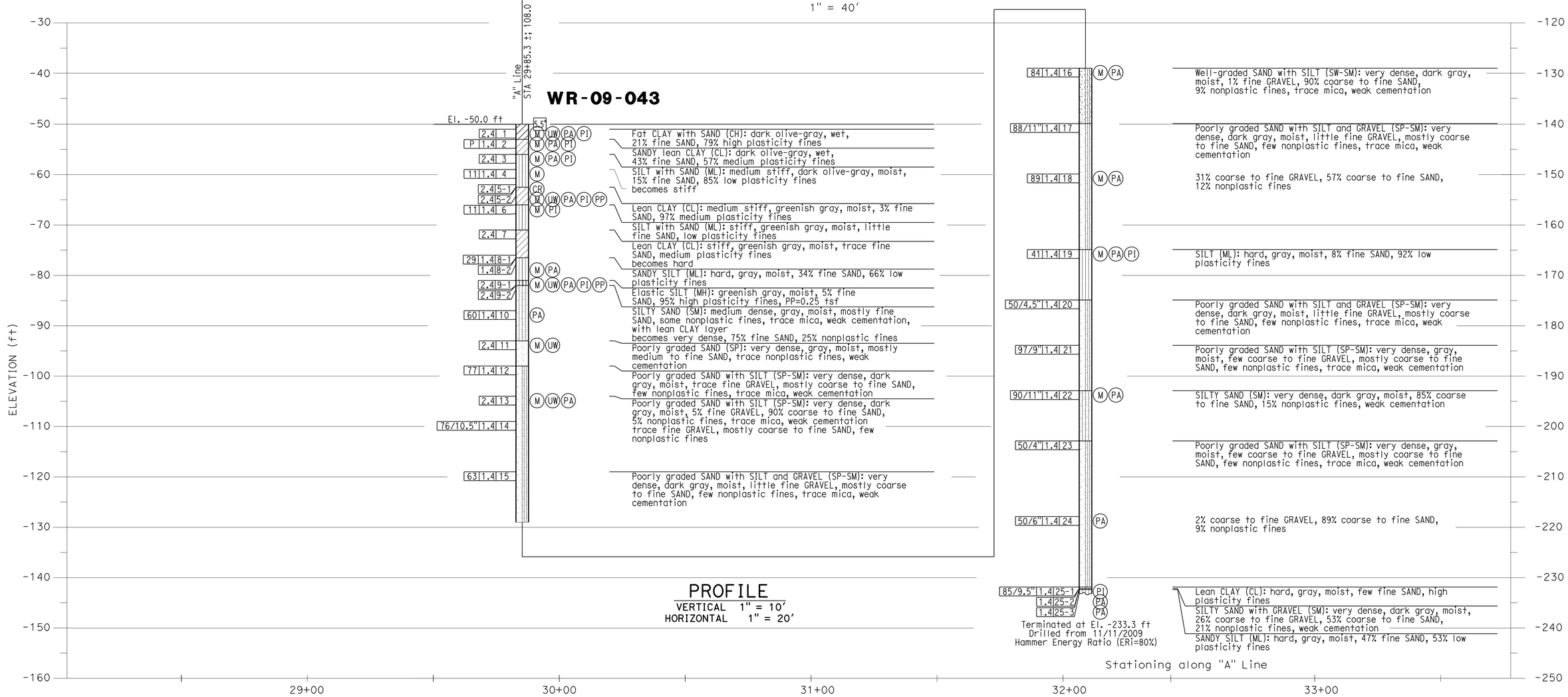


## PROFILE

VERTICAL 1" = 10′
HORIZONTAL 1" = 20′

| | | | | | |
|---|---|---|---|---|---|
| DESIGN OVERSIGHT | DRAWN BY: J. Fang | FIELD INVESTIGATION BY: | PREPARED FOR THE STATE OF CALIFORNIA DEPARTMENT OF TRANSPORTATION | G. J. Gunaranjan PROJECT ENGINEER | BRIDGE NO. 53-3032 / POST MILE 3.58 |
| SIGN OFF DATE | CHECKED BY: K. Pratheepan | K. Thant | | | |

**SCHUYLER HEIM BRIDGE (REPLACE)**

**LOG OF TEST BORINGS NO. 23 OF 34**

OGS CIVIL LOG OF TEST BORINGS SHEET (ENGLISH) (REV. 06-01-09)

ORIGINAL SCALE IN INCHES FOR REDUCED PLANS 0 1 2 3

CU 07-271
EA 138201

DISREGARD PRINTS BEARING EARLIER REVISION DATES

REVISION DATES (PRELIMINARY STAGE ONLY) 02/08/10 03/22/10 05/28/10 07/01/10 07/02/10

SHEET 236 OF 247

FILE => 53-3032-z-1tb23.dgn

USERNAME => trienard DATE PLOTTED => 18-OCT-2010 TIME PLOTTED => 14:44

| DIST | COUNTY | ROUTE | POST MILES TOTAL PROJECT | SHEET No | TOTAL SHEETS |
|---|---|---|---|---|---|
| 07 | LA | 47,103 | 3.5/4.6, 0.0/1.1 | 739 | 1003 |

REGISTERED CIVIL ENGINEER 04/19/10 DATE

10-11-10
PLANS APPROVAL DATE

REGISTERED PROFESSIONAL ENGINEER G.J.Gunaranjan No. C71758 Exp.12-31-11 CIVIL STATE OF CALIFORNIA

*The State of California or its officers or agents shall not be responsible for the accuracy or completeness of electronic copies of this plan sheet.*

ACTA
ONE CIVIC PLAZA. SUITE 350,
CARSON, CA 90745

EARTH MECHANICS, INC.
17660, NEWHOPE STREET, SUITE E
FOUNTAIN VALLEY, CA 92708

BENCHMARKS:

| PT-516 | PT-517 |
|---|---|
| SET REBAR | SET MAG NAIL |
| 116.456′ Lt ℄ "A"Line | 63.606′ Lt ℄ "A" Line |
| Sta. 33+50.41 | Sta. 32+19.25 |
| N 1737861.02 | N 1737737.54 |
| E 6488685.90 | E 6488754.76 |
| Elev. = -2.56 | Elev. = 9.21 |

NOTES:

(1) This LOTB sheet (Boring Record) was prepared in accordance with the Caltrans Soil and Rock Classification Logging, Classification and Presentation Manual (June 2007).

(2) 2.4" samples were taken using a California Split-spoon Sampler.

(3) An automatic trip hammer system consisting of a hammer weight of 140 lbs falling a distance of 30" was used to advance the drive sampler.

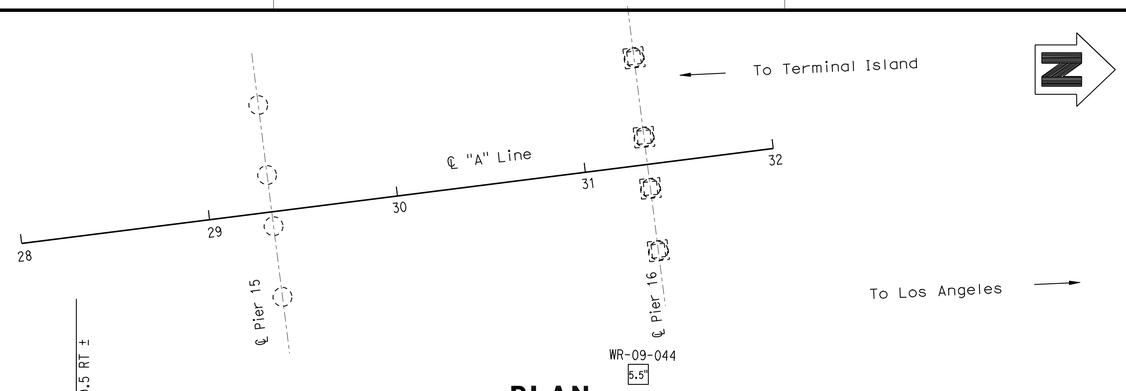


## PLAN

1" = 40′

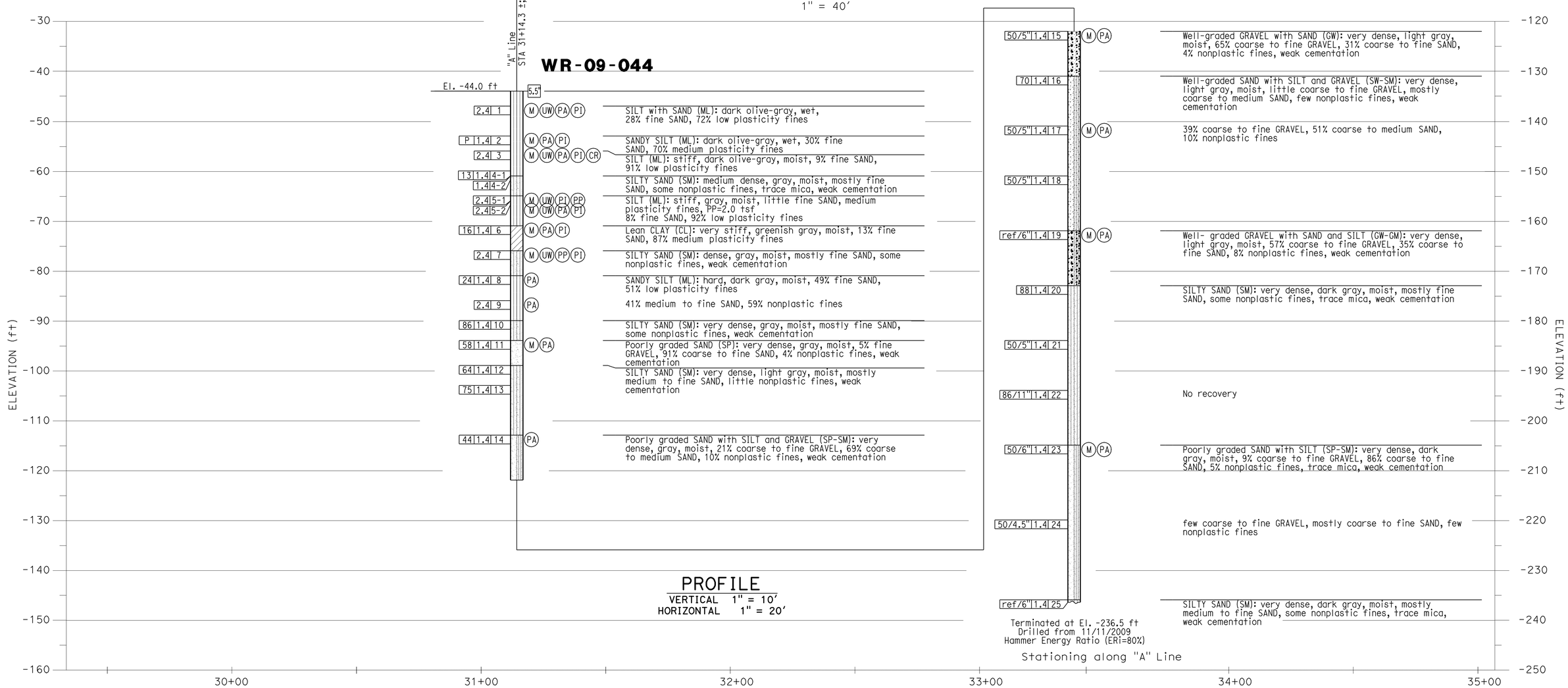


## PROFILE

VERTICAL 1" = 10′
HORIZONTAL 1" = 20′

| | | | | | |
|---|---|---|---|---|---|
| DESIGN OVERSIGHT | DRAWN BY: J. Fang | FIELD INVESTIGATION BY: | PREPARED FOR THE STATE OF CALIFORNIA DEPARTMENT OF TRANSPORTATION | G. J. Gunaranjan PROJECT ENGINEER | BRIDGE NO. 53-3032 POST MILE 3.58 |
| SIGN OFF DATE | CHECKED BY: K. Pratheepan | K. Thant | | | |

# SCHUYLER HEIM BRIDGE (REPLACE)

# LOG OF TEST BORINGS NO. 24 OF 34

OGS CIVIL LOG OF TEST BORINGS SHEET (ENGLISH) (REV. 06-01-09)

ORIGINAL SCALE IN INCHES FOR REDUCED PLANS 0 1 2 3

CU 07-271
EA 138201

DISREGARD PRINTS BEARING EARLIER REVISION DATES

REVISION DATES (PRELIMINARY STAGE ONLY) 02/02/10 03/02/10 05/03/10 07/01/10 07/02/10

SHEET 237 OF 247

FILE => 53-3032-z-1tb24.dgn

USERNAME => trlemard DATE PLOTTED => 18-OCT-2010 TIME PLOTTED => 14:44

| DIST | COUNTY | ROUTE | POST MILES TOTAL PROJECT | SHEET No | TOTAL SHEETS |
|---|---|---|---|---|---|
| 07 | LA | 47,103 | 3.5/4.6, 0.0/1.1 | 740 | 1003 |

REGISTERED CIVIL ENGINEER 04/19/10 DATE

10-11-10
PLANS APPROVAL DATE

REGISTERED PROFESSIONAL ENGINEER G.J.Gunaranjan No. C71758 Exp.12-31-11 CIVIL STATE OF CALIFORNIA

*The State of California or its officers or agents shall not be responsible for the accuracy or completeness of electronic copies of this plan sheet.*

ACTA
ONE CIVIC PLAZA. SUITE 350,
CARSON, CA 90745

EARTH MECHANICS, INC.
17660, NEWHOPE STREET, SUITE E
FOUNTAIN VALLEY, CA 92708

BENCHMARKS:

| PT-516 | PT-517 |
|---|---|
| SET REBAR | SET MAG NAIL |
| 116.456′ Lt ℄ "A"Line | 63.606′ Lt ℄ "A" Line |
| Sta. 33+50.41 | Sta. 32+19.25 |
| N 1737861.02 | N 1737737.54 |
| E 6488685.90 | E 6488754.76 |
| Elev. = -2.56 | Elev. = 9.21 |

NOTES:

(1) This LOTB sheet (Boring Record) was prepared in accordance with the Caltrans Soil and Rock Classification Logging, Classification and Presentation Manual (June 2007).

(2) 2.4" samples were taken using a California Split-spoon Sampler.

(3) An automatic trip hammer system consisting of a hammer weight of 140 lbs falling a distance of 30" was used to advance the drive sampler.

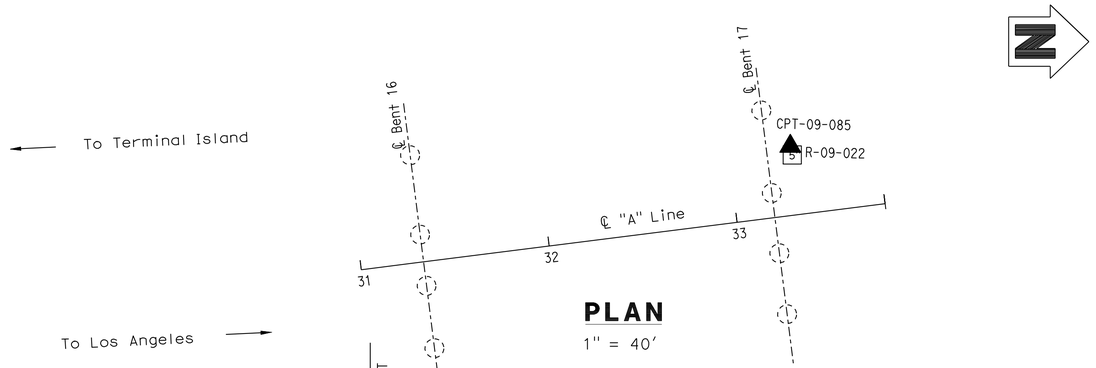


PLAN
1" = 40′

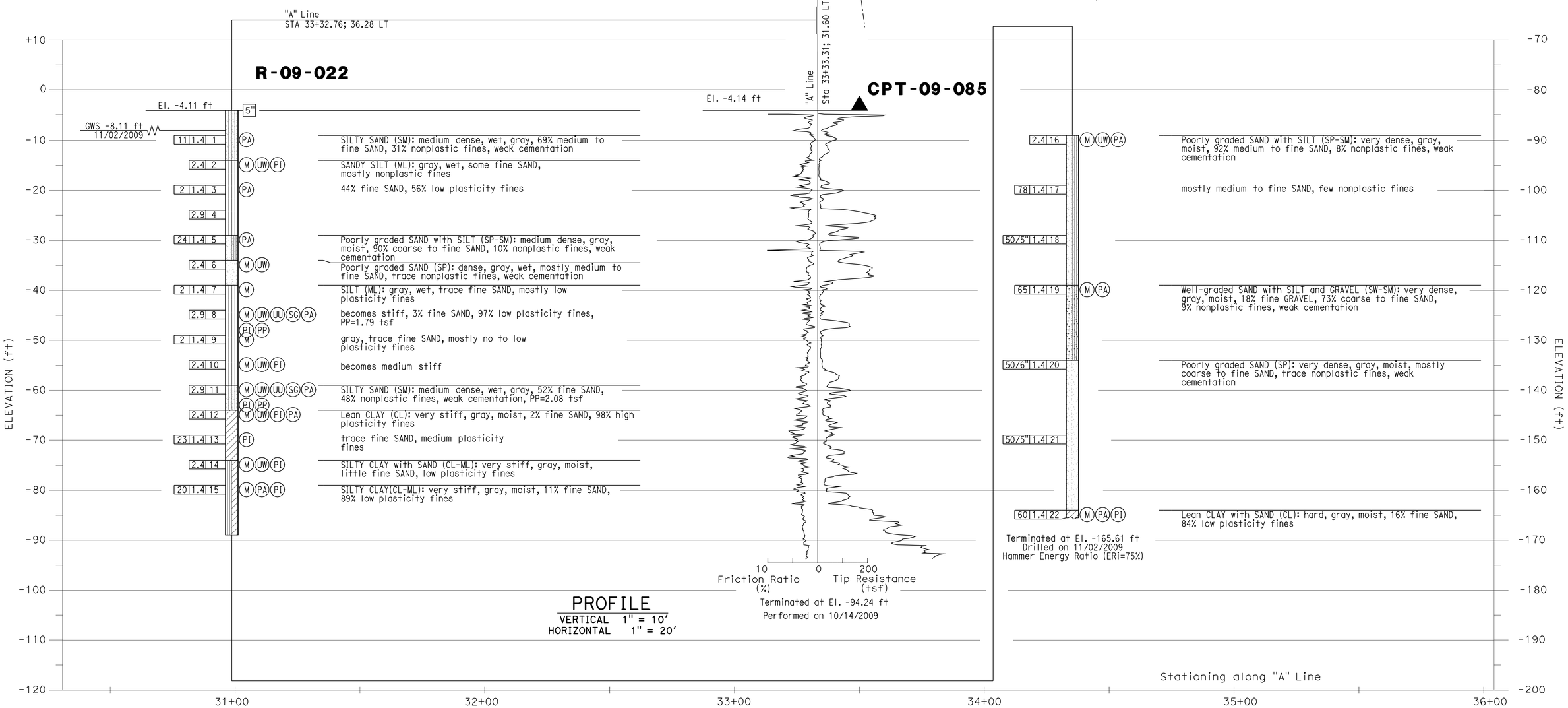


PROFILE
VERTICAL 1" = 10′
HORIZONTAL 1" = 20′

| | | | | | |
|---|---|---|---|---|---|
| DESIGN OVERSIGHT | DRAWN BY: J. Fang | FIELD INVESTIGATION BY: | PREPARED FOR THE STATE OF CALIFORNIA DEPARTMENT OF TRANSPORTATION | G. J. Gunaranjan PROJECT ENGINEER | BRIDGE NO. 53-3032 / POST MILE 3.58 | SCHUYLER HEIM BRIDGE (REPLACE) |
| SIGN OFF DATE | CHECKED BY: K. Pratheepan | R. Jie | | | | LOG OF TEST BORINGS NO. 25 OF 34 |

OGS CIVIL LOG OF TEST BORINGS SHEET (ENGLISH) (REV. 06-01-09)

ORIGINAL SCALE IN INCHES FOR REDUCED PLANS 0 1 2 3

CU 07-271
EA 138201

DISREGARD PRINTS BEARING EARLIER REVISION DATES

REVISION DATES (PRELIMINARY STAGE ONLY) 02/08/10 03/24/10 05/25/10 07/01/10 07/02/10

SHEET 238 OF 247

FILE => 53-3032-z-ltb25.dgn

USERNAME => trlenard DATE PLOTTED => 18-OCT-2010 TIME PLOTTED => 14:44

| DIST | COUNTY | ROUTE | POST MILES TOTAL PROJECT | SHEET No | TOTAL SHEETS |
|---|---|---|---|---|---|
| 07 | LA | 47,103 | 3.5/4.6, 0.0/1.1 | 741 | 1003 |

REGISTERED CIVIL ENGINEER 04/19/10 DATE

PLANS APPROVAL DATE 10-11-10

REGISTERED PROFESSIONAL ENGINEER G.J.Gunaranjan No. C71758 Exp.12-31-11 CIVIL STATE OF CALIFORNIA

*The State of California or its officers or agents shall not be responsible for the accuracy or completeness of electronic copies of this plan sheet.*

ACTA
ONE CIVIC PLAZA. SUITE 350,
CARSON, CA 90745

EARTH MECHANICS, INC.
17660, NEWHOPE STREET, SUITE E
FOUNTAIN VALLEY, CA 92708

BENCHMARKS:

| PT-PMHV509 | PT-PMHV515 |
|---|---|
| SET MAG NAIL | SET MAG NAIL |
| 26.671′ Lt ℄ "G"Line | 28.517′ Rt ℄ "G" Line |
| Sta. 604+968.70 | Sta. 600+995.50 |
| N 1738366.89 | N 1737997.51 |
| E 6488728.36 | E 6488779.52 |
| Elev. = -3.61 | Elev. = -2.21 |

NOTES:

(1) This LOTB sheet (Boring Record) was prepared in accordance with the Caltrans Soil and Rock Classification Logging, Classification and Presentation Manual (June 2007).

(2) 2.4" samples were taken using a California Split-spoon Sampler.

(3) An automatic trip hammer system consisting of a hammer weight of 140 lbs falling a distance of 30" was used to advance the drive sampler.

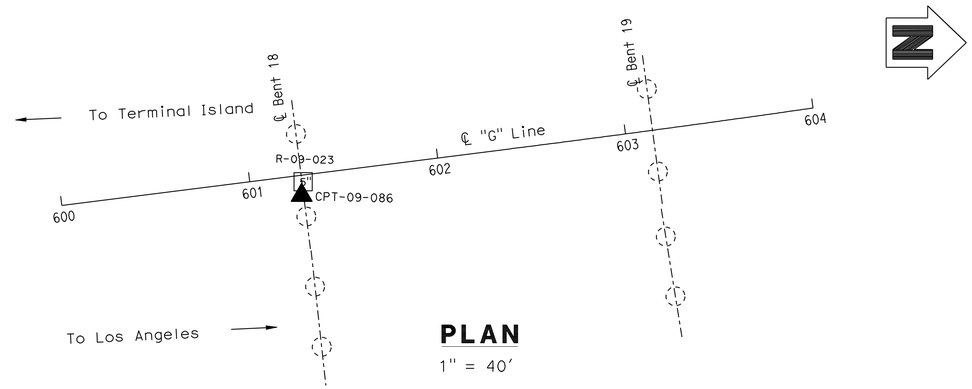


**PLAN**
1" = 40′

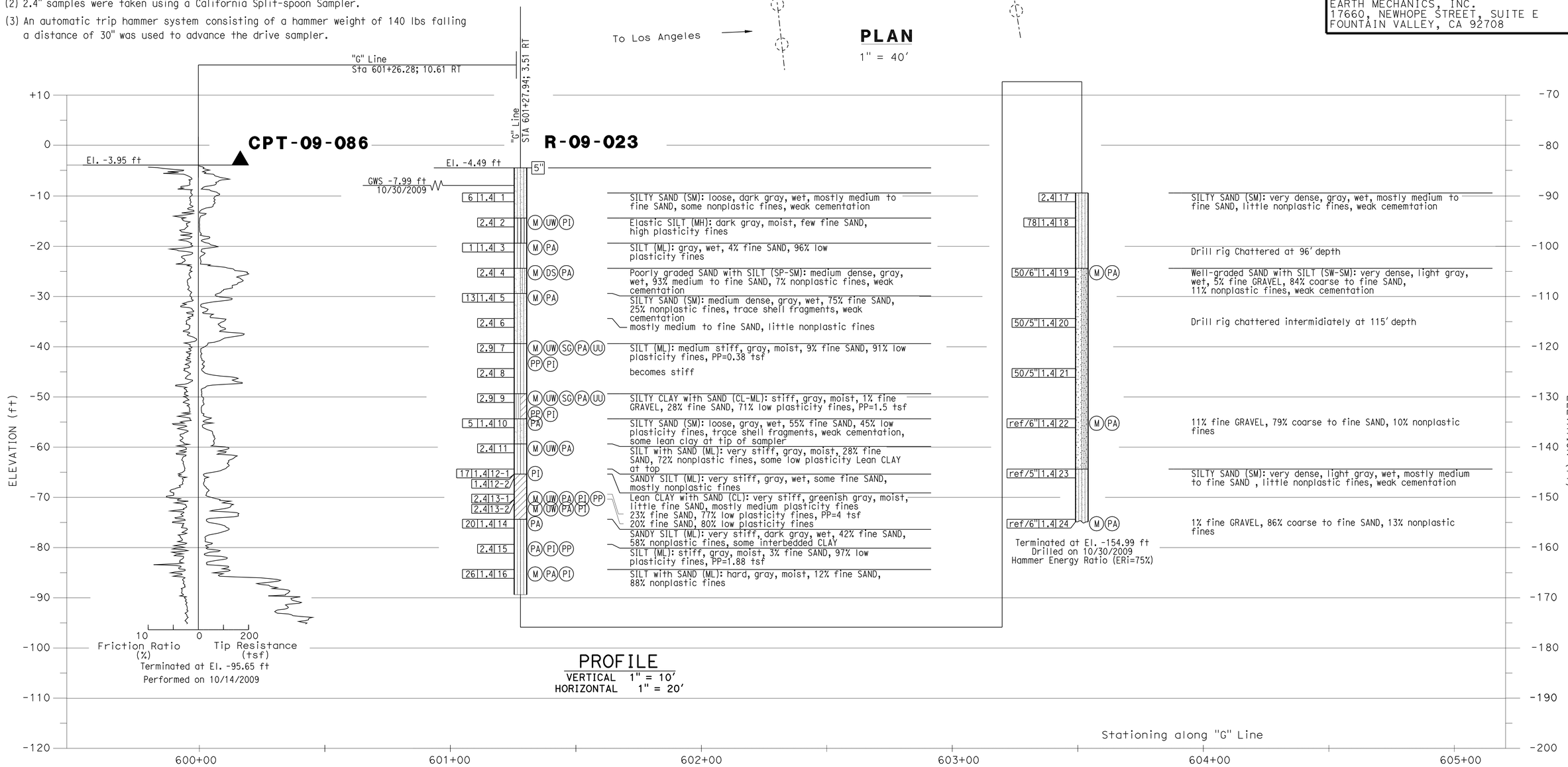


**PROFILE**
VERTICAL 1" = 10′
HORIZONTAL 1" = 20′

| | | | | | |
|---|---|---|---|---|---|
| DESIGN OVERSIGHT | DRAWN BY: J. Fang | FIELD INVESTIGATION BY: | PREPARED FOR THE STATE OF CALIFORNIA DEPARTMENT OF TRANSPORTATION | G. J. Gunaranjan PROJECT ENGINEER | BRIDGE NO. 53-3032 / POST MILE 3.58 | SCHUYLER HEIM BRIDGE (REPLACE) |
| SIGN OFF DATE | CHECKED BY: K. Pratheepan | K. Thant | | | | LOG OF TEST BORINGS NO. 26 OF 34 |

OGS CIVIL LOG OF TEST BORINGS SHEET (ENGLISH) (REV. 06-01-09)

ORIGINAL SCALE IN INCHES FOR REDUCED PLANS 0 1 2 3

CU 07-271
EA 138201

DISREGARD PRINTS BEARING EARLIER REVISION DATES

REVISION DATES (PRELIMINARY STAGE ONLY) 02/05/10 03/12/10 05/28/10 07/01/10 07/02/10

SHEET 239 OF 247

FILE => 53-3032-z-1tb26.dgn

USERNAME => ttrienard DATE PLOTTED => 18-OCT-2010 TIME PLOTTED => 14:44

| DIST | COUNTY | ROUTE | POST MILES TOTAL PROJECT | SHEET No | TOTAL SHEETS |
|---|---|---|---|---|---|
| 07 | LA | 47,103 | 3.5/4.6, 0.0/1.1 | 742 | 1003 |

REGISTERED CIVIL ENGINEER 04/19/10 DATE

10-11-10
PLANS APPROVAL DATE

REGISTERED PROFESSIONAL ENGINEER G.J.Gunaranjan No. C71758 Exp.12-31-11 CIVIL STATE OF CALIFORNIA

*The State of California or its officers or agents shall not be responsible for the accuracy or completeness of electronic copies of this plan sheet.*

ACTA
ONE CIVIC PLAZA. SUITE 350,
CARSON, CA 90745

EARTH MECHANICS, INC.
17660, NEWHOPE STREET, SUITE E
FOUNTAIN VALLEY, CA 92708

BENCHMARKS:

| PT-PMHV509 | PT-PMHV515 |
|---|---|
| SET MAG NAIL | SET MAG NAIL |
| 26.671′ Lt ℄ "G"Line | 28.517′ Rt ℄ "G" Line |
| Sta. 604+968.70 | Sta. 600+995.50 |
| N 1738366.89 | N 1737997.51 |
| E 6488728.36 | E 6488779.52 |
| Elev. = -3.61 | Elev. = -2.21 |

NOTES:

(1) This LOTB sheet (Boring Record) was prepared in accordance with the Caltrans Soil and Rock Classification Logging, Classification and Presentation Manual (June 2007).

(2) 2.4" samples were taken using a California Split-spoon Sampler.

(3) An automatic trip hammer system consisting of a hammer weight of 140 lbs falling a distance of 30" was used to advance the drive sampler.

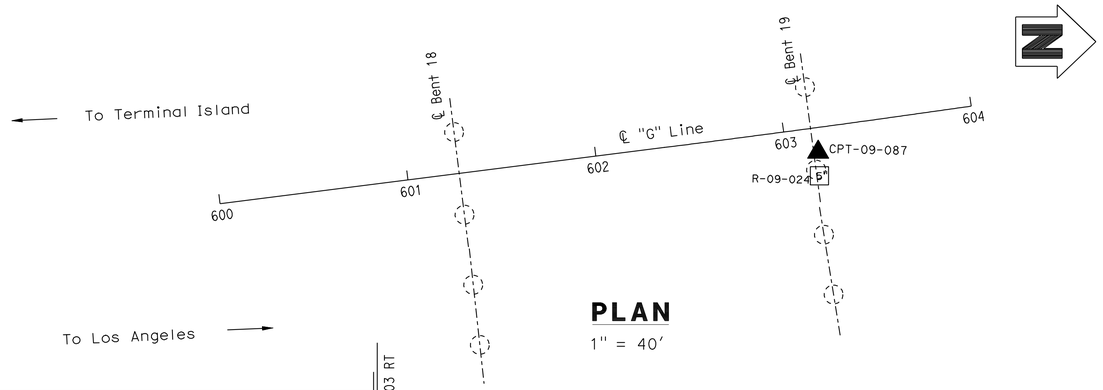


## PLAN

1" = 40′

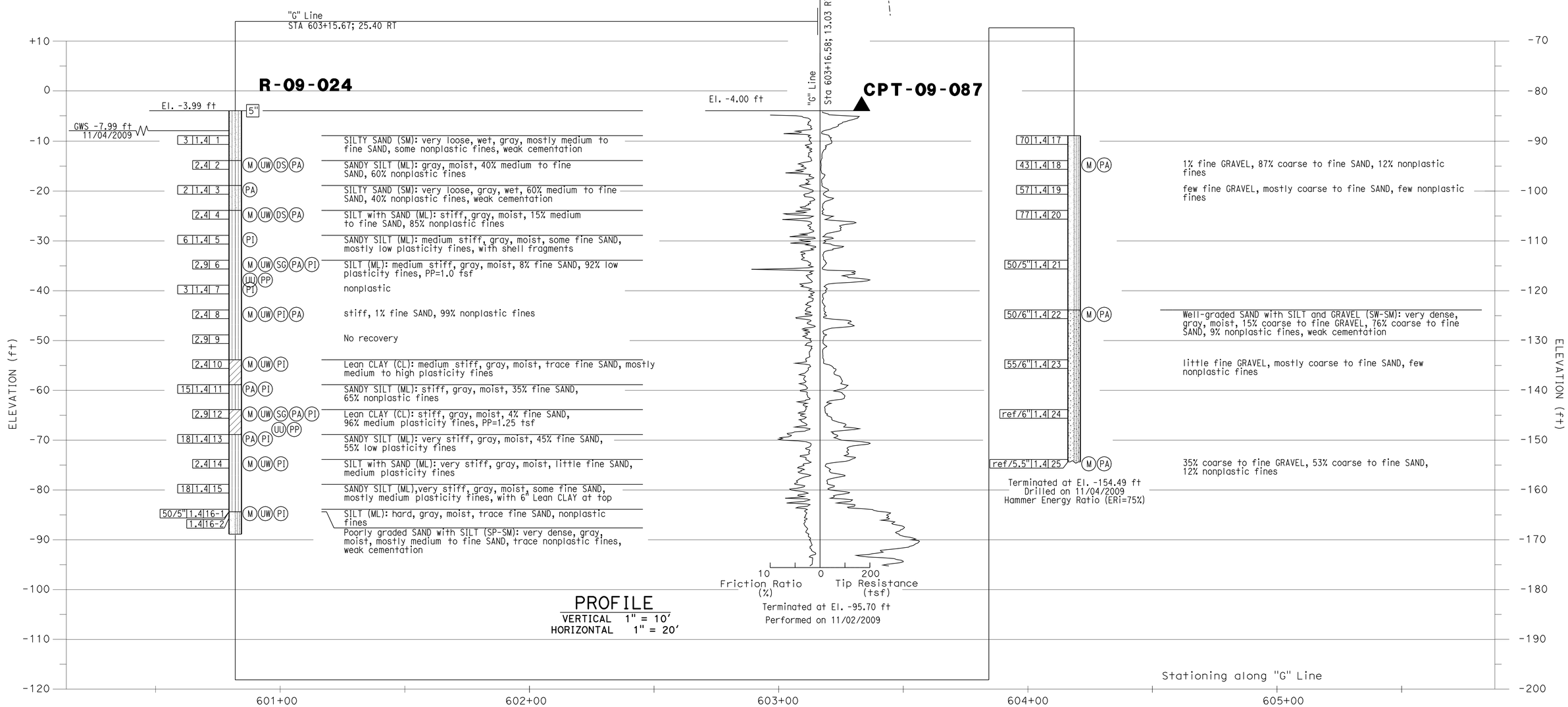


| | | | | | |
|---|---|---|---|---|---|
| DESIGN OVERSIGHT | DRAWN BY: J. Fang | FIELD INVESTIGATION BY: | PREPARED FOR THE STATE OF CALIFORNIA DEPARTMENT OF TRANSPORTATION | G. J. Gunaranjan | BRIDGE NO. 53-3032 |
| SIGN OFF DATE | CHECKED BY: K. Pratheepan | R. Jie | | PROJECT ENGINEER | POST MILE 3.58 |

SCHUYLER HEIM BRIDGE (REPLACE)

LOG OF TEST BORINGS NO. 27 OF 34

OGS CIVIL LOG OF TEST BORINGS SHEET (ENGLISH) (REV. 06-01-09)

ORIGINAL SCALE IN INCHES FOR REDUCED PLANS 0 1 2 3

CU 07-271
EA 138201

DISREGARD PRINTS BEARING EARLIER REVISION DATES

REVISION DATES (PRELIMINARY STAGE ONLY) 02/05/10 03/05/10 05/05/10 07/01/10 07/02/10

SHEET 240 OF 247

FILE => 53-3032-z-1tb27.dgn

USERNAME => trleonard DATE PLOTTED => 18-OCT-2010 TIME PLOTTED => 14:44

| DIST | COUNTY | ROUTE | POST MILES TOTAL PROJECT | SHEET No | TOTAL SHEETS |
|---|---|---|---|---|---|
| 07 | LA | 47,103 | 3.5/4.6, 0.0/1.1 | 743 | 1003 |

REGISTERED CIVIL ENGINEER 04/19/10 DATE

10-11-10
PLANS APPROVAL DATE

REGISTERED PROFESSIONAL ENGINEER G.J.Gunaranjan No. C71758 Exp.12-31-11 CIVIL STATE OF CALIFORNIA

*The State of California or its officers or agents shall not be responsible for the accuracy or completeness of electronic copies of this plan sheet.*

ACTA
ONE CIVIC PLAZA. SUITE 350,
CARSON, CA 90745

EARTH MECHANICS, INC.
17660, NEWHOPE STREET, SUITE E
FOUNTAIN VALLEY, CA 92708

BENCHMARKS:

| PT-PMHV509 | PT-PMHV515 |
|---|---|
| SET MAG NAIL | SET MAG NAIL |
| 26.671' Lt ℄ "G"Line | 28.517' Rt ℄ "G" Line |
| Sta. 604+968.70 | Sta. 600+995.50 |
| N 1738366.89 | N 1737997.51 |
| E 6488728.36 | E 6488779.52 |
| Elev. = -3.61 | Elev. = -2.21 |

NOTES:

(1) This LOTB sheet (Boring Record) was prepared in accordance with the Caltrans Soil and Rock Classification Logging, Classification and Presentation Manual (June 2007).

(2) 2.4" samples were taken using a California Split-spoon Sampler.

(3) An automatic trip hammer system consisting of a hammer weight of 140 lbs falling a distance of 30" was used to advance the drive sampler.

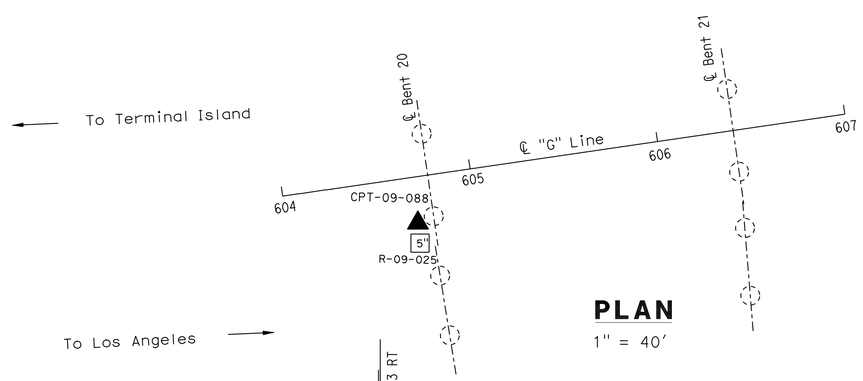


PLAN
1" = 40'

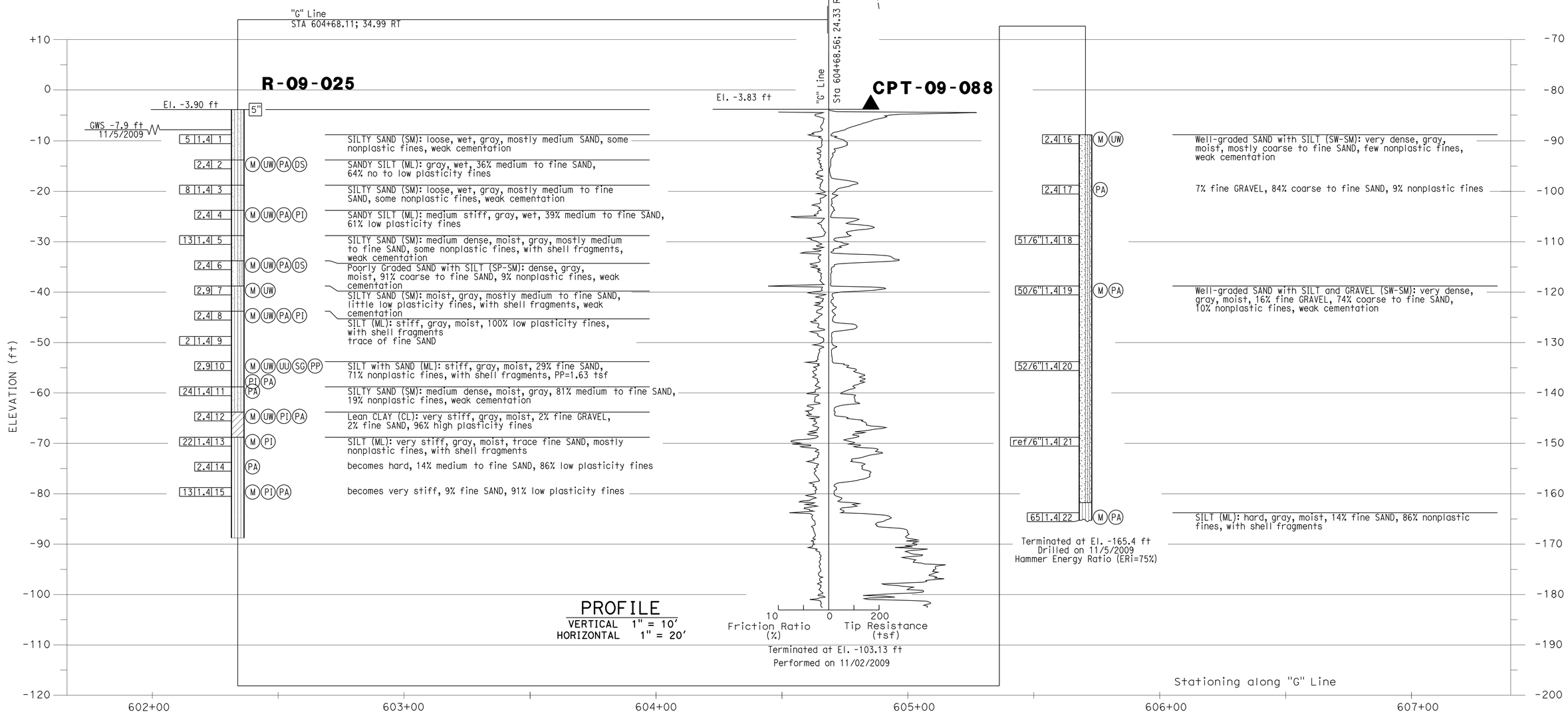


PROFILE
VERTICAL 1" = 10'
HORIZONTAL 1" = 20'

| | | | | | |
|---|---|---|---|---|---|
| DESIGN OVERSIGHT | DRAWN BY: J. Fang | FIELD INVESTIGATION BY: | PREPARED FOR THE STATE OF CALIFORNIA DEPARTMENT OF TRANSPORTATION | G. J. Gunaranjan PROJECT ENGINEER | BRIDGE NO. 53-3032 POST MILE 3.58 |
| SIGN OFF DATE | CHECKED BY: K. Pratheepan | R. Jie | | | |

SCHUYLER HEIM BRIDGE (REPLACE)

LOG OF TEST BORINGS NO. 28 OF 34

OGS CIVIL LOG OF TEST BORINGS SHEET (ENGLISH) (REV. 06-01-09)

ORIGINAL SCALE IN INCHES FOR REDUCED PLANS 0 1 2 3

CU 07-271
EA 138201

DISREGARD PRINTS BEARING EARLIER REVISION DATES

REVISION DATES (PRELIMINARY STAGE ONLY) 02/05/10 03/24/10 05/26/10 07/01/10 07/02/10

SHEET 241 OF 247

FILE => 53-3032-z-1tb28.dgn

USERNAME => friehard DATE PLOTTED => 18-OCT-2010 TIME PLOTTED => 14:44

| DIST | COUNTY | ROUTE | POST MILES TOTAL PROJECT | SHEET No | TOTAL SHEETS |
|---|---|---|---|---|---|
| 07 | LA | 47,103 | 3.5/4.6, 0.0/1.1 | 744 | 1003 |

REGISTERED CIVIL ENGINEER 04/19/10 DATE

10-11-10
PLANS APPROVAL DATE

REGISTERED PROFESSIONAL ENGINEER G.J.Gunaranjan No. C71758 Exp.12-31-11 CIVIL STATE OF CALIFORNIA

*The State of California or its officers or agents shall not be responsible for the accuracy or completeness of electronic copies of this plan sheet.*

ACTA
ONE CIVIC PLAZA. SUITE 350,
CARSON, CA 90745

EARTH MECHANICS, INC.
17660, NEWHOPE STREET, SUITE E
FOUNTAIN VALLEY, CA 92708

BENCHMARKS:

| PT-508 | PT-513 |
|---|---|
| SET MAG NAIL | SET PUN SPK |
| 59.862' Rt ℄ "G"Line | 5.264' Rt ℄ "G" Line |
| Sta. 611+10.34 | Sta. 609+51.88 |
| N 1739008.13 | N 1738843.39 |
| E 6488683.32 | E 6488642.44 |
| Elev. = 12.18 | Elev. = -3.62 |

NOTES:

(1) This LOTB sheet (Boring Record) was prepared in accordance with the Caltrans Soil and Rock Classification Logging, Classification and Presentation Manual (June 2007).

(2) 2.4" samples were taken using a California Split-spoon Sampler.

(3) An automatic trip hammer system consisting of a hammer weight of 140 lbs falling a distance of 30" was used to advance the drive sampler.

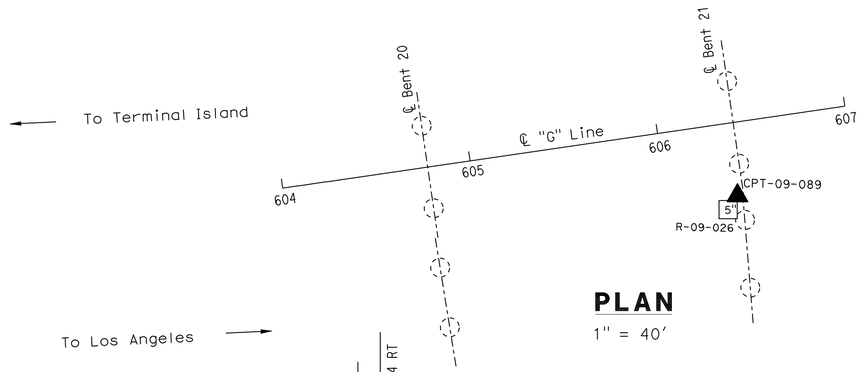


## PLAN

1" = 40'

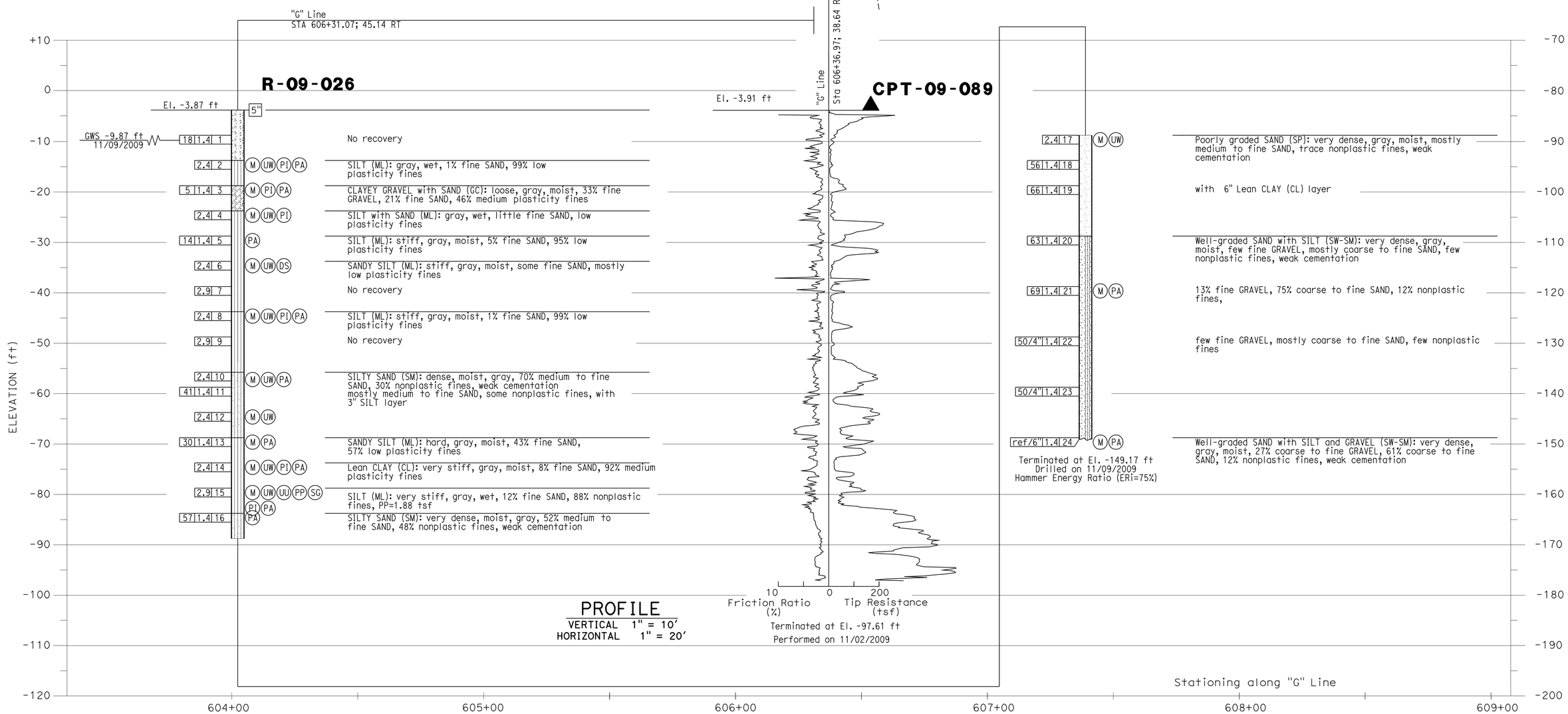


## PROFILE

VERTICAL 1" = 10'
HORIZONTAL 1" = 20'

| | | | | | | |
|---|---|---|---|---|---|---|
| DESIGN OVERSIGHT | DRAWN BY: J. Fang | FIELD INVESTIGATION BY: | PREPARED FOR THE STATE OF CALIFORNIA DEPARTMENT OF TRANSPORTATION | G. J. Gunaranjan PROJECT ENGINEER | BRIDGE NO. 53-3032 | SCHUYLER HEIM BRIDGE (REPLACE) |
| SIGN OFF DATE | CHECKED BY: K. Pratheepan | R. Jie | | | POST MILE 3.58 | LOG OF TEST BORINGS NO. 29 OF 34 |

OGS CIVIL LOG OF TEST BORINGS SHEET (ENGLISH) (REV. 06-01-09)

ORIGINAL SCALE IN INCHES FOR REDUCED PLANS 0 1 2 3

CU 07-271
EA 138201

DISREGARD PRINTS BEARING EARLIER REVISION DATES

REVISION DATES (PRELIMINARY STAGE ONLY) 02/02/10 03/02/10 05/03/10 07/01/10 07/02/10

SHEET 242 OF 247

FILE => 53-3032-z-1tb29.dgn

USERNAME => friehard DATE PLOTTED => 18-OCT-2010 TIME PLOTTED => 14:44

| DIST | COUNTY | ROUTE | POST MILES TOTAL PROJECT | SHEET No | TOTAL SHEETS |
|---|---|---|---|---|---|
| 07 | LA | 47,103 | 3.5/4.6, 0.0/1.1 | 745 | 1003 |

REGISTERED CIVIL ENGINEER 04/19/10 DATE

10-11-10
PLANS APPROVAL DATE

REGISTERED PROFESSIONAL ENGINEER G.J.Gunaranjan No. C71758 Exp.12-31-11 CIVIL STATE OF CALIFORNIA

*The State of California or its officers or agents shall not be responsible for the accuracy or completeness of electronic copies of this plan sheet.*

ACTA
ONE CIVIC PLAZA. SUITE 350,
CARSON, CA 90745

EARTH MECHANICS, INC.
17660, NEWHOPE STREET, SUITE E
FOUNTAIN VALLEY, CA 92708

BENCHMARKS:

| PT-PMHV509 | PT-PMHV515 |
|---|---|
| SET MAG NAIL | SET MAG NAIL |
| 26.671' Lt ℄ "G"Line | 28.517' Rt ℄ "G" Line |
| Sta. 604+968.70 | Sta. 600+995.50 |
| N 1738366.89 | N 1737997.51 |
| E 6488728.36 | E 6488779.52 |
| Elev. = -3.61 | Elev. = -2.21 |

NOTES:

(1) This LOTB sheet (Boring Record) was prepared in accordance with the Caltrans Soil and Rock Classification Logging, Classification and Presentation Manual (June 2007).

(2) 2.4" samples were taken using a California Split-spoon Sampler.

(3) A rope and cat-head hammer system consisting of a hammer weight of 140 lbs falling a distance of 30" was used to advance the drive sampler.

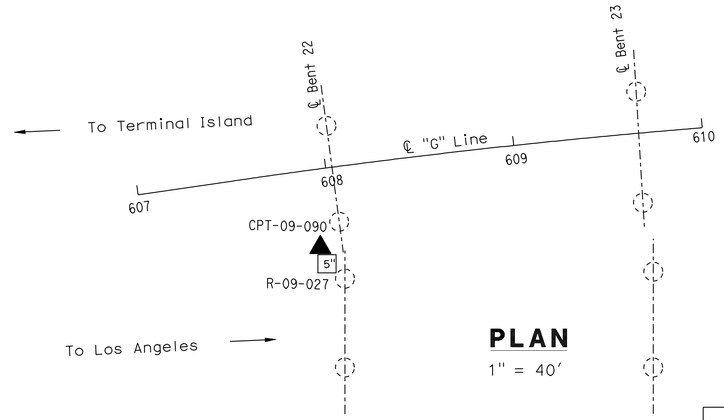


**PLAN**
1" = 40'

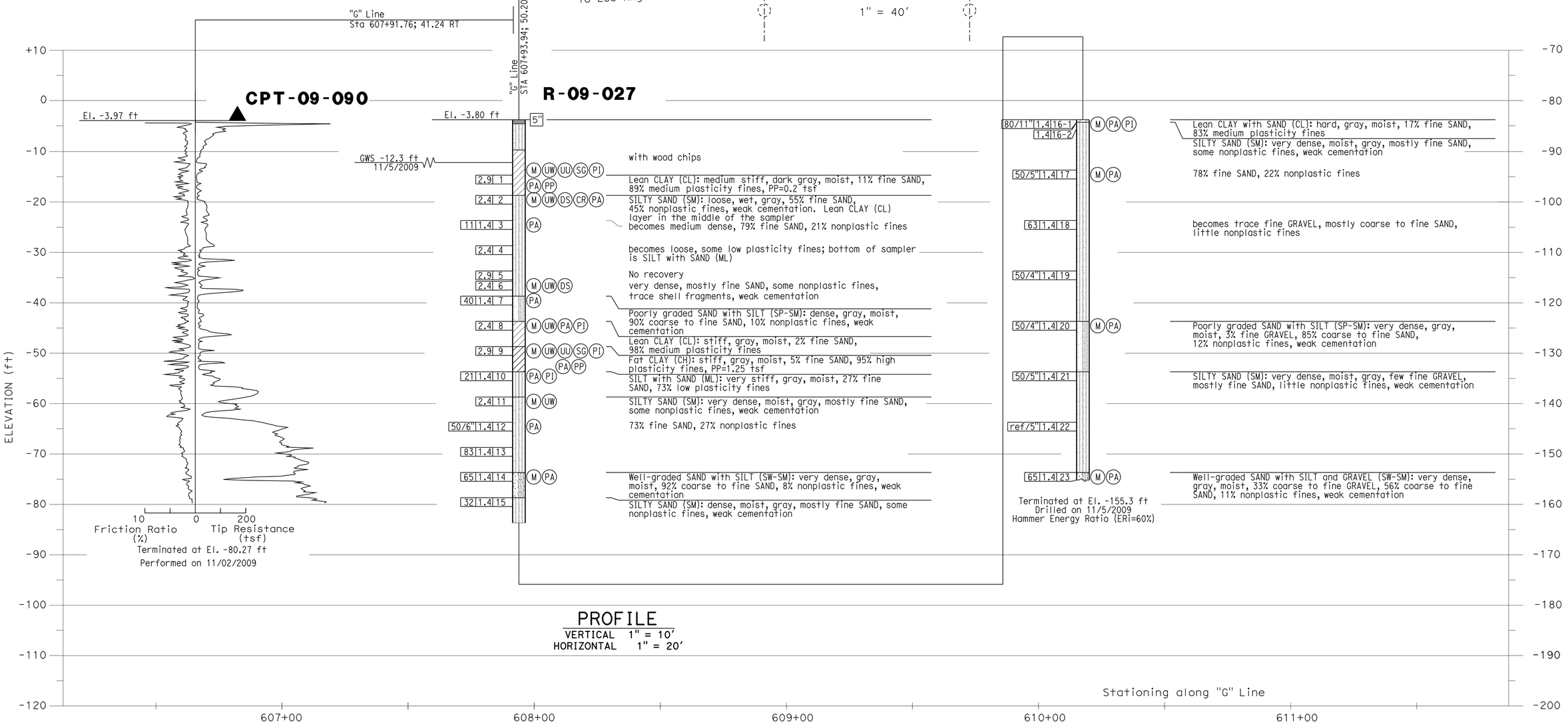


**PROFILE**
VERTICAL 1" = 10'
HORIZONTAL 1" = 20'

| | | | | | |
|---|---|---|---|---|---|
| DESIGN OVERSIGHT | DRAWN BY: J. Fang | FIELD INVESTIGATION BY: | PREPARED FOR THE STATE OF CALIFORNIA DEPARTMENT OF TRANSPORTATION | G. J. Gunaranjan PROJECT ENGINEER | BRIDGE NO. 53-3032 |
| SIGN OFF DATE | CHECKED BY: K. Pratheepan | K. Thant | | | POST MILE 3.58 |

**SCHUYLER HEIM BRIDGE (REPLACE)**

**LOG OF TEST BORINGS NO. 30 OF 34**

OGS CIVIL LOG OF TEST BORINGS SHEET (ENGLISH) (REV. 06-01-09)

ORIGINAL SCALE IN INCHES FOR REDUCED PLANS 0 1 2 3

CU 07-271
EA 138201

DISREGARD PRINTS BEARING EARLIER REVISION DATES

REVISION DATES (PRELIMINARY STAGE ONLY) 02/08/10 03/17/10 05/28/10 07/01/10 07/02/10

SHEET 243 OF 247

FILE => 53-3032-z-1tb30.dgn

USERNAME => trlenard DATE PLOTTED => 18-OCT-2010 TIME PLOTTED => 14:45

| DIST | COUNTY | ROUTE | POST MILES TOTAL PROJECT | SHEET No | TOTAL SHEETS |
|---|---|---|---|---|---|
| 07 | LA | 47,103 | 3.5/4.6, 0.0/1.1 | 746 | 1003 |

REGISTERED CIVIL ENGINEER 04/19/10 DATE

10-11-10
PLANS APPROVAL DATE

REGISTERED PROFESSIONAL ENGINEER G.J.Gunaranjan No. C71758 Exp.12-31-11 CIVIL STATE OF CALIFORNIA

*The State of California or its officers or agents shall not be responsible for the accuracy or completeness of electronic copies of this plan sheet.*

ACTA
ONE CIVIC PLAZA. SUITE 350,
CARSON, CA 90745

EARTH MECHANICS, INC.
17660, NEWHOPE STREET, SUITE E
FOUNTAIN VALLEY, CA 92708

BENCHMARKS:

| PT-PMHV509 | PT-PMHV515 |
|---|---|
| SET MAG NAIL | SET MAG NAIL |
| 26.671' Lt ℄ "G"Line | 28.517' Rt ℄ "G" Line |
| Sta. 604+968.70 | Sta. 600+995.50 |
| N 1738366.89 | N 1737997.51 |
| E 6488728.36 | E 6488779.52 |
| Elev. = -3.61 | Elev. = -2.21 |

NOTES:

(1) This LOTB sheet (Boring Record) was prepared in accordance with the Caltrans Soil and Rock Classification Logging, Classification and Presentation Manual (June 2007).

(2) 2.4" samples were taken using a California Split-spoon Sampler.

(3) An automatic trip hammer system consisting of a hammer weight of 140 lbs falling a distance of 30" was used to advance the drive sampler.

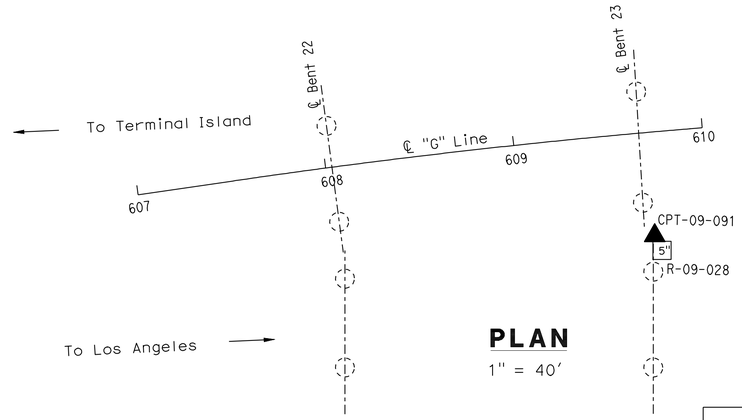


**PLAN**
1" = 40'

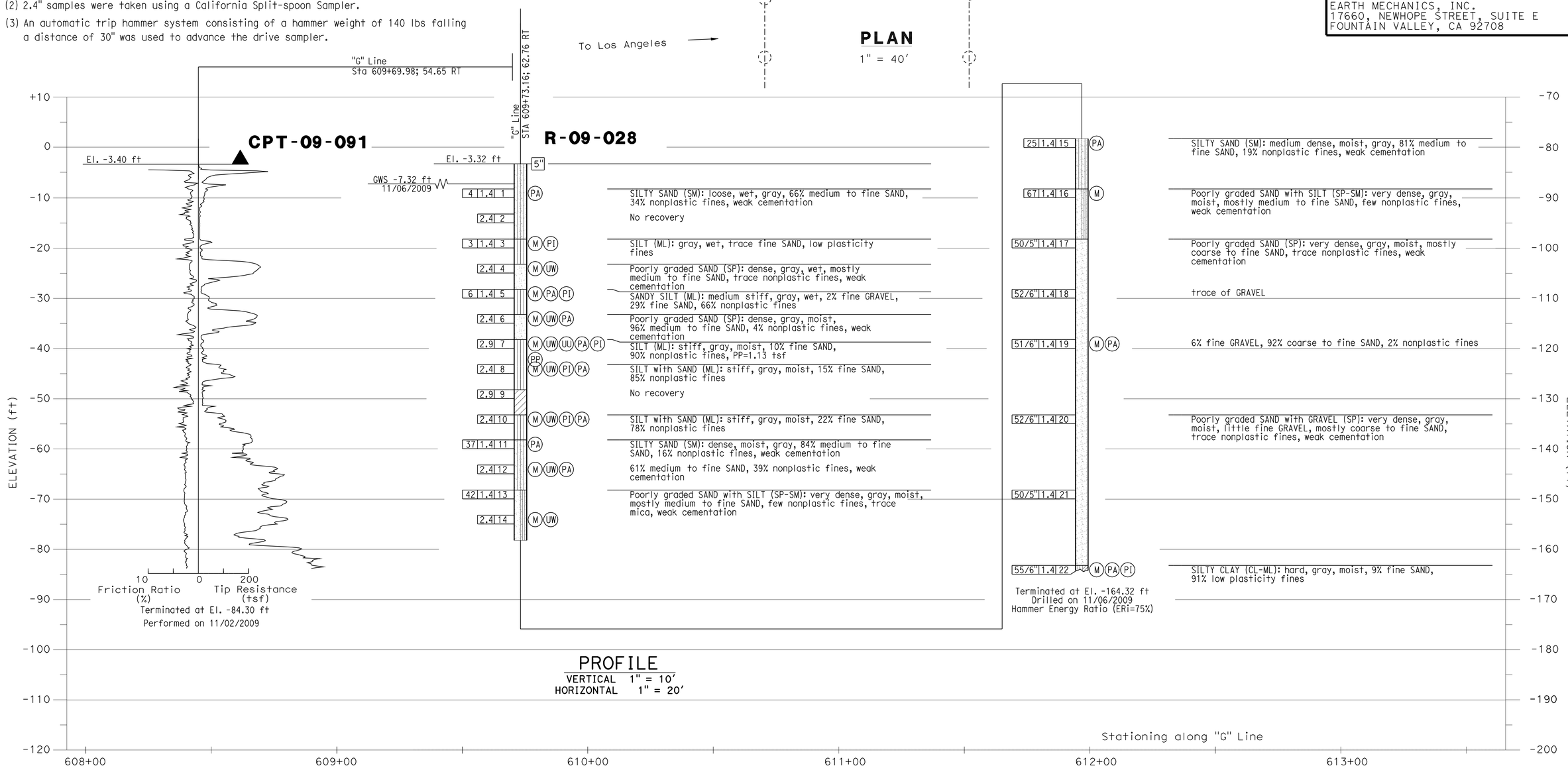


**PROFILE**
VERTICAL 1" = 10'
HORIZONTAL 1" = 20'

| | | | | | |
|---|---|---|---|---|---|
| DESIGN OVERSIGHT | DRAWN BY: J. Fang | FIELD INVESTIGATION BY: | PREPARED FOR THE STATE OF CALIFORNIA DEPARTMENT OF TRANSPORTATION | G. J. Gunaranjan PROJECT ENGINEER | BRIDGE NO. 53-3032 POST MILE 3.58 |
| SIGN OFF DATE | CHECKED BY: K. Pratheepan | R. Jie | | | |

**SCHUYLER HEIM BRIDGE (REPLACE)**

**LOG OF TEST BORINGS NO. 31 OF 34**

OGS CIVIL LOG OF TEST BORINGS SHEET (ENGLISH) (REV. 06-01-09)

ORIGINAL SCALE IN INCHES FOR REDUCED PLANS 0 1 2 3

CU 07-271
EA 138201

DISREGARD PRINTS BEARING EARLIER REVISION DATES

REVISION DATES (PRELIMINARY STAGE ONLY) 02/05/10 03/02/10 05/03/10 07/01/10 07/02/10

SHEET 244 OF 247

FILE => 53-3032-z-1tb31.dgn

USERNAME => tfrienard DATE PLOTTED => 18-OCT-2010 TIME PLOTTED => 14:45

| DIST | COUNTY | ROUTE | POST MILES TOTAL PROJECT | SHEET No | TOTAL SHEETS |
|---|---|---|---|---|---|
| 07 | LA | 47,103 | 3.5/4.6, 0.0/1.1 | 747 | 1003 |

REGISTERED CIVIL ENGINEER 04/19/10 DATE

10-11-10
PLANS APPROVAL DATE

REGISTERED PROFESSIONAL ENGINEER G.J.Gunaranjan No. C71758 Exp.12-31-11 CIVIL STATE OF CALIFORNIA

*The State of California or its officers or agents shall not be responsible for the accuracy or completeness of electronic copies of this plan sheet.*

ACTA
ONE CIVIC PLAZA. SUITE 350,
CARSON, CA 90745

EARTH MECHANICS, INC.
17660, NEWHOPE STREET, SUITE E
FOUNTAIN VALLEY, CA 92708

BENCHMARKS:

| PT-PMHV509 | PT-PMHV515 |
|---|---|
| SET MAG NAIL | SET MAG NAIL |
| 26.671' Lt ℄ "G"Line | 28.517' Rt ℄ "G" Line |
| Sta. 604+968.70 | Sta. 600+995.50 |
| N 1738366.89 | N 1737997.51 |
| E 6488728.36 | E 6488779.52 |
| Elev. = -3.61 | Elev. = -2.21 |

NOTES:

(1) This LOTB sheet (Boring Record) was prepared in accordance with the Caltrans Soil and Rock Classification Logging, Classification and Presentation Manual (June 2007).

(2) 2.4" samples were taken using a California Split-spoon Sampler.

(3) An automatic trip hammer system consisting of a hammer weight of 140 lbs falling a distance of 30" was used to advance the drive sampler.

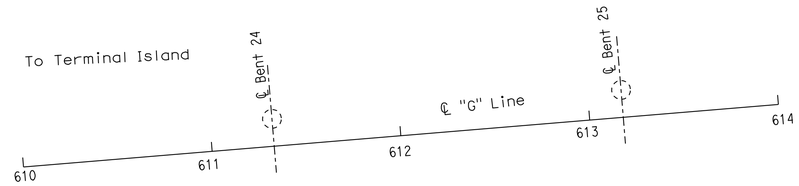


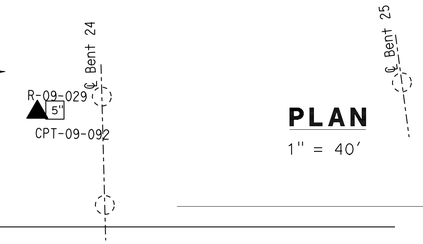


## PLAN

1" = 40'

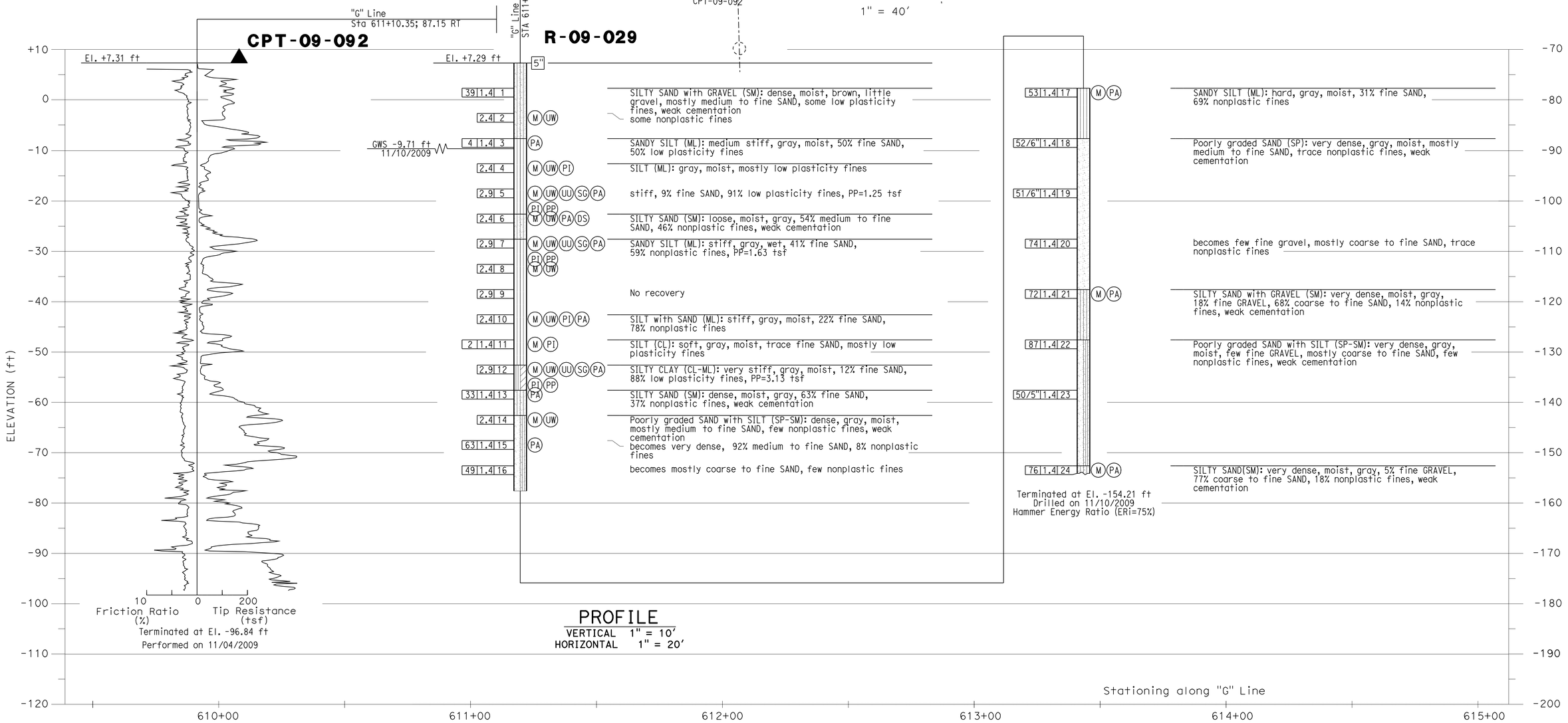


## PROFILE

VERTICAL 1" = 10'
HORIZONTAL 1" = 20'

| | | | | | |
|---|---|---|---|---|---|
| DESIGN OVERSIGHT | DRAWN BY: J. Fang | FIELD INVESTIGATION BY: | PREPARED FOR THE STATE OF CALIFORNIA DEPARTMENT OF TRANSPORTATION | G. J. Gunaranjan PROJECT ENGINEER | BRIDGE NO. 53-3032 / POST MILE 3.58 | SCHUYLER HEIM BRIDGE (REPLACE) |
| SIGN OFF DATE | CHECKED BY: K. Pratheepan | R. Jie | | | | LOG OF TEST BORINGS NO. 32 OF 34 |

OGS CIVIL LOG OF TEST BORINGS SHEET (ENGLISH) (REV. 06-01-09)

ORIGINAL SCALE IN INCHES FOR REDUCED PLANS 0 1 2 3

CU 07-271
EA 138201

DISREGARD PRINTS BEARING EARLIER REVISION DATES

REVISION DATES (PRELIMINARY STAGE ONLY) 02/05/10 03/17/10 05/25/10 07/04/10 07/02/10

SHEET 245 OF 247

FILE => 53-3032-z-1tb32.dgn

USERNAME => trlenard DATE PLOTTED => 18-OCT-2010 TIME PLOTTED => 14:45

REFERENCE: CALTRANS SOIL & ROCK LOGGING, CLASSIFICATION, AND PRESENTATION MANUAL (JUNE 2007)

| DIST | COUNTY | ROUTE | POST MILES TOTAL PROJECT | SHEET No | TOTAL SHEETS |
|---|---|---|---|---|---|
| 07 | LA | 47,103 | 3.5/4.6, 0.0/1.1 | 748 | 1003 |

REGISTERED CIVIL ENGINEER 04/19/10 DATE

10-11-10
PLANS APPROVAL DATE

*The State of California or its officers or agents shall not be responsible for the accuracy or completeness of electronic copies of this plan sheet.*

REGISTERED PROFESSIONAL ENGINEER G.J.Gunaranjan No. C71758 Exp.12-31-11 CIVIL STATE OF CALIFORNIA

ACTA
ONE CIVIC PLAZA. SUITE 350,
CARSON, CA 90745

EARTH MECHANICS, INC.
17660, NEWHOPE STREET, SUITE E
FOUNTAIN VALLEY, CA 92708

## CEMENTATION

| Description | Criteria |
|---|---|
| Weak | Crumbles or breaks with handling or little finger pressure. |
| Moderate | Crumbles or breaks with considerable finger pressure. |
| Strong | Will not crumble or break with finger pressure. |

## CONSISTENCY OF COHESIVE SOILS

| Description | Unconfined Compressive Strength (tsf) | Pocket Penetrometer Measurement (tsf) | Torvane Measurement (tsf) | Field Approximation |
|---|---|---|---|---|
| Very Soft | < 0.25 | < 0.25 | < 0.12 | Easily penetrated several inches by fist |
| Soft | 0.25 to 0.50 | 0.25 to 0.50 | 0.12 to 0.25 | Easily penetrated several inches by thumb |
| Medium Stiff | 0.50 to 1.0 | 0.50 to 1.0 | 0.25 to 0.50 | Penetrated several inches by thumb with moderate effort |
| Stiff | 1 to 2 | 1 to 2 | 0.50 to 1.0 | Readily indented by thumb but penetrated only with great effort |
| Very Stiff | 2 to 4 | 2 to 4 | 1.0 to 2.0 | Readily indented by thumbnail |
| Hard | > 4.0 | > 4.0 | > 2.0 | Indented by thumbnail with difficulty |

## BOREHOLE IDENTIFICATION

| Symbol | Hole Type | Description |
|---|---|---|
| Size | A | Auger Boring |
| Size | R<br>P | Rotary drilled boring<br>Rotary percussion boring (air) |
| Size | R | Rotary drilled diamond core |
| Size | HD<br>HA | Hand driven (1-inch soil tube)<br>Hand Auger |
| ● | D | Dynamic Cone Penetration Boring |
| ▲ | CPT | Cone Penetration Test (ASTM D 5778-95) |
| ⬚ | O | Other |

**Note: Size in inches.**

## PLASTICITY OF FINE-GRAINED SOILS

| Description | Criteria |
|---|---|
| Nonplastic | A 1/8-inch thread cannot be rolled at any water content. |
| Low | The thread can barely be rolled and the lump cannot be formed when drier than the plastic limit. |
| Medium | The thread is easy to roll and not much time is required to reach the plastic limit. The thread cannot be rerolled after reaching the plastic limit. The lump crumbles when drier than the plastic limit. |
| High | It takes considerable time rolling and kneading to reach the plastic limit. The thread can be rerolled several times after reaching the plastic limit. The lump can be formed without crumbling when drier than the plastic limit. |

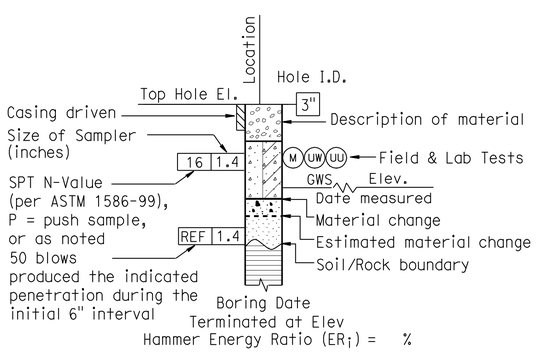


**ROTARY BORING**

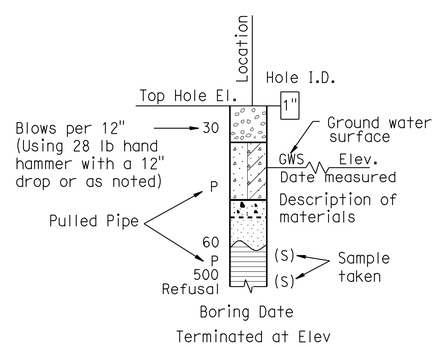


**HAND BORING**

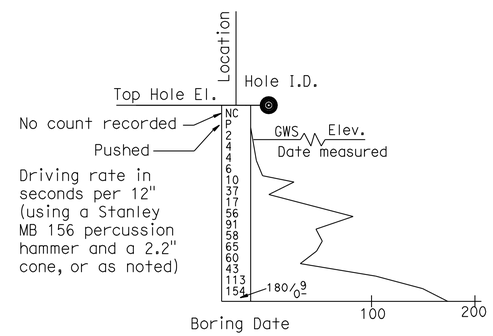


**DYNAMIC CONE PENETRATION BORING**

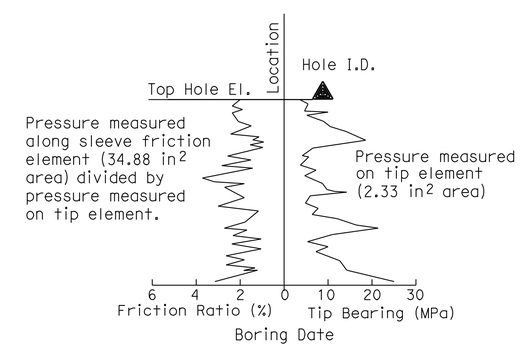


**CONE PENETRATION TEST (CPT) SOUNDING**

| | | | | | | |
|---|---|---|---|---|---|---|
| DESIGN OVERSIGHT<br>SIGN OFF DATE | DRAWN BY: J. Fang<br>CHECKED BY: K. Pratheepan | FIELD INVESTIGATION BY:<br>R. Jie, K. Thant, E. Brown | PREPARED FOR THE STATE OF CALIFORNIA DEPARTMENT OF TRANSPORTATION | G. J. Gunaranjan<br>PROJECT ENGINEER | BRIDGE NO. 53-3032<br>POST MILE 3.58 | SCHUYLER HEIM BRIDGE (REPLACE)<br>LOG OF TEST BORINGS NO. 33 OF 34 |

OGS CIVIL LOG OF TEST BORINGS SHEET (ENGLISH) (REV. 06-01-09)

ORIGINAL SCALE IN INCHES FOR REDUCED PLANS 0 1 2 3

CU 07-271
EA 138201

DISREGARD PRINTS BEARING EARLIER REVISION DATES

REVISION DATES (PRELIMINARY STAGE ONLY) 02/05/10 03/24/10 05/28/10 07/01/10 07/02/10

SHEET 246 OF 247

FILE => 53-3032-z-ltb33.dgn

USERNAME => trlenard DATE PLOTTED => 18-OCT-2010 TIME PLOTTED => 14:45

REFERENCE: CALTRANS SOIL & ROCK LOGGING, CLASSIFICATION, AND PRESENTATION MANUAL (JUNE 2007)

## GROUP SYMBOLS AND NAMES

| Graphic/Symbol | Group Names |
|---|---|
| GW | Well-graded GRAVEL<br>Well-graded GRAVEL with SAND |
| GP | Poorly graded GRAVEL<br>Poorly graded GRAVEL with SAND |
| GW-GM | Well-graded GRAVEL with SILT<br>Well-graded GRAVEL with SILT and SAND |
| GW-GC | Well-graded GRAVEL with CLAY (or SILTY CLAY)<br>Well-graded GRAVEL with CLAY and SAND (or SILTY CLAY and SAND) |
| GP-GM | Poorly graded GRAVEL with SILT<br>Poorly graded GRAVEL with SILT and SAND |
| GP-GC | Poorly graded GRAVEL with CLAY (or SILTY CLAY)<br>Poorly graded GRAVEL with CLAY and SAND (or SILTY CLAY and SAND) |
| GM | SILTY GRAVEL<br>SILTY GRAVEL with SAND |
| GC | CLAYEY GRAVEL<br>CLAYEY GRAVEL with SAND |
| GC-GM | SILTY, CLAYEY GRAVEL<br>SILTY, CLAYEY GRAVEL with SAND |
| SW | Well-graded SAND<br>Well-graded SAND with GRAVEL |
| SP | Poorly graded SAND<br>Poorly graded SAND with GRAVEL |
| SW-SM | Well-graded SAND with SILT<br>Well-graded SAND with SILT and GRAVEL |
| SW-SC | Well-graded SAND with CLAY (or SILTY CLAY)<br>Well-graded SAND with CLAY and GRAVEL (or SILTY CLAY and GRAVEL) |
| SP-SM | Poorly graded SAND with SILT<br>Poorly graded SAND with SILT and GRAVEL |
| SP-SC | Poorly graded SAND with CLAY (or SILTY CLAY)<br>Poorly graded SAND with CLAY and GRAVEL (or SILTY CLAY and GRAVEL) |
| SM | SILTY SAND<br>SILTY SAND with GRAVEL |
| SC | CLAYEY SAND<br>CLAYEY SAND with GRAVEL |
| SC-SM | SILTY, CLAYEY SAND<br>SILTY, CLAYEY SAND with GRAVEL |
| PT | PEAT |
| | COBBLES<br>COBBLES and BOULDERS<br>BOULDERS |

| Graphic/Symbol | Group Names |
|---|---|
| CL | Lean CLAY<br>Lean CLAY with SAND<br>Lean CLAY with GRAVEL<br>SANDY lean CLAY<br>SANDY lean CLAY with GRAVEL<br>GRAVELLY lean CLAY<br>GRAVELLY lean CLAY with SAND |
| CL-ML | SILTY CLAY<br>SILTY CLAY with SAND<br>SILTY CLAY with GRAVEL<br>SANDY SILTY CLAY<br>SANDY SILTY CLAY with GRAVEL<br>GRAVELLY SILTY CLAY<br>GRAVELLY SILTY CLAY with SAND |
| ML | SILT<br>SILT with SAND<br>SILT with GRAVEL<br>SANDY SILT<br>SANDY SILT with GRAVEL<br>GRAVELLY SILT<br>GRAVELLY SILT with SAND |
| OL | ORGANIC lean CLAY<br>ORGANIC lean CLAY with SAND<br>ORGANIC lean CLAY with GRAVEL<br>SANDY ORGANIC lean CLAY<br>SANDY ORGANIC lean CLAY with GRAVEL<br>GRAVELLY ORGANIC lean CLAY<br>GRAVELLY ORGANIC lean CLAY with SAND |
| OL | ORGANIC SILT<br>ORGANIC SILT with SAND<br>ORGANIC SILT with GRAVEL<br>SANDY ORGANIC SILT<br>SANDY ORGANIC SILT with GRAVEL<br>GRAVELLY ORGANIC SILT<br>GRAVELLY ORGANIC SILT with SAND |
| CH | Fat CLAY<br>Fat CLAY with SAND<br>Fat CLAY with GRAVEL<br>SANDY fat CLAY<br>SANDY fat CLAY with GRAVEL<br>GRAVELLY fat CLAY<br>GRAVELLY fat CLAY with SAND |
| MH | Elastic SILT<br>Elastic SILT with SAND<br>Elastic SILT with GRAVEL<br>SANDY elastic SILT<br>SANDY elastic SILT with GRAVEL<br>GRAVELLY elastic SILT<br>GRAVELLY elastic SILT with SAND |
| OH | ORGANIC fat CLAY<br>ORGANIC fat CLAY with SAND<br>ORGANIC fat CLAY with GRAVEL<br>SANDY ORGANIC fat CLAY<br>SANDY ORGANIC fat CLAY with GRAVEL<br>GRAVELLY ORGANIC fat CLAY<br>GRAVELLY ORGANIC fat CLAY with SAND |
| OH | ORGANIC elastic SILT<br>ORGANIC elastic SILT with SAND<br>ORGANIC elastic SILT with GRAVEL<br>SANDY ORGANIC elastic SILT<br>SANDY ORGANIC elastic SILT with GRAVEL<br>GRAVELLY ORGANIC elastic SILT<br>GRAVELLY ORGANIC elastic SILT with SAND |
| OL/OH | ORGANIC SOIL<br>ORGANIC SOIL with SAND<br>ORGANIC SOIL with GRAVEL<br>SANDY ORGANIC SOIL<br>SANDY ORGANIC SOIL with GRAVEL<br>GRAVELLY ORGANIC SOIL<br>GRAVELLY ORGANIC SOIL with SAND |

## FIELD AND LABORATORY TESTING

- (C) Consolidation (ASTM D 2435)
- (CL) Collapse Potential (ASTM D 5333)
- (CP) Compaction Curve (CTM 216)
- (CR) Corrosivity Testing (CTM 643, CTM 422, CTM 417)
- (CU) Consolidated Undrained Triaxial (ASTM D 4767)
- (DS) Direct Shear (ASTM D 3080)
- (EI) Expansion Index (ASTM D 4829)
- (M) Moisture Content (ASTM D 2216)
- (OC) Organic Content-% (ASTM D 2974)
- (P) Permeability (CTM 220)
- (PA) Particle Size Analysis (ASTM D 422)
- (PI) Plasticity Index (AASHTO T 90) Liquid Limit (AASHTO T 89)
- (PL) Point Load Index (ASTM D 5731)
- (PM) Pressure Meter
- (PP) Pocket Penetrometer
- (R) R-Value (CTM 301)
- (SE) Sand Equivalent (CTM 217)
- (SG) Specific Gravity (AASHTO T 100)
- (SL) Shrinkage Limit (ASTM D 427)
- (SW) Swell Potential (ASTM D 4546)
- (TV) Pocket Torvane
- (UC) Unconfined Compression-Soil (ASTM D 2166) Unconfined Compression-Rock (ASTM D 2938)
- (UU) Unconsolidated Undrained Triaxial (ASTM D 2850)
- (UW) Unit Weight (ASTM D 4767)
- (VS) Vane Shear (AASHTO T 223)

| DIST | COUNTY | ROUTE | POST MILES TOTAL PROJECT | SHEET No | TOTAL SHEETS |
|---|---|---|---|---|---|
| 07 | LA | 47,103 | 3.5/4.6, 0.0/1.1 | 749 | 1003 |

REGISTERED CIVIL ENGINEER 04/19/10 DATE

10-11-10
PLANS APPROVAL DATE

REGISTERED PROFESSIONAL ENGINEER G.J.Gunaranjan No. C71758 Exp.12-31-11 CIVIL STATE OF CALIFORNIA

*The State of California or its officers or agents shall not be responsible for the accuracy or completeness of electronic copies of this plan sheet.*

ACTA
ONE CIVIC PLAZA. SUITE 350,
CARSON, CA 90745

EARTH MECHANICS, INC.
17660, NEWHOPE STREET, SUITE E
FOUNTAIN VALLEY, CA 92708

## APPARENT DENSITY OF COHESIONLESS SOILS

| Description | SPT $N_{60}$ (Blows / 12 inches) |
|---|---|
| Very loose | 0 - 4 |
| Loose | 5 - 10 |
| Medium Dense | 11 - 30 |
| Dense | 31 - 50 |
| Very Dense | > 50 |

## MOISTURE

| Description | Criteria |
|---|---|
| Dry | Absence of moisture, dusty, dry to the touch |
| Moist | Damp but no visible water |
| Wet | Visible free water, usually soil is below water table |

## PERCENT OR PROPORTION OF SOILS

| Description | Criteria |
|---|---|
| Trace | Particles are present but estimated to be less than 5% |
| Few | 5 to 10% |
| Little | 15 to 25% |
| Some | 30 to 45% |
| Mostly | 50 to 100% |

## PARTICLE SIZE

| Description | | Size |
|---|---|---|
| Boulder | | > 12" |
| Cobble | | 3" to 12" |
| Gravel | Coarse | 3/4" to 3" |
| | Fine | No. 4 to 3/4" |
| Sand | Coarse | No. 10 to No. 4 |
| | Medium | No. 40 to No. 10 |
| | Fine | No. 200 to No. 40 |

DESIGN OVERSIGHT

SIGN OFF DATE

DRAWN BY: J. Fang

CHECKED BY: K. Pratheepan

FIELD INVESTIGATION BY:
R. Jie, K. Thant, E. Brown

PREPARED FOR THE STATE OF CALIFORNIA DEPARTMENT OF TRANSPORTATION

G. J. Gunaranjan
PROJECT ENGINEER

BRIDGE NO. 53-3032
POST MILE 3.58

# SCHUYLER HEIM BRIDGE (REPLACE)

# LOG OF TEST BORINGS NO. 34 OF 34

OGS CIVIL LOG OF TEST BORINGS SHEET (ENGLISH) (REV. 06-01-09)

ORIGINAL SCALE IN INCHES FOR REDUCED PLANS 0 1 2 3

CU 07-271
EA 138201

DISREGARD PRINTS BEARING EARLIER REVISION DATES

REVISION DATES (PRELIMINARY STAGE ONLY) 02/05/10 03/25/10 05/28/10 07/01/10 07/02/10

SHEET 247 OF 247

FILE => 53-3032-z-ltb34.dgn

USERNAME => trienard DATE PLOTTED => 18-OCT-2010 TIME PLOTTED => 14:45

| DIST | COUNTY | ROUTE | POST MILES TOTAL PROJECT | SHEET No | TOTAL SHEETS |
|---|---|---|---|---|---|
| 07 | LA | 47,103 | 3.5/4.6, 0.0/1.1 | 750 | 1003 |

Foued Zayati 05-24-10
REGISTERED CIVIL ENGINEER DATE

10-11-10
PLANS APPROVAL DATE

REGISTERED PROFESSIONAL ENGINEER FOUED ZAYATI No. C57046 Exp. 06-30-11 CIVIL STATE OF CALIFORNIA

*The State of California or its officers or agents shall not be responsible for the accuracy or completeness of electronic copies of this plan sheet.*

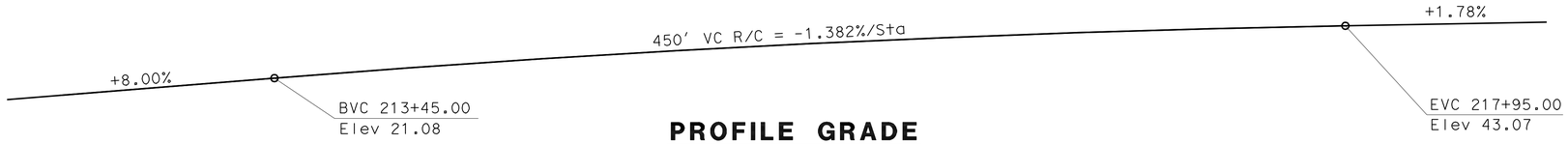


## PROFILE GRADE
No Scale

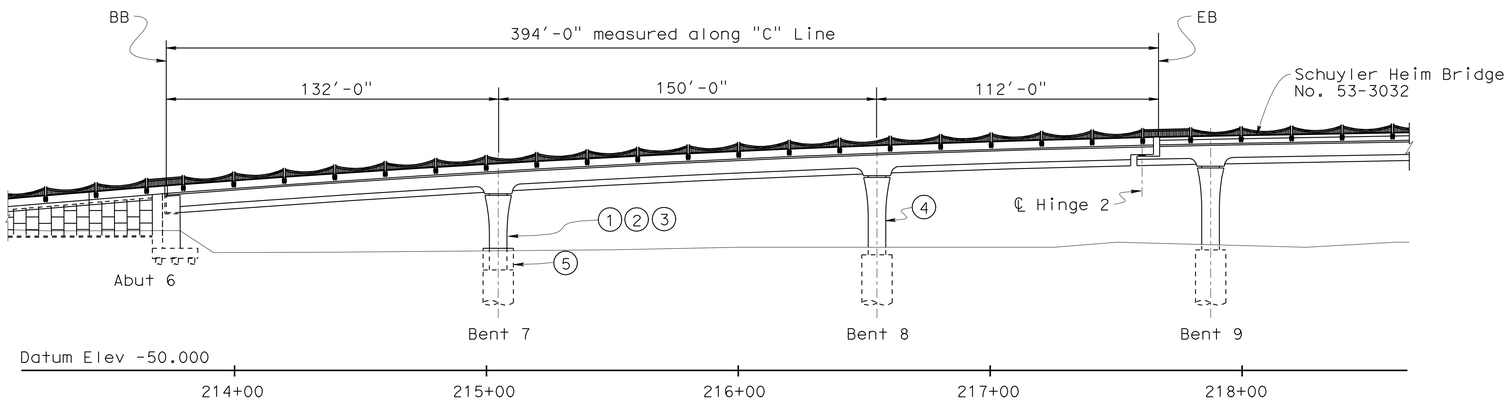


## ELEVATION
1"=30'-0"

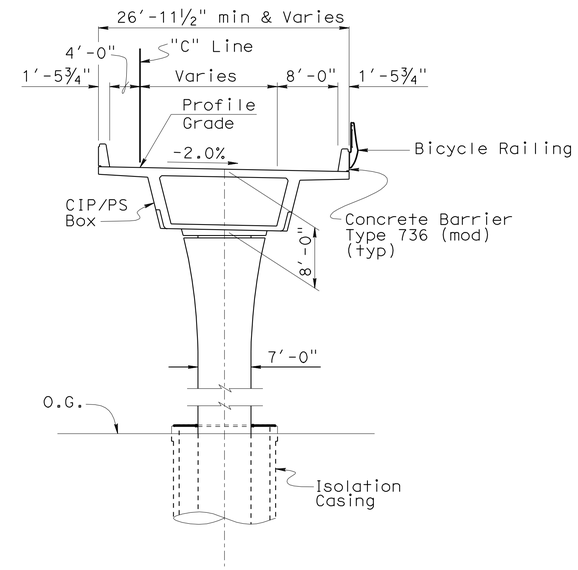


## TYPICAL SECTION
1"-10'-0"

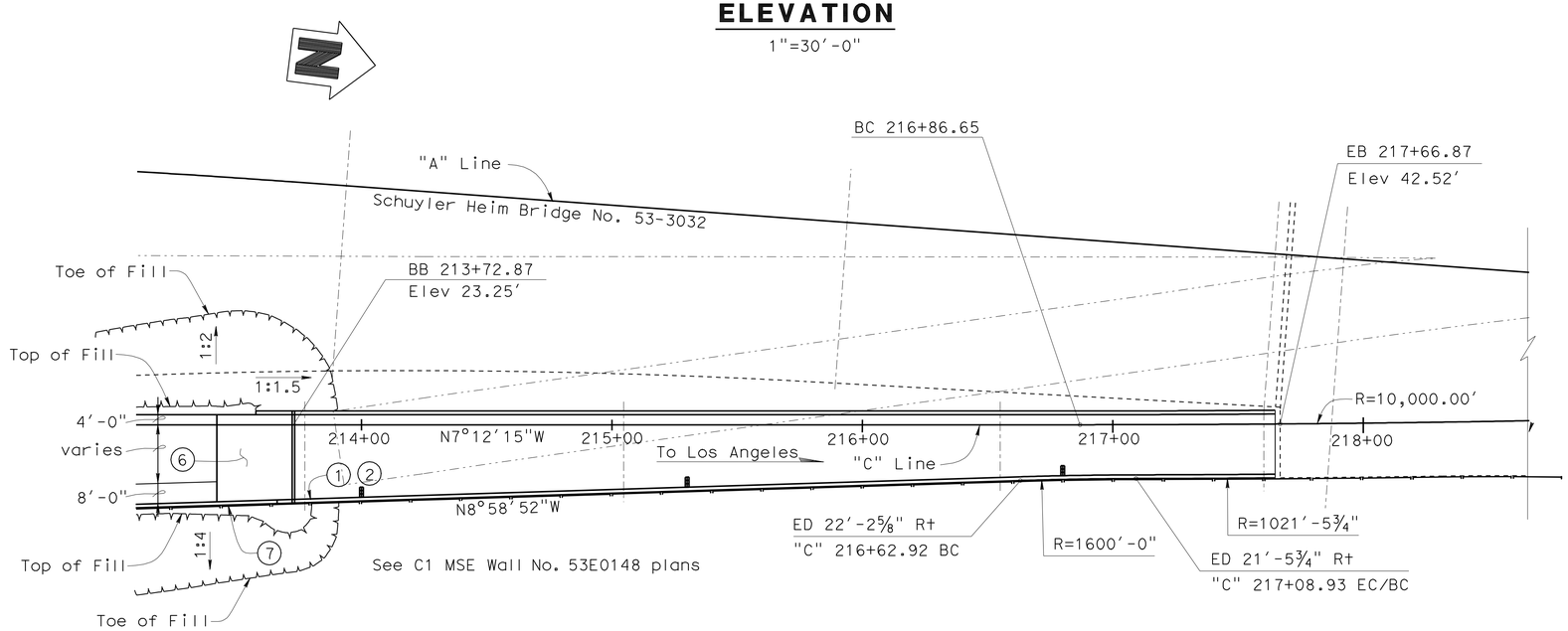


## PLAN
1"=30'-0"

NOTES:

1. Paint "New Dock St On-Ramp"
2. Paint "Bridge No. 53-3033"
3. Paint "Bent No. 7"
4. Paint "Bent No. 8"
5. Column Isolation Casing
6. Structure Approach Slab, Type N(30S)
7. C1 MSE Wall No. 53E0148, see wall plans.

Indicates Existing Bridge (to be removed)

Indicates Deck Drain Type D-3 (Modified)

X Foued Zayati
DESIGN ENGINEER

| | BY | CHECKED | | |
|---|---|---|---|---|
| DESIGN | F. Zayati | L. Bahia | LOAD & RESISTANCE FACTOR DESIGN | LIVE LOADING: HL93 W/"LOW-BOY"; PERMIT DESIGN VEHICLE |
| DETAILS | T. Nguyen | L. Bahia | LAYOUT | BY X / CHECKED X |
| QUANTITIES | J. Lane | V. Ramakrishnan | SPECIFICATIONS | BY X / PLANS AND SPECS COMPARED X |

STATE OF CALIFORNIA
DEPARTMENT OF TRANSPORTATION

DIVISION OF ENGINEERING SERVICES
STRUCTURE DESIGN
DESIGN BRANCH 14

BRIDGE NO. 53-3033
POST MILE 3.74

# NEW DOCK STREET ON-RAMP
# GENERAL PLAN

STRUCTURES DESIGN GENERAL PLAN SHEET (ENGLISH) (REV. 10/25/05)

ORIGINAL SCALE IN INCHES FOR REDUCED PLANS 0 1 2 3

CU 07-271
EA 138201

DISREGARD PRINTS BEARING EARLIER REVISION DATES

REVISION DATES: 5-21-10 06-30-10 07-15-10 12-16-07 09-28-09 12-11-09 12-18-09 4-22-10

SHEET 1 OF 40

FILE => 53-3033-a-gp.dgn

STRUCTURES DESIGN GENERAL PLAN SHEET (ENGLISH) (REV.07-24-06)

USERNAME => rtrienord DATE PLOTTED => 18-OCT-2010 TIME PLOTTED => 14:45

| DIST | COUNTY | ROUTE | POST MILES TOTAL PROJECT | SHEET No | TOTAL SHEETS |
|---|---|---|---|---|---|
| 07 | LA | 47,103 | 3.5/4.6, 0.0/1.1 | 751 | 1003 |

REGISTERED CIVIL ENGINEER — DATE 05-24-10

10-11-10
PLANS APPROVAL DATE

REGISTERED PROFESSIONAL ENGINEER — FOUED ZAYATI — No. C57046 — Exp. 06-30-11 — CIVIL — STATE OF CALIFORNIA

*The State of California or its officers or agents shall not be responsible for the accuracy or completeness of electronic copies of this plan sheet.*

# GENERAL NOTES
# LOAD AND RESISTANCE FACTOR DESIGN

DESIGN:
AASHTO LRFD Bridge Design Specifications, 3rd edition with the 2005, 2006 Interims and the California Amendments v3.06.01; except that earth retaining systems, bridge barrier and railing details taken from Standard Plans May 2006 and earlier versions, and Standard Bridge Details XS Sheets are designed using Bridge Design Specifications LFD Version April 2000 ('96 AASHTO w/Revisions by Caltrans)

SEISMIC DESIGN:
Caltrans Seismic Design Criteria (SDC), Version 1.4 dated June 2006.

DEAD LOAD:
Includes 35 psf for future wearing surface.

LIVE LOADING:
1.2*HL-93 and Low-Boy and Permit design loading.

SEISMIC LOADING:
Soil profile type D adjusted for near field effects
Magnitude 7.25 +/- 0.25
Peak Rock Acceleration 0.6g

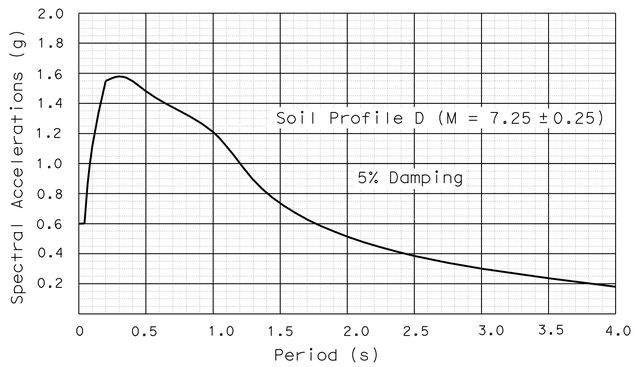


REINFORCED CONCRETE:
fy = 60 ksi
f'c = 3.6 ksi
n = 8

PRESTRESSED CONCRETE:
See 'Prestressing Notes' on "GIRDER LAYOUT" sheet.

STRUCTURAL STEEL:
fy = ASTM A709 Grade 50

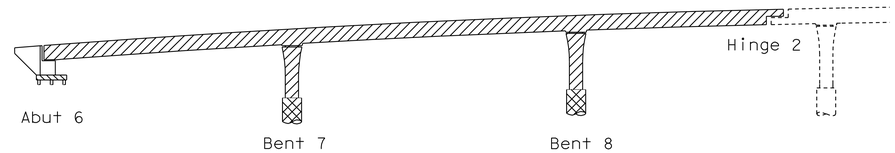


Structural Concrete, Bridge (f'c = 3.6 ksi @ 28days)
Structural Concrete, Bridge Footing (P'c = 3.6 ksi @ 28days)
Structural Concrete, Bridge (f'c = 5.0 ksi @ 28 days)
Cast-In-Place Drilled Hole Pilingn (f'c = 3.6 ksi @ 28 days)

## CONCRETE STRENGTH AND TYPE LIMITS
No Scale

## QUANTITIES

| | | |
|---|---|---|
| STRUCTURE EXCAVATION (TYPE A) | 660 | CY |
| STRUCTURE EXCAVATION (TYPE GC) | 308,000 | GAL |
| STRUCTURE EXCAVATION (TYPE Z-2) (AERIALLY DEPOSITED LEAD) | 43 | CY |
| STRUCTURE BACKFILL (BRIDGE) | 455 | CY |
| 30" CAST-IN-DRILLED-HOLE CONCRETE PILING | 822 | LF |
| 120" CAST-IN-DRILLED-HOLE CONCRETE PILING | 206 | LF |
| 132" CAST-IN-DRILLED-HOLE CONCRETE PILING | 50 | LF |
| 132" PERMANENT STEEL CASING | 50 | LF |
| PRESTRESSING CAST-IN-PLACE CONCRETE | LUMP | SUM |
| PRESTRESSING CAST-IN-PLACE CONCRETE (TRANSVERSE) | LUMP | SUM |
| SEAL COURSE CONCRETE | 195 | CY |
| STRUCTURAL CONCRETE, BRIDGE FOOTING | 120 | CY |
| STRUCTURAL CONCRETE, BRIDGE | 1,335 | CY |
| STRUCTURAL CONCRETE, APPROACH SLAB (TYPE N) | 39 | CY |
| PRECAST CONCRETE ISOLATION CASING | 48 | CY |
| PTFE SPHERICAL BEARING | 4 | EA |
| JOINT SEAL ASSEMBLY (MR = 100") | 37 | LF |
| BAR REINFORCING STEEL (BRIDGE) | 494,000 | LB |
| HEADED BAR REINFORCEMENT | 149 | EA |
| MISCELLANEOUS METAL (BRIDGE) | 1,060 | LB |
| BRIDGE DECK DRAINAGE SYSTEM | 3,730 | LB |
| BICYCLE RAILING | 396 | LF |
| CONCRETE BARRIER (TYPE 736 MODIFIED) | 848 | LF |

## INDEX TO PLANS


| SHEET NO. | TITLE |
|---|---|
| 1 | GENERAL PLAN |
| 2 | INDEX TO PLANS |
| 3 | DECK CONTOURS |
| 4 | FOUNDATION PLAN |
| 5 | ABUTMENT 6 LAYOUT |
| 6 | ABUTMENT 6 DETAILS NO. 1 |
| 7 | ABUTMENT 6 DETAILS NO. 2 |
| 8 | ABUTMENT 6 DETAILS NO. 3 |
| 9 | ABUTMENT 6 DETAILS NO. 4 |
| 10 | TYPICAL BENT LAYOUT |
| 11 | TYPICAL BENT DETAILS |
| 12 | TYPICAL SECTION |
| 13 | GIRDER LAYOUT |
| 14 | HINGE 2 DIAPHRAGM DETAILS |
| 15 | MISCELLANEOUS DETAILS |
| 16 | 2.5 FT PIPE PILE DETAILS |
| 17 | 10 FT CIDH PILE DETAILS |
| 18 | PRECAST ISOLATION CASING DETAILS |
| 19 | ISOLATION CASING COVER DETAILS |
| 20 | PTFE BEARING DETAILS NO. 1 |
| 21 | PTFE BEARING DETAILS NO. 2 |
| 22 | JOINT SEAL ASSEMBLY LAYOUT |
| 23 | JOINT SEAL ASSEMBLY DETAILS NO. 1 |
| 24 | JOINT SEAL ASSEMBLY DETAILS NO. 2 |
| 25 | JOINT SEAL ASSEMBLY DETAILS NO. 3 |
| 26 | JOINT SEAL ASSEMBLY DETAILS NO. 4 |
| 27 | JOINT SEAL ASSEMBLY DETAILS NO. 5 |
| 28 | DECK DRAIN DETAILS |
| 29 | STRUCTURE APPROACH TYPE N(30S) |
| 30 | STRUCTURE APPROACH DRAINAGE DETAILS |
| 31 | CONCRETE BARRIER DETAILS NO. 1 |
| 32 | CONCRETE BARRIER DETAILS NO. 2 |
| 33 | CONCRETE BARRIER DETAILS NO. 3 |
| 34 | RAILING DETAILS NO. 1 |
| 35 | RAILING DETAILS NO. 2 |
| 36 | LOG OF TEST BORINGS NO. 1 OF 5 |
| 37 | LOG OF TEST BORINGS NO. 2 OF 5 |
| 38 | LOG OF TEST BORINGS NO. 3 OF 5 |
| 39 | LOG OF TEST BORINGS NO. 4 OF 5 |
| 40 | LOG OF TEST BORINGS NO. 5 OF 5 |


## PILE DATA TABLE

| LOCATION | PILE TYPE | DESIGN LOADING (SERVICE) | NOMINAL RESISTANCE (KIP) | | CASING TIP ELEVATION (ft) | DESIGN TIP ELEVATION (ft) | SPECIFIED TIP ELEVATION (ft) | PILE CUTOFF ELEVATIONS (ft) | DEPTH OF SEAL COURSE (ft) | DEPTH OF CONTAMINATED SOIL | CONTAMINANTS | EXCAVATION TYPE |
|---|---|---|---|---|---|---|---|---|---|---|---|---|
| | | | COMPRESSION | TENSION | | | | | | | | |
| ABUT 6 | 2.5 FT CIDH | 220 | 520 | 0 | NA | -71 (a) | -71 | 2.75 | 0.0 | 0' to 1' | Lead | TYPE Z-2 |
| | | | | | | | | | | 1'+ | Non-Haz | TYPE A |
| BENT 7 | 11 FT CIDH<br>10 FT CIDH | 2790 | 5660 | 0 | -35 | -137 (a) | -137 | -10.0 | 7.0 | 0' to 1' | Lead | TYPE Z-2 |
| | | | | | | | | | | 1'+ | Non-Haz | TYPE A |
| BENT 8 | 11 FT CIDH<br>10 FT CIDH | 2690 | 5310 | 0 | -29 | -133 (a) | -133 | -4.0 | 4.0 | 0' to 1' | Lead | TYPE Z-2 |
| | | | | | | | | | | 1' to 5' | DRO & ORO | TYPE DC |
| | | | | | | | | | | 5'+ | Non-Haz | TYPE A |

NOTES:
1. Design Tip Elevations are controlled by the following demands: (a) Compression, (b) Tension, (c) Settlement, and (d) Lateral Load.
2. 0' is equivalent to existing ground surface.
3. 1'+ is soil more than 1' below Existing Ground Surface.

LEGEND:
DRO = Diesel Range Organics
ORO = Oil Range Organics
Non-Haz = Non-Hazardous material

## STANDARD PLANS DATED MAY 2006

| | |
|---|---|
| A62C | LIMITS OF PAYMENT FOR EXCAVATION AND BACKFILL BRIDGE |
| B0-1 | BRIDGE DETAILS |
| B0-3 | BRIDGE DETAILS |
| B0-5 | BRIDGE DETAILS |
| B0-13 | BRIDGE DETAILS |
| B7-1 | BOX GIRDER DETAILS |
| B7-8 | DECK DRAINAGE DETAILS |
| B8-5 | CAST-IN-PLACE PRESTRESSED GIRDER DETAILS |

STANDARD PLAN SHEET NO.
DETAIL NO.

| | BY | CHECKED |
|---|---|---|
| DESIGN | I. Quintanar | L. Bahia |
| DETAILS | T. Nguyen | L. Bahia |
| QUANTITIES | J. Lane | V. Ramakrishnan |

STATE OF CALIFORNIA
DEPARTMENT OF TRANSPORTATION

DIVISION OF ENGINEERING SERVICES
STRUCTURE DESIGN
DESIGN BRANCH 14

BRIDGE NO. 53-3033
POST MILE 0.01

# NEW DOCK STREET ON-RAMP
# INDEX TO PLANS

STRUCTURES DESIGN DETAIL SHEET (ENGLISH) (REV. 10/25/05)

ORIGINAL SCALE IN INCHES FOR REDUCED PLANS 0 1 2 3

CU 07-271
EA 138201

DISREGARD PRINTS BEARING EARLIER REVISION DATES

REVISION DATES: 12-18-09 | 03-26-10 | 4-22-10 | 05-14-10 | 05-13-10 | 05-14-10 | 05-21-10 | 08-26-10

SHEET 2 OF 40

FILE => 53-3033-a-itp.dgn

USERNAME => trlenard DATE PLOTTED => 18-OCT-2010 TIME PLOTTED => 15:21

| DIST | COUNTY | ROUTE | POST MILES TOTAL PROJECT | SHEET No | TOTAL SHEETS |
|---|---|---|---|---|---|
| 07 | LA | 47,103 | 3.5/4.6, 0.0/1.1 | 752 | 1003 |

REGISTERED CIVIL ENGINEER — DATE 05-24-10

10-11-10
PLANS APPROVAL DATE

REGISTERED PROFESSIONAL ENGINEER — FOUED ZAYATI — No. C57046 — Exp. 06-30-11 — CIVIL — STATE OF CALIFORNIA

*The State of California or its officers or agents shall not be responsible for the accuracy or completeness of electronic copies of this plan sheet.*

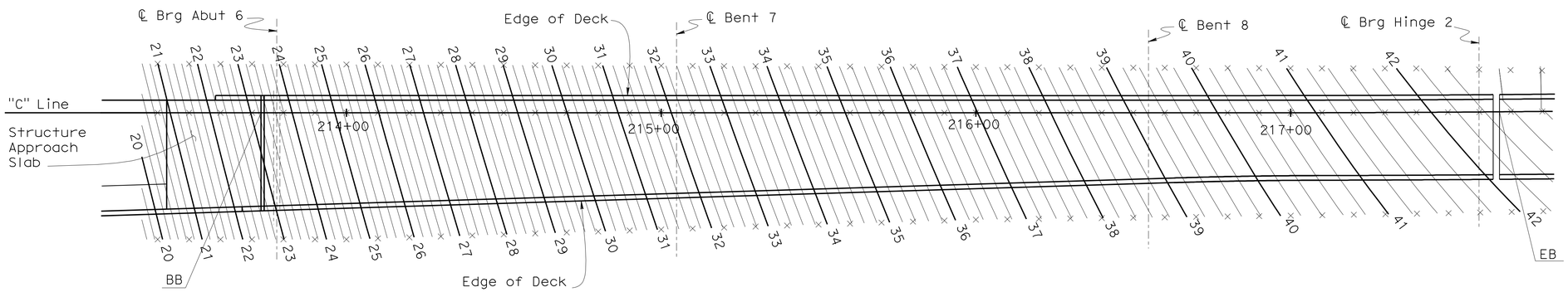


## PLAN

1"=20'-0"

NOTES:

× Indicates 10 ft intervals along Station Line
Contours do not include Camber
Contour interval = 0.2 ft

| | | | |
|---|---|---|---|
| DESIGN | BY Foued Zayati | CHECKED T. Skreslet | |
| DETAILS | BY T. Nguyen | CHECKED T. Skreslet | |
| QUANTITIES | BY J. Lane | CHECKED V. Ramakrishnan | |

STATE OF CALIFORNIA
DEPARTMENT OF TRANSPORTATION

DIVISION OF ENGINEERING SERVICES
STRUCTURE DESIGN
DESIGN BRANCH 14

BRIDGE NO. 53-3033
POST MILE 0.01

# NEW DOCK STREET ON-RAMP
# DECK CONTOURS

STRUCTURES DESIGN DETAIL SHEET (ENGLISH) (REV. 10/25/05)

ORIGINAL SCALE IN INCHES FOR REDUCED PLANS 0 1 2 3

CU 07-271
EA 138201

DISREGARD PRINTS BEARING EARLIER REVISION DATES → 12-15-09 03-22-10 03-23-10

REVISION DATES

SHEET 3 OF 40

FILE => 53-3033-d-dc.dgn

USERNAME => trlenard DATE PLOTTED => 18-OCT-2010 TIME PLOTTED => 15:21

| DIST | COUNTY | ROUTE | POST MILES TOTAL PROJECT | SHEET No. | TOTAL SHEETS |
|---|---|---|---|---|---|
| 07 | LA | 47,103 | 3.5/4.6, 0.0/1.1 | 753 | 1003 |

REGISTERED CIVIL ENGINEER 05-24-10

10-11-10
PLANS APPROVAL DATE

REGISTERED PROFESSIONAL ENGINEER FOUED ZAYATI No. C57046 Exp. 06-30-11 CIVIL STATE OF CALIFORNIA

*The State of California or its officers or agents shall not be responsible for the accuracy or completeness of electronic copies of this plan sheet.*

| CURVE DATA | | | | |
|---|---|---|---|---|
| No. | R | Δ | T | L |
| 1 | 10000′ | 1°08′14" | 99.26′ | 198.51′ |

Existing Bridge Location

Ⓔ - 2.03′ Lt ℄ "C" Line, Sta 213+88.65, Elev=15.29±

Ⓕ - 21.64′ Rt ℄ "C" Line, Sta 213+92.12, Elev=14.70±

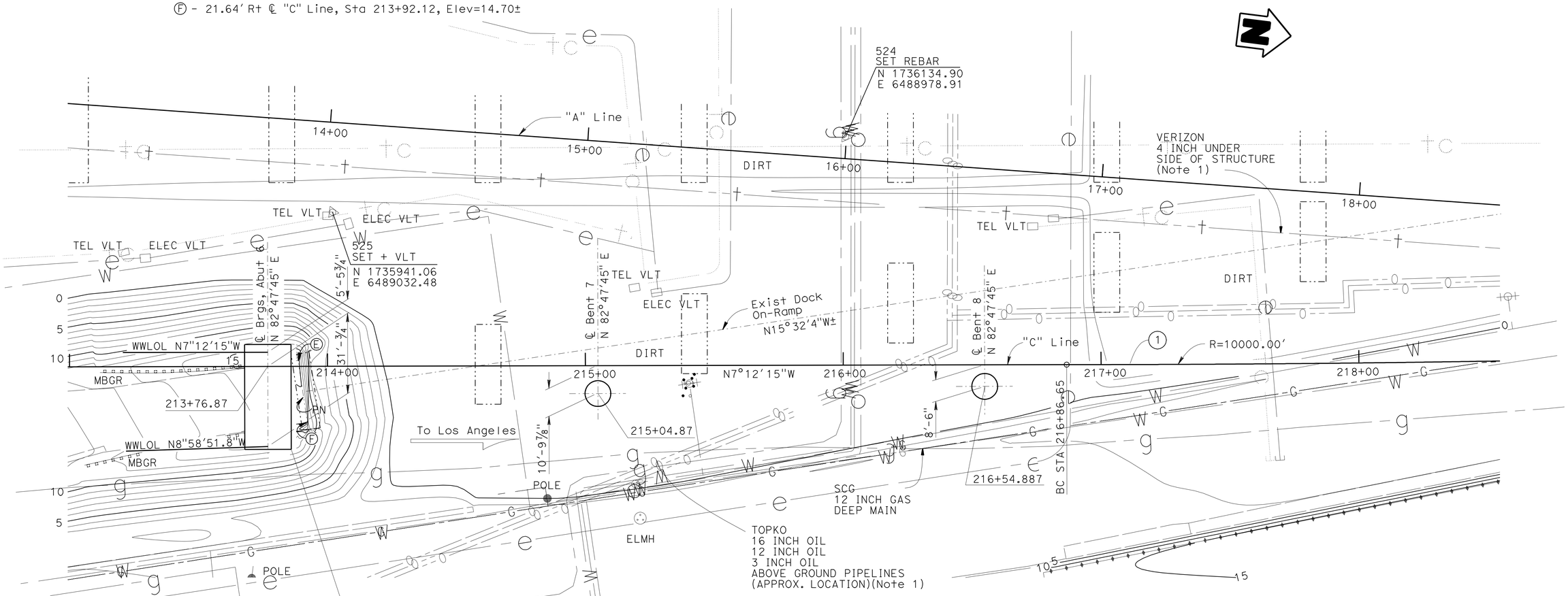


SURVEY CONTROL

PT-524

SET REBAR
88.576′ Lt ℄ "C" Line
Sta 216+1.06
N 1736134.90
E 6488978.91
Elev = -0.51

PT-525

SET + VLT
59.843′ Lt. ℄ "C" Line
Sta 214+2.15
N 1735941.06
E 6489032.48
Elev = 0.12

NOTES:

1. Utilities are per district utility map, dated 5-7-2007
2. Utilities are per district utility map, dated 4-5-2010

Indicates Existing Structure

Indicates 10′ Ø CIDH Pile

Indicates Bottom of Footing Elevation


HNTB *Corporation*
200 E. SANDPOINTE AVENUE, SUITE 200
SANTA ANA, CALIFORNIA 92707


| | | | |
|---|---|---|---|
| SCALE: 1"=20′ | VERT.DATUM NAVD 88 | HORZ.DATUM NAD 83 | |
| PHOTOGRAMMETRY AS OF: | | ALIGNMENT TIES Dist. Trav. Sheet | |
| SURVEYED | BY COAST SURVEY 1207 | DRAFTED | BY L. Zhang |
| FIELD CHECKED | BY D. Chang | CHECKED | BY D. Chang |

| | | |
|---|---|---|
| DESIGN | BY I. Quinlamar | CHECKED L. Bahia |
| DETAILS | BY T. Nguyen | CHECKED F. Zayati |
| QUANTITIES | BY J. Lane | CHECKED V. Ramakrishnan |

PREPARED FOR THE
STATE OF CALIFORNIA
DEPARTMENT OF TRANSPORTATION

F. ZAYATI
PROJECT ENGINEER

BRIDGE NO. 53-3033
POST MILE 3.74

# NEW DOCK STREET ON-RAMP
# FOUNDATION PLAN

FOUNDATION PLAN SHEET (ENGLISH) (REV. 5/9/00)

ORIGINAL SCALE IN INCHES FOR REDUCED PLANS 0 1 2 3

CU 07
EA 138201

DISREGARD PRINTS BEARING EARLIER REVISION DATES

REVISION DATES (PRELIMINARY STAGE ONLY) 06-18-08 12-15-09 03-26-10 4-28-10 05-14-10 05-21-10

SHEET 4 OF 40

FILE => 53-3033-e-fnd.dgn

USERNAME => friehard DATE PLOTTED => 18-OCT-2010 TIME PLOTTED => 15:21

| DIST | COUNTY | ROUTE | POST MILES TOTAL PROJECT | SHEET No | TOTAL SHEETS |
|---|---|---|---|---|---|
| 07 | LA | 47,103 | 3.5/4.6, 0.0/1.1 | 754 | 1003 |

REGISTERED CIVIL ENGINEER 05-24-10 DATE

10-11-10
PLANS APPROVAL DATE

REGISTERED PROFESSIONAL ENGINEER FOUED ZAYATI No. C57046 Exp. 06-30-11 CIVIL STATE OF CALIFORNIA

*The State of California or its officers or agents shall not be responsible for the accuracy or completeness of electronic copies of this plan sheet.*

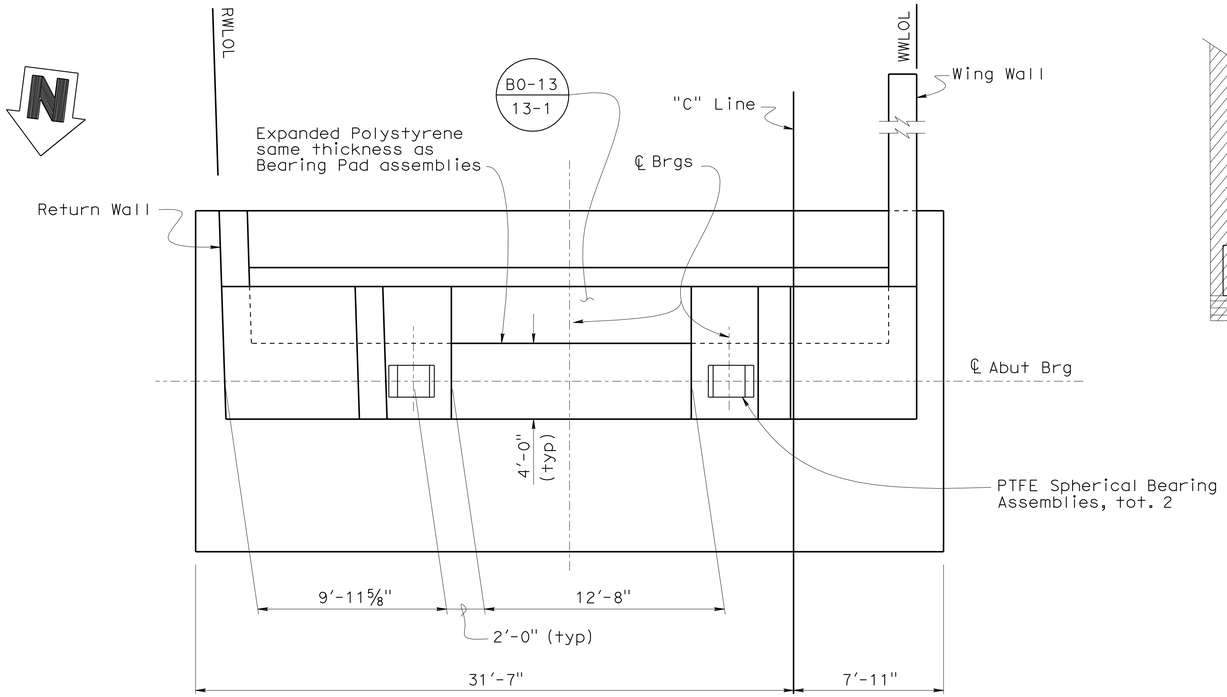


## PLAN

¼" = 1'-0"

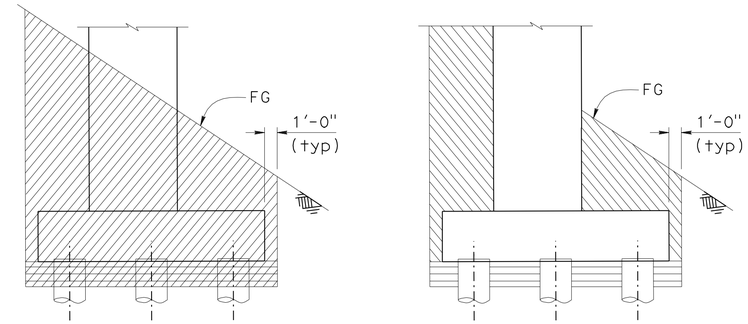


Structure Excavation, contaminated soil, see Pile Data Table for Excavation type and depth

Structure Excavation, Type A

Seal Course Concrete, See Pile Data Table for depth

Structure Backfill

## LIMITS OF PAYMENT FOR EXCAVATION AND BACKFILL

No Scale

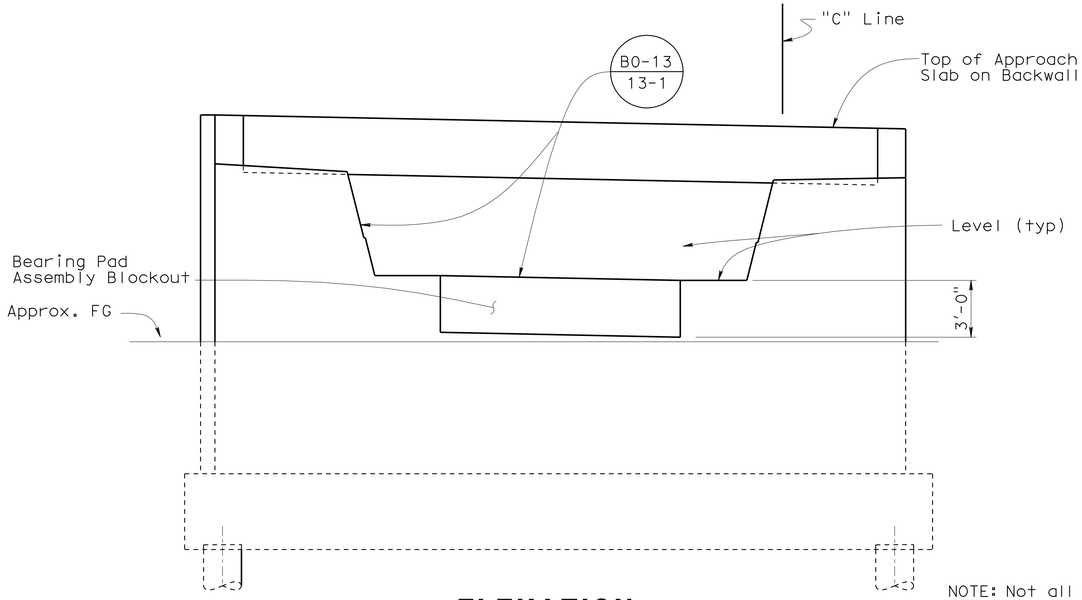


## ELEVATION

¼" = 1'-0"

NOTE: Not all piles shown

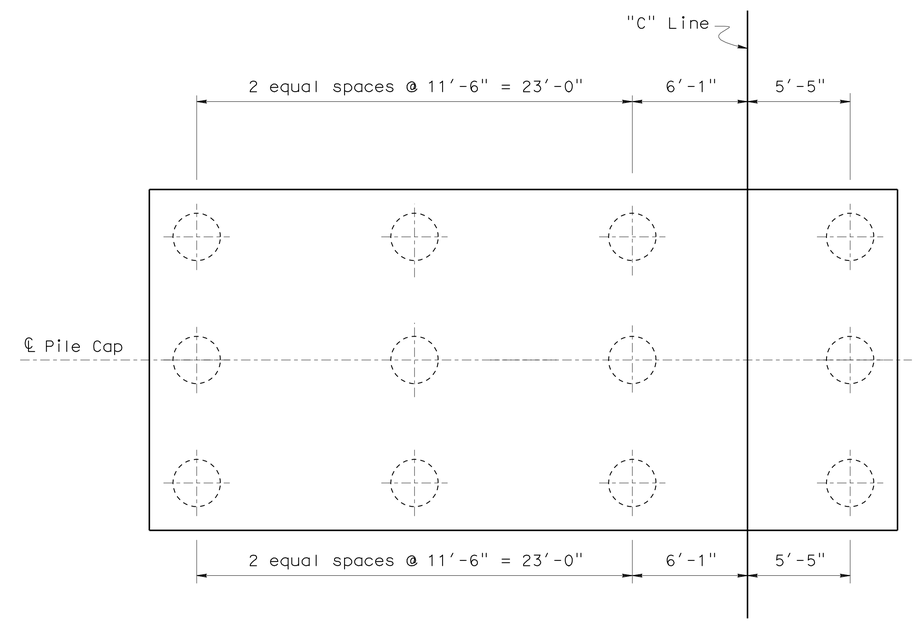


## FOOTING - PLAN

¼" = 1'-0"

Indicates 2.5' ø CIDH Pile

| | | | |
|---|---|---|---|
| DESIGN | BY S. Galgiani | CHECKED J. Lane | |
| DETAILS | BY L. Xiong | CHECKED F. Zayati | |
| QUANTITIES | BY J. Lane | CHECKED V. Ramakrishnan | |

STATE OF CALIFORNIA
DEPARTMENT OF TRANSPORTATION

DIVISION OF ENGINEERING SERVICES
STRUCTURE DESIGN
DESIGN BRANCH 14

BRIDGE NO. 53-3033
POST MILE 0.01

# NEW DOCK STREET ON-RAMP
# ABUTMENT 6 LAYOUT

STRUCTURES DESIGN DETAIL SHEET (ENGLISH) (REV. 10/25/05)

ORIGINAL SCALE IN INCHES FOR REDUCED PLANS 0 1 2 3

CU 07-271
EA 138201

DISREGARD PRINTS BEARING EARLIER REVISION DATES

REVISION DATES: 06-06-08 07-01-08 08-25-09 09-29-09 11-13-09 4-28-10 08-26-10

SHEET 5 OF 40

FILE => 53-3033-f-a06_lo.dgn

USERNAME => trlenard DATE PLOTTED => 18-OCT-2010 TIME PLOTTED => 15:21

| DIST | COUNTY | ROUTE | POST MILES TOTAL PROJECT | SHEET No | TOTAL SHEETS |
|---|---|---|---|---|---|
| 07 | LA | 47,103 | 3.5/4.6, 0.0/1.1 | 755 | 1003 |

REGISTERED CIVIL ENGINEER — DATE 05-24-10

10-11-10
PLANS APPROVAL DATE

REGISTERED PROFESSIONAL ENGINEER — FOUED ZAYATI — No. C57046 — Exp. 06-30-11 — CIVIL — STATE OF CALIFORNIA

*The State of California or its officers or agents shall not be responsible for the accuracy or completeness of electronic copies of this plan sheet.*

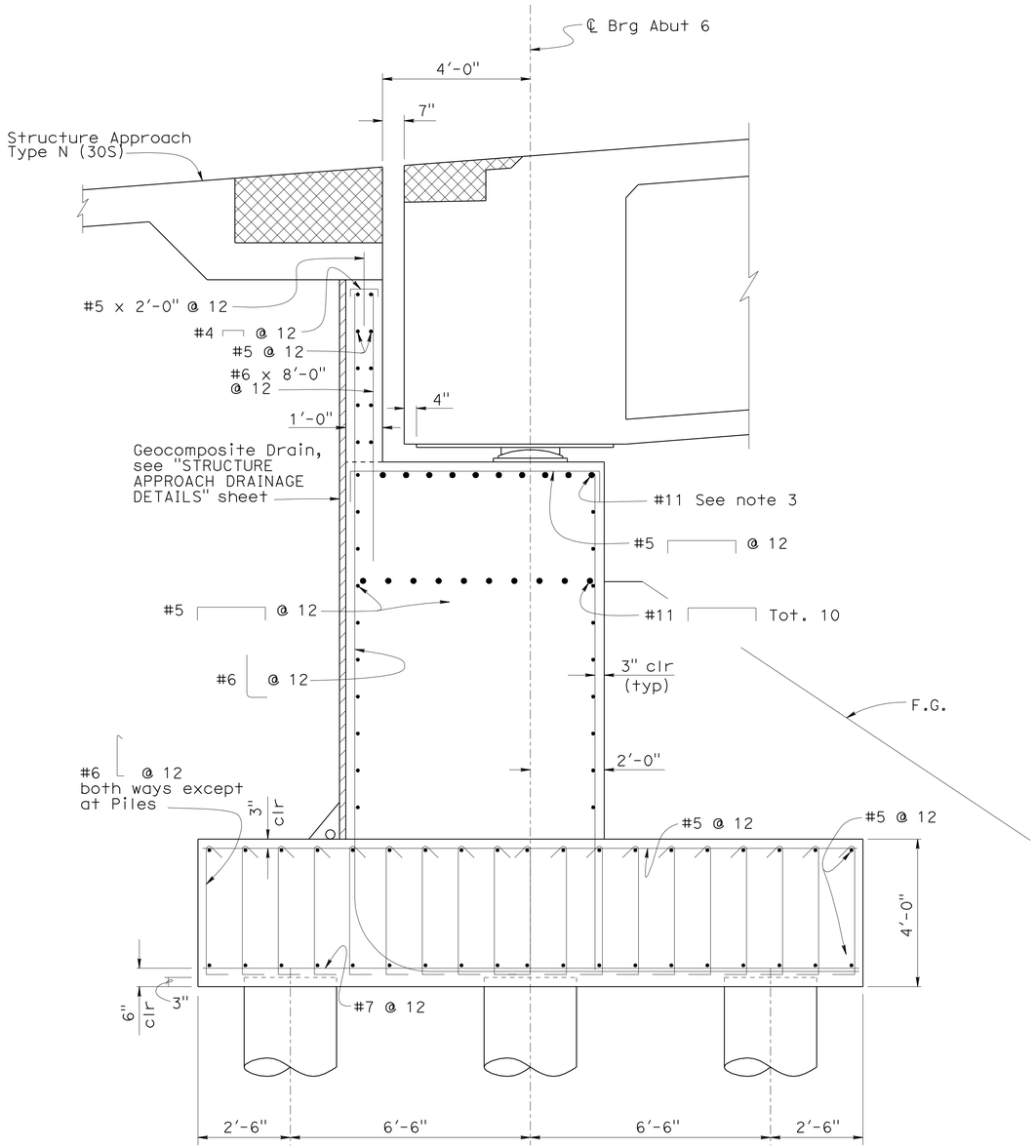


## ABUTMENT SECTION AT BEARING PADS

½" = 1'-0"

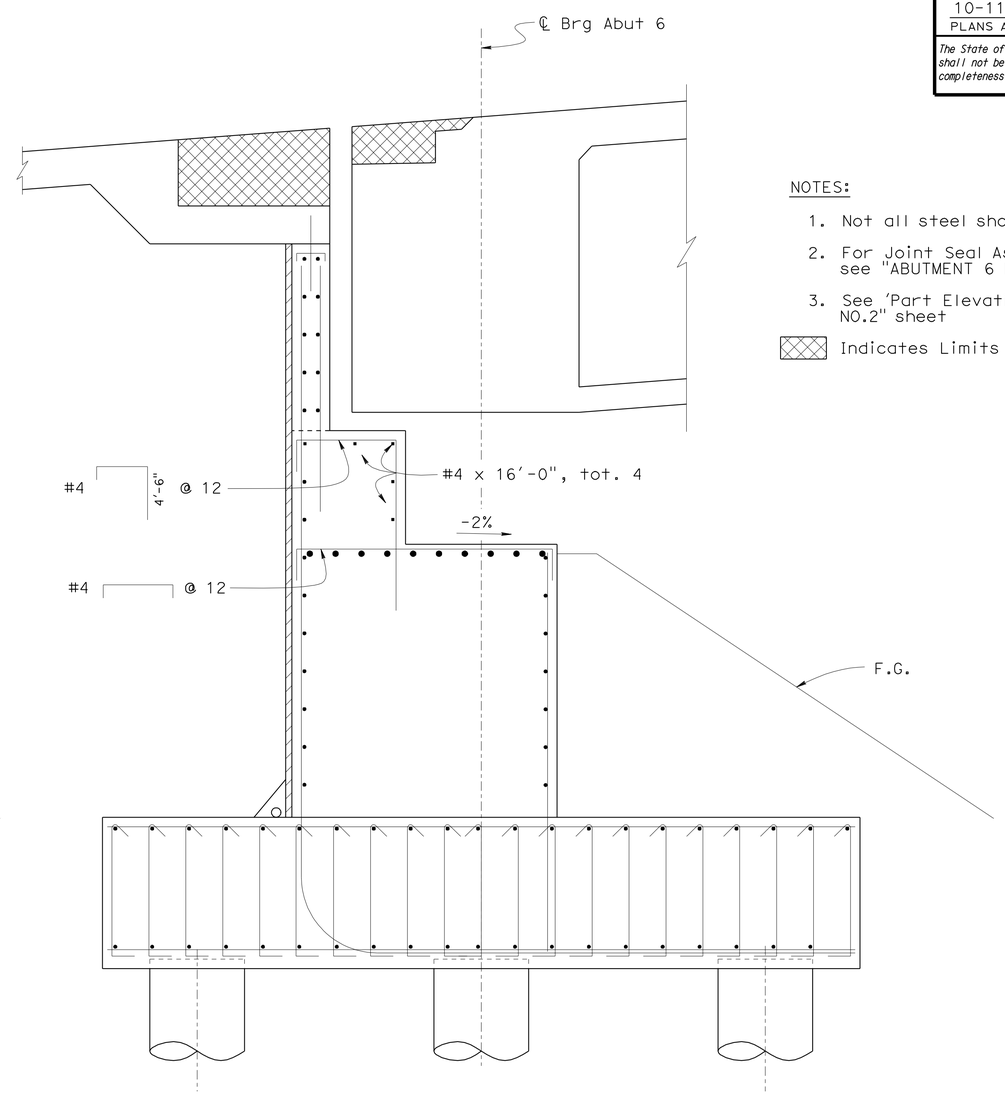


## SECTION AT ACCESS BLOCKOUTS

½" = 1'-0"

NOTES:

1. Not all steel shown.
2. For Joint Seal Assembly Blockout dimensions, see "ABUTMENT 6 DETAILS NO. 6" sheet.
3. See 'Part Elevation' view on "ABUTMENT DETAILS NO.2" sheet

Indicates Limits of Joint Seal Blockout.

| | | | |
|---|---|---|---|
| DESIGN | BY S. Galgiani | CHECKED J. Lane | |
| DETAILS | BY L. Xiong | CHECKED F. Zayati | |
| QUANTITIES | BY J. Lane | CHECKED V. Ramakrishnan | |

STATE OF CALIFORNIA
DEPARTMENT OF TRANSPORTATION

DIVISION OF ENGINEERING SERVICES
STRUCTURE DESIGN
DESIGN BRANCH 14

BRIDGE NO. 53-3033
POST MILE 0.01

# NEW DOCK STREET ON-RAMP
# ABUTMENT 6 DETAILS NO. 1

STRUCTURES DESIGN DETAIL SHEET (ENGLISH) (REV. 10/25/05)

ORIGINAL SCALE IN INCHES FOR REDUCED PLANS 0 1 2 3

CU 07-271
EA 138201

DISREGARD PRINTS BEARING EARLIER REVISION DATES

REVISION DATES: 04-18-08, 06-25-08, 09-17-09, 11-23-09, 04-26-10, 4-28-10, 05-11-10, 05-17-10, 05-20-10

SHEET 6 OF 40

FILE => 53-3033-f-a06dt01.dgn

USERNAME => trmnguye DATE PLOTTED => 21-OCT-2010 TIME PLOTTED => 14:59

| DIST | COUNTY | ROUTE | POST MILES TOTAL PROJECT | SHEET No | TOTAL SHEETS |
|---|---|---|---|---|---|
| 07 | LA | 47,103 | 3.5/4.6, 0.0/1.1 | 756 | 1003 |

Foued Zayati 05-24-10
REGISTERED CIVIL ENGINEER DATE

10-11-10
PLANS APPROVAL DATE

REGISTERED PROFESSIONAL ENGINEER FOUED ZAYATI No. C57046 Exp. 06-30-11 CIVIL STATE OF CALIFORNIA

*The State of California or its officers or agents shall not be responsible for the accuracy or completeness of electronic copies of this plan sheet.*

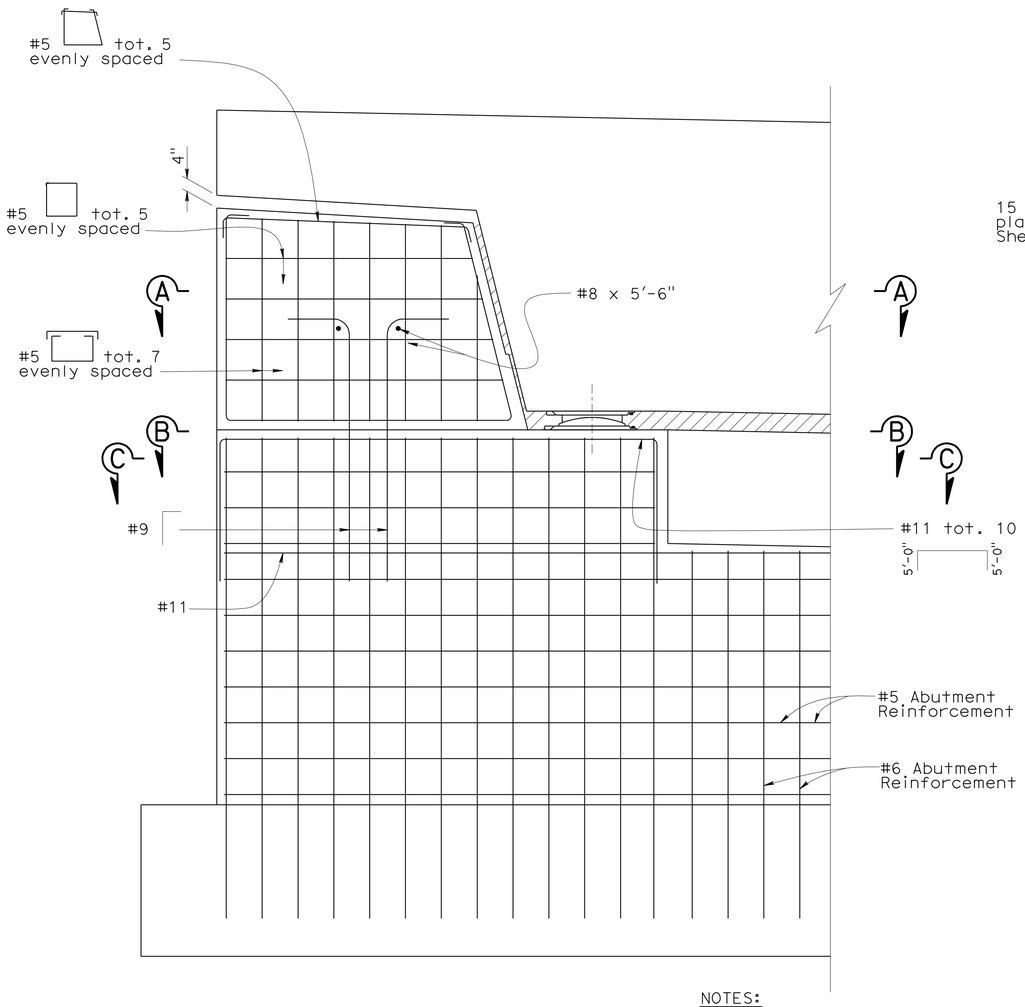


NOTES:

1. Piles not shown.
2. Barrier Rail not shown.
3. #8 Shear Key steel not shown.

## PART ELEVATION

1/2" = 1'-0"

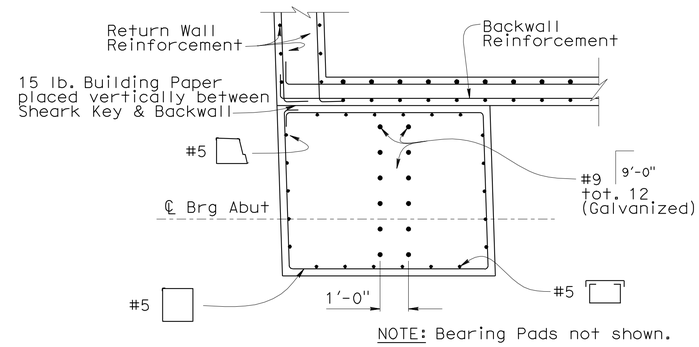


NOTE: Bearing Pads not shown.

## SECTION A-A

3/8" = 1'-0"

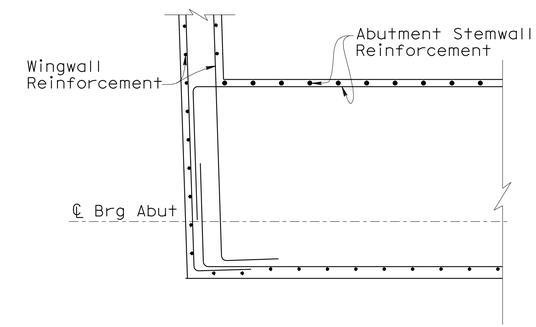


NOTE: Not all Abutment Reinforcement shown.

## SECTION C-C

3/8" = 1'-0"

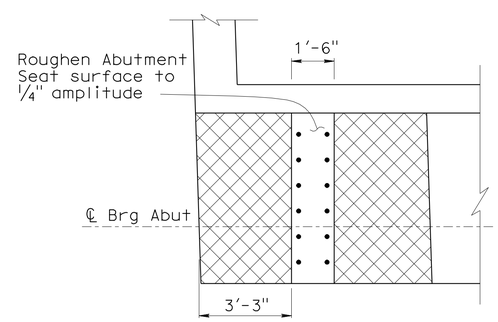


## SECTION B-B

3/8" = 1'-0"

NOTES:

1. Abutment and Wall Steel not shown.
2. Bearing Pad not shown.

Indicates Limits of 15 LB Building Paper

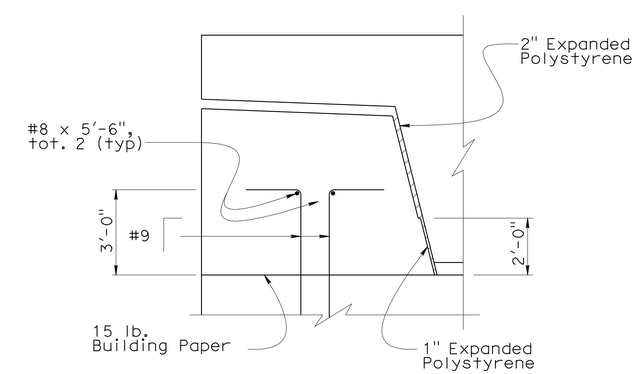


## DETAIL A

3/8" = 1'-0"

| | | | |
|---|---|---|---|
| DESIGN | BY S. Galgiani | CHECKED J. Lane | |
| DETAILS | BY L. Xiong | CHECKED F. Zayati | |
| QUANTITIES | BY J. Lane | CHECKED V. Ramakrishnan | |

STATE OF CALIFORNIA
DEPARTMENT OF TRANSPORTATION

DIVISION OF ENGINEERING SERVICES
STRUCTURE DESIGN
DESIGN BRANCH 14

BRIDGE NO. 53-3033
POST MILE 0.01

# NEW DOCK STREET ON-RAMP
# ABUTMENT 6 DETAILS NO. 2

STRUCTURES DESIGN DETAIL SHEET (ENGLISH) (REV. 10/25/05)

ORIGINAL SCALE IN INCHES FOR REDUCED PLANS 0 1 2 3

CU 07-271
EA 138201

DISREGARD PRINTS BEARING EARLIER REVISION DATES

REVISION DATES: 05-22-08 06-24-08 08-25-09 09-17-09 10-01-09 10-01-09 11-23-09 4-28-10 05-19-10

SHEET 7 OF 40

FILE => 53-3033-f-a06dt02.dgn

USERNAME => trlenard DATE PLOTTED => 18-OCT-2010 TIME PLOTTED => 15:21

| DIST | COUNTY | ROUTE | POST MILES TOTAL PROJECT | SHEET No | TOTAL SHEETS |
|---|---|---|---|---|---|
| 07 | LA | 47,103 | 3.5/4.6, 0.0/1.1 | 757 | 1003 |

REGISTERED CIVIL ENGINEER 05-24-10 DATE

10-11-10
PLANS APPROVAL DATE

REGISTERED PROFESSIONAL ENGINEER FOUED ZAYATI No. C57046 Exp. 06-30-11 CIVIL STATE OF CALIFORNIA

*The State of California or its officers or agents shall not be responsible for the accuracy or completeness of electronic copies of this plan sheet.*

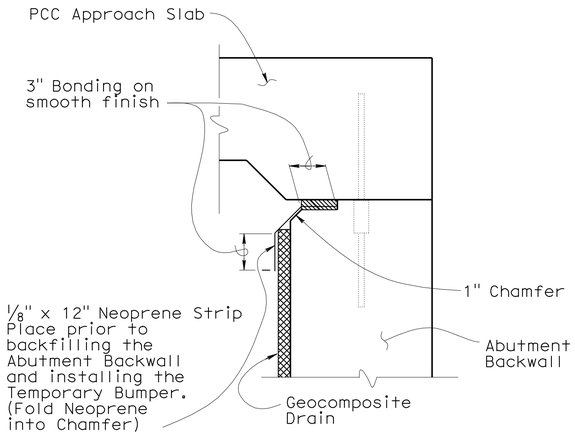


## JOINT PROTECTION DETAIL

No Scale

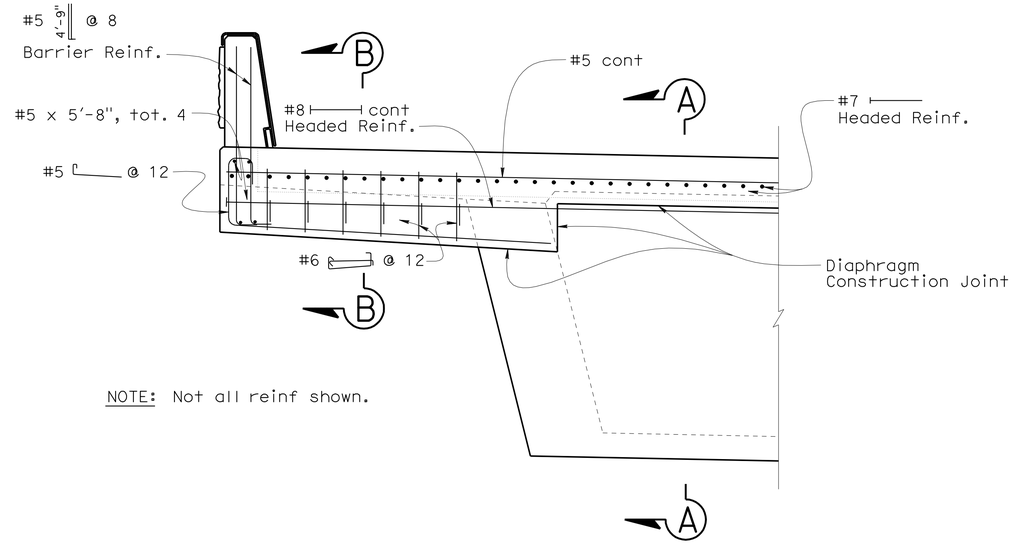


NOTE: Not all reinf shown.

## ABUTMENT DIAPHRAGM - PART ELEVATION

1/2" = 1'-0"

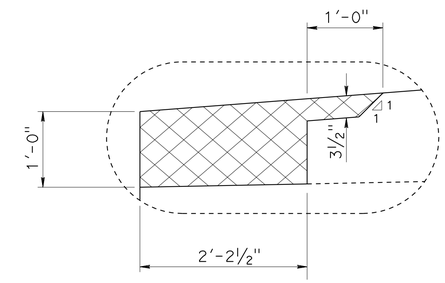


## JOINT SEAL BLOCKOUT DETAIL

1"=1'-0"

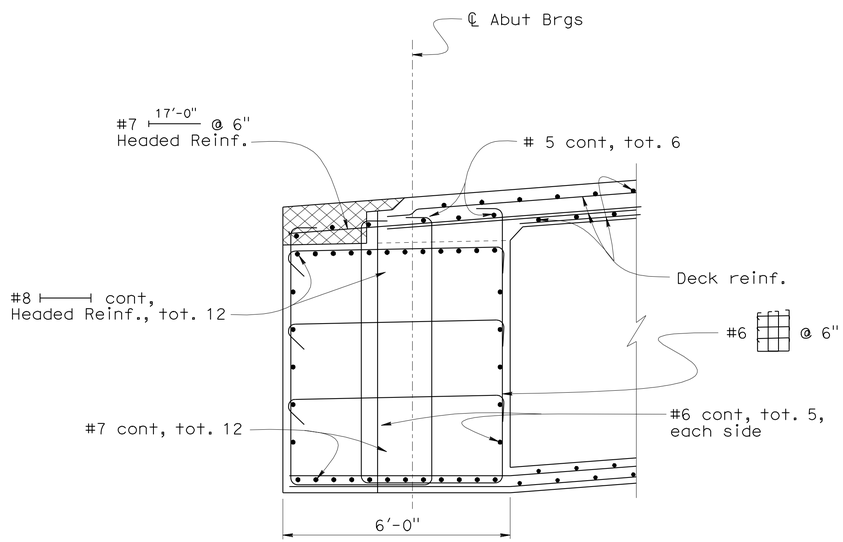


## SECTION A-A

1/2"=1'-0"

B8-5 B7-8

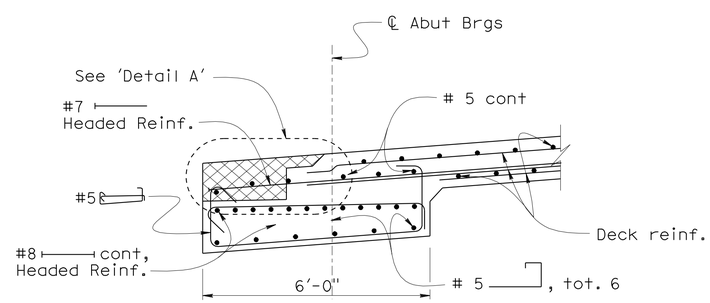


## SECTION B-B

1/2"=1'-0"

| | | | |
|---|---|---|---|
| DESIGN | BY F. Zayati | CHECKED J. Lane | |
| DETAILS | BY L. Xiong | CHECKED F. Zayati | |
| QUANTITIES | BY J. Lane | CHECKED V. Ramakrishnan | |

STATE OF CALIFORNIA
DEPARTMENT OF TRANSPORTATION

DIVISION OF ENGINEERING SERVICES
STRUCTURE DESIGN
DESIGN BRANCH 14

BRIDGE NO. 53-3033
POST MILE 0.01

# NEW DOCK STREET ON-RAMP
# ABUTMENT 6 DETAILS NO. 3

STRUCTURES DESIGN DETAIL SHEET (ENGLISH) (REV. 10/25/05)

ORIGINAL SCALE IN INCHES FOR REDUCED PLANS 0 1 2 3

CU 07-271
EA 138201

DISREGARD PRINTS BEARING EARLIER REVISION DATES

REVISION DATES: ~~11-25-09~~ ~~4-28-10~~ 05-17-10

SHEET 8 OF 40

FILE => 53-3033-f-a06dt03.dgn

USERNAME => trlenard DATE PLOTTED => 18-OCT-2010 TIME PLOTTED => 15:21

| DIST | COUNTY | ROUTE | POST MILES TOTAL PROJECT | SHEET No | TOTAL SHEETS |
|---|---|---|---|---|---|
| 07 | LA | 47,103 | 3.5/4.6, 0.0/1.1 | 758 | 1003 |

REGISTERED CIVIL ENGINEER — DATE 05-24-10

10-11-10
PLANS APPROVAL DATE

REGISTERED PROFESSIONAL ENGINEER — FOUED ZAYATI — No. C57046 — Exp. 06-30-11 — CIVIL — STATE OF CALIFORNIA

*The State of California or its officers or agents shall not be responsible for the accuracy or completeness of electronic copies of this plan sheet.*

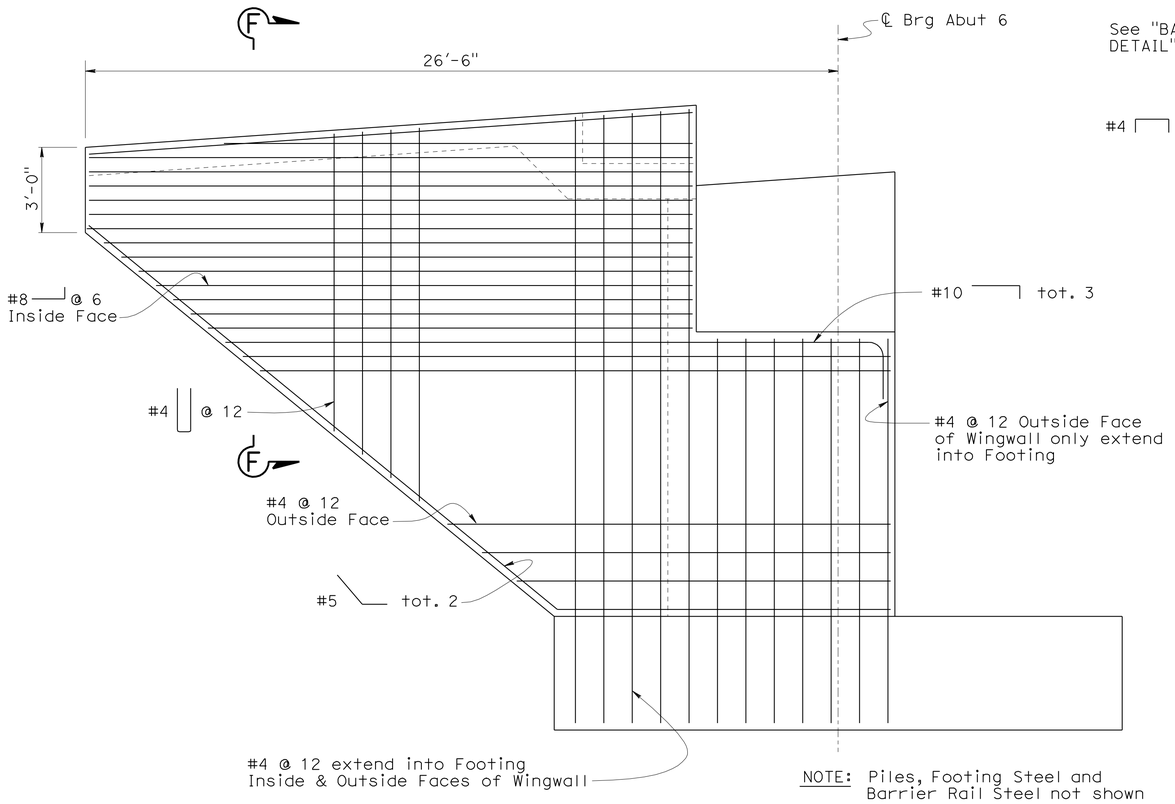


## WINGWALL ELEVATION

3/8" = 1'-0"

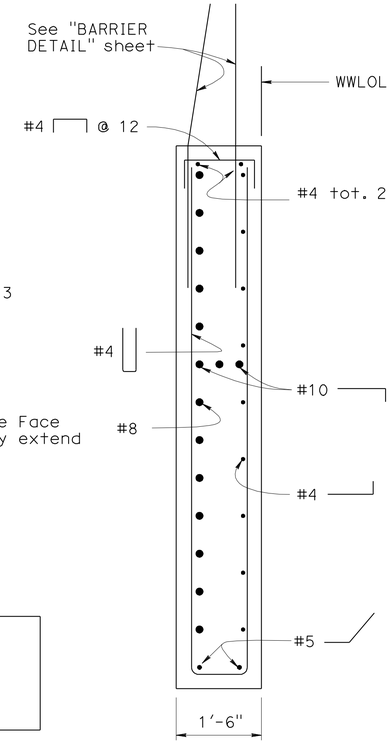


## SECTION F-F

3/4" = 1'-0"

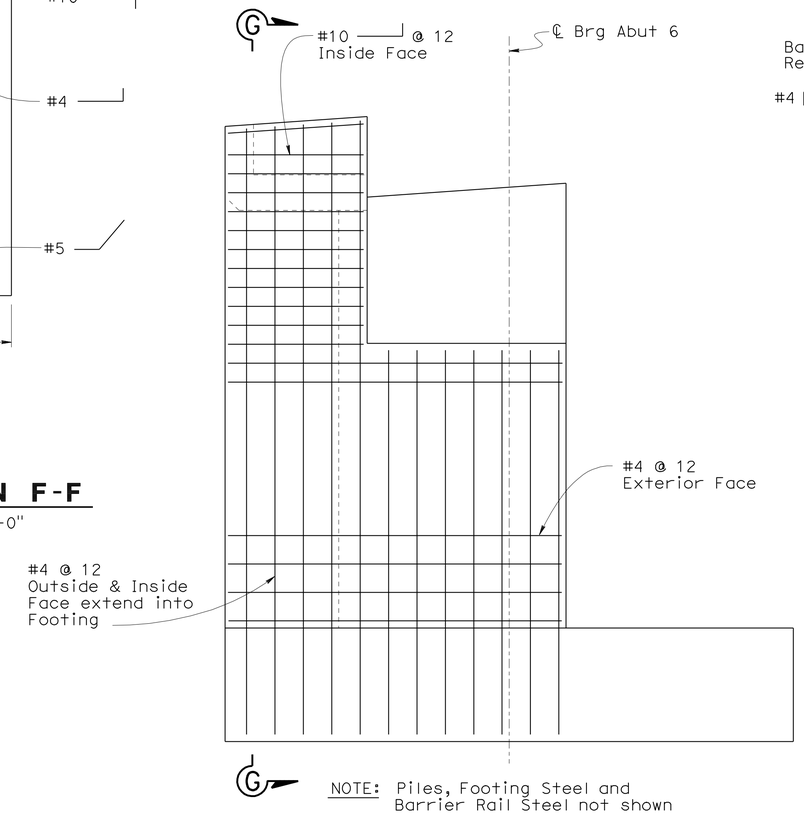


## RETURN WALL ELEVATION

3/8" = 1'-0"

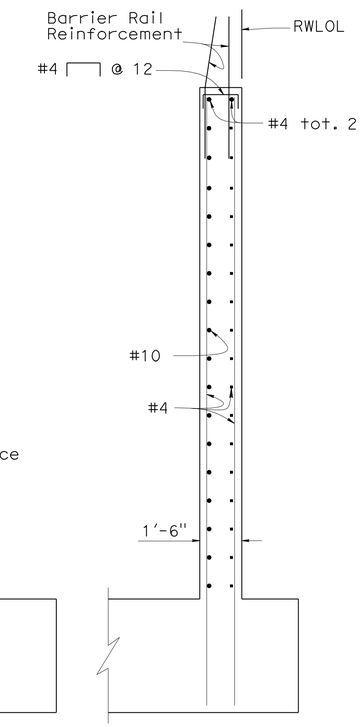


## SECTION G-G

3/8" = 1'-0"

| | | | |
|---|---|---|---|
| DESIGN | BY S. Galgiani | CHECKED J. Lane | |
| DETAILS | BY L. Xiong | CHECKED F. Zayati | |
| QUANTITIES | BY J. Lane | CHECKED V. Ramakrishnan | |

STATE OF CALIFORNIA
DEPARTMENT OF TRANSPORTATION

DIVISION OF ENGINEERING SERVICES
STRUCTURE DESIGN
DESIGN BRANCH 14

BRIDGE NO. 53-3033
POST MILE 0.01

# NEW DOCK STREET ON-RAMP
# ABUTMENT 6 DETAILS NO. 4

STRUCTURES DESIGN DETAIL SHEET (ENGLISH) (REV. 10/25/05)

ORIGINAL SCALE IN INCHES FOR REDUCED PLANS 0 1 2 3

CU 07-271
EA 138201

DISREGARD PRINTS BEARING EARLIER REVISION DATES

REVISION DATES: ~~06-06-08~~ ~~06-09-08~~ ~~06-11-08~~ ~~07-03-08~~ ~~11-25-09~~ ~~4-28-10~~ 5-27-10

SHEET 9 OF 40

FILE => 53-3033-f-a06dt04.dgn

USERNAME => trlenard DATE PLOTTED => 18-OCT-2010 TIME PLOTTED => 15:21

| DIST | COUNTY | ROUTE | POST MILES TOTAL PROJECT | SHEET No | TOTAL SHEETS |
|---|---|---|---|---|---|
| 07 | LA | 47,103 | 3.5/4.6, 0.0/1.1 | 759 | 1003 |

REGISTERED CIVIL ENGINEER 05-24-10 DATE

10-11-10
PLANS APPROVAL DATE

REGISTERED PROFESSIONAL ENGINEER FOUED ZAYATI No. C57046 Exp. 06-30-11 CIVIL STATE OF CALIFORNIA

*The State of California or its officers or agents shall not be responsible for the accuracy or completeness of electronic copies of this plan sheet.*

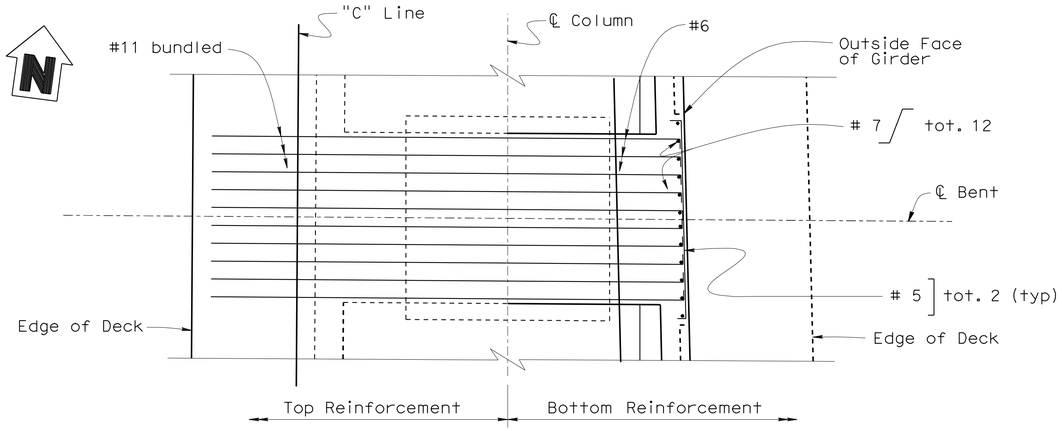


## PLAN
1/4"=1'-0"

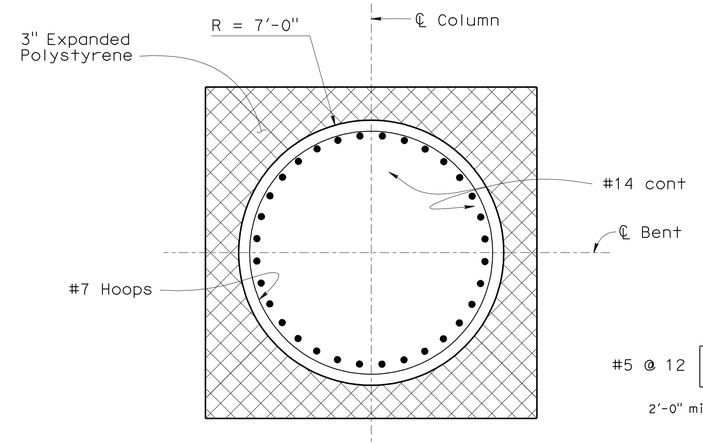


## SECTION A-A
1/2"=1'-0"

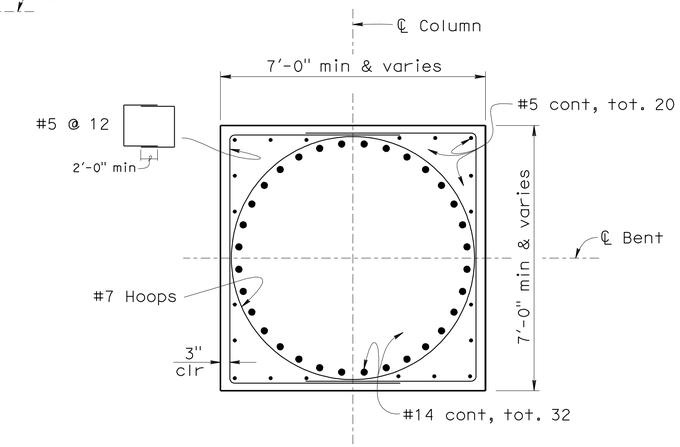


## SECTION C-C
1/2"=1'-0"

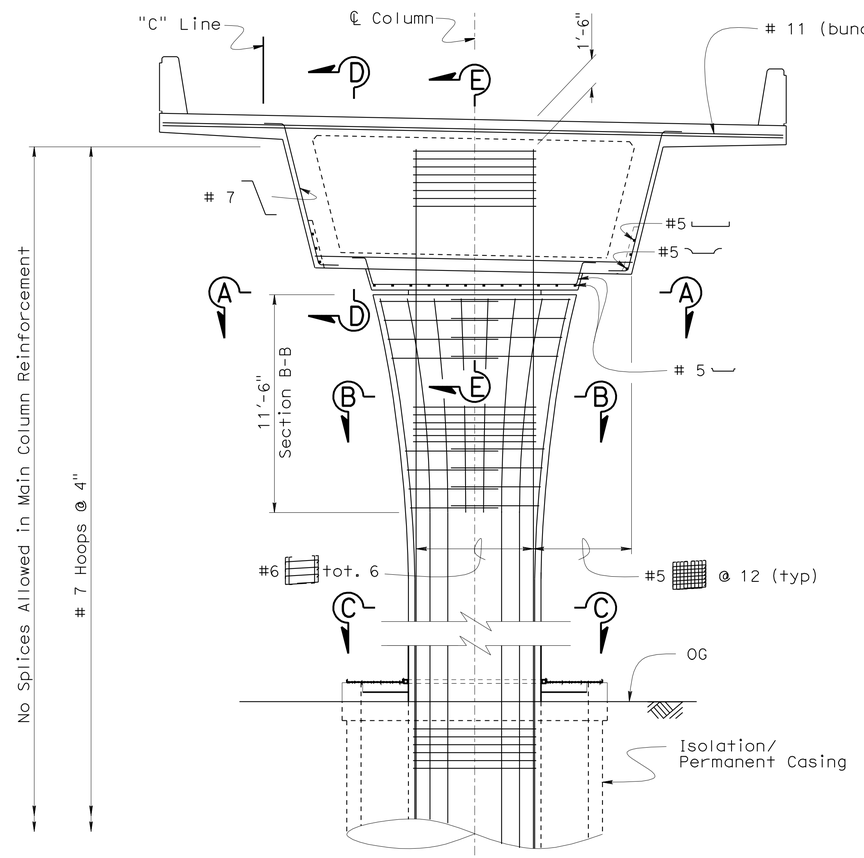


## ELEVATION
1/4"=1'-0"

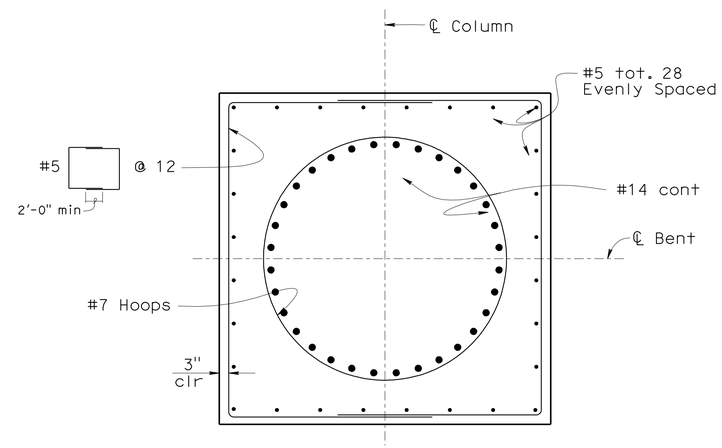


## SECTION B-B
1/2"=1'-0"

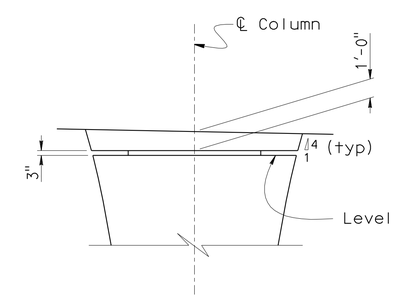


## COLUMN CAPITAL GEOMETRY
1/4"=1'-0"

NOTE:

For 'Section D-D' and 'Section E-E', see "TYPICAL BENT DETAILS" sheet.

| | | | |
|---|---|---|---|
| DESIGN | BY F. Zayati | CHECKED L. Bahia | |
| DETAILS | BY K. Kubo | CHECKED F. Zayati | |
| QUANTITIES | BY J. Lane | CHECKED V. Ramakrishnan | |

STATE OF CALIFORNIA
DEPARTMENT OF TRANSPORTATION

DIVISION OF ENGINEERING SERVICES
STRUCTURE DESIGN
DESIGN BRANCH 14

BRIDGE NO. 53-3033
POST MILE 0.01

# NEW DOCK STREET ON-RAMP
# TYPICAL BENT LAYOUT

STRUCTURES DESIGN DETAIL SHEET (ENGLISH) (REV. 10/25/05)

ORIGINAL SCALE IN INCHES FOR REDUCED PLANS 0 1 2 3

CU 07-271
EA 138201

DISREGARD PRINTS BEARING EARLIER REVISION DATES

REVISION DATES: 06-15-08 12-08-08 05-17-10 05-17-10 5-18-10

SHEET 10 OF 40

FILE => 53-3033-h-b_1o.dgn

USERNAME => trlenard DATE PLOTTED => 18-OCT-2010 TIME PLOTTED => 15:21

| DIST | COUNTY | ROUTE | POST MILES TOTAL PROJECT | SHEET No | TOTAL SHEETS |
|---|---|---|---|---|---|
| 07 | LA | 47,103 | 3.5/4.6, 0.0/1.1 | 760 | 1003 |

REGISTERED CIVIL ENGINEER 05-24-10 DATE

10-11-10
PLANS APPROVAL DATE

REGISTERED PROFESSIONAL ENGINEER FOUED ZAYATI No. C57046 Exp. 06-30-11 CIVIL STATE OF CALIFORNIA

*The State of California or its officers or agents shall not be responsible for the accuracy or completeness of electronic copies of this plan sheet.*

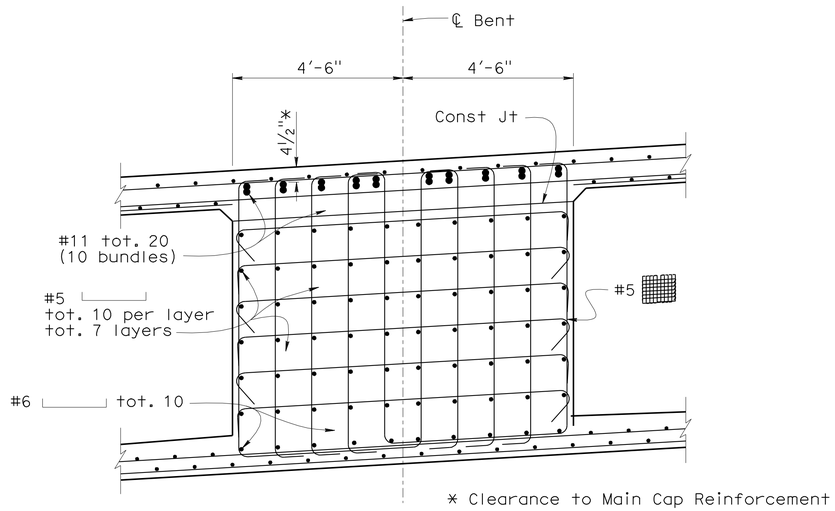


## SECTION D-D

1/2"=1'-0"

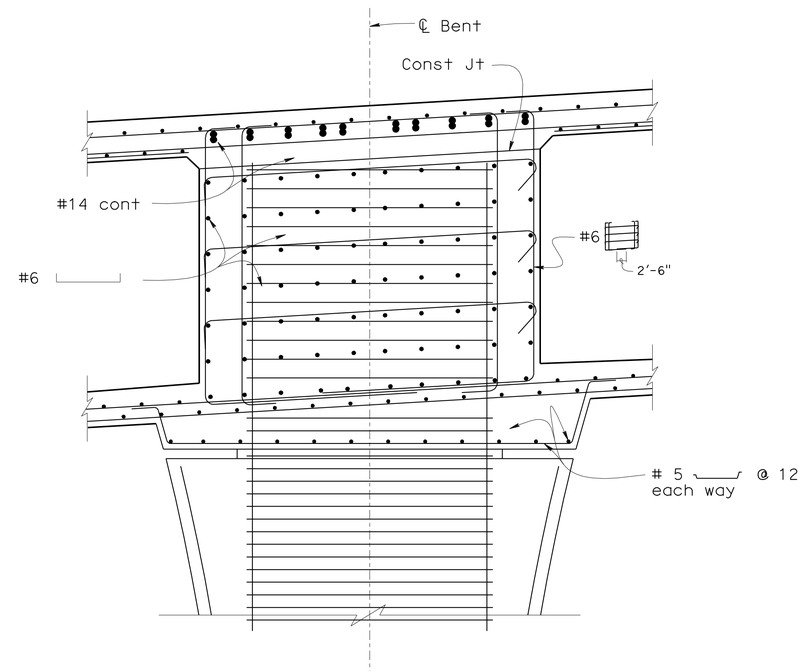


## SECTION E-E

1/2"=1'-0"

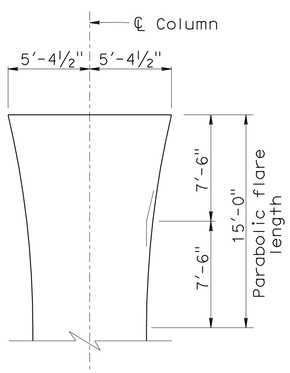


## FLARE DETAIL

No Scale

NOTE:

For location of 'Section D-D' and 'Section E-E', see "TYPICAL BENT LAYOUT" sheet.

| | | | |
|---|---|---|---|
| DESIGN | BY F. Zayati | CHECKED L. Bahia | |
| DETAILS | BY K. Kubo | CHECKED F. Zayati | |
| QUANTITIES | BY J. Lane | CHECKED V. Ramakrishnan | |

STATE OF CALIFORNIA
DEPARTMENT OF TRANSPORTATION

DIVISION OF ENGINEERING SERVICES
STRUCTURE DESIGN
DESIGN BRANCH 14

BRIDGE NO. 53-3033
POST MILE 0.01

# NEW DOCK STREET ON-RAMP
# TYPICAL BENT DETAILS

STRUCTURES DESIGN DETAIL SHEET (ENGLISH) (REV. 10/25/05)

ORIGINAL SCALE IN INCHES FOR REDUCED PLANS 0 1 2 3

CU 07-271
EA 138201

DISREGARD PRINTS BEARING EARLIER REVISION DATES

REVISION DATES: ~~06-18-08~~ ~~12-08-09~~ 05-11-10

SHEET 11 OF 40

FILE => 53-3033-h-bdt.dgn

USERNAME => trienford DATE PLOTTED => 18-OCT-2010 TIME PLOTTED => 15:21

| DIST | COUNTY | ROUTE | POST MILES TOTAL PROJECT | SHEET No | TOTAL SHEETS |
|---|---|---|---|---|---|
| 07 | LA | 47,103 | 3.5/4.6, 0.0/1.1 | 761 | 1003 |

REGISTERED CIVIL ENGINEER — DATE 05-24-10

10-11-10
PLANS APPROVAL DATE

*The State of California or its officers or agents shall not be responsible for the accuracy or completeness of electronic copies of this plan sheet.*

REGISTERED PROFESSIONAL ENGINEER — FOUED ZAYATI — No. C57046 — Exp. 06-30-11 — CIVIL — STATE OF CALIFORNIA

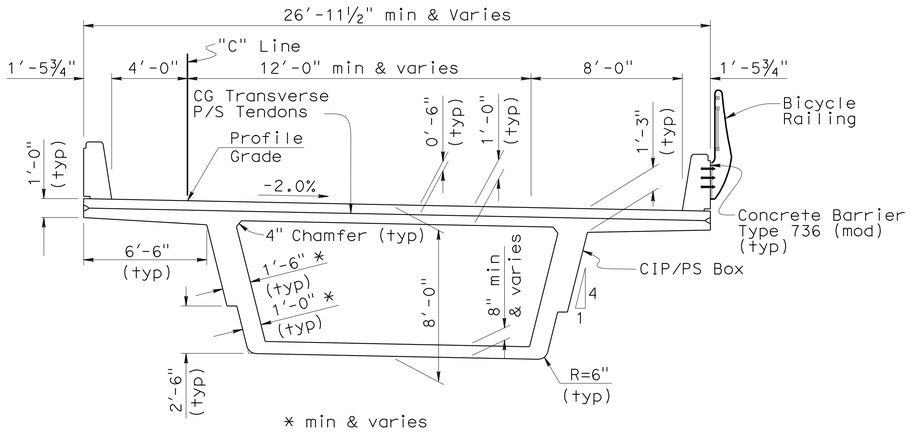


## TYPICAL SECTION

¼"=1'-0"

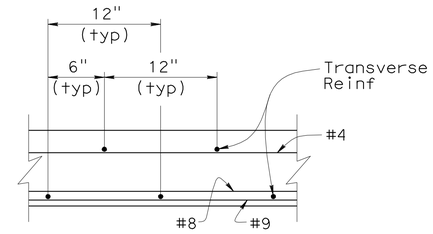


## DETAIL B

No Scale

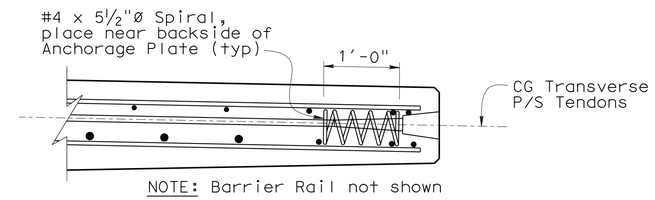


NOTE: Barrier Rail not shown

## ANCHORAGE ZONE DETAIL A76A

1" = 1'-0"

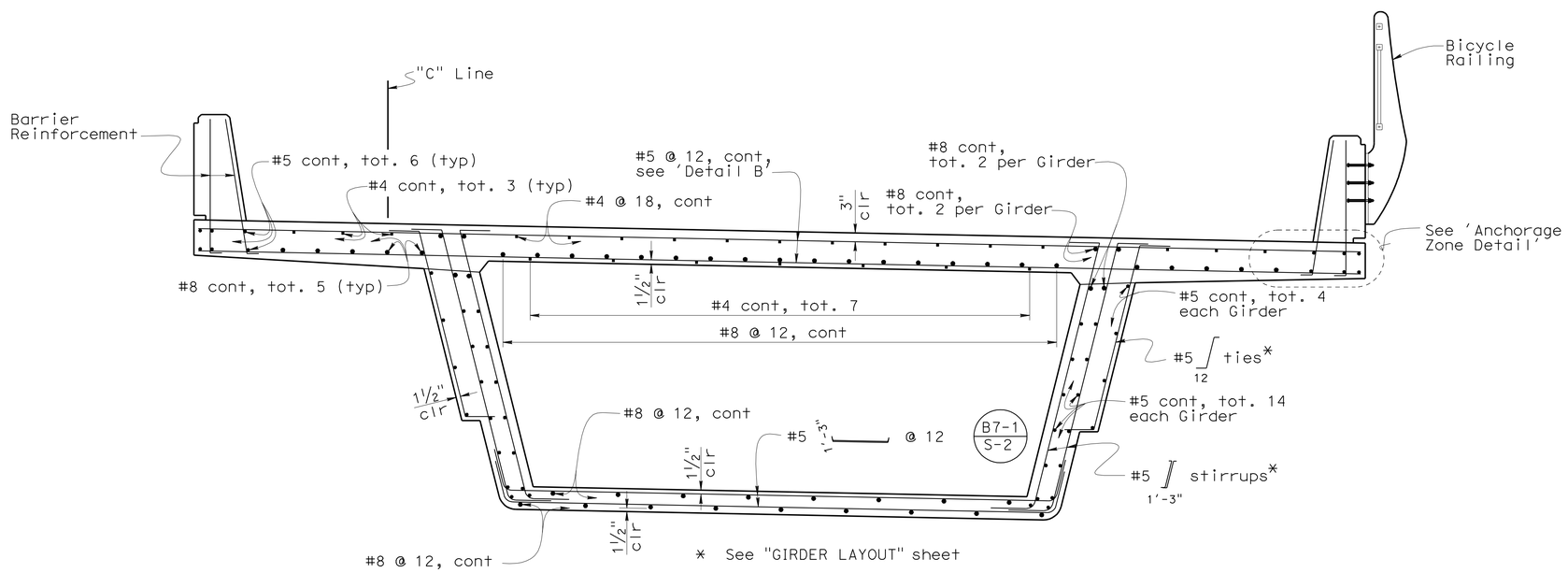


## TYPICAL SECTION

½"=1'-0"

## TRANSVERSE PRESTRESSING NOTES

1. 270 KSI Low Relaxation Strand:
2. Concrete: $f'_c$ = 5.0 psi @ 28 days
   $f'_{ci}$ = 3.5 psi @ time of stressing
3. $P_f$ = Total force remaining after all losses including those due to creep, shrinkage, elastic shortening of concrete and relaxation of prestressing steel.
   $P_f$ = 33.0 Kips/ft
4. Maximum Tendon spacing shall not exceed 4'-0"
5. Place first tendon at Sta. 213+78.87
6. Place last tendon at Sta. 217+59.87
7. Place prestress tendons normal or radial to and space along left Edge of Deck.
8. One end stressing. Alternate stressing end.
9. Transverse tendons shall be stressed prior to longitudinal tendons being stressed.
10. Falsework shall not be released prior to stressing the transverse tendons.

NOTES:

1. For additional Girder Layout details, see "GIRDER LAYOUT" sheet.
2. For stirrup spacing, see "GIRDER LAYOUT" sheet.

| | BY | CHECKED |
|---|---|---|
| DESIGN | F. Zayati | L. Bahia |
| DETAILS | T. Nguyen | F. Zayati |
| QUANTITIES | J. Lane | V. Ramakrishnan |

STATE OF CALIFORNIA
DEPARTMENT OF TRANSPORTATION

DIVISION OF ENGINEERING SERVICES
STRUCTURE DESIGN
DESIGN BRANCH 14

BRIDGE NO. 53-3033
POST MILE 0.01

# NEW DOCK STREET ON-RAMP
# TYPICAL SECTION

STRUCTURES DESIGN DETAIL SHEET (ENGLISH) (REV. 10/25/05)

ORIGINAL SCALE IN INCHES FOR REDUCED PLANS 0 1 2 3

CU 07-271
EA 138201

DISREGARD PRINTS BEARING EARLIER REVISION DATES

REVISION DATES: 12-30-07 01-25-08 06-18-08 12-11-08 02-02-09 12-11-09 05-11-10 07-09-10

SHEET 12 OF 40

FILE => 53-3033-k-ts.dgn

USERNAME => trmnguye DATE PLOTTED => 21-OCT-2010 TIME PLOTTED => 14:59

| DIST | COUNTY | ROUTE | POST MILES TOTAL PROJECT | SHEET No | TOTAL SHEETS |
|---|---|---|---|---|---|
| 07 | LA | 47,103 | 3.5/4.6, 0.0/1.1 | 762 | 1003 |

REGISTERED CIVIL ENGINEER — DATE 05-24-10

10-11-10
PLANS APPROVAL DATE

*The State of California or its officers or agents shall not be responsible for the accuracy or completeness of electronic copies of this plan sheet.*

REGISTERED PROFESSIONAL ENGINEER — FOUED ZAYATI No. C57046 Exp. 06-30-11 CIVIL — STATE OF CALIFORNIA

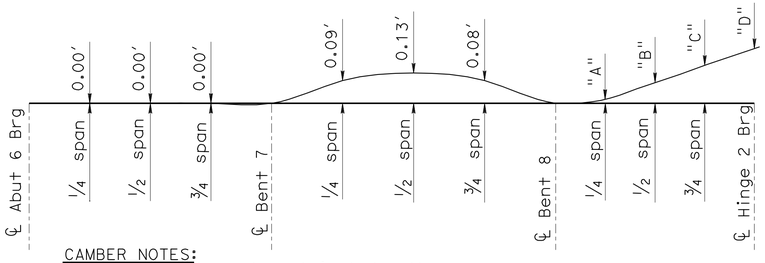


CAMBER NOTES:
1. Camber values do not include allowance for FalseWork Settlement.
2. See Table for SPAN 8 time dependent Cambers.
3. "T" is elapsed time in days from prestressing short hinge side till hinge closure and load transfer.

## CAMBER DIAGRAM
No Scale

NOTES:
1. "L" is the Girder Length measured along ℄ Girder
2. Total two Stirrups per Bundle
3. All Collector Pipes shall have lateral offset from Edge of Deck of 11′
4. Collector pipe is NPS 8 x 0.25" welded steel pipe and galvanized. Fittings and bends shall have a minimum wall thickness of 1/4". All joints or connections to be butt welded or connected by a steel pipe sleeve, and to be smooth throughout inside of pipe. All bends to be on 2′-0" minimum radius measured along ℄ pipe. Pipes to be supported by suitable galvanized hangers @ 10′-0" maximum spacing.

LEGEND:
- ⊠ Indicates Theoretical Point of No Movement
- Indicates Girder Stem width in inches
- ○ Indicates Point of Inflection
- Indicates Deck Drain Type D-3 modified
- Indicates direction of flow
- ✱ Dimension measured along Centerline of Support
- Indicates Soffit Access Opening

## SPAN 8 CAMBERS

| "T" | "A" | "B" | "C" | "D" |
|---|---|---|---|---|
| 30 | 0.01′ | 0.03′ | 0.04′ | 0.05′ |
| 60 | 0.01′ | 0.02′ | 0.03′ | 0.04′ |
| 90 | 0.01′ | 0.02′ | 0.03′ | 0.04′ |
| 120 | 0.01′ | 0.02′ | 0.02′ | 0.03′ |
| 180 | 0.01′ | 0.02′ | 0.02′ | 0.03′ |
| 240 | 0.01′ | 0.02′ | 0.02′ | 0.03′ |
| 360 | 0.01′ | 0.01′ | 0.02′ | 0.03′ |
| 720 | 0.01′ | 0.01′ | 0.02′ | 0.03′ |

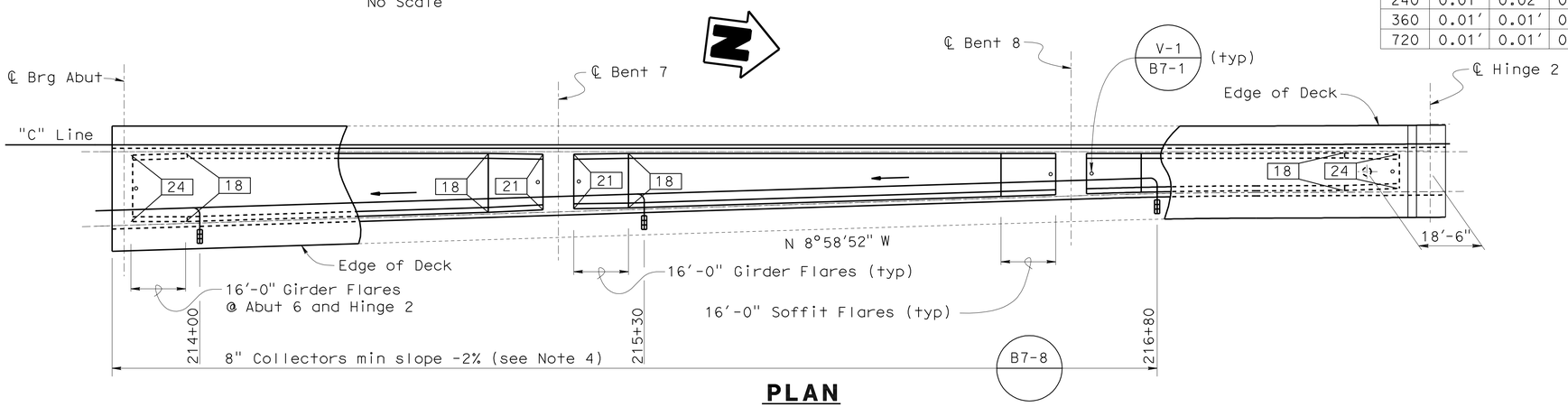


## PLAN
1"=20′

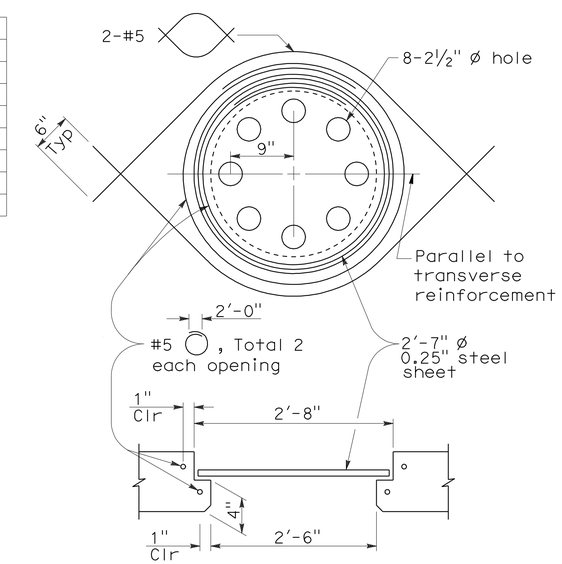


## SOFFIT ACCESS OPENING DETAIL
No Scale

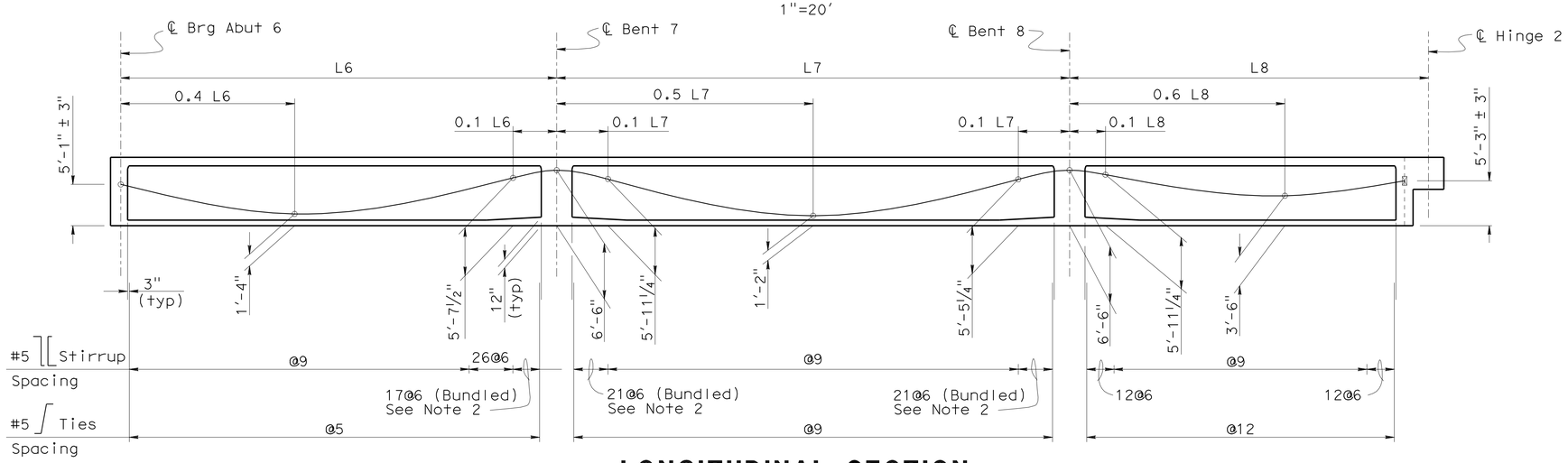


## LONGITUDINAL SECTION
No Scale

## PRESTRESSING NOTES

270 KSI Low Relaxation Strand:

$P_{jack}$ = 4800 kips

Anchor Set = 3/8 in

Total Number of Girders = 2

Distribution of prestress force (Pjack) between girders shall not exceed the ratio of 3:2. Maximum final force variation between girders shall not exceed 725 kips.

Concrete: $f'_c$ = 5.0 psi @ 28 days

$f'_{ci}$ = 3.5 psi @ time of stressing

Contractor shall submit elongation calculations based on initial stress at

⊠ = 0.776 times jacking stress.

One end stressing shall be performed from Abut 6 side.

| | BY | CHECKED |
|---|---|---|
| DESIGN | I. Quintanar | L. Bahia |
| DETAILS | T.Nguyen | F. Zayati |
| QUANTITIES | J. Lane | V. Ramakrishnan |

STATE OF CALIFORNIA
DEPARTMENT OF TRANSPORTATION

DIVISION OF ENGINEERING SERVICES
STRUCTURE DESIGN
DESIGN BRANCH 14

BRIDGE NO. 53-3033
POST MILE 0.01

# NEW DOCK STREET ON-RAMP
# GIRDER LAYOUT

STRUCTURES DESIGN DETAIL SHEET (ENGLISH) (REV. 10/25/05)

ORIGINAL SCALE IN INCHES FOR REDUCED PLANS 0 1 2 3

CU 07-271
EA 138201

DISREGARD PRINTS BEARING EARLIER REVISION DATES

REVISION DATES: 12-14-07 12-28-07 01-08-08 12-11-08 01-10-10 1-22-10 05-11-10 05-13-10 07-13-10

SHEET 13 OF 40

FILE => 53-3033-1-g_lo.dgn

USERNAME => trlenard DATE PLOTTED => 18-OCT-2010 TIME PLOTTED => 15:22

| DIST | COUNTY | ROUTE | POST MILES TOTAL PROJECT | SHEET No | TOTAL SHEETS |
|---|---|---|---|---|---|
| 07 | LA | 47,103 | 3.5/4.6, 0.0/1.1 | 763 | 1003 |

REGISTERED CIVIL ENGINEER — DATE 05-24-10

10-11-10
PLANS APPROVAL DATE

REGISTERED PROFESSIONAL ENGINEER — FOUED ZAYATI — No. C57046 — Exp. 06-30-11 — CIVIL — STATE OF CALIFORNIA

*The State of California or its officers or agents shall not be responsible for the accuracy or completeness of electronic copies of this plan sheet.*

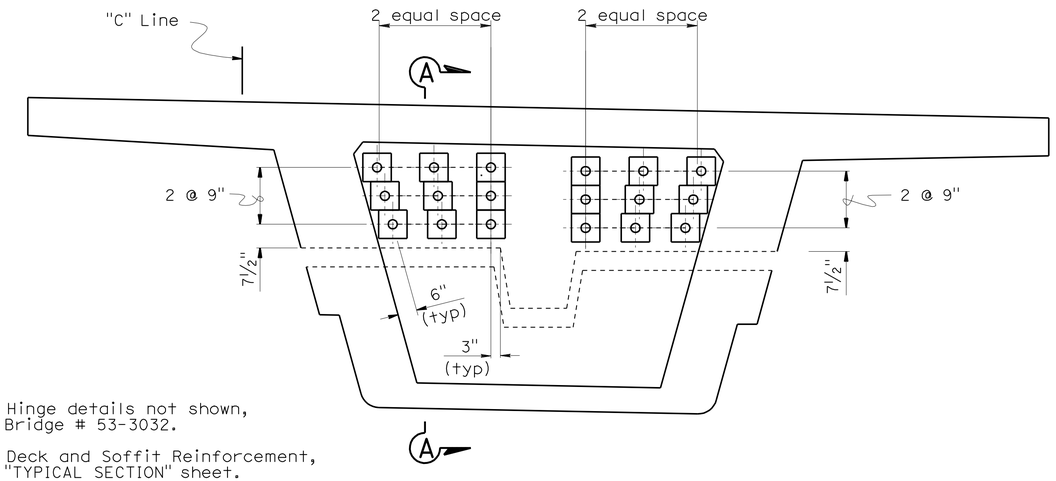


NOTES:

1. For Hinge details not shown, see Bridge # 53-3032.
2. For Deck and Soffit Reinforcement, see "TYPICAL SECTION" sheet.

## ELEVATION
½" = 1'-0"

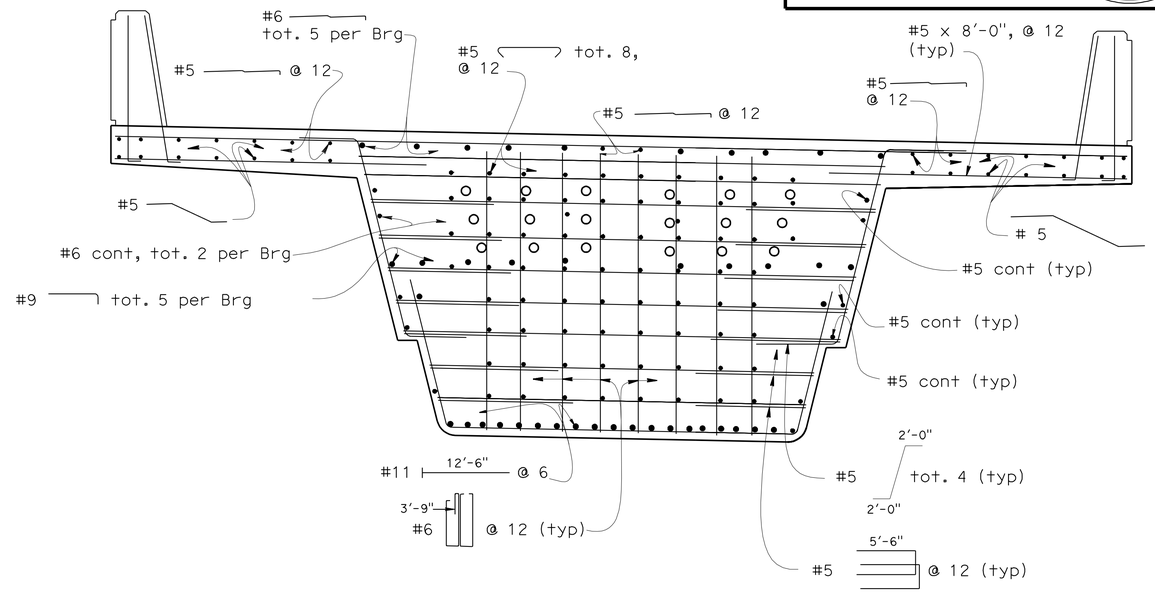


## SECTION B-B
½" = 1'-0"

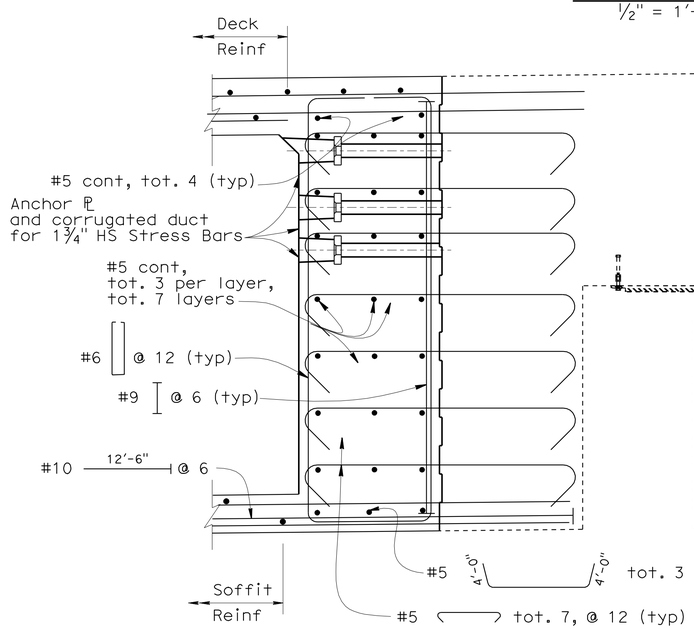


## SECTION A-A
¾" = 1'-0"

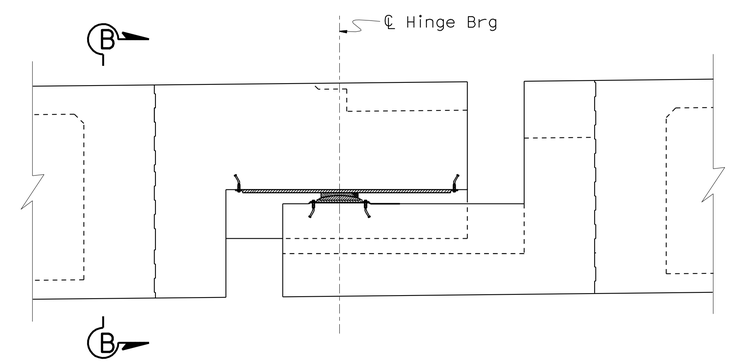


## LONGITUDINAL ELEVATION
⅜" = 1'-0"

| | | | |
|---|---|---|---|
| DESIGN | BY F. Zayati | CHECKED R. Bromenschenkel | |
| DETAILS | BY T. Nguyen | CHECKED F. Zayati | |
| QUANTITIES | BY J/P. Peterson | CHECKED J/P. Peterson | |

STATE OF CALIFORNIA
DEPARTMENT OF TRANSPORTATION

DIVISION OF ENGINEERING SERVICES
STRUCTURE DESIGN
DESIGN BRANCH 14

BRIDGE NO. 53-3033
POST MILE 0.01

# NEW DOCK STREET ON-RAMP
# HINGE 2 DIAPHRAGM DETAILS

STRUCTURES DESIGN DETAIL SHEET (ENGLISH) (REV. 10/25/05)

ORIGINAL SCALE IN INCHES FOR REDUCED PLANS 0 1 2 3

CU 07-271
EA 138201

DISREGARD PRINTS BEARING EARLIER REVISION DATES

REVISION DATES: 01-28-10 03-25-10 04-15-10 04-19-10 05-18-10 05-18-10

SHEET 14 OF 40

FILE => 53-3033-1-hingedet.dgn

USERNAME => trlenard DATE PLOTTED => 18-OCT-2010 TIME PLOTTED => 15:22

| DIST | COUNTY | ROUTE | POST MILES TOTAL PROJECT | SHEET No | TOTAL SHEETS |
|---|---|---|---|---|---|
| 07 | LA | 47,103 | 3.5/4.6, 0.0/1.1 | 764 | 1003 |

REGISTERED CIVIL ENGINEER — DATE 05-24-10

10-11-10
PLANS APPROVAL DATE

REGISTERED PROFESSIONAL ENGINEER — FOUED ZAYATI — No. C57046 — Exp. 06-30-11 — CIVIL — STATE OF CALIFORNIA

*The State of California or its officers or agents shall not be responsible for the accuracy or completeness of electronic copies of this plan sheet.*

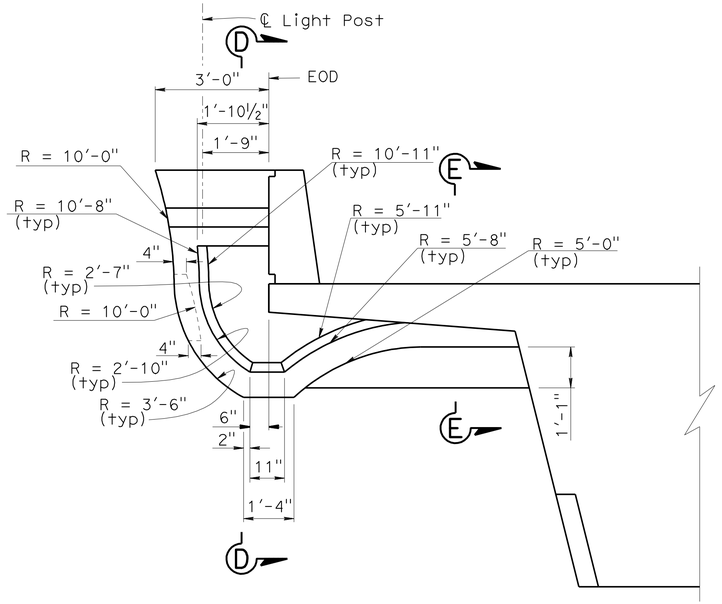


**VIEW A-A**
½"=1'-0"

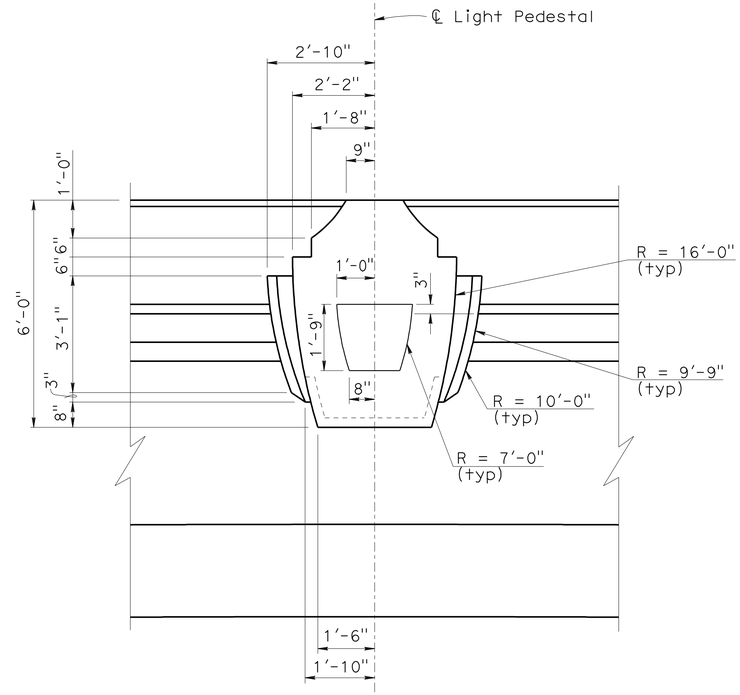


**VIEW B-B**
½"=1'-0"

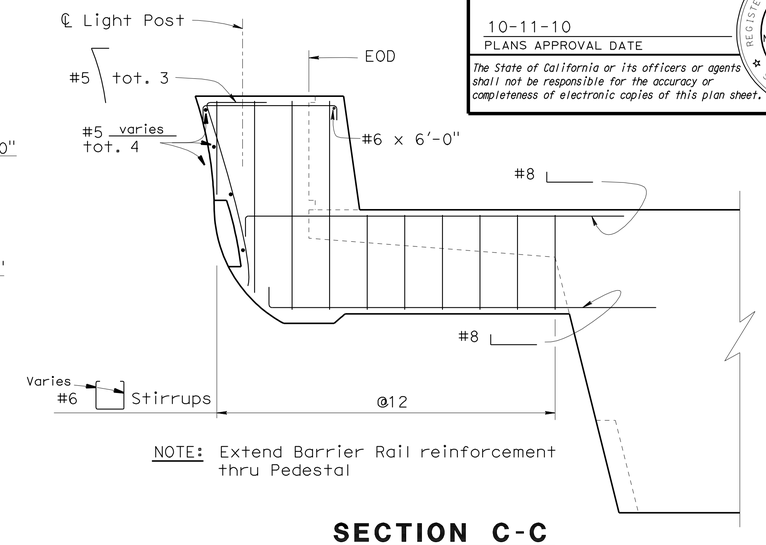


NOTE: Extend Barrier Rail reinforcement thru Pedestal

**SECTION C-C**
½"=1'-0"

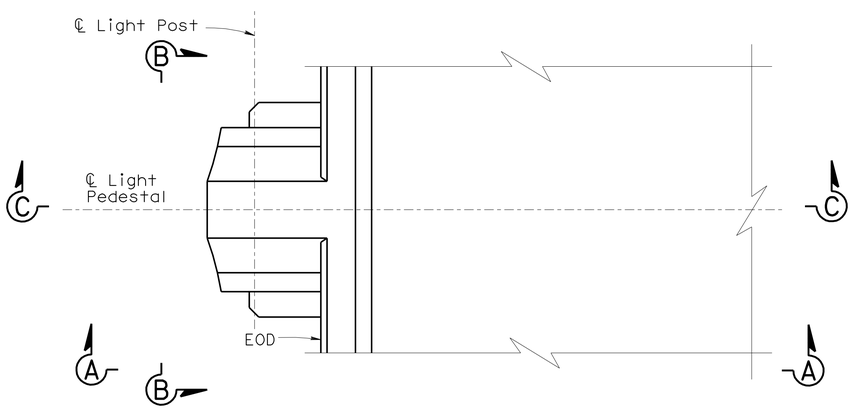


**PLAN**
½"=1'-0"

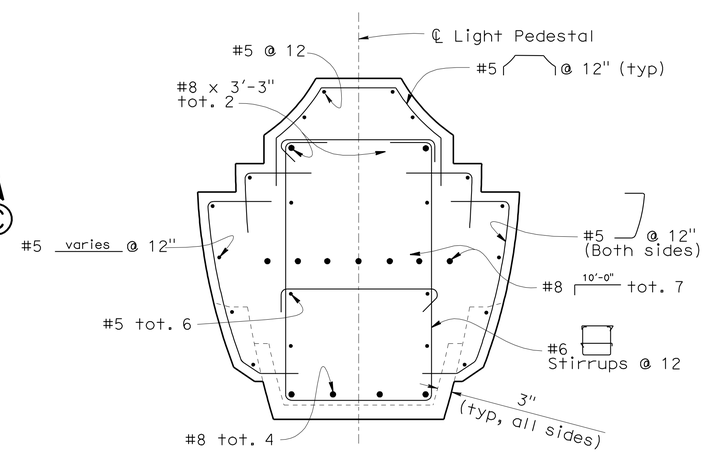


**SECTION D-D**
¾"=1'-0"

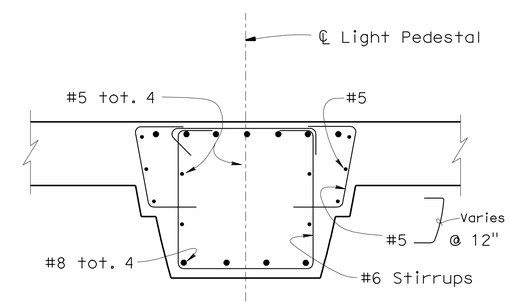


**SECTION E-E**
¾"=1'-0"

NOTE:
For locations of the Light Pedestals, see 'Electrical Plans'

| | | | |
|---|---|---|---|
| DESIGN | BY T. Skreslet | CHECKED F. Zayati | |
| DETAILS | BY K. Kubo | CHECKED T. Skreslet | |
| QUANTITIES | BY T. Skreslet | CHECKED L. Han | |

STATE OF CALIFORNIA
DEPARTMENT OF TRANSPORTATION

DIVISION OF ENGINEERING SERVICES
STRUCTURE DESIGN
DESIGN BRANCH 14

BRIDGE NO. 53-3033
POST MILE 0.01

# NEW DOCK STREET ON-RAMP
# MISCELLANEOUS DETAILS

STRUCTURES DESIGN DETAIL SHEET (ENGLISH) (REV. 10/25/05)

ORIGINAL SCALE IN INCHES FOR REDUCED PLANS 0 1 2 3

CU 07-271
EA 138201

DISREGARD PRINTS BEARING EARLIER REVISION DATES 05-24-10

REVISION DATES

SHEET 15 OF 40

FILE => 53-3033-1-miscdet.dgn

USERNAME => trlenard DATE PLOTTED => 18-OCT-2010 TIME PLOTTED => 15:22

| DIST | COUNTY | ROUTE | POST MILES TOTAL PROJECT | SHEET No | TOTAL SHEETS |
|---|---|---|---|---|---|
| 07 | LA | 47,103 | 3.5/4.6, 0.0/1.1 | 765 | 1003 |

REGISTERED CIVIL ENGINEER — DATE 05-24-10

10-11-10
PLANS APPROVAL DATE

*The State of California or its officers or agents shall not be responsible for the accuracy or completeness of electronic copies of this plan sheet.*

REGISTERED PROFESSIONAL ENGINEER — FOUED ZAYATI — No. C57046 — Exp. 06-30-11 — CIVIL — STATE OF CALIFORNIA

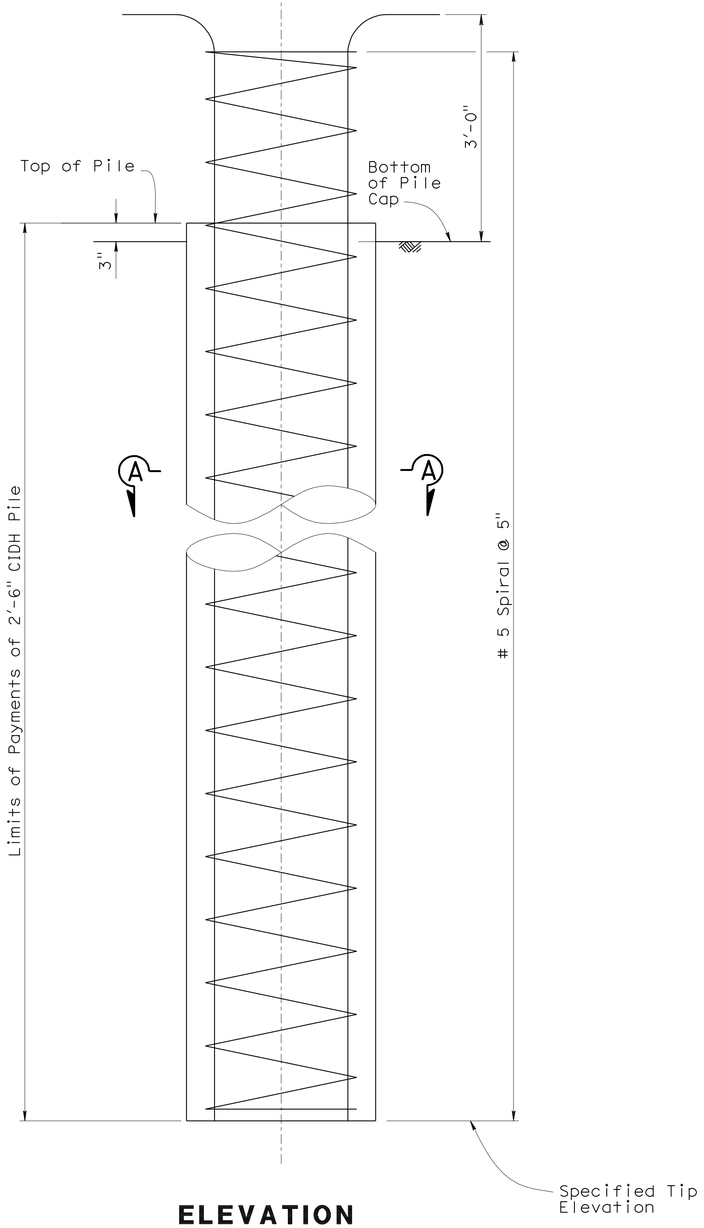


## ELEVATION

1"=1'-0"

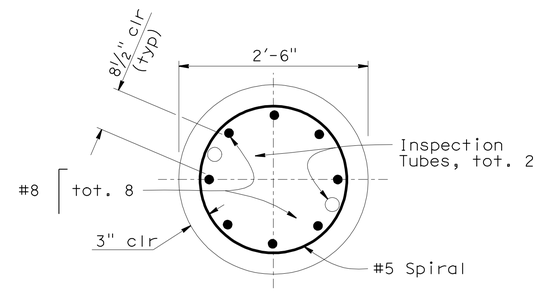


## SECTION A-A

1"=1'-0"

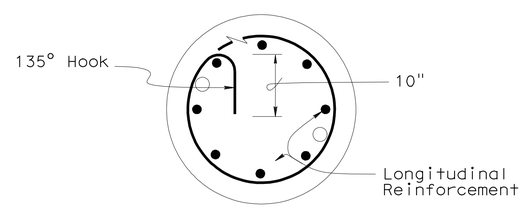


## PILE SPIRAL DETAIL

No Scale

NOTES:

1. For Lapped Splices, Spiral Reinforcement shall be lapped at least 80 diameters.
2. Spiral Reinforcement at Lapped Splices and at ends shall be terminated by a 135 degree hook around a longitudinal bar.
3. No Splices allowed in Pile Longitudinal Reinforcement.

| | | | |
|---|---|---|---|
| DESIGN | BY S. Galgiani | CHECKED F. Zayati | |
| DETAILS | BY T. Nguyen | CHECKED F. Zayati | |
| QUANTITIES | BY J. Lane | CHECKED V. Ramakrishnan | |

STATE OF CALIFORNIA
DEPARTMENT OF TRANSPORTATION

DIVISION OF ENGINEERING SERVICES
STRUCTURE DESIGN
DESIGN BRANCH 14

BRIDGE NO. 53-3033
POST MILE 0.01

# NEW DOCK STREET ON-RAMP
## 2.5 FT PIPE PILE DETAILS

STRUCTURES DESIGN DETAIL SHEET (ENGLISH) (REV. 10/25/05)

ORIGINAL SCALE IN INCHES FOR REDUCED PLANS 0 1 2 3

CU 07-271
EA 138201

DISREGARD PRINTS BEARING EARLIER REVISION DATES

REVISION DATES: 03-12-08 06-15-08 12-11-09 01-10-10 03-14-10 05-11-10 05-17-10 05-27-10 07-12-10

SHEET 16 OF 40

FILE => 53-3033-p-02ftpiledt.dgn

USERNAME => trienard DATE PLOTTED => 18-OCT-2010 TIME PLOTTED => 15:22

| DIST | COUNTY | ROUTE | POST MILES TOTAL PROJECT | SHEET No | TOTAL SHEETS |
|---|---|---|---|---|---|
| 07 | LA | 47,103 | 3.5/4.6, 0.0/1.1 | 766 | 1003 |

REGISTERED CIVIL ENGINEER — DATE 05-24-10

10-11-10
PLANS APPROVAL DATE

*The State of California or its officers or agents shall not be responsible for the accuracy or completeness of electronic copies of this plan sheet.*

REGISTERED PROFESSIONAL ENGINEER — FOUED ZAYATI — No. C57046 — Exp. 06-30-11 — CIVIL — STATE OF CALIFORNIA

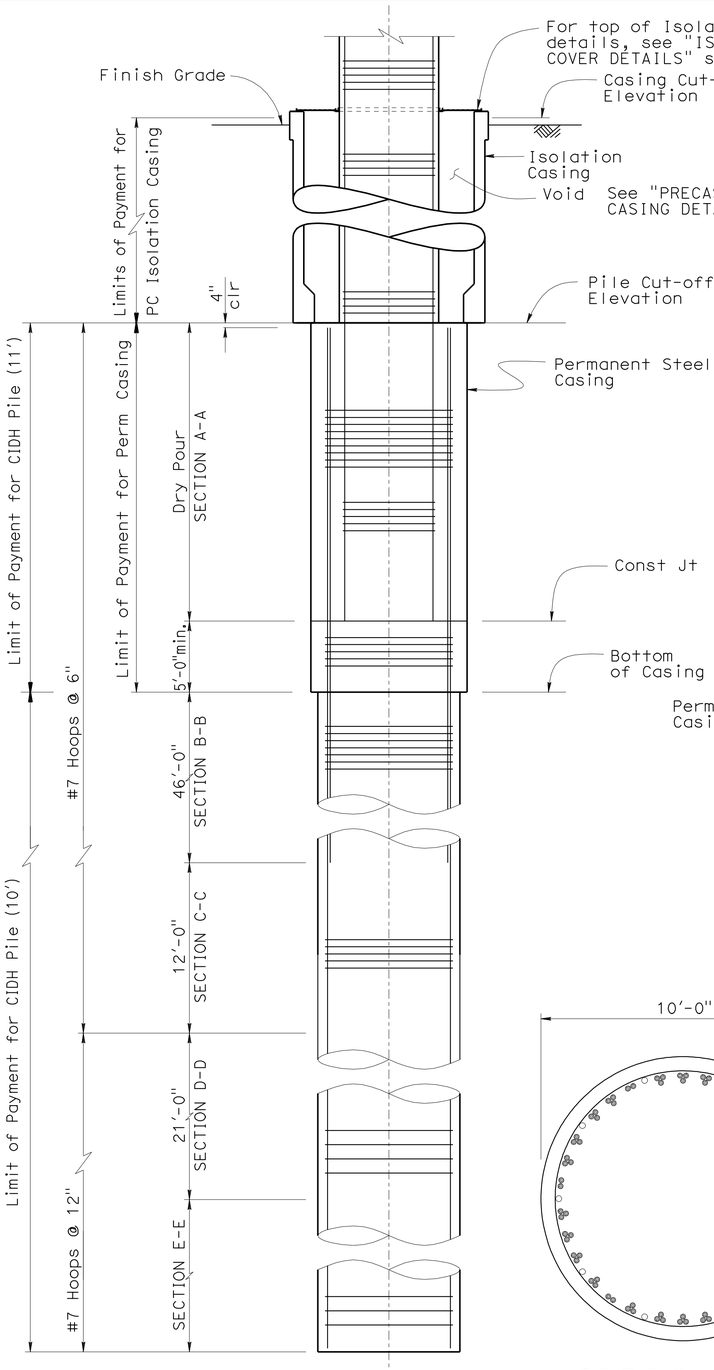


## ELEVATION

3/16"=1'-0"

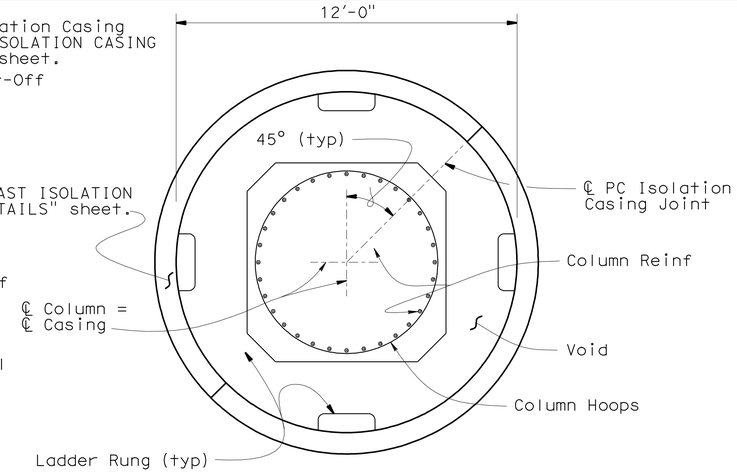


## ISOLATION CASING

3/8"=1'-0"

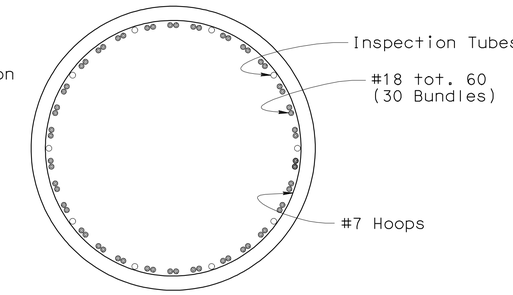


## SECTION C-C

3/8"=1'-0"

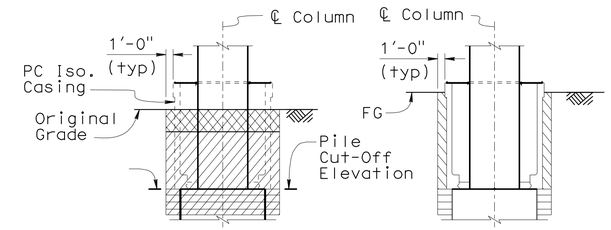


## ISOLATION CASING

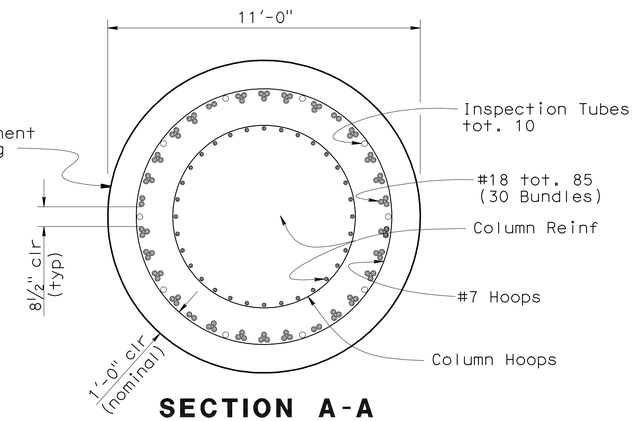


## SECTION A-A

3/8"=1'-0"

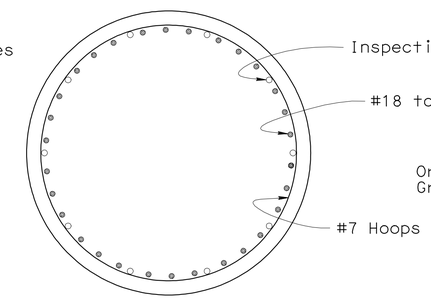


## SECTION D-D

3/8"=1'-0"

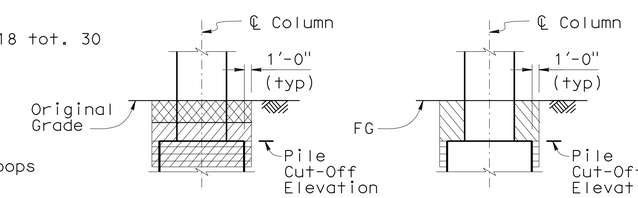


## TYPICAL COLUMN

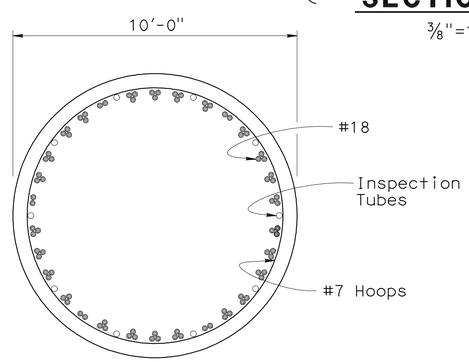


## SECTION B-B

3/8"=1'-0"

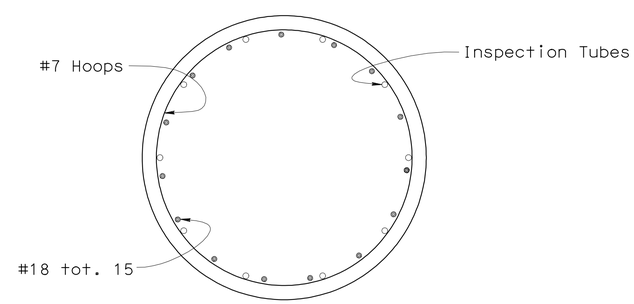


## SECTION E-E

3/8"=1'-0"

Structure Excavation, contaminated soil, see Pile Data Table for Excavation type and depth

Structure Excavation, Type A

Seal Course Concrete, See Pile Data Table for depth

Structure Backfill

## LIMITS OF PAYMENT FOR EXCAVATION AND BACKFILL

No Scale

NOTES:

1. For Column Reinf details, see "TYPICAL BENT LAYOUT" sheet.
2. For pile cut-off data, see "INDEX TO PLANS" sheet.
3. All Hoops are "Ultimate" Butt Splice continuous.
4. Only staggered "Ultimate" Butt Splices are allowed in Pile longitudinal reinforcement.
5. Inspection tubes may be removed above Construction Joint after testing and acceptance of Pile.

| | BY | CHECKED |
|---|---|---|
| DESIGN | I. Quintanar | L. Bahia |
| DETAILS | K. Kubo | F. Zayati |
| QUANTITIES | J. Lane | V. Ramakrishnan |

STATE OF CALIFORNIA
DEPARTMENT OF TRANSPORTATION

DIVISION OF ENGINEERING SERVICES
STRUCTURE DESIGN
DESIGN BRANCH 14

BRIDGE NO. 53-3033
POST MILE 0.01

# NEW DOCK STREET ON-RAMP
# 10 FT CIDH PILE DETAILS

STRUCTURES DESIGN DETAIL SHEET (ENGLISH) (REV. 10/25/05)

ORIGINAL SCALE IN INCHES FOR REDUCED PLANS 0 1 2 3

CU 07-271
EA 138201

DISREGARD PRINTS BEARING EARLIER REVISION DATES

REVISION DATES: 06-23-08 02-27-10 05-14-10 07-12-10 08-26-10

SHEET 17 OF 40

FILE => 53-3033-p-10ftpiledt.dgn

USERNAME => friehard DATE PLOTTED => 18-OCT-2010 TIME PLOTTED => 15:22

| DIST | COUNTY | ROUTE | POST MILES TOTAL PROJECT | SHEET No | TOTAL SHEETS |
|---|---|---|---|---|---|
| 07 | LA | 47,103 | 3.5/4.6, 0.0/1.1 | 767 | 1003 |

REGISTERED CIVIL ENGINEER — DATE 05-24-10

10-11-10
PLANS APPROVAL DATE

REGISTERED PROFESSIONAL ENGINEER — FOUED ZAYATI — No. C57046 — Exp. 06-30-11 — CIVIL — STATE OF CALIFORNIA

*The State of California or its officers or agents shall not be responsible for the accuracy or completeness of electronic copies of this plan sheet.*

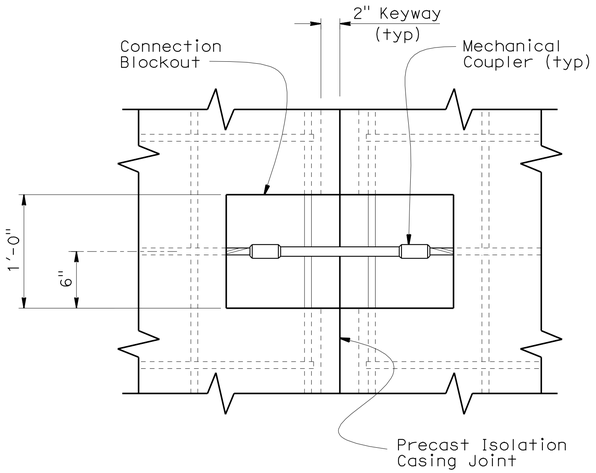


## VIEW B-B

1½"=1'-0"

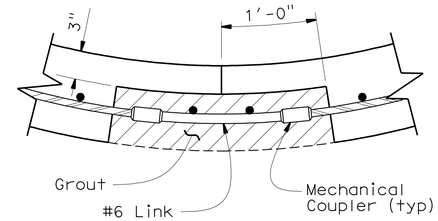


## CONNECTION DETAIL

1½"=1'-0"

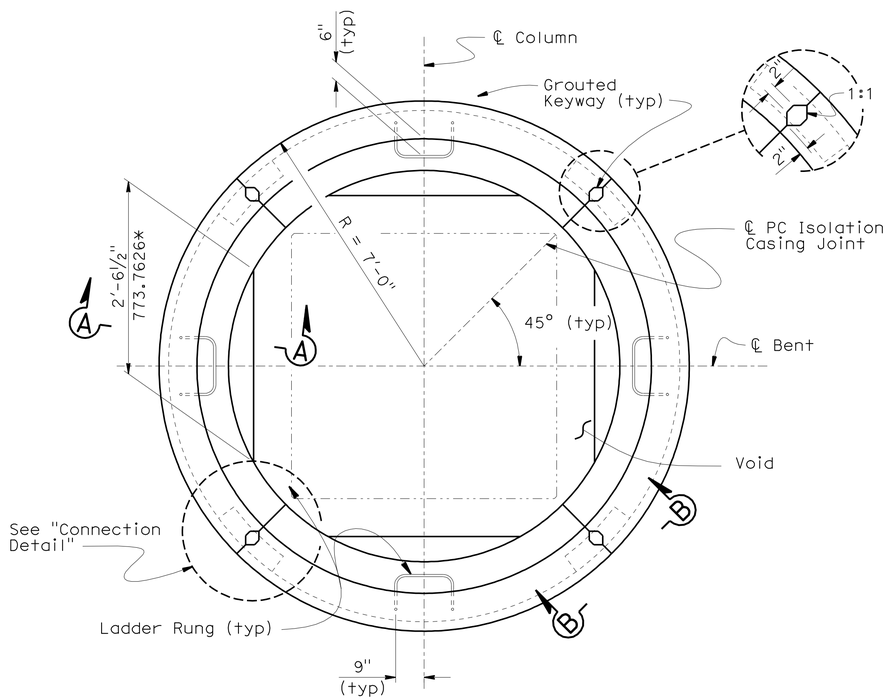


## PLAN

½"=1'-0"

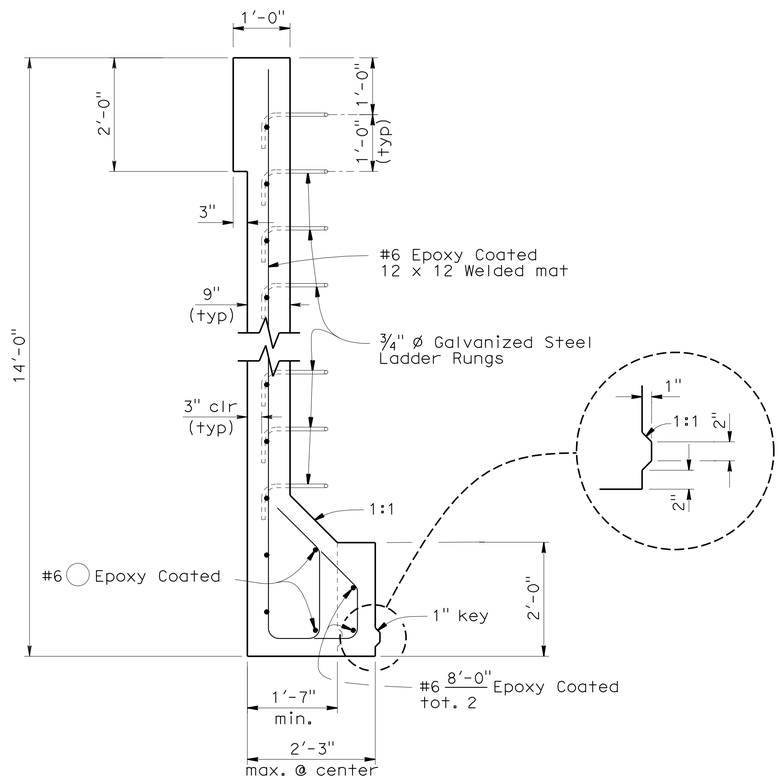


## SECTION A-A

¾"=1'-0"

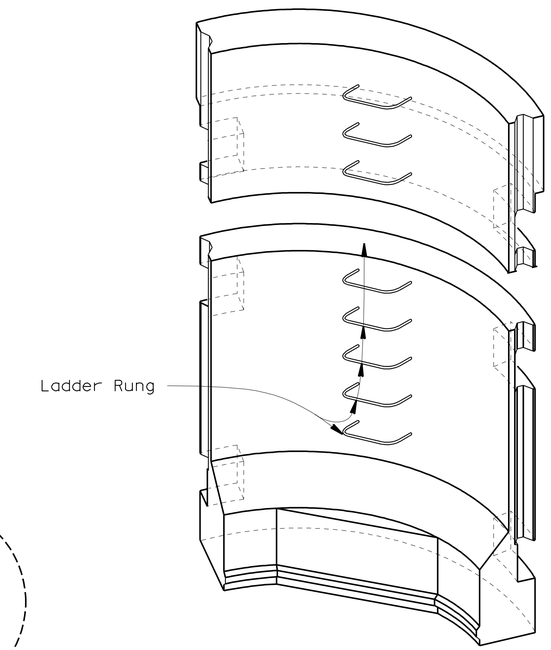


## ISOMETRIC VIEW PRECAST ISOLATION CASING

No Scale

NOTES:

1. All hardware to be galvanized before casting.
2. Place connections 3 feet from top, 2 feet from bottom and at mid - height of casing. Omit mid - height connection for H = 8 casing.
3. Align shells prior to grouting Keyway and Connection Blockouts.

| | | | |
|---|---|---|---|
| DESIGN | BY R. Bromenschenkel | CHECKED F. Zayati | |
| DETAILS | BY Jeff Thorne | CHECKED F. Zayati | |
| QUANTITIES | BY J. Lane | CHECKED V. Ramakrishnan | |

STATE OF CALIFORNIA
DEPARTMENT OF TRANSPORTATION

DIVISION OF ENGINEERING SERVICES
STRUCTURE DESIGN
DESIGN BRANCH 14

BRIDGE NO. 53-3033
POST MILE 0.01

# NEW DOCK STREET ON-RAMP
# PRECAST ISOLATION CASING DETAILS

STRUCTURES DESIGN DETAIL SHEET (ENGLISH) (REV. 10/25/05)

ORIGINAL SCALE IN INCHES FOR REDUCED PLANS 0 1 2 3

CU 07-271
EA 138201

DISREGARD PRINTS BEARING EARLIER REVISION DATES

REVISION DATES: 03-18-10 03-20-10 03-22-10 07-08-10 08-26-10

SHEET 18 OF 40

FILE => 53-3033-p-1isolation-precast.dgn

USERNAME => rfriemard DATE PLOTTED => 18-OCT-2010 TIME PLOTTED => 15:22

| DIST | COUNTY | ROUTE | POST MILES TOTAL PROJECT | SHEET No | TOTAL SHEETS |
|---|---|---|---|---|---|
| 07 | LA | 47,103 | 3.5/4.6, 0.0/1.1 | 768 | 1003 |

REGISTERED CIVIL ENGINEER — DATE 05-24-10

10-11-10
PLANS APPROVAL DATE

*The State of California or its officers or agents shall not be responsible for the accuracy or completeness of electronic copies of this plan sheet.*

REGISTERED PROFESSIONAL ENGINEER — FOUED ZAYATI — No. C57046 — Exp. 06-30-11 — CIVIL — STATE OF CALIFORNIA

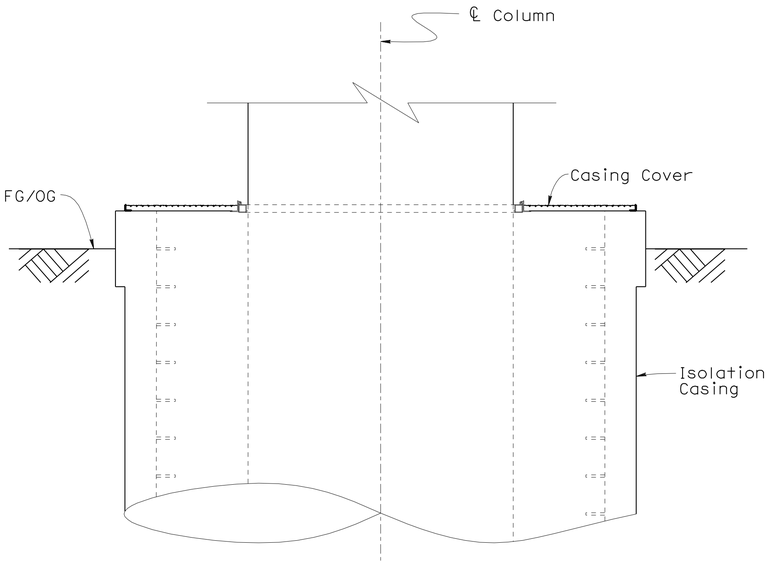


## ELEVATION

½"=1'-0"

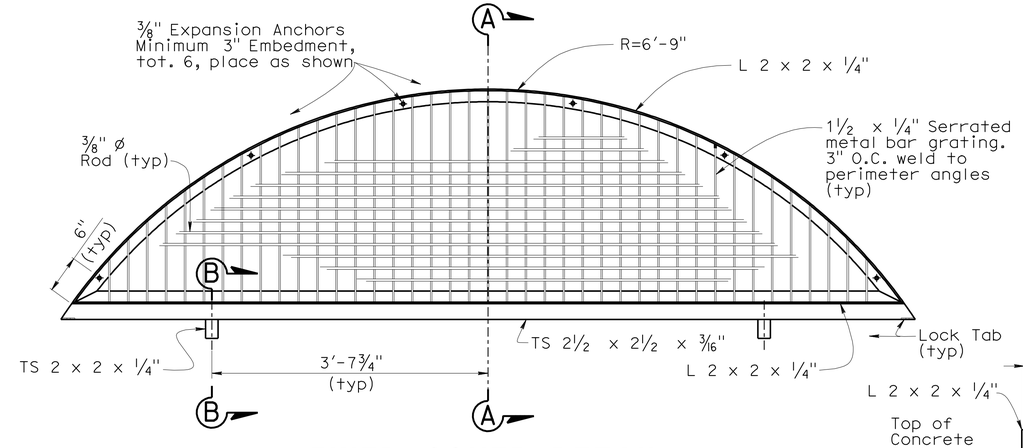


## FIXED COVER DETAIL

1"=1'-0"

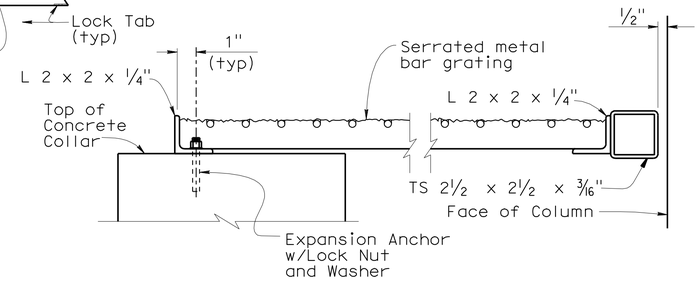


## SECTION A-A

3"=1'-0"

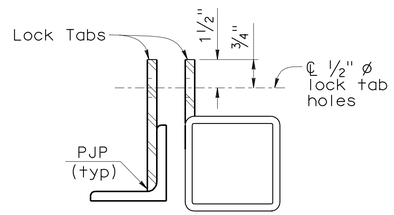


## TAB DETAIL

6"=1'-0"

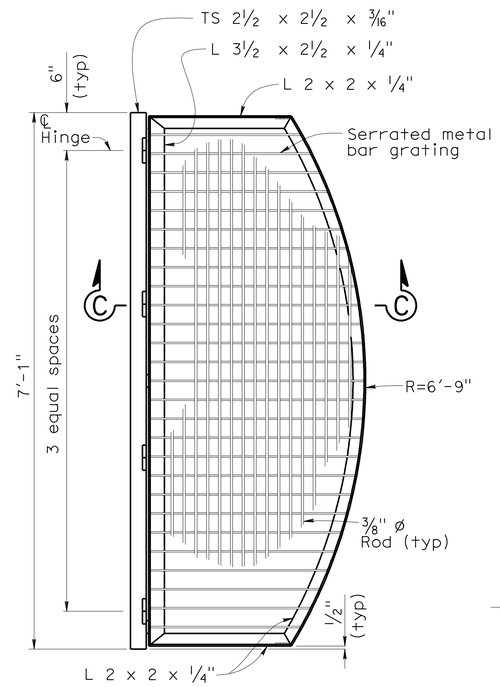


## HINGED COVER DETAIL

1"=1'-0"

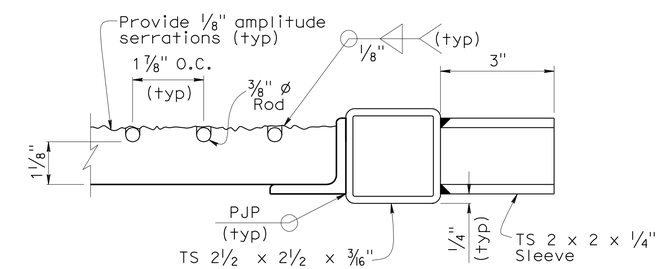


## SECTION B-B

6"=1'-0"

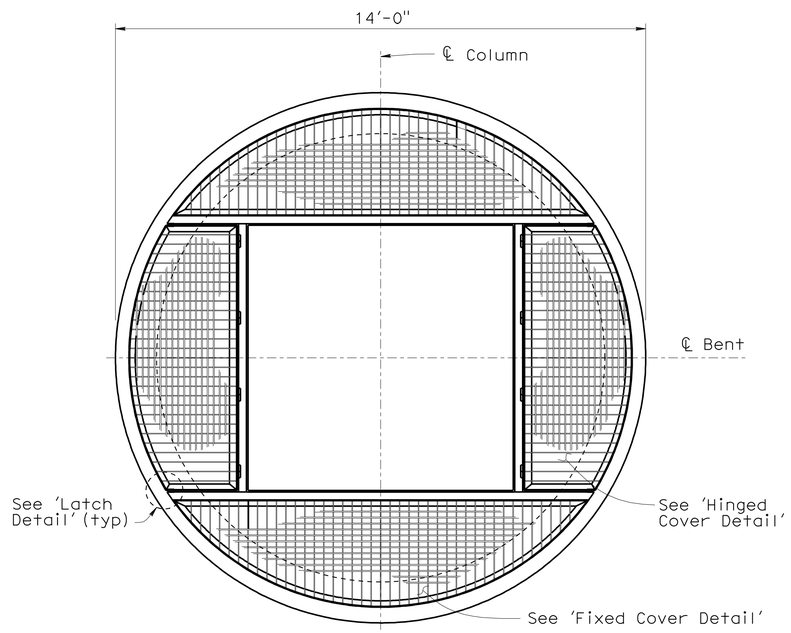


## PLAN

½"=1'-0"

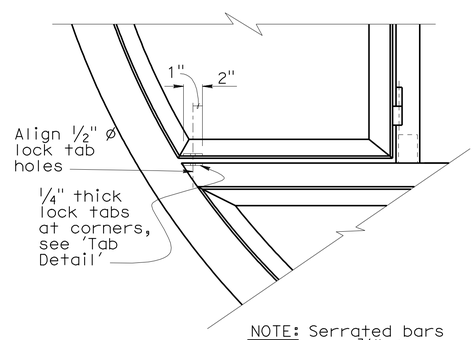


NOTE: Serrated bars and ⅜" ø rods not shown.

## LATCH DETAIL

1½"=1'-0"

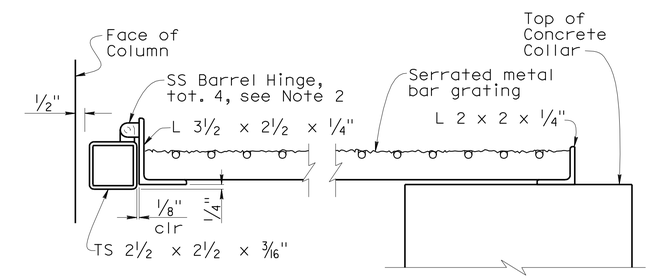


## SECTION C-C

3"=1'-0"

NOTES:

1. All assemblies to be hot dip galvanized after fabrication.
2. All Hinges are SS Barrel type, 440 lb. minimum load rating.
3. Orient hinged covers to facilitate access to download pipes at Bent 17, eastern most Column.

| | BY | CHECKED |
|---|---|---|
| DESIGN | F. Zayati | R. Bromenschenkel |
| DETAILS | K. Kubo | R. Bromenschenkel |
| QUANTITIES | J. Lane | V. Ramakrishnan |

STATE OF CALIFORNIA
DEPARTMENT OF TRANSPORTATION

DIVISION OF ENGINEERING SERVICES
STRUCTURE DESIGN
DESIGN BRANCH 14

BRIDGE NO. 53-3033
POST MILE 0.01

# NEW DOCK STREET ON-RAMP
# ISOLATION CASING COVER DETAILS

STRUCTURES DESIGN DETAIL SHEET (ENGLISH) (REV. 10/25/05)

ORIGINAL SCALE IN INCHES FOR REDUCED PLANS 0 1 2 3

CU 07-271
EA 138201

DISREGARD PRINTS BEARING EARLIER REVISION DATES → 06-29-08 03-26-10 04-06-10 04-12-10

REVISION DATES

SHEET 19 OF 40

FILE => 53-3033-p-2isolation-qcover.dgn

USERNAME => trlenard DATE PLOTTED => 18-OCT-2010 TIME PLOTTED => 15:22

| DIST | COUNTY | ROUTE | POST MILES TOTAL PROJECT | SHEET No | TOTAL SHEETS |
|---|---|---|---|---|---|
| 07 | LA | 47,103 | 3.5/4.6, 0.0/1.1 | 769 | 1003 |

REGISTERED CIVIL ENGINEER 05-24-10 DATE

10-11-10
PLANS APPROVAL DATE

REGISTERED PROFESSIONAL ENGINEER FOUED ZAYATI No. C57046 Exp. 06-30-11 CIVIL STATE OF CALIFORNIA

*The State of California or its officers or agents shall not be responsible for the accuracy or completeness of electronic copies of this plan sheet.*

## EXPANSION BEARING TABLE

| LOCATION | MAXIMUM VERTICAL LOAD (kip) | MINIMUM DEAD LOAD (kip) | DESIGN ROTATION (RADIANS) | CONCAVE PLATE | | | | | | CONVEX PLATE | | MASONRY PLATE | | | SOLE PLATE | | | ASSEMBLY HEIGHT |
|---|---|---|---|---|---|---|---|---|---|---|---|---|---|---|---|---|---|---|
| | | | | WIDTH/ LENGTH | FLAT PTFE AREA (in²) | DIAMETER | SPHERICAL RADIUS | MINIMUM THICKNESS | MAXIMUM THICKNESS | DIAMETER | MAXIMUM THICKNESS | WIDTH | LENGTH | THICKNESS | WIDTH | LENGTH | THICKNESS | |
| | | | | $L_{cp}$ | $A_{PTFE}$ | $D_m$ | $R_{act}$ | $T_{min}$ | $T_{max}$ | $C_m$ | $H_{act}$ | $W_{mp}$ | $L_{mp}$ | $T_{mp}$ | $W_{sp}$ | $L_{sp}$ | $T_{sp}$ | $A_h$ |
| Abut 6 | 542 | 271 | 0.035 | 15.38 | 155 | 14.25 | 31.00 | 0.75 | 1.875 | 16.63 | 2.00 | 18.75 | 18.75 | 1.00 | 21.5 | 64.00 | 1.00 | 4.94 |

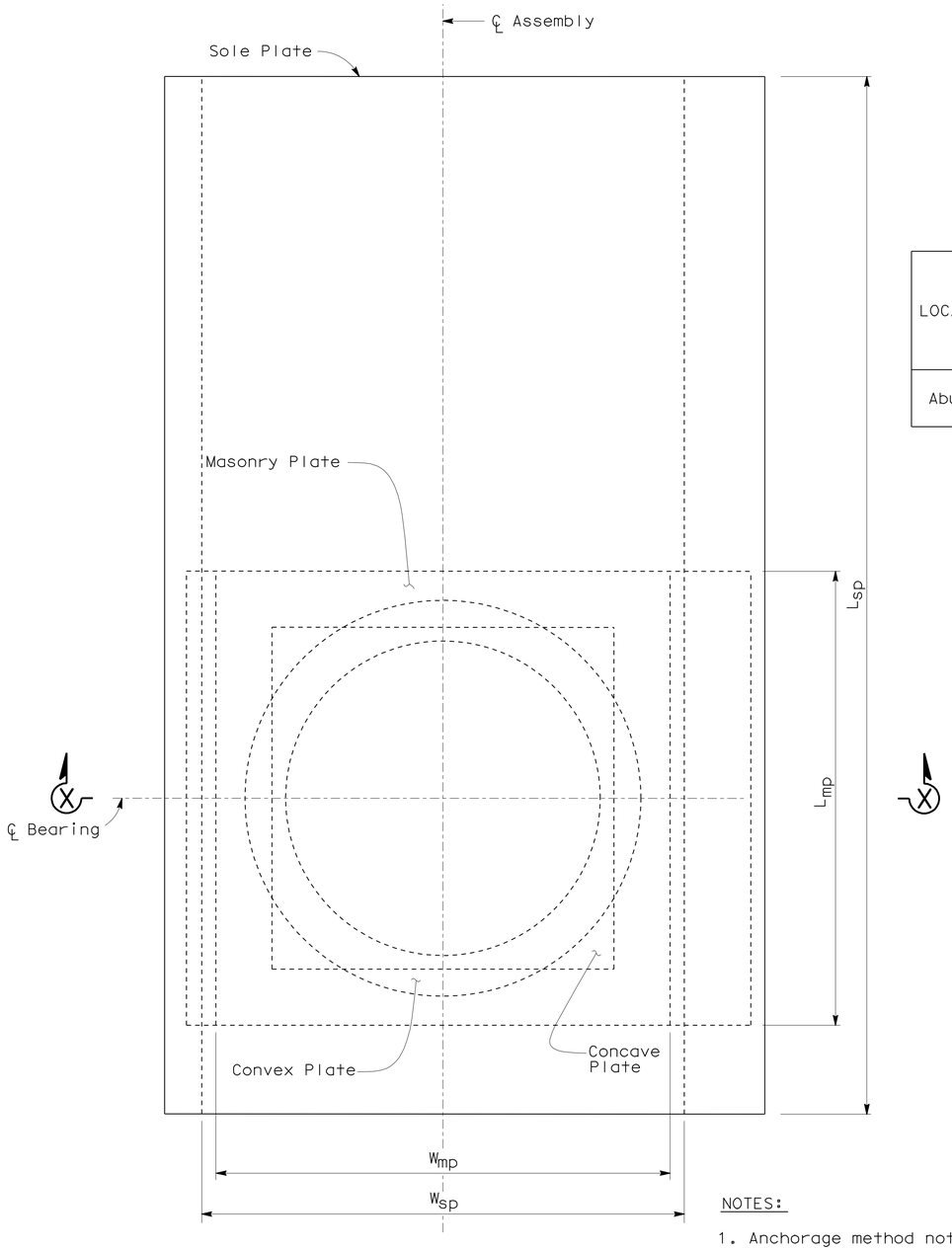


## PLAN

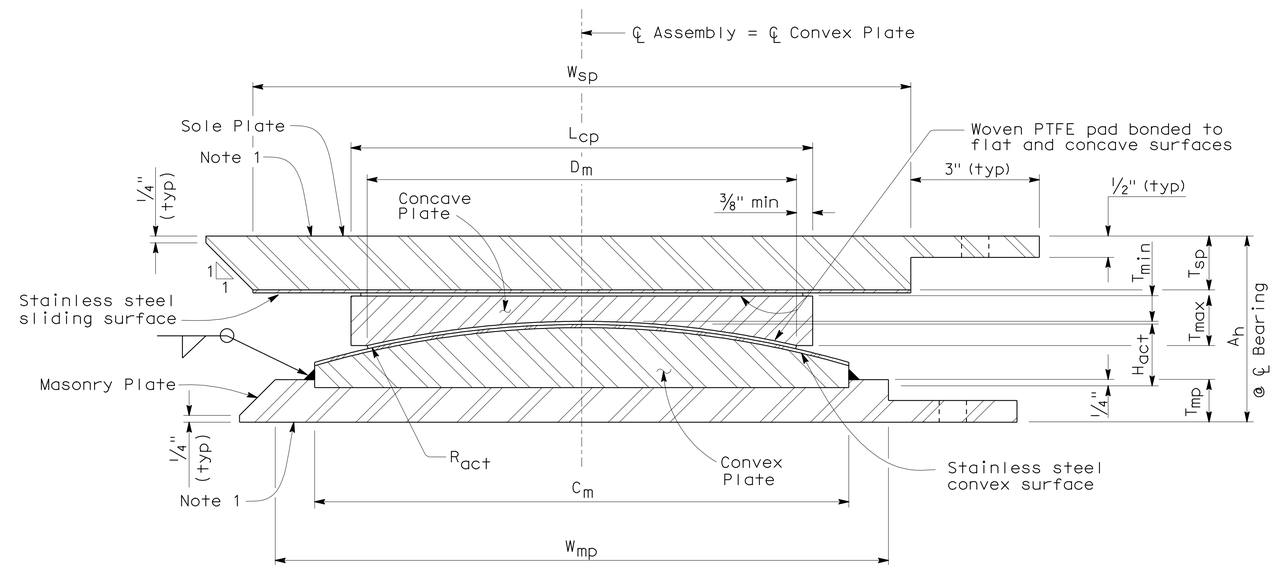


## SECTION X-X

NOTES:

1. Anchorage method not shown.
2. All dimensions shown are steel only unless otherwise noted.
3. $H_{act}$ includes stainless steel.
4. $A_h$ includes PTFE, substratum and stainless steel.
5. $R_{act}$ is to sliding surface.

**NO SCALE**

ALL DIMENSIONS ARE IN INCHES UNLESS OTHERWISE SHOWN

| | BY | CHECKED |
|---|---|---|
| DESIGN | F. Zayati | R. Bromenschenkel |
| DETAILS | T. Nguyen | F. Zayati |
| QUANTITIES | J. Lane | V. Ramakrishnan |

STATE OF CALIFORNIA
DEPARTMENT OF TRANSPORTATION

DIVISION OF ENGINEERING SERVICES
STRUCTURE DESIGN
DESIGN BRANCH 14

BRIDGE NO. 53-3033
POST MILE 0.01

# NEW DOCK STREET ON-RAMP
# PTFE BEARING DETAILS NO. 1

STRUCTURES DESIGN DETAIL SHEET (ENGLISH) (REV. 10/25/05)

ORIGINAL SCALE IN INCHES FOR REDUCED PLANS 0 1 2 3

CU 07-271
EA 138201

DISREGARD PRINTS BEARING EARLIER REVISION DATES 12-12-09 05-11-10

REVISION DATES

SHEET 20 OF 40

FILE => 53-3033-q-brgdt01.dgn

USERNAME => friehard DATE PLOTTED => 18-OCT-2010 TIME PLOTTED => 15:22

| DIST | COUNTY | ROUTE | POST MILES TOTAL PROJECT | SHEET No | TOTAL SHEETS |
|---|---|---|---|---|---|
| 07 | LA | 47,103 | 3.5/4.6, 0.0/1.1 | 770 | 1003 |

REGISTERED CIVIL ENGINEER — DATE 05-24-10

10-11-10
PLANS APPROVAL DATE

*The State of California or its officers or agents shall not be responsible for the accuracy or completeness of electronic copies of this plan sheet.*

REGISTERED PROFESSIONAL ENGINEER — FOUED ZAYATI — No. C57046 — Exp. 06-30-11 — CIVIL — STATE OF CALIFORNIA

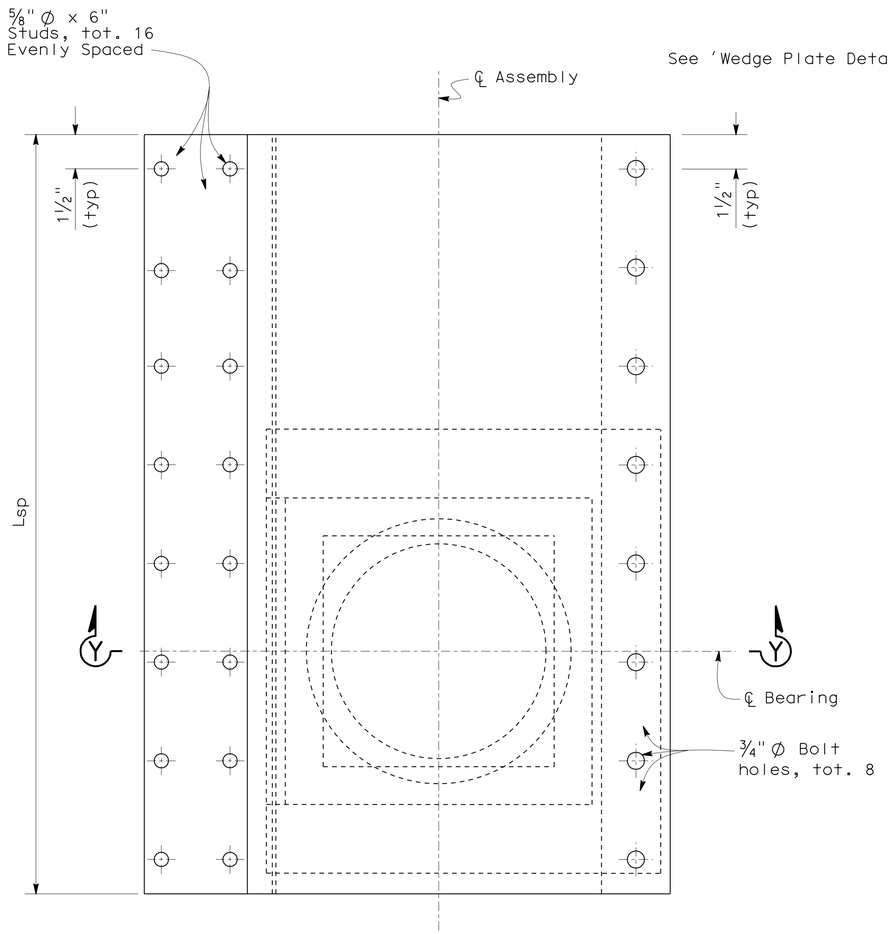


## PLAN

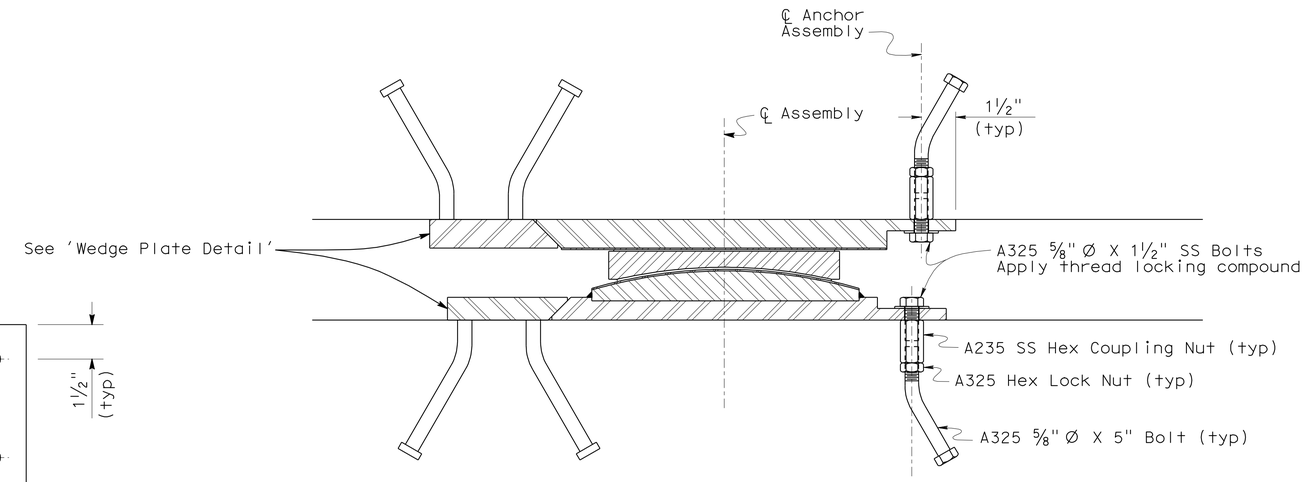


## SECTION Y-Y

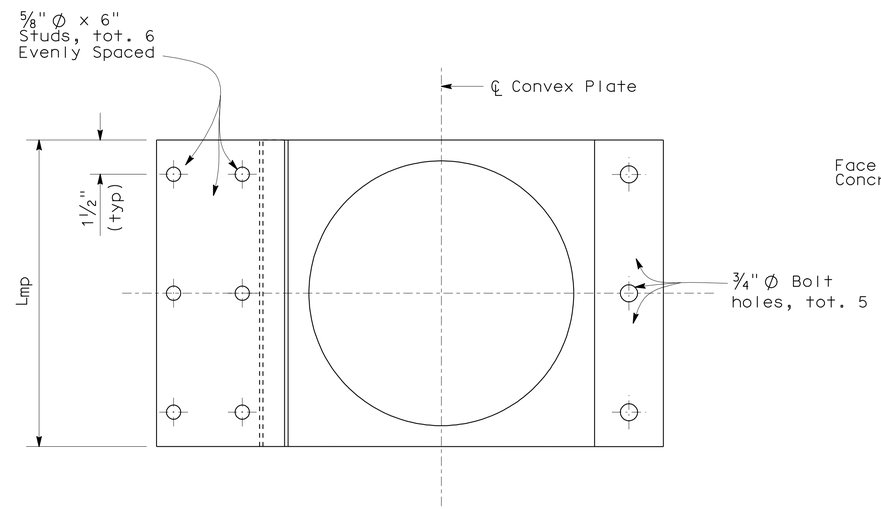


## MASONRY PLATE -PLAN

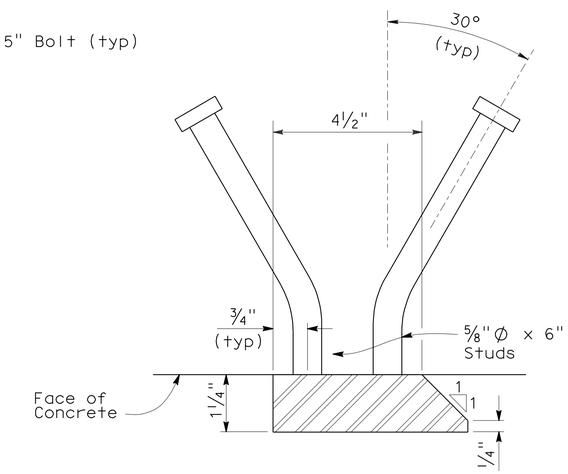


## WEDGE PLATE DETAIL

**NO SCALE**

ALL DIMENSIONS ARE IN
INCHES UNLESS OTHERWISE SHOWN

| | | | |
|---|---|---|---|
| DESIGN | BY F. Zayati | CHECKED R. Bromenschenkel | |
| DETAILS | BY T. Nguyen | CHECKED F. Zayati | |
| QUANTITIES | BY J. Lane | CHECKED V. Ramakrishnan | |

STATE OF CALIFORNIA
DEPARTMENT OF TRANSPORTATION

DIVISION OF ENGINEERING SERVICES
STRUCTURE DESIGN
DESIGN BRANCH 14

BRIDGE NO. 53-3033
POST MILE 0.01

# NEW DOCK STREET ON-RAMP
# PTFE BEARING DETAILS NO. 2

STRUCTURES DESIGN DETAIL SHEET (ENGLISH) (REV. 10/25/05)

ORIGINAL SCALE IN INCHES FOR REDUCED PLANS 0 1 2 3

CU 07-271
EA 138201

DISREGARD PRINTS BEARING EARLIER REVISION DATES → 12-12-09 05-11-10

REVISION DATES

SHEET 21 OF 40

FILE => 53-3033-q-brgdt02.dgn

USERNAME => trienard DATE PLOTTED => 18-OCT-2010 TIME PLOTTED => 15:23

| DIST | COUNTY | ROUTE | POST MILES TOTAL PROJECT | SHEET No | TOTAL SHEETS |
|---|---|---|---|---|---|
| 07 | LA | 47,103 | 3.5/4.6, 0.0/1.1 | 771 | 1003 |

REGISTERED CIVIL ENGINEER 05-24-10 DATE

10-11-10
PLANS APPROVAL DATE

REGISTERED PROFESSIONAL ENGINEER FOUED ZAYATI No. C57046 Exp. 06-30-11 CIVIL STATE OF CALIFORNIA

*The State of California or its officers or agents shall not be responsible for the accuracy or completeness of electronic copies of this plan sheet.*

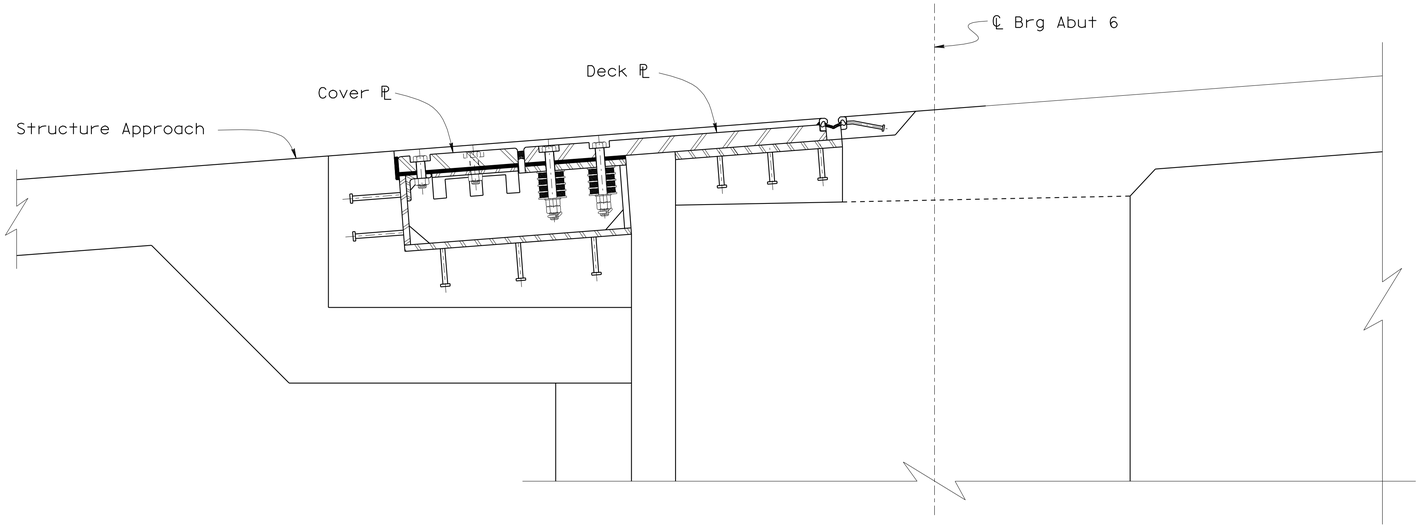


**ELEVATION**
1" = 1'

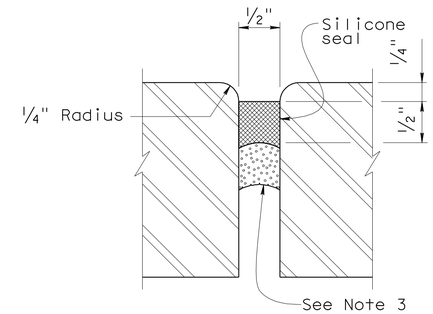


**DETAIL A**
1' = 1'-0"

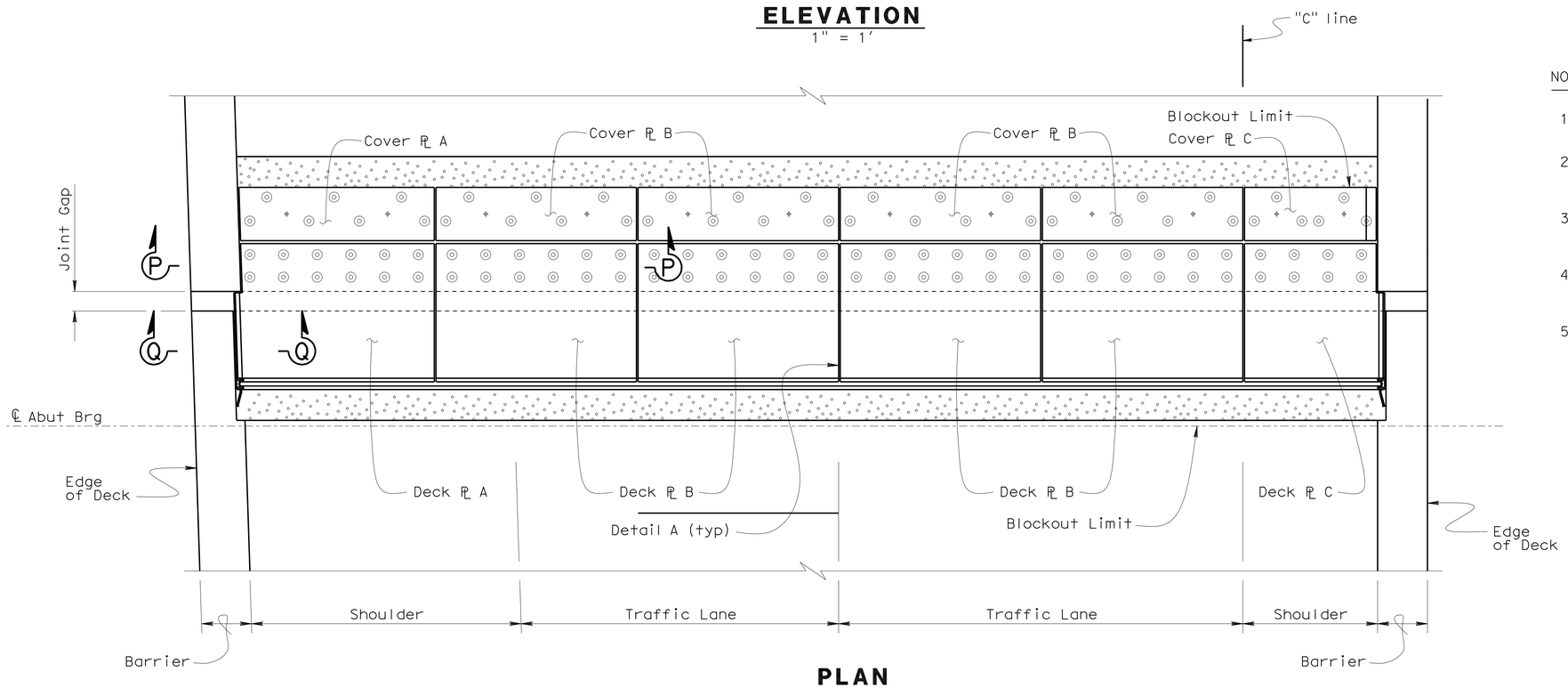


**PLAN**
1/2" = 1'

NOTES:

1. For plates A, B, and C, see "JOINT SEAL ASSEMBLY DETAILS NO. 2" sheet.
2. For 'Section P-P' and 'Section Q-Q', see "JOINT SEAL ASSEMBLY DETAILS NO. 3" sheet. plate blockout.
3. For Structure Approach Reinforcement in the blockout area, see "STRUCTURE APPROACH TYPE N(30S)" sheet.
4. For Abutment Diaphragm Reinforcement in the blockout area, see "ABUTMENT DETAILS No. 3" sheet.
5. Glazed polyethylene foam or glazed open cell backer rod. Uncompressed width/diameter to be 25% greater than actual groove width.

| | BY | CHECKED |
|---|---|---|
| DESIGN | F. Zayati | R. Bromenschenkel |
| DETAILS | K. Kubo | F. Zayati |
| QUANTITIES | J. Lane | V. Ramakrishnan |

STATE OF CALIFORNIA
DEPARTMENT OF TRANSPORTATION

DIVISION OF ENGINEERING SERVICES
STRUCTURE DESIGN
DESIGN BRANCH 14

BRIDGE NO. 53-3033
POST MILE 0.01

# NEW DOCK STREET ON-RAMP
## JOINT SEAL ASSEMBLY LAYOUT (MR = 24")

STRUCTURES DESIGN DETAIL SHEET (ENGLISH) (REV. 10/25/05)

ORIGINAL SCALE IN INCHES FOR REDUCED PLANS 0 1 2 3

CU 07-271
EA 138201

DISREGARD PRINTS BEARING EARLIER REVISION DATES

REVISION DATES: 12-22-09, 05-11-10, 05-14-10, 05-19-10, 07-15-10

SHEET 22 OF 40

FILE => 53-3033-q-jtsealassly.dgn

USERNAME => trlenard DATE PLOTTED => 18-OCT-2010 TIME PLOTTED => 15:23

| DIST | COUNTY | ROUTE | POST MILES TOTAL PROJECT | SHEET No | TOTAL SHEETS |
|---|---|---|---|---|---|
| 07 | LA | 47,103 | 3.5/4.6, 0.0/1.1 | 772 | 1003 |

REGISTERED CIVIL ENGINEER — DATE 05-24-10

10-11-10
PLANS APPROVAL DATE

REGISTERED PROFESSIONAL ENGINEER — FOUED ZAYATI No. C57046 Exp. 06-30-11 CIVIL — STATE OF CALIFORNIA

*The State of California or its officers or agents shall not be responsible for the accuracy or completeness of electronic copies of this plan sheet.*

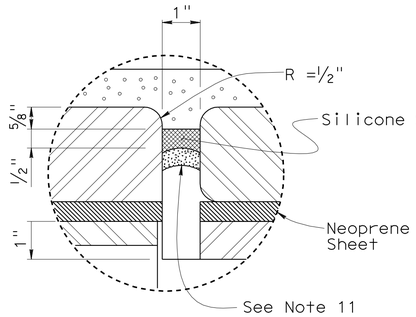


**DETAIL B**

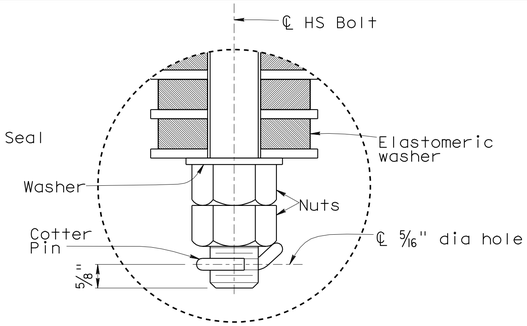


**DETAIL C**

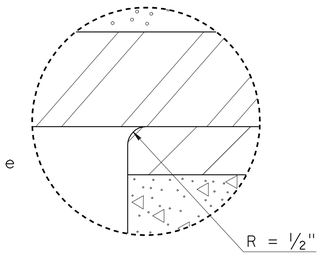


**DETAIL D**

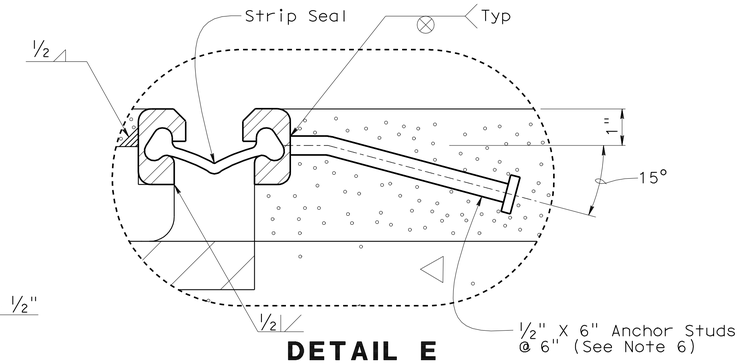


**DETAIL E**

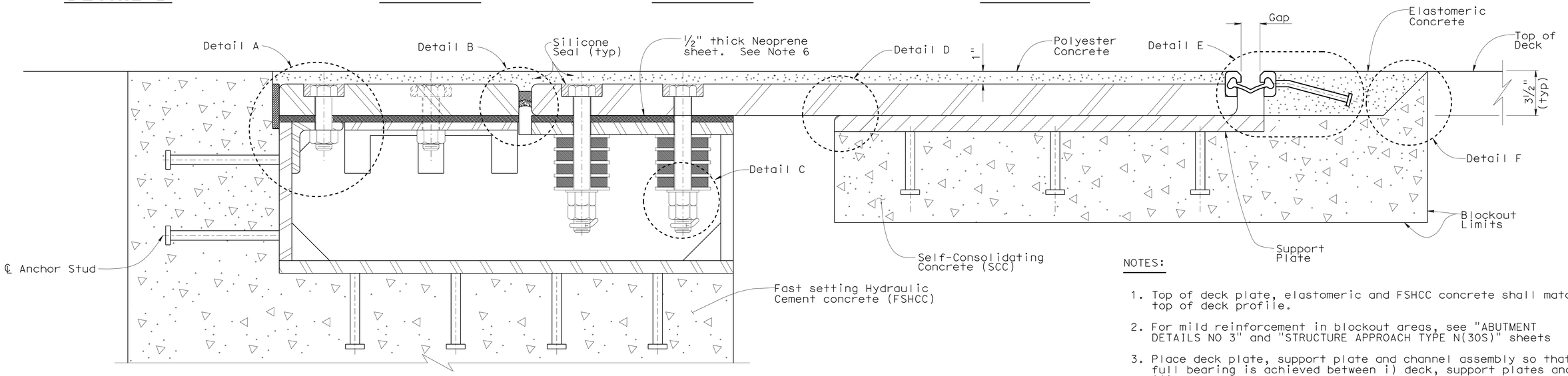


**ELEVATION**

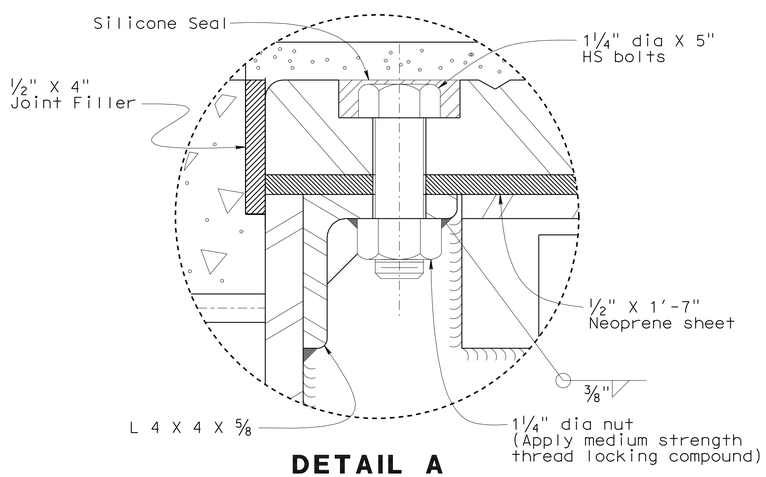


**DETAIL A**

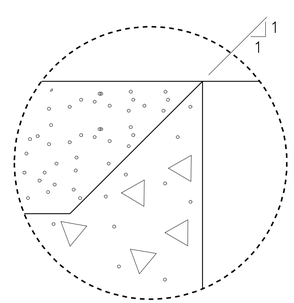


**DETAIL F**

STRIP SEAL GAP

| Season | Gap |
|---|---|
| Summer | 1.0" |
| Winter | 2.5" |
| Fall/ Spring | 1.75" |

NOTES:

1. Top of deck plate, elastomeric and FSHCC concrete shall match top of deck profile.
2. For mild reinforcement in blockout areas, see "ABUTMENT DETAILS NO 3" and "STRUCTURE APPROACH TYPE N(30S)" sheets
3. Place deck plate, support plate and channel assembly so that full bearing is achieved between i) deck, support plates and ii)deck plate and channel assembly.
4. Strip seal shall be one continuous piece. No field splice shall be permitted.
5. Strip seal shall have a movement rating of 4", manufactured specifically for highway bridges.
6. The strip seal gap shall be set at the time of installation in accordance with values shown.
7. The strip seal and associated elastomeric concrete shall be installed at least 120 days after completion of the superstructure post-tensioning.
8. HMA shall be used to protect the blockout prior to strip seal installation.
9. Prior to installation of the strip seal and the elastomeric concrete, remove asphalt concrete and clean blockout
10. Punch 1½" diameter holes in neoprene sheet for HS bolts prior to installation.
11. Glazed polyethylene foam or glazed open cell backer rod. Uncompressed width (diameter) to be 25% greater than actual groove width.

**NO SCALE**

| | BY | CHECKED |
|---|---|---|
| DESIGN | F. Zayati | R. Bromenschenkel |
| DETAILS | K. Kubo | F. Zayati |
| QUANTITIES | J. Lane | V. Ramakrishnan |

STATE OF CALIFORNIA
DEPARTMENT OF TRANSPORTATION

DIVISION OF ENGINEERING SERVICES
STRUCTURE DESIGN
DESIGN BRANCH 14

BRIDGE NO. 53-3033
POST MILE 0.01

# NEW DOCK STREET ON-RAMP
## JOINT SEAL ASSEMBLY DETAILS NO. 1

STRUCTURES DESIGN DETAIL SHEET (ENGLISH) (REV. 10/25/05)

ORIGINAL SCALE IN INCHES FOR REDUCED PLANS 0 1 2 3

CU 07-271
EA 138201

DISREGARD PRINTS BEARING EARLIER REVISION DATES — REVISION DATES 05-11-10 05-19-10

SHEET 23 OF 40

FILE => 53-3033-q-jtsealdet01.dgn

USERNAME => ttmirkes1 DATE PLOTTED => 19-OCT-2010 TIME PLOTTED => 13:41

| DIST | COUNTY | ROUTE | POST MILES TOTAL PROJECT | SHEET No | TOTAL SHEETS |
|---|---|---|---|---|---|
| 07 | LA | 47,103 | 3.5/4.6, 0.0/1.1 | 773 | 1003 |

REGISTERED CIVIL ENGINEER 05-24-10 DATE

10-11-10
PLANS APPROVAL DATE

REGISTERED PROFESSIONAL ENGINEER FOUED ZAYATI No. C57046 Exp. 06-30-11 CIVIL STATE OF CALIFORNIA

*The State of California or its officers or agents shall not be responsible for the accuracy or completeness of electronic copies of this plan sheet.*

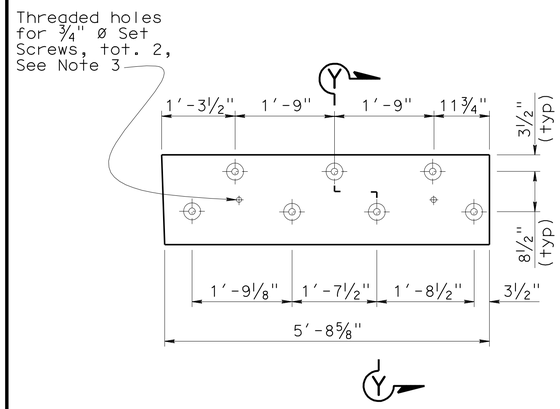


## COVER PLATE A

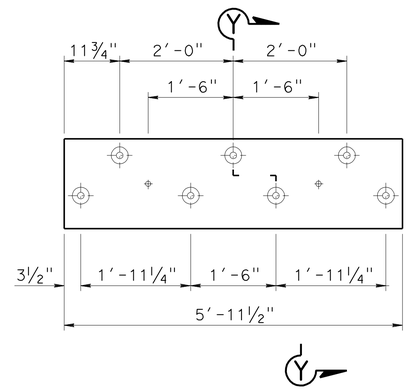


## COVER PLATE B

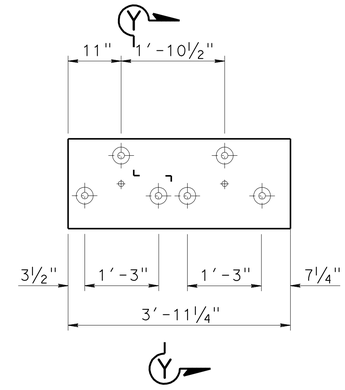


## COVER PLATE C

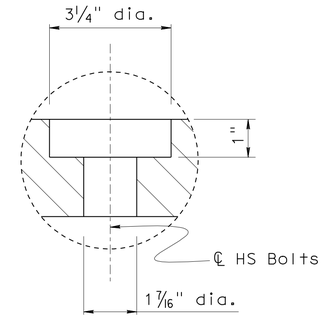


## DETAIL G

NOTES:

1. For deck plate plan see "JOINT SEAL ASSEMBLY LAYOUT" sheet.
2. Eye bolts may be used at set screw locations for lifting of cover plates.
3. Apply medium strength thread locking compound to threads.

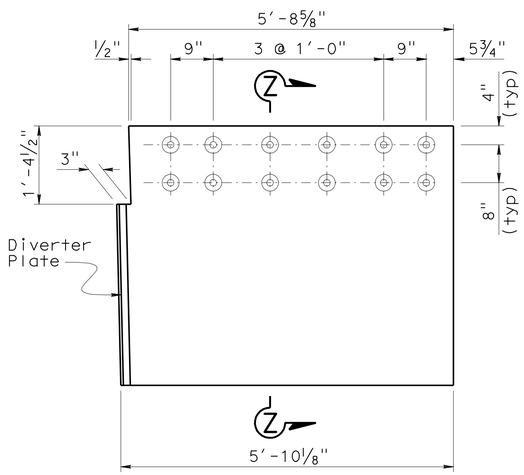


## DECK PLATE A

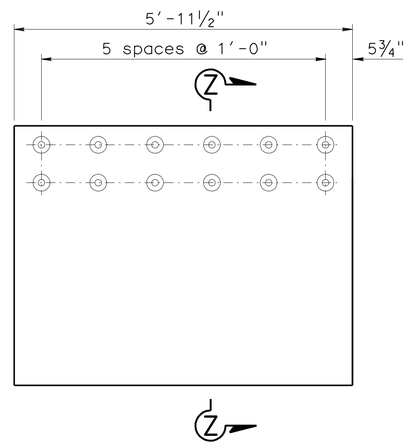


## DECK PLATE B

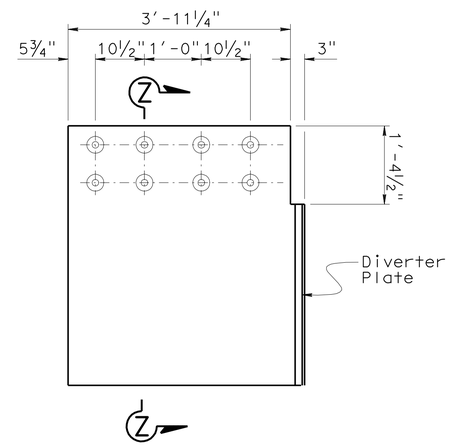


## DECK PLATE C

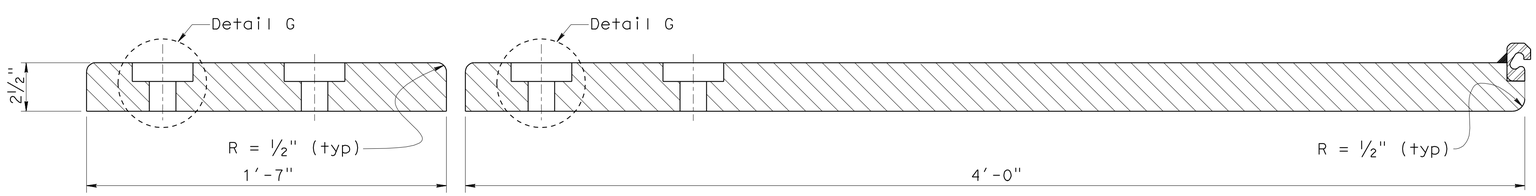


## SECTION Y-Y

## SECTION Z-Z

**NO SCALE**

THE CONTRACTOR SHALL VERIFY ALL CONTROLLING FIELD DIMENSIONS BEFORE ORDERING OR FABRICATING ANY MATERIAL.

| | BY | CHECKED |
|---|---|---|
| DESIGN | F. Zayati | R. Bromenschenkel |
| DETAILS | K. Kubo | F. Zayati |
| QUANTITIES | J. Lane | V. Ramakrishnan |

STATE OF CALIFORNIA
DEPARTMENT OF TRANSPORTATION

DIVISION OF ENGINEERING SERVICES
STRUCTURE DESIGN
DESIGN BRANCH 14

BRIDGE NO. 53-3033
POST MILE 0.01

# NEW DOCK STREET ON-RAMP
## JOINT SEAL ASSEMBLY DETAILS NO. 2

STRUCTURES DESIGN DETAIL SHEET (ENGLISH) (REV. 10/25/05)

ORIGINAL SCALE IN INCHES FOR REDUCED PLANS 0 1 2 3

CU 07-271
EA 138201

DISREGARD PRINTS BEARING EARLIER REVISION DATES 12-22-09 05-11-10 05-20-10

REVISION DATES

SHEET 24 OF 40

FILE => 53-3033-q-jtsealdet02.dgn

USERNAME => trlenord DATE PLOTTED => 18-OCT-2010 TIME PLOTTED => 15:23

| DIST | COUNTY | ROUTE | POST MILES TOTAL PROJECT | SHEET No | TOTAL SHEETS |
|---|---|---|---|---|---|
| 07 | LA | 47,103 | 3.5/4.6, 0.0/1.1 | 774 | 1003 |

REGISTERED CIVIL ENGINEER — DATE 05-24-10

10-11-10
PLANS APPROVAL DATE

REGISTERED PROFESSIONAL ENGINEER — FOUED ZAYATI — No. C57046 — Exp. 06-30-11 — CIVIL — STATE OF CALIFORNIA

*The State of California or its officers or agents shall not be responsible for the accuracy or completeness of electronic copies of this plan sheet.*

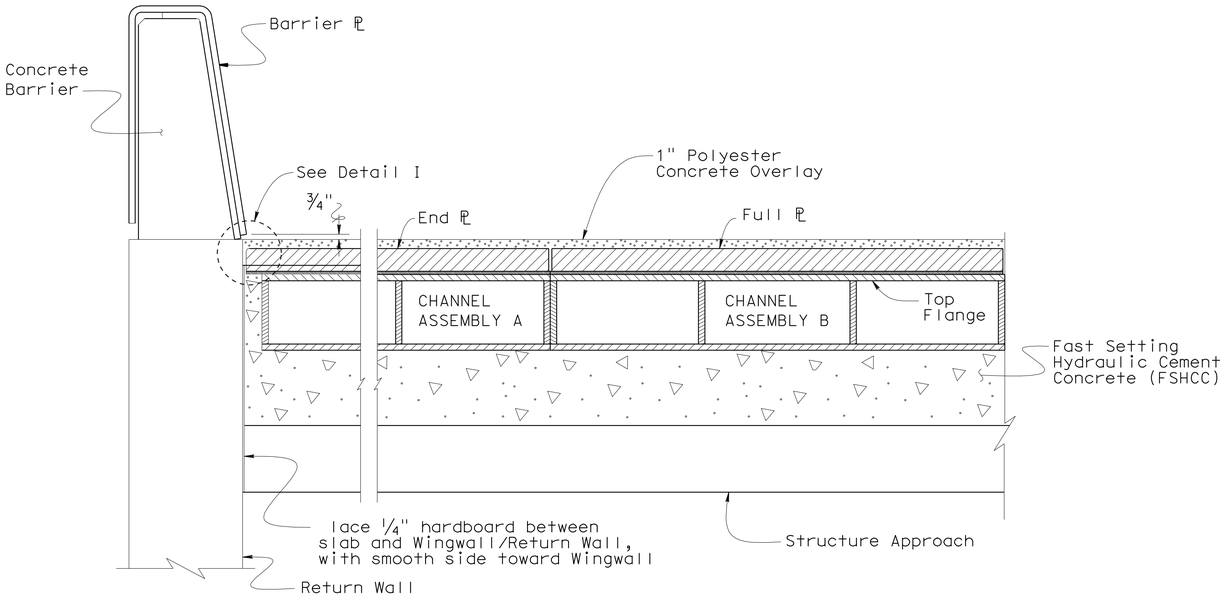


## SECTION P-P

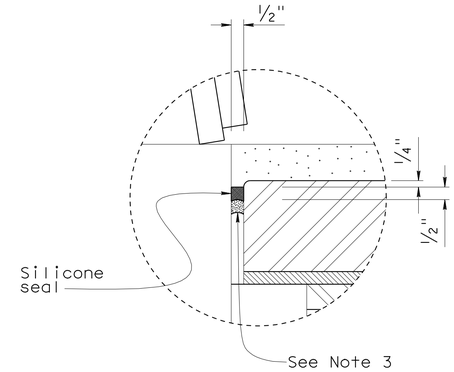


## DETAIL I

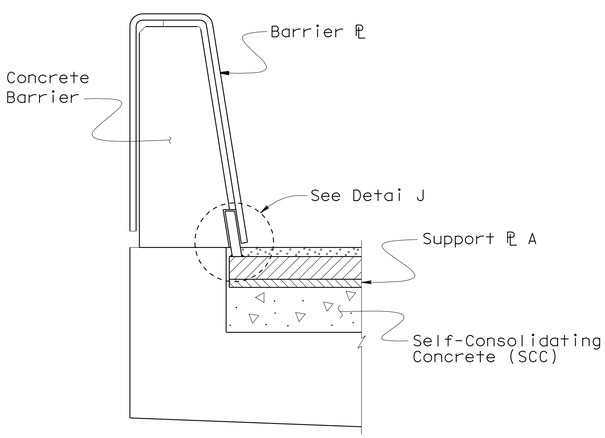


## SECTION Q-Q

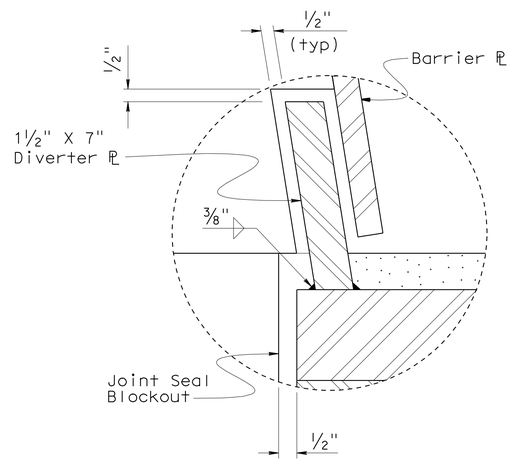


## DETAIL J

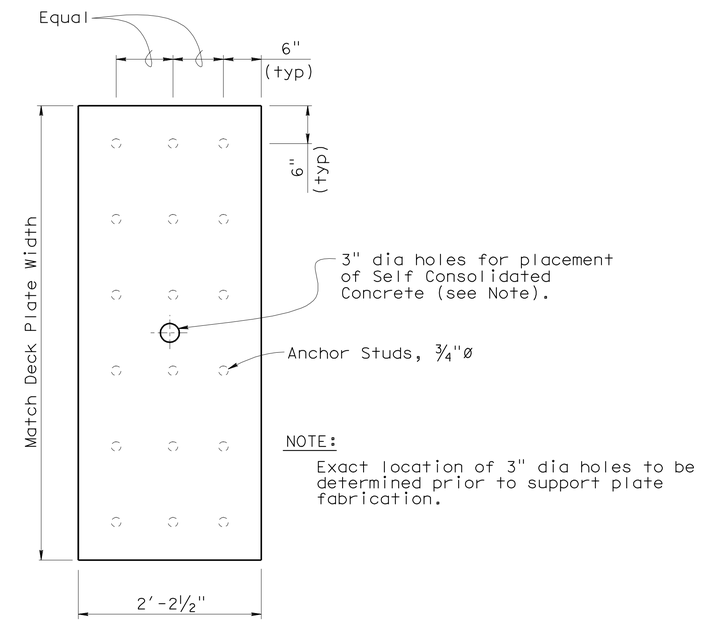


NOTE:
Exact location of 3" dia holes to be determined prior to support plate fabrication.

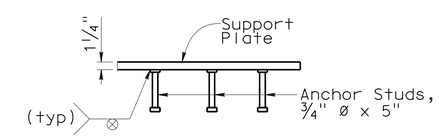


## SUPPORT PLATE DETAIL

THE CONTRACTOR SHALL VERIFY ALL CONTROLLING FIELD DIMENSIONS BEFORE ORDERING OR FABRICATING ANY MATERIAL.

NO SCALE

| | BY | CHECKED |
|---|---|---|
| DESIGN | F. Zayati | R. Bromenschenkel |
| DETAILS | K. Kubo | F. Zayati |
| QUANTITIES | J. Lane | V. Ramakrishnan |

STATE OF CALIFORNIA
DEPARTMENT OF TRANSPORTATION

DIVISION OF ENGINEERING SERVICES
STRUCTURE DESIGN
DESIGN BRANCH 14

BRIDGE NO. 53-3033
POST MILE 0.01

# NEW DOCK STREET ON-RAMP
# JOINT SEAL ASSEMBLY DETAILS NO. 3

STRUCTURES DESIGN DETAIL SHEET (ENGLISH) (REV. 10/25/05)

ORIGINAL SCALE IN INCHES FOR REDUCED PLANS 0 1 2 3

CU 07-271
EA 138201

DISREGARD PRINTS BEARING EARLIER REVISION DATES

REVISION DATES: 12-28-09, 05-12-10, 05-19-10

SHEET 25 OF 40

FILE => 53-3033-q-jtsealdet03.dgn

USERNAME => friehard DATE PLOTTED => 18-OCT-2010 TIME PLOTTED => 15:23

| DIST | COUNTY | ROUTE | POST MILES TOTAL PROJECT | SHEET No | TOTAL SHEETS |
|---|---|---|---|---|---|
| 07 | LA | 47,103 | 3.5/4.6, 0.0/1.1 | 775 | 1003 |

REGISTERED CIVIL ENGINEER — DATE 05-24-10

10-11-10
PLANS APPROVAL DATE

*The State of California or its officers or agents shall not be responsible for the accuracy or completeness of electronic copies of this plan sheet.*

REGISTERED PROFESSIONAL ENGINEER — FOUED ZAYATI — No. C57046 — Exp. 06-30-11 — CIVIL — STATE OF CALIFORNIA

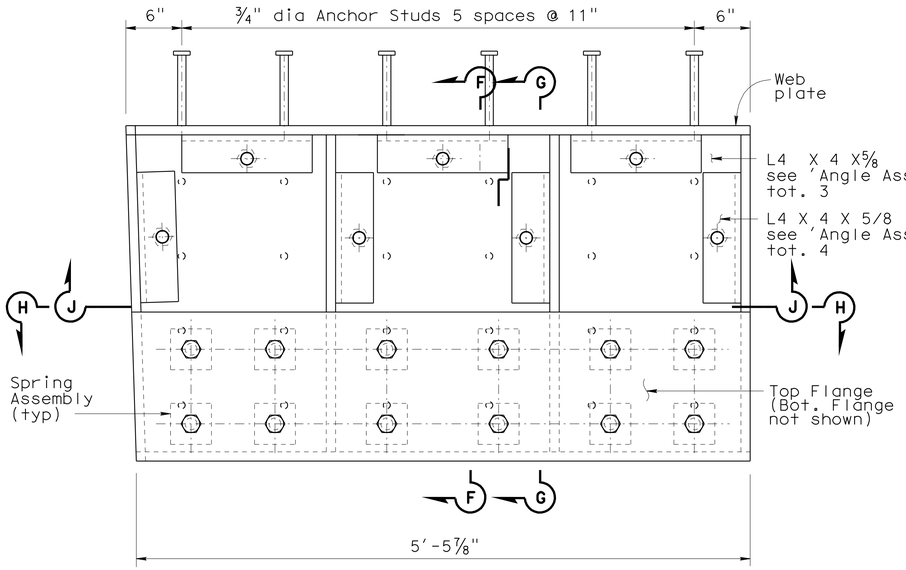


## PLAN - CHANNEL ASSEMBLY "A"

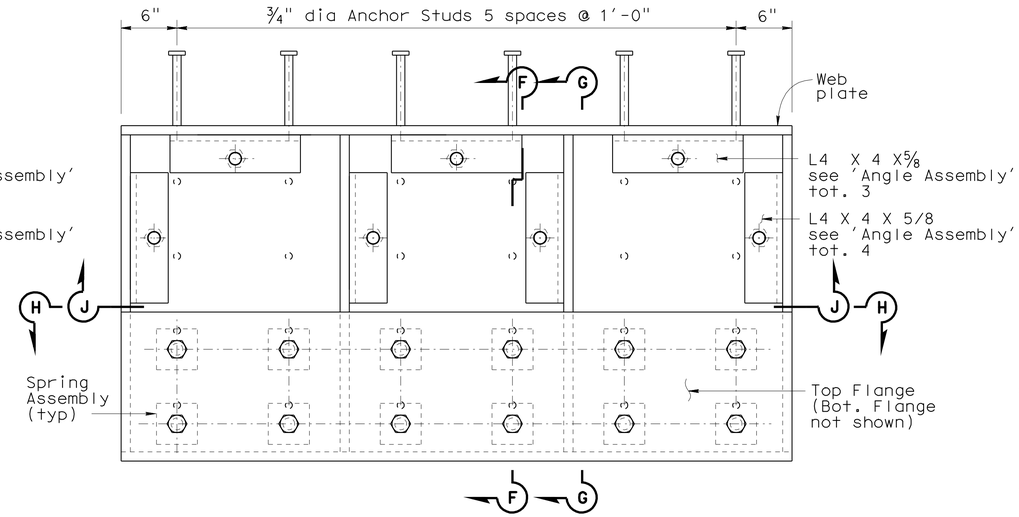


## PLAN - CHANNEL ASSEMBLY "B"

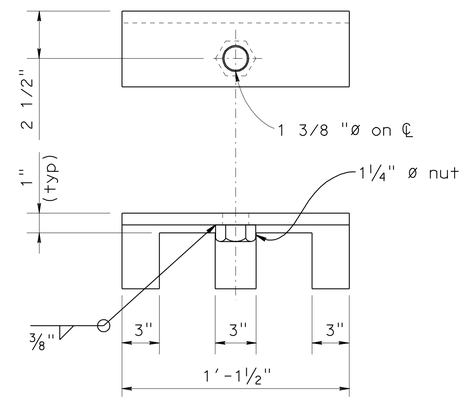


## ANGLE ASSEMBLY

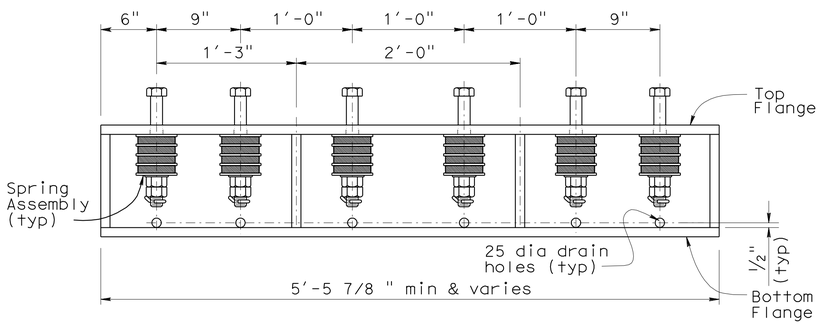


## SECTION H-H - CHANNEL ASSEMBLY "A"

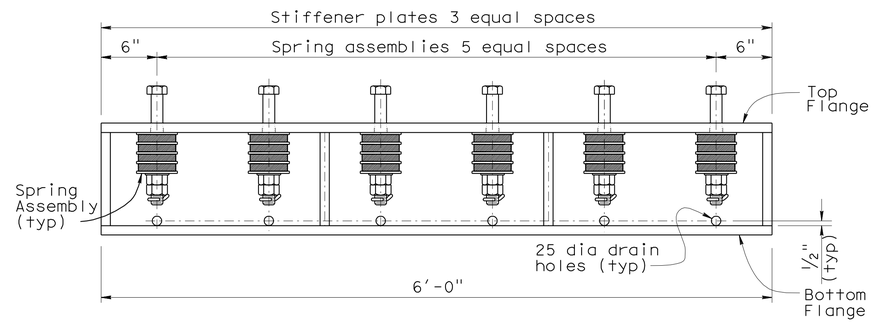


## SECTION H-H - CHANNEL ASSEMBLY "B"

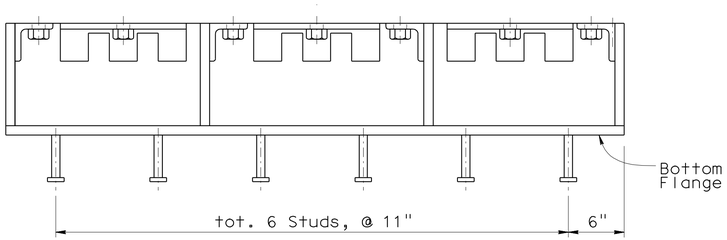


## SECTION J-J - CHANNEL ASSEMBLY "A"

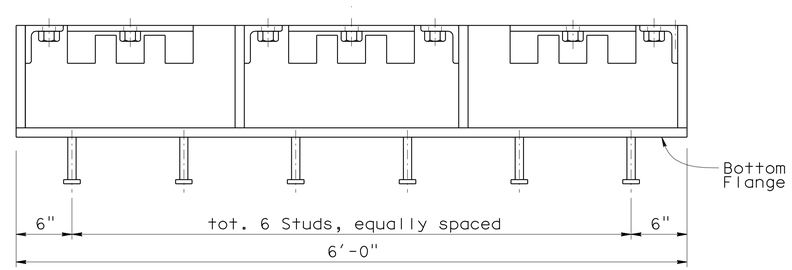


## SECTION J-J - CHANNEL ASSEMBLY "B"

NOTES:

1. For 'Section F-F' and 'Section G-G', see "JOINT SEAL ASSEMBLY DETAILS NO. 5" sheet for TYPE I Joint.
2. Top surfaces of L 4 x 4 x ⅝" angles and 1" steel ℙs shall be on same level.

THE CONTRACTOR SHALL VERIFY ALL CONTROLLING FIELD DIMENSIONS BEFORE ORDERING OR FABRICATING ANY MATERIAL.

**NO SCALE**

| | BY | CHECKED |
|---|---|---|
| DESIGN | F. Zayati | R. Bromenschenkel |
| DETAILS | K. Kubo | F. Zayati |
| QUANTITIES | J. Lane | V. Ramakrishnan |

STATE OF CALIFORNIA
DEPARTMENT OF TRANSPORTATION

DIVISION OF ENGINEERING SERVICES
STRUCTURE DESIGN
DESIGN BRANCH 14

BRIDGE NO. 53-3033
POST MILE 0.01

# NEW DOCK STREET ON-RAMP
# JOINT SEAL ASSEMBLY DETAILS NO. 4

STRUCTURES DESIGN DETAIL SHEET (ENGLISH) (REV. 10/25/05)

ORIGINAL SCALE IN INCHES FOR REDUCED PLANS 0 1 2 3

CU 07-271
EA 138201

DISREGARD PRINTS BEARING EARLIER REVISION DATES → 05-12-10 05-19-10

REVISION DATES

SHEET 26 OF 40

FILE => 53-3033-q-jtsealdet04.dgn

USERNAME => trlenard DATE PLOTTED => 18-OCT-2010 TIME PLOTTED => 15:23

| DIST | COUNTY | ROUTE | POST MILES TOTAL PROJECT | SHEET No | TOTAL SHEETS |
|---|---|---|---|---|---|
| 07 | LA | 47,103 | 3.5/4.6, 0.0/1.1 | 776 | 1003 |

REGISTERED CIVIL ENGINEER — DATE 05-24-10

10-11-10
PLANS APPROVAL DATE

REGISTERED PROFESSIONAL ENGINEER — FOUED ZAYATI No. C57046 Exp. 06-30-11 CIVIL — STATE OF CALIFORNIA

*The State of California or its officers or agents shall not be responsible for the accuracy or completeness of electronic copies of this plan sheet.*

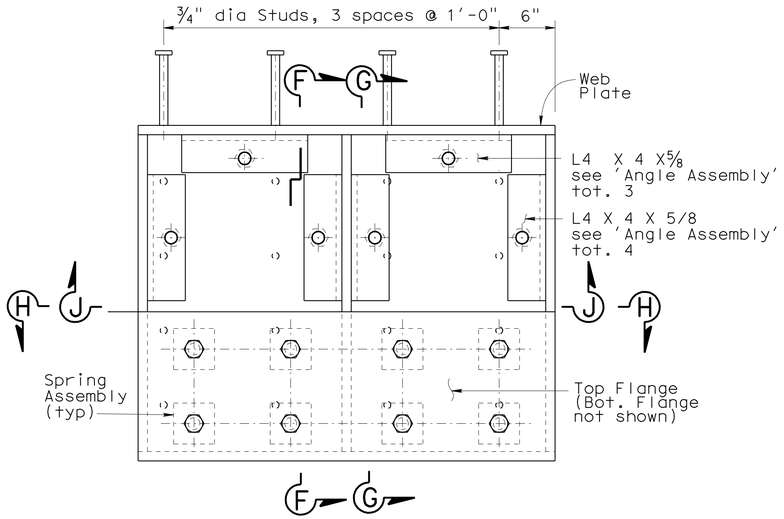


## PLAN - CHANNEL ASSEMBLY "C"

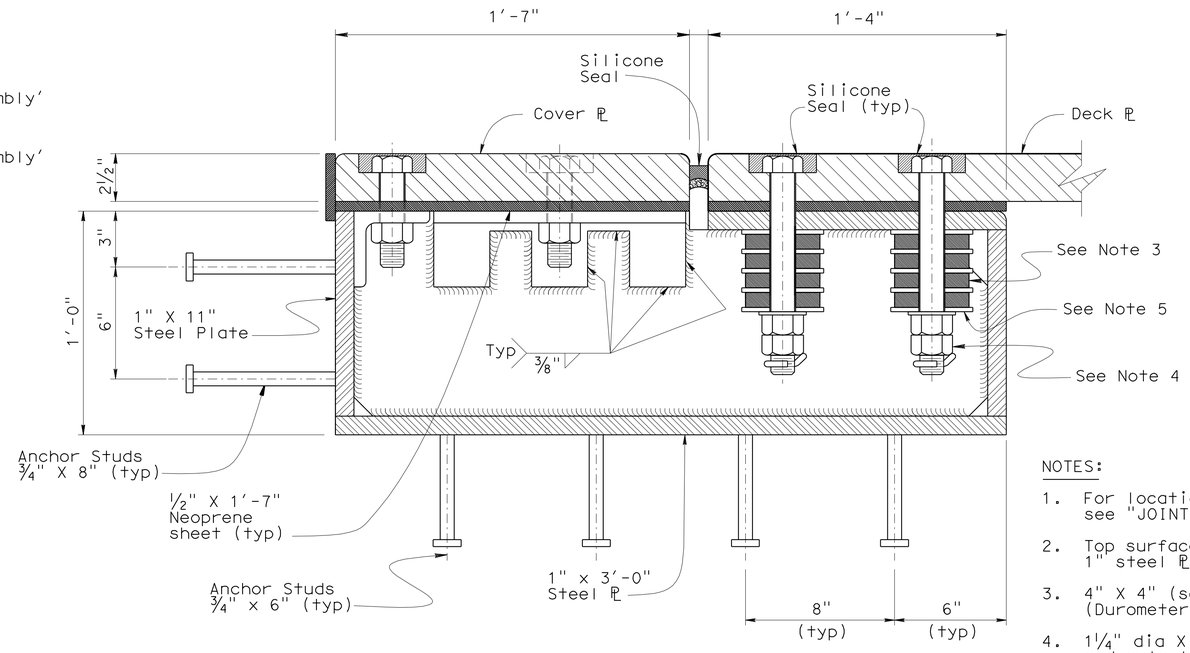


## SECTION F-F

NOTES:

1. For location of 'Section F-F' and 'Section G-G', see "JOINT SEAL ASSEMBLY DETAILS NO. 4" sheet.
2. Top surfaces of L 4 x 4 x5/8" angles and 1" steel PLs shall be on same level.
3. 4" X 4" (sq) x3/4" Long elastomeric washers (Durometer 60) with 1 3/8" dia hole (tot. 4 per bolt).
4. 1 1/4" dia X 10 1/2" HS bolts (with cotter pins) and nuts thru holes and counterbores or equal. Tighten nuts to remove slack within the system, then turn each nut an additional half turn. (Half turn corresponds to 1/16")
5. Plate Washer galvanized 1/4" X 5 1/2" X 5 1/2" with 1 3/8" dia hole (tot. 5 per bolt)

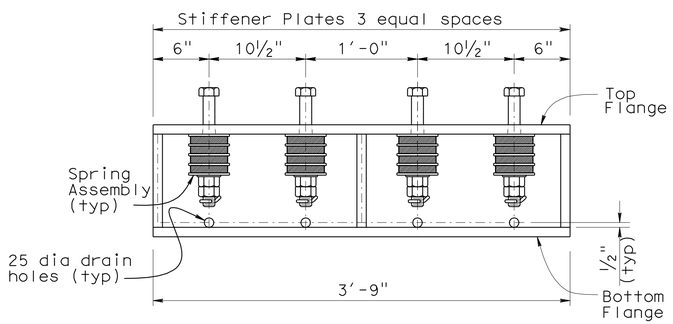


## SECTION H-H - CHANNEL ASSEMBLY "C"

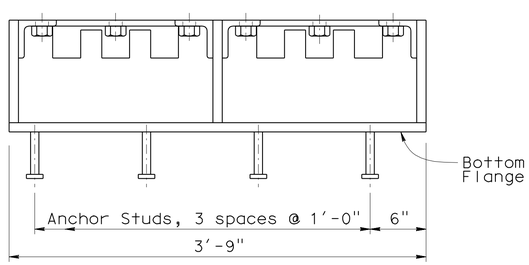


## SECTION J-J - CHANNEL ASSEMBLY "C"

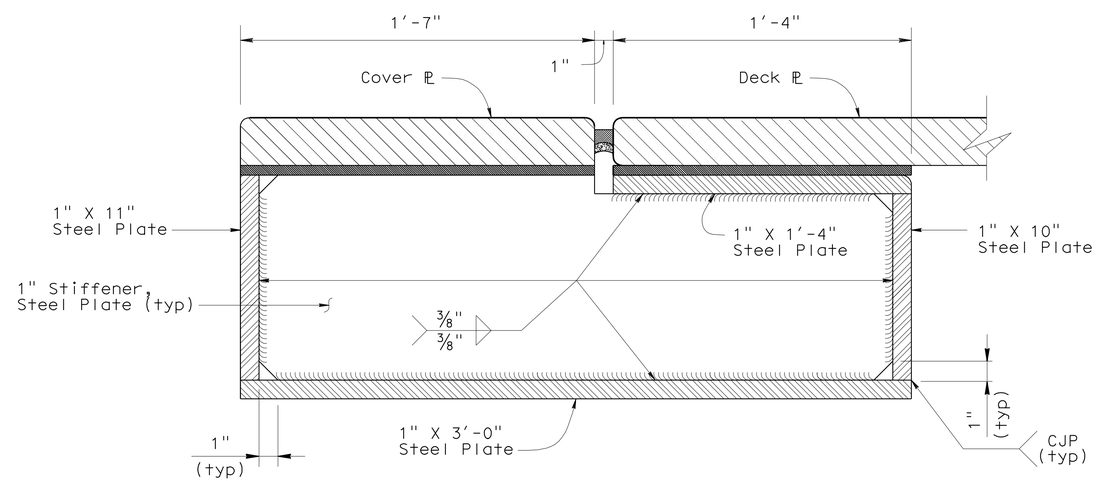


## SECTION G-G

NO SCALE

THE CONTRACTOR SHALL VERIFY ALL CONTROLLING FIELD DIMENSIONS BEFORE ORDERING OR FABRICATING ANY MATERIAL.

| | BY | CHECKED |
|---|---|---|
| DESIGN | F. Zayati | R. Bromenschenkel |
| DETAILS | K. Kubo | F. Zayati |
| QUANTITIES | J. Lane | V. Ramakrishnan |

STATE OF CALIFORNIA
DEPARTMENT OF TRANSPORTATION

DIVISION OF ENGINEERING SERVICES
STRUCTURE DESIGN
DESIGN BRANCH 14

BRIDGE NO. 53-3033
POST MILE 0.01

# NEW DOCK STREET ON-RAMP
## JOINT SEAL ASSEMBLY DETAILS NO. 5

STRUCTURES DESIGN DETAIL SHEET (ENGLISH) (REV. 10/25/05)

ORIGINAL SCALE IN INCHES FOR REDUCED PLANS 0 1 2 3

CU 07-271
EA 138201

DISREGARD PRINTS BEARING EARLIER REVISION DATES

REVISION DATES: 12-22-09 05-12-10 05-20-10

SHEET 27 OF 40

FILE => 53-3033-q-jtsealdet05.dgn

USERNAME => frlenard DATE PLOTTED => 18-OCT-2010 TIME PLOTTED => 15:23

| DIST | COUNTY | ROUTE | POST MILES TOTAL PROJECT | SHEET No | TOTAL SHEETS |
|---|---|---|---|---|---|
| 07 | LA | 47,103 | 3.5/4.6, 0.0/1.1 | 777 | 1003 |

REGISTERED CIVIL ENGINEER — DATE 05-24-10

10-11-10
PLANS APPROVAL DATE

*The State of California or its officers or agents shall not be responsible for the accuracy or completeness of electronic copies of this plan sheet.*

REGISTERED PROFESSIONAL ENGINEER — FOUED ZAYATI No. C57046 Exp. 06-30-11 CIVIL — STATE OF CALIFORNIA

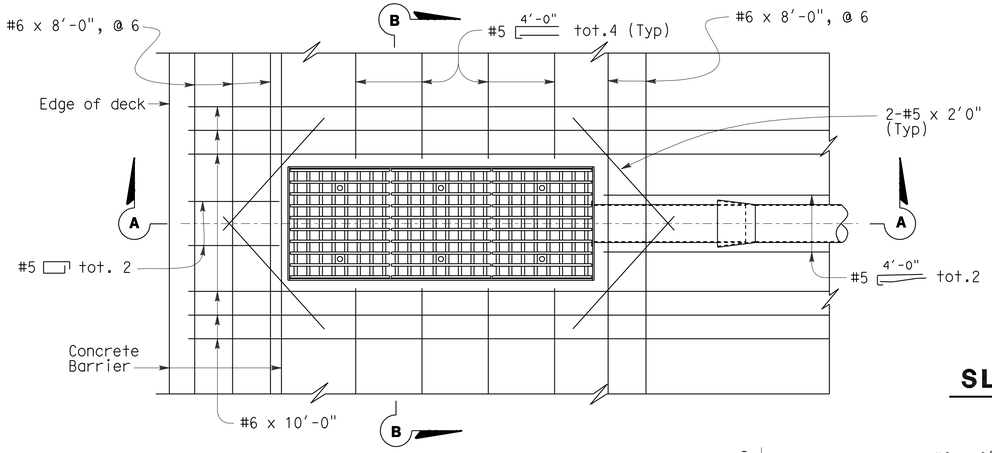


## PLAN

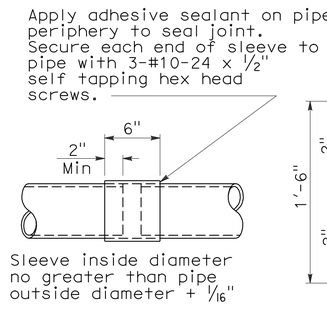


## SLEEVE CONNECTION

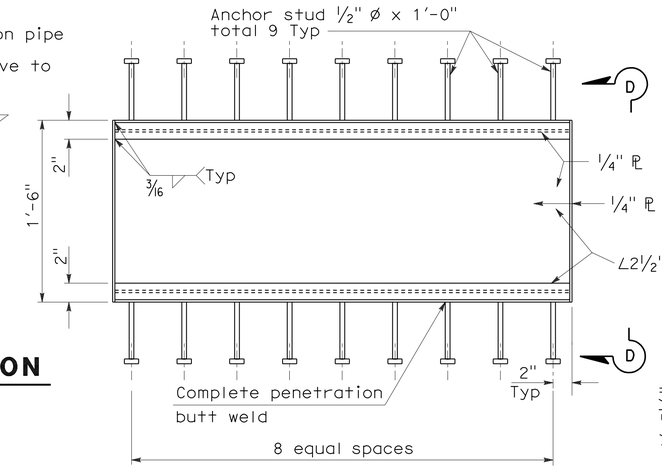


## FRAME

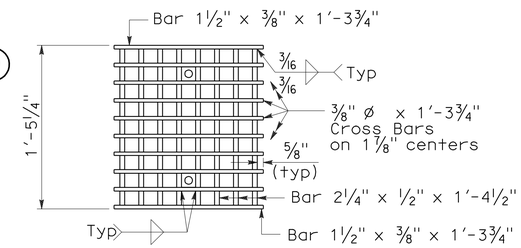


## GRATE

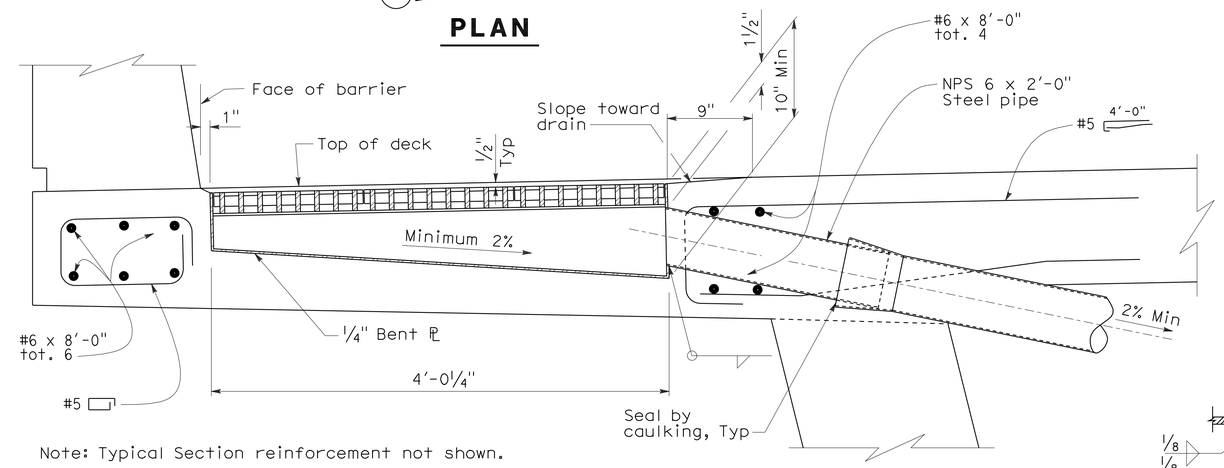


Note: Typical Section reinforcement not shown.

## SECTION A-A

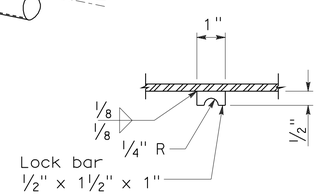


## LOCK BAR

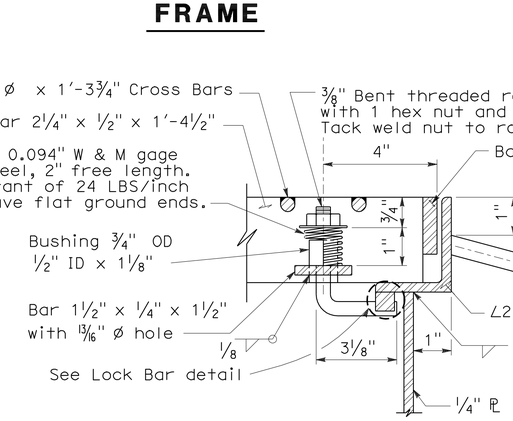


## DETAIL A

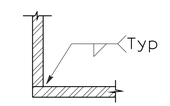


## SECTION E-E

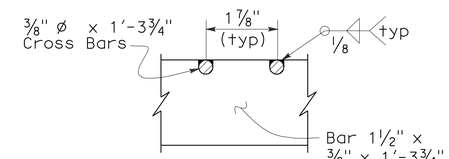


## DETAIL B

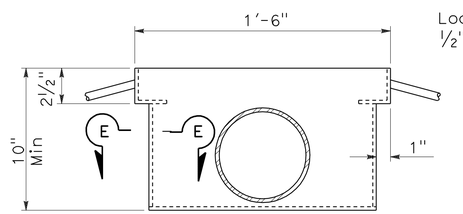


## VIEW D-D

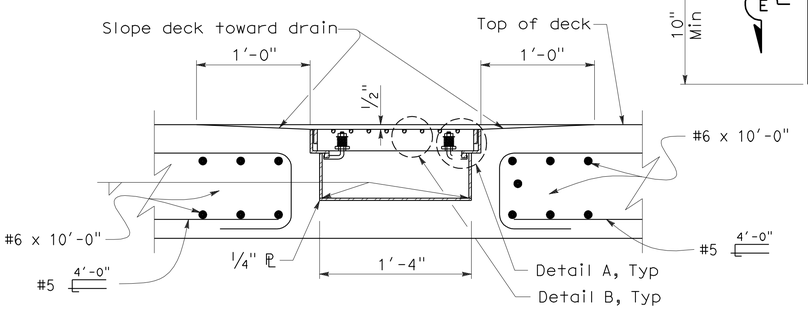


Note: Typical Section reinforcement not shown.

## SECTION B-B

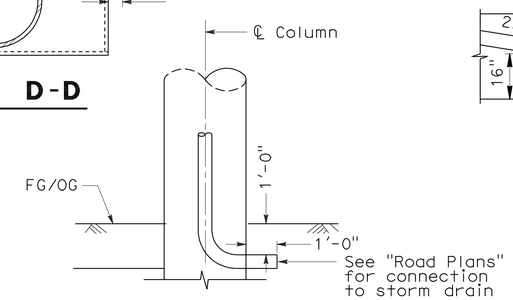


## DRAIN OUTLET

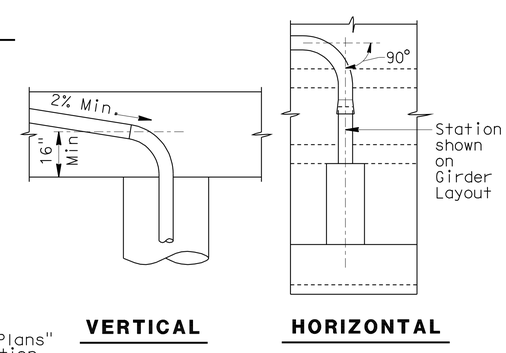


## DRAIN PIPE ALIGNMENT

NOTE:

Unless noted elsewhere on the plans, all pipe to be NPS 6 x 0.135" welded steel pipe except as noted and galvanized if not encased in concrete. Fittings and bends shall have a minimum wall thickness of 1/8". All joints or connections to be butt welded or connected by a steel pipe sleeve and to be smooth throughout inside of pipe except as noted. All bends to be on 1'-6" minimum radius measured along ℄ pipe. All bends to be smooth. Pipes not encased in concrete to be supported by suitable galvanized hangers @ 10'-0" maximum spacing throughout. Galvanize deck drain assembly after fabrication.

NO SCALE

| | BY | CHECKED |
|---|---|---|
| DESIGN | F. Zayati | S. Galgiani |
| DETAILS | K. Kubo | F. Zayati |
| QUANTITIES | J. Lane | V. Ramakrishnan |

STATE OF CALIFORNIA
DEPARTMENT OF TRANSPORTATION

DIVISION OF ENGINEERING SERVICES
STRUCTURE DESIGN
DESIGN BRANCH 14

BRIDGE NO. 53-3033
POST MILE 0.01

# NEW DOCK STREET ON-RAMP
# DECK DRAIN DETAILS

STRUCTURES DESIGN DETAIL SHEET (ENGLISH) (REV. 10/25/05)

ORIGINAL SCALE IN INCHES FOR REDUCED PLANS 0 1 2 3

CU 07-271
EA 138201

DISREGARD PRINTS BEARING EARLIER REVISION DATES

REVISION DATES: 05-12-10 05-22-10 07-13-10

SHEET 28 OF 40

FILE => 53-3033-r-ddraindet.dgn

USERNAME => trlenard DATE PLOTTED => 18-OCT-2010 TIME PLOTTED => 15:23

| DIST | COUNTY | ROUTE | POST MILES TOTAL PROJECT | SHEET No | TOTAL SHEETS |
|---|---|---|---|---|---|
| 07 | LA | 47,103 | 3.5/4.6, 0.0/1.1 | 778 | 1003 |

REGISTERED CIVIL ENGINEER 05-24-10 DATE

10-11-10
PLANS APPROVAL DATE

REGISTERED PROFESSIONAL ENGINEER FOUED ZAYATI No. C57046 Exp. 06-30-11 CIVIL STATE OF CALIFORNIA

*The State of California or its officers or agents shall not be responsible for the accuracy or completeness of electronic copies of this plan sheet.*

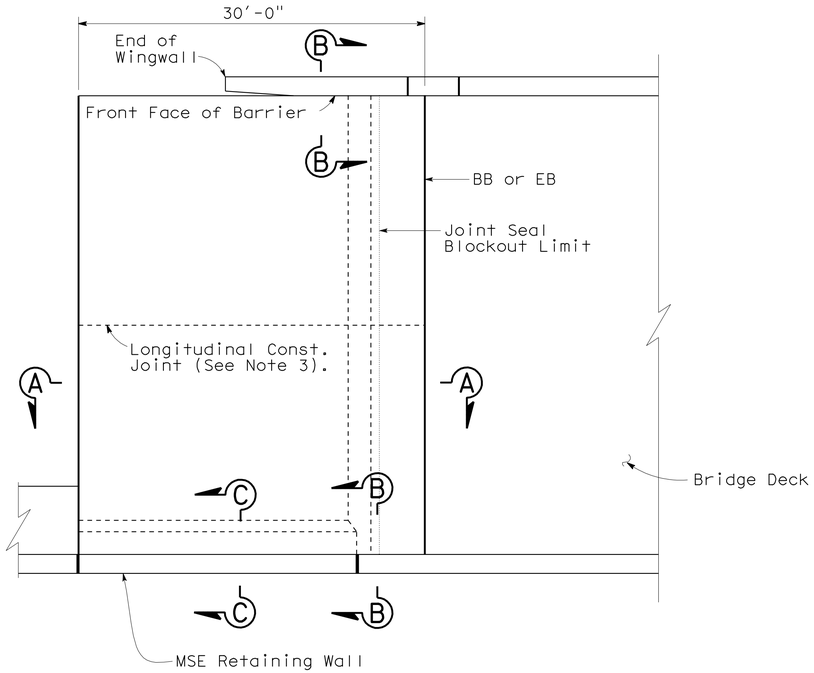


## PLAN
No Scale

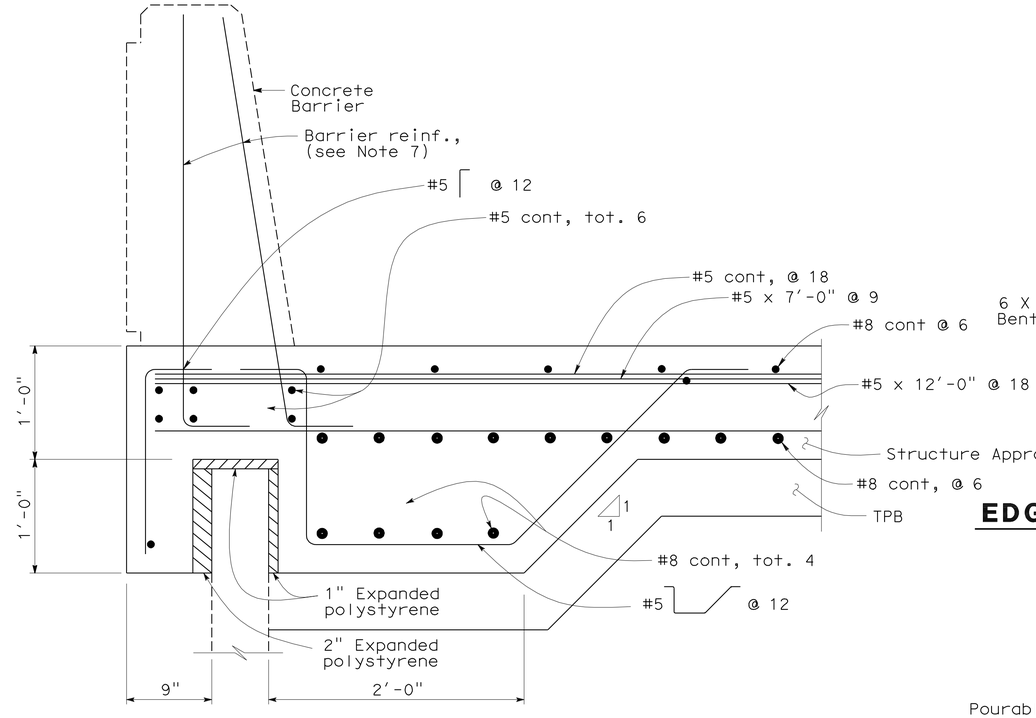


## SECTION C-C
1½"=1'-0"

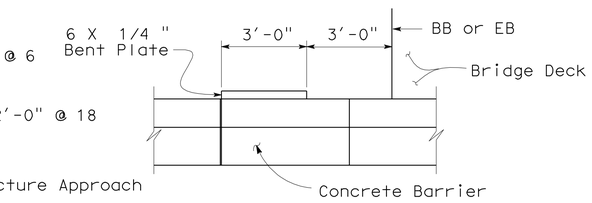


## EDGE ANGLE DETAIL - RW SIDE
No Scale

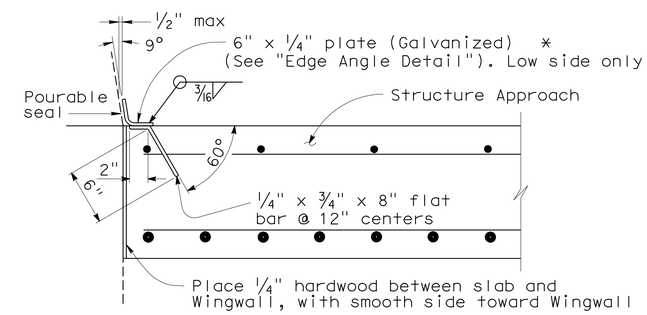


## DETAIL B
1½"=1'-0"

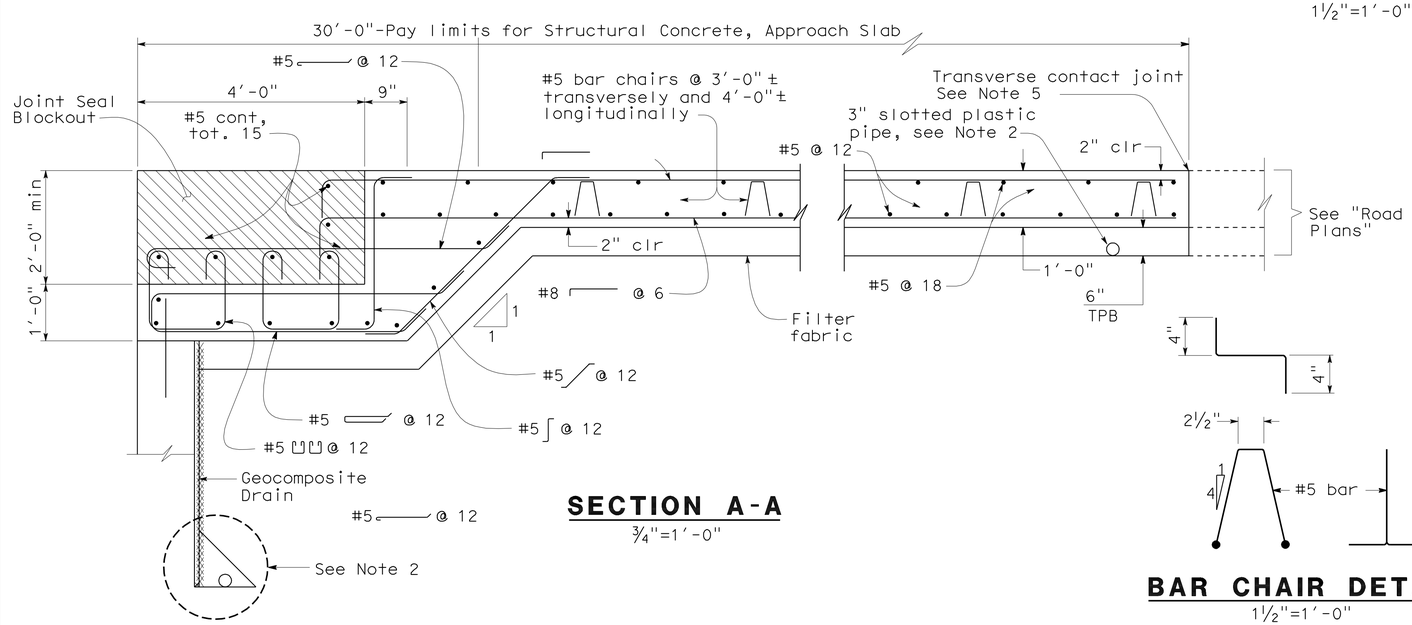


## SECTION A-A
¾"=1'-0"




## BAR CHAIR DETAIL
1½"=1'-0"

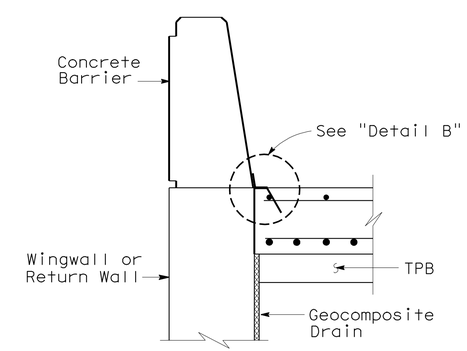


## SECTION B-B
¾"=1'-0"

NOTES:

1. For details not shown, see Structure Plans.
2. For Drainage details, see "Structure Approach Drainage Details" sheet.
3. Longitudinal Construction Joints, when permitted by the Engineer, shall be located on lane lines.
4. End angle or plate at beginning of Barrier transition, end of Wingwall or end of Structure Approach as applicable.
5. For transverse contact joint with new PCC paving, refer to Standard Plan P10.
6. Spacing of transverse reinforcement is measured along ℄ Roadway.
7. For Barrier reinforcement, see "CONCRETE BARRIER TYPE 736 (MOD)" sheet.
8. Remove 2" polystyrene.

| | BY | CHECKED |
|---|---|---|
| DESIGN | F.Zayati | S. Galgiani |
| DETAILS | K. Kubo | F.Zayati |
| QUANTITIES | J. Lane | V. Ramakrishnan |

STATE OF CALIFORNIA
DEPARTMENT OF TRANSPORTATION

DIVISION OF ENGINEERING SERVICES
STRUCTURE DESIGN
DESIGN BRANCH 14

BRIDGE NO. 53-3033
POST MILE 0.01

# NEW DOCK STREET ON-RAMP
# STRUCTURE APPROACH TYPE N(30S)

STRUCTURES DESIGN DETAIL SHEET (ENGLISH) (REV. 10/25/05)

ORIGINAL SCALE IN INCHES FOR REDUCED PLANS 0 1 2 3

CU 07-271
EA 138201

DISREGARD PRINTS BEARING EARLIER REVISION DATES 12-28-09 05-12-10

REVISION DATES

SHEET 29 OF 40

FILE => 53-3033-s-sappdtypn.dgn

USERNAME => trlenard DATE PLOTTED => 18-OCT-2010 TIME PLOTTED => 15:24

| DIST | COUNTY | ROUTE | POST MILES TOTAL PROJECT | SHEET No | TOTAL SHEETS |
|---|---|---|---|---|---|
| 07 | LA | 47,103 | 3.5/4.6, 0.0/1.1 | 779 | 1003 |

REGISTERED CIVIL ENGINEER — DATE 05-24-10

10-11-10
PLANS APPROVAL DATE

*The State of California or its officers or agents shall not be responsible for the accuracy or completeness of electronic copies of this plan sheet.*

REGISTERED PROFESSIONAL ENGINEER — FOUED ZAYATI — No. C57046 — Exp. 06-30-11 — CIVIL — STATE OF CALIFORNIA

NOTES:

1. Low end of subgrade drain shown, at high end install cap at end of 3" slotted pipe. Subgrade drain located at end of Structure Approach Slab.

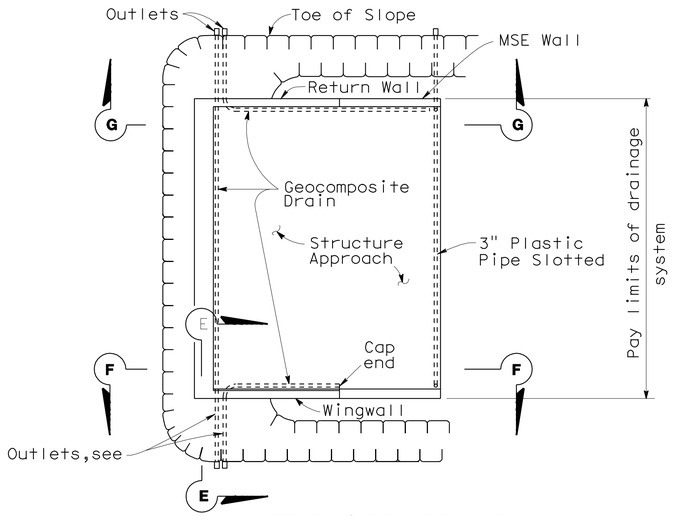


## TYPICAL PLAN
No Scale

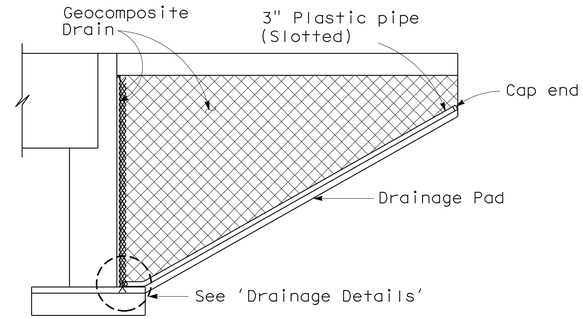


## CANTILEVER WINGWALL
## SECTION F-F
No Scale

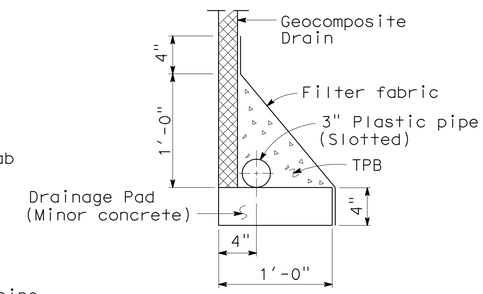


## DRAINAGE DETAILS (WINGWALL SECTION)
1½"=1'-0"

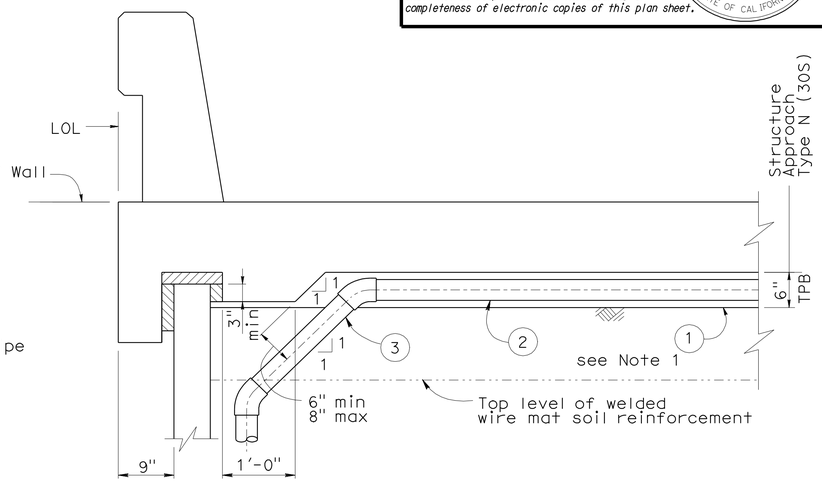


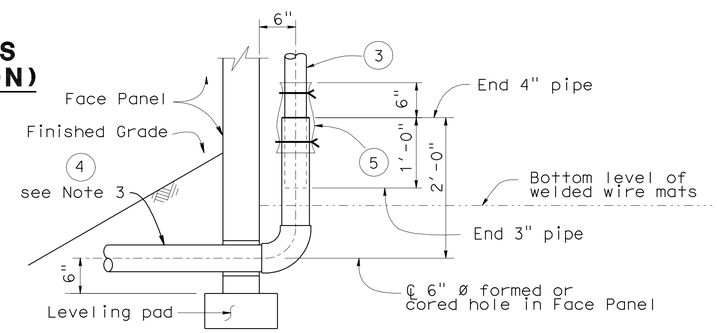


## SECTION AT MSE WALL
## STRUCTURE APPROACH SLAB AND CONCRETE BARRIER
No Scale

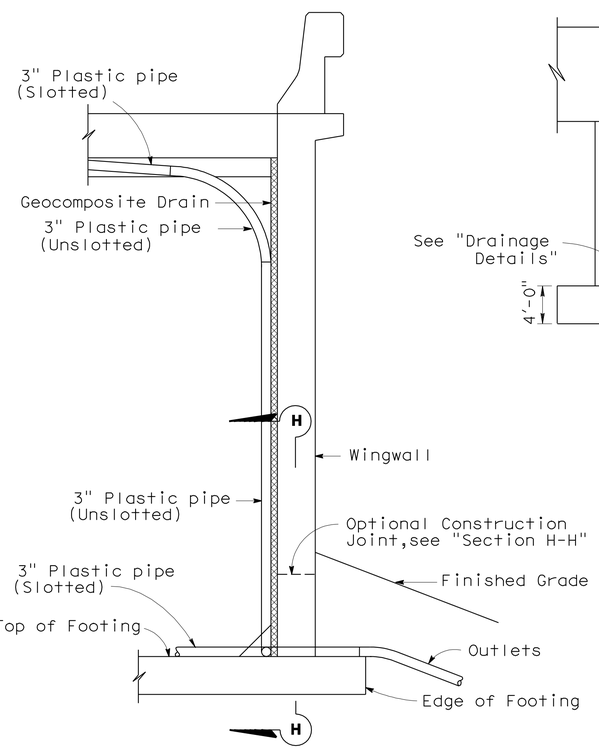


## SECTION E-E
No Scale

NOTE: Bends and junctions in 3" plastic pipe are 30" radius min.

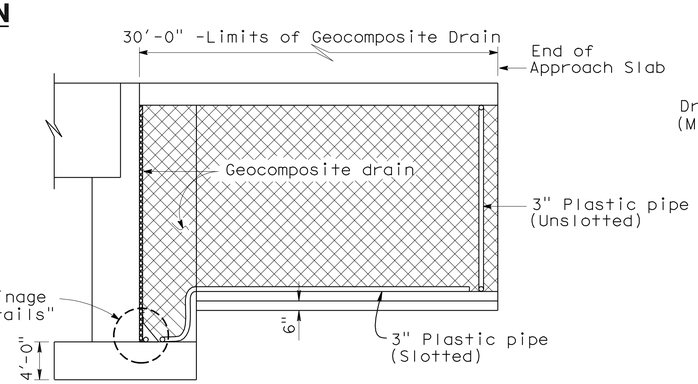


## RETURN WALL/MSE WALL
## SECTION G-G
No Scale

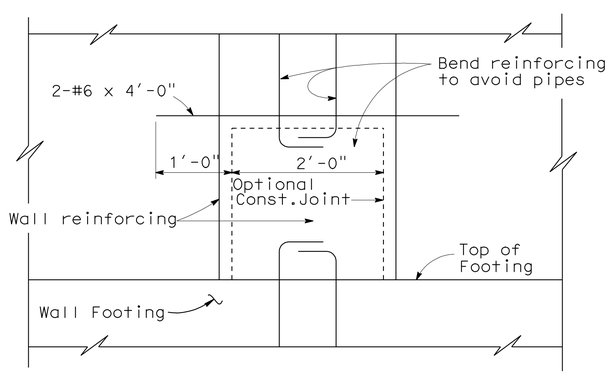


## SECTION H-H
1"=1'-0"

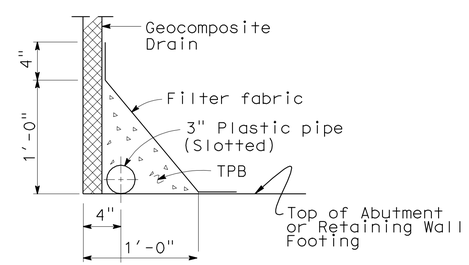


## DRAINAGE DETAILS
1½"=1'-0"

LEGEND:

1. Filter fabric.
2. 3" Plastic pipe (slotted).
3. 3" Plastic pipe and fittings (unslotted).
4. 4" Sch 80 PVC outlet pipe and fittings (unslotted).
5. 1'-0" wide x 2'-0" filter fabric wrapped around pipe and secured with nylon ties.

| | BY | CHECKED |
|---|---|---|
| DESIGN | S. Galgiani | F. Zayati |
| DETAILS | K. Kubo | F. Zayati |
| QUANTITIES | J. Lane | V. Ramakrishnan |

STATE OF CALIFORNIA
DEPARTMENT OF TRANSPORTATION

DIVISION OF ENGINEERING SERVICES
STRUCTURE DESIGN
DESIGN BRANCH 14

BRIDGE NO. 53-3033
POST MILE 0.01

# NEW DOCK STREET ON-RAMP
# STRUCTURE APPROACH DRAINAGE DETAILS

STRUCTURES DESIGN DETAIL SHEET (ENGLISH) (REV. 10/25/05)

ORIGINAL SCALE IN INCHES FOR REDUCED PLANS 0 1 2 3

CU 07-271
EA 138201

DISREGARD PRINTS BEARING EARLIER REVISION DATES — REVISION DATES 02-18-10 05-20-10

SHEET 30 OF 40

FILE => 53-3033-s-sapprdd.dgn

USERNAME => trlenard DATE PLOTTED => 18-OCT-2010 TIME PLOTTED => 15:24

| DIST | COUNTY | ROUTE | POST MILES TOTAL PROJECT | SHEET No | TOTAL SHEETS |
|---|---|---|---|---|---|
| 07 | LA | 47,103 | 3.5/4.6, 0.0/1.1 | 780 | 1003 |

REGISTERED CIVIL ENGINEER — DATE 05-24-10

10-11-10
PLANS APPROVAL DATE

*The State of California or its officers or agents shall not be responsible for the accuracy or completeness of electronic copies of this plan sheet.*

REGISTERED PROFESSIONAL ENGINEER — FOUED ZAYATI — No. C57046 — Exp. 06-30-11 — CIVIL — STATE OF CALIFORNIA

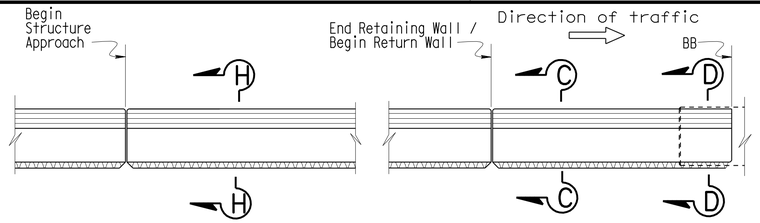


## PLAN - RETAINING WALL SIDE

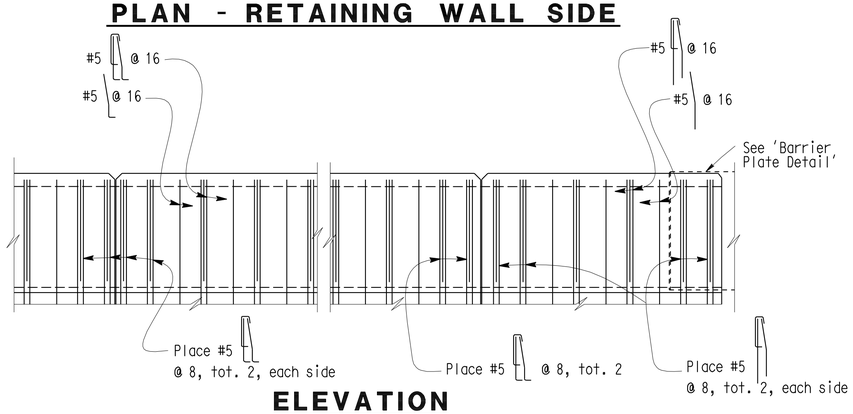


## ELEVATION

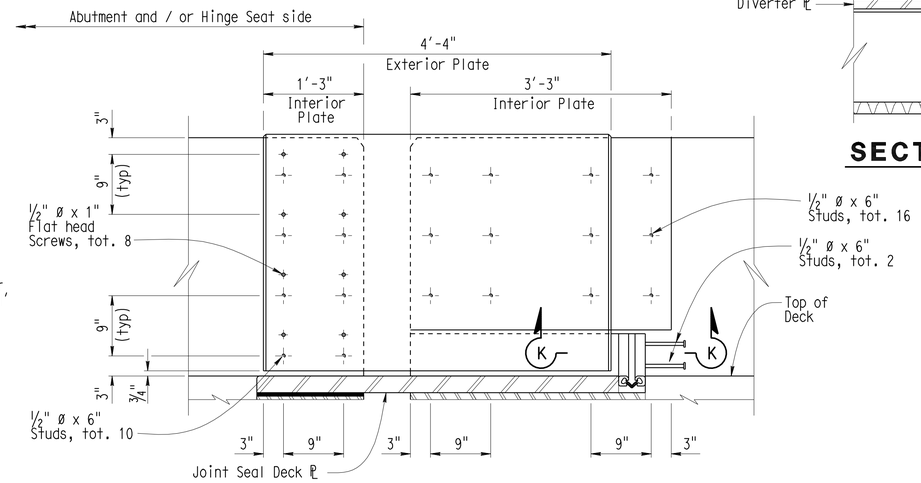


NOTE: Abutment location shown, Hinge location mirrored.

## BARRIER PLATE DETAIL

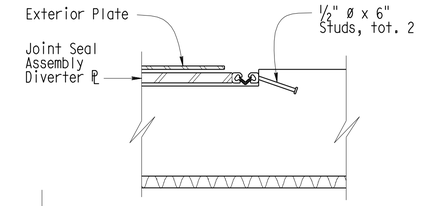


## SECTION K-K

**NOTES:**

A. Walls are to be backfilled before Barrier is placed.

B. See project plans for locations of Electroliers and Pull Boxes.

C. Refer to Project Plans and Standard Plan Sheets ES-9A, 9C, ES-9D for electrical details concerning barriers. The maximum number of conduits in a barrier is limited to two (2) 2" conduits ( max.) along with one (1) 3" conduit. When a 3.5" conduit is used, it is restricted to the base of barrier.

D. For 'Section A-A' thru 'Section H-H', see "CONCRETE BARRIER DETAILS NO.2" sheet

E. For 'Architectural Treatment', see "CONCRETE BARRIER DETAILS NO. 3" sheet

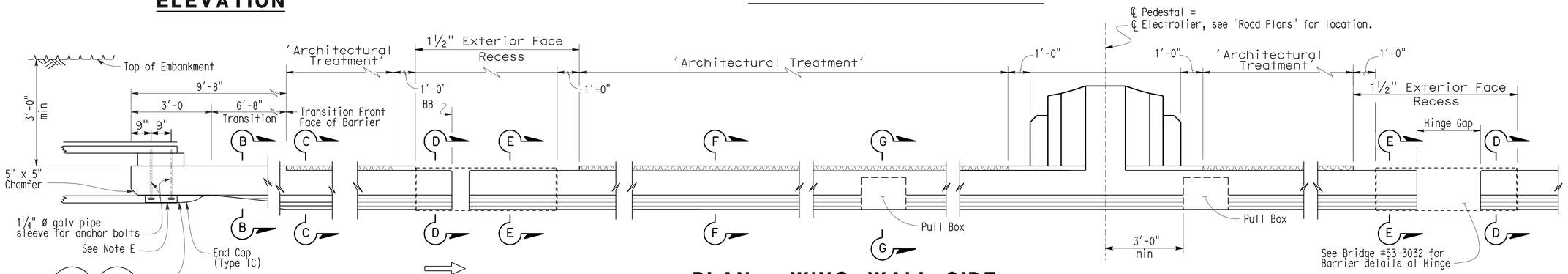


## PLAN - WING WALL SIDE

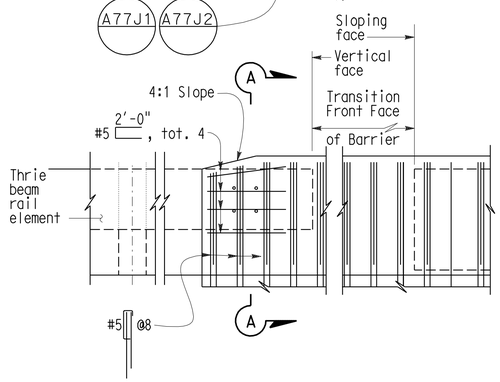


## DECK JOINT

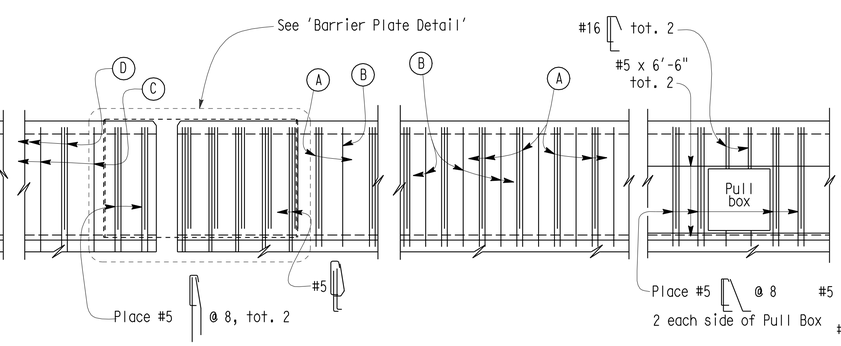


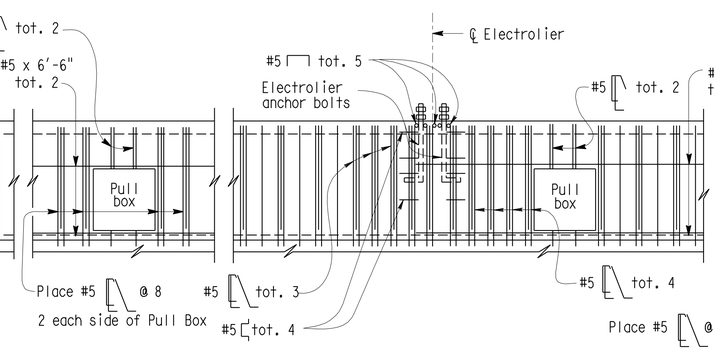


## ELEVATION

## ELECTROLIER

(See Note E)

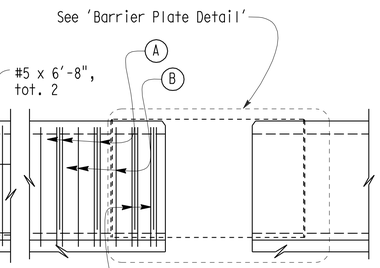


## DECK JOINT

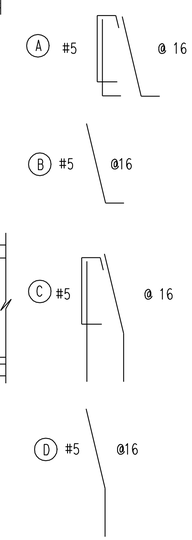


NO SCALE

| | | | |
|---|---|---|---|
| DESIGN | BY F. Zayati | CHECKED R. Bromenschenkel | |
| DETAILS | BY K. Kubo | CHECKED F. Zayati | |
| QUANTITIES | BY J. Lane | CHECKED V. Ramakrishnan | |

STATE OF CALIFORNIA
DEPARTMENT OF TRANSPORTATION

DIVISION OF ENGINEERING SERVICES
STRUCTURE DESIGN
DESIGN BRANCH 14

BRIDGE NO. 53-3033
POST MILE 0.01

# NEW DOCK STREET ON-RAMP
# CONCRETE BARRIER DETAILS NO. 1

STRUCTURES DESIGN DETAIL SHEET (ENGLISH) (REV. 10/25/05)

ORIGINAL SCALE IN INCHES FOR REDUCED PLANS 0 1 2 3

CU 07-271
EA 138201

DISREGARD PRINTS BEARING EARLIER REVISION DATES

REVISION DATES: 12-30-09 05-12-10 05-17-10 05-24-10 06-23-10 06-24-10 06-30-10 07-01-10

SHEET 31 OF 40

FILE => 53-3033-t-brdt01.dgn

USERNAME => friehard DATE PLOTTED => 18-OCT-2010 TIME PLOTTED => 15:24

| DIST | COUNTY | ROUTE | POST MILES TOTAL PROJECT | SHEET No | TOTAL SHEETS |
|---|---|---|---|---|---|
| 07 | LA | 47,103 | 3.5/4.6, 0.0/1.1 | 781 | 1003 |

REGISTERED CIVIL ENGINEER 05-24-10 DATE

10-11-10
PLANS APPROVAL DATE

REGISTERED PROFESSIONAL ENGINEER FOUED ZAYATI No. C57046 Exp. 06-30-11 CIVIL STATE OF CALIFORNIA

*The State of California or its officers or agents shall not be responsible for the accuracy or completeness of electronic copies of this plan sheet.*

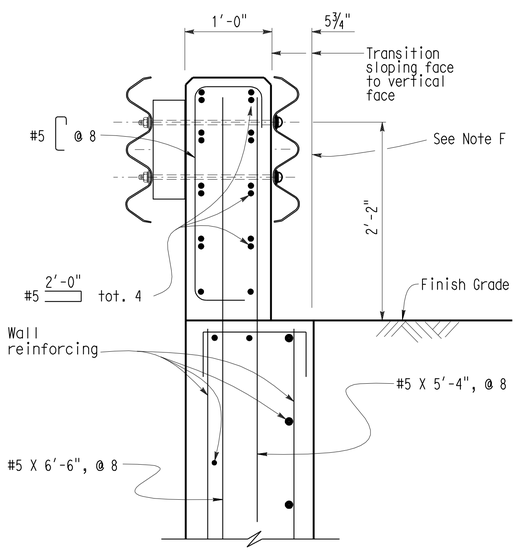


**SECTION A-A**

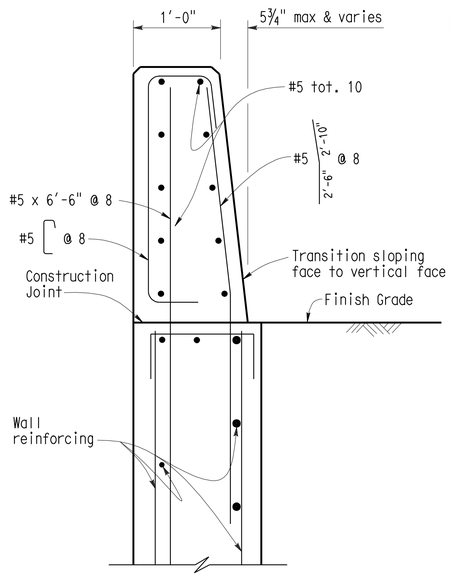


**SECTION B-B**

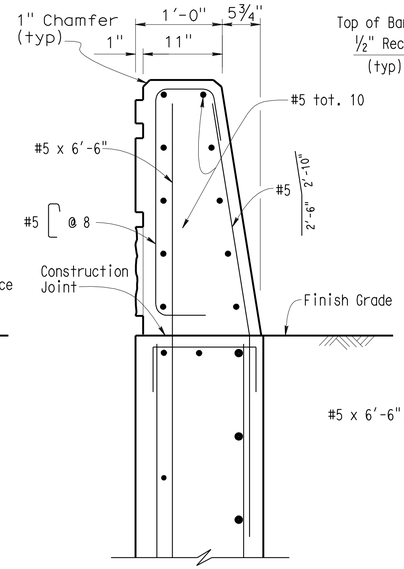


**SECTION C-C**

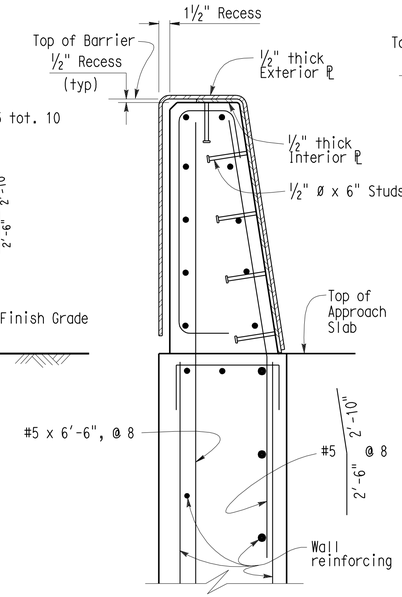


@ ABUTMENT

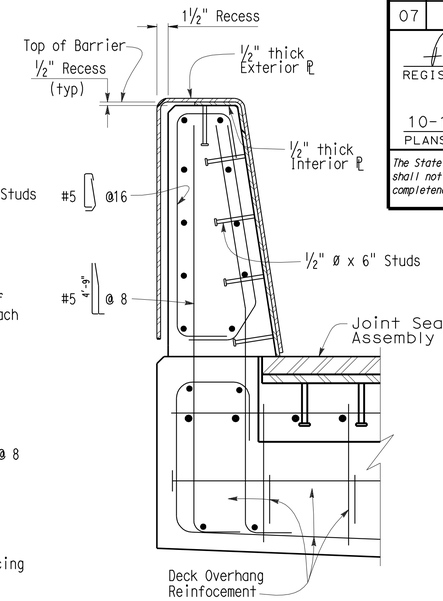


@ HINGE

**SECTION D-D**

**NOTES:**

A. Clearance to reinforcing steel in Barrier to be 1", except as noted. Longitudinal reinforcement to stop at all expansion joints.

B. Dimensions may vary with roadway cross slope and with certain thickness of surfacing. See Project Plans.

C. Minimum concrete edge distance to reinforcing shown, shall be maintained, edge distance may be adjusted to accomodate increase in concrete cover for architectural treatment. See Typical Section.

D. For location of 'Section A-A' thru 'Section H-H', see "CONCRETE BARRIER DETAILS NO. 1" sheet

E. For typical metal railing connection details not shown, see Standard Plans A77J1 and A77J2

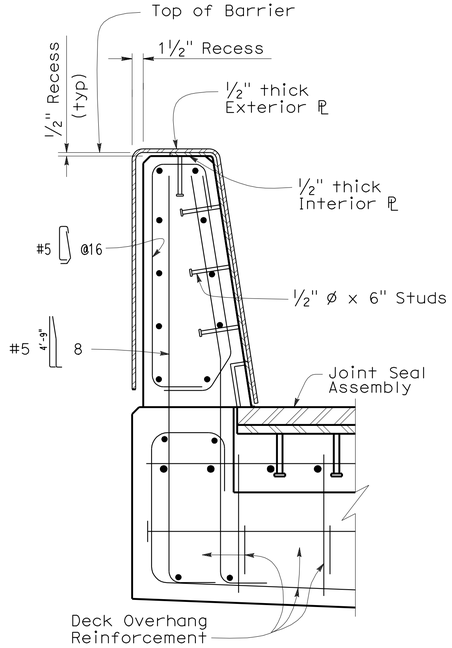


**SECTION E-E**

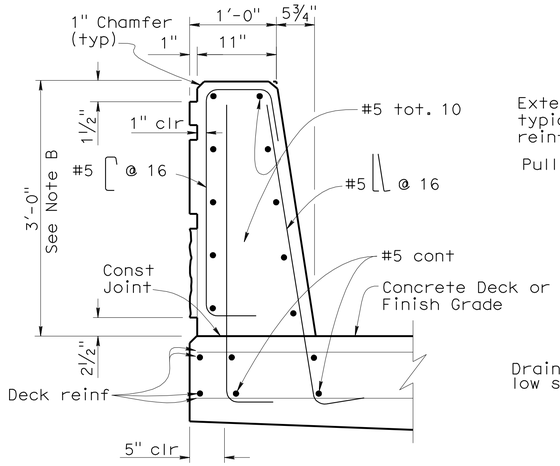


**SECTION F-F**

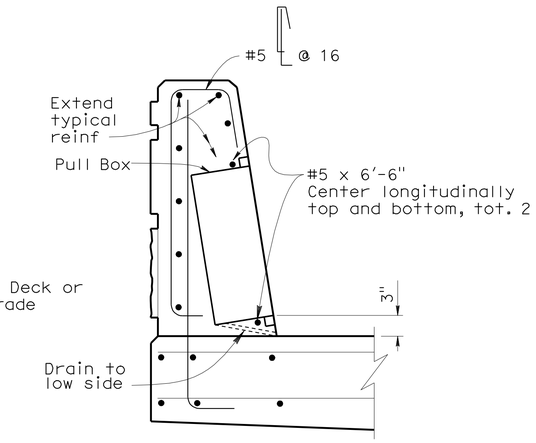


**SECTION G-G**

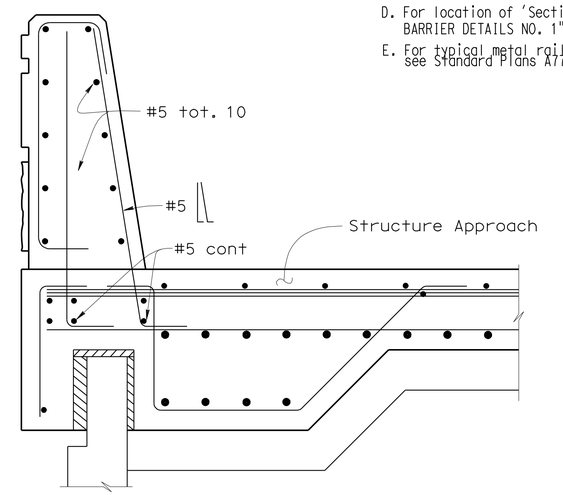


**SECTION H-H**

**NO SCALE**

| | | | |
|---|---|---|---|
| DESIGN | BY F. Zayati | CHECKED R. Bromenschenkel | |
| DETAILS | BY K. Kubo | CHECKED F. Zayati | |
| QUANTITIES | BY J. Lane | CHECKED V. Ramakrishnan | |

STATE OF CALIFORNIA
DEPARTMENT OF TRANSPORTATION

DIVISION OF ENGINEERING SERVICES
STRUCTURE DESIGN
DESIGN BRANCH 14

BRIDGE NO. 53-3033
POST MILE 0.01

# NEW DOCK STREET ON-RAMP
# CONCRETE BARRIER DETAILS NO. 2

STRUCTURES DESIGN DETAIL SHEET (ENGLISH) (REV. 10/25/05)

ORIGINAL SCALE IN INCHES FOR REDUCED PLANS 0 1 2 3

CU 07-271
EA 138201

DISREGARD PRINTS BEARING EARLIER REVISION DATES

REVISION DATES: 12-30-09 05-12-10 05-14-10 05-24-10 06-24-10 06-30-10 07-02-10 07-06-10 07-07-10

SHEET 32 OF 40

FILE => 53-3033-t-brdt02.dgn

USERNAME => trlenard DATE PLOTTED => 18-OCT-2010 TIME PLOTTED => 15:44

| DIST | COUNTY | ROUTE | POST MILES TOTAL PROJECT | SHEET No | TOTAL SHEETS |
|---|---|---|---|---|---|
| 07 | LA | 47,103 | 3.5/4.6, 0.0/1.1 | 782 | 1003 |

REGISTERED CIVIL ENGINEER — DATE 05-24-10

10-11-10
PLANS APPROVAL DATE

REGISTERED PROFESSIONAL ENGINEER — FOUED ZAYATI — No. C57046 — Exp. 06-30-11 — CIVIL — STATE OF CALIFORNIA

*The State of California or its officers or agents shall not be responsible for the accuracy or completeness of electronic copies of this plan sheet.*

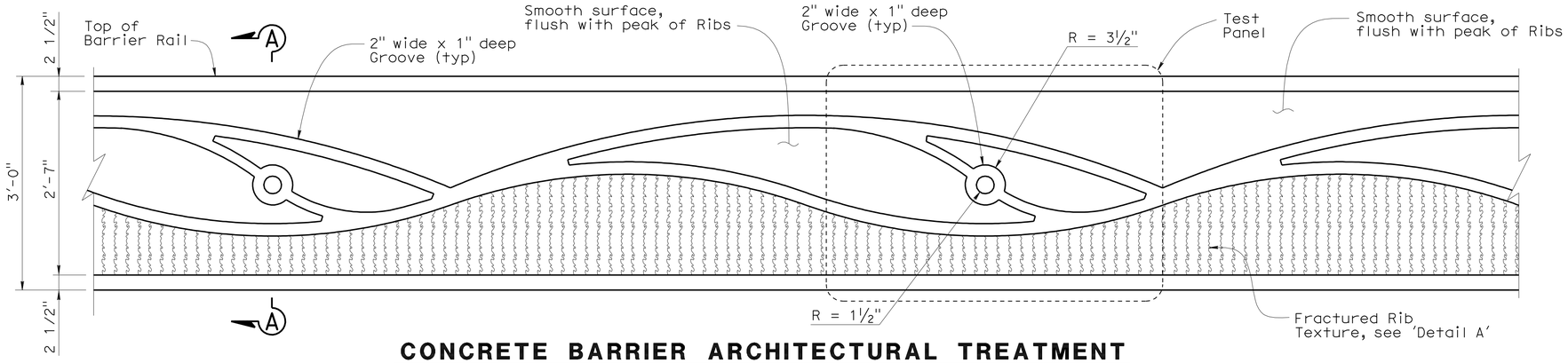


## CONCRETE BARRIER ARCHITECTURAL TREATMENT

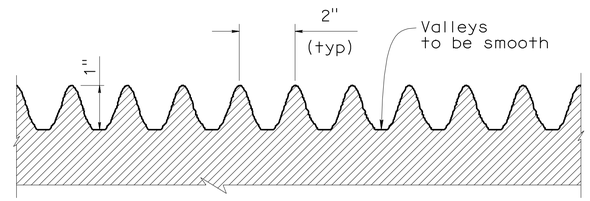


## DETAIL A

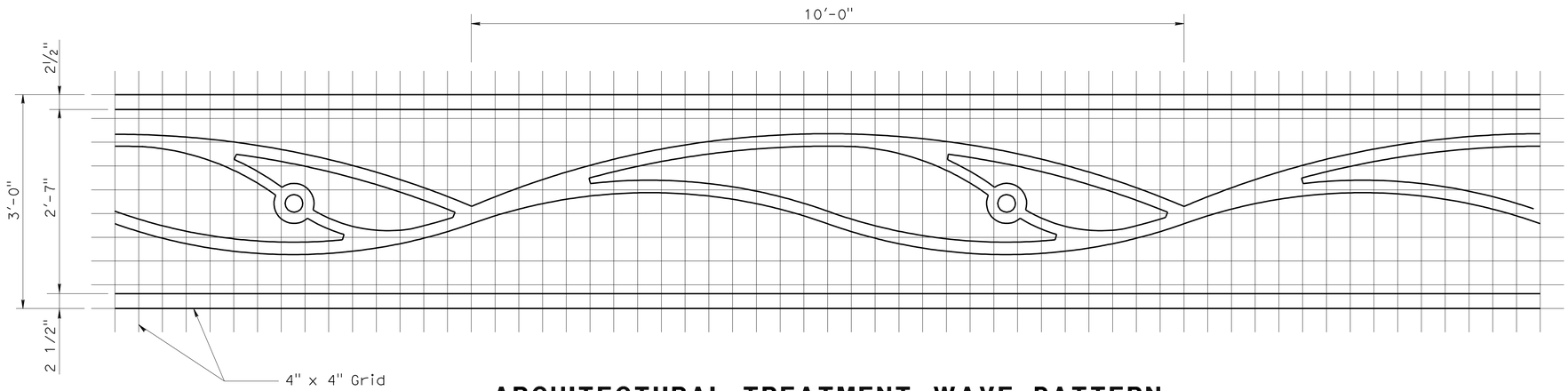


## ARCHITECTURAL TREATMENT WAVE PATTERN

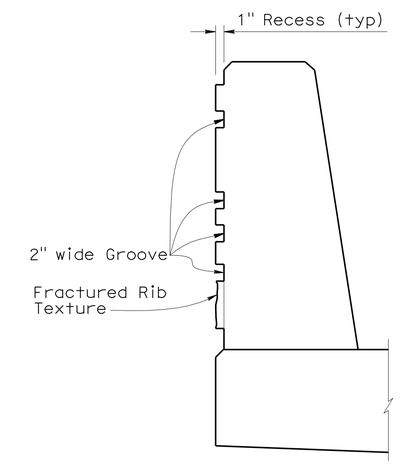


## SECTION A-A

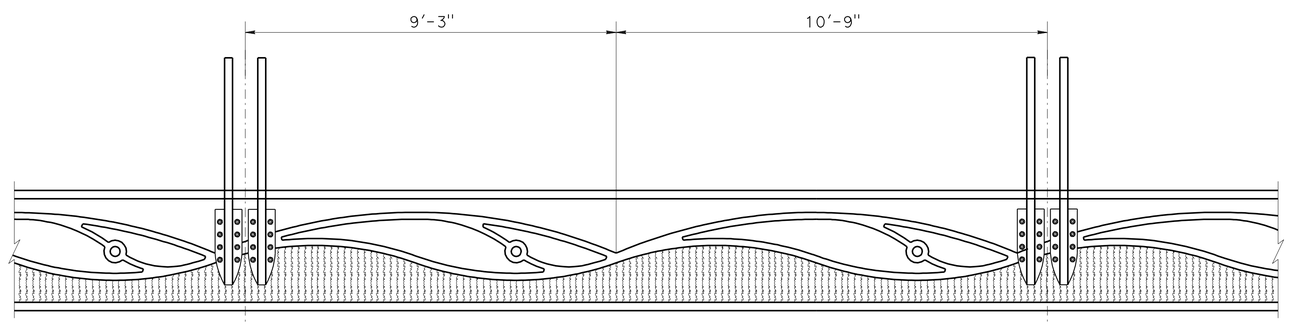


## POST LOCATION ON BARRIER

NO SCALE

| | | | |
|---|---|---|---|
| DESIGN | BY F. Zayati | CHECKED R. Bromenschenkel | |
| DETAILS | BY K. Kubo | CHECKED F. Zayati | |
| QUANTITIES | BY J. Lane | CHECKED V. Ramakrishnan | |

STATE OF CALIFORNIA
DEPARTMENT OF TRANSPORTATION

DIVISION OF ENGINEERING SERVICES
STRUCTURE DESIGN
DESIGN BRANCH 14

BRIDGE NO. 53-3033
POST MILE 0.01

# NEW DOCK STREET ON-RAMP
# CONCRETE BARRIER DETAILS NO. 3

STRUCTURES DESIGN DETAIL SHEET (ENGLISH) (REV. 10/25/05)

ORIGINAL SCALE IN INCHES FOR REDUCED PLANS 0 1 2 3

CU 07-271
EA 138201

DISREGARD PRINTS BEARING EARLIER REVISION DATES → 01-08-10 04-01-10 06-30-10

REVISION DATES

SHEET 33 OF 40

FILE => 53-3033-t-brdt03.dgn

USERNAME => trlenard DATE PLOTTED => 18-OCT-2010 TIME PLOTTED => 15:45

| DIST | COUNTY | ROUTE | POST MILES TOTAL PROJECT | SHEET No | TOTAL SHEETS |
|---|---|---|---|---|---|
| 07 | LA | 47,103 | 3.5/4.6, 0.0/1.1 | 783 | 1003 |

REGISTERED CIVIL ENGINEER — 05-24-10 DATE

10-11-10
PLANS APPROVAL DATE

REGISTERED PROFESSIONAL ENGINEER — FOUED ZAYATI — No. C57046 — Exp. 06-30-11 — CIVIL — STATE OF CALIFORNIA

*The State of California or its officers or agents shall not be responsible for the accuracy or completeness of electronic copies of this plan sheet.*

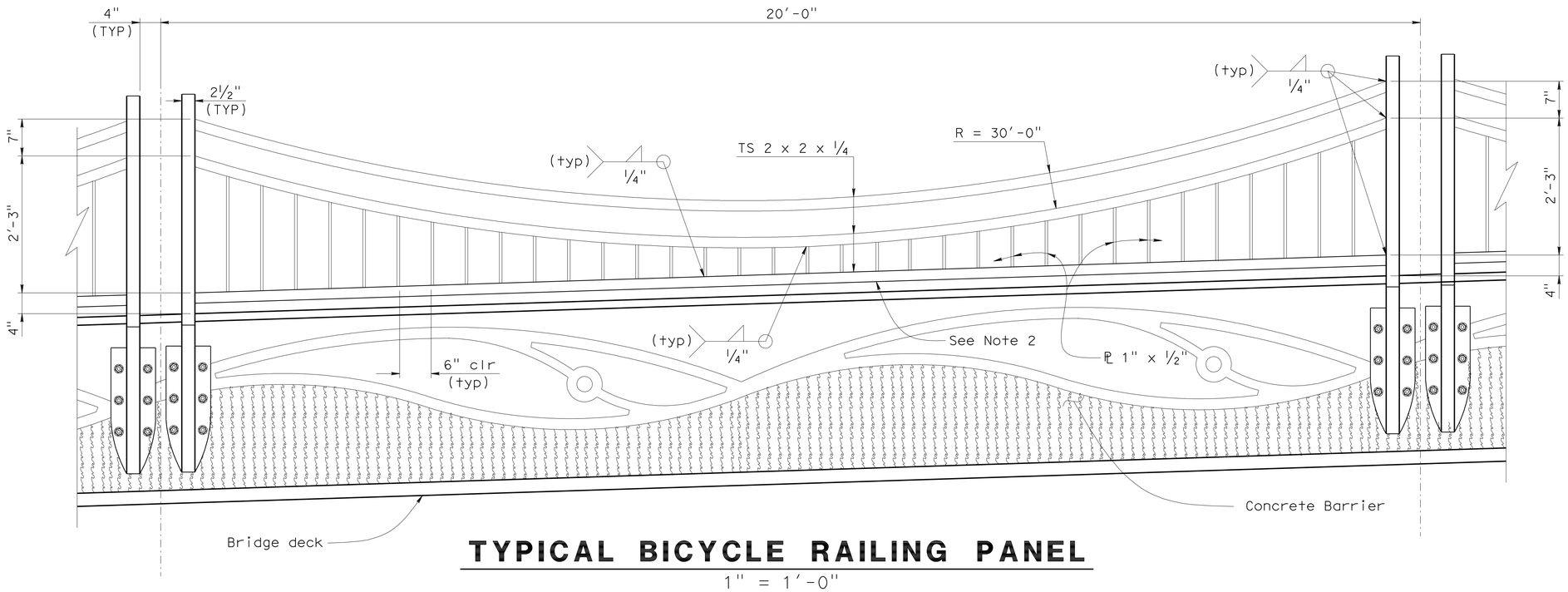


# TYPICAL BICYCLE RAILING PANEL

1" = 1'-0"

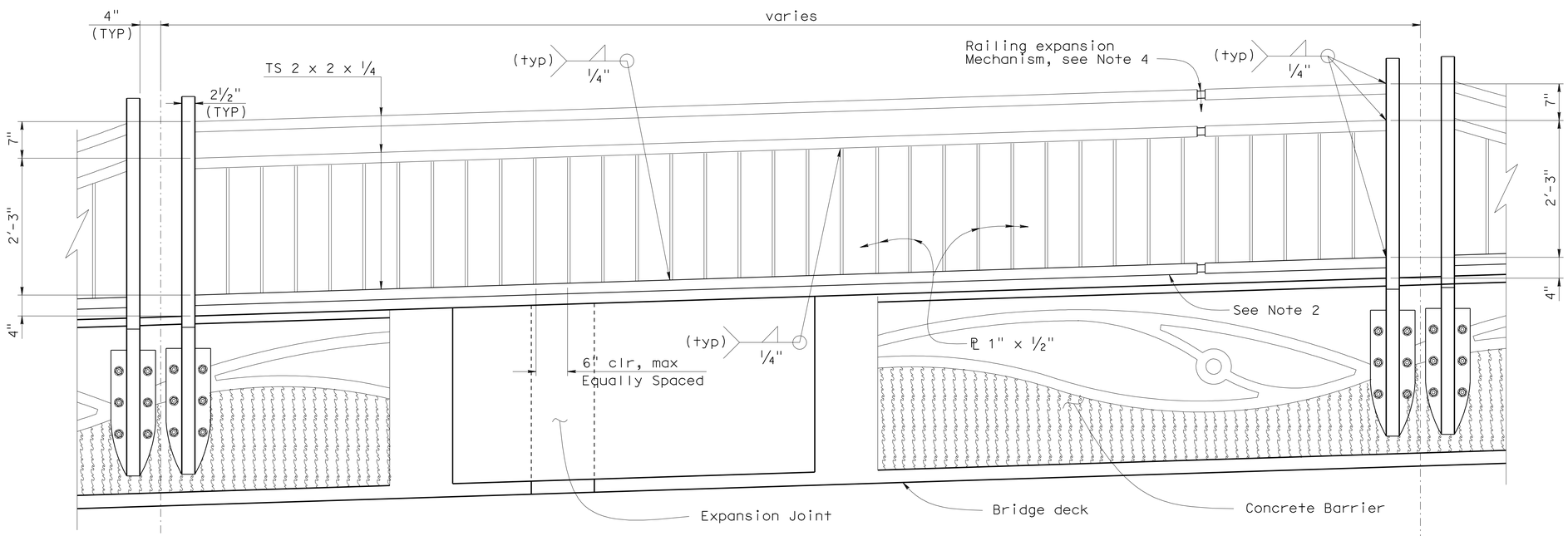


# TYPICAL BICYCLE RAILING PANEL AT EXPANSION JOINTS

1" = 1'-0"

NOTES:

1. Longitudinal deck slope varies.
2. Bottom rail is parallel to top of barrier.
3. See "RAILING DETAILS NO. 2" sheet for typival post details.
4. See "RAILING DETAILS NO. 2" sheet for post connection to barrier.
5. For railing expansion mechanism, see "RAILING DETAILS NO. 2" sheet.

| | BY | CHECKED |
|---|---|---|
| DESIGN | F. Zayati | R. Bromenschenkel |
| DETAILS | T. Nguyen | F. Zayati |
| QUANTITIES | P. Peterson | J. Peterson |

STATE OF CALIFORNIA
DEPARTMENT OF TRANSPORTATION

DIVISION OF ENGINEERING SERVICES
STRUCTURE DESIGN
DESIGN BRANCH 14

BRIDGE NO. 53-3033
POST MILE 0.01

NEW DOCK STREET ON-RAMP
RAILING DETAILS NO. 1

STRUCTURES DESIGN DETAIL SHEET (ENGLISH) (REV. 10/25/05)

ORIGINAL SCALE IN INCHES FOR REDUCED PLANS 0 1 2 3

CU 07-271
EA 138201

DISREGARD PRINTS BEARING EARLIER REVISION DATES 05-05-10

REVISION DATES

SHEET 34 OF 40

FILE => 53-3033-t-raildt01.dgn

USERNAME => trienford DATE PLOTTED => 18-OCT-2010 TIME PLOTTED => 15:45

| DIST | COUNTY | ROUTE | POST MILES TOTAL PROJECT | SHEET No | TOTAL SHEETS |
|---|---|---|---|---|---|
| 07 | LA | 47,103 | 3.5/4.6, 0.0/1.1 | 784 | 1003 |

REGISTERED CIVIL ENGINEER 05-24-10 DATE

10-11-10
PLANS APPROVAL DATE

REGISTERED PROFESSIONAL ENGINEER FOUED ZAYATI No. C57046 Exp. 06-30-11 CIVIL STATE OF CALIFORNIA

*The State of California or its officers or agents shall not be responsible for the accuracy or completeness of electronic copies of this plan sheet.*

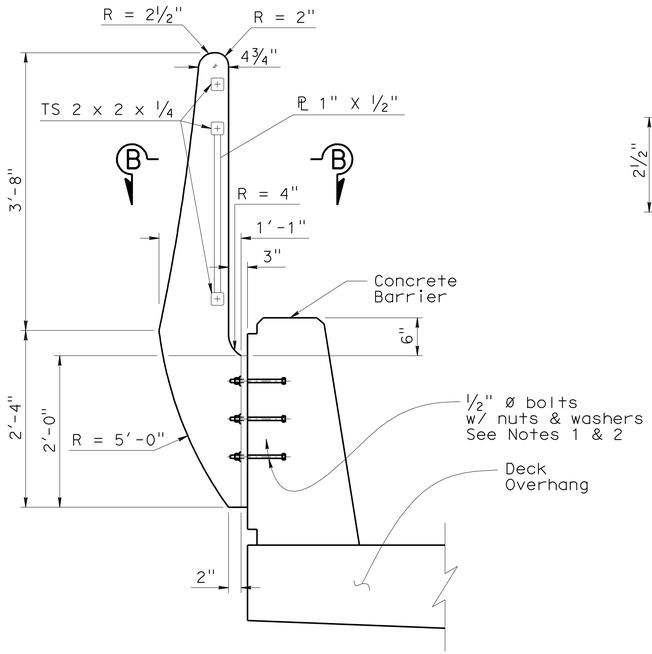


## TYPICAL BICYCLE RAILING POST

1" = 1'-0"

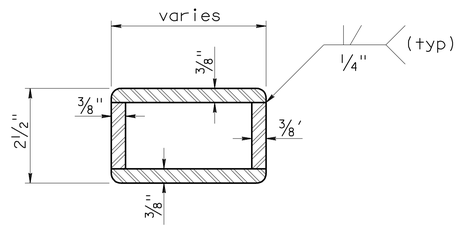


## SECTION B-B

6" = 1'-0"

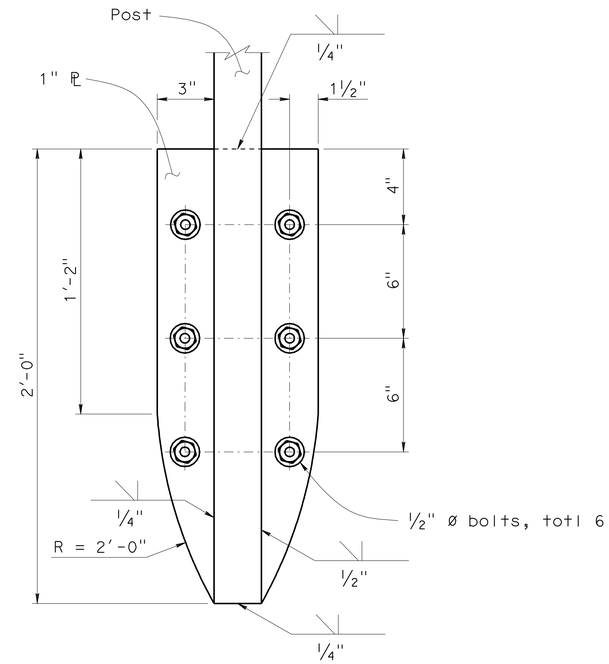


## TYPICAL POST CONNECTION

3" = 1'-0"

NOTES:

1. 6" minimum bolt embedment into barrier.
2. Apply thread locking compound.

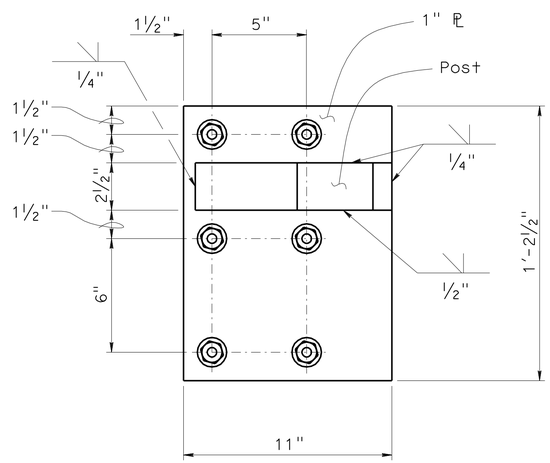


## POST CONNECTION @ LIGHT PEDESTAL

3" = 1'-0"

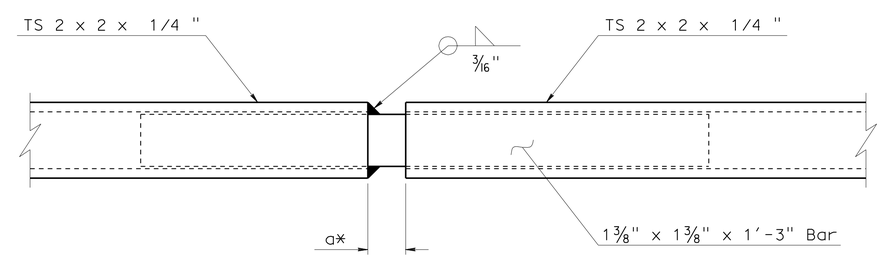


## RAILING EXPANSION MECHANISM DETAIL

6" = 1'-0"

* Gap at time of Railing installation

| Season | Gap a |
|---|---|
| Summer | 1" |
| Winter | 2½" |
| Fall/ Spring | 1¾" |

| | | | |
|---|---|---|---|
| DESIGN | BY F. Zayati | CHECKED R. Bromenschenkel | |
| DETAILS | BY T. Nguyen | CHECKED F. Zayati | |
| QUANTITIES | BY P. Peterson | CHECKED J. Peterson | |

STATE OF CALIFORNIA DEPARTMENT OF TRANSPORTATION

DIVISION OF ENGINEERING SERVICES STRUCTURE DESIGN DESIGN BRANCH 14

BRIDGE NO. 53-3033
POST MILE 0.01

# NEW DOCK STREET ON-RAMP
# RAILING DETAILS NO. 2

STRUCTURES DESIGN DETAIL SHEET (ENGLISH) (REV. 10/25/05)

ORIGINAL SCALE IN INCHES FOR REDUCED PLANS 0 1 2 3

CU 07-271
EA 138201

DISREGARD PRINTS BEARING EARLIER REVISION DATES

REVISION DATES: 05-05-10

SHEET 35 OF 40

FILE => 53-3033-t-raildt02.dgn

USERNAME => trlenard DATE PLOTTED => 18-OCT-2010 TIME PLOTTED => 15:45

| DIST | COUNTY | ROUTE | POST MILES TOTAL PROJECT | SHEET No | TOTAL SHEETS |
|---|---|---|---|---|---|
| 07 | LA | 47,103 | 3.5/4.6, 0.0/1.1 | 785 | 1003 |

REGISTERED ENGINEER — DATE 04/19/10

PLANS APPROVAL DATE 10-11-10

*The State of California or its officers or agents shall not be responsible for the accuracy or completeness of electronic copies of this plan sheet.*

REGISTERED PROFESSIONAL ENGINEER ERIC BROWN NO. GE-2806 EXP. 06-30-2010 GEOTECHNICAL STATE OF CALIFORNIA

ACTA
ONE CIVIC PLAZA, SUITE 350,
CARSON, CA 90745

EARTH MECHANICS, INC.
17660, NEWHOPE STREET, SUITE E
FOUNTAIN VALLEY, CA 92708

BENCHMARKS:

| PT-524 | PT-525 |
|---|---|
| SET REBAR | SET + VLT |
| 19.536'Lt ℄ Line SR 47 | 34.81'Lt ℄ "A" Line |
| Sta. 16+00.56 | Sta. 14+00.95 |
| N 1736134.90 | N 1735941.10 |
| E 6488978.91 | E 6489032.50 |
| Elev. = -0.51 | Elev. = 0.12 |

NOTES:

(1) This LOTB sheet (Boring Record) was prepared in accordance with the Caltrans Soil and Rock Classification Logging, Classification and Presentation Manual (June 2007).

(2) 2.4" samples were taken using a California Split-spoon Sampler.

(3) A rope and cat-head hammer system consisting of a hammer weight of 140 lbs falling a distance of 30" was used to advance the drive sampler.

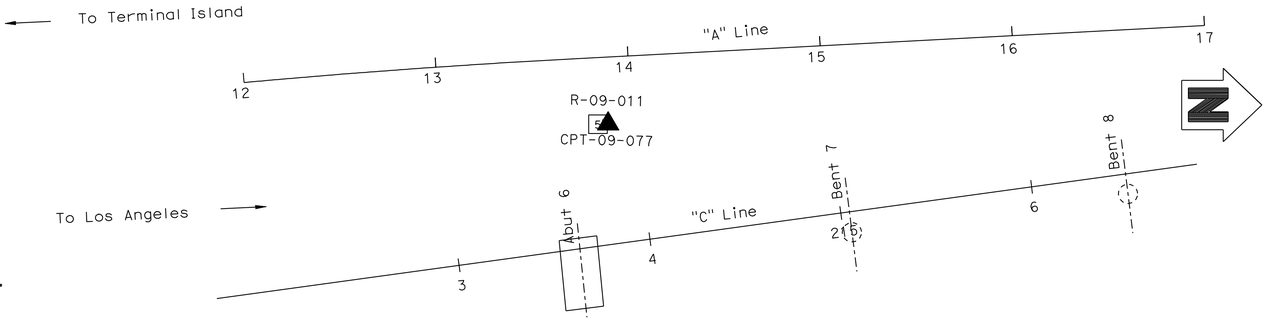


## PLAN

1" = 40'

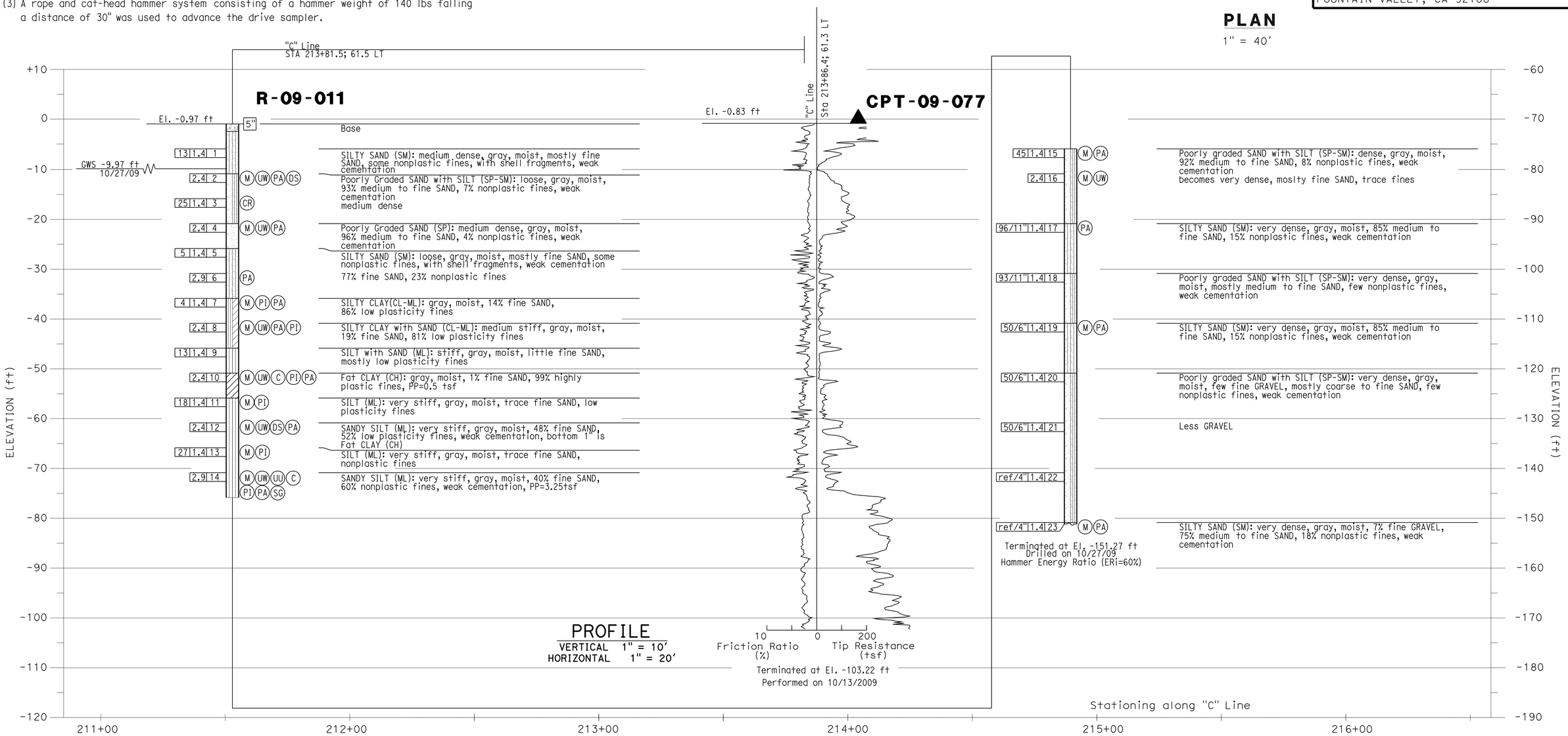


| | | | | | |
|---|---|---|---|---|---|
| DESIGN OVERSIGHT | DRAWN BY: J.Fang | FIELD INVESTIGATION BY: | PREPARED FOR THE STATE OF CALIFORNIA DEPARTMENT OF TRANSPORTATION | E. Brown PROJECT ENGINEER | BRIDGE NO. 53-3033 / POST MILE 3.74 |
| SIGN OFF DATE | CHECKED BY: K.Pratheepan | E.Brown | | | |

# NEW DOCK STREET ON-RAMP

# LOG OF TEST BORINGS NO. 1 OF 5

OGS CIVIL LOG OF TEST BORINGS SHEET (ENGLISH) (REV. 06-01-09)

ORIGINAL SCALE IN INCHES FOR REDUCED PLANS 0 1 2 3

CU 07-271
EA 138201

DISREGARD PRINTS BEARING EARLIER REVISION DATES

REVISION DATES (PRELIMINARY STAGE ONLY) 02/04/10 03/24/10 07/02/10

SHEET 36 OF 40

FILE => 53-3033-z-1tb01.dgn

USERNAME => trlenard DATE PLOTTED => 18-OCT-2010 TIME PLOTTED => 15:45

| DIST | COUNTY | ROUTE | POST MILES TOTAL PROJECT | SHEET No | TOTAL SHEETS |
|---|---|---|---|---|---|
| 07 | LA | 47,103 | 3.5/4.6, 0.0/1.1 | 786 | 1003 |

REGISTERED ENGINEER — DATE 04/19/10

PLANS APPROVAL DATE 10-11-10

REGISTERED PROFESSIONAL ENGINEER ERIC BROWN NO. GE-2806 EXP. 06-30-2010 GEOTECHNICAL STATE OF CALIFORNIA

*The State of California or its officers or agents shall not be responsible for the accuracy or completeness of electronic copies of this plan sheet.*

ACTA
ONE CIVIC PLAZA. SUITE 350,
CARSON, CA 90745

EARTH MECHANICS, INC.
17660, NEWHOPE STREET, SUITE E
FOUNTAIN VALLEY, CA 92708

BENCHMARKS:

| PT-524 | PT-525 |
|---|---|
| SET REBAR | SET + VLT |
| 19.536'Lt ℄ Line SR 47 | 34.81'Lt ℄ "A" Line |
| Sta. 16+00.56 | Sta. 14+00.95 |
| N 1736134.90 | N 1735941.10 |
| E 6488978.91 | E 6489032.50 |
| Elev. = -0.51 | Elev. = 0.12 |

NOTES:

(1) This LOTB sheet (Boring Record) was prepared in accordance with the Caltrans Soil and Rock Classification Logging, Classification and Presentation Manual (June 2007).

(2) 2.4" samples were taken using a California Split-spoon Sampler.

(3) An automatic trip hammer system consisting of a hammer weight of 140 lbs falling a distance of 30" was used to advance the drive sampler.

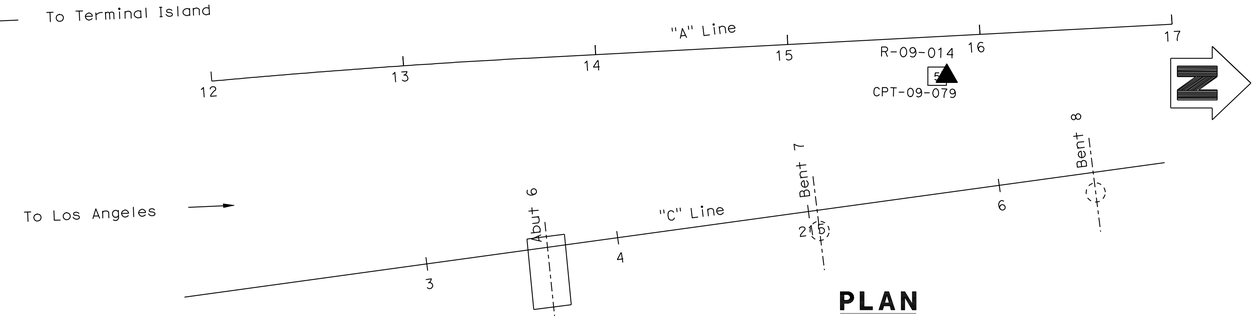


PLAN
1" = 40'

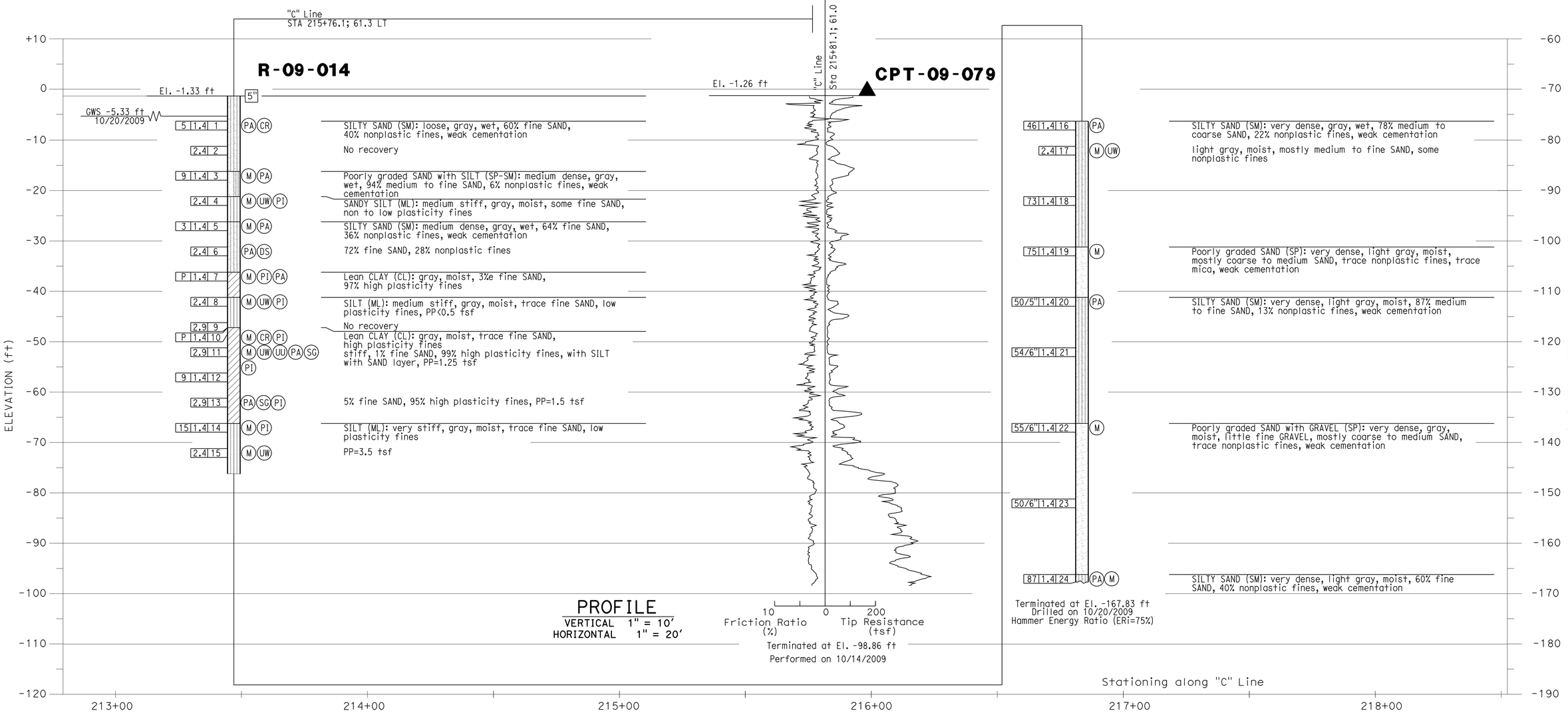


| | | | | | |
|---|---|---|---|---|---|
| DESIGN OVERSIGHT | DRAWN BY: J.Fang | FIELD INVESTIGATION BY: | PREPARED FOR THE STATE OF CALIFORNIA DEPARTMENT OF TRANSPORTATION | E. Brown PROJECT ENGINEER | BRIDGE NO. 53-3033 / POST MILE 3.74 |
| SIGN OFF DATE | CHECKED BY: K.Pratheepan | E.Brown | | | |

# NEW DOCK STREET ON-RAMP

# LOG OF TEST BORINGS NO. 2 OF 5

OGS CIVIL LOG OF TEST BORINGS SHEET (ENGLISH) (REV. 06-01-09)

ORIGINAL SCALE IN INCHES FOR REDUCED PLANS 0 1 2 3

CU 07-271
EA 138201

DISREGARD PRINTS BEARING EARLIER REVISION DATES — REVISION DATES (PRELIMINARY STAGE ONLY) 02/05/10 03/24/10 01/02/10

SHEET 37 OF 40

FILE => 53-3033-z-ltb02.dgn

USERNAME => friehard DATE PLOTTED => 18-OCT-2010 TIME PLOTTED => 15:45

| DIST | COUNTY | ROUTE | POST MILES TOTAL PROJECT | SHEET No | TOTAL SHEETS |
|---|---|---|---|---|---|
| 07 | LA | 47,103 | 3.5/4.6, 0.0/1.1 | 787 | 1003 |

REGISTERED ENGINEER — DATE 04/19/10

10-11-10
PLANS APPROVAL DATE

REGISTERED PROFESSIONAL ENGINEER ERIC BROWN NO. GE-2806 EXP. 06-30-2010 GEOTECHNICAL STATE OF CALIFORNIA

*The State of California or its officers or agents shall not be responsible for the accuracy or completeness of electronic copies of this plan sheet.*

ACTA
ONE CIVIC PLAZA. SUITE 350,
CARSON, CA 90745

EARTH MECHANICS, INC.
17660, NEWHOPE STREET, SUITE E
FOUNTAIN VALLEY, CA 92708

BENCHMARKS:

| PT-524 | PT-525 |
|---|---|
| SET REBAR | SET + VLT |
| 19.536'Lt ℄ Line SR 47 | 34.81'Lt ℄ "A" Line |
| Sta. 16+00.56 | Sta. 14+00.95 |
| N 1736134.90 | N 1735941.10 |
| E 6488978.91 | E 6489032.50 |
| Elev. = -0.51 | Elev. = 0.12 |

NOTES:

(1) This LOTB sheet (Boring Record) was prepared in accordance with the Caltrans Soil and Rock Classification Logging, Classification and Presentation Manual (June 2007).

(2) 2.4" samples were taken using a California Split-spoon Sampler.

(3) A rope and cat-head hammer system consisting of a hammer weight of 140 lbs falling a distance of 30" was used to advance the drive sampler.

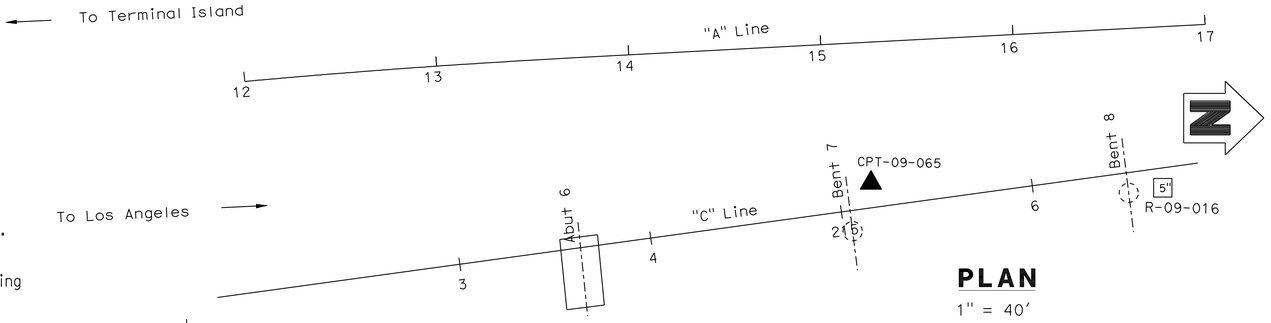


**PLAN**
1" = 40'

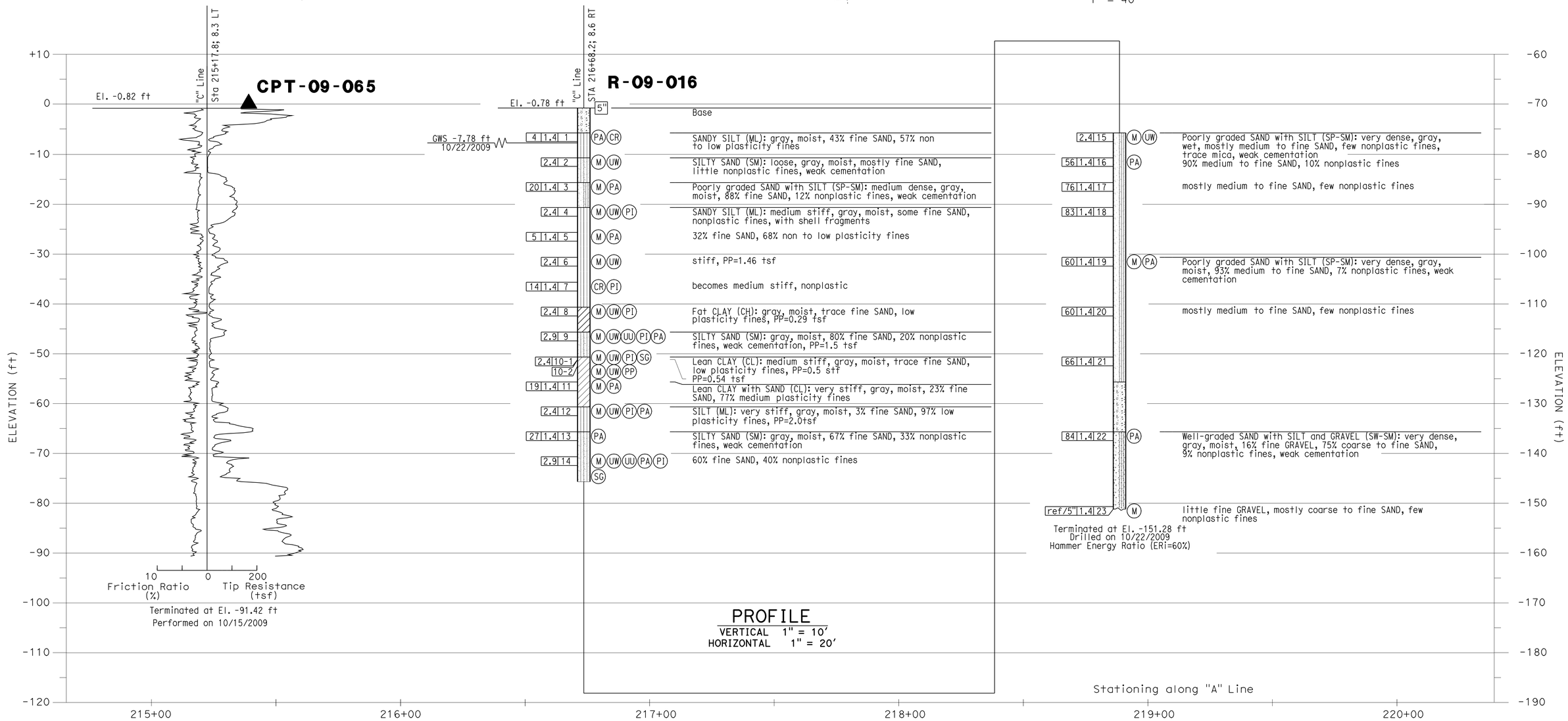


| | | | | | |
|---|---|---|---|---|---|
| DESIGN OVERSIGHT | DRAWN BY: J.Fang | FIELD INVESTIGATION BY: | PREPARED FOR THE STATE OF CALIFORNIA DEPARTMENT OF TRANSPORTATION | E. Brown PROJECT ENGINEER | BRIDGE NO. 53-3033 / POST MILE 3.74 |
| SIGN OFF DATE | CHECKED BY: K.Pratheepan | E.Brown | | | |

# NEW DOCK STREET ON-RAMP
# LOG OF TEST BORINGS NO. 3 OF 5

OGS CIVIL LOG OF TEST BORINGS SHEET (ENGLISH) (REV. 06-01-09)

ORIGINAL SCALE IN INCHES FOR REDUCED PLANS 0 1 2 3

CU 07-271
EA 138201

DISREGARD PRINTS BEARING EARLIER REVISION DATES — REVISION DATES (PRELIMINARY STAGE ONLY) 02/08/10 03/03/10 07/02/10

SHEET 38 OF 40

FILE => 53-3033-z-lttb03.dgn

USERNAME => trienard DATE PLOTTED => 18-OCT-2010 TIME PLOTTED => 15:45

REFERENCE: CALTRANS SOIL & ROCK LOGGING, CLASSIFICATION, AND PRESENTATION MANUAL (JUNE 2007)

| DIST | COUNTY | ROUTE | POST MILES TOTAL PROJECT | SHEET No | TOTAL SHEETS |
|---|---|---|---|---|---|
| 07 | LA | 47,103 | 3.5/4.6, 0.0/1.1 | 788 | 1003 |

REGISTERED ENGINEER — DATE 04/19/10

REGISTERED PROFESSIONAL ENGINEER ERIC BROWN NO. GE-2806 EXP. 06-30-2010 GEOTECHNICAL STATE OF CALIFORNIA

10-11-10
PLANS APPROVAL DATE

*The State of California or its officers or agents shall not be responsible for the accuracy or completeness of electronic copies of this plan sheet.*

ACTA
ONE CIVIC PLAZA. SUITE 350,
CARSON, CA 90745

EARTH MECHANICS, INC.
17660, NEWHOPE STREET, SUITE E
FOUNTAIN VALLEY, CA 92708

## CEMENTATION

| Description | Criteria |
|---|---|
| Weak | Crumbles or breaks with handling or little finger pressure. |
| Moderate | Crumbles or breaks with considerable finger pressure. |
| Strong | Will not crumble or break with finger pressure. |

## CONSISTENCY OF COHESIVE SOILS

| Description | Unconfined Compressive Strength (tsf) | Pocket Penetrometer Measurement (tsf) | Torvane Measurement (tsf) | Field Approximation |
|---|---|---|---|---|
| Very Soft | < 0.25 | < 0.25 | < 0.12 | Easily penetrated several inches by fist |
| Soft | 0.25 to 0.50 | 0.25 to 0.50 | 0.12 to 0.25 | Easily penetrated several inches by thumb |
| Medium Stiff | 0.50 to 1.0 | 0.50 to 1.0 | 0.25 to 0.50 | Penetrated several inches by thumb with moderate effort |
| Stiff | 1 to 2 | 1 to 2 | 0.50 to 1.0 | Readily indented by thumb but penetrated only with great effort |
| Very Stiff | 2 to 4 | 2 to 4 | 1.0 to 2.0 | Readily indented by thumbnail |
| Hard | > 4.0 | > 4.0 | > 2.0 | Indented by thumbnail with difficulty |

## BOREHOLE IDENTIFICATION

| Symbol | Hole Type | Description |
|---|---|---|
| Size | A | Auger Boring |
| Size | R<br>P | Rotary drilled boring<br>Rotary percussion boring (air) |
| Size | R | Rotary drilled diamond core |
| Size | HD<br>HA | Hand driven (1-inch soil tube)<br>Hand Auger |
| ● | D | Dynamic Cone Penetration Boring |
| ▲ | CPT | Cone Penetration Test (ASTM D 5778-95) |
| ⬚ | O | Other |

**Note: Size in inches.**

## PLASTICITY OF FINE-GRAINED SOILS

| Description | Criteria |
|---|---|
| Nonplastic | A 1/8-inch thread cannot be rolled at any water content. |
| Low | The thread can barely be rolled and the lump cannot be formed when drier than the plastic limit. |
| Medium | The thread is easy to roll and not much time is required to reach the plastic limit. The thread cannot be rerolled after reaching the plastic limit. The lump crumbles when drier than the plastic limit. |
| High | It takes considerable time rolling and kneading to reach the plastic limit. The thread can be rerolled several times after reaching the plastic limit. The lump can be formed without crumbling when drier than the plastic limit. |

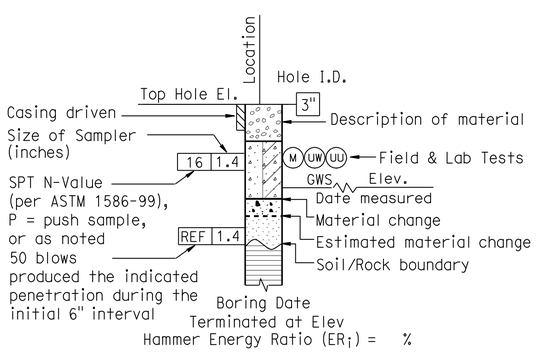


**ROTARY BORING**

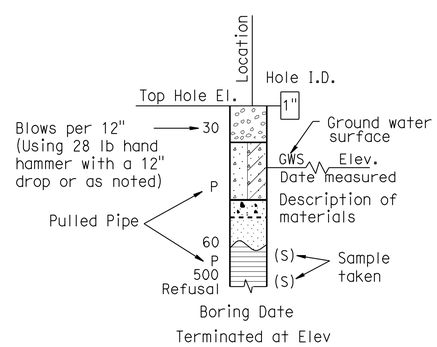


**HAND BORING**

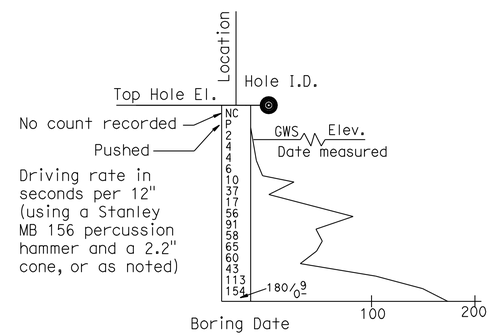


**DYNAMIC CONE PENETRATION BORING**

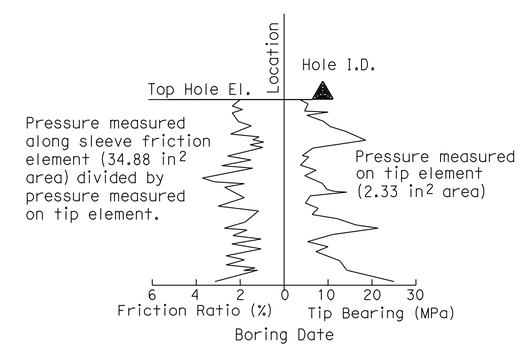


**CONE PENETRATION TEST (CPT) SOUNDING**

| | | | | | |
|---|---|---|---|---|---|
| DESIGN OVERSIGHT<br>SIGN OFF DATE | DRAWN BY: J.Fang<br>CHECKED BY: K.Pratheepan | FIELD INVESTIGATION BY:<br>E.Brown | PREPARED FOR THE STATE OF CALIFORNIA DEPARTMENT OF TRANSPORTATION | E. Brown<br>PROJECT ENGINEER | BRIDGE NO. 53-3033<br>POST MILE 3.74 |

# NEW DOCK STREET ON-RAMP
# LOG OF TEST BORINGS NO. 4 OF 5

OGS CIVIL LOG OF TEST BORINGS SHEET (ENGLISH) (REV. 06-01-09)

ORIGINAL SCALE IN INCHES FOR REDUCED PLANS 0 1 2 3

CU 07-271
EA 138201

DISREGARD PRINTS BEARING EARLIER REVISION DATES — REVISION DATES (PRELIMINARY STAGE ONLY) 02/04/10 03/24/10 07/02/10

SHEET 39 OF 40

FILE => 53-3033-z-1tb04.dgn

USERNAME => trlenard DATE PLOTTED => 18-OCT-2010 TIME PLOTTED => 15:45

REFERENCE: CALTRANS SOIL & ROCK LOGGING, CLASSIFICATION, AND PRESENTATION MANUAL (JUNE 2007)

## GROUP SYMBOLS AND NAMES

| Graphic/Symbol | Group Names |
|---|---|
| GW | Well-graded GRAVEL<br>Well-graded GRAVEL with SAND |
| GP | Poorly graded GRAVEL<br>Poorly graded GRAVEL with SAND |
| GW-GM | Well-graded GRAVEL with SILT<br>Well-graded GRAVEL with SILT and SAND |
| GW-GC | Well-graded GRAVEL with CLAY (or SILTY CLAY)<br>Well-graded GRAVEL with CLAY and SAND (or SILTY CLAY and SAND) |
| GP-GM | Poorly graded GRAVEL with SILT<br>Poorly graded GRAVEL with SILT and SAND |
| GP-GC | Poorly graded GRAVEL with CLAY (or SILTY CLAY)<br>Poorly graded GRAVEL with CLAY and SAND (or SILTY CLAY and SAND) |
| GM | SILTY GRAVEL<br>SILTY GRAVEL with SAND |
| GC | CLAYEY GRAVEL<br>CLAYEY GRAVEL with SAND |
| GC-GM | SILTY, CLAYEY GRAVEL<br>SILTY, CLAYEY GRAVEL with SAND |
| SW | Well-graded SAND<br>Well-graded SAND with GRAVEL |
| SP | Poorly graded SAND<br>Poorly graded SAND with GRAVEL |
| SW-SM | Well-graded SAND with SILT<br>Well-graded SAND with SILT and GRAVEL |
| SW-SC | Well-graded SAND with CLAY (or SILTY CLAY)<br>Well-graded SAND with CLAY and GRAVEL (or SILTY CLAY and GRAVEL) |
| SP-SM | Poorly graded SAND with SILT<br>Poorly graded SAND with SILT and GRAVEL |
| SP-SC | Poorly graded SAND with CLAY (or SILTY CLAY)<br>Poorly graded SAND with CLAY and GRAVEL (or SILTY CLAY and GRAVEL) |
| SM | SILTY SAND<br>SILTY SAND with GRAVEL |
| SC | CLAYEY SAND<br>CLAYEY SAND with GRAVEL |
| SC-SM | SILTY, CLAYEY SAND<br>SILTY, CLAYEY SAND with GRAVEL |
| PT | PEAT |
| | COBBLES<br>COBBLES and BOULDERS<br>BOULDERS |

| Graphic/Symbol | Group Names |
|---|---|
| CL | Lean CLAY<br>Lean CLAY with SAND<br>Lean CLAY with GRAVEL<br>SANDY lean CLAY<br>SANDY lean CLAY with GRAVEL<br>GRAVELLY lean CLAY<br>GRAVELLY lean CLAY with SAND |
| CL-ML | SILTY CLAY<br>SILTY CLAY with SAND<br>SILTY CLAY with GRAVEL<br>SANDY SILTY CLAY<br>SANDY SILTY CLAY with GRAVEL<br>GRAVELLY SILTY CLAY<br>GRAVELLY SILTY CLAY with SAND |
| ML | SILT<br>SILT with SAND<br>SILT with GRAVEL<br>SANDY SILT<br>SANDY SILT with GRAVEL<br>GRAVELLY SILT<br>GRAVELLY SILT with SAND |
| OL | ORGANIC lean CLAY<br>ORGANIC lean CLAY with SAND<br>ORGANIC lean CLAY with GRAVEL<br>SANDY ORGANIC lean CLAY<br>SANDY ORGANIC lean CLAY with GRAVEL<br>GRAVELLY ORGANIC lean CLAY<br>GRAVELLY ORGANIC lean CLAY with SAND |
| OL | ORGANIC SILT<br>ORGANIC SILT with SAND<br>ORGANIC SILT with GRAVEL<br>SANDY ORGANIC SILT<br>SANDY ORGANIC SILT with GRAVEL<br>GRAVELLY ORGANIC SILT<br>GRAVELLY ORGANIC SILT with SAND |
| CH | Fat CLAY<br>Fat CLAY with SAND<br>Fat CLAY with GRAVEL<br>SANDY fat CLAY<br>SANDY fat CLAY with GRAVEL<br>GRAVELLY fat CLAY<br>GRAVELLY fat CLAY with SAND |
| MH | Elastic SILT<br>Elastic SILT with SAND<br>Elastic SILT with GRAVEL<br>SANDY elastic SILT<br>SANDY elastic SILT with GRAVEL<br>GRAVELLY elastic SILT<br>GRAVELLY elastic SILT with SAND |
| OH | ORGANIC fat CLAY<br>ORGANIC fat CLAY with SAND<br>ORGANIC fat CLAY with GRAVEL<br>SANDY ORGANIC fat CLAY<br>SANDY ORGANIC fat CLAY with GRAVEL<br>GRAVELLY ORGANIC fat CLAY<br>GRAVELLY ORGANIC fat CLAY with SAND |
| OH | ORGANIC elastic SILT<br>ORGANIC elastic SILT with SAND<br>ORGANIC elastic SILT with GRAVEL<br>SANDY ORGANIC elastic SILT<br>SANDY ORGANIC elastic SILT with GRAVEL<br>GRAVELLY ORGANIC elastic SILT<br>GRAVELLY ORGANIC elastic SILT with SAND |
| OL/OH | ORGANIC SOIL<br>ORGANIC SOIL with SAND<br>ORGANIC SOIL with GRAVEL<br>SANDY ORGANIC SOIL<br>SANDY ORGANIC SOIL with GRAVEL<br>GRAVELLY ORGANIC SOIL<br>GRAVELLY ORGANIC SOIL with SAND |

## FIELD AND LABORATORY TESTING

- (C) Consolidation (ASTM D 2435)
- (CL) Collapse Potential (ASTM D 5333)
- (CP) Compaction Curve (CTM 216)
- (CR) Corrosivity Testing (CTM 643, CTM 422, CTM 417)
- (CU) Consolidated Undrained Triaxial (ASTM D 4767)
- (DS) Direct Shear (ASTM D 3080)
- (EI) Expansion Index (ASTM D 4829)
- (M) Moisture Content (ASTM D 2216)
- (OC) Organic Content-% (ASTM D 2974)
- (P) Permeability (CTM 220)
- (PA) Particle Size Analysis (ASTM D 422)
- (PI) Plasticity Index (AASHTO T 90) Liquid Limit (AASHTO T 89)
- (PL) Point Load Index (ASTM D 5731)
- (PM) Pressure Meter
- (PP) Pocket Penetrometer
- (R) R-Value (CTM 301)
- (SE) Sand Equivalent (CTM 217)
- (SG) Specific Gravity (AASHTO T 100)
- (SL) Shrinkage Limit (ASTM D 427)
- (SW) Swell Potential (ASTM D 4546)
- (TV) Pocket Torvane
- (UC) Unconfined Compression-Soil (ASTM D 2166) Unconfined Compression-Rock (ASTM D 2938)
- (UU) Unconsolidated Undrained Triaxial (ASTM D 2850)
- (UW) Unit Weight (ASTM D 4767)
- (VS) Vane Shear (AASHTO T 223)

| DIST | COUNTY | ROUTE | POST MILES TOTAL PROJECT | SHEET No | TOTAL SHEETS |
|---|---|---|---|---|---|
| 07 | LA | 47,103 | 3.5/4.6, 0.0/1.1 | 789 | 1003 |

REGISTERED ENGINEER — DATE 04/19/10

PLANS APPROVAL DATE 10-11-10

REGISTERED PROFESSIONAL ENGINEER ERIC BROWN NO. GE-2806 EXP. 06-30-2010 GEOTECHNICAL STATE OF CALIFORNIA

*The State of California or its officers or agents shall not be responsible for the accuracy or completeness of electronic copies of this plan sheet.*

ACTA
ONE CIVIC PLAZA. SUITE 350,
CARSON, CA 90745

EARTH MECHANICS, INC.
17660, NEWHOPE STREET, SUITE E
FOUNTAIN VALLEY, CA 92708

## APPARENT DENSITY OF COHESIONLESS SOILS

| Description | SPT $N_{60}$ (Blows / 12 inches) |
|---|---|
| Very loose | 0 - 4 |
| Loose | 5 - 10 |
| Medium Dense | 11 - 30 |
| Dense | 31 - 50 |
| Very Dense | > 50 |

## MOISTURE

| Description | Criteria |
|---|---|
| Dry | Absence of moisture, dusty, dry to the touch |
| Moist | Damp but no visible water |
| Wet | Visible free water, usually soil is below water table |

## PERCENT OR PROPORTION OF SOILS

| Description | Criteria |
|---|---|
| Trace | Particles are present but estimated to be less than 5% |
| Few | 5 to 10% |
| Little | 15 to 25% |
| Some | 30 to 45% |
| Mostly | 50 to 100% |

## PARTICLE SIZE

| Description | | Size |
|---|---|---|
| Boulder | | > 12" |
| Cobble | | 3" to 12" |
| Gravel | Coarse | 3/4" to 3" |
| | Fine | No. 4 to 3/4" |
| Sand | Coarse | No. 10 to No. 4 |
| | Medium | No. 40 to No. 10 |
| | Fine | No. 200 to No. 40 |

DESIGN OVERSIGHT

SIGN OFF DATE

DRAWN BY: J.Fang

CHECKED BY: K.Pratheepan

FIELD INVESTIGATION BY: E.Brown

PREPARED FOR THE STATE OF CALIFORNIA DEPARTMENT OF TRANSPORTATION

E. Brown
PROJECT ENGINEER

BRIDGE NO. 53-3033
POST MILE 3.74

# NEW DOCK STREET ON-RAMP
# LOG OF TEST BORINGS NO. 5 OF 5

OGS CIVIL LOG OF TEST BORINGS SHEET (ENGLISH) (REV. 06-01-09)

ORIGINAL SCALE IN INCHES FOR REDUCED PLANS 0 1 2 3

CU 07-271
EA 138201

DISREGARD PRINTS BEARING EARLIER REVISION DATES

REVISION DATES (PRELIMINARY STAGE ONLY) 02/08/10 03/02/10 07/02/10

SHEET 40 OF 40

FILE => 53-3033-z-1tb05.dgn

USERNAME => trienard DATE PLOTTED => 18-OCT-2010 TIME PLOTTED => 15:45

| DIST | COUNTY | ROUTE | POST MILES TOTAL PROJECT | SHEET No | TOTAL SHEETS |
|---|---|---|---|---|---|
| 07 | LA | 47,103 | 3.5/4.6, 0.0/1.1 | 790 | 1003 |

Foued Zayati 05-24-10
REGISTERED CIVIL ENGINEER DATE

10-11-10
PLANS APPROVAL DATE

*The State of California or its officers or agents shall not be responsible for the accuracy or completeness of electronic copies of this plan sheet.*

REGISTERED PROFESSIONAL ENGINEER
FOUED ZAYATI
No. C57046
Exp. 06-30-11
CIVIL
STATE OF CALIFORNIA

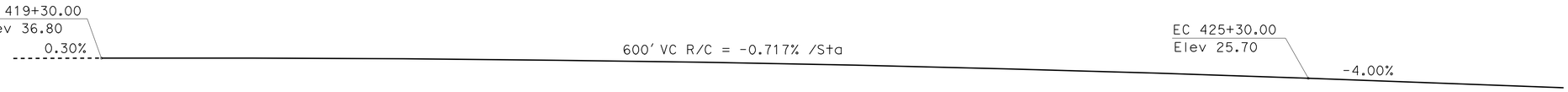


## PROFILE GRADE
No Scale

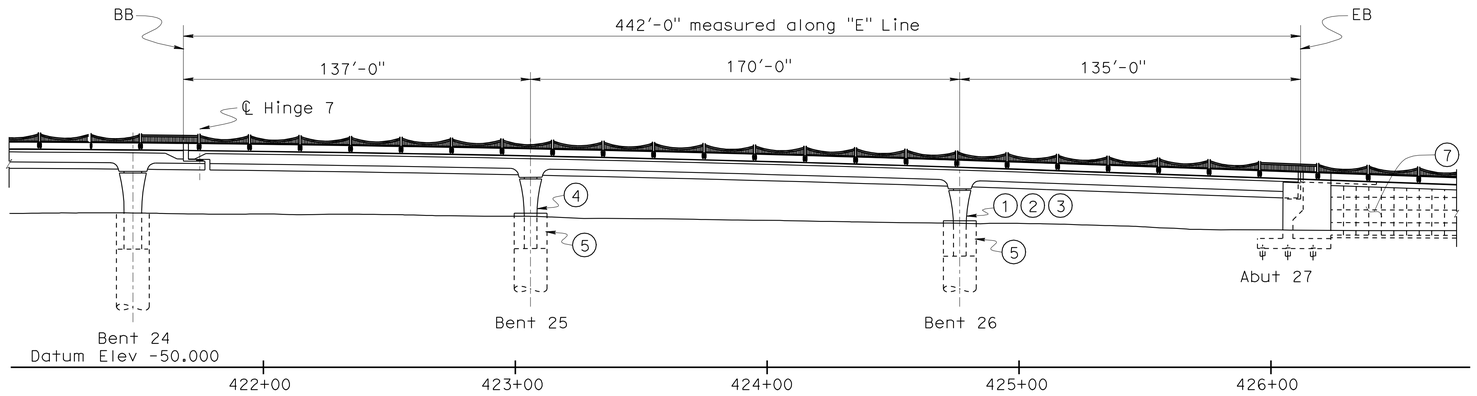


## DEVELOPED ELEVATION
1"=30'

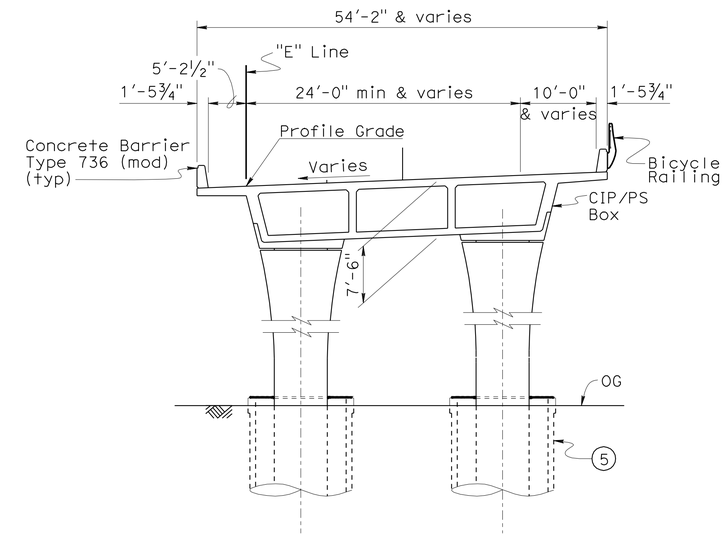


## TYPICAL SECTION
1"=10'

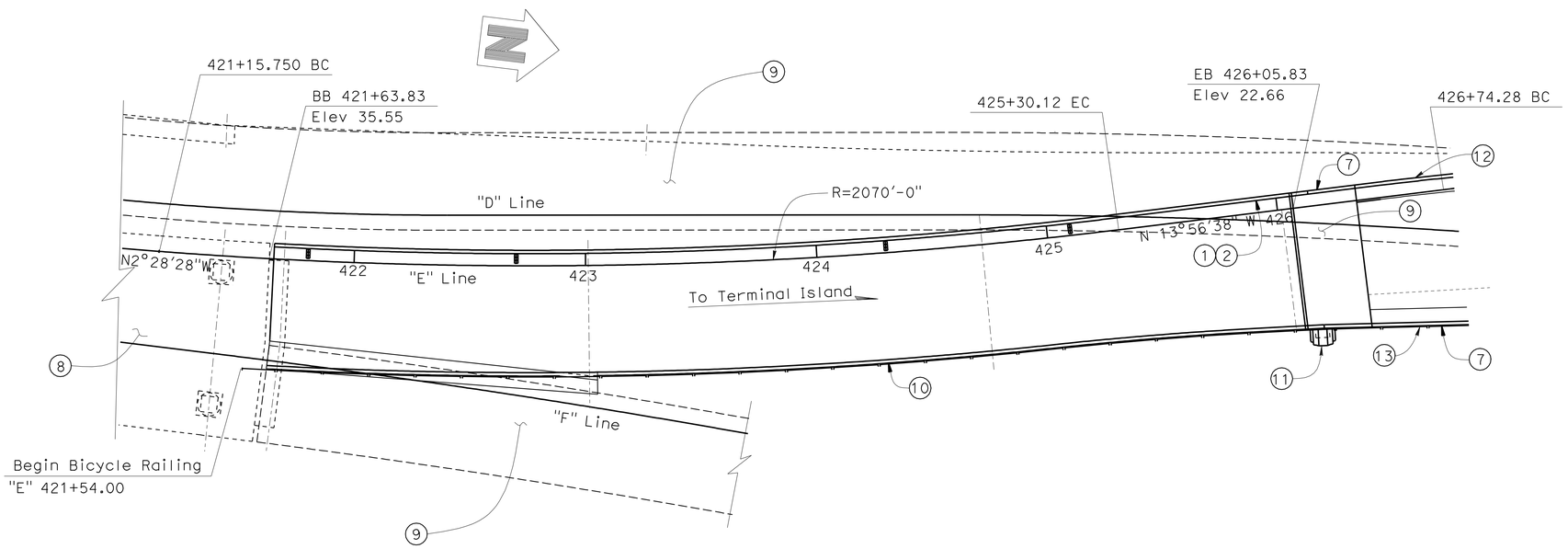


## PLAN
1"=30'

NOTES:

1. Paint "SB SR103 Off-Ramp"
2. Paint "Bridge No. 53-3034K"
3. Paint "Bent No. 26"
4. Paint "Bent No. 25"
5. Column Isolation/Permanent Casing
6. Structure Approach Slab, Type N(30S)
7. MSE Retaining Wall, see Wall Plans
8. See "Schuyler Heim Bridge " Plans, Bridge # 53-3032
9. SR 47 Expressway Structures (by others)
10. See Girder Layout sheets for Edge of Deck Layout.
11. Structure mounted sign pedestal
12. E1 MSE Wall No. 53E0149, see wall plans.
13. E2 MSE Wall No. 53E0150, see wall plans.

▮ Indicates Deck Drain

Foued Zayati
DESIGN ENGINEER

| | BY | CHECKED | | | |
|---|---|---|---|---|---|
| DESIGN | L. Bahia | V. Ramakrishnan | LOAD & RESISTANCE FACTOR DESIGN | LIVE LOADING: 1.2MHL93 W/"LOW-BOY"; PERMIT DESIGN VEHICLE | |
| DETAILS | T. Nguyen | F. Zayati | LAYOUT | F. Zayati | V. Ramakrishnan |
| QUANTITIES | J. Lane | V. Ramakrishnan | SPECIFICATIONS | X | PLANS AND SPECS COMPARED X |

STATE OF CALIFORNIA
DEPARTMENT OF TRANSPORTATION

DIVISION OF ENGINEERING SERVICES
STRUCTURE DESIGN
DESIGN BRANCH 14

BRIDGE NO. 53-3034K
POST MILE 0.01

# NB SR-103 OFF-RAMP
# GENERAL PLAN

STRUCTURES DESIGN GENERAL PLAN SHEET (ENGLISH) (REV. 10/25/05)

ORIGINAL SCALE IN INCHES FOR REDUCED PLANS 0 1 2 3

CU 07-271
EA 138201

DISREGARD PRINTS BEARING EARLIER REVISION DATES

REVISION DATES: 06-30-10 07-09-10 07-14-10 09-04-07 03-28-08 03-26-08 07-16-08 5-30-09 05-17-10 5-23-10

SHEET 1 OF 47

FILE => 53-3034k-a-gp.dgn

STRUCTURES DESIGN GENERAL PLAN SHEET (ENGLISH) (REV.07-24-06)

USERNAME => frlenard DATE PLOTTED => 18-OCT-2010 TIME PLOTTED => 15:45

| DIST | COUNTY | ROUTE | POST MILES TOTAL PROJECT | SHEET No | TOTAL SHEETS |
|---|---|---|---|---|---|
| 07 | LA | 47,103 | 3.5/4.6, 0.0/1.1 | 791 | 1003 |

REGISTERED CIVIL ENGINEER — DATE 05-24-10

10-11-10
PLANS APPROVAL DATE

REGISTERED PROFESSIONAL ENGINEER — FOUED ZAYATI — No. C57046 — Exp. 06-30-11 — CIVIL — STATE OF CALIFORNIA

*The State of California or its officers or agents shall not be responsible for the accuracy or completeness of electronic copies of this plan sheet.*

# GENRAL NOTES
# LOAD AND RESISTANCE FACTOR DESIGN

DESIGN:
AASHTO LRFD Bridge Design Specifications, 3rd edition with the 2005, 2006 Interims and the California Amendments v3.06.01; except that earth retaining systems, bridge barrier and railing details taken from Standard Plans May 2006 and earlier versions, and Standard Bridge Details XS Sheets are designed using Bridge Design Specifications LFD Version April 2000 ('96 AASHTO w/Revisions by Caltrans)

SEISMIC DESIGN:
Caltrans Seismic Design Criteria (SDC), Version 1.4 dated June 2006.

DEAD LOAD:
Includes 35 psf for future wearing surface.

LIVE LOADING:
1.2*HL-93 and Low-Boy and Permit design loading.

SEISMIC LOADING:
Soil profile type D adjusted for near field effects
Magnitude 7.25 +/- 0.25
Peak Rock Acceleration 0.6g

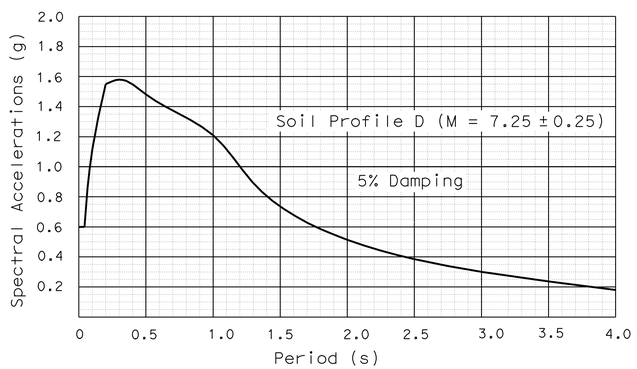


CONCRETE:
fy = 60 ksi
f'c = 3.6 ksi
n = 8

PRESTRESSED CONCRETE:
See prestressing notes.

STRUCTURAL STEEL:
fy = ASTM A709 Grade 50

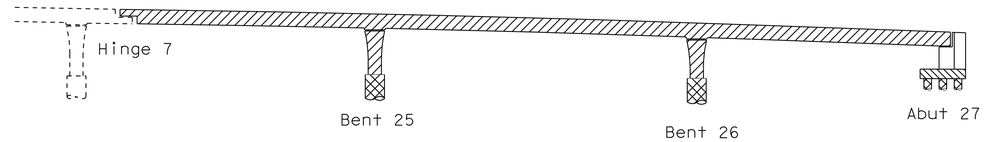


Structural Concrete, Bridge (f'c = 3.6 ksi @ 28days)
Structural Concrete, Bridge Footing (f'c = 3.6 ksi @ 28days)
Structural Concrete, Bridge (f'c = 4.0 ksi @ 28 days)
Cast-In-Drilled Hole Pilingn (f'c = 3.6 ksi @ 28 days)

## CONCRETE STRENGTH AND TYPE LIMITS
No Scale

## QUANTITIES

| | | |
|---|---|---|
| STRUCTURE EXCAVATION (TYPE A) | 250 | CY |
| STRUCTURE EXCAVATION (TYPE DC) | 278 | CY |
| STRUCTURE EXCAVATION (TYPE GC) | 402,000 | GAL |
| STRUCTURE EXCAVATION (TYPE Z-2) (AERIALLY DEPOSITED LEAD) | 99 | CY |
| STRUCTURE BACKFILL (BRIDGE) | 730 | CY |
| 30" CAST-IN-DRILLED-HOLE CONCRETE PILING | 1,599 | LF |
| 156" CAST-IN-DRILLED-HOLE CONCRETE PILING | 100 | LF |
| 144" CAST-IN-DRILLED-HOLE CONCRETE PILING | 332 | LF |
| 156" PERMANENT STEEL CASING | 100 | LF |
| PRESTRESSING CAST-IN-PLACE CONCRETE | LUMP | SUM |
| PRESTRESSING CAST-IN-PLACE CONCRETE (TRANSVERSE) | LUMP | SUM |
| SEAL COURSE CONCRETE | 452 | CY |
| STRUCTURAL CONCRETE, BRIDGE FOOTING | 224 | CY |
| STRUCTURAL CONCRETE, BRIDGE | 2,675 | CY |
| STRUCTURAL CONCRETE, APPROACH SLAB (TYPE N) | 63 | CY |
| PRECAST CONCRETE ISOLATION CASING | 96 | CY |
| PTFE SPHERICAL BEARING | 2 | EA |
| JOINT SEAL ASSEMBLY (MR = 33") | 59 | LF |
| BAR REINFORCING STEEL (BRIDGE) | 830,000 | LB |
| HEADED BAR REINFORCEMENT | 130 | EA |
| MISCELLANEOUS METAL (BRIDGE) | 14,900 | LB |
| BRIDGE DECK DRAINAGE SYSTEM | 11,000 | LB |
| BICYCLE RAILING | 472 | LF |
| CONCRETE BARRIER (TYPE 736 MODIFIED) | 946 | LF |

## STANDARD PLANS DATED MAY 2006

| | |
|---|---|
| A62C | LIMITS OF PAYMENT FOR EXCAVATION AND BACKFILL BRIDGE |
| B0-1 | BRIDGE DETAILS |
| B0-3 | BRIDGE DETAILS |
| B0-5 | BRIDGE DETAILS |
| B0-13 | BRIDGE DETAILS |
| B7-1 | BOX GIRDER DETAILS |
| B7-8 | DECK DRAINAGE DETAILS |
| B8-5 | CAST-IN-PLACE PRESTRESSED GIRDER DETAILS |

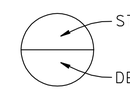


## PILE DATA TABLE

| LOCATION | PILE TYPE | DESIGN LOADING (SERVICE) | NOMINAL RESISTANCE (KIP) COMPRESSION | NOMINAL RESISTANCE (KIP) TENSION | CASING TIP ELEVATION (ft) | DESIGN TIP ELEVATION (ft) | SPECIFIED TIP ELEVATION (ft) | PILE CUTOFF ELEVATIONS (ft) | DEPTH OF SEAL COURSE (ft) | DEPTH OF CONTAMINATED SOIL | CONTAMINANTS | EXCAVATION TYPE |
|---|---|---|---|---|---|---|---|---|---|---|---|---|
| BENT 25 | 13 FT CIDH<br>12 FT CIDH | 3440 | 6490 | 0 | -25 | -117 (a) | -117 | 0.0 | 4.0 | 0' to 1' | Lead | TYPE Z-2 |
| | | | | | | | | | | 1' to 2' & 9' TO 15' | DRO & ORO | TYPE DC |
| | | | | | | | | | | 2'+ | Non-Haz | TYPE A |
| BENT 26 | 13 FT CIDH<br>12 FT CIDH | 3480 | 5090 | 0 | -28 | -102 (a) | -102 | -3.0 | 7.0 | 0' to 1' | Lead | TYPE Z-2 |
| | | | | | | | | | | 1' to 7' | Non-Haz | TYPE A |
| | | | | | | | | | | 7' to 9' | SVOCs | TYPE SC |
| | | | | | | | | | | 9'+ | Non-Haz | TYPE A |
| ABUT 27 | 2.5 FT CIDH | 230 | 460 | 0 | NA | -74 (a) | -74 | -4.75 | 4.0 | 1' to 4' | Non-Haz | TYPE A |
| | | | | | | | | | | 0' to 6' | Lead & VOCs | TYPE Z-2 |
| | | | | | | | | | | 6'+ | Non-Haz | TYPE A |

## INDEX TO PLANS


| SHEET NO. | TITLE |
|---|---|
| 1 | GENERAL PLAN |
| 2 | INDEX TO PLANS |
| 3 | DECK CONTOURS |
| 4 | FOUNDATION PLAN NO. 1 |
| 5 | FOUNDATION PLAN NO. 2 |
| 6 | ABUTMENT 27 LAYOUT |
| 7 | ABUTMENT 27 DETAILS NO. 1 |
| 8 | ABUTMENT 27 DETAILS NO. 2 |
| 9 | ABUTMENT 27 DETAILS NO. 3 |
| 10 | ABUTMENT 27 DETAILS NO. 4 |
| 11 | ABUTMENT 27 DETAILS NO. 5 |
| 12 | BENT 25 LAYOUT |
| 13 | BENT 26 LAYOUT |
| 14 | TYPICAL BENT DETAILS |
| 15 | TYPICAL SECTION NO. 1 |
| 16 | TYPICAL SECTION NO. 2 |
| 17 | GIRDER LAYOUT NO. 1 |
| 18 | GIRDER LAYOUT NO. 2 |
| 19 | GIRDER REINFORCEMENT NO. 1 |
| 20 | GIRDER REINFORCEMENT NO. 2 |
| 21 | HINGE 7 DIAPHRAGM DETAILS NO. 1 |
| 22 | HINGE 7 DIAPHRAGM DETAILS NO. 2 |
| 23 | MISCELLANEOUS DETAILS |
| 24 | 2.5 FT CIDH PILE DETAILS |
| 25 | 12 FT CIDH PILE DETAILS |
| 26 | PRECAST ISOLATION CASING DETAILS |
| 27 | ISOLATION CASING COVER DETAILS |
| 28 | PTFE BEARING DETAILS NO. 1 |
| 29 | PTFE BEARING DETAILS NO. 2 |
| 30 | JOINT SEAL ASSEMBLY LAYOUT |
| 31 | JOINT SEAL ASSEMBLY DETAILS NO. 1 |
| 32 | JOINT SEAL ASSEMBLY DETAILS NO. 2 |
| 33 | JOINT SEAL ASSEMBLY DETAILS NO. 3 |
| 34 | JOINT SEAL ASSEMBLY DETAILS NO. 4 |
| 35 | JOINT SEAL ASSEMBLY DETAILS NO. 5 |
| 36 | DECK DRAIN DETAILS |
| 37 | STRCTURE APPROACH TYPE N(30S) |
| 38 | STRUCTURE APPROACH DRAINAGE DETAILS |
| 39 | CONCRETE BARRIER DETAILS NO.1 |
| 40 | CONCRETE BARRIER DETAILS NO.2 |
| 41 | CONCRETE BARRIER DETAILS NO.3 |
| 42 | RAILING DETAILS NO. 1 |
| 43 | RAILING DETAILS NO. 2 |
| 44 | LOG OF TEST BORINGS NO. 1 OF 4 |
| 45 | LOG OF TEST BORINGS NO. 2 OF 4 |
| 46 | LOG OF TEST BORINGS NO. 3 OF 4 |
| 47 | LOG OF TEST BORINGS NO. 4 OF 4 |


NOTES:

1. Design Tip Elevations are controlled by the following demands: (a) Compression, (b) Tension, (c) Settlement, and (d) Lateral Load.
2. 0' is equivalent to existing ground surface.
3. 2'+ is soil more than 2' below Existion Ground Surface.

LEGEND:

DRO = Diesel Range Organics
ORO = Oil Range Organics
SVOCs = Semi-Volatile Organic Compounds
Non-Haz = Non-Hazardous material

| | BY | CHECKED |
|---|---|---|
| DESIGN | L. Bahia | V. Ramakrishnan |
| DETAILS | L. Xiong | F. Zayati |
| QUANTITIES | J. Lane | V. Ramakrishnan |

STATE OF CALIFORNIA
DEPARTMENT OF TRANSPORTATION

DIVISION OF ENGINEERING SERVICES
STRUCTURE DESIGN
DESIGN BRANCH 14

BRIDGE NO. 53-3034K
POST MILE 0.01

# NB SR-103 OFF-RAMP
# INDEX TO PLANS

STRUCTURES DESIGN DETAIL SHEET (ENGLISH) (REV. 10/25/05)

ORIGINAL SCALE IN INCHES FOR REDUCED PLANS 0 1 2 3

CU 07-271
EA 138201

DISREGARD PRINTS BEARING EARLIER REVISION DATES
REVISION DATES: 3-28-09 5-25-10 5-13-10 5-27-10 08-26-10

SHEET 2 OF 47

FILE => 53-3034k-a-itp.dgn

USERNAME => trmikesl DATE PLOTTED => 19-OCT-2010 TIME PLOTTED => 13:32

| DIST | COUNTY | ROUTE | POST MILES TOTAL PROJECT | SHEET No | TOTAL SHEETS |
|---|---|---|---|---|---|
| 07 | LA | 47,103 | 3.5/4.6, 0.0/1.1 | 792 | 1003 |

REGISTERED CIVIL ENGINEER — DATE 05-24-10

10-11-10
PLANS APPROVAL DATE

REGISTERED PROFESSIONAL ENGINEER — FOUED ZAYATI — No. C57046 — Exp. 06-30-11 — CIVIL — STATE OF CALIFORNIA

*The State of California or its officers or agents shall not be responsible for the accuracy or completeness of electronic copies of this plan sheet.*

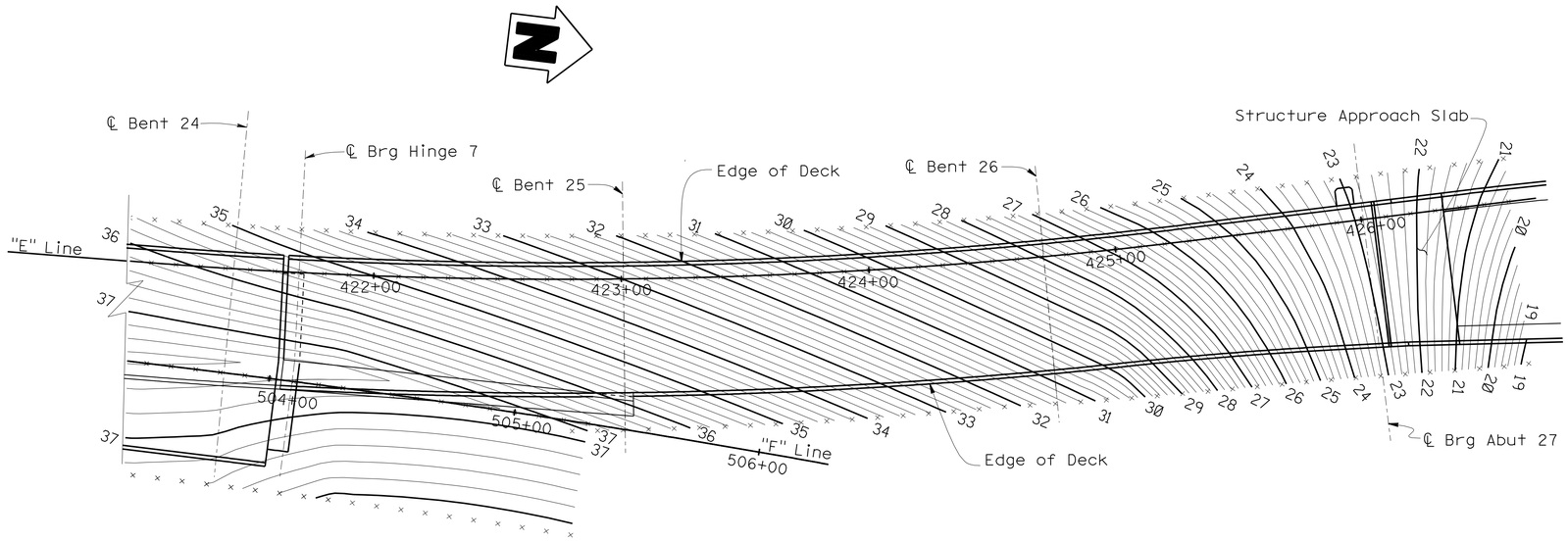


## PLAN

1"=30'

NOTES:

× Indicates 10 ft intervals along Station Line
Contours do not include camber
Contour interval = 0.2 ft

| | | | |
|---|---|---|---|
| DESIGN | BY Foued Zayati | CHECKED T. Skreslet | |
| DETAILS | BY T. Nguyen | CHECKED T. Skreslet | |
| QUANTITIES | BY J. Lane | CHECKED V. Ramakrishnan | |

STATE OF CALIFORNIA
DEPARTMENT OF TRANSPORTATION

DIVISION OF ENGINEERING SERVICES
STRUCTURE DESIGN
DESIGN BRANCH 14

BRIDGE NO. 53-3034K
POST MILE 0.01

# NB SR-103 OFF-RAMP
# DECK CONTOURS

STRUCTURES DESIGN DETAIL SHEET (ENGLISH) (REV. 10/25/05)

ORIGINAL SCALE IN INCHES FOR REDUCED PLANS 0 1 2 3

CU 07-271
EA 138201

DISREGARD PRINTS BEARING EARLIER REVISION DATES

REVISION DATES: 04-2-09, 05-04-09, 03-18-10, 03-23-10, 03-24-10

SHEET 3 OF 47

FILE => 53-3034k-d-dc.dgn

USERNAME => trlenard DATE PLOTTED => 18-OCT-2010 TIME PLOTTED => 15:46

| DIST | COUNTY | ROUTE | POST MILES TOTAL PROJECT | SHEET No. | TOTAL SHEETS |
|---|---|---|---|---|---|
| 07 | LA | 47,103 | 3.5/4.6, 0.0/1.1 | 793 | 1003 |

REGISTERED CIVIL ENGINEER 05-24-10

10-11-10
PLANS APPROVAL DATE

REGISTERED PROFESSIONAL ENGINEER FOUED ZAYATI No. C57046 Exp. 06-30-11 CIVIL STATE OF CALIFORNIA

*The State of California or its officers or agents shall not be responsible for the accuracy or completeness of electronic copies of this plan sheet.*

| CURVE DATA | | | | |
|---|---|---|---|---|
| No. | R | Δ | T | L |
| 10 | 2070′ | 11°28′10″ | 207.88′ | 414.37′ |

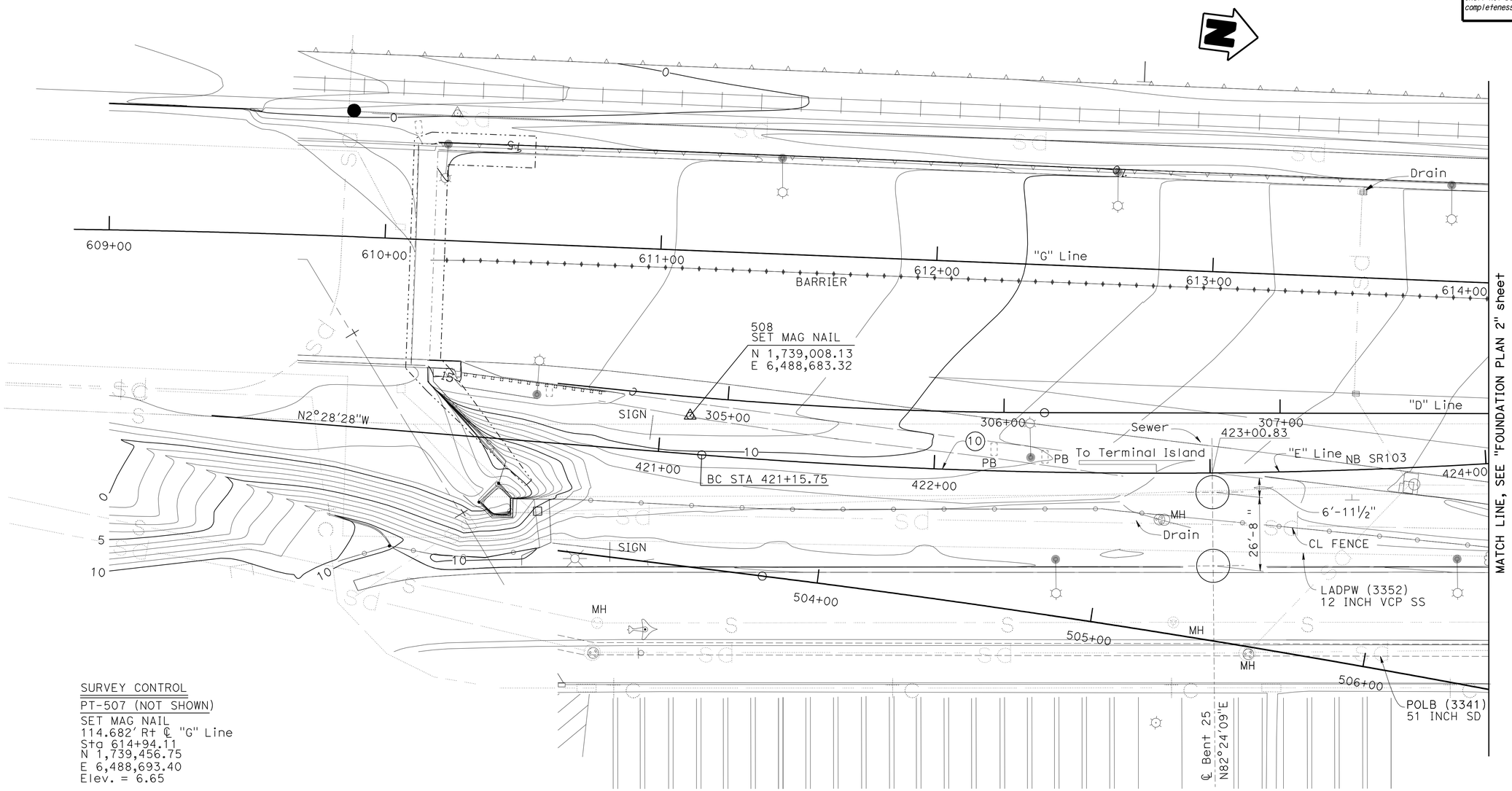


SURVEY CONTROL

PT-507 (NOT SHOWN)
SET MAG NAIL
114.682′ Rt ℄ "G" Line
Sta 614+94.11
N 1,739,456.75
E 6,488,693.40
Elev. = 6.65

PT-508
SET MAG NAIL
59.826′ Rt ℄ "G" Line
Sta 611+10.34
N 1,739,008.13
E 6,488,683.32
Elev. = 12.180

LEGEND

◯ Indicates 12′-0″ ø CIDH Piles

---- Indicates Existing Footing

NOTE:

Utilities are per district utility map dated 04-05-2010

HNTB *Corporation*
200 E. SANDPOINTE AVENUE, SUITE 200
SANTA ANA, CALIFORNIA 92707

| SCALE: 1"=20′ | VERT.DATUM NAVD 88 | HORZ.DATUM NAD 83 |
|---|---|---|
| PHOTOGRAMMETRY AS OF: | ALIGNMENT TIES Dist. Trav. Sheet | |
| SURVEYED BY COAST SURVEY 1207 | DRAFTED BY L. Zhang | |
| FIELD CHECKED BY D. Chang | CHECKED BY D. Chang | |

| | BY | CHECKED |
|---|---|---|
| DESIGN | L. Bahia | V. Ramakrishnan |
| DETAILS | L. Xiong | T. Skreslet |
| QUANTITIES | J. Lane | V. Ramakrishnan |

PREPARED FOR THE STATE OF CALIFORNIA DEPARTMENT OF TRANSPORTATION

PROJECT ENGINEER

BRIDGE NO. 53-3034k
POST MILE 0.01

# NB SR103 OFF-RAMP
# FOUNDATION PLAN NO. 1

FOUNDATION PLAN SHEET (ENGLISH) (REV. 5/9/00)

ORIGINAL SCALE IN INCHES FOR REDUCED PLANS 0 1 2 3

CU 07-271
EA 138201

DISREGARD PRINTS BEARING EARLIER REVISION DATES

REVISION DATES (PRELIMINARY STAGE ONLY): 6-11-08 3-25-09 3-26-10 04-12-10 04-27-10 05-14-10 05-21-10

SHEET 4 OF 47

FILE => 53-3034k-e-fd01.dgn

USERNAME => rtrenard DATE PLOTTED => 18-OCT-2010 TIME PLOTTED => 15:46

| DIST | COUNTY | ROUTE | POST MILES TOTAL PROJECT | SHEET No. | TOTAL SHEETS |
|---|---|---|---|---|---|
| 07 | LA | 47,103 | 3.5/4.6, 0.0/1.1 | 794 | 1003 |

Foued Zayati 05-24-10
REGISTERED CIVIL ENGINEER

10-11-10
PLANS APPROVAL DATE

REGISTERED PROFESSIONAL ENGINEER
FOUED ZAYATI
No. C57046
Exp. 06-30-11
CIVIL
STATE OF CALIFORNIA

*The State of California or its officers or agents shall not be responsible for the accuracy or completeness of electronic copies of this plan sheet.*

| CURVE DATA | | | | |
|---|---|---|---|---|
| No. | R | Δ | T | L |
| 10 | 2070′ | 11°28′10" | 207.88′ | 414.37′ |
| 11 | 1347.00′ | 35°29′47" | 431.13′ | 834.51′ |

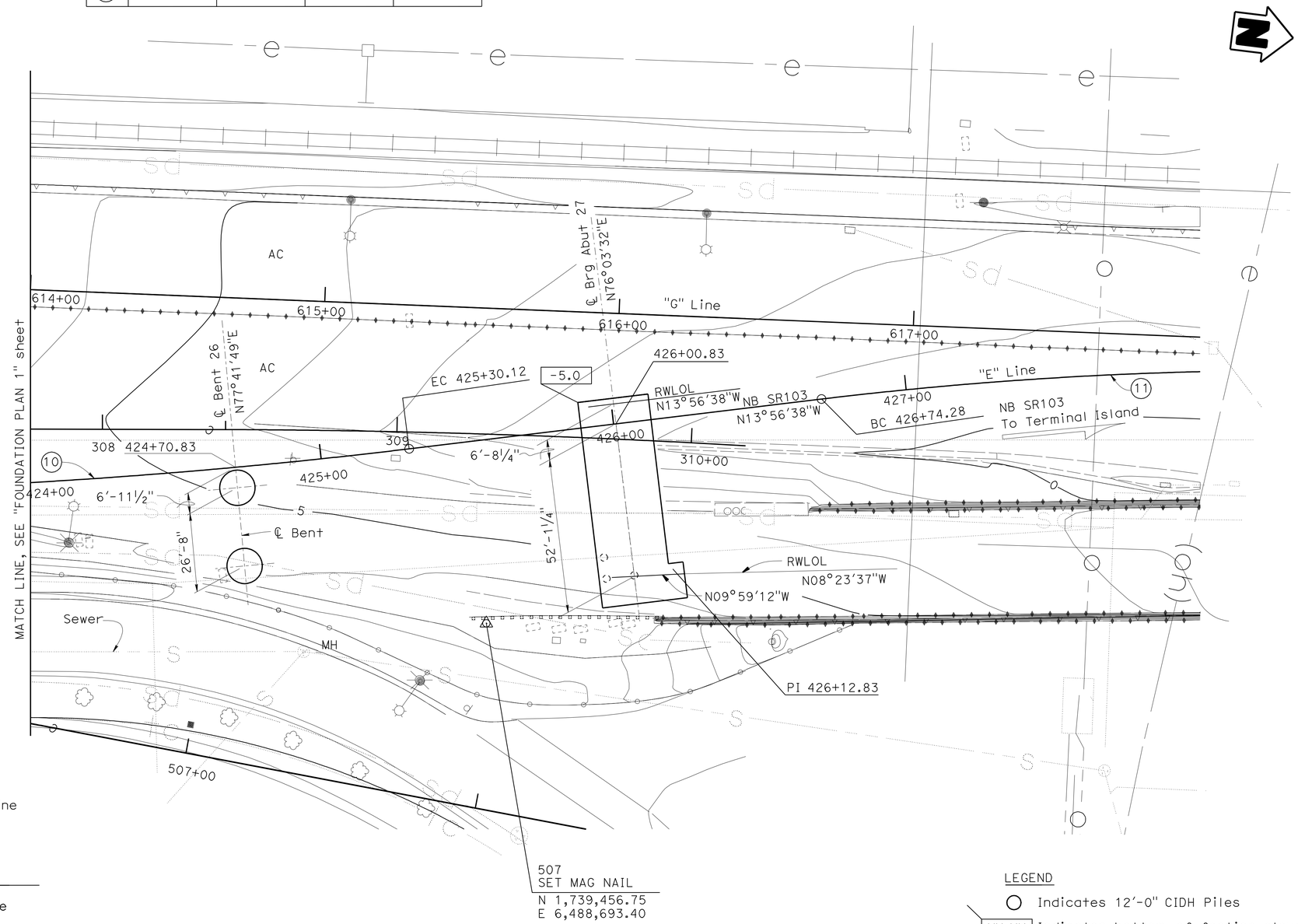


SURVEY CONTROL

PT-507
SET MAG NAIL
114.682′ Rt ℄ "G" Line
Sta 614+94.11
N 1,739,456.75
E 6,488,693.40
Elev. = 6.65

PT-508 (NOT SHOWN)
SET MAG NAIL
59.826′ Rt ℄ "G" Line
Sta 611+10.34
N 1,739,008.13
E 6,488,683.32
Elev. = 12.18

LEGEND

○ Indicates 12′-0" CIDH Piles

XX.XX Indicates bottom of footing elevation

NOTE:

Utilities are per district utility map dated 04-05-2010

HNTB *Corporation*
200 E. SANDPOINTE AVENUE, SUITE 200
SANTA ANA, CALIFORNIA 92707

| SCALE: 1"=20′ | VERT.DATUM NAVD 88 | HORZ.DATUM NAD 83 |
|---|---|---|
| PHOTOGRAMMETRY AS OF: | ALIGNMENT TIES Dist. Trav. Sheet | |
| SURVEYED BY COAST SURVEY 1207 | DRAFTED BY L. Zhang | |
| FIELD CHECKED BY D. Chang | CHECKED BY D. Chang | |

| | BY | CHECKED |
|---|---|---|
| DESIGN | L. Bahia | V. Ramakrishnan |
| DETAILS | L. Xiong | T. Skreslet |
| QUANTITIES | J. Lane | V. Ramakrishnan |

PREPARED FOR THE STATE OF CALIFORNIA DEPARTMENT OF TRANSPORTATION

PROJECT ENGINEER

BRIDGE NO. 53-3034k
POST MILE 0.01

# NB SR103 OFF-RAMP
# FOUNDATION PLAN NO. 2

FOUNDATION PLAN SHEET (ENGLISH) (REV. 5/9/00)

ORIGINAL SCALE IN INCHES FOR REDUCED PLANS 0 1 2 3

CU 07-271
EA 138201

DISREGARD PRINTS BEARING EARLIER REVISION DATES

REVISION DATES (PRELIMINARY STAGE ONLY): 6-11-08 3-26-09 3-26-10 04-14-10 04-27-10 05-14-10 05-17-10 05-24-10 06-30-10

SHEET 5 OF 47

FILE => 53-3034k-e-fd02.dgn

USERNAME => trlenard DATE PLOTTED => 18-OCT-2010 TIME PLOTTED => 15:46

| DIST | COUNTY | ROUTE | POST MILES TOTAL PROJECT | SHEET No | TOTAL SHEETS |
|---|---|---|---|---|---|
| 07 | LA | 47,103 | 3.5/4.6, 0.0/1.1 | 795 | 1003 |

REGISTERED CIVIL ENGINEER — DATE 05-24-10

10-11-10
PLANS APPROVAL DATE

REGISTERED PROFESSIONAL ENGINEER — FOUED ZAYATI — No. C57046 — Exp. 06-30-11 — CIVIL — STATE OF CALIFORNIA

*The State of California or its officers or agents shall not be responsible for the accuracy or completeness of electronic copies of this plan sheet.*

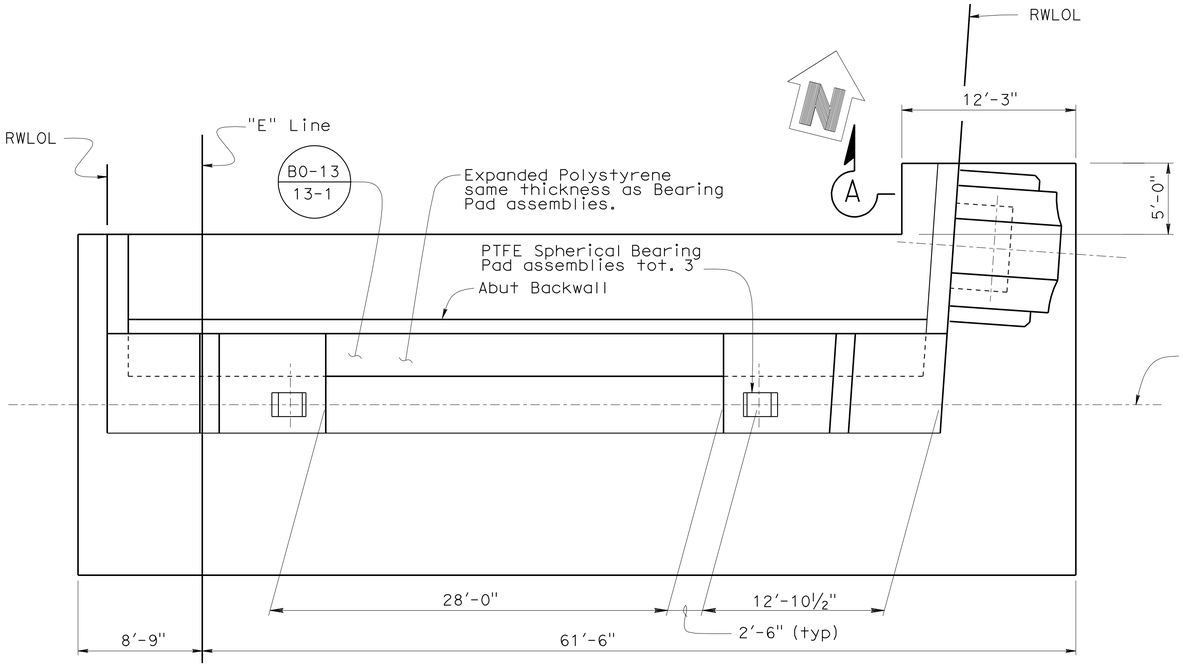


## PLAN
3/16" = 1'-0"

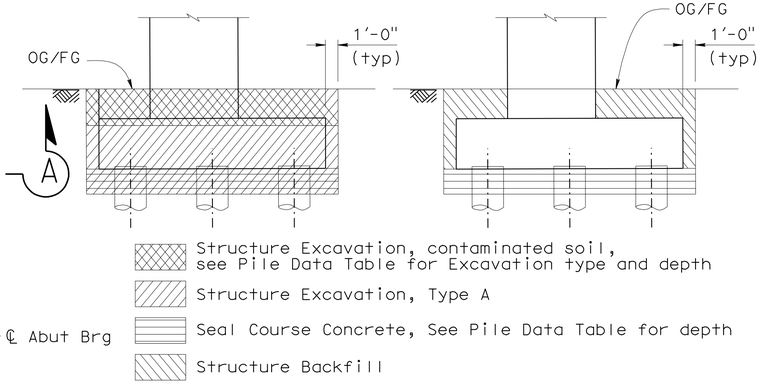


## LIMITS OF PAYMENT FOR EXCAVATION AND BACKFILL
No Scale

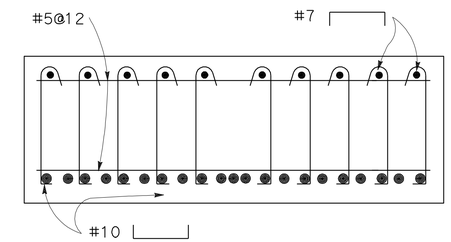


## SECTION A-A
½" = 1'-0"

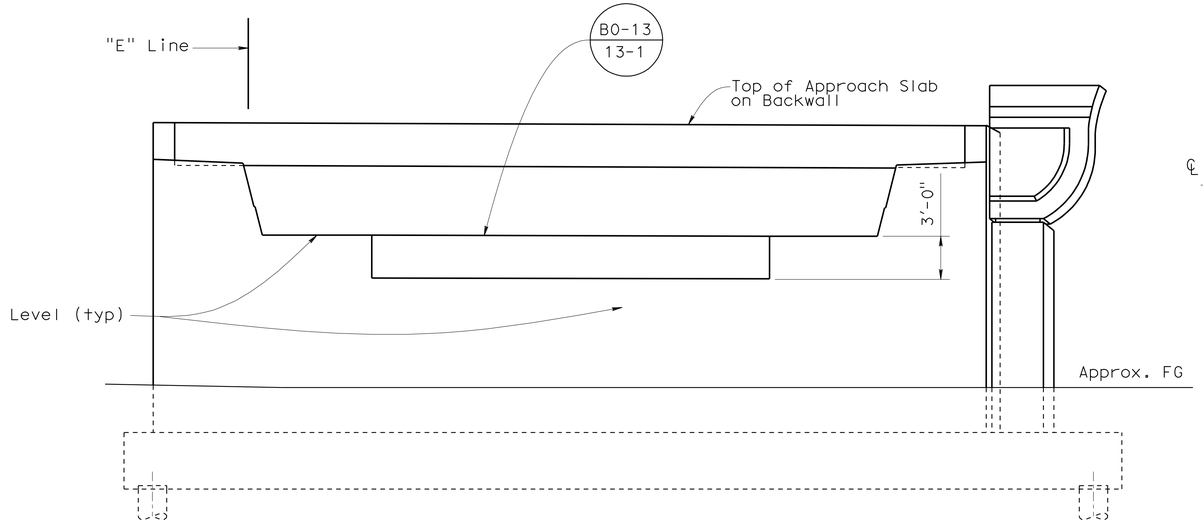


## ELEVATION
3/16" = 1'-0"

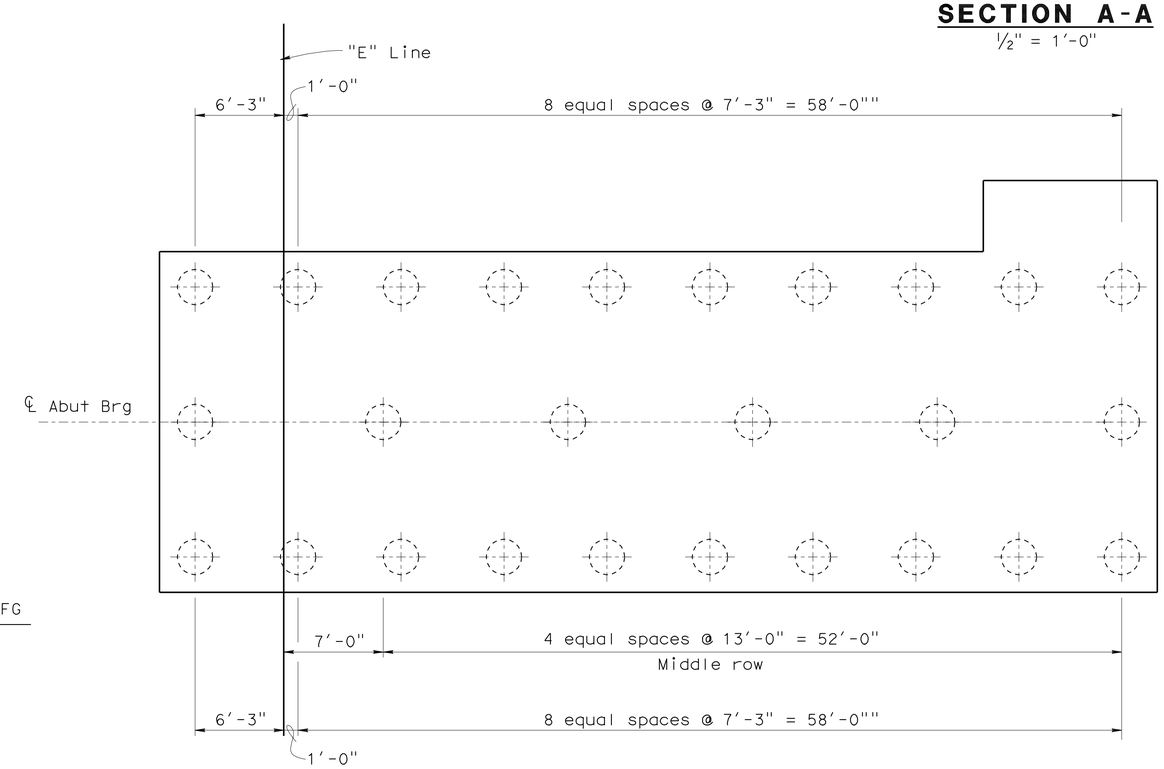


## PLAN
3/16" = 1'-0"

NOTE: Not all piles shown

Indicates 2.5' Ø CIDH Pile

| | | | |
|---|---|---|---|
| DESIGN | BY J. Lane | CHECKED S. Galgiani | |
| DETAILS | BY K. Kubo | CHECKED S. Galgiani | |
| QUANTITIES | BY J. Lane | CHECKED V. Ramakrishnan | |

STATE OF CALIFORNIA
DEPARTMENT OF TRANSPORTATION

DIVISION OF ENGINEERING SERVICES
STRUCTURE DESIGN
DESIGN BRANCH 14

BRIDGE NO. 53-3034K
POST MILE 0.01

# NB SR-103 OFF-RAMP
# ABUTMENT 27 LAYOUT

STRUCTURES DESIGN DETAIL SHEET (ENGLISH) (REV. 10/25/05)

ORIGINAL SCALE IN INCHES FOR REDUCED PLANS 0 1 2 3

CU 07-271
EA 138201

DISREGARD PRINTS BEARING EARLIER REVISION DATES

REVISION DATES: 06-05-08 07-02-08 11-14-09 02-03-10 03-18-10 04-12-10 05-17-10 05-24-10 08-26-10

SHEET 6 OF 47

FILE => 53-3034k-f-a27_lo.dgn

USERNAME => friehard DATE PLOTTED => 19-OCT-2010 TIME PLOTTED => 07:48

| DIST | COUNTY | ROUTE | POST MILES TOTAL PROJECT | SHEET No | TOTAL SHEETS |
|---|---|---|---|---|---|
| 07 | LA | 47,103 | 3.5/4.6, 0.0/1.1 | 796 | 1003 |

REGISTERED CIVIL ENGINEER 05-24-10 DATE

10-11-10
PLANS APPROVAL DATE

REGISTERED PROFESSIONAL ENGINEER FOUED ZAYATI No. C57046 Exp. 06-30-11 CIVIL STATE OF CALIFORNIA

*The State of California or its officers or agents shall not be responsible for the accuracy or completeness of electronic copies of this plan sheet.*

NOTES:

1. Not all steel shown.
2. For Joint Seal Assembly Blockout dimensions, see "JOINT SEAL ASSEMBLY DETAILS No. 1" sheet.
3. See 'Part Elevation' view on "ABUTMENT DETAILS No. 2" sheet

Indicates limits of joint seal blockout.

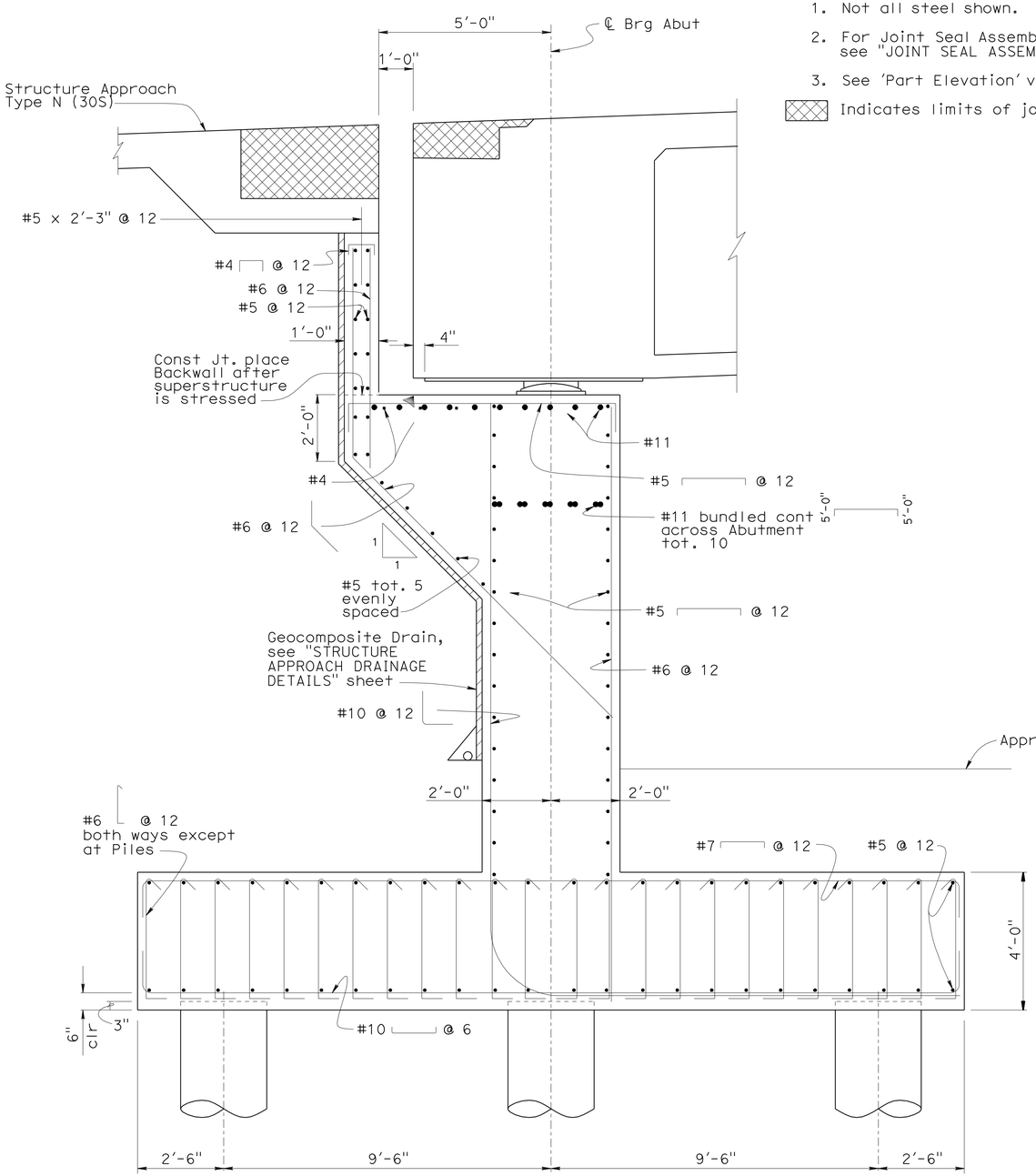


## ABUTMENT SECTION AT BEARING PADS

½" = 1'-0"

NOTE:

Not all steel shown. See 'Section E-E' for additional steel.

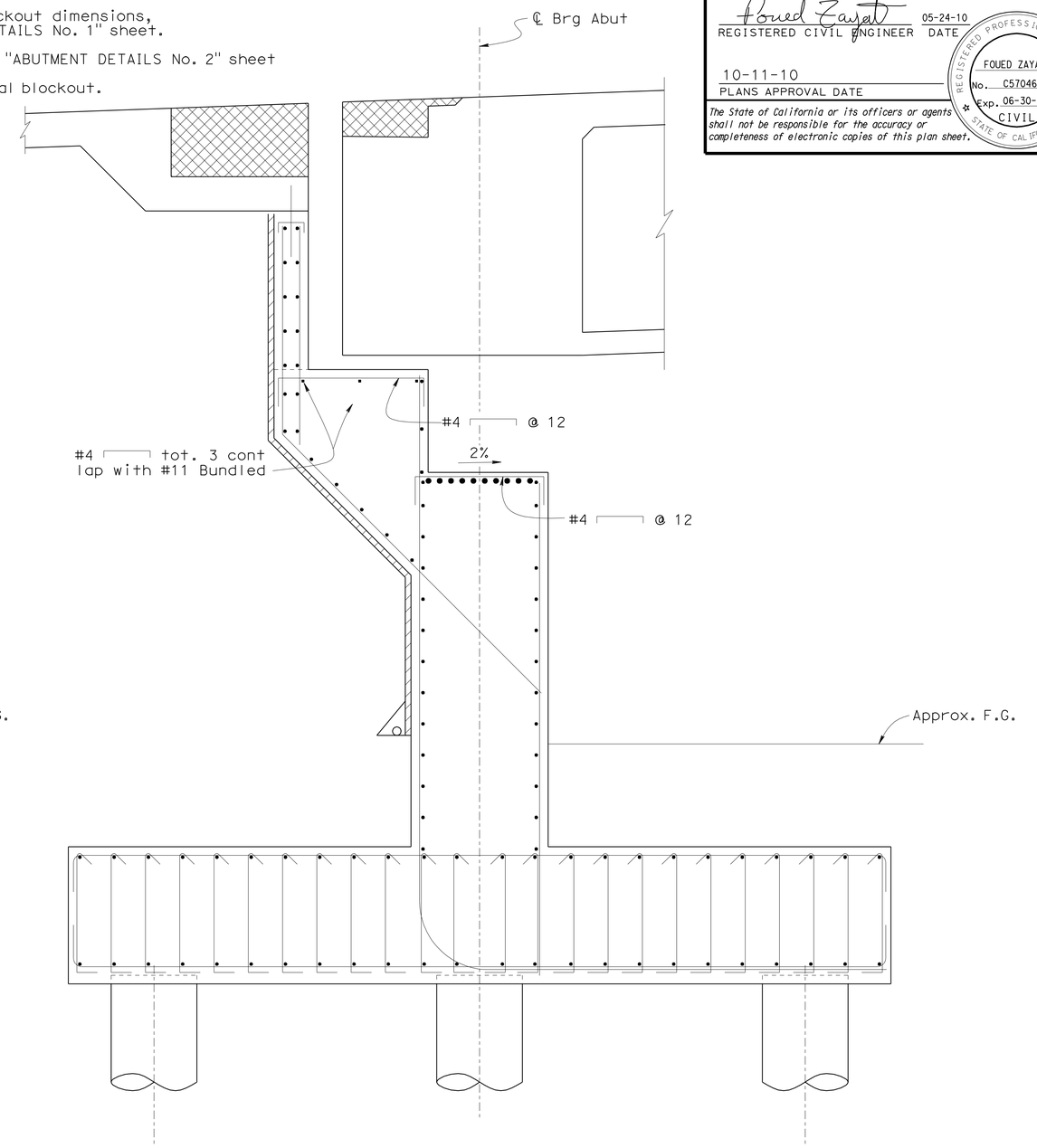


## SECTION AT ACCESS BLOCKOUTS

½" = 1'-0"

| | | | |
|---|---|---|---|
| DESIGN | BY J. Lane | CHECKED S. Galgiani | |
| DETAILS | BY K. Kubo | CHECKED S. Galgiani | |
| QUANTITIES | BY J. Lane | CHECKED V. Ramakrishnan | |

STATE OF CALIFORNIA DEPARTMENT OF TRANSPORTATION

DIVISION OF ENGINEERING SERVICES STRUCTURE DESIGN DESIGN BRANCH 14

BRIDGE NO. 53-3034K

POST MILE 0.01

# NB SR-103 OFF-RAMP
# ABUTMENT 27 DETAILS NO. 1

STRUCTURES DESIGN DETAIL SHEET (ENGLISH) (REV. 10/25/05)

ORIGINAL SCALE IN INCHES FOR REDUCED PLANS 0 1 2 3

CU 07-271
EA 138201

DISREGARD PRINTS BEARING EARLIER REVISION DATES

REVISION DATES: 04-11-08 04-14-08 04-15-08 04-18-08 06-11-08 06-26-08 09-21-09 10-15-09 01-08-10 5-17-10

SHEET 7 OF 47

FILE => 53-3034k-f-a27dt01.dgn

USERNAME => trlenard DATE PLOTTED => 18-OCT-2010 TIME PLOTTED => 15:46

| DIST | COUNTY | ROUTE | POST MILES TOTAL PROJECT | SHEET No | TOTAL SHEETS |
|---|---|---|---|---|---|
| 07 | LA | 47,103 | 3.5/4.6, 0.0/1.1 | 797 | 1003 |

REGISTERED CIVIL ENGINEER — DATE 05-24-10

10-11-10
PLANS APPROVAL DATE

*The State of California or its officers or agents shall not be responsible for the accuracy or completeness of electronic copies of this plan sheet.*

REGISTERED PROFESSIONAL ENGINEER — FOUED ZAYATI — No. C57046 — Exp. 06-30-11 — CIVIL — STATE OF CALIFORNIA

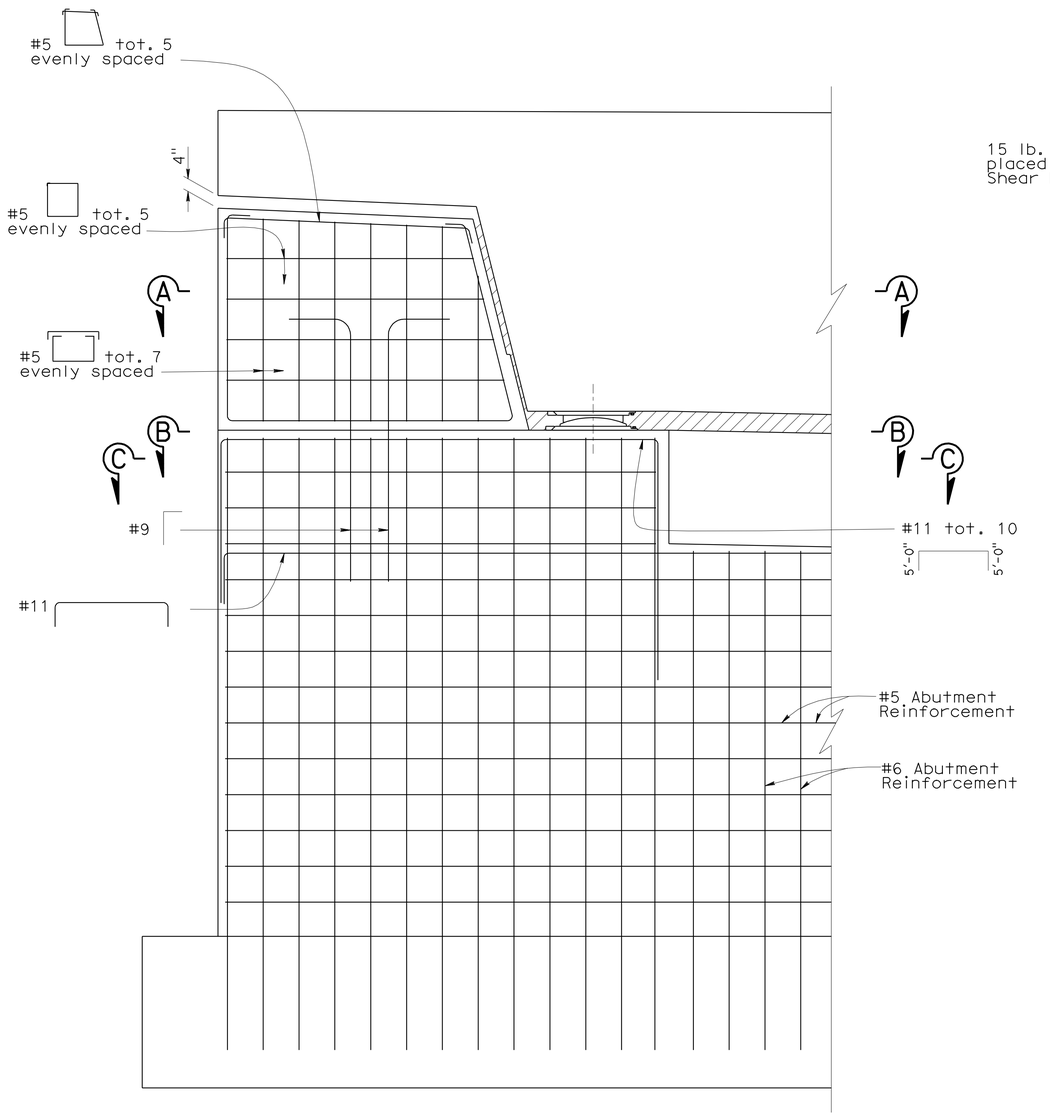


NOTES:

1. Piles not shown.
2. Barrier Rail not shown.
3. #8 Shear Key steel not shown.

## PART ELEVATION

½" = 1'-0"

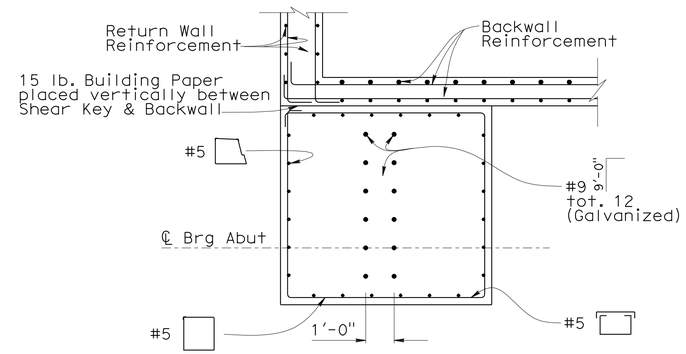


NOTE: Bearing Pad not shown.

## SECTION A-A

⅜" = 1'-0"

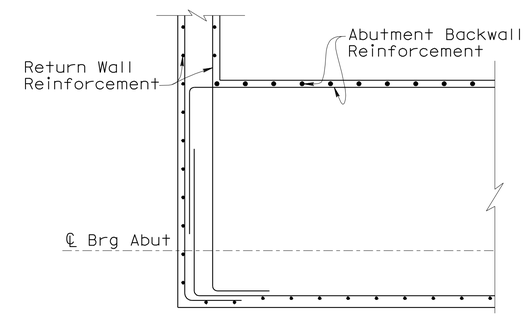


NOTE: Not all Abutment Reinforcement shown.

## SECTION C-C

⅜" = 1'-0"

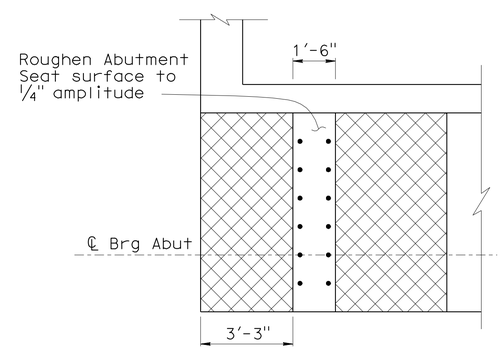


## SECTION B-B

⅜" = 1'-0"

NOTES:

1. Abutment and Wall Steel not shown.
2. Bearing Pad not shown.

Indicates Limits of 15 LB Building Paper

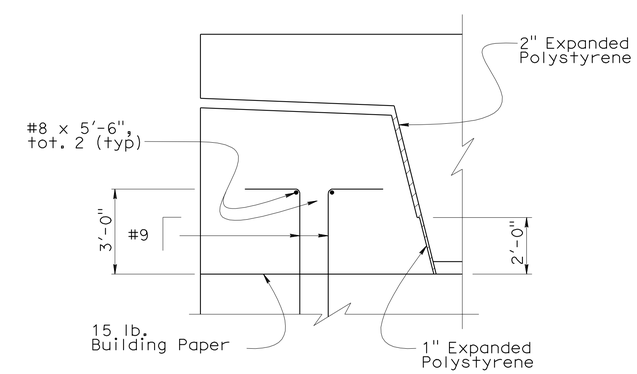


## DETAIL A

⅜" = 1'-0"

| | | | |
|---|---|---|---|
| DESIGN | BY J. Lane | CHECKED S. Galgiani | |
| DETAILS | BY K. Kubo | CHECKED S. Galgiani | |
| QUANTITIES | BY J. Lane | CHECKED V. Ramakrishnan | |

STATE OF CALIFORNIA
DEPARTMENT OF TRANSPORTATION

DIVISION OF ENGINEERING SERVICES
STRUCTURE DESIGN
DESIGN BRANCH 14

BRIDGE NO. 53-3034K
POST MILE 0.01

# NB SR-103 OFF-RAMP
# ABUTMENT 27 DETAILS NO. 2

STRUCTURES DESIGN DETAIL SHEET (ENGLISH) (REV. 10/25/05)

ORIGINAL SCALE IN INCHES FOR REDUCED PLANS 0 1 2 3

CU 07-271
EA 138201

DISREGARD PRINTS BEARING EARLIER REVISION DATES

REVISION DATES: 05-07-08 05-13-08 05-22-08 06-24-08 9-24-08 9-24-09 01-28-10 05-19-10

SHEET 8 OF 47

FILE => 53-3034k-f-a27dt02.dgn

USERNAME => trlenard DATE PLOTTED => 18-OCT-2010 TIME PLOTTED => 15:46

| DIST | COUNTY | ROUTE | POST MILES TOTAL PROJECT | SHEET No | TOTAL SHEETS |
|---|---|---|---|---|---|
| 07 | LA | 47,103 | 3.5/4.6, 0.0/1.1 | 798 | 1003 |

REGISTERED CIVIL ENGINEER 05-24-10 DATE

10-11-10
PLANS APPROVAL DATE

REGISTERED PROFESSIONAL ENGINEER FOUED ZAYATI No. C57046 Exp. 06-30-11 CIVIL STATE OF CALIFORNIA

*The State of California or its officers or agents shall not be responsible for the accuracy or completeness of electronic copies of this plan sheet.*

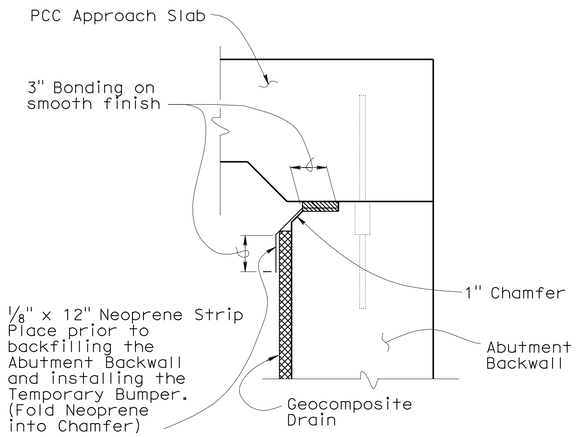


## JOINT PROTECTION DETAIL

No Scale

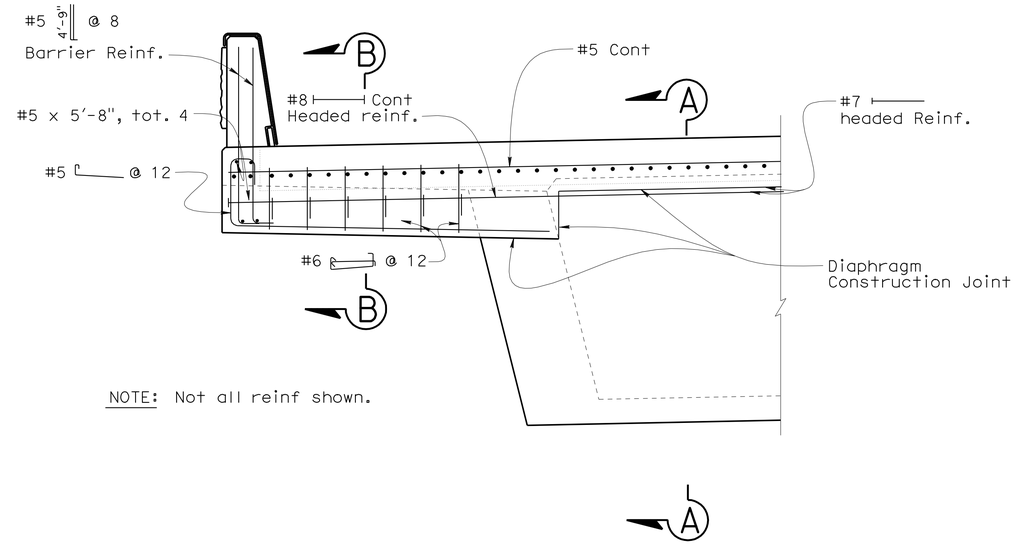


NOTE: Not all reinf shown.

## ABUTMENT DIAPHRAGM - PART ELEVATION

1/2" = 1'-0"

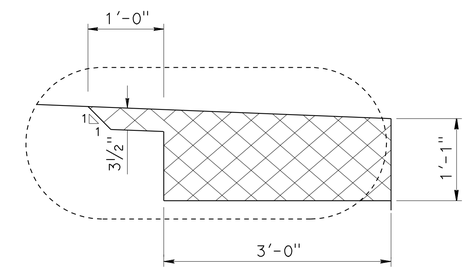


## JOINT SEAL BLOCKOUT DETAIL

1"=1'-0"

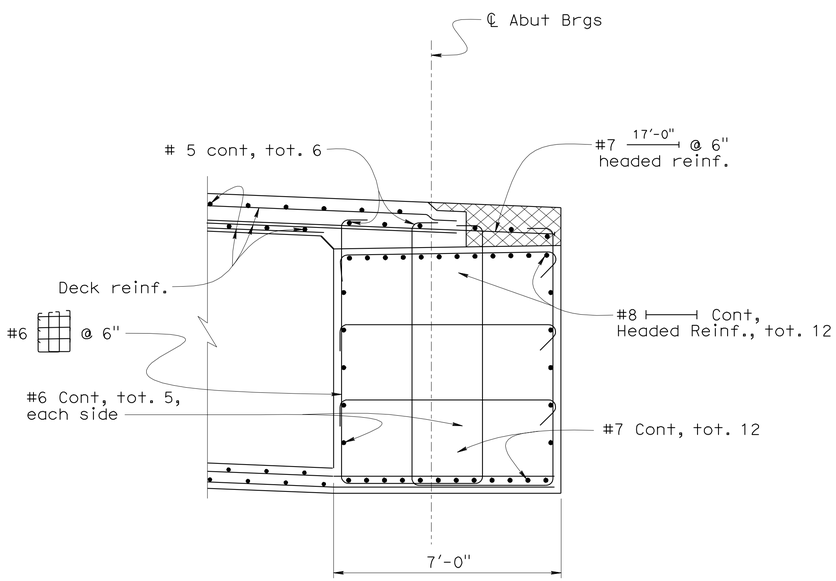


## SECTION A-A

1/2"=1'-0"

B8-5 B7-8

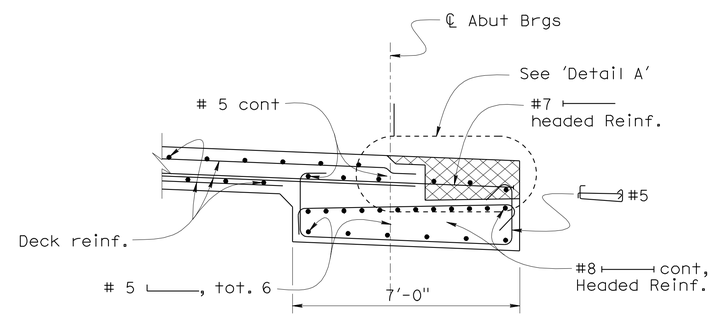


## SECTION B-B

1/2"=1'-0"

| | | | |
|---|---|---|---|
| DESIGN | BY F. Zayati | CHECKED S. Galgiani | |
| DETAILS | BY K. Kubo | CHECKED F. Zayati | |
| QUANTITIES | BY J. Lane | CHECKED V. Ramakrishnan | |

STATE OF CALIFORNIA
DEPARTMENT OF TRANSPORTATION

DIVISION OF ENGINEERING SERVICES
STRUCTURE DESIGN
DESIGN BRANCH 14

BRIDGE NO. 53-3034K
POST MILE 0.01

# NB SR-103 OFF-RAMP
# ABUTMENT 27 DETAILS NO. 3

STRUCTURES DESIGN DETAIL SHEET (ENGLISH) (REV. 10/25/05)

ORIGINAL SCALE IN INCHES FOR REDUCED PLANS 0 1 2 3

CU 07-271
EA 138201

DISREGARD PRINTS BEARING EARLIER REVISION DATES 05-28-08 01-08-10 05-17-10

REVISION DATES

SHEET 9 OF 47

FILE => 53-3034k-f-a27dt03.dgn

USERNAME => trlenard DATE PLOTTED => 18-OCT-2010 TIME PLOTTED => 15:46

| DIST | COUNTY | ROUTE | POST MILES TOTAL PROJECT | SHEET No | TOTAL SHEETS |
|---|---|---|---|---|---|
| 07 | LA | 47,103 | 3.5/4.6, 0.0/1.1 | 799 | 1003 |

REGISTERED CIVIL ENGINEER — DATE 05-24-10

10-11-10
PLANS APPROVAL DATE

REGISTERED PROFESSIONAL ENGINEER — FOUED ZAYATI — No. C57046 — Exp. 06-30-11 — CIVIL — STATE OF CALIFORNIA

*The State of California or its officers or agents shall not be responsible for the accuracy or completeness of electronic copies of this plan sheet.*

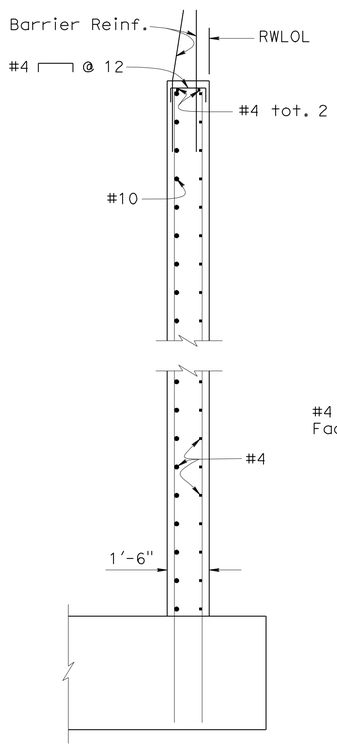


NOTE: Piles & Footing Steel not shown

## SECTION F-F

3/8" = 1'-0"

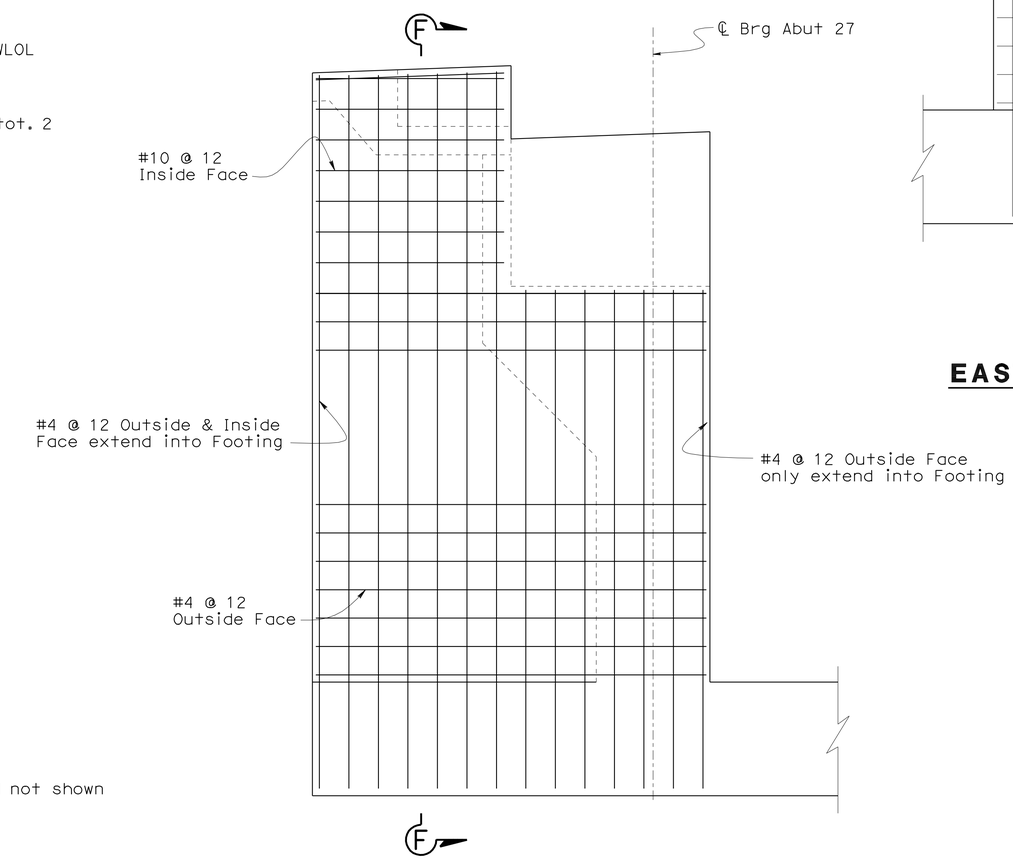


## WEST RETURN WALL ELEVATION

3/8" = 1'-0"

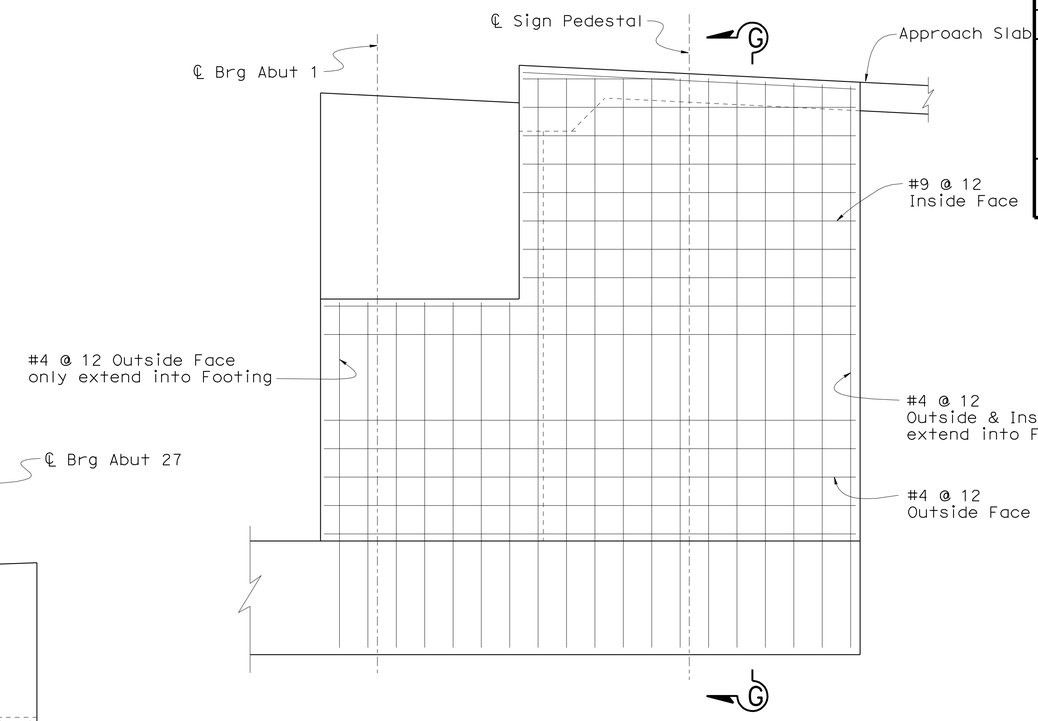


## EAST RETURN WALL ELEVATION

3/8" = 1'-0"

NOTE:

Piles, Sign Pedestal and Footing reinforcement not shown

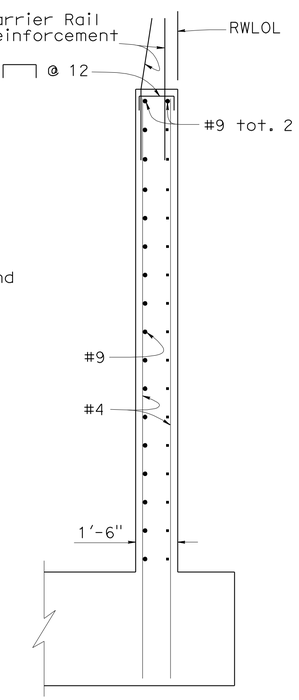


## SECTION G-G

3/8" = 1'-0"

| | | | |
|---|---|---|---|
| DESIGN | BY J. Lane | CHECKED S. Galgiani | |
| DETAILS | BY K. Kubo | CHECKED S. Galgiani | |
| QUANTITIES | BY J. Lane | CHECKED V. Ramakrishnan | |

STATE OF CALIFORNIA
DEPARTMENT OF TRANSPORTATION

DIVISION OF ENGINEERING SERVICES
STRUCTURE DESIGN
DESIGN BRANCH 14

BRIDGE NO. 53-3034K
POST MILE 0.01

# NB SR-103 OFF-RAMP
# ABUTMENT 27 DETAILS NO. 4

STRUCTURES DESIGN DETAIL SHEET (ENGLISH) (REV. 10/25/05)

ORIGINAL SCALE IN INCHES FOR REDUCED PLANS 0 1 2 3

CU 07-271
EA 138201

DISREGARD PRINTS BEARING EARLIER REVISION DATES → 06-12-08 | 07-03-08 | 01-09-10

REVISION DATES

SHEET 10 OF 47

FILE => 53-3034k-f-a27dt04.dgn

USERNAME => friehard DATE PLOTTED => 18-OCT-2010 TIME PLOTTED => 15:46

| DIST | COUNTY | ROUTE | POST MILES TOTAL PROJECT | SHEET No | TOTAL SHEETS |
|---|---|---|---|---|---|
| 07 | LA | 47,103 | 3.5/4.6, 0.0/1.1 | 800 | 1003 |

REGISTERED CIVIL ENGINEER — 05-24-10 DATE

10-11-10
PLANS APPROVAL DATE

*The State of California or its officers or agents shall not be responsible for the accuracy or completeness of electronic copies of this plan sheet.*

REGISTERED PROFESSIONAL ENGINEER — FOUED ZAYATI — No. C57046 — Exp. 06-30-11 — CIVIL — STATE OF CALIFORNIA

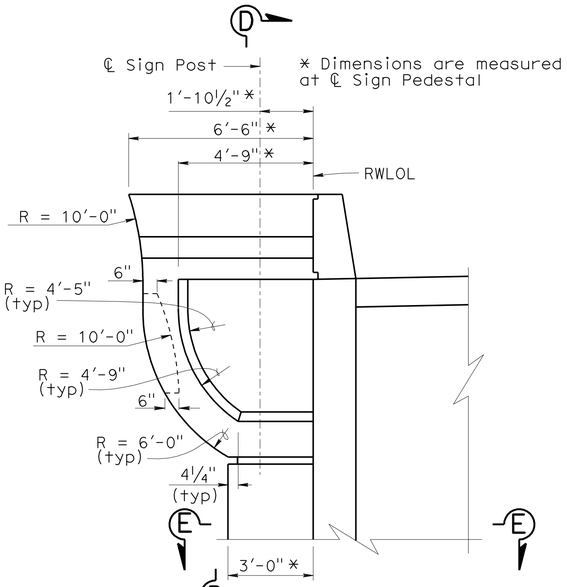


**VIEW A-A**
⅜" = 1'-0"

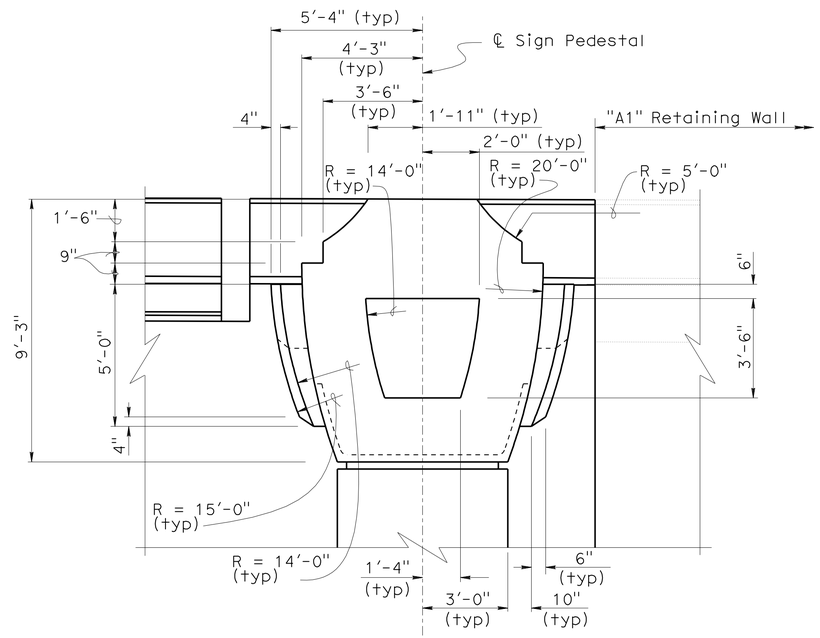


**VIEW B-B**
⅜" = 1'-0"

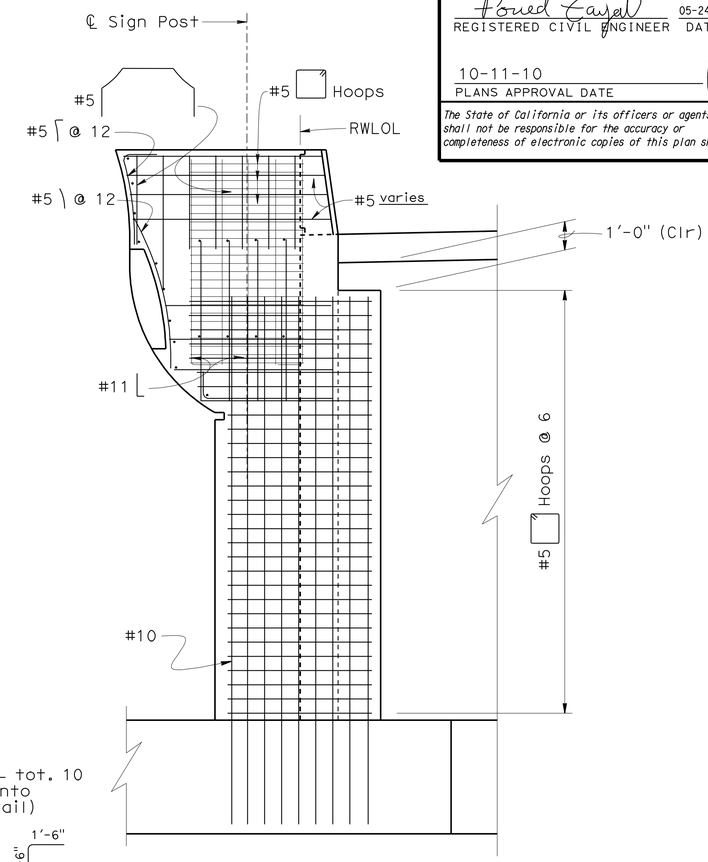


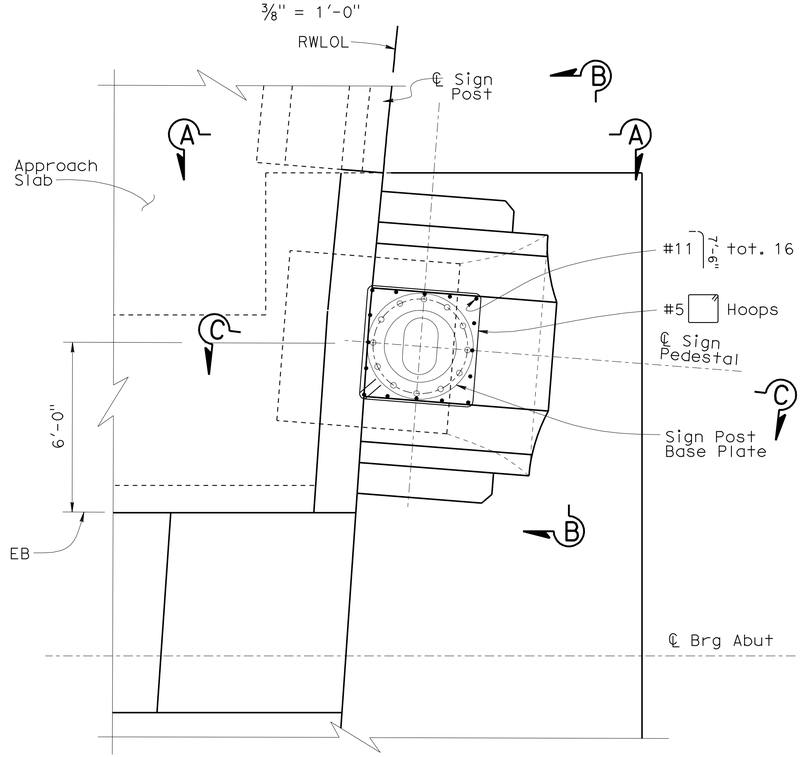


**PLAN**
⅜" = 1'-0"

NOTE:
Superstructure and Barrier Rails not shown

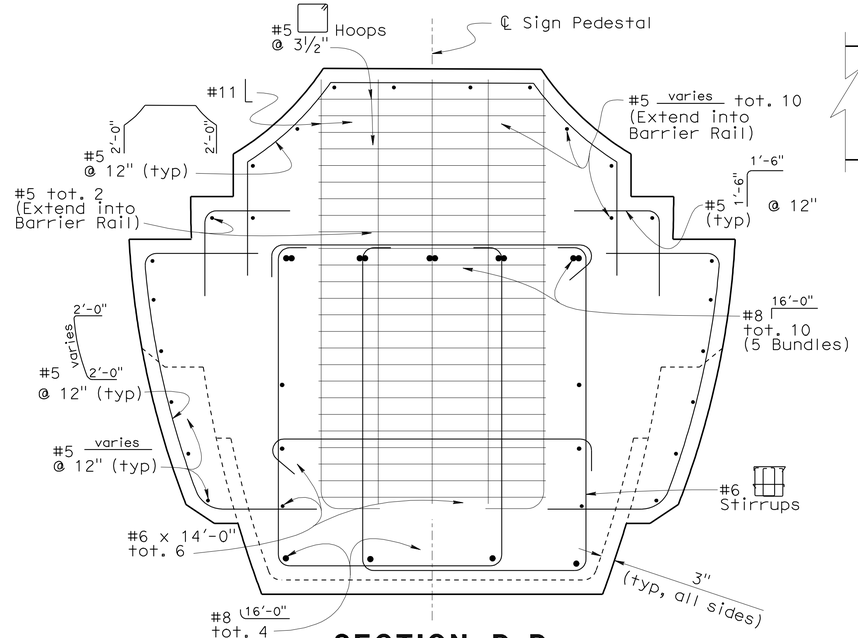


**SECTION D-D**
¾" = 1'-0"

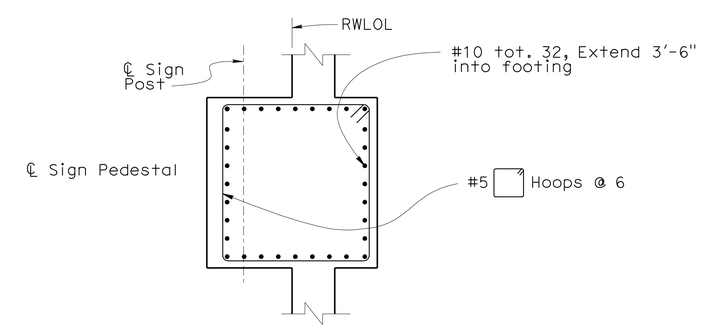


**SECTION E-E**
⅜" = 1'-0"

| | | | |
|---|---|---|---|
| DESIGN | BY J. Lane | CHECKED S. Galgiani | |
| DETAILS | BY K. Kubo | CHECKED S. Galgiani | |
| QUANTITIES | BY J. Lane | CHECKED V. Ramakrishnan | |

STATE OF CALIFORNIA
DEPARTMENT OF TRANSPORTATION

DIVISION OF ENGINEERING SERVICES
STRUCTURE DESIGN
DESIGN BRANCH 14

BRIDGE NO. 53-3034K
POST MILE 0.01

# NB SR-103 OFF-RAMP
# ABUTMENT 27 DETAILS NO. 5

STRUCTURES DESIGN DETAIL SHEET (ENGLISH) (REV. 10/25/05)

ORIGINAL SCALE IN INCHES FOR REDUCED PLANS 0 1 2 3

CU 07-271
EA 138201

DISREGARD PRINTS BEARING EARLIER REVISION DATES
REVISION DATES: 06-12-08 07-03-08 01-09-10

SHEET 11 OF 47

FILE => 53-3034k-f-a27dt05.dgn

USERNAME => friehard DATE PLOTTED => 14-OCT-2010 TIME PLOTTED => 14:41