DIST	COUNTY	ROUTE	POST MILES TOTAL PROJECT	SHEET No	TOTAL SHEETS
07	LA	47,103	3.5/4.6, 0.0/1.1	601	1003

REGISTERED CIVIL ENGINEER — DATE 05-24-10

10-11-10
PLANS APPROVAL DATE

REGISTERED PROFESSIONAL ENGINEER — FOUED ZAYATI — No. C57046 — Exp. 06-30-11 — CIVIL — STATE OF CALIFORNIA

The State of California or its officers or agents shall not be responsible for the accuracy or completeness of electronic copies of this plan sheet.

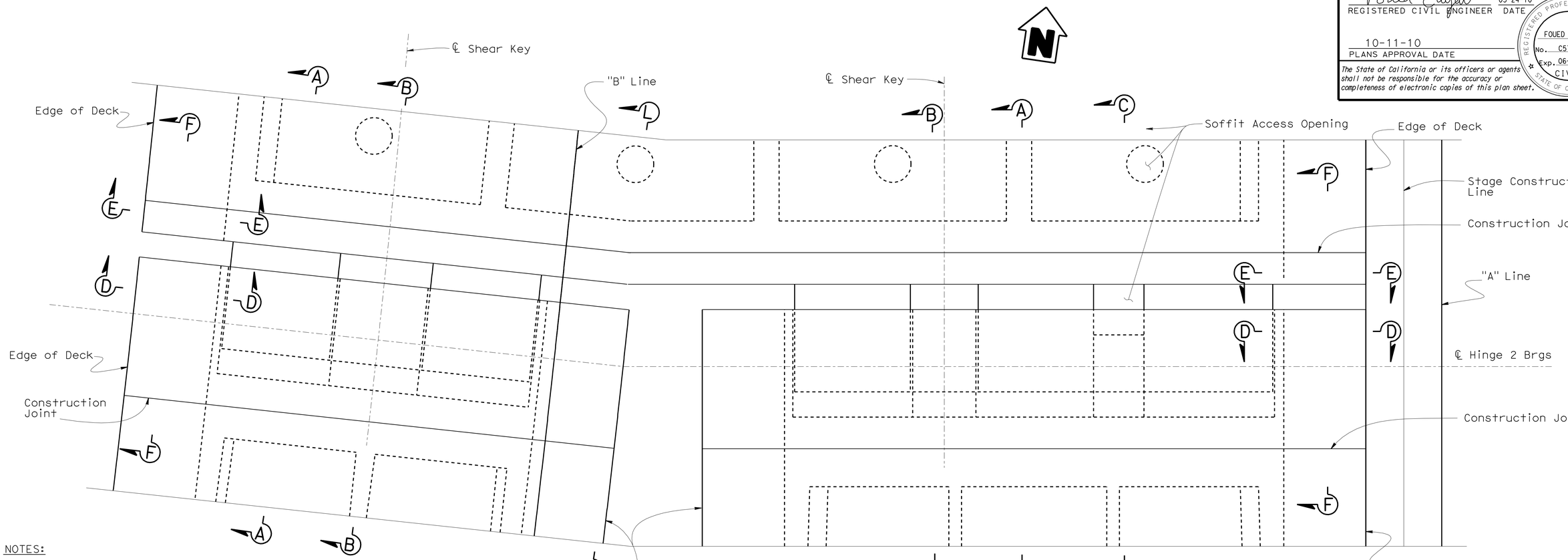

PLAN

1/4" = 1'-0"

NOTES:

1. For 'Section A-A' and 'Section B-B', see "HINGE 2 (STAGE 2) DETAILS No. 1" sheet.
2. For 'Section C-C', 'Section D-D', 'Section E-E' and 'Section F-F', see "HINGE 2 DETAILS No. 3" sheet.
3. For 'Detail A' and 'Detail B', see "HINGE 2 DETAILS No. 1" sheet.

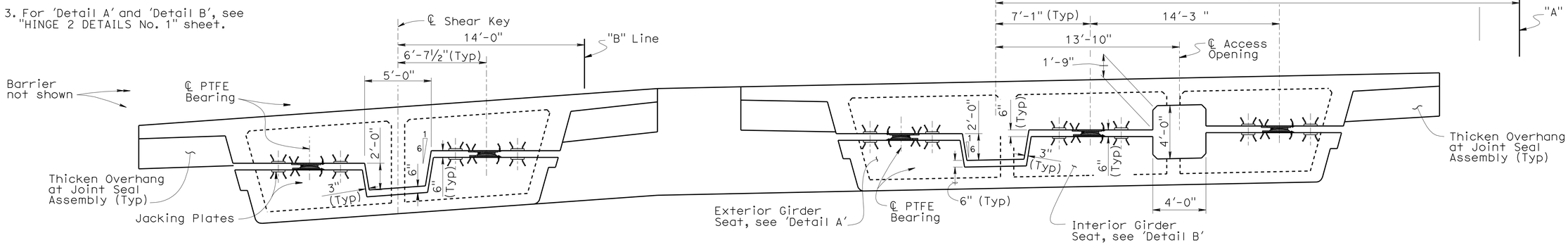

DEVELOPED ELEVATION

1/4" = 1'-0"

	BY	CHECKED
DESIGN	Ahmed M. M. Ibrahim	F. Zayati
DETAILS	T. Nguyen	F. Zayati
QUANTITIES	M. Friedheim	N. Tachta

STATE OF CALIFORNIA
DEPARTMENT OF TRANSPORTATION

DIVISION OF ENGINEERING SERVICES
STRUCTURE DESIGN
DESIGN BRANCH 14

BRIDGE NO. 53-3032
POST MILE 3.58

SCHUYLER HEIM BRIDGE (REPLACE)
HINGE 2 (STAGE 3) LAYOUT

STRUCTURES DESIGN DETAIL SHEET (ENGLISH) (REV. 10/25/05)

ORIGINAL SCALE IN INCHES FOR REDUCED PLANS 0 1 2 3

CU 07-271
EA 138201

DISREGARD PRINTS BEARING EARLIER REVISION DATES

REVISION DATES: 11-9-09 01-04-10 04-16-10 04-30-10 05-20-10

SHEET 99 OF 247

FILE => 53-3032-1-p-jhinge2-2alo.dgn

USERNAME => trmikest DATE PLOTTED => 19-NOV-2010 TIME PLOTTED => 08:05

DIST	COUNTY	ROUTE	POST MILES TOTAL PROJECT	SHEET No	TOTAL SHEETS
07	LA	47,103	3.5/4.6, 0.0/1.1	602	1003

REGISTERED CIVIL ENGINEER 05-24-10 DATE

10-11-10
PLANS APPROVAL DATE

REGISTERED PROFESSIONAL ENGINEER FOUED ZAYATI No. C57046 Exp. 06-30-11 CIVIL STATE OF CALIFORNIA

The State of California or its officers or agents shall not be responsible for the accuracy or completeness of electronic copies of this plan sheet.

NOTES:

1. For location of 'Section A-A' and 'Section B-B', see "HINGE 2 (STAGE 2) LAYOUT" sheet.

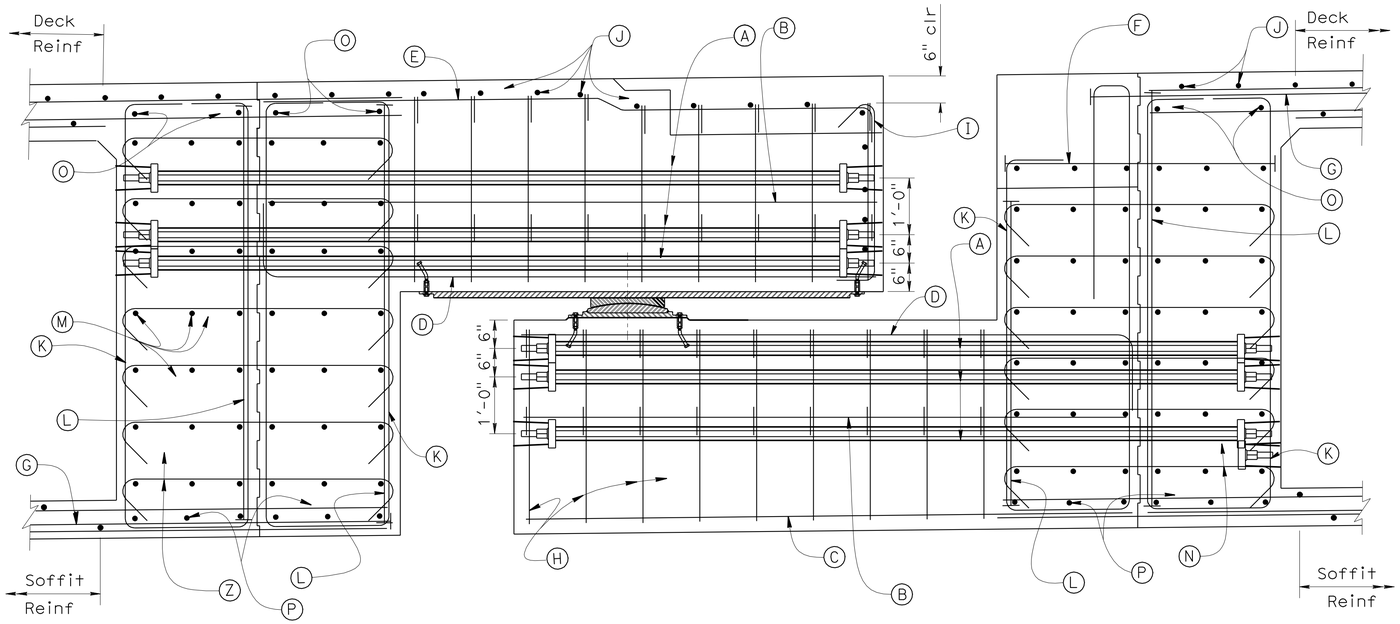

SECTION A-A

3/4" = 1'-0"

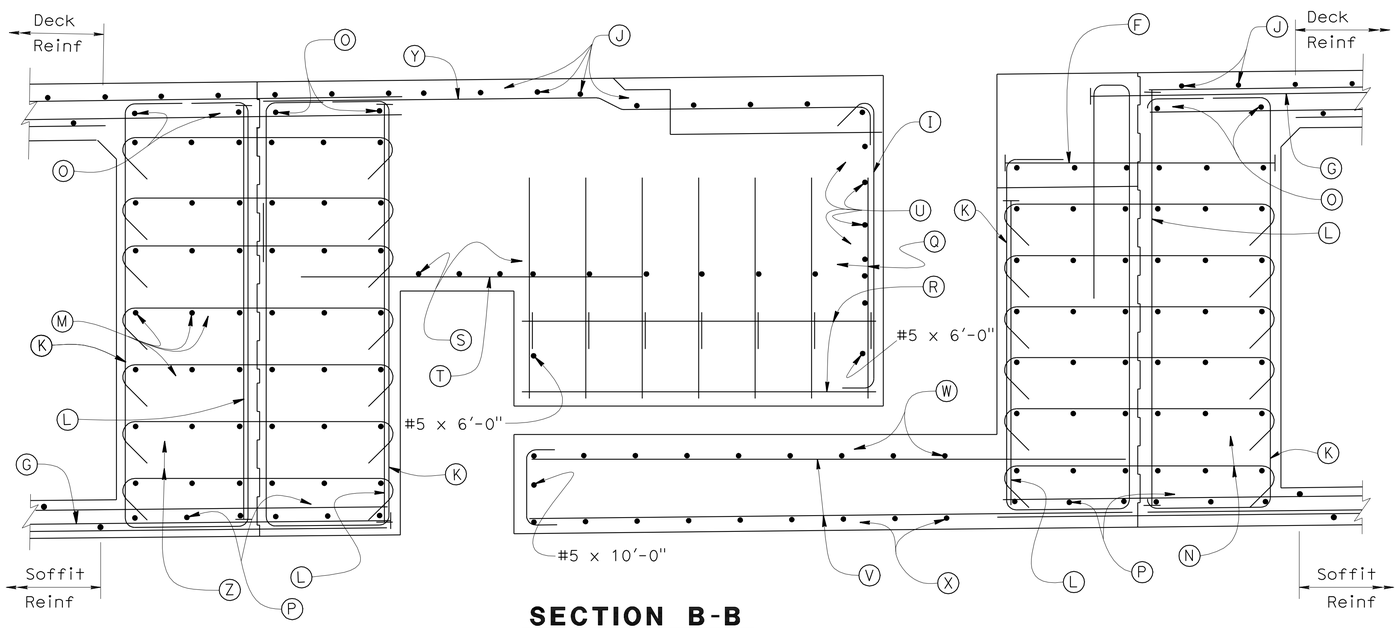

SECTION B-B

3/4" = 1'-0"

LEGEND

(A) 1 1/4" Dia. HS Stress bars, Tot 7 per layer, per Bearing (Typ)

(B) #6 Cont, Tot 2 per Bearing

(C) #6 Cont, Tot 6 per Bearing

(D) #9 Tot 6 per Bearing (Typ)

(E) #6 , Tot 6 per Bearing

(F) #11 @ 6

(G) #10 12'-6" @ 6

(H) #5 or @ 12, at each Bearing Seat

(I) #5 @ 12

(J) #5 @ 12, Cont

(K) #6 3'-9" @ 12 (Typ)

(L) #9 @ 6 (Typ)

(M) #5 Cont, Tot. 6 per layer, Tot 7 layers

(N) #5 Tot 6, @ 12 (Typ)

(O) #5 Cont, Tot 4 (Typ)

(P) #5 4'-0" 4'-0" Tot 12

(Q) #5 2'-0" @ 12

(R) #5 x 6'-9", Tot 8

(S) #8 2'-6" 2'-6" @ 12

(T) #5 x 5'-0", @ 12

(U) #5 Cont, Tot 4

(V) #5 @ 12, Cont

(W) #5 x 10'-0", @ 12

(X) #5 10" 12'-0" @12

(Y) #5 @ 12

(Z) #5 Tot 7, @ 12 (Typ)

DESIGN	BY Ahmed M. M. Ibrahim	CHECKED F. Zayati	
DETAILS	BY T. Nguyen	CHECKED F. Zayati	
QUANTITIES	BY M. Friedheim	CHECKED N. Tachta	

STATE OF CALIFORNIA DEPARTMENT OF TRANSPORTATION

DIVISION OF ENGINEERING SERVICES STRUCTURE DESIGN DESIGN BRANCH 14

BRIDGE NO. 53-3032
POST MILE 3.58

SCHUYLER HEIM BRIDGE (REPLACE)
HINGE 2 (STAGE 2) DETAILS NO. 1

STRUCTURES DESIGN DETAIL SHEET (ENGLISH) (REV. 10/25/05)

ORIGINAL SCALE IN INCHES FOR REDUCED PLANS 0 1 2 3

CU 07-271
EA 138201

DISREGARD PRINTS BEARING EARLIER REVISION DATES → 09-25-09 04-16-10 04-30-10

REVISION DATES

SHEET 100 OF 247

FILE => 53-3032-1-p-jhinge2-2det01.dgn

USERNAME => trmikesl DATE PLOTTED => 19-NOV-2010 TIME PLOTTED => 08:05

DIST	COUNTY	ROUTE	POST MILES TOTAL PROJECT	SHEET No	TOTAL SHEETS
07	LA	47,103	3.5/4.6, 0.0/1.1	603	1003

REGISTERED CIVIL ENGINEER 05-24-10 DATE

10-11-10
PLANS APPROVAL DATE

REGISTERED PROFESSIONAL ENGINEER FOUED ZAYATI No. C57046 Exp. 06-30-11 CIVIL STATE OF CALIFORNIA

The State of California or its officers or agents shall not be responsible for the accuracy or completeness of electronic copies of this plan sheet.

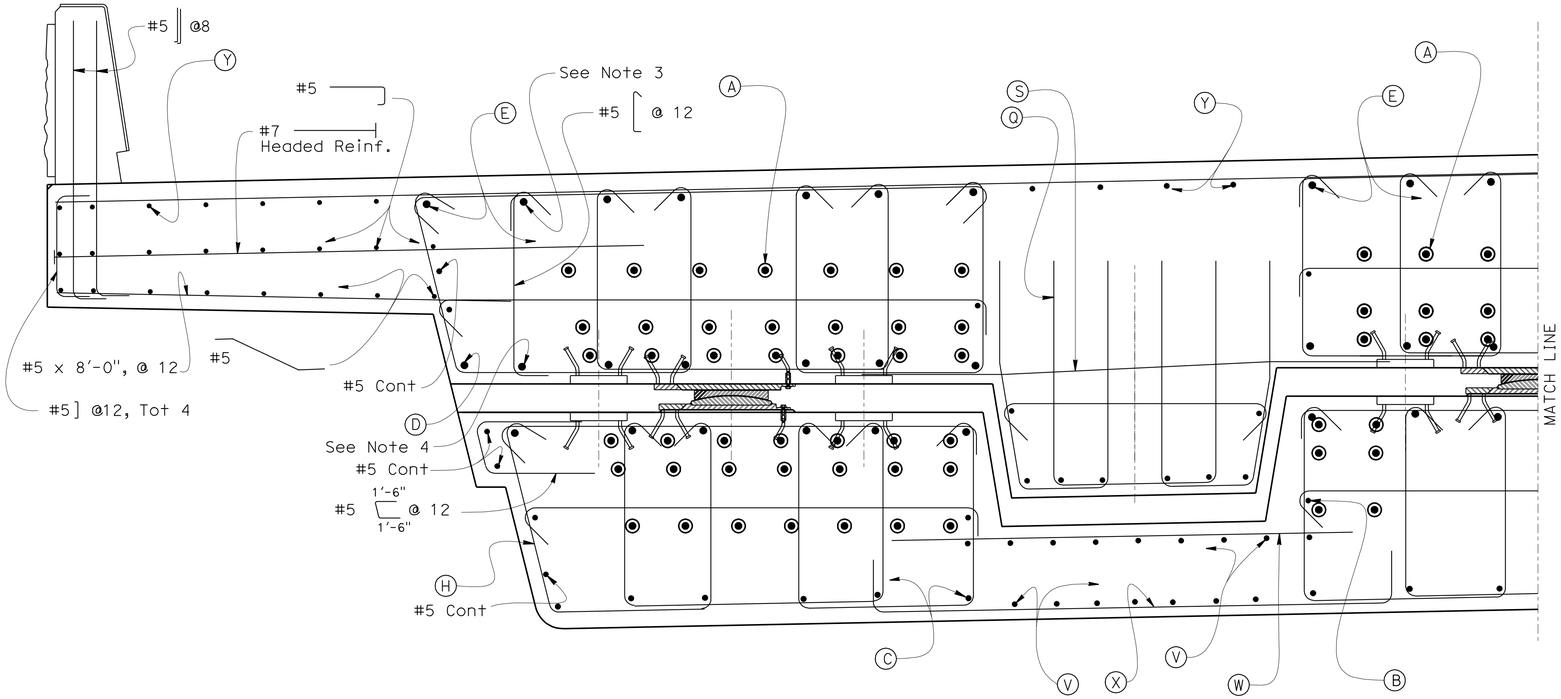

NOTES:

1. Typical Section Reinforcement not shown. See "TYPICAL SECTION No. 1" sheet.
2. For location of 'Section K-K ("A" Line)' on Stage 2, see "HINGE 2 DETAILS No. 1" sheet.
3. Add additional (E) bar
4. Add additional (D) bar
5. For rebar designation see "HINGE 2 (STAGE 2) DETAILS No. 1" sheet.

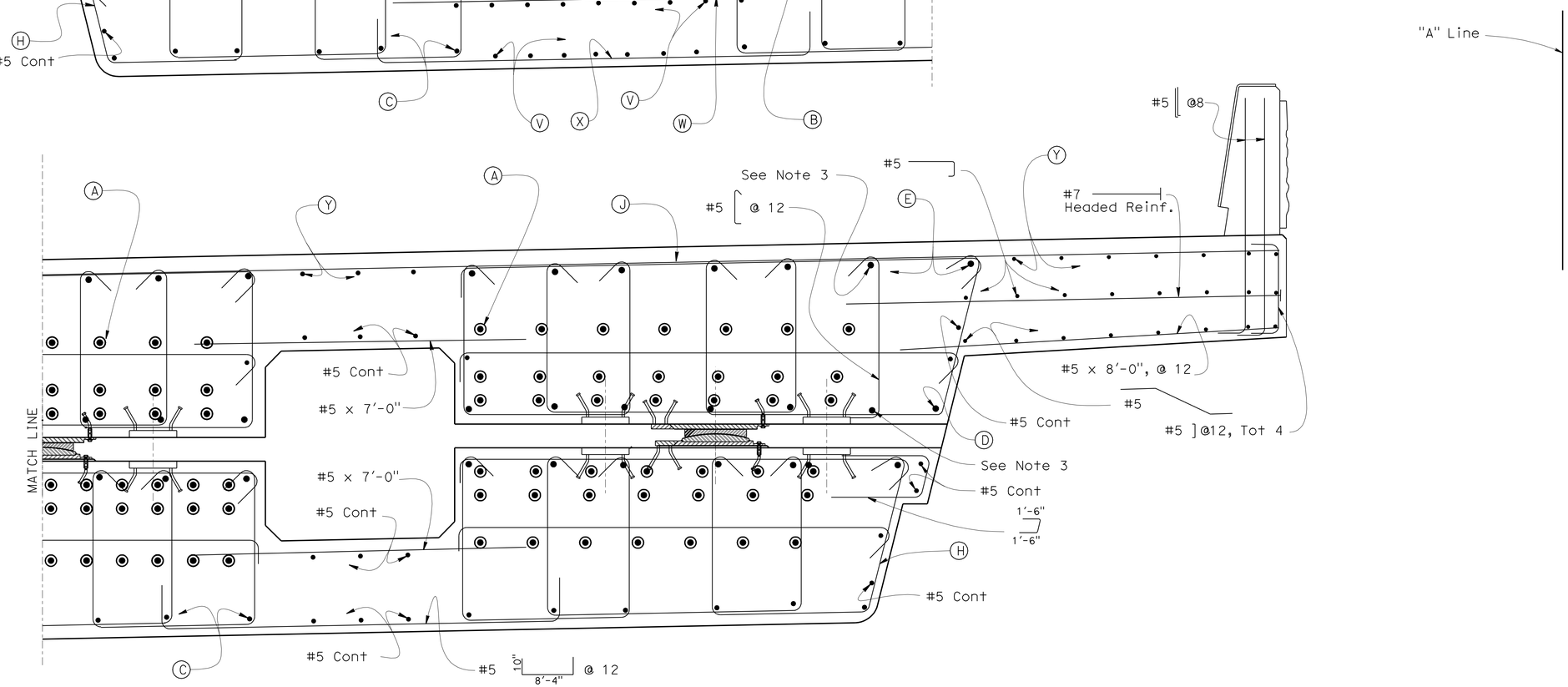

SECTION K-K ("A" Line)

3/4" = 1'-0"

DESIGN	BY Ahmed M. M.Ibrahim	CHECKED F. Zayati	
DETAILS	BY T. Nguyen	CHECKED F. Zayati	
QUANTITIES	BY M. Friedheim	CHECKED N. Tachta	

STATE OF CALIFORNIA
DEPARTMENT OF TRANSPORTATION

DIVISION OF ENGINEERING SERVICES
STRUCTURE DESIGN
DESIGN BRANCH 14

BRIDGE NO. 53-3032
POST MILE 3.58

SCHUYLER HEIM BRIDGE (REPLACE)
HINGE 2 (STAGE 3) DETAILS NO. 2

STRUCTURES DESIGN DETAIL SHEET (ENGLISH) (REV. 10/25/05)

ORIGINAL SCALE IN INCHES FOR REDUCED PLANS 0 1 2 3

CU 07-271
EA 138201

DISREGARD PRINTS BEARING EARLIER REVISION DATES → 10-01-09 04-16-10 04-30-10 05-13-10

REVISION DATES

SHEET 101 OF 247

FILE => 53-3032-1-p-jhinge2-2det02.dgn

USERNAME => ttmikesl DATE PLOTTED => 19-NOV-2010 TIME PLOTTED => 08:05

DIST	COUNTY	ROUTE	POST MILES TOTAL PROJECT	SHEET No	TOTAL SHEETS
07	LA	47,103	3.5/4.6, 0.0/1.1	604	1003

REGISTERED CIVIL ENGINEER — DATE 05-24-10

10-11-10
PLANS APPROVAL DATE

The State of California or its officers or agents shall not be responsible for the accuracy or completeness of electronic copies of this plan sheet.

REGISTERED PROFESSIONAL ENGINEER — FOUED ZAYATI — No. C57046 — Exp. 06-30-11 — CIVIL — STATE OF CALIFORNIA

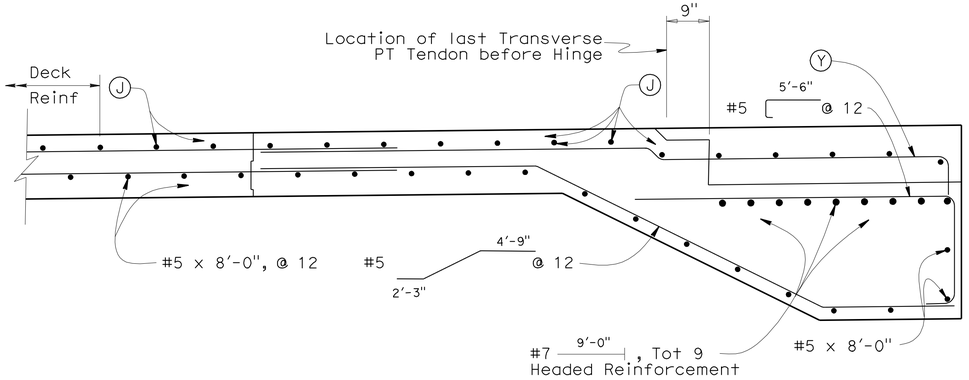

SECTION L-L

3/4" = 1'-0"

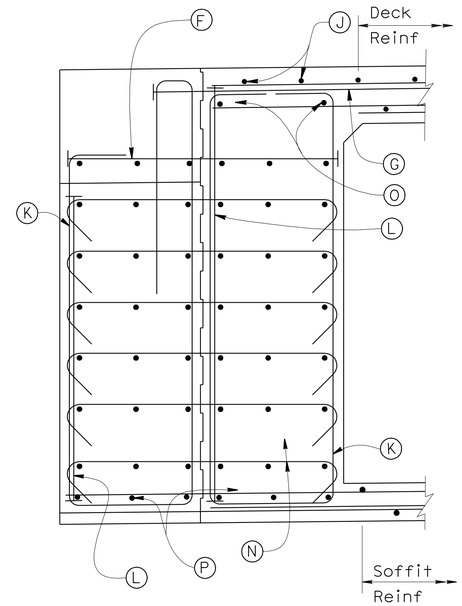

NOTES:

1. Typical Section Reinforcement not shown. See "TYPICAL SECTION No. 1" sheet.
2. See "TYPICAL SECTION No. 1" sheet for transverse prestress details
3. Add additional (E) bar.
4. Add additional (D) bar.
5. For location of 'Section J-J ("A" Line)', see "HINGE 2 DETAILS No. 1" sheet.
6. For location of 'Section L-L', see "HINGE 2 (STAGE 2) LAYOUT" sheet.
7. For rebar designation, see " HINGE 2 (STAGE 2) DETAILS No. 1" sheet.
8. For rebar designation see "HINGE 2 (STAGE 2) DETAILS No. 1" sheet.

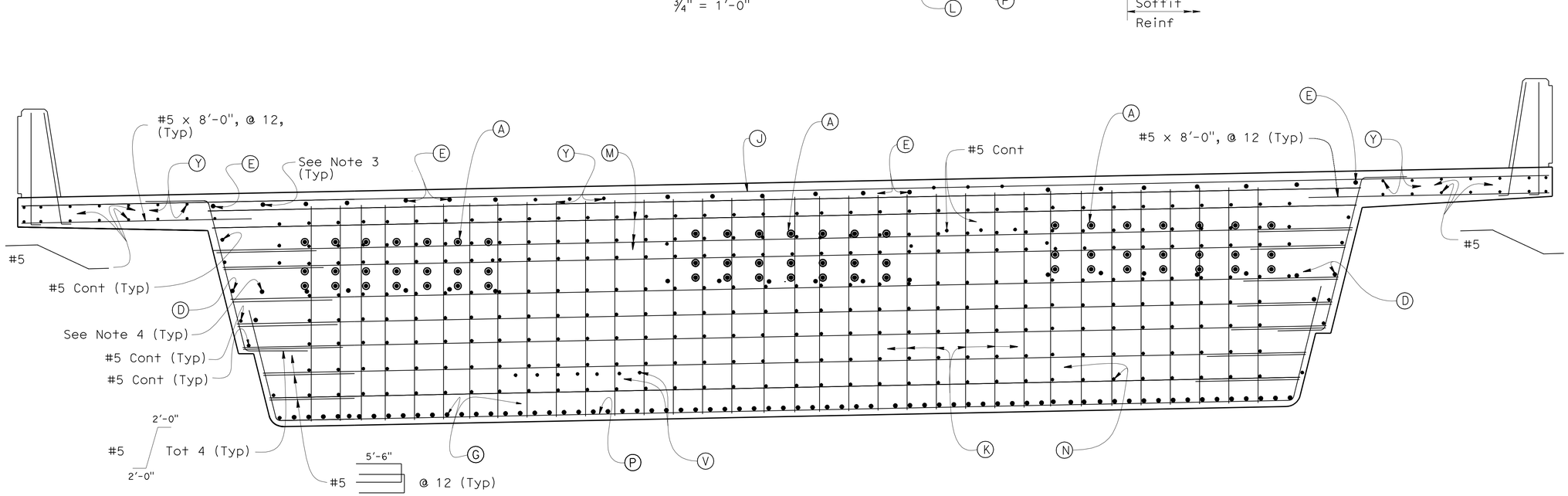

SECTION J-J ("A" Line)

1/2" = 1'-0"

DESIGN	BY Ahmed M. M. Ibrahim	CHECKED F. Zayati	
DETAILS	BY T. Nguyen	CHECKED F. Zayati	
QUANTITIES	BY M. Friedheim	CHECKED N. Tachta	

STATE OF CALIFORNIA
DEPARTMENT OF TRANSPORTATION

DIVISION OF ENGINEERING SERVICES
STRUCTURE DESIGN
DESIGN BRANCH 14

BRIDGE NO. 53-3032
POST MILE 3.58

SCHUYLER HEIM BRIDGE (REPLACE)
HINGE 2 (STAGE 3) DETAILS NO. 3

STRUCTURES DESIGN DETAIL SHEET (ENGLISH) (REV. 10/25/05)

ORIGINAL SCALE IN INCHES FOR REDUCED PLANS 0 1 2 3

CU 07-271
EA 138201

DISREGARD PRINTS BEARING EARLIER REVISION DATES → 10-01-09 04-16-10

REVISION DATES

SHEET 102 OF 247

FILE => 53-3032-1-p-jhinge2-2det03.dgn

USERNAME => trmikest DATE PLOTTED => 19-NOV-2010 TIME PLOTTED => 08:05

DIST	COUNTY	ROUTE	POST MILES TOTAL PROJECT	SHEET No	TOTAL SHEETS
07	LA	47,103	3.5/4.6, 0.0/1.1	605	1003

REGISTERED CIVIL ENGINEER — DATE 05-24-10

10-11-10
PLANS APPROVAL DATE

The State of California or its officers or agents shall not be responsible for the accuracy or completeness of electronic copies of this plan sheet.

REGISTERED PROFESSIONAL ENGINEER — FOUED ZAYATI — No. C57046 — Exp. 06-30-11 — CIVIL — STATE OF CALIFORNIA

NOTES:

1. For location of 'Section A-A' and 'Section B-B', see "HINGE 2 (STAGE 2) LAYOUT" sheet.

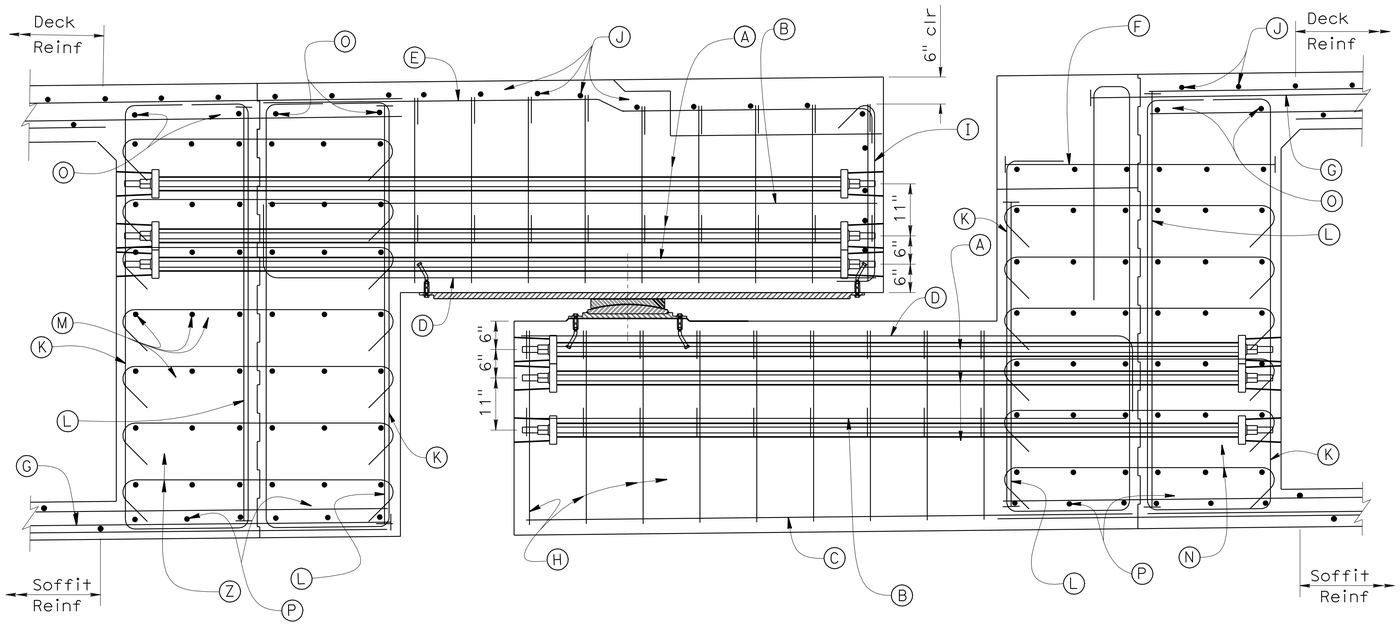

SECTION A-A

3/4" = 1'-0"

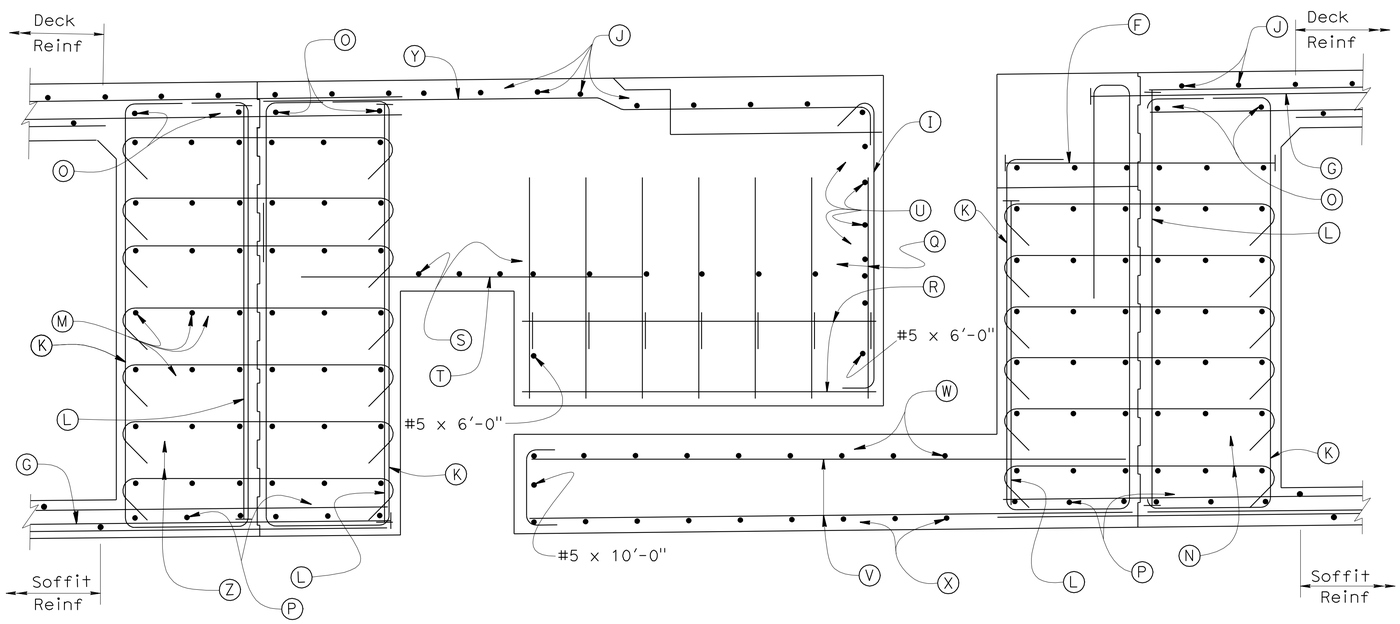

SECTION B-B

3/4" = 1'-0"

LEGEND

- (A) 1 1/4" dia. HS Stress bars, tot. 4 per layer, per Bearing (typ)
- (B) #6 cont, tot. 2 per Bearing
- (C) #6 cont, tot. 6 per Bearing
- (D) #9 tot. 10 per Bearing (typ)
- (E) #6 , tot. 4 per Bearing
- (F) #10 @ 6
- (G) #10 12'-6" @ 6
- (H) #5 @ 12, at each Bearing Seat
- (I) #5 @ 12
- (J) #5 @ 12, cont
- (K) #6 3'-9" @ 12 (typ)
- (L) #9 @ 6 (typ)
- (M) #5 cont, tot. 6 per layer, tot. 7 layers
- (N) #5 tot. 6, @ 12 (typ)
- (O) #5 cont, tot. 4 (typ)
- (P) #5 4'-0" 4'-0" tot. 12
- (Q) #6 2'-0" @ 12
- (R) #5 x 6'-9", tot. 8
- (S) #8 2'-6" 2'-6" @ 12
- (T) #5 x 5'-0", @ 12
- (U) #5 cont, tot. 4
- (V) #5 @ 12, cont
- (W) #5 x 10'-0", @ 12
- (X) #5 10" 12'-0" @12
- (Y) #5 @ 12
- (Z) #5 tot. 7, @ 12 (typ)

DESIGN	BY Ahmed M. M. Ibrahim	CHECKED F. Zayati	
DETAILS	BY T. Nguyen	CHECKED F. Zayati	
QUANTITIES	BY M. Friedheim	CHECKED N. Tachta	

STATE OF CALIFORNIA
DEPARTMENT OF TRANSPORTATION

DIVISION OF ENGINEERING SERVICES
STRUCTURE DESIGN
DESIGN BRANCH 14

BRIDGE NO. 53-3032
POST MILE 3.58

SCHUYLER HEIM BRIDGE (REPLACE)
HINGE 2 (NEW DOCK OFF RAMP) DETAILS NO. 4

STRUCTURES DESIGN DETAIL SHEET (ENGLISH) (REV. 10/25/05)

ORIGINAL SCALE IN INCHES FOR REDUCED PLANS 0 1 2 3

CU 07-271
EA 138201

DISREGARD PRINTS BEARING EARLIER REVISION DATES

REVISION DATES: 04-16-10 04-30-10

SHEET 103 OF 247

FILE => 53-3032-1-p-jhinge2-2det04.dgn

USERNAME => ttrmorlok DATE PLOTTED => 19-OCT-2010 TIME PLOTTED => 08:58

DIST	COUNTY	ROUTE	POST MILES TOTAL PROJECT	SHEET No	TOTAL SHEETS
07	LA	47,103	3.5/4.6, 0.0/1.1	606	1003

REGISTERED CIVIL ENGINEER — DATE 05-24-10

10-11-10
PLANS APPROVAL DATE

REGISTERED PROFESSIONAL ENGINEER — FOUED ZAYATI — No. C57046 — Exp. 06-30-11 — CIVIL — STATE OF CALIFORNIA

The State of California or its officers or agents shall not be responsible for the accuracy or completeness of electronic copies of this plan sheet.

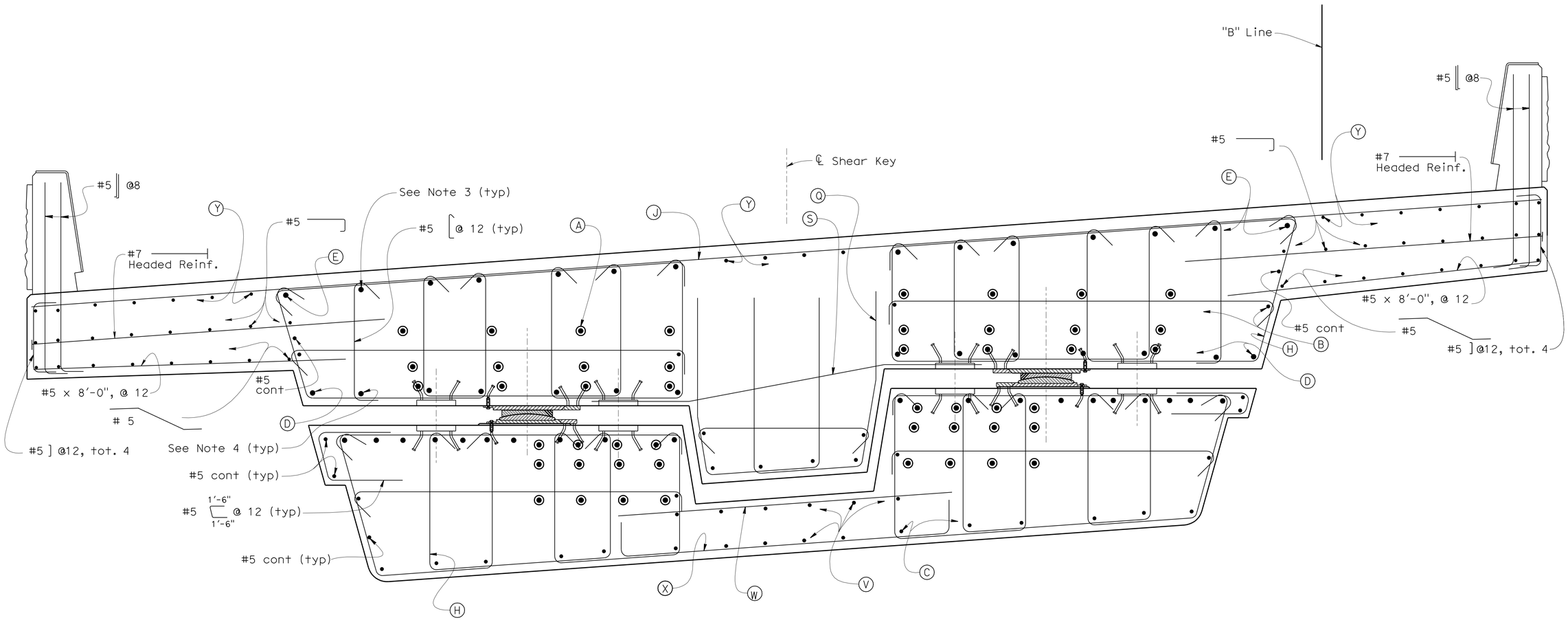

SECTION K-K ("B" Line)

3/4" = 1'-0"

NOTES:

1. Typical Section Reinforcement not shown. See "TYPICAL SECTION NO. 1" sheet.
2. For location of 'Section K-K ("B" Line)', see "HINGE 2 DETAILS NO. 1" sheet.
3. Add additional (E) bar
4. Add additional (D) bar
5. For rebar designation see "HINGE 2 (NEW DOCK OFF RAMP) DETAILS NO. 4" sheet.

	BY	CHECKED
DESIGN	Ahmed M. M. Ibrahim	F. Zayati
DETAILS	T. Nguyen	F. Zayati
QUANTITIES	M. Friedheim	N. Tachta

STATE OF CALIFORNIA
DEPARTMENT OF TRANSPORTATION

DIVISION OF ENGINEERING SERVICES
STRUCTURE DESIGN
DESIGN BRANCH 14

BRIDGE NO. 53-3032
POST MILE 3.58

SCHUYLER HEIM BRIDGE (REPLACE)
HINGE 2 (NEW DOCK OFF RAMP) DETAILS NO. 5

STRUCTURES DESIGN DETAIL SHEET (ENGLISH) (REV. 10/25/05)

ORIGINAL SCALE IN INCHES FOR REDUCED PLANS 0 1 2 3

CU 07-271
EA 138201

DISREGARD PRINTS BEARING EARLIER REVISION DATES

REVISION DATES: 01-15-10 02-11-10 02-12-10 04-16-10 05-13-10 05-25-10

SHEET 104 OF 247

FILE => 53-3032-1-p-jhinge2-2det05.dgn

USERNAME => trmartok DATE PLOTTED => 19-OCT-2010 TIME PLOTTED => 09:02

DIST	COUNTY	ROUTE	POST MILES TOTAL PROJECT	SHEET No	TOTAL SHEETS
07	LA	47,103	3.5/4.6, 0.0/1.1	607	1003

REGISTERED CIVIL ENGINEER — DATE 05-24-10

10-11-10
PLANS APPROVAL DATE

REGISTERED PROFESSIONAL ENGINEER — FOUED ZAYATI — No. C57046 — Exp. 06-30-11 — CIVIL — STATE OF CALIFORNIA

The State of California or its officers or agents shall not be responsible for the accuracy or completeness of electronic copies of this plan sheet.

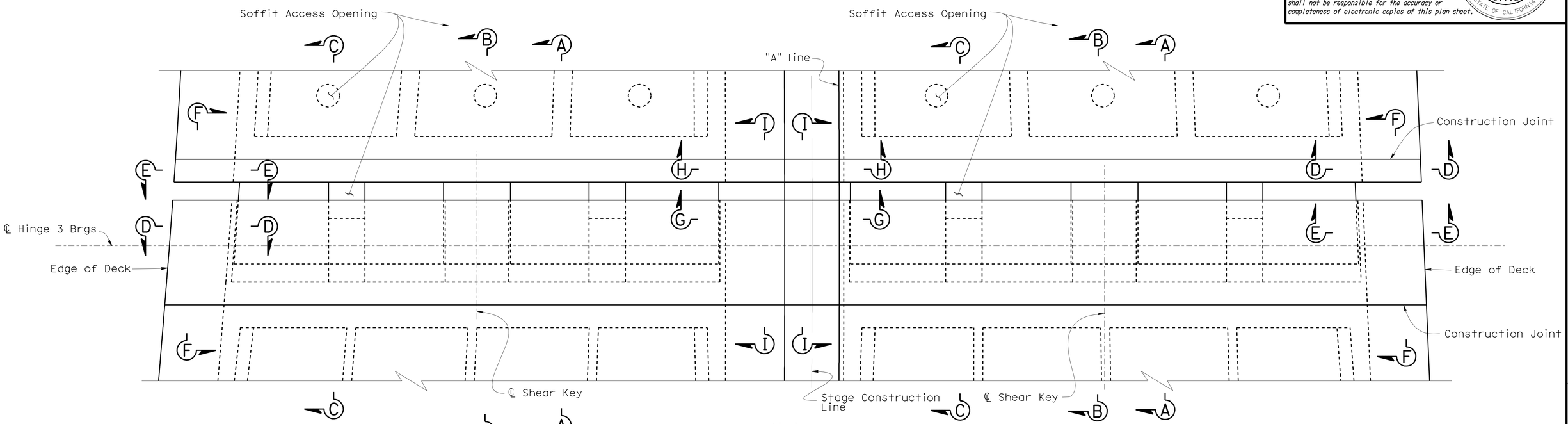

PLAN

3/16" = 1'-0"

NOTES:

1. For 'Section A-A' and 'Section B-B', see "HINGE 3 DETAILS NO. 2" sheet.
2. For 'Section C-C', 'Section D-D', 'Section E-E' and 'Section F-F', see "HINGE 3 DETAILS NO. 3" sheet.
3. For 'Section G-G', 'Section H-H' and 'Section I-I', see "HINGE 3 DETAILS NO. 4" sheet.
4. For 'Detail A' and 'Detail B', see "HINGE 3 DETAILS NO. 1" sheet.

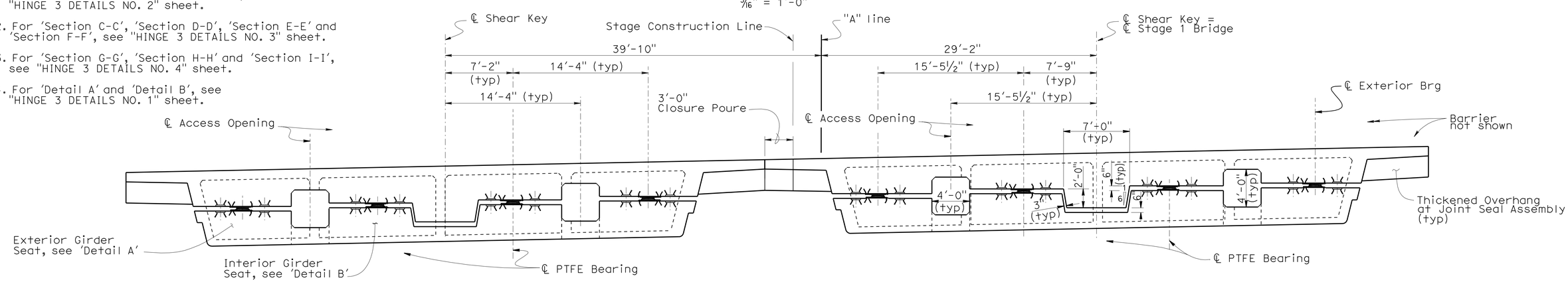

NOTE: All dimensions are the same as Stage 2 Bridge unless otherwise shown.

ELEVATION

3/16" = 1'-0"

	BY	CHECKED
DESIGN	Ahmed M. M. Ibrahim	F. Zayati
DETAILS	T. Nguyen	F. Zayati
QUANTITIES	M. Friedheim	N. Tachta

STATE OF CALIFORNIA
DEPARTMENT OF TRANSPORTATION

DIVISION OF ENGINEERING SERVICES
STRUCTURE DESIGN
DESIGN BRANCH 14

BRIDGE NO. 53-3032
POST MILE 3.58

SCHUYLER HEIM BRIDGE (REPLACE)

HINGE 3 LAYOUT

STRUCTURES DESIGN DETAIL SHEET (ENGLISH) (REV. 10/25/05)

ORIGINAL SCALE IN INCHES FOR REDUCED PLANS 0 1 2 3

CU 07-271
EA 138201

DISREGARD PRINTS BEARING EARLIER REVISION DATES

REVISION DATES: 09-23-09 | 12-16-09 | 01-20-10 | 01-29-10 | 04-16-10 | 04-30-10 | 05-20-10

SHEET 105 OF 247

FILE => 53-3032-1-p-jhinge3-1io.dgn

USERNAME => trestrk DATE PLOTTED => 19-OCT-2010 TIME PLOTTED => 12:48

DIST	COUNTY	ROUTE	POST MILES TOTAL PROJECT	SHEET No	TOTAL SHEETS
07	LA	47,103	3.5/4.6, 0.0/1.1	608	1003

REGISTERED CIVIL ENGINEER — DATE 05-24-10

10-11-10
PLANS APPROVAL DATE

The State of California or its officers or agents shall not be responsible for the accuracy or completeness of electronic copies of this plan sheet.

REGISTERED PROFESSIONAL ENGINEER — FOUED ZAYATI No. C57046 Exp. 06-30-11 CIVIL — STATE OF CALIFORNIA

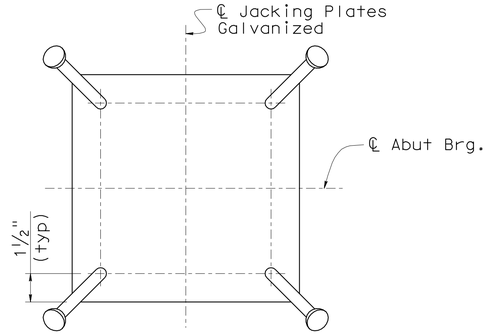

PLAN

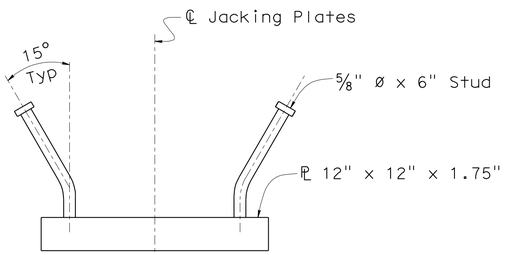

ELEVATION

JACKING PLATE DETAIL

3" = 1'-0"

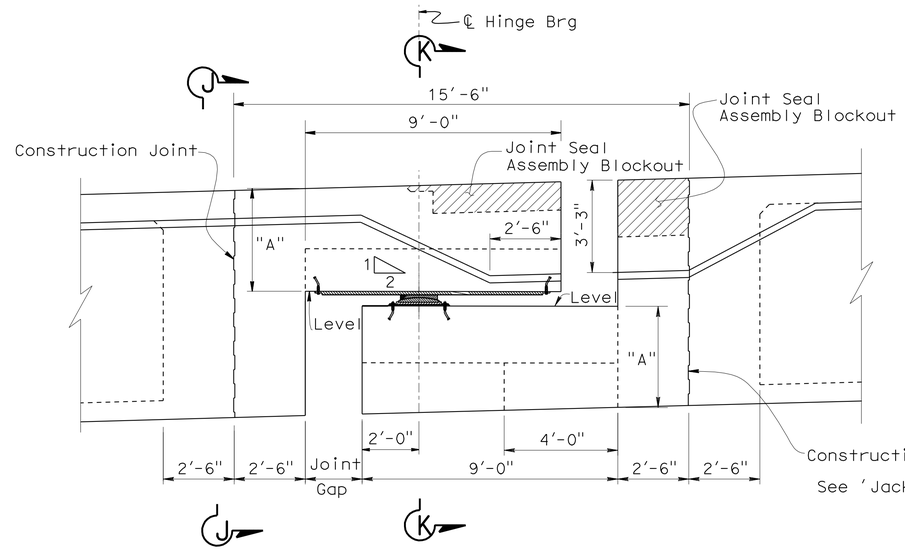

LONGITUDINAL ELEVATION

⅜" = 1'-0"

NOTES:

1. For 'Section J-J' and 'Section K-K', see "HINGE 3 DETAILS NO. 5" sheet.
2. For location of 'Detail A' and 'Detail B', see "HINGE 3 LAYOUT" sheet.
3. For Access Opening Door details, see "HINGE 2 DETAILS NO. 1" sheet.
4. "A" is measured @ ℄ bearings.

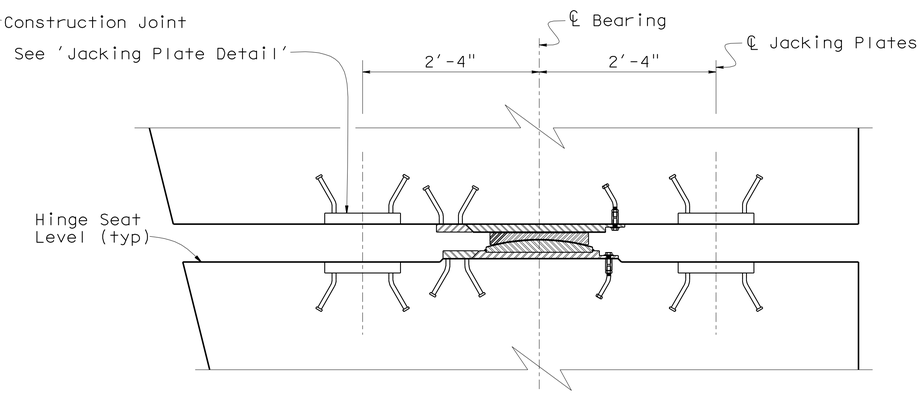

DETAIL A

1" = 1'-0"

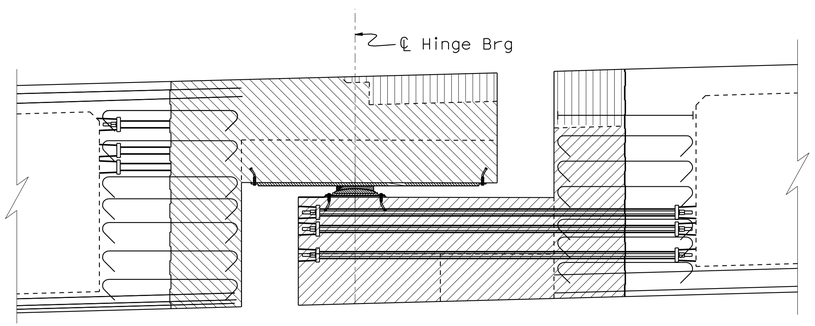

HINGE DETAIL

⅜" = 1'-0"

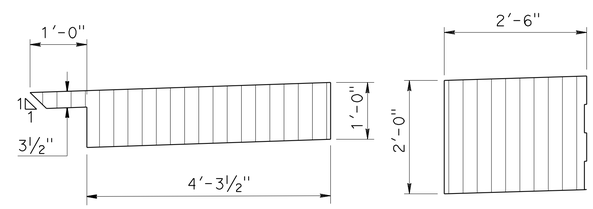

JOINT SEAL BLOCKOUT DETAIL

¾" = 1'-0"

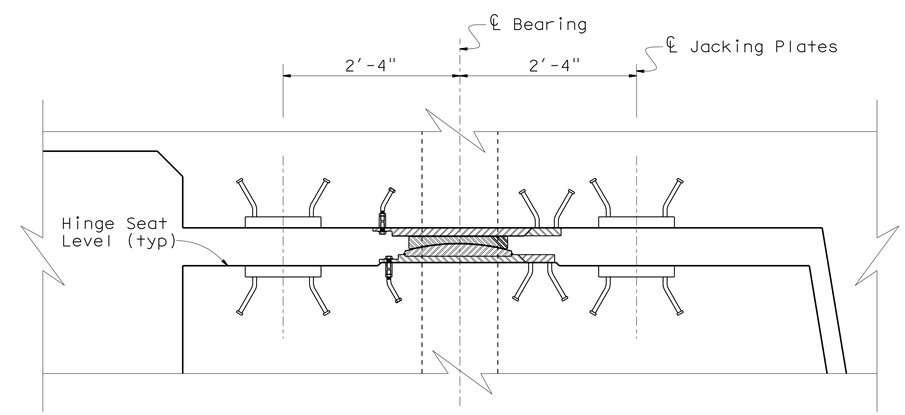

DETAIL B

1" = 1'-0"

Indicates Blockout and Closure Pour for Joint Seal Assemblies.

Indicates CIP concrete to be placed after both frames have been stressed.

Indicates CIP concrete to be placed after seat side of the Hinge is constructed and Bearings are properly positioned.

DESIGN	BY Ahmed M. M. Ibrahim	CHECKED F. Zayati	
DETAILS	BY T. Nguyen	CHECKED F. Zayati	
QUANTITIES	BY M. Friedheim	CHECKED N. Tachta	

STATE OF CALIFORNIA
DEPARTMENT OF TRANSPORTATION

DIVISION OF ENGINEERING SERVICES
STRUCTURE DESIGN
DESIGN BRANCH 14

BRIDGE NO. 53-3032
POST MILE 3.58

SCHUYLER HEIM BRIDGE (REPLACE)
HINGE 3 DETAIL NO. 1

STRUCTURES DESIGN DETAIL SHEET (ENGLISH) (REV. 10/25/05)

ORIGINAL SCALE IN INCHES FOR REDUCED PLANS 0 1 2 3

CU 07-271
EA 138201

DISREGARD PRINTS BEARING EARLIER REVISION DATES

REVISION DATES: 09-22-09 09-23-09 12-09-09 04-16-10 04-30-10 05-23-10

SHEET 106 OF 247

FILE => 53-3032-1-p-jhinge3-det1.dgn

USERNAME => trstrk DATE PLOTTED => 19-OCT-2010 TIME PLOTTED => 12:48

DIST	COUNTY	ROUTE	POST MILES TOTAL PROJECT	SHEET No	TOTAL SHEETS
07	LA	47,103	3.5/4.6, 0.0/1.1	609	1003

REGISTERED CIVIL ENGINEER 05-24-10 DATE

10-11-10
PLANS APPROVAL DATE

REGISTERED PROFESSIONAL ENGINEER FOUED ZAYATI No. C57046 Exp. 06-30-11 CIVIL STATE OF CALIFORNIA

The State of California or its officers or agents shall not be responsible for the accuracy or completeness of electronic copies of this plan sheet.

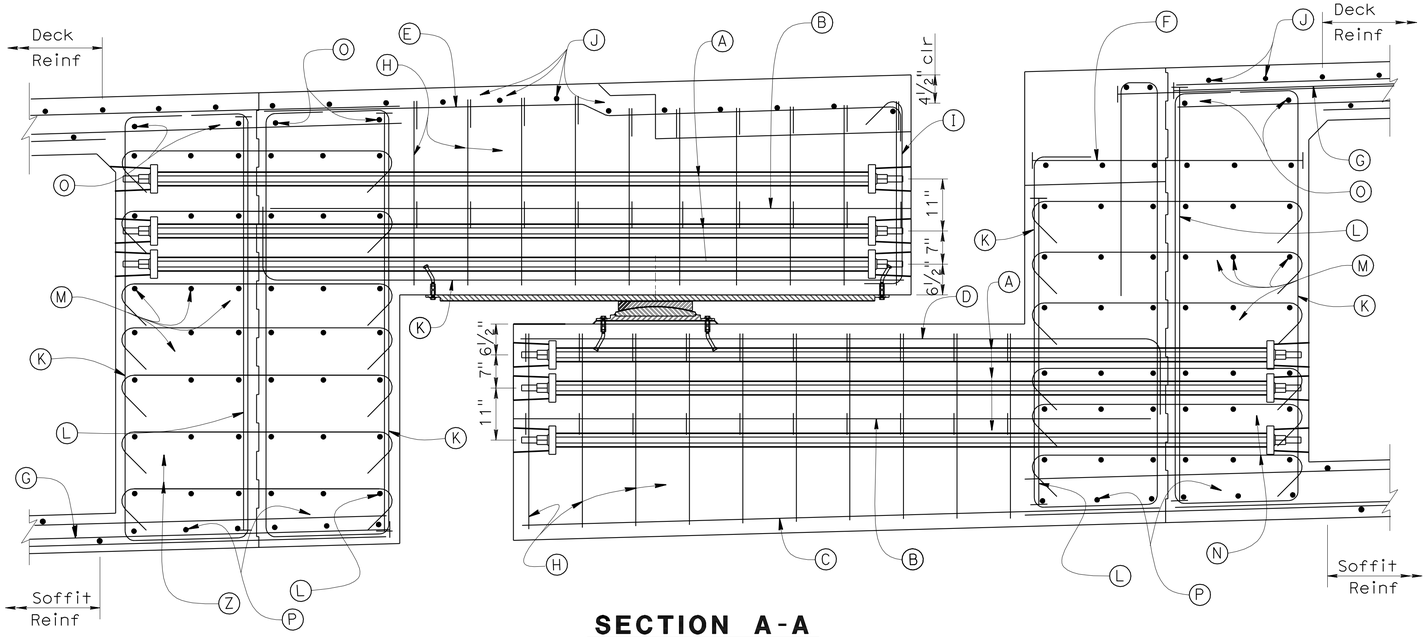

SECTION A-A

¾" = 1'-0"

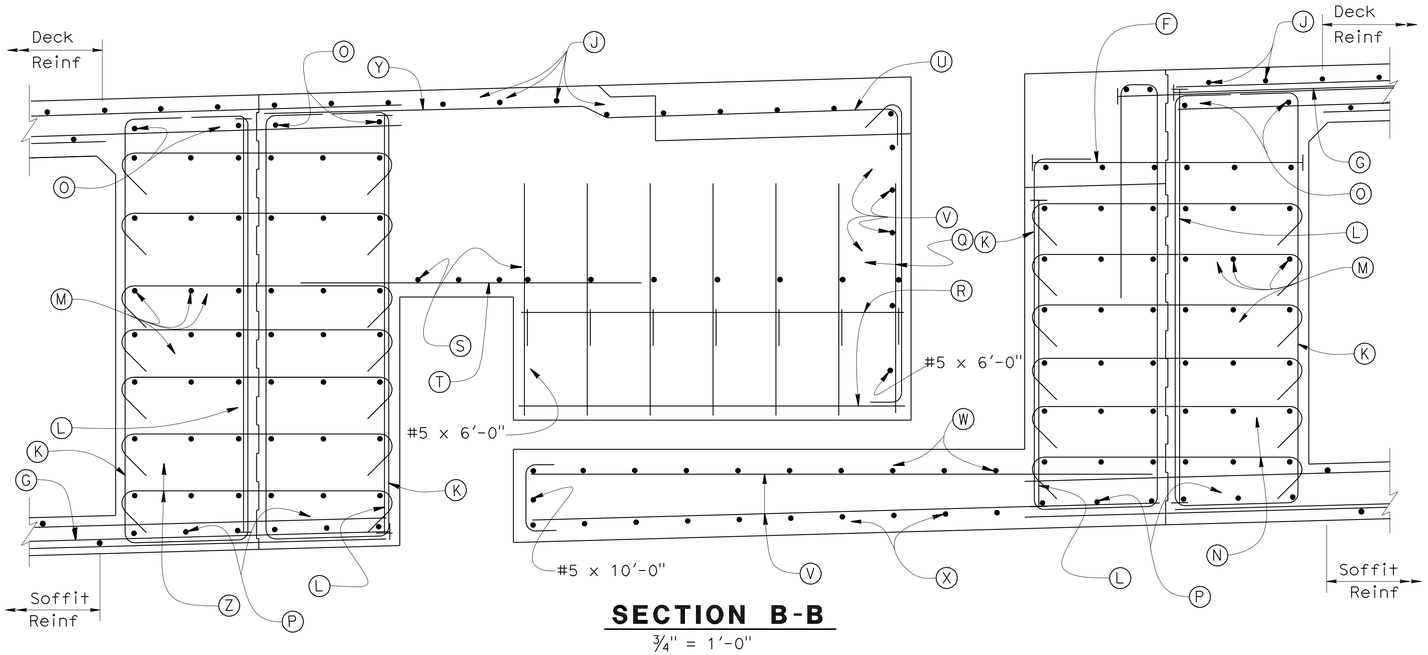

SECTION B-B

¾" = 1'-0"

PRESTRESSING NOTES

1. 150 KSI HS bars:
2. Concrete: f'_c = 5.0 ksi @ 28 days
   f'_{ci} = 4.5 ksi @ time of stressing
3. Stress all HS bars using an alternating stessing sequence to a lockoff stress equal to 70% of Ultimate stress.
4. Stress HS bars from inside structure bays
5. Falsework shall not be released prior to stressing all HS bars.

LEGEND

- (A) 1⅜" dia. HS Stress bars, tot. 7 per layer, per Bearing (typ)
- (B) #6 cont, tot. 2 per Bearing
- (C) #6 cont, tot. 6 per Bearing
- (D) #9 tot. 7 per Bearing (typ)
- (E) #6 , tot. 7 per Bearing
- (F) #11 @ 6
- (G) #11 12'-6" @ 6
- (H) #6 or @ 12, at each Bearing Seat
- (I) #5 @ 12
- (J) #5 @ 12, cont
- (K) #6 3'-9" @ 12 (typ)
- (L) #9 @ 6 (typ)
- (M) #5 cont, tot. 6 per layer, tot. 7 layers
- (N) #5 tot. 6, @ 12 (typ)
- (O) #5 cont, tot. 4 (typ)
- (P) #5 4'-0" 4'-0" tot. 12
- (Q) #7 2'-0" @ 12
- (R) #5 x 6'-9", tot. 8
- (S) #8 2'-6" 2'-6" @ 12
- (T) #5 x 5'-0", @ 12
- (U) #5 cont, tot. 4
- (V) #5 @ 12, cont
- (W) #5 x 10'-0", @ 12
- (X) #5 10" 12'-0" @12
- (Y) #5 @ 12
- (Z) #5 tot. 7, @ 12 (typ)

NOTES:

1. For location of 'Section A-A' and 'Section B-B', see "HINGE 3 LAYOUT" sheet.
2. 3" clear cover (typ)
3. All HS bars, place (K) in front Anchor Plate.

	BY	CHECKED
DESIGN	Ahmed M. M. Ibrahim	F. Zayati
DETAILS	T. Nguyen	F. Zayati
QUANTITIES	M. Friedheim	N. Tachta

STATE OF CALIFORNIA
DEPARTMENT OF TRANSPORTATION

DIVISION OF ENGINEERING SERVICES
STRUCTURE DESIGN
DESIGN BRANCH 14

BRIDGE NO. 53-3032
POST MILE 3.58

SCHUYLER HEIM BRIDGE (REPLACE)
HINGE 3 DETAILS NO. 2

STRUCTURES DESIGN DETAIL SHEET (ENGLISH) (REV. 10/25/05)

ORIGINAL SCALE IN INCHES FOR REDUCED PLANS 0 1 2 3

CU 07-271
EA 138201

DISREGARD PRINTS BEARING EARLIER REVISION DATES 09-25-09 01-29-10 04-16-10 04-30-10

REVISION DATES

SHEET 107 OF 247

FILE => 53-3032-1-p-jhinge3-det2.dgn

USERNAME => trsttrk DATE PLOTTED => 19-OCT-2010 TIME PLOTTED => 12:48

DIST	COUNTY	ROUTE	POST MILES TOTAL PROJECT	SHEET No	TOTAL SHEETS
07	LA	47,103	3.5/4.6, 0.0/1.1	610	1003

REGISTERED CIVIL ENGINEER 05-24-10 DATE

10-11-10
PLANS APPROVAL DATE

The State of California or its officers or agents shall not be responsible for the accuracy or completeness of electronic copies of this plan sheet.

REGISTERED PROFESSIONAL ENGINEER FOUED ZAYATI No. C57046 Exp. 06-30-11 CIVIL STATE OF CALIFORNIA

NOTES:

1. Typical Section Reinforcement not shown. See "TYPICAL SECTION NO. 1" sheet.
2. For location of 'Section C-C', 'Section D-D', 'Section E-E' and 'Section F-F', see "HINGE 3 LAYOUT" sheet.
3. For rebar designation see "HINGE 3 DETAILS NO. 2" sheet.

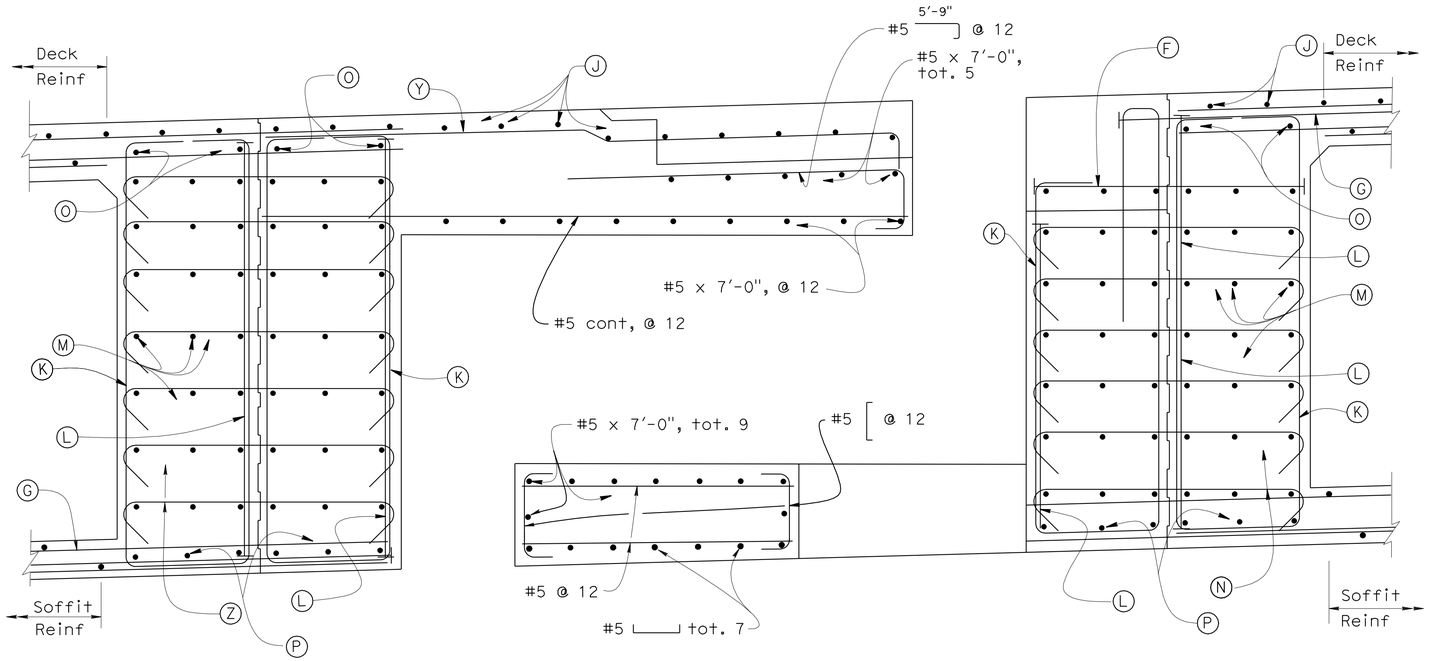

SECTION C-C

3/4" = 1'-0"

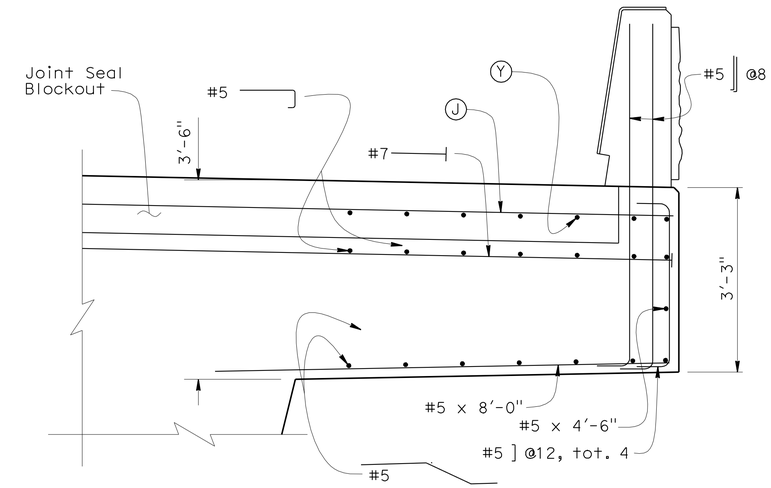

SECTION D-D

3/4" = 1'-0"

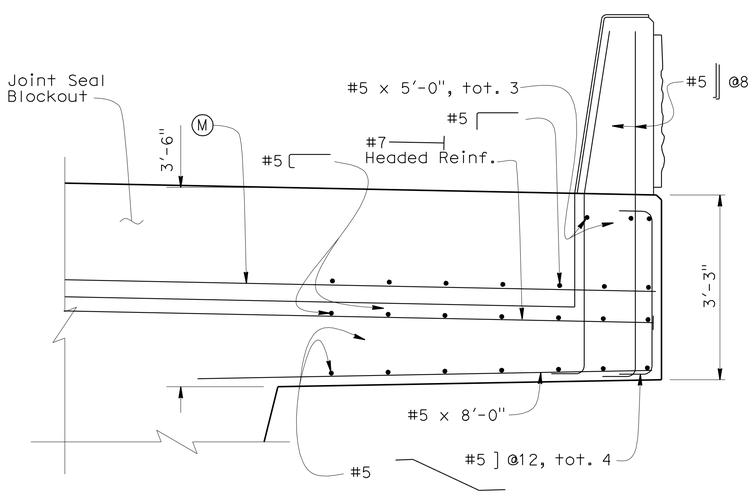

SECTION E-E

3/4" = 1'-0"

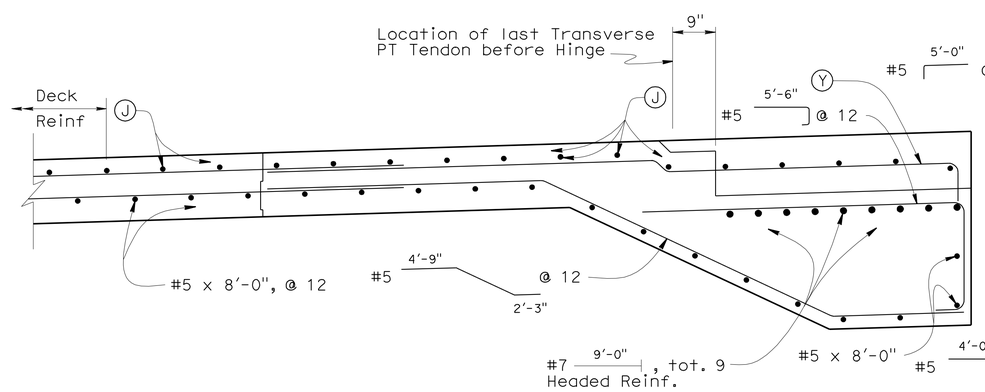

SECTION F-F

3/4" = 1'-0"

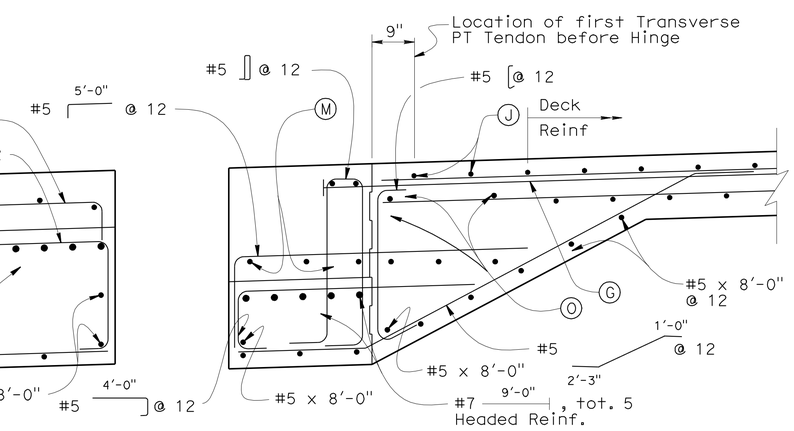

DESIGN	BY Ahmed M. M. Ibrahim	CHECKED F. Zayati	
DETAILS	BY T. Nguyen	CHECKED F. Zayati	
QUANTITIES	BY M. Friedheim	CHECKED N. Tachta	

STATE OF CALIFORNIA
DEPARTMENT OF TRANSPORTATION

DIVISION OF ENGINEERING SERVICES
STRUCTURE DESIGN
DESIGN BRANCH 14

BRIDGE NO. 53-3032
POST MILE 3.58

SCHUYLER HEIM BRIDGE (REPLACE)

HINGE 3 DETAILS NO. 3

STRUCTURES DESIGN DETAIL SHEET (ENGLISH) (REV. 10/25/05)

ORIGINAL SCALE IN INCHES FOR REDUCED PLANS 0 1 2 3

CU 07-271
EA 138201

DISREGARD PRINTS BEARING EARLIER REVISION DATES

REVISION DATES: 10-01-09 12-18-09 1-18-10 04-30-10

SHEET 108 OF 247

FILE => 53-3032-1-p-jhinge3-det3.dgn

USERNAME => ttrstrk DATE PLOTTED => 19-OCT-2010 TIME PLOTTED => 12:48

DIST	COUNTY	ROUTE	POST MILES TOTAL PROJECT	SHEET No	TOTAL SHEETS
07	LA	47,103	3.5/4.6, 0.0/1.1	611	1003

REGISTERED CIVIL ENGINEER 05-24-10 DATE

10-11-10
PLANS APPROVAL DATE

REGISTERED PROFESSIONAL ENGINEER FOUED ZAYATI No. C57046 Exp. 06-30-11 CIVIL STATE OF CALIFORNIA

The State of California or its officers or agents shall not be responsible for the accuracy or completeness of electronic copies of this plan sheet.

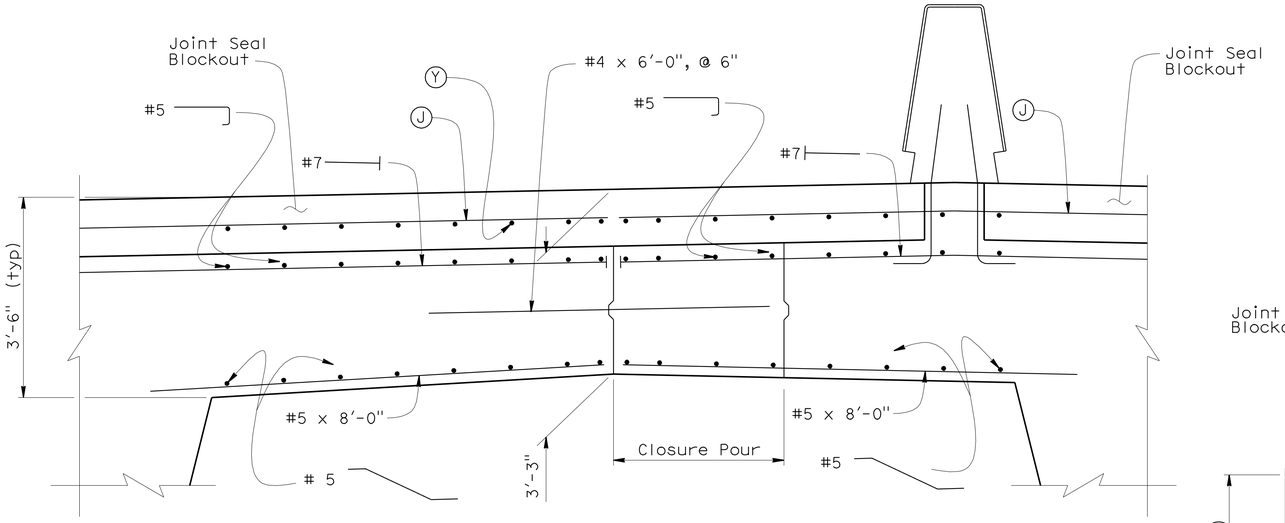

SECTION G-G

3/4" = 1'-0"

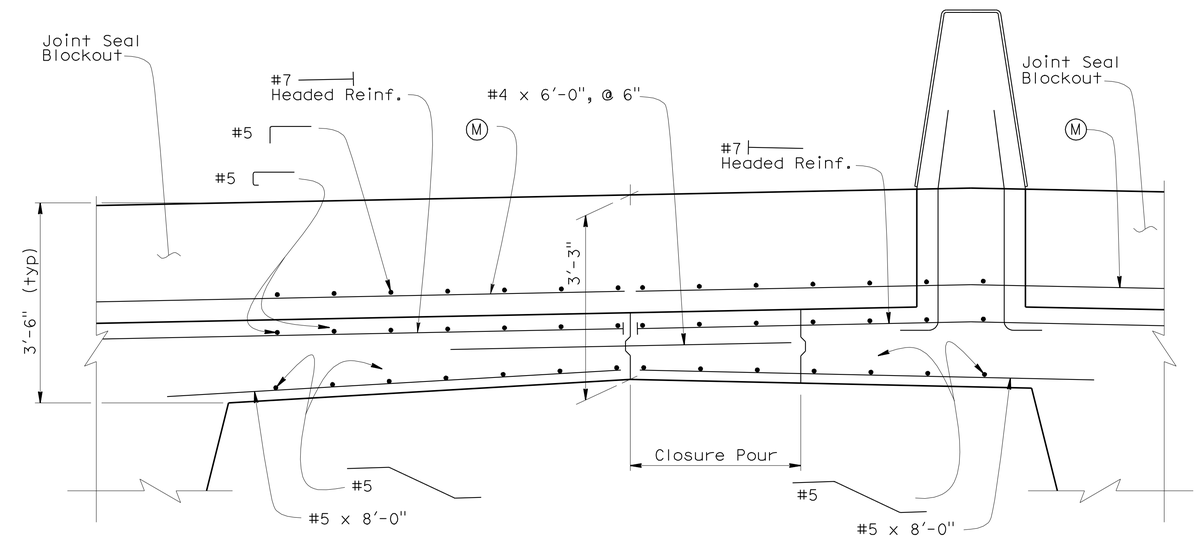

SECTION H-H

3/4" = 1'-0"

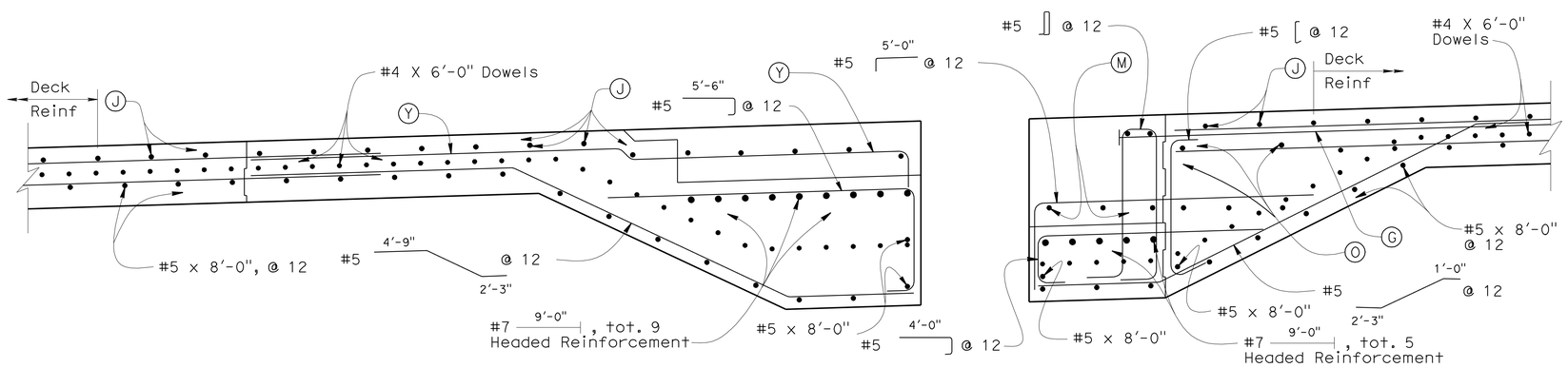

SECTION I-I

3/4" = 1'-0"

NOTES:

1. Typical Section Reinforcement not shown. See "TYPICAL SECTION NO. 1" sheet.
2. For location of 'Section C-C', 'Section G-G', 'Section H-H' and 'Section I-I', see "HINGE 3 LAYOUT" sheet.
3. For rebar designation see "HINGE 3 DETAILS NO. 2" sheet.

	BY	CHECKED
DESIGN	Ahmed M. M. Ibrahim	F. Zayati
DETAILS	T. Nguyen	F. Zayati
QUANTITIES	M. Friedheim	N. Tachta

STATE OF CALIFORNIA
DEPARTMENT OF TRANSPORTATION

DIVISION OF ENGINEERING SERVICES
STRUCTURE DESIGN
DESIGN BRANCH 14

BRIDGE NO. 53-3032
POST MILE 3.58

SCHUYLER HEIM BRIDGE (REPLACE)

HINGE 3 DETAILS NO. 4

STRUCTURES DESIGN DETAIL SHEET (ENGLISH) (REV. 10/25/05)

ORIGINAL SCALE IN INCHES FOR REDUCED PLANS 0 1 2 3

CU 07-271
EA 138201

DISREGARD PRINTS BEARING EARLIER REVISION DATES

REVISION DATES: 05-23-08 07-23-08 01-22-10 04-14-10 04-30-10

SHEET 109 OF 247

FILE => 53-3032-1-p-jhinge3-det4.dgn

USERNAME => tfstrk DATE PLOTTED => 19-OCT-2010 TIME PLOTTED => 12:49

DIST	COUNTY	ROUTE	POST MILES TOTAL PROJECT	SHEET No	TOTAL SHEETS
07	LA	47,103	3.5/4.6, 0.0/1.1	612	1003

REGISTERED CIVIL ENGINEER — 05-24-10 DATE

10-11-10
PLANS APPROVAL DATE

REGISTERED PROFESSIONAL ENGINEER — FOUED ZAYATI No. C57046 Exp. 06-30-11 CIVIL — STATE OF CALIFORNIA

The State of California or its officers or agents shall not be responsible for the accuracy or completeness of electronic copies of this plan sheet.

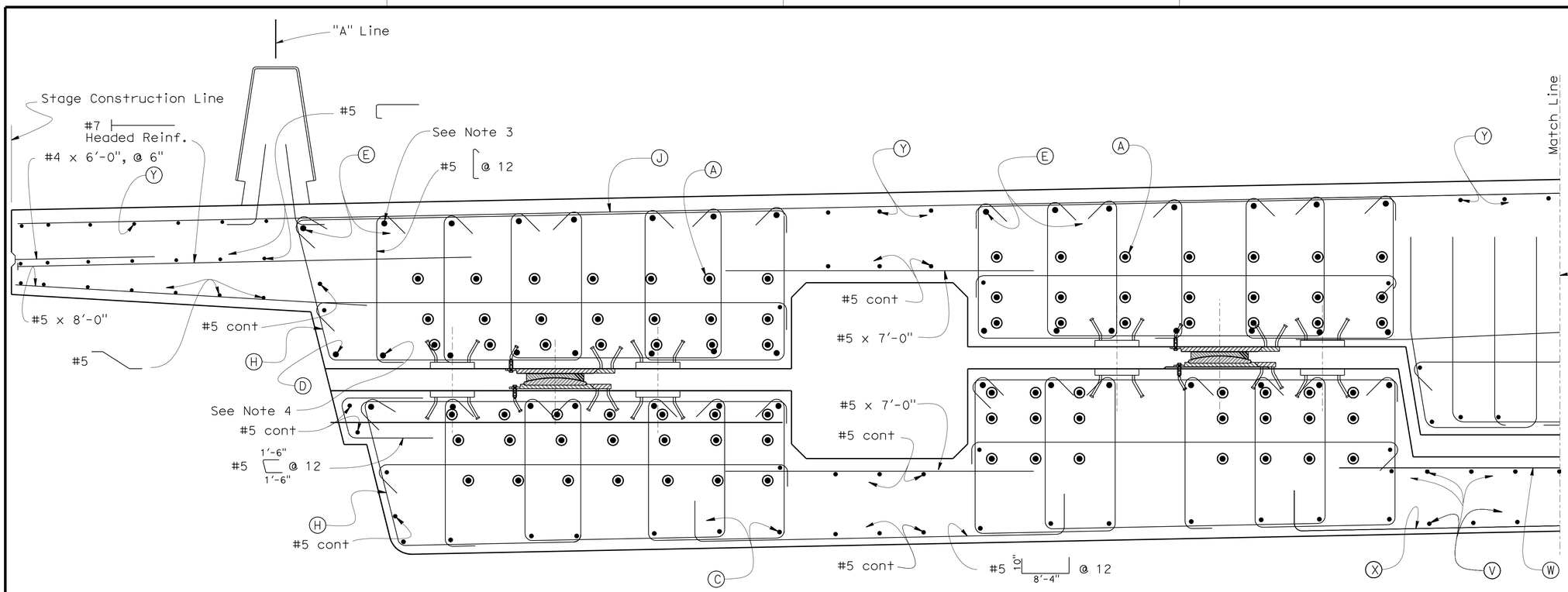

NOTES:

1. Typical Section Reinforcement not shown. See "TYPICAL SECTION NO. 1" sheet.
2. For location of 'Section K-K', see "HINGE 3 DETAILS NO. 1" sheet.
3. Add additional (E) bar
4. Add additional (D) bar
5. For rebar designation see "HINGE 3 DETAILS NO. 2" sheet.

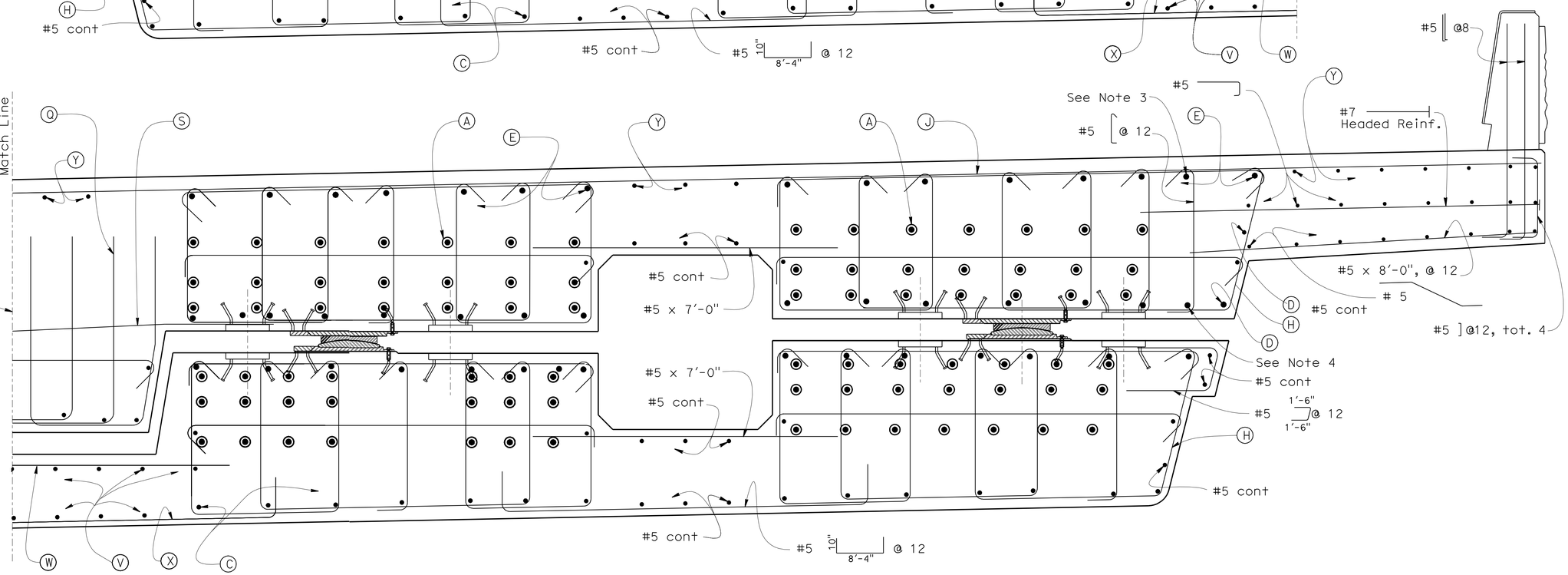

SECTION K-K

3/4" = 1'-0"

DESIGN	BY Ahmed M. M. Ibrahim	CHECKED F. Zayati	
DETAILS	BY T. Nguyen	CHECKED F. Zayati	
QUANTITIES	BY M. Friedheim	CHECKED N. Tachta	

STATE OF CALIFORNIA DEPARTMENT OF TRANSPORTATION

DIVISION OF ENGINEERING SERVICES STRUCTURE DESIGN DESIGN BRANCH 14

BRIDGE NO. 53-3032 POST MILE 3.58

SCHUYLER HEIM BRIDGE (REPLACE)
HINGE 3 (STAGE 2) DETAILS NO. 5

STRUCTURES DESIGN DETAIL SHEET (ENGLISH) (REV. 10/25/05)

ORIGINAL SCALE IN INCHES FOR REDUCED PLANS 0 1 2 3

CU 07-271
EA 138201

DISREGARD PRINTS BEARING EARLIER REVISION DATES

REVISION DATES: 10-01-09 12-18-09 1-14-10 2-5-10 4-16-10 4-30-10

SHEET 110 OF 247

FILE => 53-3032-1-p-jhinge3-det5.dgn

USERNAME => trstrk DATE PLOTTED => 19-OCT-2010 TIME PLOTTED => 12:49

DIST	COUNTY	ROUTE	POST MILES TOTAL PROJECT	SHEET No	TOTAL SHEETS
07	LA	47,103	3.5/4.6, 0.0/1.1	613	1003

REGISTERED CIVIL ENGINEER — DATE 05-24-10

10-11-10
PLANS APPROVAL DATE

REGISTERED PROFESSIONAL ENGINEER — FOUED ZAYATI — No. C57046 — Exp. 06-30-11 — CIVIL — STATE OF CALIFORNIA

The State of California or its officers or agents shall not be responsible for the accuracy or completeness of electronic copies of this plan sheet.

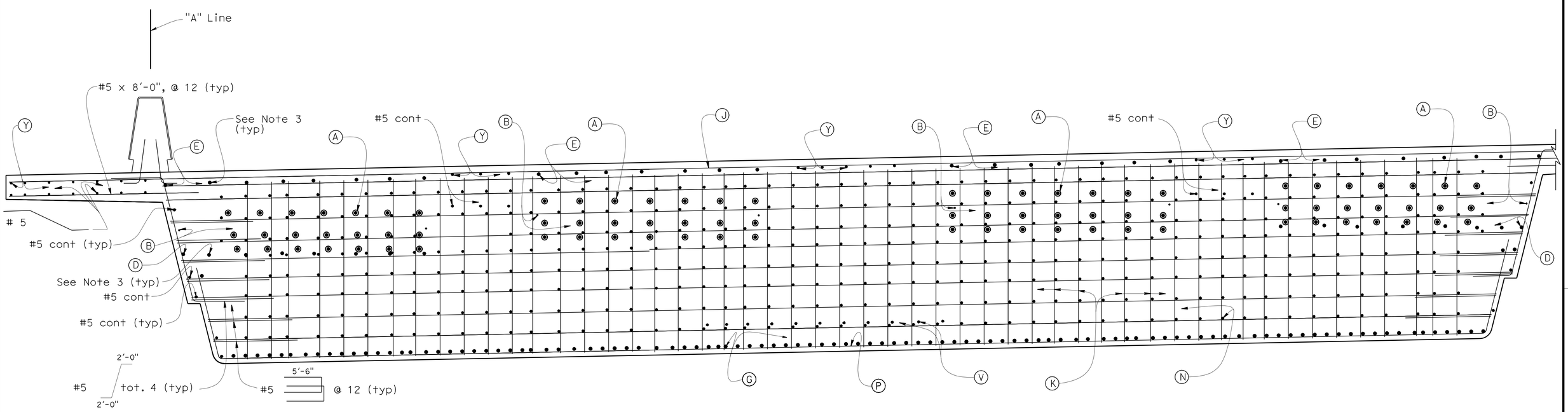

SECTION J-J

1/2" = 1'-0"

NOTES:

1. Typical Section Reinforcement not shown. See "TYPICAL SECTION NO. 1" sheet.
2. For location of 'Section J-J', see "HINGE 3 DETAILS NO. 1" sheet.
3. Add additional (E) bar
4. Add additional (D) bar
5. Right Overhang reinforcement shown, left Overhang reinforment similar.
6. For rebar designation see "HINGE 3 DETAILS NO. 2" sheet.

	BY	CHECKED
DESIGN	Ahmed M. M. Ibrahim	F. Zayati
DETAILS	T. Nguyen	F. Zayati
QUANTITIES	M. Friedheim	N. Tachta

STATE OF CALIFORNIA
DEPARTMENT OF TRANSPORTATION

DIVISION OF ENGINEERING SERVICES
STRUCTURE DESIGN
DESIGN BRANCH 14

BRIDGE NO. 53-3032
POST MILE 3.58

SCHUYLER HEIM BRIDGE (REPLACE)
HINGE 3 (STAGE 2) DETAILS NO. 6

STRUCTURES DESIGN DETAIL SHEET (ENGLISH) (REV. 10/25/05)

ORIGINAL SCALE IN INCHES FOR REDUCED PLANS 0 1 2 3

CU 07-271
EA 138201

DISREGARD PRINTS BEARING EARLIER REVISION DATES

REVISION DATES: 12-18-09 1-20-10 2-4-10 4-16-10 4-19-10 05-25-10

SHEET 111 OF 247

FILE => 53-3032-1-p-jhinge3-det6.dgn

USERNAME => ttrstrk DATE PLOTTED => 19-OCT-2010 TIME PLOTTED => 12:49

DIST	COUNTY	ROUTE	POST MILES TOTAL PROJECT	SHEET No	TOTAL SHEETS
07	LA	47,103	3.5/4.6, 0.0/1.1	614	1003

REGISTERED CIVIL ENGINEER — 05-24-10 DATE

10-11-10
PLANS APPROVAL DATE

The State of California or its officers or agents shall not be responsible for the accuracy or completeness of electronic copies of this plan sheet.

REGISTERED PROFESSIONAL ENGINEER — FOUED ZAYATI — No. C57046 — Exp. 06-30-11 — CIVIL — STATE OF CALIFORNIA

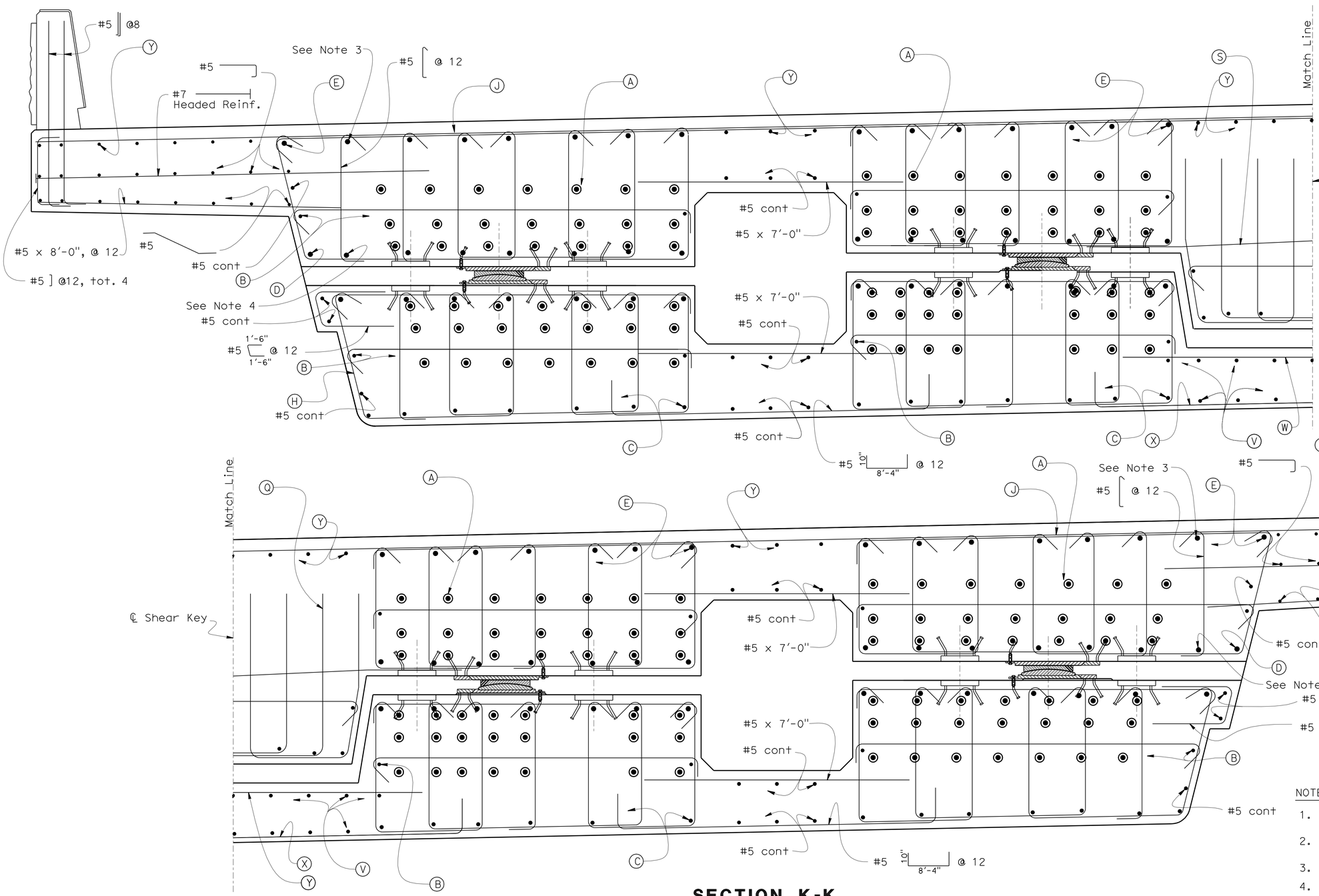

SECTION K-K

3/4" = 1'-0"

NOTES:

1. Typical Section Reinforcement not shown. See "TYPICAL SECTION NO. 1" sheet.
2. For location of 'Section K-K', see "HINGE 3 DETAILS NO. 1" sheet.
3. Add additional (E) bar
4. Add additional (D) bar
5. For rebar designation see "HINGE 3 DETAILS NO. 2" sheet.

	BY	CHECKED
DESIGN	Ahmed M. M. Ibrahim	F. Zayati
DETAILS	T. Nguyen	F. Zayati
QUANTITIES	M. Friedheim	N. Tachta

STATE OF CALIFORNIA
DEPARTMENT OF TRANSPORTATION

DIVISION OF ENGINEERING SERVICES
STRUCTURE DESIGN
DESIGN BRANCH 14

BRIDGE NO. 53-3032
POST MILE 3.58

SCHUYLER HEIM BRIDGE (REPLACE)
HINGE 3 (STAGE 3) DETAILS NO. 7

STRUCTURES DESIGN DETAIL SHEET (ENGLISH) (REV. 10/25/05)

ORIGINAL SCALE IN INCHES FOR REDUCED PLANS 0 1 2 3

CU 07-271
EA 138201

DISREGARD PRINTS BEARING EARLIER REVISION DATES

REVISION DATES: 10-01-09 12-18-09 2-02-10 4-16-10 4-30-10

SHEET 112 OF 247

FILE => 53-3032-1-p-jhinge3-det7.dgn

USERNAME => trsitrk DATE PLOTTED => 19-OCT-2010 TIME PLOTTED => 13:04

DIST	COUNTY	ROUTE	POST MILES TOTAL PROJECT	SHEET No	TOTAL SHEETS
07	LA	47,103	3.5/4.6, 0.0/1.1	615	1003

REGISTERED CIVIL ENGINEER — DATE: 05-24-10

10-11-10
PLANS APPROVAL DATE

REGISTERED PROFESSIONAL ENGINEER — FOUED ZAYATI — No. C57046 — Exp. 06-30-11 — CIVIL — STATE OF CALIFORNIA

The State of California or its officers or agents shall not be responsible for the accuracy or completeness of electronic copies of this plan sheet.

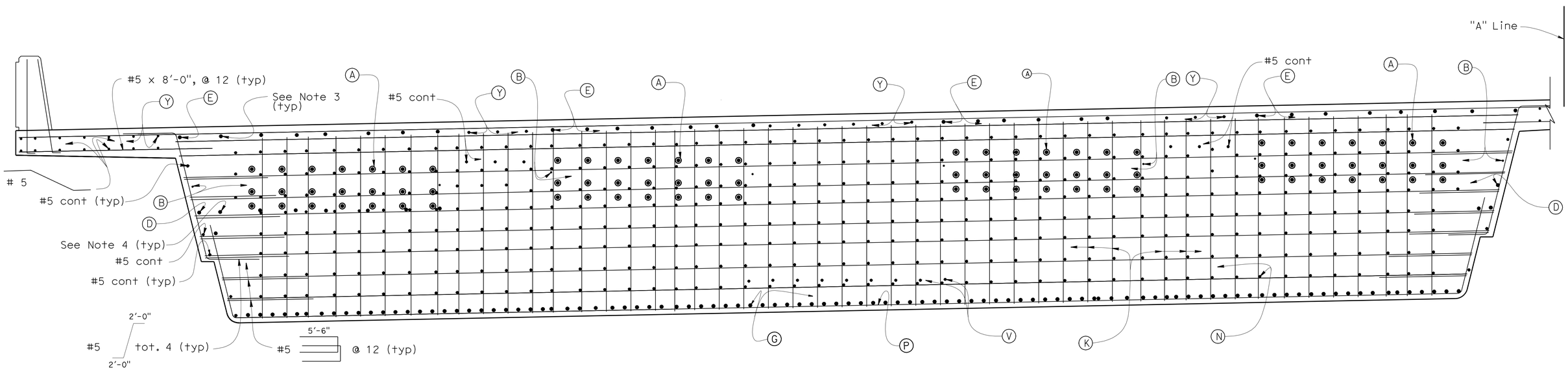

SECTION J-J

½" = 1'-0"

NOTES:

1. Typical Section Reinforcement not shown. See "TYPICAL SECTION NO. 1" sheet.
2. For location of 'Section J-J', see "HINGE 3 DETAILS NO. 1" sheet.
3. Add additional (E) bar
4. Add additional (D) bar
5. Right Overhang reinforcement shown, left Overhang reinforcement similar.
6. For rebar designation see "HINGE 3 DETAILS NO. 2" sheet.

	BY	CHECKED
DESIGN	Ahmed M. M. Ibrahim	F. Zayati
DETAILS	T. Nguyen	F. Zayati
QUANTITIES	M. Friedheim	N. Tachta

STATE OF CALIFORNIA
DEPARTMENT OF TRANSPORTATION

DIVISION OF ENGINEERING SERVICES
STRUCTURE DESIGN
DESIGN BRANCH 14

BRIDGE NO. 53-3032
POST MILE 3.58

SCHUYLER HEIM BRIDGE (REPLACE)
HINGE 3 (STAGE 3) DETAILS NO. 8

STRUCTURES DESIGN DETAIL SHEET (ENGLISH) (REV. 10/25/05)

ORIGINAL SCALE IN INCHES FOR REDUCED PLANS 0 1 2 3

CU 07-271
EA 138201

DISREGARD PRINTS BEARING EARLIER REVISION DATES

REVISION DATES: 10-07-09 | 12-18-09 | 1-29-10 | 2-5-10 | 4-16-10 | 4-30-10 | 05-25-10

SHEET 113 OF 247

FILE => 53-3032-1-p-jhinge3-det8.dgn

USERNAME => tfstrk DATE PLOTTED => 19-OCT-2010 TIME PLOTTED => 12:49

DIST	COUNTY	ROUTE	POST MILES TOTAL PROJECT	SHEET No	TOTAL SHEETS
07	LA	47,103	3.5/4.6, 0.0/1.1	616	1003

REGISTERED CIVIL ENGINEER — DATE 05-24-10

10-11-10
PLANS APPROVAL DATE

REGISTERED PROFESSIONAL ENGINEER — FOUED ZAYATI — No. C57046 — Exp. 06-30-11 — CIVIL — STATE OF CALIFORNIA

The State of California or its officers or agents shall not be responsible for the accuracy or completeness of electronic copies of this plan sheet.

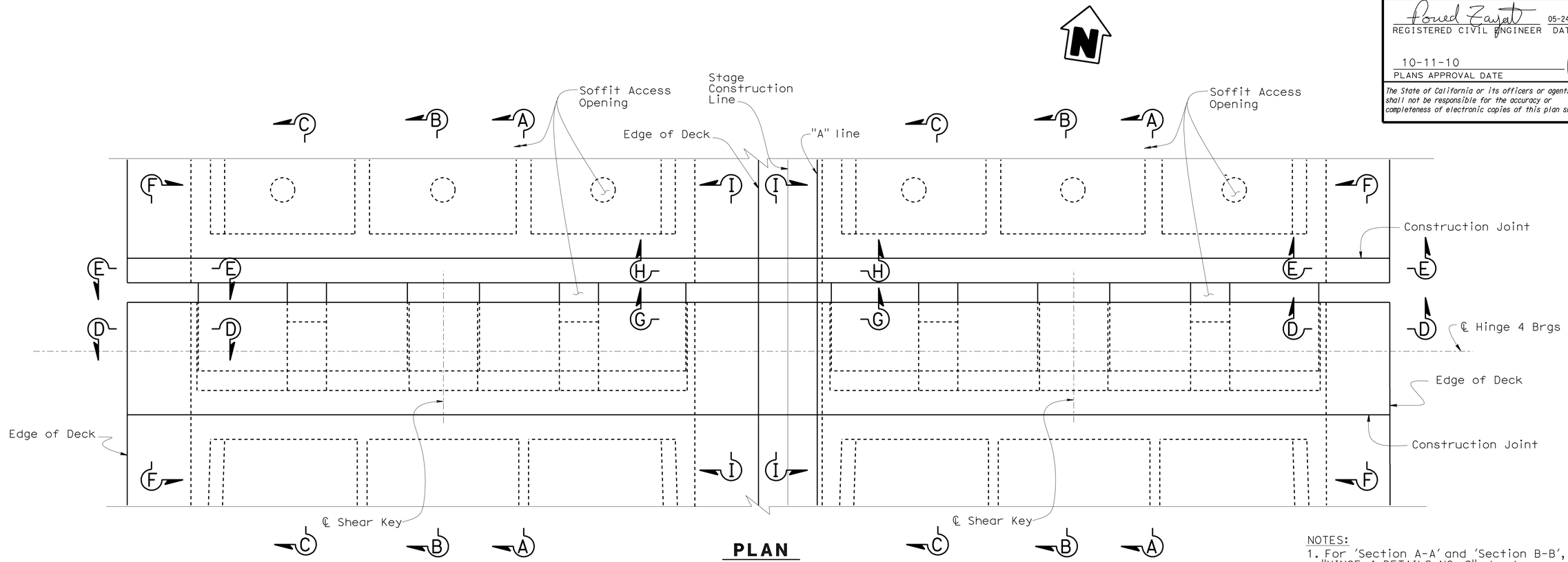

PLAN

3/16" = 1'-0"

NOTES:

1. For 'Section A-A' and 'Section B-B', see "HINGE 4 DETAILS NO. 2" sheet.
2. For 'Section C-C', 'Section D-D', 'Section E-E' and 'Section F-F', see "HINGE 4 DETAILS NO. 3" sheet.
3. For 'Section G-G', 'Section H-H' and 'Section I-I', see "HINGE 4 DETAILS NO. 4" sheet.
4. For 'Detail A' and 'Detail B', see "HINGE 4 DETAILS NO. 1" sheet.

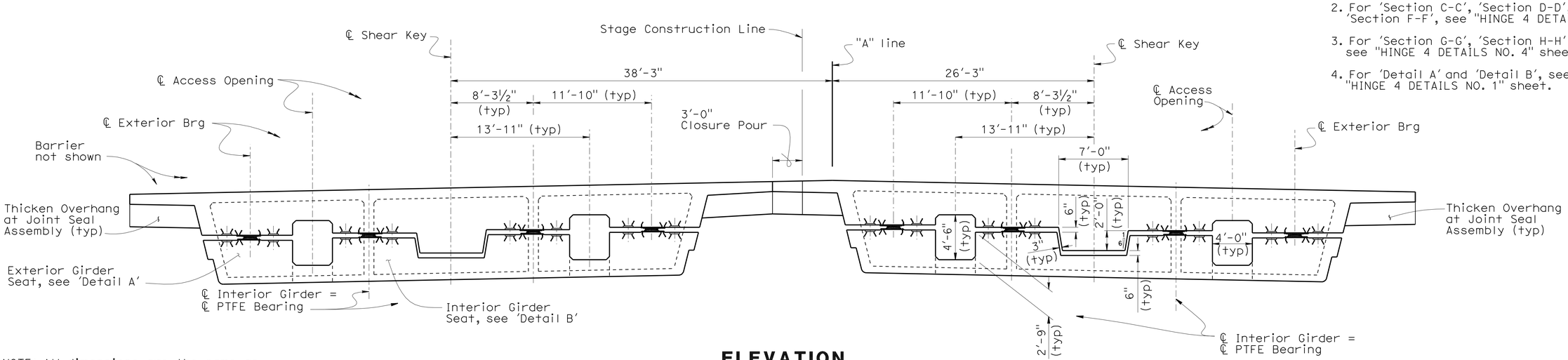

ELEVATION

3/16" = 1'-0"

NOTE: All dimensions are the same as Stage 2 Bridge unless otherwise shown.

	BY	CHECKED
DESIGN	Ahmed M. M. Ibrahim	F. Zayati
DETAILS	T. Nguyen	F. Zayati
QUANTITIES	M. Friedheim	N. Tachta

STATE OF CALIFORNIA
DEPARTMENT OF TRANSPORTATION

DIVISION OF ENGINEERING SERVICES
STRUCTURE DESIGN
DESIGN BRANCH 14

BRIDGE NO. 53-3032
POST MILE 3.58

SCHUYLER HEIM BRIDGE (REPLACE)

HINGE 4 LAYOUT

STRUCTURES DESIGN DETAIL SHEET (ENGLISH) (REV. 10/25/05)

ORIGINAL SCALE IN INCHES FOR REDUCED PLANS 0 1 2 3

CU 07-271
EA 138201

DISREGARD PRINTS BEARING EARLIER REVISION DATES

REVISION DATES: 05-21-08, 07-24-09, 10-26-09, 12-08-09, 4-16-10, 4-30-10, 5-20-10

SHEET 114 OF 247

FILE => 53-3032-1-p-jhinge4-1io.dgn

USERNAME => tfstrk DATE PLOTTED => 19-OCT-2010 TIME PLOTTED => 12:50

DIST	COUNTY	ROUTE	POST MILES TOTAL PROJECT	SHEET No	TOTAL SHEETS
07	LA	47,103	3.5/4.6, 0.0/1.1	617	1003

REGISTERED CIVIL ENGINEER 05-24-10 DATE

10-11-10
PLANS APPROVAL DATE

The State of California or its officers or agents shall not be responsible for the accuracy or completeness of electronic copies of this plan sheet.

REGISTERED PROFESSIONAL ENGINEER FOUED ZAYATI No. C57046 Exp. 06-30-11 CIVIL STATE OF CALIFORNIA

NOTES:

1. For 'Section J-J' and 'Section K-K', see "HINGE 4 DETAILS NO. 5" sheet.
2. For location of 'Detail A' and 'Detail B', see "HINGE 4 LAYOUT" sheet.
3. For Access Opening Door details, see "HINGE 2 DETAILS NO. 1" sheet.
4. "A" is measured @ ℄ bearings.

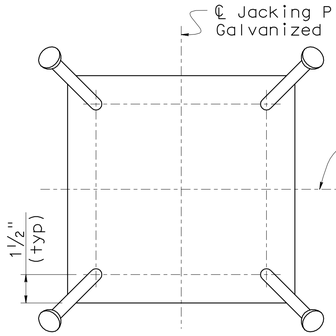

PLAN

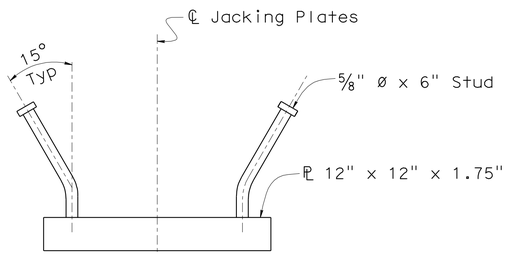

ELEVATION

JACKING PLATE DETAIL

3" = 1'-0"

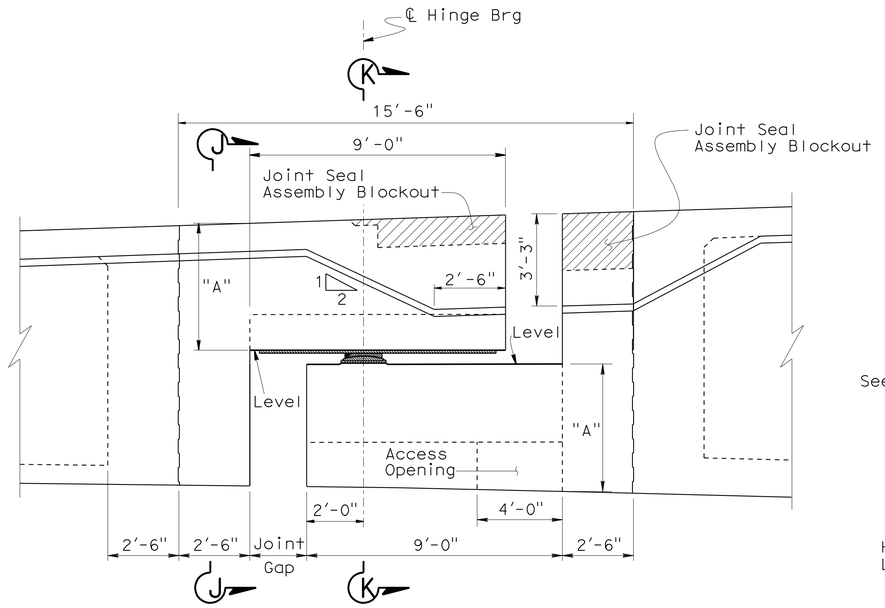

LONGITUDINAL ELEVATION

⅜" = 1'-0"

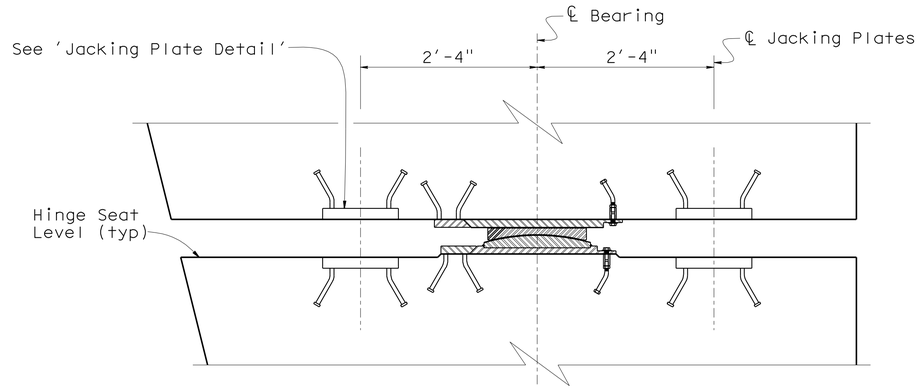

DETAIL A

1" = 1'-0"

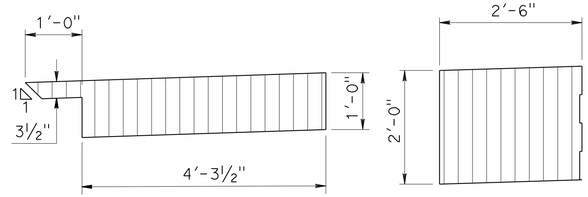

JOINT SEAL BLOCKOUT DETAIL

¾" = 1'-0"

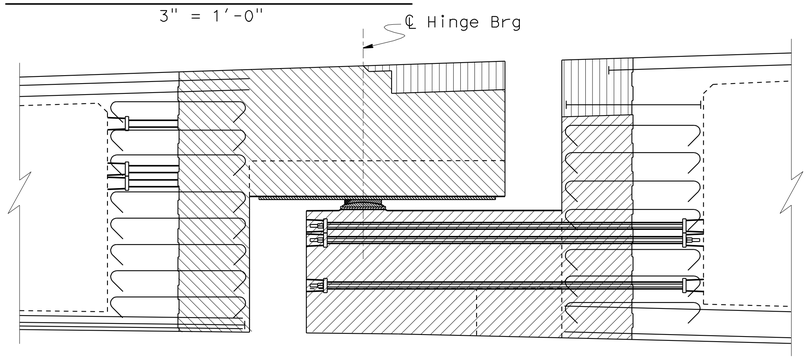

HINGE DETAIL

¾" = 1'-0"

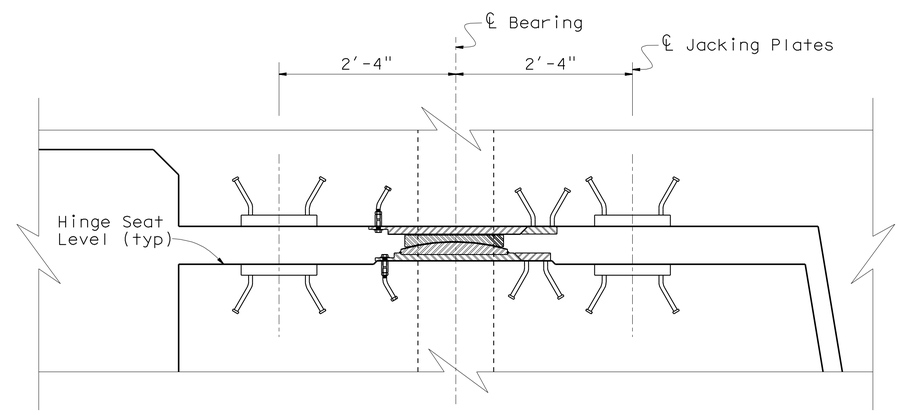

DETAIL B

1" = 1'-0"

Indicates Blockout and Closure Pour for Joint Seal Assemblies.

Indicates CIP concrete to be placed after both frames have been stressed.

Indicates CIP concrete to be placed after seat side of the Hinge is constructed and Bearings are properly positioned.

	BY	CHECKED
DESIGN	Ahmed M. M. Ibrahim	F. Zayati
DETAILS	T. Nguyen	F. Zayati
QUANTITIES	M. Friedheim	N. Tachta

STATE OF CALIFORNIA
DEPARTMENT OF TRANSPORTATION

DIVISION OF ENGINEERING SERVICES
STRUCTURE DESIGN
DESIGN BRANCH 14

BRIDGE NO. 53-3032
POST MILE 3.58

SCHUYLER HEIM BRIDGE (REPLACE)
HINGE 4 DETAIL NO. 1

STRUCTURES DESIGN DETAIL SHEET (ENGLISH) (REV. 10/25/05)

ORIGINAL SCALE IN INCHES FOR REDUCED PLANS 0 1 2 3

CU 07-271
EA 138201

DISREGARD PRINTS BEARING EARLIER REVISION DATES

REVISION DATES: 05-21-08, 07-24-09, 10-26-09, 12-04-09, 4-16-10, 4-30-10, 05-23-10

SHEET 115 OF 247

FILE => 53-3032-1-p-jhinge4-det01.dgn

USERNAME => frstrk DATE PLOTTED => 19-OCT-2010 TIME PLOTTED => 12:50

DIST	COUNTY	ROUTE	POST MILES TOTAL PROJECT	SHEET No	TOTAL SHEETS
07	LA	47,103	3.5/4.6, 0.0/1.1	618	1003

REGISTERED CIVIL ENGINEER 05-24-10 DATE

10-11-10
PLANS APPROVAL DATE

REGISTERED PROFESSIONAL ENGINEER FOUED ZAYATI No. C57046 Exp. 06-30-11 CIVIL STATE OF CALIFORNIA

The State of California or its officers or agents shall not be responsible for the accuracy or completeness of electronic copies of this plan sheet.

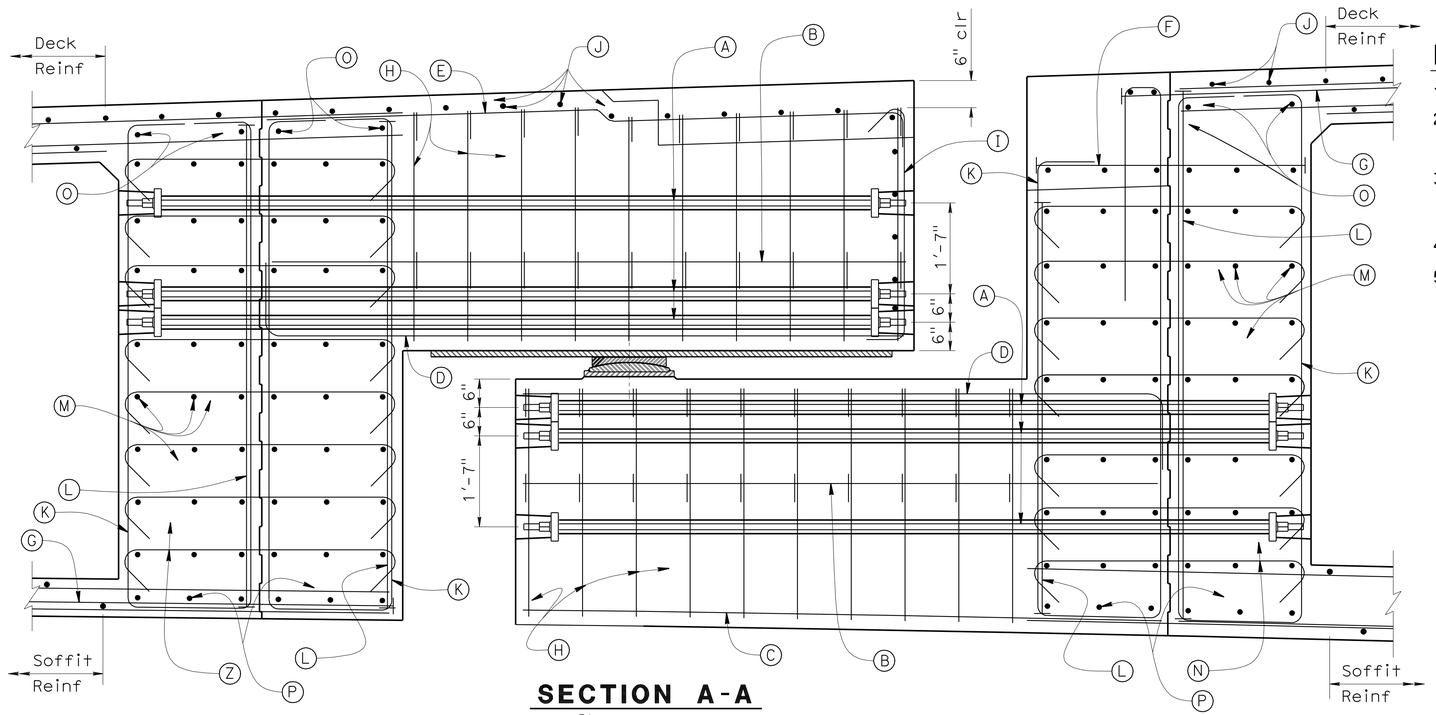

SECTION A-A

3/4" = 1'-0"

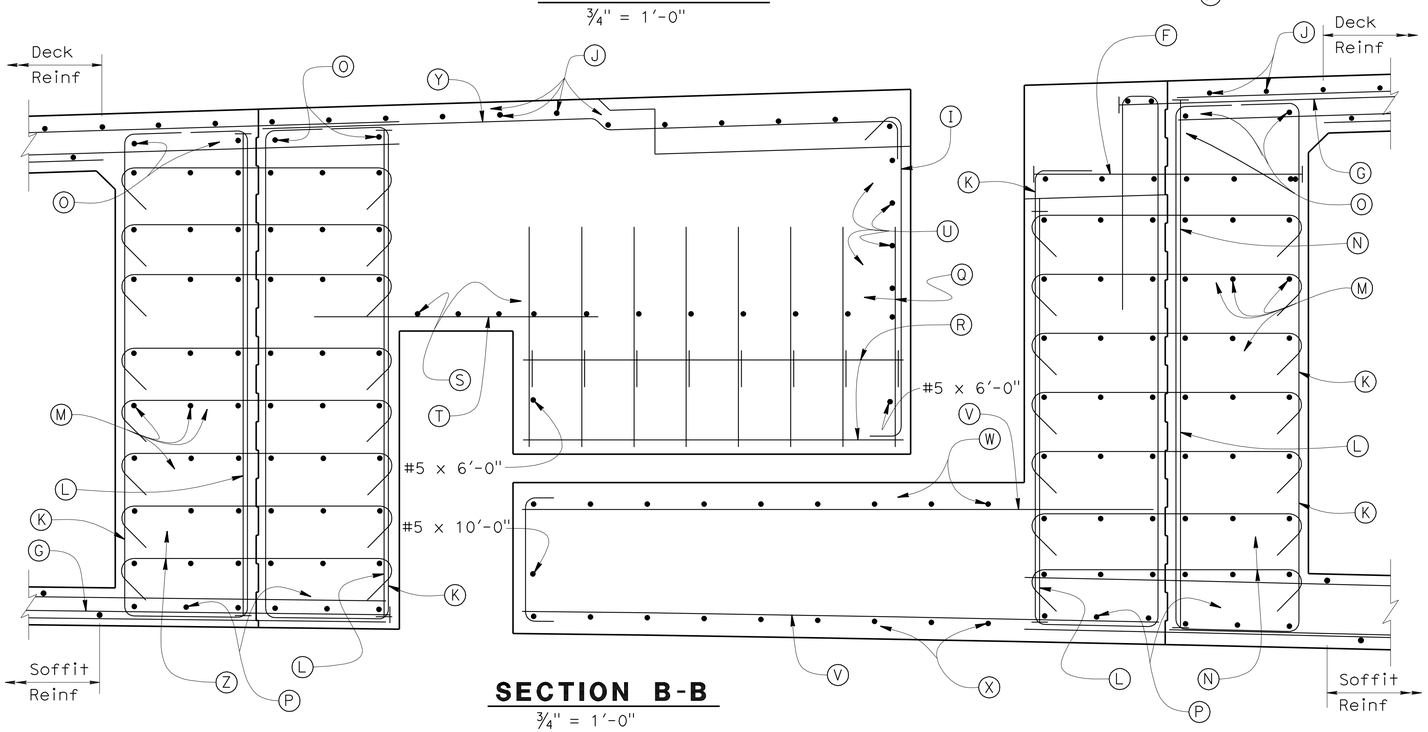

SECTION B-B

3/4" = 1'-0"

PRESTRESSING NOTES

1. 150 KSI HS bars:
2. Concrete: f'_c = 5.0 ksi @ 28 days
   f'_{ci} = 4.5 ksi @ time of stressing
3. Stress all HS bars using an alternating stessing sequence to a lockoff stress equal to 70% of Ultimate stress.
4. Stress HS bars from inside structure bays
5. Falsework shall not be released prior to stressing all HS bars.

LEGEND

- (A) 1¼" dia. HS Stress bars, tot. 7 per layer, per Bearing (typ)
- (B) #6 cont, tot. 2 per Bearing
- (C) #6 cont, tot. 6 per Bearing
- (D) #8 tot. 6 per Bearing (typ)
- (E) #6 , tot. 6 per Bearing
- (F) #10 @ 6
- (G) #10 12'-6" @ 6
- (H) #5 or @ 12, at each Bearing Seat
- (I) #5 @ 12
- (J) #5 @ 12, cont
- (K) #6 3'-9" @ 12 (typ)
- (L) #9 @ 6 (typ)
- (M) #5 cont, tot. 6 per layer, tot. 8 layers
- (N) #5 tot. 7, @ 12 (typ)
- (O) #5 cont, tot. 4 (typ)
- (P) #5 4'-0" 4'-0" tot. 12
- (Q) #6 2'-0" @ 12
- (R) #5 x 6'-9", tot. 8
- (S) #8 2'-6" 2'-6" @ 12
- (T) #5 x 5'-0", @ 12
- (U) #5 cont, tot. 4
- (V) #5 @ 12, cont
- (W) #5 x 10'-0", @ 12
- (X) #5 10" 12'-0" @12
- (Y) #5 @ 12
- (Z) #5 tot. 8, @ 12 (typ)

NOTES:

1. For location of 'Section A-A' and 'Section B-B', see "HINGE 4 LAYOUT" sheet.
2. 3" clear cover (typ)
3. All HS bars, place (K) in front Anchor Plate.

	BY	CHECKED
DESIGN	Ahmed M. M. Ibrahim	F. Zayati
DETAILS	T. Nguyen	F. Zayati
QUANTITIES	M. Friedheim	N. Tachta

STATE OF CALIFORNIA DEPARTMENT OF TRANSPORTATION

DIVISION OF ENGINEERING SERVICES STRUCTURE DESIGN DESIGN BRANCH 14

BRIDGE NO. 53-3032
POST MILE 3.58

SCHUYLER HEIM BRIDGE (REPLACE)
HINGE 4 DETAILS NO. 2

STRUCTURES DESIGN DETAIL SHEET (ENGLISH) (REV. 10/25/05)

ORIGINAL SCALE IN INCHES FOR REDUCED PLANS 0 1 2 3

CU 07-271
EA 138201

DISREGARD PRINTS BEARING EARLIER REVISION DATES → 05-21-08 01-26-10 01-22-10 04-30-10

REVISION DATES

SHEET 116 OF 247

FILE => 53-3032-1-p-jhinge4-det02.dgn

USERNAME => trstrk DATE PLOTTED => 19-OCT-2010 TIME PLOTTED => 12:50

DIST	COUNTY	ROUTE	POST MILES TOTAL PROJECT	SHEET No	TOTAL SHEETS
07	LA	47,103	3.5/4.6, 0.0/1.1	619	1003

REGISTERED CIVIL ENGINEER 05-24-10 DATE

10-11-10
PLANS APPROVAL DATE

REGISTERED PROFESSIONAL ENGINEER FOUED ZAYATI No. C57046 Exp. 06-30-11 CIVIL STATE OF CALIFORNIA

The State of California or its officers or agents shall not be responsible for the accuracy or completeness of electronic copies of this plan sheet.

NOTES:

1. Typical Section Reinforcement not shown. See "TYPICAL SECTION NO. 1" sheet.
2. For location of 'Section C-C', 'Section D-D', 'Section E-E' and 'Section F-F', see "HINGE 4 LAYOUT" sheet.
3. For rebar designation see "HINGE 4 DETAILS NO. 2" sheet.

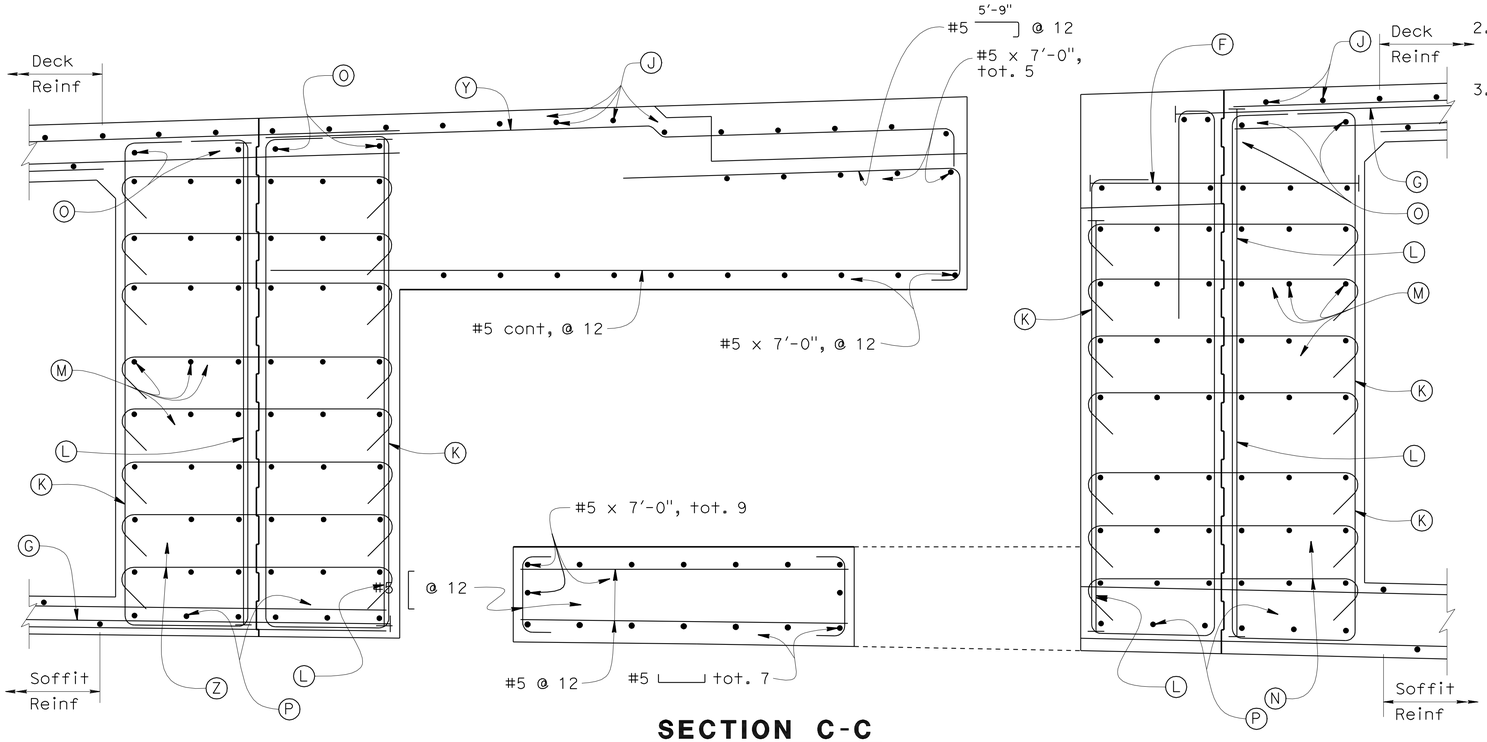

SECTION C-C
3/4" = 1'-0"

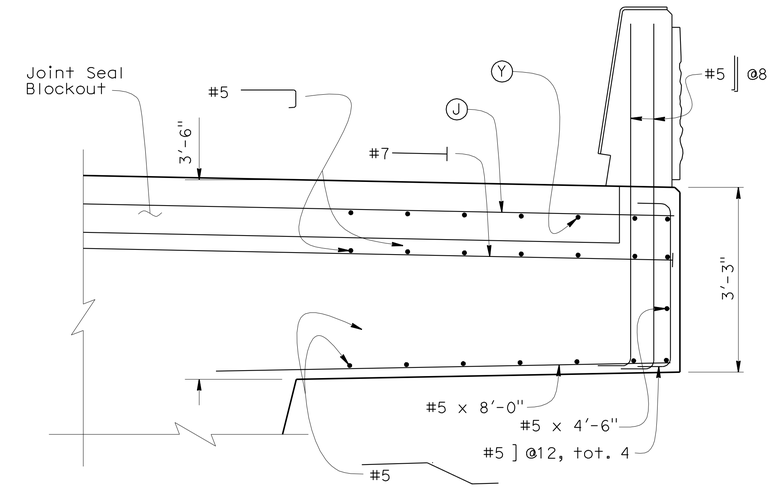

SECTION D-D
3/4" = 1'-0"

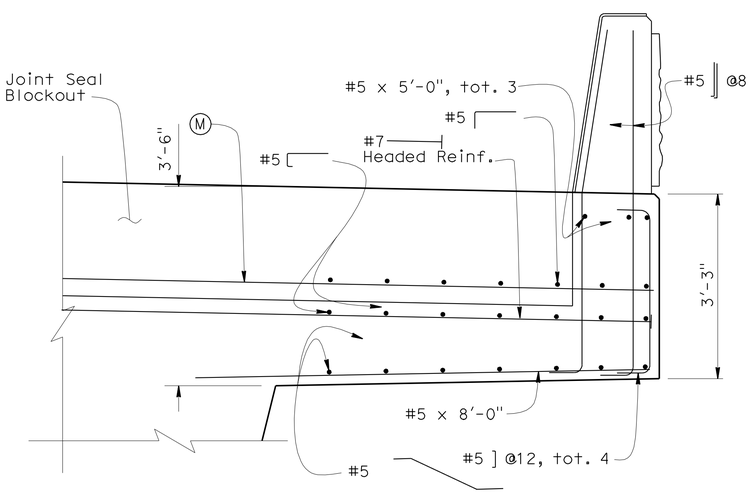

SECTION E-E
3/4" = 1'-0"

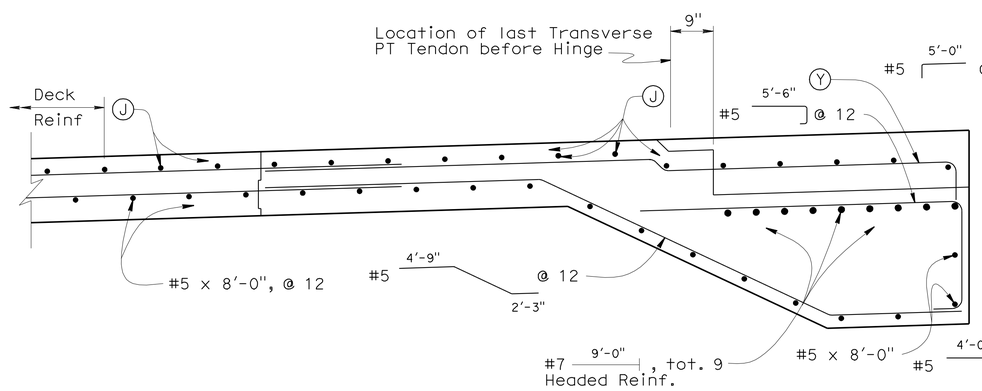

SECTION F-F
3/4" = 1'-0"

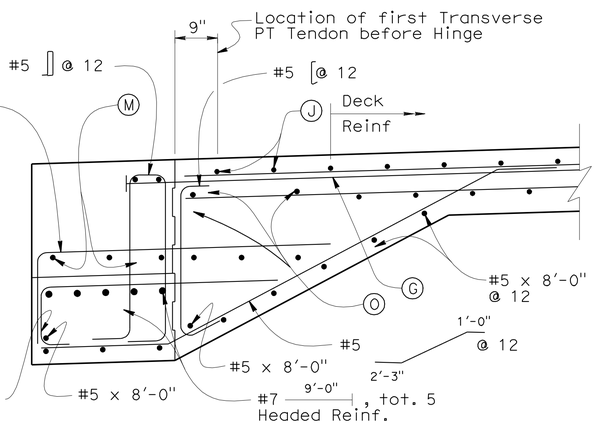

DESIGN	BY Ahmed M. M. Ibrahim	CHECKED F. Zayati	
DETAILS	BY T. Nguyen	CHECKED F. Zayati	
QUANTITIES	BY M. Friedheim	CHECKED N. Tachta	

STATE OF CALIFORNIA
DEPARTMENT OF TRANSPORTATION

DIVISION OF ENGINEERING SERVICES
STRUCTURE DESIGN
DESIGN BRANCH 14

BRIDGE NO. 53-3032
POST MILE 3.58

SCHUYLER HEIM BRIDGE (REPLACE)
HINGE 4 DETAILS NO. 3

STRUCTURES DESIGN DETAIL SHEET (ENGLISH) (REV. 10/25/05)

ORIGINAL SCALE IN INCHES FOR REDUCED PLANS 0 1 2 3

CU 07-271
EA 138201

DISREGARD PRINTS BEARING EARLIER REVISION DATES

REVISION DATES: 05-22-08 07-21-09 03-29-10 04-30-10

SHEET 117 OF 247

FILE => 53-3032-1-p-jhinge4-det03.dgn

USERNAME => trstrk DATE PLOTTED => 19-OCT-2010 TIME PLOTTED => 12:50

DIST	COUNTY	ROUTE	POST MILES TOTAL PROJECT	SHEET No	TOTAL SHEETS
07	LA	47,103	3.5/4.6, 0.0/1.1	620	1003

REGISTERED CIVIL ENGINEER 05-24-10 DATE

10-11-10
PLANS APPROVAL DATE

REGISTERED PROFESSIONAL ENGINEER FOUED ZAYATI No. C57046 Exp. 06-30-11 CIVIL STATE OF CALIFORNIA

The State of California or its officers or agents shall not be responsible for the accuracy or completeness of electronic copies of this plan sheet.

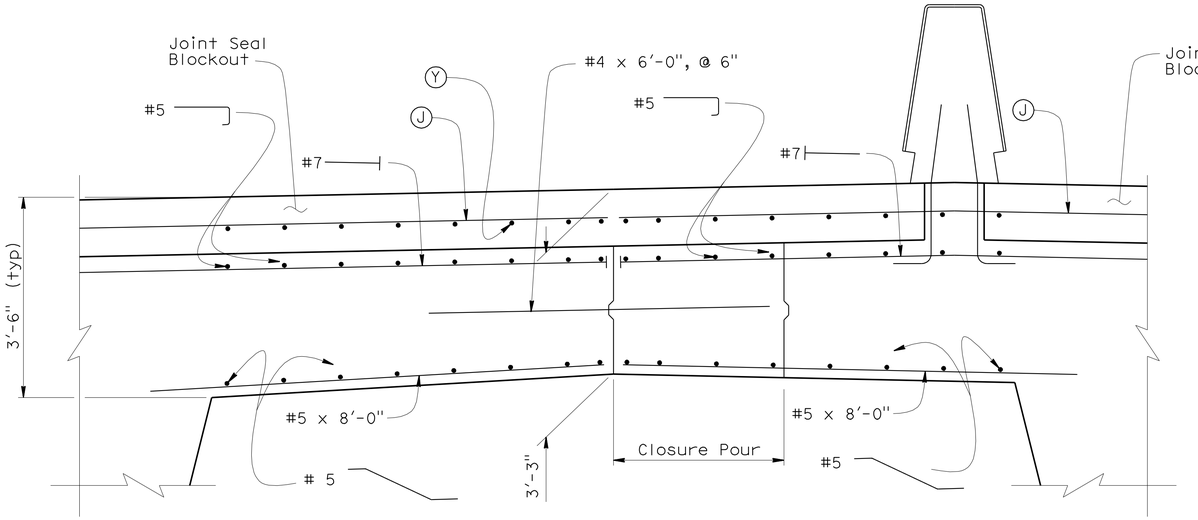

SECTION G-G

3/4" = 1'-0"

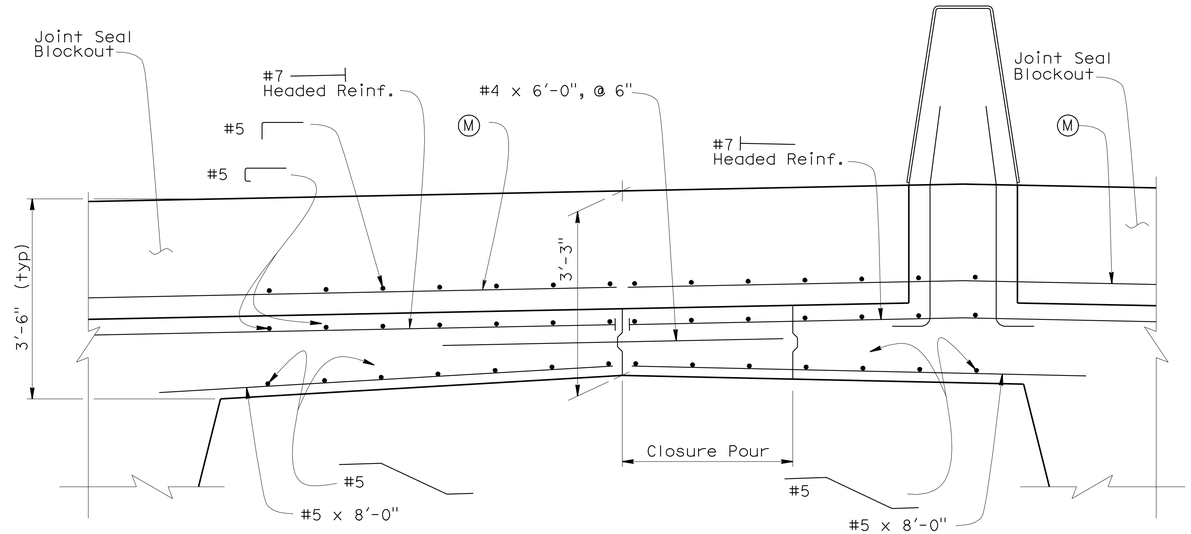

SECTION H-H

3/4" = 1'-0"

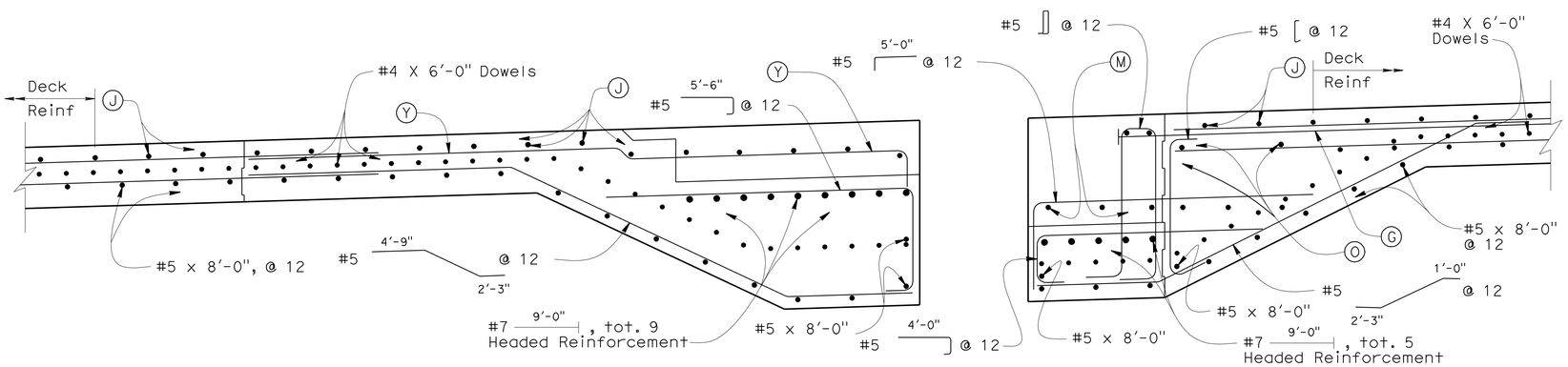

SECTION I-I

3/4" = 1'-0"

NOTES:

1. Typical Section Reinforcement not shown. See "TYPICAL SECTION NO. 1" sheet.
2. For location of 'Section G-G', Section H-H' and 'Section I-I', see "HINGE 4 LAYOUT" sheet.
3. For rebar designation see "HINGE 4 DETAILS NO. 2" sheet.

	BY	CHECKED
DESIGN	Ahmed M. M. Ibrahim	F. Zayati
DETAILS	T. Nguyen	F. Zayati
QUANTITIES	M. Friedheim	N. Tachta

STATE OF CALIFORNIA
DEPARTMENT OF TRANSPORTATION

DIVISION OF ENGINEERING SERVICES
STRUCTURE DESIGN
DESIGN BRANCH 14

BRIDGE NO. 53-3032
POST MILE 3.58

SCHUYLER HEIM BRIDGE (REPLACE)

HINGE 4 DETAILS NO. 4

STRUCTURES DESIGN DETAIL SHEET (ENGLISH) (REV. 10/25/05)

ORIGINAL SCALE IN INCHES FOR REDUCED PLANS 0 1 2 3

CU 07-271
EA 138201

DISREGARD PRINTS BEARING EARLIER REVISION DATES

REVISION DATES: 05-27-08 07-24-08 01-22-10 02-09-10 03-11-10 04-16-10 04-30-10 05-25-10

SHEET 118 OF 247

FILE => 53-3032-1-p-jhinge4-det04.dgn

USERNAME => tfstrk DATE PLOTTED => 19-OCT-2010 TIME PLOTTED => 12:50

DIST	COUNTY	ROUTE	POST MILES TOTAL PROJECT	SHEET No	TOTAL SHEETS
07	LA	47,103	3.5/4.6, 0.0/1.1	621	1003

REGISTERED CIVIL ENGINEER — DATE 05-24-10

10-11-10
PLANS APPROVAL DATE

The State of California or its officers or agents shall not be responsible for the accuracy or completeness of electronic copies of this plan sheet.

REGISTERED PROFESSIONAL ENGINEER — FOUED ZAYATI — No. C57046 — Exp. 06-30-11 — CIVIL — STATE OF CALIFORNIA

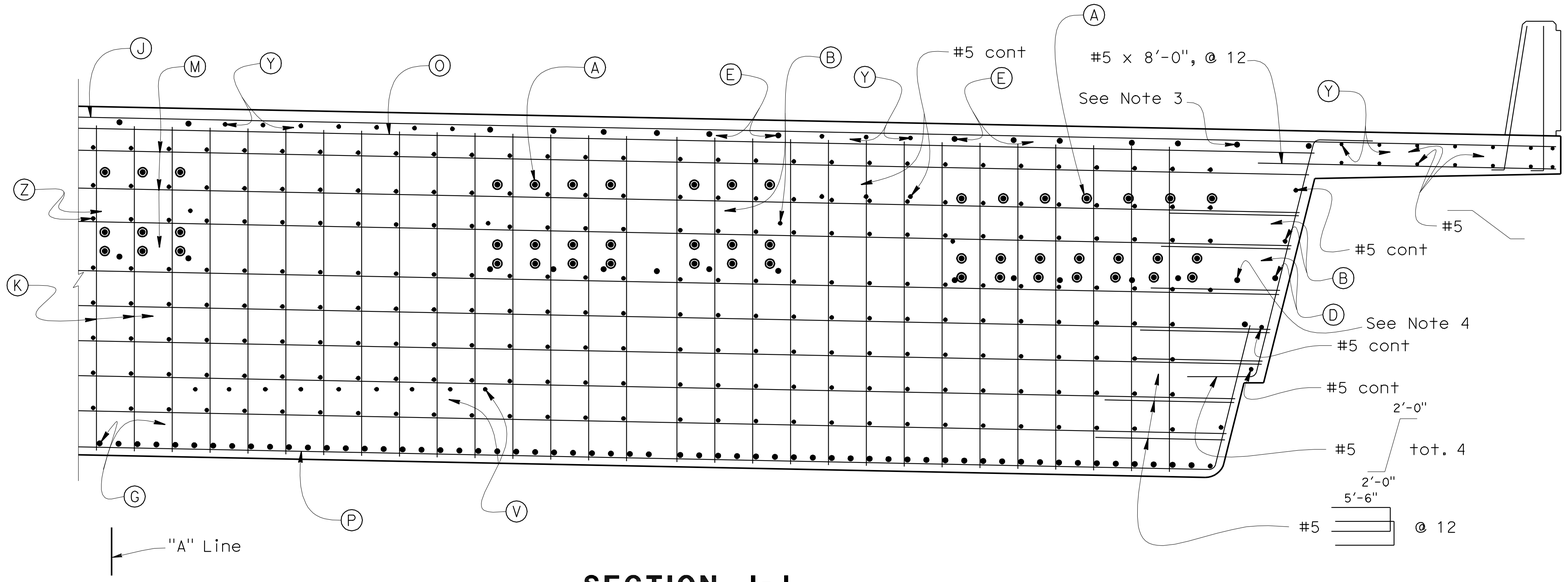

SECTION J-J

1/2" = 1'-0"

NOTES:

1. Typical Section Reinforcement not shown. See "TYPICAL SECTION NO. 1" sheet.
2. For location of 'Section J-J' and 'Section K-K', see "HINGE 4 DETAILS NO. 1" sheet.
3. Add additional (E) bar
4. Add additional (D) bar
5. For rebar designation see "HINGE 4 DETAILS NO. 2" sheet.

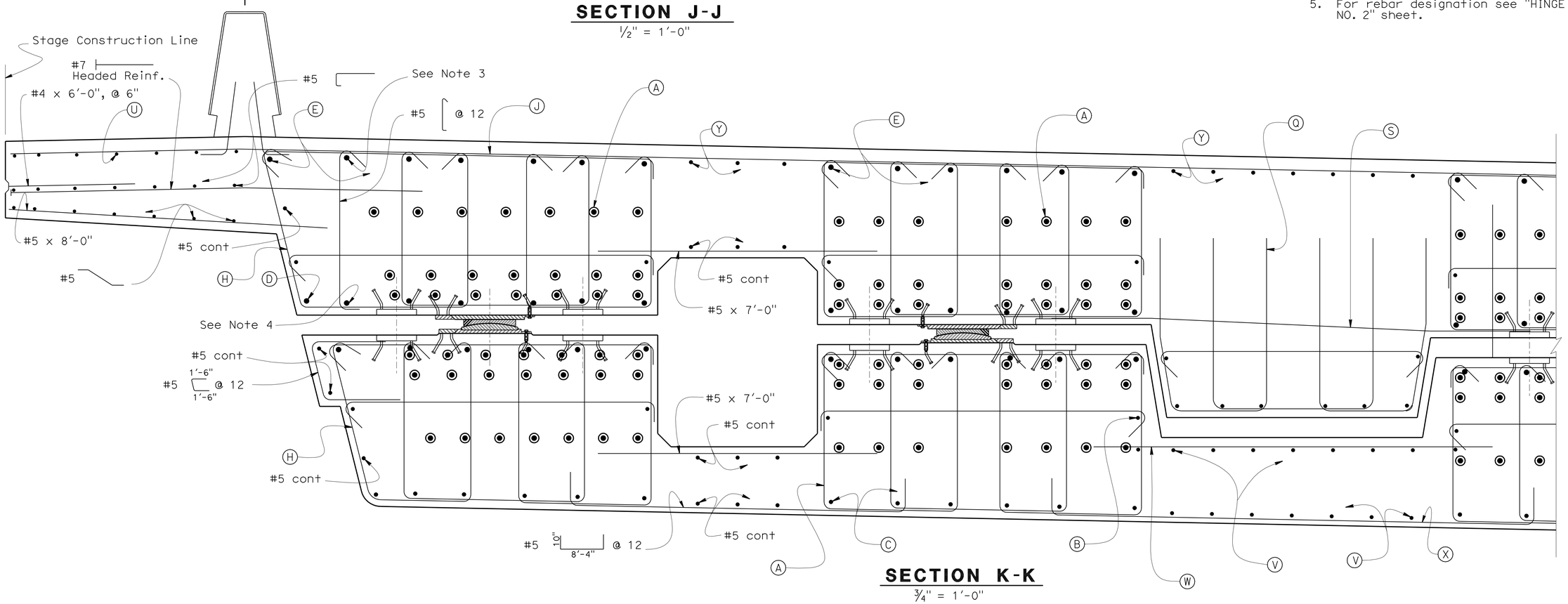

SECTION K-K

3/4" = 1'-0"

DESIGN	BY Ahmed M. M. Ibrahim	CHECKED F. Zayati	
DETAILS	BY T. Nguyen	CHECKED F. Zayati	
QUANTITIES	BY M. Friedheim	CHECKED N. Tachta	

STATE OF CALIFORNIA
DEPARTMENT OF TRANSPORTATION

DIVISION OF ENGINEERING SERVICES
STRUCTURE DESIGN
DESIGN BRANCH 14

BRIDGE NO. 53-3032
POST MILE 3.58

SCHUYLER HEIM BRIDGE (REPLACE)
HINGE 4 DETAILS NO. 5

STRUCTURES DESIGN DETAIL SHEET (ENGLISH) (REV. 10/25/05)

ORIGINAL SCALE IN INCHES FOR REDUCED PLANS 0 1 2 3

CU 07-271
EA 138201

DISREGARD PRINTS BEARING EARLIER REVISION DATES → 05-27-08 07-24-08 01-21-10 04-30-10

REVISION DATES

SHEET 119 OF 247

FILE => 53-3032-1-p-jhinge4-det05.dgn

USERNAME => friehard DATE PLOTTED => 19-OCT-2010 TIME PLOTTED => 11:29

DIST	COUNTY	ROUTE	POST MILES TOTAL PROJECT	SHEET No	TOTAL SHEETS
07	LA	47,103	3.5/4.6, 0.0/1.1	622	1003

REGISTERED CIVIL ENGINEER 05-24-10 DATE

10-11-10
PLANS APPROVAL DATE

The State of California or its officers or agents shall not be responsible for the accuracy or completeness of electronic copies of this plan sheet.

REGISTERED PROFESSIONAL ENGINEER FOUED ZAYATI No. C57046 Exp. 06-30-11 CIVIL STATE OF CALIFORNIA

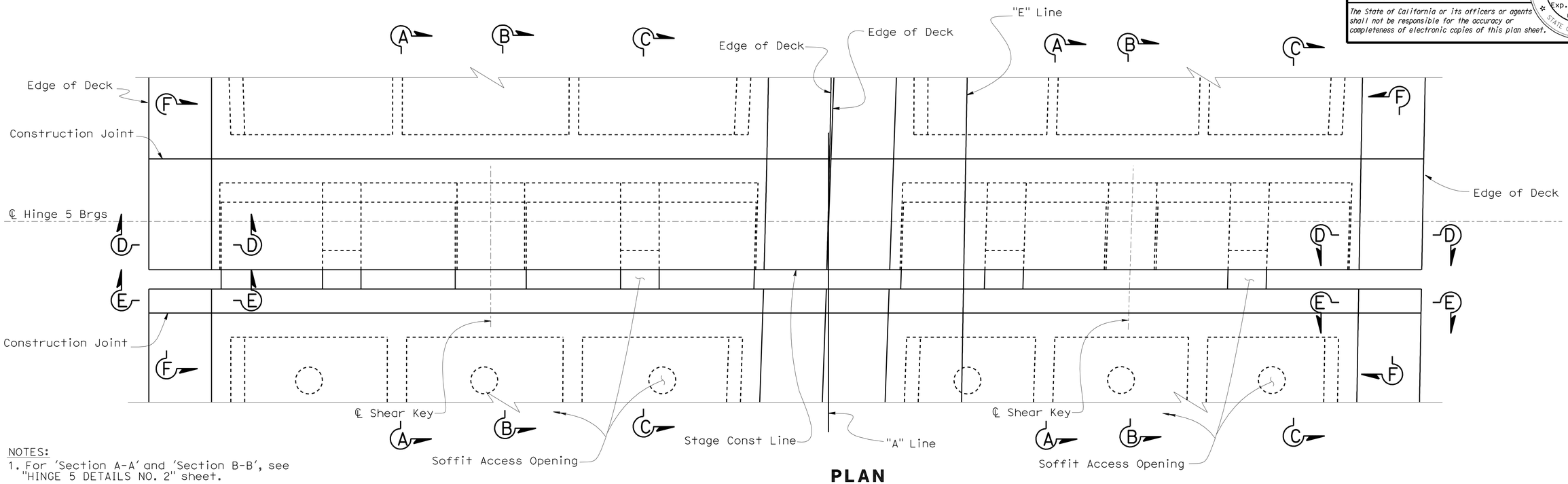

PLAN

3/16" = 1'-0"

NOTES:

1. For 'Section A-A' and 'Section B-B', see "HINGE 5 DETAILS NO. 2" sheet.
2. For 'Section C-C', 'Section D-D', 'Section E-E' and 'Section F-F', see "HINGE 5 DETAILS NO. 3" sheet.
3. For 'Detail A' and 'Detail B', see "HINGE 5 DETAILS NO. 1" sheet.

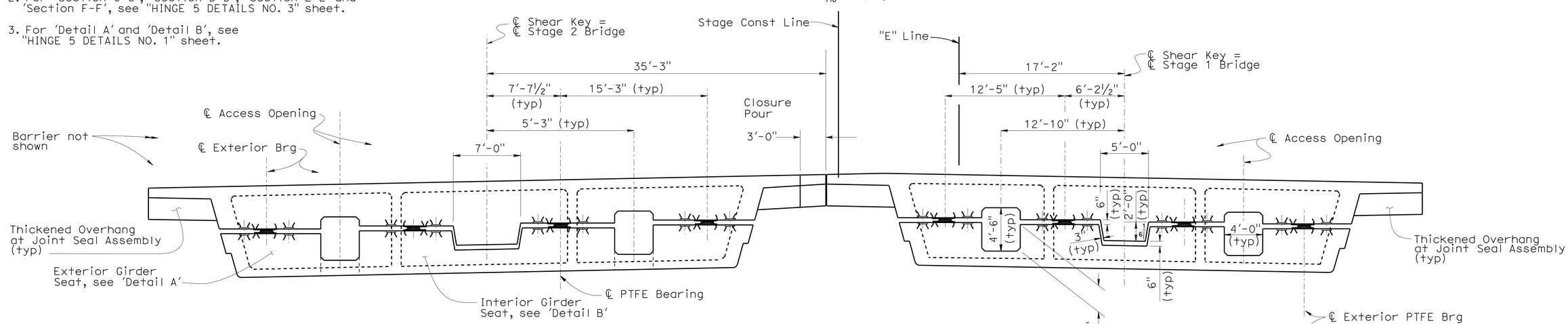

NOTE: All dimensions are the same as Stage 2 Bridge unless otherwise shown.

ELEVATION

3/16" = 1'-0"

	BY	CHECKED
DESIGN	Ahmed M. M. Ibrahim	F. Zayati
DETAILS	T. Nguyen	F. Zayati
QUANTITIES	M. Friedheim	N. Tachta

STATE OF CALIFORNIA
DEPARTMENT OF TRANSPORTATION

DIVISION OF ENGINEERING SERVICES
STRUCTURE DESIGN
DESIGN BRANCH 14

BRIDGE NO. 53-3032
POST MILE 3.58

SCHUYLER HEIM BRIDGE (REPLACE)
HINGE 5 LAYOUT

STRUCTURES DESIGN DETAIL SHEET (ENGLISH) (REV. 10/25/05)

ORIGINAL SCALE IN INCHES FOR REDUCED PLANS 0 1 2 3

CU 07-271
EA 138201

DISREGARD PRINTS BEARING EARLIER REVISION DATES

REVISION DATES: 09-22-09 12-18-09 04-16-10 04-16-10 05-18-10 05-20-10

SHEET 120 OF 247

FILE => 53-3032-1-p-jhinge5-1lo.dgn

USERNAME => trmnguye DATE PLOTTED => 21-OCT-2010 TIME PLOTTED => 14:58

DIST	COUNTY	ROUTE	POST MILES TOTAL PROJECT	SHEET No	TOTAL SHEETS
07	LA	47,103	3.5/4.6, 0.0/1.1	623	1003

REGISTERED CIVIL ENGINEER — DATE 05-24-10

10-11-10
PLANS APPROVAL DATE

The State of California or its officers or agents shall not be responsible for the accuracy or completeness of electronic copies of this plan sheet.

REGISTERED PROFESSIONAL ENGINEER — FOUED ZAYATI — No. C57046 — Exp. 06-30-11 — CIVIL — STATE OF CALIFORNIA

NOTES:

1. For 'Section J-J' and 'Section K-K', see "HINGE 5 DETAILS NO. 5" sheet.
2. For location of 'Detail A' and 'Detail B', see "HINGE 5 LAYOUT" sheet.
3. For Access Opening Door details, see "HINGE 2 DETAILS NO. 1" sheet.
4. "A" is measured at ℄ bearings

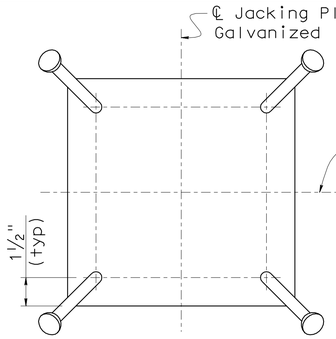

PLAN

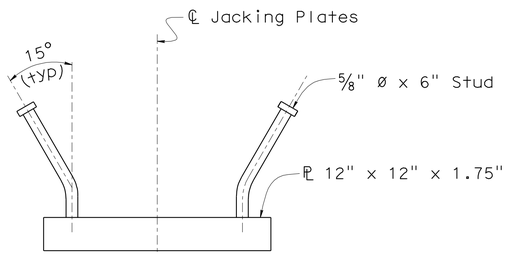

ELEVATION

JACKING PLATE DETAIL
3" = 1'-0"

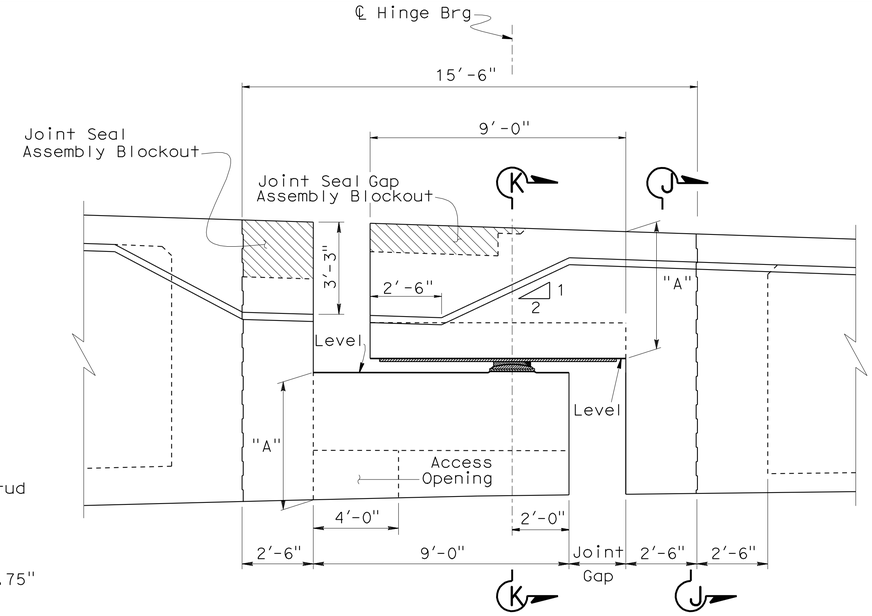

LONGITUDINAL ELEVATION
⅜" = 1'-0"

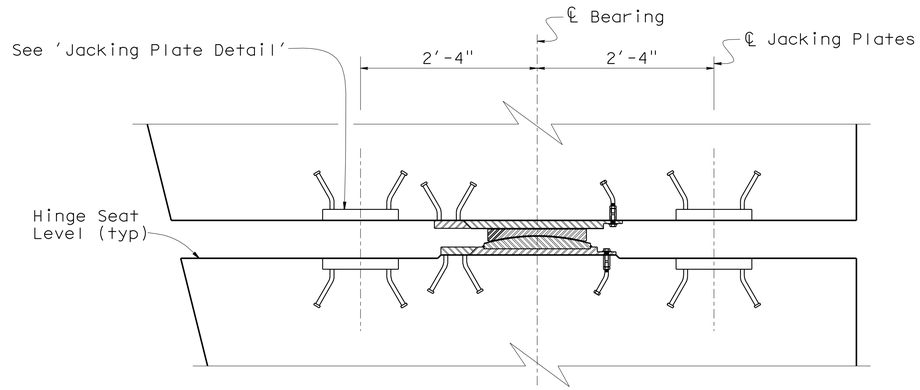

DETAIL A
1" = 1'-0"

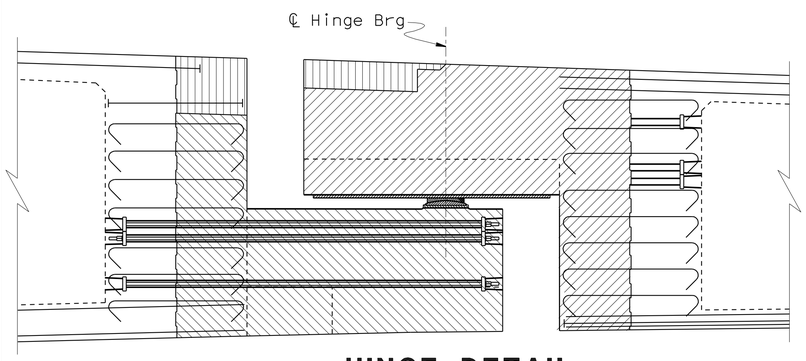

HINGE DETAIL
¾" = 1'-0"

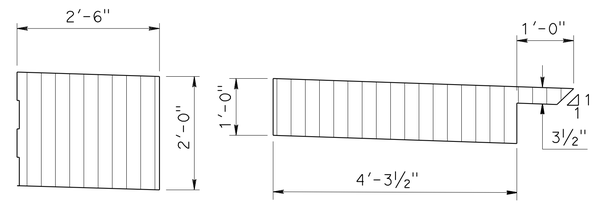

JOINT SEAL BLOCKOUT DETAIL
¾" = 1'-0"

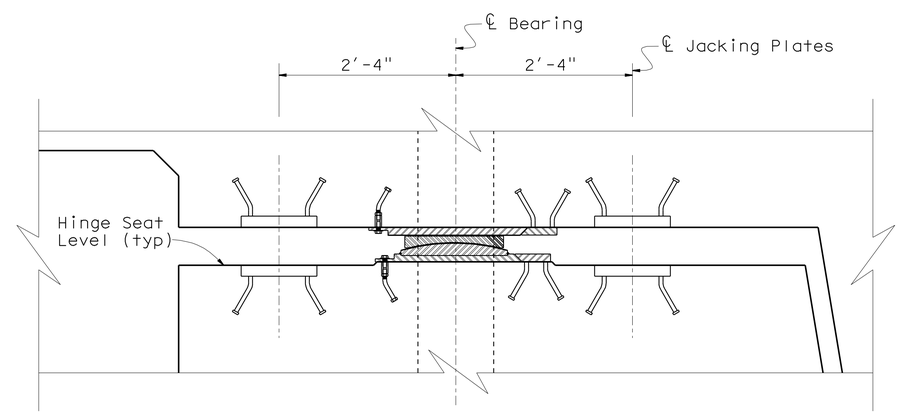

DETAIL B
1" = 1'-0"

Indicates Blockout and Closure Pour for Joint Seal Assemblies.

Indicates CIP concrete to be placed after both frames have been stressed.

Indicates CIP concrete to be placed after seat side of the Hinge is constructed and Bearings are properly positioned.

	BY	CHECKED
DESIGN	Ahmed M. M. Ibrahim	F. Zayati
DETAILS	T. Nguyen	F. Zayati
QUANTITIES	M. Friedheim	N. Tachta

STATE OF CALIFORNIA
DEPARTMENT OF TRANSPORTATION

DIVISION OF ENGINEERING SERVICES
STRUCTURE DESIGN
DESIGN BRANCH 14

BRIDGE NO. 53-3032
POST MILE 3.58

SCHUYLER HEIM BRIDGE (REPLACE)
HINGE 5 DETAILS NO. 1

STRUCTURES DESIGN DETAIL SHEET (ENGLISH) (REV. 10/25/05)

ORIGINAL SCALE IN INCHES FOR REDUCED PLANS 0 1 2 3

CU 07-271
EA 138201

DISREGARD PRINTS BEARING EARLIER REVISION DATES

REVISION DATES: 09-23-09, 12-10-09, 4-13-10, 04-30-10, 05-23-10

SHEET 121 OF 247

FILE => 53-3032-1-p-jhinge5-det01.dgn

USERNAME => friehard DATE PLOTTED => 19-OCT-2010 TIME PLOTTED => 11:23

DIST	COUNTY	ROUTE	POST MILES TOTAL PROJECT	SHEET No	TOTAL SHEETS
07	LA	47,103	3.5/4.6, 0.0/1.1	624	1003

REGISTERED CIVIL ENGINEER — DATE 05-24-10

10-11-10
PLANS APPROVAL DATE

The State of California or its officers or agents shall not be responsible for the accuracy or completeness of electronic copies of this plan sheet.

REGISTERED PROFESSIONAL ENGINEER — FOUED ZAYATI — No. C57046 — Exp. 06-30-11 — CIVIL — STATE OF CALIFORNIA

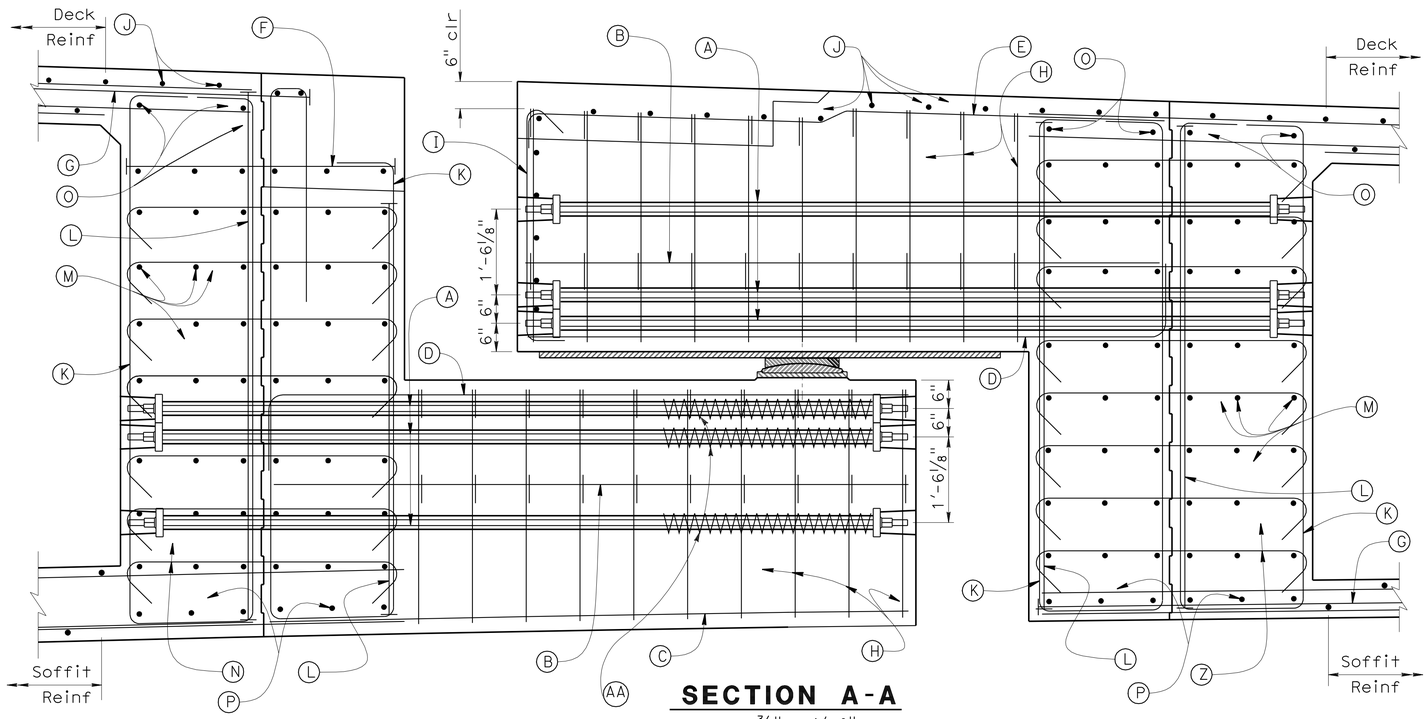

SECTION A-A

3/4" = 1'-0"

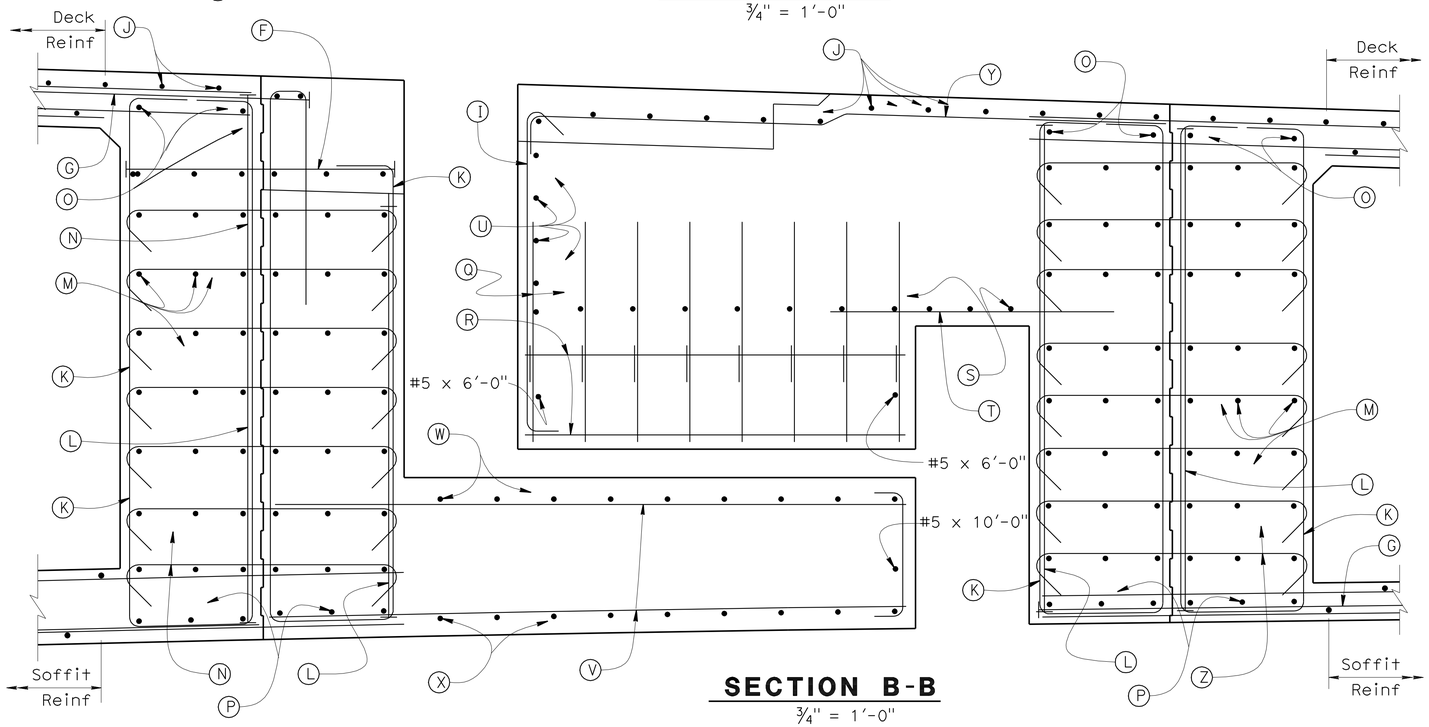

SECTION B-B

3/4" = 1'-0"

PRESTRESSING NOTES

1. 150 KSI HS bars:
2. Concrete: f'_c = 5.0 ksi @ 28 days
   f'_{ci} = 4.5 ksi @ time of stressing
3. Stress all HS bars using an alternating stessing sequence to a lockoff stress equal to 70% of Ultimate stress.
4. Stress HS bars from inside structure bays
5. Falsework shall not be released prior to stressing all HS bars.

LEGEND

- (A) 1 1/4" dia. HS Stress bars, tot. 7 per layer, per Bearing (typ)
- (B) #6 cont, tot. 2 per Bearing
- (C) #6 cont, tot. 6 per Bearing
- (D) #9 tot. 6 per Bearing (typ)
- (E) #6 , tot. 6 per Bearing
- (F) #11 @ 6
- (G) #11 12'-6" @ 6
- (H) #5 or @ 12, at each Bearing Seat
- (I) #5 @ 12
- (J) #5 @ 12, cont
- (K) #6 3'-9" @ 12 (typ)
- (L) #9 @ 6 (typ)
- (M) #5 cont, tot. 6 per layer, tot. 8 layers
- (N) #5 tot. 7, @ 12 (typ)
- (O) #5 cont, tot. 4 (typ)
- (P) #5 4'-0" 4'-0" tot. 12
- (Q) #6 2'-0" @ 12
- (R) #5 x 6'-9", tot. 8
- (S) #8 2'-6" 2'-6" @ 12
- (T) #5 x 5'-0", @ 12
- (U) #5 cont, tot. 4
- (V) #5 @ 12, cont
- (W) #5 x 10'-0", @ 12
- (X) #5 10" 12'-0" @12
- (Y) #5 @ 12
- (Z) #5 tot. 8, @ 12 (typ)
- (AA) #4 Spiral, 5 1/2" ø 2 1/2" pitch by 2'0" long

NOTES:

1. For location of 'Section A-A' and 'Section B-B', see "HINGE 5 LAYOUT" sheet.
2. 3" clear cover (typ)
3. All HS bars, place (K) in front Anchor Plate.

	BY	CHECKED
DESIGN	Ahmed M. M. Ibrahim	F. Zayati
DETAILS	T. Nguyen	F. Zayati
QUANTITIES	M. Friedheim	N. Tachta

STATE OF CALIFORNIA
DEPARTMENT OF TRANSPORTATION

DIVISION OF ENGINEERING SERVICES
STRUCTURE DESIGN
DESIGN BRANCH 14

BRIDGE NO. 53-3032
POST MILE 3.58

SCHUYLER HEIM BRIDGE (REPLACE)

HINGE 5 DETAILS NO. 2

STRUCTURES DESIGN DETAIL SHEET (ENGLISH) (REV. 10/25/05)

ORIGINAL SCALE IN INCHES FOR REDUCED PLANS 0 1 2 3

CU 07-271
EA 138201

DISREGARD PRINTS BEARING EARLIER REVISION DATES — REVISION DATES 12-08-09 1-28-10 04-30-10

SHEET 122 OF 247

FILE => 53-3032-1-p-jhinge5-det2.dgn

USERNAME => friehard DATE PLOTTED => 19-OCT-2010 TIME PLOTTED => 11:30

DIST	COUNTY	ROUTE	POST MILES TOTAL PROJECT	SHEET No	TOTAL SHEETS
07	LA	47,103	3.5/4.6, 0.0/1.1	625	1003

REGISTERED CIVIL ENGINEER 05-24-10 DATE

10-11-10
PLANS APPROVAL DATE

The State of California or its officers or agents shall not be responsible for the accuracy or completeness of electronic copies of this plan sheet.

REGISTERED PROFESSIONAL ENGINEER FOUED ZAYATI No. C57046 Exp. 06-30-11 CIVIL STATE OF CALIFORNIA Exp.

NOTES:

1. Typical Section Reinforcement not shown. See "TYPICAL SECTION NO. 1" sheet.
2. For location of 'Section C-C', 'Section D-D', 'Section E-E' and 'Section F-F', see "HINGE 5 LAYOUT" sheet.
3. For rebar designation see "HINGE 5 DETAILS NO. 2" sheet.

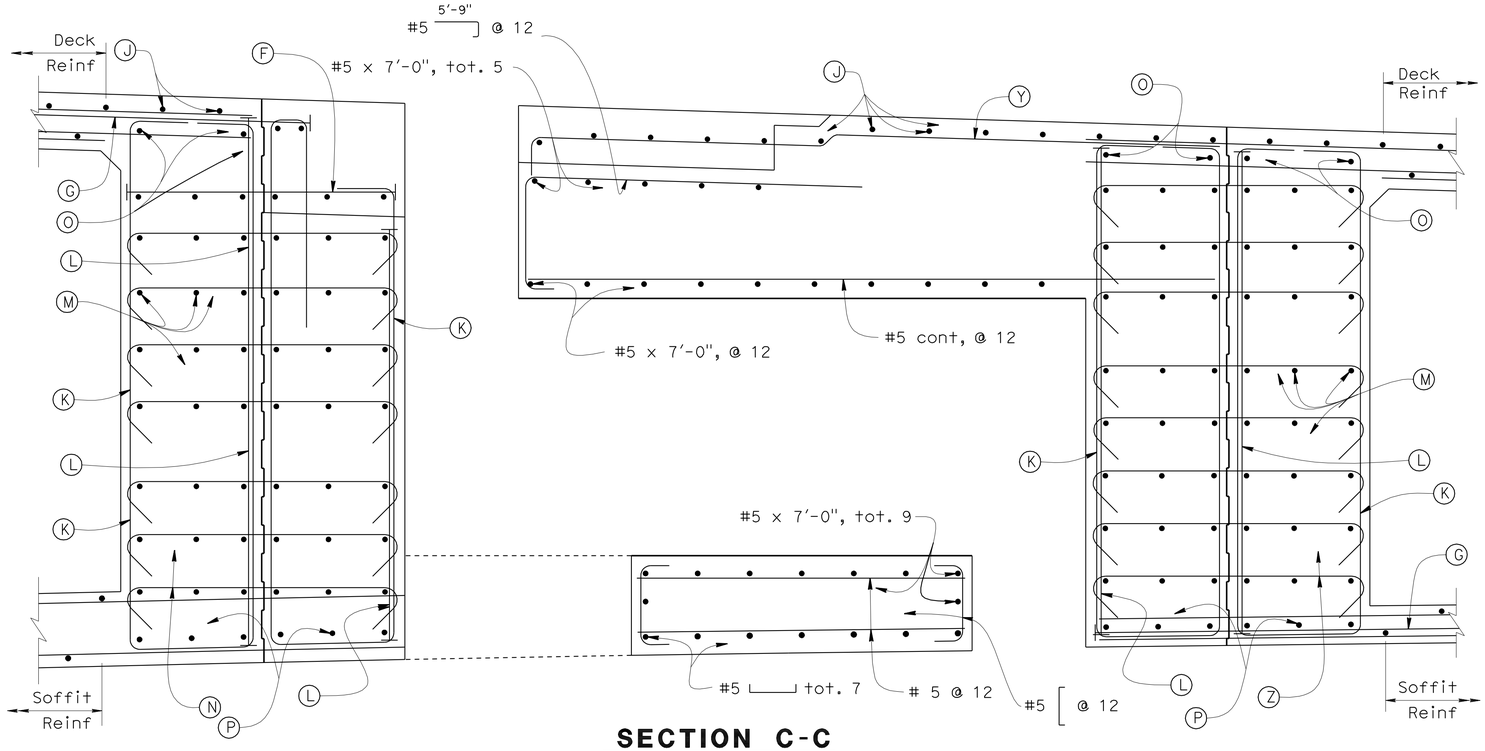

SECTION C-C

3/4" = 1'-0"

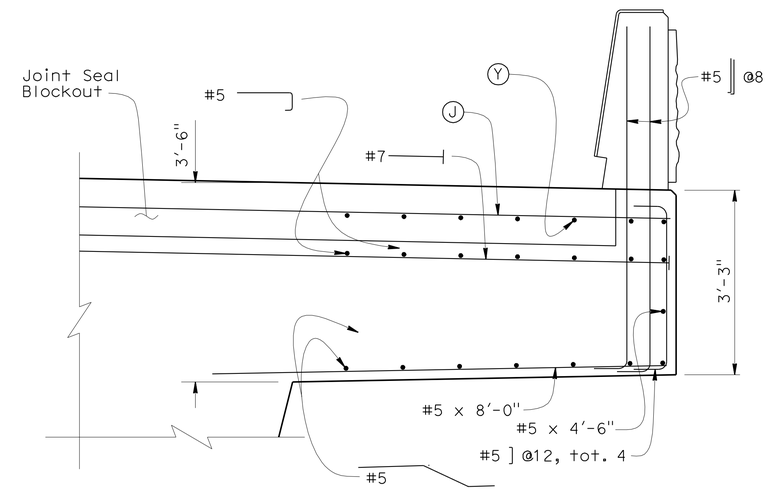

SECTION D-D

3/4" = 1'-0"

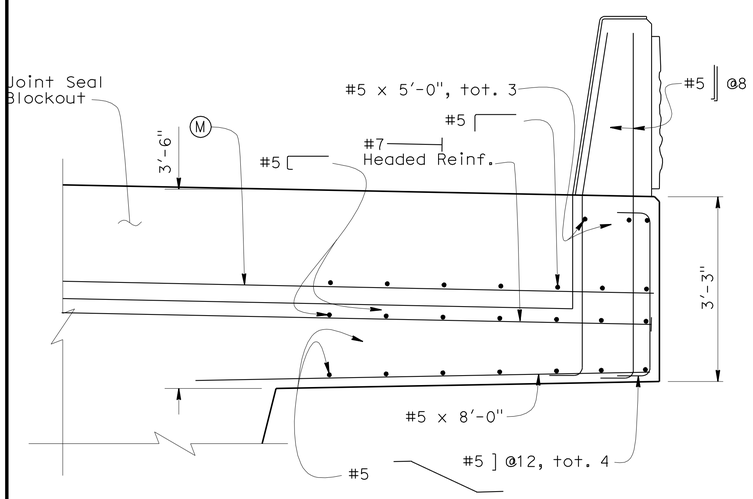

SECTION E-E

3/4" = 1'-0"

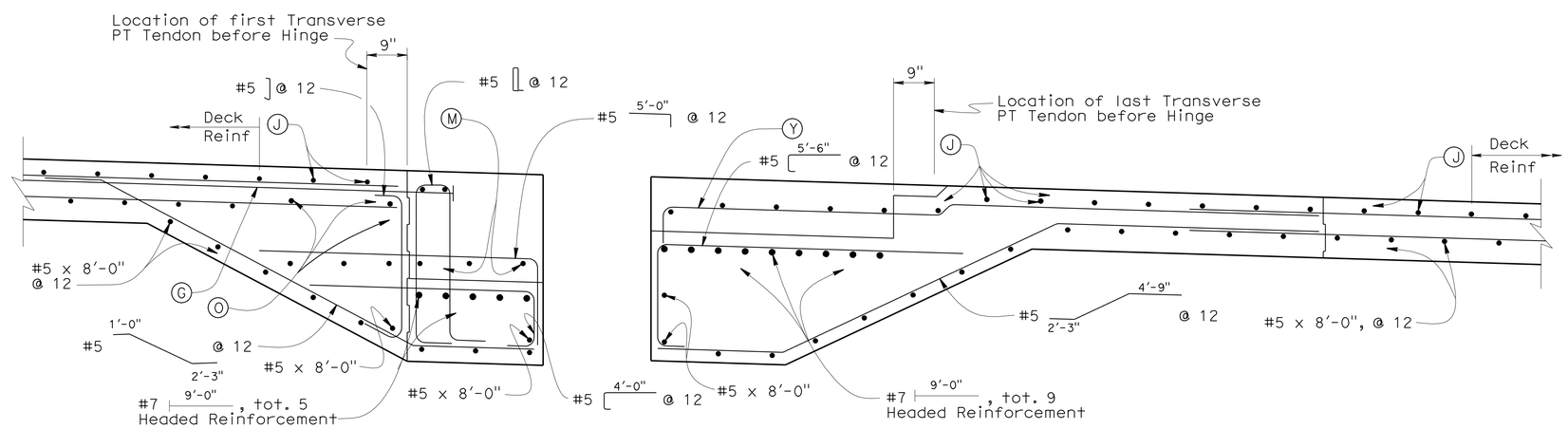

SECTION F-F

3/4" = 1'-0"

DESIGN	BY Ahmed M. M. Ibrahim	CHECKED F. Zayati	
DETAILS	BY T. Nguyen	CHECKED F. Zayati	
QUANTITIES	BY M. Friedheim	CHECKED N. Tachta	

STATE OF CALIFORNIA DEPARTMENT OF TRANSPORTATION

DIVISION OF ENGINEERING SERVICES STRUCTURE DESIGN DESIGN BRANCH 14

BRIDGE NO. 53-3032
POST MILE 3.58

SCHUYLER HEIM BRIDGE (REPLACE)

HINGE 5 DETAILS NO. 3

STRUCTURES DESIGN DETAIL SHEET (ENGLISH) (REV. 10/25/05)

ORIGINAL SCALE IN INCHES FOR REDUCED PLANS 0 1 2 3

CU 07-271
EA 138201

DISREGARD PRINTS BEARING EARLIER REVISION DATES

REVISION DATES 05-27-08 07-24-09 04-11-10 04-30-10

SHEET 123 OF 247

FILE => 53-3032-1-p-jhinge5-det3.dgn

USERNAME => friemard DATE PLOTTED => 19-OCT-2010 TIME PLOTTED => 11:30

DIST	COUNTY	ROUTE	POST MILES TOTAL PROJECT	SHEET No	TOTAL SHEETS
07	LA	47,103	3.5/4.6, 0.0/1.1	626	1003

REGISTERED CIVIL ENGINEER — DATE 05-24-10

10-11-10
PLANS APPROVAL DATE

The State of California or its officers or agents shall not be responsible for the accuracy or completeness of electronic copies of this plan sheet.

REGISTERED PROFESSIONAL ENGINEER — FOUED ZAYATI — No. C57046 — Exp. 06-30-11 — CIVIL — STATE OF CALIFORNIA

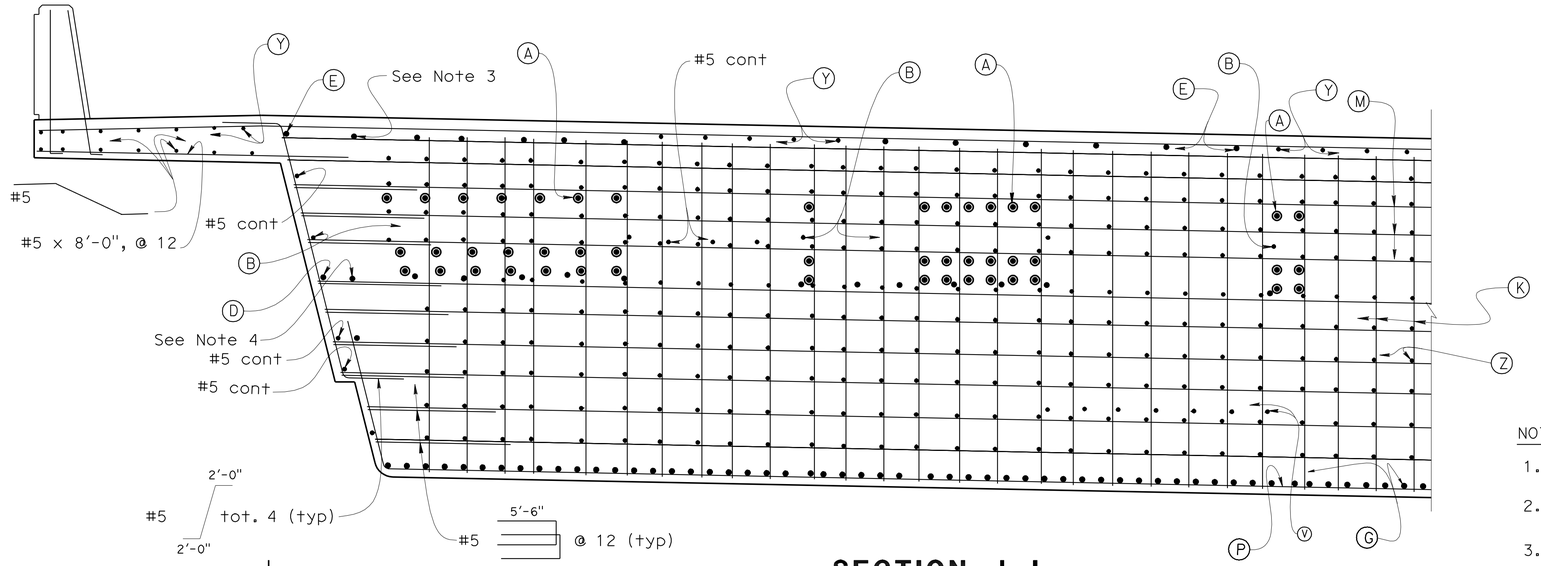

SECTION J-J

½" = 1'-0"

NOTES:

1. Typical Section Reinforcement not shown. See "TYPICAL SECTION NO. 1" sheet.
2. For location of 'Section J-J' and 'Section K-K' on Stage 1, see "HINGE 5 DETAILS NO. 1" sheet.
3. Add additional (E) bar
4. Add additional (D) bar
5. For rebar designation see "HINGE 5 DETAILS NO. 2" sheet.

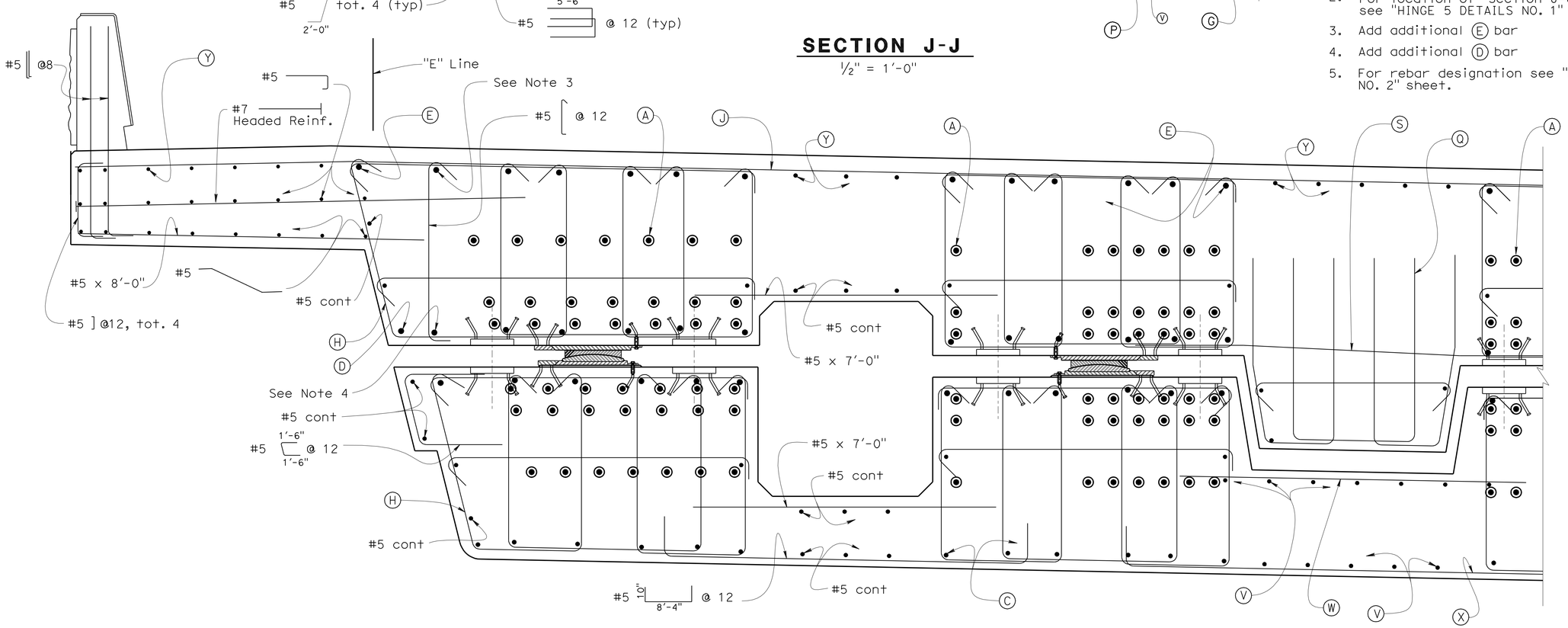

SECTION K-K

¾" = 1'-0"

DESIGN	BY Ahmed M. M. Ibrahim	CHECKED F. Zayati	
DETAILS	BY T. Nguyen	CHECKED F. Zayati	
QUANTITIES	BY M. Friedheim	CHECKED N. Tachta	

STATE OF CALIFORNIA
DEPARTMENT OF TRANSPORTATION

DIVISION OF ENGINEERING SERVICES
STRUCTURE DESIGN
DESIGN BRANCH 14

BRIDGE NO. 53-3032
POST MILE 3.58

SCHUYLER HEIM BRIDGE (REPLACE)
HINGE 5 (STAGE 1) DETAILS NO. 4

STRUCTURES DESIGN DETAIL SHEET (ENGLISH) (REV. 10/25/05)

ORIGINAL SCALE IN INCHES FOR REDUCED PLANS 0 1 2 3

CU 07-271
EA 138201

DISREGARD PRINTS BEARING EARLIER REVISION DATES

REVISION DATES: 11-29-09 04-30-10 5-19-10

SHEET 124 OF 247

FILE => 53-3032-1-p-jhinge5-det4.dgn

USERNAME => friehard DATE PLOTTED => 19-OCT-2010 TIME PLOTTED => 11:30

DIST	COUNTY	ROUTE	POST MILES TOTAL PROJECT	SHEET No	TOTAL SHEETS
07	LA	47,103	3.5/4.6, 0.0/1.1	627	1003

REGISTERED CIVIL ENGINEER — DATE 05-24-10

10-11-10
PLANS APPROVAL DATE

REGISTERED PROFESSIONAL ENGINEER — FOUED ZAYATI — No. C57046 — Exp. 06-30-11 — CIVIL — STATE OF CALIFORNIA

The State of California or its officers or agents shall not be responsible for the accuracy or completeness of electronic copies of this plan sheet.

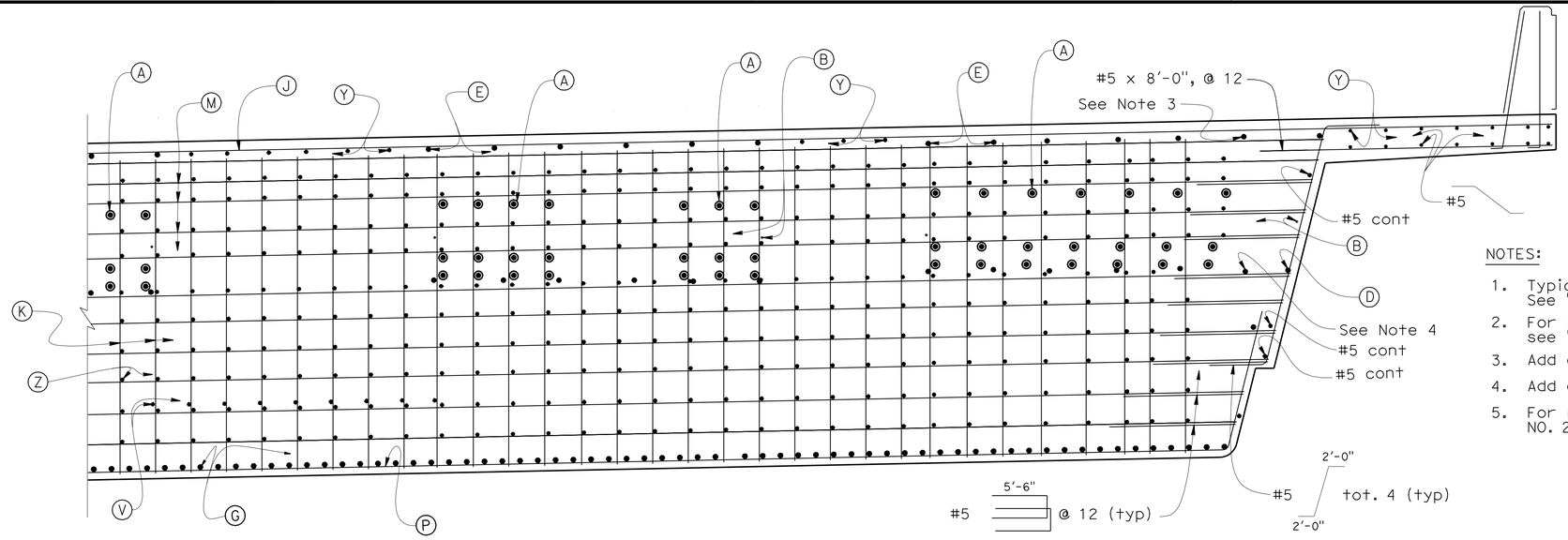

NOTES:

1. Typical Section Reinforcement not shown. See "TYPICAL SECTION NO. 1" sheet.
2. For location of 'Section J-J' and 'Section K-K' on Stage 2, see "HINGE 5 DETAILS NO. 1" sheet.
3. Add additional (E) bar
4. Add additional (D) bar
5. For rebar designation see "HINGE 5 DETAILS NO. 2" sheet.

SECTION J-J

1/2" = 1'-0"

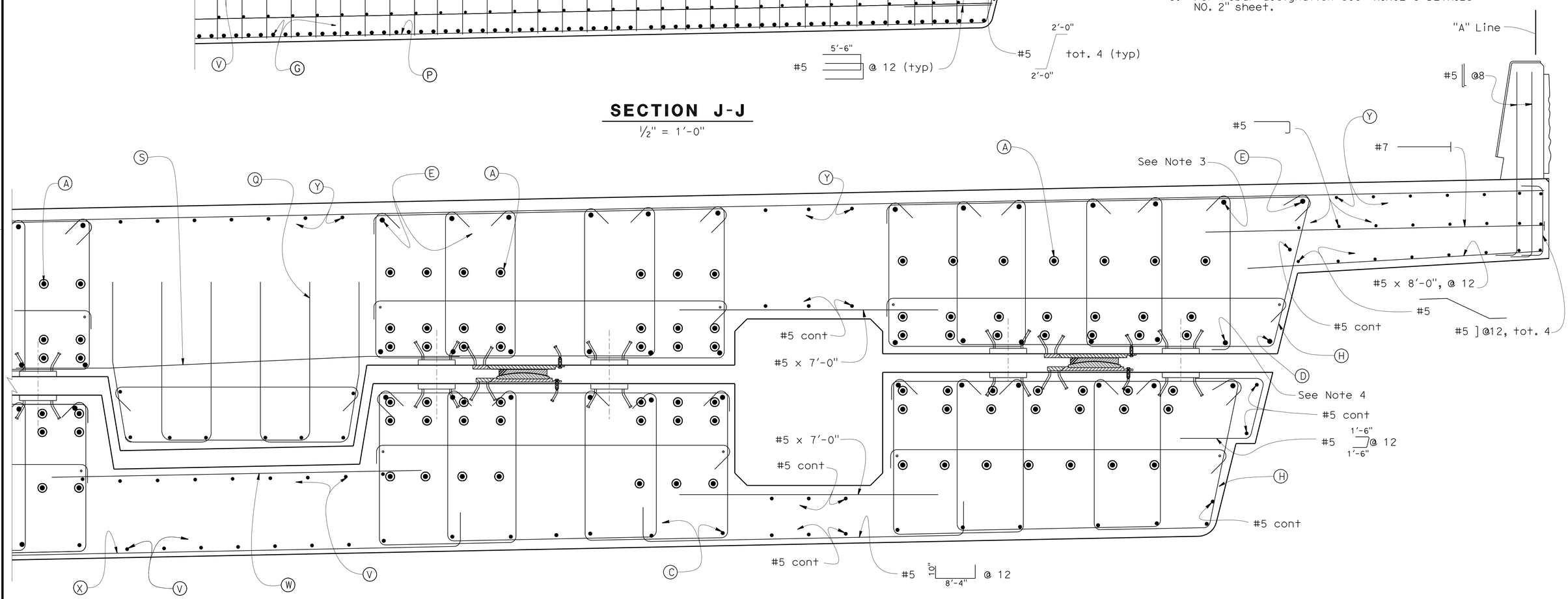

SECTION K-K

3/4" = 1'-0"

DESIGN	BY Ahmed M. M. Ibrahim	CHECKED F. Zayati	
DETAILS	BY T. Nguyen	CHECKED F. Zayati	
QUANTITIES	BY M. Friedheim	CHECKED N. Tachta	

STATE OF CALIFORNIA
DEPARTMENT OF TRANSPORTATION

DIVISION OF ENGINEERING SERVICES
STRUCTURE DESIGN
DESIGN BRANCH 14

BRIDGE NO. 53-3032
POST MILE 3.58

SCHUYLER HEIM BRIDGE (REPLACE)
HINGE 5 (STAGE 3) DETAILS NO. 5

STRUCTURES DESIGN DETAIL SHEET (ENGLISH) (REV. 10/25/05)

ORIGINAL SCALE IN INCHES FOR REDUCED PLANS 0 1 2 3

CU 07-271
EA 138201

DISREGARD PRINTS BEARING EARLIER REVISION DATES

REVISION DATES: 11-24-09 04-16-10 04-30-10 5-19-10

SHEET 125 OF 247

FILE => 53-3032-1-p-jhinge5-det5.dgn

USERNAME => trlenard DATE PLOTTED => 19-OCT-2010 TIME PLOTTED => 11:30

DIST	COUNTY	ROUTE	POST MILES TOTAL PROJECT	SHEET No	TOTAL SHEETS
07	LA	47,103	3.5/4.6, 0.0/1.1	628	1003

REGISTERED CIVIL ENGINEER 05-24-10 DATE

10-11-10
PLANS APPROVAL DATE

REGISTERED PROFESSIONAL ENGINEER FOUED ZAYATI No. C57046 Exp. 06-30-11 CIVIL STATE OF CALIFORNIA

The State of California or its officers or agents shall not be responsible for the accuracy or completeness of electronic copies of this plan sheet.

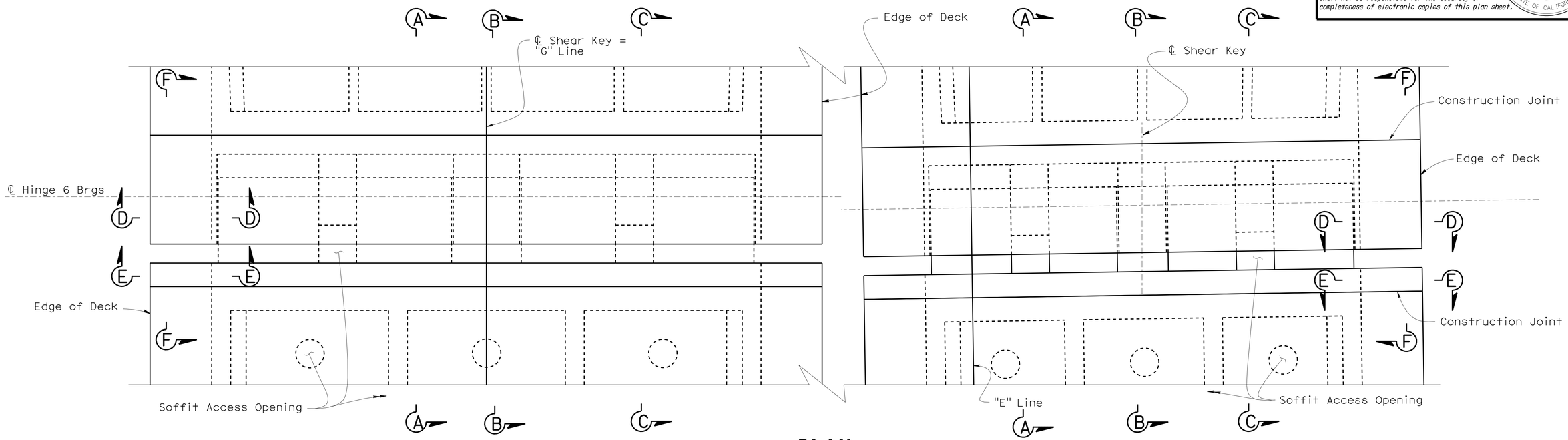

PLAN

3/16" = 1'-0"

NOTES:

1. For 'Section A-A' and 'Section B-B', see "HINGE 6 DETAILS NO. 2" sheet.
2. For 'Section C-C', 'Section D-D', 'Section E-E' and 'Section F-F', see "HINGE 6 DETAILS NO. 3" sheet.
3. For 'Detail A' and 'Detail B', see "HINGE 6 DETAILS NO. 1" sheet.

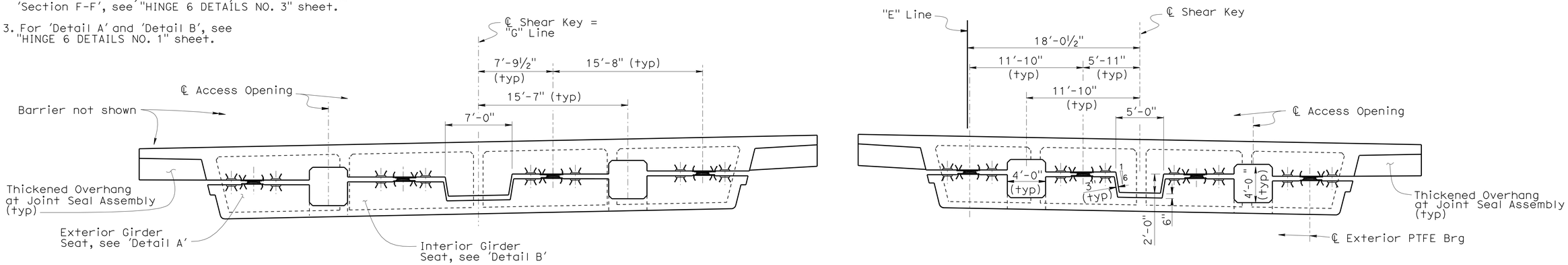

NOTE: All dimensions are the same as Stage 2 Bridge unless otherwise shown.

ELEVATION

3/16" = 1'-0"

DESIGN	BY Ahmed M. M. Ibrahim	CHECKED F. Zayati	
DETAILS	BY T. Nguyen	CHECKED F. Zayati	
QUANTITIES	BY M. Friedheim	CHECKED N. Tachta	

STATE OF CALIFORNIA
DEPARTMENT OF TRANSPORTATION

DIVISION OF ENGINEERING SERVICES
STRUCTURE DESIGN
DESIGN BRANCH 14

BRIDGE NO. 53-3032
POST MILE 3.58

SCHUYLER HEIM BRIDGE (REPLACE)

HINGE 6 LAYOUT

STRUCTURES DESIGN DETAIL SHEET (ENGLISH) (REV. 10/25/05)

ORIGINAL SCALE IN INCHES FOR REDUCED PLANS 0 1 2 3

CU 07-271
EA 138201

DISREGARD PRINTS BEARING EARLIER REVISION DATES

REVISION DATES: 09-23-09, 10-26-09, 2-05-10, 4-16-10, 4-30-10, 5-20-10

SHEET 126 OF 247

FILE => 53-3032-1-p-jhinge6-1lo.dgn

USERNAME => trmnguye DATE PLOTTED => 21-OCT-2010 TIME PLOTTED => 14:58

DIST	COUNTY	ROUTE	POST MILES TOTAL PROJECT	SHEET No	TOTAL SHEETS
07	LA	47,103	3.5/4.6, 0.0/1.1	629	1003

REGISTERED CIVIL ENGINEER — DATE 05-24-10

10-11-10
PLANS APPROVAL DATE

REGISTERED PROFESSIONAL ENGINEER — FOUED ZAYATI — No. C57046 — Exp. 06-30-11 — CIVIL — STATE OF CALIFORNIA

The State of California or its officers or agents shall not be responsible for the accuracy or completeness of electronic copies of this plan sheet.

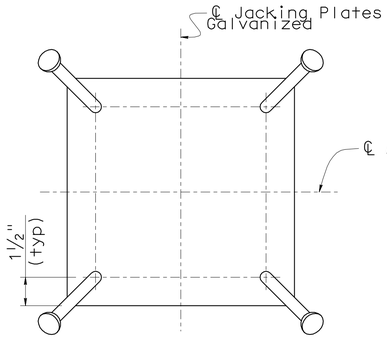

PLAN

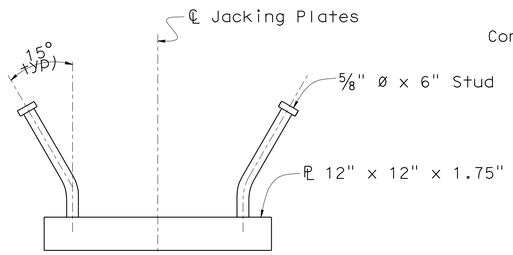

ELEVATION

JACKING PLATE DETAIL

3" = 1'-0"

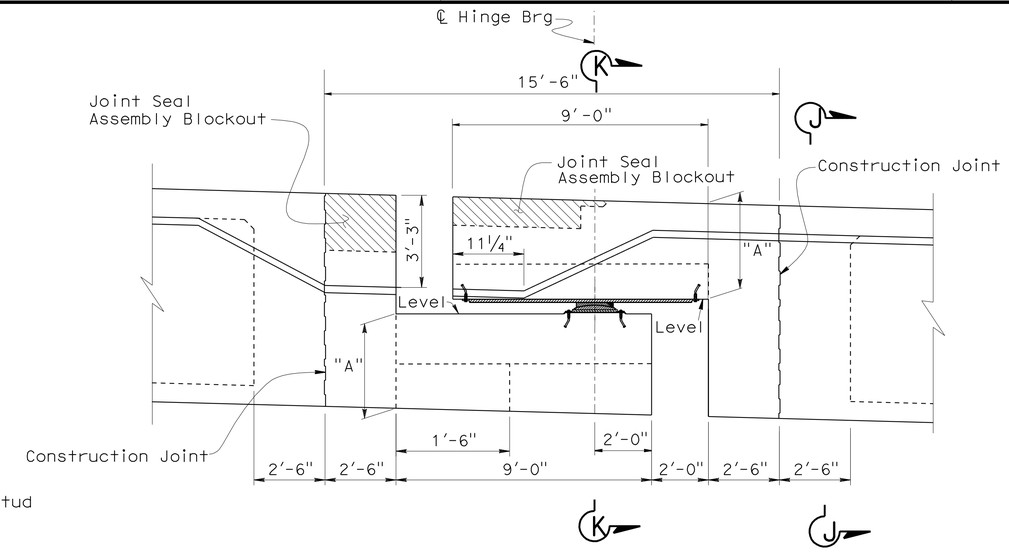

LONGITUDINAL ELEVATION

⅜" = 1'-0"

NOTES:

1. For 'Section J-J' and 'Section K-K', see "HINGE 6 DETAILS NO. 5" sheet.
2. For location of 'Detail A' and 'Detail B', see "HINGE 6 LAYOUT" sheet.
3. For Access Opening Door details, see "HINGE 2 DETAILS NO. 1" sheet.
4. "A" is measured at C bearings

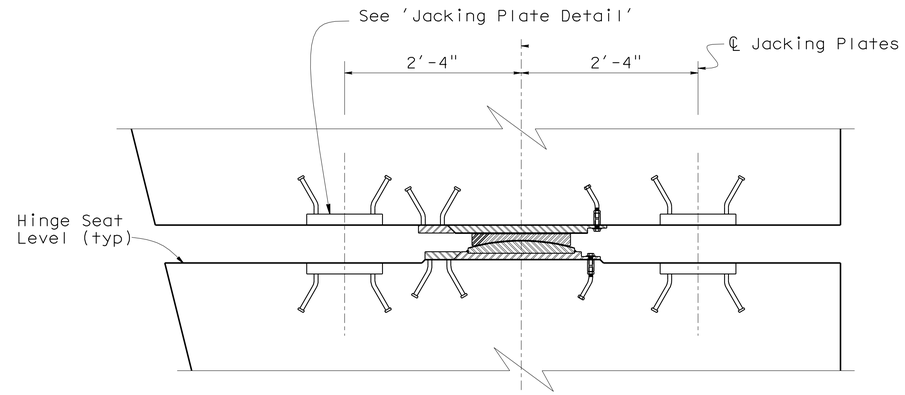

DETAIL A

1" = 1'-0"

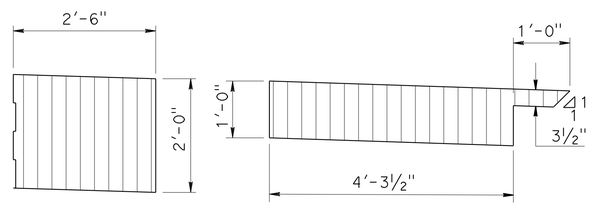

JOINT SEAL BLOCKOUT DETAIL

¾" = 1'-0"

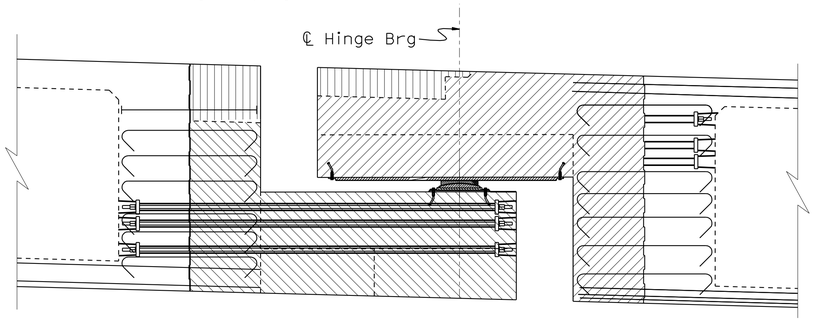

HINGE DETAIL

¾" = 1'-0"

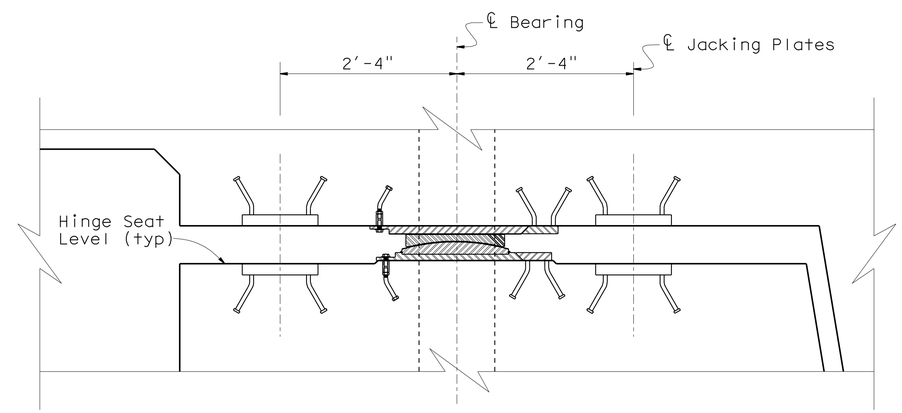

DETAIL B

1" = 1'-0"

Indicates Blockout and Closure Pour for Joint Seal Assemblies.

Indicates CIP concrete to be placed after both frames have been stressed.

Indicates CIP concrete to be placed after seat side of the Hinge is constructed and Bearings are properly positioned.

	BY	CHECKED
DESIGN	Ahmed M. M. Ibrahim	F. Zayati
DETAILS	T. Nguyen	F. Zayati
QUANTITIES	M. Friedheim	N. Tachta

STATE OF CALIFORNIA
DEPARTMENT OF TRANSPORTATION

DIVISION OF ENGINEERING SERVICES
STRUCTURE DESIGN
DESIGN BRANCH 14

BRIDGE NO. 53-3032
POST MILE 3.58

SCHUYLER HEIM BRIDGE (REPLACE)
HINGE 6 DETAILS NO. 1

STRUCTURES DESIGN DETAIL SHEET (ENGLISH) (REV. 10/25/05)

ORIGINAL SCALE IN INCHES FOR REDUCED PLANS 0 1 2 3

CU 07-271
EA 138201

DISREGARD PRINTS BEARING EARLIER REVISION DATES

REVISION DATES: 09-23-09 12-08-09 04-16-10 04-30-10 05-23-10

SHEET 127 OF 247

FILE => 53-3032-1-p-jhinge6-det01.dgn

USERNAME => trlenard DATE PLOTTED => 19-OCT-2010 TIME PLOTTED => 11:30

DIST	COUNTY	ROUTE	POST MILES TOTAL PROJECT	SHEET No	TOTAL SHEETS
07	LA	47,103	3.5/4.6, 0.0/1.1	630	1003

REGISTERED CIVIL ENGINEER — DATE 05-24-10

10-11-10
PLANS APPROVAL DATE

REGISTERED PROFESSIONAL ENGINEER — FOUED ZAYATI — No. C57046 — Exp. 06-30-11 — CIVIL — STATE OF CALIFORNIA

The State of California or its officers or agents shall not be responsible for the accuracy or completeness of electronic copies of this plan sheet.

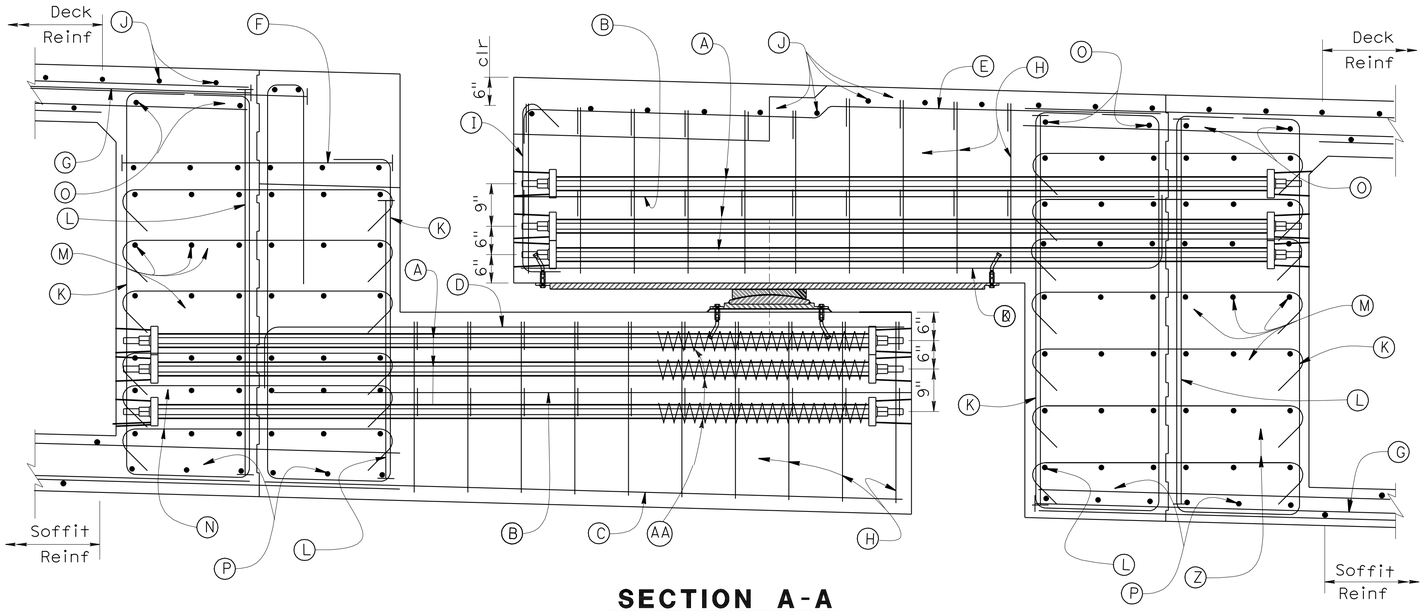

SECTION A-A

¾" = 1'-0"

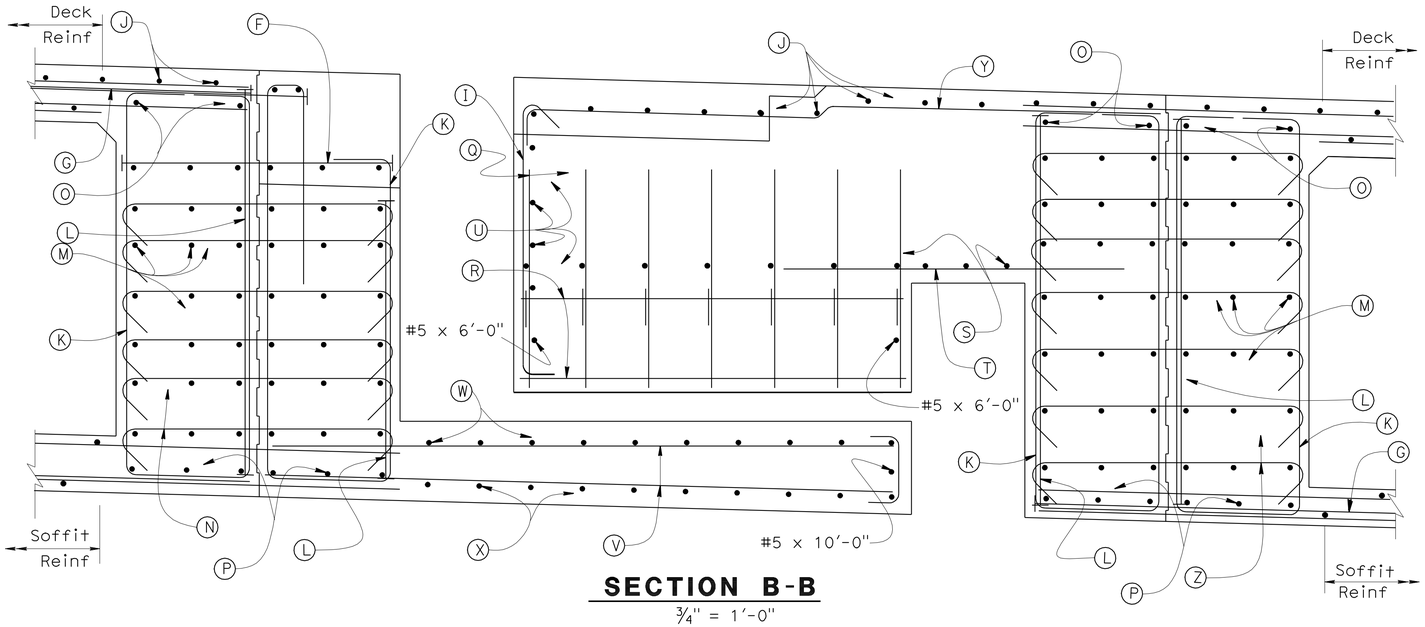

SECTION B-B

¾" = 1'-0"

PRESTRESSING NOTES

1. 150 KSI HS bars:
2. Concrete: f'_c = 5.0 ksi @ 28 days
   f'_{ci} = 4.5 ksi @ time of stressing
3. Stress all HS bars using an alternating stessing sequence to a lockoff stress equal to 70% of Ultimate stress.
4. Stress HS bars from inside structure bays
5. Falsework shall not be released prior to stressing all HS bars.

LEGEND

- (A) 1¼" dia. HS Stress bars, tot. 7 per layer, per Bearing (typ)
- (B) #6 cont, tot. 2 per Bearing
- (C) #6 cont, tot. 6 per Bearing
- (D) #9 tot. 6 per Bearing (typ)
- (E) #6 , tot. 6 per Bearing
- (F) #11 @ 6
- (G) #11 12'-6" @ 6
- (H) #6 or @ 12, at each Bearing Seat
- (I) #5 @ 12
- (J) #5 @ 12, cont
- (K) #6 3'-9" @ 12 (typ)
- (L) #9 @ 6 (typ)
- (M) #5 cont, tot. 6 per layer, tot. 7 layers
- (N) #5 tot. 6, @ 12 (typ)
- (O) #5 cont, tot. 4 (typ)
- (P) #5 4'-0" 4'-0" tot. 12
- (Q) #6 2'-0" @ 12
- (R) #5 x 6'-9", tot. 8
- (S) #8 2'-6" 2'-6" @ 12
- (T) #5 x 5'-0", @ 12
- (U) #5 cont, tot. 4
- (V) #5 @ 12, cont
- (W) #5 x 10'-0", @ 12
- (X) #5 10" 12'-0" @12
- (Y) #5 @ 12
- (Z) #5 tot. 7, @ 12 (typ)
- (AA) #4 Spiral, 5½" ø 2½" pitch by 2'0" long

NOTES:

1. For location of 'Section A-A' and 'Section B-B', see "HINGE 5 LAYOUT" sheet.
2. 3" clear cover (typ)
3. All HS bars, place (K) in front Anchor Plate.

	BY	CHECKED
DESIGN	Ahmed M. M. Ibrahim	F. Zayati
DETAILS	T. Nguyen	F. Zayati
QUANTITIES	M. Friedheim	N. Tachta

STATE OF CALIFORNIA
DEPARTMENT OF TRANSPORTATION

DIVISION OF ENGINEERING SERVICES
STRUCTURE DESIGN
DESIGN BRANCH 14

BRIDGE NO. 53-3032
POST MILE 3.58

SCHUYLER HEIM BRIDGE (REPLACE)

HINGE 6 DETAILS NO. 2

STRUCTURES DESIGN DETAIL SHEET (ENGLISH) (REV. 10/25/05)

ORIGINAL SCALE IN INCHES FOR REDUCED PLANS 0 1 2 3

CU 07-271
EA 138201

DISREGARD PRINTS BEARING EARLIER REVISION DATES

REVISION DATES: 05-21-08 01-26-10 2-1-10 04-30-10

SHEET 128 OF 247

FILE => 53-3032-1-p-jhinge6-det2.dgn

USERNAME => rtrenard DATE PLOTTED => 19-OCT-2010 TIME PLOTTED => 11:30

DIST	COUNTY	ROUTE	POST MILES TOTAL PROJECT	SHEET No	TOTAL SHEETS
07	LA	47,103	3.5/4.6, 0.0/1.1	631	1003

REGISTERED CIVIL ENGINEER 05-24-10 DATE

10-11-10
PLANS APPROVAL DATE

REGISTERED PROFESSIONAL ENGINEER FOUED ZAYATI No. C57046 Exp. 06-30-11 CIVIL STATE OF CALIFORNIA

The State of California or its officers or agents shall not be responsible for the accuracy or completeness of electronic copies of this plan sheet.

NOTES:

1. Typical Section Reinforcement not shown. See "TYPICAL SECTION NO. 1" sheet.
2. For location of 'Section C-C', 'Section D-D', 'Section E-E' and 'Section F-F', see "HINGE 6 LAYOUT" sheet.
3. For rebar designation see "HINGE 6 DETAILS NO. 2" sheet.

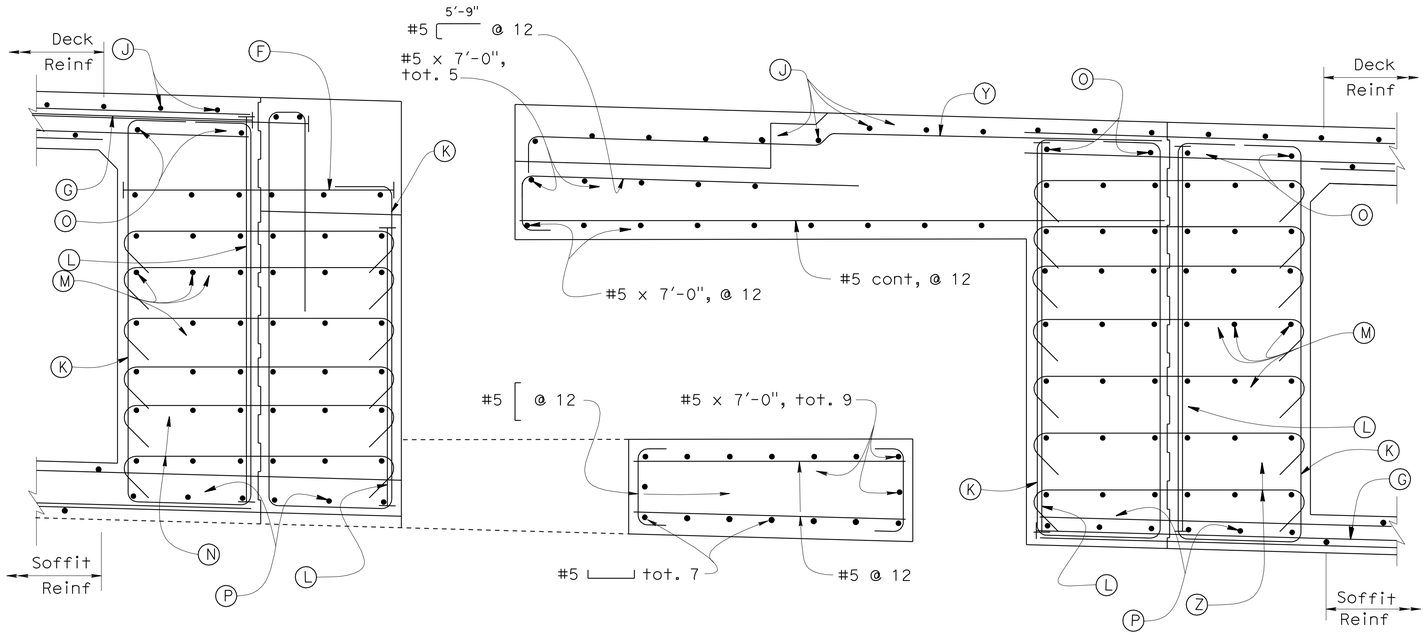

SECTION C-C

3/4" = 1'-0"

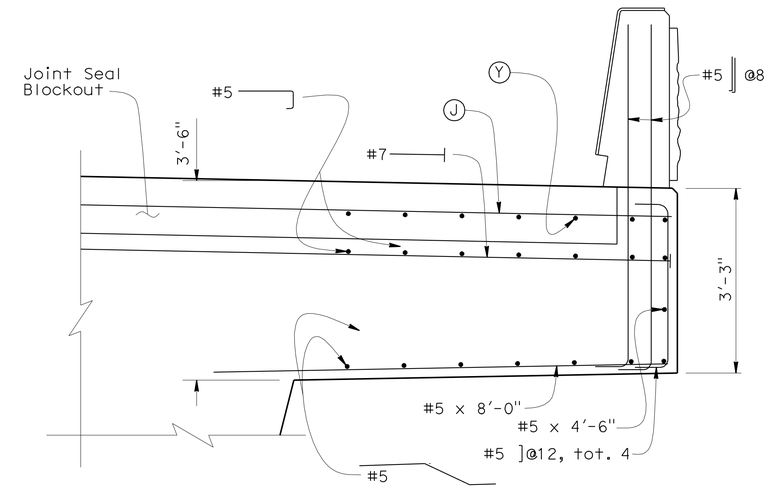

SECTION D-D

3/4" = 1'-0"

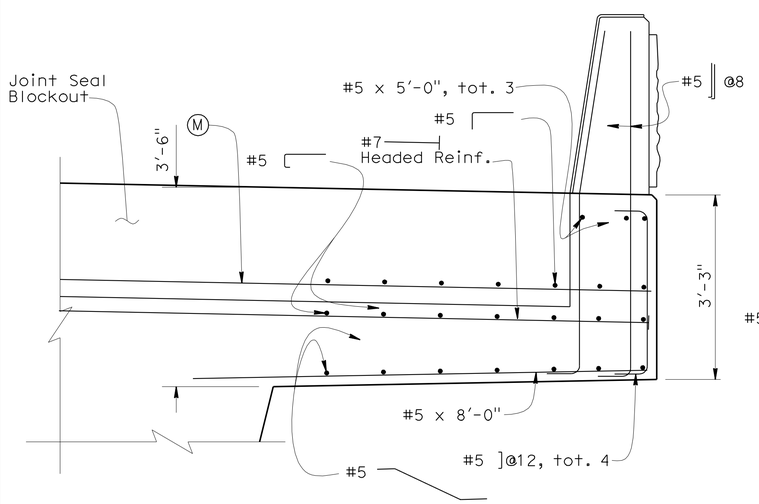

SECTION E-E

3/4" = 1'-0"

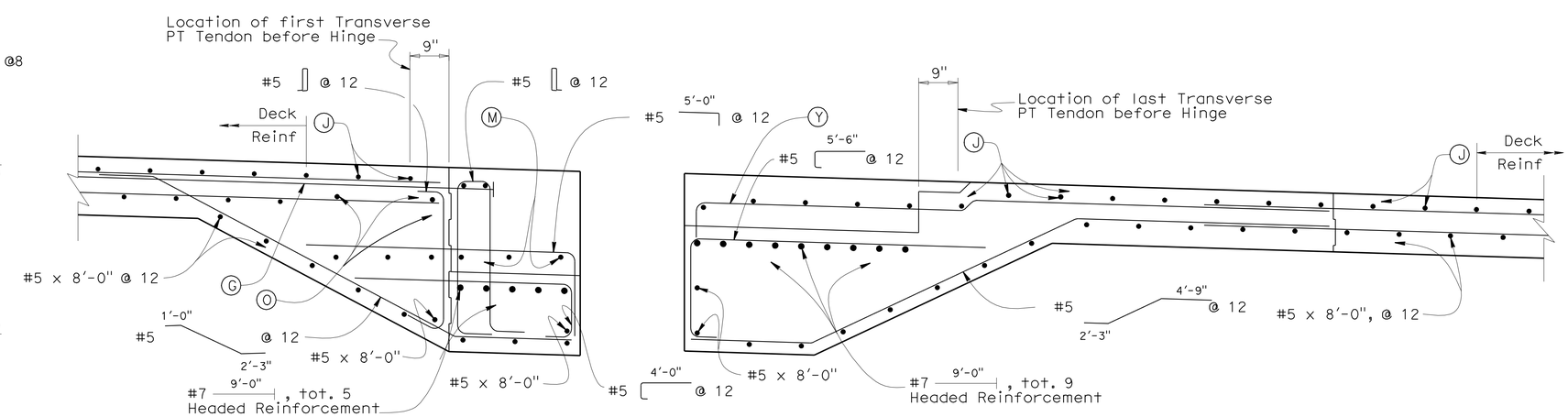

SECTION F-F

3/4" = 1'-0"

DESIGN	BY Ahmed M. M. Ibrahim	CHECKED F. Zayati	
DETAILS	BY T. Nguyen	CHECKED F. Zayati	
QUANTITIES	BY M. Friedheim	CHECKED N. Tachta	

STATE OF CALIFORNIA
DEPARTMENT OF TRANSPORTATION

DIVISION OF ENGINEERING SERVICES
STRUCTURE DESIGN
DESIGN BRANCH 14

BRIDGE NO. 53-3032
POST MILE 3.58

SCHUYLER HEIM BRIDGE (REPLACE)

HINGE 6 DETAILS NO. 3

STRUCTURES DESIGN DETAIL SHEET (ENGLISH) (REV. 10/25/05)

ORIGINAL SCALE IN INCHES FOR REDUCED PLANS 0 1 2 3

CU 07-271
EA 138201

DISREGARD PRINTS BEARING EARLIER REVISION DATES

REVISION DATES: 10-01-09 12-18-09 1-18-10 2-08-10 4-16-10 4-30-10

SHEET 129 OF 247

FILE => 53-3032-1-p-jhinge6-det3.dgn

USERNAME => tfriehard DATE PLOTTED => 19-OCT-2010 TIME PLOTTED => 11:30

DIST	COUNTY	ROUTE	POST MILES TOTAL PROJECT	SHEET No	TOTAL SHEETS
07	LA	47,103	3.5/4.6, 0.0/1.1	632	1003

REGISTERED CIVIL ENGINEER — DATE 05-24-10

10-11-10
PLANS APPROVAL DATE

The State of California or its officers or agents shall not be responsible for the accuracy or completeness of electronic copies of this plan sheet.

REGISTERED PROFESSIONAL ENGINEER — FOUED ZAYATI — No. C57046 — Exp. 06-30-11 — CIVIL — STATE OF CALIFORNIA

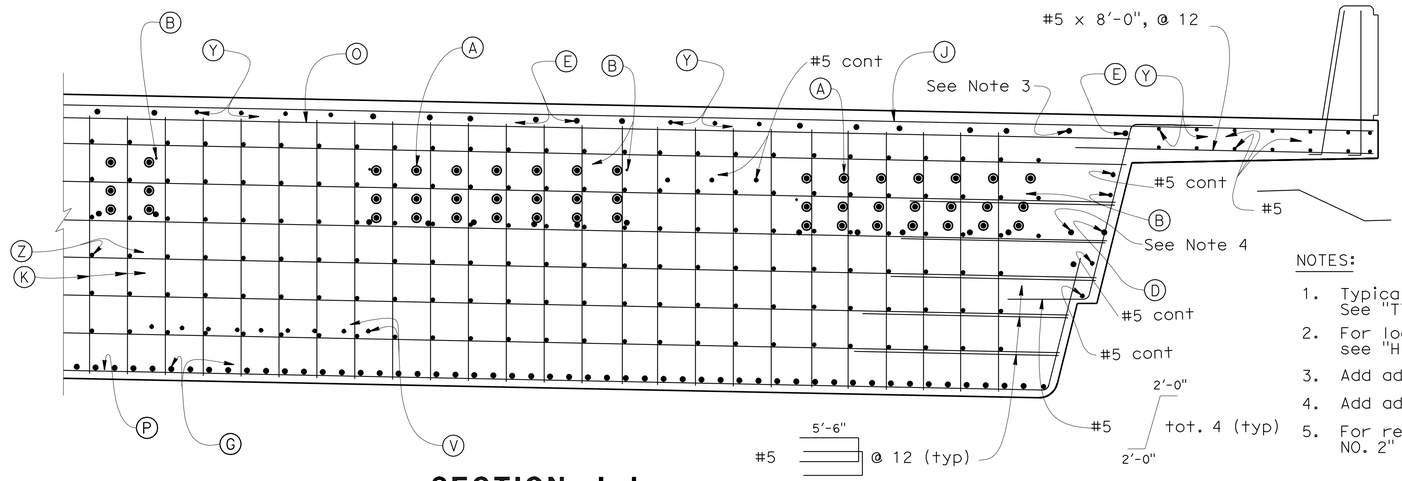

SECTION J-J

1/2" = 1'-0"

NOTES:

1. Typical Section Reinforcement not shown. See "TYPICAL SECTION NO. 1" sheet.
2. For location of 'Section J-J' and 'Section K-K' on Stage 1, see "HINGE 6 DETAILS NO. 1" sheet.
3. Add additional (E) bar
4. Add additional (D) bar
5. For rebar designation see "HINGE 6 DETAILS NO. 2" sheet.

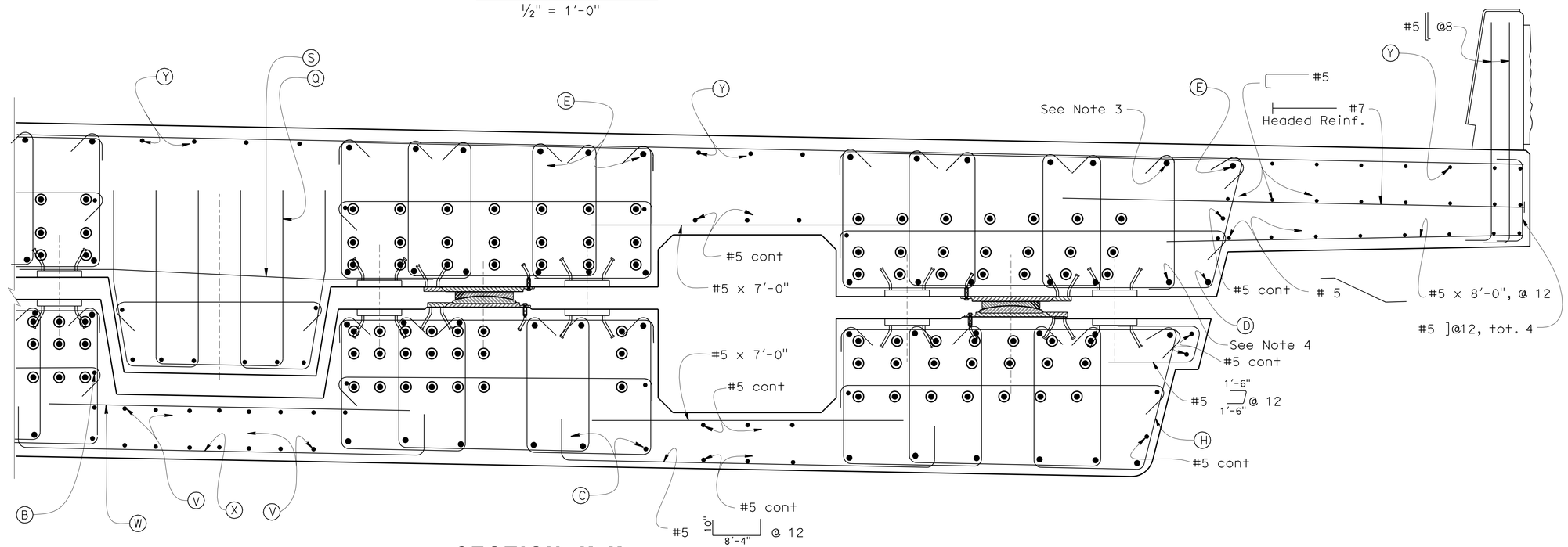

SECTION K-K

3/4" = 1'-0"

DESIGN	BY Ahmed M. M. Ibrahim	CHECKED F. Zayati	
DETAILS	BY T. Nguyen	CHECKED F. Zayati	
QUANTITIES	BY M. Friedheim	CHECKED N. Tachta	

STATE OF CALIFORNIA
DEPARTMENT OF TRANSPORTATION

DIVISION OF ENGINEERING SERVICES
STRUCTURE DESIGN
DESIGN BRANCH 14

BRIDGE NO. 53-3032
POST MILE 3.58

SCHUYLER HEIM BRIDGE (REPLACE)
HINGE 6 (STAGE 1) DETAILS NO. 4

STRUCTURES DESIGN DETAIL SHEET (ENGLISH) (REV. 10/25/05)

ORIGINAL SCALE IN INCHES FOR REDUCED PLANS 0 1 2 3

CU 07-271
EA 138201

DISREGARD PRINTS BEARING EARLIER REVISION DATES → 10-27-09 12-18-09 04-28-10 5-19-10

REVISION DATES

SHEET 130 OF 247

FILE => 53-3032-1-p-jhinge6-det4.dgn

USERNAME => trlenard DATE PLOTTED => 19-OCT-2010 TIME PLOTTED => 11:30

DIST	COUNTY	ROUTE	POST MILES TOTAL PROJECT	SHEET No	TOTAL SHEETS
07	LA	47,103	3.5/4.6, 0.0/1.1	633	1003

REGISTERED CIVIL ENGINEER — DATE 05-24-10

10-11-10
PLANS APPROVAL DATE

The State of California or its officers or agents shall not be responsible for the accuracy or completeness of electronic copies of this plan sheet.

REGISTERED PROFESSIONAL ENGINEER — FOUED ZAYATI — No. C57046 — Exp. 06-30-11 — CIVIL — STATE OF CALIFORNIA

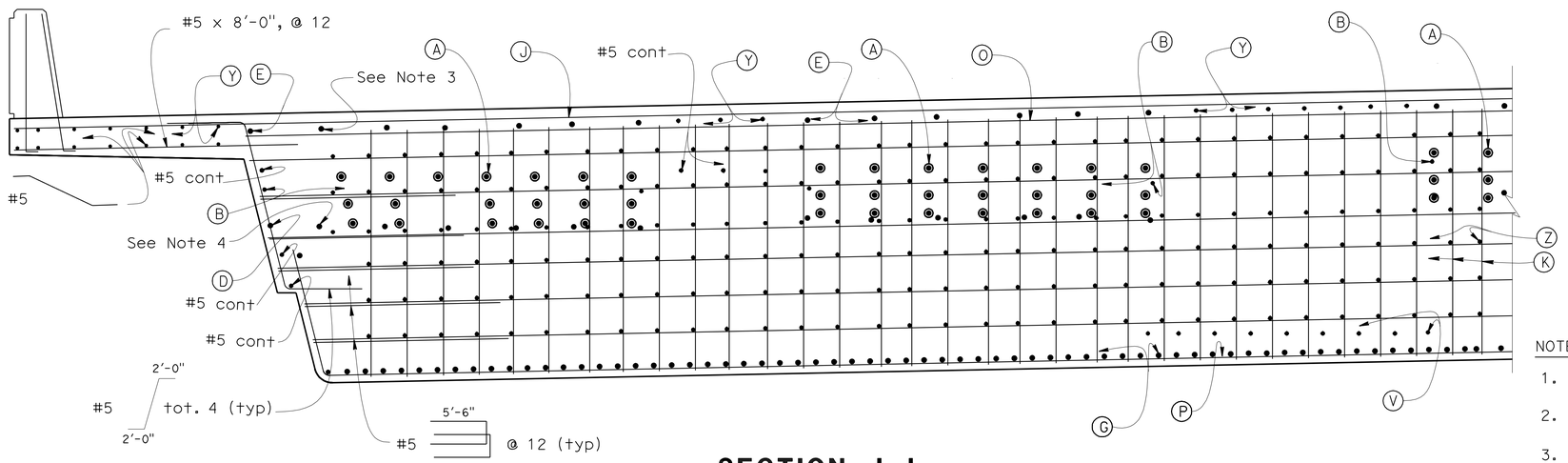

SECTION J-J

1/2" = 1'-0"

NOTES:

1. Typical Section Reinforcement not shown. See "TYPICAL SECTION NO. 1" sheet.
2. For location of 'Section J-J' and 'Section K-K' on Stage 2, see "HINGE 6 DETAILS NO. 2" sheet.
3. Add additional (E) bar
4. Add additional (D) bar
5. For rebar designation see "HINGE 6 DETAILS NO. 2" sheet.

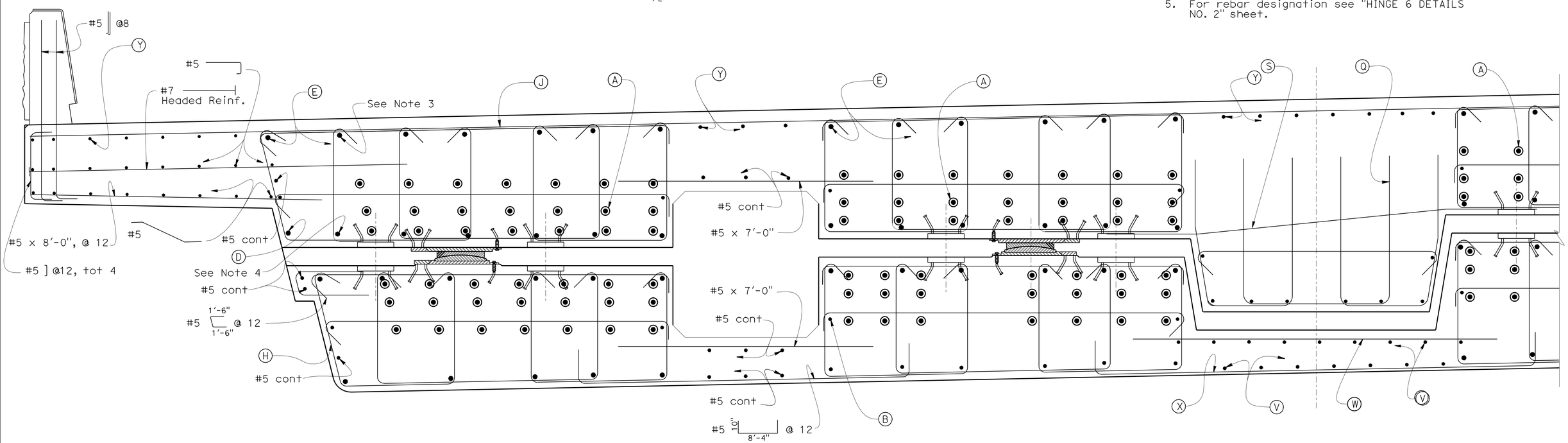

SECTION G-G

3/4" = 1'-0"

DESIGN	BY Ahmed M. M. Ibrahim	CHECKED F. Zayati	
DETAILS	BY T. Nguyen	CHECKED F. Zayati	
QUANTITIES	BY M. Friedheim	CHECKED N. Tachta	

STATE OF CALIFORNIA
DEPARTMENT OF TRANSPORTATION

DIVISION OF ENGINEERING SERVICES
STRUCTURE DESIGN
DESIGN BRANCH 14

BRIDGE NO. 53-3032
POST MILE 3.58

SCHUYLER HEIM BRIDGE (REPLACE)
HINGE 6 (STAGE 3) DETAILS NO. 5

STRUCTURES DESIGN DETAIL SHEET (ENGLISH) (REV. 10/25/05)

ORIGINAL SCALE IN INCHES FOR REDUCED PLANS 0 1 2 3

CU 07-271
EA 138201

DISREGARD PRINTS BEARING EARLIER REVISION DATES

REVISION DATES: 09-22-09 12-18-09 04-28-10 5-19-10 5-25-10

SHEET 131 OF 247

FILE => 53-3032-1-p-jhinge6-det5.dgn

USERNAME => friehard DATE PLOTTED => 19-OCT-2010 TIME PLOTTED => 11:30

DIST	COUNTY	ROUTE	POST MILES TOTAL PROJECT	SHEET No	TOTAL SHEETS
07	LA	47,103	3.5/4.6, 0.0/1.1	634	1003

REGISTERED CIVIL ENGINEER — DATE 05-24-10

10-11-10
PLANS APPROVAL DATE

The State of California or its officers or agents shall not be responsible for the accuracy or completeness of electronic copies of this plan sheet.

REGISTERED PROFESSIONAL ENGINEER — FOUED ZAYATI — No. C57046 — Exp. 06-30-11 — CIVIL — STATE OF CALIFORNIA

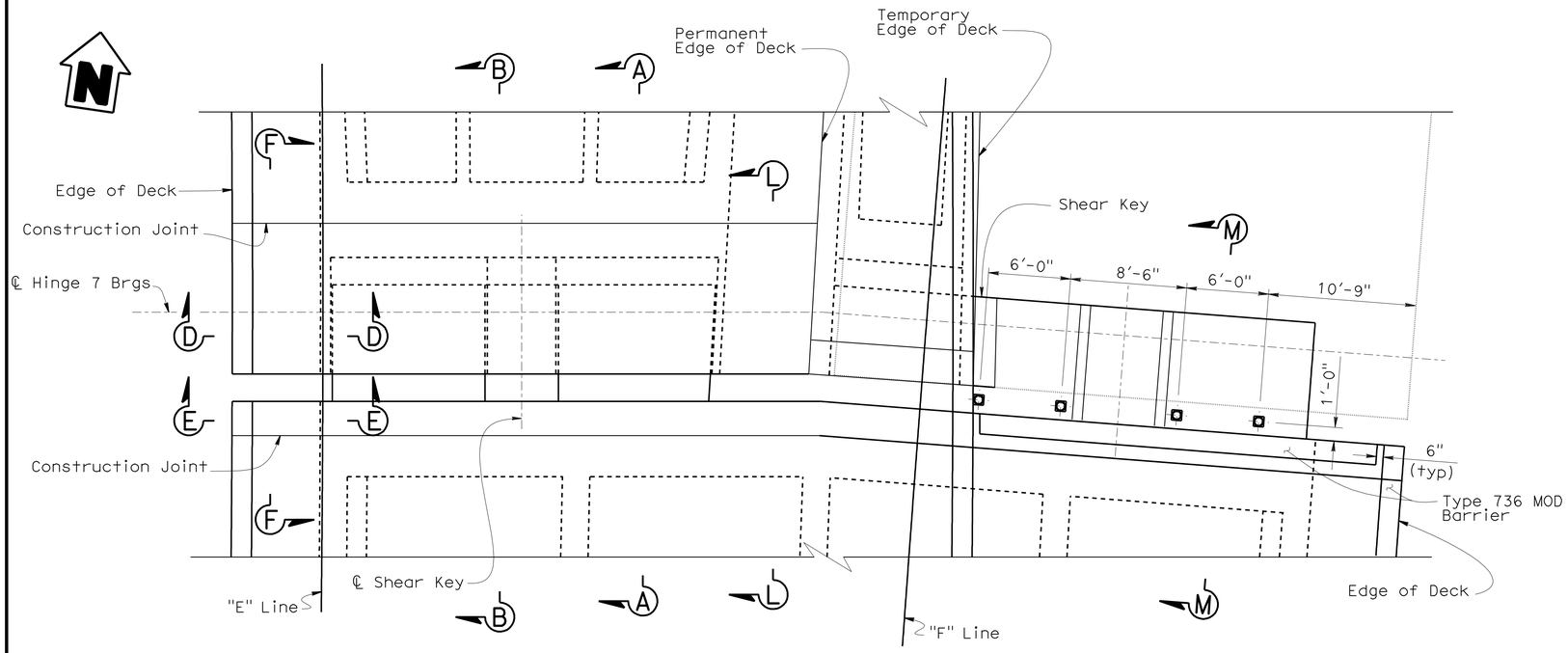

PLAN
3/16" = 1'-0"

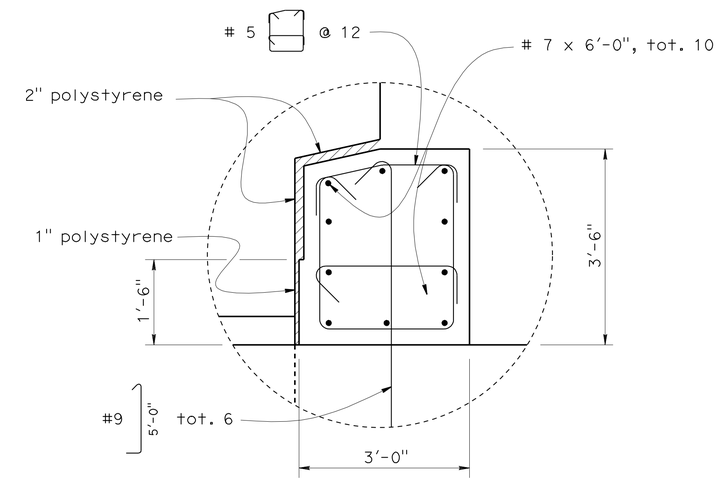

SHEAR KEY DETAIL
3/4" = 1'-0"

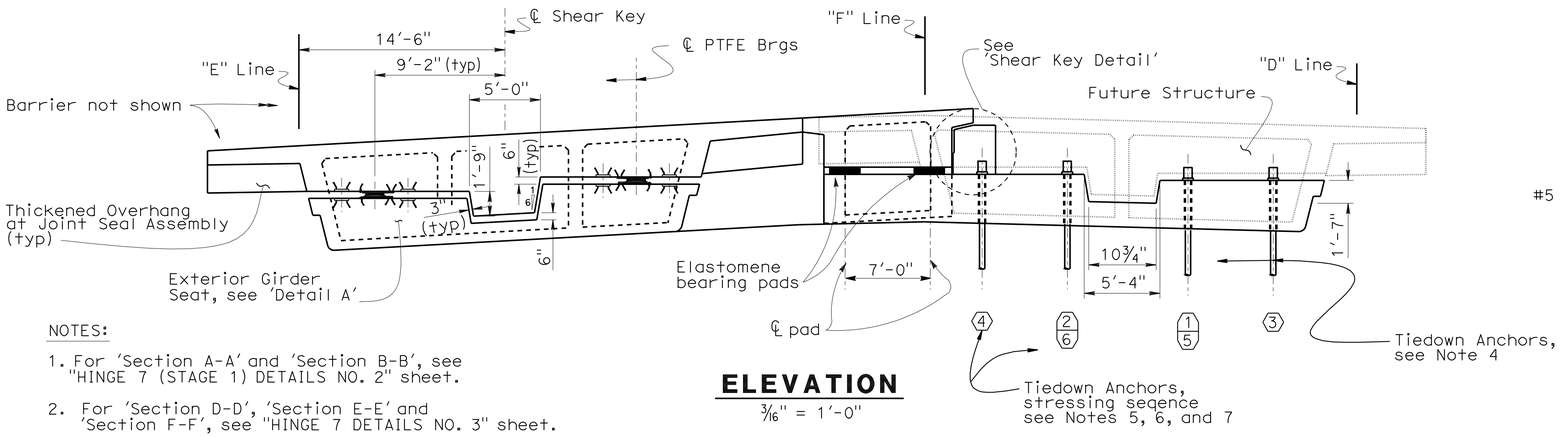

ELEVATION
3/16" = 1'-0"

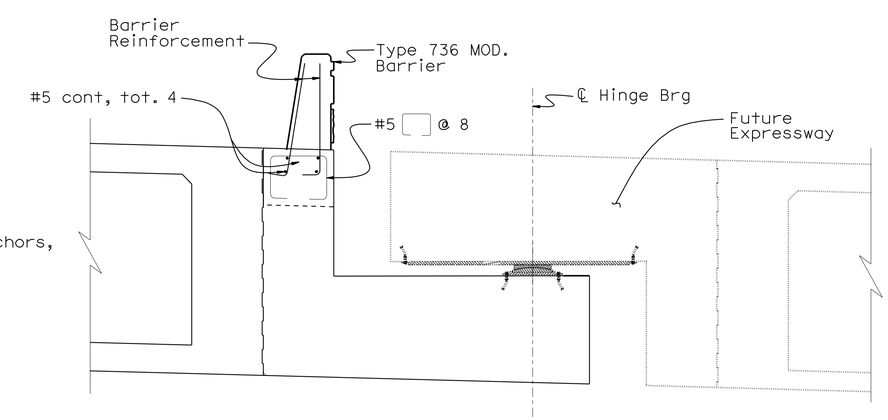

SECTION M-M
3/8" = 1'-0"

NOTES:

1. For 'Section A-A' and 'Section B-B', see "HINGE 7 (STAGE 1) DETAILS NO. 2" sheet.
2. For 'Section D-D', 'Section E-E' and 'Section F-F', see "HINGE 7 DETAILS NO. 3" sheet.
3. For 'Section L-L', see "HINGE 7 DETAIL NO. 6" sheet.
4. For 'Detail A', see "HINGE 7 DETAILS NO. 1" sheet.
5. See "HINGE 7 DETAILS NO. 6" sheet for Tiedown Anchor details.
6. Apply 50% of lockoff load in steps 1 and 2.
7. Apply full lockoff load in steps 3 and 4.
8. Apply balance of lockoff force in steps 5 and 6.

	BY	CHECKED
DESIGN	Ahmed M. M. Ibrahim	F. Zayati
DETAILS	T. Nguyen	F. Zayati
QUANTITIES	M. Friedheim	N. Tachta

STATE OF CALIFORNIA
DEPARTMENT OF TRANSPORTATION

DIVISION OF ENGINEERING SERVICES
STRUCTURE DESIGN
DESIGN BRANCH 14

BRIDGE NO. 53-3032
POST MILE 3.58

SCHUYLER HEIM BRIDGE (REPLACE)
HINGE 7 (STAGE 1) LAYOUT

STRUCTURES DESIGN DETAIL SHEET (ENGLISH) (REV. 10/25/05)

ORIGINAL SCALE IN INCHES FOR REDUCED PLANS 0 1 2 3

CU 07-271
EA 138201

DISREGARD PRINTS BEARING EARLIER REVISION DATES

REVISION DATES: 09-22-09 | 02-15-09 | 02-23-10 | 04-14-10 | 04-16-10 | 05-18-10 | 06-23-10 | 05-25-10

SHEET 132 OF 247

FILE => 53-3032-1-p-jhinge7-1a1o1.dgn

USERNAME => friehard DATE PLOTTED => 19-OCT-2010 TIME PLOTTED => 11:31

DIST	COUNTY	ROUTE	POST MILES TOTAL PROJECT	SHEET No	TOTAL SHEETS
07	LA	47,103	3.5/4.6, 0.0/1.1	635	1003

REGISTERED CIVIL ENGINEER — DATE 05-24-10

10-11-10
PLANS APPROVAL DATE

The State of California or its officers or agents shall not be responsible for the accuracy or completeness of electronic copies of this plan sheet.

REGISTERED PROFESSIONAL ENGINEER — FOUED ZAYATI — No. C57046 — Exp. 06-30-11 — CIVIL — STATE OF CALIFORNIA

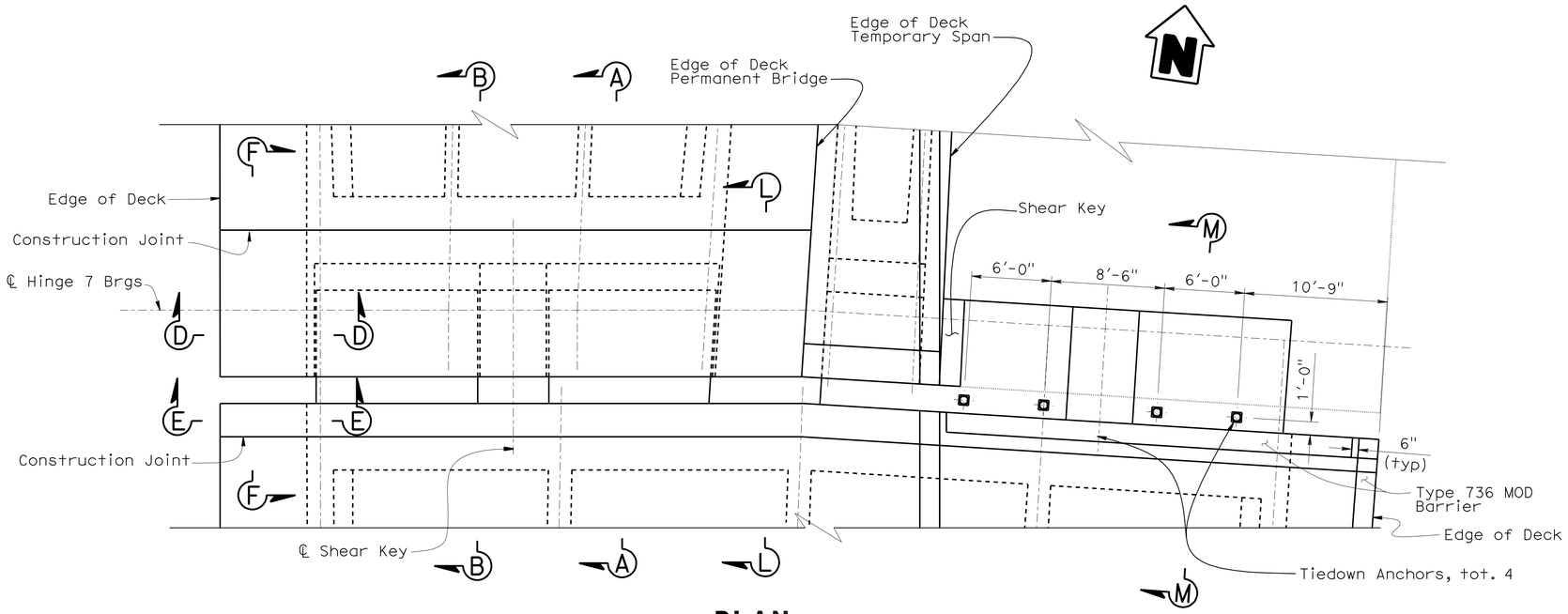

PLAN

3/16" = 1'-0"

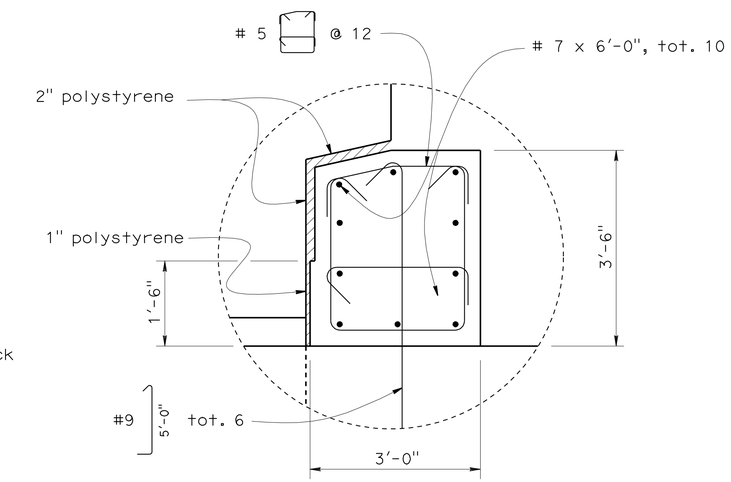

SHEAR KEY DETAIL

3/4" = 1'-0"

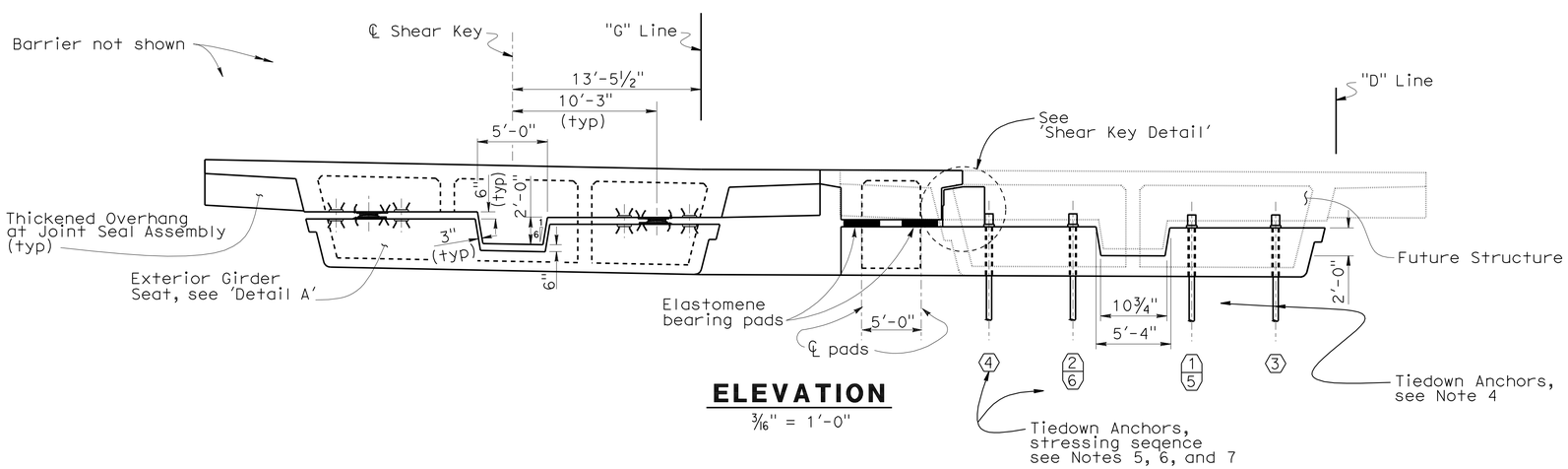

ELEVATION

3/16" = 1'-0"

NOTES:

1. For 'Section A-A' and 'Section B-B', see "HINGE 7 (STAGE 1) DETAILS NO. 2" sheet.
2. For 'Section D-D', 'Section E-E' and 'Section F-F', see "HINGE 7 DETAILS NO. 3" sheet.
3. For 'Section L-L', see "HINGE 7 DETAIL NO. 6" sheet.
4. For 'Detail A', see "HINGE 7 DETAILS NO. 1" sheet.
5. See "HINGE 7 DETAILS NO. 6" sheet for Tiedown Anchor details.
6. Apply 50% of lockoff load in steps 1 and 2.
7. Apply full lockoff load in steps 3 and 4.
8. Apply balance of lockoff force in steps 5 and 6.
9. for 'Section M-M', See "HINGE 7 (STAGE 1) LAYOUT" sheet.

	BY	CHECKED
DESIGN	Ahmed M. M. Ibrahim	F. Zayati
DETAILS	T. Nguyen	F. Zayati
QUANTITIES	M. Friedheim	N. Tachta

STATE OF CALIFORNIA
DEPARTMENT OF TRANSPORTATION

DIVISION OF ENGINEERING SERVICES
STRUCTURE DESIGN
DESIGN BRANCH 14

BRIDGE NO. 53-3032
POST MILE 3.58

SCHUYLER HEIM BRIDGE (REPLACE)
HINGE 7 (STAGE 3) LAYOUT

STRUCTURES DESIGN DETAIL SHEET (ENGLISH) (REV. 10/25/05)

ORIGINAL SCALE IN INCHES FOR REDUCED PLANS 0 1 2 3

CU 07-271
EA 138201

DISREGARD PRINTS BEARING EARLIER REVISION DATES

REVISION DATES: 09-23-09 12-28-09 2-22-10 05-25-10

SHEET 133 OF 247

FILE => 53-3032-1-p-jhinge7-1a1o2.dgn

USERNAME => friehard DATE PLOTTED => 19-OCT-2010 TIME PLOTTED => 11:31

DIST	COUNTY	ROUTE	POST MILES TOTAL PROJECT	SHEET No	TOTAL SHEETS
07	LA	47,103	3.5/4.6, 0.0/1.1	636	1003

REGISTERED CIVIL ENGINEER 05-24-10 DATE

10-11-10
PLANS APPROVAL DATE

REGISTERED PROFESSIONAL ENGINEER FOUED ZAYATI No. C57046 Exp. 06-30-11 CIVIL STATE OF CALIFORNIA

The State of California or its officers or agents shall not be responsible for the accuracy or completeness of electronic copies of this plan sheet.

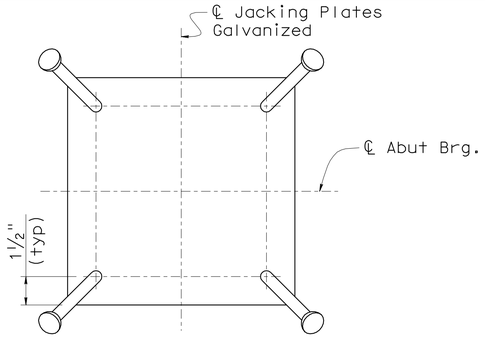

PLAN

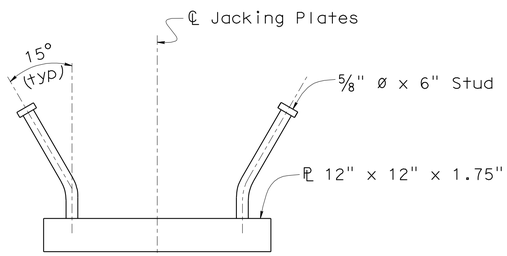

ELEVATION

JACKING PLATE DETAIL

3" = 1'-0"

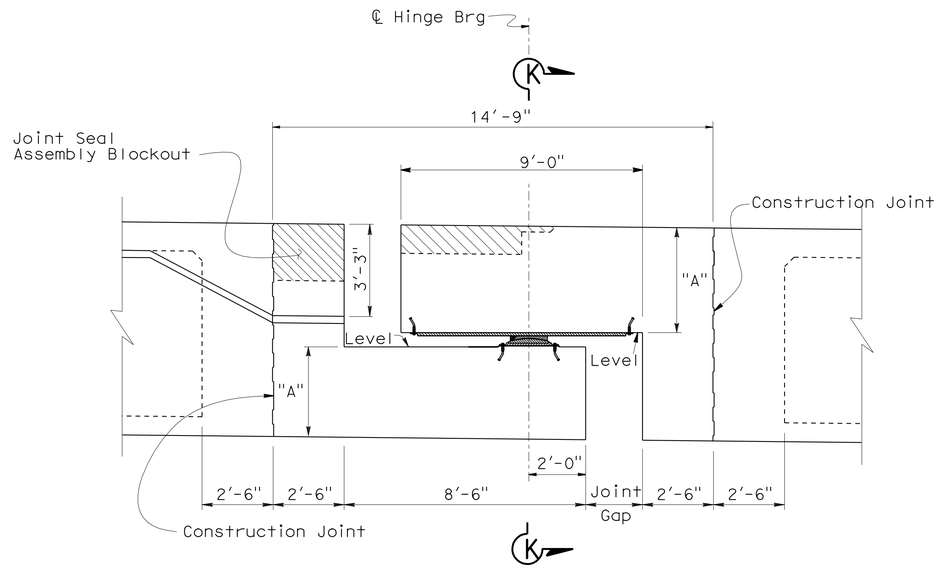

LONGITUDINAL ELEVATION

3/8 " = 1'-0"

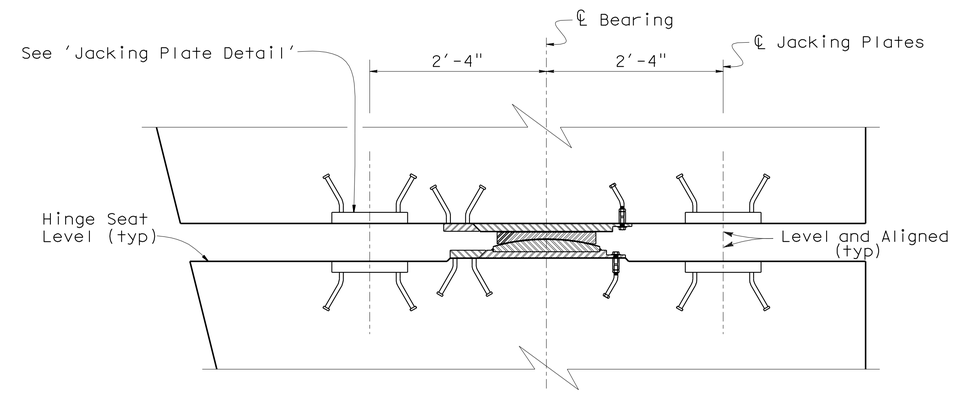

DETAIL A

1" = 1'-0"

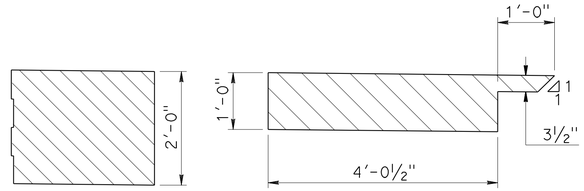

JOINT SEAL BLOCKOUT DETAIL

¾" = 1'-0"

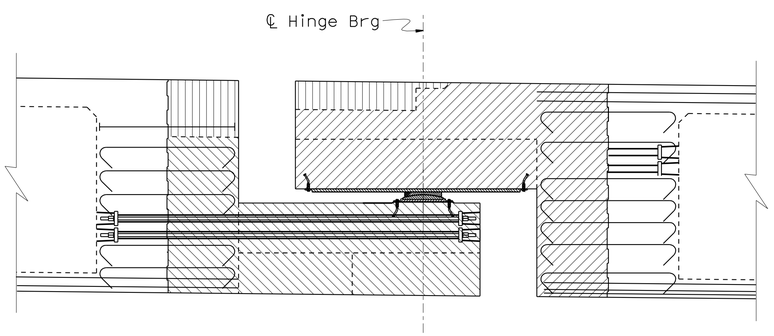

HINGE DETAILS

3/8 " = 1'-0"

Indicates Blockout and Closure Pour for Joint Seal Assemblies.

Indicates CIP concrete to be placed after both frames have been stressed.

Indicates CIP concrete to be placed after seat side of the Hinge is constructed and Bearings are properly positioned.

NOTES:

1. For 'Section K-K', see "HINGE 7 (STAGE 1) DETAILS NO. 4" sheet.
2. For location of 'Detail A', see "HINGE 7 (STAGE 1) LAYOUT" and "HINGE 7 (STAGE 2) LAYOUT" sheets.
3. For Access Opening Door details, see "HINGE 2 DETAILS NO. 1" sheet.
4. "A" is measured @ ℄ bearings

	BY	CHECKED
DESIGN	Ahmed M. M. Ibrahim	F. Zayati
DETAILS	T. Nguyen	F. Zayati
QUANTITIES	M. Friedheim	N. Tachta

STATE OF CALIFORNIA
DEPARTMENT OF TRANSPORTATION

DIVISION OF ENGINEERING SERVICES
STRUCTURE DESIGN
DESIGN BRANCH 14

BRIDGE NO. 53-3032
POST MILE 3.58

SCHUYLER HEIM BRIDGE (REPLACE)
HINGE 7 DETAILS NO. 1

STRUCTURES DESIGN DETAIL SHEET (ENGLISH) (REV. 10/25/05)

ORIGINAL SCALE IN INCHES FOR REDUCED PLANS 0 1 2 3

CU 07-271
EA 138201

DISREGARD PRINTS BEARING EARLIER REVISION DATES

REVISION DATES: 09-24-09 09-25-09 12-08-09 04-30-10 5-4-10 05-23-10 05-25-10

SHEET 134 OF 247

FILE => 53-3032-1-p-jhinge7-det01.dgn

USERNAME => trlenard DATE PLOTTED => 19-OCT-2010 TIME PLOTTED => 11:31

DIST	COUNTY	ROUTE	POST MILES TOTAL PROJECT	SHEET No	TOTAL SHEETS
07	LA	47,103	3.5/4.6, 0.0/1.1	637	1003

REGISTERED CIVIL ENGINEER 05-24-10 DATE

10-11-10
PLANS APPROVAL DATE

REGISTERED PROFESSIONAL ENGINEER FOUED ZAYATI No. C57046 Exp. 06-30-11 CIVIL STATE OF CALIFORNIA

The State of California or its officers or agents shall not be responsible for the accuracy or completeness of electronic copies of this plan sheet.

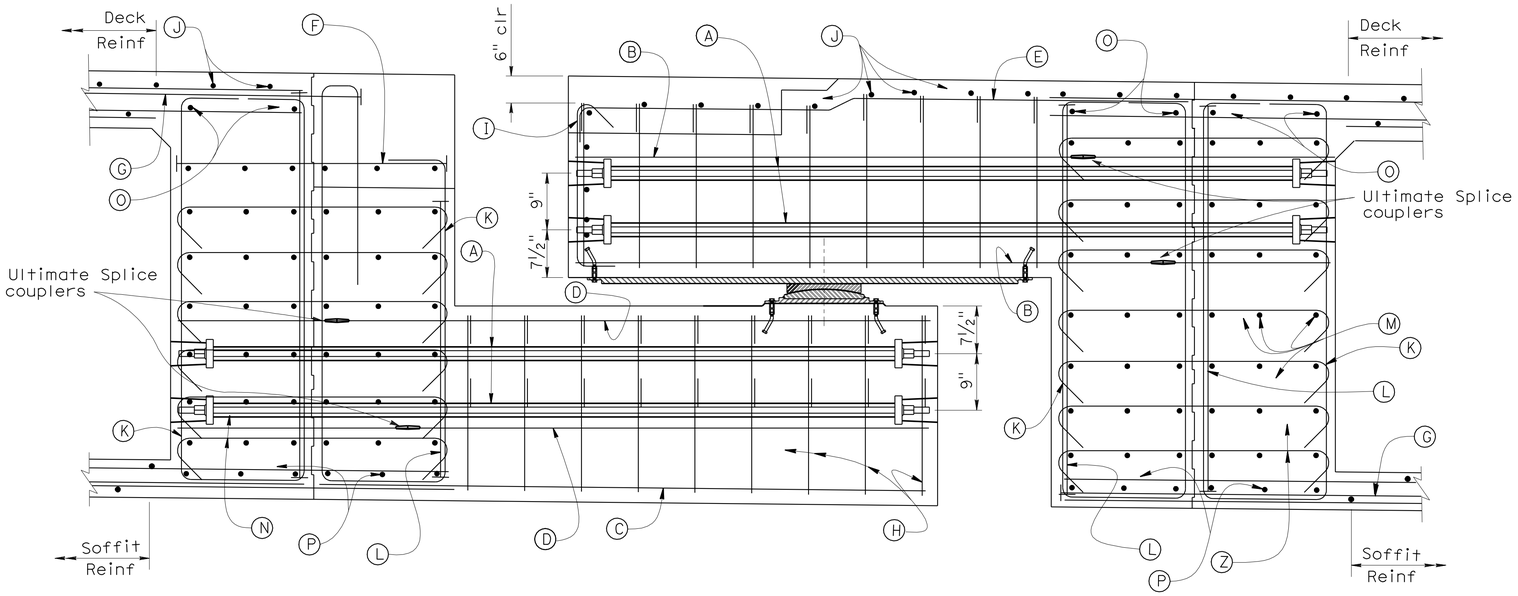

SECTION A-A

¾" = 1'-0"

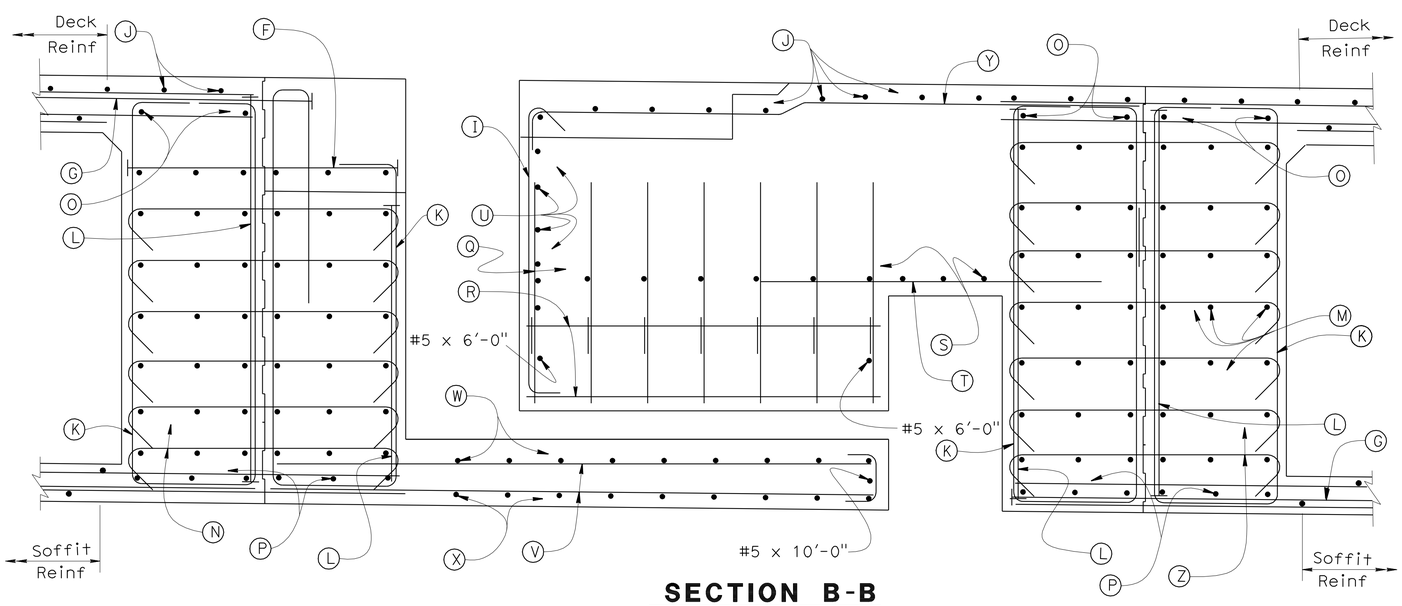

SECTION B-B

¾" = 1'-0"

PRESTRESSING NOTES

1. 150 KSI HS bars:
2. Concrete: f'_c = 5.0 ksi @ 28 days
   f'_{ci} = 4.5 ksi @ time of stressing
3. Stress all HS bars using an alternating stessing sequence to a lockoff stress equal to 70% of Ultimate stress.
4. Stress HS bars from inside structure bays
5. Falsework shall not be released prior to stressing all HS bars.

LEGEND

- (A) 1¾" dia. HS Stress bars
- (B) #11 tot. 13
- (C) #6 cont, tot. 6 per Bearing
- (D) #11 tot. 11
- (E) #6 , tot. 6 per Bearing
- (F) #10 @ 6
- (G) #10 12'-6" @ 6
- (H) #7 or @ 12, at each Bearing Seat
- (I) #5 @ 12
- (J) #5 @ 12, cont
- (K) #6 3'-9" @ 12 (typ)
- (L) #10 @ 6 (typ)
- (M) #5 cont, tot. 6 per layer, tot. 7 layers
- (N) #5 tot. 6, @ 12 (typ)
- (O) #5 cont, tot. 4 (typ)
- (P) #5 4'-0" 4'-0" tot. 12
- (Q) #6 2'-0" @ 12
- (R) #5 x 6'-9", tot. 8
- (S) #8 2'-6" 2'-6" @ 12
- (T) #5 x 5'-0", @ 12
- (U) #5 cont, tot. 4
- (V) #5 @ 12, cont
- (W) #5 x 10'-0", @ 12
- (X) #5 1'-0" 12'-0" @12
- (Y) #5 @ 12
- (Z) #5 tot. 7, @ 12 (typ)

NOTES:

For Location of 'Section A-A' and 'Section B-B', see "HINGE 7 (STAGE 1) LAYOUT" and "HINGE 7 (STAGE 2) LAYOUT" sheets.

DESIGN	BY Ahmed M. M. Ibrahim	CHECKED F. Zayati	
DETAILS	BY T. Nguyen	CHECKED F. Zayati	
QUANTITIES	BY M. Friedheim	CHECKED N. Tachta	

STATE OF CALIFORNIA
DEPARTMENT OF TRANSPORTATION

DIVISION OF ENGINEERING SERVICES
STRUCTURE DESIGN
DESIGN BRANCH 14

BRIDGE NO. 53-3032
POST MILE 3.58

SCHUYLER HEIM BRIDGE (REPLACE)
HINGE 7 DETAILS NO. 2

STRUCTURES DESIGN DETAIL SHEET (ENGLISH) (REV. 10/25/05)

ORIGINAL SCALE IN INCHES FOR REDUCED PLANS 0 1 2 3

CU 07-271
EA 138201

DISREGARD PRINTS BEARING EARLIER REVISION DATES

REVISION DATES: 01-22-10 03-26-10 03-26-10 04-29-10 05-03-10 05-18-10

SHEET 135 OF 247

FILE => 53-3032-1-p-jhinge7-det02.dgn

USERNAME => rtrienard DATE PLOTTED => 19-OCT-2010 TIME PLOTTED => 11:31

DIST	COUNTY	ROUTE	POST MILES TOTAL PROJECT	SHEET No	TOTAL SHEETS
07	LA	47,103	3.5/4.6, 0.0/1.1	638	1003

REGISTERED CIVIL ENGINEER — DATE 05-24-10

10-11-10
PLANS APPROVAL DATE

The State of California or its officers or agents shall not be responsible for the accuracy or completeness of electronic copies of this plan sheet.

REGISTERED PROFESSIONAL ENGINEER — FOUED ZAYATI — No. C57046 — Exp. 06-30-11 — CIVIL — STATE OF CALIFORNIA

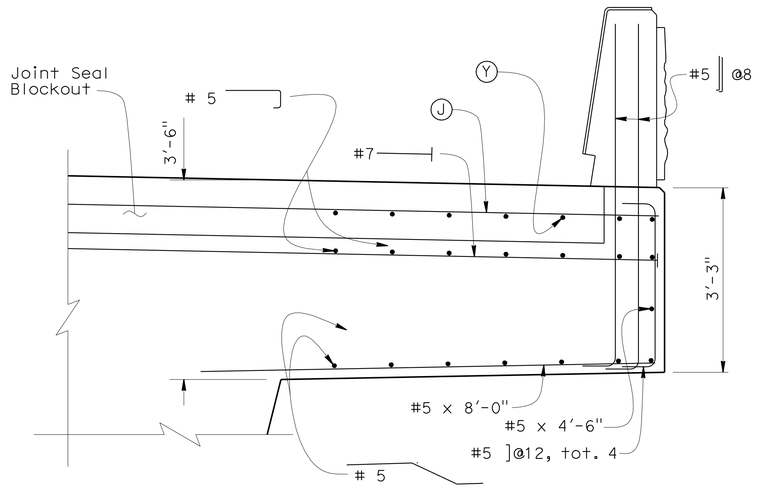

SECTION D-D

3/4" = 1'-0"

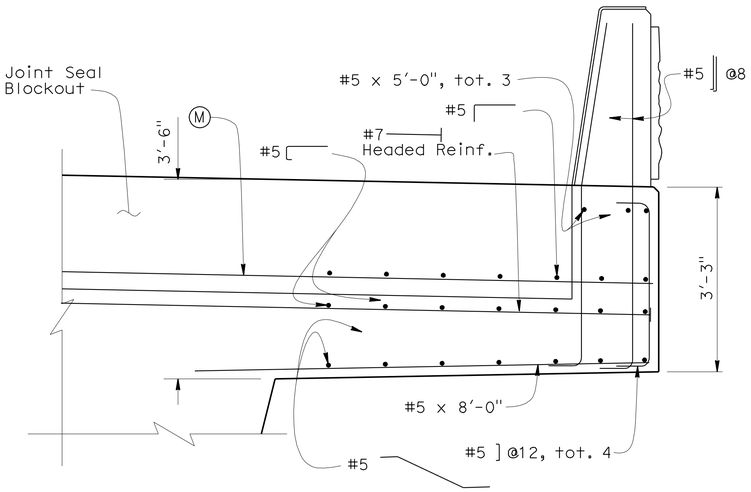

SECTION E-E

3/4" = 1'-0"

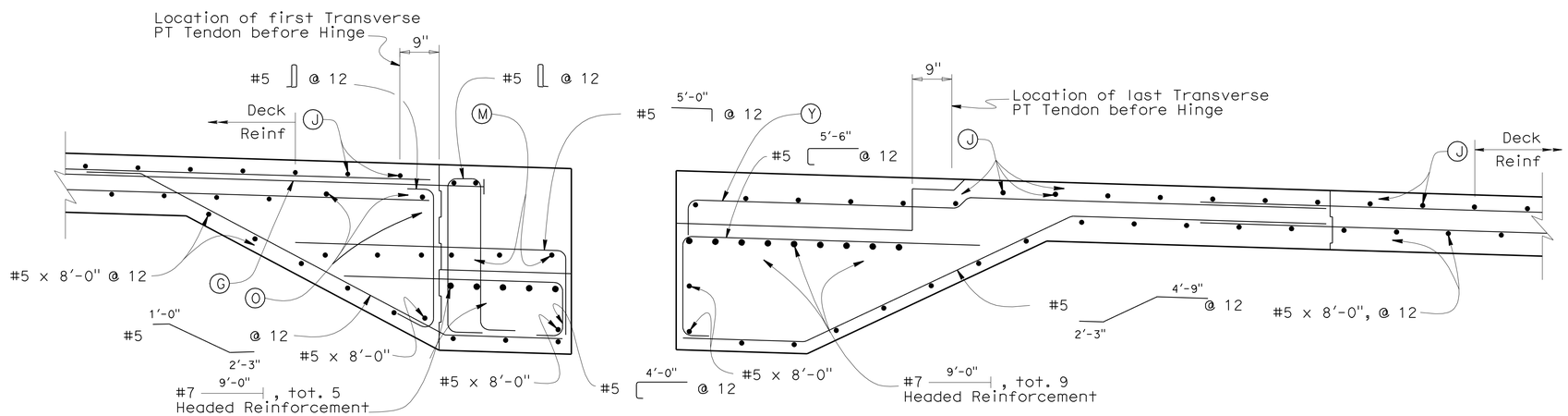

SECTION F-F

3/4" = 1'-0"

NOTES:

1. Typical Section Reinforcement not shown. See "TYPICAL SECTION NO. 1" sheet.
2. For location of 'Section D-D', 'Section E-E' and 'Section F-F', see "HINGE 7 (STAGE 1) LAYOUT" and "HINGE 7 (STAGE 2) LAYOUT" sheets.
3. For rebar designation see "HINGE 7 DETAILS NO. 2" sheet.

	BY	CHECKED
DESIGN	Ahmed M. M. Ibrahim	F. Zayati
DETAILS	T. Nguyen	F. Zayati
QUANTITIES	M. Friedheim	N. Tachta

STATE OF CALIFORNIA
DEPARTMENT OF TRANSPORTATION

DIVISION OF ENGINEERING SERVICES
STRUCTURE DESIGN
DESIGN BRANCH 14

BRIDGE NO. 53-3032
POST MILE 3.58

SCHUYLER HEIM BRIDGE (REPLACE)

HINGE 7 DETAILS NO. 3

STRUCTURES DESIGN DETAIL SHEET (ENGLISH) (REV. 10/25/05)

ORIGINAL SCALE IN INCHES FOR REDUCED PLANS 0 1 2 3

CU 07-271
EA 138201

DISREGARD PRINTS BEARING EARLIER REVISION DATES

REVISION DATES: 10-01-09, 12-18-09, 1-18-10, 2-08-10, 4-15-10, 5-03-10

SHEET 136 OF 247

FILE => 53-3032-1-p-jhinge7-det03.dgn

USERNAME => friehard DATE PLOTTED => 19-OCT-2010 TIME PLOTTED => 11:31

DIST	COUNTY	ROUTE	POST MILES TOTAL PROJECT	SHEET No	TOTAL SHEETS
07	LA	47,103	3.5/4.6, 0.0/1.1	639	1003

REGISTERED CIVIL ENGINEER — DATE 05-24-10

10-11-10
PLANS APPROVAL DATE

REGISTERED PROFESSIONAL ENGINEER — FOUED ZAYATI — No. C57046 — Exp. 06-30-11 — CIVIL — STATE OF CALIFORNIA

The State of California or its officers or agents shall not be responsible for the accuracy or completeness of electronic copies of this plan sheet.

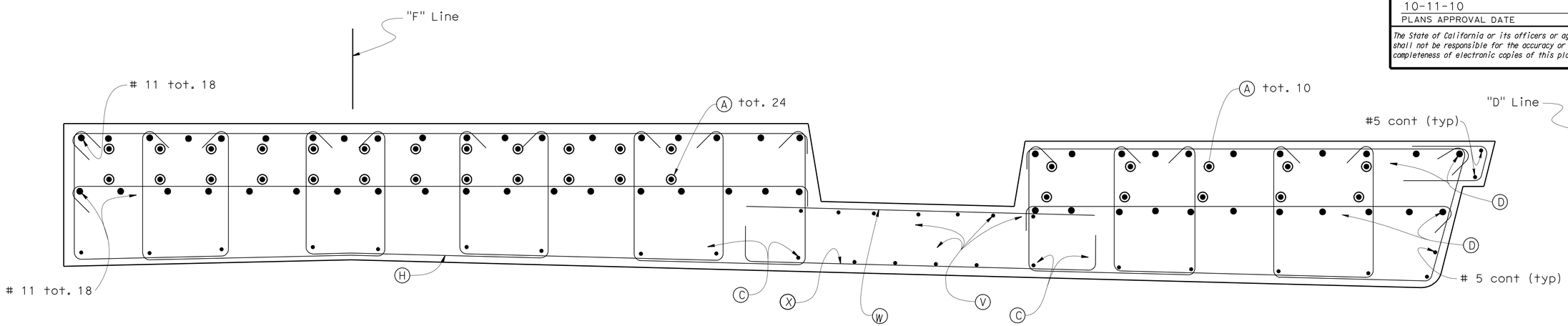

SECTION K-K ("F" Line)

3/4" = 1'-0"

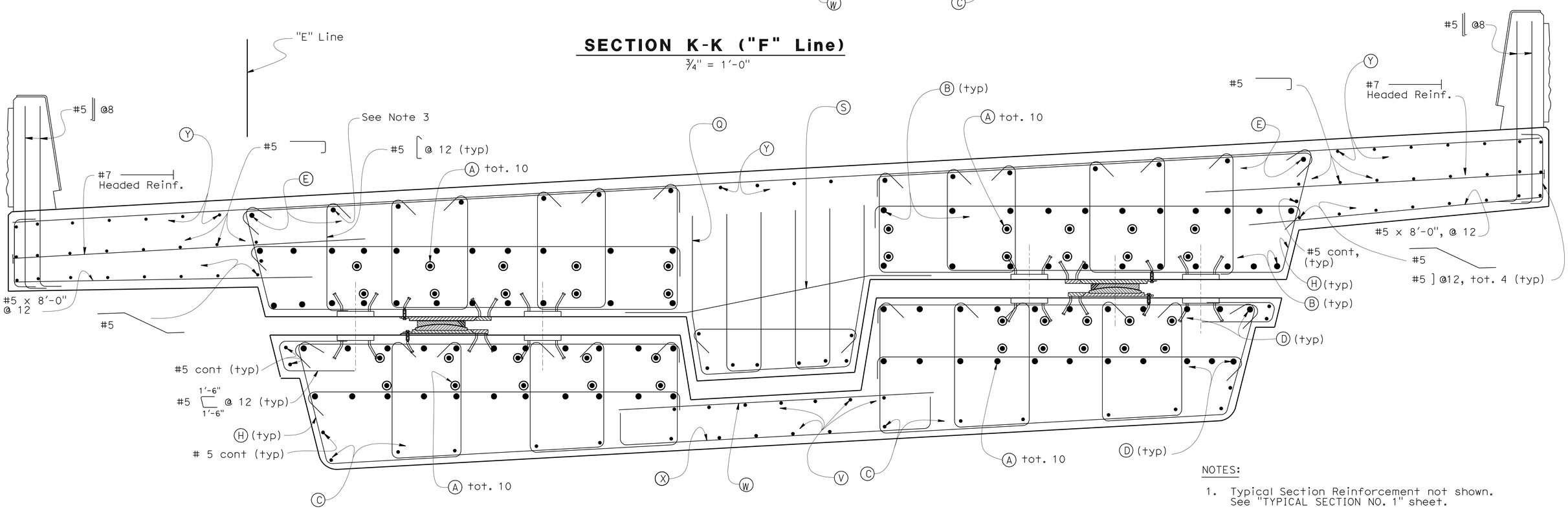

SECTION K-K ("E" Line)

3/4" = 1'-0"

NOTES:

1. Typical Section Reinforcement not shown. See "TYPICAL SECTION NO. 1" sheet.
2. For location of 'Section K-K' on Stage 1, see "HINGE 7 DETAILS NO. 1" sheet.
3. Add additional Ⓔ bar
4. For rebar designation see "HINGE 7 DETAILS NO. 2" sheet.

	BY	CHECKED
DESIGN	Ahmed M. M. Ibrahim	F. Zayati
DETAILS	T. Nguyen	F. Zayati
QUANTITIES	M. Friedheim	N. Tachta

STATE OF CALIFORNIA
DEPARTMENT OF TRANSPORTATION

DIVISION OF ENGINEERING SERVICES
STRUCTURE DESIGN
DESIGN BRANCH 14

BRIDGE NO. 53-3032
POST MILE 3.58

SCHUYLER HEIM BRIDGE (REPLACE)
HINGE 7 (STAGE 1) DETAILS NO. 4

STRUCTURES DESIGN DETAIL SHEET (ENGLISH) (REV. 10/25/05)

ORIGINAL SCALE IN INCHES FOR REDUCED PLANS 0 1 2 3

CU 07-271
EA 138201

DISREGARD PRINTS BEARING EARLIER REVISION DATES
REVISION DATES: 10-01-09, 2-12-10, 4-12-10, 4-28-10, 4-30-10, 05-14-10, 05-18-10

SHEET 137 OF 247

FILE => 53-3032-1-p-jhinge7-det04.dgn

USERNAME => friehard DATE PLOTTED => 19-OCT-2010 TIME PLOTTED => 11:31

DIST	COUNTY	ROUTE	POST MILES TOTAL PROJECT	SHEET No	TOTAL SHEETS
07	LA	47,103	3.5/4.6, 0.0/1.1	640	1003

REGISTERED CIVIL ENGINEER — DATE 05-24-10

10-11-10
PLANS APPROVAL DATE

REGISTERED PROFESSIONAL ENGINEER — FOUED ZAYATI — No. C57046 — Exp. 06-30-11 — CIVIL — STATE OF CALIFORNIA

The State of California or its officers or agents shall not be responsible for the accuracy or completeness of electronic copies of this plan sheet.

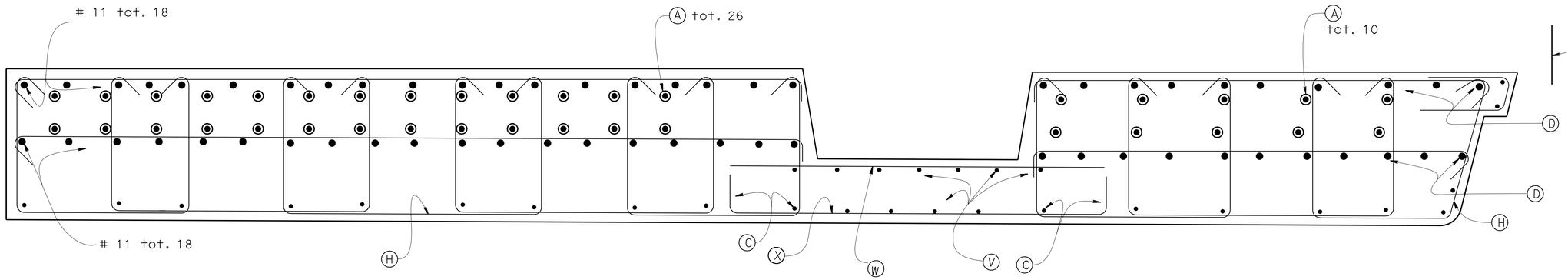

SECTION K-K ("D" Line)

3/4" = 1'-0"

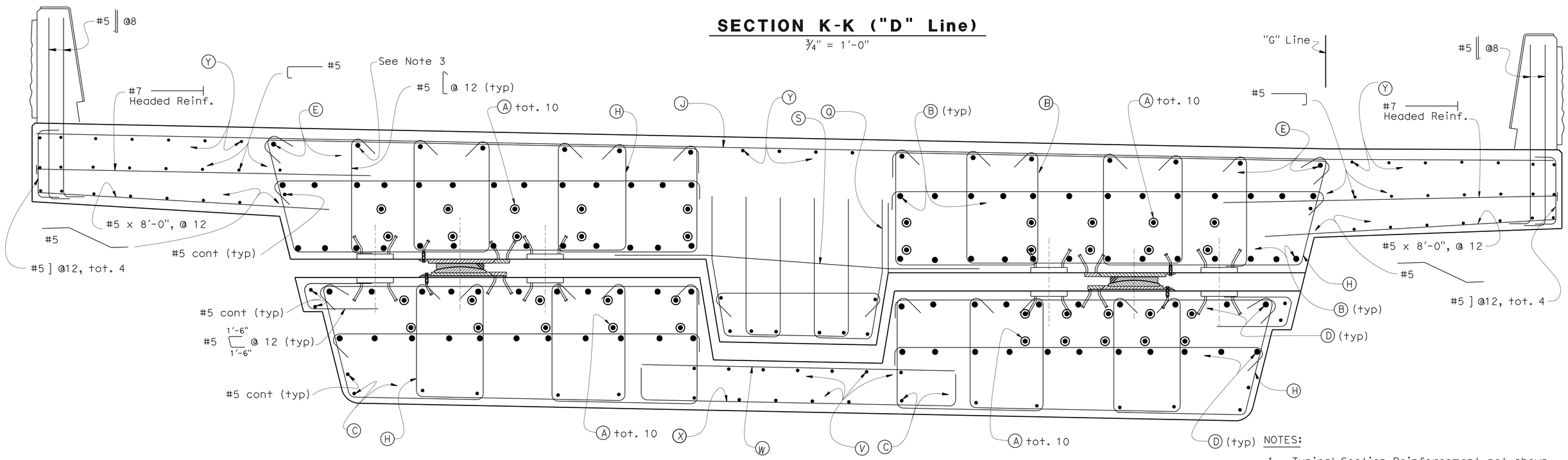

SECTION K-K ("G" Line)

3/4" = 1'-0"

NOTES:

1. Typical Section Reinforcement not shown. See "TYPICAL SECTION NO. 1" sheet.
2. For location of 'Section K-K' on Stage 2, see "HINGE 7 DETAILS NO. 1" sheet.
3. Add additional (E) Bar.
4. For rebar designation see "HINGE 7 DETAILS NO. 2" sheet.

	BY	CHECKED
DESIGN	Ahmed M. M. Ibrahim	F. Zayati
DETAILS	T. Nguyen	F. Zayati
QUANTITIES	M. Friedheim	N. Tachta

STATE OF CALIFORNIA
DEPARTMENT OF TRANSPORTATION

DIVISION OF ENGINEERING SERVICES
STRUCTURE DESIGN
DESIGN BRANCH 14

BRIDGE NO. 53-3032
POST MILE 3.58

SCHUYLER HEIM BRIDGE (REPLACE)
HINGE 7 (STAGE 3) DETAILS NO. 5

STRUCTURES DESIGN DETAIL SHEET (ENGLISH) (REV. 10/25/05)

ORIGINAL SCALE IN INCHES FOR REDUCED PLANS 0 1 2 3

CU 07-271
EA 138201

DISREGARD PRINTS BEARING EARLIER REVISION DATES

REVISION DATES: 10-01-09, 2-12-10, 4-16-10, 4-30-10, 05-03-10, 05-06-10, 05-18-10

SHEET 138 OF 247

FILE => 53-3032-1-p-jhinge7-det05.dgn

USERNAME => friehard DATE PLOTTED => 19-OCT-2010 TIME PLOTTED => 11:31

DIST	COUNTY	ROUTE	POST MILES TOTAL PROJECT	SHEET No	TOTAL SHEETS
07	LA	47,103	3.5/4.6, 0.0/1.1	641	1003

REGISTERED CIVIL ENGINEER — DATE 05-24-10

10-11-10
PLANS APPROVAL DATE

REGISTERED PROFESSIONAL ENGINEER — FOUED ZAYATI — No. C57046 — Exp. 06-30-11 — CIVIL — STATE OF CALIFORNIA

The State of California or its officers or agents shall not be responsible for the accuracy or completeness of electronic copies of this plan sheet.

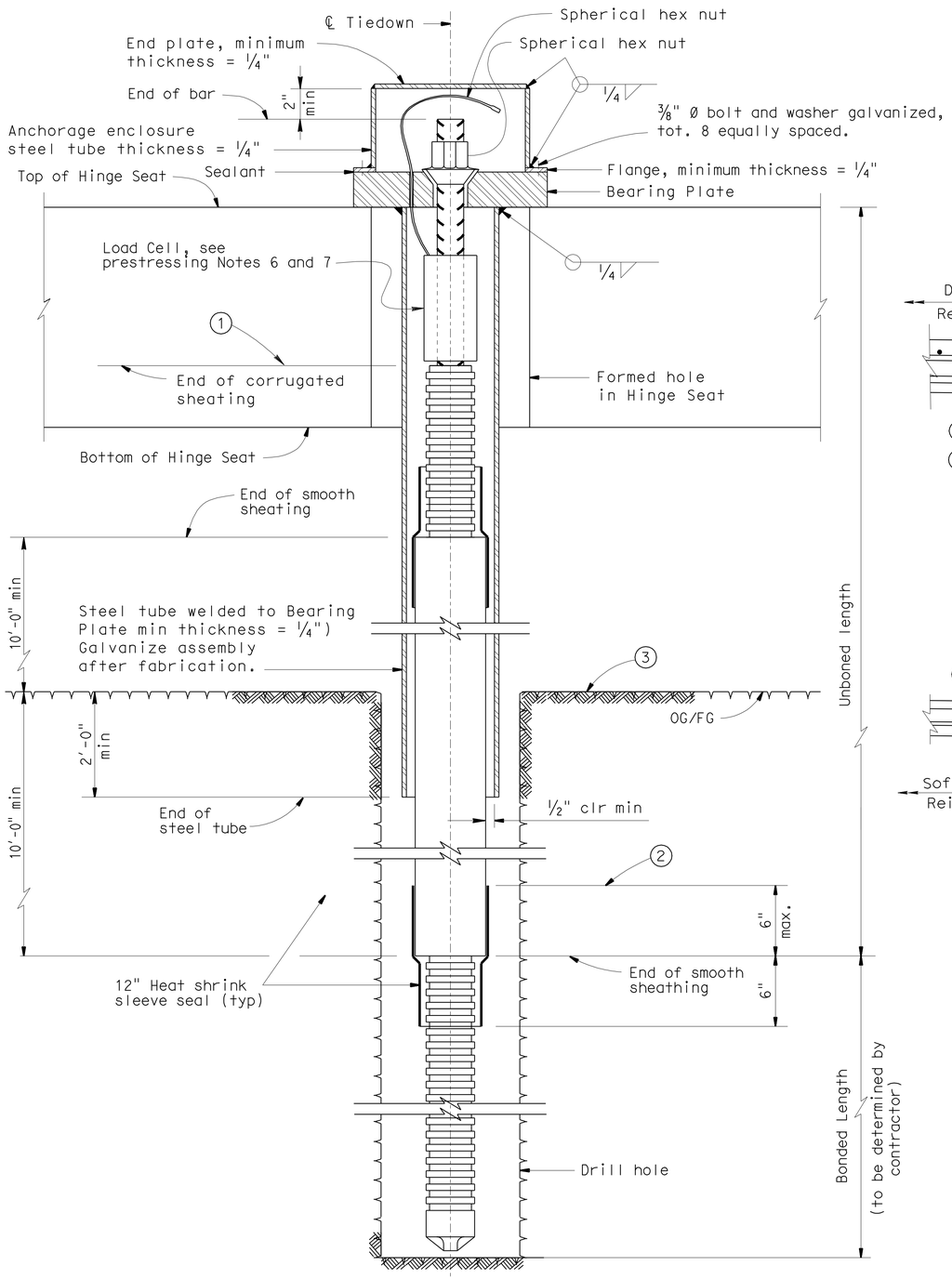

TIEDOWN TENDON DETAILS

No Scale

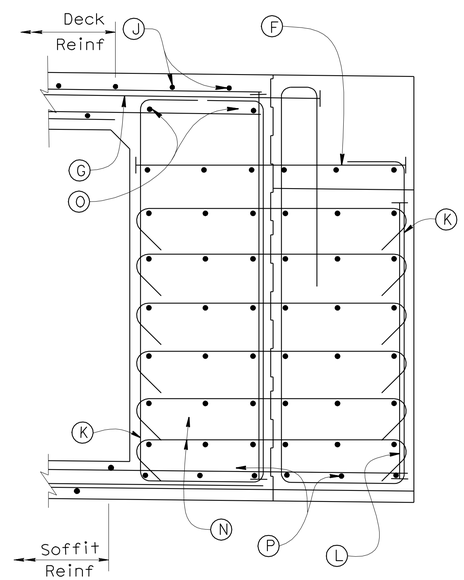

SECTION L-L

3/4" = 1'-0"

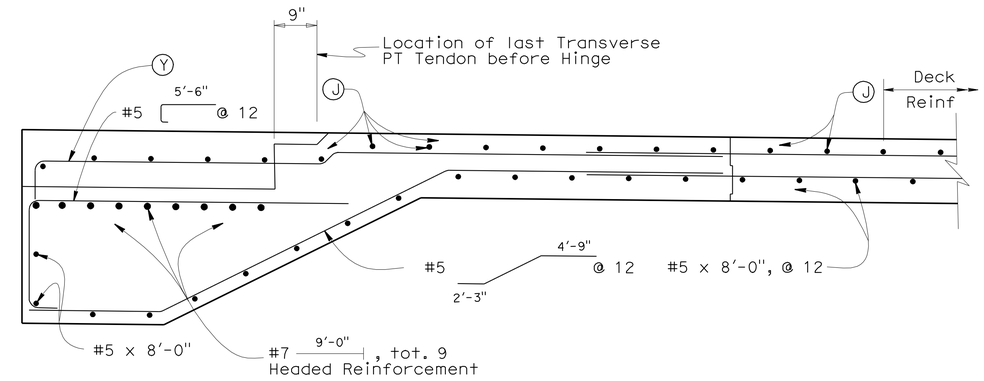

NOTE:

1. For location of 'Section L-L', see "HINGE 7 (STAGE 1) LAYOUT" and "HINGE 7 (STAGE 2) LAYOUT" sheets.
2. For rebar designation see "HINGE 7 DETAILS NO. 2" sheet.

GENERAL NOTES-TIEDOWN ANCHOR

PRESTRESSING NOTES

1. 1 3/4" Ø, 150 KSI HS bars, ASTM A 722 Type II
2. Minimum Concrete: f'_{ci} = 4.0 ksi @ time of stressing
3. Lockoff load = 175 kips per Anchor.
4. See hinge layout sheets for stressing sequence.
5. Falsework in the span preceeding the hinge span shall not be released prior to stressing all anchors.
6. Install one Load Cell with each anchor. Load cell shall remain in place untill the anchor is no longer in service.
7. Tiedown anchor load shall be tested every 60 days. Anchor load shall be adjusted when the measured value deviates from the specified load by 10% or more.

NOTES:

(1) Level of initial grouting inside corrugated sheathing

(2) Level of initial grouting in drilled hole.

(3) Level of secondary grouting in drilled hole.

DESIGN	BY Ahmed M. M. Ibrahim	CHECKED F. Zayati	
DETAILS	BY T. Nguyen	CHECKED F. Zayati	
QUANTITIES	BY M. Friedheim	CHECKED N. Tachta	

STATE OF CALIFORNIA
DEPARTMENT OF TRANSPORTATION

DIVISION OF ENGINEERING SERVICES
STRUCTURE DESIGN
DESIGN BRANCH 14

BRIDGE NO. 53-3032
POST MILE 3.58

SCHUYLER HEIM BRIDGE (REPLACE)

HINGE 7 DETAILS NO. 6

STRUCTURES DESIGN DETAIL SHEET (ENGLISH) (REV. 10/25/05)

ORIGINAL SCALE IN INCHES FOR REDUCED PLANS 0 1 2 3

CU 07-271
EA 138201

DISREGARD PRINTS BEARING EARLIER REVISION DATES → 03-26-10 05-03-10

REVISION DATES

SHEET 139 OF 247

FILE => 53-3032-1-p-jhinge7-det06.dgn

USERNAME => trfriedmd DATE PLOTTED => 19-OCT-2010 TIME PLOTTED => 11:31

DIST	COUNTY	ROUTE	POST MILES TOTAL PROJECT	SHEET No	TOTAL SHEETS
07	LA	47,103	3.5/4.6, 0.0/1.1	642	1003

REGISTERED CIVIL ENGINEER — DATE 05-24-10

10-11-10
PLANS APPROVAL DATE

The State of California or its officers or agents shall not be responsible for the accuracy or completeness of electronic copies of this plan sheet.

REGISTERED PROFESSIONAL ENGINEER — FOUED ZAYATI — No. C57046 — Exp. 06-30-11 — CIVIL — STATE OF CALIFORNIA

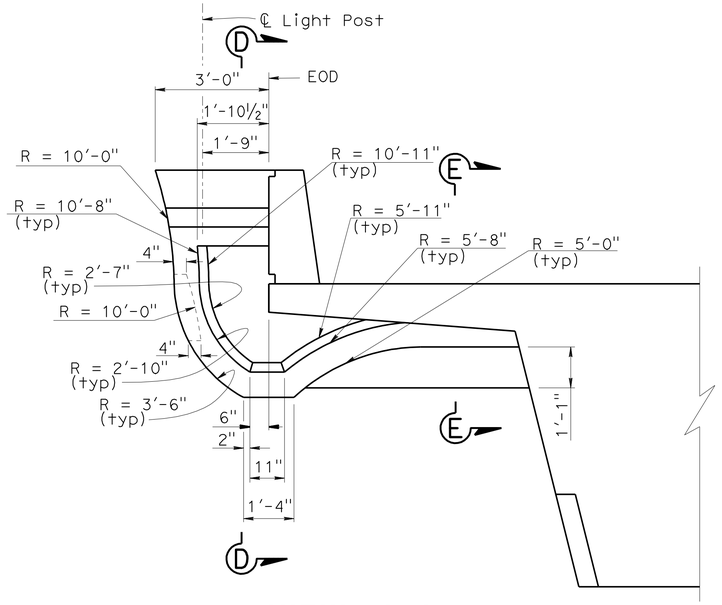

VIEW A-A
½"=1'-0"

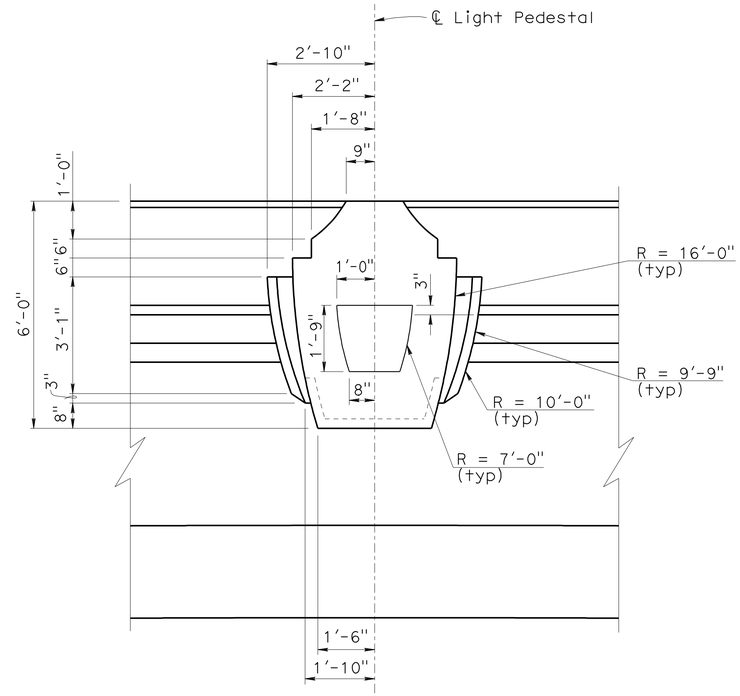

VIEW B-B
½"=1'-0"

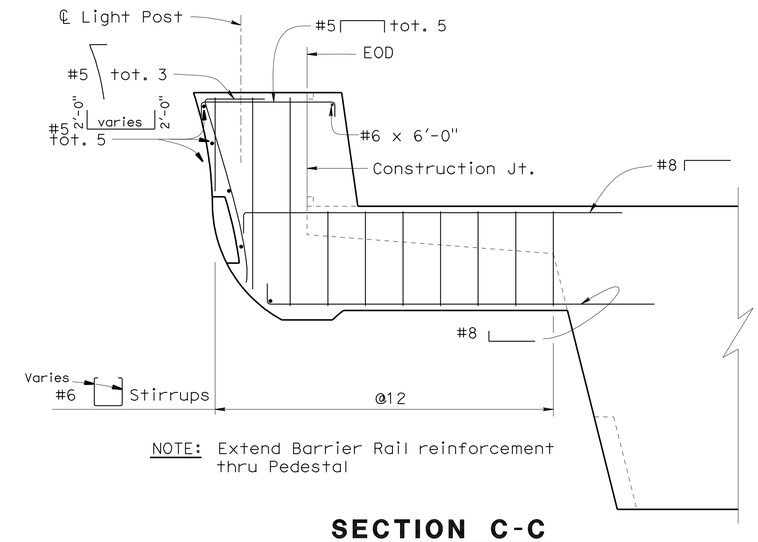

NOTE: Extend Barrier Rail reinforcement thru Pedestal

SECTION C-C
½"=1'-0"

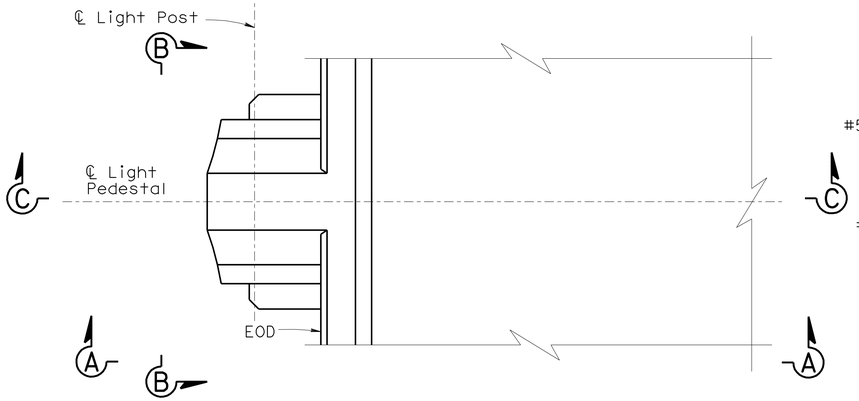

PLAN
½"=1'-0"

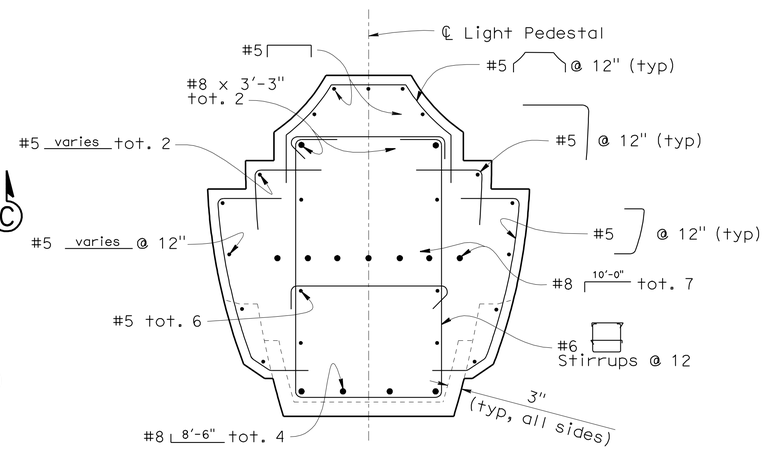

SECTION D-D
¾"=1'-0"

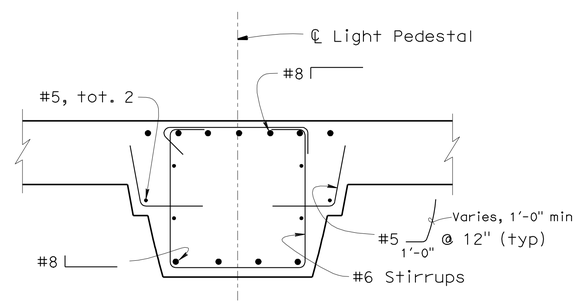

SECTION E-E
¾"=1'-0"

NOTE:
For locations of the Light Pedestals, see 'Electrical Plans'

	BY	CHECKED
DESIGN	T. Skreslet	F. Zayati
DETAILS	K. Kubo	T. Skreslet
QUANTITIES	T. Skreslet	L. Han

STATE OF CALIFORNIA
DEPARTMENT OF TRANSPORTATION

DIVISION OF ENGINEERING SERVICES
STRUCTURE DESIGN
DESIGN BRANCH 14

BRIDGE NO. 53-3032
POST MILE 3.58

SCHUYLER HEIM BRIDGE (REPLACE)
MISCELLANEOUS DETAILS

STRUCTURES DESIGN DETAIL SHEET (ENGLISH) (REV. 10/25/05)

ORIGINAL SCALE IN INCHES FOR REDUCED PLANS 0 1 2 3

CU 07-271
EA 138201

DISREGARD PRINTS BEARING EARLIER REVISION DATES

REVISION DATES: ~~05-05-10~~ ~~05-06-10~~ ~~05-07-10~~ ~~05-12-10~~ ~~05-23-10~~ 07-13-10

SHEET 140 OF 247

FILE => 53-3032-1-p-jmiscdet.dgn

USERNAME => trlenard DATE PLOTTED => 19-OCT-2010 TIME PLOTTED => 11:31

DIST	COUNTY	ROUTE	POST MILES TOTAL PROJECT	SHEET No	TOTAL SHEETS
07	LA	47,103	3.5/4.6, 0.0/1.1	643	1003

REGISTERED CIVIL ENGINEER 05-24-10 DATE

10-11-10
PLANS APPROVAL DATE

REGISTERED PROFESSIONAL ENGINEER
FOUED ZAYATI
No. C57046
Exp. 06-30-11
CIVIL
STATE OF CALIFORNIA

The State of California or its officers or agents shall not be responsible for the accuracy or completeness of electronic copies of this plan sheet.

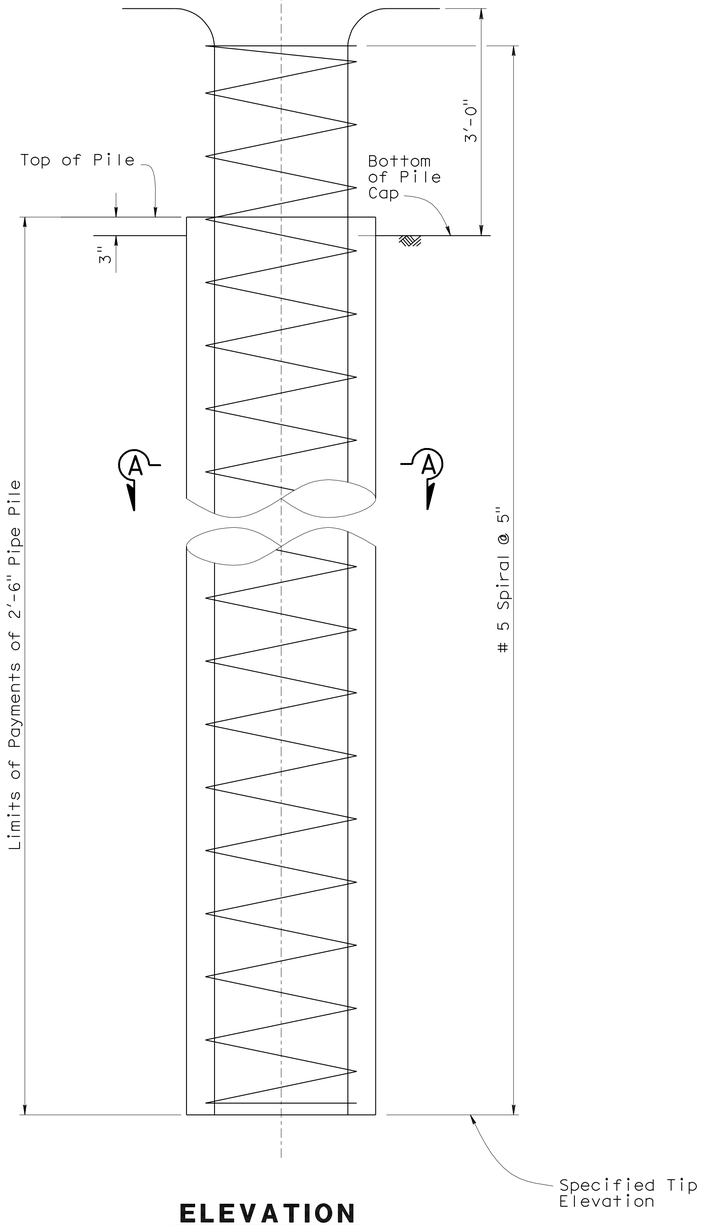

ELEVATION
1"=1'-0"

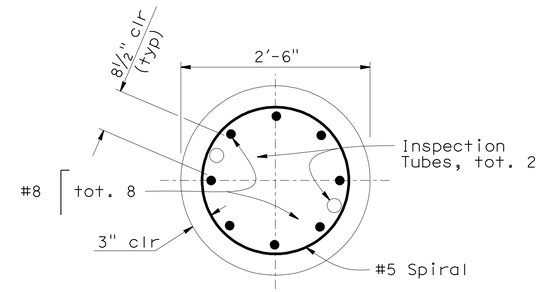

SECTION A-A
1"=1'-0"

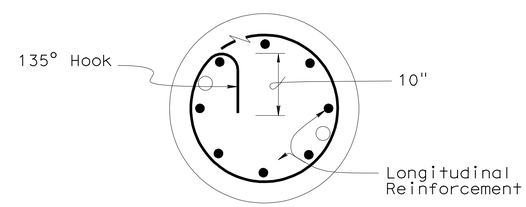

PILE SPIRAL DETAIL
No Scale

NOTES:

1. For lapped splices, spiral reinforcement shall be lapped at least 80 diameters.
2. Spiral reinforcement at lapped splices and at ends shall be terminated by a 135 degree hook around a longitudinal bar.
3. No splices allowed in pile longitudinal reinforcement.

DESIGN	BY F. Zayati	CHECKED S. Galgiani	
DETAILS	BY T. Nguyen	CHECKED F. Zayati	
QUANTITIES	BY S. Galgiani	CHECKED S. Hegazi	

STATE OF CALIFORNIA
DEPARTMENT OF TRANSPORTATION

DIVISION OF ENGINEERING SERVICES
STRUCTURE DESIGN
DESIGN BRANCH 14

BRIDGE NO. 53-3032
POST MILE 3.58

SCHUYLER HEIM BRIDGE (REPLACE)
2.5 FT CIDH PILE DETAILS

STRUCTURES DESIGN DETAIL SHEET (ENGLISH) (REV. 10/25/05)

ORIGINAL SCALE IN INCHES FOR REDUCED PLANS 0 1 2 3

CU 07-271
EA 138201

DISREGARD PRINTS BEARING EARLIER REVISION DATES

REVISION DATES: 3-12-08 03-14-10 04-29-10 07-12-10

SHEET 141 OF 247

FILE => 53-3032-1-p-kcpt02ft.dgn

USERNAME => trlenard DATE PLOTTED => 19-OCT-2010 TIME PLOTTED => 11:31

DIST	COUNTY	ROUTE	POST MILES TOTAL PROJECT	SHEET No	TOTAL SHEETS
07	LA	47,103	3.5/4.6, 0.0/1.1	644	1003

REGISTERED CIVIL ENGINEER 05-24-10 DATE

10-11-10
PLANS APPROVAL DATE

REGISTERED PROFESSIONAL ENGINEER FOUED ZAYATI No. C57046 Exp. 06-30-11 CIVIL STATE OF CALIFORNIA

The State of California or its officers or agents shall not be responsible for the accuracy or completeness of electronic copies of this plan sheet.

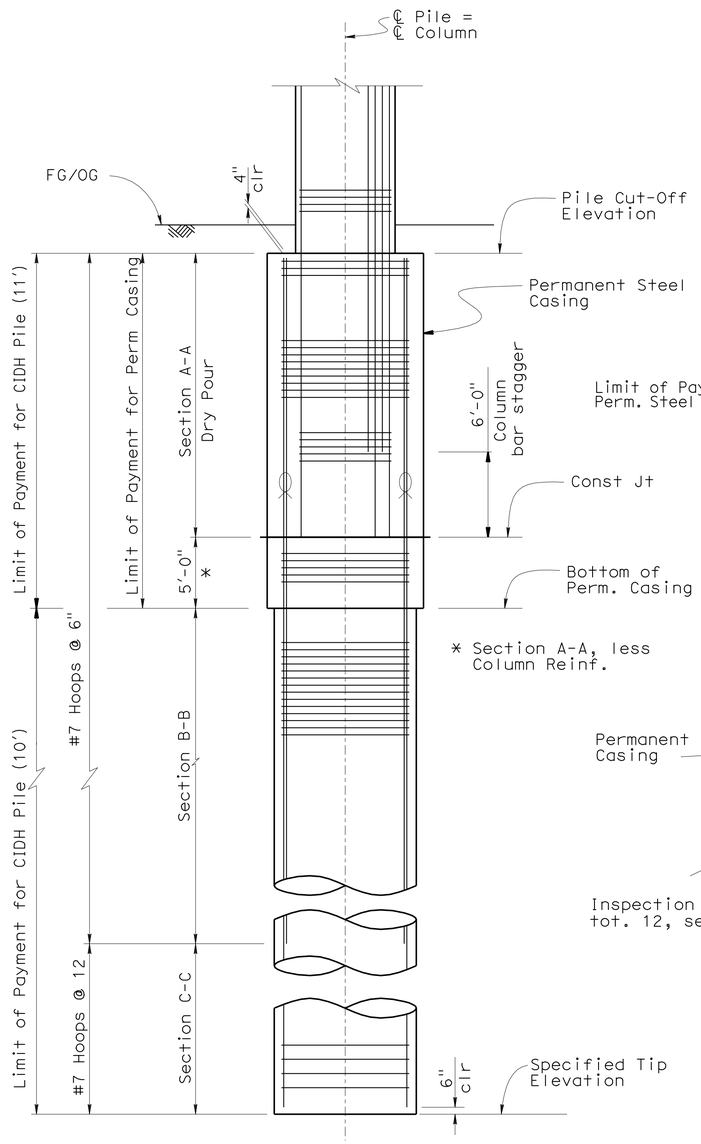

* Section A-A, less Column Reinf.

ELEVATION

3/16"=1'-0"

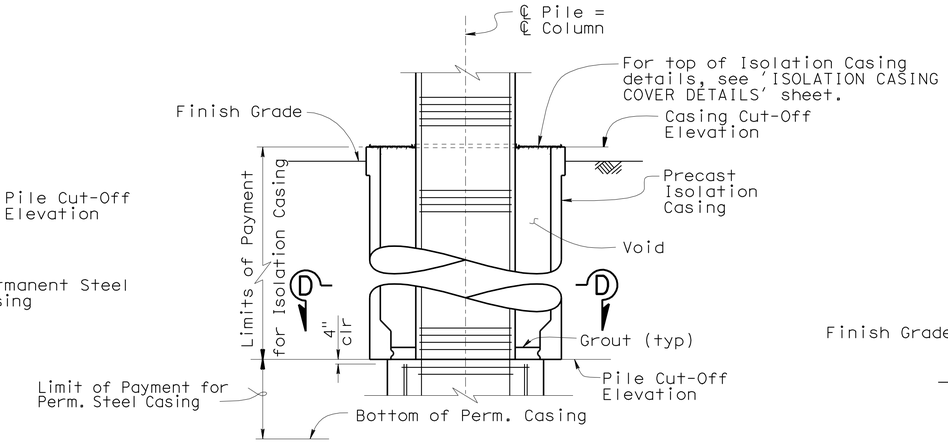

BENT 2 DETAIL

3/16"=1'-0"

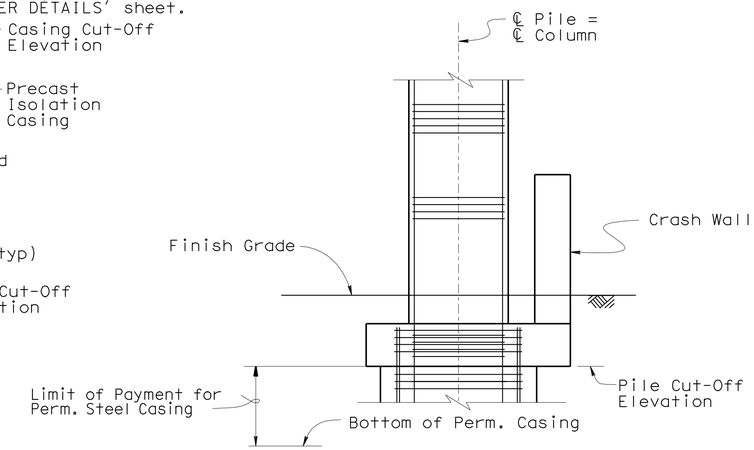

BENT 4 (STAGE 2) DETAIL

3/16"=1'-0"

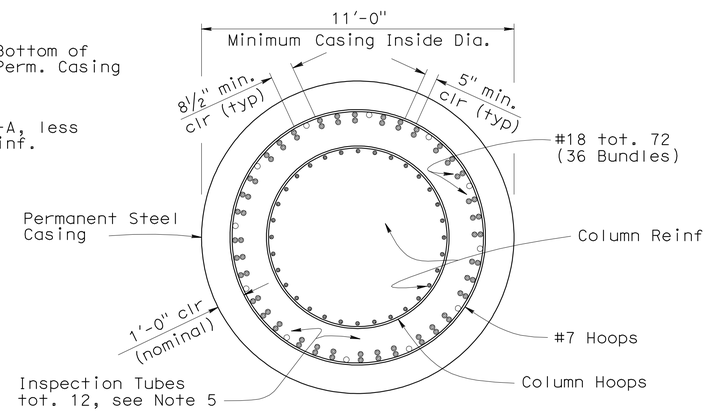

SECTION A-A

3/8"=1'-0"

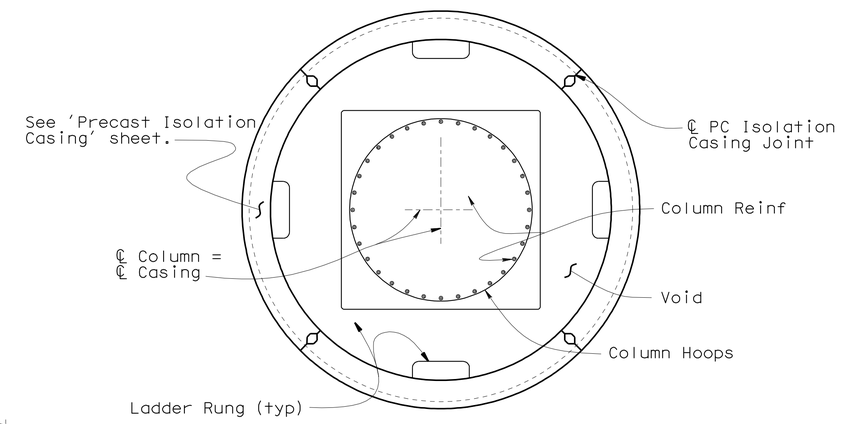

SECTION D-D

3/8"=1'-0"

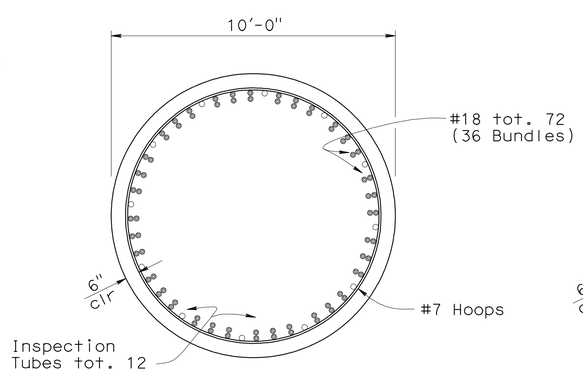

SECTION B-B

3/8"=1'-0"

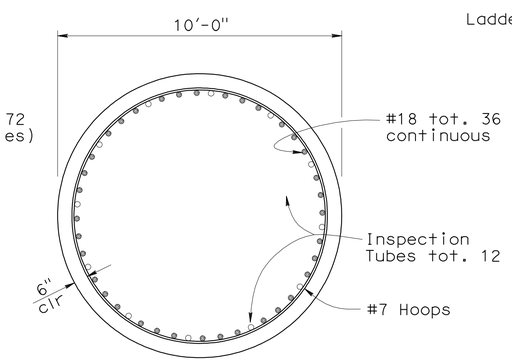

SECTION C-C

3/8"=1'-0"

Location	Section B-B Length
Bents 2-7, 10 and 11(except easterly piles)*, 12	50'-0"

* See "10 FT CIDH PILE DETAILS NO. 3" sheet for Bent 10 eastern most pile.

See "10 FT CIDH PILE DETAILS NO. 4" sheet for Bent 11 eastern most pile.

NOTES:

1. For Column Reinf details, see "TYPICAL BENT LAYOUT" sheet.
2. For Pile Cut-Off data, see "INDEX TO PLANS" sheet.
3. All hoops are "Ultimate" butt splice continuous.
4. Only staggered "Ultimate" butt splices are allowed in Pile longitudinal reinforcement.
5. Inspection tubes may be removed above construction joint after testing and acceptance of pile.

⌒ Denotes bundled bars

	BY	CHECKED
DESIGN	R. Bromenschenkel	F. Zayati
DETAILS	J. Thorne	F. Zayati
QUANTITIES	J. Massoomi	L. Han

STATE OF CALIFORNIA DEPARTMENT OF TRANSPORTATION

DIVISION OF ENGINEERING SERVICES STRUCTURE DESIGN DESIGN BRANCH 14

BRIDGE NO. 53-3032
POST MILE 3.58

SCHUYLER HEIM BRIDGE (REPLACE)

10 FT CIDH PILE DETAILS NO. 1

STRUCTURES DESIGN DETAIL SHEET (ENGLISH) (REV. 10/25/05)

ORIGINAL SCALE IN INCHES FOR REDUCED PLANS 0 1 2 3

CU 07-271
EA 138201

DISREGARD PRINTS BEARING EARLIER REVISION DATES

REVISION DATES: 04-05-10 04-28-10 06-30-10 07-24-09 07-23-09 03-22-10 03-30-10

SHEET 142 OF 247

FILE => 53-3032-1-p-kcpt10fdet1.dgn

USERNAME => friehard DATE PLOTTED => 19-OCT-2010 TIME PLOTTED => 11:31

DIST	COUNTY	ROUTE	POST MILES TOTAL PROJECT	SHEET No	TOTAL SHEETS
07	LA	47,103	3.5/4.6, 0.0/1.1	645	1003

REGISTERED CIVIL ENGINEER — DATE 05-24-10

10-11-10
PLANS APPROVAL DATE

REGISTERED PROFESSIONAL ENGINEER — FOUED ZAYATI — No. C57046 — Exp. 06-30-11 — CIVIL — STATE OF CALIFORNIA

The State of California or its officers or agents shall not be responsible for the accuracy or completeness of electronic copies of this plan sheet.

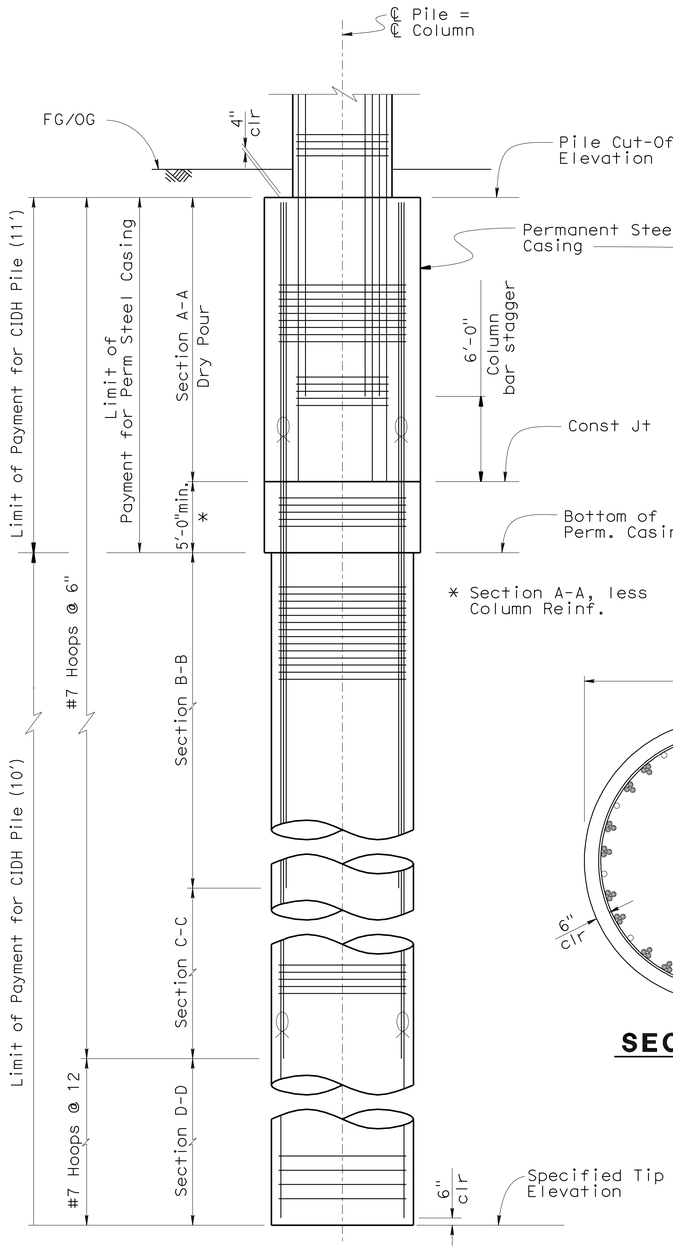

ELEVATION

3/16"=1'-0"

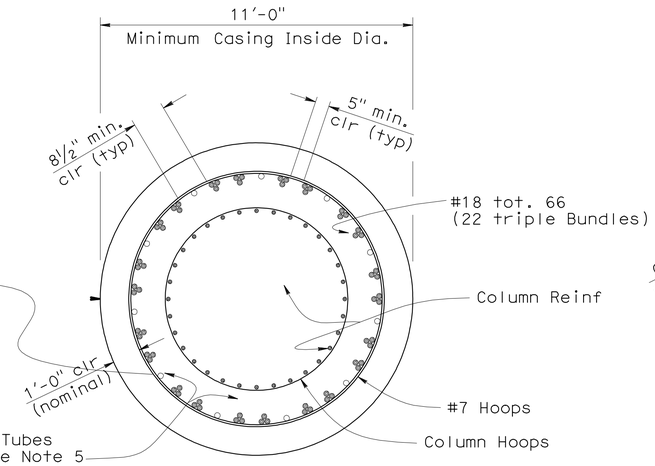

SECTION A-A

3/8"=1'-0"

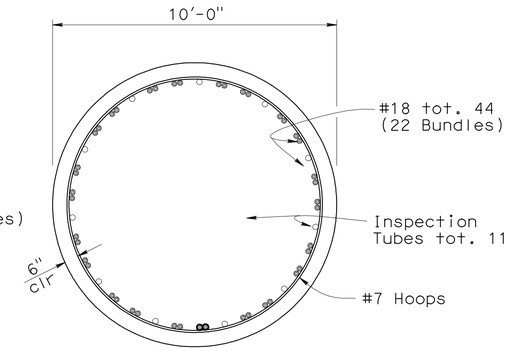

SECTION C-C

3/8"=1'-0"

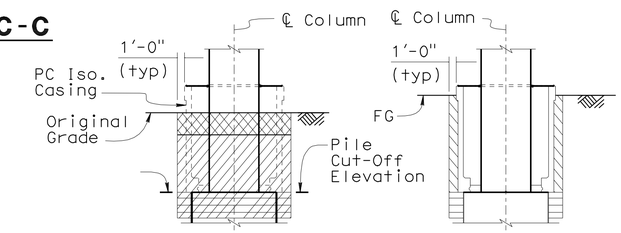

ISOLATION CASING

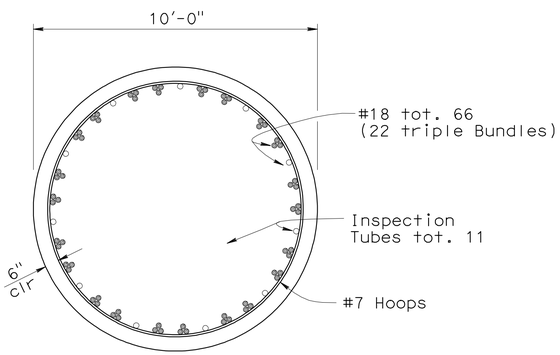

SECTION B-B

3/8"=1'-0"

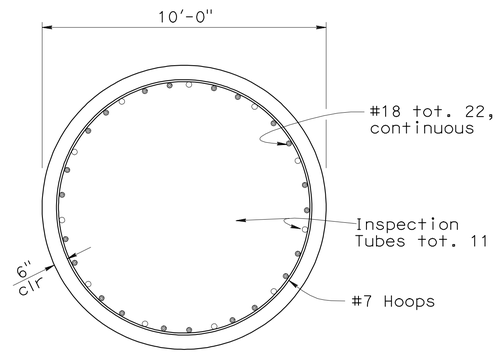

SECTION D-D

3/8"=1'-0"

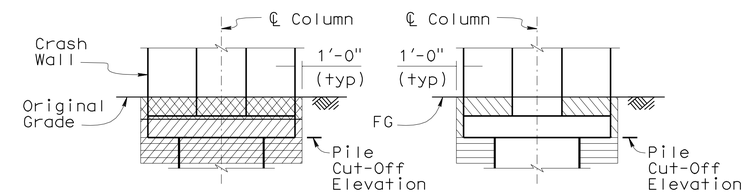

CRASH WALL

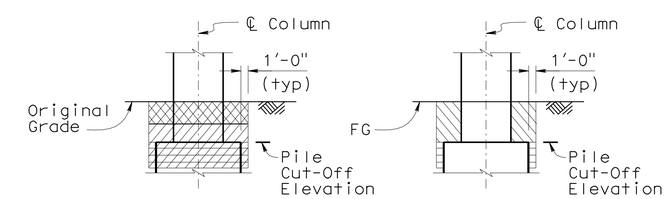

TYPICAL COLUMN

Location	Section B-B Length	Section C-C Length
Bents 8 & 9	25'-0"	10'-0"

NOTES:

1. For Column Reinf details, see "TYPICAL BENT LAYOUT" sheet.
2. For Pile Cut-Off data, see "INDEX TO PLANS" sheet.
3. All hoops are "Ultimate" butt splice continuous.
4. Only staggered "Ultimate" butt splices are allowed in Pile longitudinal reinforcement.
5. Inspection tubes may be removed above construction joint after testing and acceptance of pile.

- Structure Excavation, contaminated soil, see Pile Data Table for Excavation type and depth
- Structure Excavation, Type A
- Seal Course Concrete, See Pile Data Table for depth
- Structure Backfill

LIMITS OF PAYMENT FOR EXCAVATION AND BACKFILL

No Scale

	BY	CHECKED
DESIGN	R. Bromenschenkel	F. Zayati
DETAILS	J. Thorne	F. Zayati
QUANTITIES	J. Massoomi	L. Han

STATE OF CALIFORNIA
DEPARTMENT OF TRANSPORTATION

DIVISION OF ENGINEERING SERVICES
STRUCTURE DESIGN
DESIGN BRANCH 14

BRIDGE NO. 53-3032
POST MILE 3.58

SCHUYLER HEIM BRIDGE (REPLACE)
10 FT CIDH PILE DETAILS NO. 2

STRUCTURES DESIGN DETAIL SHEET (ENGLISH) (REV. 10/25/05)

ORIGINAL SCALE IN INCHES FOR REDUCED PLANS 0 1 2 3

CU 07-271
EA 138201

DISREGARD PRINTS BEARING EARLIER REVISION DATES

REVISION DATES: 08-25-10 | 10-30-08 | 07-24-09 | 07-28-09 | 02-26-10 | 03-22-10 | 04-29-10

SHEET 143 OF 247

FILE => 53-3032-1-p-kcpt10fdet2.dgn

USERNAME => trlenard DATE PLOTTED => 19-OCT-2010 TIME PLOTTED => 11:32

DIST	COUNTY	ROUTE	POST MILES TOTAL PROJECT	SHEET No	TOTAL SHEETS
07	LA	47,103	3.5/4.6, 0.0/1.1	646	1003

REGISTERED CIVIL ENGINEER — DATE 05-24-10

10-11-10
PLANS APPROVAL DATE

REGISTERED PROFESSIONAL ENGINEER — FOUED ZAYATI No. C57046 Exp. 06-30-11 CIVIL — STATE OF CALIFORNIA

The State of California or its officers or agents shall not be responsible for the accuracy or completeness of electronic copies of this plan sheet.

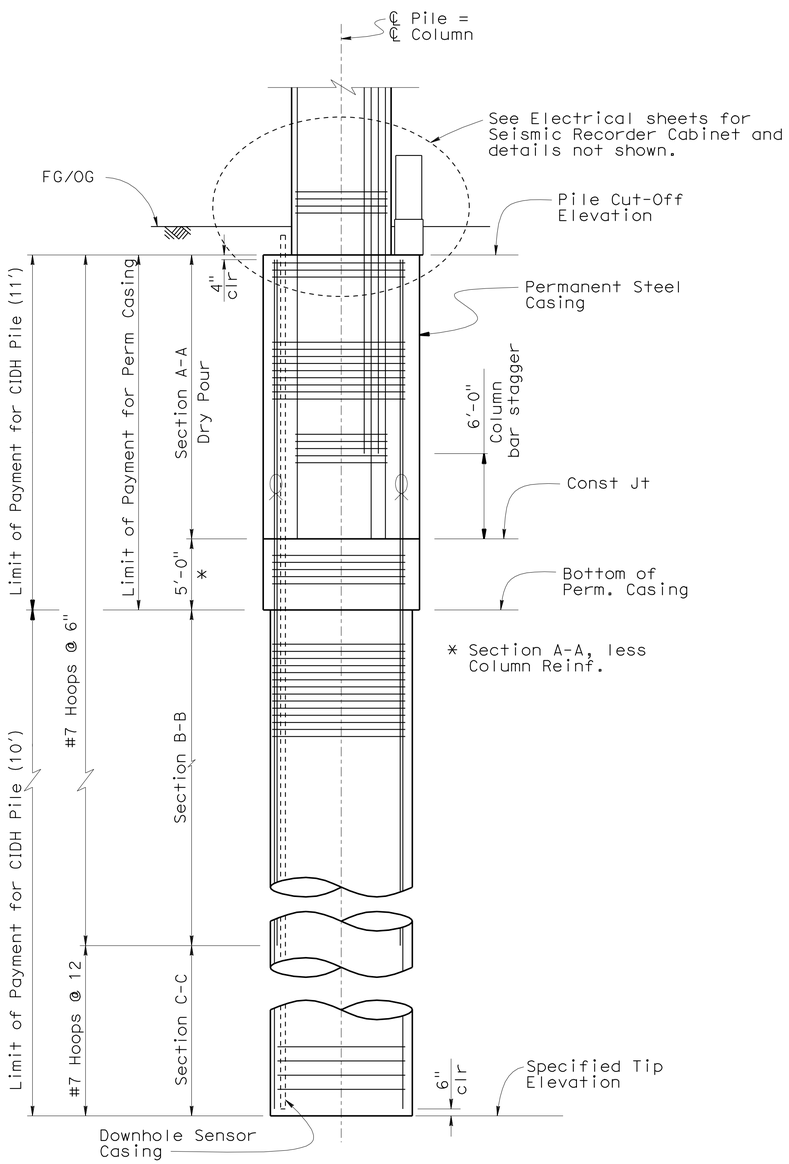

ELEVATION

3/16"=1'-0"

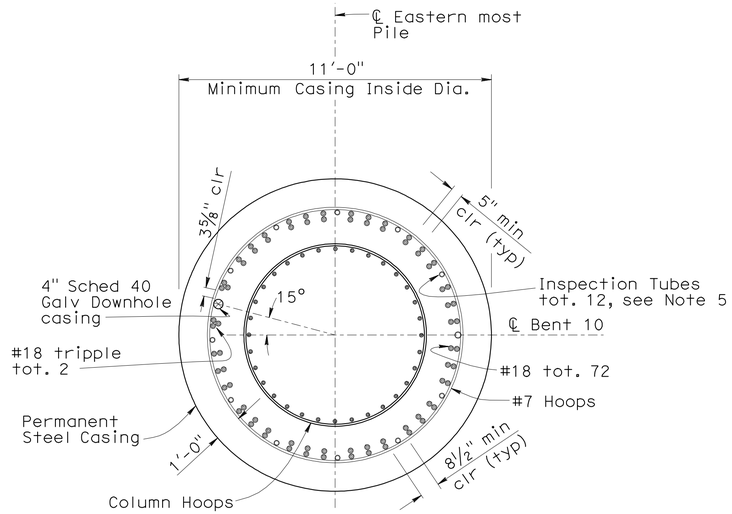

SECTION A-A

3/8"=1'-0"

NOTES:

1. For Column Reinf details, see "TYPICAL BENT LAYOUT" sheet.
2. For Pile Cut-Off data, see "INDEX TO PLANS" sheet.
3. All hoops are "Ultimate" butt splice continuous.
4. Only staggered "Ultimate" butt splices are allowed in Pile longitudinal reinforcement.
5. Inspection tubes may be removed above construction joint after testing and acceptance of pile.
6. For 'Downhole Casing' details, see "RECORDER DETAILS" sheet.

Location	Section B-B Length
Bent 10 - Easterly Pile	50'-0"

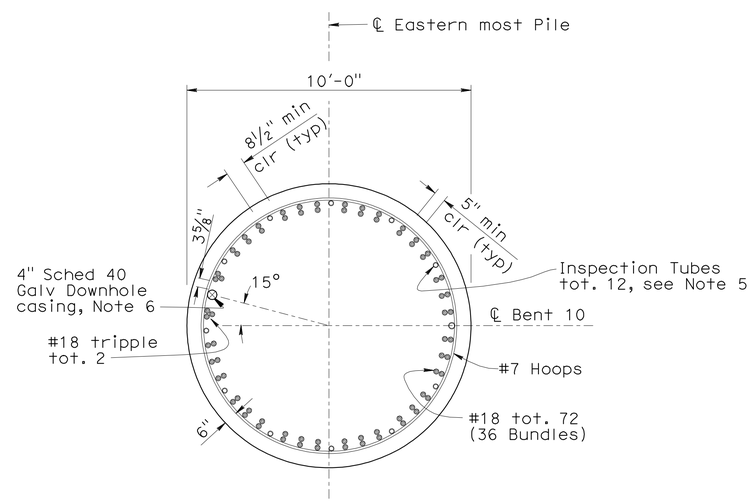

SECTION B-B

3/8"=1'-0"

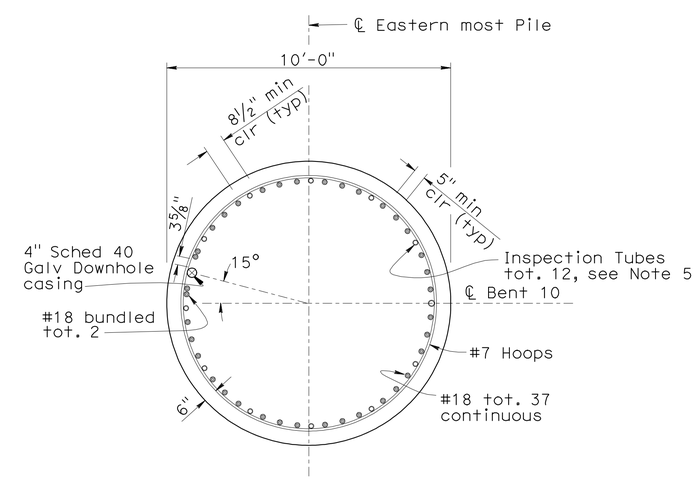

SECTION C-C

3/8"=1'-0"

DESIGN	BY R. Bromenschenkel	CHECKED F. Zayati	
DETAILS	BY K. Kubo	CHECKED F. Zayati	
QUANTITIES	BY J. Massoomi	CHECKED L. Han	

STATE OF CALIFORNIA DEPARTMENT OF TRANSPORTATION

DIVISION OF ENGINEERING SERVICES STRUCTURE DESIGN DESIGN BRANCH 14

BRIDGE NO. 53-3032 POST MILE 3.58

SCHUYLER HEIM BRIDGE (REPLACE)
10 FT CIDH PILE DETAILS NO. 3

STRUCTURES DESIGN DETAIL SHEET (ENGLISH) (REV. 10/25/05)

ORIGINAL SCALE IN INCHES FOR REDUCED PLANS 0 1 2 3

CU 07-271
EA 138201

DISREGARD PRINTS BEARING EARLIER REVISION DATES

REVISION DATES: 03-30-10 04-05-10 04-06-10 04-29-10 07-09-10

SHEET 144 OF 247

FILE => 53-3032-1-p-kcpt10fdet3.dgn

USERNAME => trlenard DATE PLOTTED => 19-OCT-2010 TIME PLOTTED => 11:32

DIST	COUNTY	ROUTE	POST MILES TOTAL PROJECT	SHEET No	TOTAL SHEETS
07	LA	47,103	3.5/4.6, 0.0/1.1	647	1003

REGISTERED CIVIL ENGINEER — DATE 05-24-10

10-11-10
PLANS APPROVAL DATE

The State of California or its officers or agents shall not be responsible for the accuracy or completeness of electronic copies of this plan sheet.

REGISTERED PROFESSIONAL ENGINEER — FOUED ZAYATI — No. C57046 — Exp. 06-30-11 — CIVIL — STATE OF CALIFORNIA

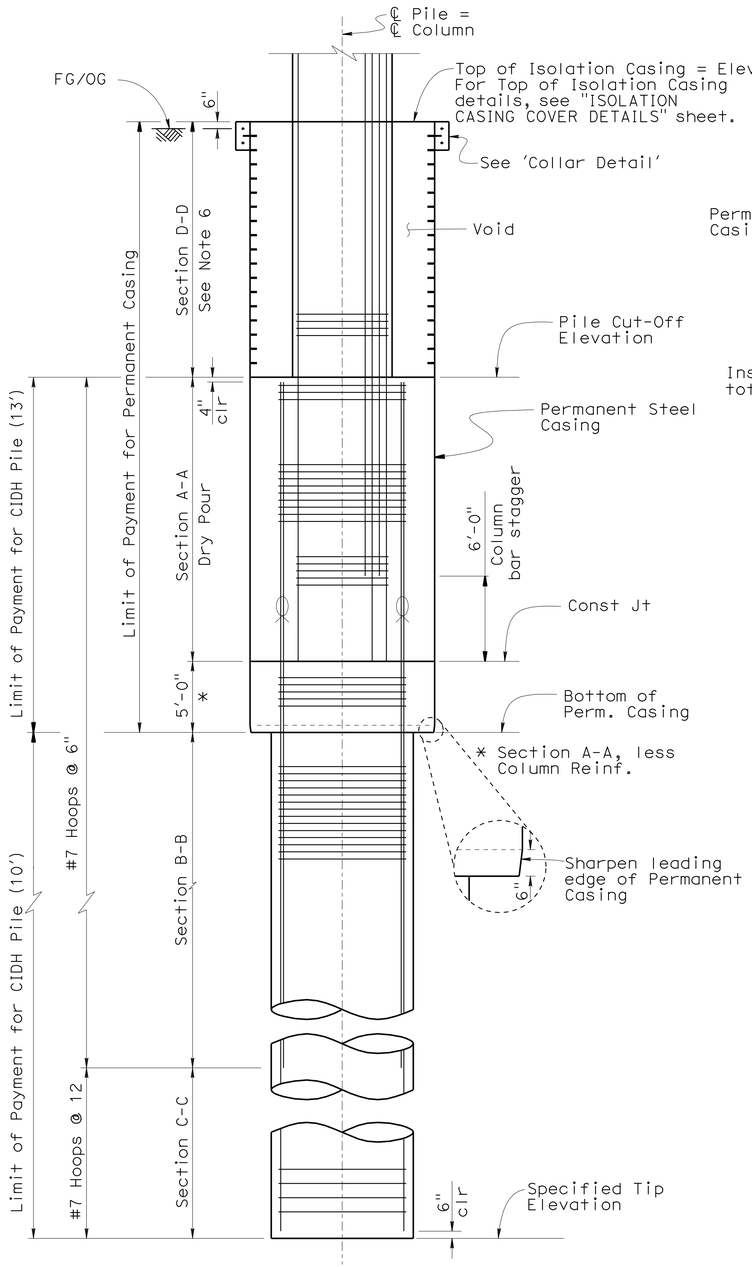

ELEVATION

3/16"=1'-0"

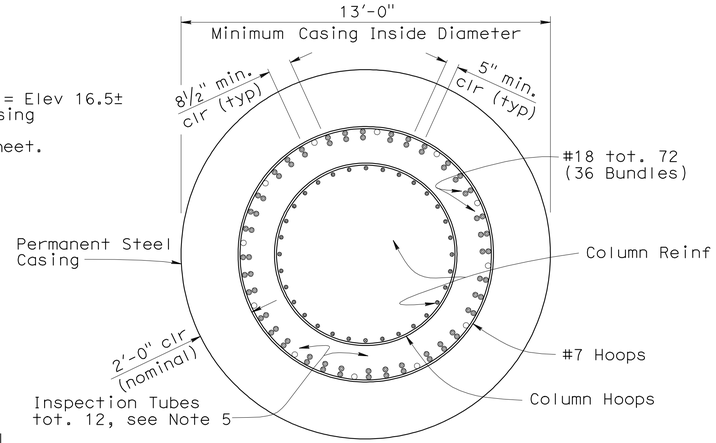

SECTION A-A

3/8"=1'-0"

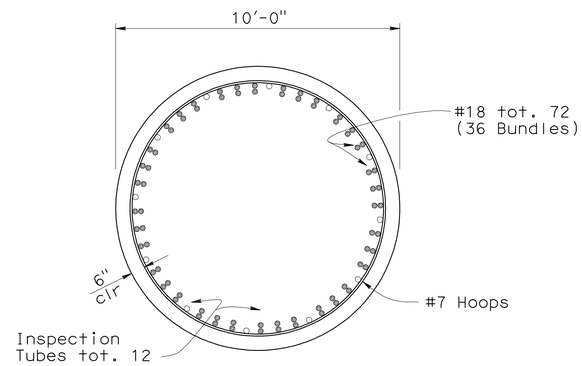

SECTION B-B

3/8"=1'-0"

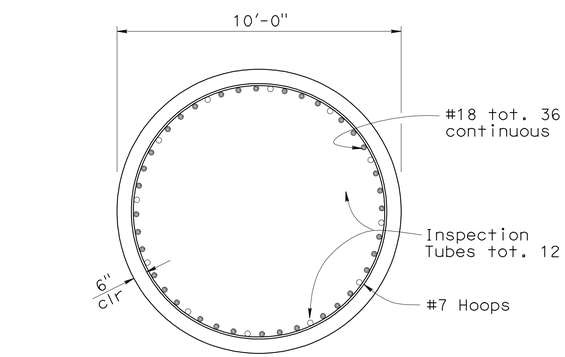

SECTION C-C

3/8"=1'-0"

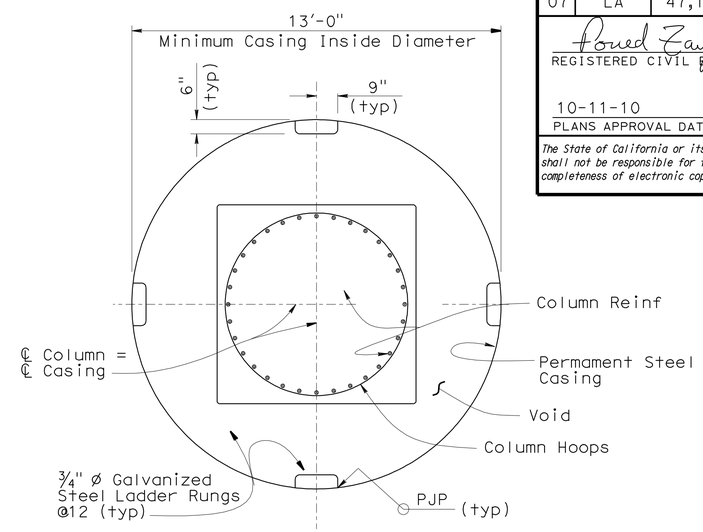

SECTION D-D

3/8"=1'-0"

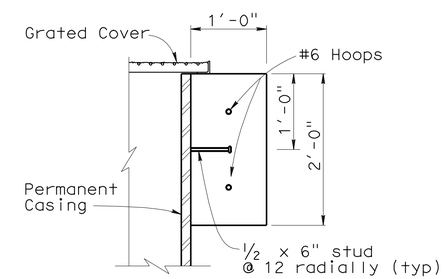

COLLAR DETAIL

No Scale

Location	Section B-B Length
Bent 11 Easterly Pile	50'-0"

NOTES:

1. For Column Reinf details, see "TYPICAL BENT LAYOUT" sheet.
2. For Pile Cut-Off data, see "INDEX TO PLANS" sheet.
3. All hoops are "Ultimate" butt splice continuous.
4. Only staggered "Ultimate" butt splices are allowed in Pile longitudinal reinforcement.
5. Inspection tubes may be removed above construction joint after testing and acceptance of pile.
6. Sever tieback wall straps as required.

⌒ Denotes bundled bars

	BY	CHECKED
DESIGN	R. Bromenschenkel	F. Zayati
DETAILS	J. Thorne	F. Zayati
QUANTITIES	J. Massoomi	L. Han

STATE OF CALIFORNIA
DEPARTMENT OF TRANSPORTATION

DIVISION OF ENGINEERING SERVICES
STRUCTURE DESIGN
DESIGN BRANCH 14

BRIDGE NO. 53-3032
POST MILE 3.58

SCHUYLER HEIM BRIDGE (REPLACE)
10 FT CIDH PILE DETAILS NO. 4

STRUCTURES DESIGN DETAIL SHEET (ENGLISH) (REV. 10/25/05)

ORIGINAL SCALE IN INCHES FOR REDUCED PLANS 0 1 2 3

CU 07-271
EA 138201

DISREGARD PRINTS BEARING EARLIER REVISION DATES

REVISION DATES: 04-06-10 04-08-10 04-09-10 04-13-10 07-12-10 07-13-10 07-23-09 03-22-10 03-30-10

SHEET 145 OF 247

FILE => 53-3032-1-p-kcpt10fdet4.dgn

USERNAME => trlenard DATE PLOTTED => 19-OCT-2010 TIME PLOTTED => 11:32

DIST	COUNTY	ROUTE	POST MILES TOTAL PROJECT	SHEET No	TOTAL SHEETS
07	LA	47,103	3.5/4.6, 0.0/1.1	648	1003

REGISTERED CIVIL ENGINEER 05-24-10 DATE

10-11-10
PLANS APPROVAL DATE

REGISTERED PROFESSIONAL ENGINEER FOUED ZAYATI No. C57046 Exp. 06-30-11 CIVIL STATE OF CALIFORNIA

The State of California or its officers or agents shall not be responsible for the accuracy or completeness of electronic copies of this plan sheet.

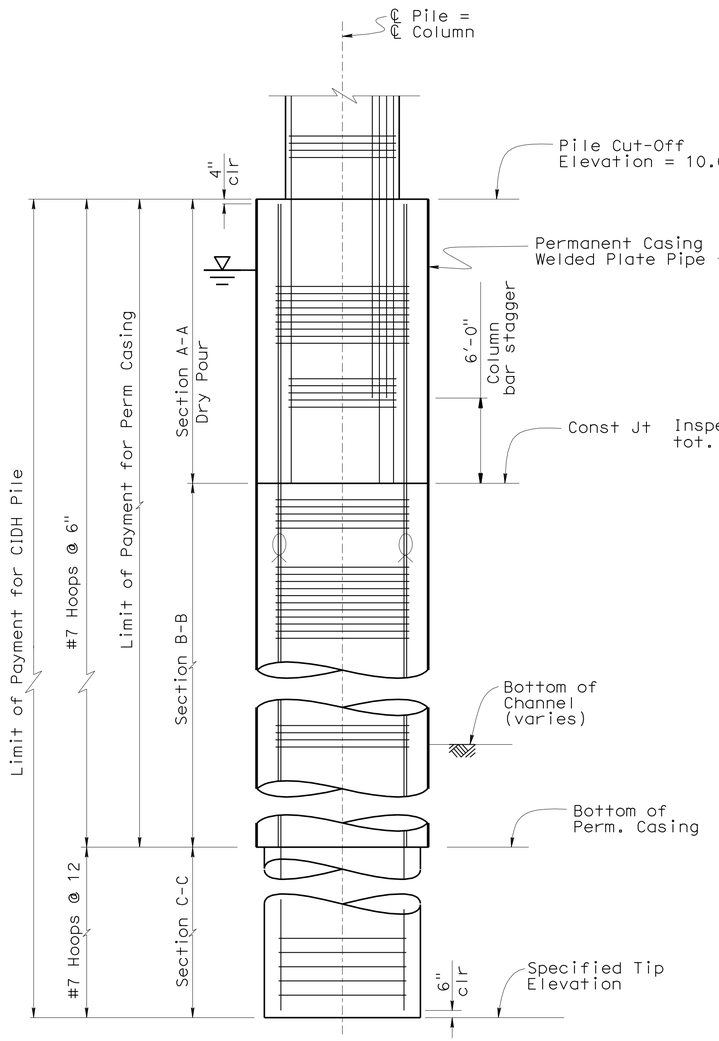

ELEVATION

3/16"=1'-0"

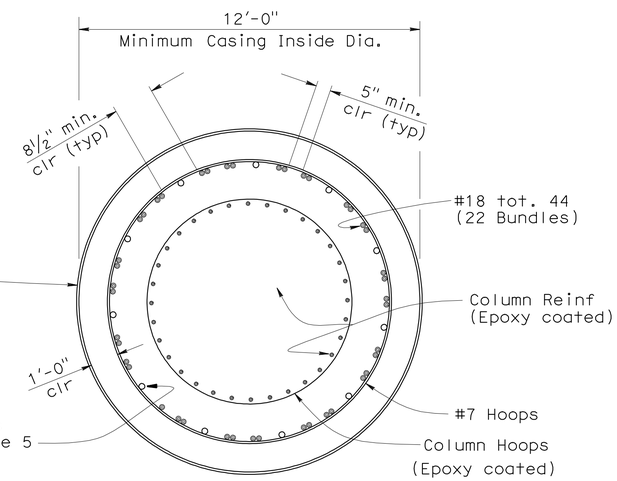

SECTION A-A

3/8"=1'-0"

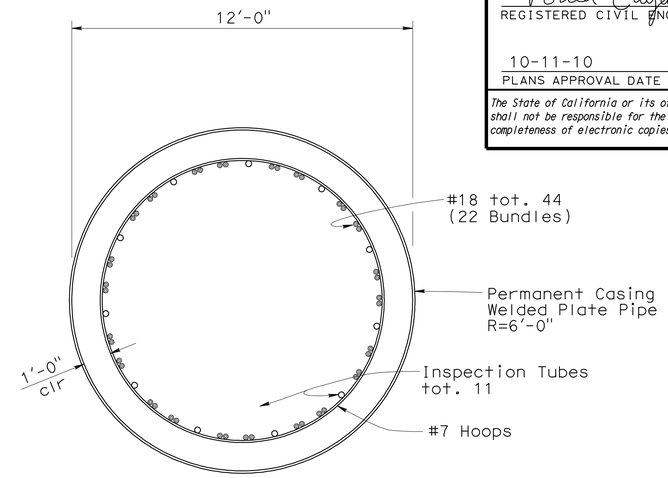

SECTION B-B

3/8"=1'-0"

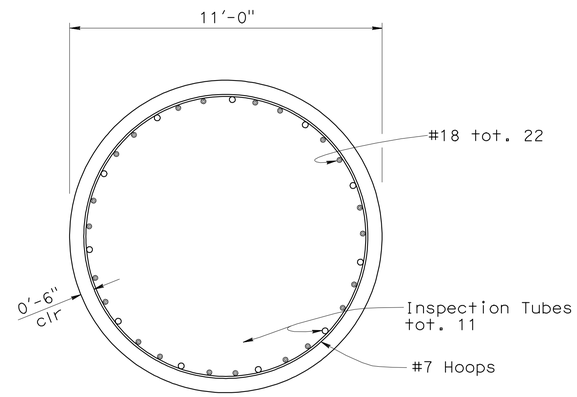

SECTION C-C

3/8"=1'-0"

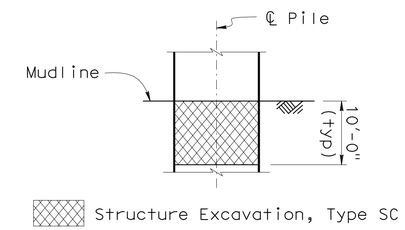

LIMITS OF PAYMENT FOR STRUCTURE EXCAVATION, TYPE SC

No Scale

Location	Section A-A Length	Section B-B Length	Casing Thickness
Bent 13	20'-0"	55'-0"	1½"
Bents 14, 15	20'-0"	85'-0"	1½"
Bent 16	20'-0"	65'-0"	1½"

NOTES:

1. For Column Reinf details, see "TYPICAL BENT LAYOUT" sheet.
2. For Pile Cut-Off data, see "INDEX TO PLANS" sheet.
3. All hoops are "Ultimate" butt splice continuous.
4. Only staggered "Ultimate" butt splices are allowed in Pile longitudinal reinforcement.
5. Inspection tubes may be removed above construction joint after testing and acceptance of pile.

	BY	CHECKED
DESIGN	R. Bromenschenkel	F. Zayati
DETAILS	J. Thorne	F. Zayati
QUANTITIES	J. Massoomi	F. Zayati

STATE OF CALIFORNIA
DEPARTMENT OF TRANSPORTATION

DIVISION OF ENGINEERING SERVICES
STRUCTURE DESIGN
DESIGN BRANCH 14

BRIDGE NO. 53-3032
POST MILE 3.58

SCHUYLER HEIM BRIDGE (REPLACE)
12 FT CIDH PILE DETAILS NO. 1

STRUCTURES DESIGN DETAIL SHEET (ENGLISH) (REV. 10/25/05)

ORIGINAL SCALE IN INCHES FOR REDUCED PLANS 0 1 2 3

CU 07-271
EA 138201

DISREGARD PRINTS BEARING EARLIER REVISION DATES

REVISION DATES: 11-04-08 07-24-09 07-29-09 03-22-10 04-29-10 08-28-08 09-25-08 10-09-08 10-31-08

SHEET 146 OF 247

FILE => 53-3032-1-p-kcpt12fdet1.dgn

USERNAME => Trenhard DATE PLOTTED => 19-OCT-2010 TIME PLOTTED => 11:32

DIST	COUNTY	ROUTE	POST MILES TOTAL PROJECT	SHEET No	TOTAL SHEETS
07	LA	47,103	3.5/4.6, 0.0/1.1	649	1003

REGISTERED CIVIL ENGINEER — DATE 05-24-10

10-11-10
PLANS APPROVAL DATE

REGISTERED PROFESSIONAL ENGINEER — FOUED ZAYATI — No. C57046 — Exp. 06-30-11 — CIVIL — STATE OF CALIFORNIA

The State of California or its officers or agents shall not be responsible for the accuracy or completeness of electronic copies of this plan sheet.

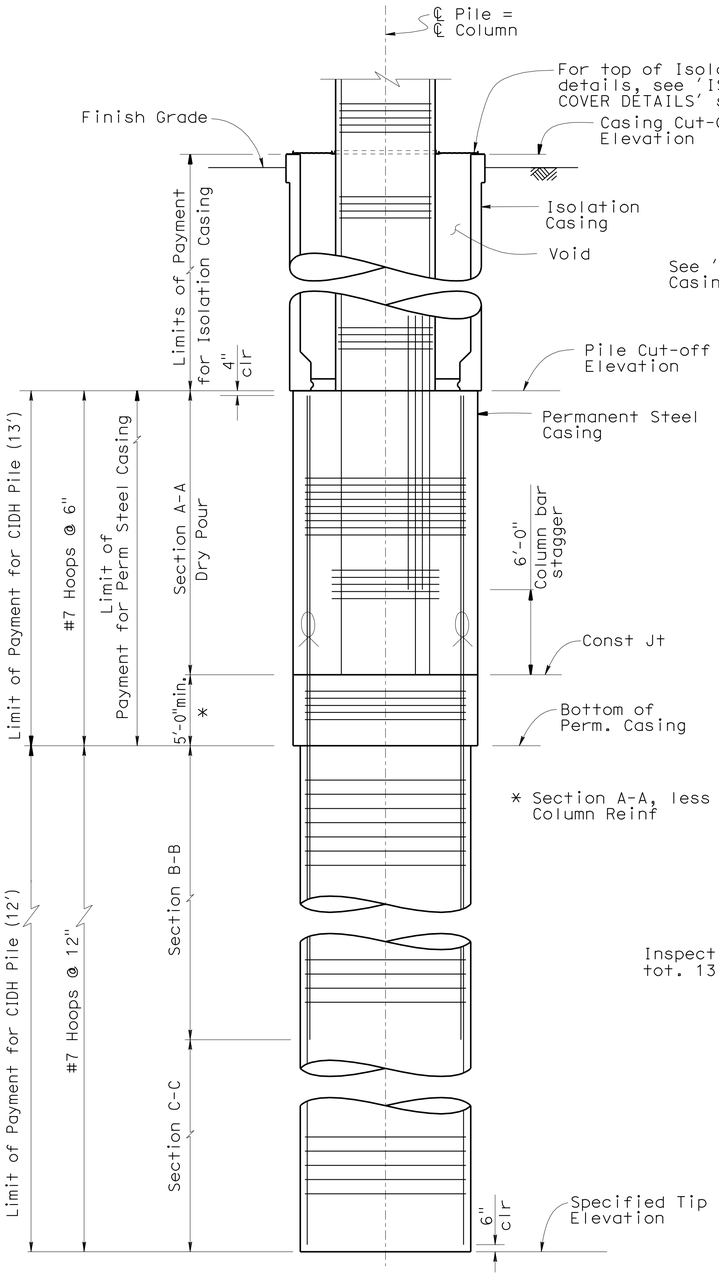

ELEVATION

3/16"=1'-0"

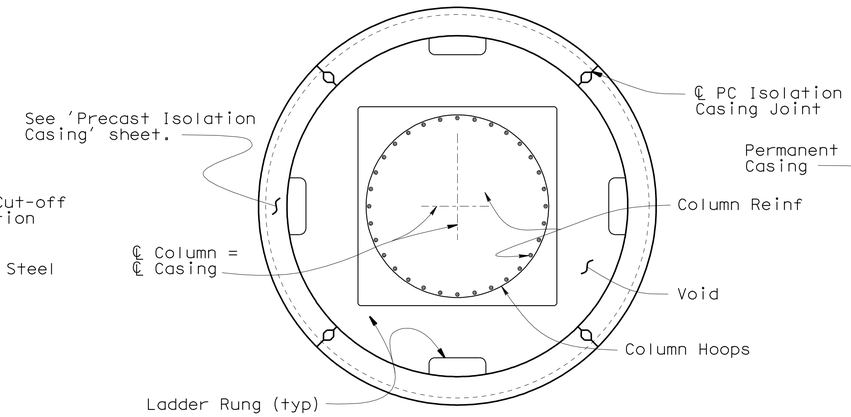

ISOLATION CASING

3/8"=1'-0"

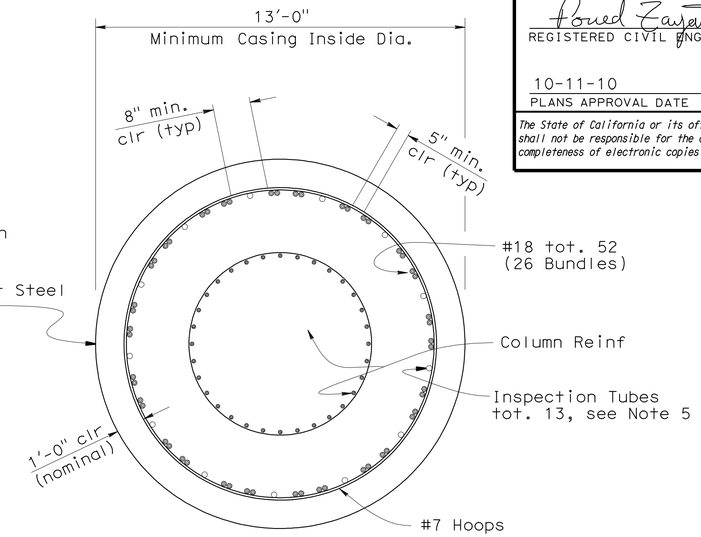

SECTION A-A

3/8"=1'-0"

Location	Section B-B Length
Bent 17 (except easterly pile)*	30'-0"
Bent 18	50'-0"
Bents 19 - 24	70'-0"

* See "12 FT CIDH PILE DETAILS NO. 3" sheet for Bent 17 eastern most pile.

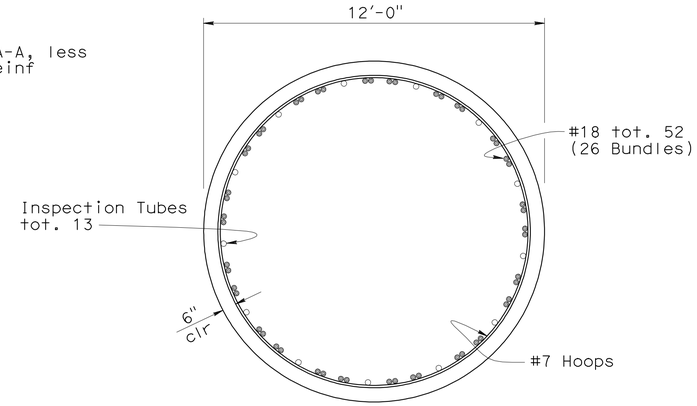

SECTION B-B

3/8"=1'-0"

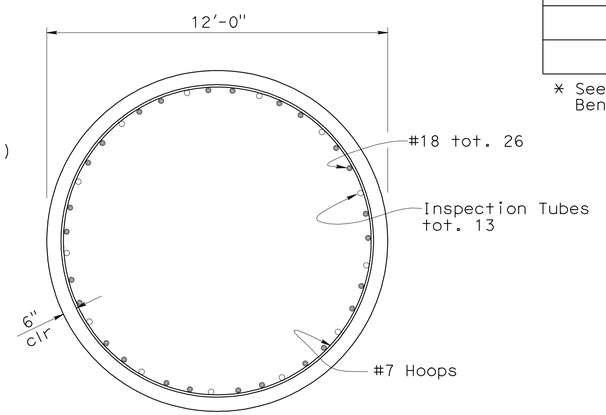

SECTION C-C

3/8"=1'-0"

NOTES:

1. For Column Reinf details, see "TYPICAL BENT LAYOUT" sheet.
2. For Pile Cut-Off data, see "INDEX TO PLANS" sheet.
3. All hoops are "Ultimate" butt splice continuous.
4. Only staggered "Ultimate" butt splices are allowed in Pile longitudinal reinforcement.
5. Inspection tubes may be removed above construction joint after testing and acceptance of pile.

	BY	CHECKED
DESIGN	R. Bromenschenkel	F. Zayati
DETAILS	J. Thorne	F. Zayati
QUANTITIES	J. Massoomi	L. Han

STATE OF CALIFORNIA
DEPARTMENT OF TRANSPORTATION

DIVISION OF ENGINEERING SERVICES
STRUCTURE DESIGN
DESIGN BRANCH 14

BRIDGE NO. 53-3032
POST MILE 3.58

SCHUYLER HEIM BRIDGE (REPLACE)
12 FT CIDH PILE DETAILS NO. 2

STRUCTURES DESIGN DETAIL SHEET (ENGLISH) (REV. 10/25/05)

ORIGINAL SCALE IN INCHES FOR REDUCED PLANS 0 1 2 3

CU 07-271
EA 138201

DISREGARD PRINTS BEARING EARLIER REVISION DATES

REVISION DATES: 03-30-10 04-30-10 08-14-08 10-31-08 11-06-08 07-28-09 07-23-09 02-22-10 03-22-10

SHEET 147 OF 247

FILE => 53-3032-1-p-kcpt12fdet2.dgn

USERNAME => friehard DATE PLOTTED => 19-Oct-2010 TIME PLOTTED => 11:32

DIST	COUNTY	ROUTE	POST MILES TOTAL PROJECT	SHEET No	TOTAL SHEETS
07	LA	47,103	3.5/4.6, 0.0/1.1	650	1003

REGISTERED CIVIL ENGINEER 05-24-10 DATE

10-11-10
PLANS APPROVAL DATE

The State of California or its officers or agents shall not be responsible for the accuracy or completeness of electronic copies of this plan sheet.

REGISTERED PROFESSIONAL ENGINEER FOUED ZAYATI No. C57046 Exp. 06-30-11 CIVIL STATE OF CALIFORNIA

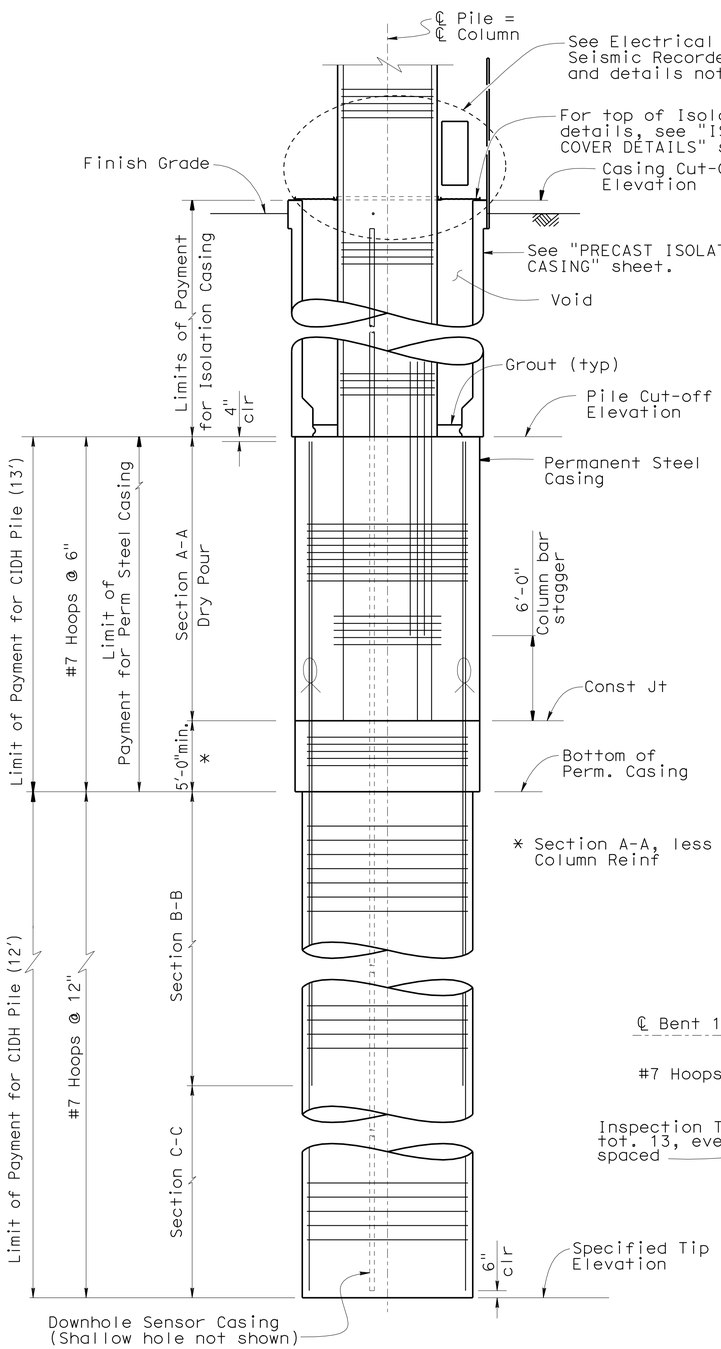

ELEVATION

3/16"=1'-0"

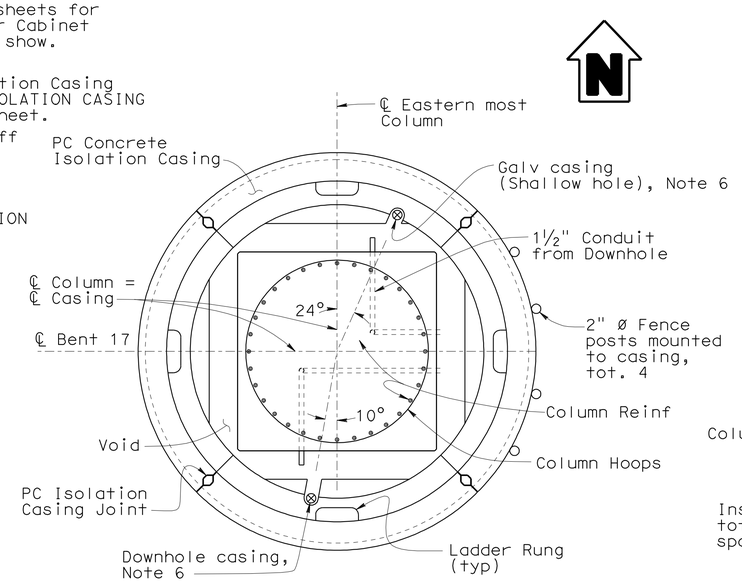

ISOLATION CASING

3/8"=1'-0"

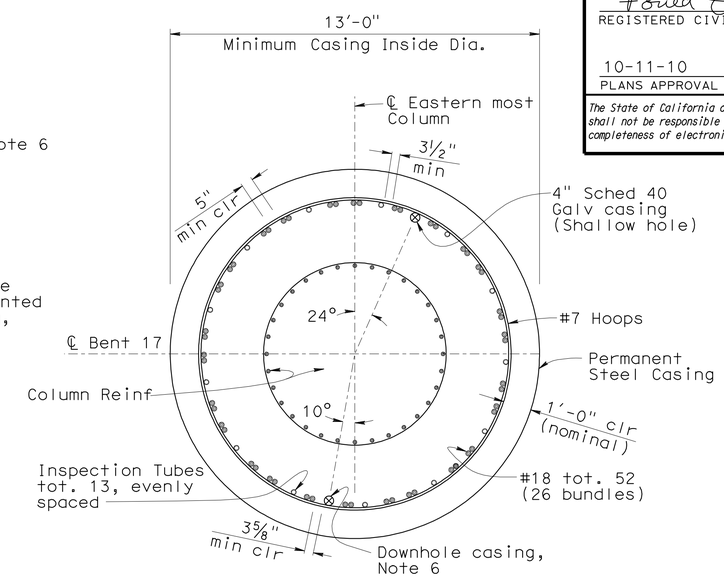

SECTION A-A

3/8"=1'-0"

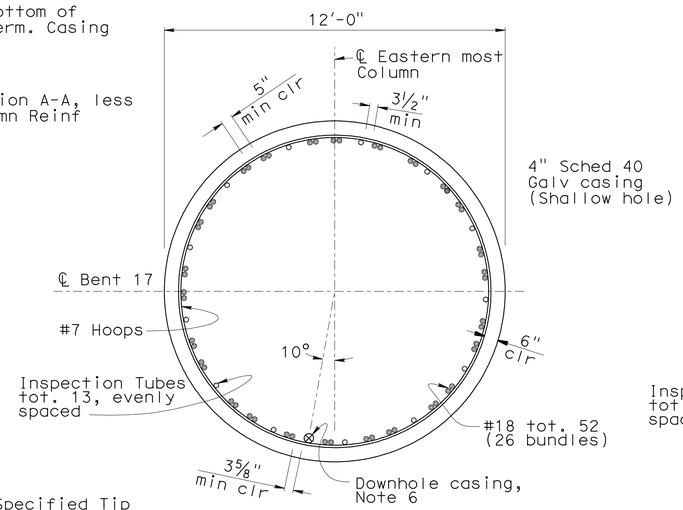

SECTION B-B

3/8"=1'-0"

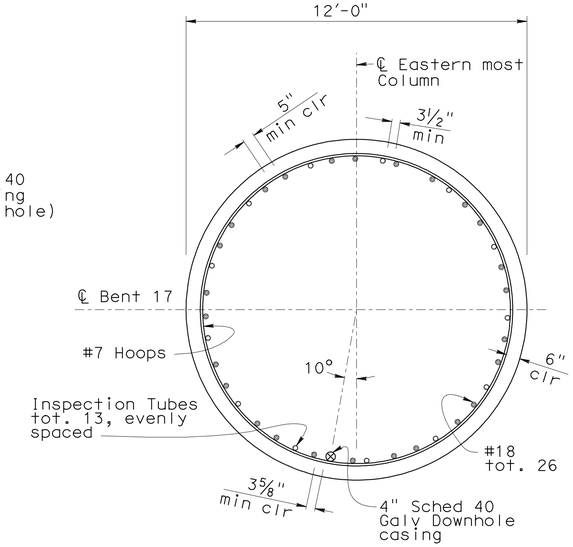

SECTION C-C

3/8"=1'-0"

Location	Section B-B Length
Bent 17 - Easterly Pile	30'-0"

NOTES:

1. For Column Reinf details, see "TYPICAL BENT LAYOUT" sheet.
2. For Pile Cut-Off data, see "INDEX TO PLANS" sheet.
3. All hoops are "Ultimate" butt splice continuous.
4. Only staggered "Ultimate" butt splices are allowed in Pile longitudinal reinforcement.
5. Inspection tubes may be removed above construction joint after testing and acceptance of pile.
6. For 'Downhole Casings' details, see "RECORDER DETAILS" sheet.

Denotes bundled reinforcement

	BY	CHECKED
DESIGN	R. Bromenschenkel	F. Zayati
DETAILS	J. Thorne	F. Zayati
QUANTITIES	J. Massoomi	L. Han

STATE OF CALIFORNIA DEPARTMENT OF TRANSPORTATION

DIVISION OF ENGINEERING SERVICES STRUCTURE DESIGN DESIGN BRANCH 14

BRIDGE NO. 53-3032
POST MILE 3.58

SCHUYLER HEIM BRIDGE (REPLACE)

12 FT CIDH PILE DETAILS NO. 3

STRUCTURES DESIGN DETAIL SHEET (ENGLISH) (REV. 10/25/05)

ORIGINAL SCALE IN INCHES FOR REDUCED PLANS 0 1 2 3

CU 07-271
EA 138201

DISREGARD PRINTS BEARING EARLIER REVISION DATES

REVISION DATES: 03-30-10 04-06-10 04-13-10 04-30-10 07-09-10

SHEET 148 OF 247

FILE => 53-3032-1-p-kcpt12fdet3.dgn

USERNAME => trlenard DATE PLOTTED => 13-OCT-2010 TIME PLOTTED => 08:58

DIST	COUNTY	ROUTE	POST MILES TOTAL PROJECT	SHEET No	TOTAL SHEETS
07	LA	47,103	3.5/4.6, 0.0/1.1	651	1003

REGISTERED CIVIL ENGINEER — DATE 05-24-10

10-11-10
PLANS APPROVAL DATE

The State of California or its officers or agents shall not be responsible for the accuracy or completeness of electronic copies of this plan sheet.

REGISTERED PROFESSIONAL ENGINEER — FOUED ZAYATI — No. C57046 — Exp. 06-30-11 — CIVIL — STATE OF CALIFORNIA

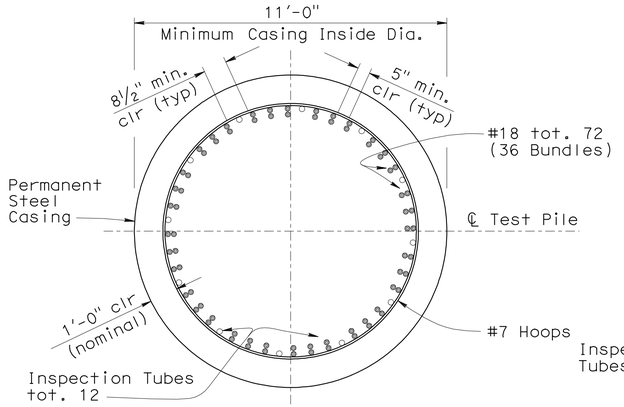

SECTION A-A

⅜"=1'-0"

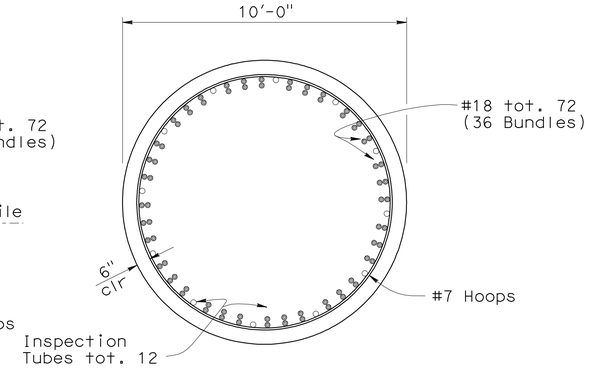

SECTION B-B

⅜"=1'-0"

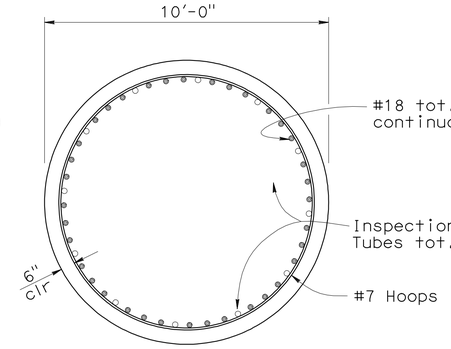

SECTION C-C

⅜"=1'-0"

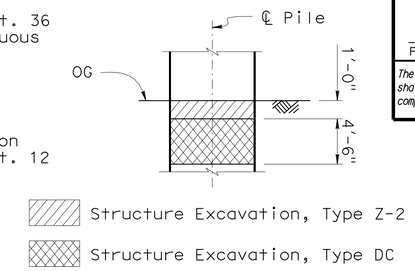

LIMITS OF PAYMENT FOR STRUCTURE EXCAVATION

No Scale

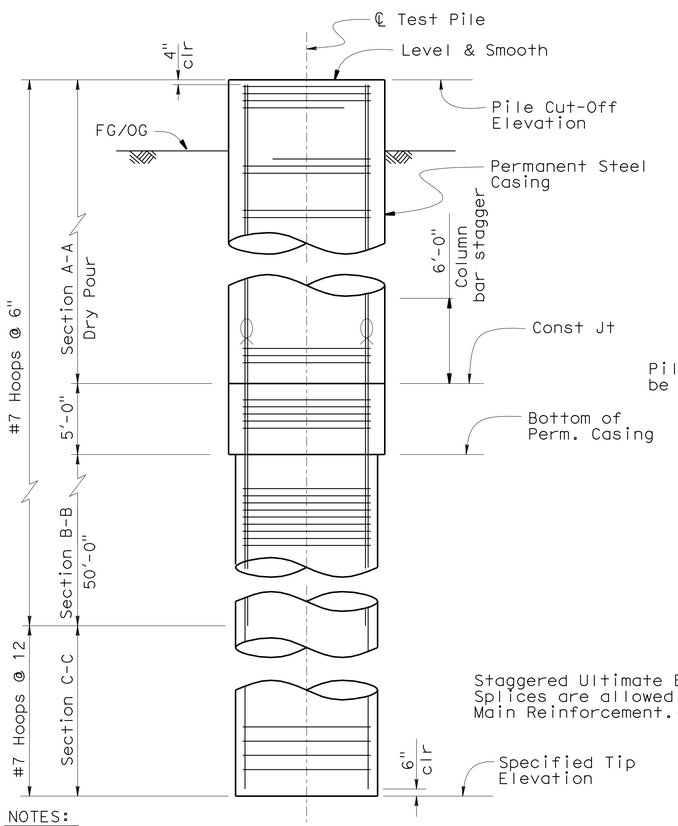

NOTES:

1. All hoops are "Ultimate" butt splice continuous.
2. Only staggered "Ultimate" butt splices are allowed in Pile longitudinal reinforcement.

ELEVATION - TEST PILE

3/16"=1'-0"

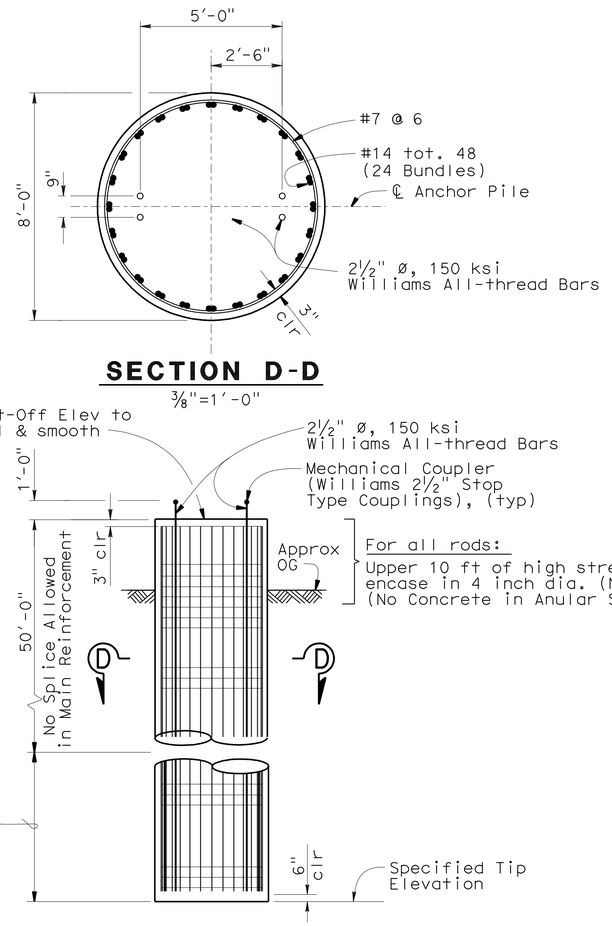

SECTION D-D

⅜"=1'-0"

ELEVATION - ANCHOR PILE

3/16"=1'-0"

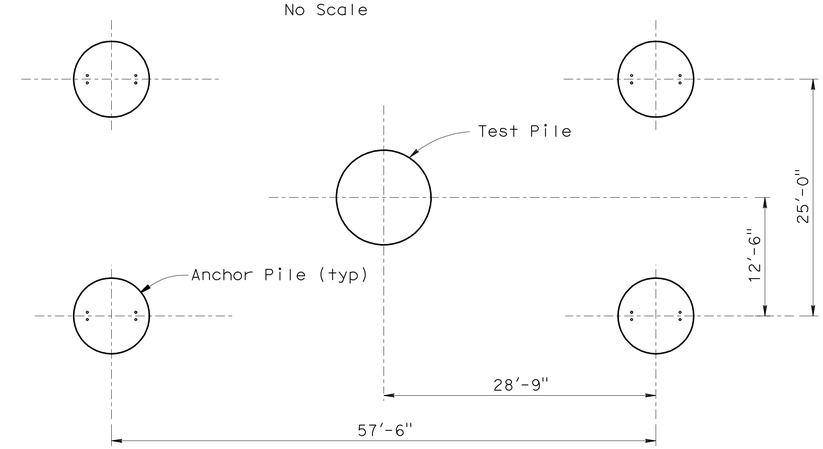

NOTE:

For location and orientation, see "FOUNDATION PLAN NO. 2" sheet.
Pile Load test locations may change as directed by Engineer.

PLAN

No Scale

PILE DATA TABLE

Location	Pile Type	Nominal Resistance (kip)		Casing Tip Elevation (ft)	Design Tip Elevation (ft)	Specified Tip Elevation (ft)	Top of Pile Cut-Off Elevation (ft)
		Compression	Tension				
Load Test Pile	11 ft CIDH 10 ft CIDH	6,000	0	-25	-136 (a)	-136	5.0
Anchor Piles	8 ft CIDH	0	2,250	NA	-121 (b)	-129	5.0

NOTES:

1. Design Tip Elevations are controlled by the following demands: (a) Compression, (b) Tension, (c) Settlement, and (d) Lateral Load.
2. The Specified Tip Elevation shall not be raised.
3. The Test Pile should be loaded up to 8,000 kips or failure, whichever occurs first.

	BY	CHECKED
DESIGN	R. Bromenschenkel	F. Zayati
DETAILS	J. Thorne	B. Liebich
QUANTITIES	R. Bromenschenkel	F. Zayati

STATE OF CALIFORNIA
DEPARTMENT OF TRANSPORTATION

DIVISION OF ENGINEERING SERVICES
STRUCTURE DESIGN
DESIGN BRANCH 14

BRIDGE NO. 53-3032
POST MILE 3.58

SCHUYLER HEIM BRIDGE (REPLACE)
PILE LOAD TEST DATA

STRUCTURES DESIGN DETAIL SHEET (ENGLISH) (REV. 10/25/05)

ORIGINAL SCALE IN INCHES FOR REDUCED PLANS 0 1 2 3

CU 07-271
EA 138201

DISREGARD PRINTS BEARING EARLIER REVISION DATES

REVISION DATES: 04-06-10 04-08-10 04-30-10 05-13-10 05-14-10

SHEET 149 OF 247

FILE => 53-3032-1-p-kdloadtest01.dgn

USERNAME => trmikest DATE PLOTTED => 19-OCT-2010 TIME PLOTTED => 09:00

DIST	COUNTY	ROUTE	POST MILES TOTAL PROJECT	SHEET No	TOTAL SHEETS
07	LA	47,103	3.5/4.6, 0.0/1.1	652	1003

REGISTERED CIVIL ENGINEER — DATE 05-24-10

10-11-10
PLANS APPROVAL DATE

The State of California or its officers or agents shall not be responsible for the accuracy or completeness of electronic copies of this plan sheet.

REGISTERED PROFESSIONAL ENGINEER — FOUED ZAYATI — No. C57046 — Exp. 06-30-11 — CIVIL — STATE OF CALIFORNIA

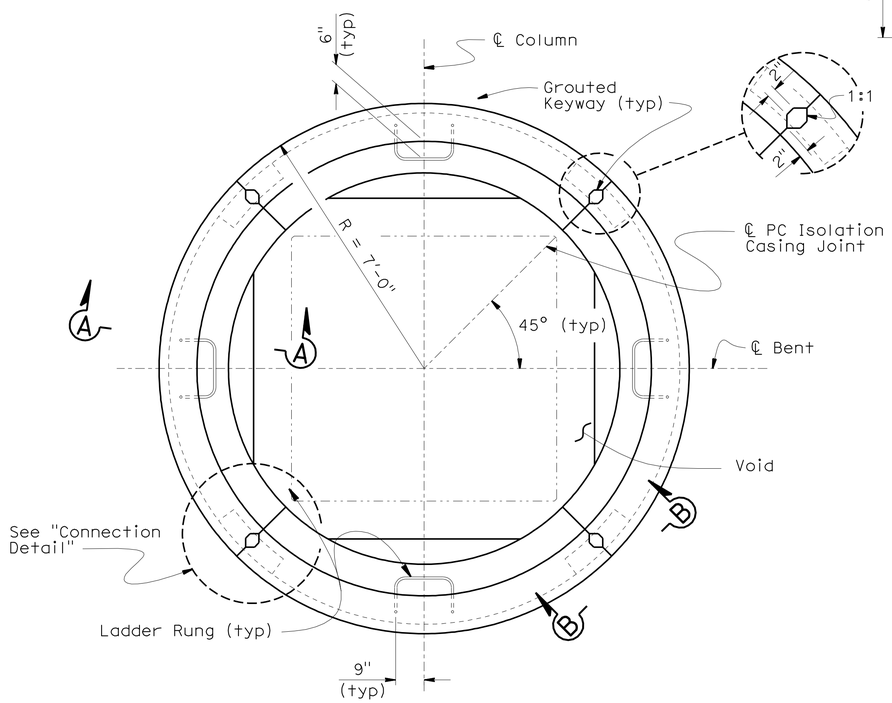

PLAN

½"=1'-0"

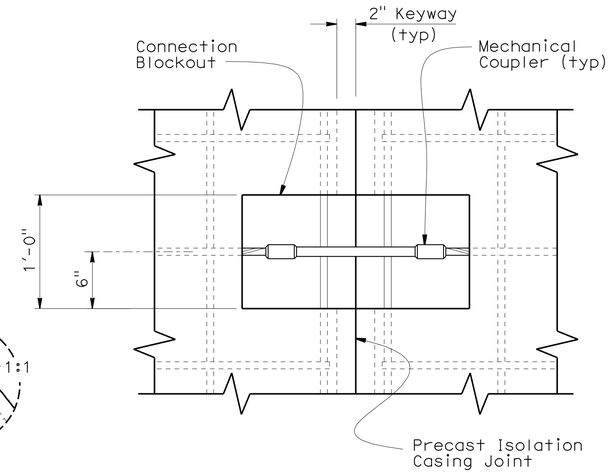

VIEW B-B

1½"=1'-0"

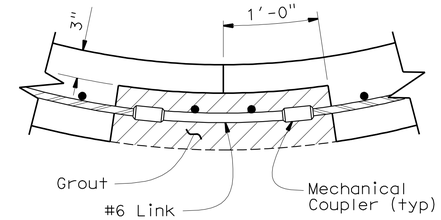

CONNECTION DETAIL

1½"=1'-0"

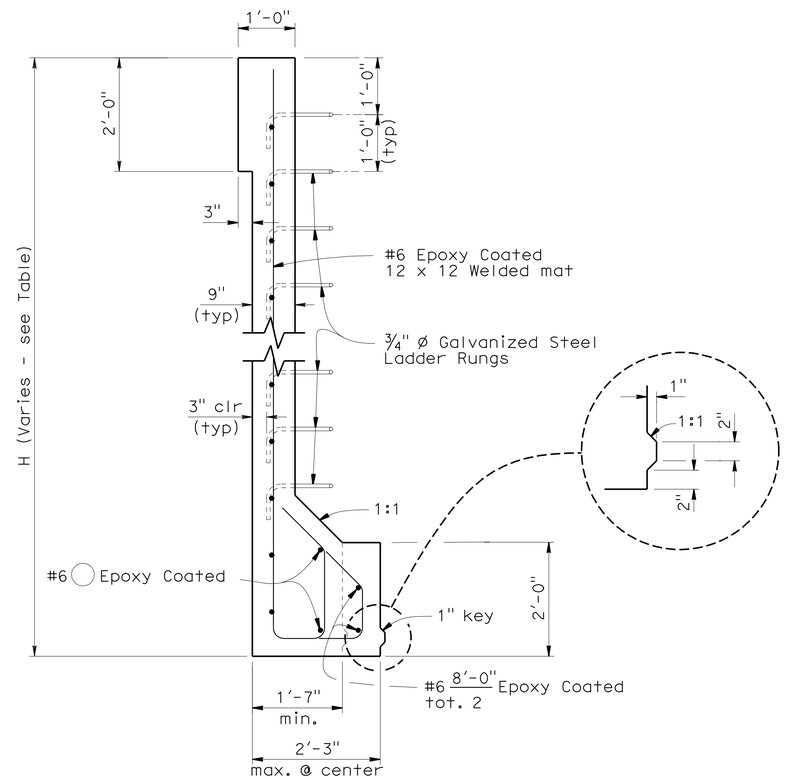

SECTION A-A

¾"=1'-0"

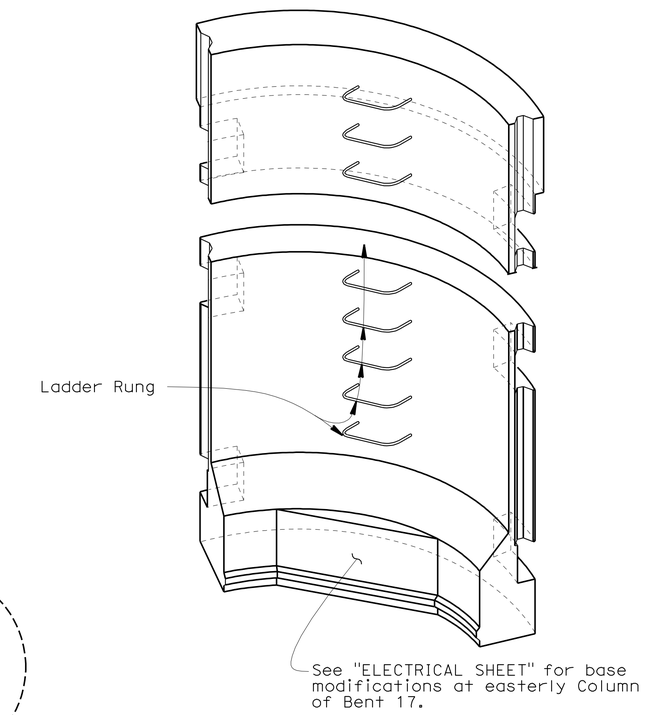

ISOMETRIC VIEW PRECAST ISOLATION CASING

No Scale

Location	H (ft)
Bent 2	14
Bents 17 - 24	21

NOTES:

1. All hardware to be galvanized before casting.
2. Place connections 3 feet from top, 2 feet from bottom and at mid - height of casing.
3. Align shells prior to grouting Keyway and Connection Blockouts.

	BY	CHECKED
DESIGN	R. Bromenschenkel	F. Zayati
DETAILS	Jeff Thorne	F. Zayati
QUANTITIES	R. Bromenschenkel	F. Zayati

STATE OF CALIFORNIA
DEPARTMENT OF TRANSPORTATION

DIVISION OF ENGINEERING SERVICES
STRUCTURE DESIGN
DESIGN BRANCH 14

BRIDGE NO. 53-3032
POST MILE 3.58

SCHUYLER HEIM BRIDGE (REPLACE)
PRECAST ISOLATION CASING DETAILS

STRUCTURES DESIGN DETAIL SHEET (ENGLISH) (REV. 10/25/05)

ORIGINAL SCALE IN INCHES FOR REDUCED PLANS 0 1 2 3

CU 07-271
EA 138201

DISREGARD PRINTS BEARING EARLIER REVISION DATES

REVISION DATES: 03-18-10 03-20-10 03-22-10 03-30-10 04-06-10 04-07-10 04-30-10 07-08-10 08-26-10

SHEET 150 OF 247

FILE => 53-3032-1-p-kisolation-precast.dgn

USERNAME => trienard DATE PLOTTED => 19-OCT-2010 TIME PLOTTED => 08:59

DIST	COUNTY	ROUTE	POST MILES TOTAL PROJECT	SHEET No	TOTAL SHEETS
07	LA	47,103	3.5/4.6, 0.0/1.1	653	1003

REGISTERED CIVIL ENGINEER — DATE 05-24-10

10-11-10
PLANS APPROVAL DATE

The State of California or its officers or agents shall not be responsible for the accuracy or completeness of electronic copies of this plan sheet.

REGISTERED PROFESSIONAL ENGINEER — FOUED ZAYATI — No. C57046 — Exp. 06-30-11 — CIVIL — STATE OF CALIFORNIA

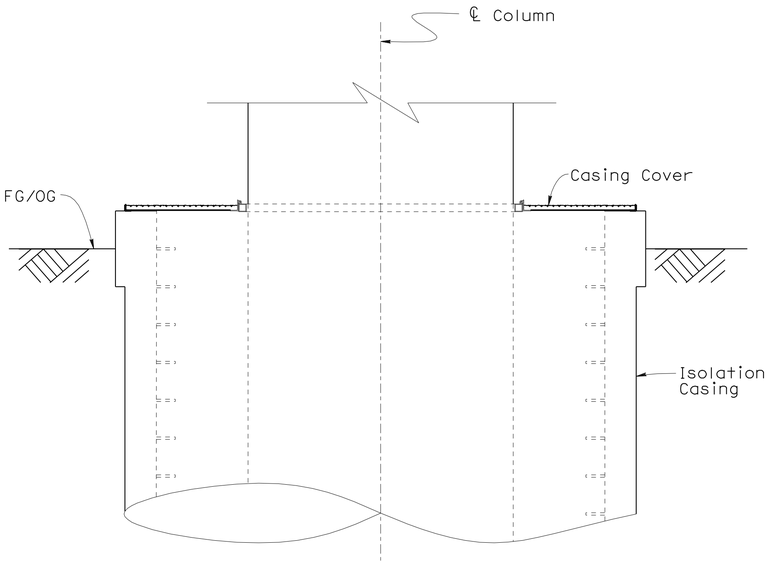

ELEVATION

½"=1'-0"

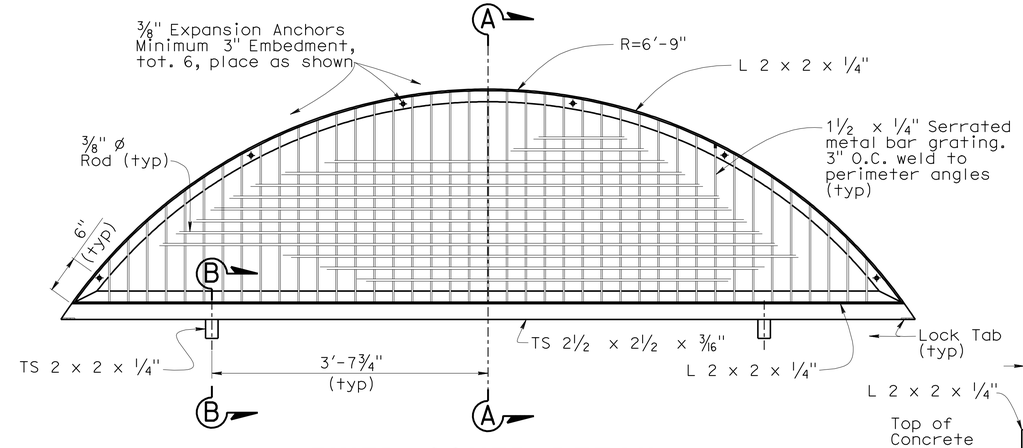

FIXED COVER DETAIL

1"=1'-0"

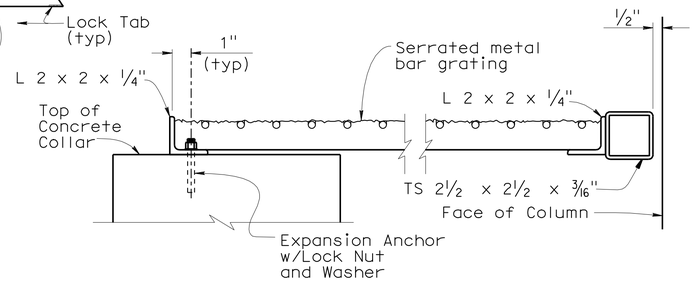

SECTION A-A

3"=1'-0"

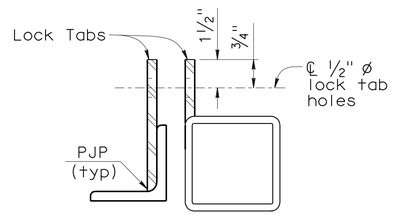

TAB DETAIL

6"=1'-0"

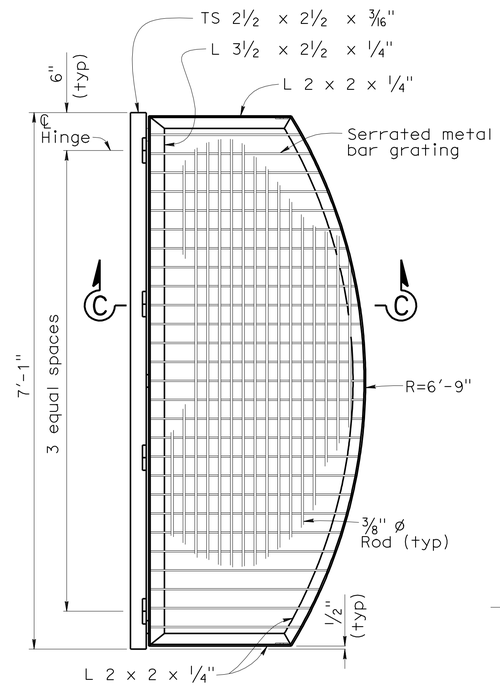

HINGED COVER DETAIL

1"=1'-0"

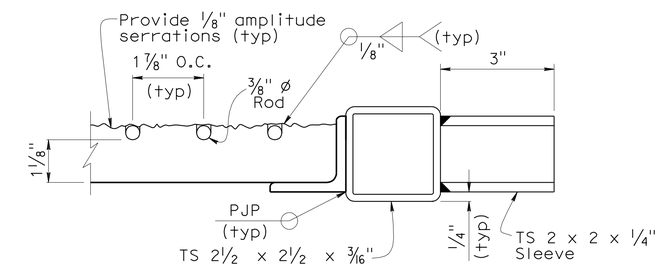

SECTION B-B

6"=1'-0"

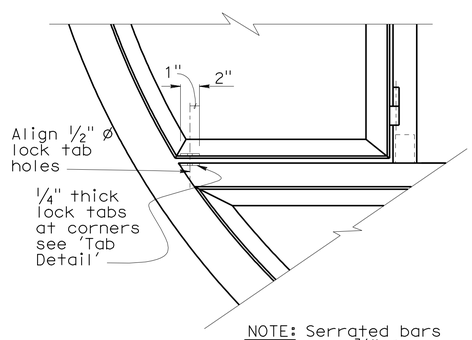

NOTE: Serrated bars and ⅜" ø rods not shown.

LATCH DETAIL

1½"=1'-0"

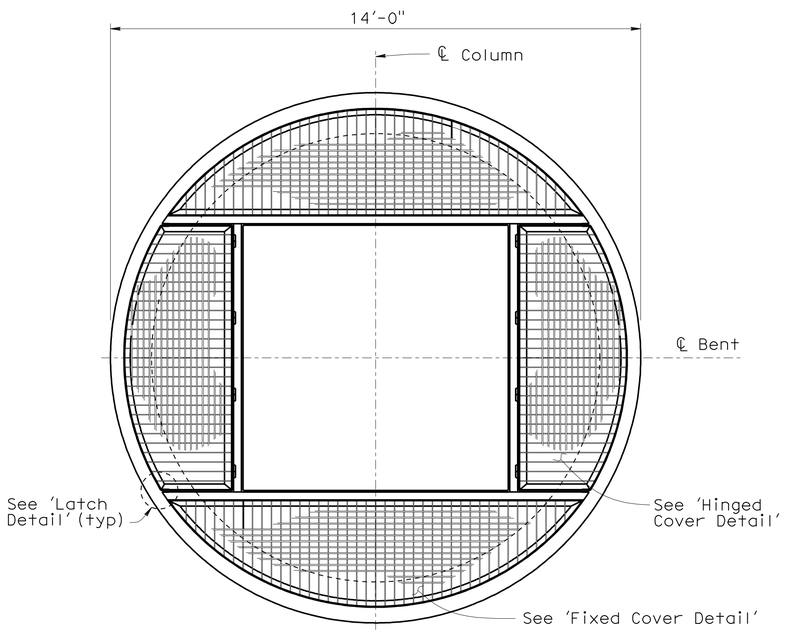

PLAN

½"=1'-0"

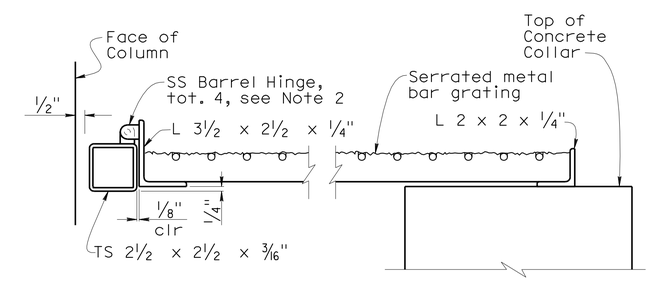

SECTION C-C

3"=1'-0"

NOTES:

1. All assemblies to be hot dip galvanized after fabrication.
2. All Hinges are SS Barrel type, 440 lb. minimum load rating.
3. Orient hinged covers to facilitate access to download pipes at Bent 17, eastern most Column.

DESIGN	BY F. Zayati	CHECKED R. Bromenschenkel	
DETAILS	BY K. Kubo	CHECKED R. Bromenschenkel	
QUANTITIES	BY F. Zayati	CHECKED R. Bromenschenkel	

STATE OF CALIFORNIA
DEPARTMENT OF TRANSPORTATION

DIVISION OF ENGINEERING SERVICES
STRUCTURE DESIGN
DESIGN BRANCH 14

BRIDGE NO. 53-3032
POST MILE 3.58

SCHUYLER HEIM BRIDGE (REPLACE)
ISOLATION CASING COVER DETAILS

STRUCTURES DESIGN DETAIL SHEET (ENGLISH) (REV. 10/25/05)

ORIGINAL SCALE IN INCHES FOR REDUCED PLANS 0 1 2 3

CU 07-271
EA 138201

DISREGARD PRINTS BEARING EARLIER REVISION DATES

REVISION DATES: 06-27-08 03-26-10 04-06-10 04-12-10 04-13-10 04-30-10

SHEET 151 OF 247

FILE => 53-3032-1-p-kisolation-qcover.dgn

USERNAME => trlenard DATE PLOTTED => 19-OCT-2010 TIME PLOTTED => 08:59

DIST	COUNTY	ROUTE	POST MILES TOTAL PROJECT	SHEET No	TOTAL SHEETS
07	LA	47,103	3.5/4.6, 0.0/1.1	654	1003

REGISTERED CIVIL ENGINEER — DATE 05-24-10

10-11-10
PLANS APPROVAL DATE

REGISTERED PROFESSIONAL ENGINEER — FOUED ZAYATI — No. C57046 — Exp. 06-30-11 — CIVIL — STATE OF CALIFORNIA

The State of California or its officers or agents shall not be responsible for the accuracy or completeness of electronic copies of this plan sheet.

NOTES:

1. Anchorage method not shown.
2. All dimensions shown are steel only unless otherwise noted.
3. H_{act} includes stainless steel.
4. A_h includes PTFE, substratum and stainless steel.
5. R_{act} is to sliding surface.

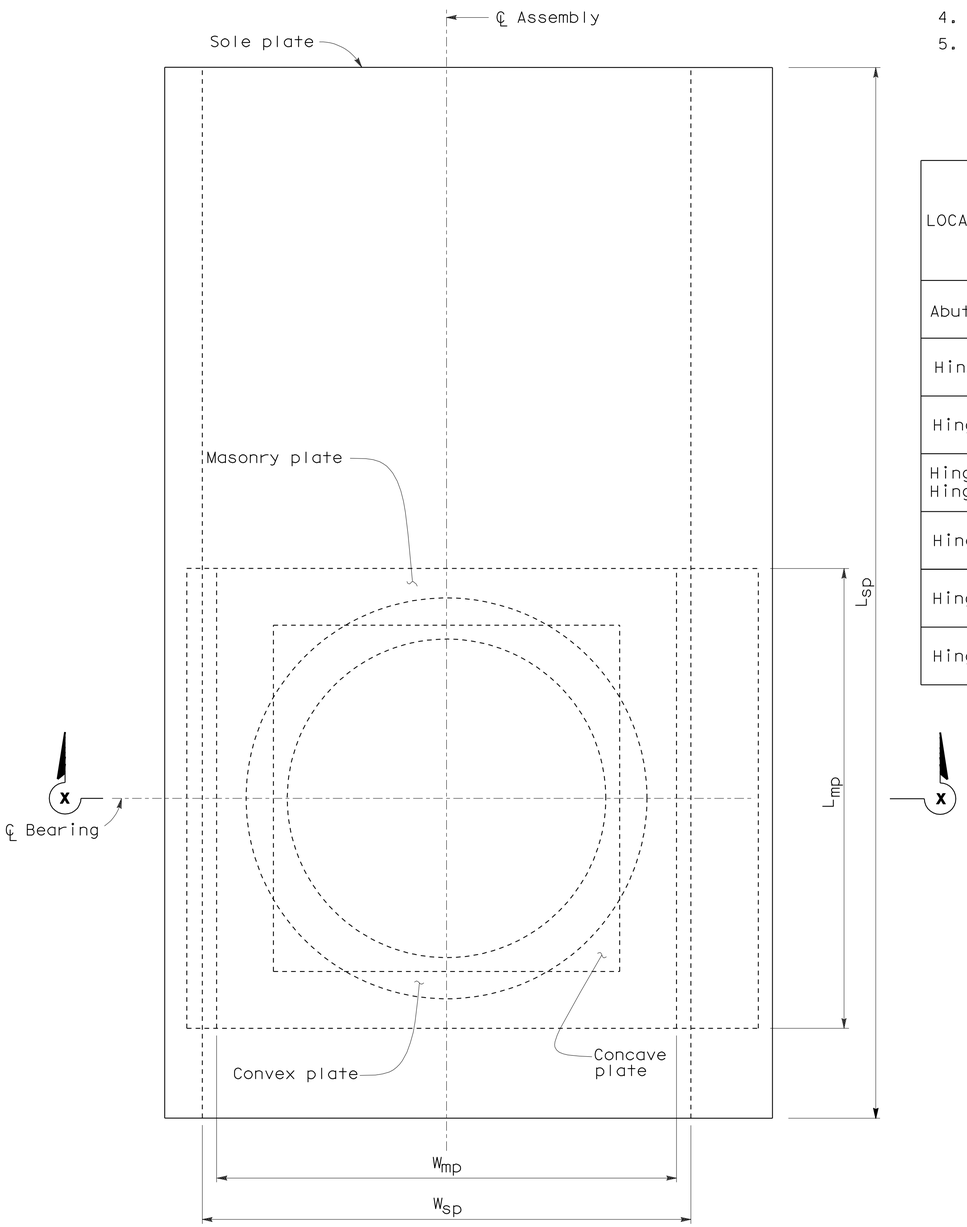

PLAN

EXPANSION BEARING TABLE

LOCATION	MAXIMUM VERTICAL LOAD (kip)	MINIMUM DEAD LOAD (kip)	DESIGN ROTATION (Radians)	CONCAVE PLATE						CONVEX PLATE		MASONRY PLATE			SOLE PLATE			ASSEMBLY HEIGHT
				WIDTH / LENGTH	FLAT PTFE AREA (in^2)	DIAMETER	SPHERICAL RADIUS	MINIMUM THICKNESS	MAXIMUM THICKNESS	DIAMETER	MAXIMUM THICKNESS	WIDTH	LENGTH	THICKNESS	WIDTH	LENGTH	THICKNESS	
				L_{cp}	A_{PTFE}	D_m	R_{act}	T_{min}	T_{max}	C_m	H_{act}	W_{mp}	L_{mp}	T_{mp}	W_{sp}	L_{sp}	T_{sp}	A_h
Abut 1	953	477	0.035	19.875	272	18.75	36.00	0.75	2.25	21.50	2.50	23.75	23.75	1.125	28.00	82.00	1.50	6.0625
Hinge 1	1127	563	0.035	21.375	322	20.25	36.00	0.75	2.50	23.125	2.75	25.25	25.25	1.25	29.5	100.0	1.875	5.4375
Hinge 2	717	359	0.035	17.375	205	16.25	35.50	0.75	2.00	18.875	2.125	21.00	21.00	1.125	22.50	94.00	0.75	4.9375
Hinge 3 Hinge 6	731	366	0.035	17.625	209	16.50	35.5	0.75	2.00	19.25	2.125	21.50	21.50	1.125	22.95	100.0	0.75	4.9375
Hinge 4	656	328	0.035	16.625	187	15.50	33.75	0.75	1.875	18.00	2.0	20.25	20.25	1.125	21.75	100.0	0.75	4.8125
Hinge 5	633	4.6875	0.035	17.625	181	15.25	33.25	0.75	1.875	17.75	2.00	19.75	19.75	1.00	21.5	100.0	0.75	4.6875
Hinge 7	851	426	0.035	18.875	243	17.75	36.00	0.75	2.125	20.50	2.25	22.50	22.50	1.125	24.00	100	0.75	5.4375

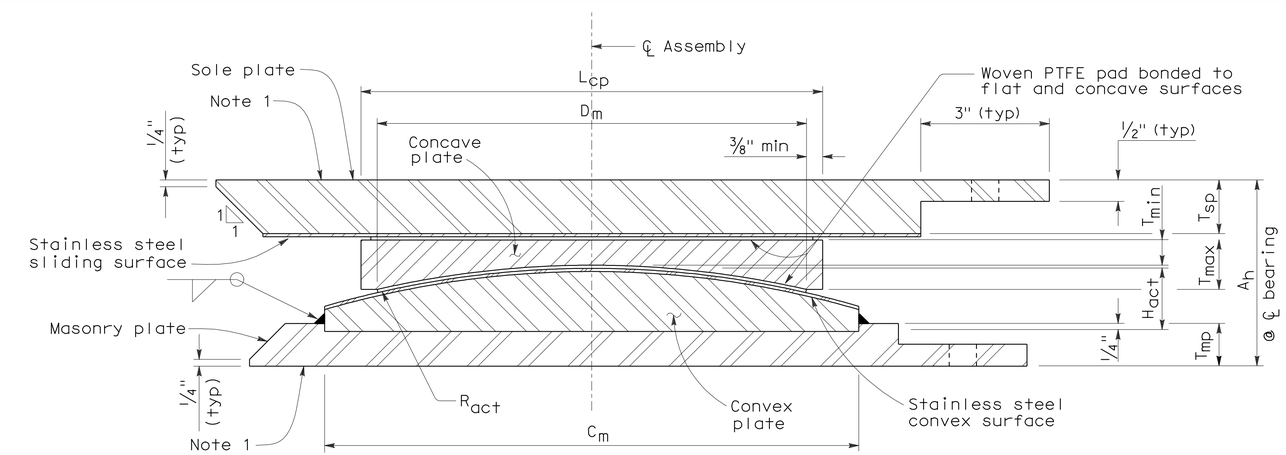

SECTION X-X

NO SCALE

ALL DIMENSIONS ARE IN INCHES UNLESS OTHERWISE SHOWN

	BY	CHECKED
DESIGN	F. Zayati	R. Bromenschenkel
DETAILS	K. Kubo	F. Zayati
QUANTITIES	F. Zayati	R. Bromenschenkel

STATE OF CALIFORNIA
DEPARTMENT OF TRANSPORTATION

DIVISION OF ENGINEERING SERVICES
STRUCTURE DESIGN
DESIGN BRANCH 14

BRIDGE NO. 53-3032
POST MILE 3.58

SCHUYLER HEIM BRIDGE (REPLACE)
PTFE BEARING DETAILS NO. 1

STRUCTURES DESIGN DETAIL SHEET (ENGLISH) (REV. 10/25/05)

ORIGINAL SCALE IN INCHES FOR REDUCED PLANS 0 1 2 3

CU 07-271
EA 138201

DISREGARD PRINTS BEARING EARLIER REVISION DATES 05-03-10

REVISION DATES

SHEET 152 OF 247

FILE => 53-3032-1-q-brgdt01.dgn

USERNAME => trmikes1 DATE PLOTTED => 19-OCT-2010 TIME PLOTTED => 13:29

DIST	COUNTY	ROUTE	POST MILES TOTAL PROJECT	SHEET No	TOTAL SHEETS
07	LA	47,103	3.5/4.6, 0.0/1.1	655	1003

REGISTERED CIVIL ENGINEER — DATE 05-24-10

10-11-10
PLANS APPROVAL DATE

REGISTERED PROFESSIONAL ENGINEER — FOUED ZAYATI No. C57046 Exp. 06-30-11 CIVIL — STATE OF CALIFORNIA

The State of California or its officers or agents shall not be responsible for the accuracy or completeness of electronic copies of this plan sheet.

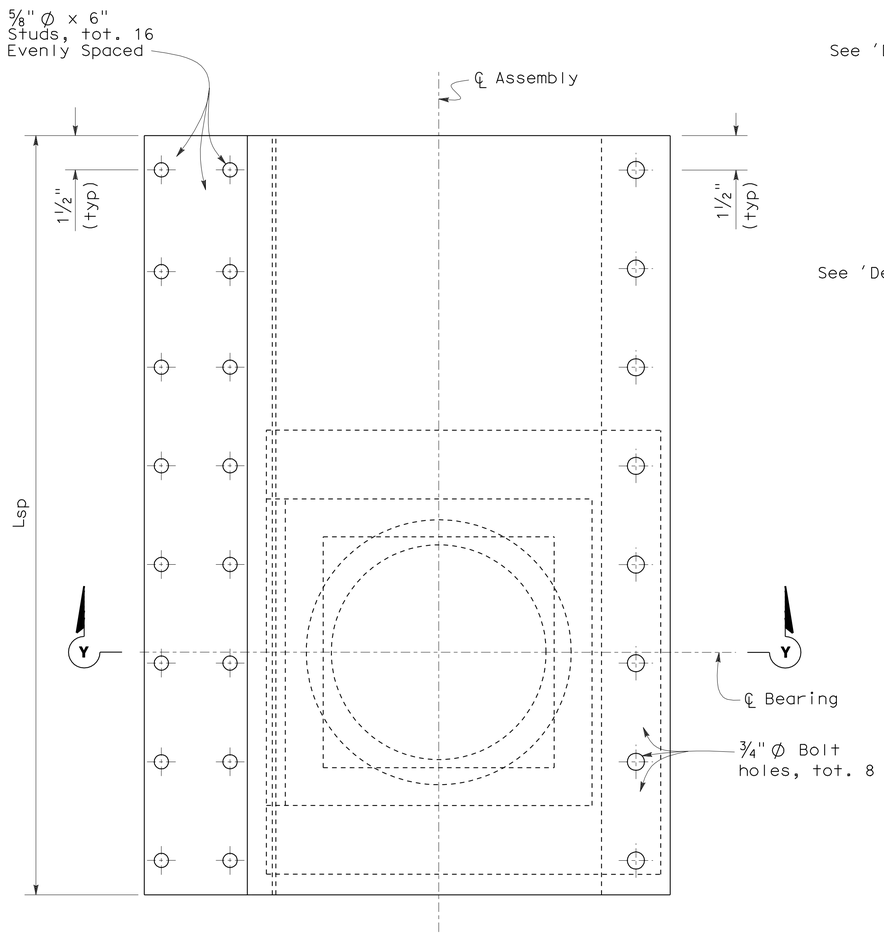

PLAN

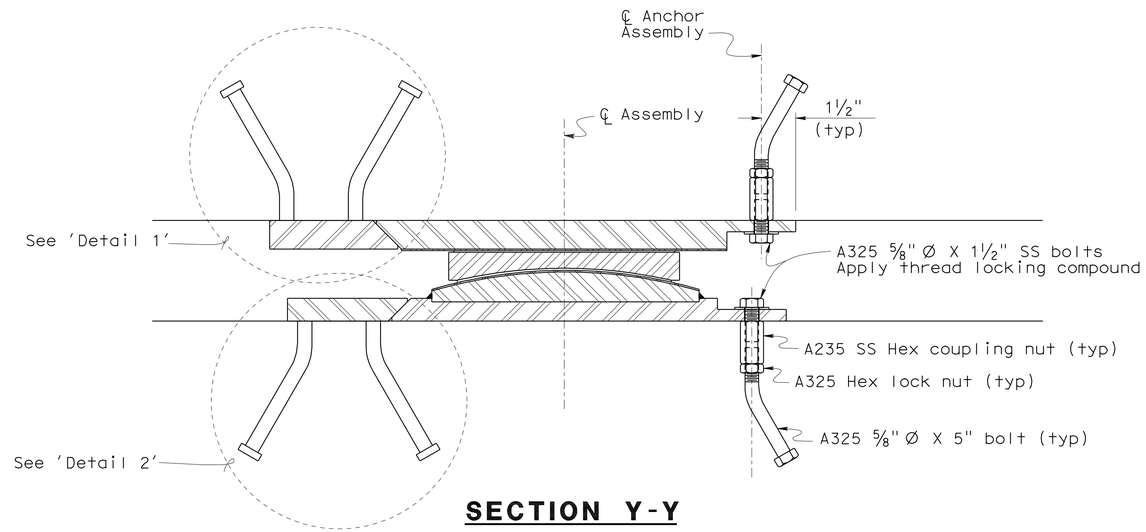

SECTION Y-Y

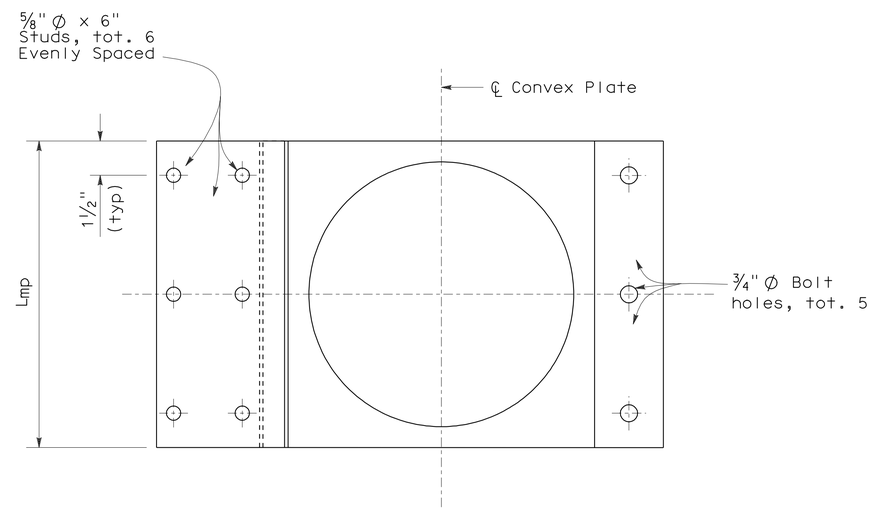

MASONRY PLATE -PLAN

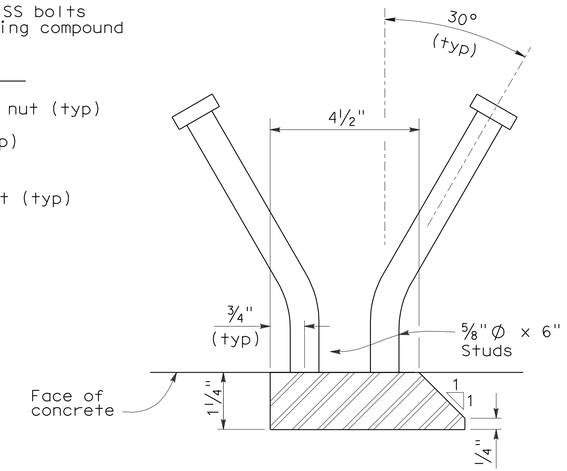

DETAIL 1

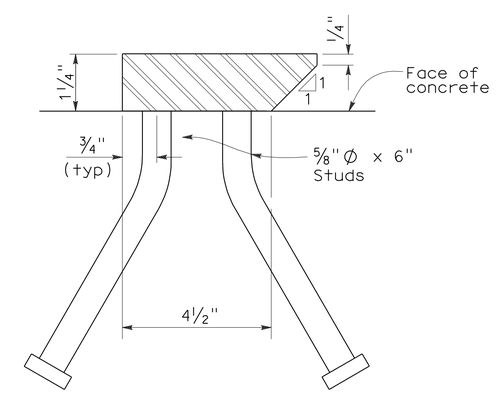

DETAIL 2

No Scale

DESIGN	BY F. Zayati	CHECKED R. Bromenschenkel	
DETAILS	BY K. Kubo	CHECKED F. Zayati	
QUANTITIES	BY F. Zayati	CHECKED R. Bromenschenkel	

STATE OF CALIFORNIA
DEPARTMENT OF TRANSPORTATION

DIVISION OF ENGINEERING SERVICES
STRUCTURE DESIGN
DESIGN BRANCH 14

BRIDGE NO. 53-3032
POST MILE 3.58

SCHUYLER HEIM BRIDGE (REPLACE)
PTFE BEARING DETAILS NO. 2

STRUCTURES DESIGN DETAIL SHEET (ENGLISH) (REV. 10/25/05)

ORIGINAL SCALE IN INCHES FOR REDUCED PLANS 0 1 2 3

CU 07-271
EA 138201

DISREGARD PRINTS BEARING EARLIER REVISION DATES 05-03-10

REVISION DATES

SHEET 153 OF 247

FILE => 53-3032-1-q-brgdt02.dgn

USERNAME => rfriehard DATE PLOTTED => 19-OCT-2010 TIME PLOTTED => 08:59

DIST	COUNTY	ROUTE	POST MILES TOTAL PROJECT	SHEET No	TOTAL SHEETS
07	LA	47,103	3.5/4.6, 0.0/1.1	656	1003

REGISTERED CIVIL ENGINEER 05-24-10 DATE

10-11-10
PLANS APPROVAL DATE

The State of California or its officers or agents shall not be responsible for the accuracy or completeness of electronic copies of this plan sheet.

REGISTERED PROFESSIONAL ENGINEER
FOUED ZAYATI
No. C57046
Exp. 06-30-11
CIVIL
STATE OF CALIFORNIA

FENDER CRITERIA

PARAMETER	UNIT	DESIGN BARGE	PARAMETER	UNIT	DESIGN BARGE
LENGTH OVERALL (LOA)	FT	170	BERTHING ANGLE	DEGREES	15
LENGTH BETWEEN PERPENDICULAR (LBP)	FT	N/A	COEFFICIENT OF ECCENTRICITY	N/A	0.92
BEAM (B)	FT	44	HYDRODYNAMIC MASS	N/A	1.3
MOULDED DEPTH (MD)	FT	11.6	SOFTNESS COEFFICIENT	N/A	1.0
DEADWEIGHT	TON	1,543	ABNORMAL BERTHING FACTOR	N/A	1.75
DISPLACEMENT AT MAXIMUM DRAFT (FLD)	TON	1,984	MAXIMUM ALLOWABLE HULL PRESSURE	KIPS/SQ.FT.	4.0
MAXIMUM DRAFT (D)	FT	ABOUT 7	MINIMUM KINETIC ENERGY	KIP-FT	6600
BALLASTED DRAFT	FT	ABOUT 4	MAXIMUM ALLOWABLE FENDER REACTION	KIP	1877
LOADED FREEBOARD	FT	4.8	MINIMUM ALLOWABLE REACTION (BREASTING LOADS)	KIP	N/A
BALLASTED FREEBOARD	FT	7.8	MAXIMUM LOAD FOR DESIGN OF SUPPORT STRUCTURE	KIP	3100
APPROACH VELOCITY NORMAL TO FACE OF WHARF (V)	FT/SEC	1.00	———	———	———

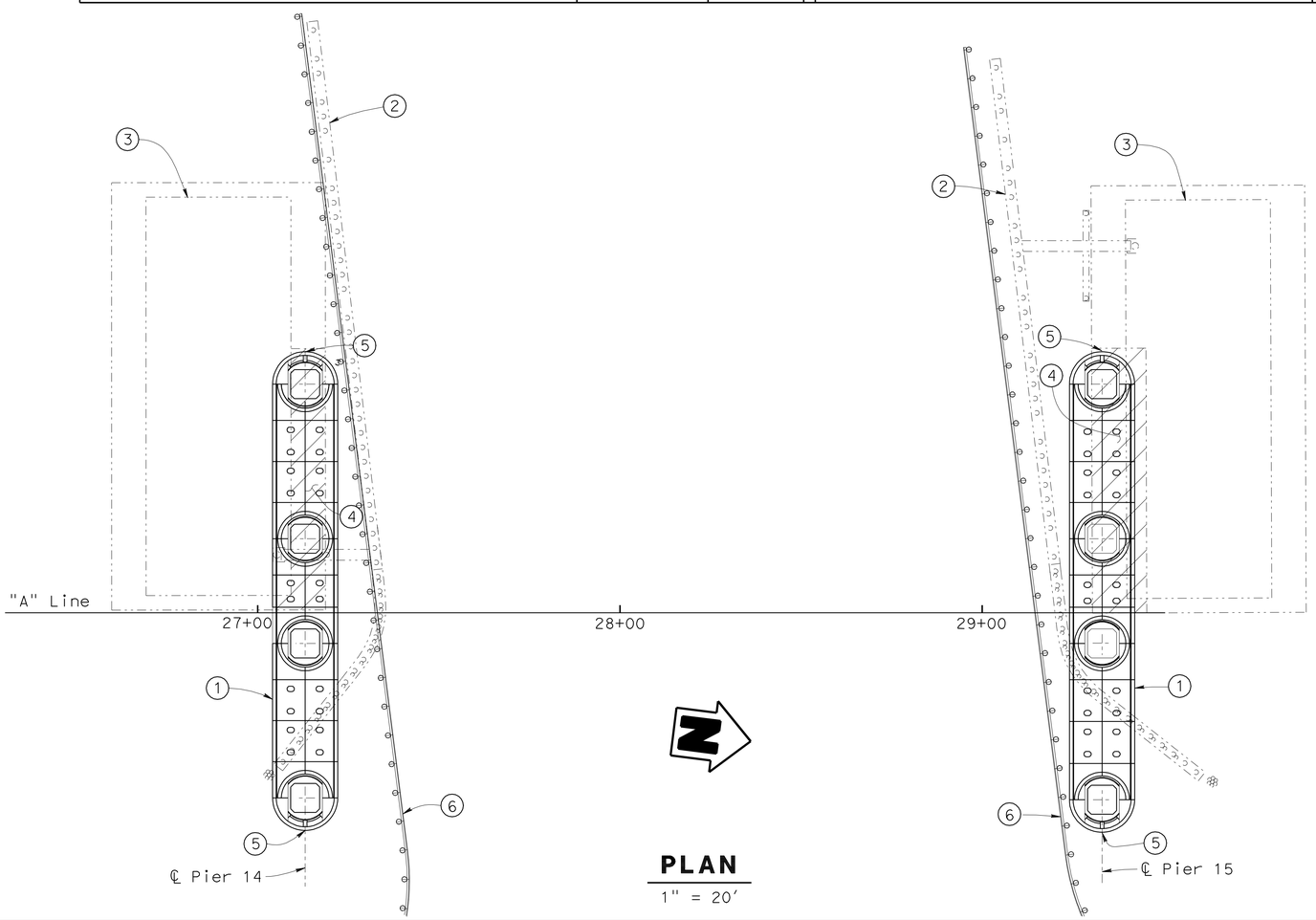

PLAN
1" = 20'

NOTES:

1. Modular Precast Concrete Fender System
2. Existing Fender system to be removed
3. Existing Pier to be removed
4. Existing Pier Foundation - remove portions
5. Fender mounted 180 degree Navigation Lights, tot. 6 See "Electrical Plans".
6. Navigational Guideway System, see "GUIDEWAY DETAILS NO. 1 and NO. 2" sheets
7. Superstructure not shown for clarity
8. The Contractor shall verify all controlling field dimensions before ordering or fabricating any material.

	BY	CHECKED
DESIGN	R. Bromenschenkel	F. Zayati
DETAILS	K. Kubo	F. Zayati
QUANTITIES	R. Bromenschenkel	F. Zayati

STATE OF CALIFORNIA
DEPARTMENT OF TRANSPORTATION

DIVISION OF ENGINEERING SERVICES
STRUCTURE DESIGN
DESIGN BRANCH 14

BRIDGE NO. 53-3032
POST MILE 3.58

SCHUYLER HEIM BRIDGE (REPLACE)
FENDER LAYOUT

STRUCTURES DESIGN DETAIL SHEET (ENGLISH) (REV. 10/25/05)

ORIGINAL SCALE IN INCHES FOR REDUCED PLANS 0 1 2 3

CU 07-271
EA 138201

DISREGARD PRINTS BEARING EARLIER REVISION DATES

REVISION DATES: 05-03-10 12-02-09 12-08-09 12-10-09 12-14-09 12-24-09 12-28-09 01-08-10 3-16-10

SHEET 154 OF 247

FILE => 53-3032-1-q-fend11o.dgn

USERNAME => trmnguye DATE PLOTTED => 21-OCT-2010 TIME PLOTTED => 14:58

DIST	COUNTY	ROUTE	POST MILES TOTAL PROJECT	SHEET No	TOTAL SHEETS
07	LA	47,103	3.5/4.6, 0.0/1.1	657	1003

REGISTERED CIVIL ENGINEER — DATE 05-24-10

10-11-10
PLANS APPROVAL DATE

REGISTERED PROFESSIONAL ENGINEER — FOUED ZAYATI — No. C57046 — Exp. 06-30-11 — CIVIL — STATE OF CALIFORNIA

The State of California or its officers or agents shall not be responsible for the accuracy or completeness of electronic copies of this plan sheet.

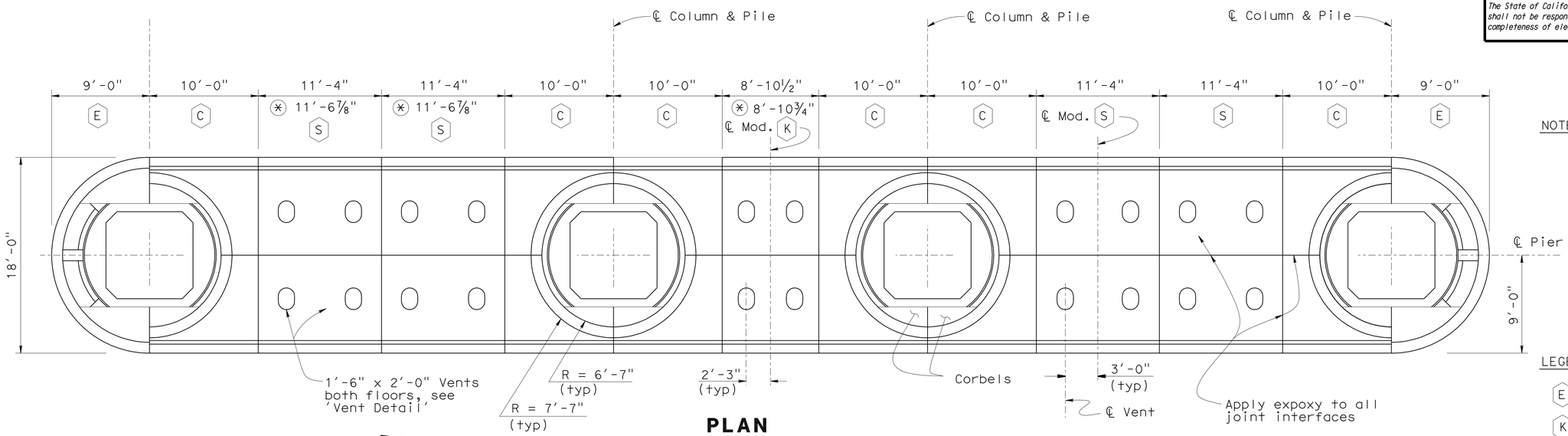

PLAN

3/16"= 1'-0"

NOTE: Cladding not shown.

LEGEND

- (E) End Module (tot. 4)
- (K) Key Module (tot. 4)
- (C) Collar Module (tot. 24)
- (S) Span Module (tot. 16)
- (*) Denotes dimension at Pier 15

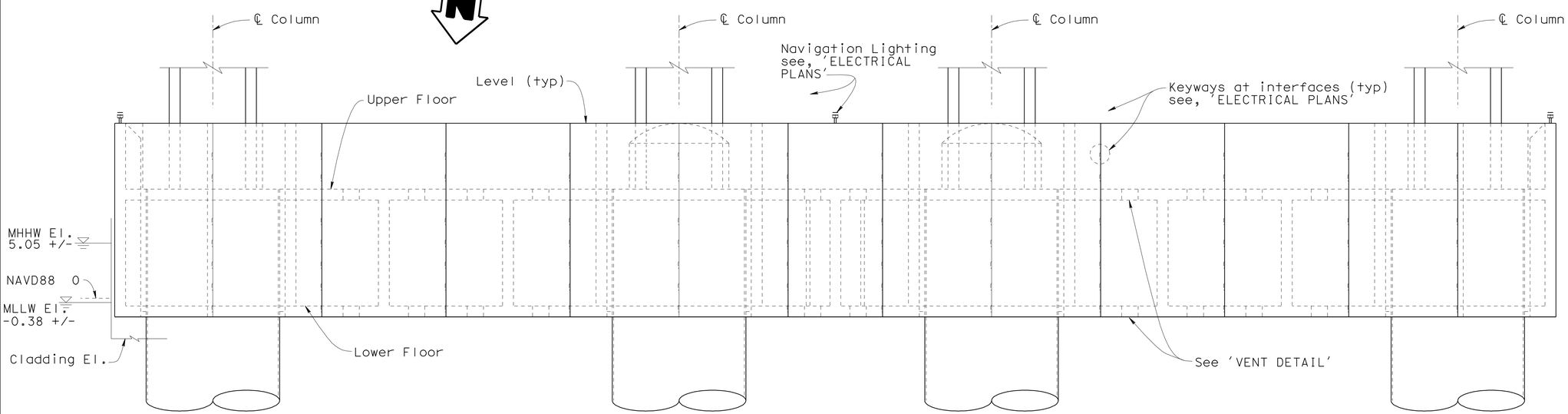

ELEVATION

3/16"= 1'-0"

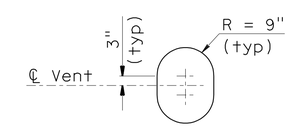

VENT DETAIL

½"= 1'-0"

NOTE:
THE CONTRACTOR SHALL VERIFY ALL CONTROLLING FIELD DIMENSIONS BEFORE ORDERING OR FABRICATING ANY MATERIAL.

	BY	CHECKED
DESIGN	R. Bromenschekel	F. Zayati
DETAILS	K. Kubo	F. Zayati
QUANTITIES	R. Bromenschekel	F. Zayati

STATE OF CALIFORNIA
DEPARTMENT OF TRANSPORTATION

DIVISION OF ENGINEERING SERVICES
STRUCTURE DESIGN
DESIGN BRANCH 14

BRIDGE NO. 53-3032
POST MILE 3.58

SCHUYLER HEIM BRIDGE (REPLACE)
FENDER DETAILS NO. 1

STRUCTURES DESIGN DETAIL SHEET (ENGLISH) (REV. 10/25/05)

ORIGINAL SCALE IN INCHES FOR REDUCED PLANS 0 1 2 3

CU 07-271
EA 138201

DISREGARD PRINTS BEARING EARLIER REVISION DATES

REVISION DATES: 12-28-09 12-28-09 01-04-10 01-06-10 01-06-10 04-14-10 4-19-10 4-23-10 05-03-10

SHEET 155 OF 247

FILE => 53-3032-1-q-fendet01.dgn

USERNAME => friehard DATE PLOTTED => 19-OCT-2010 TIME PLOTTED => 08:59

DIST	COUNTY	ROUTE	POST MILES TOTAL PROJECT	SHEET No	TOTAL SHEETS
07	LA	47,103	3.5/4.6, 0.0/1.1	658	1003

REGISTERED CIVIL ENGINEER — DATE 05-24-10

10-11-10
PLANS APPROVAL DATE

REGISTERED PROFESSIONAL ENGINEER — FOUED ZAYATI — No. C57046 — Exp. 06-30-11 — CIVIL — STATE OF CALIFORNIA

The State of California or its officers or agents shall not be responsible for the accuracy or completeness of electronic copies of this plan sheet.

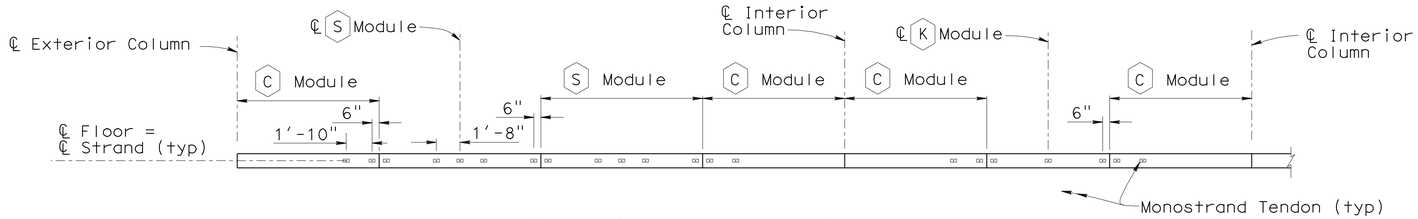

TRANSVERSE PT TENDON LAYOUT

3/16" = 1'-0"

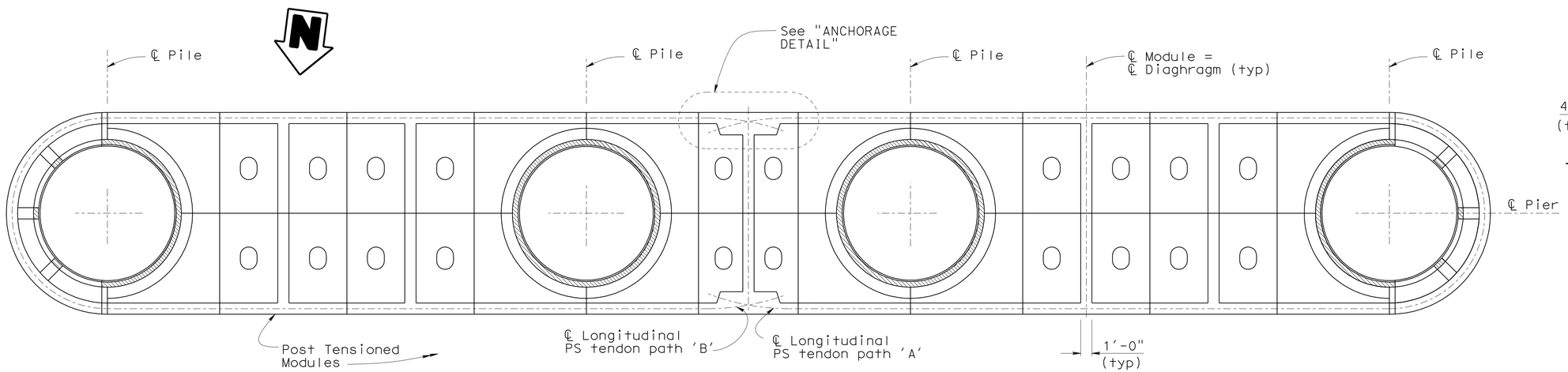

FENDER WALL LAYOUT

3/16" = 1'-0"

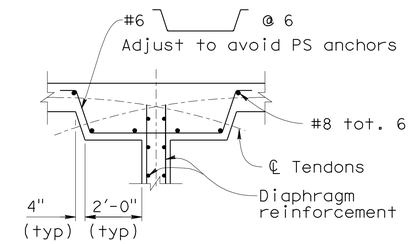

ANCHORAGE DETAIL

3/8" = 1'-0"

TRANSVERSE PRESTRESSING NOTES

1. 270 KSI Low Relaxation Strand: Epoxy coated Monostrand
2. Concrete: f'_c = 5.0 psi @ 28 days
   f'_{ci} = 3.6 psi @ time of stressing
3. P_f = Total force remaining after all losses including those due to creep, shrinkage, elastic shortening of concrete and relaxation of prestressing steel.
   P_f = 23.2 Kips/Strand
4. One end stressing. Alternate stressing end.
5. Transverse tendons shall be stressed prior to longitudinal tendons being stressed.
6. Fender shall not be lowered prior to stressing all tendons.

LONGITUDINAL PRESTRESSING NOTES

1. 270 KSI Low Relaxation Strand: Epoxy coated
2. Concrete: f'_c = 5.0 psi @ 28 days
   f'_{ci} = 3.6 psi @ time of stressing
3. P_f = Total force remaining after all losses including those due to creep, shrinkage, elastic shortening of concrete and relaxation of prestressing steel.
   P_f = 1840 Kips - Each Path
4. One end stressing. Alternate stressing end.
5. Transverse tendons shall be stressed prior to longitudinal tendons being stressed.
6. Fender shall not be lowered prior to stressing all tendons.

NOTES:

1. Structural Plastic Lumber and UHMW sheeting not shown.
2. The Contractor shall submit plans and proceedures of erecting the fender to The Engineer for review and approval. Proposed lifting points and expected loads shall be included in the submittal. Approval of the submittal is required prior to fender construction.
3. Localized allowable bearing pressure on any concrete surface used for temporary jacking shall not exceed 2000 psi.
4. Grout and grout pad thicknesses may vary to ensure fender system is level and bearing on all support locations. Jacks and/or wire ropes shall not be the final load bearing elements prior to grouting.
5. All modules are to be match cast.

Denotes grout placed between pile and modules

NOTE:
THE CONTRACTOR SHALL VERIFY ALL CONTROLLING FIELD DIMENSIONS BEFORE ORDERING OR FABRICATING ANY MATERIAL.

	BY	CHECKED
DESIGN	R. Bromenschenkel	F. Zayati
DETAILS	K. Kubo	F. Zayati
QUANTITIES	R. Bromenschenkel	F. Zayati

STATE OF CALIFORNIA
DEPARTMENT OF TRANSPORTATION

DIVISION OF ENGINEERING SERVICES
STRUCTURE DESIGN
DESIGN BRANCH 14

BRIDGE NO. 53-3032
POST MILE 3.58

SCHUYLER HEIM BRIDGE (REPLACE)
FENDER DETAILS NO. 2

STRUCTURES DESIGN DETAIL SHEET (ENGLISH) (REV. 10/25/05)

ORIGINAL SCALE IN INCHES FOR REDUCED PLANS 0 1 2 3

CU 07-271
EA 138201

DISREGARD PRINTS BEARING EARLIER REVISION DATES

REVISION DATES: 05-03-10 | 12-22-09 | 12-23-09 | 01-04-10 | 01-05-10 | 01-06-10 | 3-15-10 | 4-23-10 | 04-26-10

SHEET 156 OF 247

FILE => 53-3032-1-q-fendet02.dgn

USERNAME => friehard DATE PLOTTED => 19-Oct-2010 TIME PLOTTED => 08:53

DIST	COUNTY	ROUTE	POST MILES TOTAL PROJECT	SHEET No	TOTAL SHEETS
07	LA	47,103	3.5/4.6, 0.0/1.1	659	1003

REGISTERED CIVIL ENGINEER 05-24-10 DATE

10-11-10
PLANS APPROVAL DATE

The State of California or its officers or agents shall not be responsible for the accuracy or completeness of electronic copies of this plan sheet.

REGISTERED PROFESSIONAL ENGINEER FOUED ZAYATI No. C57046 Exp. 06-30-09 CIVIL STATE OF CALIFORNIA

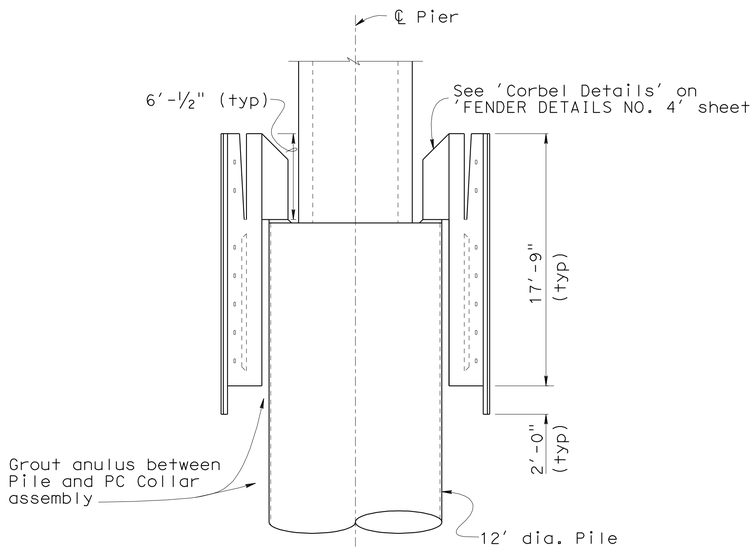

PIER SECTION
3/16" = 1'-0"

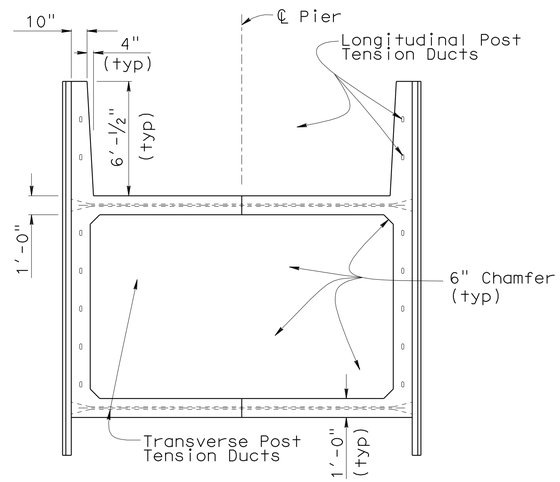

SPAN SECTION
1/4" = 1'-0"

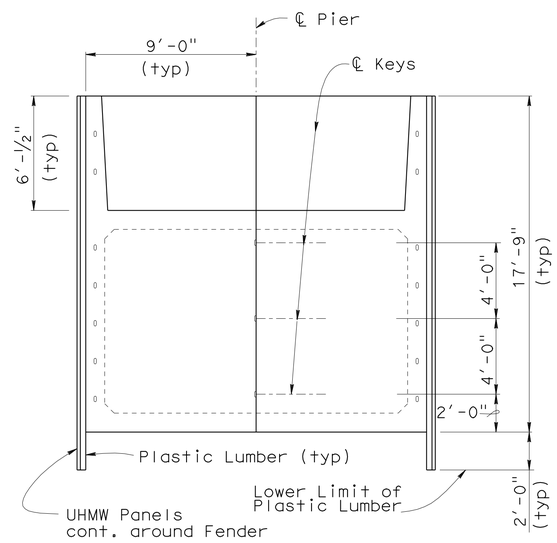

DIAPHRAGM SECTION
1/4" = 1'-0"

NOTE: UHMW Panels shall be grey in color.

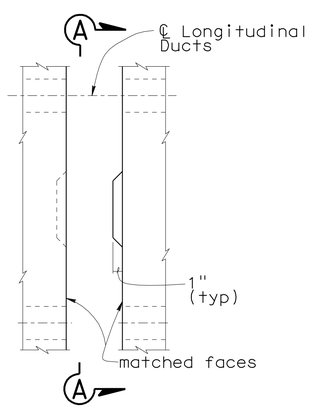

ELEVATION

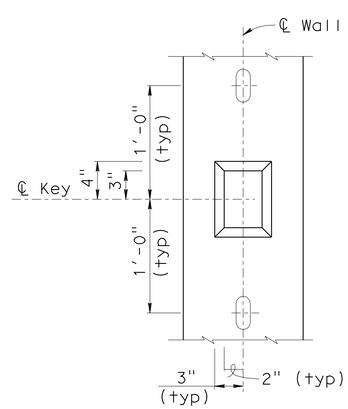

VIEW A-A

KEY DETAIL
1 1/2" = 1'-0"

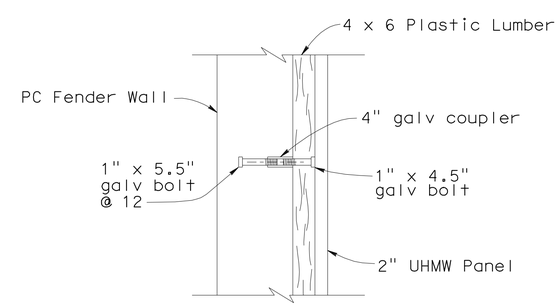

CLADDING CONNECTION DETAIL
1" = 1'-0"

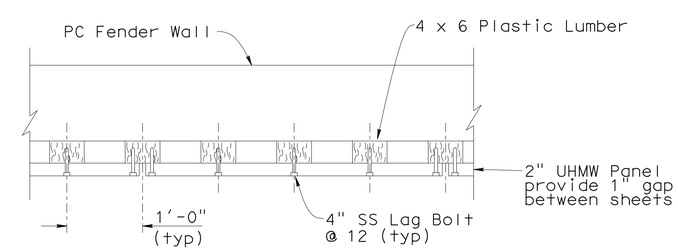

PLAN-UHMW CONNECTION DETAIL
1" = 1'-0"

	BY	CHECKED
DESIGN	R. Bromenschenkel	F. Zayati
DETAILS	K. Kubo	F. Zayati
QUANTITIES	R. Bromenschenkel	F. Zayati

STATE OF CALIFORNIA
DEPARTMENT OF TRANSPORTATION

DIVISION OF ENGINEERING SERVICES
STRUCTURE DESIGN
DESIGN BRANCH 14

BRIDGE NO. 53-3032
POST MILE 3.58

SCHUYLER HEIM BRIDGE (REPLACE)
FENDER DETAILS NO. 3

STRUCTURES DESIGN DETAIL SHEET (ENGLISH) (REV. 10/25/05)

ORIGINAL SCALE IN INCHES FOR REDUCED PLANS 0 1 2 3

CU 07
EA 238501

DISREGARD PRINTS BEARING EARLIER REVISION DATES

REVISION DATES: 4-19-10 4-20-10 4-22-10 05-05-10 06-24-10 01-04-10 01-05-10 01-06-10 01-07-10

SHEET 157 OF 247

FILE => 53-3032-1-q-fendet03.dgn

USERNAME => trlenard DATE PLOTTED => 19-OCT-2010 TIME PLOTTED => 08:59

DIST	COUNTY	ROUTE	POST MILES TOTAL PROJECT	SHEET No	TOTAL SHEETS
07	LA	47,103	3.5/4.6, 0.0/1.1	660	1003

REGISTERED CIVIL ENGINEER — 05-24-10 DATE

10-11-10
PLANS APPROVAL DATE

The State of California or its officers or agents shall not be responsible for the accuracy or completeness of electronic copies of this plan sheet.

REGISTERED PROFESSIONAL ENGINEER — FOUED ZAYATI — No. C57046 — Exp. 06-30-11 — CIVIL — STATE OF CALIFORNIA

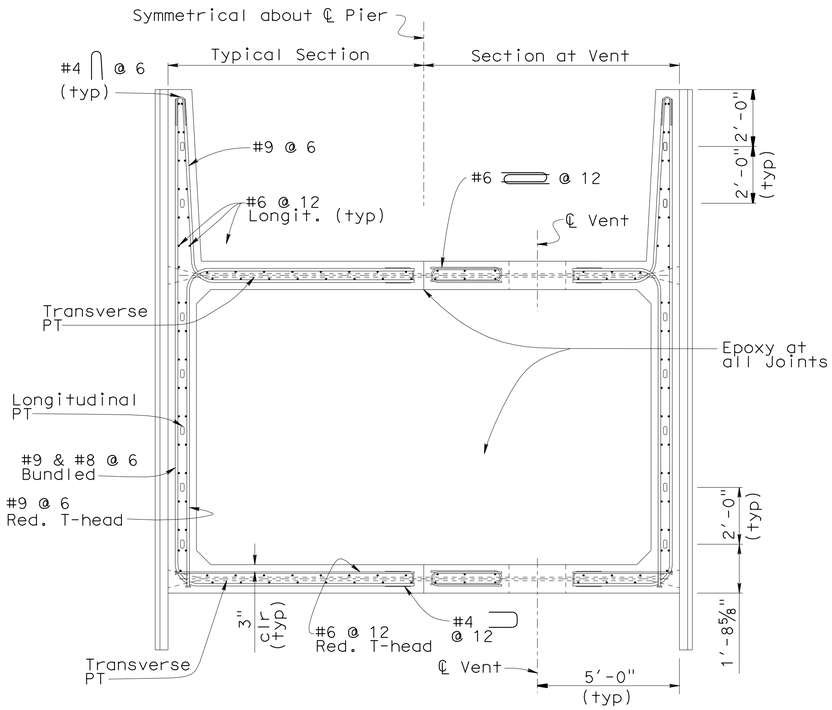

TYPICAL WALL SECTION

B7-10 U-5

⅜" = 1'-0"

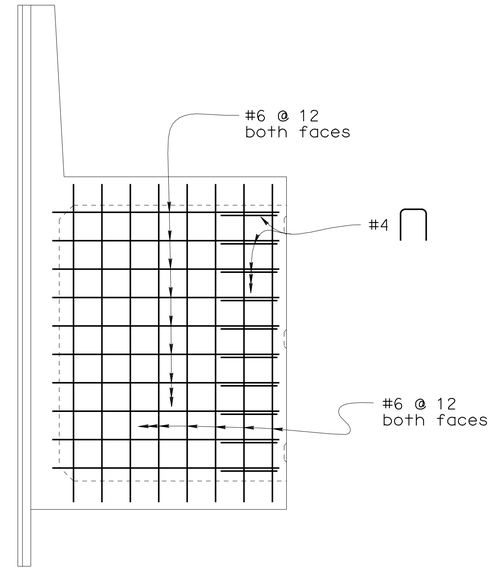

DIAPHRAGM REINFORCEMENT

⅜" = 1'-0"

NOTE: Outer wall reinf. and cladding not shown

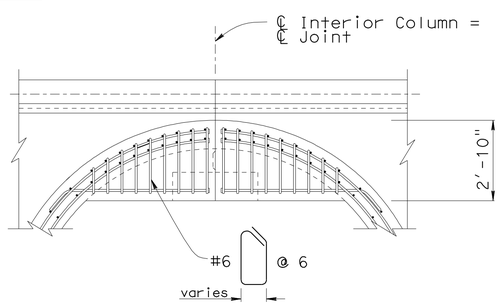

PLAN - CORBEL REINFORCEMENT

⅜" = 1'-0"

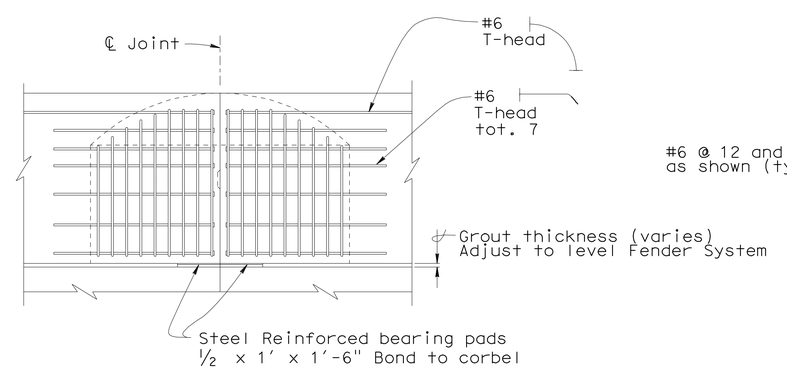

SECTION A-A

3/16" = 1'-0"

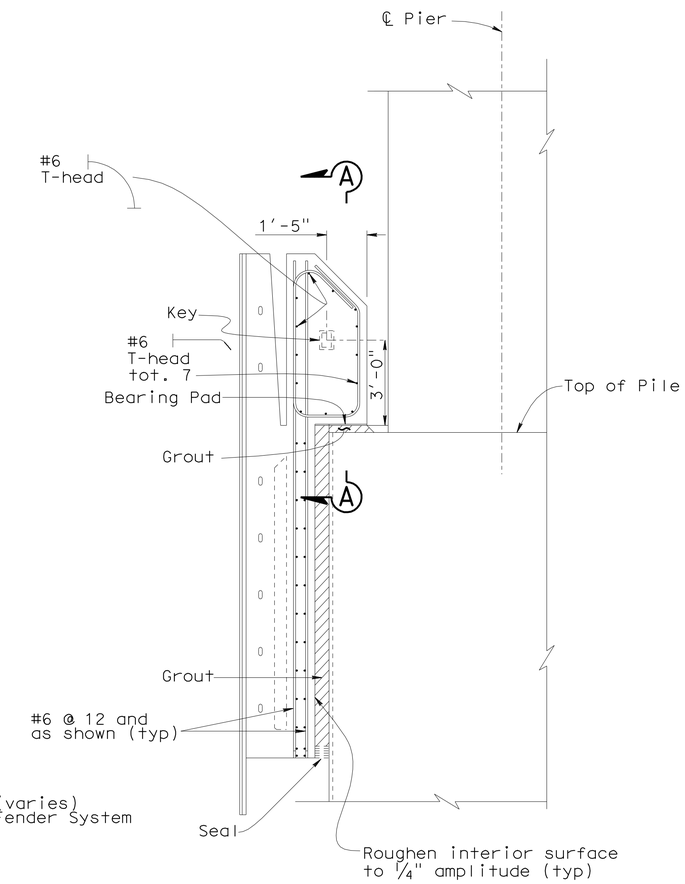

CORBEL DETAILS

⅜" = 1'-0"

	BY	CHECKED
DESIGN	R. Bromenschenkel	F. Zayati
DETAILS	K. Kubo	F. Zayati
QUANTITIES	R. Bromenschenkel	F. Zayati

STATE OF CALIFORNIA
DEPARTMENT OF TRANSPORTATION

DIVISION OF ENGINEERING SERVICES
STRUCTURE DESIGN
DESIGN BRANCH 14

BRIDGE NO. 53-3032
POST MILE 3.58

SCHUYLER HEIM BRIDGE (REPLACE)
FENDER DETAILS NO. 4

STRUCTURES DESIGN DETAIL SHEET (ENGLISH) (REV. 10/25/05)

ORIGINAL SCALE IN INCHES FOR REDUCED PLANS 0 1 2 3

CU 07-271
EA 138201

DISREGARD PRINTS BEARING EARLIER REVISION DATES

REVISION DATES: 01-04-10 01-05-10 01-07-10 1-13-10 1-20-10 05-03-10 05-06-10

SHEET 158 OF 247

FILE => 53-3032-1-q-fendet04.dgn

USERNAME => friehard DATE PLOTTED => 13-OCT-2010 TIME PLOTTED => 08:46

DIST	COUNTY	ROUTE	POST MILES TOTAL PROJECT	SHEET No	TOTAL SHEETS
07	LA	47,103	3.5/4.6, 0.0/1.1	661	1003

REGISTERED CIVIL ENGINEER 05-24-10 DATE

10-11-10
PLANS APPROVAL DATE

REGISTERED PROFESSIONAL ENGINEER FOUED ZAYATI No. C57046 Exp. 06-30-11 CIVIL STATE OF CALIFORNIA

The State of California or its officers or agents shall not be responsible for the accuracy or completeness of electronic copies of this plan sheet.

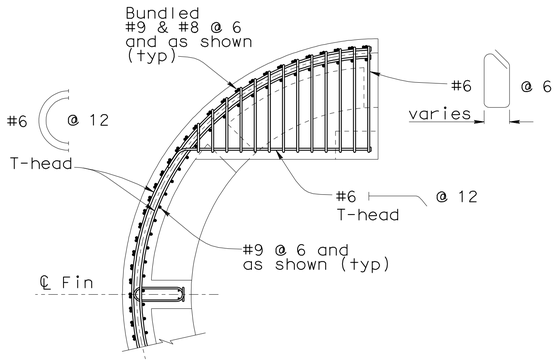

REINFORCEMENT DETAIL

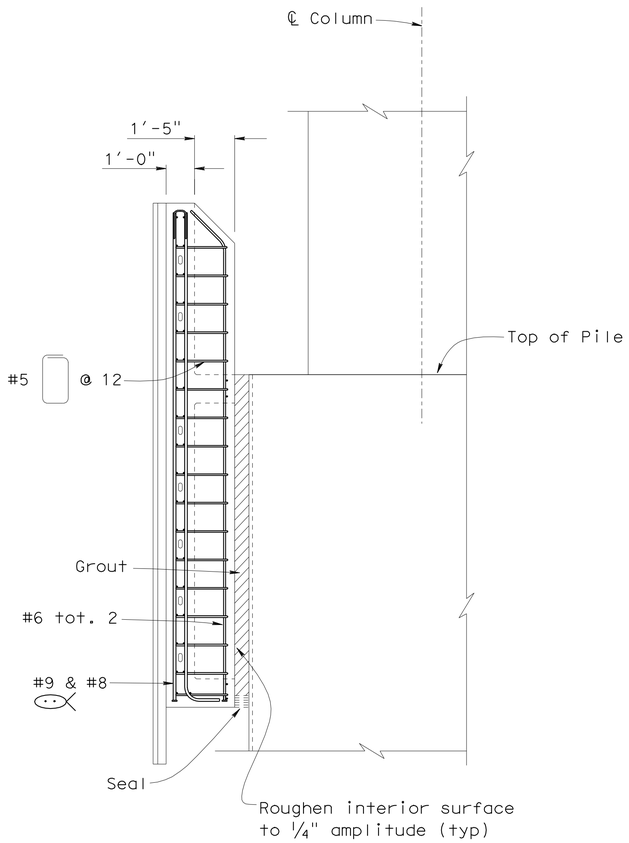

SECTION B-B

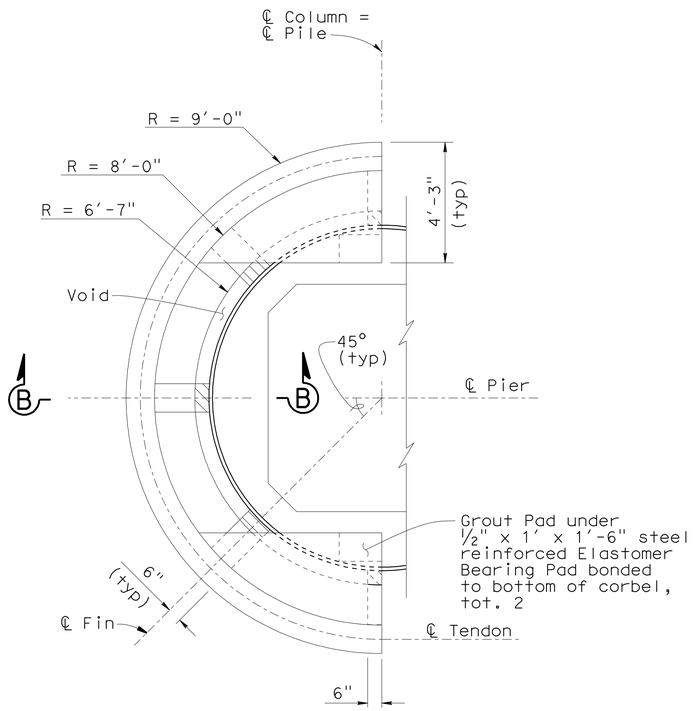

PLAN

MODULE (E) DETAILS

3/8" = 1'-0"

	BY	CHECKED
DESIGN	R. Bromenschenkel	F. Zayati
DETAILS	K. Kubo	F. Zayati
QUANTITIES	R. Bromenschenkel	F. Zayati

STATE OF CALIFORNIA
DEPARTMENT OF TRANSPORTATION

DIVISION OF ENGINEERING SERVICES
STRUCTURE DESIGN
DESIGN BRANCH 14

BRIDGE NO. 53-3032
POST MILE 3.58

SCHUYLER HEIM BRIDGE (REPLACE)
FENDER DETAILS NO. 5

STRUCTURES DESIGN DETAIL SHEET (ENGLISH) (REV. 10/25/05)

ORIGINAL SCALE IN INCHES FOR REDUCED PLANS 0 1 2 3

CU 07-271
EA 138201

DISREGARD PRINTS BEARING EARLIER REVISION DATES → 01-04-10 01-06-10 01-22-10 4-29-10 05-03-10

REVISION DATES

SHEET 159 OF 247

FILE => 53-3032-1-q-fendet05.dgn

USERNAME => friehard DATE PLOTTED => 19-OCT-2010 TIME PLOTTED => 08:46

DIST	COUNTY	ROUTE	POST MILES TOTAL PROJECT	SHEET No	TOTAL SHEETS
07	LA	47,103	3.5/4.6, 0.0/1.1	662	1003

REGISTERED CIVIL ENGINEER 05-24-10 DATE

10-11-10
PLANS APPROVAL DATE

REGISTERED PROFESSIONAL ENGINEER FOUED ZAYATI No. C57046 Exp. 06-30-11 CIVIL STATE OF CALIFORNIA

The State of California or its officers or agents shall not be responsible for the accuracy or completeness of electronic copies of this plan sheet.

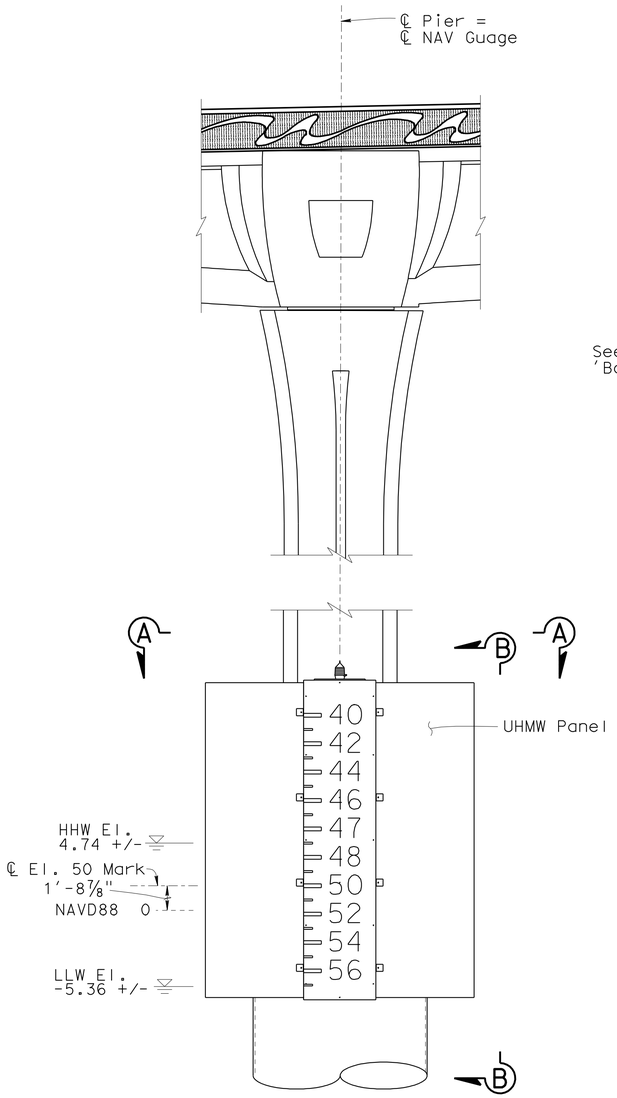

ELEVATION

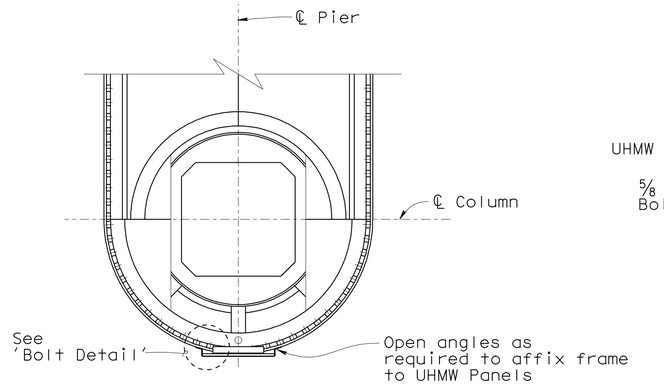

SECTION A-A

3/16"= 1'-0"

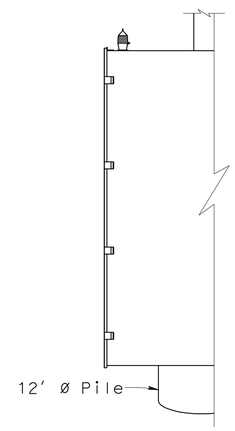

VIEW B-B

3/16"= 1'-0"

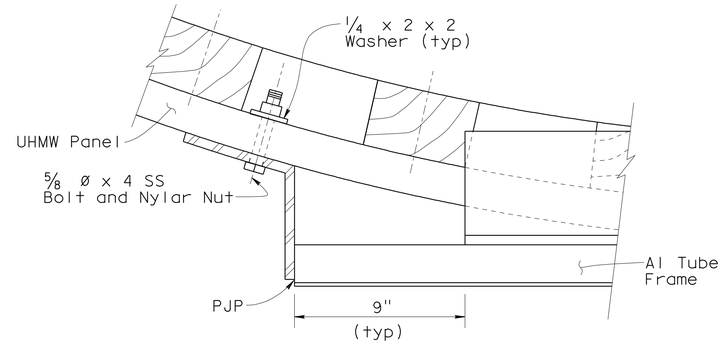

BOLT DETAIL

3"= 1'-0"

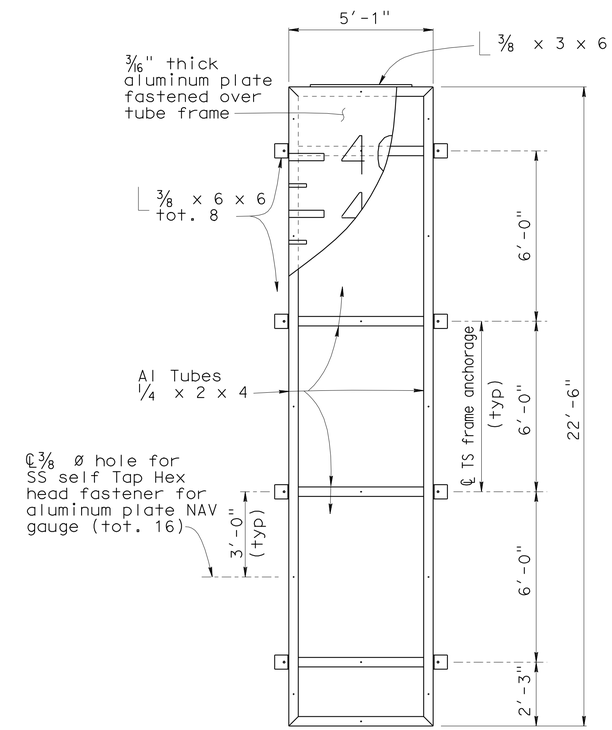

ALUMINUM TUBE FRAME

⅜"= 1'-0"

NOTES:

1. Elevation of top of Clearance Gauge at Pier 14L shall be the same as elevation determined for top of Clearance Gauge at Pier 15R.
2. All Aluminum is grade 6061 T6

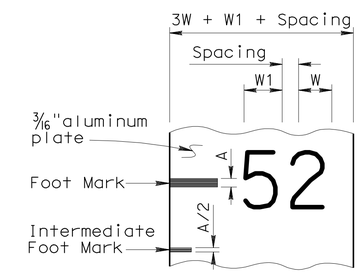

NOTE:

Size, type, and spacing of numerals shall conform to the Federal Highway Administration "STANDARD ALPHABET FOR HIGHWAY SIGNS".

LEGEND:

W Width of widest numeral (5=14.35", 0=14.90")

H Height of numeral prescribed for distance visibility (H = 18")

A Width of stroke of the numeral (A = 3.10")

W1 Width of widest first numeral (5 = 14.35", 6 = 14.35")

TYPICAL NUMERAL DETAIL

No Scale

NAVIGATIONAL GAUGE AT PIER 14(L) AND 15(R)

3/16"= 1'-0"

	BY	CHECKED
DESIGN	R. Bromenschenkel	F. Zayati
DETAILS	K. Kubo	F. Zayati
QUANTITIES	R. Bromenschenkel	F. Zayati

STATE OF CALIFORNIA
DEPARTMENT OF TRANSPORTATION

DIVISION OF ENGINEERING SERVICES
STRUCTURE DESIGN
DESIGN BRANCH 14

BRIDGE NO. 53-3032
POST MILE 3.58

SCHUYLER HEIM BRIDGE (REPLACE)
FENDER DETAILS NO. 6

STRUCTURES DESIGN DETAIL SHEET (ENGLISH) (REV. 10/25/05)

ORIGINAL SCALE IN INCHES FOR REDUCED PLANS 0 1 2 3

CU 07-271
EA 138201

DISREGARD PRINTS BEARING EARLIER REVISION DATES

REVISION DATES: 02-04-10 02-08-10 02-18-10 02-24-10 05-03-10

SHEET 160 OF 247

FILE => 53-3032-1-q-fendet06.dgn

USERNAME => friehard DATE PLOTTED => 19-OCT-2010 TIME PLOTTED => 08:46

DIST	COUNTY	ROUTE	POST MILES TOTAL PROJECT	SHEET No	TOTAL SHEETS
07	LA	47,103	3.5/4.6, 0.0/1.1	663	1003

REGISTERED CIVIL ENGINEER — DATE 05-24-10

10-11-10
PLANS APPROVAL DATE

The State of California or its officers or agents shall not be responsible for the accuracy or completeness of electronic copies of this plan sheet.

REGISTERED PROFESSIONAL ENGINEER — FOUED ZAYATI — No. C57046 — Exp. 06-30-11 — CIVIL — STATE OF CALIFORNIA

NOTES:

1. Datum - NAVD 88
2. MLLW = -0.38, MHHW = + 5.05
3. For details not shown, see "GUIDEWAY DETAILS NO. 2 and NO. 3" sheets.

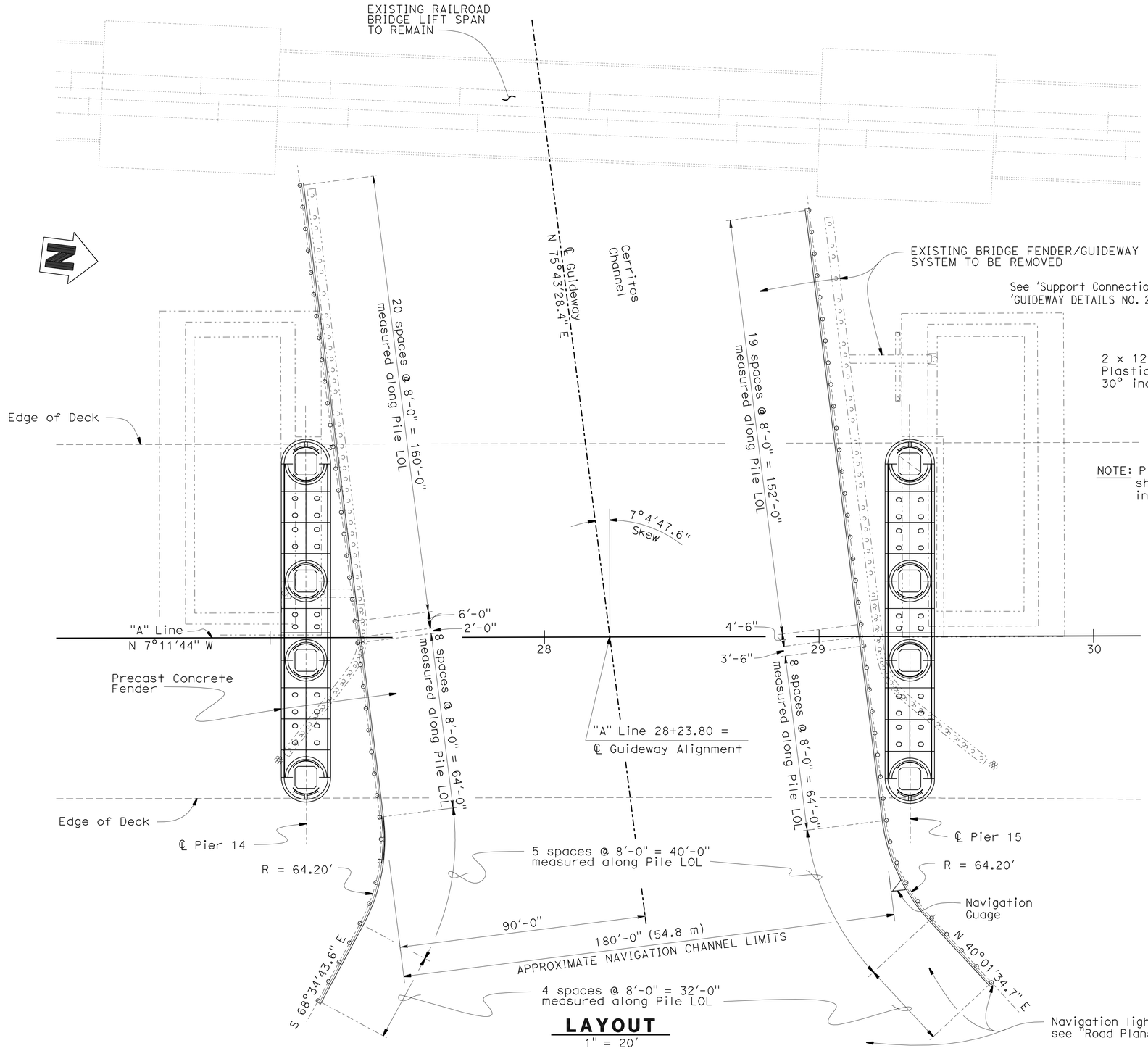

LAYOUT

1" = 20'

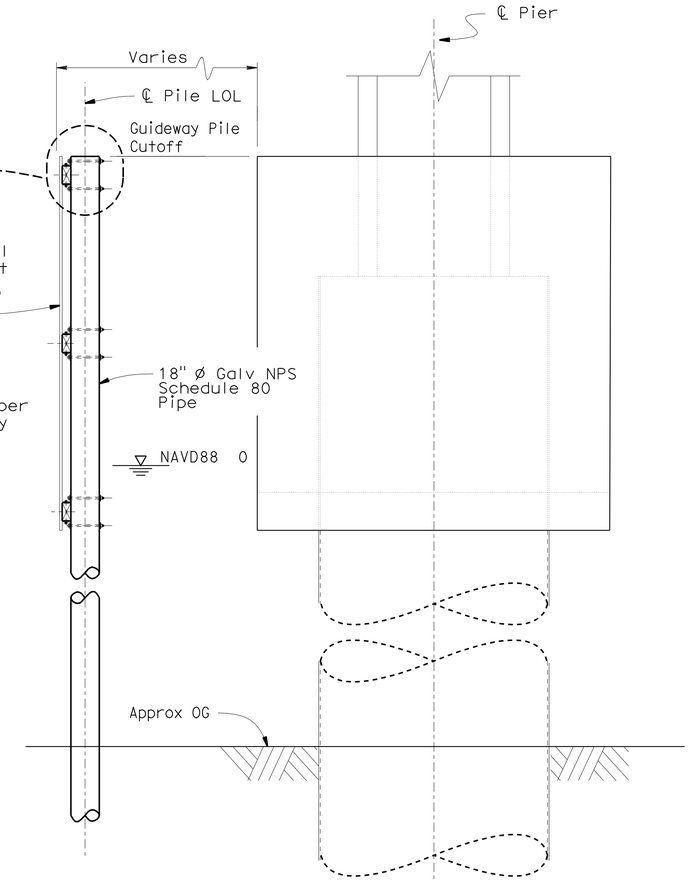

NOTE: Plastic Lumber shall be grey in color.

TYPICAL SECTION

1/4" = 1'-0"

PILE DATA TABLE

Location	Pile Type	Design Tip Elevation (ft)	Specified Tip Elevation (ft)	Top of Pile Cut-Off Elevation (ft)
Guideway	1.5 ft PP	-110.0 (d)	-110.0	15.0

NOTE:
Design Tip Elevations are controlled by the following demands: (a) Compression, and (d) Lateral Load.

	BY	CHECKED
DESIGN	R. Bromenschenkel	F. Zayati
DETAILS	Jeff Thorne	F. Zayati
QUANTITIES	R. Bromenschenkel	F. Zayati

STATE OF CALIFORNIA
DEPARTMENT OF TRANSPORTATION

DIVISION OF ENGINEERING SERVICES
STRUCTURE DESIGN
DESIGN BRANCH 14

BRIDGE NO. 53-3032
POST MILE 3.58

SCHUYLER HEIM BRIDGE (REPLACE)
GUIDEWAY DETAILS NO. 1

STRUCTURES DESIGN DETAIL SHEET (ENGLISH) (REV. 10/25/05)

ORIGINAL SCALE IN INCHES FOR REDUCED PLANS 0 1 2 3

CU 07-271
EA 138201

DISREGARD PRINTS BEARING EARLIER REVISION DATES

REVISION DATES: 03-25-10 04-02-10 04-12-10 04-14-10 05-03-10 05-13-10 06-24-10

SHEET 161 OF 247

FILE => 53-3032-1-q-guide-dts01.dgn

USERNAME => trlenard DATE PLOTTED => 19-OCT-2010 TIME PLOTTED => 08:46

DIST	COUNTY	ROUTE	POST MILES TOTAL PROJECT	SHEET No	TOTAL SHEETS
07	LA	47,103	3.5/4.6, 0.0/1.1	664	1003

REGISTERED CIVIL ENGINEER — DATE 05-24-10

10-11-10
PLANS APPROVAL DATE

The State of California or its officers or agents shall not be responsible for the accuracy or completeness of electronic copies of this plan sheet.

REGISTERED PROFESSIONAL ENGINEER — FOUED ZAYATI — No. C57046 — Exp. 06-30-11 — CIVIL — STATE OF CALIFORNIA

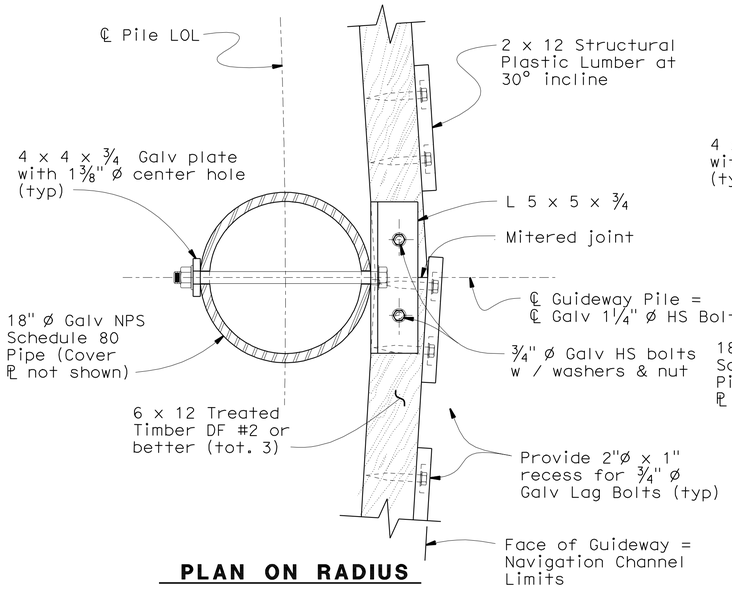

PLAN ON RADIUS

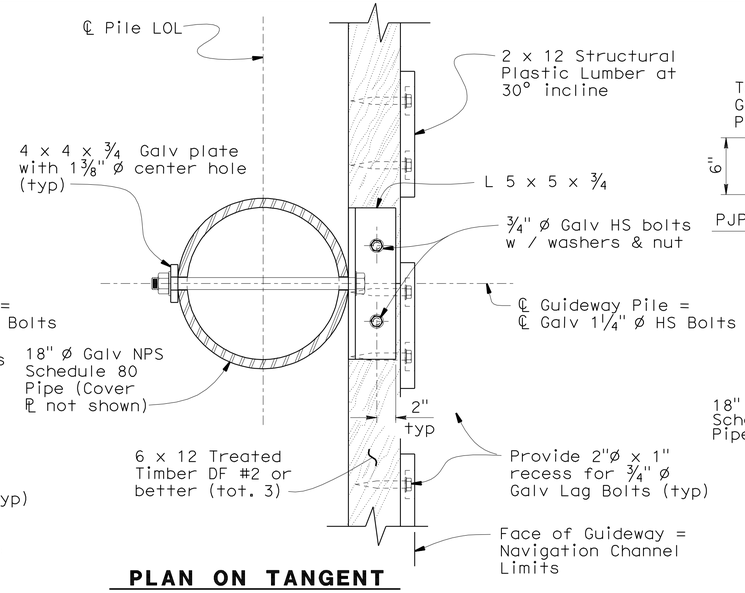

PLAN ON TANGENT

SUPPORT CONNECTION DETAIL

1½" = 1'-0"

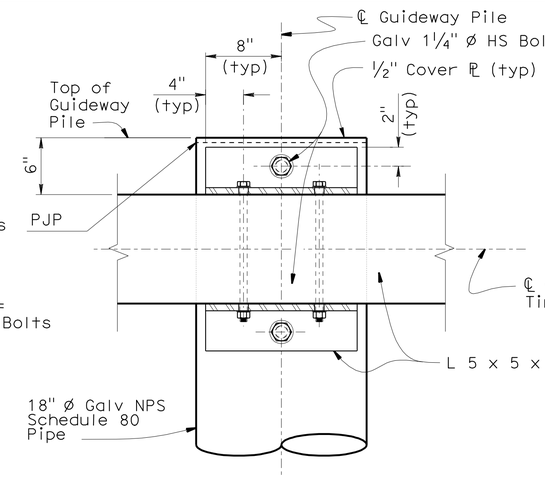

ELEVATION

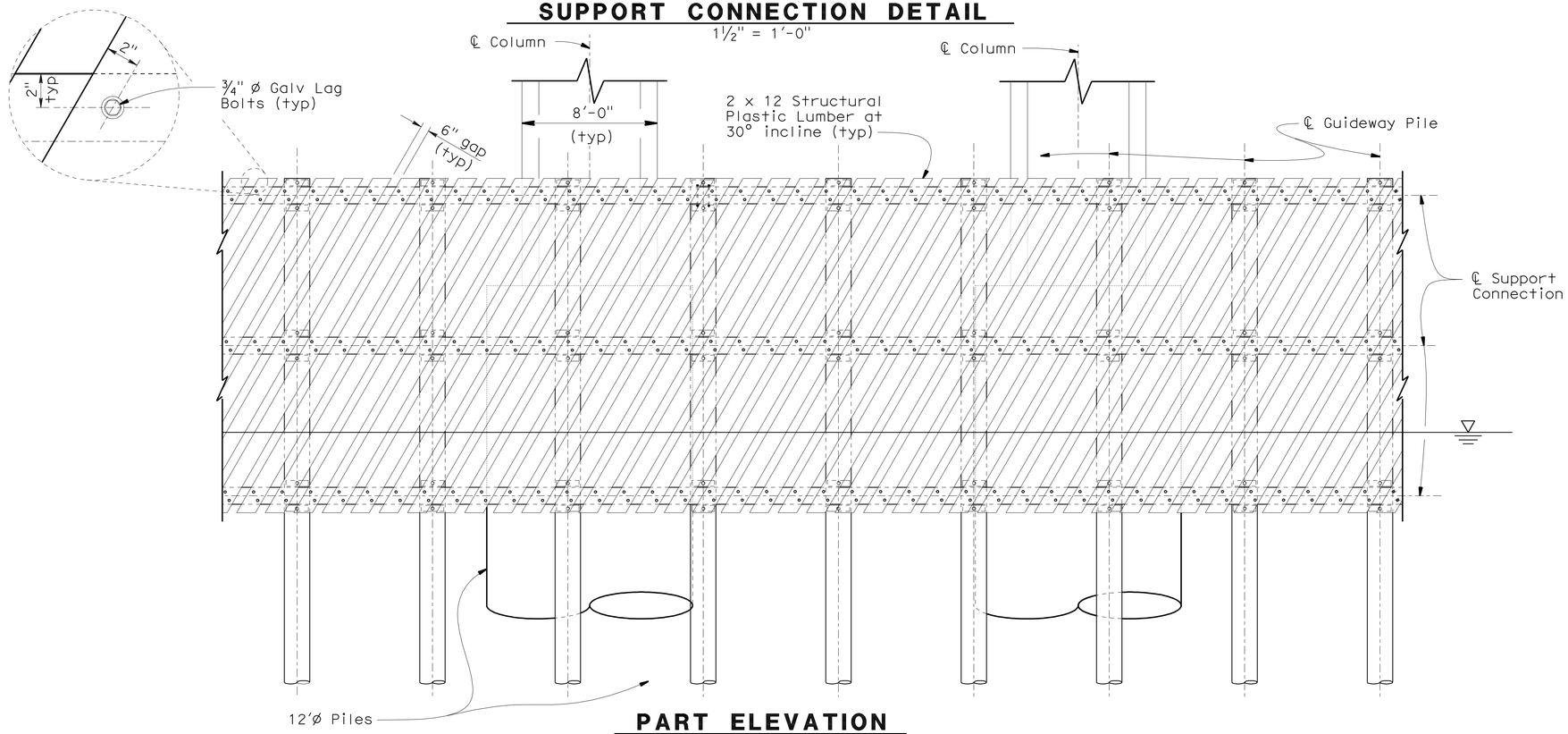

PART ELEVATION

¼" = 1'-0"

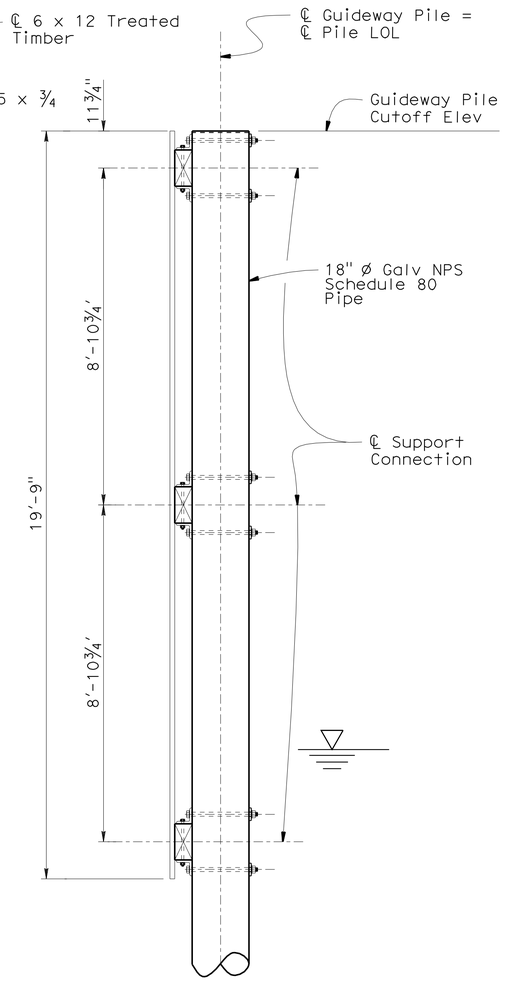

GUIDEWAY PILE ELEVATION

½" = 1'-0"

DESIGN	BY R. Bromenschenkel	CHECKED F. Zayati	
DETAILS	BY Jeff Thorne	CHECKED F. Zayati	
QUANTITIES	BY R. Bromenschenkel	CHECKED F. Zayati	

STATE OF CALIFORNIA
DEPARTMENT OF TRANSPORTATION

DIVISION OF ENGINEERING SERVICES
STRUCTURE DESIGN
DESIGN BRANCH 14

BRIDGE NO. 53-3032
POST MILE 3.58

SCHUYLER HEIM BRIDGE (REPLACE)
GUIDEWAY DETAILS NO. 2

STRUCTURES DESIGN DETAIL SHEET (ENGLISH) (REV. 10/25/05)

ORIGINAL SCALE IN INCHES FOR REDUCED PLANS 0 1 2 3

CU 07-271
EA 138201

DISREGARD PRINTS BEARING EARLIER REVISION DATES

REVISION DATES: ~~03-26-10~~ ~~04-19-10~~ ~~05-03-10~~ ~~5-18-10~~ 5-19-10

SHEET 162 OF 247

FILE => 53-3032-1-q-guide-dts02.dgn

USERNAME => trienford DATE PLOTTED => 19-OCT-2010 TIME PLOTTED => 08:46

DIST	COUNTY	ROUTE	POST MILES TOTAL PROJECT	SHEET No	TOTAL SHEETS
07	LA	47,103	3.5/4.6, 0.0/1.1	665	1003

REGISTERED CIVIL ENGINEER — DATE 05-24-10

10-11-10
PLANS APPROVAL DATE

The State of California or its officers or agents shall not be responsible for the accuracy or completeness of electronic copies of this plan sheet.

REGISTERED PROFESSIONAL ENGINEER — FOUED ZAYATI — No. C57046 — Exp. 06-30-11 — CIVIL — STATE OF CALIFORNIA

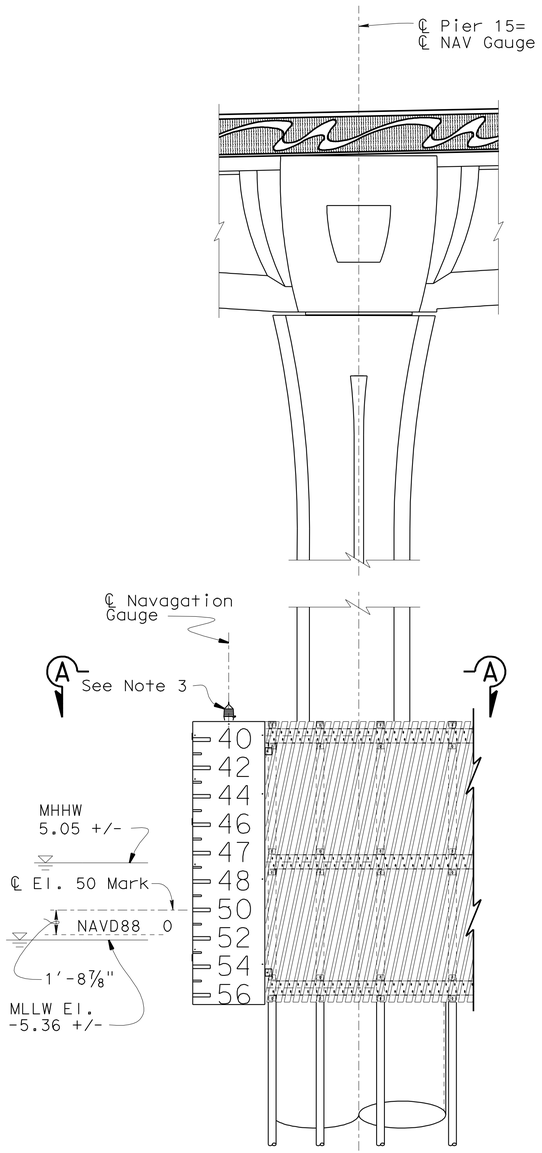

ELEVATION

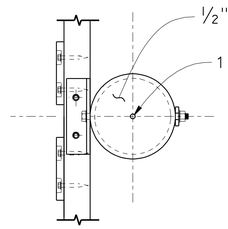

DETAIL "A"

¾"= 1'-0"

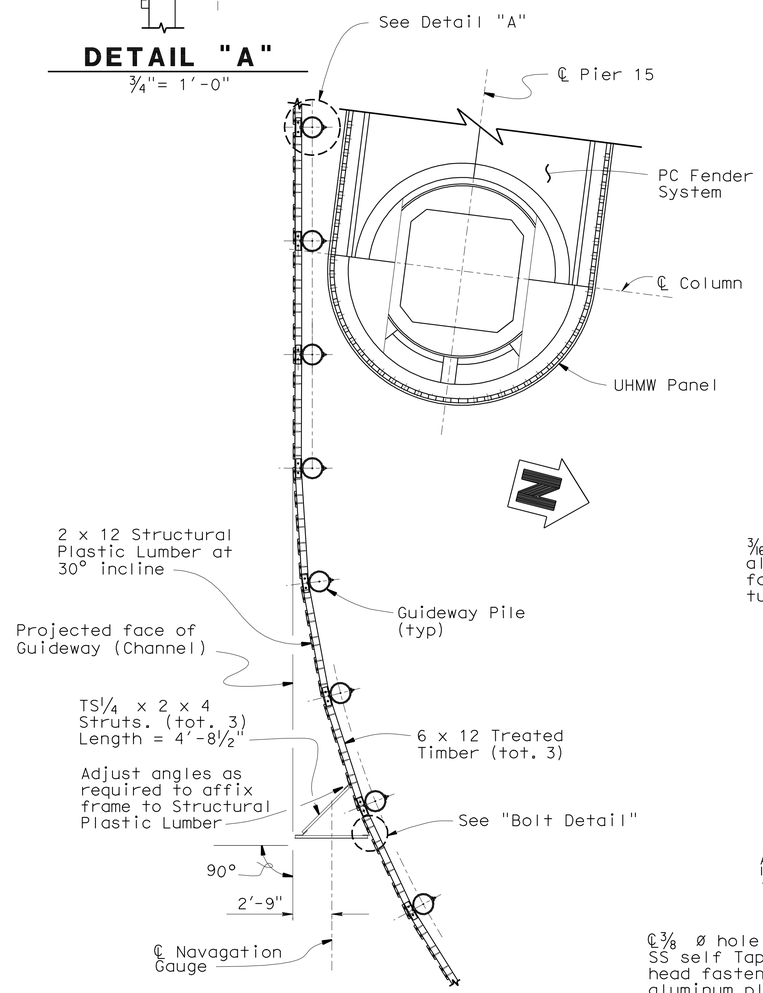

VIEW A-A

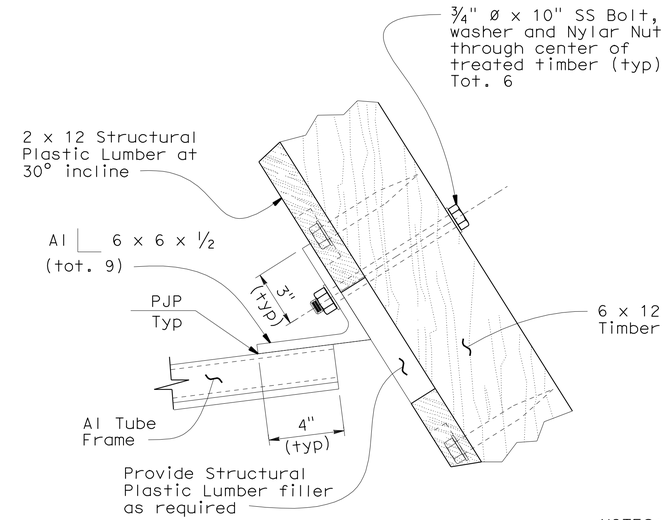

BOLT DETAIL

3"= 1'-0"

NOTES:

1. Verify clearance to soffit prior to affixing NAV Gauge to guideway.
2. All Aluminum is grade 6061 T6
3. For navigation lighs, see "Road Plans"

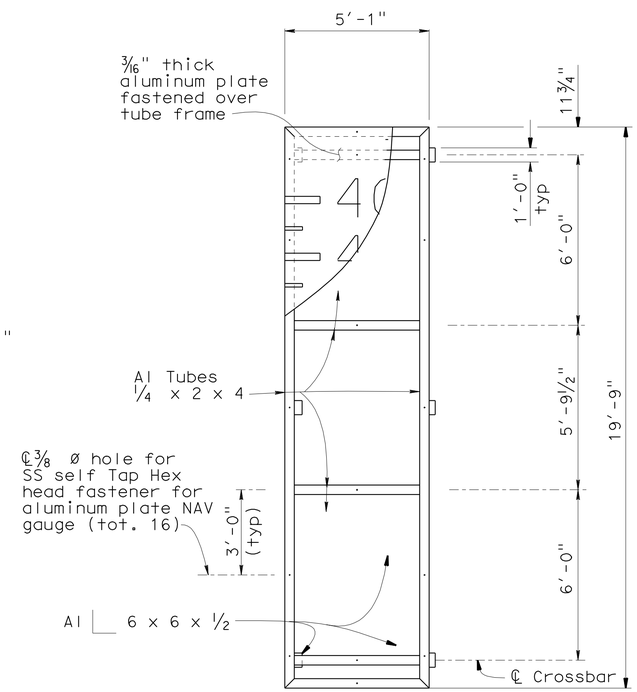

ALUMINUM TUBE FRAME

⅜"= 1'-0"

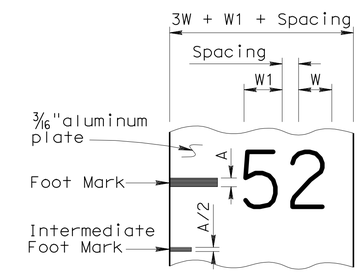

NOTE:

Size, type, and spacing of numerals shall conform to the Federal Highway Administration "STANDARD ALPHABET FOR HIGHWAY SIGNS".

LEGEND:

W Width of widest numeral (5=14.35", 0=14.90")

H Height of numeral prescribed for distance visibility (H = 18")

A Width of stroke of the numeral (A = 3.10")

W1 Width of widest first numeral (5 = 14.35", 6 = 14.35")

TYPICAL NUMERAL DETAIL

No Scale

NAVIGATIONAL GAUGE AT PIER 14(L) AND 15(R)

¾6"= 1'-0"

	BY	CHECKED
DESIGN	R. Bromenschenkel	F. Zayati
DETAILS	J. Thorne	F. Zayati
QUANTITIES	R. Bromenschenkel	F. Zayati

STATE OF CALIFORNIA
DEPARTMENT OF TRANSPORTATION

DIVISION OF ENGINEERING SERVICES
STRUCTURE DESIGN
DESIGN BRANCH 14

BRIDGE NO. 53-3032
POST MILE 3.58

SCHUYLER HEIM BRIDGE (REPLACE)
GUIDEWAY DETAILS NO. 3

STRUCTURES DESIGN DETAIL SHEET (ENGLISH) (REV. 10/25/05)

ORIGINAL SCALE IN INCHES FOR REDUCED PLANS 0 1 2 3

CU 07-271
EA 138201

DISREGARD PRINTS BEARING EARLIER REVISION DATES

REVISION DATES: ~~04-12-10~~ ~~04-19-10~~ ~~05-03-10~~ 05-10-10

SHEET 163 OF 247

FILE => 53-3032-1-q-guide-dts03.dgn

USERNAME => friehard DATE PLOTTED => 19-OCT-2010 TIME PLOTTED => 08:46

DIST	COUNTY	ROUTE	POST MILES TOTAL PROJECT	SHEET No	TOTAL SHEETS
07	LA	47,103	3.5/4.6, 0.0/1.1	666	1003

REGISTERED CIVIL ENGINEER 05-24-10 DATE

10-11-10
PLANS APPROVAL DATE

The State of California or its officers or agents shall not be responsible for the accuracy or completeness of electronic copies of this plan sheet.

REGISTERED PROFESSIONAL ENGINEER
FOUED ZAYATI
No. C57046
Exp. 06-30-11
CIVIL
STATE OF CALIFORNIA

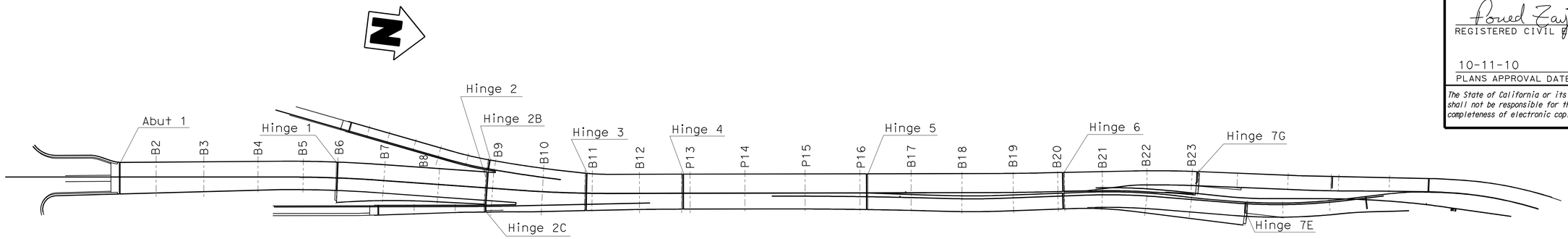

JOINT ASSEMBLY LOCATION DETAIL

1"=200'

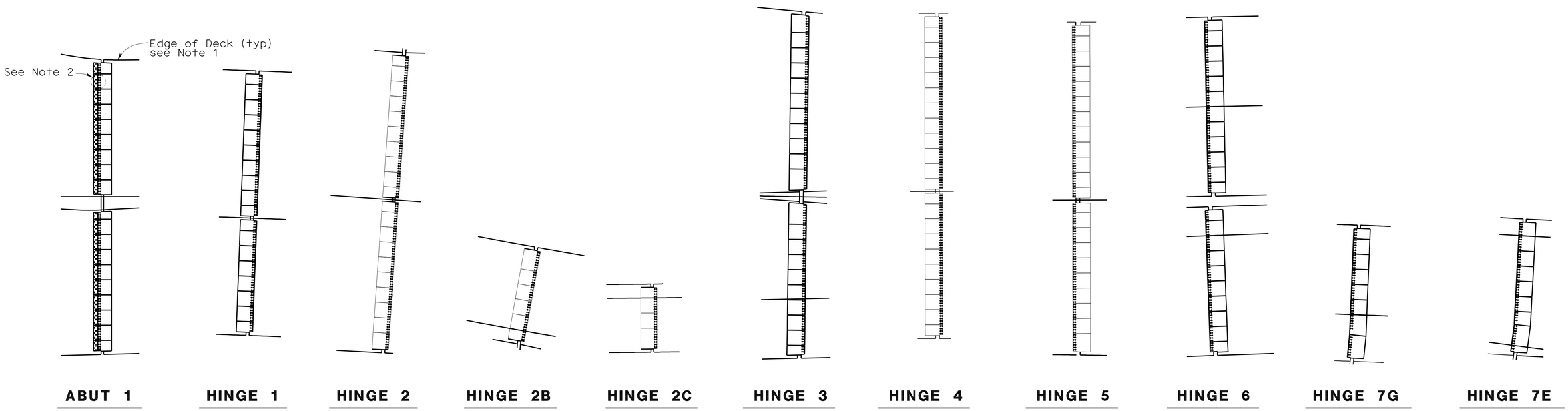

PLAN - JOINT SEAL ASSEMBLY CONFIGURATIONS

1"=20'

NOTES:

1. Barrier Rail and Barrier Cover not shown.
2. Bolt pattern indicates fixed side of assembly. See "JOINT ASSEMBLY DETAILS NO. 1" sheet.

	BY	CHECKED
DESIGN	R. Bromenschenkel	F. Zayati
DETAILS	K. Kubo	F. Zayati
QUANTITIES	R. Bromenschenkel	F. Zayati

STATE OF CALIFORNIA
DEPARTMENT OF TRANSPORTATION

DIVISION OF ENGINEERING SERVICES
STRUCTURE DESIGN
DESIGN BRANCH 14

BRIDGE NO. 53-3032
POST MILE 3.58

SCHUYLER HEIM BRIDGE (REPLACE)

JOINT SEAL ASSEMBLY LAYOUT NO. 1

STRUCTURES DESIGN DETAIL SHEET (ENGLISH) (REV. 10/25/05)

ORIGINAL SCALE IN INCHES FOR REDUCED PLANS 0 1 2 3

CU 07-271
EA 138201

DISREGARD PRINTS BEARING EARLIER REVISION DATES

REVISION DATES: ~~11-20-08~~ ~~11-25-08~~ ~~12-05-08~~ ~~05-03-10~~ ~~05-14-10~~ ~~05-18-10~~ 5-21-10

SHEET 164 OF 247

FILE => 53-3032-1-q-jtsealdet01.dgn

USERNAME => friehard DATE PLOTTED => 19-OCT-2010 TIME PLOTTED => 08:46

DIST	COUNTY	ROUTE	POST MILES TOTAL PROJECT	SHEET No	TOTAL SHEETS
07	LA	47,103	3.5/4.6, 0.0/1.1	667	1003

REGISTERED CIVIL ENGINEER 05-24-10 DATE

10-11-10
PLANS APPROVAL DATE

The State of California or its officers or agents shall not be responsible for the accuracy or completeness of electronic copies of this plan sheet.

REGISTERED PROFESSIONAL ENGINEER FOUED ZAYATI No. C57046 Exp. 06-30-11 CIVIL STATE OF CALIFORNIA

PLATE LAYOUT TABLE

Location	Joint MR	Seismic Gap Dimension	STAGE 2 Left End ℙ 'A' W1	STAGE 2 Left End ℙ 'A' W2	STAGE 2 Left End ℙ 'A' W3	STAGE 2 Number Full Plates	STAGE 2 Right End ℙ 'C' W4	STAGE 2 Right End ℙ 'C' W5	STAGE 2 Right End ℙ 'C' W6	STAGE 1 Left End ℙ 'A' W1	STAGE 1 Left End ℙ 'A' W2	STAGE 1 Left End ℙ 'A' W3	STAGE 1 Number Full Plates	STAGE 1 Right End ℙ 'C' W4	STAGE 1 Right End ℙ 'C' W5	STAGE 1 Right End ℙ 'C' W6	Deck Plate Length	Support Plate Length
Abut 1	42"	12"	4'-3"	4'-2 1/8"	4'-3 1/4"	7	5'-10 3/8"	5'-7 1/4"	5'-7 3/8"	3'-1 7/8"	2'-8 3/8"	2'-7 1/2"	8	4'-2 1/4"	4'-0 5/8"	4'-1 1/8"	5'-6"	3'-3 1/2"
Hinge 1	54"	15"	4'-2 1/4"	3'-11 1/4"	3'-11 1/4"	8	4'-2 1/4"	3'-11 1/4"	3'-11 1/4"	4'-2 1/4"	3'-11 1/4"	3'-11 1/4"	6	4'-2 1/4"	3'-11 1/4"	3'-11 1/4"	6'-6"	4'-0 1/2"
Hinge 2	54"	15"	4'-2 1/4"	3'-11 1/4"	4'-0"	8	4'-2 1/4"	3'-11 1/4"	3'-11 1/4"	4'-2 1/4"	3'-11 1/4"	3'-11 1/4"	8	6'-7 3/4"	6'-3 5/8"	6'-3 5/8"	6'-6"	4'-0 1/2"
Hinge 2B	54"	15"	8'-2 1/8"	7'-11 1/4"	7'-11 1/4"	4	4'-2 3/8"	3'-11 1/2"	4'-0"	—	—	—	—	—	—	—	6'-6"	4'-0 1/2"
Hinge 2C	54"	15"	—	—	—	—	—	—	—	4'-1 5/8"	3'-11 1/8"	3'-11 1/4"	2	8'-2 7/8"	7'-11 3/8"	7'-11 1/4"	6'-6"	4'-0 1/2"
Hinge 3	60"	18"	7'-4 3/8"	6'-8 1/8"	6'-7"	9	8'-5 1/2"	7'-11 5/8"	7'-10 7/8"	8'-7 3/4"	8'-0 7/8"	8'-0"	8	3'-11 1/4"	3'-5 3/4"	3'-5 1/4"	7'-0"	4'-3 1/2"
Hinge 4	60"	18"	4'-2 1/4"	3'-11 1/4"	3'-11 1/4"	10	4'-2 1/4"	3'-11 1/4"	3'-11 1/4"	4'-2 1/4"	3'-11 1/4"	3'-11 1/4"	8	4'-2 1/4"	3'-11 1/4"	3'-11 1/4"	7'-0"	4'-3 1/2"
Hinge 5	60"	18"	4'-2 1/4"	3'-11 1/4"	3'-11 1/4"	10	4'-2 1/4"	3'-11 1/4"	3'-11 1/4"	3'-9"	3'-8 1/4"	3'-8 1/4"	8	7'-3 3/4"	6'-11 1/8"	6'-10 3/4"	7'-0"	4'-3 1/2"
Hinge 6	60"	18"	4'-2 1/4"	3'-11 1/4"	3'-11 1/4"	10	4'-2 1/4"	3'-11 1/4"	3'-11 1/4"	4'-2 1/4"	3'-11 1/4"	3'-11 1/4"	8	4'-2 1/4"	3'-11 1/4"	3'-11 1/4"	7'-0"	4'-3 1/2"
Hinge 7G	54"	15"	4'-2 1/4"	3'-11 1/4"	3'-11 1/4"	5	8'-4" 8'-9 7/8"	— 8'-11"	7'-10 7/8" 9'-0 1/8"	—	—	—	—	—	—	—	6'-6"	4'-3 1/2"
Hinge 7E	54"	15"	—	—	—	—	—	—	—	5'-4 5/8"	5'-1 3/4"	5'-1 7/8"	5	5'-7 1/8" 10'-7"	— 10'-7 1/4"	5'-2 5/8" 10'-8 1/8"	6'-6"	4'-0 1/2"

Note:

1. Eye bolts may be used at set screw locations for lifting of cover plates.
2. For 'Detail A' see "ABUTMENT JOINT SEAL ASSEMBLY DETAILS NO. 1" sheet.

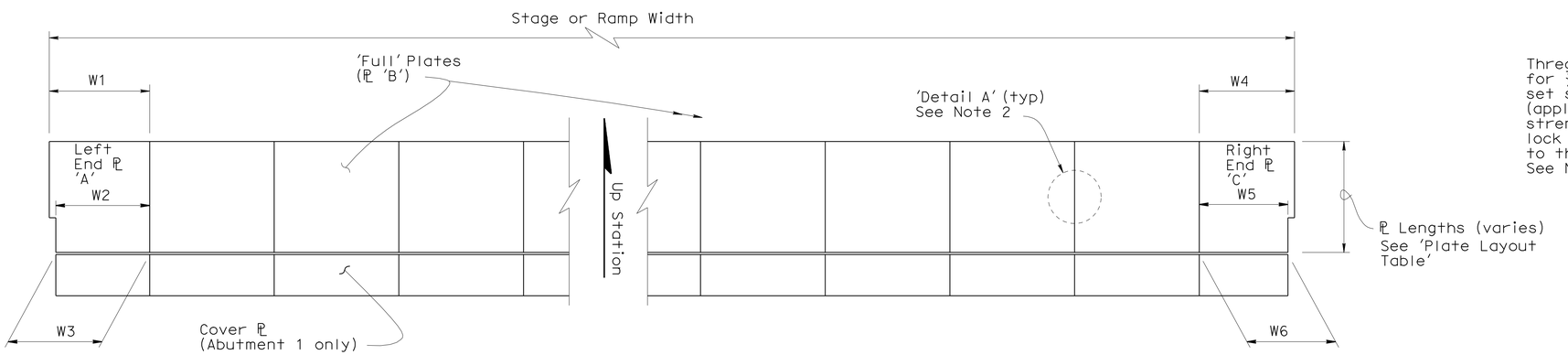

PLAN - PLATE LAYOUT DETAIL

No Scale

NOTE: Bolt layout not shown.

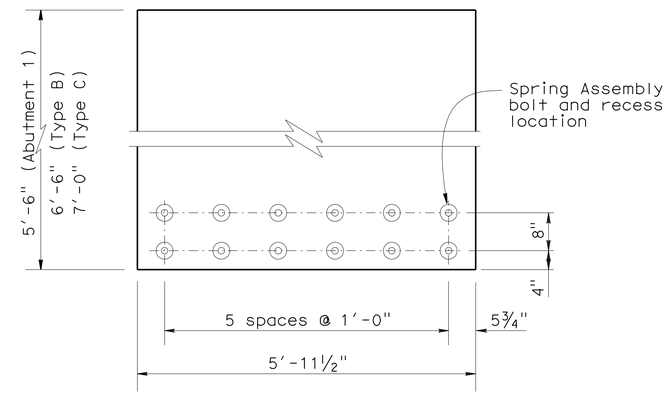

FULL PLATE (ℙ 'B')

No Scale

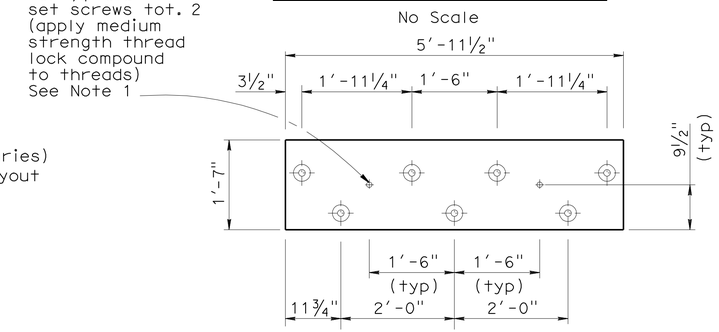

COVER PLATE B

No Scale

DESIGN	BY R. Bromenschenkel	CHECKED F. Zayati	
DETAILS	BY K. Kubo/M. Lane	CHECKED F. Zayati	
QUANTITIES	BY R. Bromenschenkel	CHECKED F. Zayati	

STATE OF CALIFORNIA
DEPARTMENT OF TRANSPORTATION

DIVISION OF ENGINEERING SERVICES
STRUCTURE DESIGN
DESIGN BRANCH 14

BRIDGE NO. 53-3032
POST MILE 3.58

SCHUYLER HEIM BRIDGE (REPLACE)
JOINT SEAL ASSEMBLY LAYOUT NO. 2

STRUCTURES DESIGN DETAIL SHEET (ENGLISH) (REV. 10/25/05)

ORIGINAL SCALE IN INCHES FOR REDUCED PLANS 0 1 2 3

CU 07-271
EA 138201

DISREGARD PRINTS BEARING EARLIER REVISION DATES

REVISION DATES: 05-24-10 5-23-10 6-28-10 07-15-10 05-14-10 05-18-10 5-20-10 5-23-10

SHEET 165 OF 247

FILE => 53-3032-1-q-jtsealdet02.dgn

USERNAME => friehard DATE PLOTTED => 19-OCT-2010 TIME PLOTTED => 08:47

DIST	COUNTY	ROUTE	POST MILES TOTAL PROJECT	SHEET No	TOTAL SHEETS
07	LA	47,103	3.5/4.6, 0.0/1.1	668	1003

REGISTERED CIVIL ENGINEER 05-24-10 DATE

10-11-10
PLANS APPROVAL DATE

REGISTERED PROFESSIONAL ENGINEER FOUED ZAYATI No. C57046 Exp. 06-30-11 CIVIL STATE OF CALIFORNIA

The State of California or its officers or agents shall not be responsible for the accuracy or completeness of electronic copies of this plan sheet.

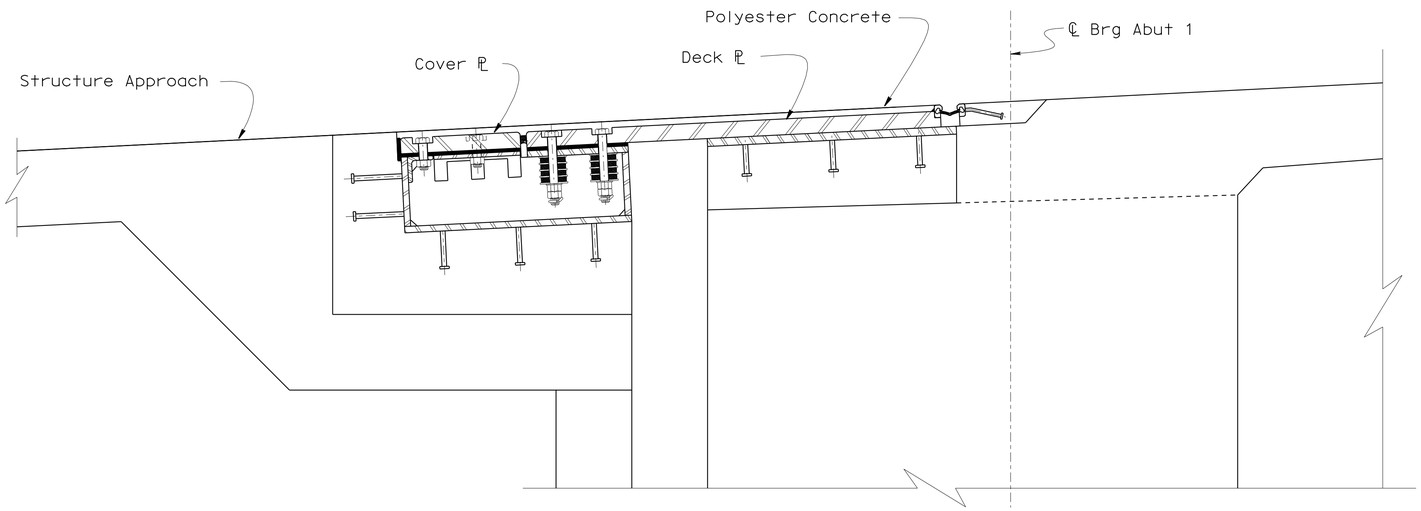

ELEVATION TYPE 'A'
1" = 1'

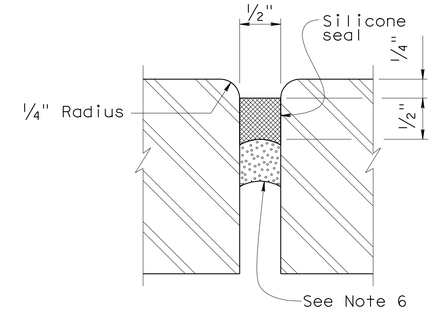

DETAIL A
1' = 1'-0"

NOTES:

1. For plates A and C, see "ABUTMENT JOINT SEAL ASSEMBLY DETAILS NO 4" sheet
2. For plate B see "JOINT SEAL ASSEMBLY LAYOUT NO. 2" sheet.
3. For 'Section P-P', and 'Section Q-Q', see "ABUTMENT JOINT SEAL ASSEMBLY DETAILS NO 3" sheet.
4. For Structure Approach Reinforcement in the blockout area, see "STRUCTURE APPROACH TYPE N(30S)" sheet.
5. For Abutment Diaphragm Reinforcement in the blockout area, see "ABUTMENT DETAILS" sheet.
6. Glazed polyethelene foam or glazed open cell backer rod. Uncompressed width/diameter to be 25% greater than actual groove width.

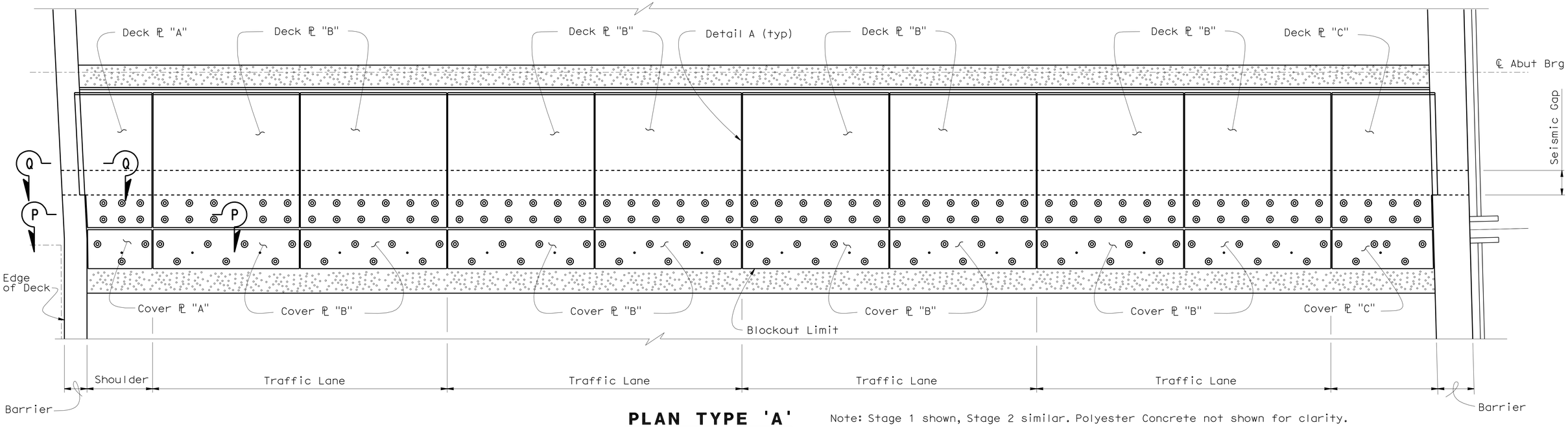

PLAN TYPE 'A'
1/2" = 1'

Note: Stage 1 shown, Stage 2 similar. Polyester Concrete not shown for clarity.

	BY	CHECKED
DESIGN	F. Zayati	R. Bromenschenkel
DETAILS	K. Kubo/M. Lane	F. Zayati
QUANTITIES	V. Ramakrishnan	J. Lane

STATE OF CALIFORNIA
DEPARTMENT OF TRANSPORTATION

DIVISION OF ENGINEERING SERVICES
STRUCTURE DESIGN
DESIGN BRANCH 14

BRIDGE NO. 53-3032
POST MILE 3.58

SCHUYLER HEIM BRIDGE (REPLACE)
ABUTMENT JOINT SEAL ASSEMBLY DETAILS NO. 1

STRUCTURES DESIGN DETAIL SHEET (ENGLISH) (REV. 10/25/05)

ORIGINAL SCALE IN INCHES FOR REDUCED PLANS 0 1 2 3

CU 07-271
EA 138201

DISREGARD PRINTS BEARING EARLIER REVISION DATES

REVISION DATES: 01-12-10, 05-14-10, 05-14-10, 5-20-10, 5-21-10, 5-22-10, 5-28-10, 6-28-10

SHEET 166 OF 247

FILE => 53-3032-1-q-jtsealdet03.dgn

USERNAME => rtrienord DATE PLOTTED => 19-OCT-2010 TIME PLOTTED => 08:47

DIST	COUNTY	ROUTE	POST MILES TOTAL PROJECT	SHEET No	TOTAL SHEETS
07	LA	47,103	3.5/4.6, 0.0/1.1	669	1003

REGISTERED CIVIL ENGINEER — DATE 05-24-10

10-11-10
PLANS APPROVAL DATE

REGISTERED PROFESSIONAL ENGINEER — FOUED ZAYATI No. C57046 Exp. 06-30-11 CIVIL — STATE OF CALIFORNIA

The State of California or its officers or agents shall not be responsible for the accuracy or completeness of electronic copies of this plan sheet.

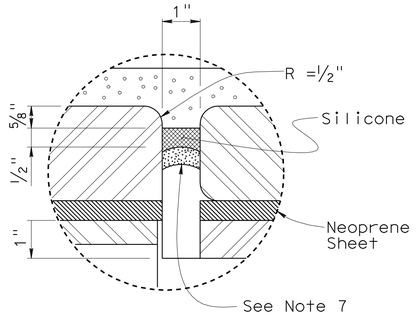

DETAIL B

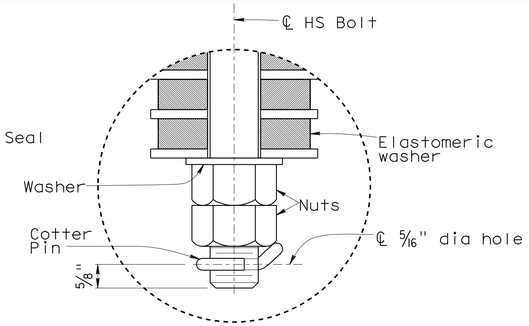

DETAIL C

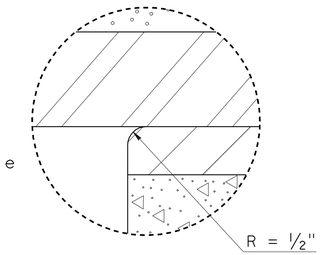

DETAIL D

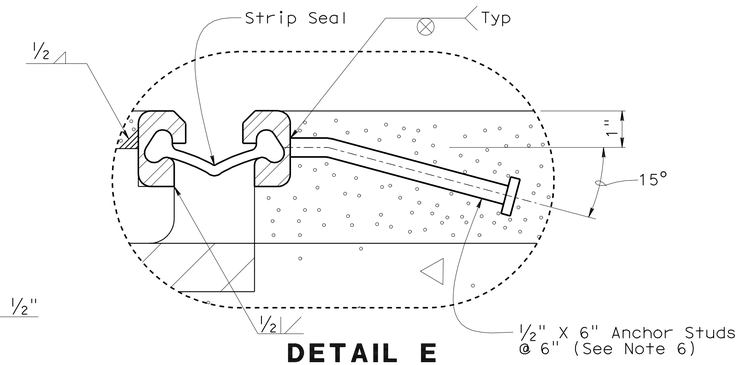

DETAIL E

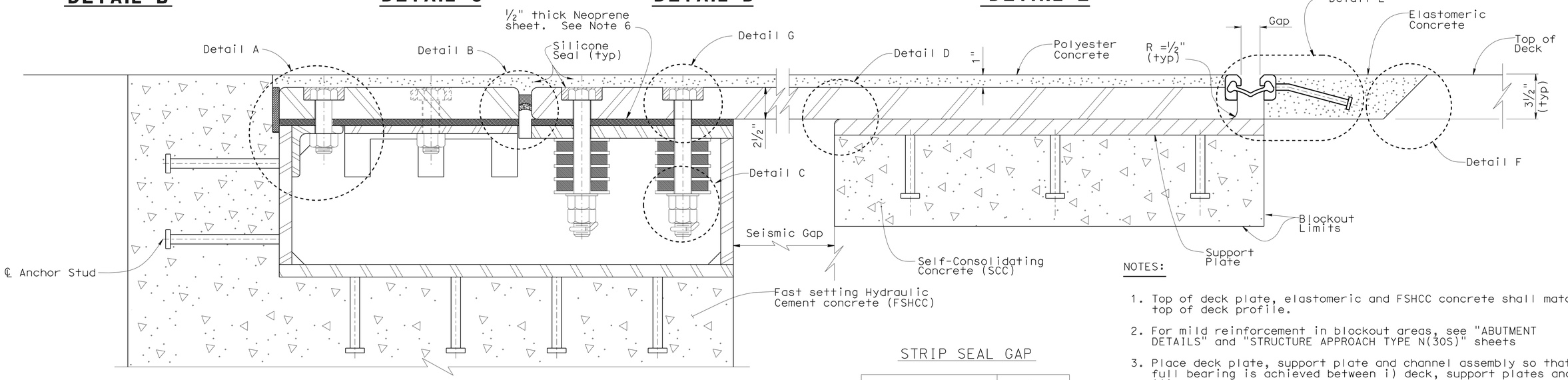

ELEVATION

STRIP SEAL GAP

Season	Gap
Summer	1.0"
Winter	2.5"
Fall/ Spring	1.75"

NOTES:

1. Top of deck plate, elastomeric and FSHCC concrete shall match top of deck profile.
2. For mild reinforcement in blockout areas, see "ABUTMENT DETAILS" and "STRUCTURE APPROACH TYPE N(30S)" sheets
3. Place deck plate, support plate and channel assembly so that full bearing is achieved between i) deck, support plates and ii)deck plate and channel assembly.
4. Strip seal shall be one continuous piece. No field splice shall be permitted.
5. Strip seal shall have a movement rating of 4", manufactured specifically for highway bridges.
6. The strip seal gap shall be set at the time of installation in accordance with values shown.
7. The strip seal and associated elastomeric concrete shall be installed at least 120 days after completion of the superstructure post-tensioning.
8. Asphalt concrete shall be used to protect the blockout prior to strip seal installation.
9. Prior to installation of the strip seal and the elastomeric concrete, remove asphalt concrete and clean blockout
10. Punch 1 1/2" diameter holes in neoprene sheet for HS bolts prior to installation.
11. Glazed polyethylene foam or glazed open cell backer rod. Uncompressed width (diameter) to be 25% greater than actual groove width.

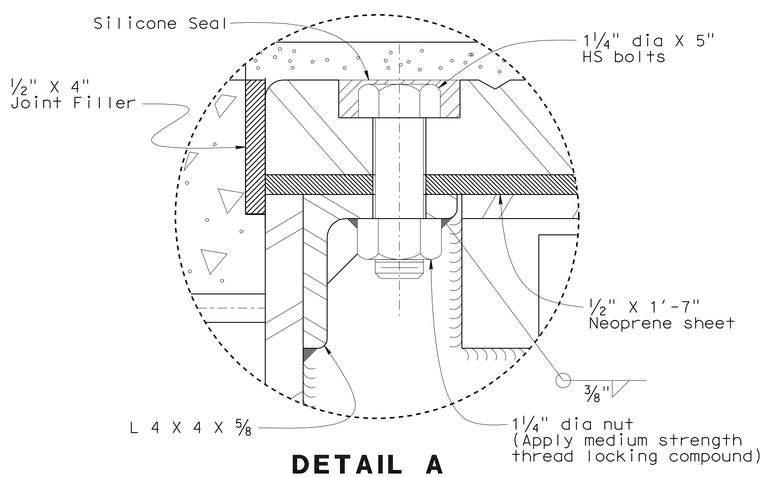

DETAIL A

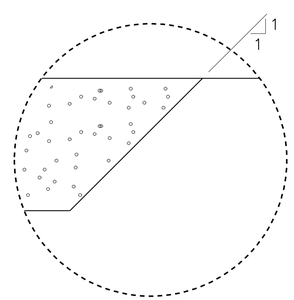

DETAIL F

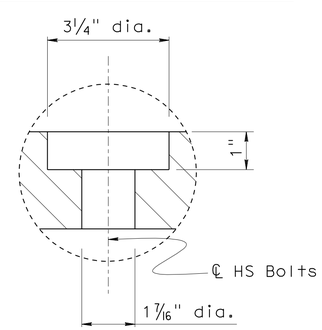

DETAIL G

NO SCALE

DESIGN	BY F. Zayati	CHECKED R. Bromenschenkel	
DETAILS	BY K. Kubo	CHECKED F. Zayati	
QUANTITIES	BY V. Ramakrishnan	CHECKED J. Lane	

STATE OF CALIFORNIA
DEPARTMENT OF TRANSPORTATION

DIVISION OF ENGINEERING SERVICES
STRUCTURE DESIGN
DESIGN BRANCH 14

BRIDGE NO. 53-3032
POST MILE 3.58

SCHUYLER HEIM BRIDGE (REPLACE)
ABUTMENT JOINT SEAL ASSEMBLY DETAILS NO. 2

STRUCTURES DESIGN DETAIL SHEET (ENGLISH) (REV. 10/25/05)

ORIGINAL SCALE IN INCHES FOR REDUCED PLANS 0 1 2 3

CU 07-271
EA 138201

DISREGARD PRINTS BEARING EARLIER REVISION DATES

REVISION DATES: 01-14-10, 05-14-10, 05-17-10, 5-20-10, 5-23-10, 6-28-10

SHEET 167 OF 247

FILE => 53-3032-1-q-jtsealdet04.dgn

USERNAME => tfriehard DATE PLOTTED => 19-OCT-2010 TIME PLOTTED => 08:47

DIST	COUNTY	ROUTE	POST MILES TOTAL PROJECT	SHEET No	TOTAL SHEETS
07	LA	47,103	3.5/4.6, 0.0/1.1	670	1003

REGISTERED CIVIL ENGINEER — DATE 05-24-10

10-11-10
PLANS APPROVAL DATE

REGISTERED PROFESSIONAL ENGINEER — FOUED ZAYATI — No. C57046 — Exp. 06-30-11 — CIVIL — STATE OF CALIFORNIA

The State of California or its officers or agents shall not be responsible for the accuracy or completeness of electronic copies of this plan sheet.

Note: Stage 1 shown, Stage 2 similar.

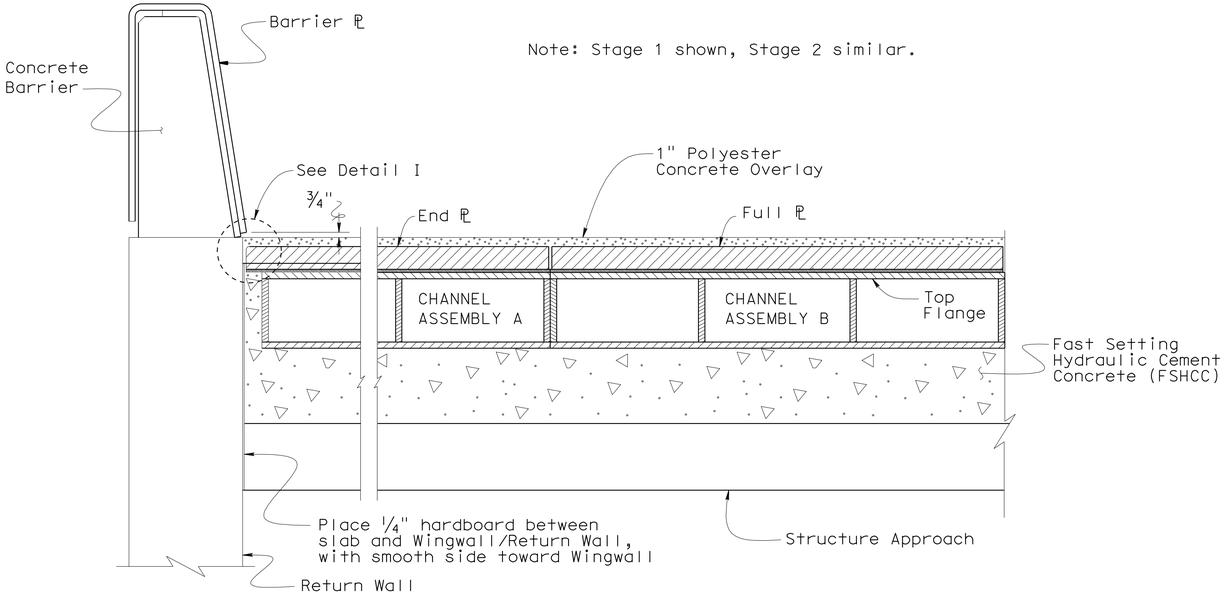

SECTION P-P

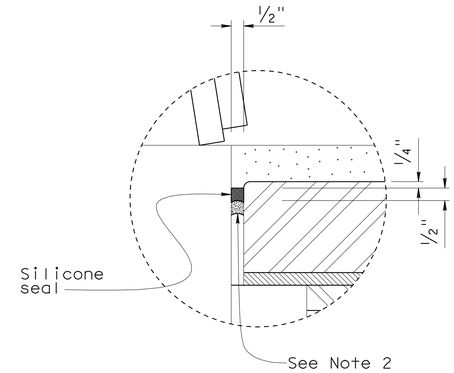

DETAIL I

NOTES:

1. Exact location of 3" dia holes to be determined prior to support plate fabrication.
2. Glazed polyethelylene foam or glazed open cell backer rod. Uncompressed width/diameter to be 25% greater than actual groove width.
3. For location of 'Section P-P' and 'Section Q-Q', see "JOINT SEAL ASSEMBLY DETAILS NO. 1" sheet.

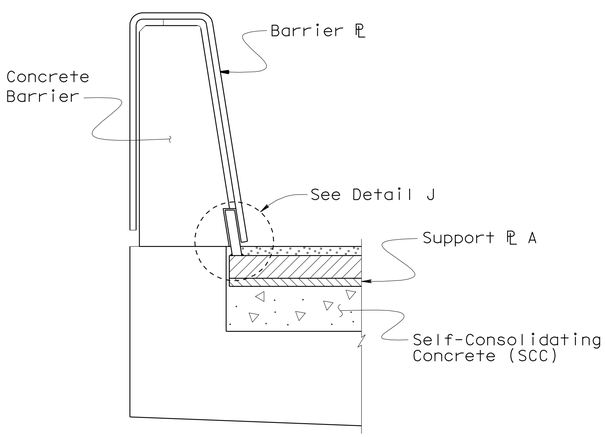

SECTION Q-Q

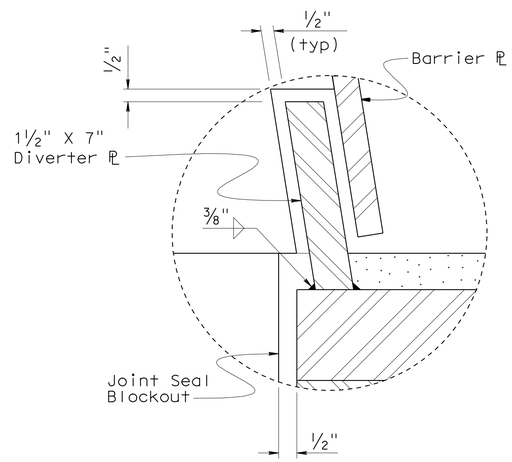

DETAIL J

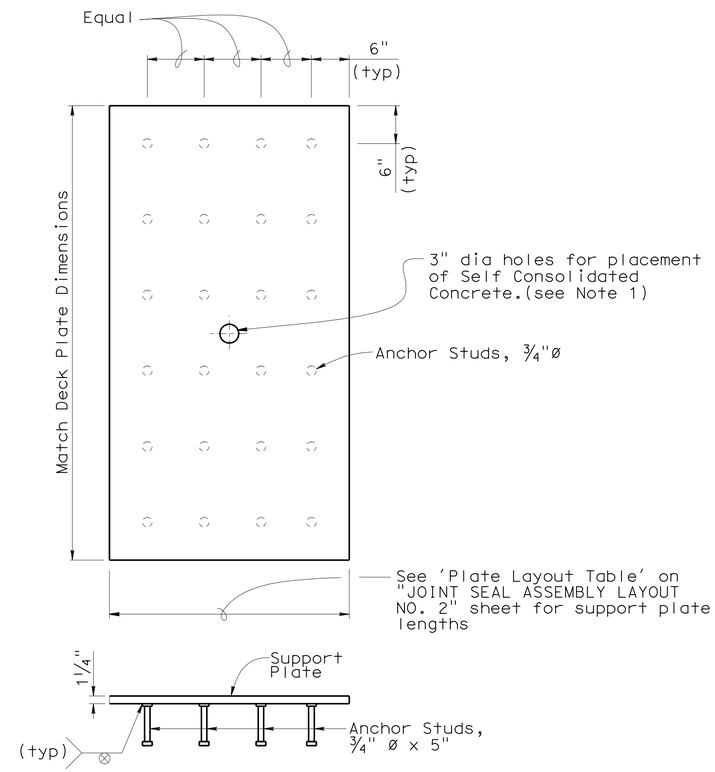

SUPPORT PLATE DETAIL

NO SCALE

THE CONTRACTOR SHALL VERIFY ALL CONTROLLING FIELD DIMENSIONS BEFORE ORDERING OR FABRICATING ANY MATERIAL.

	BY	CHECKED
DESIGN	F. Zayati	R. Bromenschenkel
DETAILS	K. Kubo	F. Zayati
QUANTITIES	V. Ramakrishnan	J. Lane

STATE OF CALIFORNIA
DEPARTMENT OF TRANSPORTATION

DIVISION OF ENGINEERING SERVICES
STRUCTURE DESIGN
DESIGN BRANCH 14

BRIDGE NO. 53-3032
POST MILE 3.58

SCHUYLER HEIM BRIDGE (REPLACE)
ABUTMENT JOINT SEAL ASSEMBLY DETAILS NO. 3

STRUCTURES DESIGN DETAIL SHEET (ENGLISH) (REV. 10/25/05)

ORIGINAL SCALE IN INCHES FOR REDUCED PLANS 0 1 2 3

CU 07-271
EA 138201

DISREGARD PRINTS BEARING EARLIER REVISION DATES

REVISION DATES: 01-14-10, 05-14-10, 05-17-10, 05-20-10, 5-22-10, 05-24-10, 05-28-10, 6-28-10

SHEET 168 OF 247

FILE => 53-3032-1-q-jtsealdet05.dgn

USERNAME => friehard DATE PLOTTED => 19-OCT-2010 TIME PLOTTED => 08:47

DIST	COUNTY	ROUTE	POST MILES TOTAL PROJECT	SHEET No	TOTAL SHEETS
07	LA	47,103	3.5/4.6, 0.0/1.1	671	1003

REGISTERED CIVIL ENGINEER — DATE 05-24-10

10-11-10
PLANS APPROVAL DATE

REGISTERED PROFESSIONAL ENGINEER — FOUED ZAYATI — No. C57046 — Exp. 06-30-11 — CIVIL — STATE OF CALIFORNIA

The State of California or its officers or agents shall not be responsible for the accuracy or completeness of electronic copies of this plan sheet.

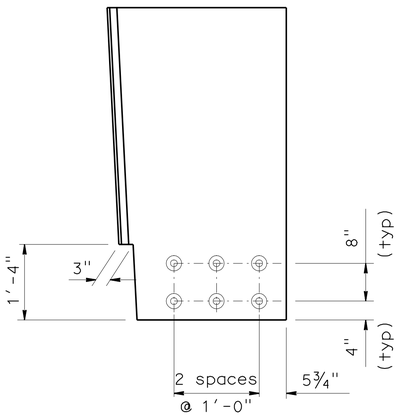

DECK PLATE A (STAGE 1)

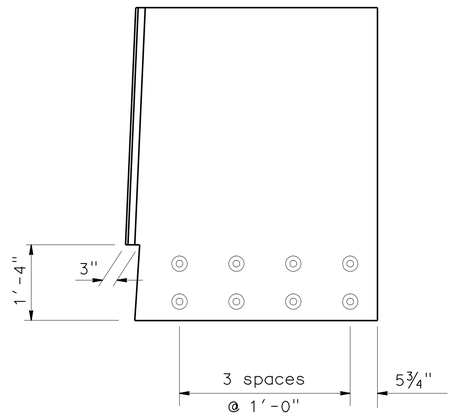

DECK PLATE A (STAGE 2)

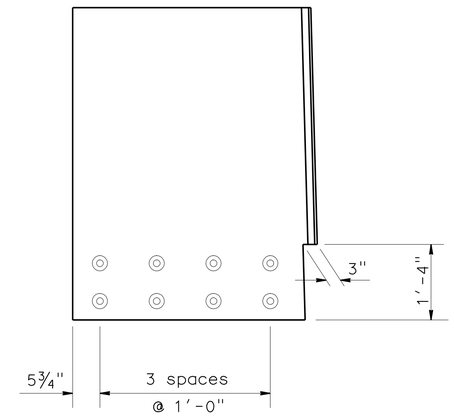

DECK PLATE C (STAGE 1)

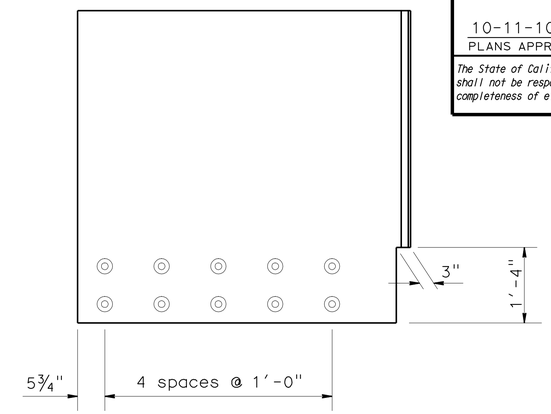

DECK PLATE C (STAGE 2)

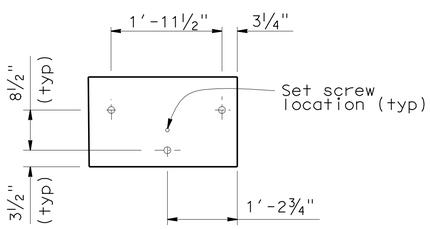

COVER PLATE A (STAGE 1)

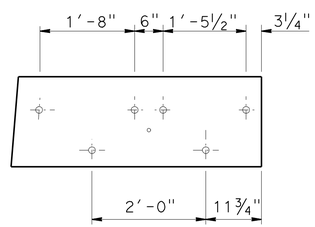

COVER PLATE A (STAGE 2)

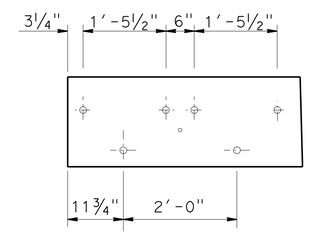

COVER PLATE C (STAGE 1)

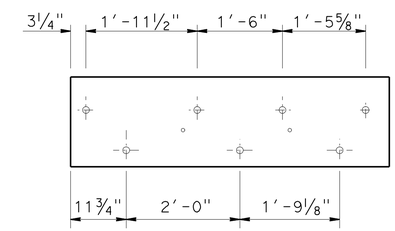

COVER PLATE C (STAGE 2)

NOTES:

1. For deck plate plan, see "JOINT SEAL ASSEMBLY LAYOUT NO. 2" sheet.
2. Eye bolts may be used at set screw locations for lifting of cover plates.

NOTE:
THE CONTRACTOR SHALL VERIFY ALL CONTROLLING FIELD DIMENSIONS BEFORE ORDERING OR FABRICATING ANY MATERIAL.

NO SCALE

THE CONTRACTOR SHALL VERIFY ALL CONTROLLING FIELD DIMENSIONS BEFORE ORDERING OR FABRICATING ANY MATERIAL.

	BY	CHECKED
DESIGN	F. Zayati	R. Bromenschenkel
DETAILS	K. Kubo	F. Zayati
QUANTITIES	V. Ramakrishnan	J. Lane

STATE OF CALIFORNIA
DEPARTMENT OF TRANSPORTATION

DIVISION OF ENGINEERING SERVICES
STRUCTURE DESIGN
DESIGN BRANCH 14

BRIDGE NO. 53-3032
POST MILE 3.58

SCHUYLER HEIM BRIDGE (REPLACE)
ABUTMENT JOINT SEAL ASSEMBLY DETAILS NO. 4

STRUCTURES DESIGN DETAIL SHEET (ENGLISH) (REV. 10/25/05)

ORIGINAL SCALE IN INCHES FOR REDUCED PLANS 0 1 2 3

CU 07-271
EA 138201

DISREGARD PRINTS BEARING EARLIER REVISION DATES

REVISION DATES: 01-16-10, 05-17-10, 05-20-10, 5-22-10, 5-25-10, 6-29-10

SHEET 169 OF 247

FILE => 53-3032-1-q-jtsealdet06.dgn

USERNAME => friehard DATE PLOTTED => 19-OCT-2010 TIME PLOTTED => 08:47

DIST	COUNTY	ROUTE	POST MILES TOTAL PROJECT	SHEET No	TOTAL SHEETS
07	LA	47,103	3.5/4.6, 0.0/1.1	672	1003

REGISTERED CIVIL ENGINEER — DATE 05-24-10

10-11-10
PLANS APPROVAL DATE

REGISTERED PROFESSIONAL ENGINEER — FOUED ZAYATI No. C57046 Exp. 06-30-11 CIVIL — STATE OF CALIFORNIA

The State of California or its officers or agents shall not be responsible for the accuracy or completeness of electronic copies of this plan sheet.

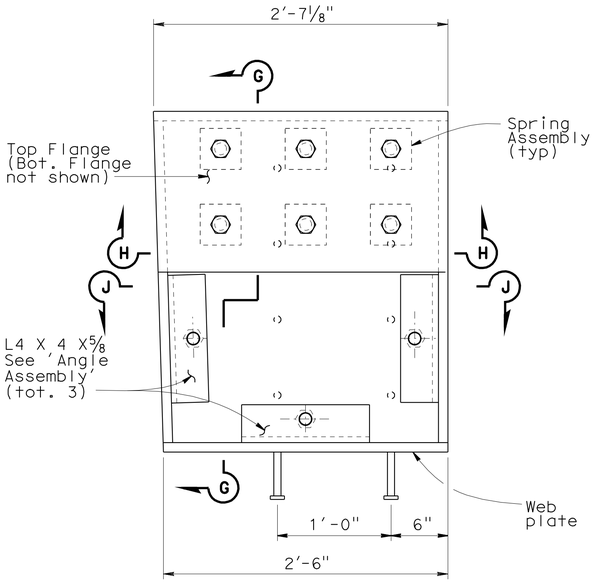

PLAN
CHANNEL ASSEMBLY "A" - STAGE 1

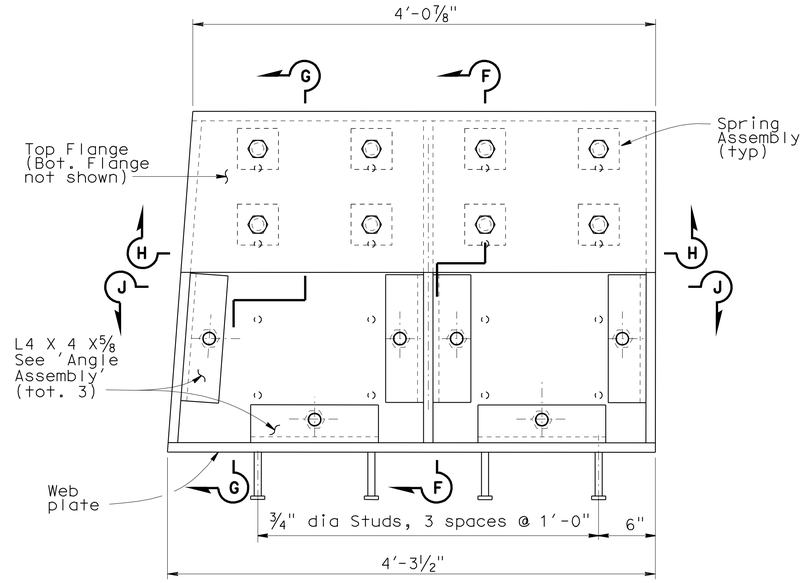

PLAN
CHANNEL ASSEMBLY "A" - STAGE 2

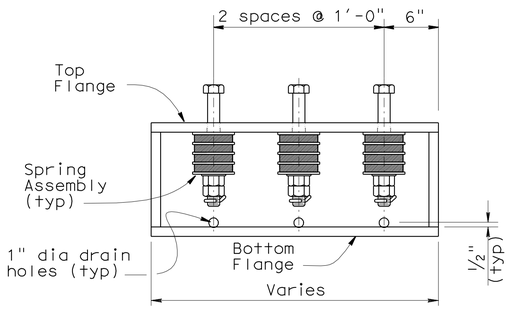

SECTION H-H
CHANNEL ASSEMBLY "A" - STAGE 1

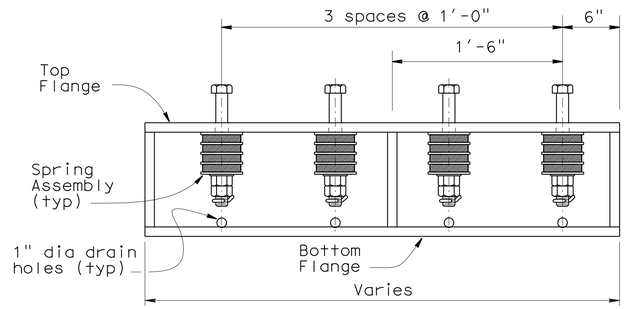

SECTION H-H
CHANNEL ASSEMBLY "A" - STAGE 2

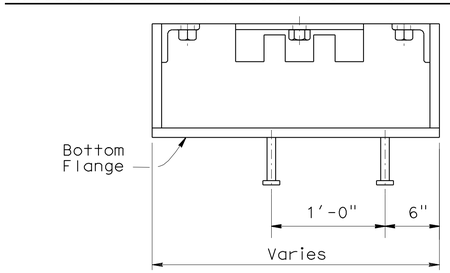

SECTION J-J
CHANNEL ASSEMBLY "A" - STAGE 1

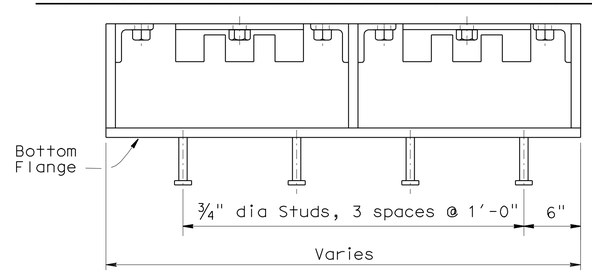

SECTION J-J
CHANNEL ASSEMBLY "A" - STAGE 2

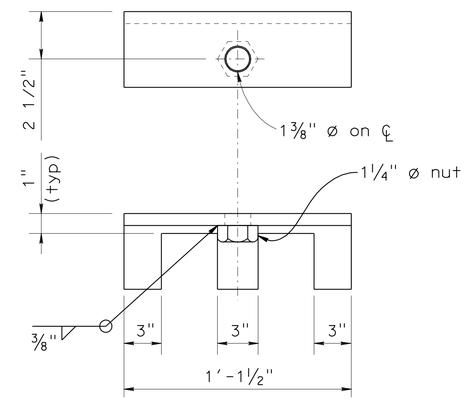

ANGLE ASSEMBLY

NOTES:

1. For 'Section F-F' and 'Section G-G', see "ABUTMENT JOINT SEAL ASSEMBLY DETAILS NO. 7" sheet for TYPE A Joint.
2. Top surfaces of L 4 x 4 x ⅝" angles and 1" steel ℙs shall be on same level.

THE CONTRACTOR SHALL VERIFY ALL CONTROLLING FIELD DIMENSIONS BEFORE ORDERING OR FABRICATING ANY MATERIAL.

NO SCALE

	BY	CHECKED
DESIGN	F. Zayati	R. Bromenschenkel
DETAILS	K. Kubo/M. Lane	F. Zayati
QUANTITIES	V. Ramakrishnan	J. Lane

STATE OF CALIFORNIA
DEPARTMENT OF TRANSPORTATION

DIVISION OF ENGINEERING SERVICES
STRUCTURE DESIGN
DESIGN BRANCH 14

BRIDGE NO. 53-3032
POST MILE 3.58

SCHUYLER HEIM BRIDGE (REPLACE)
ABUTMENT JOINT SEAL ASSEMBLY DETAILS NO. 5

STRUCTURES DESIGN DETAIL SHEET (ENGLISH) (REV. 10/25/05)

ORIGINAL SCALE IN INCHES FOR REDUCED PLANS 0 1 2 3

CU 07-271
EA 138201

DISREGARD PRINTS BEARING EARLIER REVISION DATES

REVISION DATES: 05-11-10 05-17-10 05-24-10 05-25-10 6-28-10 6-29-10

SHEET 170 OF 247

FILE => 53-3032-1-q-jtsealdet07.dgn

USERNAME => friehard DATE PLOTTED => 19-OCT-2010 TIME PLOTTED => 08:47

DIST	COUNTY	ROUTE	POST MILES TOTAL PROJECT	SHEET No	TOTAL SHEETS
07	LA	47,103	3.5/4.6, 0.0/1.1	673	1003

REGISTERED CIVIL ENGINEER — DATE 05-24-10

10-11-10
PLANS APPROVAL DATE

The State of California or its officers or agents shall not be responsible for the accuracy or completeness of electronic copies of this plan sheet.

REGISTERED PROFESSIONAL ENGINEER — FOUED ZAYATI — No. C57046 — Exp. 06-30-11 — CIVIL — STATE OF CALIFORNIA

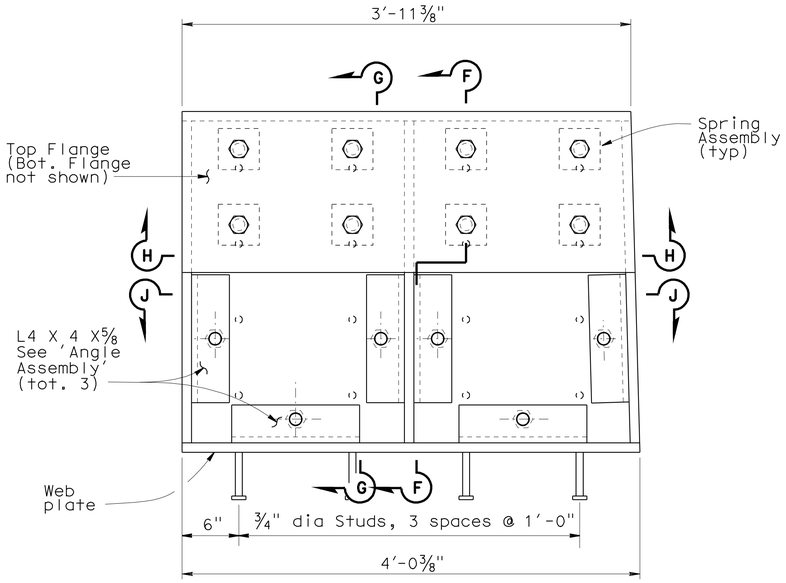

PLAN
CHANNEL ASSEMBLY "C" - STAGE 1

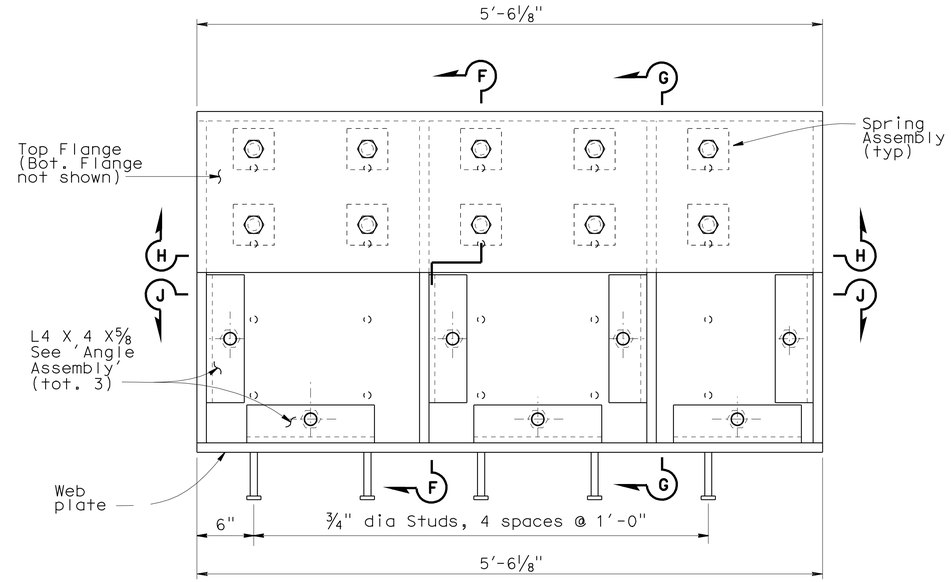

PLAN
CHANNEL ASSEMBLY "C" - STAGE 2

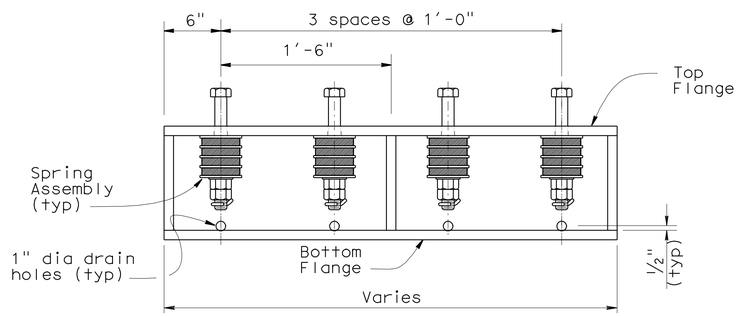

SECTION H-H
CHANNEL ASSEMBLY "C" - STAGE 1

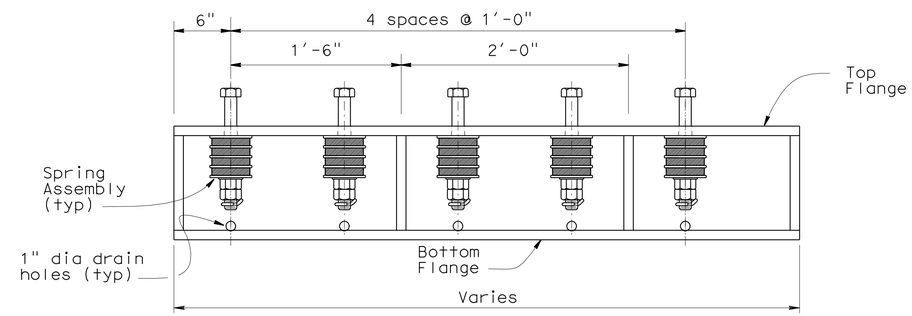

SECTION H-H
CHANNEL ASSEMBLY "C" - STAGE 2

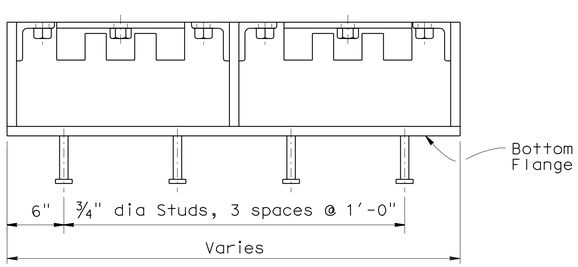

SECTION J-J
CHANNEL ASSEMBLY "C" - STAGE 1

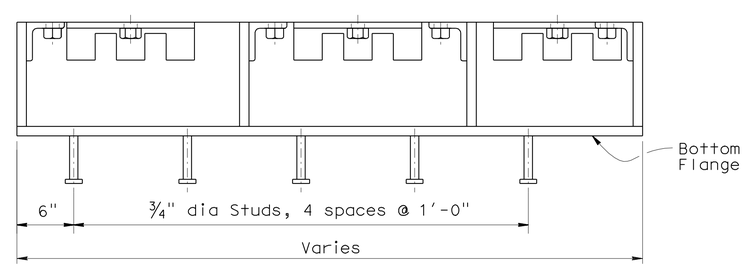

SECTION J-J
CHANNEL ASSEMBLY "C" - STAGE 2

NOTES:

1. For 'Section F-F' and 'Section G-G', see "ABUTMENT JOINT SEAL ASSEMBLY DETAILS NO. 7" sheet for TYPE A Joint.
2. Top surfaces of L 4 x 4 x 5/8" angles and 1" steel PLs shall be on same level.

THE CONTRACTOR SHALL VERIFY ALL CONTROLLING FIELD DIMENSIONS BEFORE ORDERING OR FABRICATING ANY MATERIAL.

NO SCALE

	BY	CHECKED
DESIGN	F. Zayati	R. Bromenschenkel
DETAILS	K. Kubo/M. Lane	F. Zayati
QUANTITIES	V. Ramakrishnan	J. Lane

STATE OF CALIFORNIA
DEPARTMENT OF TRANSPORTATION

DIVISION OF ENGINEERING SERVICES
STRUCTURE DESIGN
DESIGN BRANCH 14

BRIDGE NO. 53-3032
POST MILE 3.58

SCHUYLER HEIM BRIDGE (REPLACE)
ABUTMENT JOINT SEAL ASSEMBLY DETAILS NO. 6

STRUCTURES DESIGN DETAIL SHEET (ENGLISH) (REV. 10/25/05)

ORIGINAL SCALE IN INCHES FOR REDUCED PLANS 0 1 2 3

CU 07-271
EA 138201

DISREGARD PRINTS BEARING EARLIER REVISION DATES

REVISION DATES: 05-11-10 05-17-10 05-19-10 6-28-10

SHEET 171 OF 247

FILE => 53-3032-1-q-jtsealdet08.dgn

USERNAME => friemard DATE PLOTTED => 19-OCT-2010 TIME PLOTTED => 08:47

DIST	COUNTY	ROUTE	POST MILES TOTAL PROJECT	SHEET No	TOTAL SHEETS
07	LA	47,103	3.5/4.6, 0.0/1.1	674	1003

REGISTERED CIVIL ENGINEER 05-24-10 DATE

10-11-10
PLANS APPROVAL DATE

The State of California or its officers or agents shall not be responsible for the accuracy or completeness of electronic copies of this plan sheet.

REGISTERED PROFESSIONAL ENGINEER FOUED ZAYATI No. C57046 Exp. 06-30-11 CIVIL STATE OF CALIFORNIA

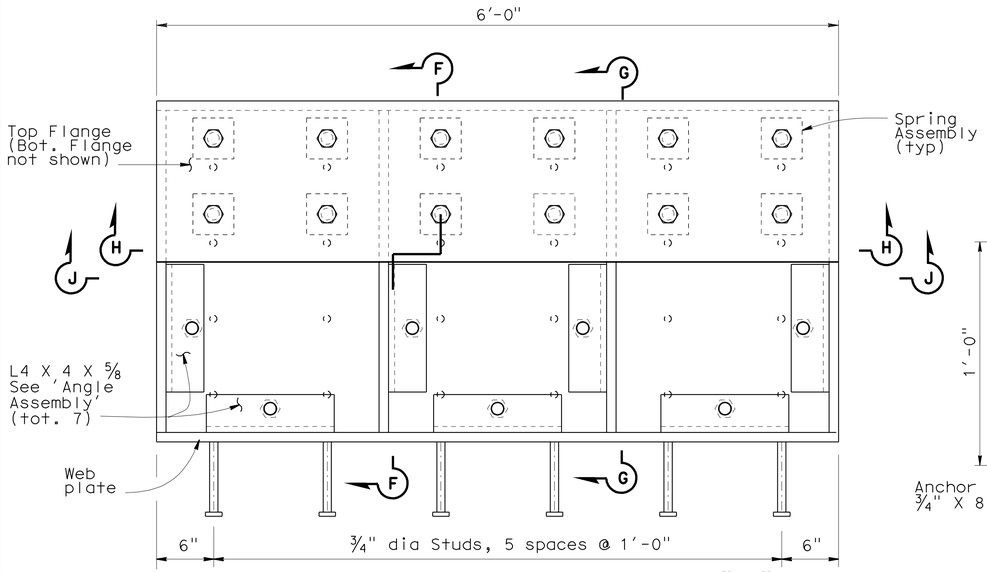

PLAN - CHANNEL ASSEMBLY "B"

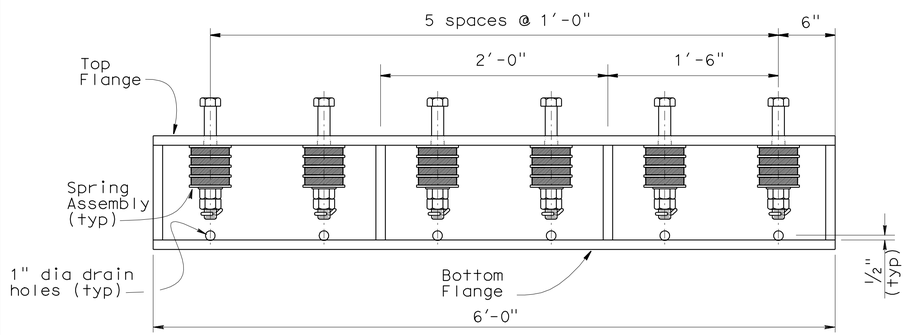

SECTION H-H - CHANNEL ASSEMBLY "C"

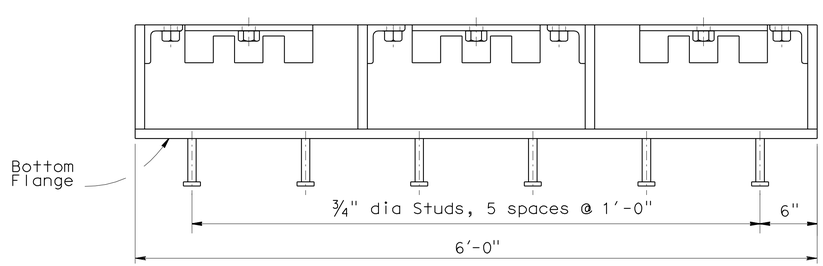

SECTION J-J - CHANNEL ASSEMBLY "B"

NOTE:
THE CONTRACTOR SHALL VERIFY ALL CONTROLLING FIELD DIMENSIONS BEFORE ORDERING OR FABRICATING ANY MATERIAL.

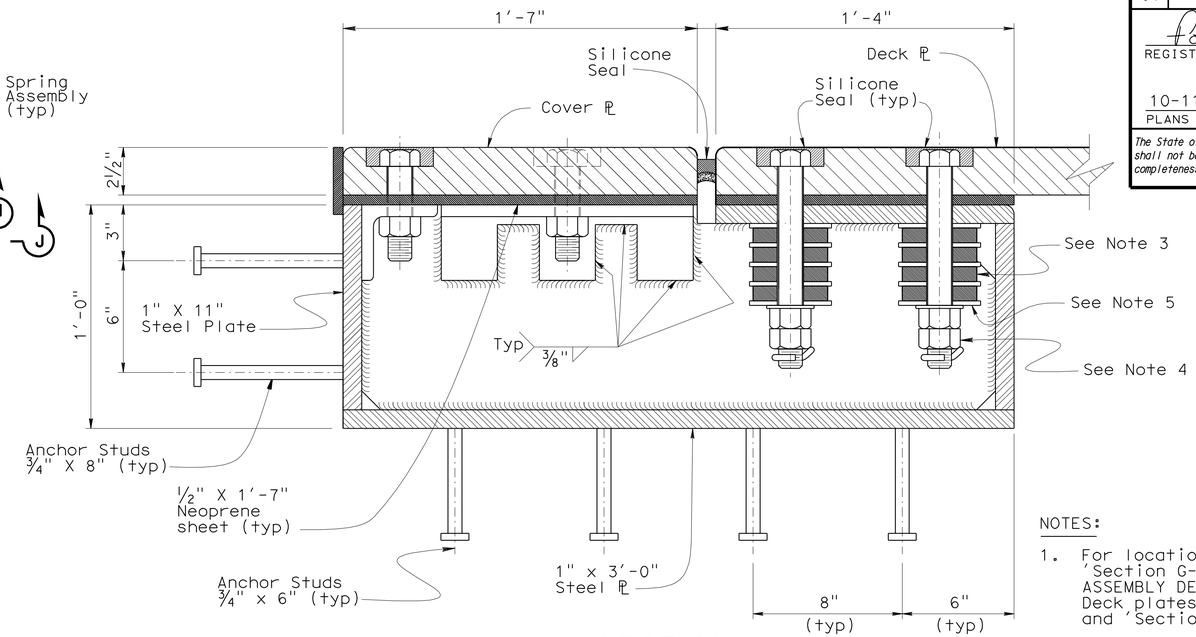

SECTION F-F

NOTES:

1. For location of 'Section F-F' and 'Section G-G', see "ABUTMENT JOINT SEAL ASSEMBLY DETAILS NO. 5" and "NO. 6" sheets. Deck plates and bolts shown in 'Section F-F' and 'Section G-G' for clarity.
2. Top surfaces of L 4 x 4 x 5/8" angles and 1" steel PLs shall be on same level.
3. 4" X 4" (sq) x 3/4" Long elastomeric washers (Durometer 60) with 1 3/8" dia hole (tot. 4 per bolt).
4. 1 1/4" dia X 10 1/2" HS bolts (with cotter pins) and nuts thru holes and counterbores or equal. Tighten nuts to remove slack within the system, then turn each nut an additional half turn. (Half turn corresponds to 1/16")
5. Plate Washer galvanized 1/4" X 5 1/2" X 5 1/2" with 1 3/8" dia hole (tot. 5 per bolt)

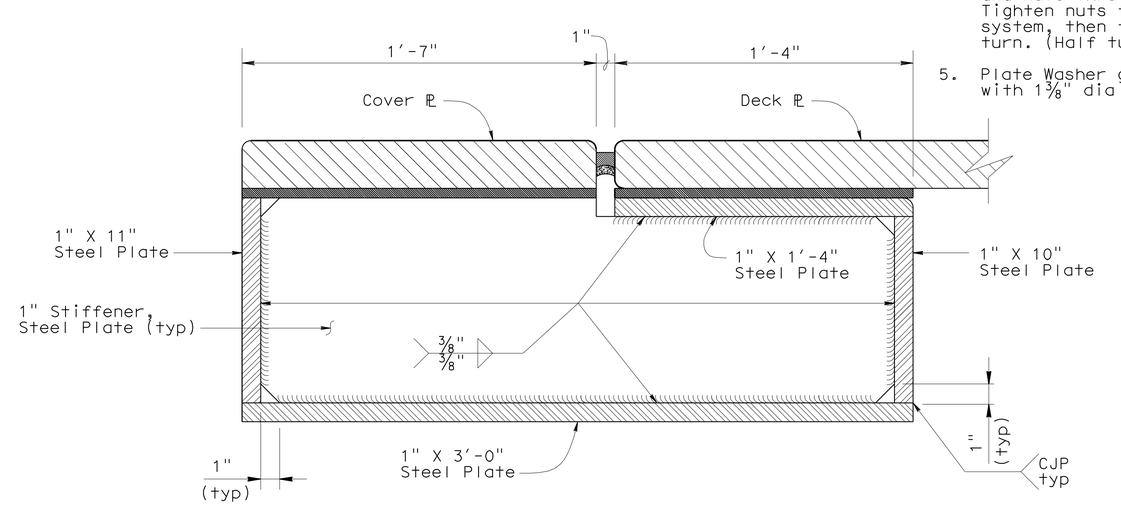

SECTION G-G

NO SCALE

DESIGN	BY F. Zayati	CHECKED R. Bromenschenkel	
DETAILS	BY M. Lane	CHECKED F. Zayati	
QUANTITIES	BY V. Ramakrishnan	CHECKED J. Lane	

STATE OF CALIFORNIA DEPARTMENT OF TRANSPORTATION

DIVISION OF ENGINEERING SERVICES STRUCTURE DESIGN DESIGN BRANCH 14

BRIDGE NO. 53-3032
POST MILE 3.58

SCHUYLER HEIM BRIDGE (REPLACE)
ABUTMENT JOINT SEAL ASSEMBLY DETAILS NO. 7

STRUCTURES DESIGN DETAIL SHEET (ENGLISH) (REV. 10/25/05)

ORIGINAL SCALE IN INCHES FOR REDUCED PLANS 0 1 2 3

CU 07-271
EA 138201

DISREGARD PRINTS BEARING EARLIER REVISION DATES

REVISION DATES: 01-14-10 05-14-10 05-17-10 5-23-10 5-25-10 5-26-10 6-29-10

SHEET 172 OF 247

FILE => 53-3032-1-q-jtsealdet09.dgn

USERNAME => friehard DATE PLOTTED => 19-OCT-2010 TIME PLOTTED => 08:47

DIST	COUNTY	ROUTE	POST MILES TOTAL PROJECT	SHEET No	TOTAL SHEETS
07	LA	47,103	3.5/4.6, 0.0/1.1	675	1003

REGISTERED CIVIL ENGINEER — DATE 05-24-10

10-11-10
PLANS APPROVAL DATE

REGISTERED PROFESSIONAL ENGINEER — FOUED ZAYATI — No. C57046 — Exp. 06-30-11 — CIVIL — STATE OF CALIFORNIA

The State of California or its officers or agents shall not be responsible for the accuracy or completeness of electronic copies of this plan sheet.

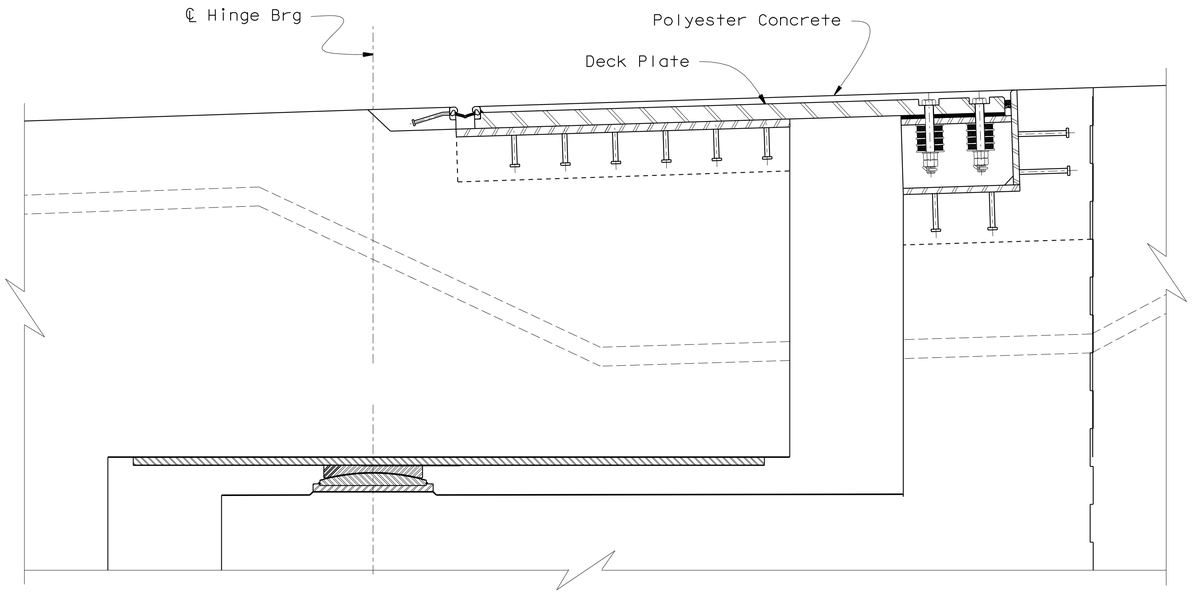

ELEVATION
1" = 1'-0"

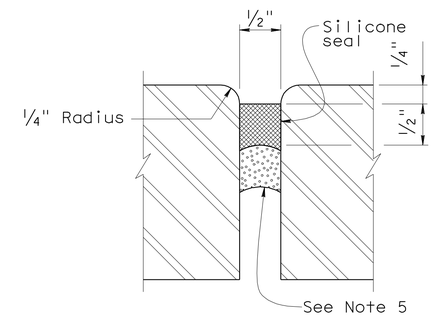

DETAIL A
1' = 1'-0"

NOTES:

1. For plates A and C, see "HINGE JOINT SEAL ASSEMBLY DETAILS NO 4" sheet.
2. For plate B see "JOINT SEAL ASSEMBLY LAYOUT NO. 2" sheet.
3. For 'Section P-P', and 'Section Q-Q', see "HINGE JOINT SEAL ASSEMBLY DETAILS NO 3" sheet.
4. Blockout reinforcement may be adjusted, as directed by the Engineer.
5. Glazed polyethylene foam or glazed open cell backer rod. Uncompressed width/diameter to be 25% greater than actual groove width.

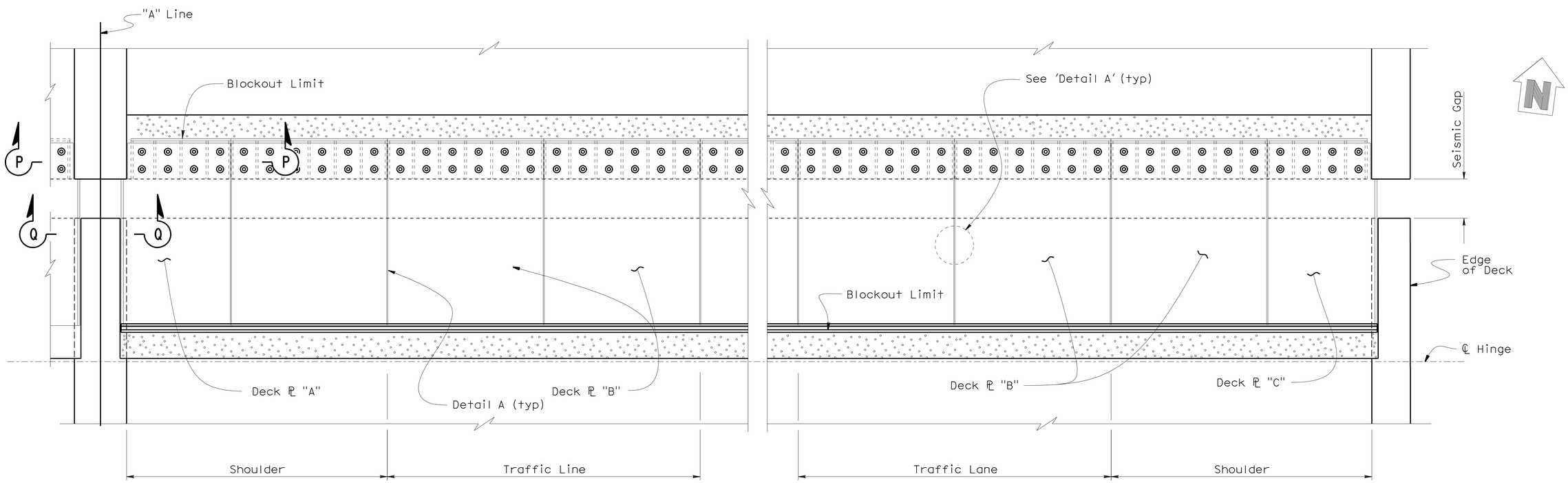

PLAN
1/2" = 1'-0"

Note: Stage 1 shown, Stage 2 similar. Polyester Concrete not shown for clarity.

	BY	CHECKED
DESIGN	F. Zayati	R. Bromenschenkel
DETAILS	J. Thorne	F. Zayati
QUANTITIES	V. Ramakrishnan	J. Lane

STATE OF CALIFORNIA
DEPARTMENT OF TRANSPORTATION

DIVISION OF ENGINEERING SERVICES
STRUCTURE DESIGN
DESIGN BRANCH 14

BRIDGE NO. 53-3032
POST MILE 3.58

SCHUYLER HEIM BRIDGE (REPLACE)
HINGE JOINT SEAL ASSEMBLY DETAILS NO. 1

STRUCTURES DESIGN DETAIL SHEET (ENGLISH) (REV. 10/25/05)

ORIGINAL SCALE IN INCHES FOR REDUCED PLANS 0 1 2 3

CU 07-271
EA 138201

DISREGARD PRINTS BEARING EARLIER REVISION DATES → REVISION DATES 01-12-10 05-14-10 05-20-10 5-28-10 05-24-10 05-25-10 6-28-10

SHEET 173 OF 247

FILE => 53-3032-1-q-jtsealdet10.dgn

USERNAME => trlenard DATE PLOTTED => 19-OCT-2010 TIME PLOTTED => 08:48

DIST	COUNTY	ROUTE	POST MILES TOTAL PROJECT	SHEET No	TOTAL SHEETS
07	LA	47,103	3.5/4.6, 0.0/1.1	676	1003

REGISTERED CIVIL ENGINEER — DATE 05-24-10

10-11-10
PLANS APPROVAL DATE

REGISTERED PROFESSIONAL ENGINEER — FOUED ZAYATI No. C57046 Exp. 06-30-11 CIVIL — STATE OF CALIFORNIA

The State of California or its officers or agents shall not be responsible for the accuracy or completeness of electronic copies of this plan sheet.

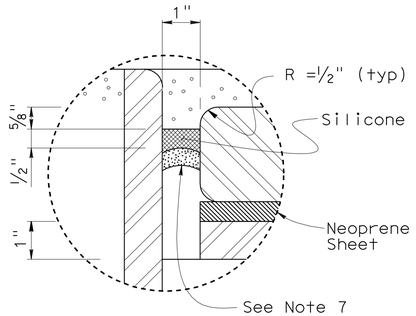

DETAIL B

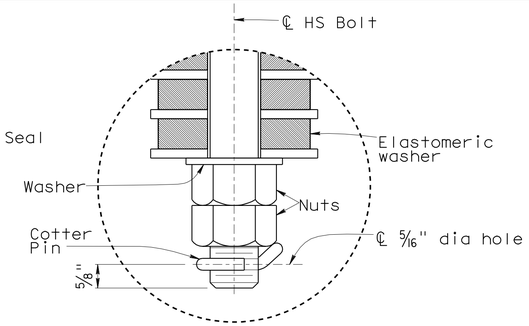

DETAIL C

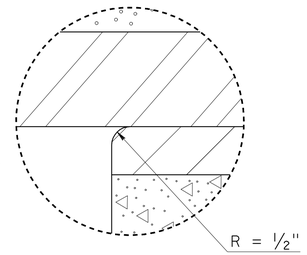

DETAIL D

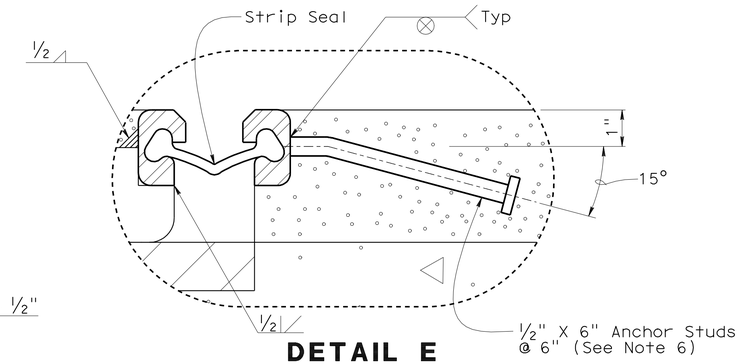

DETAIL E

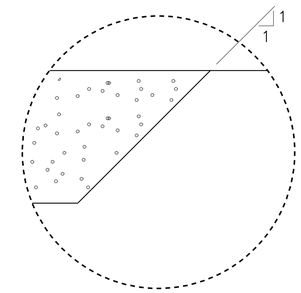

DETAIL F

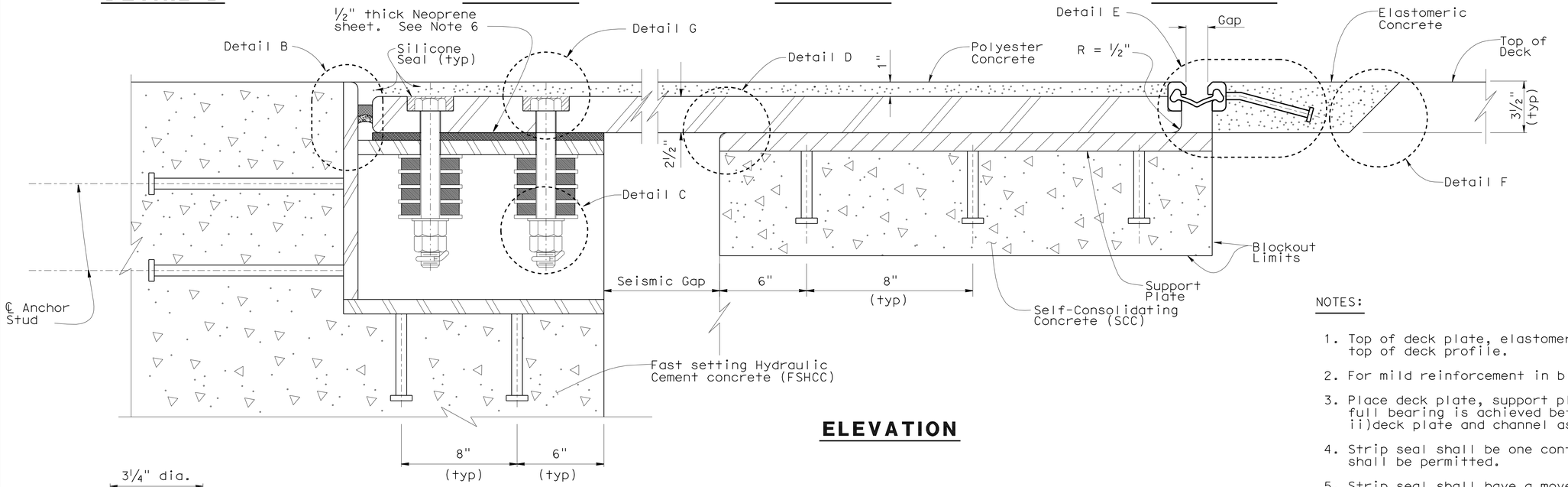

ELEVATION

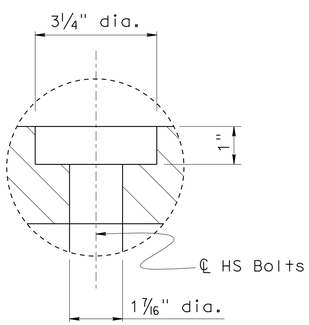

DETAIL G

STRIP SEAL GAP

Season	Gap
Summer	1.0"
Winter	2.5"
Fall/ Spring	1.75"

NOTES:

1. Top of deck plate, elastomeric and FSHCC concrete shall match top of deck profile.
2. For mild reinforcement in blockout areas, see "STRUCTURE PLANS".
3. Place deck plate, support plate and channel assembly so that full bearing is achieved between i) deck, support plates and ii)deck plate and channel assembly.
4. Strip seal shall be one continuous piece. No field splice shall be permitted.
5. Strip seal shall have a movement rating of 4", manufactured specifically for highway bridges.
6. The strip seal gap shall be set at the time of installation in accordance with values shown.
7. The strip seal and associated elastomeric concrete shall be installed at least 120 days after completion of the superstructure post-tensioning.
8. Asphalt concrete shall be used to protect the blockout prior to strip seal installation.
9. Prior to installation of the strip seal and the elastomeric concrete, remove asphalt concrete and clean blockout
10. Punch 1 1/2" diameter holes in neoprene sheet for HS bolts prior to installation.
11. Glazed polyethylene foam or glazed open cell backer rod. Uncompressed width (diameter) to be 25% greater than actual groove width.

NO SCALE

	BY	CHECKED
DESIGN	F. Zayati	R. Bromenschenkel
DETAILS	K. Kubo	F. Zayati
QUANTITIES	V. Ramakrishnan	J. Lane

STATE OF CALIFORNIA
DEPARTMENT OF TRANSPORTATION

DIVISION OF ENGINEERING SERVICES
STRUCTURE DESIGN
DESIGN BRANCH 14

BRIDGE NO. 53-3032
POST MILE 3.58

SCHUYLER HEIM BRIDGE (REPLACE)
HINGE JOINT SEAL ASSEMBLY DETAILS NO. 2

STRUCTURES DESIGN DETAIL SHEET (ENGLISH) (REV. 10/25/05)

ORIGINAL SCALE IN INCHES FOR REDUCED PLANS 0 1 2 3

CU 07-271
EA 138201

DISREGARD PRINTS BEARING EARLIER REVISION DATES

REVISION DATES: 01-14-10 05-14-10 05-17-10 5-18-10 5-25-10 6-28-10

SHEET 174 OF 247

FILE => 53-3032-1-q-jtsealdet11.dgn

USERNAME => trlenard DATE PLOTTED => 19-OCT-2010 TIME PLOTTED => 08:48

DIST	COUNTY	ROUTE	POST MILES TOTAL PROJECT	SHEET No	TOTAL SHEETS
07	LA	47,103	3.5/4.6, 0.0/1.1	677	1003

REGISTERED CIVIL ENGINEER — DATE 05-24-10

10-11-10
PLANS APPROVAL DATE

REGISTERED PROFESSIONAL ENGINEER — FOUED ZAYATI — No. C57046 — Exp. 06-30-11 — CIVIL — STATE OF CALIFORNIA

The State of California or its officers or agents shall not be responsible for the accuracy or completeness of electronic copies of this plan sheet.

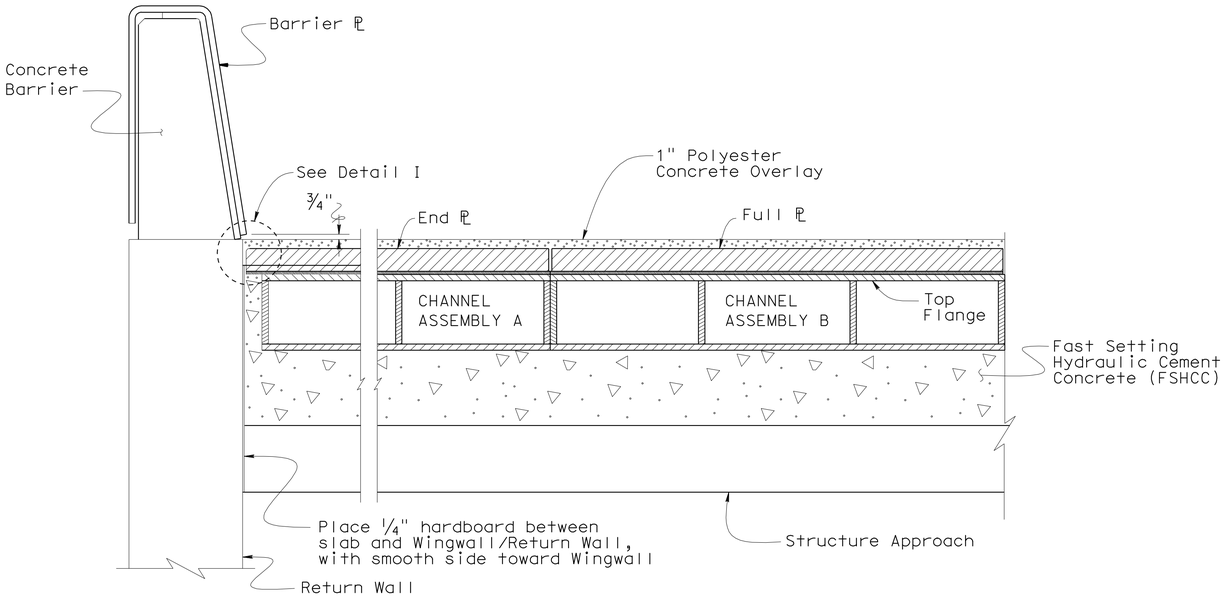

SECTION P-P

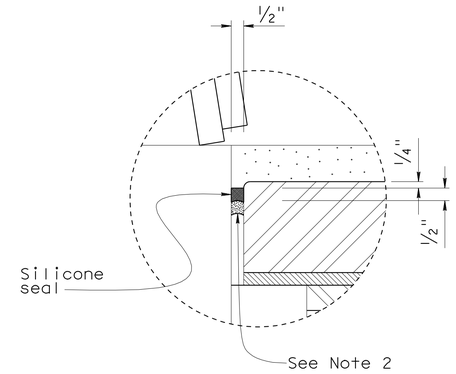

DETAIL I

NOTE:

1. Exact location of 3" dia holes to be determined prior to support plate fabrication.
2. Glazed polyetylene foam or glazed open cell backer rod. Uncompressed width/diameter to be 25% greater than actual groove width.
3. For location of 'Section P-P' and 'Section Q-Q' see "HINGE JOINT SEAL ASSEMBLY NO. 1" sheet.

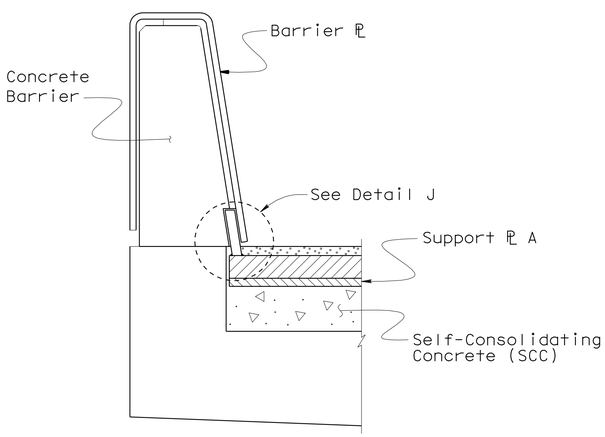

SECTION Q-Q

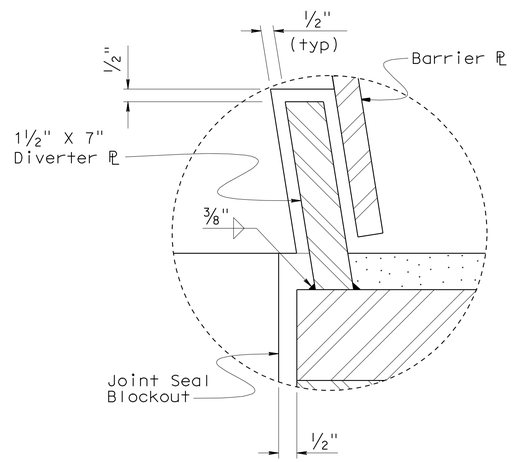

DETAIL J

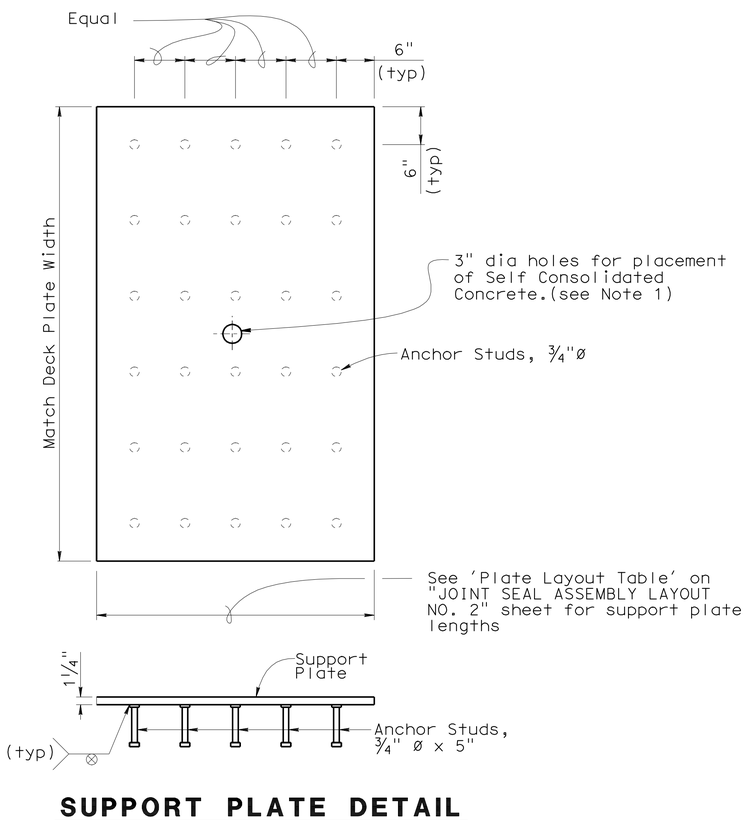

SUPPORT PLATE DETAIL

NO SCALE

THE CONTRACTOR SHALL VERIFY ALL CONTROLLING FIELD DIMENSIONS BEFORE ORDERING OR FABRICATING ANY MATERIAL.

	BY	CHECKED
DESIGN	F. Zayati	R. Bromenschenkel
DETAILS	K. Kubo	F. Zayati
QUANTITIES	V. Ramakrishnan	J. Lane

STATE OF CALIFORNIA
DEPARTMENT OF TRANSPORTATION

DIVISION OF ENGINEERING SERVICES
STRUCTURE DESIGN
DESIGN BRANCH 14

BRIDGE NO. 53-3032
POST MILE 3.58

SCHUYLER HEIM BRIDGE (REPLACE)
HINGE JOINT SEAL ASSEMBLY DETAILS NO. 3

STRUCTURES DESIGN DETAIL SHEET (ENGLISH) (REV. 10/25/05)

ORIGINAL SCALE IN INCHES FOR REDUCED PLANS 0 1 2 3

CU 07-271
EA 138201

DISREGARD PRINTS BEARING EARLIER REVISION DATES

REVISION DATES: 01-14-10 05-14-10 05-17-10 05-22-10 05-24-10 05-25-10 6-28-10

SHEET 175 OF 247

FILE => 53-3032-1-q-jtsealdet12.dgn

USERNAME => friehard DATE PLOTTED => 19-OCT-2010 TIME PLOTTED => 08:48

DIST	COUNTY	ROUTE	POST MILES TOTAL PROJECT	SHEET No	TOTAL SHEETS
07	LA	47,103	3.5/4.6, 0.0/1.1	678	1003

REGISTERED CIVIL ENGINEER — DATE 05-24-10

10-11-10
PLANS APPROVAL DATE

REGISTERED PROFESSIONAL ENGINEER — FOUED ZAYATI — No. C57046 — Exp. 06-30-11 — CIVIL — STATE OF CALIFORNIA

The State of California or its officers or agents shall not be responsible for the accuracy or completeness of electronic copies of this plan sheet.

Notes:

1. For specific plate dimensions not shown, see 'PLATE LAYOUT TABLE' on "JOINT SEAL ASSEMBLY LAYOUT NO. 2" sheet.
2. Final bolt locations shall match corresponding channel assembly configurations shown on "HINGE JOINT SEAL ASSEMBLY DETAILS NO. 5-16" sheets.
3. For details on Cantilevered Deck Plates 'C' and Deck Plate "Temp" (Temporary), see "HINGE JOINT SEAL ASSEMBLY DETAILS NO. 17" sheet.
4. For "Section F-F' and 'Section G-G' see "HINGE JOINT SEAL ASSEMBLY DETAILS NO. 17" sheet.

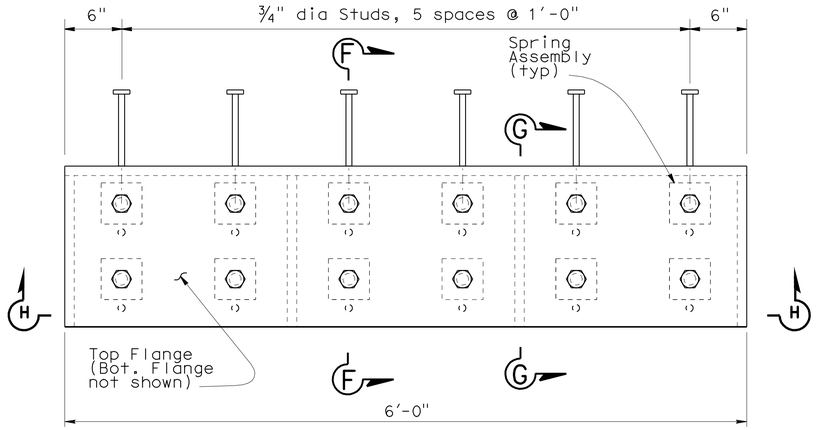

PLAN - CHANNEL ASSEMBLY "B"

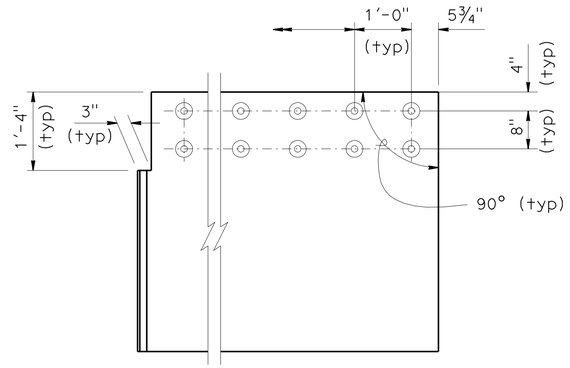

TYPICAL HINGE END PLATE "A"/"C"

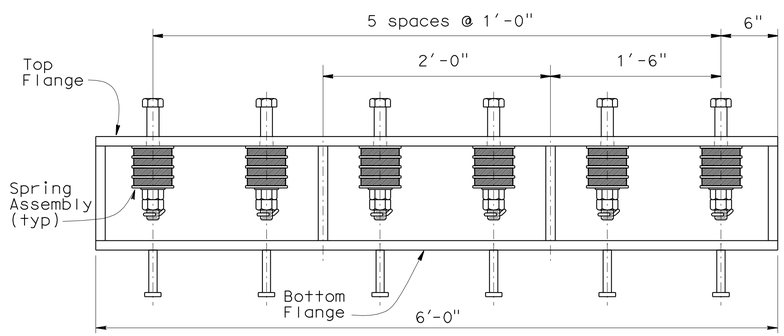

SECTION H-H - CHANNEL ASSEMBLY "C"

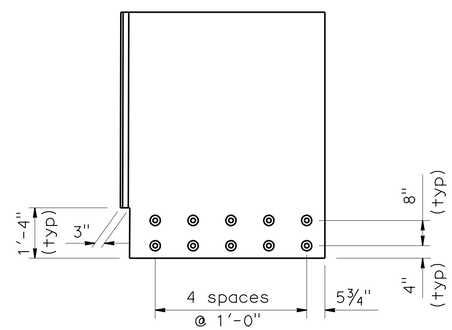

HINGE 7E DECK PLATE "A"

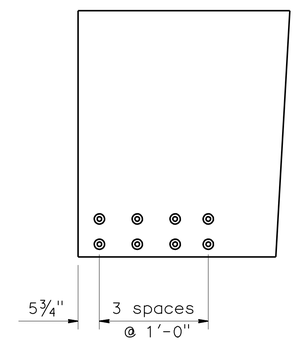

HINGE 7E CANTILEVERED DECK PLATE "C"

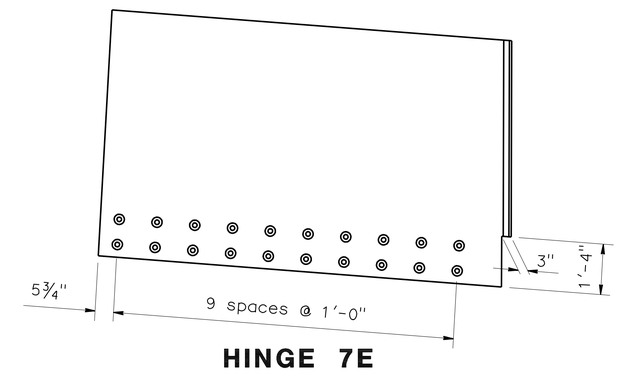

HINGE 7E DECK PLATE "TEMP"

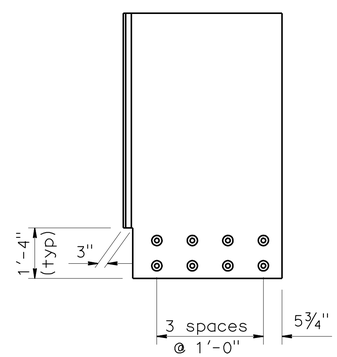

HINGE 7G DECK PLATE "A"

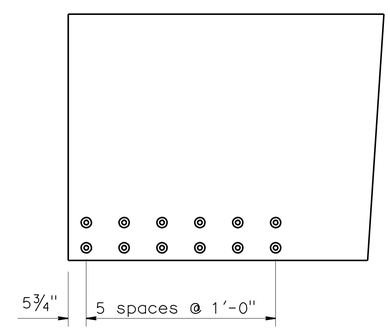

HINGE 7G CANTILEVERED DECK PLATE "C"

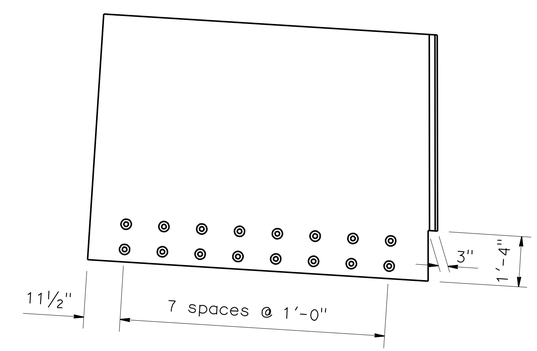

HINGE 7G DECK PLATE "TEMP"

THE CONTRACTOR SHALL VERIFY ALL CONTROLLING FIELD DIMENSIONS BEFORE ORDERING OR FABRICATING ANY MATERIAL.

NO SCALE

	BY	CHECKED
DESIGN	F. Zayati	R. Bromenschenkel
DETAILS	J. Thorne	F. Zayati
QUANTITIES	V. Ramakrishnan	J. Lane

STATE OF CALIFORNIA
DEPARTMENT OF TRANSPORTATION

DIVISION OF ENGINEERING SERVICES
STRUCTURE DESIGN
DESIGN BRANCH 14

BRIDGE NO. 53-3032
POST MILE 3.58

SCHUYLER HEIM BRIDGE (REPLACE)
HINGE JOINT SEAL ASSEMBLY DETAILS NO. 4

STRUCTURES DESIGN DETAIL SHEET (ENGLISH) (REV. 10/25/05)

ORIGINAL SCALE IN INCHES FOR REDUCED PLANS 0 1 2 3

CU 07-271
EA 138201

DISREGARD PRINTS BEARING EARLIER REVISION DATES

REVISION DATES: 05-24-10 05-25-10 05-26-10 6-29-10 6-30-10

SHEET 176 OF 247

FILE => 53-3032-1-q-jtsealdet13.dgn

USERNAME => rfrienard DATE PLOTTED => 19-OCT-2010 TIME PLOTTED => 08:48

DIST	COUNTY	ROUTE	POST MILES TOTAL PROJECT	SHEET No	TOTAL SHEETS
07	LA	47,103	3.5/4.6, 0.0/1.1	679	1003

REGISTERED CIVIL ENGINEER 05-24-10 DATE

10-11-10
PLANS APPROVAL DATE

REGISTERED PROFESSIONAL ENGINEER FOUED ZAYATI No. C57046 Exp. 06-30-11 CIVIL STATE OF CALIFORNIA

The State of California or its officers or agents shall not be responsible for the accuracy or completeness of electronic copies of this plan sheet.

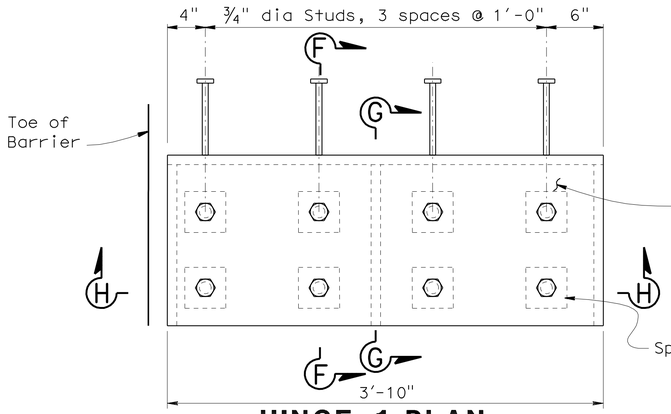

HINGE 1 PLAN
CHANNEL ASSEMBLY "A" (STAGE 1 & 2)

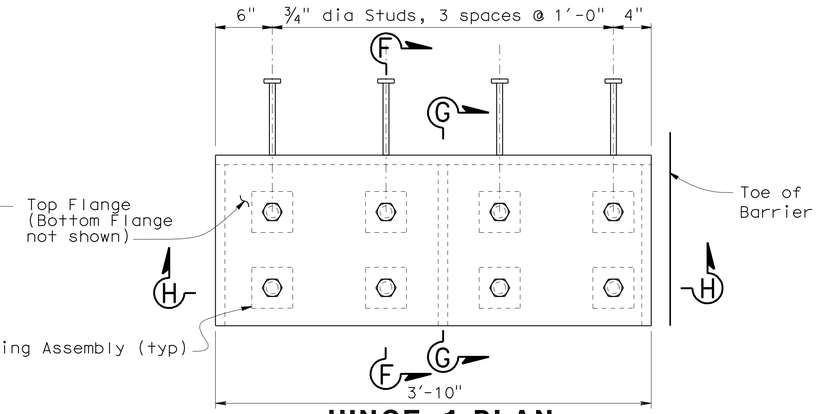

HINGE 1 PLAN
CHANNEL ASSEMBLY "C" (STAGE 1 & 2)

NOTE:

1. For 'Section F-F' and 'Section G-G' see "HINGE JOINT SEAL ASSEMBLY DETAILS NO. 17" sheet.

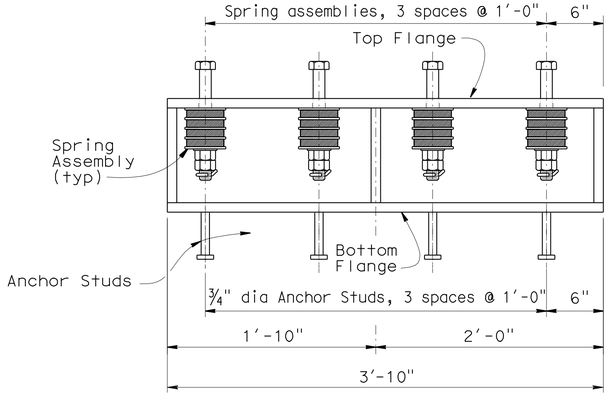

HINGE 1 SECTION H-H
CHANNEL ASSEMBLY "A" (STAGE 1 & 2)

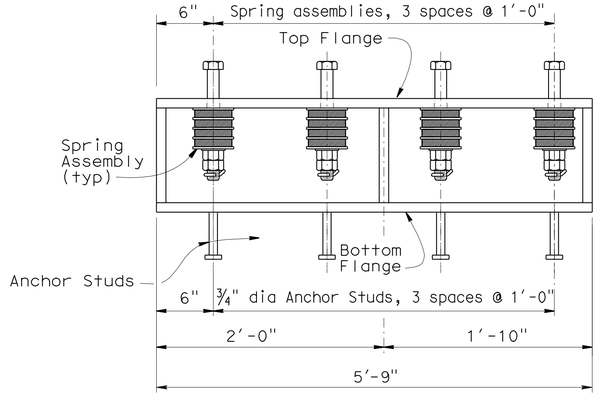

HINGE 1 SECTION H-H
CHANNEL ASSEMBLY "C" (STAGE 1 & 2)

THE CONTRACTOR SHALL VERIFY ALL CONTROLLING FIELD DIMENSIONS BEFORE ORDERING OR FABRICATING ANY MATERIAL.

NO SCALE

	BY	CHECKED
DESIGN	F. Zayati	R. Bromenschenkel
DETAILS	M. Lane	F. Zayati
QUANTITIES	V. Ramakrishnan	J. Lane

STATE OF CALIFORNIA DEPARTMENT OF TRANSPORTATION

DIVISION OF ENGINEERING SERVICES STRUCTURE DESIGN DESIGN BRANCH 14

BRIDGE NO. 53-3032
POST MILE 3.58

SCHUYLER HEIM BRIDGE (REPLACE)
HINGE JOINT SEAL ASSEMBLY DETAILS NO. 5

STRUCTURES DESIGN DETAIL SHEET (ENGLISH) (REV. 10/25/05)

ORIGINAL SCALE IN INCHES FOR REDUCED PLANS 0 1 2 3

CU 07-271
EA 138201

DISREGARD PRINTS BEARING EARLIER REVISION DATES

REVISION DATES: 01-15-10 05-14-10 05-11-10 5-21-10 5-24-10 05-24-10 05-28-10 6-29-10

SHEET 177 OF 247

FILE => 53-3032-1-q-jtsealdet14.dgn

USERNAME => friehard DATE PLOTTED => 19-OCT-2010 TIME PLOTTED => 08:48

DIST	COUNTY	ROUTE	POST MILES TOTAL PROJECT	SHEET No	TOTAL SHEETS
07	LA	47,103	3.5/4.6, 0.0/1.1	680	1003

REGISTERED CIVIL ENGINEER 05-24-10 DATE

10-11-10
PLANS APPROVAL DATE

REGISTERED PROFESSIONAL ENGINEER FOUED ZAYATI No. C57046 Exp. 06-30-11 CIVIL STATE OF CALIFORNIA

The State of California or its officers or agents shall not be responsible for the accuracy or completeness of electronic copies of this plan sheet.

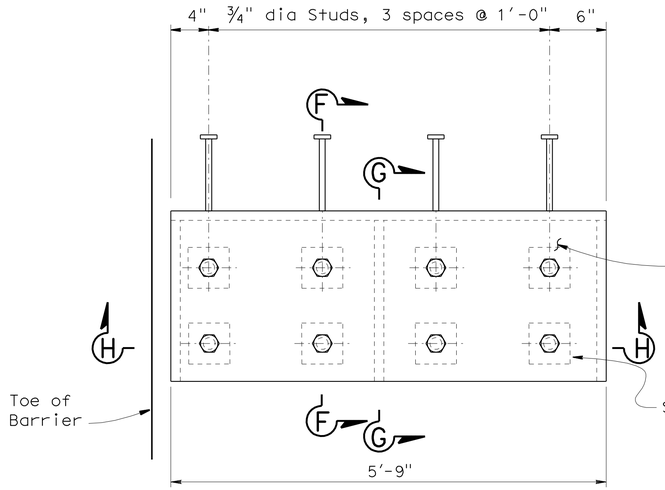

HINGE 2 PLAN
CHANNEL ASSEMBLY "A" (STAGE 1)

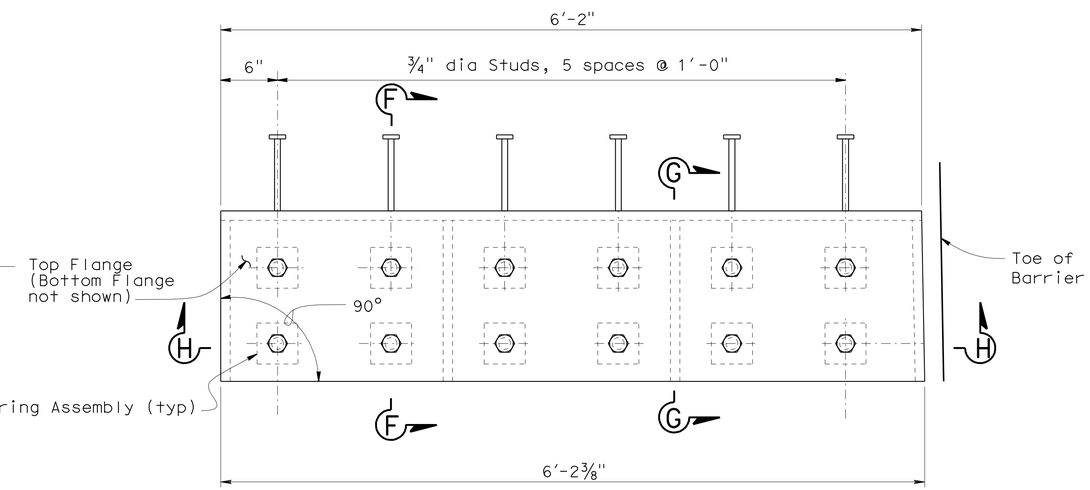

HINGE 2 PLAN
CHANNEL ASSEMBLY "C" (STAGE 1)

NOTE:

1. For 'Section F-F' and 'Section G-G' see "HINGE JOINT SEAL ASSEMBLY DETAILS NO. 17" sheet.

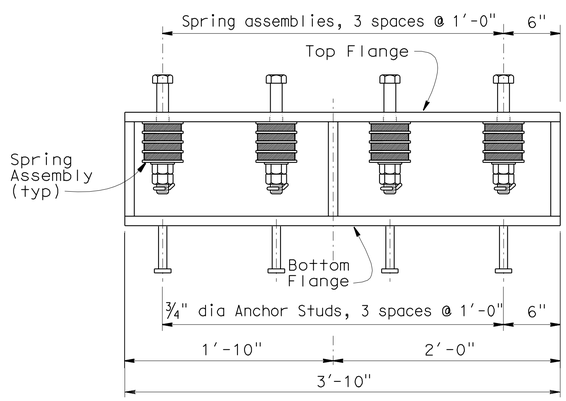

HINGE 2 SECTION H-H
CHANNEL ASSEMBLY "A" (STAGE 1)

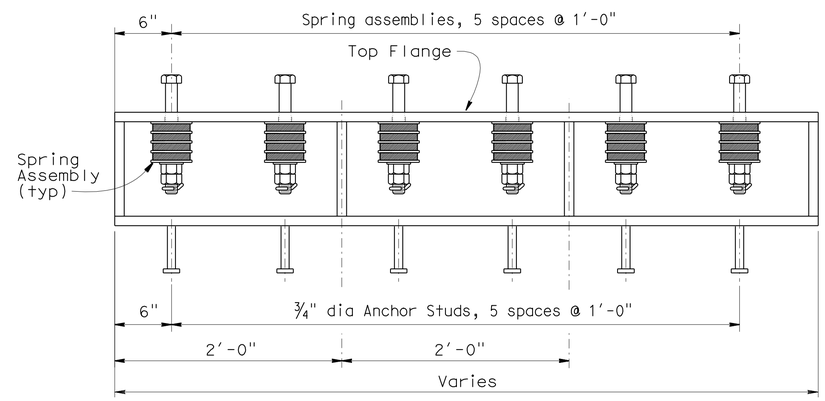

HINGE 2 SECTION H-H
CHANNEL ASSEMBLY "C" (STAGE 1)

THE CONTRACTOR SHALL VERIFY ALL CONTROLLING FIELD DIMENSIONS BEFORE ORDERING OR FABRICATING ANY MATERIAL.

NO SCALE

	BY	CHECKED
DESIGN	F. Zayati	R. Bromenschenkel
DETAILS	M. Lane	F. Zayati
QUANTITIES	V. Ramakrishnan	J. Lane

STATE OF CALIFORNIA
DEPARTMENT OF TRANSPORTATION

DIVISION OF ENGINEERING SERVICES
STRUCTURE DESIGN
DESIGN BRANCH 14

BRIDGE NO. 53-3032
POST MILE 3.58

SCHUYLER HEIM BRIDGE (REPLACE)
HINGE JOINT SEAL ASSEMBLY DETAILS NO. 6

STRUCTURES DESIGN DETAIL SHEET (ENGLISH) (REV. 10/25/05)

ORIGINAL SCALE IN INCHES FOR REDUCED PLANS 0 1 2 3

CU 07-271
EA 138201

DISREGARD PRINTS BEARING EARLIER REVISION DATES

REVISION DATES: 01-11-10 03-16-10 05-11-10 5-21-10 5-22-10 5-24-10 5-28-10 6-29-10

SHEET 178 OF 247

FILE => 53-3032-1-q-jtsealdet15.dgn

USERNAME => friehard DATE PLOTTED => 19-OCT-2010 TIME PLOTTED => 08:07

DIST	COUNTY	ROUTE	POST MILES TOTAL PROJECT	SHEET No	TOTAL SHEETS
07	LA	47,103	3.5/4.6, 0.0/1.1	681	1003

REGISTERED CIVIL ENGINEER — DATE 05-24-10

10-11-10
PLANS APPROVAL DATE

REGISTERED PROFESSIONAL ENGINEER — FOUED ZAYATI — No. C57046 — Exp. 06-30-11 — CIVIL — STATE OF CALIFORNIA

The State of California or its officers or agents shall not be responsible for the accuracy or completeness of electronic copies of this plan sheet.

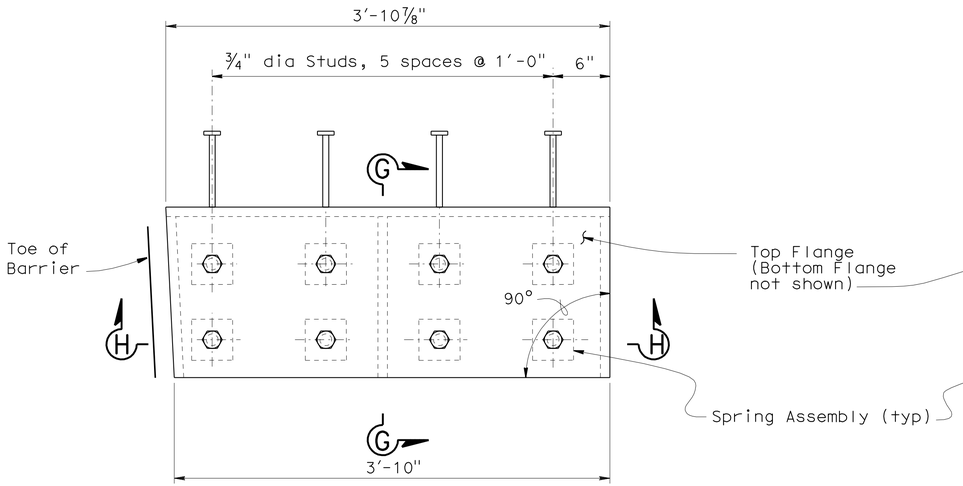

HINGE 2 PLAN
CHANNEL ASSEMBLY "A" (STAGE 2)

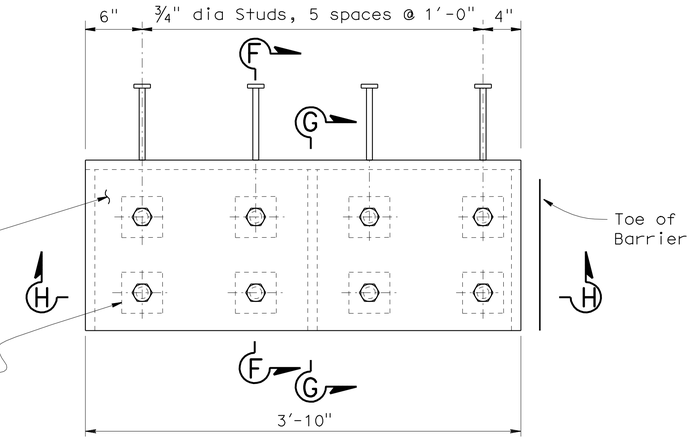

HINGE 2 PLAN
CHANNEL ASSEMBLY "C" (STAGE 1)

NOTE:

1. For 'Section F-F' and 'Section G-G' see "HINGE JOINT SEAL ASSEMBLY DETAILS NO. 17" sheet.

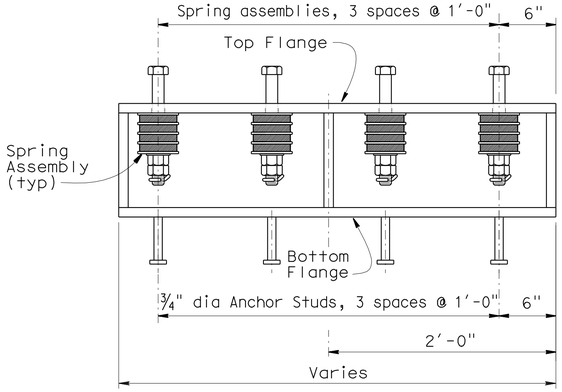

HINGE 2 SECTION H-H
CHANNEL ASSEMBLY "A" (STAGE 2)

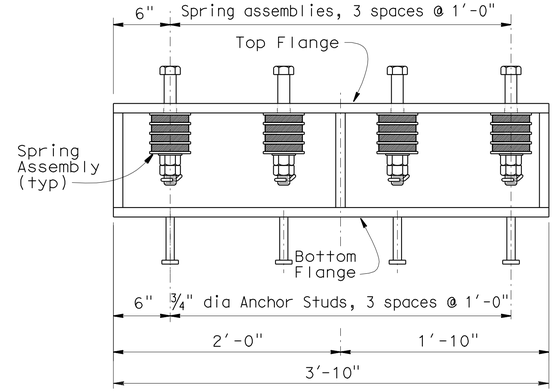

HINGE 2 SECTION H-H
CHANNEL ASSEMBLY "C" (STAGE 2)

THE CONTRACTOR SHALL VERIFY ALL CONTROLLING FIELD DIMENSIONS BEFORE ORDERING OR FABRICATING ANY MATERIAL.

NO SCALE

	BY	CHECKED
DESIGN	F. Zayati	R. Bromenschenkel
DETAILS	M. Lane	F. Zayati
QUANTITIES	V. Ramakrishnan	J. Lane

STATE OF CALIFORNIA
DEPARTMENT OF TRANSPORTATION

DIVISION OF ENGINEERING SERVICES
STRUCTURE DESIGN
DESIGN BRANCH 14

BRIDGE NO. 53-3032
POST MILE 3.58

SCHUYLER HEIM BRIDGE (REPLACE)
HINGE JOINT SEAL ASSEMBLY DETAILS NO. 7

STRUCTURES DESIGN DETAIL SHEET (ENGLISH) (REV. 10/25/05)

ORIGINAL SCALE IN INCHES FOR REDUCED PLANS 0 1 2 3

CU 07-271
EA 138201

DISREGARD PRINTS BEARING EARLIER REVISION DATES

REVISION DATES: 05-22-10, 05-23-10, 05-24-10, 05-28-10, 6-29-10

SHEET 179 OF 247

FILE => 53-3032-1-q-jtsealdet16.dgn

USERNAME => trlenard DATE PLOTTED => 19-OCT-2010 TIME PLOTTED => 08:07

DIST	COUNTY	ROUTE	POST MILES TOTAL PROJECT	SHEET No	TOTAL SHEETS
07	LA	47,103	3.5/4.6, 0.0/1.1	682	1003

REGISTERED CIVIL ENGINEER — DATE 05-24-10

10-11-10
PLANS APPROVAL DATE

REGISTERED PROFESSIONAL ENGINEER — FOUED ZAYATI — No. C57046 — Exp. 06-30-11 — CIVIL — STATE OF CALIFORNIA

The State of California or its officers or agents shall not be responsible for the accuracy or completeness of electronic copies of this plan sheet.

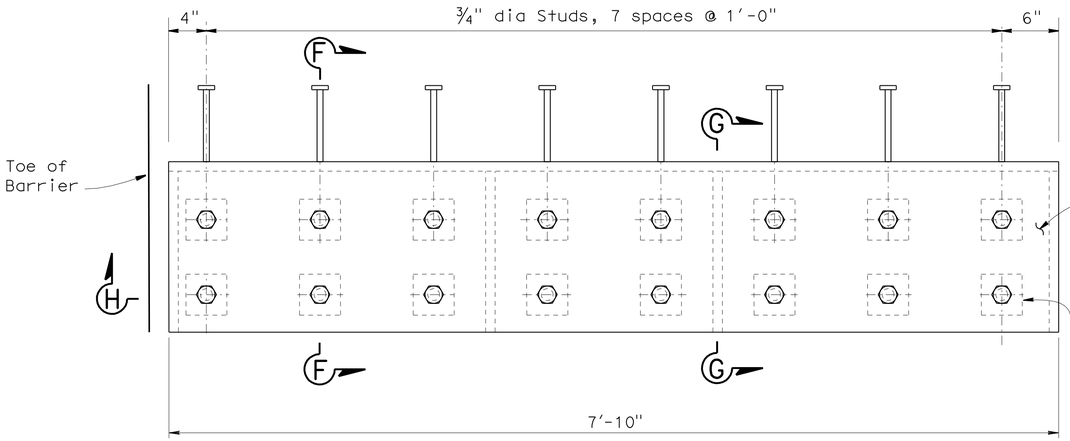

HINGE 2B PLAN
CHANNEL ASSEMBLY "A" (STAGE 2)

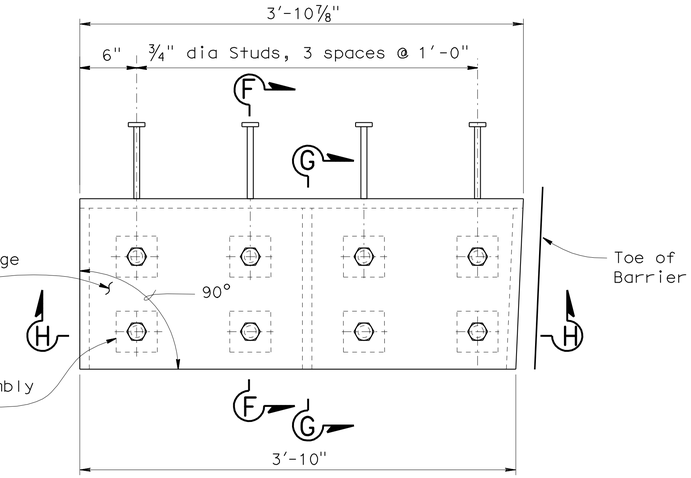

HINGE 2B PLAN
CHANNEL ASSEMBLY "C" (STAGE 2)

NOTE:

1. For 'Section F-F' and 'Section G-G' see "HINGE JOINT SEAL ASSEMBLY DETAILS NO. 17" sheet.

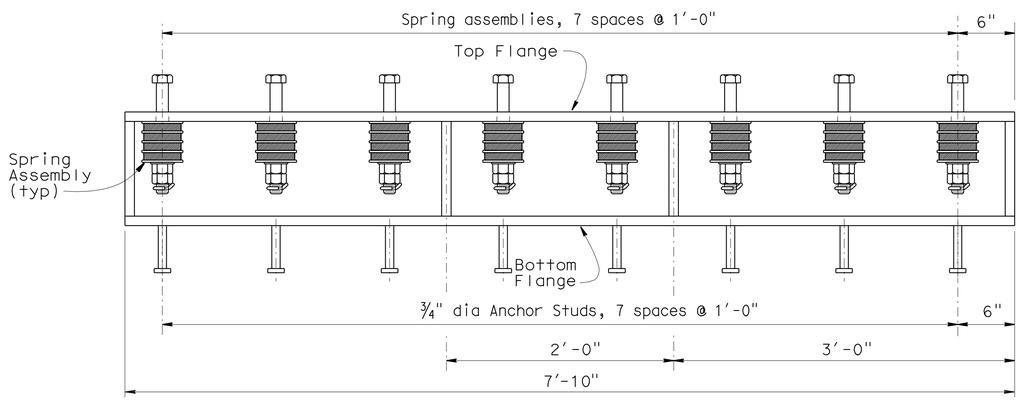

HINGE 2B SECTION H-H
CHANNEL ASSEMBLY "A" (STAGE 2)

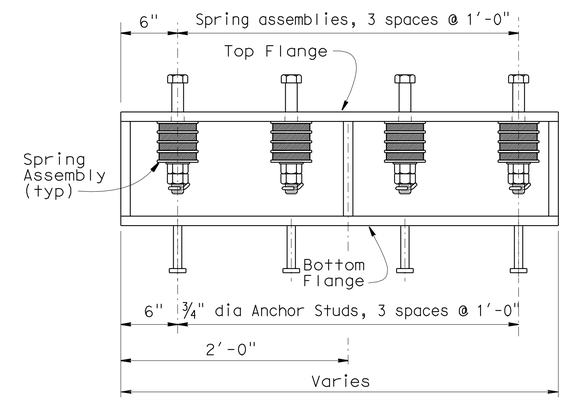

HINGE 2B SECTION H-H
CHANNEL ASSEMBLY "C" (STAGE 2)

THE CONTRACTOR SHALL VERIFY ALL CONTROLLING FIELD DIMENSIONS BEFORE ORDERING OR FABRICATING ANY MATERIAL.

NO SCALE

DESIGN	BY F. Zayati	CHECKED R. Bromenschenkel
DETAILS	BY M. Lane	CHECKED F. Zayati
QUANTITIES	BY V. Ramakrishnan	CHECKED J. Lane

STATE OF CALIFORNIA
DEPARTMENT OF TRANSPORTATION

DIVISION OF ENGINEERING SERVICES
STRUCTURE DESIGN
DESIGN BRANCH 14

BRIDGE NO. 53-3032
POST MILE 3.58

SCHUYLER HEIM BRIDGE (REPLACE)
HINGE JOINT SEAL ASSEMBLY DETAILS NO. 8

STRUCTURES DESIGN DETAIL SHEET (ENGLISH) (REV. 10/25/05)

ORIGINAL SCALE IN INCHES FOR REDUCED PLANS 0 1 2 3

CU 07-271
EA 138201

DISREGARD PRINTS BEARING EARLIER REVISION DATES → REVISION DATES 05-22-10 05-23-10 05-24-10 05-25-10 6-29-10

SHEET 180 OF 247

FILE => 53-3032-1-q-jtsealdet17.dgn

USERNAME => tfriehard DATE PLOTTED => 19-OCT-2010 TIME PLOTTED => 08:07

DIST	COUNTY	ROUTE	POST MILES TOTAL PROJECT	SHEET No	TOTAL SHEETS
07	LA	47,103	3.5/4.6, 0.0/1.1	683	1003

REGISTERED CIVIL ENGINEER — DATE 05-24-10

10-11-10
PLANS APPROVAL DATE

REGISTERED PROFESSIONAL ENGINEER — FOUED ZAYATI No. C57046 Exp. 06-30-11 CIVIL — STATE OF CALIFORNIA

The State of California or its officers or agents shall not be responsible for the accuracy or completeness of electronic copies of this plan sheet.

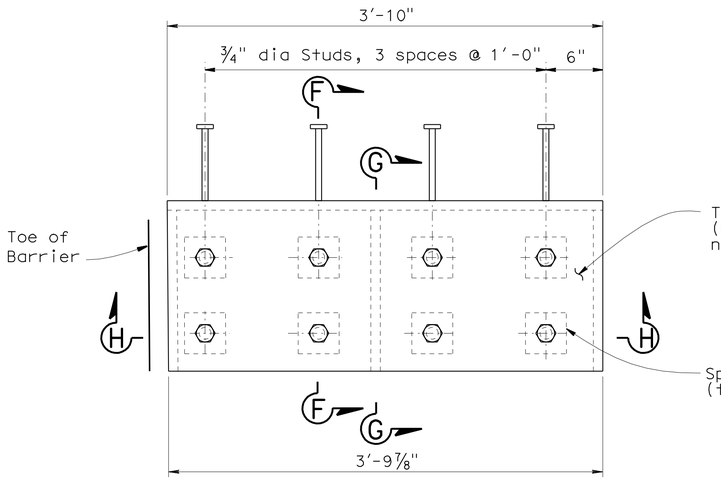

HINGE 2C PLAN
CHANNEL ASSEMBLY "A" (STAGE 1)

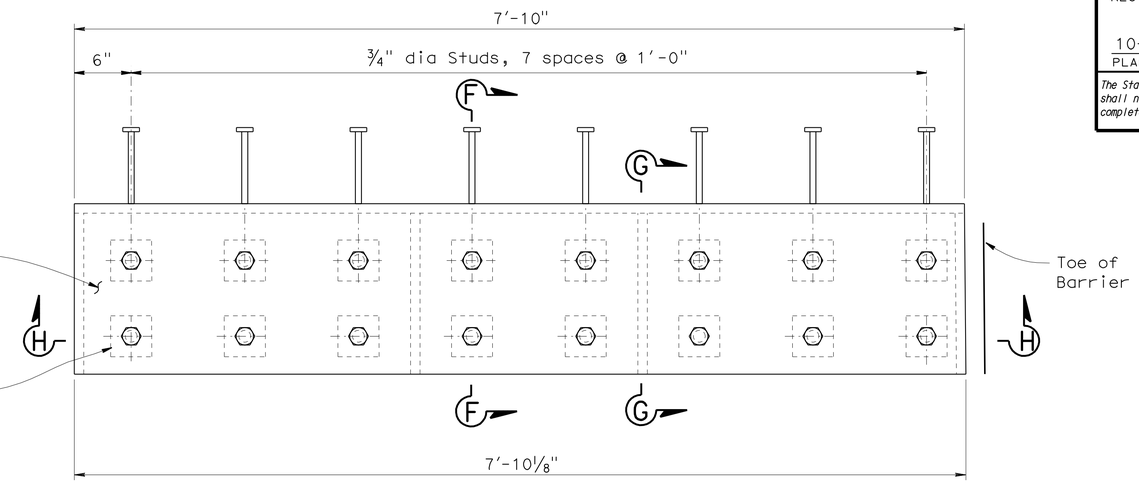

HINGE 2C PLAN
CHANNEL ASSEMBLY "C" (STAGE 1)

NOTE:

1. For 'Section F-F' and 'Section G-G' see "HINGE JOINT SEAL ASSEMBLY DETAILS NO. 17" sheet.

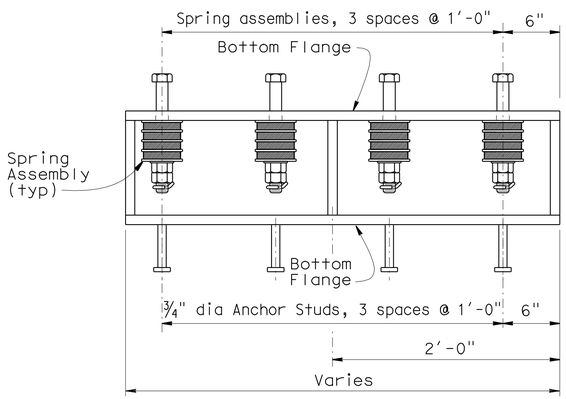

HINGE 2C SECTION H-H
CHANNEL ASSEMBLY "A" (STAGE 1)

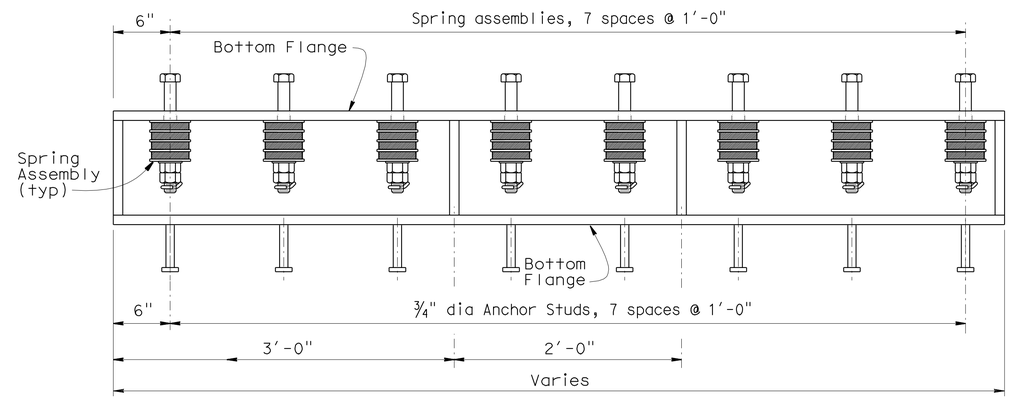

HINGE 2C SECTION H-H
CHANNEL ASSEMBLY "C" (STAGE 1)

THE CONTRACTOR SHALL VERIFY ALL CONTROLLING FIELD DIMENSIONS BEFORE ORDERING OR FABRICATING ANY MATERIAL.

NO SCALE

	BY	CHECKED
DESIGN	F. Zayati	R. Bromenschenkel
DETAILS	M. Lane	F. Zayati
QUANTITIES	V. Ramakrishnan	J. Lane

STATE OF CALIFORNIA
DEPARTMENT OF TRANSPORTATION

DIVISION OF ENGINEERING SERVICES
STRUCTURE DESIGN
DESIGN BRANCH 14

BRIDGE NO. 53-3032
POST MILE 3.58

SCHUYLER HEIM BRIDGE (REPLACE)
HINGE JOINT SEAL ASSEMBLY DETAILS NO. 9

STRUCTURES DESIGN DETAIL SHEET (ENGLISH) (REV. 10/25/05)

ORIGINAL SCALE IN INCHES FOR REDUCED PLANS 0 1 2 3

CU 07-271
EA 138201

DISREGARD PRINTS BEARING EARLIER REVISION DATES → 05-28-10 05-25-10 05-24-10 05-25-10 6-29-10

REVISION DATES

SHEET 181 OF 247

FILE => 53-3032-1-q-jtsealdet18.dgn

USERNAME => friehard DATE PLOTTED => 19-OCT-2010 TIME PLOTTED => 08:07

DIST	COUNTY	ROUTE	POST MILES TOTAL PROJECT	SHEET No	TOTAL SHEETS
07	LA	47,103	3.5/4.6, 0.0/1.1	684	1003

REGISTERED CIVIL ENGINEER — 05-24-10 DATE

10-11-10
PLANS APPROVAL DATE

REGISTERED PROFESSIONAL ENGINEER — FOUED ZAYATI — No. C57046 — Exp. 06-30-11 — CIVIL — STATE OF CALIFORNIA

The State of California or its officers or agents shall not be responsible for the accuracy or completeness of electronic copies of this plan sheet.

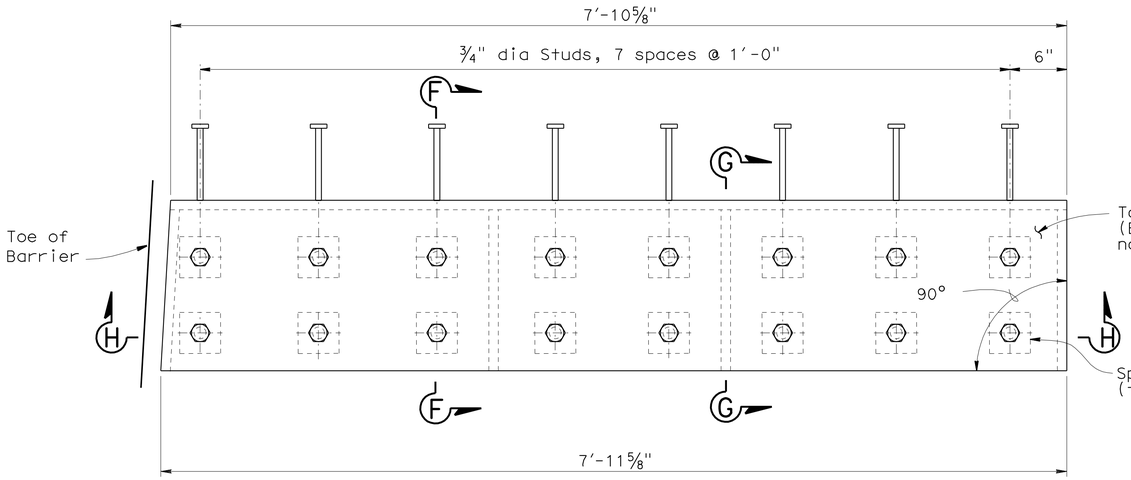

HINGE 3 PLAN
CHANNEL ASSEMBLY "A" (STAGE 1)

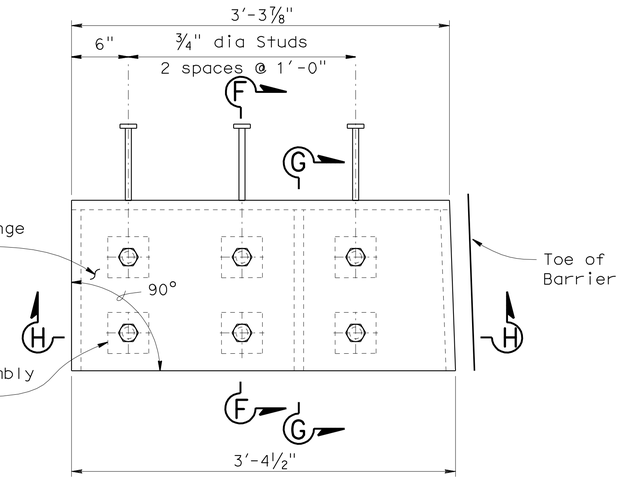

HINGE 3 PLAN
CHANNEL ASSEMBLY "C" (STAGE 1)

NOTE:

1. For 'Section F-F' and 'Section G-G' see "HINGE JOINT SEAL ASSEMBLY DETAILS NO. 17" sheet.

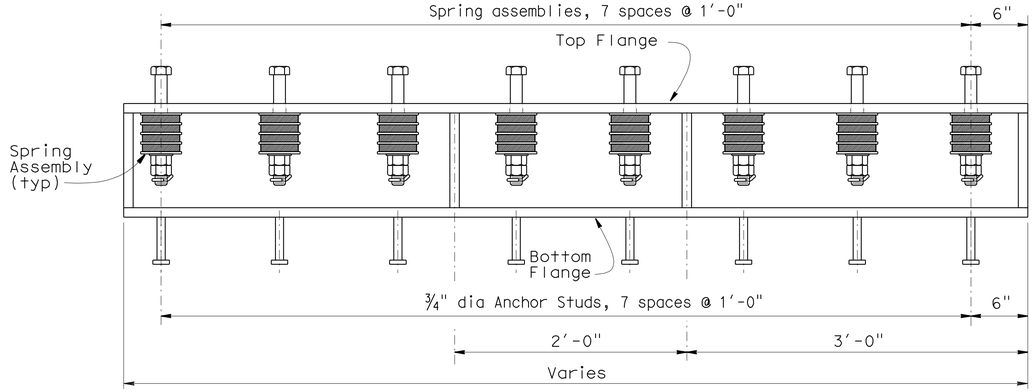

HINGE 3 SECTION H-H
CHANNEL ASSEMBLY "A" (STAGE 1)

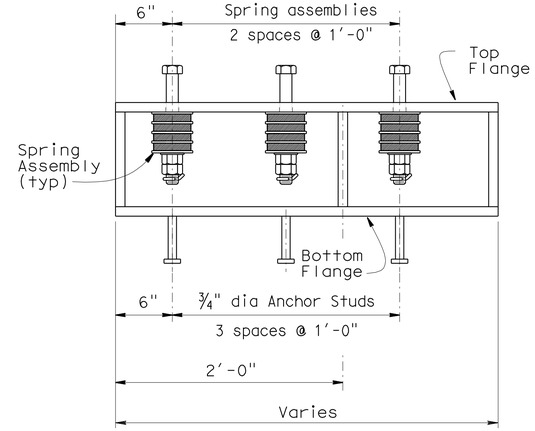

HINGE 3 SECTION H-H
CHANNEL ASSEMBLY "C" (STAGE 1)

THE CONTRACTOR SHALL VERIFY ALL CONTROLLING FIELD DIMENSIONS BEFORE ORDERING OR FABRICATING ANY MATERIAL.

NO SCALE

	BY	CHECKED
DESIGN	F. Zayati	R. Bromenschenkel
DETAILS	M. Lane	F. Zayati
QUANTITIES	V. Ramakrishnan	J. Lane

STATE OF CALIFORNIA
DEPARTMENT OF TRANSPORTATION

DIVISION OF ENGINEERING SERVICES
STRUCTURE DESIGN
DESIGN BRANCH 14

BRIDGE NO. 53-3032
POST MILE 3.58

SCHUYLER HEIM BRIDGE (REPLACE)
HINGE JOINT SEAL ASSEMBLY DETAILS NO. 10

STRUCTURES DESIGN DETAIL SHEET (ENGLISH) (REV. 10/25/05)

ORIGINAL SCALE IN INCHES FOR REDUCED PLANS 0 1 2 3

CU 07-271
EA 138201

DISREGARD PRINTS BEARING EARLIER REVISION DATES

REVISION DATES: ~~05-25-10~~ ~~05-25-10~~ ~~05-24-10~~ ~~05-28-10~~ 6-29-10

SHEET 182 OF 247

FILE => 53-3032-1-q-jtsealdet19.dgn

USERNAME => friehard DATE PLOTTED => 19-OCT-2010 TIME PLOTTED => 08:07

DIST	COUNTY	ROUTE	POST MILES TOTAL PROJECT	SHEET No	TOTAL SHEETS
07	LA	47,103	3.5/4.6, 0.0/1.1	685	1003

REGISTERED CIVIL ENGINEER 05-24-10 DATE

10-11-10
PLANS APPROVAL DATE

REGISTERED PROFESSIONAL ENGINEER FOUED ZAYATI No. C57046 Exp. 06-30-11 CIVIL STATE OF CALIFORNIA

The State of California or its officers or agents shall not be responsible for the accuracy or completeness of electronic copies of this plan sheet.

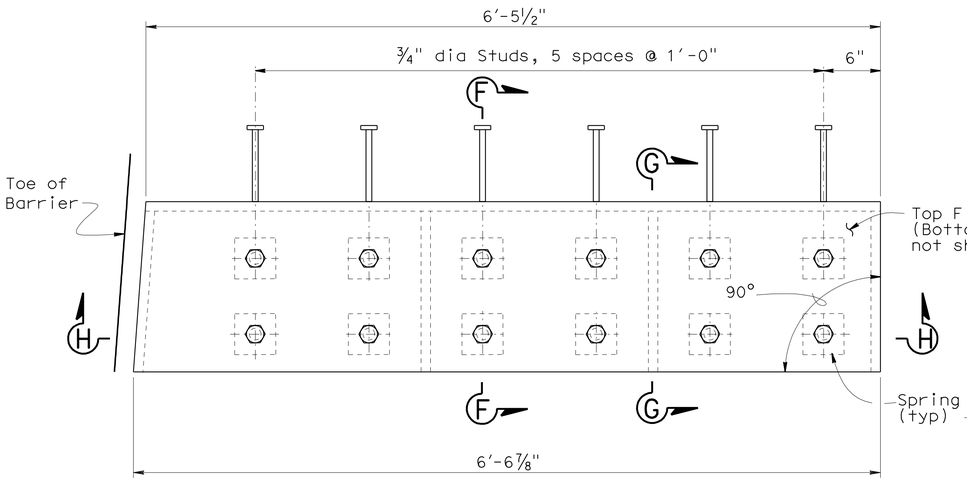

HINGE 3 PLAN
CHANNEL ASSEMBLY "A" (STAGE 2)

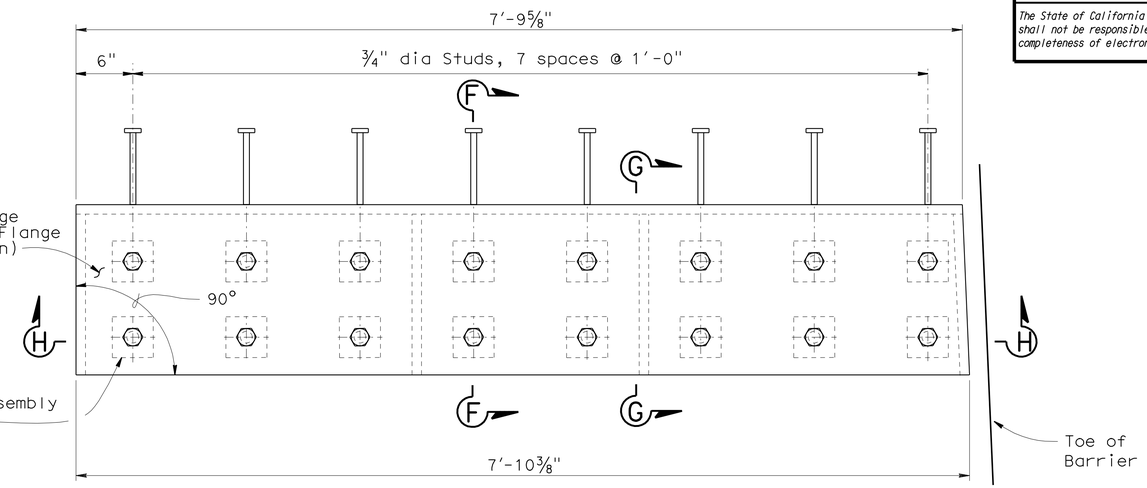

HINGE 3 PLAN
CHANNEL ASSEMBLY "C" (STAGE 2)

NOTE:

1. For 'Section F-F' and 'Section G-G' see "HINGE JOINT SEAL ASSEMBLY DETAILS NO. 17" sheet.

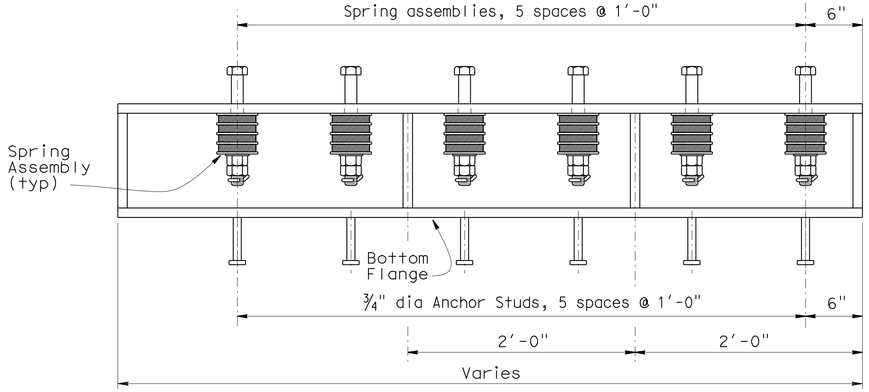

HINGE 3 SECTION H-H
CHANNEL ASSEMBLY "A" (STAGE 2)

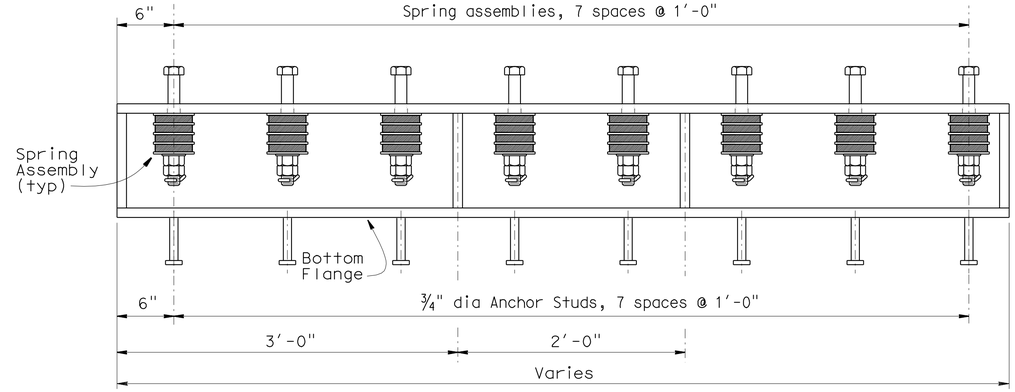

HINGE 3 SECTION H-H
CHANNEL ASSEMBLY "C" (STAGE 2)

THE CONTRACTOR SHALL VERIFY ALL CONTROLLING FIELD DIMENSIONS BEFORE ORDERING OR FABRICATING ANY MATERIAL.

NO SCALE

	BY	CHECKED
DESIGN	F. Zayati	R. Bromenschenkel
DETAILS	M. Lane	F. Zayati
QUANTITIES	V. Ramakrishnan	J. Lane

STATE OF CALIFORNIA
DEPARTMENT OF TRANSPORTATION

DIVISION OF ENGINEERING SERVICES
STRUCTURE DESIGN
DESIGN BRANCH 14

BRIDGE NO. 53-3032
POST MILE 3.58

SCHUYLER HEIM BRIDGE (REPLACE)
HINGE JOINT SEAL ASSEMBLY DETAILS NO. 11

STRUCTURES DESIGN DETAIL SHEET (ENGLISH) (REV. 10/25/05)

ORIGINAL SCALE IN INCHES FOR REDUCED PLANS 0 1 2 3

CU 07-271
EA 138201

DISREGARD PRINTS BEARING EARLIER REVISION DATES

REVISION DATES: 05-24-10 05-25-10 05-24-10 05-25-10 6-29-10

SHEET 183 OF 247

FILE => 53-3032-1-q-jtsealdet20.dgn

USERNAME => rfrenard DATE PLOTTED => 19-OCT-2010 TIME PLOTTED => 08:07

DIST	COUNTY	ROUTE	POST MILES TOTAL PROJECT	SHEET No	TOTAL SHEETS
07	LA	47,103	3.5/4.6, 0.0/1.1	686	1003

REGISTERED CIVIL ENGINEER — DATE 05-24-10

10-11-10
PLANS APPROVAL DATE

REGISTERED PROFESSIONAL ENGINEER — FOUED ZAYATI — No. C57046 — Exp. 06-30-11 — CIVIL — STATE OF CALIFORNIA

The State of California or its officers or agents shall not be responsible for the accuracy or completeness of electronic copies of this plan sheet.

NOTE:

1. For 'Section F-F' and 'Section G-G' see "HINGE JOINT SEAL ASSEMBLY DETAILS NO. 17" sheet.

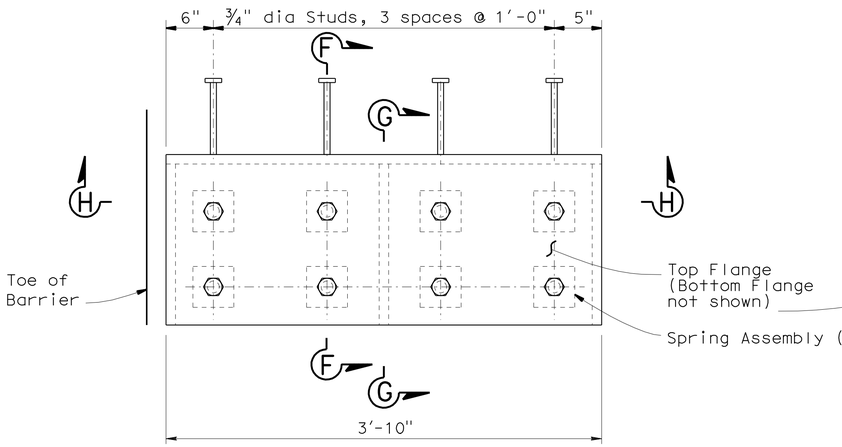

HINGE 4 PLAN
CHANNEL ASSEMBLY "A" (STAGE 1 & 2)

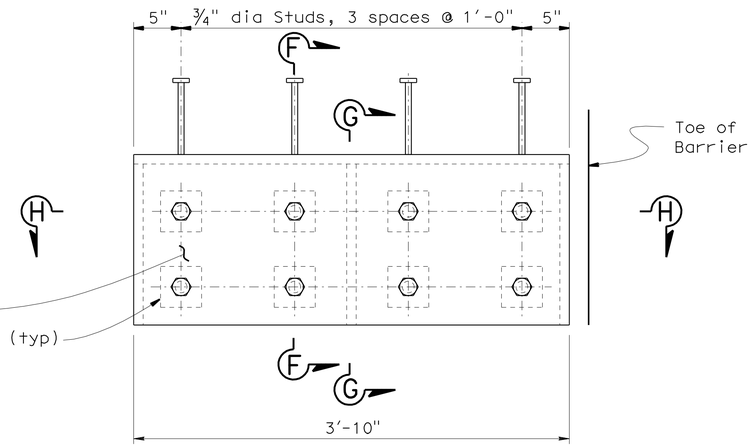

HINGE 4 PLAN
CHANNEL ASSEMBLY "C" (STAGE 1 & 2)

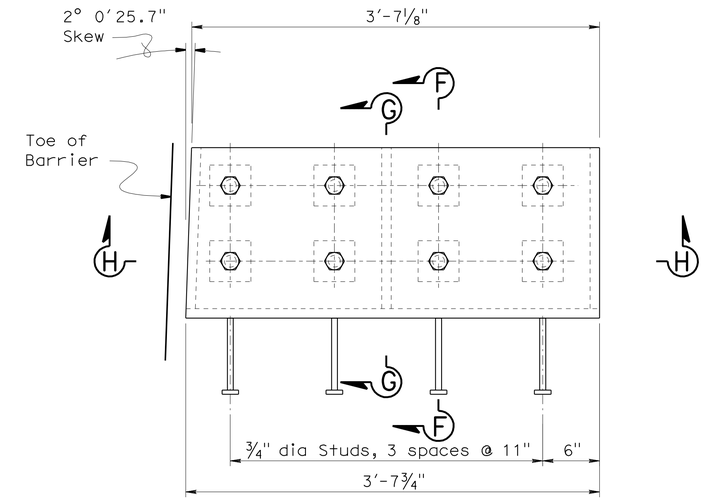

HINGE 5 PLAN
CHANNEL ASSEMBLY "A" (STAGE 1)

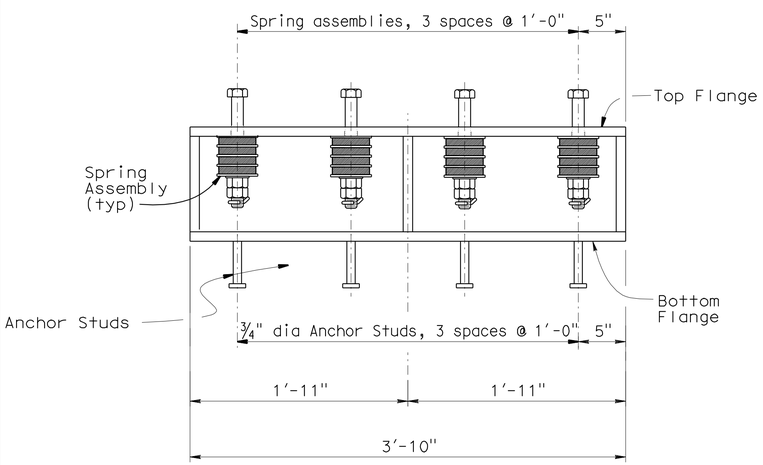

HINGE 4 SECTION H-H
CHANNEL ASSEMBLY "A" (STAGE 1 & 2)

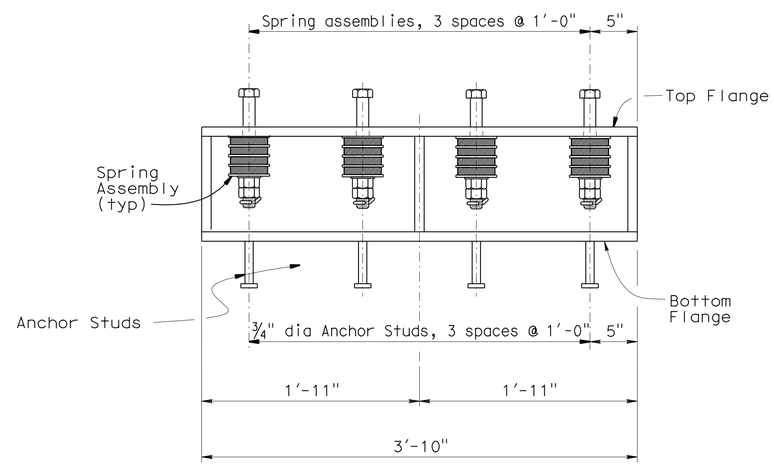

HINGE 4 SECTION H-H
CHANNEL ASSEMBLY "C" (STAGE 1 & 2)

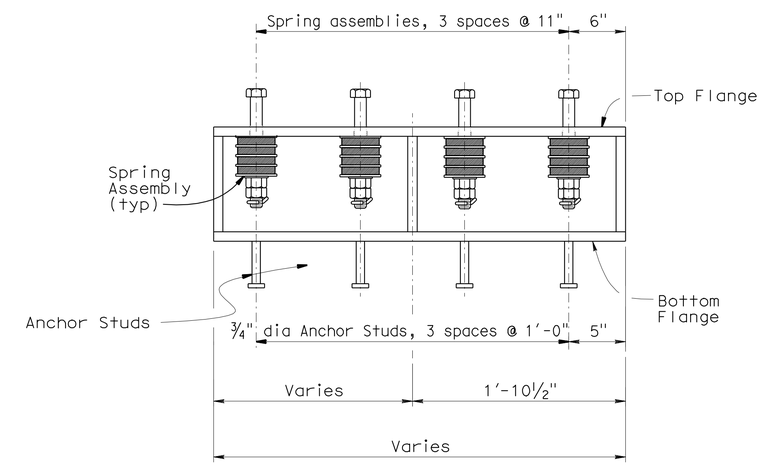

HINGE 5 SECTION H-H
CHANNEL ASSEMBLY "A" (STAGE 1)

THE CONTRACTOR SHALL VERIFY ALL CONTROLLING FIELD DIMENSIONS BEFORE ORDERING OR FABRICATING ANY MATERIAL.

NO SCALE

	BY	CHECKED
DESIGN	F. Zayati	R. Bromenschenkel
DETAILS	J. Thorne	F. Zayati
QUANTITIES	V. Ramakrishnan	J. Lane

STATE OF CALIFORNIA
DEPARTMENT OF TRANSPORTATION

DIVISION OF ENGINEERING SERVICES
STRUCTURE DESIGN
DESIGN BRANCH 14

BRIDGE NO. 53-3032
POST MILE 3.58

SCHUYLER HEIM BRIDGE (REPLACE)
HINGE JOINT SEAL ASSEMBLY DETAILS NO. 12

STRUCTURES DESIGN DETAIL SHEET (ENGLISH) (REV. 10/25/05)

ORIGINAL SCALE IN INCHES FOR REDUCED PLANS 0 1 2 3

CU 07-271
EA 138201

DISREGARD PRINTS BEARING EARLIER REVISION DATES

REVISION DATES: 05-24-10 05-24-10 05-24-10 05-24-10 6-29-10

SHEET 184 OF 247

FILE => 53-3032-1-q-jtsealdet21.dgn

USERNAME => trlenard DATE PLOTTED => 13-OCT-2010 TIME PLOTTED => 08:07

DIST	COUNTY	ROUTE	POST MILES TOTAL PROJECT	SHEET No	TOTAL SHEETS
07	LA	47,103	3.5/4.6, 0.0/1.1	687	1003

REGISTERED CIVIL ENGINEER — DATE 05-24-10

10-11-10
PLANS APPROVAL DATE

REGISTERED PROFESSIONAL ENGINEER — FOUED ZAYATI — No. C57046 — Exp. 06-30-11 — CIVIL — STATE OF CALIFORNIA

The State of California or its officers or agents shall not be responsible for the accuracy or completeness of electronic copies of this plan sheet.

NOTE:

1. For 'Section F-F' and 'Section G-G' see "HINGE JOINT SEAL ASSEMBLY DETAILS NO. 17" sheet.

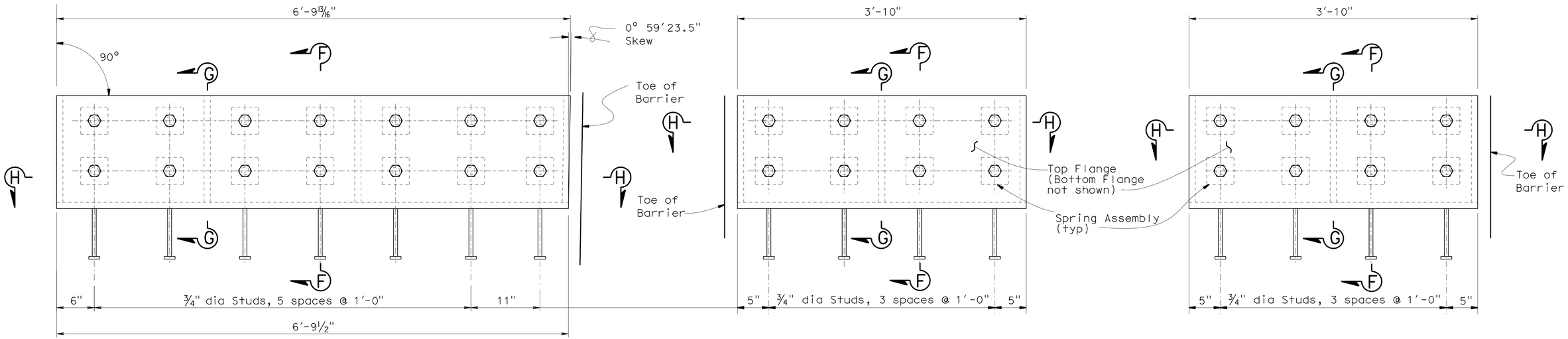

HINGE 5 PLAN
CHANNEL ASSEMBLY "C" (STAGE 1)

HINGE 5 PLAN
CHANNEL ASSEMBLY "A" (STAGE 2)

HINGE 5 PLAN
CHANNEL ASSEMBLY "C" (STAGE 2)

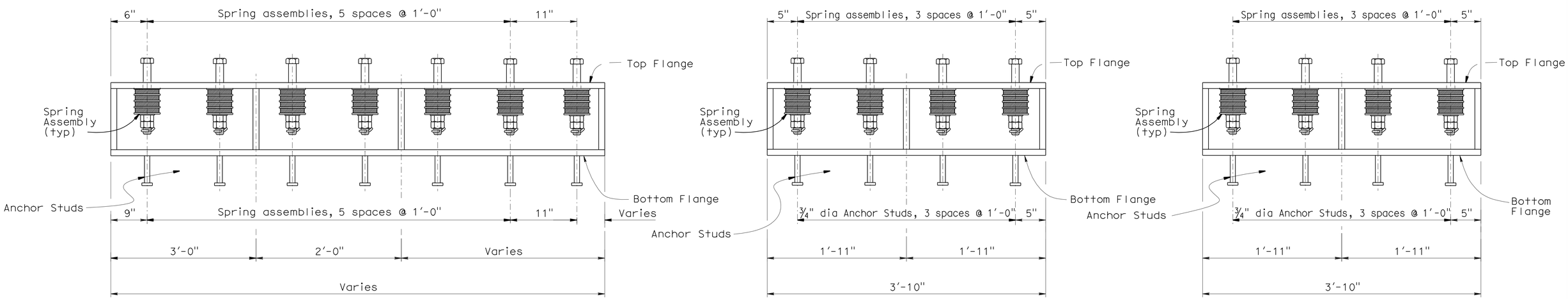

HINGE 5 SECTION H-H
CHANNEL ASSEMBLY "C" (STAGE 1)

HINGE 5 SECTION H-H
CHANNEL ASSEMBLY "A" (STAGE 2)

HINGE 5 SECTION H-H
CHANNEL ASSEMBLY "C" (STAGE 2)

THE CONTRACTOR SHALL VERIFY ALL CONTROLLING FIELD DIMENSIONS BEFORE ORDERING OR FABRICATING ANY MATERIAL.

NO SCALE

	BY	CHECKED
DESIGN	F. Zayati	R. Bromenschenkel
DETAILS	J. Thorne	F. Zayati
QUANTITIES	V. Ramakrishnan	J. Lane

STATE OF CALIFORNIA
DEPARTMENT OF TRANSPORTATION

DIVISION OF ENGINEERING SERVICES
STRUCTURE DESIGN
DESIGN BRANCH 14

BRIDGE NO. 53-3032
POST MILE 3.58

SCHUYLER HEIM BRIDGE (REPLACE)
HINGE JOINT SEAL ASSEMBLY DETAILS NO. 13

STRUCTURES DESIGN DETAIL SHEET (ENGLISH) (REV. 10/25/05)

ORIGINAL SCALE IN INCHES FOR REDUCED PLANS 0 1 2 3

CU 07-271
EA 138201

DISREGARD PRINTS BEARING EARLIER REVISION DATES

REVISION DATES: 05-24-10 05-24-10 05-24-10 05-24-10 6-29-10

SHEET 185 OF 247

FILE => 53-3032-1-q-jtsealdet22.dgn

USERNAME => friemard DATE PLOTTED => 19-OCT-2010 TIME PLOTTED => 08:08

DIST	COUNTY	ROUTE	POST MILES TOTAL PROJECT	SHEET No	TOTAL SHEETS
07	LA	47,103	3.5/4.6, 0.0/1.1	688	1003

REGISTERED CIVIL ENGINEER — DATE 05-24-10

10-11-10
PLANS APPROVAL DATE

REGISTERED PROFESSIONAL ENGINEER — FOUED ZAYATI — No. C57046 — Exp. 06-30-11 — CIVIL — STATE OF CALIFORNIA

The State of California or its officers or agents shall not be responsible for the accuracy or completeness of electronic copies of this plan sheet.

NOTE:

1. For 'Section F-F' and 'Section G-G' see "HINGE JOINT SEAL ASSEMBLY DETAILS NO. 17" sheet.

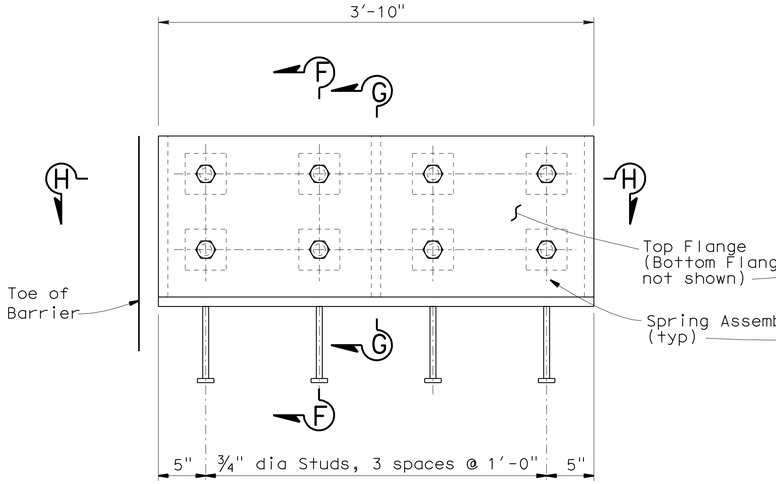

HINGE 6 PLAN
CHANNEL ASSEMBLY "A" (STAGE 1 & 2)

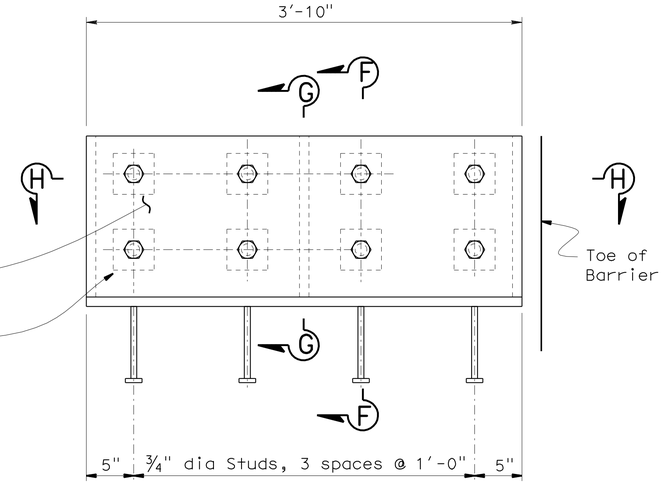

HINGE 6 PLAN
CHANNEL ASSEMBLY "C" (STAGE 1 & 2)

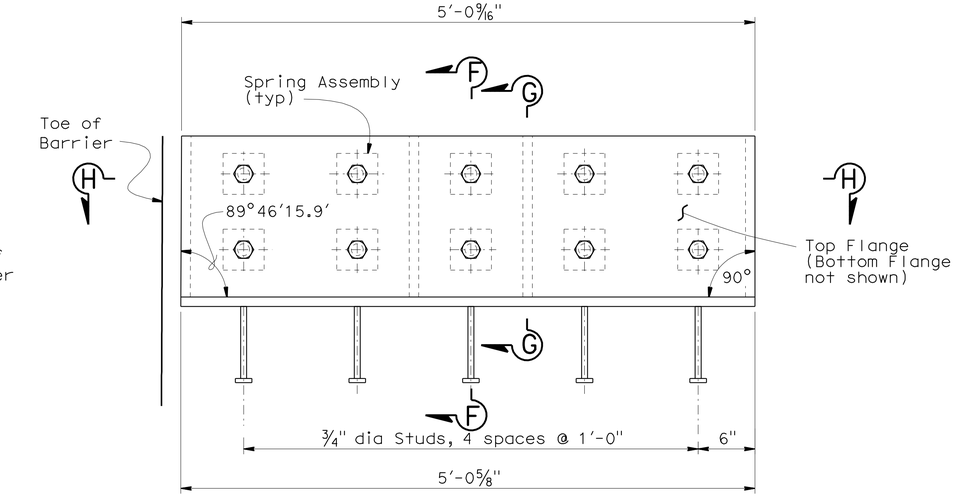

HINGE 7E PLAN
CHANNEL ASSEMBLY "A" (STAGE 1)

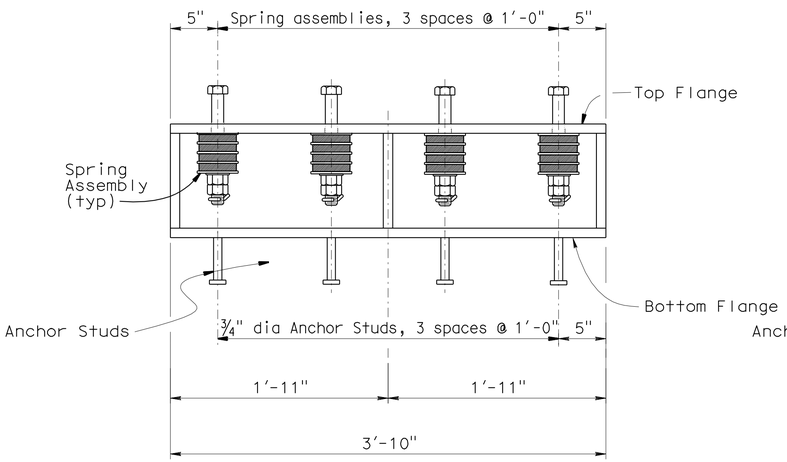

HINGE 6 SECTION H-H
CHANNEL ASSEMBLY "A" (STAGE 1 & 2)

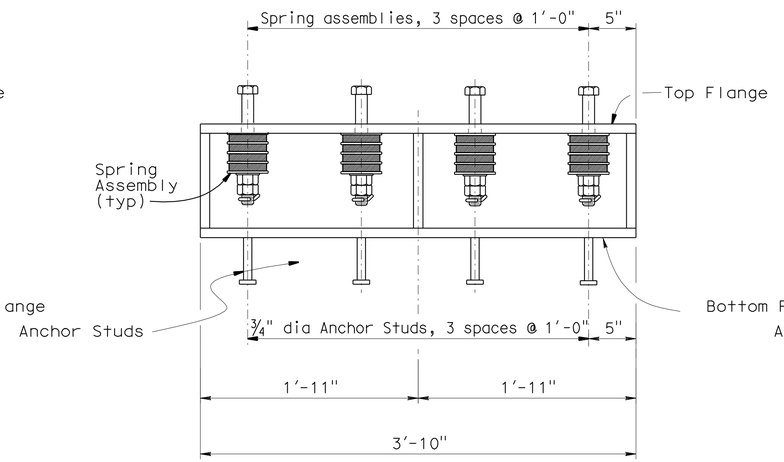

HINGE 6 SECTION H-H
CHANNEL ASSEMBLY "C" (STAGE 1 & 2)

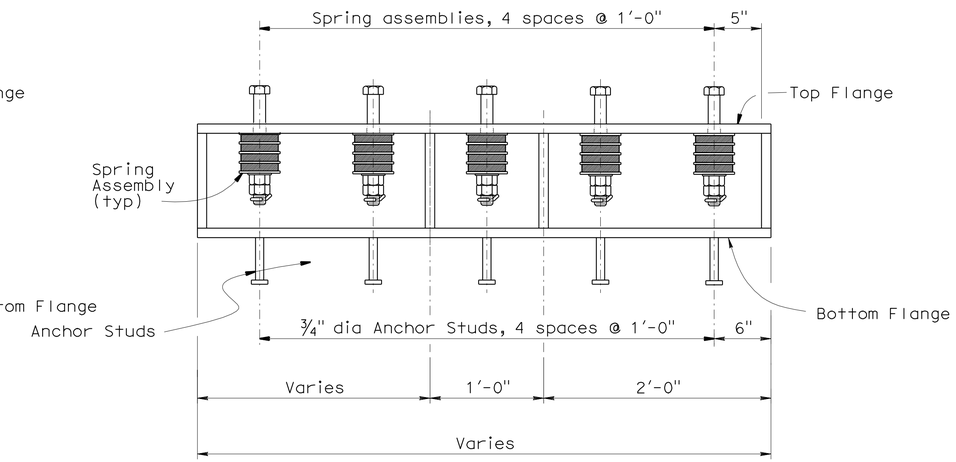

HINGE 7E SECTION H-H
CHANNEL ASSEMBLY "A" (STAGE 1 & 2)

THE CONTRACTOR SHALL VERIFY ALL CONTROLLING FIELD DIMENSIONS BEFORE ORDERING OR FABRICATING ANY MATERIAL.

NO SCALE

	BY	CHECKED
DESIGN	F. Zayati	R. Bromenschenkel
DETAILS	J. Thorne	F. Zayati
QUANTITIES	V. Ramakrishnan	J. Lane

STATE OF CALIFORNIA
DEPARTMENT OF TRANSPORTATION

DIVISION OF ENGINEERING SERVICES
STRUCTURE DESIGN
DESIGN BRANCH 14

BRIDGE NO. 53-3032
POST MILE 3.58

SCHUYLER HEIM BRIDGE (REPLACE)
HINGE JOINT SEAL ASSEMBLY DETAILS NO. 14

STRUCTURES DESIGN DETAIL SHEET (ENGLISH) (REV. 10/25/05)

ORIGINAL SCALE IN INCHES FOR REDUCED PLANS 0 1 2 3

CU 07-271
EA 138201

DISREGARD PRINTS BEARING EARLIER REVISION DATES

REVISION DATES: 05-24-10 05-24-10 05-24-10 05-24-10 6-29-10

SHEET 186 OF 247

FILE => 53-3032-1-q-jtsealdet23.dgn

USERNAME => trienard DATE PLOTTED => 13-OCT-2010 TIME PLOTTED => 08:08

DIST	COUNTY	ROUTE	POST MILES TOTAL PROJECT	SHEET No	TOTAL SHEETS
07	LA	47,103	3.5/4.6, 0.0/1.1	689	1003

REGISTERED CIVIL ENGINEER — DATE 05-24-10

10-11-10
PLANS APPROVAL DATE

REGISTERED PROFESSIONAL ENGINEER — FOUED ZAYATI — No. C57046 — Exp. 06-30-11 — CIVIL — STATE OF CALIFORNIA

The State of California or its officers or agents shall not be responsible for the accuracy or completeness of electronic copies of this plan sheet.

NOTE:

1. For 'Section F-F' and 'Section G-G' see "HINGE JOINT SEAL ASSEMBLY DETAILS NO. 17" sheet.

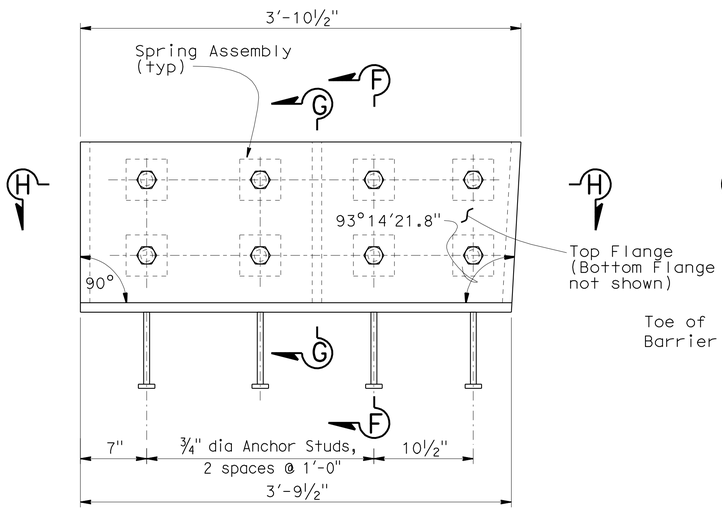

HINGE 7E PLAN
CHANNEL ASSEMBLY "C" (STAGE 1)

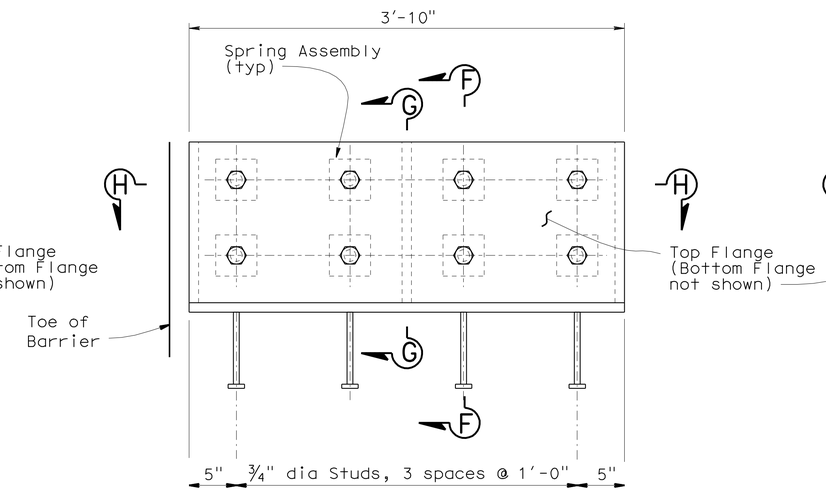

HINGE 7G PLAN
CHANNEL ASSEMBLY "A" (STAGE 2)

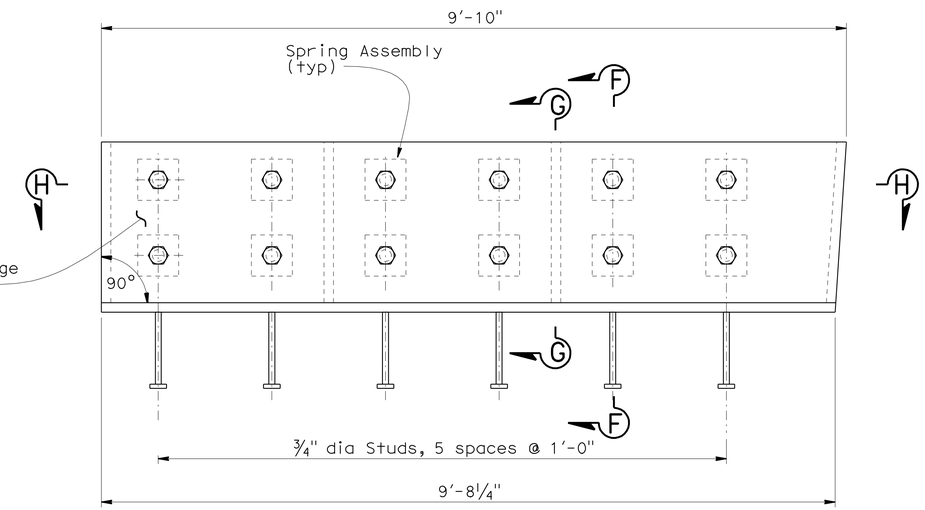

HINGE 7G PLAN
CHANNEL ASSEMBLY "C" (STAGE 2)

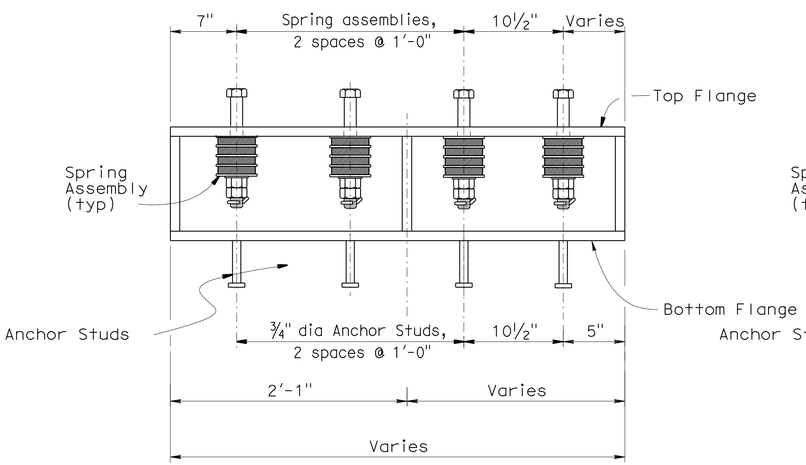

HINGE 7E SECTION H-H
CHANNEL ASSEMBLY "C" (STAGE 1)

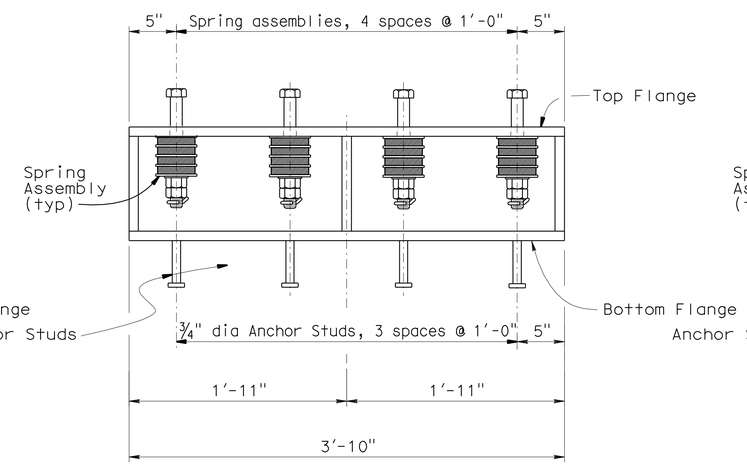

HINGE 7G SECTION H-H
CHANNEL ASSEMBLY "A" (STAGE 2)

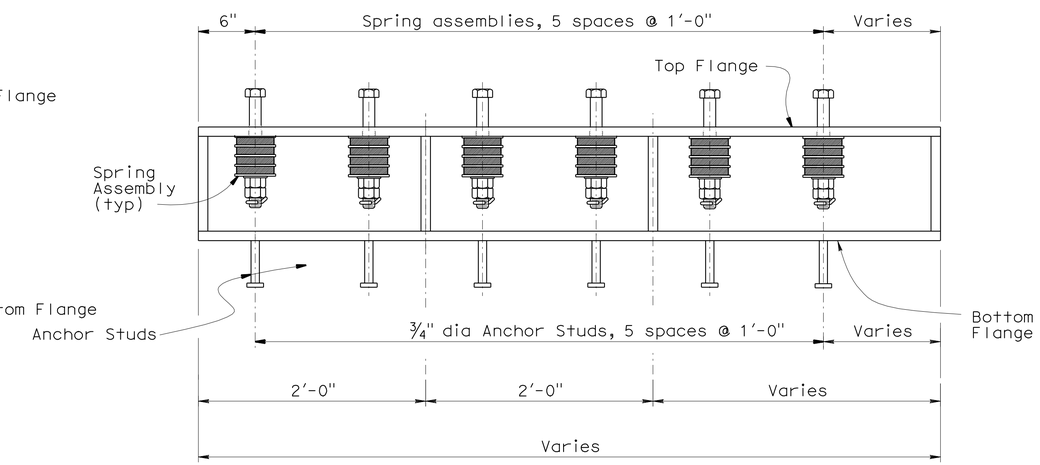

HINGE 7G SECTION H-H
CHANNEL ASSEMBLY "C" (STAGE 2)

THE CONTRACTOR SHALL VERIFY ALL CONTROLLING FIELD DIMENSIONS BEFORE ORDERING OR FABRICATING ANY MATERIAL.

NO SCALE

	BY	CHECKED
DESIGN	F. Zayati	R. Bromenschenkel
DETAILS	J. Thorne	F. Zayati
QUANTITIES	V. Ramakrishnan	J. Lane

STATE OF CALIFORNIA
DEPARTMENT OF TRANSPORTATION

DIVISION OF ENGINEERING SERVICES
STRUCTURE DESIGN
DESIGN BRANCH 14

BRIDGE NO. 53-3032
POST MILE 3.58

SCHUYLER HEIM BRIDGE (REPLACE)
HINGE JOINT SEAL ASSEMBLY DETAILS NO. 15

STRUCTURES DESIGN DETAIL SHEET (ENGLISH) (REV. 10/25/05)

ORIGINAL SCALE IN INCHES FOR REDUCED PLANS 0 1 2 3

CU 07-271
EA 138201

DISREGARD PRINTS BEARING EARLIER REVISION DATES

REVISION DATES: 05-24-10 05-25-10 05-26-10 5-27-10 5-28-10 6-29-10

SHEET 187 OF 247

FILE => 53-3032-1-q-jtsealdet24.dgn

USERNAME => trienard DATE PLOTTED => 19-OCT-2010 TIME PLOTTED => 08:08

DIST	COUNTY	ROUTE	POST MILES TOTAL PROJECT	SHEET No	TOTAL SHEETS
07	LA	47,103	3.5/4.6, 0.0/1.1	690	1003

REGISTERED CIVIL ENGINEER 05-24-10 DATE

10-11-10
PLANS APPROVAL DATE

REGISTERED PROFESSIONAL ENGINEER FOUED ZAYATI No. C57046 Exp. 06-30-11 CIVIL STATE OF CALIFORNIA

The State of California or its officers or agents shall not be responsible for the accuracy or completeness of electronic copies of this plan sheet.

NOTE:

1. For 'Section F-F' and 'Section G-G' see "HINGE JOINT SEAL ASSEMBLY DETAILS NO. 17" sheet.

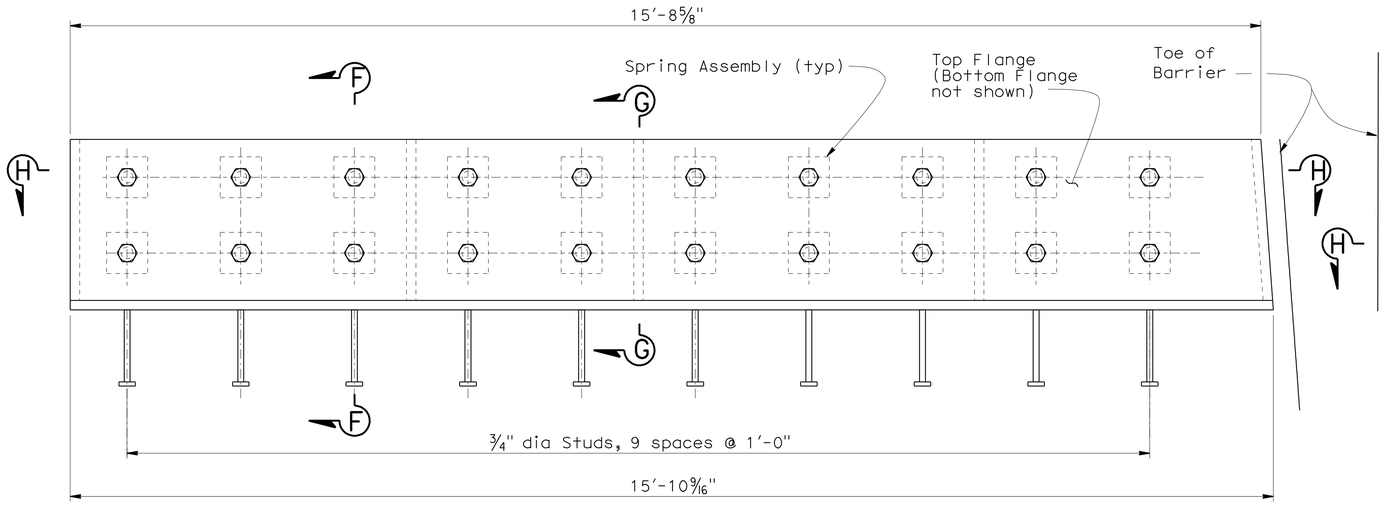

HINGE 7E CHANNEL ASSEMBLY "TEMP" (STAGE 1)

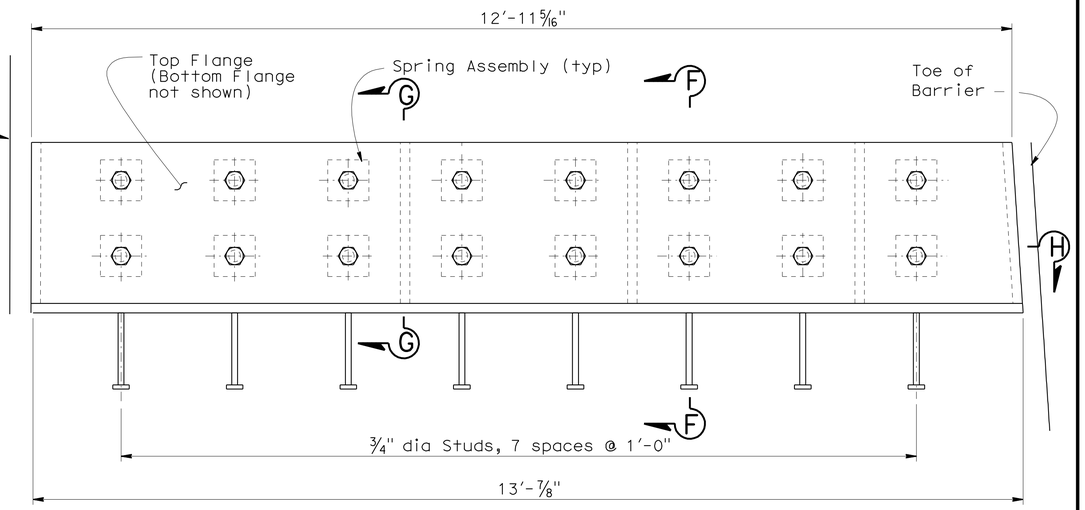

HINGE 7G CHANNEL ASSEMBLY "TEMP" (STAGE 2)

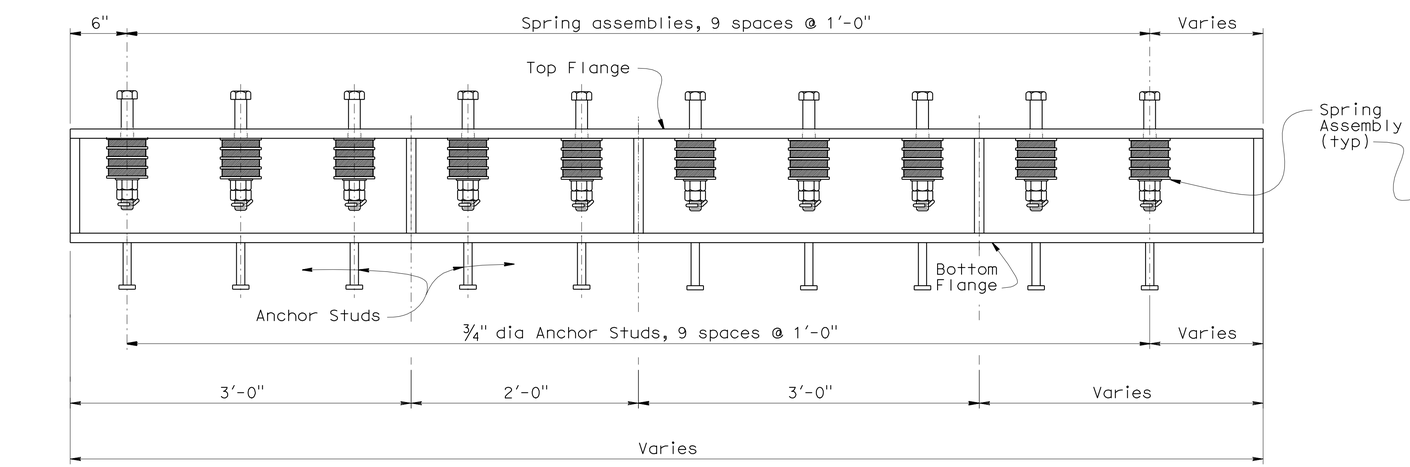

HINGE 7G SECTION H-H CHANNEL ASSEMBLY "C" (STAGE 2)

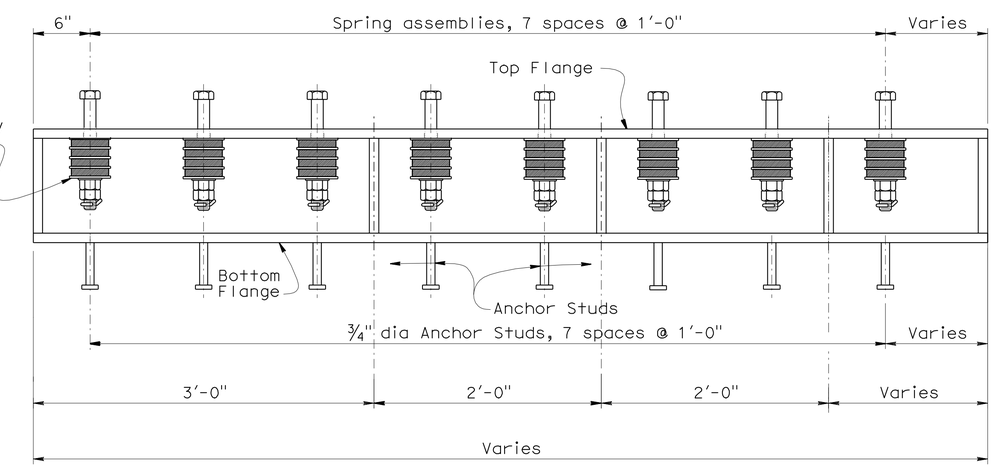

HINGE 7G SECTION H-H CHANNEL ASSEMBLY "C" (STAGE 2)

THE CONTRACTOR SHALL VERIFY ALL CONTROLLING FIELD DIMENSIONS BEFORE ORDERING OR FABRICATING ANY MATERIAL.

NO SCALE

DESIGN	BY F. Zayati	CHECKED R. Bromenschenkel	
DETAILS	BY J. Thorne	CHECKED F. Zayati	
QUANTITIES	BY V. Ramakrishnan	CHECKED J. Lane	

STATE OF CALIFORNIA DEPARTMENT OF TRANSPORTATION

DIVISION OF ENGINEERING SERVICES STRUCTURE DESIGN DESIGN BRANCH 14

BRIDGE NO. 53-3032
POST MILE 3.58

SCHUYLER HEIM BRIDGE (REPLACE)
HINGE JOINT SEAL ASSEMBLY DETAILS NO. 16

STRUCTURES DESIGN DETAIL SHEET (ENGLISH) (REV. 10/25/05)

ORIGINAL SCALE IN INCHES FOR REDUCED PLANS 0 1 2 3

CU 07-271
EA 138201

DISREGARD PRINTS BEARING EARLIER REVISION DATES

REVISION DATES: 05-24-10 05-25-10 05-26-10 5-24-10 5-28-10 6-29-10

SHEET 188 OF 247

FILE => 53-3032-1-q-jtsealdet25.dgn

USERNAME => trienard DATE PLOTTED => 13-OCT-2010 TIME PLOTTED => 08:08

DIST	COUNTY	ROUTE	POST MILES TOTAL PROJECT	SHEET No	TOTAL SHEETS
07	LA	47,103	3.5/4.6, 0.0/1.1	691	1003

REGISTERED CIVIL ENGINEER — DATE 05-24-10

10-11-10
PLANS APPROVAL DATE

REGISTERED PROFESSIONAL ENGINEER — FOUED ZAYATI — No. C57046 — Exp. 06-30-11 — CIVIL — STATE OF CALIFORNIA

The State of California or its officers or agents shall not be responsible for the accuracy or completeness of electronic copies of this plan sheet.

NOTES:

1. For location of 'Section F-F' and 'Section G-G', see "HINGE JOINT SEAL ASSEMBLY DETAILS" sheets.
2. 4" X 4" (sq) x¾" Long elastomeric washers (Durometer 60) with 1⅜" dia hole (tot. 4 per bolt).
3. 1¼" dia X 10½" HS bolts (with cotter pins) and nuts thru holes and counterbores or equal. Tighten nuts to remove slack within the system, then turn each nut an additional half turn. (Half turn corresponds to 1/16")
4. Plate Washer galvanized ¼" X 5½" X 5½" with 1⅜" dia hole (tot. 5 per bolt)

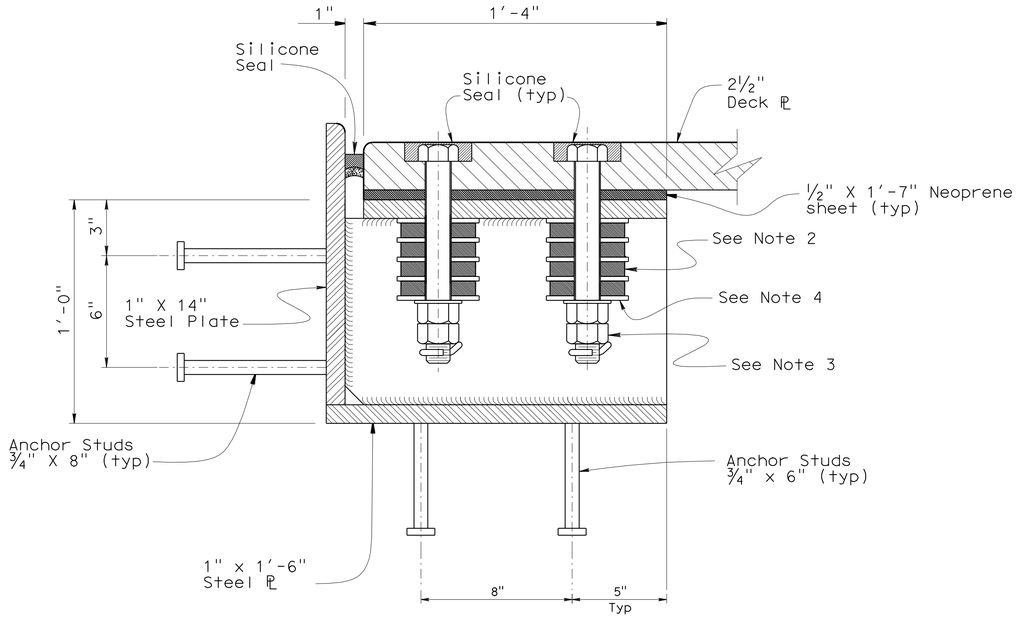

SECTION F-F

3 " = 1'-0"

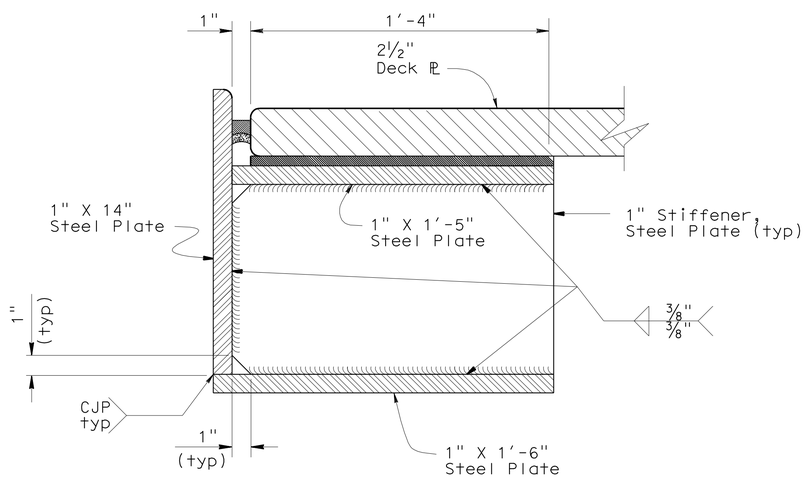

SECTION G-G

3 " = 1'-0"

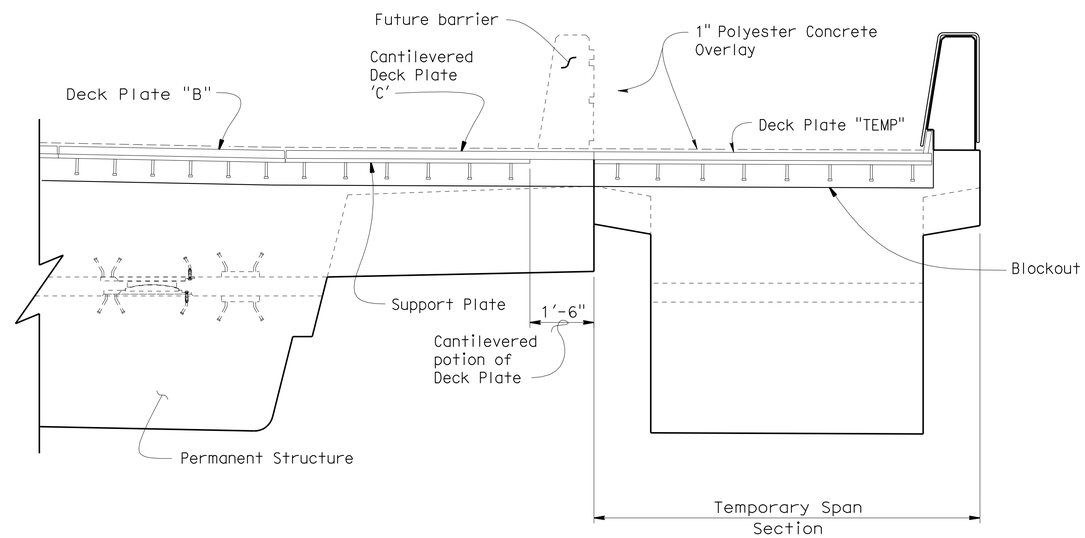

NOTE: Deck Plate "TEMP" and Temporary Span Section are expected to be removed at later date and replaced with another parmanent structure.

SECTION - RIGHT SIDE HINGES 7G AND 7E

½" = 1'-0"

THE CONTRACTOR SHALL VERIFY ALL CONTROLLING FIELD DIMENSIONS BEFORE ORDERING OR FABRICATING ANY MATERIAL.

	BY	CHECKED
DESIGN	F. Zayati	R. Bromenschenkel
DETAILS	J. Thorne	F. Zayati
QUANTITIES	V. Ramakrishnan	J. Lane

STATE OF CALIFORNIA
DEPARTMENT OF TRANSPORTATION

DIVISION OF ENGINEERING SERVICES
STRUCTURE DESIGN
DESIGN BRANCH 14

BRIDGE NO. 53-3032
POST MILE 3.58

SCHUYLER HEIM BRIDGE (REPLACE)
HINGE JOINT SEAL ASSEMBLY DETAILS NO. 17

STRUCTURES DESIGN DETAIL SHEET (ENGLISH) (REV. 10/25/05)

ORIGINAL SCALE IN INCHES FOR REDUCED PLANS 0 1 2 3

CU 07-271
EA 138201

DISREGARD PRINTS BEARING EARLIER REVISION DATES → 05-18-10 05-24-10 05-28-10 06-29-10

REVISION DATES

SHEET 189 OF 247

FILE => 53-3032-1-q-jtsealdet26.dgn

USERNAME => rtrienard DATE PLOTTED => 19-OCT-2010 TIME PLOTTED => 08:08

DIST	COUNTY	ROUTE	POST MILES TOTAL PROJECT	SHEET No	TOTAL SHEETS
07	LA	47,103	3.5/4.6, 0.0/1.1	692	1003

REGISTERED CIVIL ENGINEER — 05-24-10 DATE

10-11-10
PLANS APPROVAL DATE

REGISTERED PROFESSIONAL ENGINEER — FOUED ZAYATI No. C57046 Exp. 06-30-11 CIVIL — STATE OF CALIFORNIA

The State of California or its officers or agents shall not be responsible for the accuracy or completeness of electronic copies of this plan sheet.

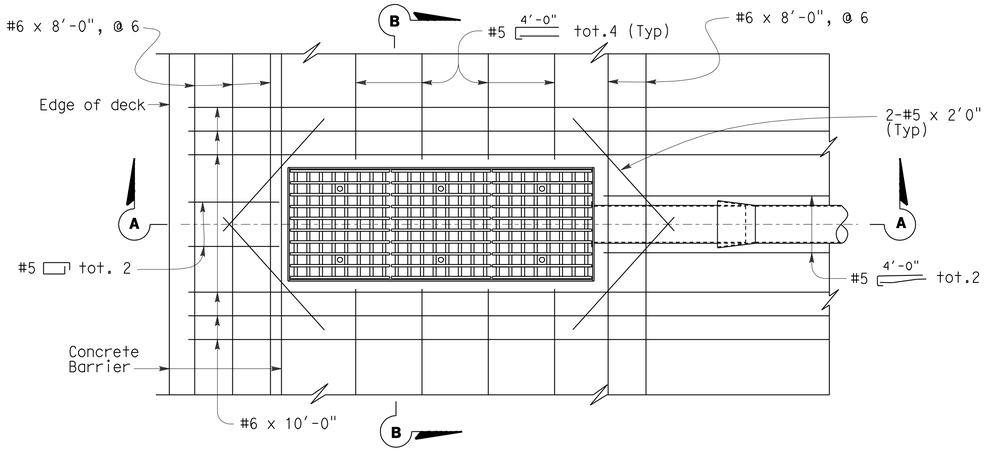

PLAN - TYPE A DRAIN

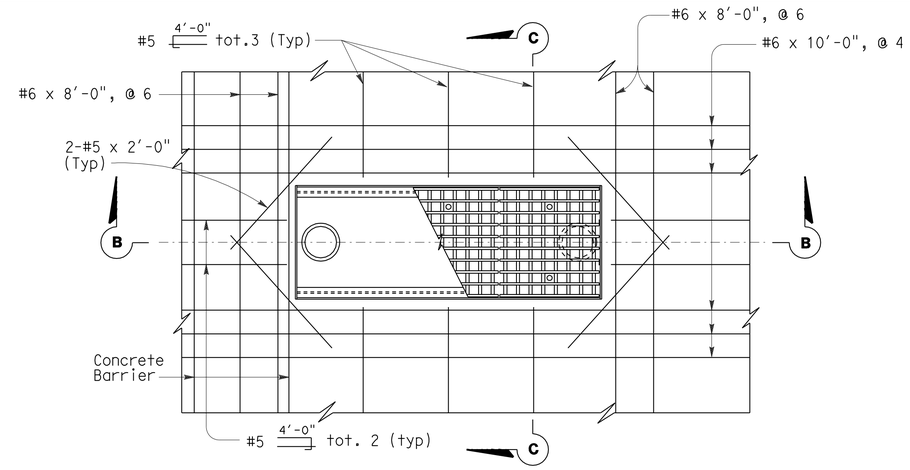

PLAN - TYPE B DRAIN

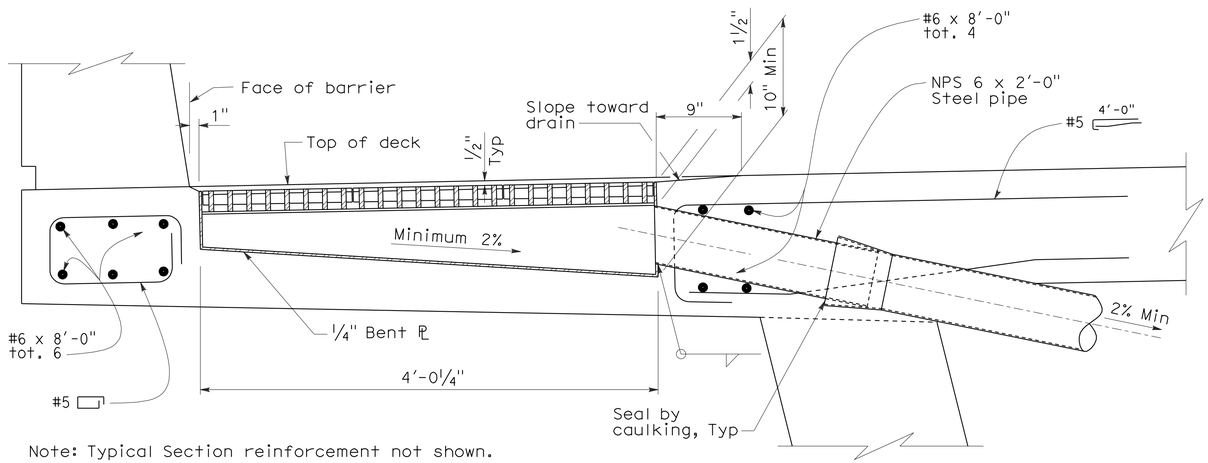

Note: Typical Section reinforcement not shown.

SECTION A-A

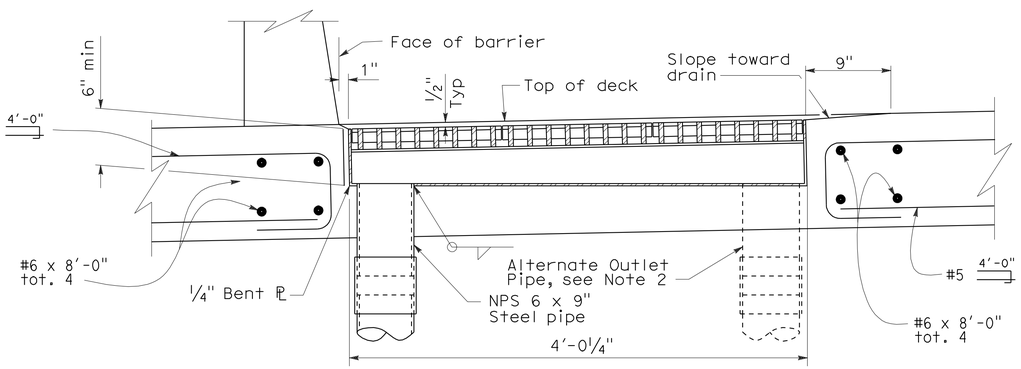

Note: Typical Section reinforcement not shown.

SECTION B-B

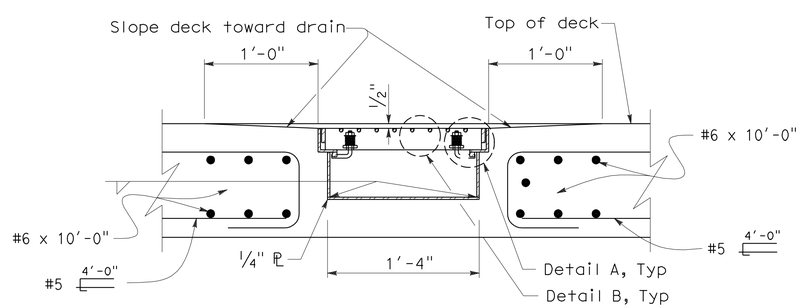

Note: Typical Section reinforcement not shown.

SECTION C-C

Notes:

1. For deck drain details, 'Detail A', and 'Detail B', see 'DECK DRAIN DETAILS NO. 2" sheet.
2. See girder layout for drains with alternate outlet pipe.

NO SCALE

DESIGN	BY F. Zayati	CHECKED S. Galgiani	
DETAILS	BY K. Kubo	CHECKED F. Zayati	
QUANTITIES	BY S. Hegazi	CHECKED M. Thach	

STATE OF CALIFORNIA
DEPARTMENT OF TRANSPORTATION

DIVISION OF ENGINEERING SERVICES
STRUCTURE DESIGN
DESIGN BRANCH 14

BRIDGE NO. 53-3032
POST MILE 3.58

SCHUYLER HEIM BRIDGE (REPLACE)
DECK DRAIN DETAILS NO. 1

STRUCTURES DESIGN DETAIL SHEET (ENGLISH) (REV. 10/25/05)

ORIGINAL SCALE IN INCHES FOR REDUCED PLANS 0 1 2 3

CU 07-271
EA 138201

DISREGARD PRINTS BEARING EARLIER REVISION DATES

REVISION DATES: 05-02-10 05-13-10 05-22-10

SHEET 190 OF 247

FILE => 53-3032-1-r-ddraindet01.dgn

USERNAME => trlenard DATE PLOTTED => 19-OCT-2010 TIME PLOTTED => 08:08

DIST	COUNTY	ROUTE	POST MILES TOTAL PROJECT	SHEET No	TOTAL SHEETS
07	LA	47,103	3.5/4.6, 0.0/1.1	693	1003

REGISTERED CIVIL ENGINEER — 05-24-10 DATE

10-11-10
PLANS APPROVAL DATE

The State of California or its officers or agents shall not be responsible for the accuracy or completeness of electronic copies of this plan sheet.

REGISTERED PROFESSIONAL ENGINEER — FOUED ZAYATI No. C57046 Exp. 06-30-11 CIVIL — STATE OF CALIFORNIA

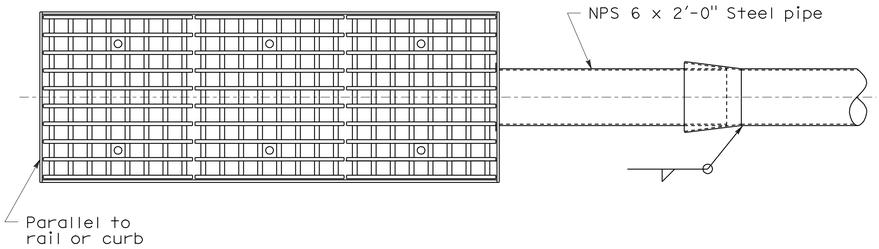

PLAN-DECK DRAIN ASSEMBLY

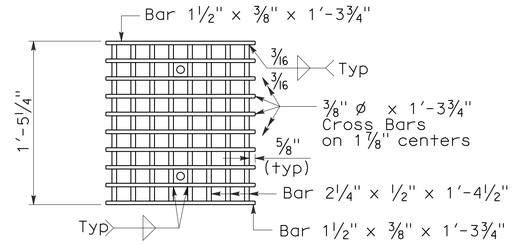

GRATE

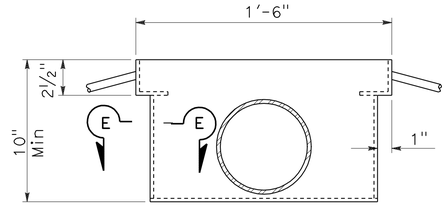

VIEW D-D

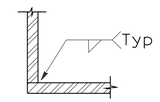

SECTION E-E

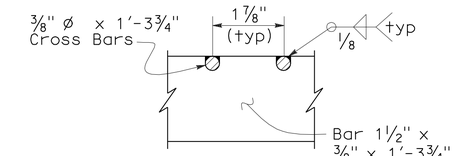

DETAIL B

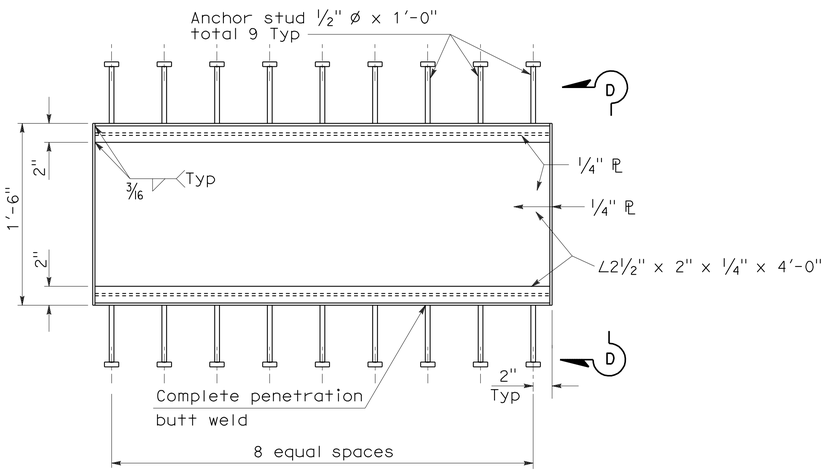

FRAME

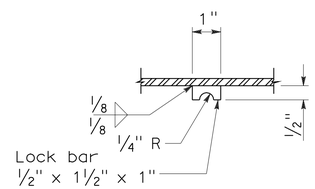

LOCK BAR

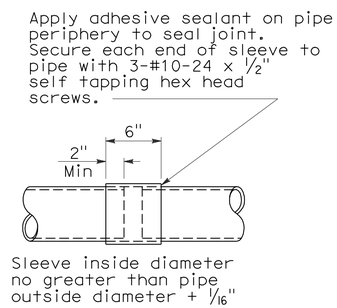

SLEEVE CONNECTION

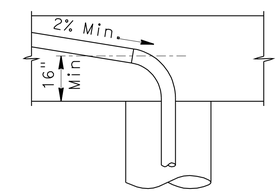

VERTICAL

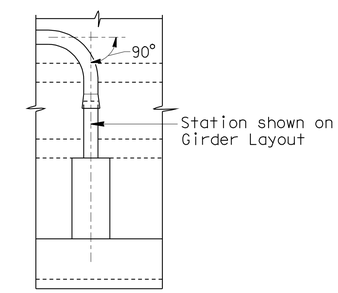

HORIZONTAL

DRAIN PIPE ALIGNMENT

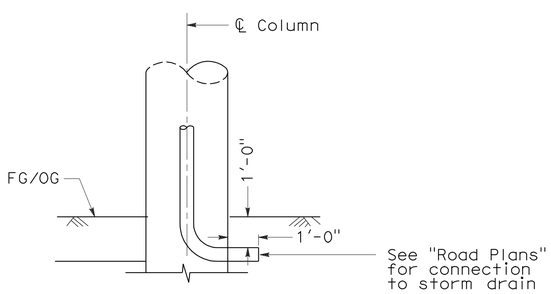

DRAIN OUTLET

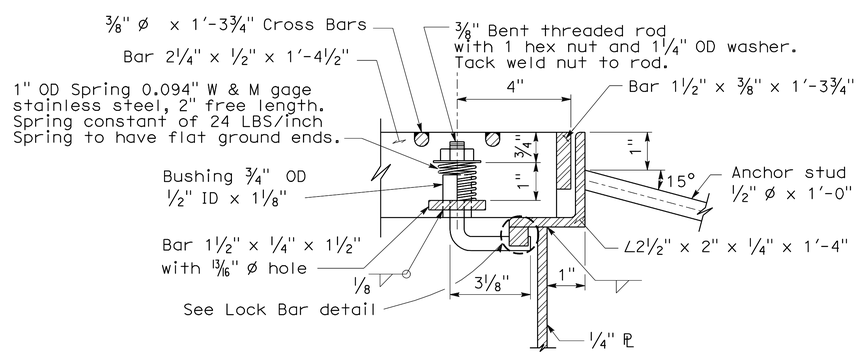

DETAIL A

NOTE:

Unless noted elsewhere on the plans, all pipe to be NPS 6 x 0.135" welded steel pipe except as noted and galvanized if not encased in concrete. Fittings and bends shall have a minimum wall thickness of ⅛". All joints or connections to be butt welded or connected by a steel pipe sleeve and to be smooth throughout inside of pipe except as noted. All bends to be on 1'-6" minimum radius measured along ℄ pipe. All bends to be smooth. Pipes not encased in concrete to be supported by suitable galvanized hangers @ 10'-0" maximum spacing throughout. Galvanize deck drain assembly after fabrication.

NO SCALE

	BY	CHECKED
DESIGN	F. Zayati	S. Galgiani
DETAILS	K. Kubo	F. Zayati
QUANTITIES	S. Hegazi	M. Thach

STATE OF CALIFORNIA
DEPARTMENT OF TRANSPORTATION

DIVISION OF ENGINEERING SERVICES
STRUCTURE DESIGN
DESIGN BRANCH 14

BRIDGE NO. 53-3032
POST MILE 3.58

SCHUYLER HEIM BRIDGE (REPLACE)
DECK DRAIN DETAILS NO. 2

STRUCTURES DESIGN DETAIL SHEET (ENGLISH) (REV. 10/25/05)

ORIGINAL SCALE IN INCHES FOR REDUCED PLANS 0 1 2 3

CU 07-271
EA 138201

DISREGARD PRINTS BEARING EARLIER REVISION DATES

REVISION DATES: 05-03-10 05-13-10 05-22-10 07-13-10

SHEET 191 OF 247

FILE => 53-3032-1-r-ddraindet02.dgn

USERNAME => rfrenord DATE PLOTTED => 19-OCT-2010 TIME PLOTTED => 08:08

DIST	COUNTY	ROUTE	POST MILES TOTAL PROJECT	SHEET No	TOTAL SHEETS
07	LA	47,103	3.5/4.6, 0.0/1.1	694	1003

REGISTERED CIVIL ENGINEER — 05-24-10 DATE

10-11-10
PLANS APPROVAL DATE

REGISTERED PROFESSIONAL ENGINEER — FOUED ZAYATI — No. C57046 — Exp. 06-30-11 — CIVIL — STATE OF CALIFORNIA

The State of California or its officers or agents shall not be responsible for the accuracy or completeness of electronic copies of this plan sheet.

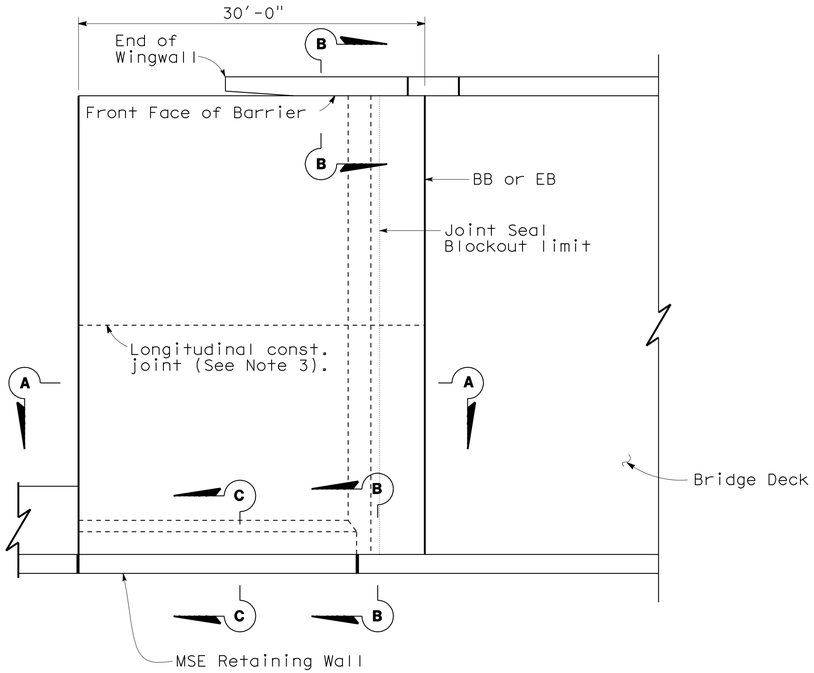

PLAN
No Scale

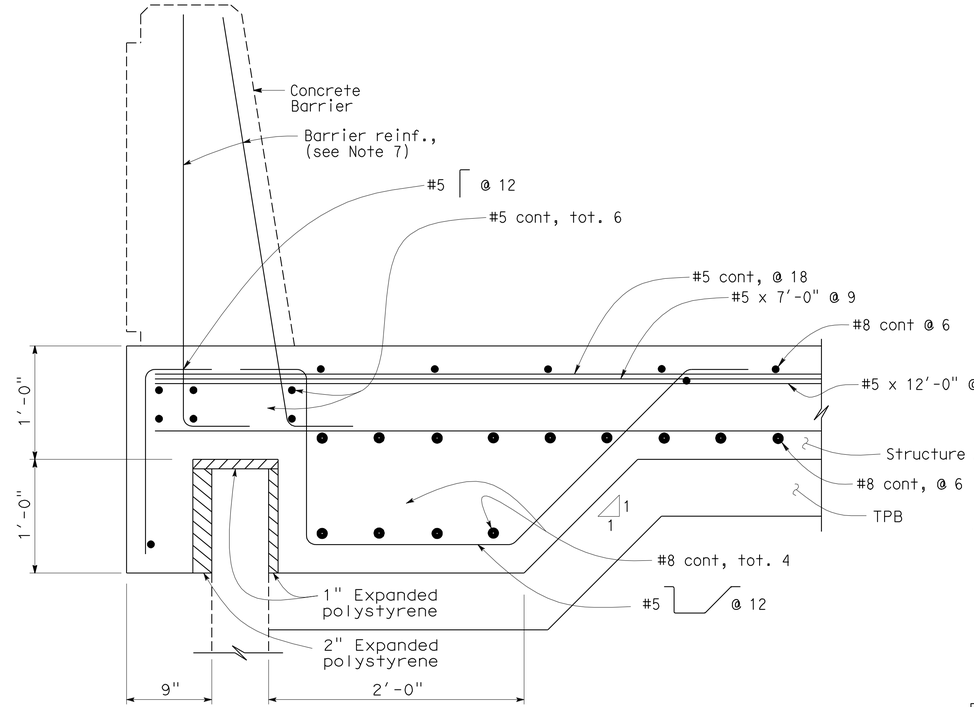

SECTION C-C
1½"=1'-0"

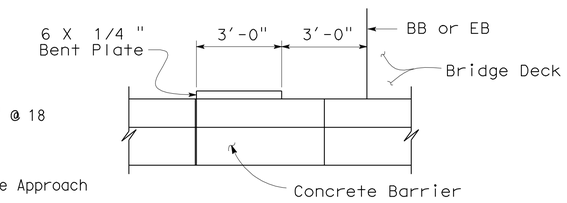

EDGE ANGLE DETAIL - RW SIDE
No Scale

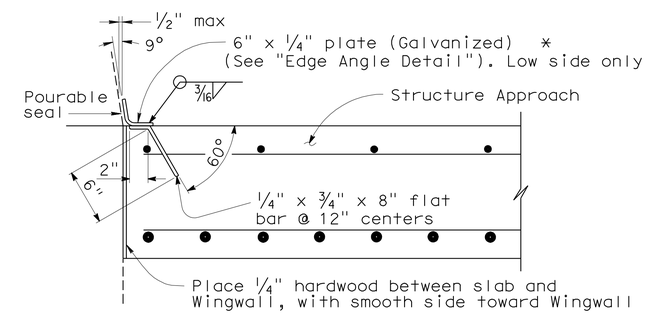

DETAIL B
1½"=1'-0"

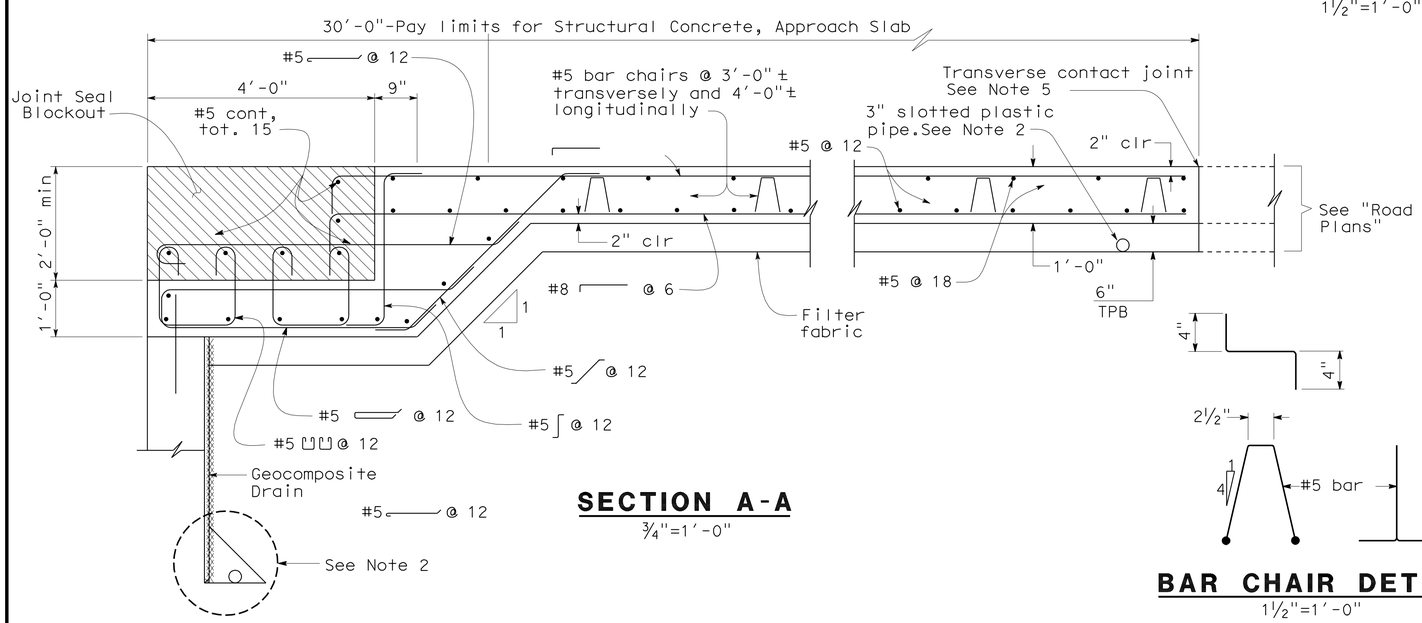

SECTION A-A
¾"=1'-0"

BAR CHAIR DETAIL
1½"=1'-0"

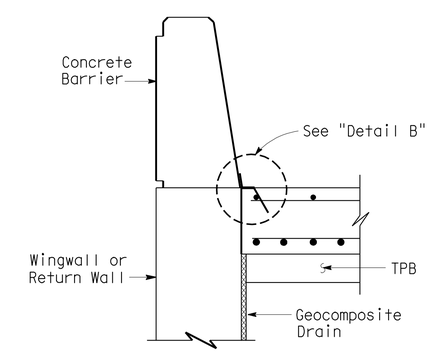

SECTION B-B
¾"=1'-0"

NOTES:

1. For details not shown,see Structure Plans.
2. For drainage details,see "Structure Approach Drainage Details" sheet.
3. Longitudinal construction joints,when permitted by the Engineer, shall be located on lane lines.
4. End angle or plate at beginning of barrier transition, end of wingwall or end of structure approach as applicable.
5. For transverse contact joint with new PCC paving, refer to Standard Plan P10.
6. Spacing of transverse reinforcement is measured along ℄ Roadway.
7. For Barrier reinforcement, see "CONCRETE BARRIER TYPE 736 (MOD)" sheet.
8. Remove 2" polystyrene.

	BY	CHECKED
DESIGN	F.Zayati	S. Galgiani
DETAILS	K. Kubo	F.Zayati
QUANTITIES	S. Galgiani	S. Hegazi

STATE OF CALIFORNIA
DEPARTMENT OF TRANSPORTATION

DIVISION OF ENGINEERING SERVICES
STRUCTURE DESIGN
DESIGN BRANCH 14

BRIDGE NO. 53-3032
POST MILE 3.58

SCHUYLER HEIM BRIDGE (REPLACE)
STRUCTURE APPROACH TYPE N(30S)

STRUCTURES DESIGN DETAIL SHEET (ENGLISH) (REV. 10/25/05)

ORIGINAL SCALE IN INCHES FOR REDUCED PLANS 0 1 2 3

CU 07-271
EA 138201

DISREGARD PRINTS BEARING EARLIER REVISION DATES 05-03-10

REVISION DATES

SHEET 192 OF 247

FILE => 53-3032-1-s-sa.dgn

USERNAME => trlenard DATE PLOTTED => 19-OCT-2010 TIME PLOTTED => 08:09

DIST	COUNTY	ROUTE	POST MILES TOTAL PROJECT	SHEET No	TOTAL SHEETS
07	LA	47,103	3.5/4.6, 0.0/1.1	695	1003

REGISTERED CIVIL ENGINEER — DATE 05-24-10

10-11-10
PLANS APPROVAL DATE

The State of California or its officers or agents shall not be responsible for the accuracy or completeness of electronic copies of this plan sheet.

REGISTERED PROFESSIONAL ENGINEER — FOUED ZAYATI — No. C57046 — Exp. 06-30-11 — CIVIL — STATE OF CALIFORNIA

NOTES:

1. Low end of subgrade drain shown, at high end install cap at end of 3" slotted pipe. Subgrade drain located at end of structure approach slab,

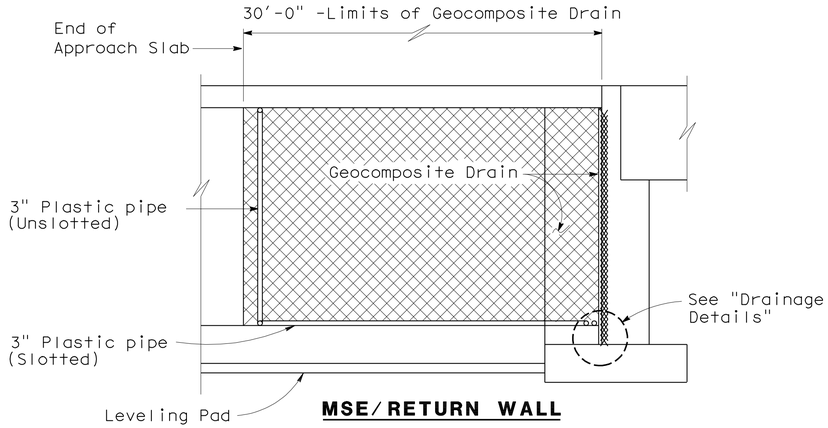

MSE/RETURN WALL
SECTION G-G
1/4"=1'-0"

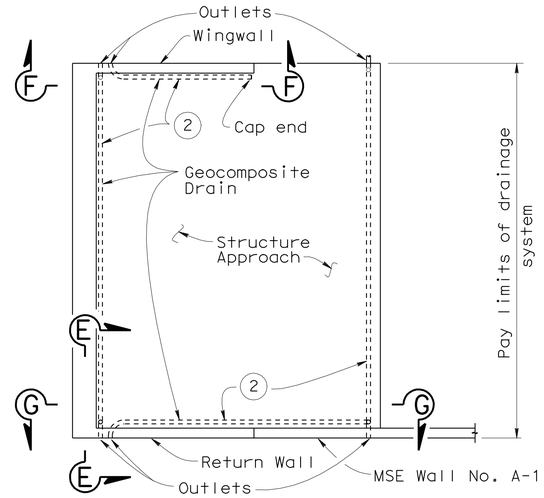

TYPICAL PLAN
No Scale

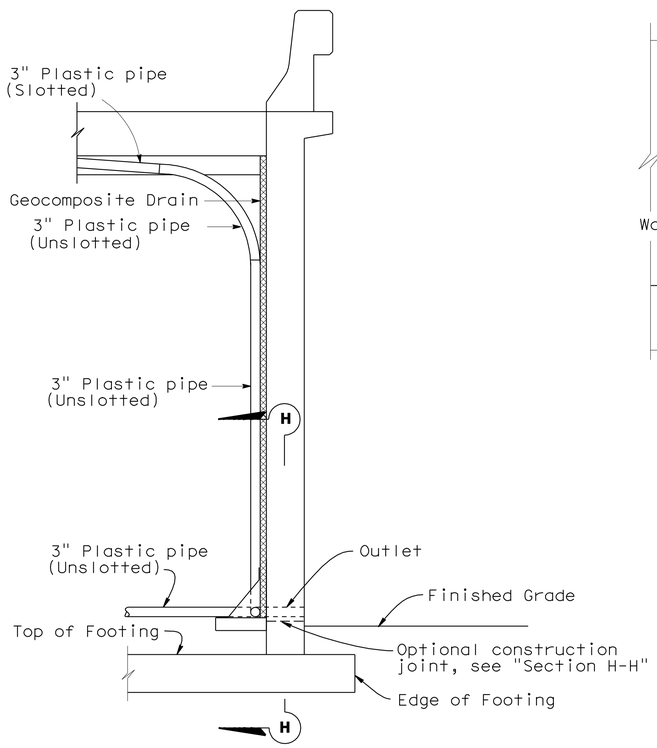

SECTION E-E
1/2"=1'-0"

NOTE: Bends and junctions in 3" plastic pipe are 30" radius min.

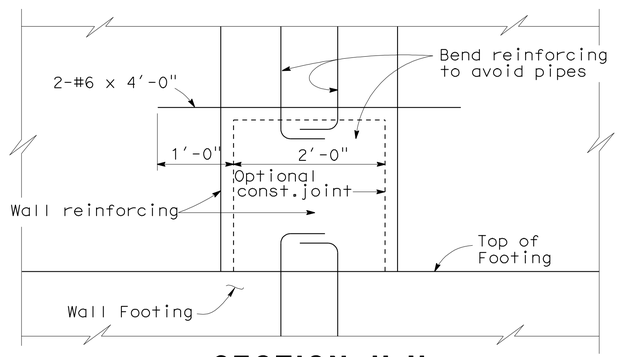

SECTION H-H
1"=1'-0"

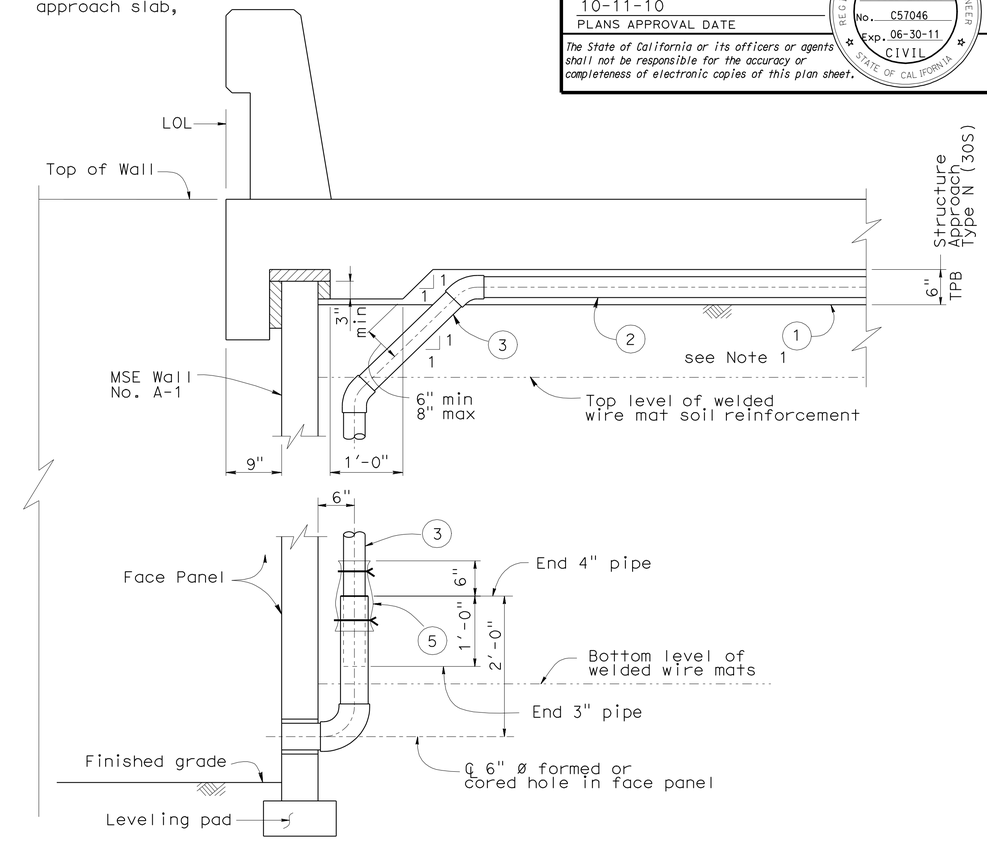

SECTION AT MSE WALL
STRUCTURE APPROACH SLAB AND CONCRETE BARRIER
No Scale

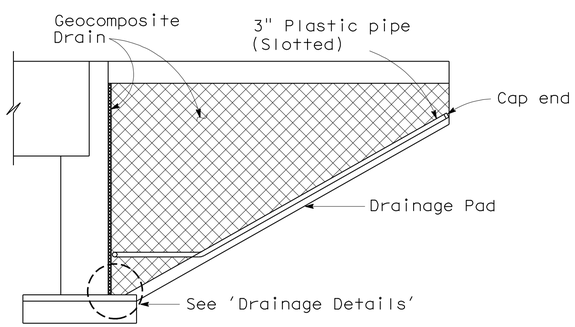

CANTILEVER WINGWALL
SECTION F-F
1/4"=1'-0"

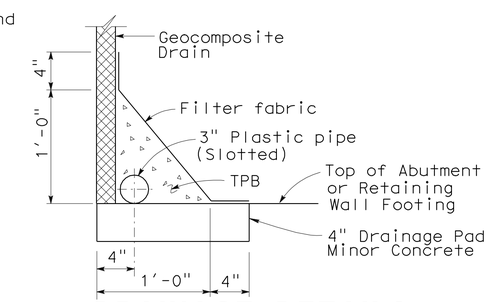

DRAINAGE DETAILS
1 1/2"=1'-0"

LEGEND:

1. Filter fabric.
2. 3" Plastic pipe (slotted).
3. 3" Plastic pipe and fittings (unslotted).
4. 4" Sch 80 PVC outlet pipe and fittings (unslotted).
5. 1'-0" wide x 2'-0" filter fabric wrapped around pipe and secured with nylon ties.

	BY	CHECKED
DESIGN	F. Zayati	S. Galgiani
DETAILS	K. Kubo	F. Zayati
QUANTITIES	S. Galgiani	S. Hegazi

STATE OF CALIFORNIA
DEPARTMENT OF TRANSPORTATION

DIVISION OF ENGINEERING SERVICES
STRUCTURE DESIGN
DESIGN BRANCH 14

BRIDGE NO. 53-3032
POST MILE 3.58

SCHUYLER HEIM BRIDGE (REPLACE)
STRUCTURE APPROACH DRAINAGE DETAILS

STRUCTURES DESIGN DETAIL SHEET (ENGLISH) (REV. 10/25/05)

ORIGINAL SCALE IN INCHES FOR REDUCED PLANS 0 1 2 3

CU 07-271
EA 138201

DISREGARD PRINTS BEARING EARLIER REVISION DATES 02-11-10 05-03-10

REVISION DATES

SHEET 193 OF 247

FILE => 53-3032-1-s-sadd.dgn

USERNAME => friehard DATE PLOTTED => 19-OCT-2010 TIME PLOTTED => 08:03

DIST	COUNTY	ROUTE	POST MILES TOTAL PROJECT	SHEET No	TOTAL SHEETS
07	LA	47,103	3.5/4.6, 0.0/1.1	696	1003

REGISTERED CIVIL ENGINEER — 05-24-10 DATE

10-11-10
PLANS APPROVAL DATE

REGISTERED PROFESSIONAL ENGINEER — FOUED ZAYATI — No. C57046 — Exp. 06-30-11 — CIVIL — STATE OF CALIFORNIA

The State of California or its officers or agents shall not be responsible for the accuracy or completeness of electronic copies of this plan sheet.

NOTES:

A. Walls are to be backfilled before Barrier is placed.

B. Clearance to reinforcing steel in Barrier to be 1", except as noted. Longitudinal reinforcement to stop at all expansion joints.

C. See project plans for locations of Electroliers and Pull Boxes.

D. Dimensions may vary with roadway cross slope and with certain thickness of surfacing. See Project Plans.

E. Refer to Project Plans and Standard Plan Sheets ES-9A, 9C, ES-9D for electrical details concerning barriers. The maximum number of conduits in a barrier is limited to two (2) 2" conduits (max.) along with one (1) 3" conduit. When a 3½" conduit is used, it is restricted to the base of barrier.

F. Minimum concrete edge distance to reinforcing shown, shall be maintained, edge distance may be adjusted to accomodate increase in concrete cover for architectural treatment. See Typical Section.

G. For 'SECTION A-A' thru 'SECTION G-G', see "CONCRETE BARRIER DETAILS NO. 3" sheet.

H. For 'Architectural Treatment', see "CONCRETE BARRIER DETAILS NO. 7" sheet.

I. For Concrete Barrier Details on the Retaining Wall side, see "CONCRETE BARRIER DETAILS NO. 2" sheet.

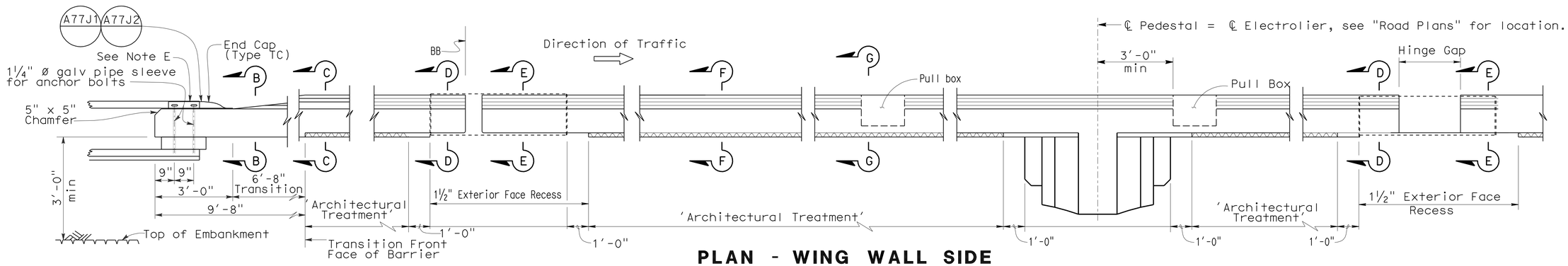

PLAN - WING WALL SIDE

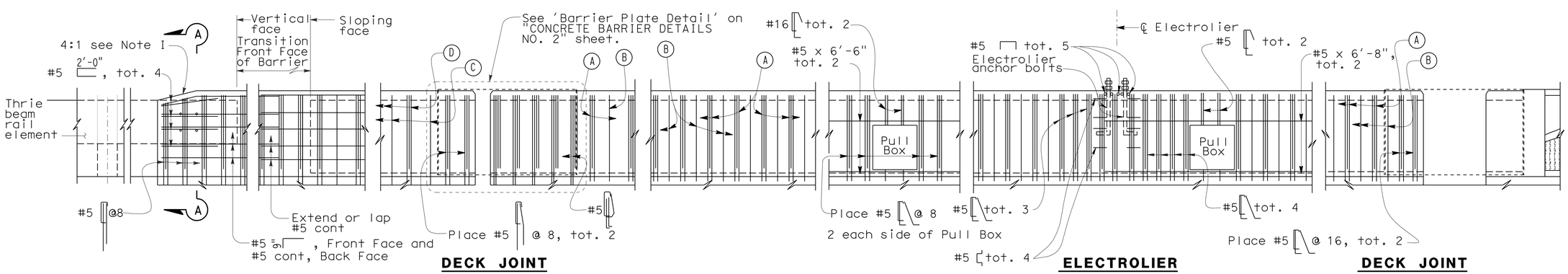

DECK JOINT

ELECTROLIER
(See Note E)

DECK JOINT

ELEVATION

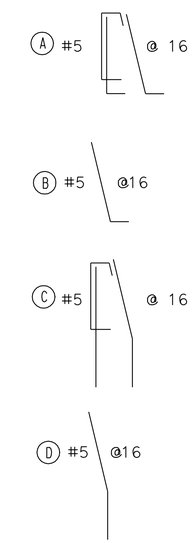

NO SCALE

DESIGN	BY F. Zayati	CHECKED R. Bromenschenkel	
DETAILS	BY K. Kubo	CHECKED F. Zayati	
QUANTITIES	BY J/P. Peterson	CHECKED J/P. Peterson	

STATE OF CALIFORNIA
DEPARTMENT OF TRANSPORTATION

DIVISION OF ENGINEERING SERVICES
STRUCTURE DESIGN
DESIGN BRANCH 14

BRIDGE NO. 53-3032
POST MILE 3.58

SCHUYLER HEIM BRIDGE (REPLACE)
CONCRETE BARRIER DETAILS NO. 1

STRUCTURES DESIGN DETAIL SHEET (ENGLISH) (REV. 10/25/05)

ORIGINAL SCALE IN INCHES FOR REDUCED PLANS 0 1 2 3

CU 07-271
EA 138201

DISREGARD PRINTS BEARING EARLIER REVISION DATES

REVISION DATES: 07-06-10 | 05-16-10 | 05-18-10 | 05-22-10 | 5-24-10 | 5-24-10 | 6-18-10 | 6-22-10 | 06-24-10

SHEET 194 OF 247

FILE => 53-3032-1-t-brdt01.dgn

USERNAME => trlenard DATE PLOTTED => 19-OCT-2010 TIME PLOTTED => 08:09

DIST	COUNTY	ROUTE	POST MILES TOTAL PROJECT	SHEET No	TOTAL SHEETS
07	LA	47,103	3.5/4.6, 0.0/1.1	697	1003

REGISTERED CIVIL ENGINEER — DATE 05-24-10

10-11-10
PLANS APPROVAL DATE

REGISTERED PROFESSIONAL ENGINEER — FOUED ZAYATI No. C57046 Exp. 06-30-11 CIVIL — STATE OF CALIFORNIA

The State of California or its officers or agents shall not be responsible for the accuracy or completeness of electronic copies of this plan sheet.

NOTES:

A. Walls are to be backfilled before Barrier is placed.

B. Clearance to reinforcing steel in Barrier to be 1", except as noted. Longitudinal reinforcement to stop at all expansion joints.

C. See project plans for locations of Electroliers and Pull Boxes.

D. Dimensions may vary with roadway cross slope and with certain thickness of surfacing. See Project Plans.

E. Refer to Project Plans and Standard Plan Sheets ES-9A, 9C, ES-9D for electrical details concerning barriers. The maximum number of conduits in a barrier is limited to two (2) 2" conduits (max.) along with one (1) 3" conduit. When a 3½" conduit is used, it is restricted to the base of barrier.

F. Minimum concrete edge distance to reinforcing shown, shall be maintained, edge distance may be adjusted to accomodate increase in concrete cover for architectural treatment. See Typical Section.

G. For 'SECTION C-C', 'SECTION D-D', and 'SECTION H-H', see "CONCRETE BARRIER DETAILS NO. 3" sheet.

H. For 'Architectural Treatment', see "CONCRETE BARRIER DETAILS NO. 7" sheet.

I. For Concrete Barrier Rail Details on the Bridge, see "CONCRETE BARRIER DETAILS NO. 1" sheet.

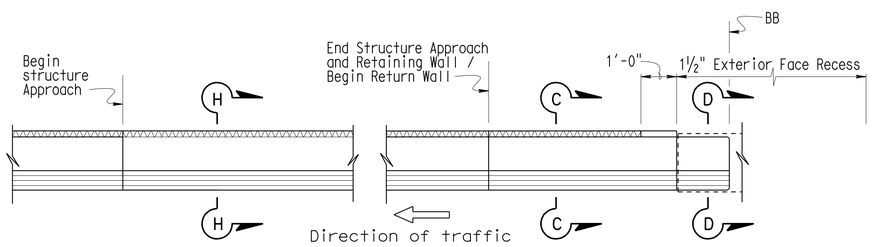

PLAN - RETAINING WALL SIDE

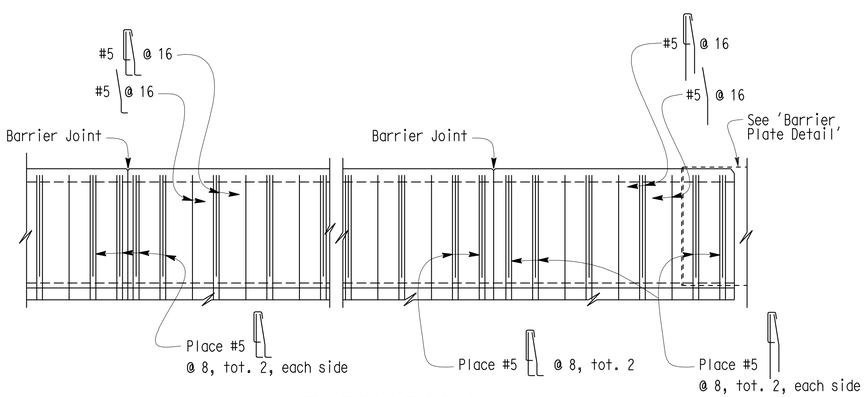

ELEVATION

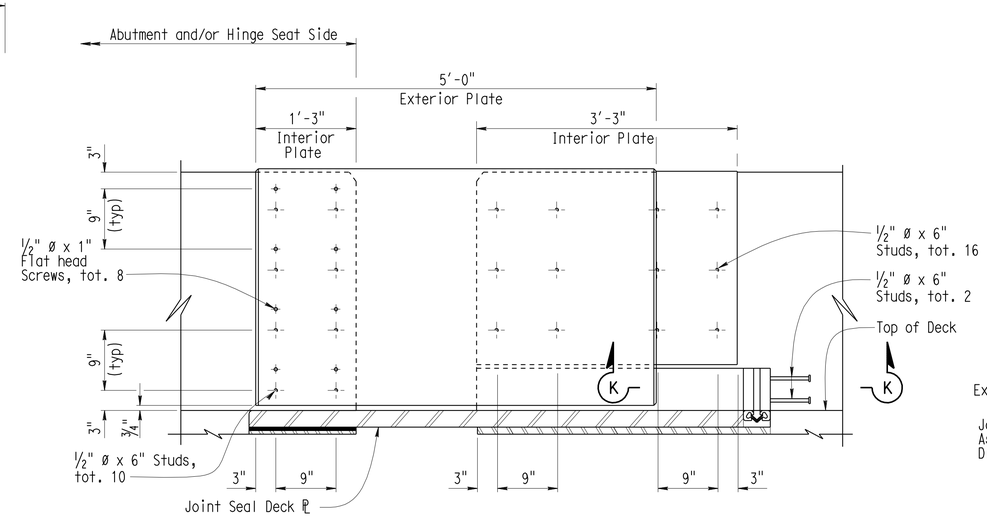

BARRIER PLATE DETAIL

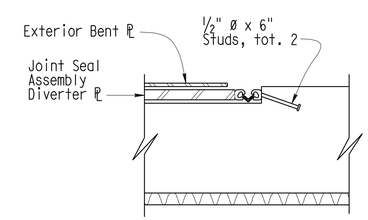

SECTION K-K

NO SCALE

DESIGN	BY F. Zayati	CHECKED R. Bromenschenkel	
DETAILS	BY K. Kubo	CHECKED F. Zayati	
QUANTITIES	BY J/P. Peterson	CHECKED J/P. Peterson	

STATE OF CALIFORNIA
DEPARTMENT OF TRANSPORTATION

DIVISION OF ENGINEERING SERVICES
STRUCTURE DESIGN
DESIGN BRANCH 14

BRIDGE NO. 53-3032
POST MILE 3.58

SCHUYLER HEIM BRIDGE (REPLACE)
CONCRETE BARRIER DETAILS NO. 2

STRUCTURES DESIGN DETAIL SHEET (ENGLISH) (REV. 10/25/05)

ORIGINAL SCALE IN INCHES FOR REDUCED PLANS 0 1 2 3

CU 07-271
EA 138201

DISREGARD PRINTS BEARING EARLIER REVISION DATES

REVISION DATES: 05-05-10 05-13-10 05-14-10 05-18-10 05-20-10 5-23-10 5-24-10 6-16-10 6-22-10

SHEET 195 OF 247

FILE => 53-3032-1-t-brdt02.dgn

USERNAME => trlenard DATE PLOTTED => 19-OCT-2010 TIME PLOTTED => 08:09

DIST	COUNTY	ROUTE	POST MILES TOTAL PROJECT	SHEET No	TOTAL SHEETS
07	LA	47,103	3.5/4.6, 0.0/1.1	698	1003

REGISTERED CIVIL ENGINEER 05-24-10 DATE

10-11-10
PLANS APPROVAL DATE

REGISTERED PROFESSIONAL ENGINEER FOUED ZAYATI No. C57046 Exp. 06-30-11 CIVIL STATE OF CALIFORNIA

The State of California or its officers or agents shall not be responsible for the accuracy or completeness of electronic copies of this plan sheet.

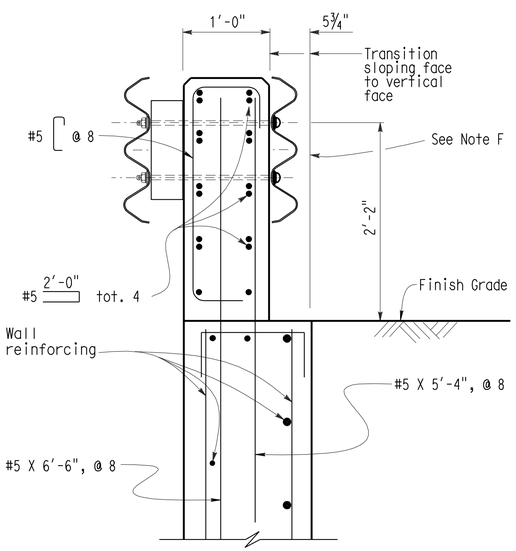

SECTION A-A

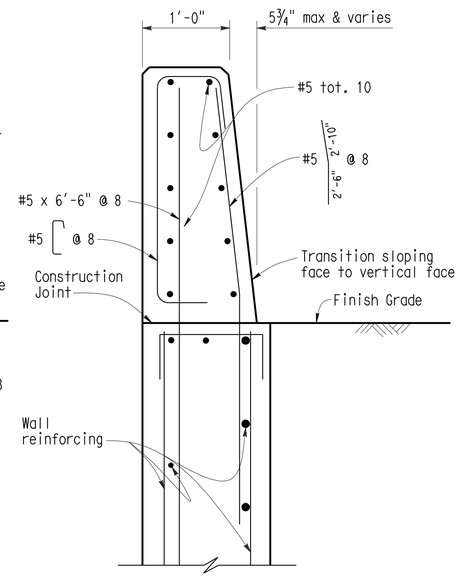

SECTION B-B

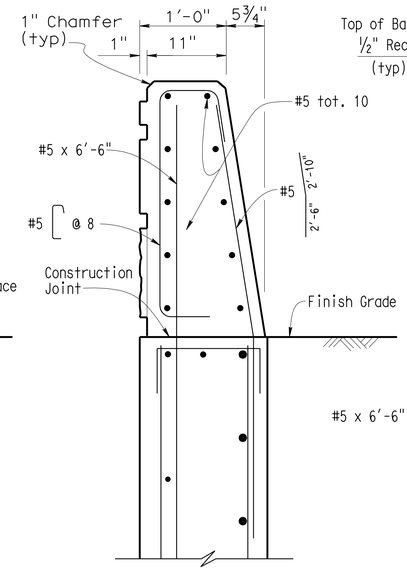

SECTION C-C

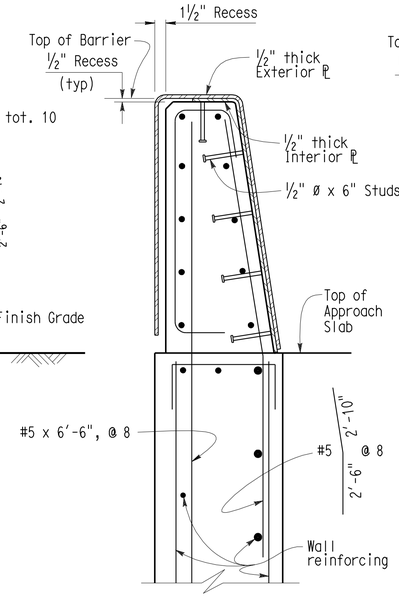

@ ABUTMENT

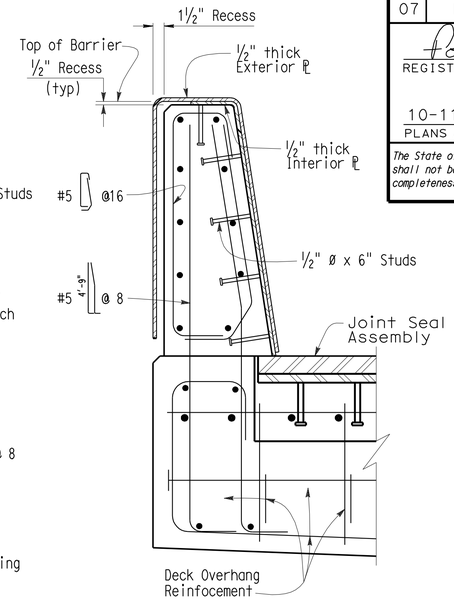

@ HINGE

SECTION D-D

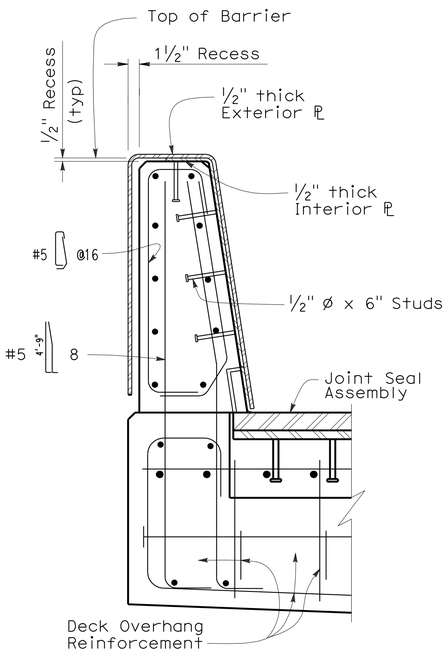

SECTION E-E

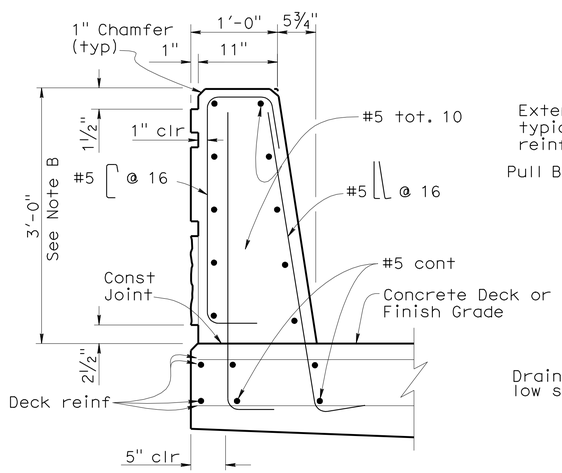

SECTION F-F

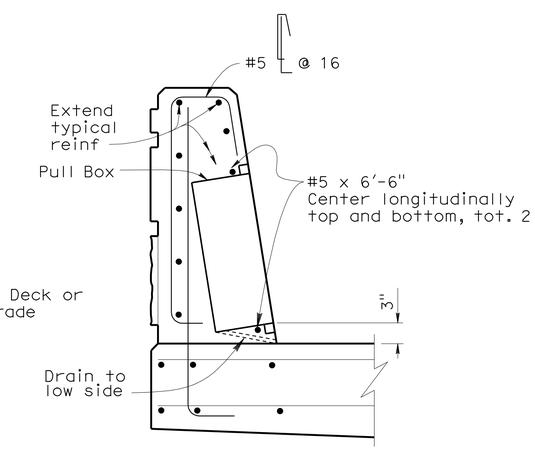

SECTION G-G

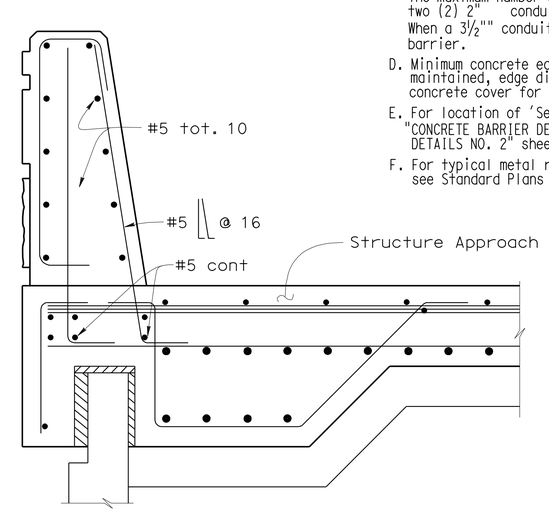

SECTION H-H

NOTES:

A. Clearance to reinforcing steel in Barrier to be 1", except as noted. Longitudinal reinforcement to stop at all expansion joints.

B. Dimensions may vary with roadway cross slope and with certain thickness of surfacing. See Project Plans.

C. Refer to Project Plans and Standard Plan Sheets ES-9A, 9C, ES-9D for electrical details concerning barriers.
The maximum number of conduits in a barrier is limited to two (2) 2" conduits (max.) along with one (1) 3" conduit. When a 3½"" conduit is used, it is restricted to the base of barrier.

D. Minimum concrete edge distance to reinforcing shown, shall be maintained, edge distance may be adjusted to accomodate increase in concrete cover for architectural treatment. See Typical Section.

E. For location of 'Section A-A' thru 'Section H-H', see "CONCRETE BARRIER DETAILS NO. 1" and "CONCRETE BARRIER DETAILS NO. 2" sheets.

F. For typical metal railing connection details not shown, see Standard Plans A77J1 and A77J2.

NO SCALE

	BY	CHECKED
DESIGN	F. Zayati	R. Bromenschenkel
DETAILS	K. Kubo	F. Zayati
QUANTITIES	J/P. Peterson	J/P. Peterson

STATE OF CALIFORNIA
DEPARTMENT OF TRANSPORTATION

DIVISION OF ENGINEERING SERVICES
STRUCTURE DESIGN
DESIGN BRANCH 14

BRIDGE NO. 53-3032
POST MILE 3.58

SCHUYLER HEIM BRIDGE (REPLACE)
CONCRETE BARRIER DETAILS NO. 3

STRUCTURES DESIGN DETAIL SHEET (ENGLISH) (REV. 10/25/05)

ORIGINAL SCALE IN INCHES FOR REDUCED PLANS 0 1 2 3

CU 07-271
EA 138201

DISREGARD PRINTS BEARING EARLIER REVISION DATES

REVISION DATES: 7-06-10 7-07-10 05-14-10 05-20-10 05-22-10 5-23-10 5-24-10 6-16-10 06-24-10

SHEET 196 OF 247

FILE => 53-3032-1-t-brdt03.dgn

USERNAME => friehard DATE PLOTTED => 19-OCT-2010 TIME PLOTTED => 08:09

DIST	COUNTY	ROUTE	POST MILES TOTAL PROJECT	SHEET No	TOTAL SHEETS
07	LA	47,103	3.5/4.6, 0.0/1.1	699	1003

REGISTERED CIVIL ENGINEER 05-24-10 DATE

10-11-10
PLANS APPROVAL DATE

REGISTERED PROFESSIONAL ENGINEER FOUED ZAYATI No. C57046 Exp. 06-30-11 CIVIL STATE OF CALIFORNIA

The State of California or its officers or agents shall not be responsible for the accuracy or completeness of electronic copies of this plan sheet.

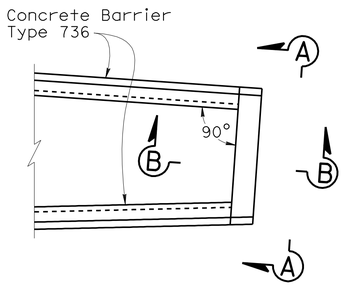

DETAIL A B11-56
1" = 5'

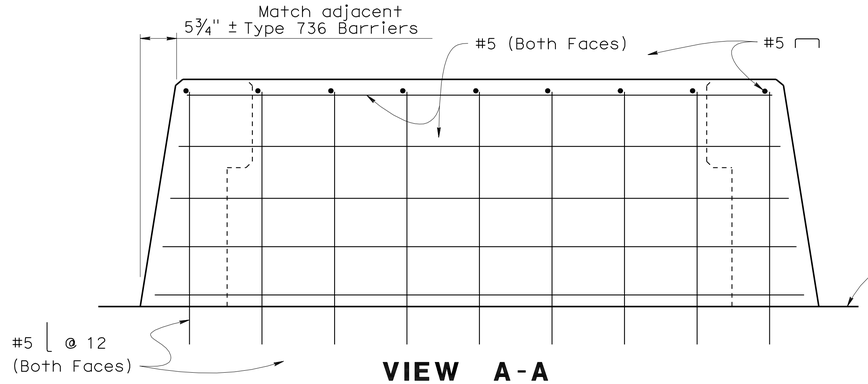

VIEW A-A
1" = 1'

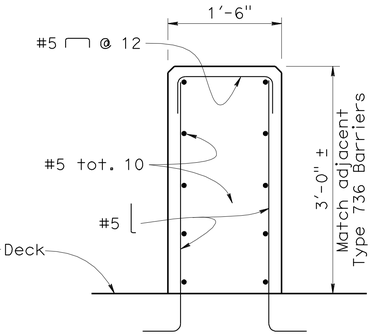

SECTION B-B
1" = 1'

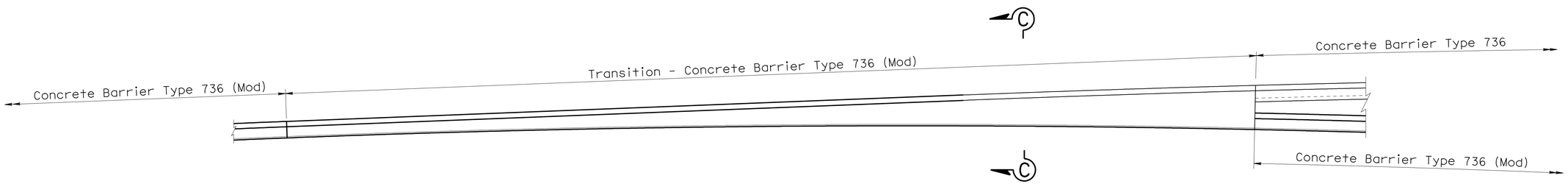

DETAIL B
1" = 5'

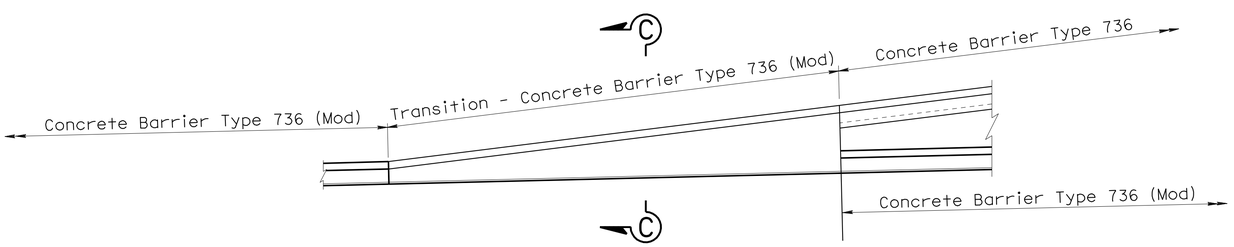

DETAIL C
1" = 5'

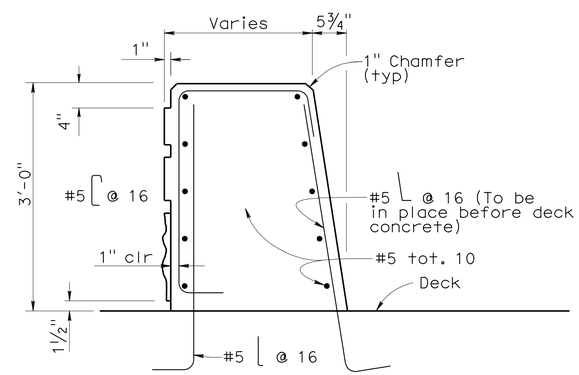

SECTION C-C
1" = 1'

NOTES:

1. For location of 'Detail A', see "STRUCTURE PLAN NO. 3" sheet.
2. For location of 'Detail B', see "STRUCTURE PLAN NO. 7" sheet.
3. For location of 'Detail C', see "STRUCTURE PLAN NO. 9" sheet.

	BY	CHECKED
DESIGN	T. Skreslet	F. Zayati
DETAILS	L. Xiong	F. Zayati
QUANTITIES	J/P. Peterson	J/P. Peterson

STATE OF CALIFORNIA
DEPARTMENT OF TRANSPORTATION

DIVISION OF ENGINEERING SERVICES
STRUCTURE DESIGN
DESIGN BRANCH 14

BRIDGE NO. 53-3032
POST MILE 3.58

SCHUYLER HEIM BRIDGE (REPLACE)
CONCRETE BARRIER DETAILS NO. 4

STRUCTURES DESIGN DETAIL SHEET (ENGLISH) (REV. 10/25/05)

ORIGINAL SCALE IN INCHES FOR REDUCED PLANS 0 1 2 3

CU 07-271
EA 138201

DISREGARD PRINTS BEARING EARLIER REVISION DATES

REVISION DATES: 5-13-10 5-14-10 5-19-10 5-20-10 6-16-10

SHEET 197 OF 247

FILE => 53-3032-1-t-brdt04.dgn

USERNAME => trlenard DATE PLOTTED => 19-OCT-2010 TIME PLOTTED => 08:09

DIST	COUNTY	ROUTE	POST MILES TOTAL PROJECT	SHEET No	TOTAL SHEETS
07	LA	47,103	3.5/4.6, 0.0/1.1	700	1003

REGISTERED CIVIL ENGINEER — DATE 05-24-10

10-11-10
PLANS APPROVAL DATE

The State of California or its officers or agents shall not be responsible for the accuracy or completeness of electronic copies of this plan sheet.

REGISTERED PROFESSIONAL ENGINEER — FOUED ZAYATI — No. C57046 — Exp. 06-30-11 — CIVIL — STATE OF CALIFORNIA

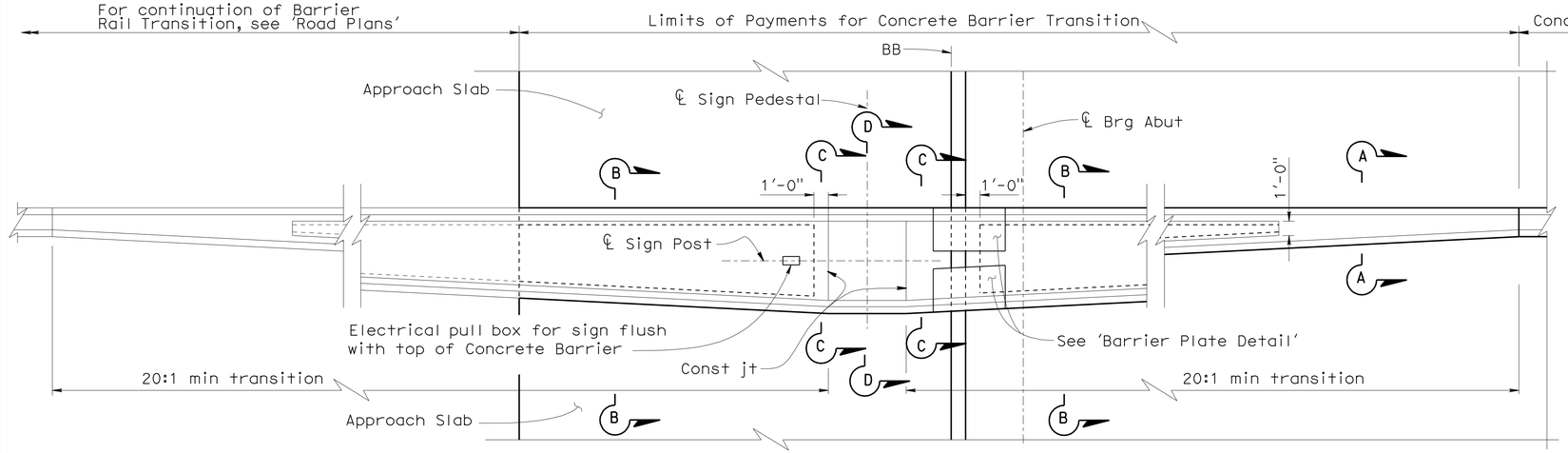

DETAIL A (TRANSITION AT SIGN PEDESTAL)

1" = 5'

NOTES:

1. Reinforcing steel shall extend continuous through construction joints.
2. See "Overhead Sign" plans for sign pedestal elevations on new construction.
3. Adjust height of concrete barrier wall on low side of offset or superelevated roadways to provide level grade across top of concrete barrier cap.
4. For location of 'Detail A', see "STRUCTURE PLAN NO. 1" sheet

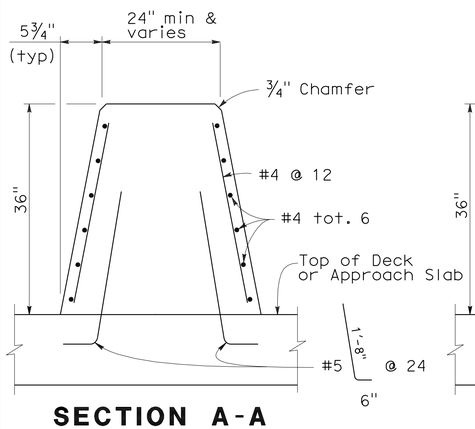

SECTION A-A

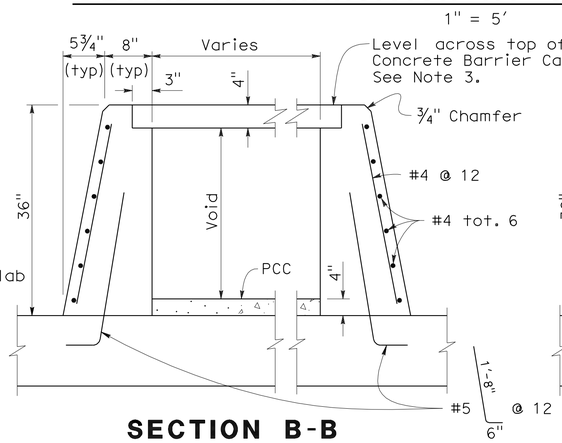

SECTION B-B

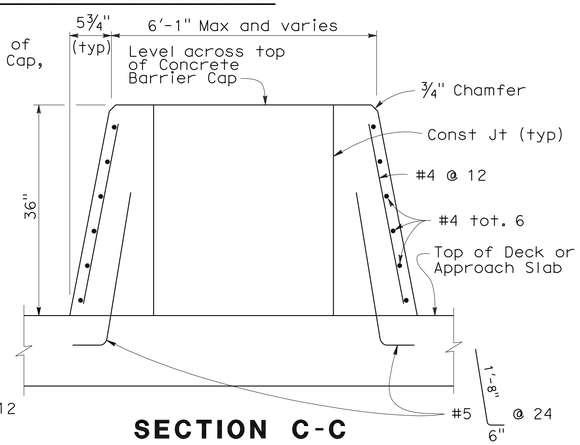

SECTION C-C

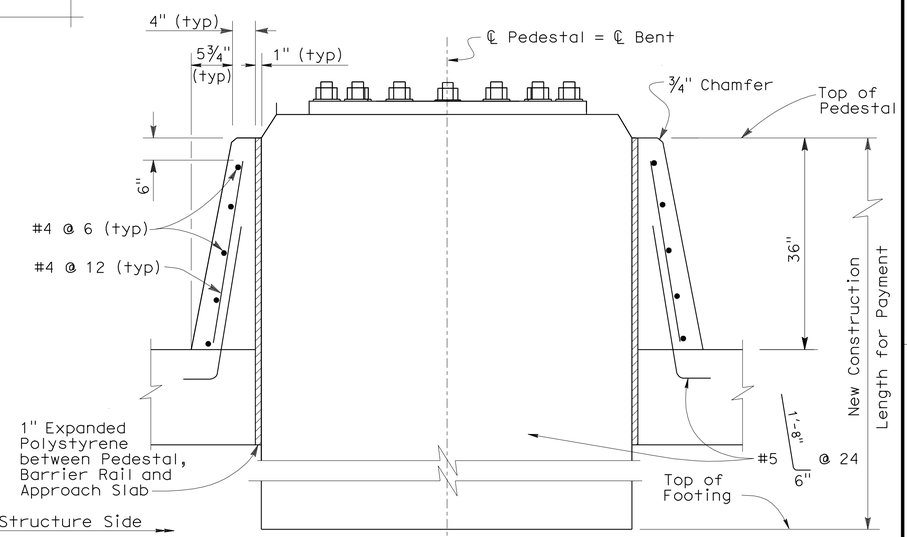

SECTION D-D

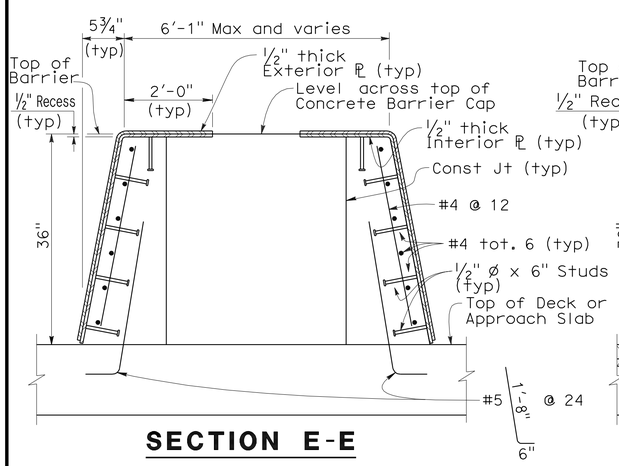

SECTION E-E

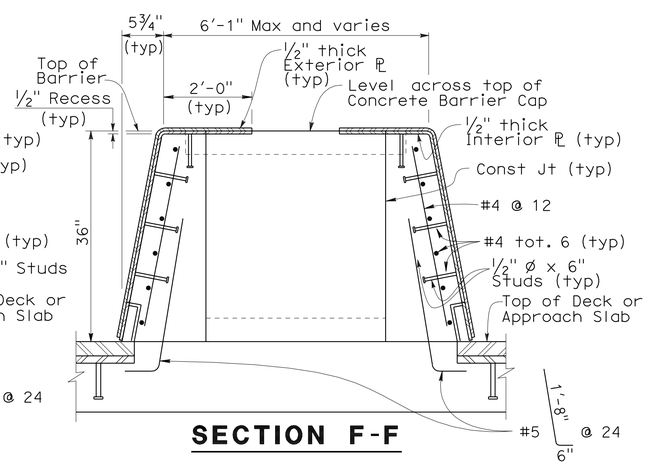

SECTION F-F

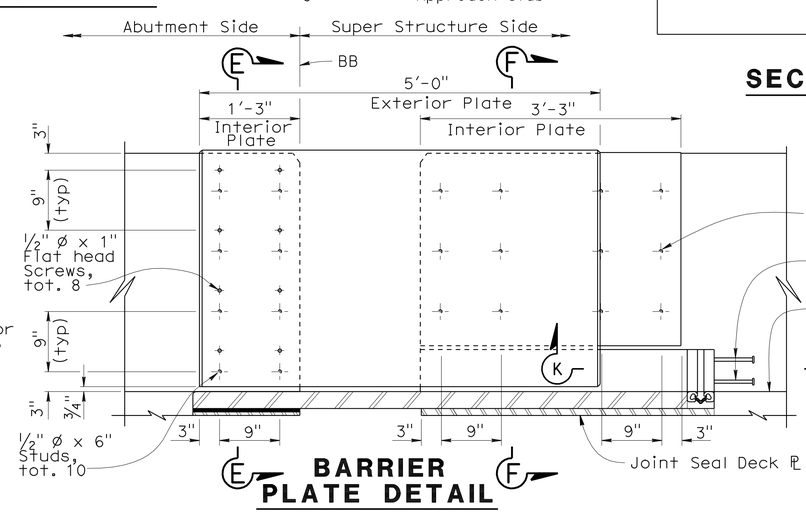

BARRIER PLATE DETAIL

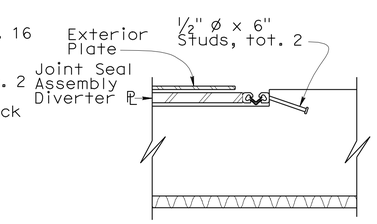

SECTION K-K

NO SCALE

DESIGN	BY F. Zayati	CHECKED R. Bromenschenkel	
DETAILS	BY K. Kubo	CHECKED F. Zayati	
QUANTITIES	BY	CHECKED	

STATE OF CALIFORNIA
DEPARTMENT OF TRANSPORTATION

DIVISION OF ENGINEERING SERVICES
STRUCTURE DESIGN
DESIGN BRANCH 14

BRIDGE NO. 53-3032
POST MILE 3.58

SCHUYLER HEIM BRIDGE (REPLACE)
CONCRETE BARRIER DETAILS NO. 5

STRUCTURES DESIGN DETAIL SHEET (ENGLISH) (REV. 10/25/05)

ORIGINAL SCALE IN INCHES FOR REDUCED PLANS 0 1 2 3

CU 07-271
EA 138201

DISREGARD PRINTS BEARING EARLIER REVISION DATES

REVISION DATES: 5-13-10 5-20-10 05-22-10 06-16-10 06-21-10 6-22-10 6-24-10 06-28-10 06-28-10 07-15-10

SHEET 198 OF 247

FILE => 53-3032-1-t-brdt05.dgn

USERNAME => friehard DATE PLOTTED => 18-OCT-2010 TIME PLOTTED => 14:33