REFERENCE: CALTRANS SOIL & ROCK LOGGING, CLASSIFICATION, AND PRESENTATION MANUAL (JUNE 2007)

DIST	COUNTY	ROUTE	POST MILES TOTAL PROJECT	SHEET No	TOTAL SHEETS
07	LA	47,103	3.5/4.6, 0.0/1.1	501	1003

REGISTERED ENGINEER — DATE 04/19/10

10-11-10
PLANS APPROVAL DATE

REGISTERED PROFESSIONAL ENGINEER ERIC BROWN NO. GE-2806 EXP. 06-30-2010 GEOTECHNICAL STATE OF CALIFORNIA

The State of California or its officers or agents shall not be responsible for the accuracy or completeness of electronic copies of this plan sheet.

ACTA
ONE CIVIC PLAZA. SUITE 350,
CARSON, CA 90745

EARTH MECHANICS, INC.
17660, NEWHOPE STREET, SUITE E
FOUNTAIN VALLEY, CA 92708

CEMENTATION

Description	Criteria
Weak	Crumbles or breaks with handling or little finger pressure.
Moderate	Crumbles or breaks with considerable finger pressure.
Strong	Will not crumble or break with finger pressure.

CONSISTENCY OF COHESIVE SOILS

Description	Unconfined Compressive Strength (tsf)	Pocket Penetrometer Measurement (tsf)	Torvane Measurement (tsf)	Field Approximation
Very Soft	< 0.25	< 0.25	< 0.12	Easily penetrated several inches by fist
Soft	0.25 to 0.50	0.25 to 0.50	0.12 to 0.25	Easily penetrated several inches by thumb
Medium Stiff	0.50 to 1.0	0.50 to 1.0	0.25 to 0.50	Penetrated several inches by thumb with moderate effort
Stiff	1 to 2	1 to 2	0.50 to 1.0	Readily indented by thumb but penetrated only with great effort
Very Stiff	2 to 4	2 to 4	1.0 to 2.0	Readily indented by thumbnail
Hard	> 4.0	> 4.0	> 2.0	Indented by thumbnail with difficulty

BOREHOLE IDENTIFICATION

Symbol	Hole Type	Description
Size	A	Auger Boring
Size	R P	Rotary drilled boring Rotary percussion boring (air)
Size	R	Rotary drilled diamond core
Size	HD HA	Hand driven (1-inch soil tube) Hand Auger
●	D	Dynamic Cone Penetration Boring
▲	CPT	Cone Penetration Test (ASTM D 5778-95)
⬚	O	Other

Note: Size in inches.

PLASTICITY OF FINE-GRAINED SOILS

Description	Criteria
Nonplastic	A 1/8-inch thread cannot be rolled at any water content.
Low	The thread can barely be rolled and the lump cannot be formed when drier than the plastic limit.
Medium	The thread is easy to roll and not much time is required to reach the plastic limit. The thread cannot be rerolled after reaching the plastic limit. The lump crumbles when drier than the plastic limit.
High	It takes considerable time rolling and kneading to reach the plastic limit. The thread can be rerolled several times after reaching the plastic limit. The lump can be formed without crumbling when drier than the plastic limit.

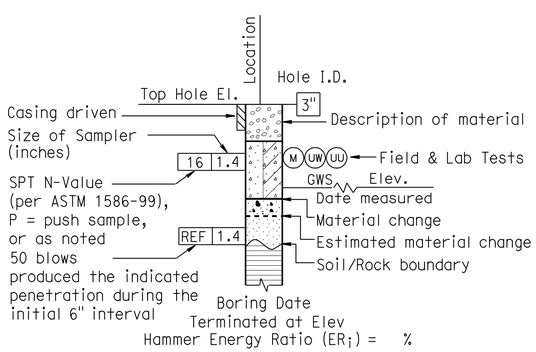

ROTARY BORING

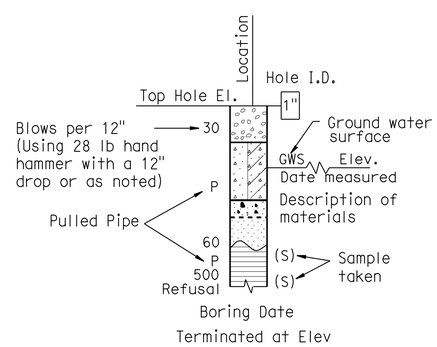

HAND BORING

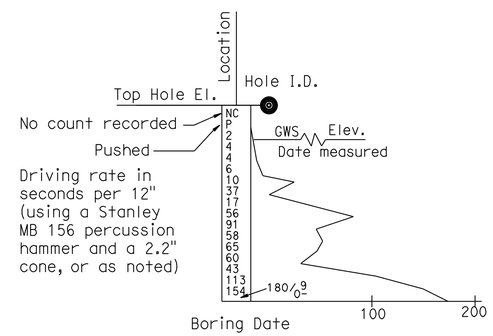

DYNAMIC CONE PENETRATION BORING

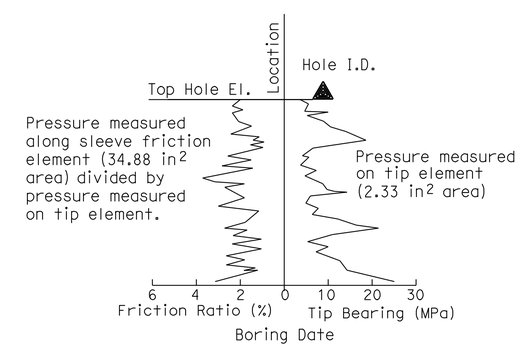

CONE PENETRATION TEST (CPT) SOUNDING

DESIGN OVERSIGHT SIGN OFF DATE	DRAWN BY: J.Fang CHECKED BY: K.Pratheepan	FIELD INVESTIGATION BY: E.Brown	PREPARED FOR THE STATE OF CALIFORNIA DEPARTMENT OF TRANSPORTATION	E. Brown PROJECT ENGINEER	BRIDGE NO. 53-3031 POST MILE 3.74

NEW DOCK STREET OFF-RAMP
LOG OF TEST BORINGS NO. 5 OF 6

OGS CIVIL LOG OF TEST BORINGS SHEET (ENGLISH) (REV. 06-01-09)

ORIGINAL SCALE IN INCHES FOR REDUCED PLANS 0 1 2 3

CU 07-271
EA 138201

DISREGARD PRINTS BEARING EARLIER REVISION DATES — REVISION DATES (PRELIMINARY STAGE ONLY) 02/05/10 03/24/10 07/01/10 07/02/10

SHEET 48 OF 49

FILE => 53-3031-z-1tb05.dgn

USERNAME => trmnguye DATE PLOTTED => 19-OCT-2010 TIME PLOTTED => 07:27

REFERENCE: CALTRANS SOIL & ROCK LOGGING, CLASSIFICATION, AND PRESENTATION MANUAL (JUNE 2007)

DIST	COUNTY	ROUTE	POST MILES TOTAL PROJECT	SHEET No	TOTAL SHEETS
07	LA	47,103	3.5/4.6, 0.0/1.1	502	1003

REGISTERED ENGINEER — DATE 04/19/10

PLANS APPROVAL DATE 10-11-10

REGISTERED PROFESSIONAL ENGINEER ERIC BROWN NO. GE-2806 EXP. 06-30-2010 GEOTECHNICAL STATE OF CALIFORNIA

The State of California or its officers or agents shall not be responsible for the accuracy or completeness of electronic copies of this plan sheet.

ACTA
ONE CIVIC PLAZA. SUITE 350,
CARSON, CA 90745

EARTH MECHANICS, INC.
17660, NEWHOPE STREET, SUITE E
FOUNTAIN VALLEY, CA 92708

GROUP SYMBOLS AND NAMES

Graphic/Symbol	Group Names	Graphic/Symbol	Group Names
GW	Well-graded GRAVEL Well-graded GRAVEL with SAND	CL	Lean CLAY Lean CLAY with SAND Lean CLAY with GRAVEL SANDY lean CLAY SANDY lean CLAY with GRAVEL GRAVELLY lean CLAY GRAVELLY lean CLAY with SAND
GP	Poorly graded GRAVEL Poorly graded GRAVEL with SAND		
GW-GM	Well-graded GRAVEL with SILT Well-graded GRAVEL with SILT and SAND	CL-ML	SILTY CLAY SILTY CLAY with SAND SILTY CLAY with GRAVEL SANDY SILTY CLAY SANDY SILTY CLAY with GRAVEL GRAVELLY SILTY CLAY GRAVELLY SILTY CLAY with SAND
GW-GC	Well-graded GRAVEL with CLAY (or SILTY CLAY) Well-graded GRAVEL with CLAY and SAND (or SILTY CLAY and SAND)		
GP-GM	Poorly graded GRAVEL with SILT Poorly graded GRAVEL with SILT and SAND	ML	SILT SILT with SAND SILT with GRAVEL SANDY SILT SANDY SILT with GRAVEL GRAVELLY SILT GRAVELLY SILT with SAND
GP-GC	Poorly graded GRAVEL with CLAY (or SILTY CLAY) Poorly graded GRAVEL with CLAY and SAND (or SILTY CLAY and SAND)		
GM	SILTY GRAVEL SILTY GRAVEL with SAND	OL	ORGANIC lean CLAY ORGANIC lean CLAY with SAND ORGANIC lean CLAY with GRAVEL SANDY ORGANIC lean CLAY SANDY ORGANIC lean CLAY with GRAVEL GRAVELLY ORGANIC lean CLAY GRAVELLY ORGANIC lean CLAY with SAND
GC	CLAYEY GRAVEL CLAYEY GRAVEL with SAND		
GC-GM	SILTY, CLAYEY GRAVEL SILTY, CLAYEY GRAVEL with SAND	OL	ORGANIC SILT ORGANIC SILT with SAND ORGANIC SILT with GRAVEL SANDY ORGANIC SILT SANDY ORGANIC SILT with GRAVEL GRAVELLY ORGANIC SILT GRAVELLY ORGANIC SILT with SAND
SW	Well-graded SAND Well-graded SAND with GRAVEL		
SP	Poorly graded SAND Poorly graded SAND with GRAVEL	CH	Fat CLAY Fat CLAY with SAND Fat CLAY with GRAVEL SANDY fat CLAY SANDY fat CLAY with GRAVEL GRAVELLY fat CLAY GRAVELLY fat CLAY with SAND
SW-SM	Well-graded SAND with SILT Well-graded SAND with SILT and GRAVEL		
SW-SC	Well-graded SAND with CLAY (or SILTY CLAY) Well-graded SAND with CLAY and GRAVEL (or SILTY CLAY and GRAVEL)	MH	Elastic SILT Elastic SILT with SAND Elastic SILT with GRAVEL SANDY elastic SILT SANDY elastic SILT with GRAVEL GRAVELLY elastic SILT GRAVELLY elastic SILT with SAND
SP-SM	Poorly graded SAND with SILT Poorly graded SAND with SILT and GRAVEL		
SP-SC	Poorly graded SAND with CLAY (or SILTY CLAY) Poorly graded SAND with CLAY and GRAVEL (or SILTY CLAY and GRAVEL)	OH	ORGANIC fat CLAY ORGANIC fat CLAY with SAND ORGANIC fat CLAY with GRAVEL SANDY ORGANIC fat CLAY SANDY ORGANIC fat CLAY with GRAVEL GRAVELLY ORGANIC fat CLAY GRAVELLY ORGANIC fat CLAY with SAND
SM	SILTY SAND SILTY SAND with GRAVEL		
SC	CLAYEY SAND CLAYEY SAND with GRAVEL	OH	ORGANIC elastic SILT ORGANIC elastic SILT with SAND ORGANIC elastic SILT with GRAVEL SANDY ORGANIC elastic SILT SANDY ORGANIC elastic SILT with GRAVEL GRAVELLY ORGANIC elastic SILT GRAVELLY ORGANIC elastic SILT with SAND
SC-SM	SILTY, CLAYEY SAND SILTY, CLAYEY SAND with GRAVEL		
PT	PEAT	OL/OH	ORGANIC SOIL ORGANIC SOIL with SAND ORGANIC SOIL with GRAVEL SANDY ORGANIC SOIL SANDY ORGANIC SOIL with GRAVEL GRAVELLY ORGANIC SOIL GRAVELLY ORGANIC SOIL with SAND
	COBBLES COBBLES and BOULDERS BOULDERS		

FIELD AND LABORATORY TESTING

- (C) Consolidation (ASTM D 2435)
- (CL) Collapse Potential (ASTM D 5333)
- (CP) Compaction Curve (CTM 216)
- (CR) Corrosivity Testing (CTM 643, CTM 422, CTM 417)
- (CU) Consolidated Undrained Triaxial (ASTM D 4767)
- (DS) Direct Shear (ASTM D 3080)
- (EI) Expansion Index (ASTM D 4829)
- (M) Moisture Content (ASTM D 2216)
- (OC) Organic Content-% (ASTM D 2974)
- (P) Permeability (CTM 220)
- (PA) Particle Size Analysis (ASTM D 422)
- (PI) Plasticity Index (AASHTO T 90) Liquid Limit (AASHTO T 89)
- (PL) Point Load Index (ASTM D 5731)
- (PM) Pressure Meter
- (PP) Pocket Penetrometer
- (R) R-Value (CTM 301)
- (SE) Sand Equivalent (CTM 217)
- (SG) Specific Gravity (AASHTO T 100)
- (SL) Shrinkage Limit (ASTM D 427)
- (SW) Swell Potential (ASTM D 4546)
- (TV) Pocket Torvane
- (UC) Unconfined Compression-Soil (ASTM D 2166) Unconfined Compression-Rock (ASTM D 2938)
- (UU) Unconsolidated Undrained Triaxial (ASTM D 2850)
- (UW) Unit Weight (ASTM D 4767)
- (VS) Vane Shear (AASHTO T 223)

APPARENT DENSITY OF COHESIONLESS SOILS

Description	SPT N_{60} (Blows / 12 inches)
Very loose	0 - 4
Loose	5 - 10
Medium Dense	11 - 30
Dense	31 - 50
Very Dense	> 50

MOISTURE

Description	Criteria
Dry	Absence of moisture, dusty, dry to the touch
Moist	Damp but no visible water
Wet	Visible free water, usually soil is below water table

PERCENT OR PROPORTION OF SOILS

Description	Criteria
Trace	Particles are present but estimated to be less than 5%
Few	5 to 10%
Little	15 to 25%
Some	30 to 45%
Mostly	50 to 100%

PARTICLE SIZE

Description		Size
Boulder		> 12"
Cobble		3" to 12"
Gravel	Coarse	3/4" to 3"
	Fine	No. 4 to 3/4"
Sand	Coarse	No. 10 to No. 4
	Medium	No. 40 to No. 10
	Fine	No. 200 to No. 40

DESIGN OVERSIGHT

SIGN OFF DATE

DRAWN BY: J.Fang

CHECKED BY: K.Pratheepan

FIELD INVESTIGATION BY: E.Brown

PREPARED FOR THE STATE OF CALIFORNIA DEPARTMENT OF TRANSPORTATION

E. Brown
PROJECT ENGINEER

BRIDGE NO. 53-3031
POST MILE 3.74

NEW DOCK STREET OFF-RAMP
LOG OF TEST BORINGS NO. 6 OF 6

OGS CIVIL LOG OF TEST BORINGS SHEET (ENGLISH) (REV. 06-01-09)

ORIGINAL SCALE IN INCHES FOR REDUCED PLANS 0 1 2 3

CU 07-271
EA 138201

DISREGARD PRINTS BEARING EARLIER REVISION DATES

REVISION DATES (PRELIMINARY STAGE ONLY) 02/09/10 03/01/10 07/01/10 07/02/10

SHEET 49 OF 49

FILE => 53-3031-z-ltb06.dgn

USERNAME => trmmgoye DATE PLOTTED => 19-OCT-2010 TIME PLOTTED => 07:27

DIST	COUNTY	ROUTE	POST MILES TOTAL PROJECT	SHEET No	TOTAL SHEETS
07	LA	47,103	3.5/4.6, 0.0/1.1	503	1003

REGISTERED CIVIL ENGINEER — DATE 05-24-10

10-11-10
PLANS APPROVAL DATE

The State of California or its officers or agents shall not be responsible for the accuracy or completeness of electronic copies of this plan sheet.

REGISTERED PROFESSIONAL ENGINEER — FOUED ZAYATI — No. C57046 — Exp. 06-30-11 — CIVIL — STATE OF CALIFORNIA

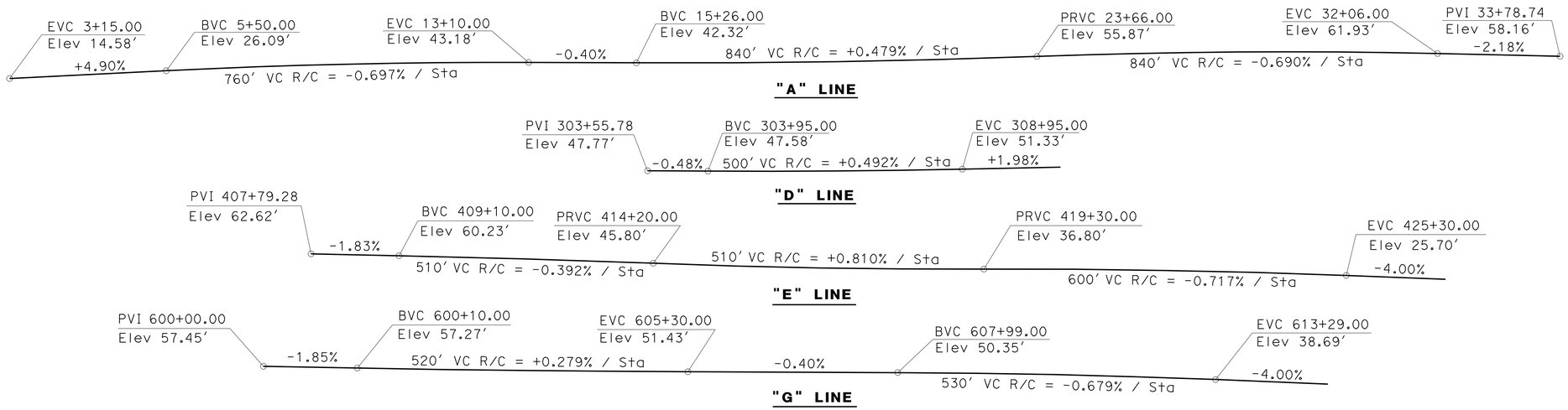

PROFILE GRADES

No Scale

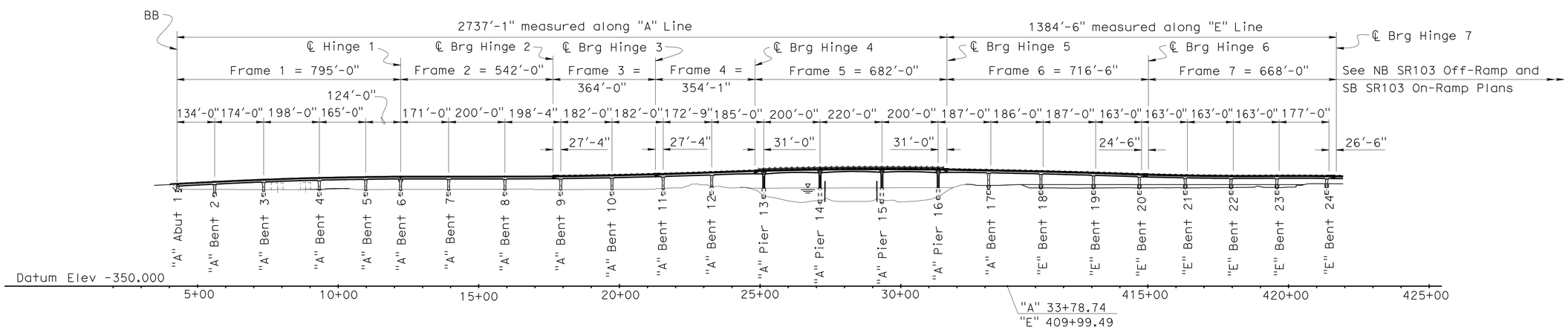

DEVELOPED ELEVATION - Stage 1

1"=200′

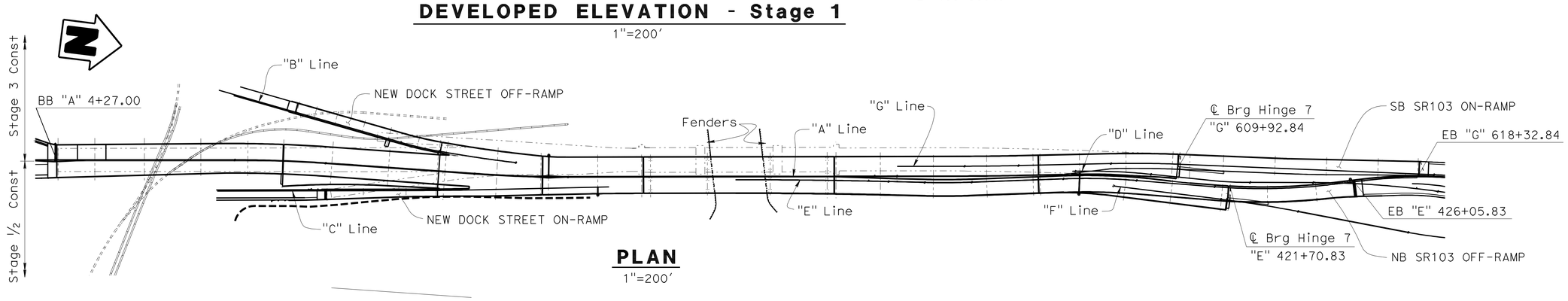

PLAN

1"=200′

X Foued Zayati — DESIGN ENGINEER	DESIGN	BY F. Zayati	CHECKED T. Skreslet	LOAD & RESISTANCE FACTOR DESIGN — LIVE LOADING: HL93 W/"LOW-BOY"; PERMIT DESIGN VEHICLE
	DETAILS	BY T. Nguyen/K. Kubo	CHECKED T. Skreslet	LAYOUT — BY F. Zayati — CHECKED X
	QUANTITIES	BY J/P Peterson	CHECKED J/P Peterson	SPECIFICATIONS — BY X — PLANS AND SPECS COMPARED X

STATE OF CALIFORNIA — DEPARTMENT OF TRANSPORTATION

DIVISION OF ENGINEERING SERVICES — STRUCTURE DESIGN — DESIGN BRANCH 14

BRIDGE NO. 53-3032 — POST MILE 3.58

SCHUYLER HEIM BRIDGE (REPLACE)
GENERAL PLAN

STRUCTURES DESIGN GENERAL PLAN SHEET (ENGLISH) (REV. 10/25/05)

ORIGINAL SCALE IN INCHES FOR REDUCED PLANS 0 1 2 3

CU 07-271
EA 138201

DISREGARD PRINTS BEARING EARLIER REVISION DATES

REVISION DATES: 04-24-08 08-14-08 08-18-08 01-06-10 03-22-10 03-23-10 06-24-10 06-30-10

SHEET 1 OF 247

FILE => 53-3032-a-gp.dgn

STRUCTURES DESIGN GENERAL PLAN SHEET (ENGLISH) (REV.07-24-06)

USERNAME => trmnguye DATE PLOTTED => 19-OCT-2010 TIME PLOTTED => 07:27

DIST	COUNTY	ROUTE	POST MILES TOTAL PROJECT	SHEET No	TOTAL SHEETS
07	LA	47,103	3.5/4.6, 0.0/1.1	504	1003

REGISTERED CIVIL ENGINEER 05-24-10 DATE

10-11-10
PLANS APPROVAL DATE

REGISTERED PROFESSIONAL ENGINEER FOUED ZAYATI No. C57046 Exp. 06-30-11 CIVIL STATE OF CALIFORNIA

The State of California or its officers or agents shall not be responsible for the accuracy or completeness of electronic copies of this plan sheet.

INDEX TO PLANS

SHEET NO.	TITLE
1	GENERAL PLAN
2	INDEX TO PLANS
3	GENERAL NOTES NO. 1
4	GENERAL NOTES NO. 2
5	STRUCTURE PLAN NO. 1
6	STRUCTURE PLAN NO. 2
7	STRUCTURE PLAN NO. 3
8	STRUCTURE PLAN NO. 4
9	STRUCTURE PLAN NO. 5
10	STRUCTURE PLAN NO. 6
11	STRUCTURE PLAN NO. 7
12	STRUCTURE PLAN NO. 8
13	STRUCTURE PLAN NO. 9
14	DECK CONTOURS NO. 1
15	DECK CONTOURS NO. 2
16	DECK CONTOURS NO. 3
17	DECK CONTOURS NO. 4
18	DECK CONTOURS NO. 5
19	DECK CONTOURS NO. 6
20	DECK CONTOURS NO. 7
21	DECK CONTOURS NO. 8
22	DECK CONTOURS NO. 9
23	FOUNDATION PLAN NO. 1
24	FOUNDATION PLAN NO. 2
25	FOUNDATION PLAN NO. 3
26	FOUNDATION PLAN NO. 4
27	FOUNDATION PLAN NO. 5
28	FOUNDATION PLAN NO. 6
29	FOUNDATION PLAN NO. 7
30	FOUNDATION PLAN NO. 8
31	ABUTMENT 1 LAYOUT
32	ABUTMENT 1 DETAILS NO. 1
33	ABUTMENT 1 DETAILS NO. 2
34	ABUTMENT 1 DETAILS NO. 3
35	ABUTMENT 1 DETAILS NO. 4
36	ABUTMENT 1 DETAILS NO. 5
37	BENTS 2 & 3 LAYOUT
38	BENT 4 LAYOUT
39	BENT 5 LAYOUT
40	BENT 6 LAYOUT
41	BENT 6 DETAILS NO. 1
42	BENT 6 DETAILS NO. 2
43	BENT 6 DETAILS NO. 3
44	BENT 7 LAYOUT
45	BENT 8 LAYOUT
46	BENT 9 LAYOUT
47	BENT 10 LAYOUT
48	BENT 11 LAYOUT NO. 1
49	BENT 11 LAYOUT NO. 2
50	BENT 12 LAYOUT
51	PIERS 13 THRU 16 LAYOUT
52	PIERS 13 THRU 16 DETAILS NO. 1
53	PIERS 13 THRU 16 DETAILS NO. 2
54	PIERS 13 THRU 16 DETAILS NO. 3
55	BENTS 17 THRU 19 LAYOUT (STAGE 1)
56	BENTS 17 THRU 19 LAYOUT (STAGE 2)
57	BENTS 20 THRU 22 LAYOUT (STAGE 1)
58	BENTS 20 THRU 22 LAYOUT (STAGE 2)
59	BENT 23 LAYOUT (STAGE 1)
60	BENT 23 LAYOUT (STAGE 2)
61	BENT 24 LAYOUT (STAGE 1)
62	BENT DETAILS NO. 1
63	BENT DETAILS NO. 2
64	BENT DETAILS NO. 3
65	BENT DETAILS NO. 4
66	BENT DETAILS NO. 5
67	BENT DETAILS NO. 6
68	BENT DETAILS NO. 7
69	BENT DETAILS NO. 8
70	TYPICAL SECTION NO. 1
71	TYPICAL SECTION NO. 2
72	TYPICAL SECTION NO. 3
73	TYPICAL SECTION NO. 4
74	GIRDER LAYOUT NO. 1
75	GIRDER LAYOUT NO. 2
76	GIRDER LAYOUT NO. 3
77	GIRDER LAYOUT NO. 4
78	GIRDER LAYOUT NO. 5
79	GIRDER LAYOUT NO. 6
80	GIRDER LAYOUT NO. 7
81	GIRDER LAYOUT NO. 8
82	GIRDER LAYOUT NO. 9
83	GIRDER LAYOUT NO. 10
84	GIRDER LAYOUT NO. 11
85	GIRDER DETAILS NO. 1
86	GIRDER DETAILS NO. 2
87	GIRDER DETAILS NO. 3
88	GIRDER DETAILS NO. 4
89	GIRDER DETAILS NO. 5
90	GIRDER DETAILS NO. 6
91	HINGE 2 (STAGE 1) LAYOUT
92	HINGE 2 DETAILS NO. 1
93	HINGE 2 (STAGE 1) DETAILS NO. 2
94	HINGE 2 DETAILS NO. 3
95	HINGE 2 (STAGE 1) DETAILS NO. 4
96	HINGE 2 (STAGE 1) DETAILS NO. 5
97	HINGE 2 (NEW DOCK ON RAMP) DETAILS NO. 6
98	HINGE 2 (NEW DOCK ON RAMP) DETAILS NO. 7
99	HINGE 2 (STAGE 2) LAYOUT
100	HINGE 2 (STAGE 2) DETAILS NO. 1
101	HINGE 2 (STAGE 2) DETAILS NO. 2
102	HINGE 2 (STAGE 2) DETAILS NO. 3
103	HINGE 2 (NEW DOCK OFF RAMP) DETAILS NO. 4
104	HINGE 2 (NEW DOCK OFF RAMP) DETAILS NO. 5
105	HINGE 3 LAYOUT
106	HINGE 3 DETAILS NO. 1
107	HINGE 3 DETAILS NO. 2
108	HINGE 3 DETAILS NO. 3
109	HINGE 3 DETAILS NO. 4
110	HINGE 3 (STAGE 1) DETAILS NO. 5
111	HINGE 3 (STAGE 1) DETAILS NO. 6
112	HINGE 3 (STAGE 2) DETAILS NO. 7
113	HINGE 3 (STAGE 2) DETAILS NO. 8
114	HINGE 4 LAYOUT
115	HINGE 4 DETAILS NO. 1
116	HINGE 4 DETAILS NO. 2
117	HINGE 4 DETAILS NO. 3
118	HINGE 4 DETAILS NO. 4
119	HINGE 4 DETAILS NO. 5
120	HINGE 5 LAYOUT
121	HINGE 5 DETAILS NO. 1
122	HINGE 5 DETAILS NO. 2
123	HINGE 5 DETAILS NO. 3
124	HINGE 5 (STAGE 1) DETAILS NO. 4
125	HINGE 5 (STAGE 2) DETAILS NO. 5
126	HINGE 6 LAYOUT
127	HINGE 6 DETAILS NO. 1
128	HINGE 6 DETAILS NO. 2
129	HINGE 6 DETAILS NO. 3
130	HINGE 6 (STAGE 1) DETAILS NO. 4
131	HINGE 6 (STAGE 2) DETAILS NO. 5
132	HINGE 7 (STAGE 1) LAYOUT
133	HINGE 7 (STAGE 2) LAYOUT
134	HINGE 7 DETAILS NO. 1
135	HINGE 7 DETAILS NO. 2
136	HINGE 7 DETAILS NO. 3
137	HINGE 7 (STAGE 1) DETAILS NO. 4
138	HINGE 7 (STAGE 2) DETAILS NO. 5
139	HINGE 7 DETAILS NO. 6
140	MISCELLANEOUS DETAILS
141	2.5 ft CIDH PILE DETAILS
142	10 ft CIDH PILE DETAILS NO. 1
143	10 ft CIDH PILE DETAILS NO. 2
144	10 ft CIDH PILE DETAILS NO. 3
145	10 ft CIDH PILE DETAILS NO. 4
146	12 ft CIDH PILE DETAILS NO. 1
147	12 ft CIDH PILE DETAILS NO. 2
148	12 ft CIDH PILE DETAILS NO. 3
149	PILE LOAD TEST DATA
150	PRECAST ISOLATION CASING DETAILS
151	ISOLATION CASING COVER DETAILS
152	PTFE BEARING DETAILS NO. 1
153	PTFE BEARING DETAILS NO. 2
154	FENDER LAYOUT
155	FENDER DETAILS NO. 1
156	FENDER DETAILS NO. 2
157	FENDER DETAILS NO. 3
158	FENDER DETAILS NO. 4
159	FENDER DETAILS NO. 5
160	FENDER DETAILS NO. 6
161	GUIDEWAY DETAILS NO. 1
162	GUIDEWAY DETAILS NO. 2
163	GUIDEWAY DETAILS NO. 3
164	JOINT SEAL ASSEMBLY LAYOUT NO. 1
165	JOINT SEAL ASSEMBLY LAYOUT NO. 2
166	ABUTMENT JOINT SEAL ASSEMBLY DETAILS NO. 1
167	ABUTMENT JOINT SEAL ASSEMBLY DETAILS NO. 2
168	ABUTMENT JOINT SEAL ASSEMBLY DETAILS NO. 3
169	ABUTMENT JOINT SEAL ASSEMBLY DETAILS NO. 4
170	ABUTMENT JOINT SEAL ASSEMBLY DETAILS NO. 5
171	ABUTMENT JOINT SEAL ASSEMBLY DETAILS NO. 6
172	ABUTMENT JOINT SEAL ASSEMBLY DETAILS NO. 7
173	HINGE JOINT SEAL ASSEMBLY DETAILS NO. 1
174	HINGE JOINT SEAL ASSEMBLY DETAILS NO. 2
175	HINGE JOINT SEAL ASSEMBLY DETAILS NO. 3
176	HINGE JOINT SEAL ASSEMBLY DETAILS NO. 4
177	HINGE JOINT SEAL ASSEMBLY DETAILS NO. 5
178	HINGE JOINT SEAL ASSEMBLY DETAILS NO. 6
179	HINGE JOINT SEAL ASSEMBLY DETAILS NO. 7
180	HINGE JOINT SEAL ASSEMBLY DETAILS NO. 8
181	HINGE JOINT SEAL ASSEMBLY DETAILS NO. 9
182	HINGE JOINT SEAL ASSEMBLY DETAILS NO. 10
183	HINGE JOINT SEAL ASSEMBLY DETAILS NO. 11
184	HINGE JOINT SEAL ASSEMBLY DETAILS NO. 12
185	HINGE JOINT SEAL ASSEMBLY DETAILS NO. 13
186	HINGE JOINT SEAL ASSEMBLY DETAILS NO. 14
187	HINGE JOINT SEAL ASSEMBLY DETAILS NO. 15
188	HINGE JOINT SEAL ASSEMBLY DETAILS NO. 16
189	HINGE JOINT SEAL ASSEMBLY DETAILS NO. 17
190	DECK DRAIN DETAILS NO. 1
191	DECK DRAIN DETAILS NO. 2
192	STRUCTURE APPROACH TYPE N(30S)
193	STRUCTURE APPROACH DRAINAGE DETAILS
194	CONCRETE BARRIER DETAILS NO. 1
195	CONCRETE BARRIER DETAILS NO. 2
196	CONCRETE BARRIER DETAILS NO. 3
197	CONCRETE BARRIER DETAILS NO. 4
198	CONCRETE BARRIER DETAILS NO. 5
199	CONCRETE BARRIER DETAILS NO. 6
200	CONCRETE BARRIER DETAILS NO. 7
201	RAILING DETAILS NO. 1
202	RAILING DETAILS NO. 2
203	RAILING DETAILS NO. 3
204	RAILING DETAILS NO. 4
205	LEGEND AND ABBREVIATIONS
206	SEISMIC SITE PLAN
207	ENLARGED LAYOUT NO. 1, BENT 8 TO BENT 10
208	ENLARGED LAYOUT NO. 2, BENT 11 TO PIER 13
209	ENLARGED LAYOUT NO. 3, PIER 14 TO PIER 16
210	ENLARGED LAYOUT NO. 4, BENT 17 TO BENT 20
211	SEISMIC SENSOR ENCLOSURE DETAILS
212	RECORDER DETAILS
213	SEISMIC SENSOR ENCLOSURE LOCATION TABLE
214	LOG OF TEST BORINGS NO. 1 OF 34
215	LOG OF TEST BORINGS NO. 2 OF 34
216	LOG OF TEST BORINGS NO. 3 OF 34
217	LOG OF TEST BORINGS NO. 4 OF 34
218	LOG OF TEST BORINGS NO. 5 OF 34
219	LOG OF TEST BORINGS NO. 6 OF 34
220	LOG OF TEST BORINGS NO. 7 OF 34
221	LOG OF TEST BORINGS NO. 8 OF 34
222	LOG OF TEST BORINGS NO. 9 OF 34
223	LOG OF TEST BORINGS NO. 10 OF 34
224	LOG OF TEST BORINGS NO. 11 OF 34
225	LOG OF TEST BORINGS NO. 12 OF 34
226	LOG OF TEST BORINGS NO. 13 OF 34
227	LOG OF TEST BORINGS NO. 14 OF 34
228	LOG OF TEST BORINGS NO. 15 OF 34
229	LOG OF TEST BORINGS NO. 16 OF 34
230	LOG OF TEST BORINGS NO. 17 OF 34
231	LOG OF TEST BORINGS NO. 18 OF 34
232	LOG OF TEST BORINGS NO. 19 OF 34
233	LOG OF TEST BORINGS NO. 20 OF 34
234	LOG OF TEST BORINGS NO. 21 OF 34
235	LOG OF TEST BORINGS NO. 22 OF 34
236	LOG OF TEST BORINGS NO. 23 OF 34
237	LOG OF TEST BORINGS NO. 24 OF 34
238	LOG OF TEST BORINGS NO. 25 OF 34
239	LOG OF TEST BORINGS NO. 26 OF 34
240	LOG OF TEST BORINGS NO. 27 OF 34
241	LOG OF TEST BORINGS NO. 28 OF 34
242	LOG OF TEST BORINGS NO. 29 OF 34
243	LOG OF TEST BORINGS NO. 30 OF 34
244	LOG OF TEST BORINGS NO. 31 OF 34
245	LOG OF TEST BORINGS NO. 32 OF 34
246	LOG OF TEST BORINGS NO. 33 OF 34
247	LOG OF TEST BORINGS NO. 34 OF 34

QUANTITIES

BRIDGE REMOVAL (PORTION), LOCATION E	LUMP	SUM
STRUCTURE EXCAVATION (TYPE A)	1,900	CY
STRUCTURE EXCAVATION (TYPE SC)	670	CY
STRUCTURE EXCAVATION (TYPE DC)	794	CY
STRUCTURE EXCAVATION (TYPE GC)	2,043,000	GAL
STRUCTURE EXCAVATION (TYPE Z-2) (AERIALLY DEPOSITED LEAD)	504	CY
STRUCTURE BACKFILL (BRIDGE)	1,635	CY
FURNISH 18" STEEL PIPE PILING	9,625	LF
DRIVE 18" STEEL PIPE PILE	77	EA
30" CAST-IN-DRILLED-HOLE CONCRETE PILING	2,937	LF
96" CAST-IN-DRILLED-HOLE CONCRETE PILING	504	LF
120" CAST-IN-DRILLED-HOLE CONCRETE PILING	5,680	LF
156" CAST-IN-DRILLED-HOLE CONCRETE PILING	772	LF
132" CAST-IN-DRILLED-HOLE CONCRETE PILING	2,952	LF
144" CAST-IN-DRILLED-HOLE CONCRETE PILING	4,723	LF
132" PERMANENT STEEL CASING	1,257	LF
144" PERMANENT STEEL CASING	1,505	LF
156" PERMANENT STEEL CASING	765	LF
PRESTRESSING CAST-IN-PLACE CONCRETE	LUMP	SUM
PRESTRESSING CAST-IN-PLACE CONCRETE (TRANSVERSE)	LUMP	SUM
PRESTRESSING CAST-IN-PLACE CONCRETE (HIGH-STRENGTH BARS)	LUMP	SUM
TEMPORARY HINGE TIEDOWN ANCHOR	8	EA
SEAL COURSE CONCRETE	2,436	CY
STRUCTURAL CONCRETE, BRIDGE FOOTING	432	CY
STRUCTURAL CONCRETE, BRIDGE	57,925	CY
STRUCTURAL CONCRETE, APPROACH SLAB (TYPE N)	155	CY
FRACTURED RIB TEXTURE WITH WAVE PATTERN	3,724	SQFT
PRECAST CONCRETE ISOLATION CASING	845	CY
FURNISH PRECAST CONCRETE FENDER MODULE	48	EA
ERECT PRECAST CONCRETE FENDER MODULE	48	EA
PTFE SPHERICAL BEARING	59	EA
JOINT SEAL ASSEMBLY (MR = 42")	110	LF
JOINT SEAL ASSEMBLY (MR = 54")	515	LF
JOINT SEAL ASSEMBLY (MR = 60")	440	LF
BAR REINFORCING STEEL (BRIDGE)	22,166,000	LB
BAR REINFORCING STEEL (EPOXY COATED) (BRIDGE)	690,000	LB
HEADED BAR REINFORCEMENT	14,600	EA
TREATED LUMBER AND TIMBER	11	MFBM
PLASTIC LUMBER	127	CY
UHMW SHEATHING	12,300	SQFT
MISCELLANEOUS METAL (BRIDGE)	421,000	LB
BRIDGE DECK DRAINAGE SYSTEM	253,000	LB
BIRD RAILING	1,320	LF
BICYCLE RAILING	4,027	LF
CONCRETE BARRIER (TYPE 60A)	2,754	LF
CONCRETE BARRIER (TYPE 736 MODIFIED)	11,350	LF
SEISMIC MONITORING SYSTEM	LUMP	SUM

	BY	CHECKED
DESIGN	F. Zayati	T. Skreslet
DETAILS	T. Nguyen	T. Skreslet
QUANTITIES	J/P Peterson	J/P Peterson

STATE OF CALIFORNIA
DEPARTMENT OF TRANSPORTATION

DIVISION OF ENGINEERING SERVICES
STRUCTURE DESIGN
DESIGN BRANCH 14

BRIDGE NO. 53-3032
POST MILE 3.58

SCHUYLER HEIM BRIDGE (REPLACE)
INDEX TO PLANS

STRUCTURES DESIGN DETAIL SHEET (ENGLISH) (REV. 10/25/05)

ORIGINAL SCALE IN INCHES FOR REDUCED PLANS 0 1 2 3

CU 07-271
EA 138201

DISREGARD PRINTS BEARING EARLIER REVISION DATES

REVISION DATES: 03-30-10 04-02-10 04-26-10 04-30-10 05-06-10 05-06-10 05-18-10 05-18-10 05-25-10

SHEET 2 OF 247

FILE => 53-3032-a-itp.dgn

USERNAME => trmnguye DATE PLOTTED => 13-OCT-2010 TIME PLOTTED => 07:28

DIST	COUNTY	ROUTE	POST MILES TOTAL PROJECT	SHEET No	TOTAL SHEETS
07	LA	47,103	3.5/4.6, 0.0/1.1	505	1003

REGISTERED CIVIL ENGINEER — DATE 05-24-10

10-11-10
PLANS APPROVAL DATE

REGISTERED PROFESSIONAL ENGINEER — FOUED ZAYATI — No. C57046 — Exp. 06-30-11 — CIVIL — STATE OF CALIFORNIA

The State of California or its officers or agents shall not be responsible for the accuracy or completeness of electronic copies of this plan sheet.

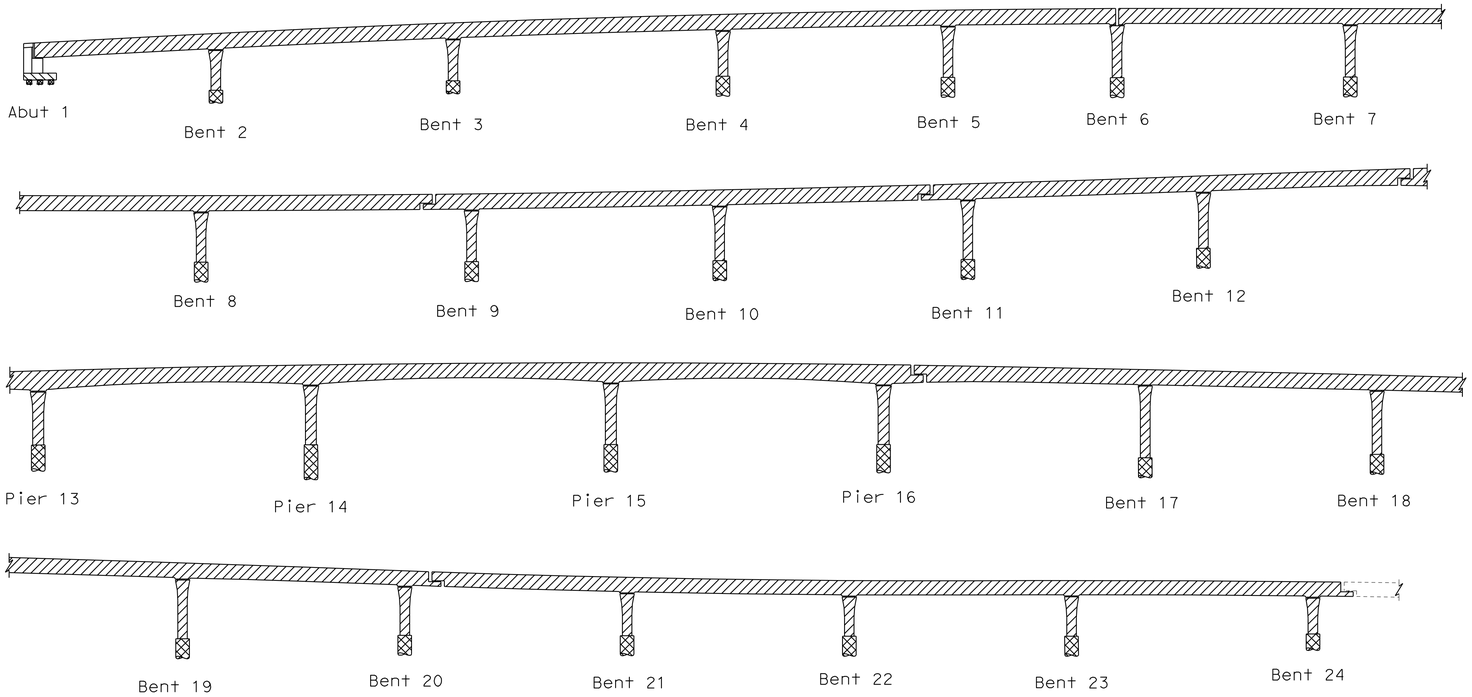

Structural Concrete, Bridge (f'c = 3.6 ksi @ 28 days)
Structural Concrete, Bridge Footing (f'c = 3.6 ksi @ 28 days)
Structural Concrete, Bridge (f'c = 5.0 ksi @ 28 days)
Cast-in-place Drilled Hole Piling (f'c = 3.6 ksi @ 28 days)

CONCRETE STRENGTH AND TYPE LIMITS

No Scale

STANDARD PLANS DATED MAY 2006

A62C	LIMITS OF PAYMENT FOR EXCAVATION AND BACKFILL BRIDGE
B0-1	BRIDGE DETAILS
B0-3	BRIDGE DETAILS
B0-5	BRIDGE DETAILS
B0-13	BRIDGE DETAILS
B7-1	BOX GIRDER DETAILS
B7-8	DECK DRAINAGE DETAILS
B8-5	CAST-IN-PLACE PRESTRESSED GIRDER DETAILS

STANDARD PLAN SHEET NO.

DETAIL NO.

GENERAL NOTES
LOAD AND RESISTANCE FACTOR DESIGN

DESIGN:
AASHTO LRFD Bridge Design Specifications, 3rd edition with the 2005, 2006 Interims and the California Amendments v3.06.01; except that earth retaining systems, bridge barrier and railing details taken from Standard Plans May 2006 and earlier versions, and Standard Bridge Details XS Sheets are designed using Bridge Design Specifications LFD Version April 2000 ('96 AASHTO w/Revisions by Caltrans)

SEISMIC DESIGN:
Caltrans Seismic Design Criteria (SDC), Version 1.4 dated June 2006.

DEAD LOAD:
Includes 35 psf for future wearing surface.

LIVE LOADING:
1.2 x HL-93 and Low-Boy and Permit design loading.

SEISMIC LOADING:
Soil profile type D adjusted for near field effects
Magnitude 7.25 +/- 0.25
Peak Rock Acceleration 0.6g

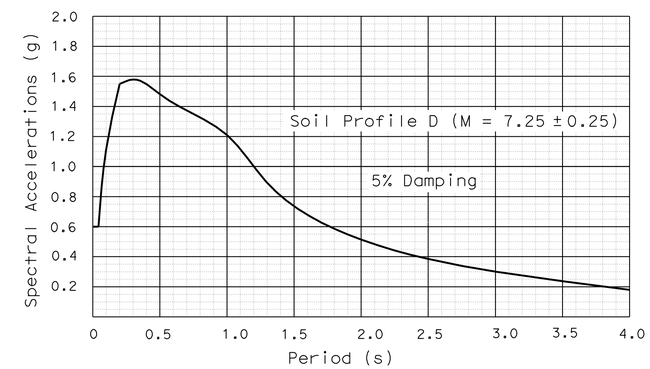

REINFORCED CONCRETE:
fy = 60 ksi
f'c = 3.6 ksi
n = 8

PRESTRESSED CONCRETE:
See Prestressing Notes on "GIRDER DETAILS NO. 1" sheet.

STRUCTURAL STEEL:
fy = ASTM A709 Grade 50

	BY	CHECKED
DESIGN	F. Zayati	T. Skreslet
DETAILS	K. Kubo	T. Skreslet
QUANTITIES	J/P Peterson	J/P Peterson

STATE OF CALIFORNIA
DEPARTMENT OF TRANSPORTATION

DIVISION OF ENGINEERING SERVICES
STRUCTURE DESIGN
DESIGN BRANCH 14

BRIDGE NO. 53-3032
POST MILE 3.58

SCHUYLER HEIM BRIDGE (REPLACE)
GENERAL NOTES NO. 1

STRUCTURES DESIGN DETAIL SHEET (ENGLISH) (REV. 10/25/05)

ORIGINAL SCALE IN INCHES FOR REDUCED PLANS 0 1 2 3

CU 07-271
EA 138201

DISREGARD PRINTS BEARING EARLIER REVISION DATES

REVISION DATES: 11-13-07, 02-05-08, 02-26-08, 04-24-08, 4-28-10

SHEET 3 OF 247

FILE => 53-3032-b-gnotes01.dgn

USERNAME => s135318 DATE PLOTTED => 18-OCT-2010 TIME PLOTTED => 16:05

DIST	COUNTY	ROUTE	POST MILES TOTAL PROJECT	SHEET No	TOTAL SHEETS
07	LA	47,103	3.5/4.6, 0.0/1.1	506	1003

REGISTERED CIVIL ENGINEER 05-24-10 DATE

10-11-10
PLANS APPROVAL DATE

REGISTERED PROFESSIONAL ENGINEER FOUED ZAYATI No. C57046 Exp. 06-30-11 CIVIL STATE OF CALIFORNIA

The State of California or its officers or agents shall not be responsible for the accuracy or completeness of electronic copies of this plan sheet.

PILE DATA TABLE

LOCATION	PILE TYPE	DESIGN LOADING (SERVICE)	NOMINAL RESISTANCE (Kip) COMPRESSION	NOMINAL RESISTANCE (Kip) TENSION	CASING TIP ELEVATION (ft)	DESIGN TIP ELEVATION (ft)	SPECIFIED TIP ELEVATION (ft)	PILE CUTOFF ELEVATION (ft)	DEPTH OF SEAL COURSE (ft)	DEPTH OF CONTAMINATED SOIL	CONTAMINANTS	EXCAVATION TYPE
ABUT 1	2.5 ft CIDH	278	560	0	NA	-77 (a)	-77	-1.75	3.0	0' to 1'	Lead	TYPE Z-2
										1' to 3.5'	DRO & ORO	TYPE DC
										3.5'+	Non-Haz	TYPE A
BENT 2	11 ft CIDH 10 ft CIDH	2790	5,680	0	-38	-127 (a)	-127	-12.5	8.0	0' to 1'	Lead	TYPE Z-2
										1' to TIP	Non-Haz	TYPE A
BENT 3	11 ft CIDH 10 ft CIDH	3140	6,280	0	-27	-136 (a)	-136	-2.0	3.0	0' to 1'	Lead	TYPE Z-2
										1'+	Non-Haz	TYPE A
BENT 4 (STAGE 1)	11 ft CIDH 10 ft CIDH	3300	6,570	0	-27	-149 (a)	-149	-2.0	4.0	0' to 1'	Lead	TYPE Z-2
										1'+	Non-Haz	TYPE A
BENT 4 (STAGE 2)	11 ft CIDH 10 ft CIDH	3300	6,570	0	-27	-149 (a)	-149	-5.0	4.0	0' to 1'	Lead	TYPE Z-2
										1'+	Non-Haz	TYPE A
BENT 5	11 ft CIDH 10 ft CIDH	2750	5,590	0	-27	-131 (a)	-131	-2.0	3.0	0' to 1'	Lead	TYPE Z-2
										1' to 2.5'	DRO & ORO	TYPE DC
										2.5'+	Non-Haz	TYPE A
BENT 6	11 ft CIDH 10 ft CIDH	2970	5,970	0	-28	-136 (a)	-136	-3.0	4.0	0' to 1'	Lead	TYPE Z-2
										1' to 4.5'	DRO & ORO	TYPE DC
										4.5'+	Non-Haz	TYPE A
BENT 7	11 ft CIDH 10 ft CIDH	3190	6,390	0	-28	-145 (a)	-145	-3.0	4.0	0' to 1'	Lead	TYPE Z-2
										1' to 3'	DRO & ORO	TYPE DC
										3'+	Non-Haz	TYPE A
BENT 8	11 ft CIDH 10 ft CIDH	3960	7,650	0	-29	-161 (a)	-161	-4.0	4.0	0' to 1'	Lead	TYPE Z-2
										1' to 2'	DRO & ORO	TYPE DC
										2'+	Non-Haz	TYPE A
BENT 9	11 ft CIDH 10 ft CIDH	3400	6,620	0	-29	-143 (a)	-143	-4.0	4.0	0' to 1'	Lead	TYPE Z-2
										1'+	Non-Haz	TYPE A
BENT 10	11 ft CIDH 10 ft CIDH	3180	6,370	0	-29	-144 (a)	-144	-4.0	4.0	0' to 1'	Lead	TYPE Z-2
										1' to 4.5'	DRO & ORO	TYPE DC
										4.5'+	Non-Haz	TYPE A
BENT 11	11 ft CIDH 10 ft CIDH	3840	7,550	0	-26	-156 (a)	-156	-1.0	3.0	0' to 1'	Lead	TYPE Z-2
										1' to 6'	DRO & ORO	TYPE DC
										6'+	Non-Haz	TYPE A
BENT 12	11 ft CIDH 10 ft CIDH	3340	6,600	0	-19	-133 (a)	-133	6.0	0.0	0' to 1'	Lead	TYPE Z-2
										1' to 2.5'	DRO & ORO	TYPE DC
										2.5' to TIP	Non-Haz	TYPE A
PIER 13	12 ft CIDH 11 ft CIDH	4910	9,230	0	-76	-181 (a)	-181	-1.0	N/A	0' to 10'	NIA	TYPE SC
										10' to Tip	Non-Haz	TYPE A
PIER 14	12 ft CIDH 11 ft CIDH	5260	9,940	0	-95	-200 (a)	-200	10.0	N/A	0' to 10'	NIA	TYPE SC
										10' to Tip	Non-Haz	TYPE A
PIER 15	12 ft CIDH 11 ft CIDH	5490	10,350	0	-95	-206 (a)	-206	10.0	N/A	0' to 10'	NIA	TYPE SC
										10' to Tip	Non-Haz	TYPE A
PIER 16	12 ft CIDH 11 ft CIDH	4870	9,140	0	-86	-189 (a)	-189	-1.0	N/A	0' to 10'	NIA	TYPE SC
										10' to Tip	Non-Haz	TYPE A
BENT 17	13 ft CIDH 12 ft CIDH	3950	7,670	0	-30.5	-143 (a)	-143	-5.5	5.0	0' to 1'	Lead	TYPE Z-2
										1'+	Non-Haz	TYPE A
BENT 18	13 ft CIDH 12 ft CIDH	3800	7,380	0	-30.5	-140 (a)	-140	-5.5	5.0	0' to 1'	Lead	TYPE Z-2
										1'+	Non-Haz	TYPE A
BENT 19	13 ft CIDH 12 ft CIDH	3480	6,800	0	-30.5	-138 (a)	-138	-5.5	5.0	0' to 1'	Lead	TYPE Z-2
										1'+	Non-Haz	TYPE A
BENT 20	13 ft CIDH 12 ft CIDH	3700	7,210	0	-30.5	-137 (a)	-137	-5.5	5.0	0' to 1'	Lead	TYPE Z-2
										1'+	Non-Haz	TYPE A
BENT 21	13 ft CIDH 12 ft CIDH	3390	6,620	0	-30.5	-129 (a)	-129	-5.5	5.0	0' to 1'	Lead	TYPE Z-2
										1'+	Non-Haz	TYPE A
BENT 22	13 ft CIDH 12 ft CIDH	3420	6,700	0	-30.5	-134 (a)	-134	-5.5	5.0	0' to 1'	Lead	TYPE Z-2
										1' to 2.5'	DRO & ORO	TYPE DC
										2.5'+	Non-Haz	TYPE A
BENT 23	13 ft CIDH 12 ft CIDH	4240	8,020	0	-30.5	-142 (a)	-142	-5.5	5.0	0' to 1'	Lead	TYPE Z-2
										1' to 4.5'	Non-Haz	TYPE A
										4.5' to 5.5'	DRO & ORO	TYPE DC
										5.5'+	Non-Haz	TYPE A
BENT 24	13 ft CIDH 12 ft CIDH	4200	8,200	0	-30.5	-148 (a)	-148	-5.5	5.0	0' to 1'	Lead	TYPE Z-2
										1'+	Non-Haz	TYPE A

NOTES:

1. Design Tip Elevation is controlled by the following demands:
   (a) Compression,
   (b) Tension,
   (c) Settlement,
   (d) Lateral Load.
2. 0' is equivalent to existing ground surface.
3. 3.5'+ is soil more than 3.5' below Original Ground Surface.

LEGEND:

DRO = Diesel Range Organic Compounds
ORO = Oil Range Organic Compounds
NIA = No Information Available
Non-Haz = Non-Hazardous Material

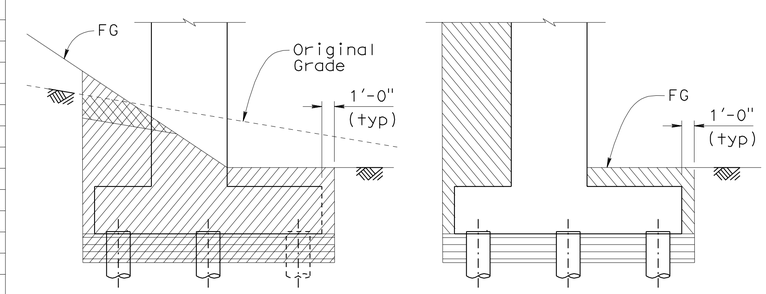

Structure Excavation, contaminated soil, see Pile Data Table for Excavation type and depth

Structure Excavation, Type A

Seal Course Concrete, See Pile Data Table for depth

Structure Backfill

ABUTMENT LIMITS OF PAYMENT FOR EXCAVATION AND BACKFILL

No Scale

DESIGN	BY T. Skreslet	CHECKED J. Massoomi	
DETAILS	BY T. Nguyen	CHECKED F. Zayati	
QUANTITIES	BY J. Han	CHECKED J. Massoomi	

STATE OF CALIFORNIA
DEPARTMENT OF TRANSPORTATION

DIVISION OF ENGINEERING SERVICES
STRUCTURE DESIGN
DESIGN BRANCH 14

BRIDGE NO. 53-3032
POST MILE 3.58

SCHUYLER HEIM BRIDGE (REPLACE)

GENERAL NOTES NO. 2

STRUCTURES DESIGN DETAIL SHEET (ENGLISH) (REV. 10/25/05)

ORIGINAL SCALE IN INCHES FOR REDUCED PLANS 0 1 2 3

CU 07-271
EA 138201

DISREGARD PRINTS BEARING EARLIER REVISION DATES

REVISION DATES 05-24-10 05-25-10 05-26-10 06-30-10 08-26-10

SHEET 4 OF 247

FILE => 53-3032-b-gnotes02.dgn

USERNAME => s135318 DATE PLOTTED => 18-OCT-2010 TIME PLOTTED => 16:05

DIST	COUNTY	ROUTE	POST MILES TOTAL PROJECT	SHEET No	TOTAL SHEETS
07	LA	47,103	3.5/4.6, 0.0/1.1	507	1003

REGISTERED CIVIL ENGINEER — DATE 05-24-10

10-11-10
PLANS APPROVAL DATE

REGISTERED PROFESSIONAL ENGINEER — FOUED ZAYATI No. C57046 Exp. 06-30-11 CIVIL — STATE OF CALIFORNIA

The State of California or its officers or agents shall not be responsible for the accuracy or completeness of electronic copies of this plan sheet.

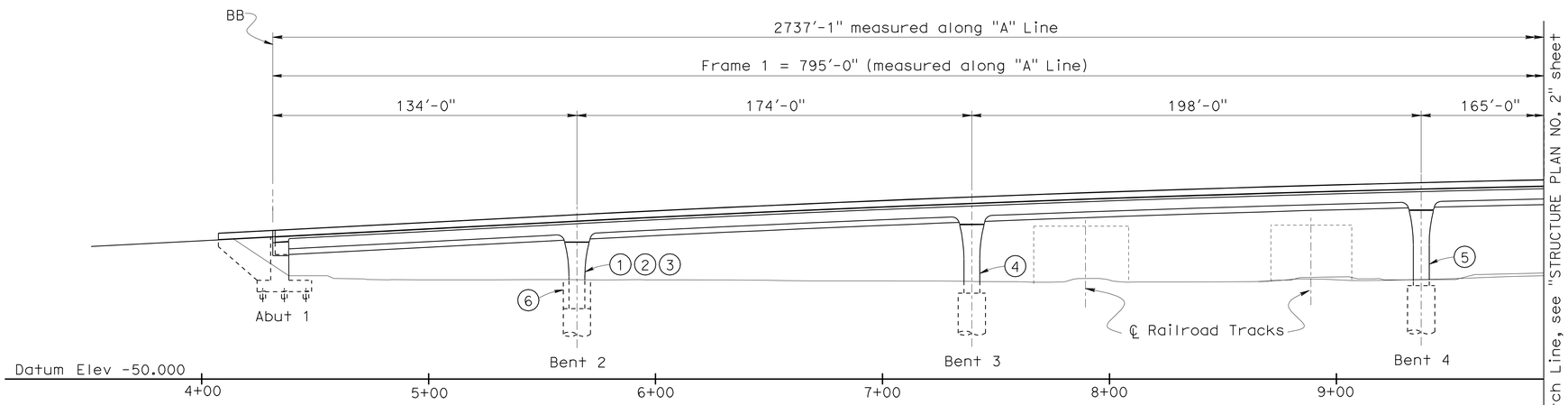

DEVELOPED ELEVATION (Stage 2 & 3)

1"=30'

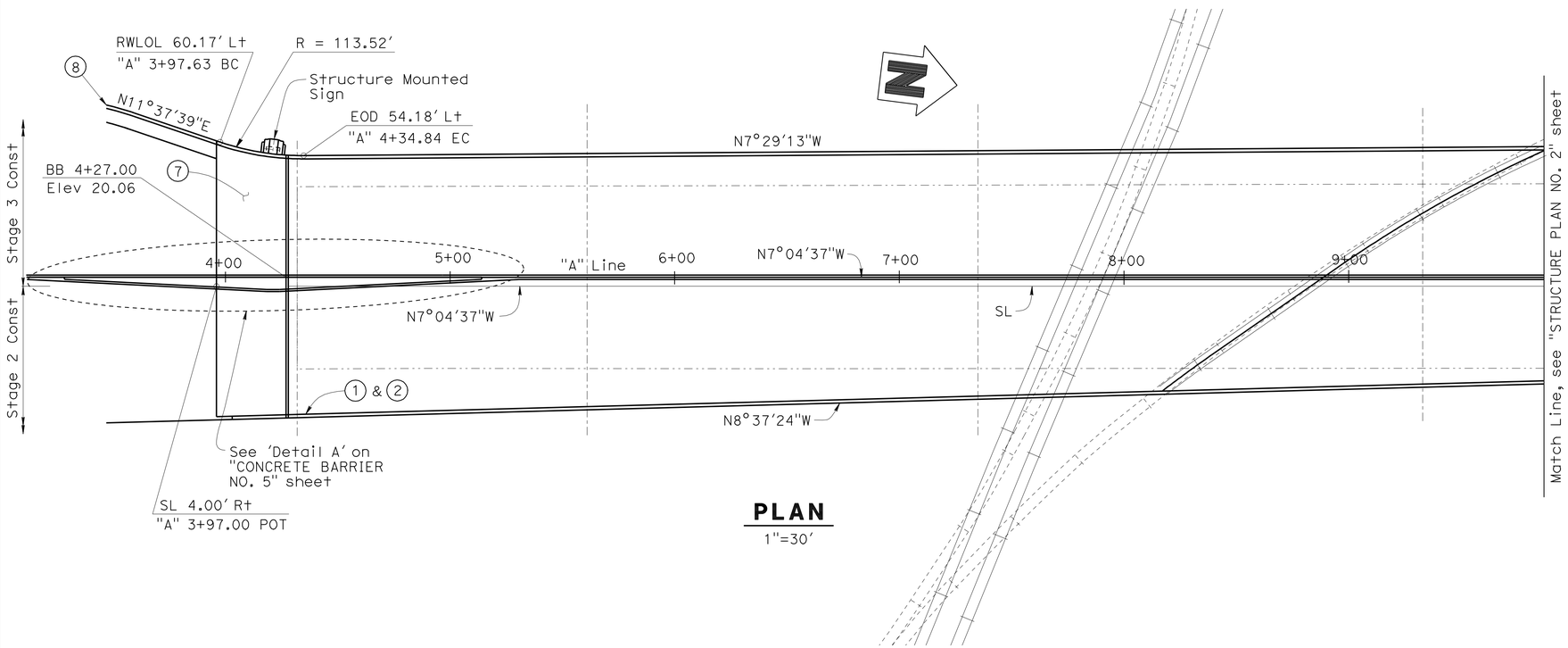

PLAN

1"=30'

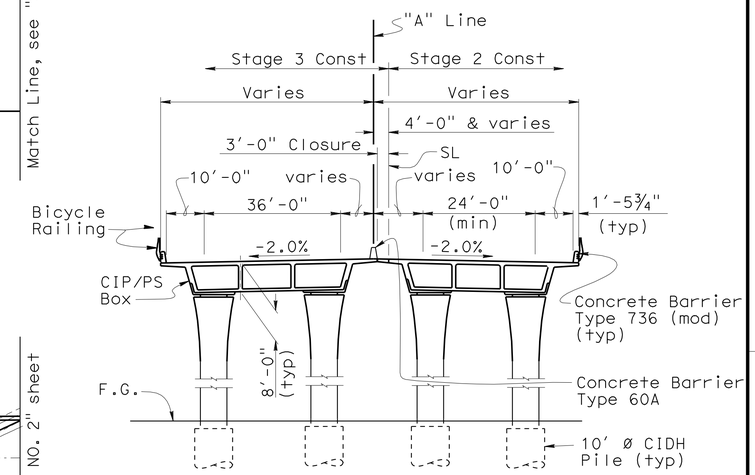

TYPICAL SECTION (Frame 1)

1"=20'

NOTES:

1. Paint "SCHUYLER HEIM BRIDGE"
2. Paint "Bridge No. 53-3032"
3. Paint "Bent No. 2"
4. Paint "Bent No. 3"
5. Paint "Bent No. 4"
6. Column Isolation Casing
7. Structure Approach Slab, Type N(30S)
8. A1 MSE Wall No. 53E0147, see wall plans.

EOD Indicates Edge of Deck

SL Indicates Staging Line

	BY	CHECKED
DESIGN	Foued Zayati	T. Skreslet
DETAILS	T. Nguyen	T. Skreslet
QUANTITIES	J/P Peterson	J/P Peterson

STATE OF CALIFORNIA
DEPARTMENT OF TRANSPORTATION

DIVISION OF ENGINEERING SERVICES
STRUCTURE DESIGN
DESIGN BRANCH 14

BRIDGE NO. 53-3032
POST MILE 3.58

SCHUYLER HEIM BRIDGE (REPLACE)
STRUCTURE PLAN NO. 1

STRUCTURES DESIGN DETAIL SHEET (ENGLISH) (REV. 10/25/05)

ORIGINAL SCALE IN INCHES FOR REDUCED PLANS 0 1 2 3

CU 07-271
EA 138201

DISREGARD PRINTS BEARING EARLIER REVISION DATES

REVISION DATES: 05-14-10 5-18-10 5-18-10 06-18-10 06-24-10 07-09-10 03-17-10 05-13-10

SHEET 5 OF 247

FILE => 53-3032-c-sp01.dgn

USERNAME => s135318 DATE PLOTTED => 18-OCT-2010 TIME PLOTTED => 16:05

DIST	COUNTY	ROUTE	POST MILES TOTAL PROJECT	SHEET No	TOTAL SHEETS
07	LA	47,103	3.5/4.6, 0.0/1.1	508	1003

REGISTERED CIVIL ENGINEER 05-24-10 DATE

10-11-10
PLANS APPROVAL DATE

The State of California or its officers or agents shall not be responsible for the accuracy or completeness of electronic copies of this plan sheet.

REGISTERED PROFESSIONAL ENGINEER FOUED ZAYATI No. C57046 Exp. 06-30-11 CIVIL STATE OF CALIFORNIA

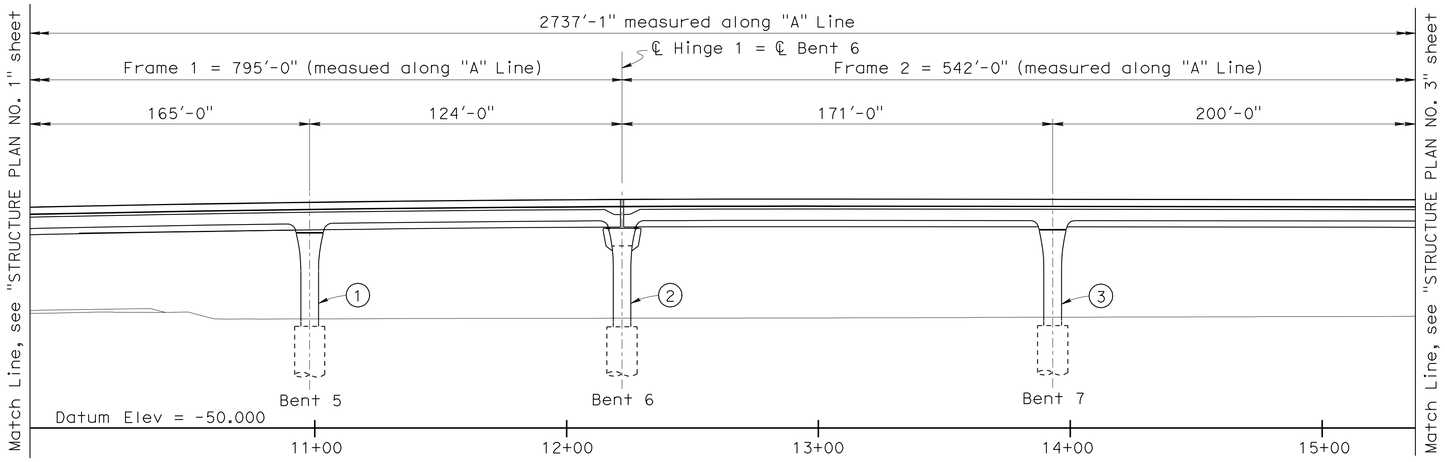

DEVELOPED ELEVATION (Stage 2 & 3)

1"=30'

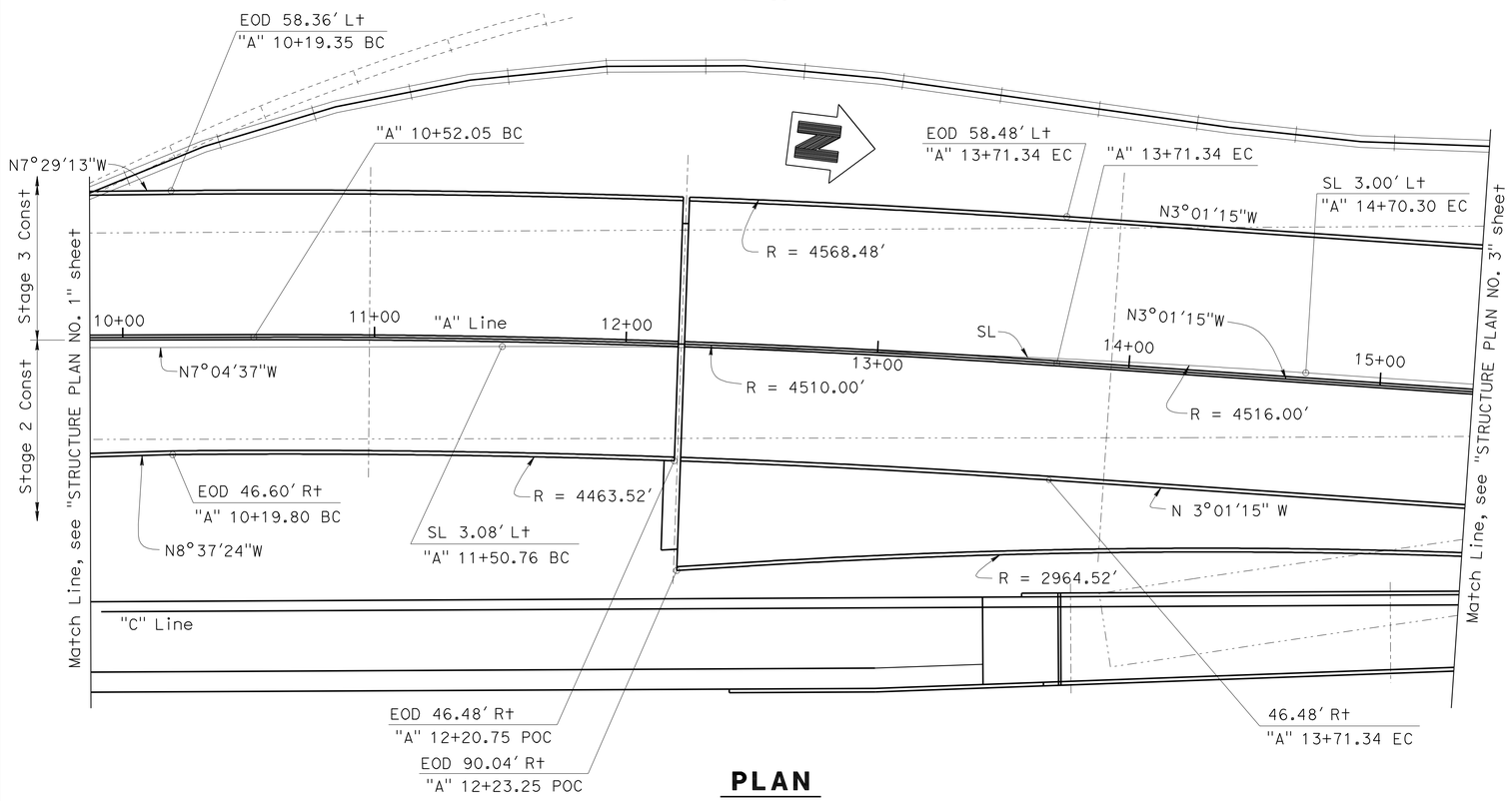

PLAN

1"=30'

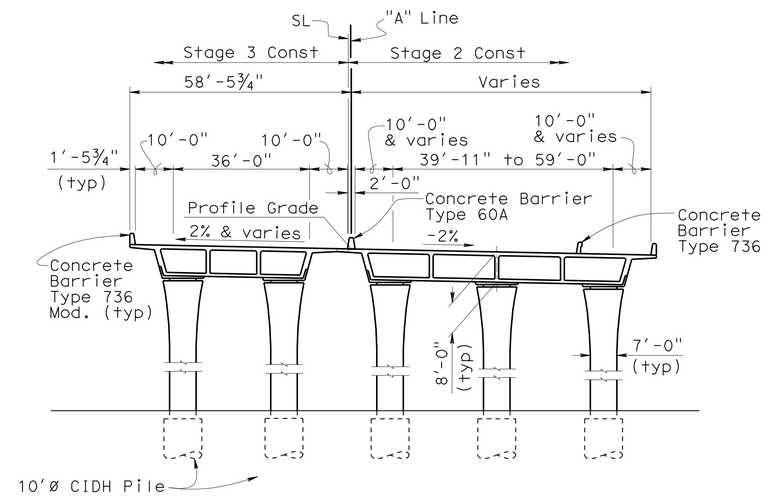

TYPICAL SECTION (Frame 2)

1"=20'

NOTES:

1. Paint "Bent No. 5"
2. Paint "Bent No. 6"
3. Paint "Bent No. 7"

EOD Indicates Edge of Deck

SL Indicates Staging Line

DESIGN	BY F. Zayati	CHECKED T. Skreslet	
DETAILS	BY T. Nguyen	CHECKED T. Skreslet	
QUANTITIES	BY J/P Peterson	CHECKED J/P Peterson	

STATE OF CALIFORNIA
DEPARTMENT OF TRANSPORTATION

DIVISION OF ENGINEERING SERVICES
STRUCTURE DESIGN
DESIGN BRANCH 14

BRIDGE NO. 53-3032
POST MILE 3.58

SCHUYLER HEIM BRIDGE (REPLACE)
STRUCTURE PLAN NO. 2

STRUCTURES DESIGN DETAIL SHEET (ENGLISH) (REV. 10/25/05)

ORIGINAL SCALE IN INCHES FOR REDUCED PLANS 0 1 2 3

CU 07-271
EA 138201

DISREGARD PRINTS BEARING EARLIER REVISION DATES

REVISION DATES: 03-17-10 05-12-10 05-13-10 05-14-10 05-16-10 06-24-10 06-30-10 07-15-10

SHEET 6 OF 247

FILE => 53-3032-c-sp02.dgn

USERNAME => s135318 DATE PLOTTED => 18-OCT-2010 TIME PLOTTED => 16:06

DIST	COUNTY	ROUTE	POST MILES TOTAL PROJECT	SHEET No	TOTAL SHEETS
07	LA	47,103	3.5/4.6, 0.0/1.1	509	1003

REGISTERED CIVIL ENGINEER — DATE 05-24-10

10-11-10
PLANS APPROVAL DATE

The State of California or its officers or agents shall not be responsible for the accuracy or completeness of electronic copies of this plan sheet.

REGISTERED PROFESSIONAL ENGINEER — FOUED ZAYATI — No. C57046 — Exp. 06-30-11 — CIVIL — STATE OF CALIFORNIA

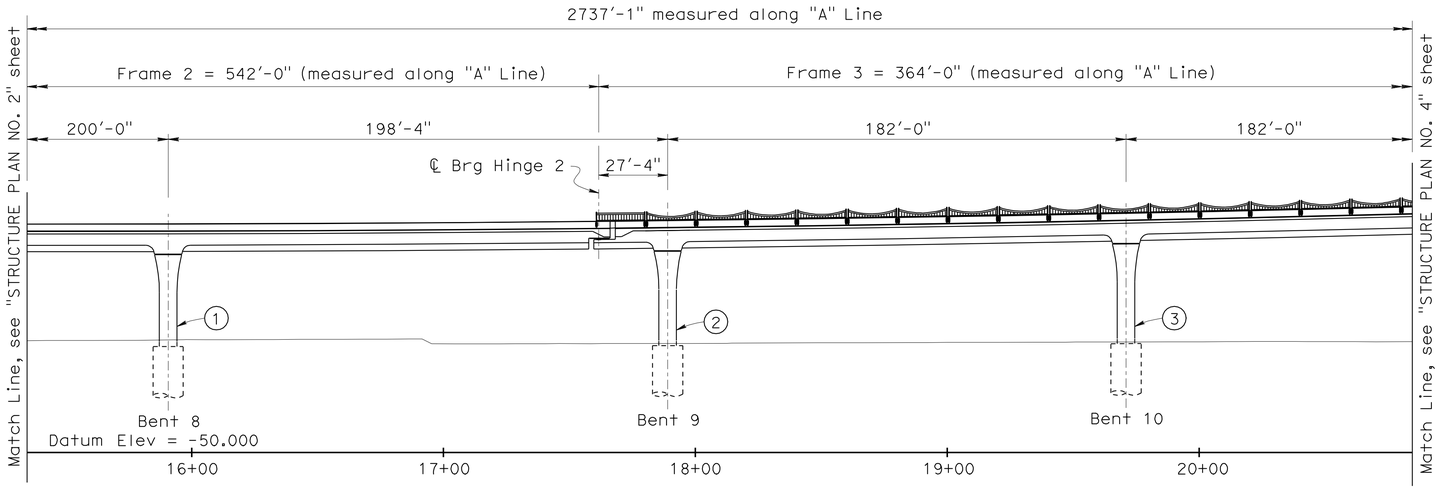

DEVELOPED ELEVATION (Stage 1, 2, & 3)

1"=30'

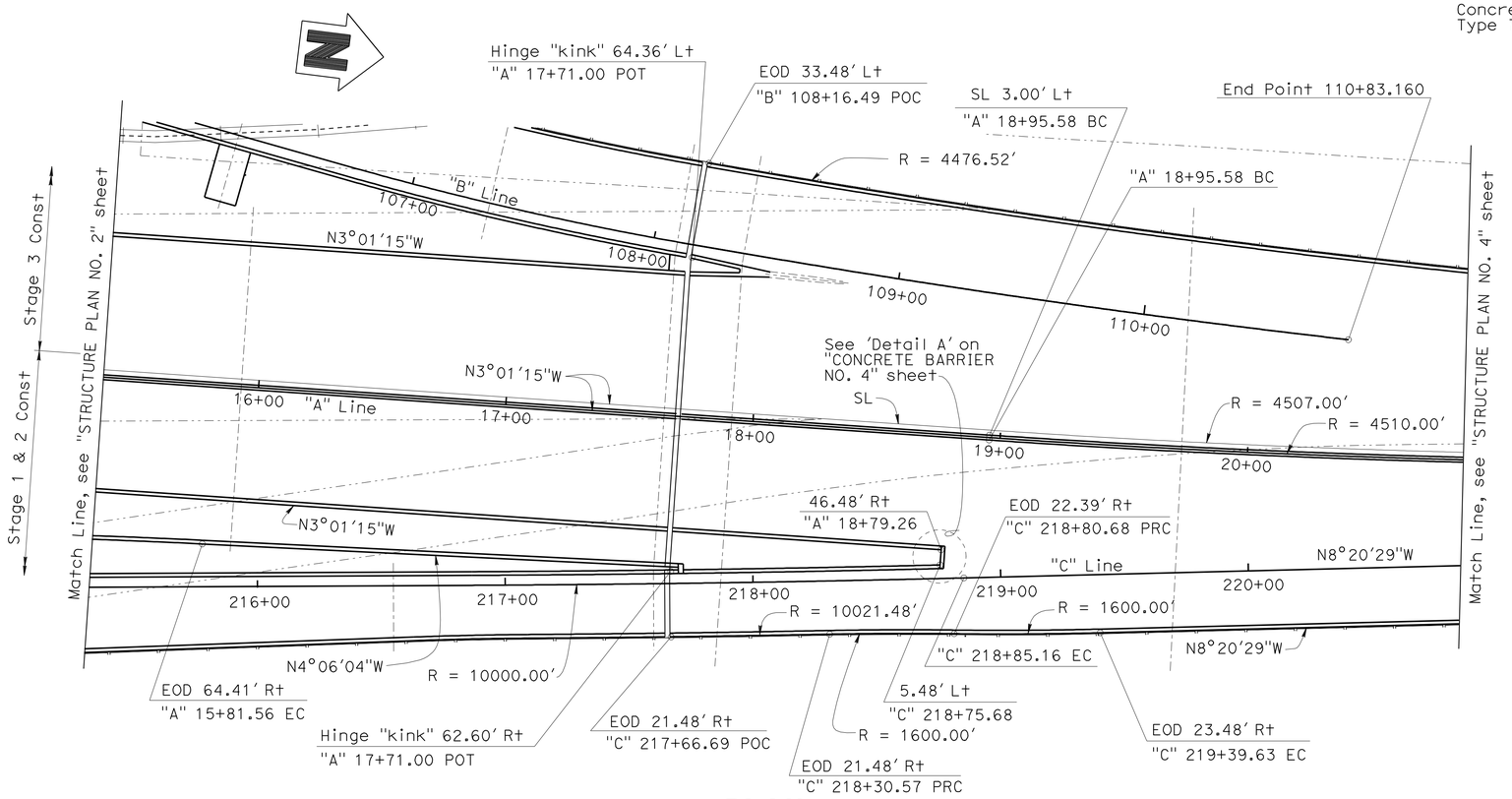

PLAN

1"=30'

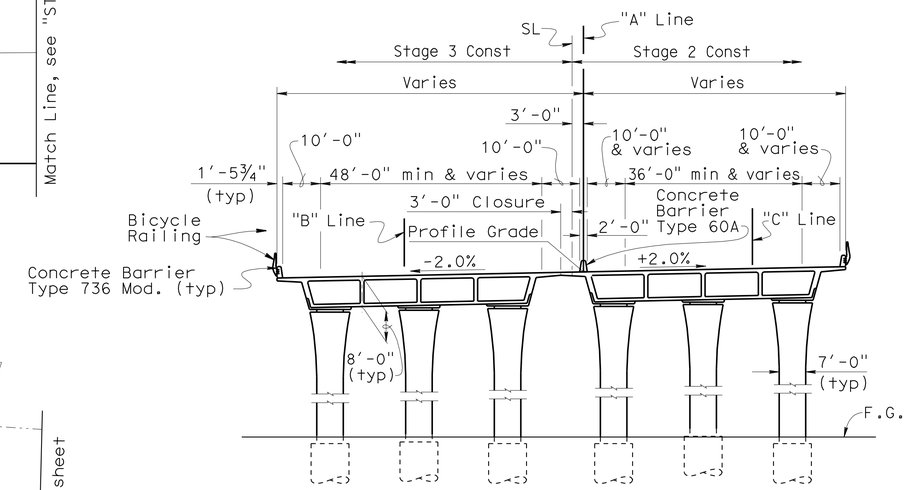

TYPICAL SECTION (Frame 3)

1"=20'

NOTES:

1. Paint "Bent No. 8"
2. Paint "Bent No. 9"
3. Paint "Bent No. 10"

EOD Indicates Edge of Deck

SL Indicates Staging Line

DESIGN	BY F. Zayati	CHECKED T. Skreslet	
DETAILS	BY T. Nguyen	CHECKED T. Skreslet	
QUANTITIES	BY J/P Peterson	CHECKED J/P Peterson	

STATE OF CALIFORNIA
DEPARTMENT OF TRANSPORTATION

DIVISION OF ENGINEERING SERVICES
STRUCTURE DESIGN
DESIGN BRANCH 14

BRIDGE NO. 53-3032
POST MILE 3.58

SCHUYLER HEIM BRIDGE (REPLACE)
STRUCTURE PLAN NO. 3

STRUCTURES DESIGN DETAIL SHEET (ENGLISH) (REV. 10/25/05)

ORIGINAL SCALE IN INCHES FOR REDUCED PLANS 0 1 2 3

CU 07-271
EA 138201

DISREGARD PRINTS BEARING EARLIER REVISION DATES

REVISION DATES: 05-28-09 03-17-10 05-13-10 05-14-10 5-16-10 06-16-10 06-30-10 07-09-10 07-15-10

SHEET 7 OF 247

FILE => 53-3032-c-sp03.dgn

USERNAME => s135318 DATE PLOTTED => 18-OCT-2010 TIME PLOTTED => 16:06

DIST	COUNTY	ROUTE	POST MILES TOTAL PROJECT	SHEET No	TOTAL SHEETS
07	LA	47,103	3.5/4.6, 0.0/1.1	510	1003

REGISTERED CIVIL ENGINEER — DATE 05-24-10

10-11-10
PLANS APPROVAL DATE

The State of California or its officers or agents shall not be responsible for the accuracy or completeness of electronic copies of this plan sheet.

REGISTERED PROFESSIONAL ENGINEER — FOUED ZAYATI No. C57046 Exp. 06-30-11 CIVIL — STATE OF CALIFORNIA

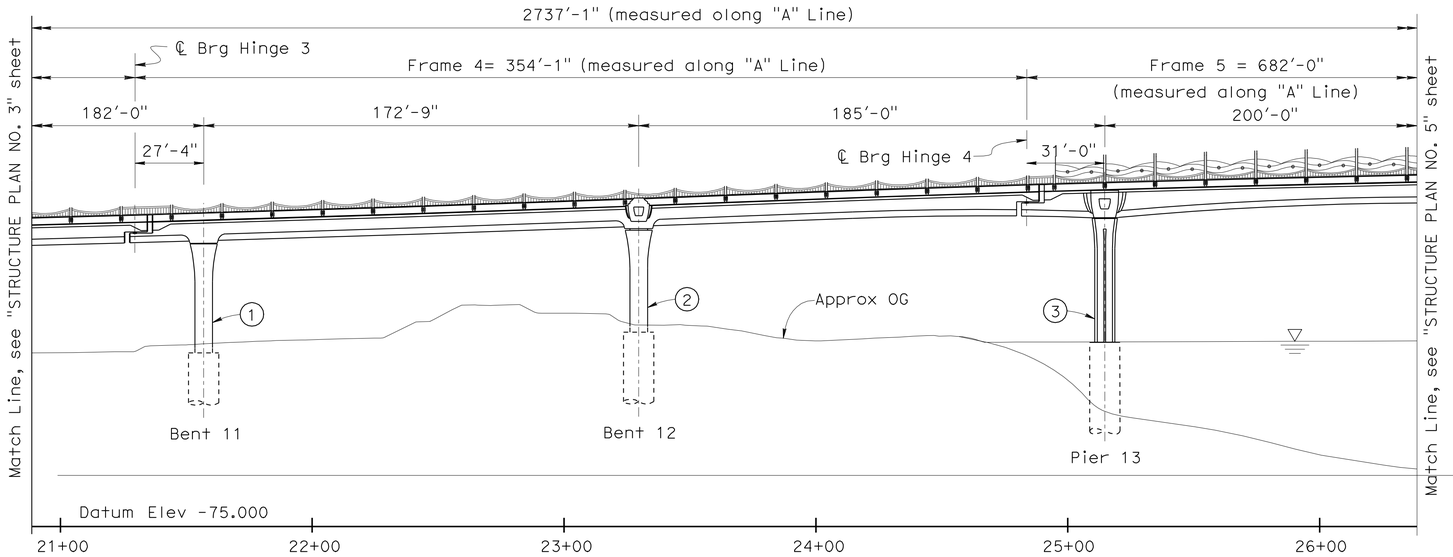

DEVELOPED ELEVATION (Stage 1 & 3)

1"=30'

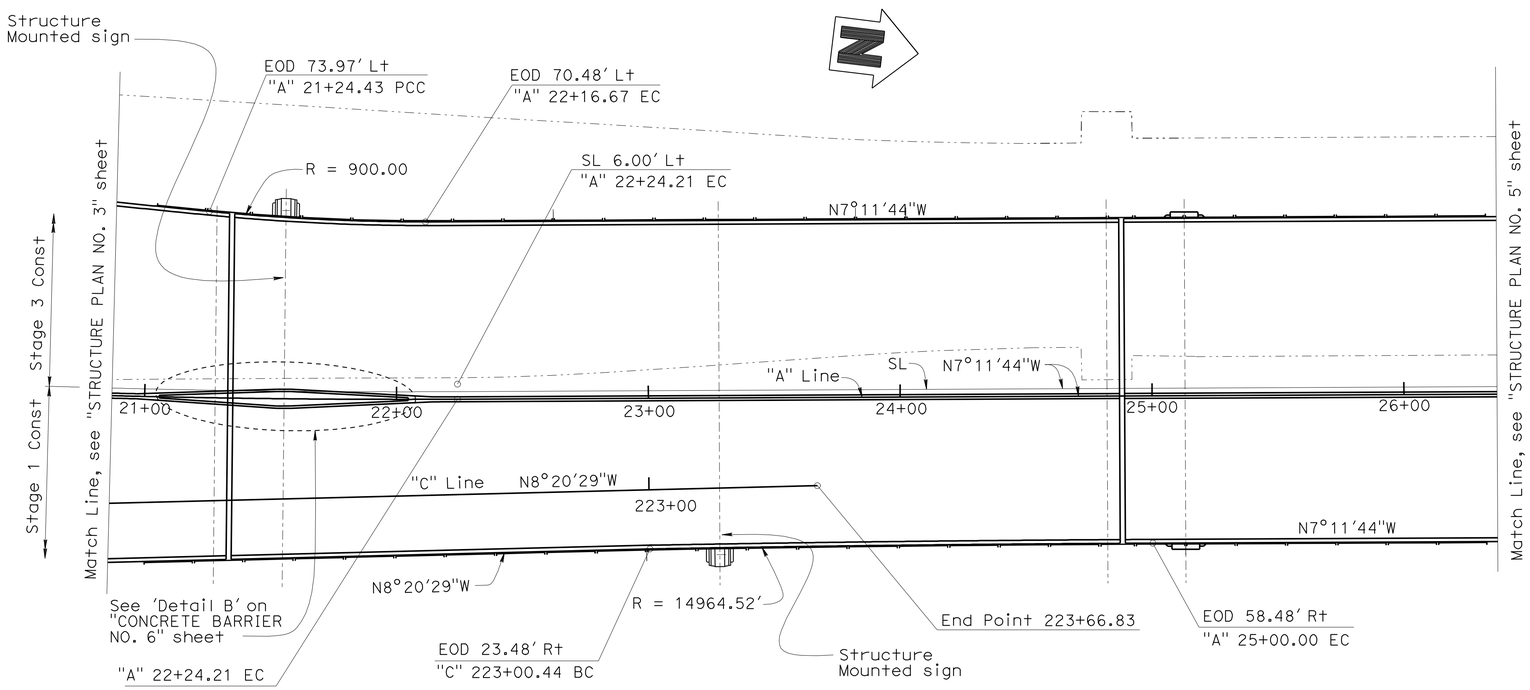

PLAN

1"=30'

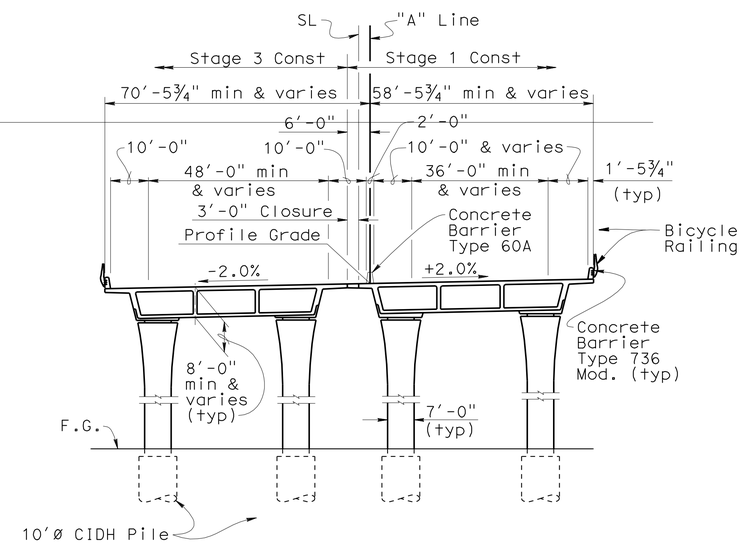

TYPICAL SECTION (Frame 4)

1"=20'

NOTES:

1. Paint "Bent No. 11"
2. Paint "Bent No. 12"
3. Paint "Pier No. 13"

1. For Sign Pedestal Details, see "BENT DETAILS NO. 7" and "BENT 11 LAYOUT NO. 1" sheets
2. EOD Indicates Edge of Deck
3. SL Indicates Staging Line

▽ Indicates Water Surface

	BY	CHECKED
DESIGN	F. Zayati	T. Skreslet
DETAILS	T. Nguyen	T. Skreslet
QUANTITIES	J/P Peterson	J/P Peterson

STATE OF CALIFORNIA
DEPARTMENT OF TRANSPORTATION

DIVISION OF ENGINEERING SERVICES
STRUCTURE DESIGN
DESIGN BRANCH 14

BRIDGE NO. 53-3032
POST MILE 3.58

SCHUYLER HEIM BRIDGE (REPLACE)
STRUCTURE PLAN NO. 4

STRUCTURES DESIGN DETAIL SHEET (ENGLISH) (REV. 10/25/05)

ORIGINAL SCALE IN INCHES FOR REDUCED PLANS 0 1 2 3

CU 07-271
EA 138201

DISREGARD PRINTS BEARING EARLIER REVISION DATES

REVISION DATES: 04-22-08 08-18-08 05-13-10 05-14-10 5-16-10 5-18-10 5-28-10 06-16-10 07-15-10

SHEET 8 OF 247

FILE => 53-3032-c-sp04.dgn

USERNAME => s135318 DATE PLOTTED => 18-OCT-2010 TIME PLOTTED => 16:06

DIST	COUNTY	ROUTE	POST MILES TOTAL PROJECT	SHEET No	TOTAL SHEETS
07	LA	47,103	3.5/4.6, 0.0/1.1	511	1003

REGISTERED CIVIL ENGINEER 05-24-10 DATE

10-11-10
PLANS APPROVAL DATE

The State of California or its officers or agents shall not be responsible for the accuracy or completeness of electronic copies of this plan sheet.

REGISTERED PROFESSIONAL ENGINEER FOUED ZAYATI No. C57046 Exp. 06-30-11 CIVIL STATE OF CALIFORNIA

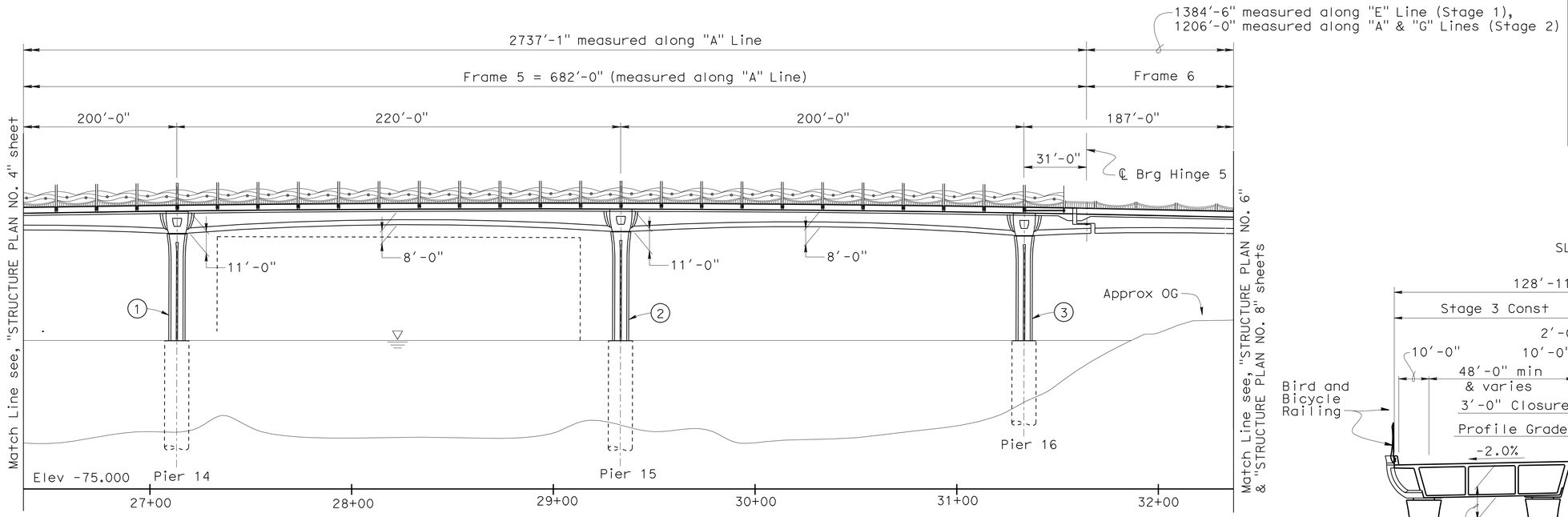

DEVELOPED ELEVATION (Stage 1 & 3)

1"=30'

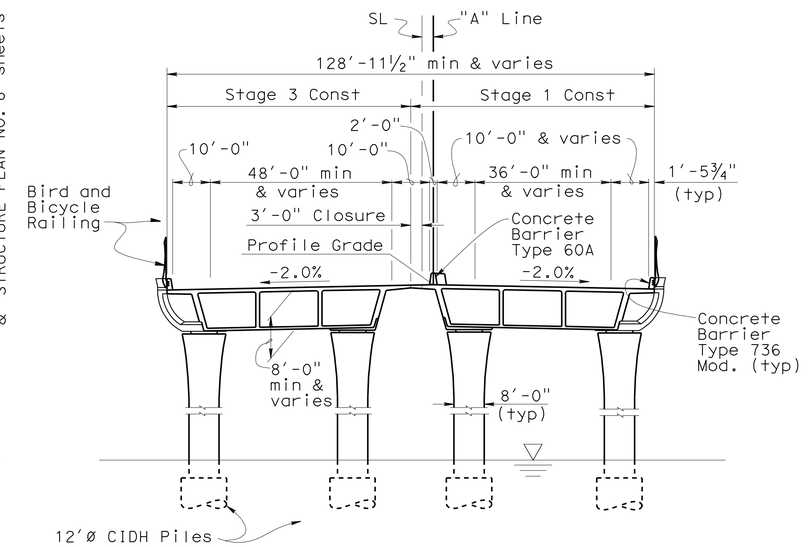

TYPICAL SECTION (Frame 5)

1"=20'

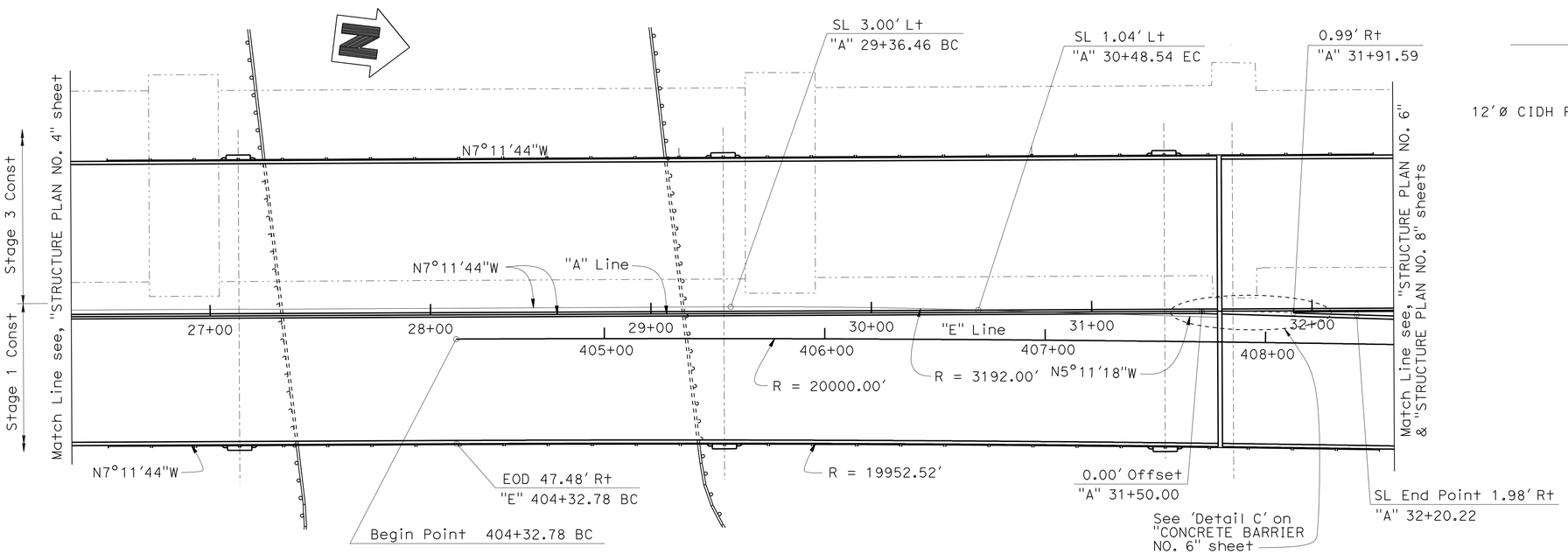

PLAN

1"=30'

NOTES:

1. Paint "Pier No. 14"
2. Paint "Pier No. 15"
3. Paint "Pier No. 16"

EOD Indicates Edge of Deck

SL Indicates Staging Line

▽ Indicates Water Surface

DESIGN	BY F. Zayati	CHECKED T. Skreslet	
DETAILS	BY T. Nguyen	CHECKED T. Skreslet	
QUANTITIES	BY J/P Peterson	CHECKED J/P Peterson	

STATE OF CALIFORNIA
DEPARTMENT OF TRANSPORTATION

DIVISION OF ENGINEERING SERVICES
STRUCTURE DESIGN
DESIGN BRANCH 14

BRIDGE NO. 53-3032
POST MILE 3.58

SCHUYLER HEIM BRIDGE (REPLACE)
STRUCTURE PLAN NO. 5

STRUCTURES DESIGN DETAIL SHEET (ENGLISH) (REV. 10/25/05)

ORIGINAL SCALE IN INCHES FOR REDUCED PLANS 0 1 2 3

CU 07-271
EA 138201

DISREGARD PRINTS BEARING EARLIER REVISION DATES

REVISION DATES: 01-28-10 05-06-10 05-13-10 05-14-10 5-17-10 5-19-10 05-23-10 06-14-10 07-15-10

SHEET 9 OF 247

FILE => 53-3032-c-sp05.dgn

USERNAME => trstrk DATE PLOTTED => 18-OCT-2010 TIME PLOTTED => 16:44

DIST	COUNTY	ROUTE	POST MILES TOTAL PROJECT	SHEET No	TOTAL SHEETS
07	LA	47,103	3.5/4.6, 0.0/1.1	512	1003

REGISTERED CIVIL ENGINEER — DATE 05-24-10

10-11-10
PLANS APPROVAL DATE

The State of California or its officers or agents shall not be responsible for the accuracy or completeness of electronic copies of this plan sheet.

REGISTERED PROFESSIONAL ENGINEER — FOUED ZAYATI — No. C57046 — Exp. 06-30-11 — CIVIL — STATE OF CALIFORNIA

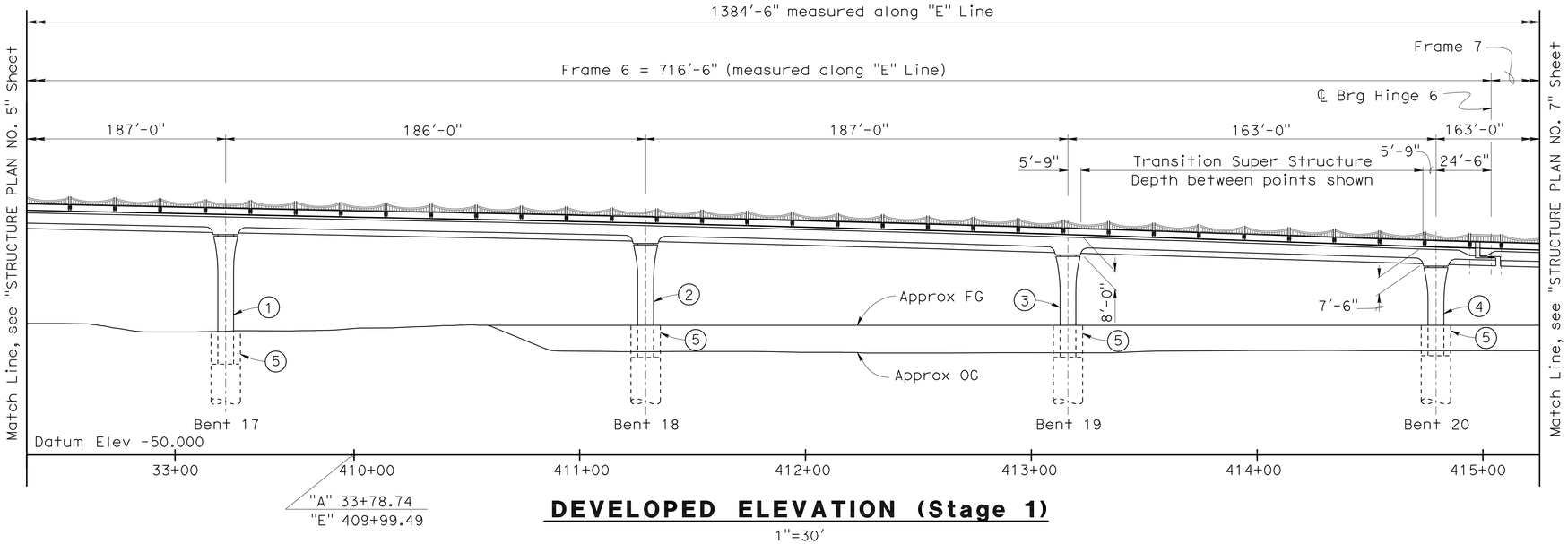

DEVELOPED ELEVATION (Stage 1)

1"=30'

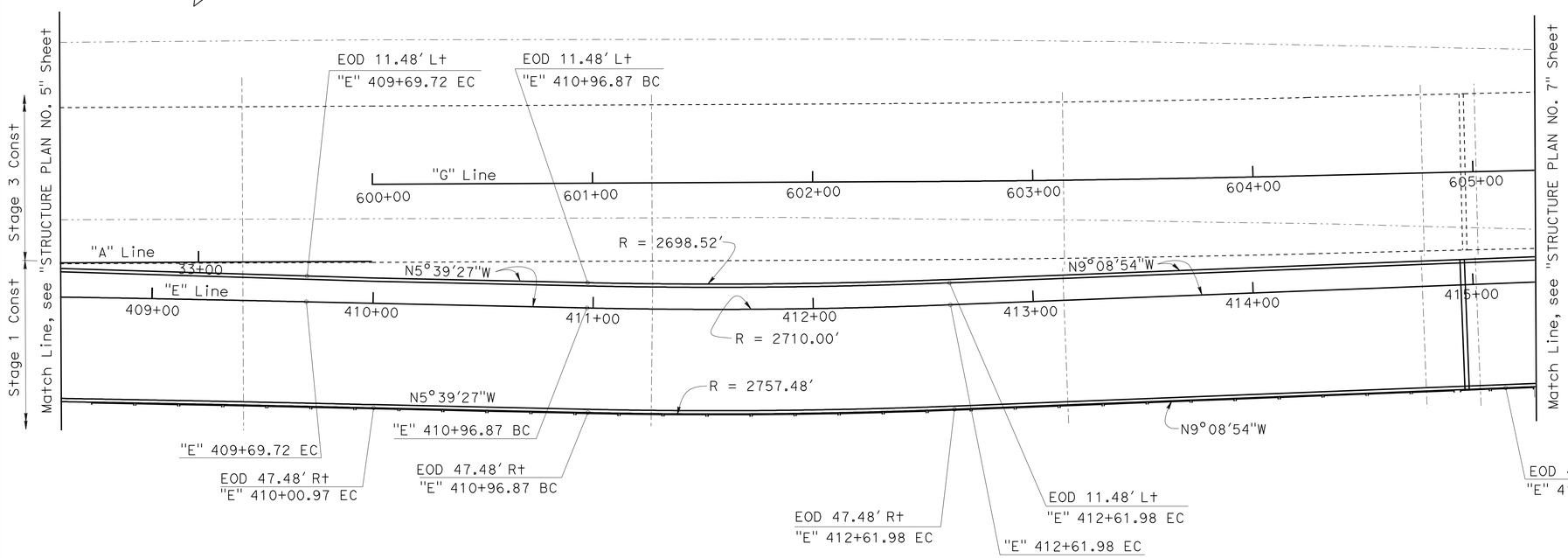

PLAN

1"=30'

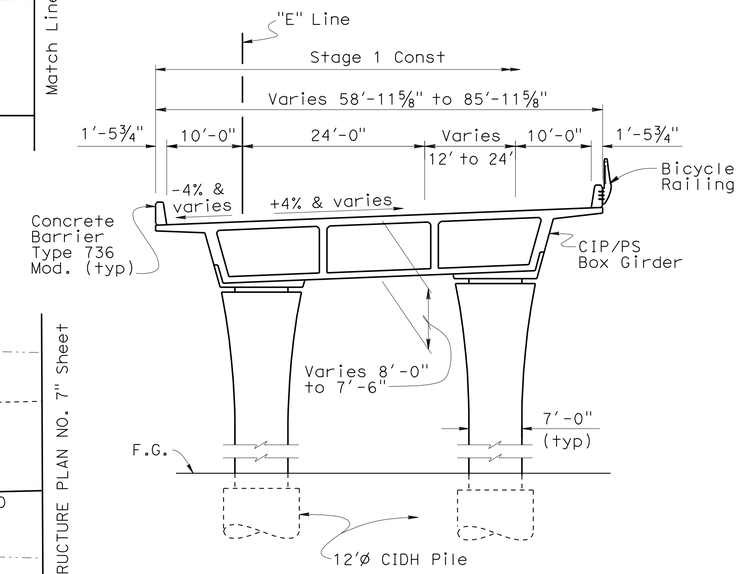

TYPICAL SECTION (Frame 6)

1"=10'

NOTES:

1. Paint "Bent No. 17"
2. Paint "Bent No. 18"
3. Paint "Bent No. 19"
4. Paint "Bent No. 20"
5. Column Isolation Casing

EOD Indicates Edge of Deck

	BY	CHECKED
DESIGN	F. Zayati	T. Skreslet
DETAILS	T. Nguyen	T. Skreslet
QUANTITIES	J/P Peterson	J/P Peterson

STATE OF CALIFORNIA
DEPARTMENT OF TRANSPORTATION

DIVISION OF ENGINEERING SERVICES
STRUCTURE DESIGN
DESIGN BRANCH 14

BRIDGE NO. 53-3032
POST MILE 3.58

SCHUYLER HEIM BRIDGE (REPLACE)
STRUCTURE PLAN NO. 6

STRUCTURES DESIGN DETAIL SHEET (ENGLISH) (REV. 10/25/05)

ORIGINAL SCALE IN INCHES FOR REDUCED PLANS 0 1 2 3

CU 07-271
EA 138201

DISREGARD PRINTS BEARING EARLIER REVISION DATES

REVISION DATES: 05-14-10 06-30-10 07-15-10 01-16-08 03-11-08 03-14-08 04-22-08 05-22-08 1-2-10 05-13-10

SHEET 10 OF 247

FILE => 53-3032-c-sp06.dgn

USERNAME => trestrk DATE PLOTTED => 18-OCT-2010 TIME PLOTTED => 16:44

DIST	COUNTY	ROUTE	POST MILES TOTAL PROJECT	SHEET No	TOTAL SHEETS
07	LA	47,103	3.5/4.6, 0.0/1.1	513	1003

REGISTERED CIVIL ENGINEER — DATE 05-24-10

10-11-10
PLANS APPROVAL DATE

The State of California or its officers or agents shall not be responsible for the accuracy or completeness of electronic copies of this plan sheet.

REGISTERED PROFESSIONAL ENGINEER — FOUED ZAYATI — No. C57046 — Exp. 06-30-11 — CIVIL — STATE OF CALIFORNIA

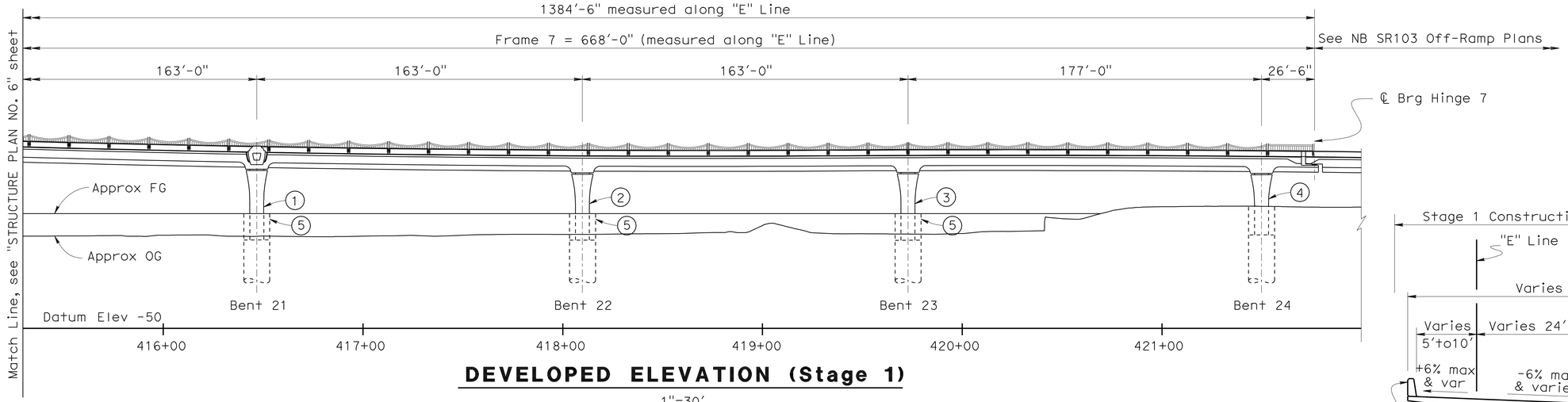

DEVELOPED ELEVATION (Stage 1)

1"=30'

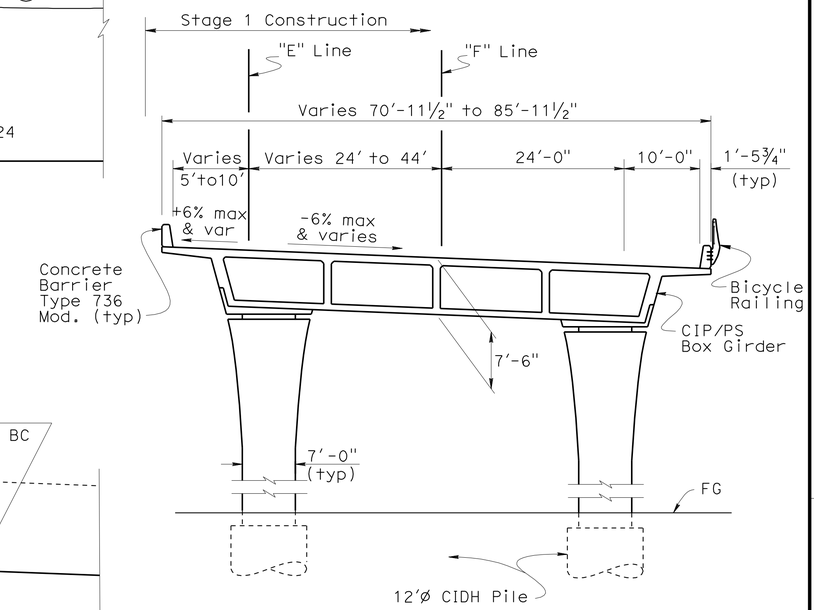

TYPICAL SECTION (Frame 7)

1"=10'

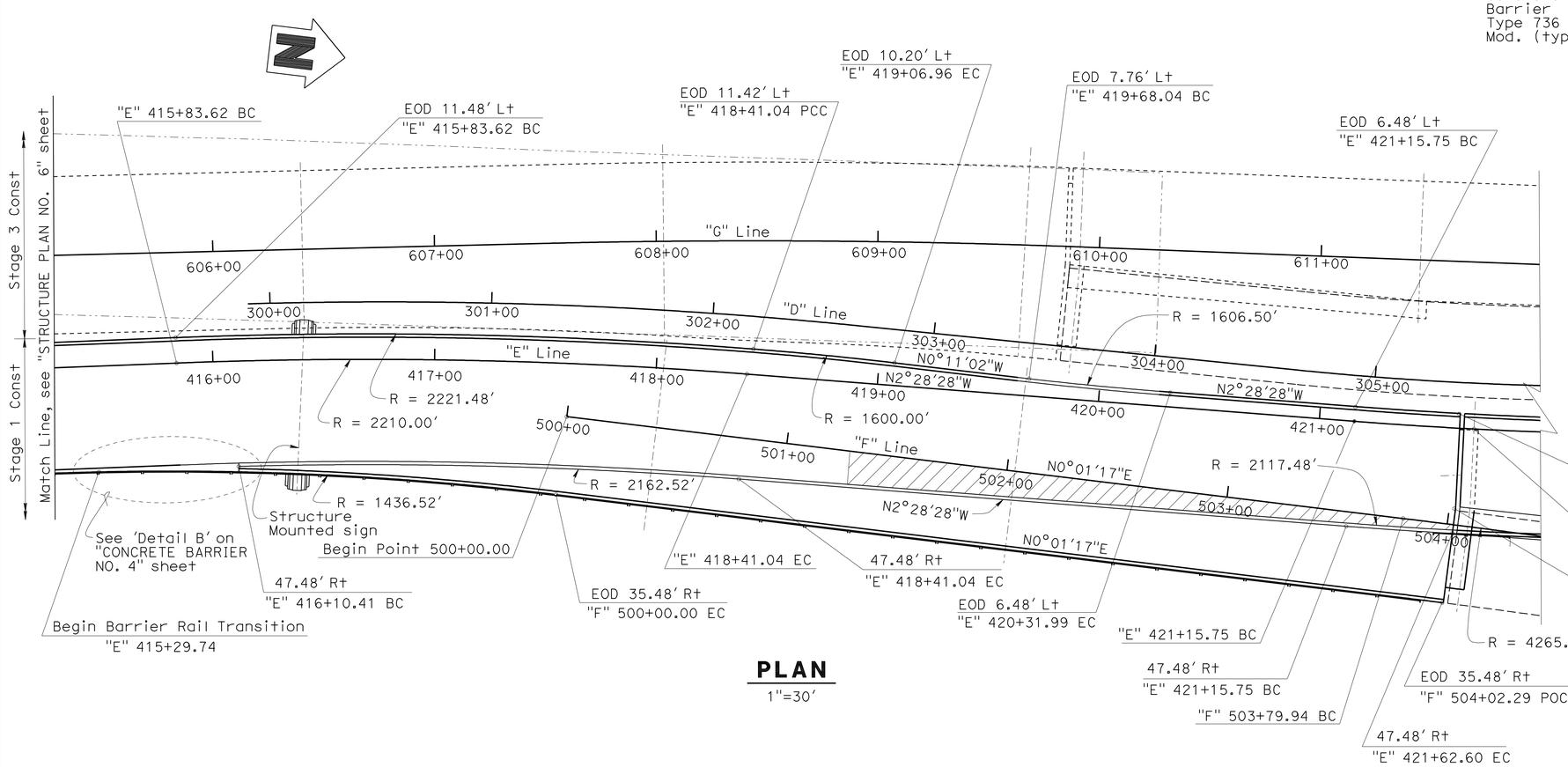

PLAN

1"=30'

NOTES:

1. Paint "Bent No. 21"
2. Paint "Bent No. 22"
3. Paint "Bent No. 23"
4. Paint "Bent No. 24"
5. Column Isolation Casing

1. For Sign Pedestal Details, see "BENT DETAILS NO. 7" and "BENT DETAILS NO. 8" sheets
2. EOD Indicates Edge of Deck

Indicates Deck area to receive additional concrete cover. See "GIRDER DETAILS NO. 4" sheet.

	BY	CHECKED
DESIGN	F. Zayati	T. Skreslet
DETAILS	T. Nguyen	T. Skreslet
QUANTITIES	J/P Peterson	J/P Peterson

STATE OF CALIFORNIA
DEPARTMENT OF TRANSPORTATION

DIVISION OF ENGINEERING SERVICES
STRUCTURE DESIGN
DESIGN BRANCH 14

BRIDGE NO. 53-3032
POST MILE 3.58

SCHUYLER HEIM BRIDGE (REPLACE)
STRUCTURE PLAN NO. 7

STRUCTURES DESIGN DETAIL SHEET (ENGLISH) (REV. 10/25/05)

ORIGINAL SCALE IN INCHES FOR REDUCED PLANS 0 1 2 3

CU 07-271
EA 138201

DISREGARD PRINTS BEARING EARLIER REVISION DATES

REVISION DATES: 05-13-10 05-14-10 5-18-10 5-28-10 06-18-10 07-15-10 05-06-10

SHEET 11 OF 247

FILE => 53-3032-c-sp07.dgn

USERNAME => tfstrk DATE PLOTTED => 18-OCT-2010 TIME PLOTTED => 16:44

DIST	COUNTY	ROUTE	POST MILES TOTAL PROJECT	SHEET No	TOTAL SHEETS
07	LA	47,103	3.5/4.6, 0.0/1.1	514	1003

REGISTERED CIVIL ENGINEER — DATE 05-24-10

10-11-10
PLANS APPROVAL DATE

The State of California or its officers or agents shall not be responsible for the accuracy or completeness of electronic copies of this plan sheet.

REGISTERED PROFESSIONAL ENGINEER — FOUED ZAYATI — No. C57046 — Exp. 06-30-11 — CIVIL — STATE OF CALIFORNIA

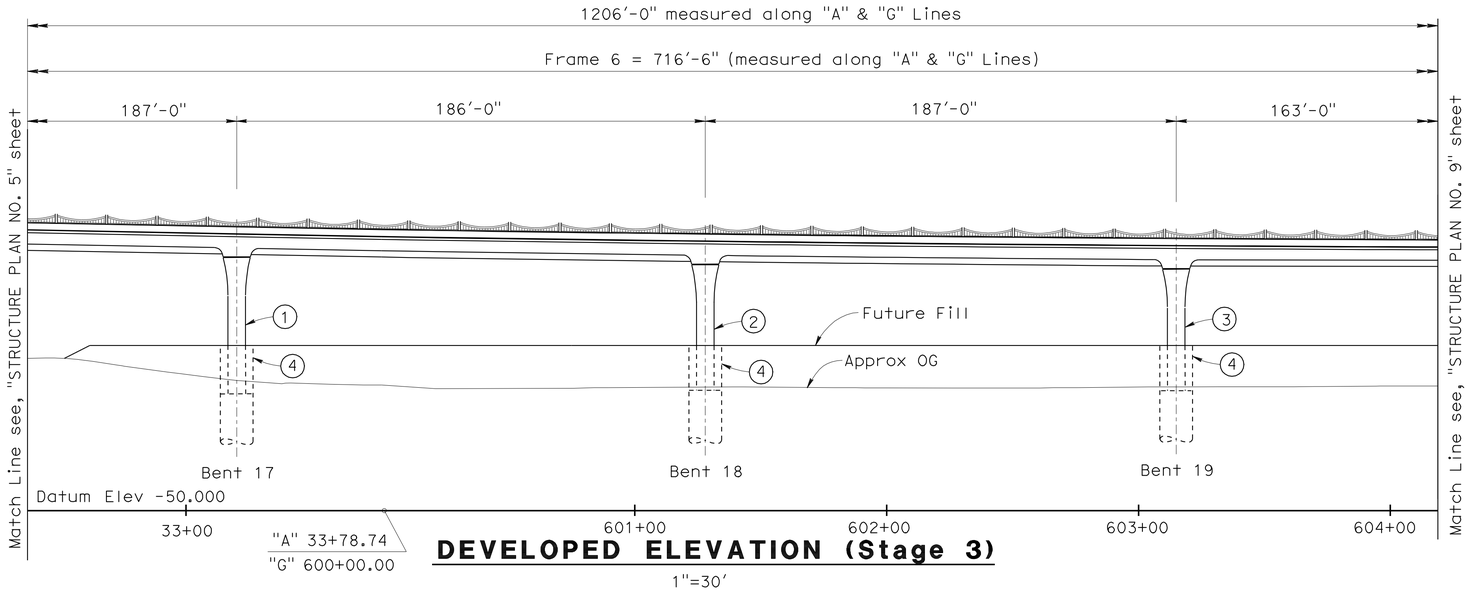

DEVELOPED ELEVATION (Stage 3)

1"=30'

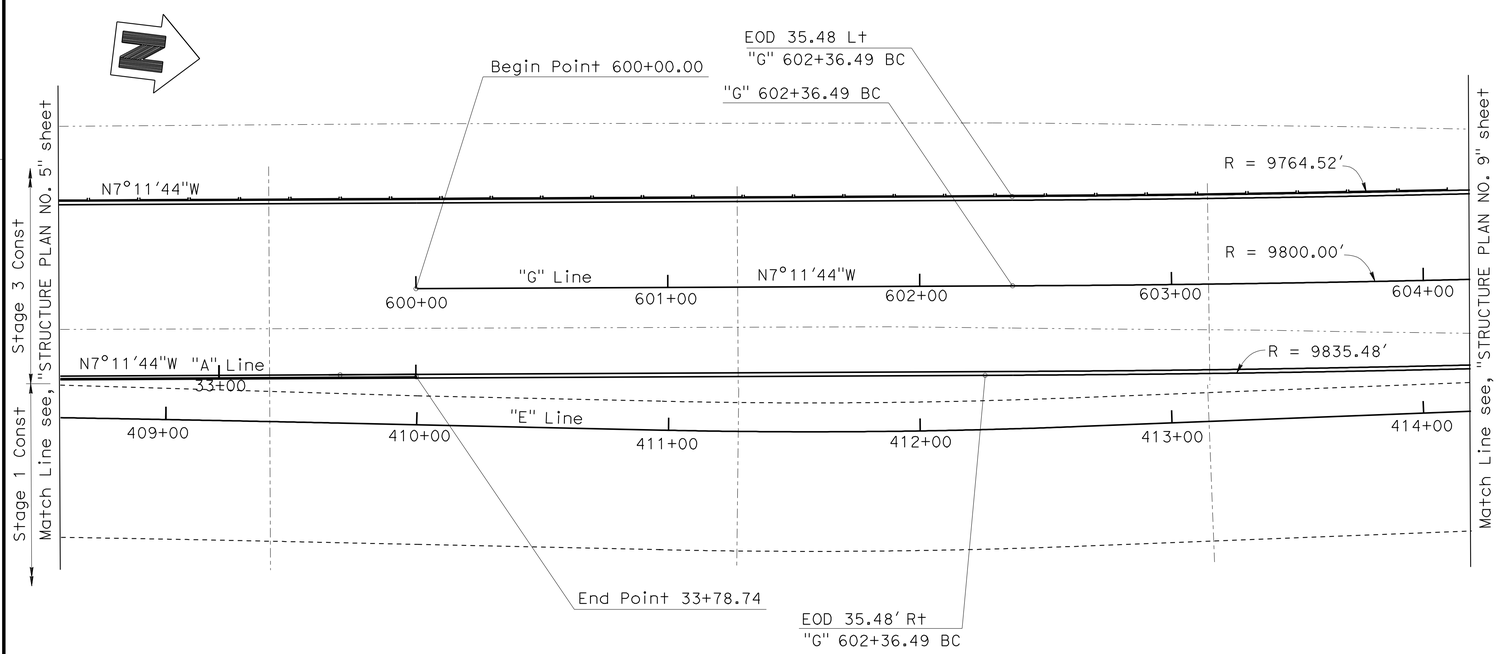

PLAN

1"=30'

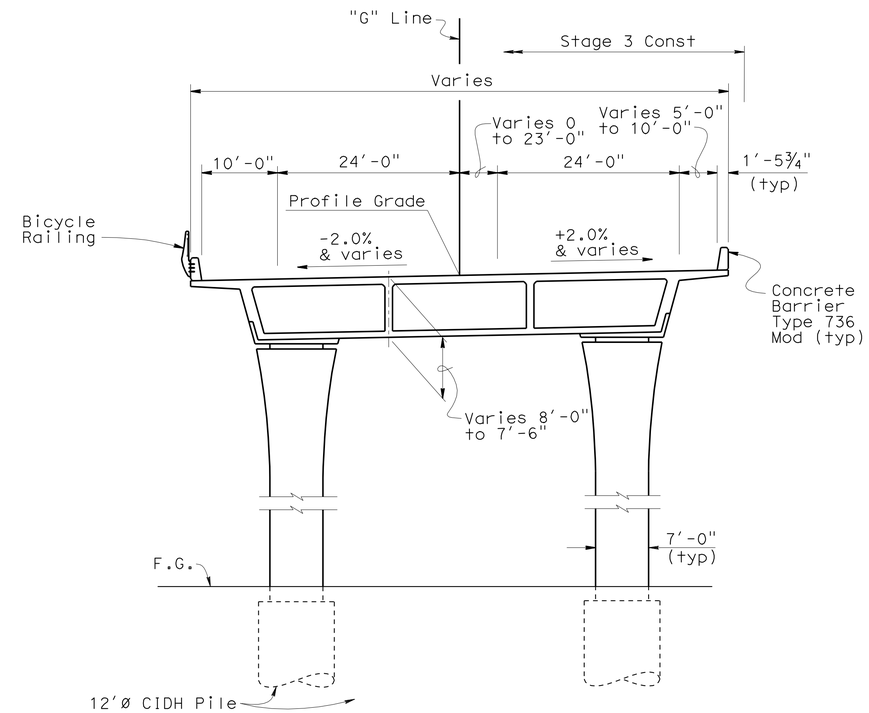

TYPICAL SECTION (Frame 6)

1"=10'

NOTES:

1. Paint "Bent No. 17"
2. Paint "Bent No. 18"
3. Paint "Bent No. 19"
4. Column Isolation Casing

EOD Indicates Edge of Deck

DESIGN	BY F. Zayati	CHECKED T. Skreslet	
DETAILS	BY T. Nguyen	CHECKED T. Skreslet	
QUANTITIES	BY J/P Peterson	CHECKED J/P Peterson	

STATE OF CALIFORNIA
DEPARTMENT OF TRANSPORTATION

DIVISION OF ENGINEERING SERVICES
STRUCTURE DESIGN
DESIGN BRANCH 14

BRIDGE NO. 53-3032
POST MILE 3.58

SCHUYLER HEIM BRIDGE (REPLACE)
STRUCTURE PLAN NO. 8

STRUCTURES DESIGN DETAIL SHEET (ENGLISH) (REV. 10/25/05)

ORIGINAL SCALE IN INCHES FOR REDUCED PLANS 0 1 2 3

CU 07-271
EA 138201

DISREGARD PRINTS BEARING EARLIER REVISION DATES

REVISION DATES: 05-28-08 05-14-10 5-17-10 06-30-10 07-15-10

SHEET 12 OF 247

FILE => 53-3032-c-sp08.dgn

USERNAME => trestrk DATE PLOTTED => 18-OCT-2010 TIME PLOTTED => 16:45

DIST	COUNTY	ROUTE	POST MILES TOTAL PROJECT	SHEET No	TOTAL SHEETS
07	LA	47,103	3.5/4.6, 0.0/1.1	515	1003

REGISTERED CIVIL ENGINEER 05-24-10 DATE

10-11-10
PLANS APPROVAL DATE

REGISTERED PROFESSIONAL ENGINEER FOUED ZAYATI No. C57046 Exp. 06-30-11 CIVIL STATE OF CALIFORNIA

The State of California or its officers or agents shall not be responsible for the accuracy or completeness of electronic copies of this plan sheet.

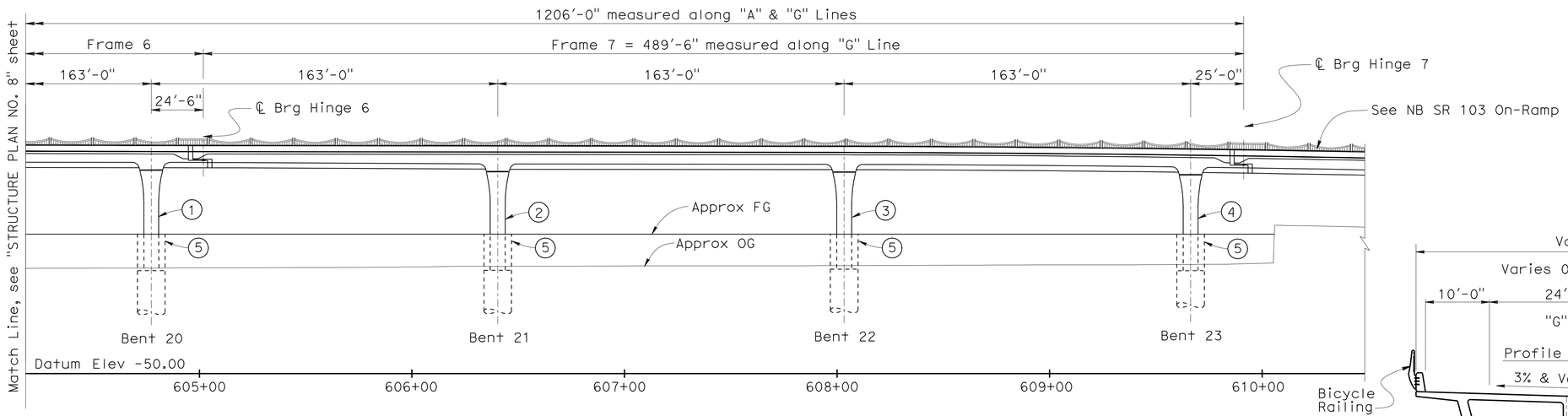

DEVELOPED ELEVATION (Stage 3)

1"=30'

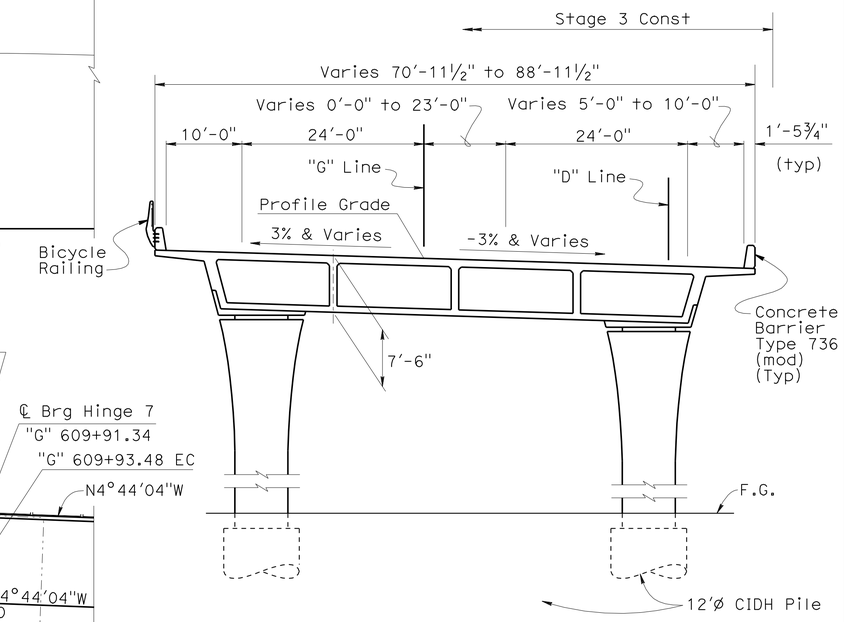

TYPICAL SECTION (Frame 7)

1"=10'

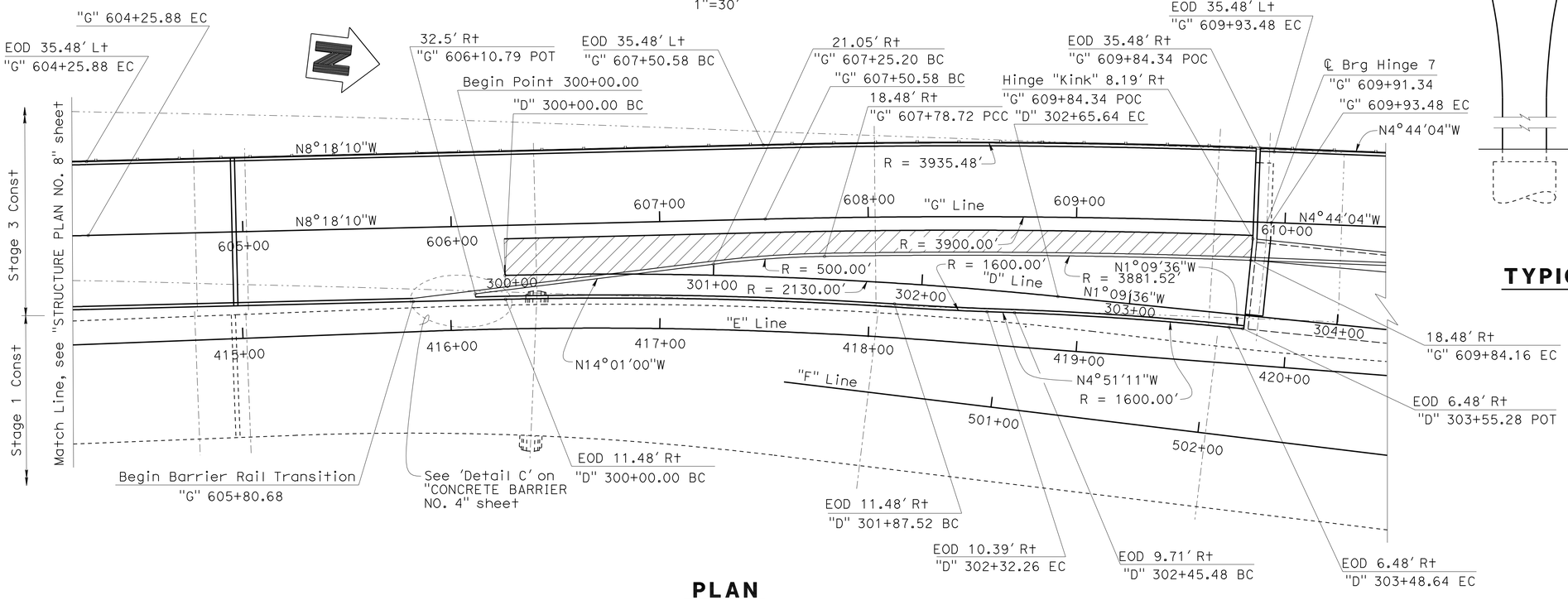

PLAN

1"=30'

NOTES:

1. Paint "Bent No. 20"
2. Paint "Bent No. 21"
3. Paint "Bent No. 22"
4. Paint "Bent No. 23"
5. Column Isolation Casing

1. EOD Indicates Edge of Deck

Indicates Deck area to receive additional concrete cover. See "GIRDER DETAILS NO. 4" sheet.

	BY	CHECKED
DESIGN	F. Zayati	T. Skreslet
DETAILS	T. Nguyen	T. Skreslet
QUANTITIES	J/P Peterson	J/P Peterson

STATE OF CALIFORNIA
DEPARTMENT OF TRANSPORTATION

DIVISION OF ENGINEERING SERVICES
STRUCTURE DESIGN
DESIGN BRANCH 14

BRIDGE NO. 53-3032
POST MILE 3.58

SCHUYLER HEIM BRIDGE (REPLACE)
STRUCTURE PLAN NO. 9

STRUCTURES DESIGN DETAIL SHEET (ENGLISH) (REV. 10/25/05)

ORIGINAL SCALE IN INCHES FOR REDUCED PLANS 0 1 2 3

CU 07-271
EA 138201

DISREGARD PRINTS BEARING EARLIER REVISION DATES

REVISION DATES: 05-13-10 05-14-10 5-12-10 5-18-10 5-28-10 06-16-10 06-30-10 07-15-10

SHEET 13 OF 247

FILE => 53-3032-c-sp09.dgn

USERNAME => trsttk DATE PLOTTED => 18-OCT-2010 TIME PLOTTED => 16:45

DIST	COUNTY	ROUTE	POST MILES TOTAL PROJECT	SHEET No	TOTAL SHEETS
07	LA	47,103	3.5/4.6, 0.0/1.1	516	1003

REGISTERED CIVIL ENGINEER — DATE: 05-24-10

10-11-10
PLANS APPROVAL DATE

REGISTERED PROFESSIONAL ENGINEER — FOUED ZAYATI — No. C57046 — Exp. 06-30-11 — CIVIL — STATE OF CALIFORNIA

The State of California or its officers or agents shall not be responsible for the accuracy or completeness of electronic copies of this plan sheet.

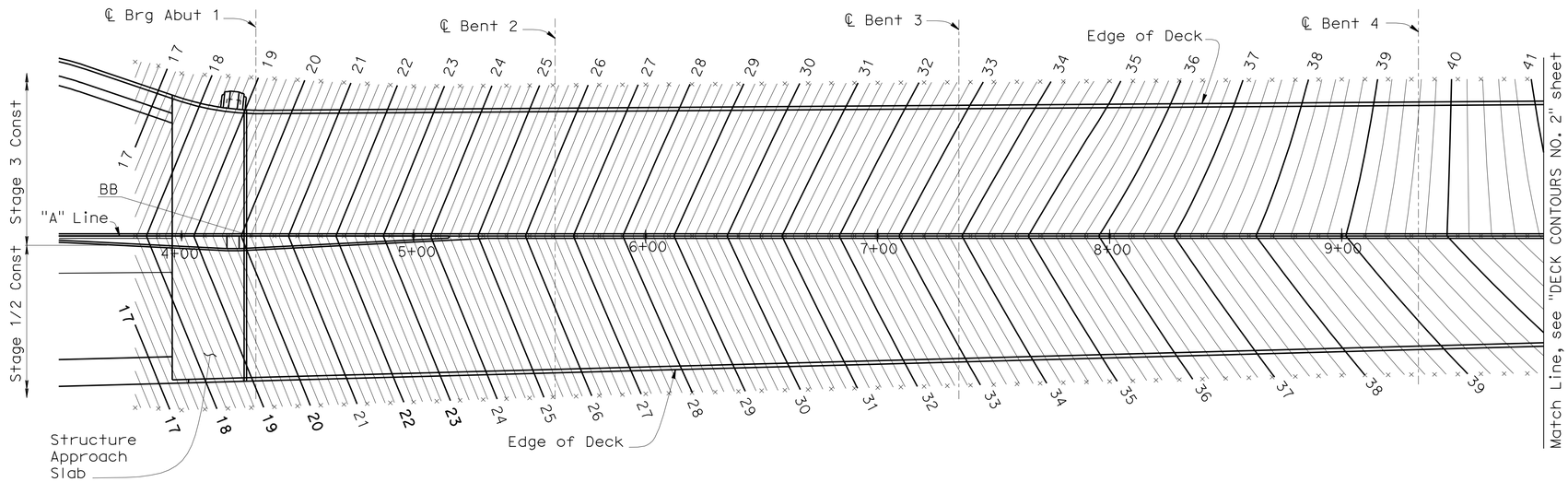

PLAN

1"=30'

NOTES:

× Indicates 10 ft intervals along Station Line
Contours do not include Camber
Contour interval = 0.2 ft

DESIGN	BY Foued Zayati	CHECKED T. Skreslet	
DETAILS	BY T. Nguyen	CHECKED T. Skreslet	
QUANTITIES	BY J/P. Peterson	CHECKED J/P. Peterson	

STATE OF CALIFORNIA
DEPARTMENT OF TRANSPORTATION

DIVISION OF ENGINEERING SERVICES
STRUCTURE DESIGN
DESIGN BRANCH 14

BRIDGE NO. 53-3032
POST MILE 3.58

SCHUYLER HEIM BRIDGE (REPLACE)
DECK CONTOURS NO. 1

STRUCTURES DESIGN DETAIL SHEET (ENGLISH) (REV. 10/25/05)

ORIGINAL SCALE IN INCHES FOR REDUCED PLANS 0 1 2 3

CU 07-271
EA 138201

DISREGARD PRINTS BEARING EARLIER REVISION DATES

REVISION DATES: 08-28-07 02-04-10 03-12-10 03-24-10 5-28-10

SHEET 14 OF 247

FILE => 53-3032-d-dc01.dgn

USERNAME => trestrk DATE PLOTTED => 18-OCT-2010 TIME PLOTTED => 16:45

DIST	COUNTY	ROUTE	POST MILES TOTAL PROJECT	SHEET No	TOTAL SHEETS
07	LA	47,103	3.5/4.6, 0.0/1.1	517	1003

REGISTERED CIVIL ENGINEER — DATE 05-24-10

10-11-10
PLANS APPROVAL DATE

REGISTERED PROFESSIONAL ENGINEER — FOUED ZAYATI — No. C57046 — Exp. 06-30-11 — CIVIL — STATE OF CALIFORNIA

The State of California or its officers or agents shall not be responsible for the accuracy or completeness of electronic copies of this plan sheet.

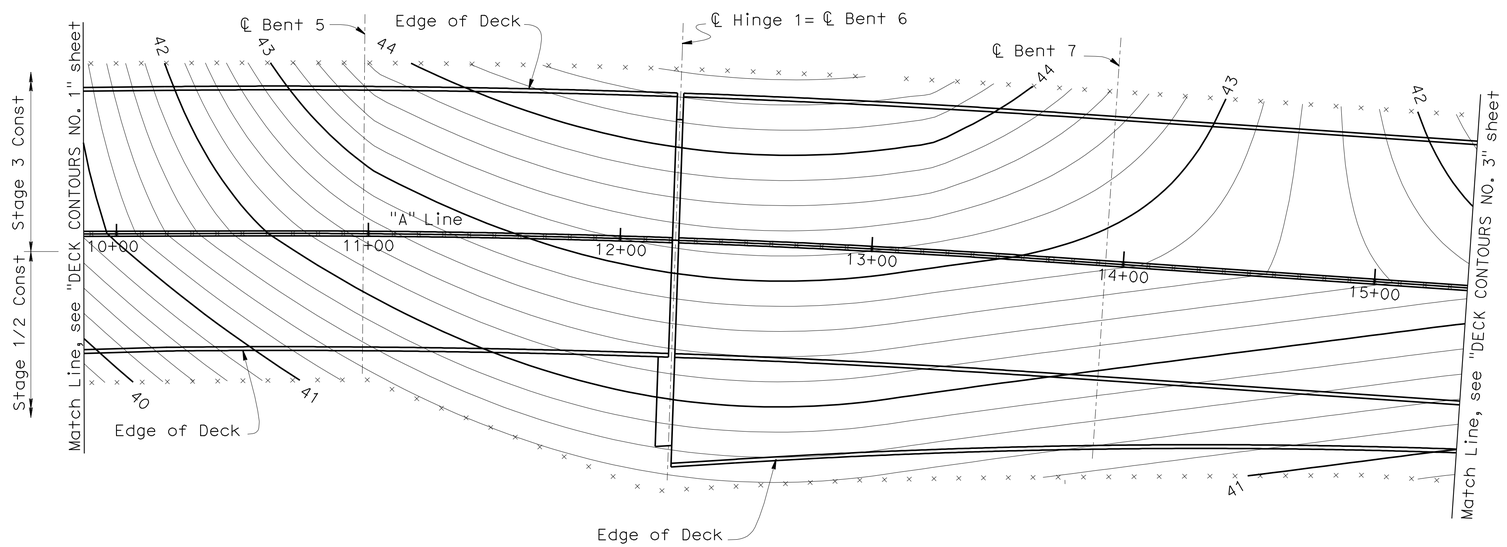

PLAN

1"=30'

NOTES:

× Indicates 10 ft intervals along Station Line

Contours do not include Camber

Contour interval = 0.2 ft

DESIGN	BY F. Zayati	CHECKED T. Skreslet	
DETAILS	BY T. Nguyen	CHECKED T. Skreslet	
QUANTITIES	BY J/P. Peterson	CHECKED J/P. Peterson	

STATE OF CALIFORNIA
DEPARTMENT OF TRANSPORTATION

DIVISION OF ENGINEERING SERVICES
STRUCTURE DESIGN
DESIGN BRANCH 14

BRIDGE NO. 53-3032
POST MILE 3.58

SCHUYLER HEIM BRIDGE (REPLACE)
DECK CONTOURS NO. 2

STRUCTURES DESIGN DETAIL SHEET (ENGLISH) (REV. 10/25/05)

ORIGINAL SCALE IN INCHES FOR REDUCED PLANS 0 1 2 3

CU 07-271
EA 138201

DISREGARD PRINTS BEARING EARLIER REVISION DATES

REVISION DATES: 01-12-09 04-20-09 02-04-10 03-12-10 03-22-10 03-23-10

SHEET 15 OF 247

FILE => 53-3032-d-dc02.dgn

USERNAME => trstrk DATE PLOTTED => 18-OCT-2010 TIME PLOTTED => 16:45

DIST	COUNTY	ROUTE	POST MILES TOTAL PROJECT	SHEET No	TOTAL SHEETS
07	LA	47,103	3.5/4.6, 0.0/1.1	518	1003

REGISTERED CIVIL ENGINEER — DATE: 05-24-10

10-11-10
PLANS APPROVAL DATE

REGISTERED PROFESSIONAL ENGINEER — FOUED ZAYATI — No. C57046 — Exp. 06-30-11 — CIVIL — STATE OF CALIFORNIA

The State of California or its officers or agents shall not be responsible for the accuracy or completeness of electronic copies of this plan sheet.

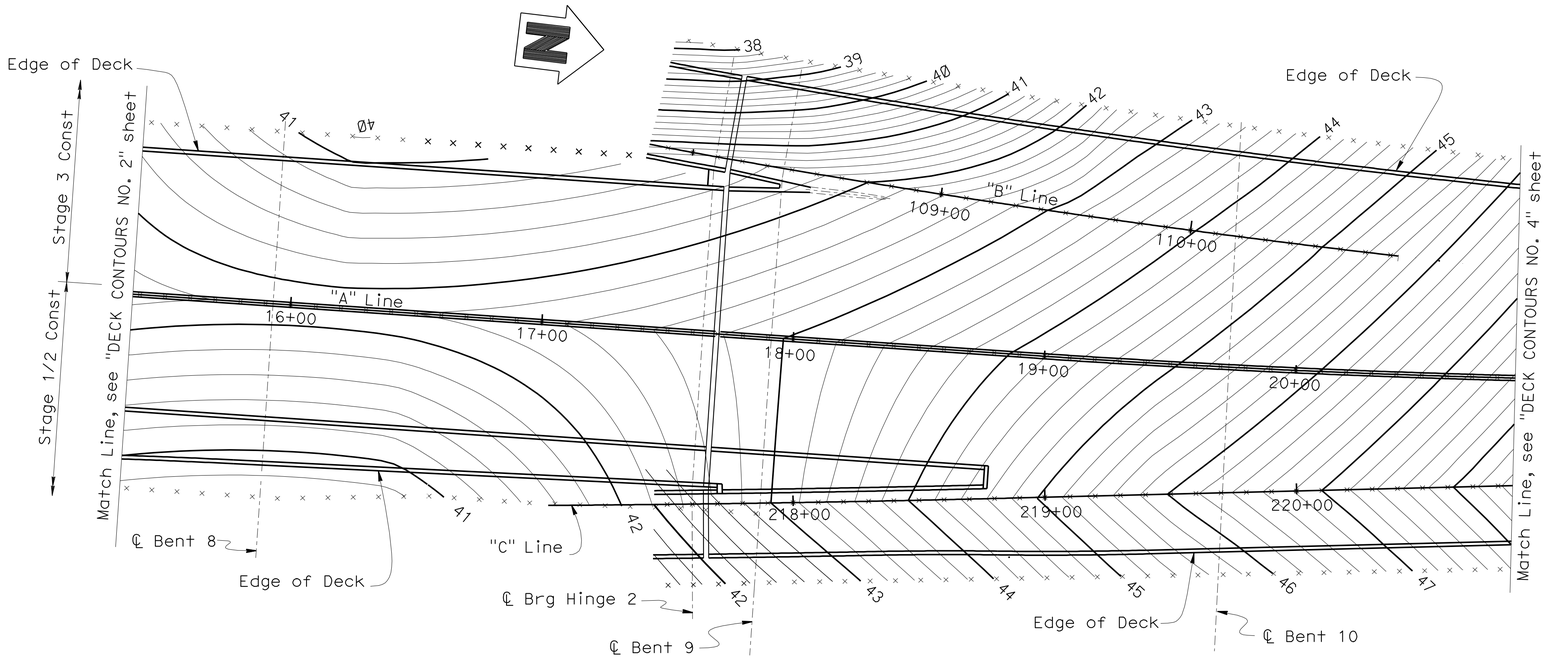

PLAN

1"=30'

NOTES:

× Indicates 10 ft intervals along Station Line
Contours do not include Camber
Contour interval = 0.2 ft

DESIGN	BY F. Zayati	CHECKED T. Skreslet	
DETAILS	BY T. Nguyen	CHECKED T. Skreslet	
QUANTITIES	BY J/P. Peterson	CHECKED J/P. Peterson	

STATE OF CALIFORNIA
DEPARTMENT OF TRANSPORTATION

DIVISION OF ENGINEERING SERVICES
STRUCTURE DESIGN
DESIGN BRANCH 14

BRIDGE NO. 53-3032
POST MILE 3.58

SCHUYLER HEIM BRIDGE (REPLACE)
DECK CONTOURS NO. 3

STRUCTURES DESIGN DETAIL SHEET (ENGLISH) (REV. 10/25/05)

ORIGINAL SCALE IN INCHES FOR REDUCED PLANS 0 1 2 3

CU 07-271
EA 138201

DISREGARD PRINTS BEARING EARLIER REVISION DATES

REVISION DATES: 03-05-08 04-22-09 02-04-10 03-22-10 03-24-10 03-29-10

SHEET 16 OF 247

FILE => 53-3032-d-dc03.dgn

USERNAME => trstrk DATE PLOTTED => 18-OCT-2010 TIME PLOTTED => 16:45

DIST	COUNTY	ROUTE	POST MILES TOTAL PROJECT	SHEET No	TOTAL SHEETS
07	LA	47,103	3.5/4.6, 0.0/1.1	519	1003

REGISTERED CIVIL ENGINEER 05-24-10 DATE

10-11-10
PLANS APPROVAL DATE

REGISTERED PROFESSIONAL ENGINEER
FOUED ZAYATI
No. C57046
Exp. 06-30-11
CIVIL
STATE OF CALIFORNIA

The State of California or its officers or agents shall not be responsible for the accuracy or completeness of electronic copies of this plan sheet.

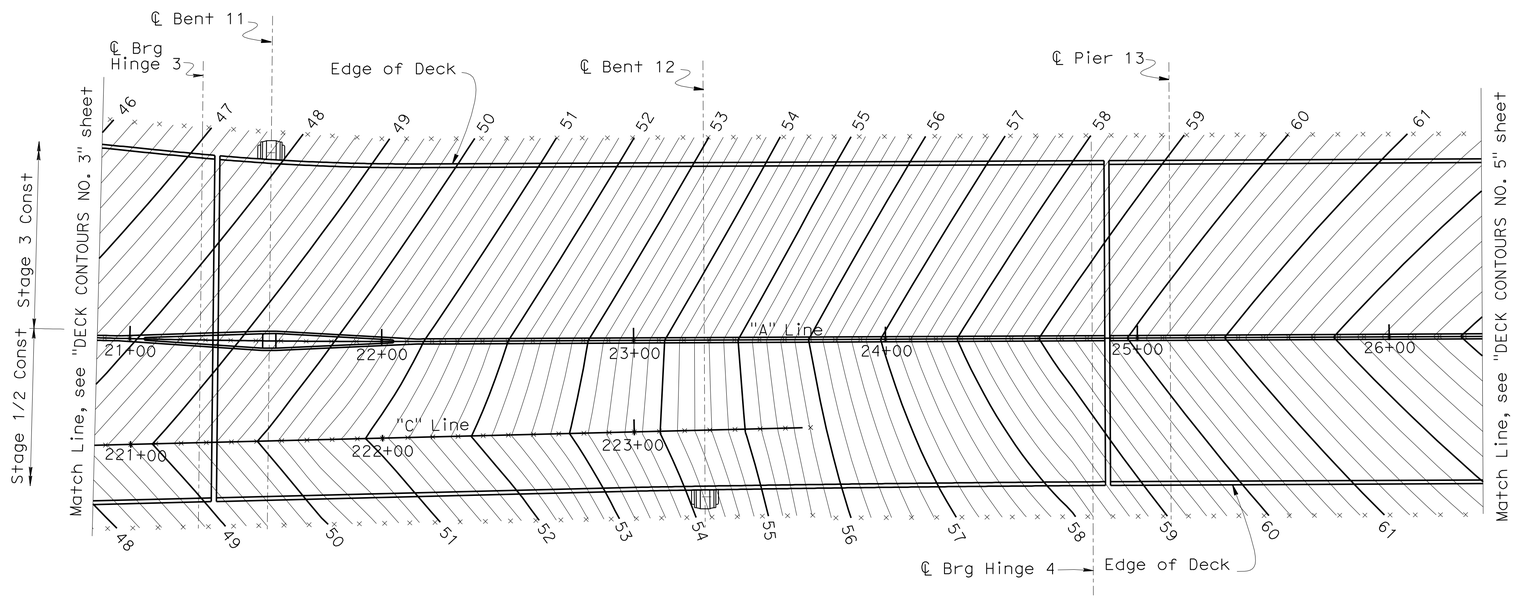

PLAN
1"=30'

NOTES:
× Indicates 10 ft intervals along Station Line
Contours do not include Camber
Contour interval = 0.2 ft

DESIGN	BY F. Zayati	CHECKED T. Skreslet	
DETAILS	BY T. Nguyen	CHECKED T. Skreslet	
QUANTITIES	BY J/P. Peterson	CHECKED J/P. Peterson	

STATE OF CALIFORNIA
DEPARTMENT OF TRANSPORTATION

DIVISION OF ENGINEERING SERVICES
STRUCTURE DESIGN
DESIGN BRANCH 14

BRIDGE NO. 53-3032
POST MILE 3.58

SCHUYLER HEIM BRIDGE (REPLACE)
DECK CONTOURS NO. 4

STRUCTURES DESIGN DETAIL SHEET (ENGLISH) (REV. 10/25/05)

ORIGINAL SCALE IN INCHES FOR REDUCED PLANS 0 1 2 3

CU 07-271
EA 138201

DISREGARD PRINTS BEARING EARLIER REVISION DATES
REVISION DATES: 03-02-09 04-30-09 02-04-10 03-29-10 5-28-10 7-13-10

SHEET 17 OF 247

FILE => 53-3032-d-dc04.dgn

USERNAME => trstrk DATE PLOTTED => 18-OCT-2010 TIME PLOTTED => 16:45

DIST	COUNTY	ROUTE	POST MILES TOTAL PROJECT	SHEET No	TOTAL SHEETS
07	LA	47,103	3.5/4.6, 0.0/1.1	520	1003

REGISTERED CIVIL ENGINEER — DATE: 05-24-10

10-11-10
PLANS APPROVAL DATE

REGISTERED PROFESSIONAL ENGINEER — FOUED ZAYATI — No. C57046 — Exp. 06-30-11 — CIVIL — STATE OF CALIFORNIA

The State of California or its officers or agents shall not be responsible for the accuracy or completeness of electronic copies of this plan sheet.

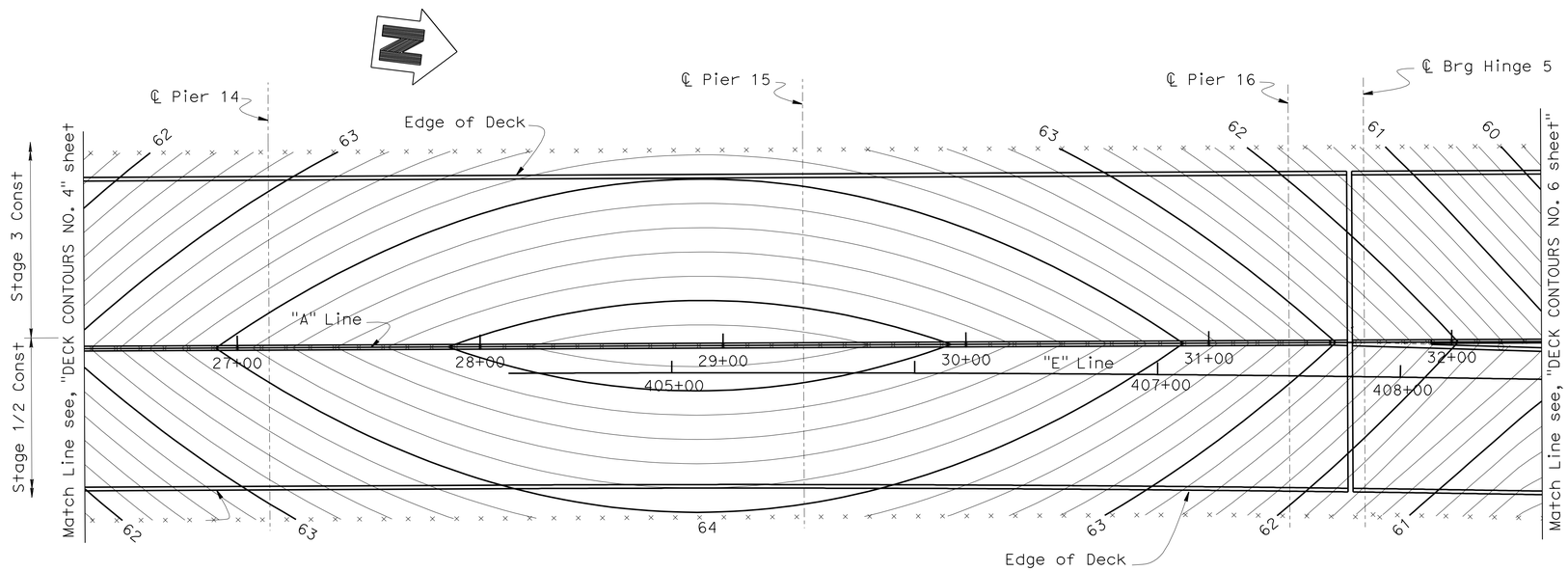

PLAN

1"=30'

NOTES:

× Indicates 10 ft intervals along Station Line
Contours do not include Camber
Contour interval = 0.2 ft

DESIGN	BY F. Zayati	CHECKED T. Skreslet	
DETAILS	BY T. Nguyen	CHECKED T. Skreslet	
QUANTITIES	BY J/P. Peterson	CHECKED J/P. Peterson	

STATE OF CALIFORNIA
DEPARTMENT OF TRANSPORTATION

DIVISION OF ENGINEERING SERVICES
STRUCTURE DESIGN
DESIGN BRANCH 14

BRIDGE NO. 53-3032
POST MILE 3.58

SCHUYLER HEIM BRIDGE (REPLACE)
DECK CONTOURS NO. 5

STRUCTURES DESIGN DETAIL SHEET (ENGLISH) (REV. 10/25/05)

ORIGINAL SCALE IN INCHES FOR REDUCED PLANS 0 1 2 3

CU 07-271
EA 138201

DISREGARD PRINTS BEARING EARLIER REVISION DATES → 03-12-09 04-21-09 02-04-10 03-22-10

REVISION DATES

SHEET 18 OF 247

FILE => 53-3032-d-dc05.gdn

USERNAME => frstrk DATE PLOTTED => 18-OCT-2010 TIME PLOTTED => 16:46

DIST	COUNTY	ROUTE	POST MILES TOTAL PROJECT	SHEET No	TOTAL SHEETS
07	LA	47,103	3.5/4.6, 0.0/1.1	521	1003

REGISTERED CIVIL ENGINEER — DATE 05-24-10

10-11-10
PLANS APPROVAL DATE

REGISTERED PROFESSIONAL ENGINEER — FOUED ZAYATI — No. C57046 — Exp. 06-30-11 — CIVIL — STATE OF CALIFORNIA

The State of California or its officers or agents shall not be responsible for the accuracy or completeness of electronic copies of this plan sheet.

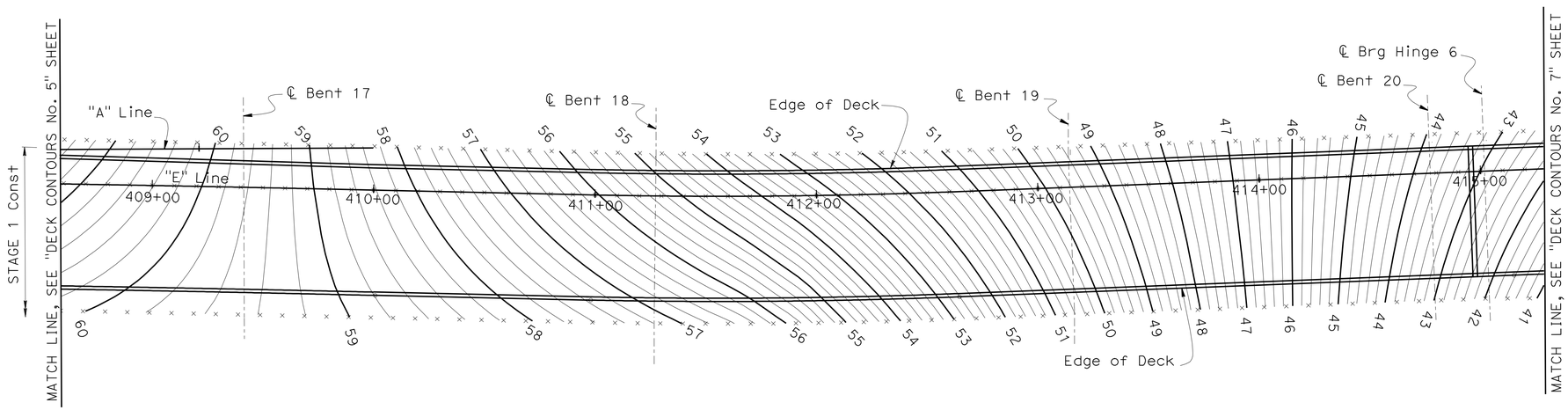

PLAN (STAGE 1)

SCALE: 1" = 30'

NOTES:

× Indicates 10 ft intervals along Station Line
Contours do not include Camber
Contour interval = 0.2 ft

DESIGN	BY F. Zayati	CHECKED T. Skreslet	
DETAILS	BY T. Nguyen	CHECKED T. Skreslet	
QUANTITIES	BY J/P. Peterson	CHECKED J/P. Peterson	

STATE OF CALIFORNIA
DEPARTMENT OF TRANSPORTATION

DIVISION OF ENGINEERING SERVICES
STRUCTURE DESIGN
DESIGN BRANCH 14

BRIDGE NO. 53-3032
POST MILE 3.58

SCHUYLER HEIM BRIDGE (REPLACE)
DECK CONTOURS NO. 6

STRUCTURES DESIGN DETAIL SHEET (ENGLISH) (REV. 10/25/05)

ORIGINAL SCALE IN INCHES FOR REDUCED PLANS 0 1 2 3

CU 07-271
EA 138201

DISREGARD PRINTS BEARING EARLIER REVISION DATES

REVISION DATES: 03-07-07 04-24-09 02-04-10 03-22-10 03-24-10

SHEET 19 OF 247

FILE => 53-3032-d-dc06.dgn

USERNAME => ttmartin DATE PLOTTED => 19-OCT-2010 TIME PLOTTED => 08:08

DIST	COUNTY	ROUTE	POST MILES TOTAL PROJECT	SHEET No	TOTAL SHEETS
07	LA	47,103	3.5/4.6, 0.0/1.1	522	1003

REGISTERED CIVIL ENGINEER — DATE: 05-24-10

10-11-10
PLANS APPROVAL DATE

REGISTERED PROFESSIONAL ENGINEER — FOUED ZAYATI — No. C57046 — Exp. 06-30-11 — CIVIL — STATE OF CALIFORNIA

The State of California or its officers or agents shall not be responsible for the accuracy or completeness of electronic copies of this plan sheet.

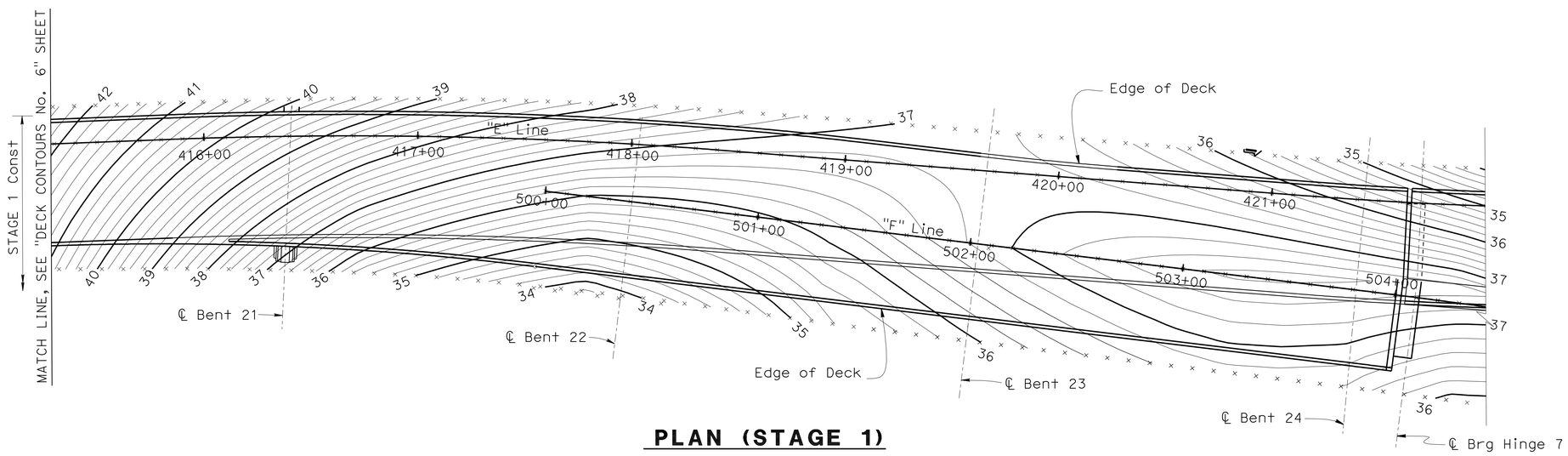

PLAN (STAGE 1)

SCALE: 1" = 30'

NOTES:

× Indicates 10 ft intervals along Station Line
Contours do not include Camber
Contour interval = 0.2 ft

	BY	CHECKED
DESIGN	F. Zayati	T. Skreslet
DETAILS	T. Nguyen	T. Skreslet
QUANTITIES	J/P. Peterson	J/P. Peterson

STATE OF CALIFORNIA
DEPARTMENT OF TRANSPORTATION

DIVISION OF ENGINEERING SERVICES
STRUCTURE DESIGN
DESIGN BRANCH 14

BRIDGE NO. 53-3032
POST MILE 3.58

SCHUYLER HEIM BRIDGE (REPLACE)
DECK CONTOURS NO. 7

STRUCTURES DESIGN DETAIL SHEET (ENGLISH) (REV. 10/25/05)

ORIGINAL SCALE IN INCHES FOR REDUCED PLANS 0 1 2 3

CU 07-271
EA 138201

DISREGARD PRINTS BEARING EARLIER REVISION DATES

REVISION DATES: 03-01-09 04-23-09 02-04-10 03-22-10 03-24-10 07-13-10

SHEET 20 OF 247

FILE => 53-3032-d-dc07.dgn

USERNAME => frmartin DATE PLOTTED => 19-OCT-2010 TIME PLOTTED => 08:08

DIST	COUNTY	ROUTE	POST MILES TOTAL PROJECT	SHEET No	TOTAL SHEETS
07	LA	47,103	3.5/4.6, 0.0/1.1	523	1003

REGISTERED CIVIL ENGINEER 05-24-10 DATE

10-11-10
PLANS APPROVAL DATE

REGISTERED PROFESSIONAL ENGINEER
FOUED ZAYATI
No. C57046
Exp. 06-30-11
CIVIL
STATE OF CALIFORNIA

The State of California or its officers or agents shall not be responsible for the accuracy or completeness of electronic copies of this plan sheet.

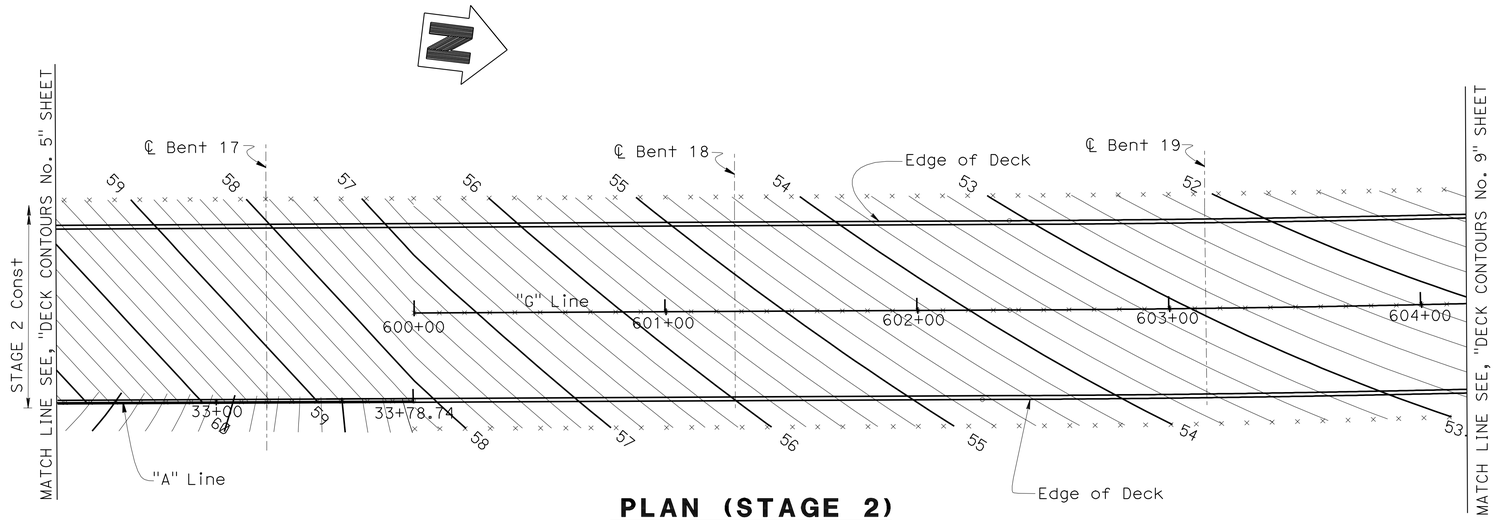

PLAN (STAGE 2)

SCALE: 1" = 30'

NOTES:

× Indicates 10 ft intervals along Station Line
Contours do not include Camber
Contour interval = 0.2 ft

	BY	CHECKED
DESIGN	F. Zayati	T. Skreslet
DETAILS	T. Nguyen	T. Skreslet
QUANTITIES	J/P. Peterson	J/P. Peterson

STATE OF CALIFORNIA
DEPARTMENT OF TRANSPORTATION

DIVISION OF ENGINEERING SERVICES
STRUCTURE DESIGN
DESIGN BRANCH 14

BRIDGE NO. 53-3032
POST MILE 3.58

SCHUYLER HEIM BRIDGE (REPLACE)
DECK CONTOURS NO. 8

STRUCTURES DESIGN DETAIL SHEET (ENGLISH) (REV. 10/25/05)

ORIGINAL SCALE IN INCHES FOR REDUCED PLANS 0 1 2 3

CU 07-271
EA 138201

DISREGARD PRINTS BEARING EARLIER REVISION DATES

REVISION DATES: 08-17-09 04-24-09 02-04-10 03-24-10 03-25-10

SHEET 21 OF 247

FILE => 53-3032-d-dc08.dgn

USERNAME => ttmartin DATE PLOTTED => 19-OCT-2010 TIME PLOTTED => 08:08

DIST	COUNTY	ROUTE	POST MILES TOTAL PROJECT	SHEET No	TOTAL SHEETS
07	LA	47,103	3.5/4.6, 0.0/1.1	524	1003

REGISTERED CIVIL ENGINEER — DATE 05-24-10

10-11-10
PLANS APPROVAL DATE

REGISTERED PROFESSIONAL ENGINEER — FOUED ZAYATI — No. C57046 — Exp. 06-30-11 — CIVIL — STATE OF CALIFORNIA

The State of California or its officers or agents shall not be responsible for the accuracy or completeness of electronic copies of this plan sheet.

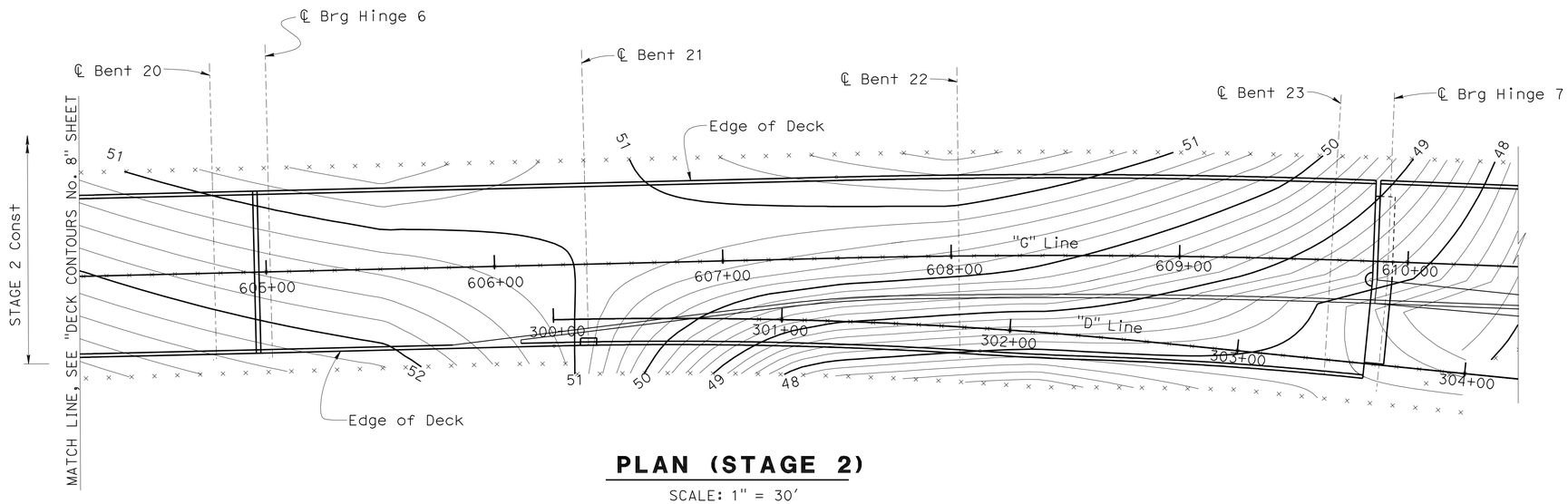

PLAN (STAGE 2)

SCALE: 1" = 30'

NOTES:

× Indicates 10 ft intervals along Station Line
Contours do not include Camber
Contour interval = 0.2 ft

DESIGN	BY F. Zayati	CHECKED T. Skreslet
DETAILS	BY T. Nguyen	CHECKED T. Skreslet
QUANTITIES	BY J/P. Peterson	CHECKED J/P. Peterson

STATE OF CALIFORNIA
DEPARTMENT OF TRANSPORTATION

DIVISION OF ENGINEERING SERVICES
STRUCTURE DESIGN
DESIGN BRANCH 14

BRIDGE NO. 53-3032
POST MILE 3.58

SCHUYLER HEIM BRIDGE (REPLACE)
DECK CONTOURS NO. 9

STRUCTURES DESIGN DETAIL SHEET (ENGLISH) (REV. 10/25/05)

ORIGINAL SCALE IN INCHES FOR REDUCED PLANS 0 1 2 3

CU 07-271
EA 138201

DISREGARD PRINTS BEARING EARLIER REVISION DATES → 3-12-09 02-04-10 03-24-10

REVISION DATES

SHEET 22 OF 247

FILE => 53-3032-d-dc09.dgn

USERNAME => ttmartin DATE PLOTTED => 19-OCT-2010 TIME PLOTTED => 08:08

DIST	COUNTY	ROUTE	POST MILES TOTAL PROJECT	SHEET No.	TOTAL
07	LA	47,103	3.5/4.6, 0.0/1.1	525	1003

Foued Zayati 05-24-10
REGISTERED CIVIL ENGINEER

10-11-10
PLANS APPROVAL DATE

REGISTERED PROFESSIONAL ENGINEER FOUED ZAYATI No. C57046 Exp. 06-30-11 CIVIL STATE OF CALIFORNIA

The State of California or its officers or agents shall not be responsible for the accuracy or completeness of electronic copies of this plan sheet.

BRIDGE LOCATION:

Ⓐ - 41.50′ Lt ℄ "A" Line, Sta 4+29.07, Elev=18.24±
Ⓑ - 41.72′ Rt ℄ "A" Line, Sta 4+29.03, Elev=18.06±

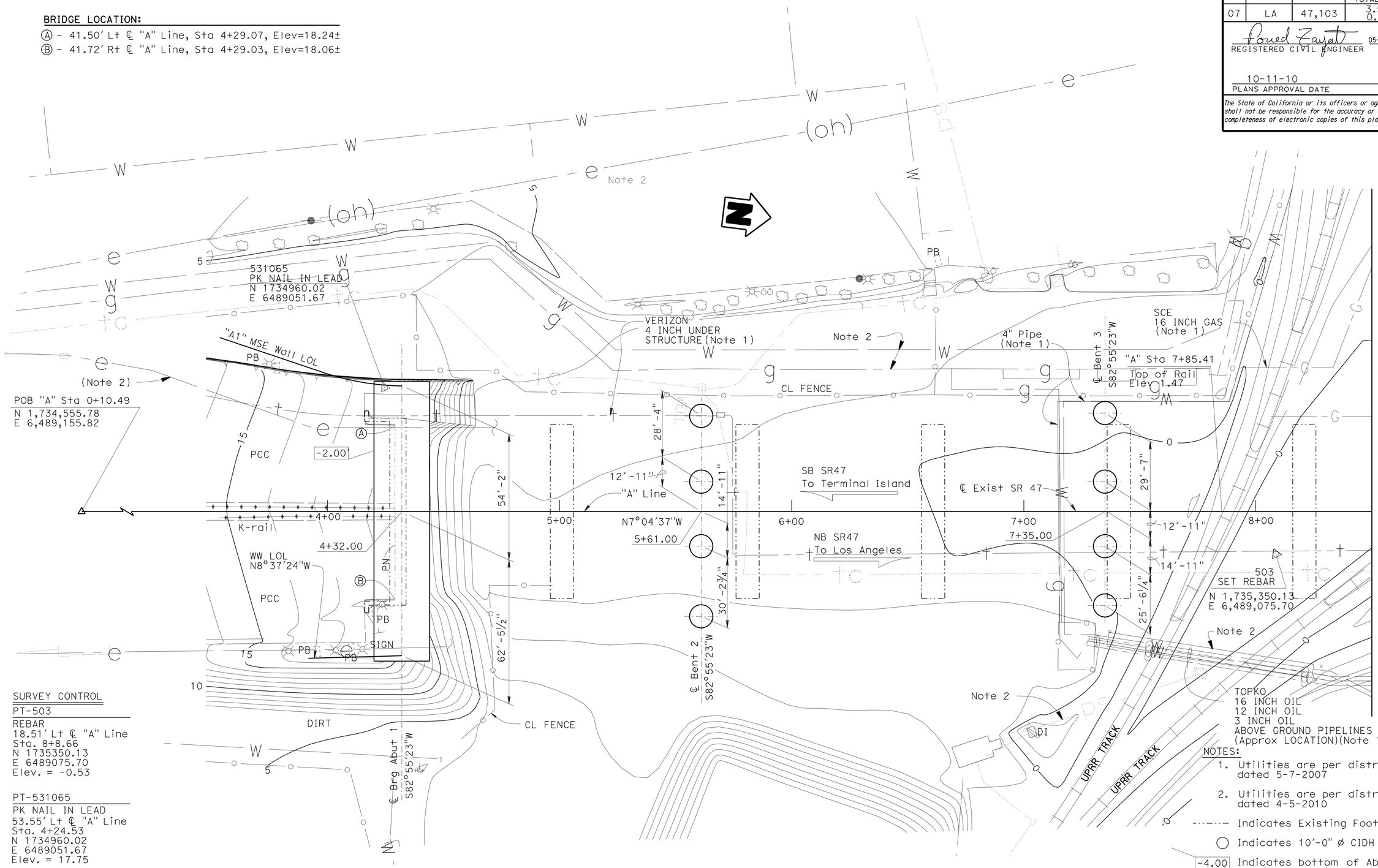

SURVEY CONTROL

PT-503
REBAR
18.51′ Lt ℄ "A" Line
Sta. 8+8.66
N 1735350.13
E 6489075.70
Elev. = -0.53

PT-531065
PK NAIL IN LEAD
53.55′ Lt ℄ "A" Line
Sta. 4+24.53
N 1734960.02
E 6489051.67
Elev. = 17.75

NOTES:

1. Utilities are per district utility map, dated 5-7-2007
2. Utilities are per district utility map, dated 4-5-2010

---·---·-- Indicates Existing Footings

◯ Indicates 10′-0" ø CIDH Pile

-4.00 Indicates bottom of Abutment Footing elevation

HNTB *Corporation*
200 E. SANDPOINTE AVENUE, SUITE 200
SANTA ANA, CALIFORNIA 92707

SCALE: 1"=20′	VERT.DATUM NAVD 88	HORZ.DATUM NAD 83			
PHOTOGRAMMETRY AS OF:		ALIGNMENT TIES Dist. Trav. Sheet	DESIGN	BY T. Skreslet	CHECKED J. Mass
SURVEYED	BY COAST SURVEY 1207	DRAFTED BY L. Zhang	DETAILS	BY K. Kubo	CHECKED T. Skreslet
FIELD CHECKED	BY D. Chang	CHECKED BY D. Chang	QUANTITIES	BY L. Han	CHECKED J. Mass

PREPARED FOR THE STATE OF CALIFORNIA DEPARTMENT OF TRANSPORTATION

PROJECT ENGINEER

BRIDGE NO. 53-3032
POST MILE 3.58

SCHUYLER HEIM BRIDGE (REPLACE)
FOUNDATION PLAN NO. 1

FOUNDATION PLAN SHEET (ENGLISH) (REV. 5/9/00)

ORIGINAL SCALE IN INCHES FOR REDUCED PLANS 0 1 2 3

CU 07
EA 138201

DISREGARD PRINTS BEARING EARLIER REVISION DATES

REVISION DATES (PRELIMINARY STAGE ONLY): 09-08-08 12-23-08 03-06-09 03-26-10 05-14-10 05-18-10 05-21-10 05-25-10 06-30-10

SHEET 23 OF 247

FILE => 53-3032-e-fnd01.dgn

USERNAME => trmartin DATE PLOTTED => 19-OCT-2010 TIME PLOTTED => 08:08

DIST	COUNTY	ROUTE	POST MILES TOTAL PROJECT	SHEET No.	TOTAL
07	LA	47,103	3.5/4.6, 0.0/1.1	526	1003

Foued Zayati 05-24-10
REGISTERED CIVIL ENGINEER

10-11-10
PLANS APPROVAL DATE

The State of California or its officers or agents shall not be responsible for the accuracy or completeness of electronic copies of this plan sheet.

REGISTERED PROFESSIONAL ENGINEER FOUED ZAYATI No. C57046 Exp. 06-30-11 CIVIL STATE OF CALIFORNIA

CURVE DATA				
No.	R	Δ	T	L
1	4510′	4°3′23"	159.71′	319.29′

NOTES:

1. Utilities are per district utility map, dated 5-7-2007
2. Utilities are per district utility map, dated 4-5-2010

○ Indicates 10′-0" ø CIDH Pile
Indicates Existing Footings
Utilities are per district utility map

For Test Pile and Anchor Pile details, see "PILE LOAD TEST DATA" sheet.

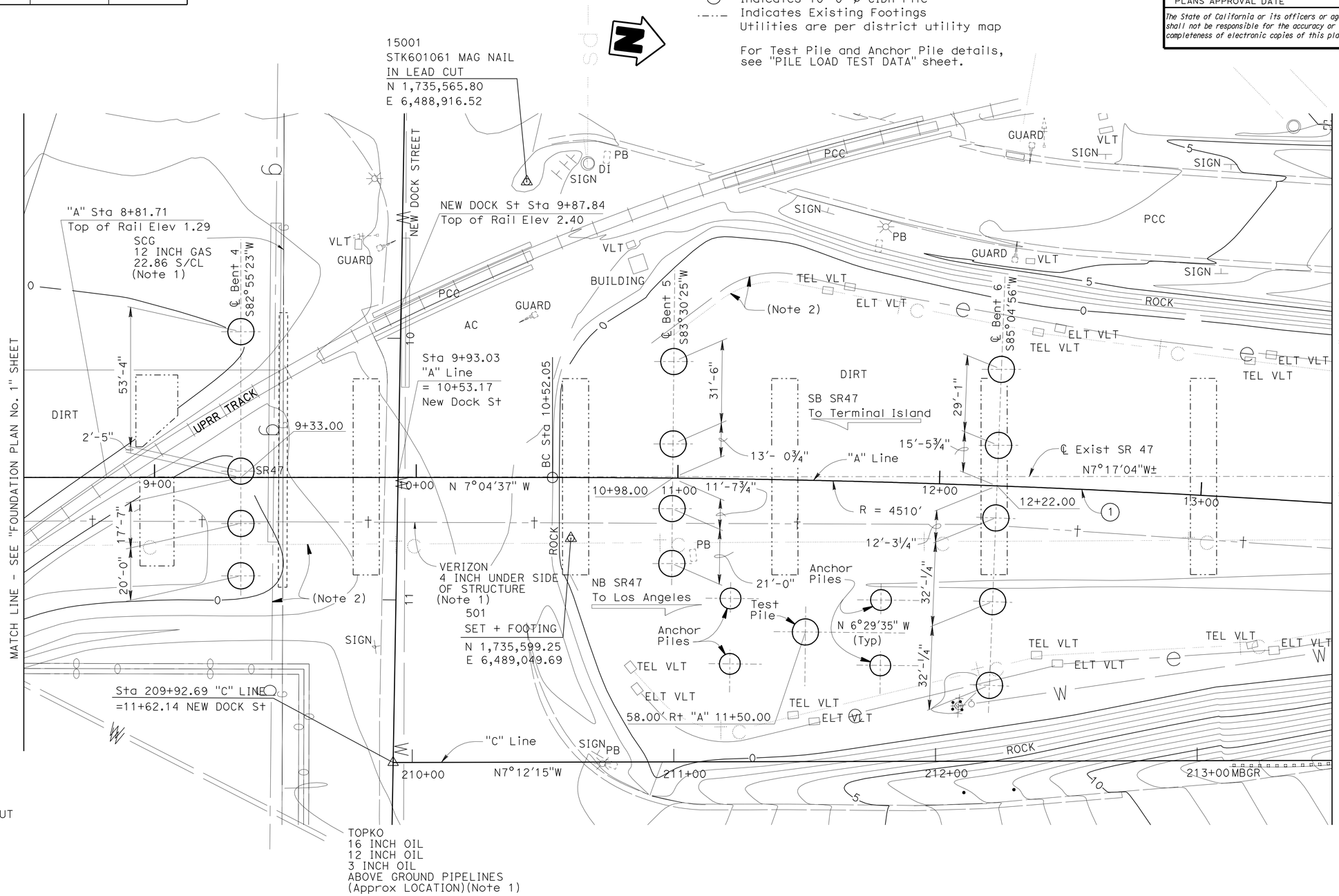

SURVEY CONTROL

PT-501
SET + FOOTING
23.25′ Rt ℄ "A" Line
Sta. 10+59.08
N 1735599.25
E 6489049.69
Elev. = -0.91

PT-15001
STK601061 MAG NAIL IN LEAD CUT
113.09′ Lt ℄ "A" Line
Sta. 10+42.39
N 1735565.80
E 6488916.52
Elev. = 3.42

HNTB *Corporation*
200 E. SANDPOINTE AVENUE, SUITE 200
SANTA ANA, CALIFORNIA 92707

SCALE: 1"=20′	VERT.DATUM NAVD 88	HORZ.DATUM NAD 83	
PHOTOGRAMMETRY AS OF:		ALIGNMENT TIES Dist. Trav. Sheet	
SURVEYED	BY COAST SURVEY 1207	DRAFTED	BY L. Zhang
FIELD CHECKED	BY D. Chang	CHECKED	BY D. Chang

DESIGN	BY T. Skreslet	CHECKED J. Mass
DETAILS	BY K. Kubo	CHECKED T. Skreslet
QUANTITIES	BY L. Han	CHECKED J. Mass

PREPARED FOR THE
StaTE OF CALIFORNIA
DEPARTMENT OF TRANSPORTATION

PROJECT ENGINEER

BRIDGE NO. 53-3032
POST MILE 3.58

SCHUYLER HEIM BRIDGE (REPLACE)
FOUNDATION PLAN NO. 2

FOUNDATION PLAN SHEET (ENGLISH) (REV. 5/9/00)

ORIGINAL SCALE IN INCHES FOR REDUCED PLANS 0 1 2 3

CU 07
EA 138201

DISREGARD PRINTS BEARING EARLIER REVISION DATES

REVISION DATES (PRELIMINARY StaGE ONLY) 09-04-08 12-23-08 03-03-09 8-17-09 03-26-10 04-06-10 05-14-10 05-19-10 05-21-10 05-25-10

SHEET 24 OF 247

FILE => 53-3032-e-fnd02.dgn

USERNAME => trmartin DATE PLOTTED => 19-OCT-2010 TIME PLOTTED => 08:09

DIST	COUNTY	ROUTE	POST MILES TOTAL PROJECT	SHEET No.	TOTAL
07	LA	47,103	3.5/4.6, 0.0/1.1	527	1003

Foued Zayati 05-24-10
REGISTERED CIVIL ENGINEER

10-11-10
PLANS APPROVAL DATE

REGISTERED PROFESSIONAL ENGINEER FOUED ZAYATI No. C57046 Exp. 06-30-11 CIVIL STATE OF CALIFORNIA

The State of California or its officers or agents shall not be responsible for the accuracy or completeness of electronic copies of this plan sheet.

NOTES:

1. Utilities are per district utility map, dated 5-7-2007
2. Utilities are per district utility map, dated 4-5-2010

Indicates 10'-0" Ø CIDH Piles

Indicates Existing Footings

Utilities are per district utility map

CURVE DATA				
No.	R	Δ	T	L
1	4510'	4°03'23"	159.71'	319.29'
4	1360'	5°49'28"	69.19'	138.25'
5	10000'	1°08'14"	99.26'	198.51'

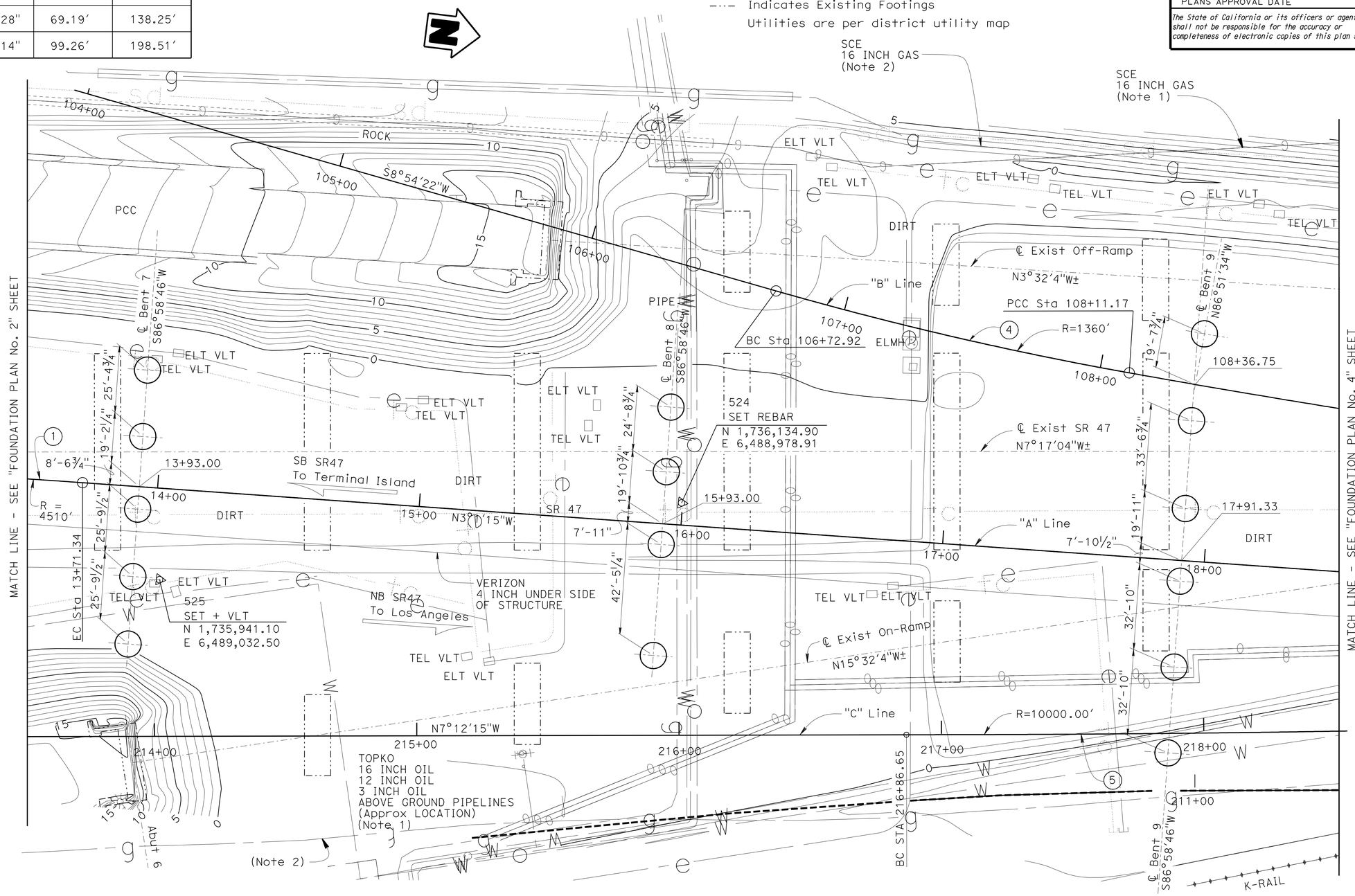

SURVEY CONTROL

PT-524
SET REBAR
19.536' Lt ℄ Line SR 47
Sta 16+00.56
N 1736134.90
E 6488978.91
Elev. = -0.51

PT-525
SET + VLT
34.81' Lt ℄ "A" Line
Sta 14+00.95
N 1735941.10
E 6489032.50
Elev. = 0.12

HNTB *Corporation*
200 E. SANDPOINTE AVENUE, SUITE 200
SANTA ANA, CALIFORNIA 92707

SCALE: 1"=20'	VERT.DATUM NAVD 88		HORZ.DATUM NAD 83		
PHOTOGRAMMETRY AS OF:		ALIGNMENT TIES Dist. Trav. Sheet			
SURVEYED	BY COAST SURVEY 1207	DRAFTED	BY L. Zhang		
FIELD CHECKED	BY D. Chang	CHECKED	BY D. Chang		

	BY	CHECKED
DESIGN	T. Skreslet	J. Mass
DETAILS	K. Kubo	T. Skreslet
QUANTITIES	L. Han	J. Mass

PREPARED FOR THE STATE OF CALIFORNIA DEPARTMENT OF TRANSPORTATION

PROJECT ENGINEER

BRIDGE NO. 53-3032
POST MILE 3.58

SCHUYLER HEIM BRIDGE (REPLACE)
FOUNDATION PLAN NO. 3

FOUNDATION PLAN SHEET (ENGLISH) (REV. 5/9/00)

ORIGINAL SCALE IN INCHES FOR REDUCED PLANS 0 1 2 3

CU 07
EA 138201

DISREGARD PRINTS BEARING EARLIER REVISION DATES

REVISION DATES (PRELIMINARY STAGE ONLY): 05-25-10 9-1-08 12-22-08 3-04-09 9-18-09 03-26-10 04-27-10 05-14-10 05-19-10 05-21-10

SHEET 25 OF 247

FILE => 53-3032-e-fnd03.dgn

USERNAME => trmartin DATE PLOTTED => 19-OCT-2010 TIME PLOTTED => 08:09

DIST	COUNTY	ROUTE	POST MILES TOTAL PROJECT	SHEET No.	TOTAL
07	LA	47,103	3.5/4.6, 0.0/1.1	528	1003

Foued Zayati 05-24-10
REGISTERED CIVIL ENGINEER

10-11-10
PLANS APPROVAL DATE

The State of California or its officers or agents shall not be responsible for the accuracy or completeness of electronic copies of this plan sheet.

REGISTERED PROFESSIONAL ENGINEER FOUED ZAYATI No. C57046 Exp. 06-30-11 CIVIL STATE OF CALIFORNIA

CURVE DATA

No.	R	Δ	T	L
2	4510′	3°27′19"	136.04′	271.99′
3	4510′	4°10′30"	164.39′	328.63′
5	20000′	1°08′14"	397.01′	198.51′

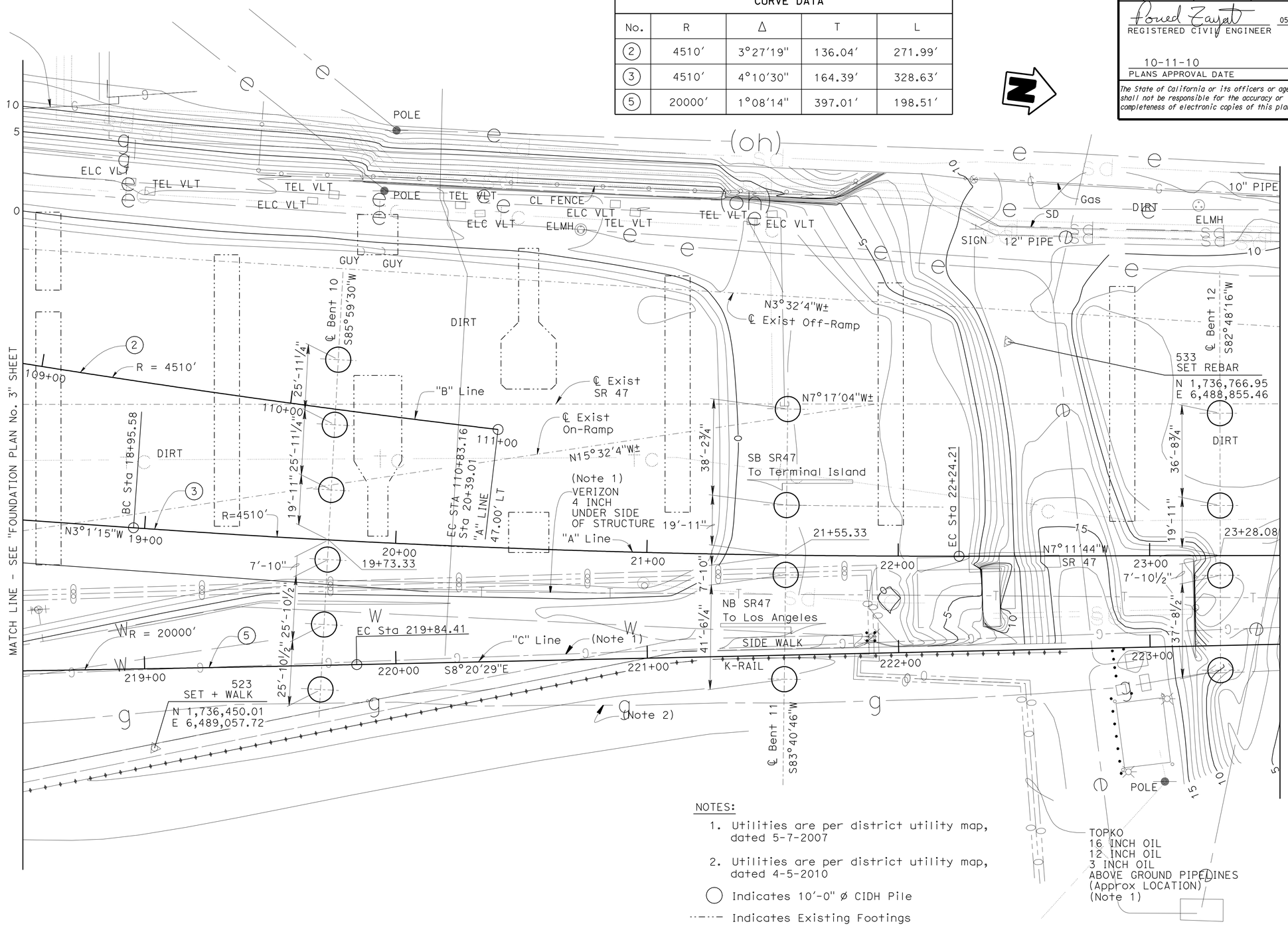

SURVEY CONTROL

PT-523
SET + WALK
86.853′ Rt. ℄ "A" Line
Sta 29+3.99
N 1736450.01
E 6489057.72
Elev. = 1.26

PT-533
SET REBAR
85.280′ Lt ℄ "A" Line
Sta 22+43.67
N 1736766.95
E 6488855.46
Elev. = 11.56

NOTES:

1. Utilities are per district utility map, dated 5-7-2007
2. Utilities are per district utility map, dated 4-5-2010

◯ Indicates 10′-0" ø CIDH Pile

Indicates Existing Footings

HNTB *Corporation*
200 E. SANDPOINTE AVENUE, SUITE 200
SANTA ANA, CALIFORNIA 92707

SCALE: 1"=20′ | VERT.DATUM NAVD 88 | HORZ.DATUM NAD 83
PHOTOGRAMMETRY AS OF: | ALIGNMENT TIES Dist. Trav. Sheet
SURVEYED BY COAST SURVEY 1207 | DRAFTED BY L. Zhang
FIELD CHECKED BY D. Chang | CHECKED BY D. Chang

DESIGN BY T. Skreslet CHECKED J. Mass
DETAILS BY K.Kubo CHECKED T. Skreslet
QUANTITIES BY L. Han CHECKED J. Mass

PREPARED FOR THE STATE OF CALIFORNIA DEPARTMENT OF TRANSPORTATION

PROJECT ENGINEER

BRIDGE NO. 53-3032
POST MILE 3.58

SCHUYLER HEIM BRIDGE (REPLACE)
FOUNDATION PLAN NO. 4

FOUNDATION PLAN SHEET (ENGLISH) (REV. 5/9/00)

ORIGINAL SCALE IN INCHES FOR REDUCED PLANS 0 1 2 3

CU 07
EA 138201

DISREGARD PRINTS BEARING EARLIER REVISION DATES
REVISION DATES (PRELIMINARY STAGE ONLY) 05-14-10 05-25-10 05-25-10 3-03-09 9-14-09 03-17-10 03-26-10 04-27-10 05-14-10

SHEET 26 OF 247

FILE => 53-3032-e-fnd04.dgn

USERNAME => trmartin DATE PLOTTED => 19-OCT-2010 TIME PLOTTED => 08:09

DIST	COUNTY	ROUTE	POST MILES TOTAL PROJECT	SHEET No.	TOTAL
07	LA	47,103	3.5/4.6, 0.0/1.1	529	1003

Foued Zayati 05-24-10
REGISTERED CIVIL ENGINEER

10-11-10
PLANS APPROVAL DATE

REGISTERED PROFESSIONAL ENGINEER FOUED ZAYATI No. C57046 Exp. 06-30-11 CIVIL STATE OF CALIFORNIA

The State of California or its officers or agents shall not be responsible for the accuracy or completeness of electronic copies of this plan sheet.

HYDROLOGIC SUMMARY

DRAINAGE AREA: N/A SQUARE FEET

	DESIGN FLOOD	BASE FLOOD	OVERTOPPING FLOOD
FREQUENCY (YEARS)	50	100	N/A
DISCHARGE (CUBIC FEET PER SECOND)	N/A	N/A	N/A
WATER SURFACE ELEV. AT BRIDGE (FEET)	7.66	7.79	N/A

FLOOD PLAIN DATA ARE BASED UPON INFORMATION AVAILABLE WHEN THE PLANS WERE PREPARED AND ARE SHOWN TO MEET FEDERAL REQUIREMENTS. THE ACCURACY OF SAID INFORMATION IS NOT WARRANTED BY THE STATE AND INTERESTED OR AFFECTED PARTIES SHOULD MAKE THEIR OWN INVESTIGATIONS.

CURVE DATA

No.	R	Δ	T	L
34	20000"	1°32'18"	268.49'	536.94'

NOTES:

1. Utilities are per district utility map, dated 5-7-2007
2. Utilities are per district utility map, dated 4-5-2010

◯ Indicates 12'-0" ø CIDH Piles

-·-·- Indicates Existing Footings

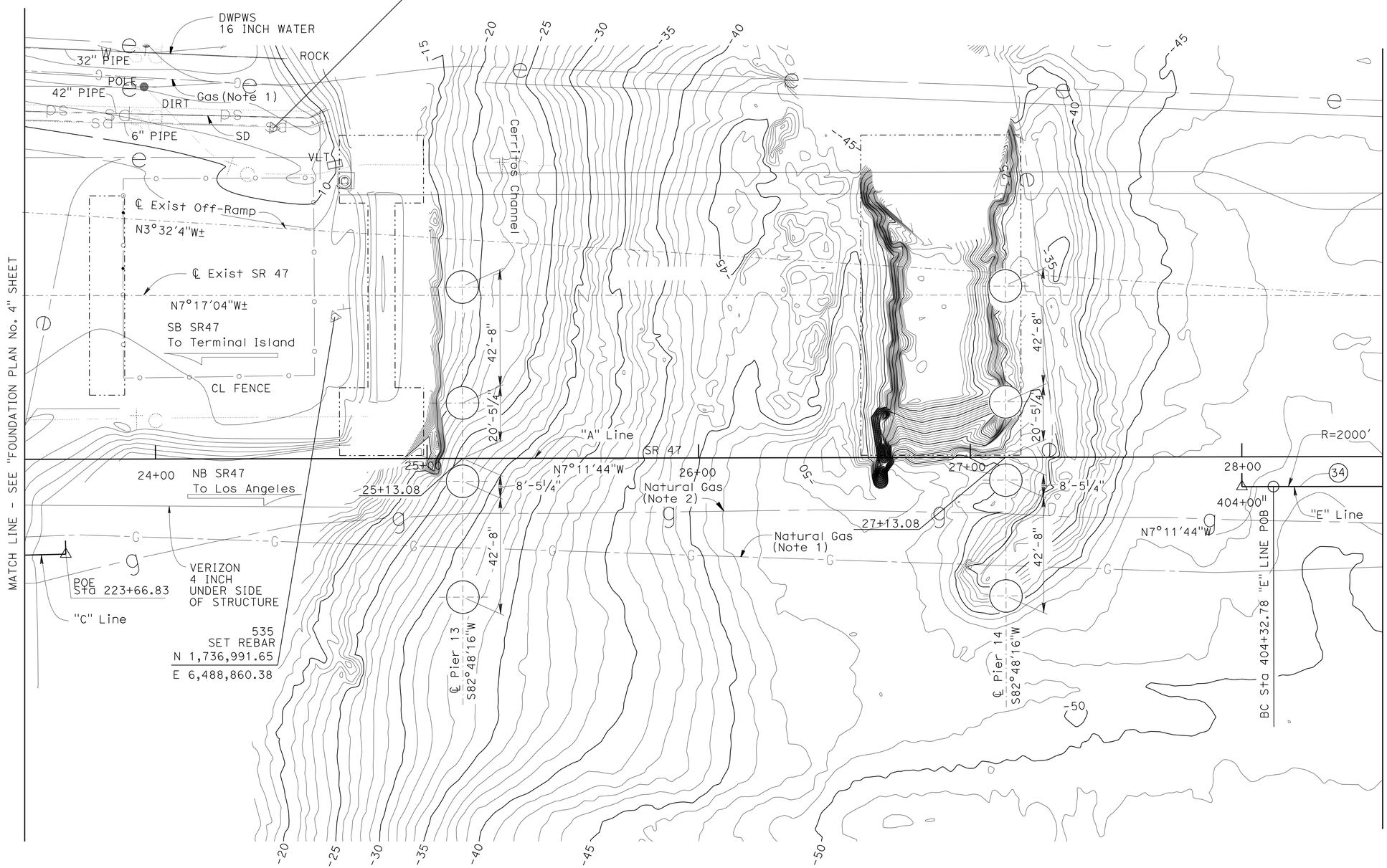

SURVEY CONTROL

PT-535
SET REBAR
52.253' Lt ℄ "A" Line
Sta 24+66.03
N 1736991.65
E 6488860.38
Elev. = 8.08

PT-86000
TBM SOUTH SIDE
121.813' Lt. ℄ "A" Line
Sta 24+66.03
N 1736960.63
E 6488794.18
Elev. = 13.38

HNTB *Corporation*
200 E. SANDPOINTE AVENUE, SUITE 200
SANTA ANA, CALIFORNIA 92707

SCALE: 1"=20'	VERT.DATUM NAVD 88	HORZ.DATUM NAD 83	
PHOTOGRAMMETRY AS OF:		ALIGNMENT TIES Dist. Trav. Sheet	
SURVEYED	BY COAST SURVEY 1207	DRAFTED	BY L. Zhang
FIELD CHECKED	BY D. Chang	CHECKED	BY D. Chang

DESIGN	BY T. Skreslet	CHECKED J. Mass
DETAILS	BY K. Kubo	CHECKED T. Skreslet
QUANTITIES	BY L. Han	CHECKED J. Mass

PREPARED FOR THE
STATE OF CALIFORNIA
DEPARTMENT OF TRANSPORTATION

PROJECT ENGINEER

BRIDGE NO. 53-3032
POST MILE 3.58

SCHUYLER HEIM BRIDGE (REPLACE)
FOUNDATION PLAN NO. 5

FOUNDATION PLAN SHEET (ENGLISH) (REV. 5/9/00)

ORIGINAL SCALE IN INCHES FOR REDUCED PLANS 0 1 2 3

CU 07
EA 138201

DISREGARD PRINTS BEARING EARLIER REVISION DATES

REVISION DATES (PRELIMINARY STAGE ONLY) 05-21-10 05-25-10 12-28-08 3-05-09 9-14-09 03-26-10 04-27-10 05-14-10 05-20-10

SHEET 27 OF 247

FILE => 53-3032-e-fnd05.dgn

USERNAME => trmart1n DATE PLOTTED => 19-OCT-2010 TIME PLOTTED => 08:09

DIST	COUNTY	ROUTE	POST MILES TOTAL PROJECT	SHEET No.	TOTAL
07	LA	47,103	3.5/4.6, 0.0/1.1	530	1003

Foued Zayati 05-24-10
REGISTERED CIVIL ENGINEER

10-11-10
PLANS APPROVAL DATE

REGISTERED PROFESSIONAL ENGINEER FOUED ZAYATI No. C57046 Exp. 06-30-11 CIVIL STATE OF CALIFORNIA

The State of California or its officers or agents shall not be responsible for the accuracy or completeness of electronic copies of this plan sheet.

HYDROLOGIC SUMMARY

DRAINAGE AREA: N/A SQUARE FEET

	DESIGN FLOOD	BASE FLOOD	OVERTOPPING FLOOD
FREQUENCY (YEARS)	50	100	N/A
DISCHARGE (CUBIC FEET PER SECOND)	N/A	N/A	N/A
WATER SURFACE ELEV. AT BRIDGE (FEET)	7.66	7.79	N/A

FLOOD PLAIN DATA ARE BASED UPON INFORMATION AVAILABLE WHEN THE PLANS WERE PREPARED AND ARE SHOWN TO MEET FEDERAL REQUIREMENTS. THE ACCURACY OF SAID INFORMATION IS NOT WARRANTED BY THE STATE AND INTERESTED OR AFFECTED PARTIES SHOULD MAKE THEIR OWN INVESTIGATIONS.

CURVE DATA

No.	R	Δ	T	L
34	20000"	1°32'18"	268.49'	536.94'

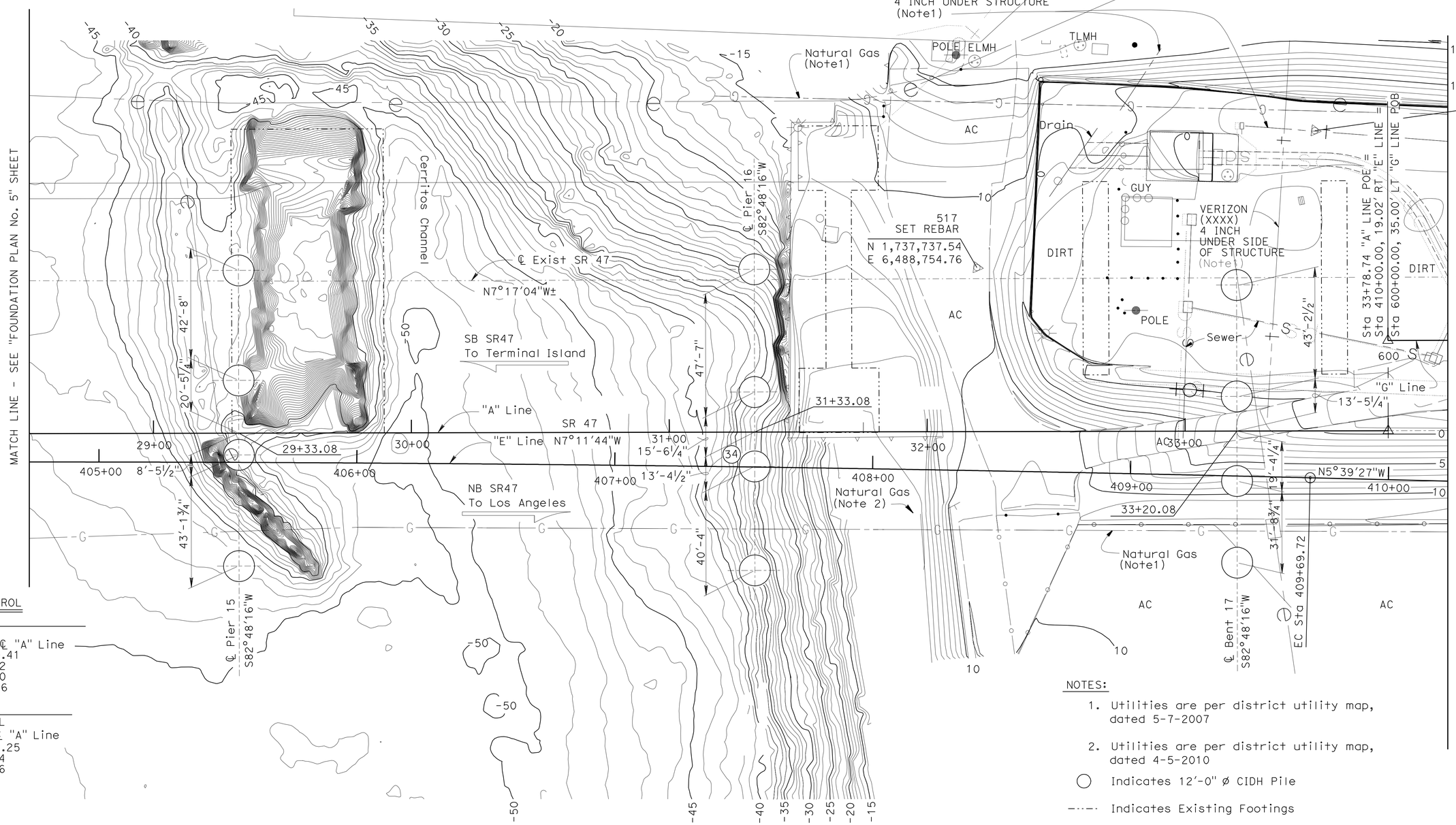

SURVEY CONTROL

PT-516
SET REBAR
116.456' Lt ℄ "A" Line
Sta 33 + 50.41
N 1737861.02
E 6488685.90
Elev. = -2.56

PT-517
SET MAG NAIL
63.606' Lt. ℄ "A" Line
Sta 32 + 19.25
N 1737737.54
E 6488754.76
Elev. = 9.21

NOTES:

1. Utilities are per district utility map, dated 5-7-2007
2. Utilities are per district utility map, dated 4-5-2010

○ Indicates 12'-0" ø CIDH Pile

—·—·— Indicates Existing Footings

HNTB *Corporation*
200 E. SANDPOINTE AVENUE, SUITE 200
SANTA ANA, CALIFORNIA 92707

SCALE: 1"=20'	VERT.DATUM NAVD 88	HORZ.DATUM NAD 83	
PHOTOGRAMMETRY AS OF:		ALIGNMENT TIES Dist. Trav. Sheet	
SURVEYED	BY COAST SURVEY 1207	DRAFTED	BY L. Zhang
FIELD CHECKED	BY D. Chang	CHECKED	BY D. Chang

DESIGN	BY T. Skreslet	CHECKED J. Mass
DETAILS	BY K. Kubo	CHECKED T. Skreslet
QUANTITIES	BY L. Han	CHECKED J. Mass

PREPARED FOR THE STATE OF CALIFORNIA DEPARTMENT OF TRANSPORTATION

PROJECT ENGINEER

BRIDGE NO. 53-3032
POST MILE 3.58

SCHUYLER HEIM BRIDGE (REPLACE)
FOUNDATION PLAN NO. 6

FOUNDATION PLAN SHEET (ENGLISH) (REV. 5/9/00)

ORIGINAL SCALE IN INCHES FOR REDUCED PLANS 0 1 2 3

CU 07
EA 138201

DISREGARD PRINTS BEARING EARLIER REVISION DATES

REVISION DATES (PRELIMINARY STAGE ONLY) 05-20-10 05-21-10 05-25-10 12-29-08 3-04-09 9-18-09 03-26-10 04-27-10 05-14-10

SHEET 28 OF 247

FILE => 53-3032-e-fnd06.dgn

USERNAME => trmartin DATE PLOTTED => 19-OCT-2010 TIME PLOTTED => 08:09

DIST	COUNTY	ROUTE	POST MILES TOTAL PROJECT	SHEET No.	TOTAL
07	LA	47,103	3.5/4.6, 0.0/1.1	531	1003

Foued Zayati 05-24-10
REGISTERED CIVIL ENGINEER

10-11-10
PLANS APPROVAL DATE

REGISTERED PROFESSIONAL ENGINEER FOUED ZAYATI No. C57046 Exp. 06-30-11 CIVIL STATE OF CALIFORNIA

The State of California or its officers or agents shall not be responsible for the accuracy or completeness of electronic copies of this plan sheet.

CURVE DATA				
No.	R	Δ	T	L
7	2710′	3°29′27″	82.58′	165.11′
8	9800′	1°06′26″	94.70′	189.39′
8A	15000′	2°25′00″	316.39′	632.68′

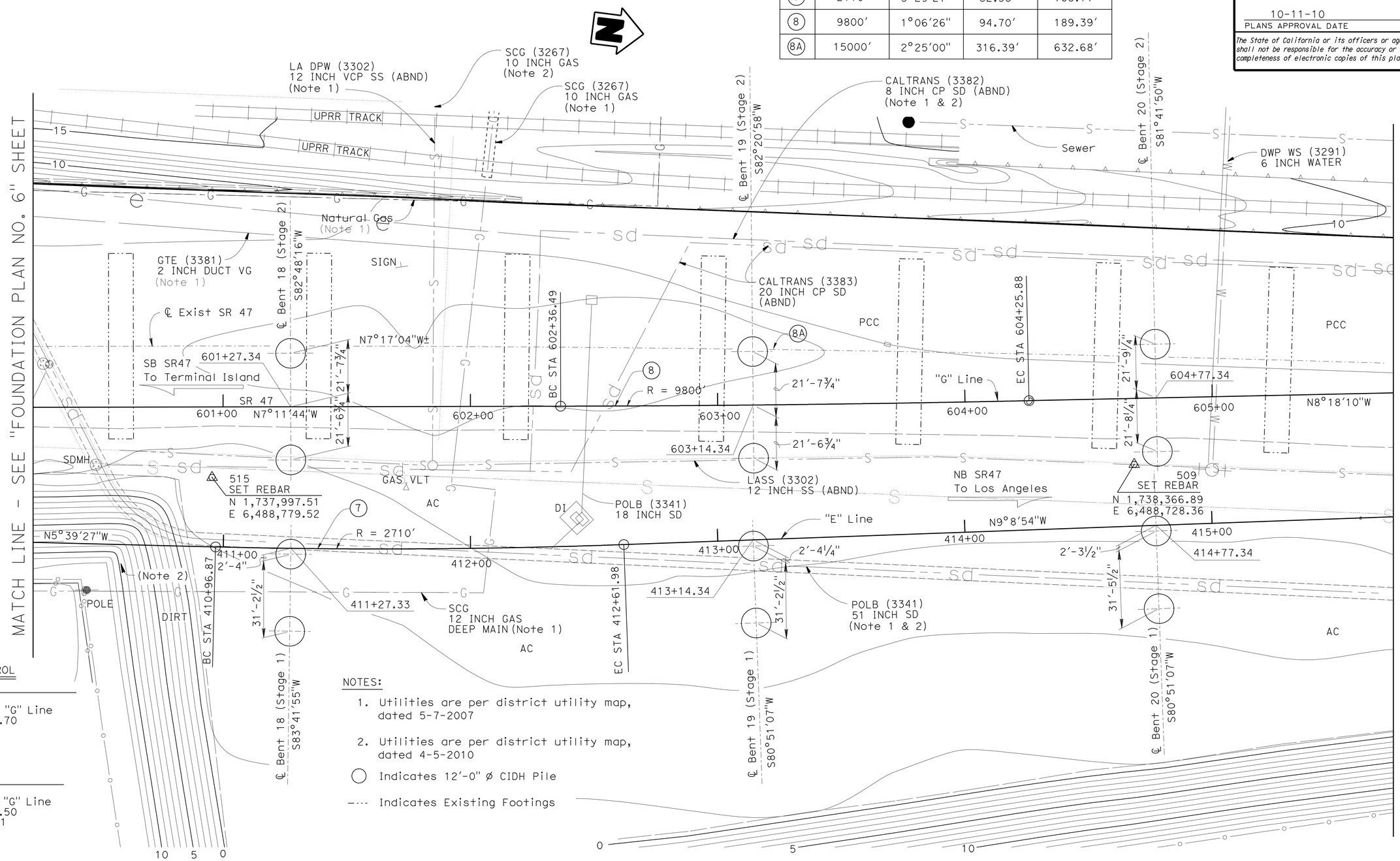

SURVEY CONTROL

PT-PMHV509
SET MAG NAIL
26.671′ Lt. ℄ "G" Line
Sta. 604+968.70
N 1738366.89
E 6488728.36
Elev. = -3.61

PT-PMHV515
SET MAG NAIL
28.517 Rt. ℄ "G" Line
Sta. 600+995.50
N 1737997.51
E 6488779.52
Elev. = -2.21

NOTES:

1. Utilities are per district utility map, dated 5-7-2007
2. Utilities are per district utility map, dated 4-5-2010

○ Indicates 12′-0″ ø CIDH Pile

—·— Indicates Existing Footings

HNTB *Corporation*
200 E. SANDPOINTE AVENUE, SUITE 200
SANTA ANA, CALIFORNIA 92707

SCALE: 1"=20′	VERT.DATUM NAVD 88	HORZ.DATUM NAD 83	
PHOTOGRAMMETRY AS OF:		ALIGNMENT TIES Dist. Trav. Sheet	
SURVEYED	BY COAST SURVEY 1207	DRAFTED	BY L. Zhang
FIELD CHECKED	BY D. Chang	CHECKED	BY D. Chang

DESIGN	BY T. Skreslet	CHECKED J. Mass
DETAILS	BY K. Kubo	CHECKED T. Skreslet
QUANTITIES	BY L. Han	CHECKED J. Mass

PREPARED FOR THE STATE OF CALIFORNIA DEPARTMENT OF TRANSPORTATION

PROJECT ENGINEER

CU 07
EA 138201

BRIDGE NO. 53-3032
POST MILE 3.58

SCHUYLER HEIM BRIDGE (REPLACE)
FOUNDATION PLAN NO. 7

FOUNDATION PLAN SHEET (ENGLISH) (REV. 5/9/00)

ORIGINAL SCALE IN INCHES FOR REDUCED PLANS 0 1 2 3

DISREGARD PRINTS BEARING EARLIER REVISION DATES

REVISION DATES (PRELIMINARY STAGE ONLY): 05-25-10 09-04-08 12-24-08 3-03-09 9-14-09 03-26-10 04-27-10 05-14-10 05-20-10 05-24-10

SHEET 29 OF 247

FILE => 53-3032-e-fnd07.dgn

USERNAME => trphi16 DATE PLOTTED => 19-OCT-2010 TIME PLOTTED => 10:51

DIST	COUNTY	ROUTE	POST MILES TOTAL PROJECT	SHEET No.	TOTAL
07	LA	47,103	3.5/4.6, 0.0/1.1	532	1003

Foued Zayati 05-24-10
REGISTERED CIVIL ENGINEER

10-11-10
PLANS APPROVAL DATE

The State of California or its officers or agents shall not be responsible for the accuracy or completeness of electronic copies of this plan sheet.

REGISTERED PROFESSIONAL ENGINEER FOUED ZAYATI No. C57046 Exp. 06-30-11 CIVIL STATE OF CALIFORNIA

Bridge Location
Ⓒ - 32.18′ Lt ℄ "A" Line, Sta 610+17.88, Elev=15.035±
Ⓓ - 43.41′ Rt ℄ "A" Line, Sta 610+17.88, Elev=14.576±

CURVE DATA				
No.	R	Δ	T	L
9	2210′	6°40′25"	128.85′	257.42′
12	2130′	7°8′24"	132.94′	265.54′
15	3900′	3°34′6"	21.49′	242.90′

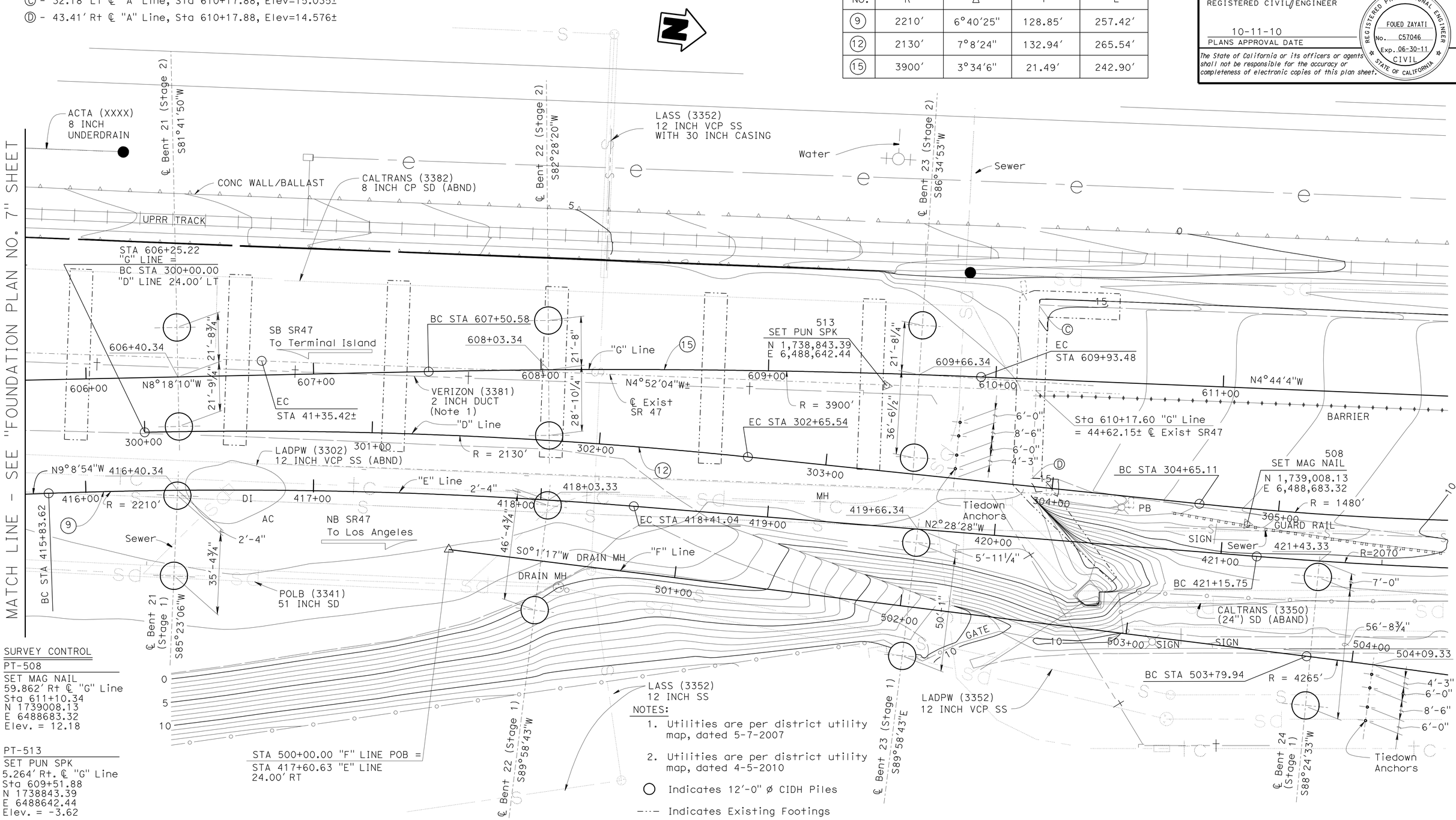

SURVEY CONTROL

PT-508
SET MAG NAIL
59.862′ Rt ℄ "G" Line
Sta 611+10.34
N 1739008.13
E 6488683.32
Elev. = 12.18

PT-513
SET PUN SPK
5.264′ Rt. ℄ "G" Line
Sta 609+51.88
N 1738843.39
E 6488642.44
Elev. = -3.62

NOTES:
1. Utilities are per district utility map, dated 5-7-2007
2. Utilities are per district utility map, dated 4-5-2010

○ Indicates 12′-0" ø CIDH Piles
-·-·- Indicates Existing Footings

HNTB *Corporation*
200 E. SANDPOINTE AVENUE, SUITE 200
SANTA ANA, CALIFORNIA 92707

SCALE: 1"=20′	VERT.DATUM NAVD 88	HORZ.DATUM NAD 83
PHOTOGRAMMETRY AS OF:	ALIGNMENT TIES Dist. Trav. Sheet	
SURVEYED BY COAST SURVEY 1207	DRAFTED BY L. Zhang	
FIELD CHECKED BY D. Chang	CHECKED BY D. Chang	

	BY	CHECKED
DESIGN	T. Skreslet	J. Mass
DETAILS	K. Kubo	T. Skreslet
QUANTITIES	L. Han	J. Mass

PREPARED FOR THE STATE OF CALIFORNIA DEPARTMENT OF TRANSPORTATION

PROJECT ENGINEER

BRIDGE NO. 53-3032
POST MILE 3.58

SCHUYLER HEIM BRIDGE (REPLACE)
FOUNDATION PLAN NO. 8

FOUNDATION PLAN SHEET (ENGLISH) (REV. 5/9/09)

ORIGINAL SCALE IN INCHES FOR REDUCED PLANS 0 1 2 3

CU 07
EA 138201

DISREGARD PRINTS BEARING EARLIER REVISION DATES

REVISION DATES (PRELIMINARY STAGE ONLY) 05-25-10 ~~09-11-08~~ ~~12-29-08~~ ~~3-03-09~~ ~~9-18-09~~ ~~3-12-10~~ ~~3-26-10~~ ~~05-14-10~~ ~~05-20-10~~ ~~05-24-10~~

SHEET 30 OF 247

FILE => 53-3032-e-fnd08.dgn

USERNAME => rtrphtis DATE PLOTTED => 19-OCT-2010 TIME PLOTTED => 10:52

DIST	COUNTY	ROUTE	POST MILES TOTAL PROJECT	SHEET No	TOTAL SHEETS
07	LA	47,103	3.5/4.6, 0.0/1.1	533	1003

REGISTERED CIVIL ENGINEER — DATE 05-24-10

10-11-10
PLANS APPROVAL DATE

The State of California or its officers or agents shall not be responsible for the accuracy or completeness of electronic copies of this plan sheet.

REGISTERED PROFESSIONAL ENGINEER — FOUED ZAYATI — No. C57046 — Exp. 06-30-11 — CIVIL — STATE OF CALIFORNIA

NOTES:

1. For Sign Pedestal Details, see "ABUTMENT 1 DETAILS NO. 4" and "ABUTMENT 1 DETAILS NO. 5" sheets
2. For Joint Seal Assembly Blockout dimensions, see "JOINT SEAL ASSEMBLY DETAILS NO. 1" SHEET.

Indicates Limits of Joint Seal Blockout.

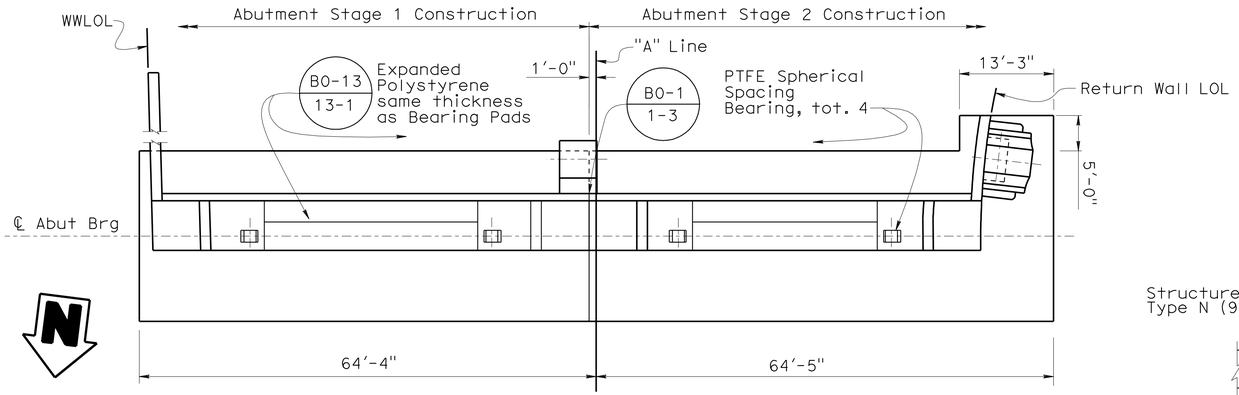

PLAN
3/32" 1'-0"

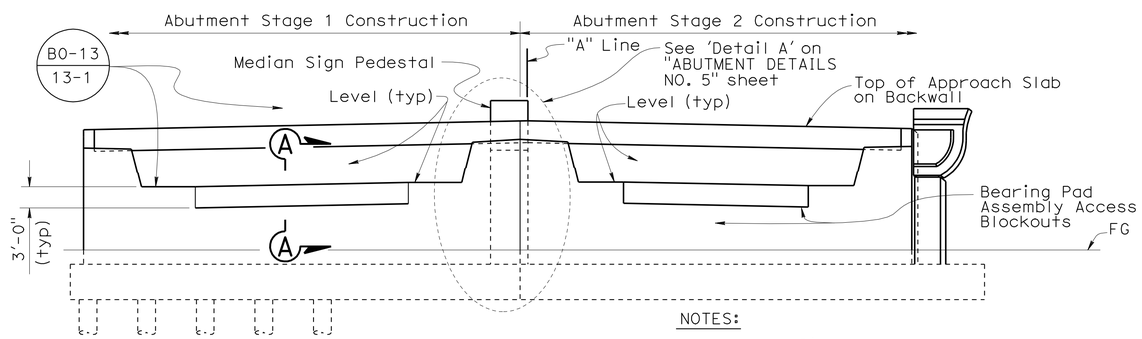

ELEVATION
3/32" 1'-0"

NOTES:

1. Not all Piles are shown.
2. Concrete barriers not shown.

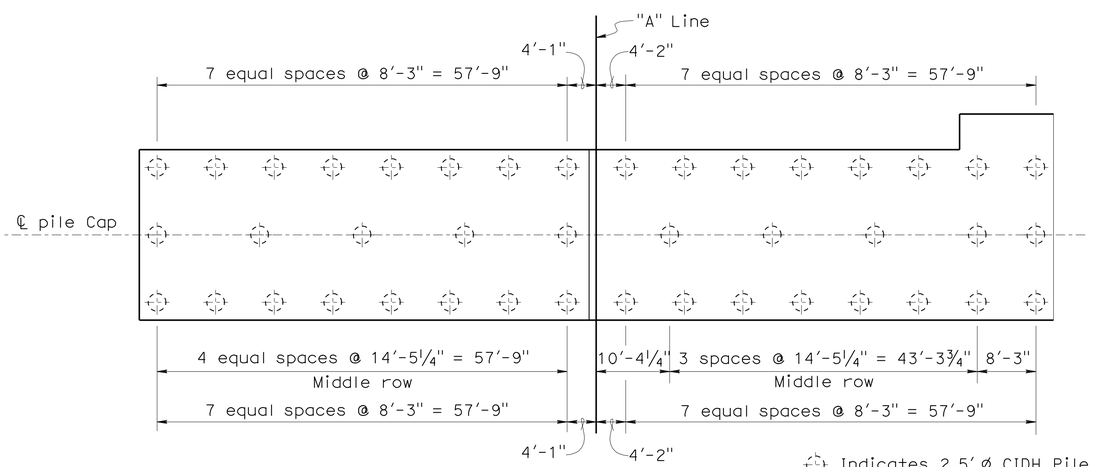

Indicates 2.5' ø CIDH Pile

FOOTING - PLAN
3/32" 1'-0"

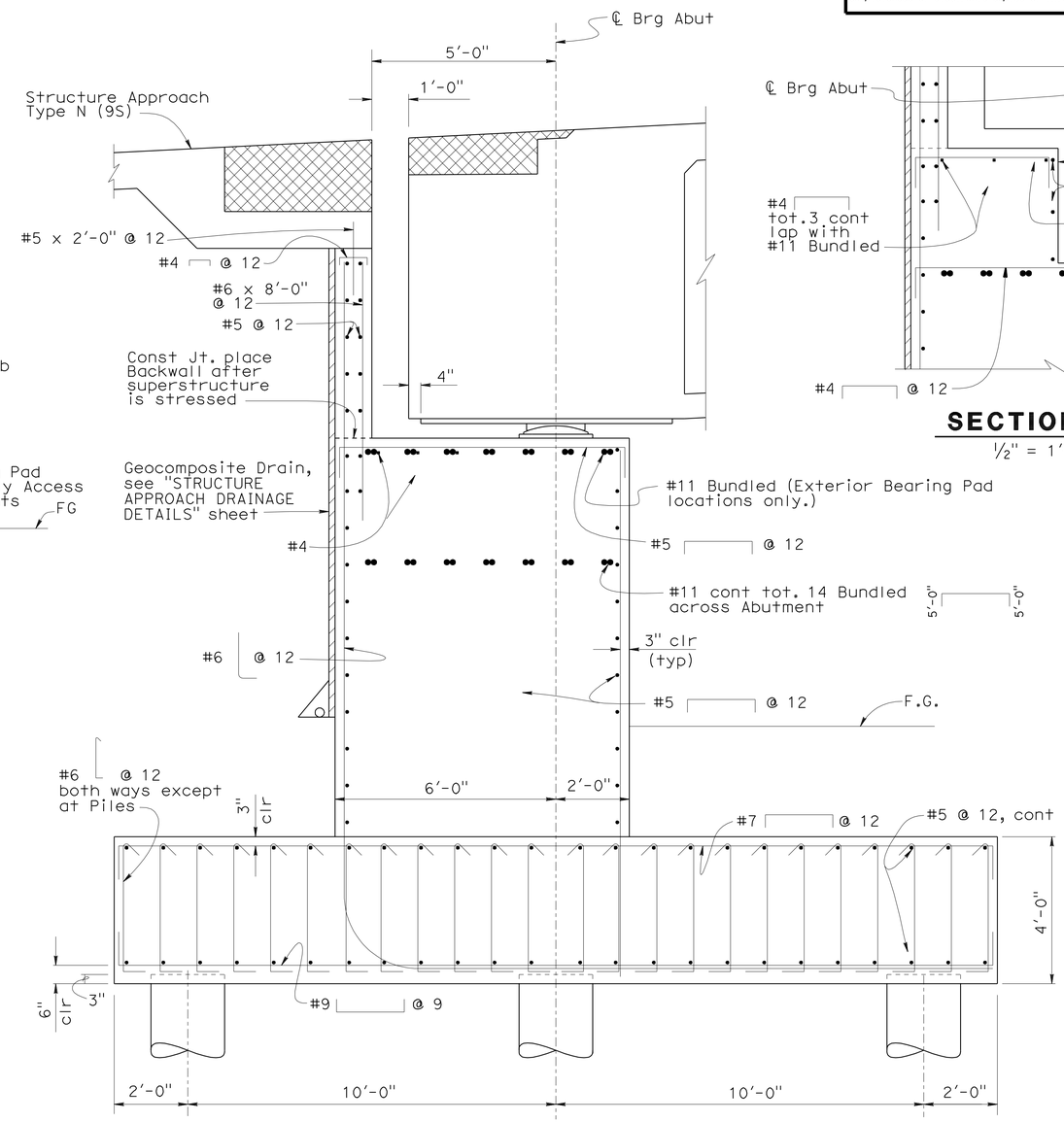

SECTION AT BEARING PADS
1/2" = 1'-0"

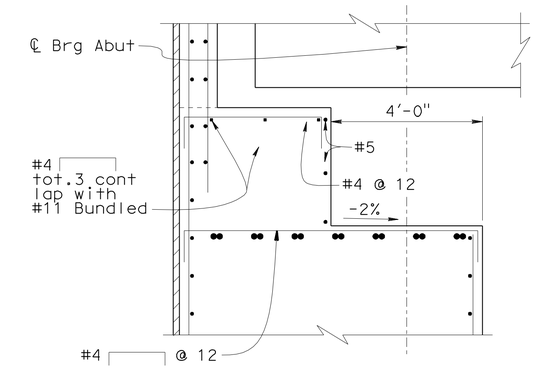

SECTION A-A
1/2" = 1'-0"

DESIGN	BY S. Galgiani	CHECKED J. Lane	
DETAILS	BY T. Nguyen	CHECKED J. Lane	
QUANTITIES	BY S. Galgiani	CHECKED S. Hegazi	

STATE OF CALIFORNIA
DEPARTMENT OF TRANSPORTATION

DIVISION OF ENGINEERING SERVICES
STRUCTURE DESIGN
DESIGN BRANCH 14

BRIDGE NO. 53-3032
POST MILE 3.58

SCHUYLER HEIM BRIDGE (REPLACE)
ABUTMENT 1 LAYOUT

STRUCTURES DESIGN DETAIL SHEET (ENGLISH) (REV. 10/25/05)

ORIGINAL SCALE IN INCHES FOR REDUCED PLANS 0 1 2 3

CU 07-271
EA 138201

DISREGARD PRINTS BEARING EARLIER REVISION DATES

REVISION DATES: 05-12-08 06-05-08 06-27-08 02-04-10 04-28-10 05-04-10 05-14-10 05-16-10 5-18-10 5-28-10

SHEET 31 OF 247

FILE => 53-3032-f-a01_lo.dgn

USERNAME => trphtis DATE PLOTTED => 19-OCT-2010 TIME PLOTTED => 10:52

DIST	COUNTY	ROUTE	POST MILES TOTAL PROJECT	SHEET No	TOTAL SHEETS
07	LA	47,103	3.5/4.6, 0.0/1.1	534	1003

REGISTERED CIVIL ENGINEER 05-24-10 DATE

10-11-10
PLANS APPROVAL DATE

REGISTERED PROFESSIONAL ENGINEER FOUED ZAYATI No. C57046 Exp. 06-30-11 CIVIL STATE OF CALIFORNIA

The State of California or its officers or agents shall not be responsible for the accuracy or completeness of electronic copies of this plan sheet.

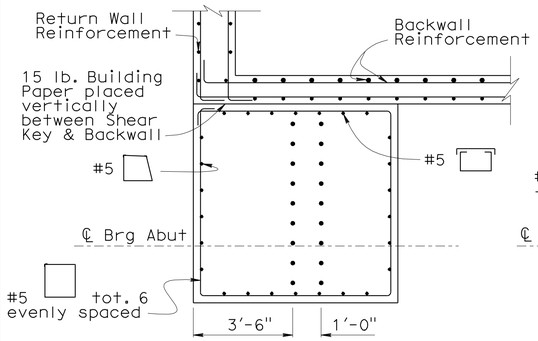

SECTION A-A

3/8" = 1'-0"

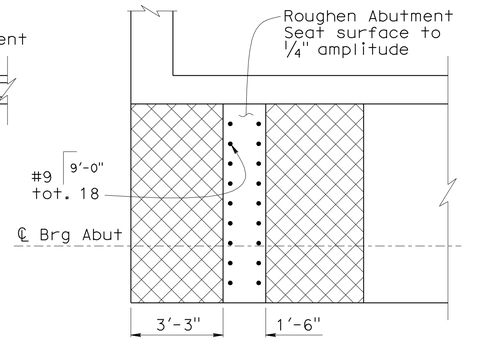

Indicates Limits of 15 LB Building Paper

SECTION B-B

3/8" = 1'-0"

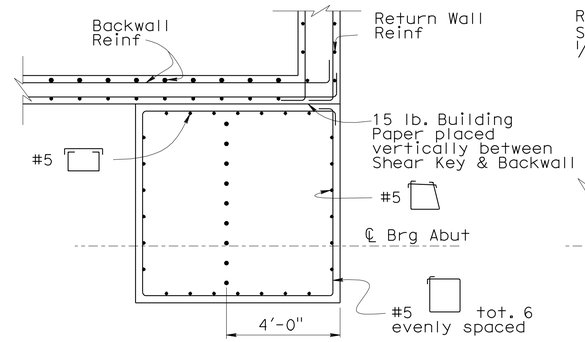

SECTION C-C

3/8" = 1'-0"

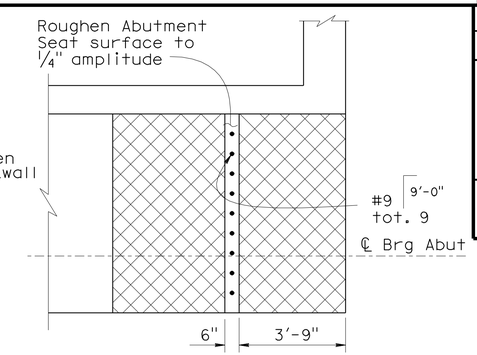

Indicates Limits of 15 LB Building Paper

SECTION D-D

3/8" = 1'-0"

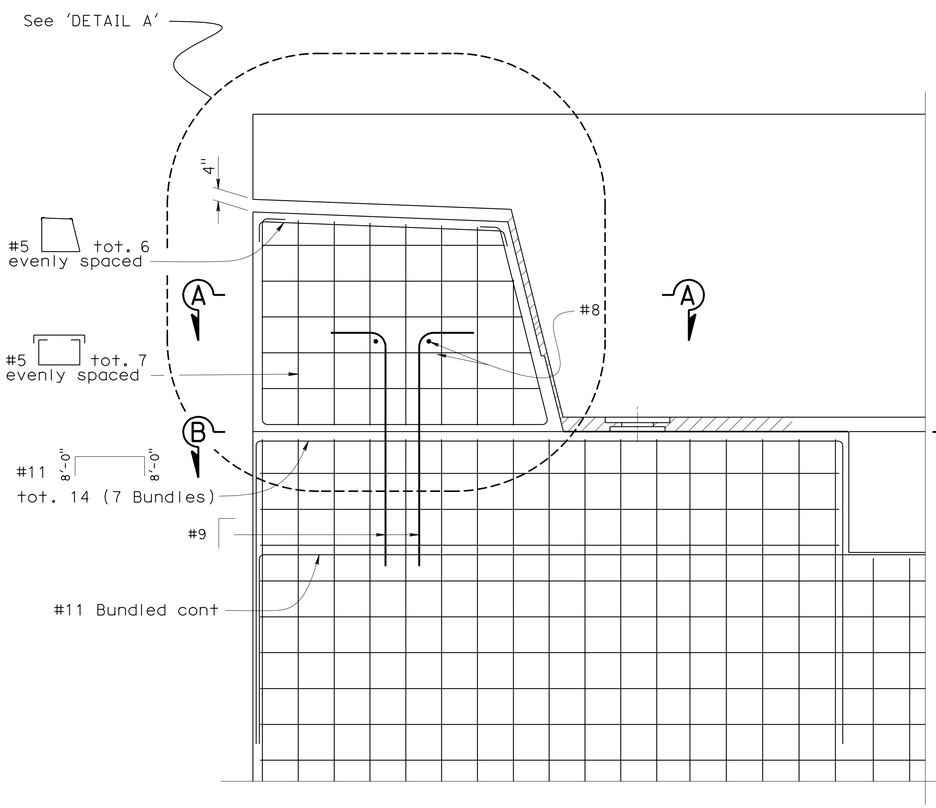

EXTERIOR SHEAR KEY

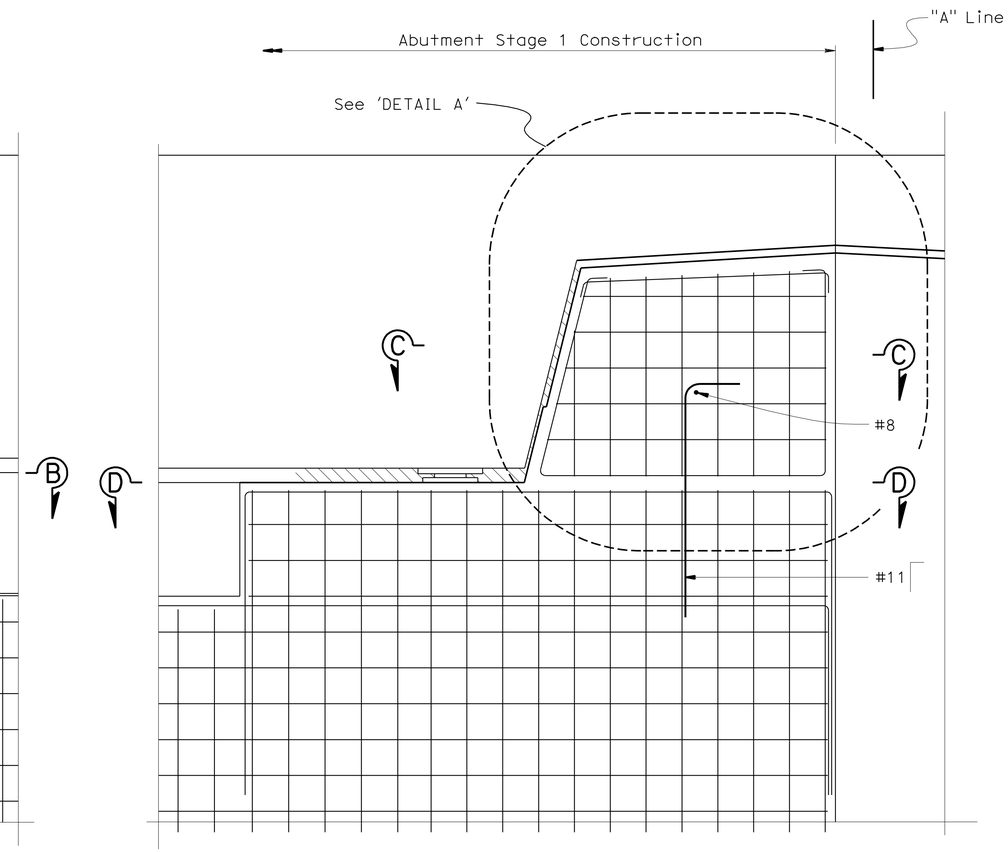

INTERIOR SHEAR KEY

NOTE
Abutment Stage 1 Construction shown,
Abutment Stage 2 Construction similar.

ELEVATION

1/2" = 1'-0"

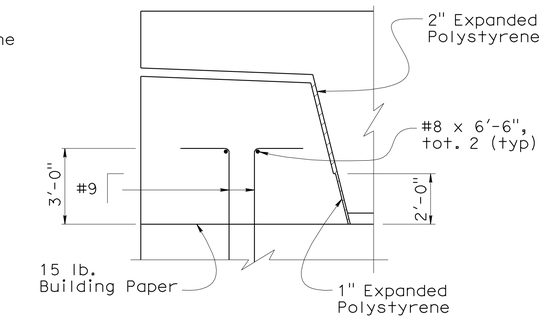

DETAIL A

3/8" = 1'-0"

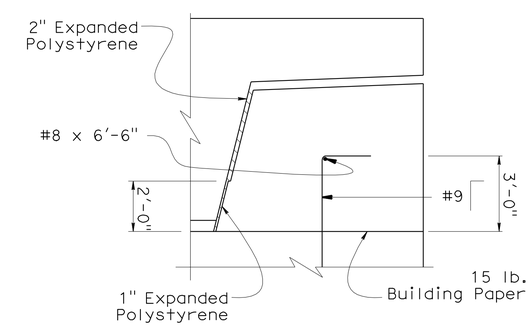

DETAIL B

3/8" = 1'-0"

DESIGN	BY S. Galgiani	CHECKED J. Lane	
DETAILS	BY K. Kubo	CHECKED J. Lane	
QUANTITIES	BY S. Galgiani	CHECKED S. Hegazi	

STATE OF CALIFORNIA
DEPARTMENT OF TRANSPORTATION

DIVISION OF ENGINEERING SERVICES
STRUCTURE DESIGN
DESIGN BRANCH 14

BRIDGE NO. 53-3032
POST MILE 3.58

SCHUYLER HEIM BRIDGE (REPLACE)
ABUTMENT 1 DETAILS NO. 1

STRUCTURES DESIGN DETAIL SHEET (ENGLISH) (REV. 10/25/05)

ORIGINAL SCALE IN INCHES FOR REDUCED PLANS 0 1 2 3

CU 07-271
EA 138201

DISREGARD PRINTS BEARING EARLIER REVISION DATES

REVISION DATES: 04-14-08 04-15-08 04-17-08 06-26-08 09-17-09 11-15-09 05-04-10 05-14-10 05-16-10

SHEET 32 OF 247

FILE => 53-3032-f-a01dt01.dgn

USERNAME => trphilis DATE PLOTTED => 19-OCT-2010 TIME PLOTTED => 10:52

DIST	COUNTY	ROUTE	POST MILES TOTAL PROJECT	SHEET No	TOTAL SHEETS
07	LA	47,103	3.5/4.6, 0.0/1.1	535	1003

REGISTERED CIVIL ENGINEER — DATE 05-24-10

10-11-10
PLANS APPROVAL DATE

REGISTERED PROFESSIONAL ENGINEER — FOUED ZAYATI — No. C57046 — Exp. 06-30-11 — CIVIL — STATE OF CALIFORNIA

The State of California or its officers or agents shall not be responsible for the accuracy or completeness of electronic copies of this plan sheet.

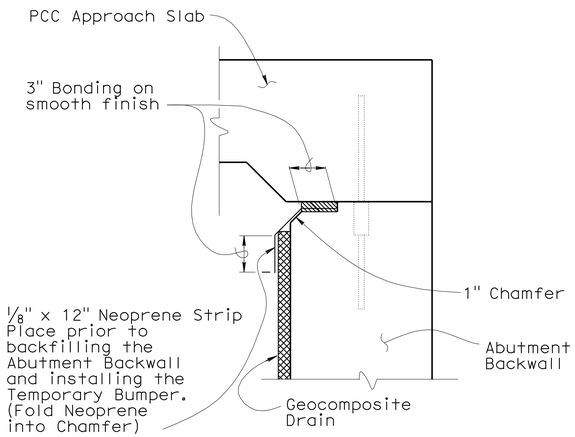

JOINT PROTECTION DETAIL

No Scale

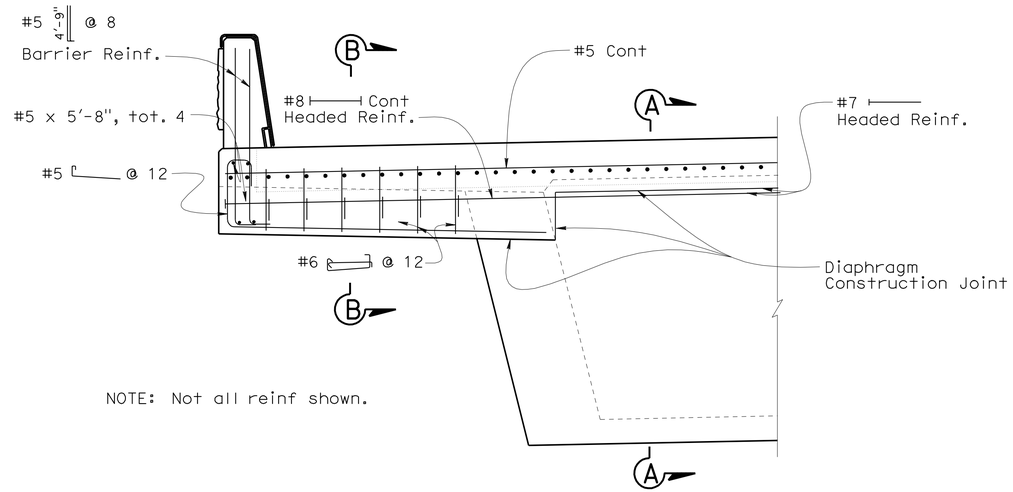

NOTE: Not all reinf shown.

ABUTMENT DIAPHRAGM - PART ELEVATION

1/2" = 1'-0"

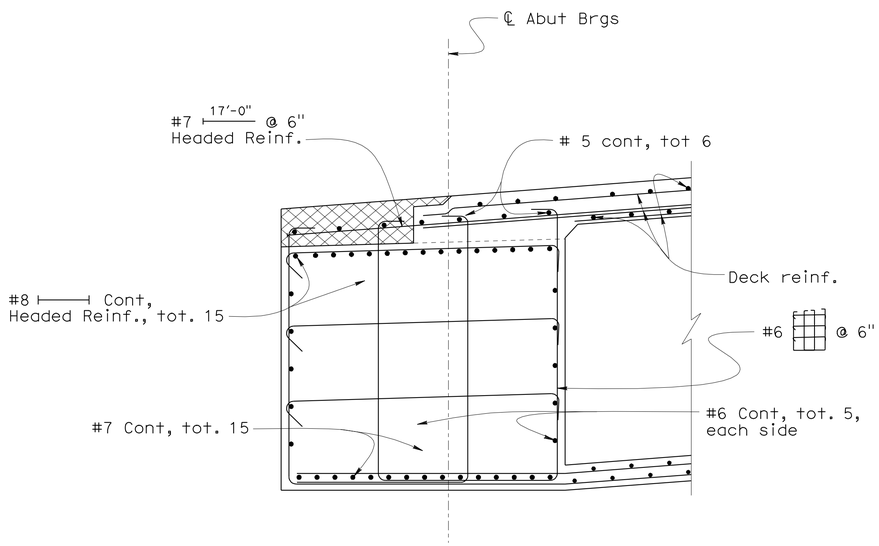

SECTION A-A

1/2"=1'-0"

B8-5 B7-8

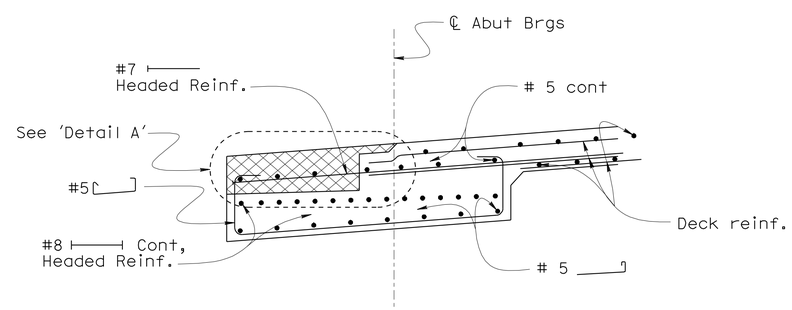

SECTION B-B

1/2"=1'-0"

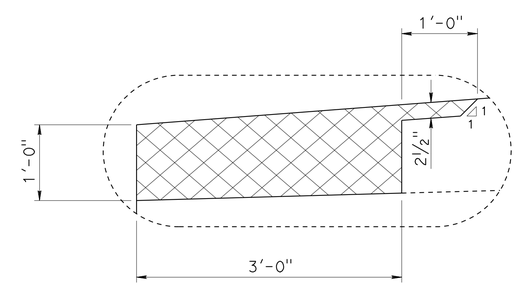

JOINT SEAL BLOCKOUT DETAIL

1"=1'-0"

DESIGN	BY S. Galgiani	CHECKED J. Lane	
DETAILS	BY K. Kubo	CHECKED J. Lane	
QUANTITIES	BY S. Galgiani	CHECKED S. Hegazi	

STATE OF CALIFORNIA
DEPARTMENT OF TRANSPORTATION

DIVISION OF ENGINEERING SERVICES
STRUCTURE DESIGN
DESIGN BRANCH 14

BRIDGE NO. 53-3032
POST MILE 3.58

SCHUYLER HEIM BRIDGE (REPLACE)
ABUTMENT 1 DETAILS NO. 2

STRUCTURES DESIGN DETAIL SHEET (ENGLISH) (REV. 10/25/05)

ORIGINAL SCALE IN INCHES FOR REDUCED PLANS 0 1 2 3

CU 07-271
EA 138201

DISREGARD PRINTS BEARING EARLIER REVISION DATES

REVISION DATES: 05-06-08 05-20-08 05-22-08 06-25-08 8-31-09 9-17-09 4-28-10 05-14-10

SHEET 33 OF 247

FILE => 53-3032-f-a01dt02.dgn

USERNAME => trphnis DATE PLOTTED => 19-OCT-2010 TIME PLOTTED => 10:52

DIST	COUNTY	ROUTE	POST MILES TOTAL PROJECT	SHEET No	TOTAL SHEETS
07	LA	47,103	3.5/4.6, 0.0/1.1	536	1003

REGISTERED CIVIL ENGINEER — DATE: 05-24-10

10-11-10
PLANS APPROVAL DATE

REGISTERED PROFESSIONAL ENGINEER — FOUED ZAYATI — No. C57046 — Exp. 06-30-11 — CIVIL — STATE OF CALIFORNIA

The State of California or its officers or agents shall not be responsible for the accuracy or completeness of electronic copies of this plan sheet.

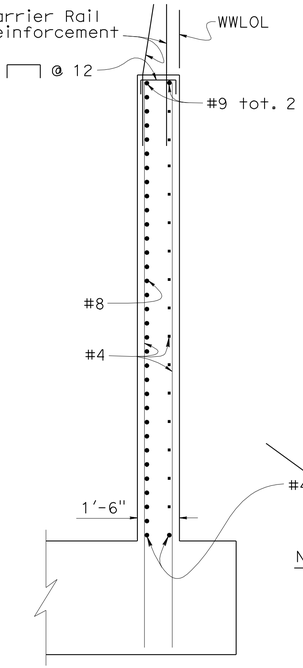

NOTE:

Piles and Footing reinforcement not shown

SECTION A-A

3/8" = 1'-0"

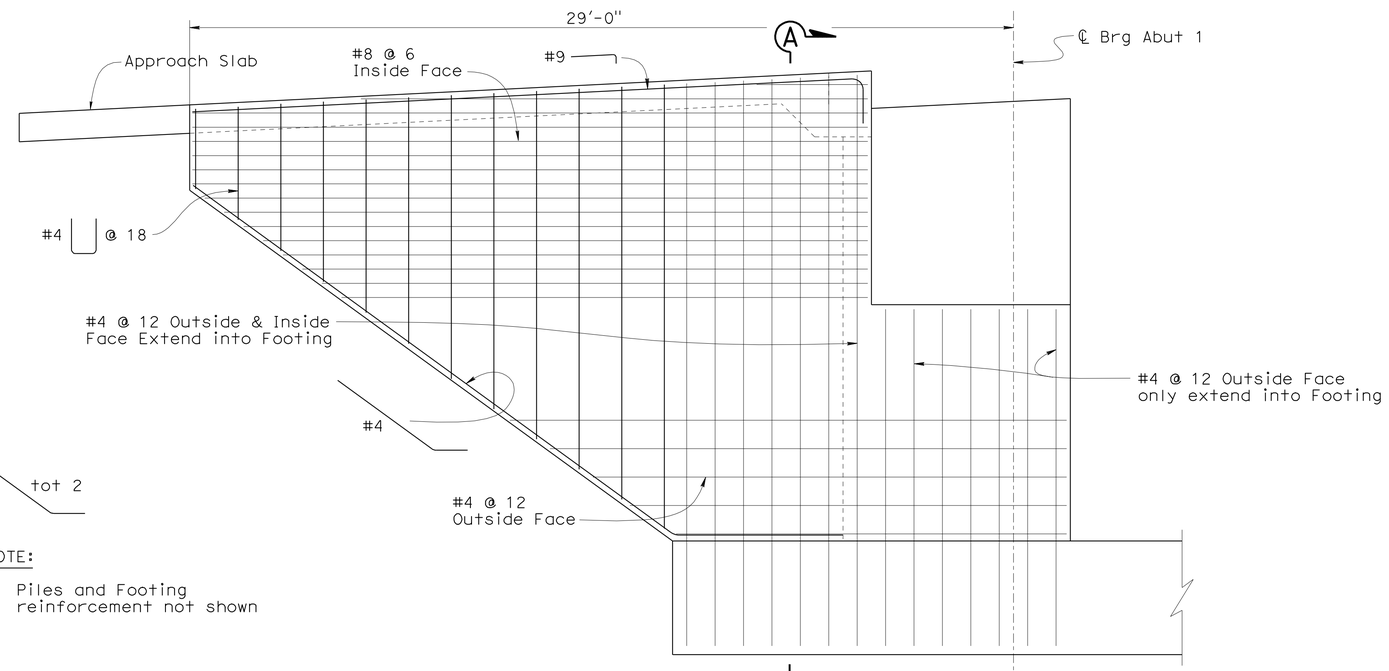

WINGWALL ELEVATION (STAGE 2)

3/8" = 1'-0"

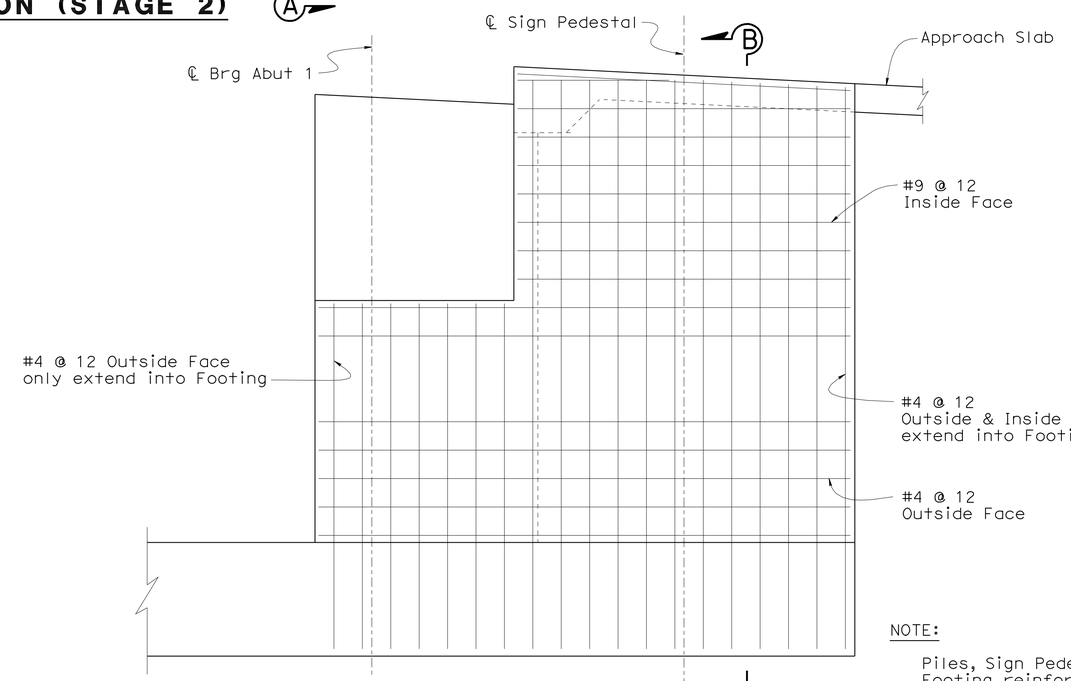

RETURN WALL ELEVATION (STAGE 3)

3/8" = 1'-0"

NOTE:

Piles, Sign Pedestal and Footing reinforcement not shown

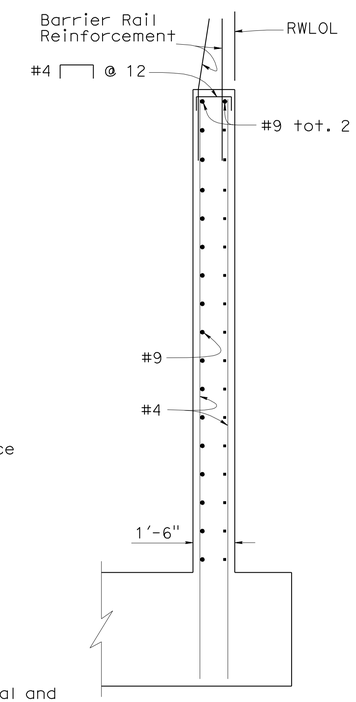

SECTION B-B

3/8" = 1'-0"

DESIGN	BY S. Galgiani	CHECKED J. Lane	
DETAILS	BY K. Kubo	CHECKED J. Lane	
QUANTITIES	BY S. Galgiani	CHECKED S. Hegazi	

STATE OF CALIFORNIA
DEPARTMENT OF TRANSPORTATION

DIVISION OF ENGINEERING SERVICES
STRUCTURE DESIGN
DESIGN BRANCH 14

BRIDGE NO. 53-3032
POST MILE 3.58

SCHUYLER HEIM BRIDGE (REPLACE)
ABUTMENT 1 DETAILS NO. 3

STRUCTURES DESIGN DETAIL SHEET (ENGLISH) (REV. 10/25/05)

ORIGINAL SCALE IN INCHES FOR REDUCED PLANS 0 1 2 3

CU 07-271
EA 138201

DISREGARD PRINTS BEARING EARLIER REVISION DATES

REVISION DATES: ~~05-23-08~~ ~~6-26-10~~ ~~05-14-10~~ ~~05-16-10~~ ~~05-17-10~~ 05-21-10

SHEET 34 OF 247

FILE => 53-3032-f-a01dt03.dgn

USERNAME => trphtis DATE PLOTTED => 19-OCT-2010 TIME PLOTTED => 10:52

DIST	COUNTY	ROUTE	POST MILES TOTAL PROJECT	SHEET No	TOTAL SHEETS
07	LA	47,103	3.5/4.6, 0.0/1.1	537	1003

REGISTERED CIVIL ENGINEER — DATE 05-24-10

10-11-10
PLANS APPROVAL DATE

The State of California or its officers or agents shall not be responsible for the accuracy or completeness of electronic copies of this plan sheet.

REGISTERED PROFESSIONAL ENGINEER — FOUED ZAYATI — No. C57046 — Exp. 06-30-11 — CIVIL — STATE OF CALIFORNIA

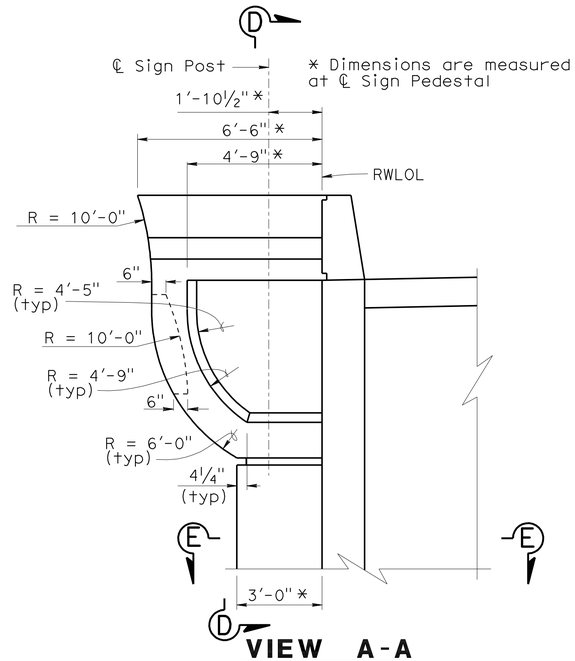

VIEW A-A
⅜" = 1'-0"

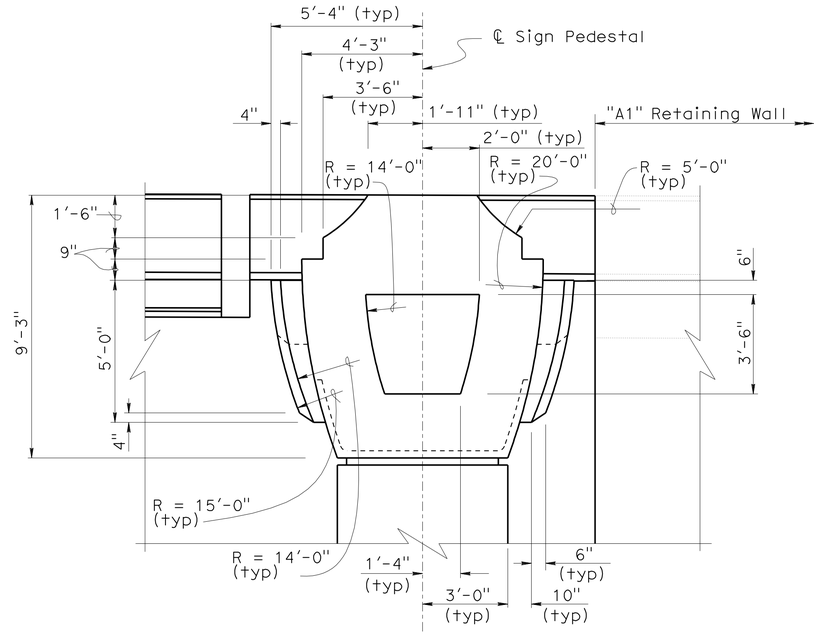

VIEW B-B
⅜" = 1'-0"

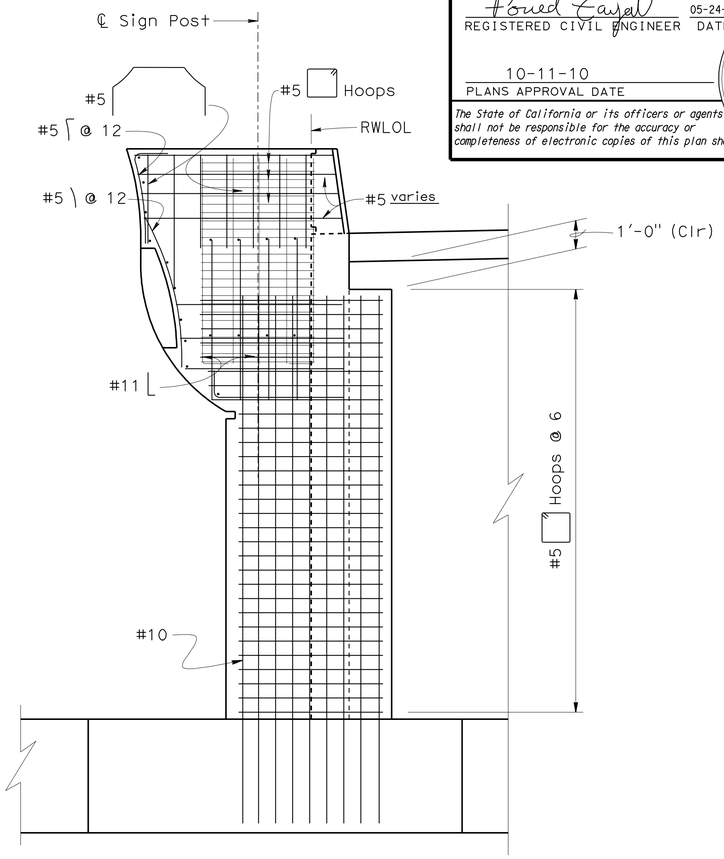

SECTION C-C
⅜" = 1'-0"

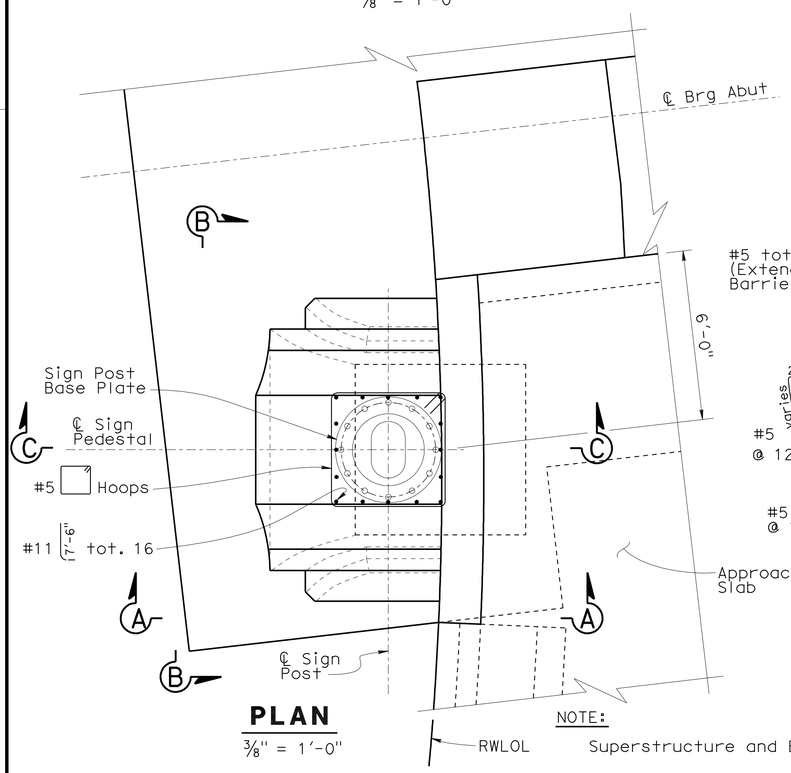

PLAN
⅜" = 1'-0"

NOTE:
Superstructure and Barrier Rails not shown

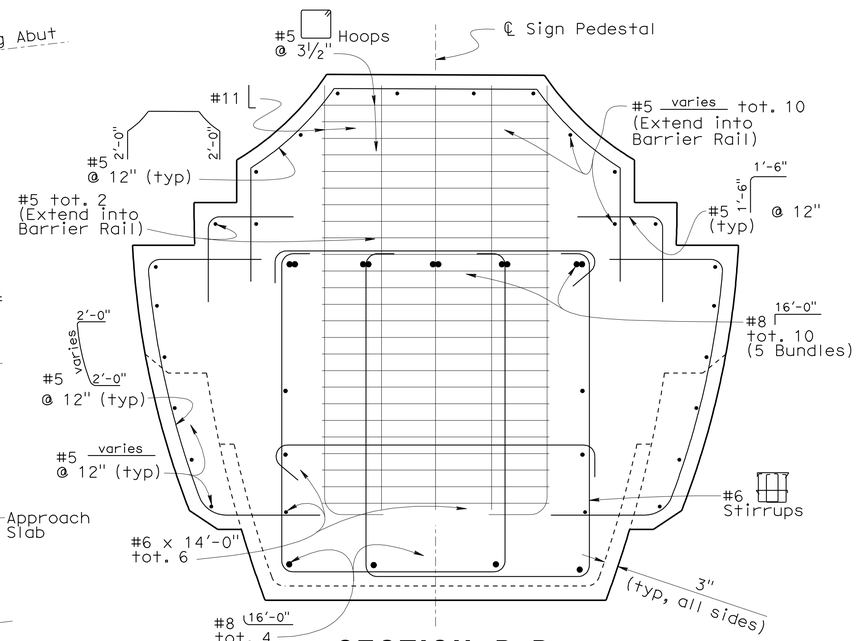

SECTION D-D
¾" = 1'-0"

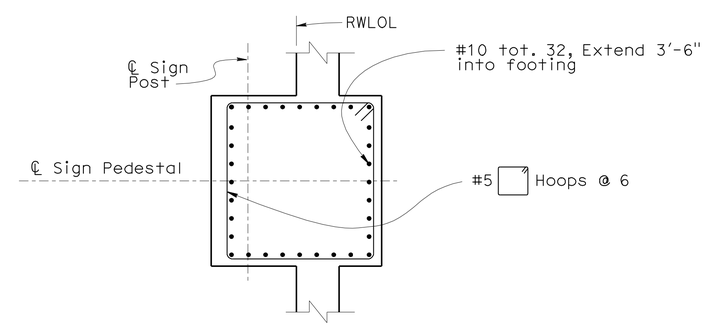

SECTION E-E
⅜" = 1'-0"

NOTE:
See "Roadway Plans" for sign post details

DESIGN	BY S. Galgiani	CHECKED J. Lane	
DETAILS	BY K. Kubo	CHECKED J. Lane	
QUANTITIES	BY S. Galgiani	CHECKED S. Hegazi	

STATE OF CALIFORNIA
DEPARTMENT OF TRANSPORTATION

DIVISION OF ENGINEERING SERVICES
STRUCTURE DESIGN
DESIGN BRANCH 14

BRIDGE NO. 53-3032
POST MILE 3.58

SCHUYLER HEIM BRIDGE (REPLACE)
ABUTMENT 1 DETAILS NO. 4

STRUCTURES DESIGN DETAIL SHEET (ENGLISH) (REV. 10/25/05)

ORIGINAL SCALE IN INCHES FOR REDUCED PLANS 0 1 2 3

CU 07-271
EA 138201

DISREGARD PRINTS BEARING EARLIER REVISION DATES

REVISION DATES: 06-06-08 06-11-08 07-02-08 04-28-10 05-14-10 05-18-10 05-18-10 05-23-10 07-19-10

SHEET 35 OF 247

FILE => 53-3032-f-a01dt04.dgn

USERNAME => trphtis DATE PLOTTED => 19-OCT-2010 TIME PLOTTED => 10:52

DIST	COUNTY	ROUTE	POST MILES TOTAL PROJECT	SHEET No	TOTAL SHEETS
07	LA	47,103	3.5/4.6, 0.0/1.1	538	1003

REGISTERED CIVIL ENGINEER — DATE 05-24-10

10-11-10
PLANS APPROVAL DATE

The State of California or its officers or agents shall not be responsible for the accuracy or completeness of electronic copies of this plan sheet.

REGISTERED PROFESSIONAL ENGINEER — FOUED ZAYATI — No. C57046 — Exp. 06-30-11 — CIVIL — STATE OF CALIFORNIA

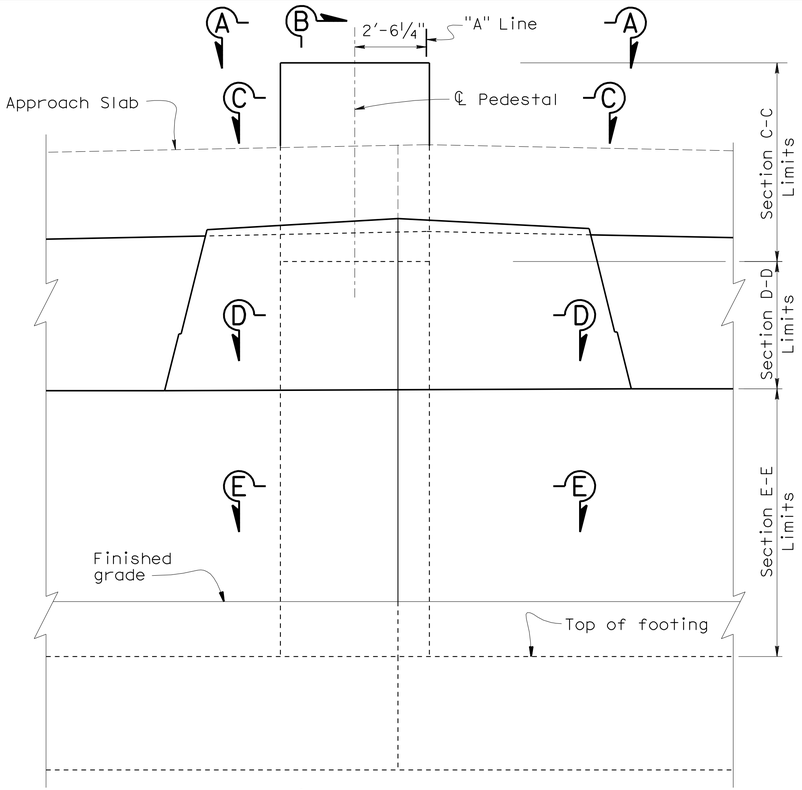

B

DETAIL A

3/8" = 1'-0"

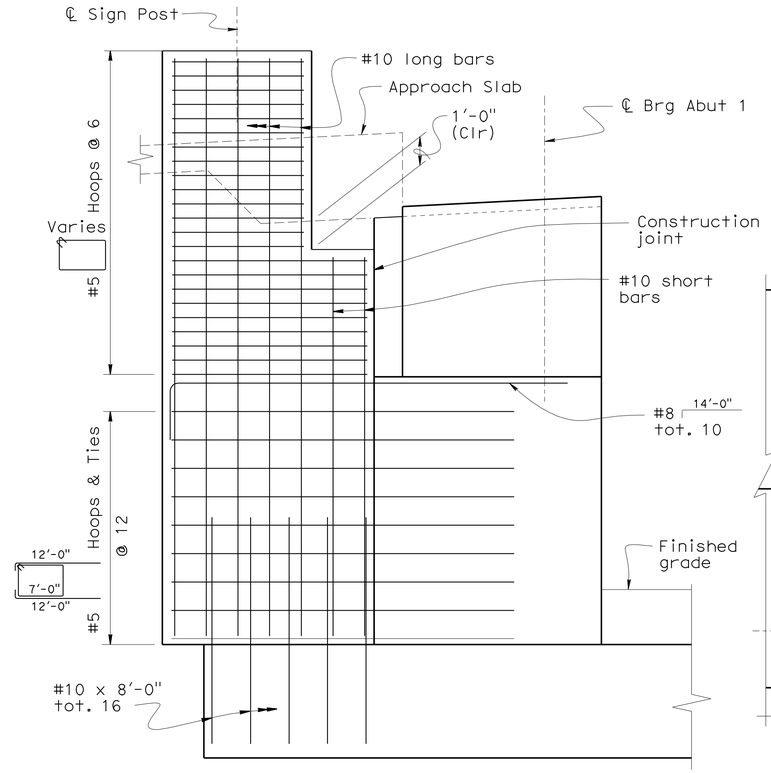

SECTION B-B

3/8" = 1'-0"

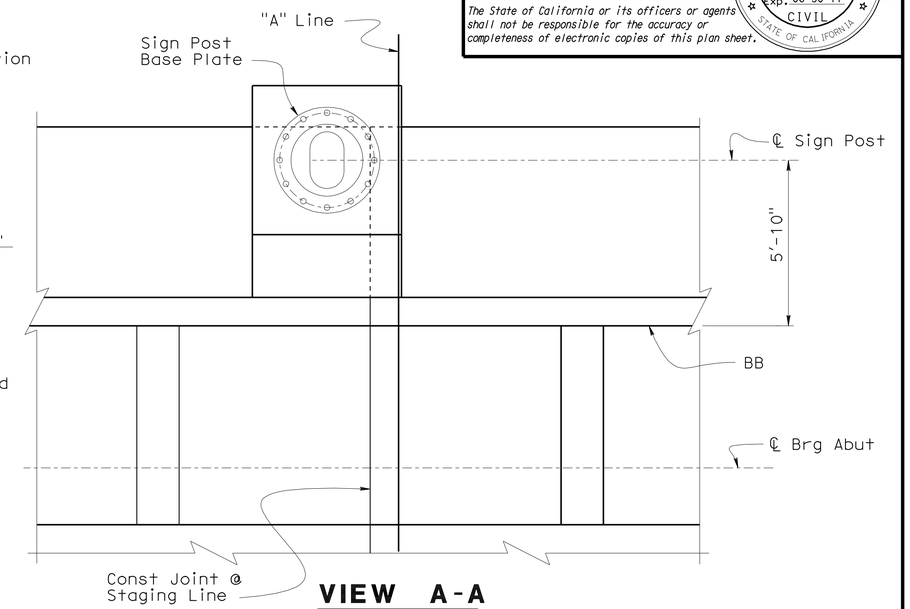

VIEW A-A

3/8" = 1'-0"

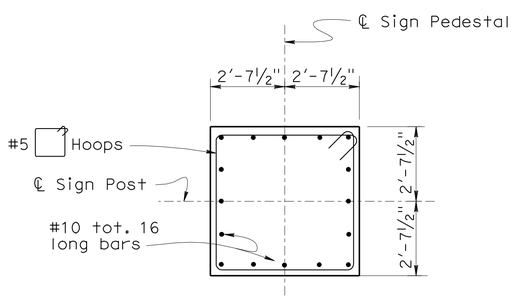

SECTION C-C

3/8" = 1'-0"

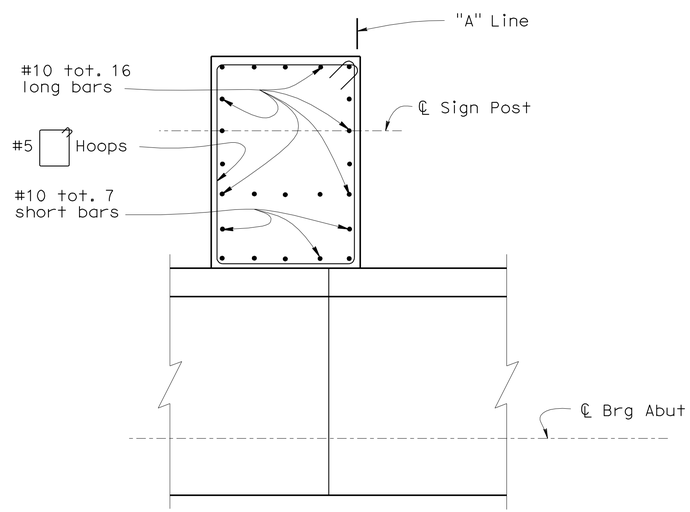

SECTION D-D

3/8" = 1'-0"

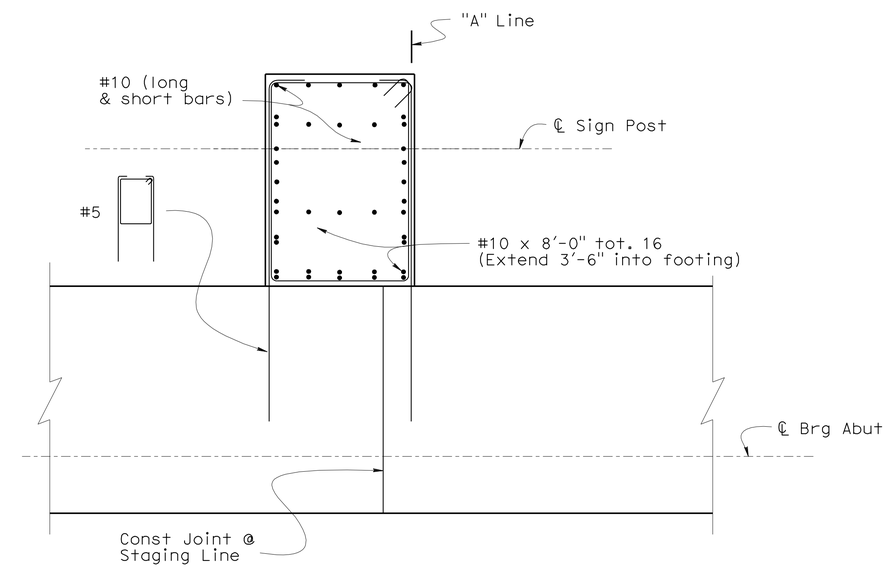

SECTION E-E

3/8" = 1'-0"

Note: See "Roadway Plans" for sign post details.

	BY	CHECKED
DESIGN	S. Galgiani	J. Lane
DETAILS	K. Kubo	J. Lane
QUANTITIES	S. Galgiani	S. Hegazi

STATE OF CALIFORNIA
DEPARTMENT OF TRANSPORTATION

DIVISION OF ENGINEERING SERVICES
STRUCTURE DESIGN
DESIGN BRANCH 14

BRIDGE NO. 53-3032
POST MILE 3.58

SCHUYLER HEIM BRIDGE (REPLACE)
ABUTMENT 1 DETAILS NO. 5

STRUCTURES DESIGN DETAIL SHEET (ENGLISH) (REV. 10/25/05)

ORIGINAL SCALE IN INCHES FOR REDUCED PLANS 0 1 2 3

CU 07-271
EA 138201

DISREGARD PRINTS BEARING EARLIER REVISION DATES

REVISION DATES: 05-17-10 05-18-10 05-24-10 5-28-10 07-19-10

SHEET 36 OF 247

FILE => 53-3032-f-a01dt05.dgn

USERNAME => trphtis DATE PLOTTED => 19-OCT-2010 TIME PLOTTED => 10:52

DIST	COUNTY	ROUTE	POST MILES TOTAL PROJECT	SHEET No	TOTAL SHEETS
07	LA	47,103	3.5/4.6, 0.0/1.1	539	1003

REGISTERED CIVIL ENGINEER 05-24-10 DATE

10-11-10
PLANS APPROVAL DATE

REGISTERED PROFESSIONAL ENGINEER FOUED ZAYATI No. C57046 Exp. 06-30-11 CIVIL STATE OF CALIFORNIA

The State of California or its officers or agents shall not be responsible for the accuracy or completeness of electronic copies of this plan sheet.

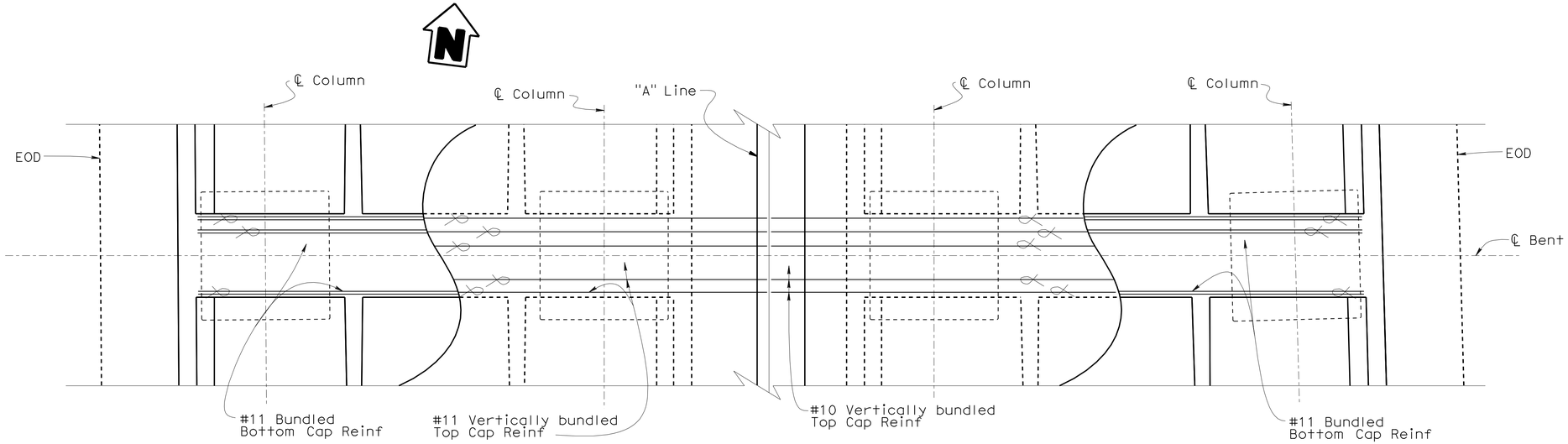

PLAN

3/16"=1'-0"

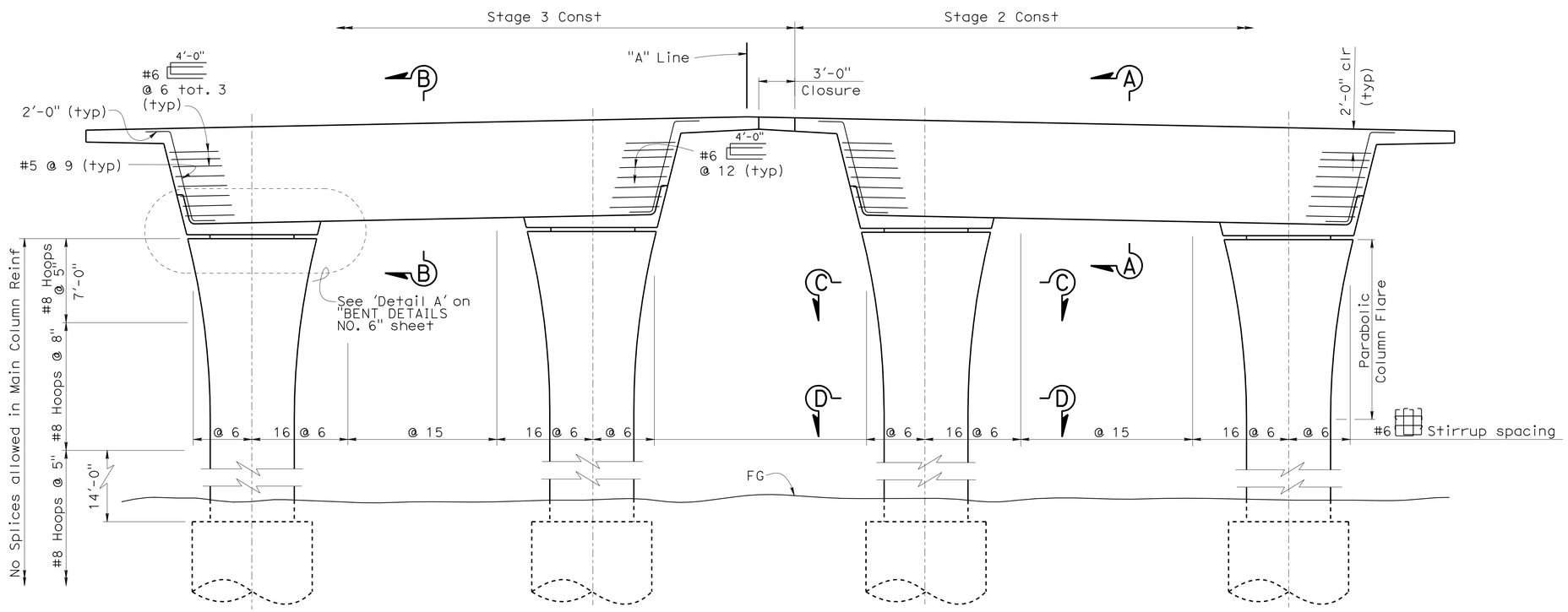

ELEVATION

3/16"=1'-0"

NOTES:

1. For 'Section A-A', see "BENT DETAILS NO. 4" sheet. For 'Section B-B', see "BENT DETAILS NO. 5" sheet.
2. For 'Section C-C' and 'Section D-D', see "BENT DETAILS NO. 2" sheet.
3. For Parabolic Column Flare, see "BENT DETAILS NO. 1" sheet.
4. Bent 2 shown, Bent 3 similar

	BY	CHECKED
DESIGN	J. Massoomi	T. Skreslet
DETAILS	T. Nguyen	T. Skreslet
QUANTITIES	J. Massoomi	L. Han

STATE OF CALIFORNIA
DEPARTMENT OF TRANSPORTATION

DIVISION OF ENGINEERING SERVICES
STRUCTURE DESIGN
DESIGN BRANCH 14

BRIDGE NO. 53-3032
POST MILE 3.58

SCHUYLER HEIM BRIDGE (REPLACE)

BENTS 2 & 3 LAYOUT

STRUCTURES DESIGN DETAIL SHEET (ENGLISH) (REV. 10/25/05)

ORIGINAL SCALE IN INCHES FOR REDUCED PLANS 0 1 2 3

CU 07-271
EA 138201

DISREGARD PRINTS BEARING EARLIER REVISION DATES

REVISION DATES: 3-29-10 04-29-10 05-03-10 5-17-10 5-28-10 12-23-09 01-07-10 2-9-10 3-22-10

SHEET 37 OF 247

FILE => 53-3032-h-b02&03_lo.dgn

USERNAME => trphnis DATE PLOTTED => 19-OCT-2010 TIME PLOTTED => 10:53

DIST	COUNTY	ROUTE	POST MILES TOTAL PROJECT	SHEET No	TOTAL SHEETS
07	LA	47,103	3.5/4.6, 0.0/1.1	540	1003

REGISTERED CIVIL ENGINEER — DATE 05-24-10

10-11-10
PLANS APPROVAL DATE

REGISTERED PROFESSIONAL ENGINEER — FOUED ZAYATI — No. C57046 — Exp. 06-30-11 — CIVIL — STATE OF CALIFORNIA

The State of California or its officers or agents shall not be responsible for the accuracy or completeness of electronic copies of this plan sheet.

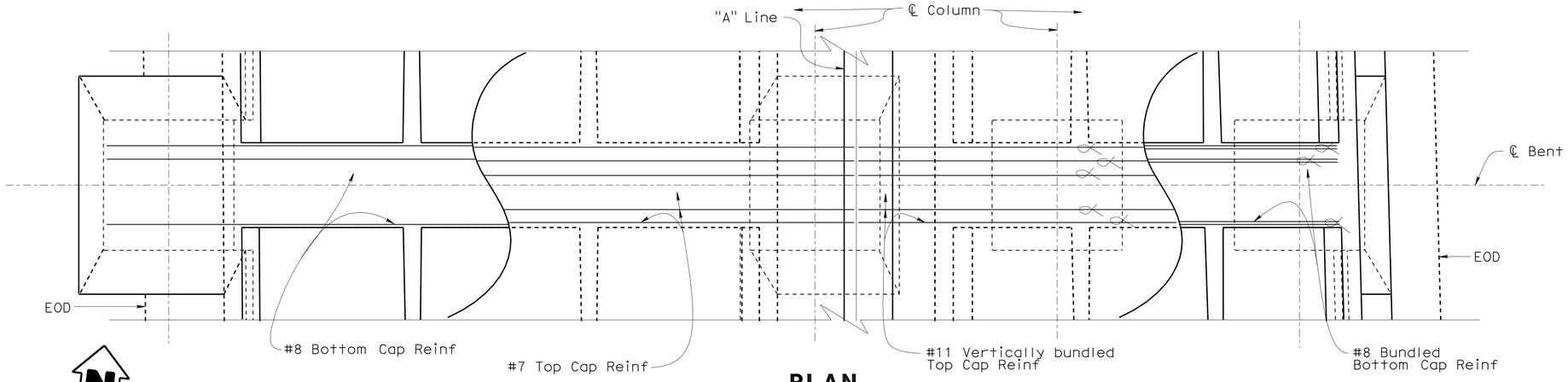

NOTE: Not all top and bottom bars shown.
Top Cap Reinf extends to 2" from EOD.

PLAN
3/16"=1'-0"

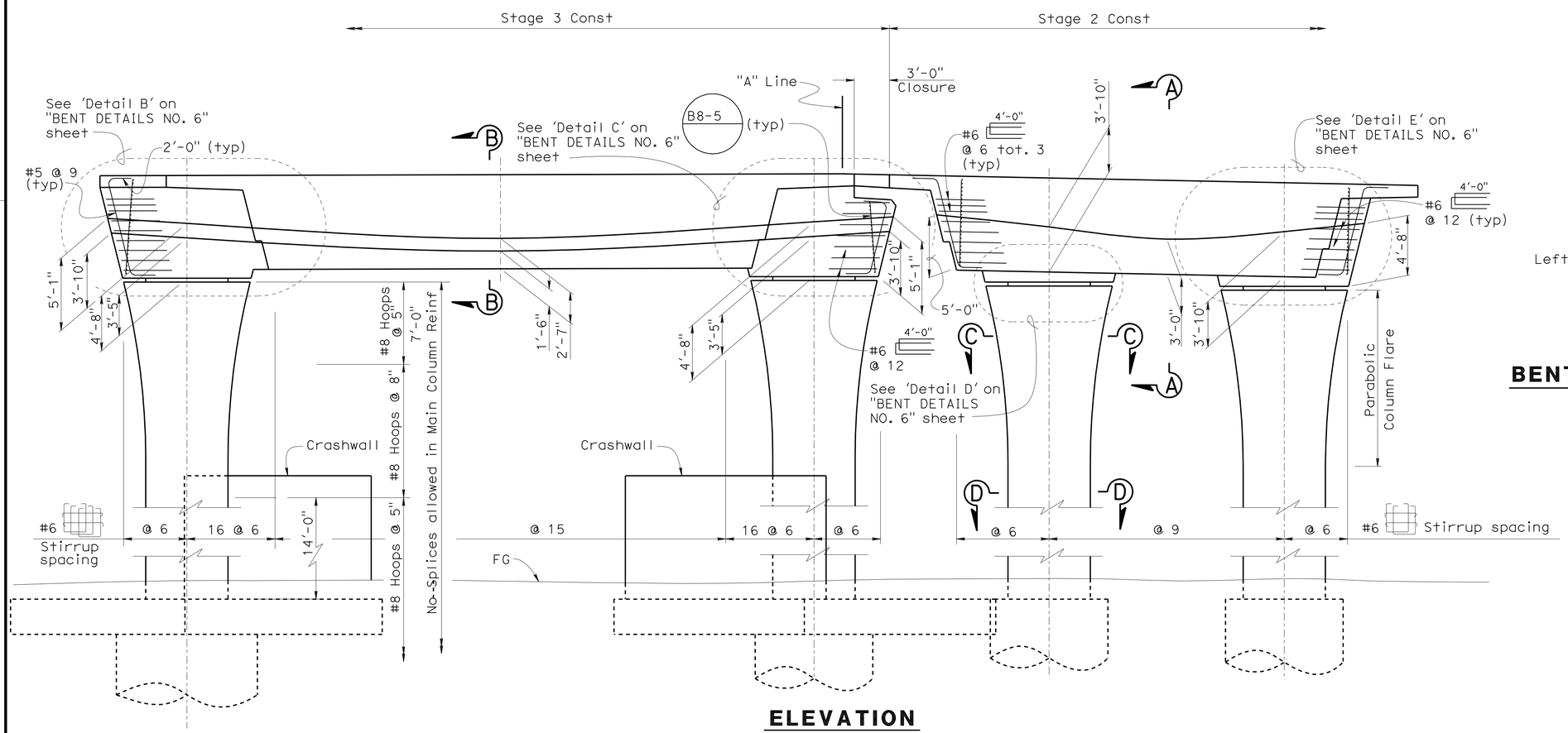

ELEVATION
3/16"=1'-0"

PRESTRESSING NOTES

270 KSI Low Relaxation Strand:

P_{jack} (Upper Cable) Stage 2 = 5120 kips

Anchor Set = 3/8 in

P_{jack} (Lower Cable) Stage 2 = 4500 kips

P_{jack} Stage 1 = 2540 kips

Anchor Set = 3/8 in

Concrete: f'_c = 5.0 ksi @ 28 days

f'_{ci} = 3.5 ksi @ time of stressing

Contractor shall submit elongation calculations based on initial stress at

☒ Stage 1 = 0.878 times jacking stress for both Cables.

☒ Stage 2 = 0.923 times jacking stress for both Cables.

One end stressing shall be performed.

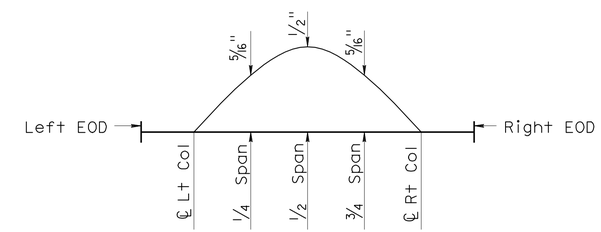

BENT 4, STAGE 2 CAMBER DIAGRAM

NOTES:

1. For 'Section A-A', see "BENT DETAILS NO. 4" sheet. For 'Section B-B', see "BENT DETAILS NO. 5" sheet.
2. For 'Section C-C' and 'Section D-D', see "BENT DETAILS NO. 2" sheet.
3. For P/S Anchorage Zone detail, see "TYPICAL SECTION NO. 1" sheet
4. For Parabolic Column flare, see "BENT DETAILS NO. 1" sheet
5. Cable Paths are parabolic between centerline of Columns and straight all other locations.
6. Barrier Rails not shown.
7. Stirrups not shown.

	BY	CHECKED
DESIGN	J. Massoomi	T. Skreslet
DETAILS	T. Nguyen	T. Skreslet
QUANTITIES	J. Massoomi	L. Han

STATE OF CALIFORNIA
DEPARTMENT OF TRANSPORTATION

DIVISION OF ENGINEERING SERVICES
STRUCTURE DESIGN
DESIGN BRANCH 14

BRIDGE NO. 53-3032
POST MILE 3.58

SCHUYLER HEIM BRIDGE (REPLACE)
BENT 4 LAYOUT

STRUCTURES DESIGN DETAIL SHEET (ENGLISH) (REV. 10/25/05)

ORIGINAL SCALE IN INCHES FOR REDUCED PLANS 0 1 2 3

CU 07-271
EA 138201

DISREGARD PRINTS BEARING EARLIER REVISION DATES

REVISION DATES: 03-19-10 3-29-10 3-30-10 4-13-10 4-29-10 05-04-10 5-17-10 5-28-10 06-08-10

SHEET 38 OF 247

FILE => 53-3032-h-b04_lo.dgn

USERNAME => trphilis DATE PLOTTED => 19-OCT-2010 TIME PLOTTED => 10:53

DIST	COUNTY	ROUTE	POST MILES TOTAL PROJECT	SHEET No	TOTAL SHEETS
07	LA	47,103	3.5/4.6, 0.0/1.1	541	1003

REGISTERED CIVIL ENGINEER 05-24-10 DATE

10-11-10
PLANS APPROVAL DATE

REGISTERED PROFESSIONAL ENGINEER FOUED ZAYATI No. C57046 Exp. 06-30-11 CIVIL STATE OF CALIFORNIA

The State of California or its officers or agents shall not be responsible for the accuracy or completeness of electronic copies of this plan sheet.

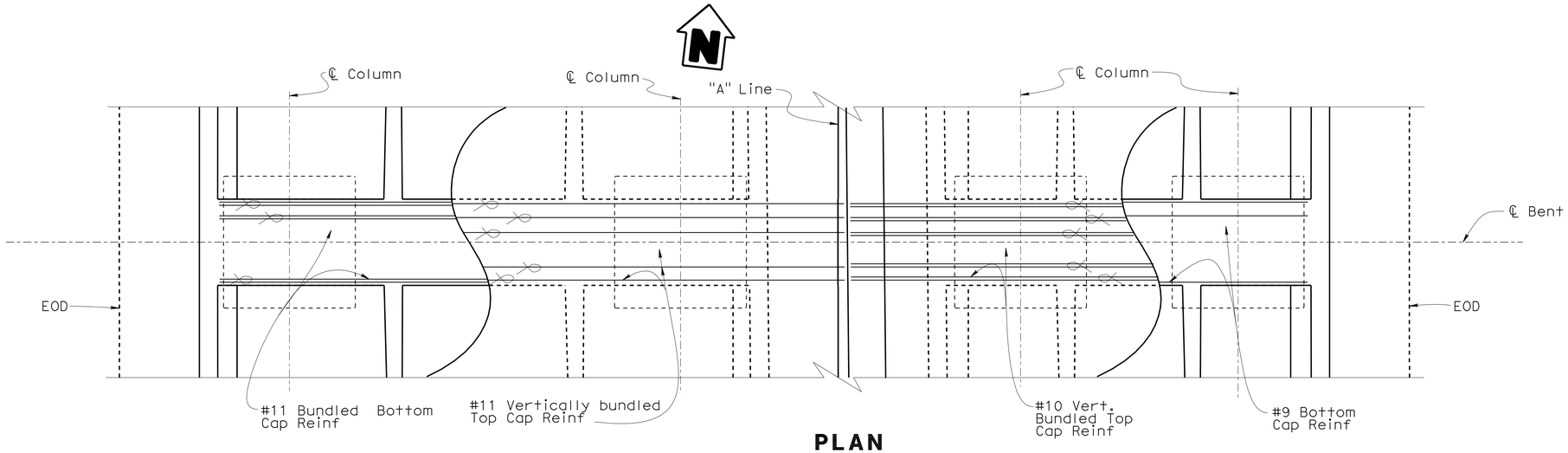

PLAN
3/16"=1'-0"

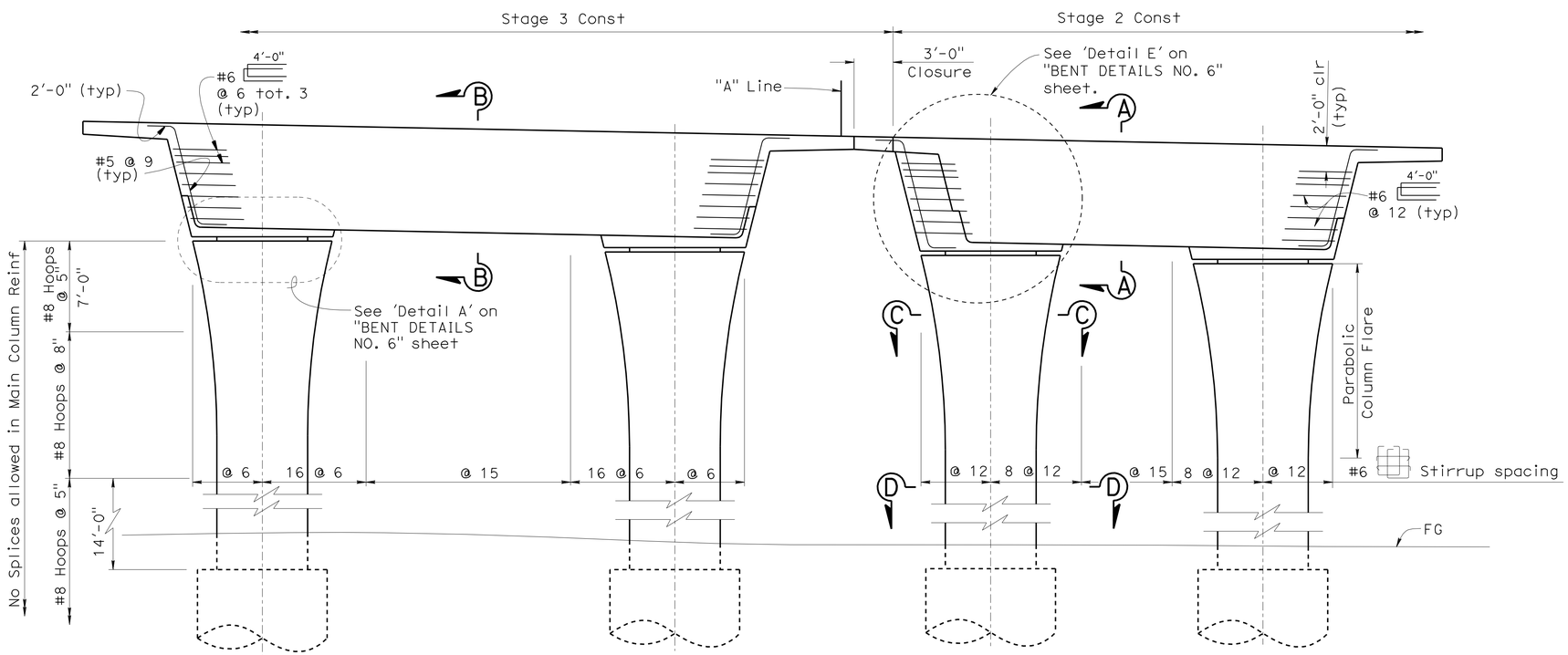

ELEVATION
3/16"=1'-0"

NOTES:

1. For 'Section A-A', see "BENT DETAILS NO. 4" sheet. For 'Section B-B', see "BENT DETAILS NO. 5" sheet.
2. For 'Section C-C' and 'Section D-D', see "BENT DETAILS NO. 2" sheet.
3. For Parabolic Column flare see, "BENT DETAILS NO. 1" sheet

	BY	CHECKED
DESIGN	J. Massoomi	T. Skreslet
DETAILS	T. Nguyen	T. Skreslet
QUANTITIES	J. Massoomi	L. Han

STATE OF CALIFORNIA
DEPARTMENT OF TRANSPORTATION

DIVISION OF ENGINEERING SERVICES
STRUCTURE DESIGN
DESIGN BRANCH 14

BRIDGE NO. 53-3032
POST MILE 3.58

SCHUYLER HEIM BRIDGE (REPLACE)
BENT 5 LAYOUT

STRUCTURES DESIGN DETAIL SHEET (ENGLISH) (REV. 10/25/05)

ORIGINAL SCALE IN INCHES FOR REDUCED PLANS 0 1 2 3

CU 07-271
EA 138201

DISREGARD PRINTS BEARING EARLIER REVISION DATES

REVISION DATES: 4-13-10, 04-28-10, 05-03-10, 5-17-10, 01-04-10, 02-9-10, 03-12-10, 3-26-10, 3-30-10

SHEET 39 OF 247

FILE => 53-3032-h-b05_lo.dgn

USERNAME => trphtis DATE PLOTTED => 19-OCT-2010 TIME PLOTTED => 10:53

DIST	COUNTY	ROUTE	POST MILES TOTAL PROJECT	SHEET No	TOTAL SHEETS
07	LA	47,103	3.5/4.6, 0.0/1.1	542	1003

REGISTERED CIVIL ENGINEER 05-24-10 DATE

10-11-10
PLANS APPROVAL DATE

REGISTERED PROFESSIONAL ENGINEER FOUED ZAYATI No. C57046 Exp. 06-30-11 CIVIL STATE OF CALIFORNIA

The State of California or its officers or agents shall not be responsible for the accuracy or completeness of electronic copies of this plan sheet.

NOTES:

1. Extend Exterior Column Flare Reinforcement to top of Column.
2. Extend Interior Column Flare Reinforcement 2'-0" into Bent Cap.
3. See 'Exterior Face Of Girder Reinforcement' detail on "BENT 6 DETAILS NO. 1" sheet.
4. See "BENT 6 DETAILS NO. 1" sheet for 'View A-A', and 'Shear Key Detail'.
5. For 'Section B-B' and 'Section C-C', see 'BENT 6 DETAILS NO. 2" sheet.
6. For 'Section D-D', Section F-F, Section G-G and 'Section H-H', see "BENT DETAILS NO. 3" sheet.
7. Extend #5 Column longitudinal reinforcement 1'-6" into top of Pile.

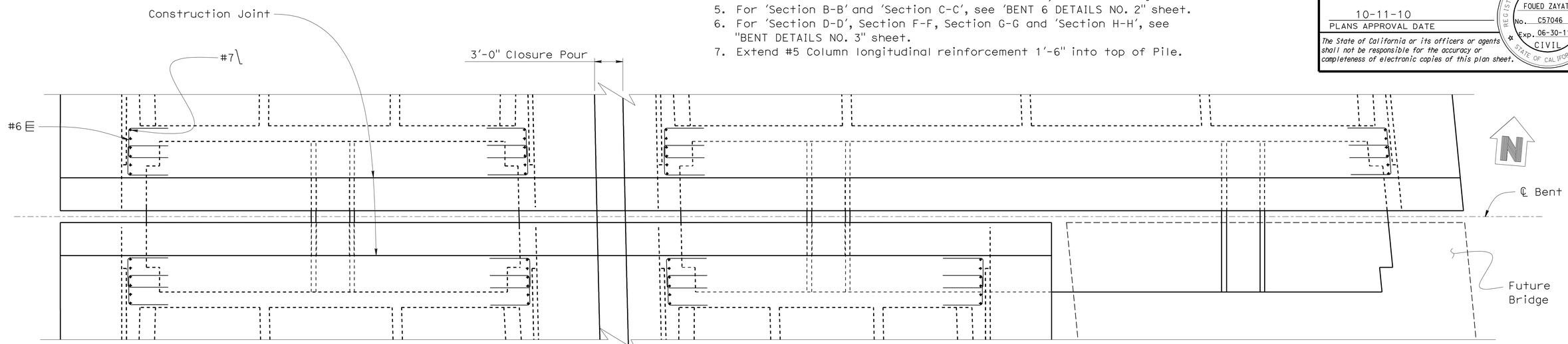

PLAN
3/16"=1'-0"

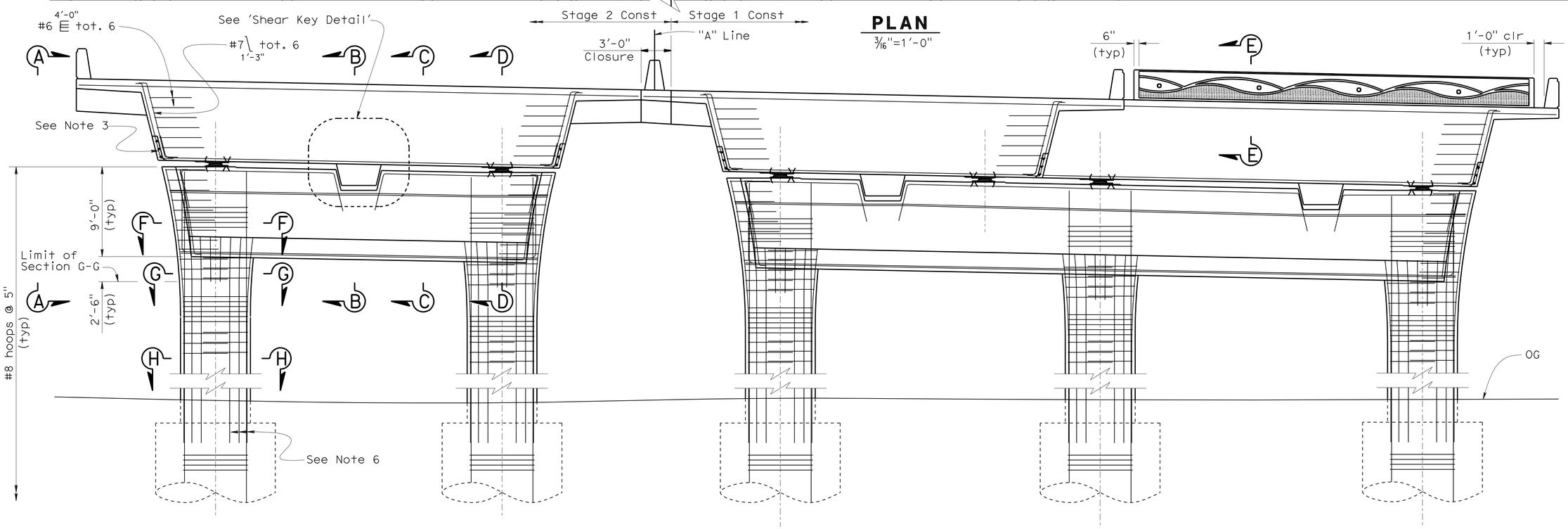

ELEVATION
3/16"=1'-0"

	BY	CHECKED
DESIGN	J. Massoomi/F. Zayati	T. Skreslet
DETAILS	K. Kubo	T. Skreslet
QUANTITIES	J. Massoomi	L. Han

STATE OF CALIFORNIA
DEPARTMENT OF TRANSPORTATION

DIVISION OF ENGINEERING SERVICES
STRUCTURE DESIGN
DESIGN BRANCH 14

BRIDGE NO. 53-3032
POST MILE 3.58

SCHUYLER HEIM BRIDGE (REPLACE)
BENT 6 LAYOUT

STRUCTURES DESIGN DETAIL SHEET (ENGLISH) (REV. 10/25/05)

ORIGINAL SCALE IN INCHES FOR REDUCED PLANS 0 1 2 3

CU 07-271
EA 138201

DISREGARD PRINTS BEARING EARLIER REVISION DATES

REVISION DATES: 06-01-08 12-07-09 02-04-10 03-29-10 04-29-10 05-03-10 05-13-10 5-21-10 07-12-10

SHEET 40 OF 247

FILE => 53-3032-h-b06_lo.dgn

USERNAME => trphtis DATE PLOTTED => 19-OCT-2010 TIME PLOTTED => 10:53

DIST	COUNTY	ROUTE	POST MILES TOTAL PROJECT	SHEET No	TOTAL SHEETS
07	LA	47,103	3.5/4.6, 0.0/1.1	543	1003

REGISTERED CIVIL ENGINEER 05-24-10 DATE

10-11-10
PLANS APPROVAL DATE

REGISTERED PROFESSIONAL ENGINEER FOUED ZAYATI No. C57046 Exp. 06-30-11 CIVIL STATE OF CALIFORNIA

The State of California or its officers or agents shall not be responsible for the accuracy or completeness of electronic copies of this plan sheet.

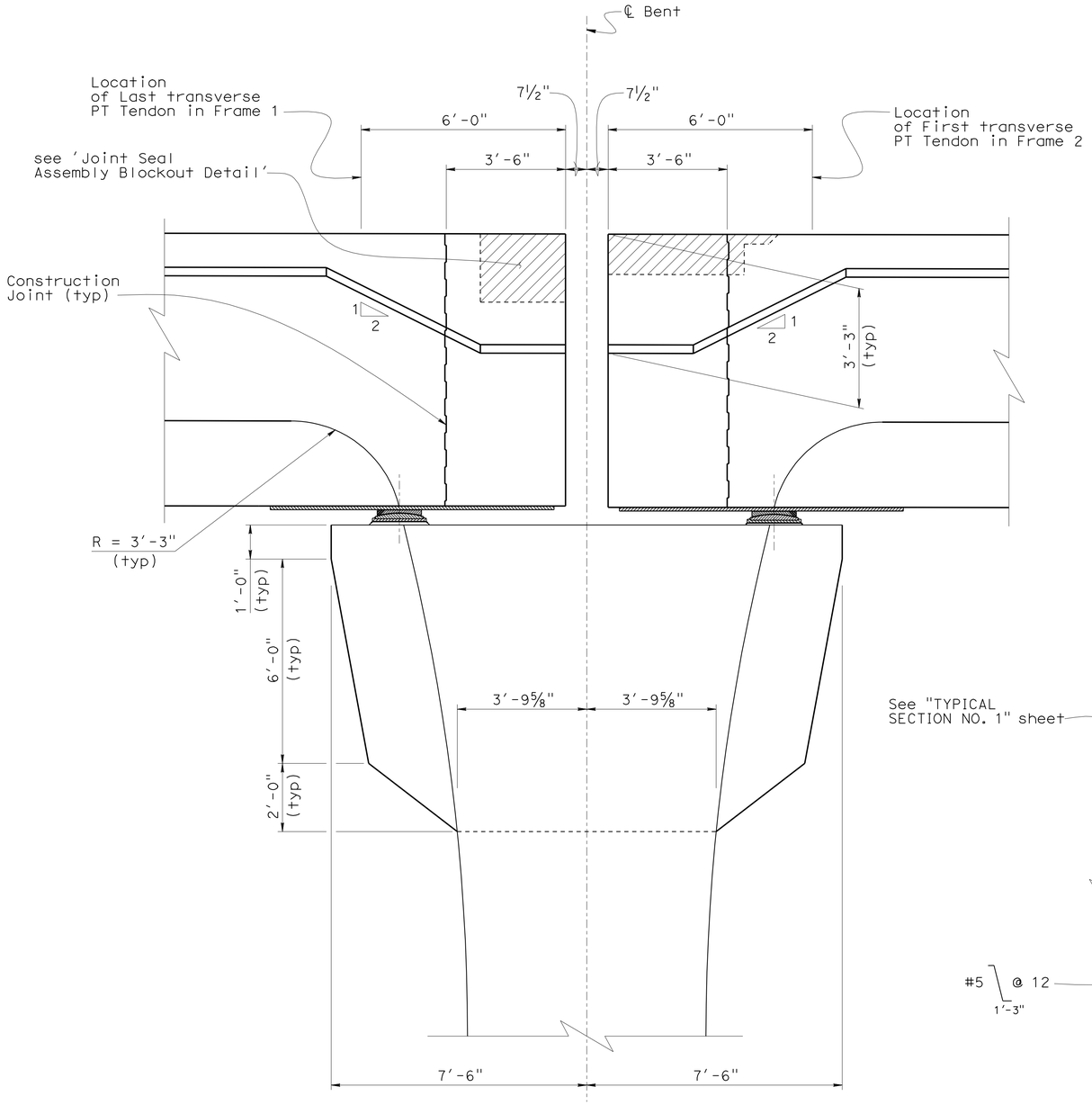

VIEW A-A

½" = 1'-0"

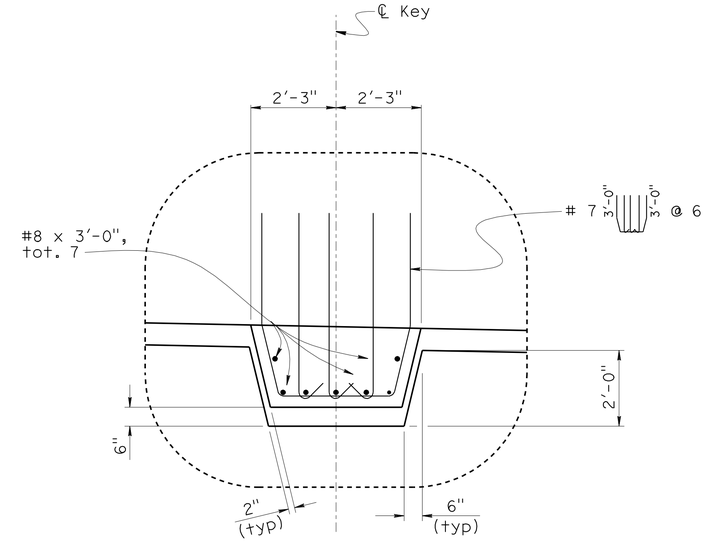

SHEAR KEY DETAIL

½" = 1'-0"

NOTE:

For location of 'View A-A', see 'BENT 6 LAYOUT" sheet.

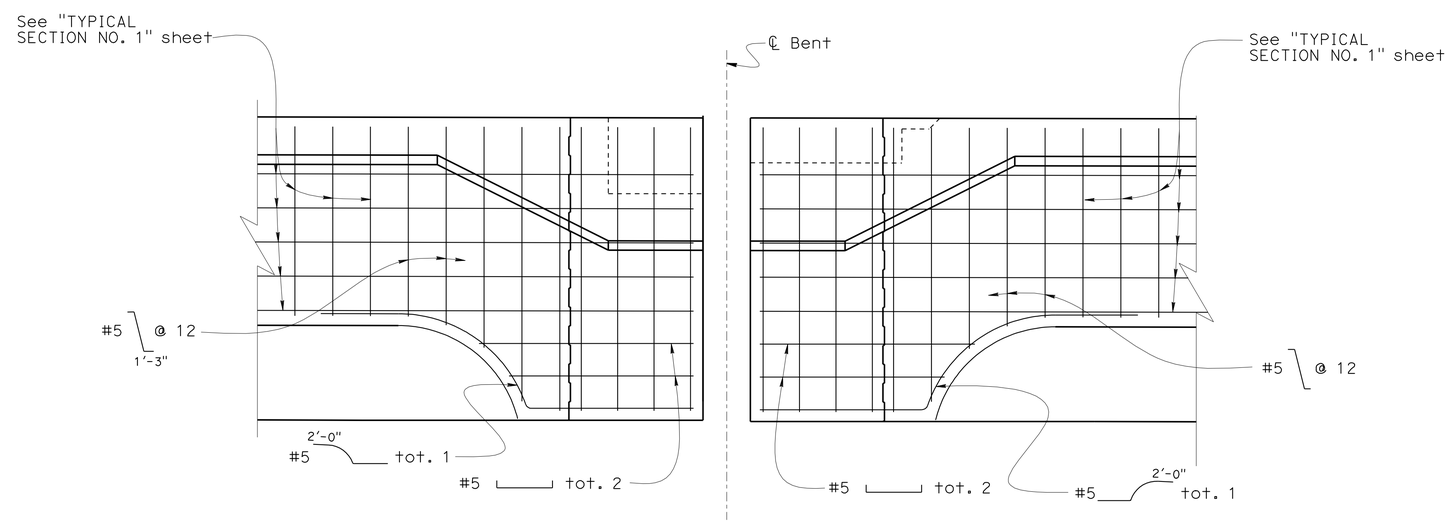

EXTERIOR FACE OF GIRDER REINFORCEMENT

½" = 1'-0"

DESIGN	BY F. Zayati	CHECKED L. Bahia	
DETAILS	BY K. Kubo	CHECKED F. Zayati	
QUANTITIES	BY J. Massoomi	CHECKED L. Han	

STATE OF CALIFORNIA
DEPARTMENT OF TRANSPORTATION

DIVISION OF ENGINEERING SERVICES
STRUCTURE DESIGN
DESIGN BRANCH 14

BRIDGE NO. 53-3032
POST MILE 3.58

SCHUYLER HEIM BRIDGE (REPLACE)

BENT 6 DETAILS NO. 1

STRUCTURES DESIGN DETAIL SHEET (ENGLISH) (REV. 10/25/05)

ORIGINAL SCALE IN INCHES FOR REDUCED PLANS 0 1 2 3

CU 07-271
EA 138201

DISREGARD PRINTS BEARING EARLIER REVISION DATES

REVISION DATES 02-04-10 03-29-10 04-29-10

SHEET 41 OF 247

FILE => 53-3032-h-b06det01.dgn

USERNAME => trphtis DATE PLOTTED => 19-OCT-2010 TIME PLOTTED => 10:53

DIST	COUNTY	ROUTE	POST MILES TOTAL PROJECT	SHEET No	TOTAL SHEETS
07	LA	47,103	3.5/4.6, 0.0/1.1	544	1003

REGISTERED CIVIL ENGINEER — DATE 05-24-10

10-11-10
PLANS APPROVAL DATE

REGISTERED PROFESSIONAL ENGINEER — FOUED ZAYATI — No. C57046 — Exp. 06-30-11 — CIVIL — STATE OF CALIFORNIA

The State of California or its officers or agents shall not be responsible for the accuracy or completeness of electronic copies of this plan sheet.

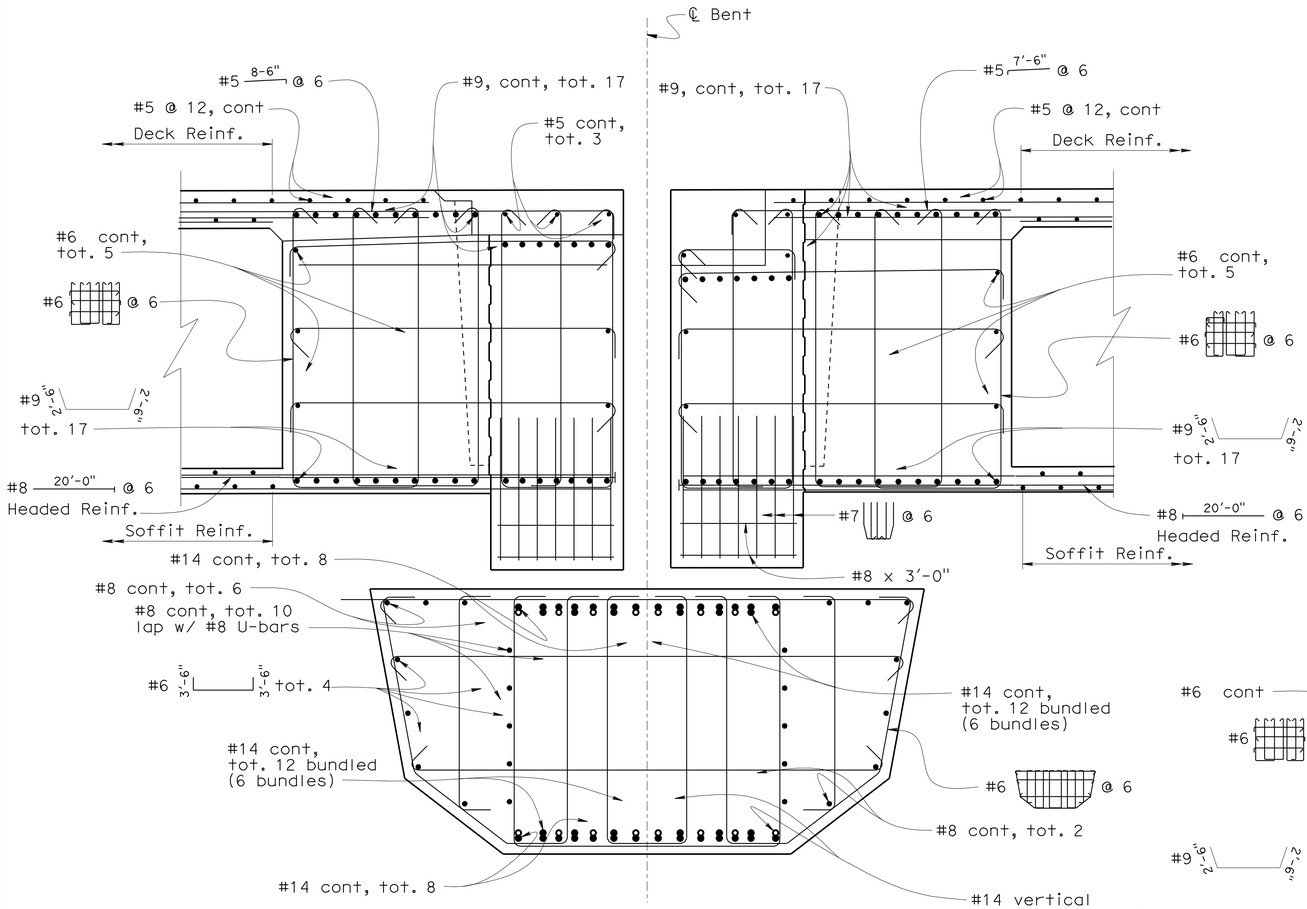

SECTION B-B
½" = 1'-0"

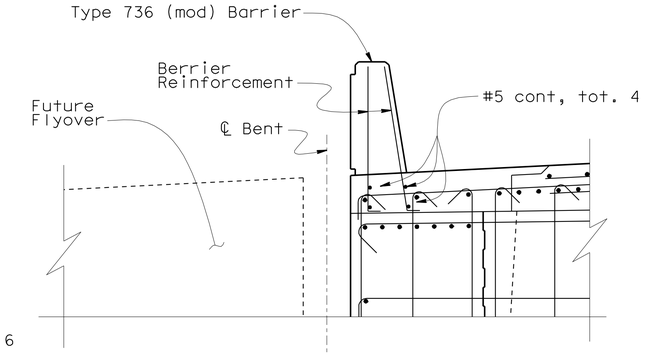

SECTION E-E
½" = 1'-0"

NOTE:

For location of 'Section B-B', 'Section C-C' and 'Section E-E', see 'BENT 6 LAYOUT" sheet.

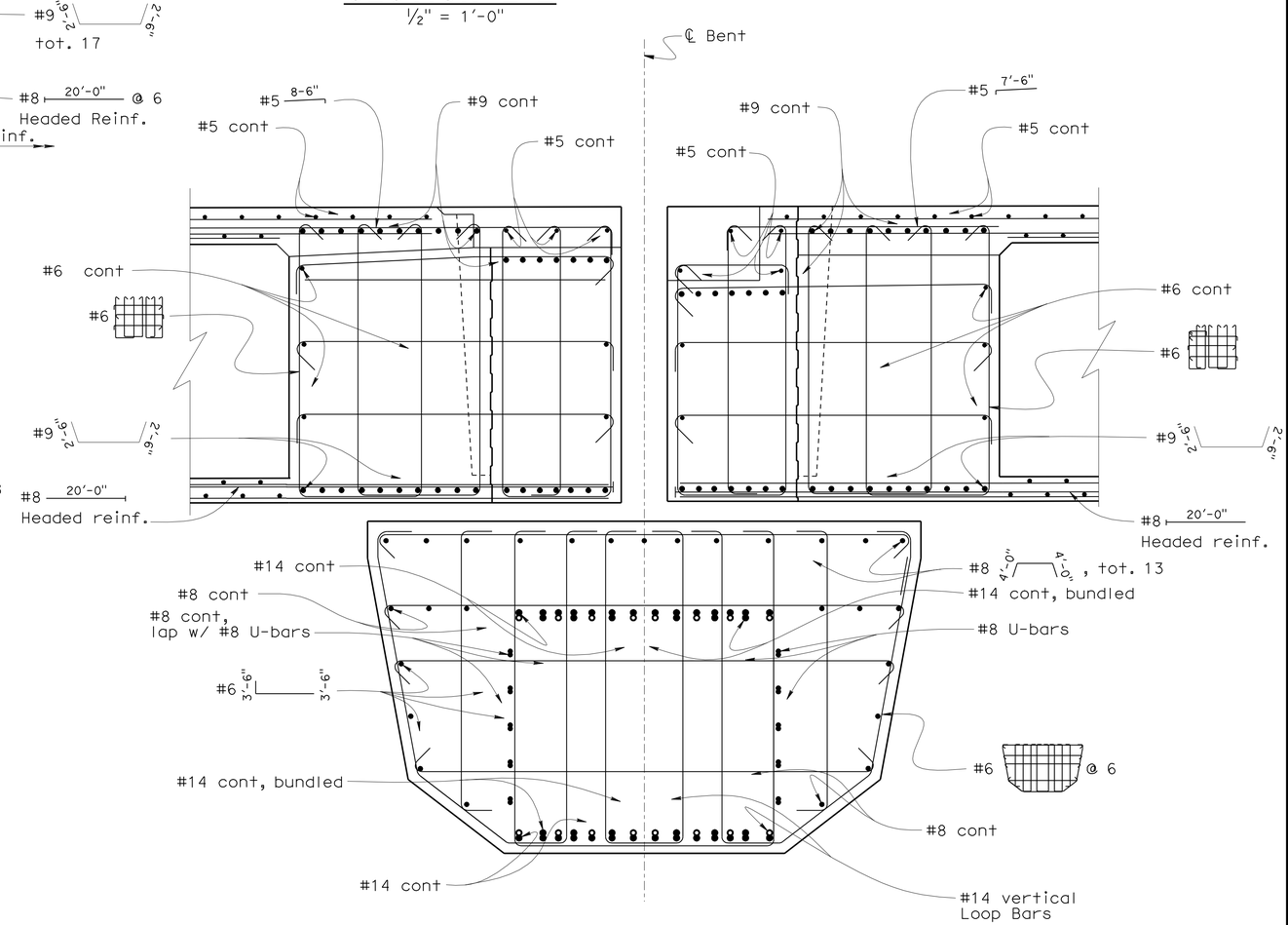

SECTION C-C
½" = 1'-0"

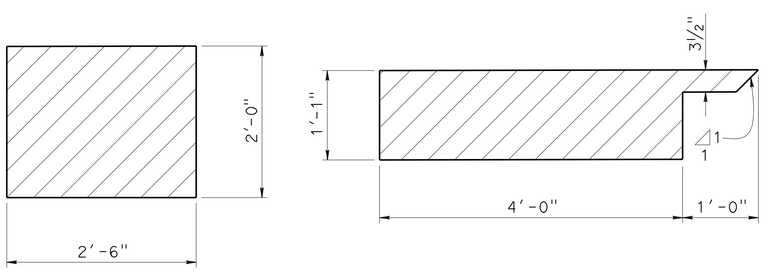

JOINT SEAL BLOCKOUT DETAIL
1" = 1'-0"

DESIGN	BY F. Zayati	CHECKED L. Bahia	
DETAILS	BY K. Kubo	CHECKED F. Zayati	
QUANTITIES	BY J. Massoomi	CHECKED L. Han	

STATE OF CALIFORNIA
DEPARTMENT OF TRANSPORTATION

DIVISION OF ENGINEERING SERVICES
STRUCTURE DESIGN
DESIGN BRANCH 14

BRIDGE NO. 53-3032
POST MILE 3.58

SCHUYLER HEIM BRIDGE (REPLACE)
BENT 6 DETAILS NO. 2

STRUCTURES DESIGN DETAIL SHEET (ENGLISH) (REV. 10/25/05)

ORIGINAL SCALE IN INCHES FOR REDUCED PLANS 0 1 2 3

CU 07-271
EA 138201

DISREGARD PRINTS BEARING EARLIER REVISION DATES

REVISION DATES: ~~02-04-10~~ ~~03-29-10~~ 04-29-10

SHEET 42 OF 247

FILE => 53-3032-h-b06det02.dgn

USERNAME => trphtis DATE PLOTTED => 19-OCT-2010 TIME PLOTTED => 10:53

DIST	COUNTY	ROUTE	POST MILES TOTAL PROJECT	SHEET No	TOTAL SHEETS
07	LA	47,103	3.5/4.6, 0.0/1.1	545	1003

REGISTERED CIVIL ENGINEER 05-24-10 DATE

10-11-10
PLANS APPROVAL DATE

The State of California or its officers or agents shall not be responsible for the accuracy or completeness of electronic copies of this plan sheet.

REGISTERED PROFESSIONAL ENGINEER FOUED ZAYATI No. C57046 Exp. 06-30-11 CIVIL STATE OF CALIFORNIA

NOTES:

1. For 'Section D-D', 'Section F-F', 'Section G-G' and 'Section H-H', see 'BENT 6 LAYOUT" sheet.
2. Column Steel Pin not shown for clarity.
3. For Column Steel Pin, see "BENT DETAILS NO. 4" sheet.
4. Extend #5 bars 1'-6" into top of Pile.

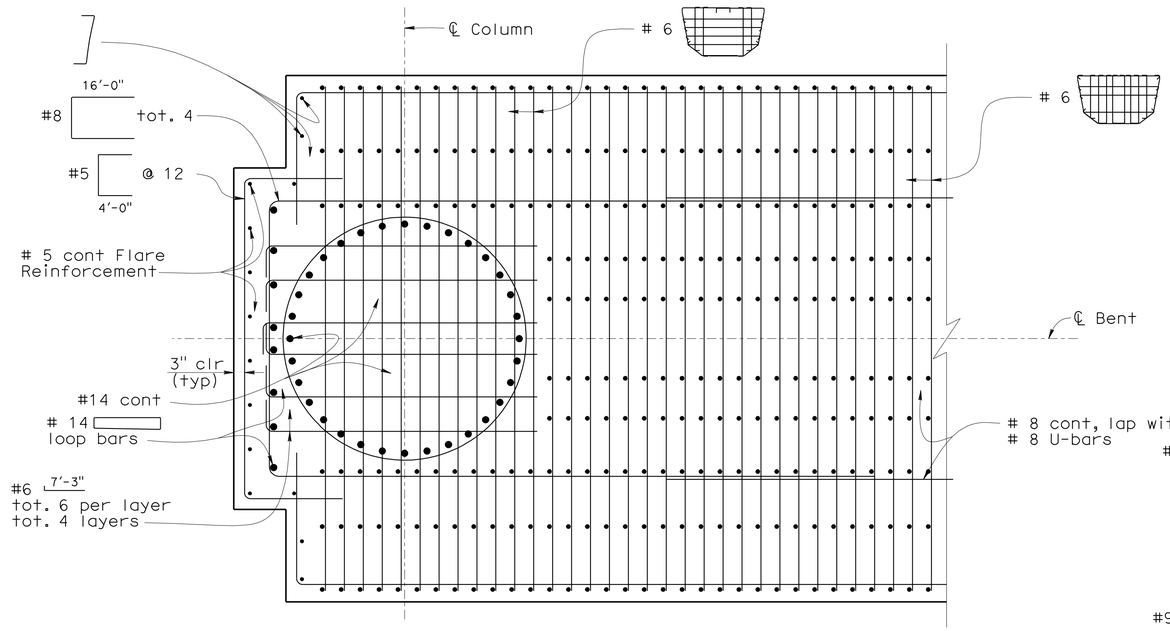

SECTION F-F

1/2"=1'-0"

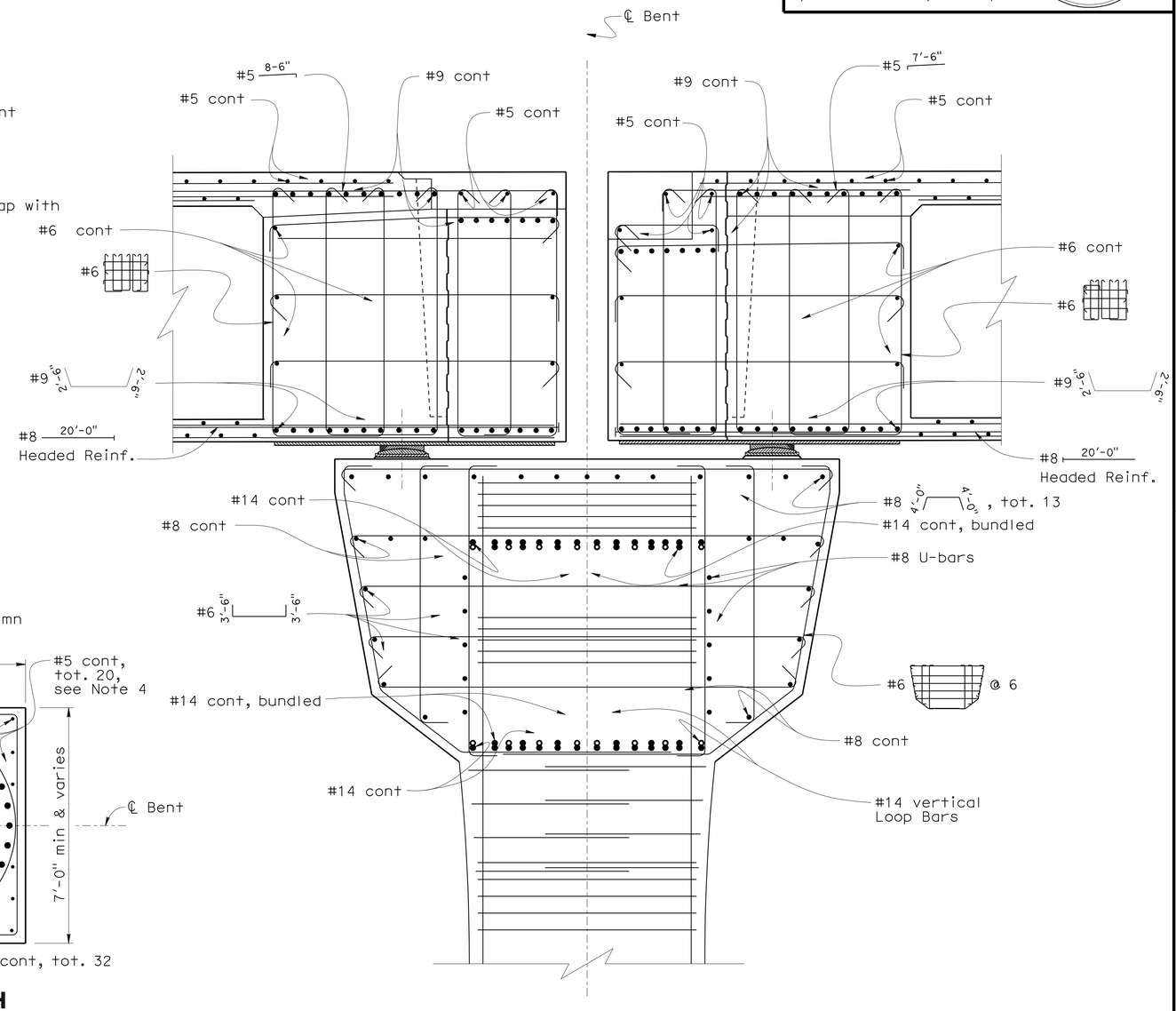

SECTION D-D

1/2" = 1'-0"

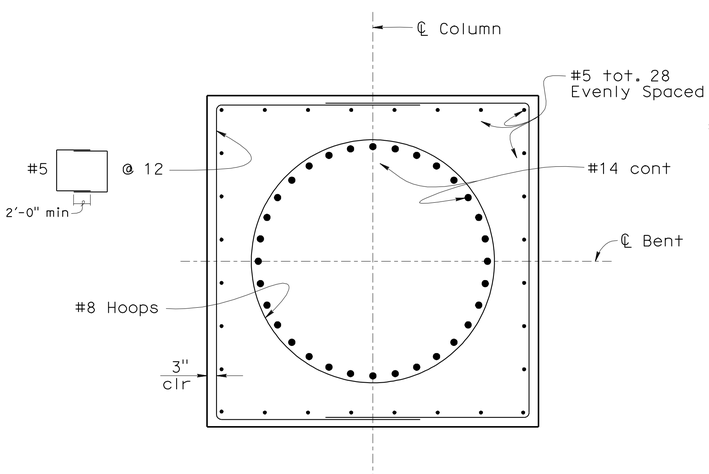

SECTION G-G

1/2"=1'-0"

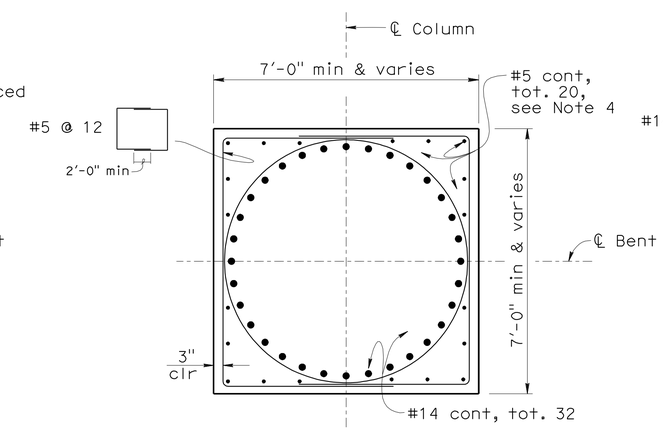

SECTION H-H

1/2"=1'-0"

DESIGN	BY F. Zayati	CHECKED L. Bahia	
DETAILS	BY K. Kubo	CHECKED F. Zayati	
QUANTITIES	BY J. Massoomi	CHECKED L. Han	

STATE OF CALIFORNIA
DEPARTMENT OF TRANSPORTATION

DIVISION OF ENGINEERING SERVICES
STRUCTURE DESIGN
DESIGN BRANCH 14

BRIDGE NO. 53-3032
POST MILE 3.58

SCHUYLER HEIM BRIDGE (REPLACE)

BENT 6 DETAILS NO. 3

STRUCTURES DESIGN DETAIL SHEET (ENGLISH) (REV. 10/25/05)

ORIGINAL SCALE IN INCHES FOR REDUCED PLANS 0 1 2 3

CU 07-271
EA 138201

DISREGARD PRINTS BEARING EARLIER REVISION DATES

REVISION DATES: 02-04-10 03-29-10 04-29-10

SHEET 43 OF 247

FILE => 53-3032-h-b06det03.dgn

USERNAME => trphilis DATE PLOTTED => 19-OCT-2010 TIME PLOTTED => 10:54

DIST	COUNTY	ROUTE	POST MILES TOTAL PROJECT	SHEET No	TOTAL SHEETS
07	LA	47,103	3.5/4.6, 0.0/1.1	546	1003

REGISTERED CIVIL ENGINEER — 05-24-10 DATE

10-11-10
PLANS APPROVAL DATE

REGISTERED PROFESSIONAL ENGINEER — FOUED ZAYATI — No. C57046 — Exp. 06-30-11 — CIVIL — STATE OF CALIFORNIA

The State of California or its officers or agents shall not be responsible for the accuracy or completeness of electronic copies of this plan sheet.

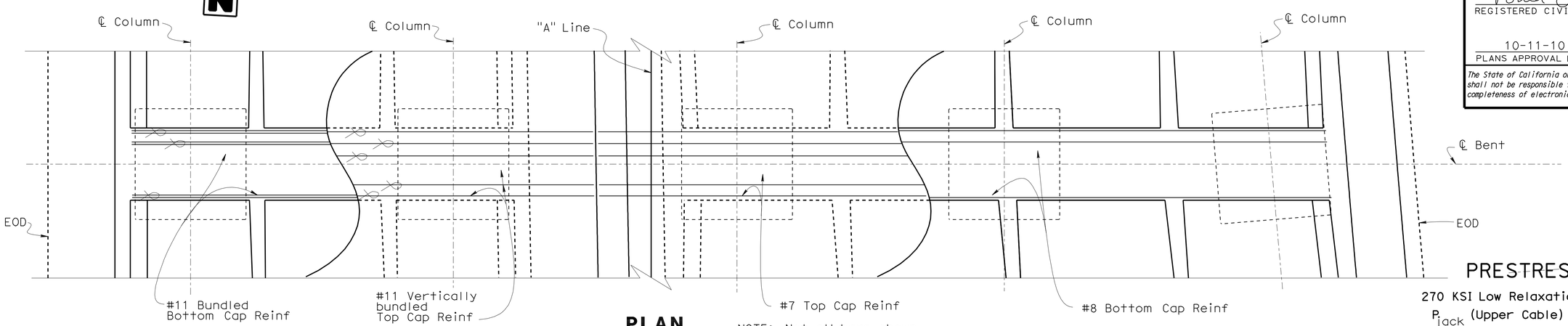

PLAN
3/16"=1'-0"

NOTE: Not all bars shown
Top cap Reinf extend to 2'-0" from EOD

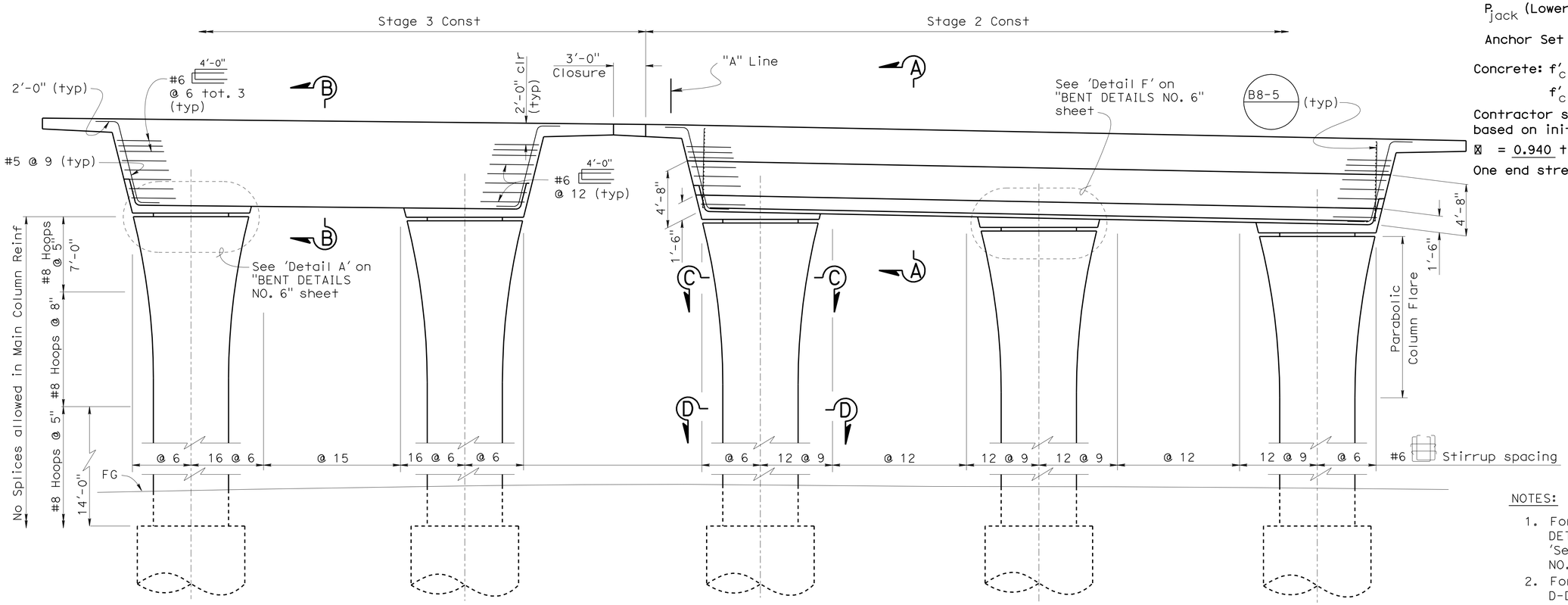

ELEVATION
3/16"=1'-0"

PRESTRESSING NOTES

270 KSI Low Relaxation Strand:

P_{jack} (Upper Cable) Stage 1 = 1840 kips

Anchor Set = 3/8 in

P_{jack} (Lower Cable) Stage 1 = 2000 kips

Anchor Set = 3/8 in

Concrete: f'_c = 5.0 ksi @ 28 days

f'_{ci} = 3.5 ksi @ time of stressing

Contractor shall submit elongation calculations based on initial stress at

☒ = 0.940 times jacking stress for both Cables.

One end stressing shall be performed.

NOTES:

1. For 'Section A-A', see "BENT DETAILS NO. 4" sheet. For 'Section B-B', see "BENT DETAILS NO. 5" sheet.
2. For 'Section C-C' and 'Section D-D', see "BENT DETAILS NO. 2" sheet.
3. For Parabolic Column flare, see "BENT DETAILS No. 1" sheet

	BY	CHECKED
DESIGN	J. Massoomi	T. Skreslet
DETAILS	T. Nguyen	T. Skreslet
QUANTITIES	J. Massoomi	L. Han

STATE OF CALIFORNIA
DEPARTMENT OF TRANSPORTATION

DIVISION OF ENGINEERING SERVICES
STRUCTURE DESIGN
DESIGN BRANCH 14

BRIDGE NO. 53-3032
POST MILE 3.58

SCHUYLER HEIM BRIDGE (REPLACE)
BENT 7 LAYOUT

STRUCTURES DESIGN DETAIL SHEET (ENGLISH) (REV. 10/25/05)

ORIGINAL SCALE IN INCHES FOR REDUCED PLANS 0 1 2 3

CU 07-271
EA 138201

DISREGARD PRINTS BEARING EARLIER REVISION DATES

REVISION DATES: 4-1-10 4-13-10 04-29-10 05-03-10 5-14-10 5-28-10 02-18-10 03-12-10

SHEET 44 OF 247

FILE => 53-3032-h-b07_lo.dgn

USERNAME => trphilis DATE PLOTTED => 19-OCT-2010 TIME PLOTTED => 10:54

DIST	COUNTY	ROUTE	POST MILES TOTAL PROJECT	SHEET No	TOTAL SHEETS
07	LA	47,103	3.5/4.6, 0.0/1.1	547	1003

REGISTERED CIVIL ENGINEER — DATE 05-24-10

10-11-10
PLANS APPROVAL DATE

REGISTERED PROFESSIONAL ENGINEER — FOUED ZAYATI — No. C57046 — Exp. 06-30-11 — CIVIL — STATE OF CALIFORNIA

The State of California or its officers or agents shall not be responsible for the accuracy or completeness of electronic copies of this plan sheet.

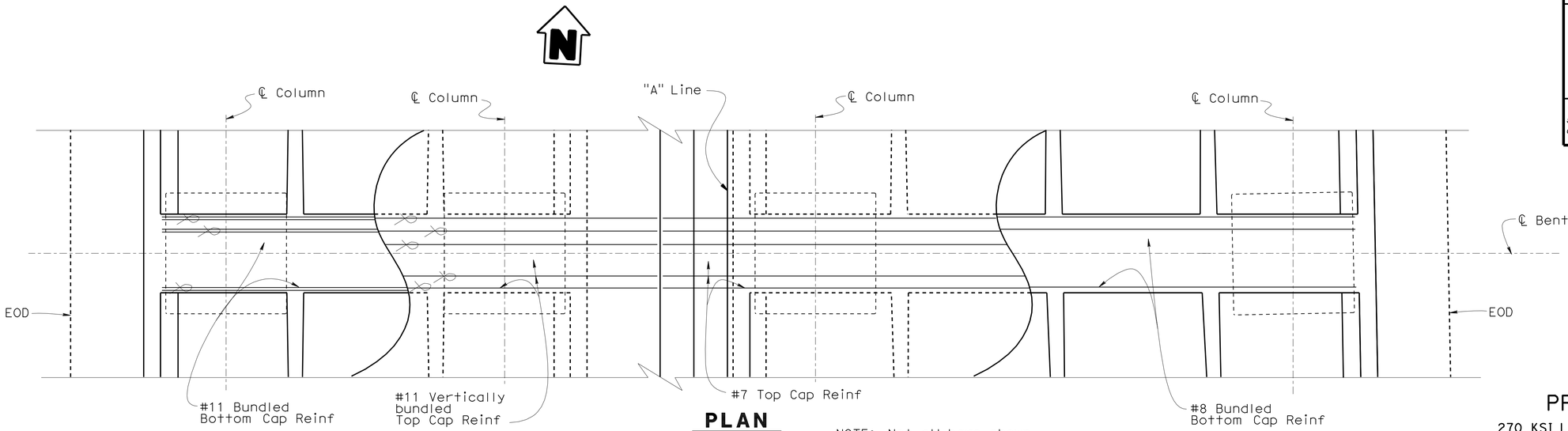

PLAN
3/16"=1'-0"

NOTE: Not all bars shown
Top cap Reinf extend to 2'-0" from EOD

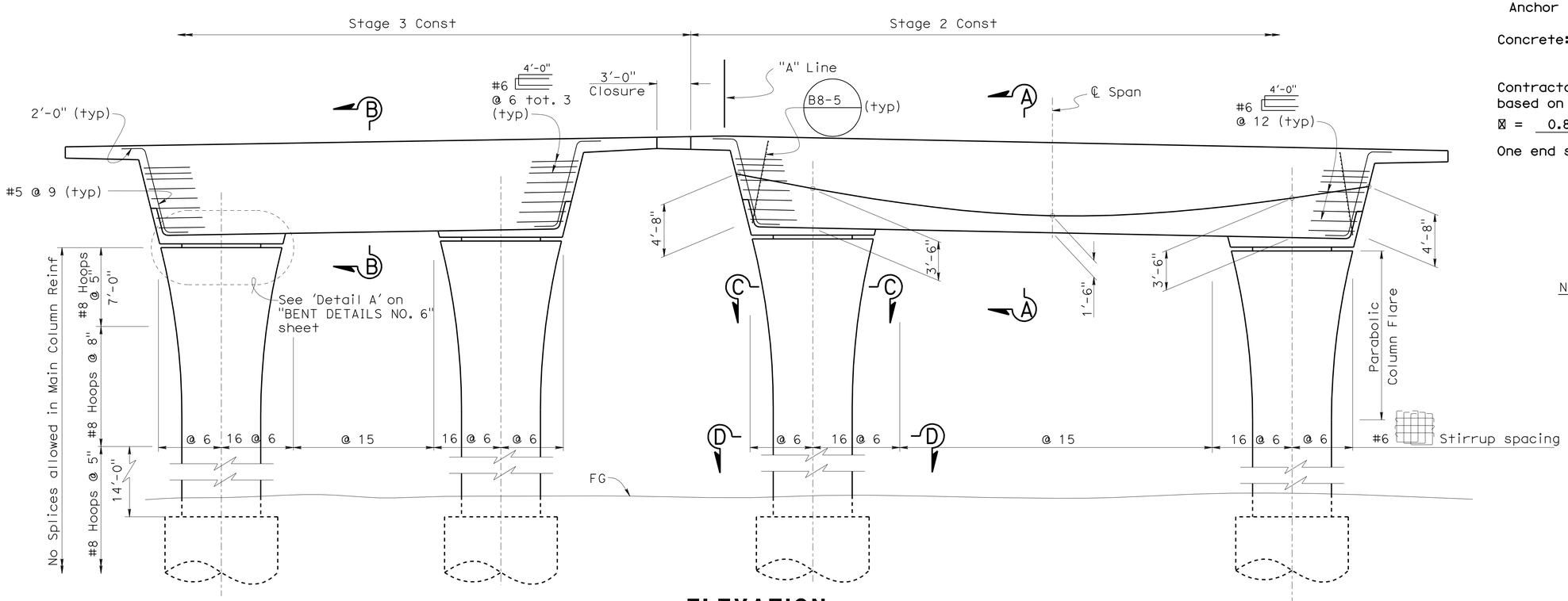

ELEVATION
3/16"=1'-0"

PRESTRESSING NOTES

270 KSI Low Relaxation Strand:

P_{jack} = 4730 kips

Anchor Set = 3/8 in

Concrete: f'_c = 5.0 ksi @ 28 days

f'_{ci} = 3.5 ksi @ time of stressing

Contractor shall submit elongation calculations based on initial stress at

⊠ = 0.876 times jacking stress.

One end stressing shall be performed.

NOTES:

1. For 'Section A-A', see "BENT DETAILS NO. 4" sheet. For 'Section B-B', see "BENT DETAILS NO. 5" sheet.
2. For 'Section C-C' and 'Section D-D', see "BENT DETAILS NO. 2" sheet.
3. For P/S Anchorage Zone detail, see "BENT DETAILS NO. 9" sheet.
4. For Parabolic Column flare, see "TYPICAL SECTION NO. 1" sheet.
5. Cable Path is parabolic between centerline of Columns and straight all other locations.
6. Barrier Rails not shown.

	BY	CHECKED
DESIGN	J. Massoomi	T. Skreslet
DETAILS	T. Nguyen	T. Skreslet
QUANTITIES	J. Massoomi	L. Han

STATE OF CALIFORNIA
DEPARTMENT OF TRANSPORTATION

DIVISION OF ENGINEERING SERVICES
STRUCTURE DESIGN
DESIGN BRANCH 14

BRIDGE NO. 53-3032
POST MILE 3.58

SCHUYLER HEIM BRIDGE (REPLACE)
BENT 8 LAYOUT

STRUCTURES DESIGN DETAIL SHEET (ENGLISH) (REV. 10/25/05)

ORIGINAL SCALE IN INCHES FOR REDUCED PLANS 0 1 2 3

CU 07-271
EA 138201

DISREGARD PRINTS BEARING EARLIER REVISION DATES

REVISION DATES: 4-13-10 04-29-10 05-03-10 5-17-10 02-04-10 2-10-10 03-04-10 03-17-10 4-7-10

SHEET 45 OF 247

FILE => 53-3032-h-b08_lo.dgn

USERNAME => trphillis DATE PLOTTED => 19-OCT-2010 TIME PLOTTED => 10:54

DIST	COUNTY	ROUTE	POST MILES TOTAL PROJECT	SHEET No	TOTAL SHEETS
07	LA	47,103	3.5/4.6, 0.0/1.1	548	1003

REGISTERED CIVIL ENGINEER — DATE 05-24-10

10-11-10
PLANS APPROVAL DATE

REGISTERED PROFESSIONAL ENGINEER — FOUED ZAYATI — No. C57046 — Exp. 06-30-11 — CIVIL — STATE OF CALIFORNIA

The State of California or its officers or agents shall not be responsible for the accuracy or completeness of electronic copies of this plan sheet.

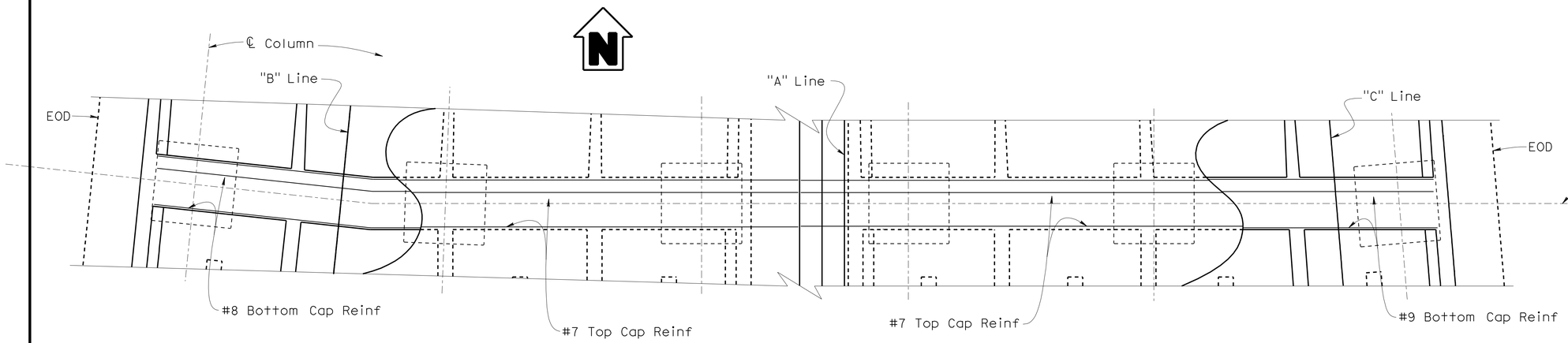

NOTE: Not all top and bottom bars shown.
Top Cap Reinf extend to 2" from EOD.

PLAN
1/8 "=1'-0"

PRESTRESSING NOTES

270 KSI Low Relaxation Strand:

P_{jack} (Stage 1 - Upper Cable)	=	3870	kips
Anchor Set	=	3/8	in
P_{jack} (Stage 1 - Lower Cable)	=	1500	kips
Anchor Set	=	3/8	in
P_{jack} (Stage 2 - Upper Cable)	=	2340	kips
Anchor Set	=	3/8	in
P_{jack} (Stage 2 - Lower Cable)	=	1500	kips
Anchor Set	=	3/8	in

Concrete: f'_c = 5.0 ksi @ 28 days
f'_{ci} = 3.5 ksi @ time of stressing

Contractor shall submit elongation calculations based on initial stress at
⊠ = 0.950 times jacking stress.

One end stressing shall be performed.

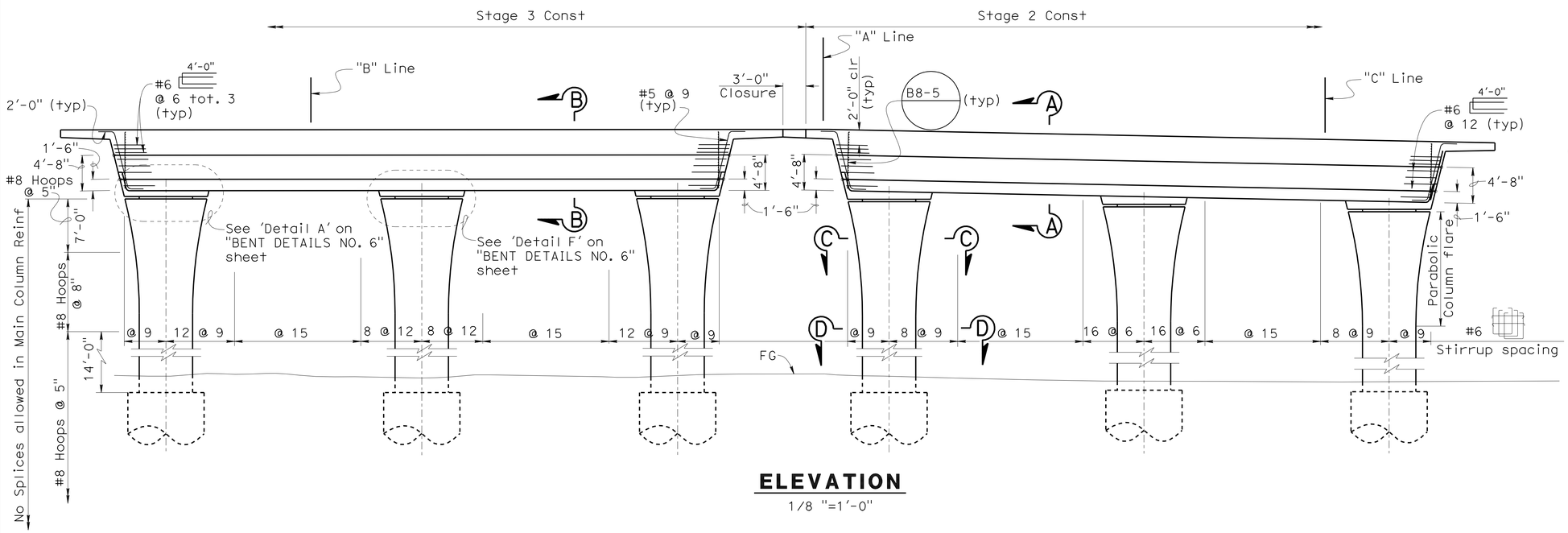

ELEVATION
1/8 "=1'-0"

NOTES:

1. For 'Section A-A', see "BENT DETAILS NO. 4" sheet. For 'Section B-B', see "BENT DETAILS NO. 5" sheet.
2. For 'Section C-C' and 'Section D-D', see "BENT DETAILS NO. 2" sheet
3. For P/S Anchorage Zone detail, see "TYPICAL SECTION NO. 1" sheet
4. For Parabolic Column flare, see "BENT DETAILS NO. 1" sheet
5. Cable Paths are parabolic between centerline of Columns and straight all other locations.
6. Barrier Rails not shown.

	BY	CHECKED
DESIGN	J. Massoomi	T. Skreslet
DETAILS	T. Nguyen	T. Skreslet
QUANTITIES	J. Massoomi	L. Han

STATE OF CALIFORNIA
DEPARTMENT OF TRANSPORTATION

DIVISION OF ENGINEERING SERVICES
STRUCTURE DESIGN
DESIGN BRANCH 14

BRIDGE NO. 53-3032
POST MILE 3.58

SCHUYLER HEIM BRIDGE (REPLACE)
BENT 9 LAYOUT

STRUCTURES DESIGN DETAIL SHEET (ENGLISH) (REV. 10/25/05)

ORIGINAL SCALE IN INCHES FOR REDUCED PLANS 0 1 2 3

CU 07-271
EA 138201

DISREGARD PRINTS BEARING EARLIER REVISION DATES

REVISION DATES: 4-13-10 04-29-10 05-05-10 5-17-10 5-28-10 2-10-10 03-04-10 03-17-10 4-1-10

SHEET 46 OF 247

FILE => 53-3032-h-b09_lo.dgn

USERNAME => trphtis DATE PLOTTED => 19-OCT-2010 TIME PLOTTED => 10:54

DIST	COUNTY	ROUTE	POST MILES TOTAL PROJECT	SHEET No	TOTAL SHEETS
07	LA	47,103	3.5/4.6, 0.0/1.1	549	1003

REGISTERED CIVIL ENGINEER 05-24-10 DATE

10-11-10
PLANS APPROVAL DATE

The State of California or its officers or agents shall not be responsible for the accuracy or completeness of electronic copies of this plan sheet.

REGISTERED PROFESSIONAL ENGINEER FOUED ZAYATI No. C57046 Exp. 06-30-11 CIVIL STATE OF CALIFORNIA

PRESTRESSING NOTES

270 KSI Low Relaxation Strand:

P_{jack} (Stage 1 Upper Cable) = 1990 kips

P_{jack} (Stage 1 Lower Cable) = 2000 kips

P_{jack} (Stage 2 Upper Cable) = 1800 kips

P_{jack} (Stage 2 Lower Cable) = 2000 kips

Anchor Set = 3/8 in

Concrete: f'_c = 5.0 ksi @ 28 days

f'_{ci} = 3.5 ksi @ time of stressing

Contractor shall submit elongation calculations based on initial stress at

☒ (Stage 1) = 0.940 times jacking stress.

☒ (Stage 2) = 0.940 times jacking stress.

One end stressing shall be performed from the long-span end only.

NOTES:

1. For 'Section A-A', see "BENT DETAILS NO. 4" sheet. For 'Section B-B', see "BENT DETAILS NO. 5" sheet.
2. For 'Section C-C' and 'Section D-D', see "BENT DETAILS NO. 2" sheet.
3. For Parabolic Column flare, see "BENT DETAILS NO. 1" sheet.

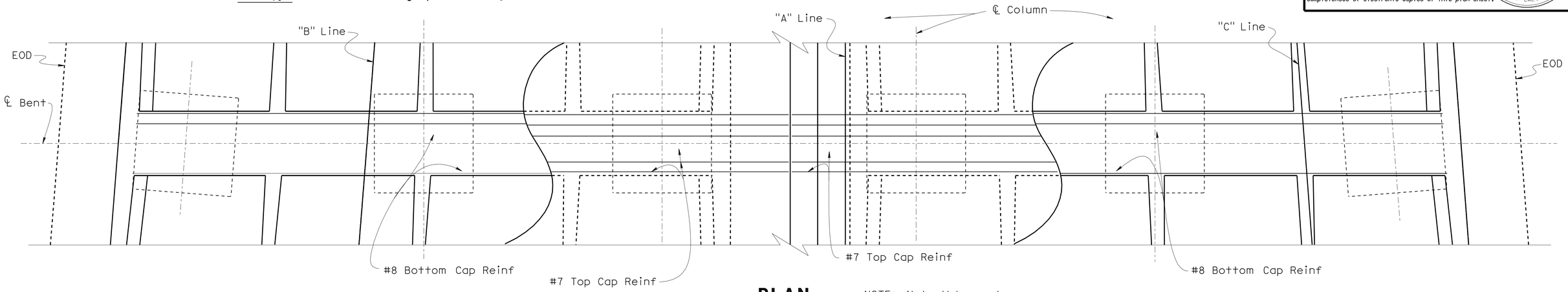

PLAN
3/16"=1'-0"

NOTE: Not all bars shown
Top cap Reinf extend to 2'-0" from EOD

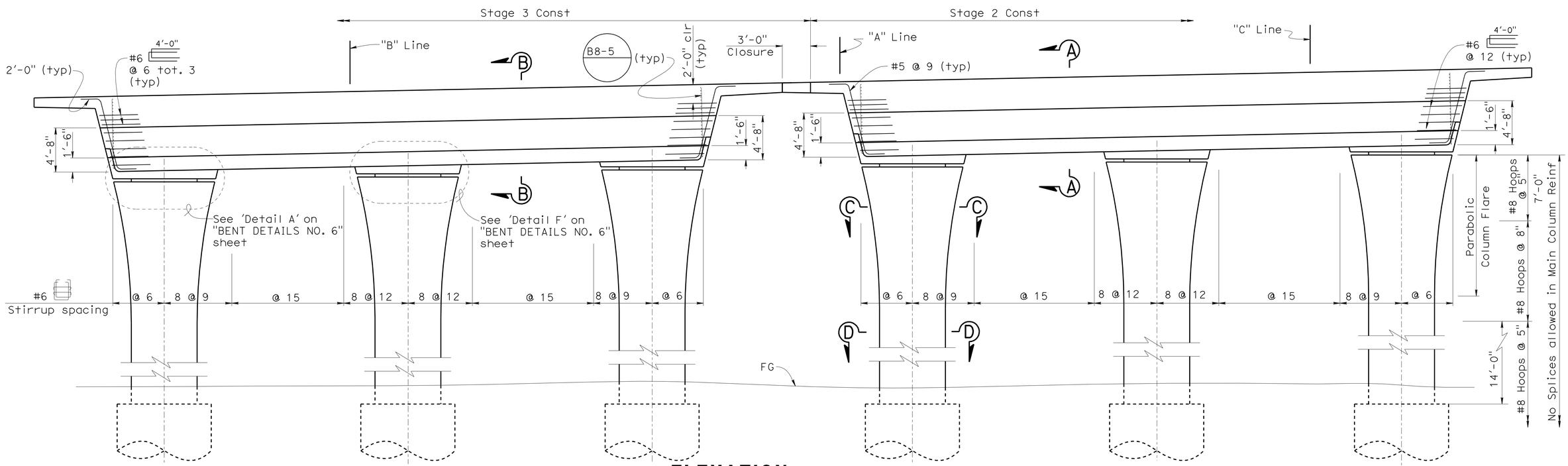

ELEVATION
3/16"=1'-0"

DESIGN	BY J. Massoomi	CHECKED T. Skreslet	
DETAILS	BY T. Nguyen	CHECKED T. Skreslet	
QUANTITIES	BY J. Massoomi	CHECKED L. Han	

STATE OF CALIFORNIA
DEPARTMENT OF TRANSPORTATION

DIVISION OF ENGINEERING SERVICES
STRUCTURE DESIGN
DESIGN BRANCH 14

BRIDGE NO. 53-3032
POST MILE 3.58

SCHUYLER HEIM BRIDGE (REPLACE)
BENT 10 LAYOUT

STRUCTURES DESIGN DETAIL SHEET (ENGLISH) (REV. 10/25/05)

ORIGINAL SCALE IN INCHES FOR REDUCED PLANS 0 1 2 3

CU 07-271
EA 138201

DISREGARD PRINTS BEARING EARLIER REVISION DATES

REVISION DATES: 4-20-10 4-21-10 04-28-10 05-03-10 5-18-10 5-28-10 03-17-10 4-5-10 4-13-10

SHEET 47 OF 247

FILE => 53-3032-h-b10_lo.dgn

USERNAME => trphi16 DATE PLOTTED => 19-OCT-2010 TIME PLOTTED => 10:54

DIST	COUNTY	ROUTE	POST MILES TOTAL PROJECT	SHEET No	TOTAL SHEETS
07	LA	47,103	3.5/4.6, 0.0/1.1	550	1003

REGISTERED CIVIL ENGINEER 05-24-10 DATE

10-11-10
PLANS APPROVAL DATE

REGISTERED PROFESSIONAL ENGINEER FOUED ZAYATI No. C57046 Exp. 06-30-11 CIVIL STATE OF CALIFORNIA

The State of California or its officers or agents shall not be responsible for the accuracy or completeness of electronic copies of this plan sheet.

NOTES:

1. For 'Section A-A', see "BENT DETAILS NO. 4" sheet. For 'Section B-B', see "BENT DETAILS NO. 5" sheet.
2. For 'Section C-C' and 'Section D-D', see "BENT DETAILS NO. 2" sheet.
3. For P/S Anchorage Zone detail, see "TYPICAL SECTION NO. 1" sheet
4. For Parabolic Column flare, see, "BENT DETAILS NO. 1" sheet
5. Cable Paths are parabolic between center line of Columns and straight all other locations.
6. Barrier Rails not shown.

PRESTRESSING NOTES

270 KSI Low Relaxation Strand:

P_{jack} (Stage 1) = 6050 kips

Anchor Set = 3/8 in

P_{jack} (Stage 2) = 5980 kips

Anchor Set = 3/8 in

Concrete: f'_c = 5.0 ksi @ 28 days

f'_{ci} = 3.5 ksi @ time of stressing

Contractor shall submit elongation calculations based on initial stress at

⊠ = 0.917 times jacking stress (Stage 1).

⊠ = 0.878 times jacking stress (Stage 2).

One end stressing shall be performed.

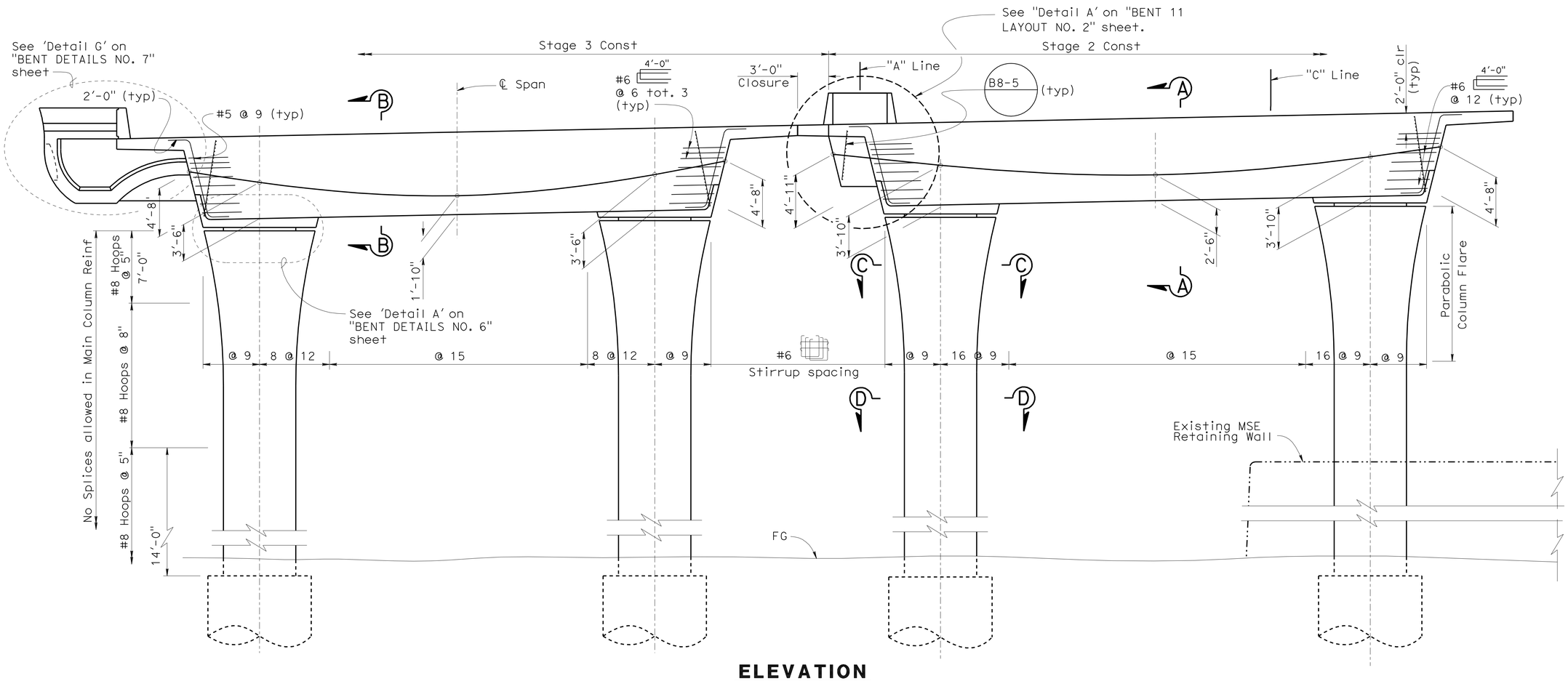

ELEVATION

3/16"=1'-0"

DESIGN	BY J. Massoomi	CHECKED T. Skreslet	
DETAILS	BY T. Nguyen	CHECKED T. Skreslet	
QUANTITIES	BY J. Massoomi	CHECKED L. Han	

STATE OF CALIFORNIA
DEPARTMENT OF TRANSPORTATION

DIVISION OF ENGINEERING SERVICES
STRUCTURE DESIGN
DESIGN BRANCH 14

BRIDGE NO. 53-3032
POST MILE 3.58

SCHUYLER HEIM BRIDGE (REPLACE)

BENT 11 LAYOUT NO. 1

STRUCTURES DESIGN DETAIL SHEET (ENGLISH) (REV. 10/25/05)

ORIGINAL SCALE IN INCHES FOR REDUCED PLANS 0 1 2 3

CU 07-271
EA 138201

DISREGARD PRINTS BEARING EARLIER REVISION DATES

REVISION DATES: 03-26-10 03-26-10 3-5-10 4-13-10 4-16-10 04-29-10 05-03-10 5-18-10 03-14-10

SHEET 48 OF 247

FILE => 53-3032-h-b11_lo-no01.dgn

USERNAME => trphilis DATE PLOTTED => 13-OCT-2010 TIME PLOTTED => 10:54

DIST	COUNTY	ROUTE	POST MILES TOTAL PROJECT	SHEET No	TOTAL SHEETS
07	LA	47,103	3.5/4.6, 0.0/1.1	551	1003

REGISTERED CIVIL ENGINEER — 05-24-10 DATE

10-11-10
PLANS APPROVAL DATE

REGISTERED PROFESSIONAL ENGINEER — FOUED ZAYATI — No. C57046 — Exp. 06-30-11 — CIVIL — STATE OF CALIFORNIA

The State of California or its officers or agents shall not be responsible for the accuracy or completeness of electronic copies of this plan sheet.

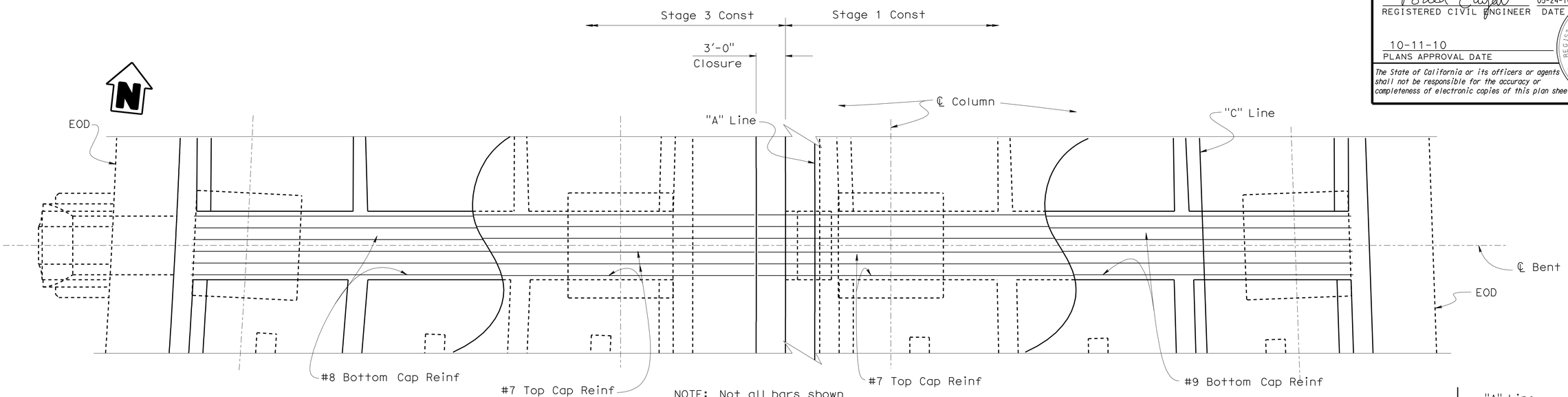

NOTE: Not all bars shown
Top cap Reinf extend to 2'-0" from EOD

PLAN

SCALE: 3/16" = 1'-0"

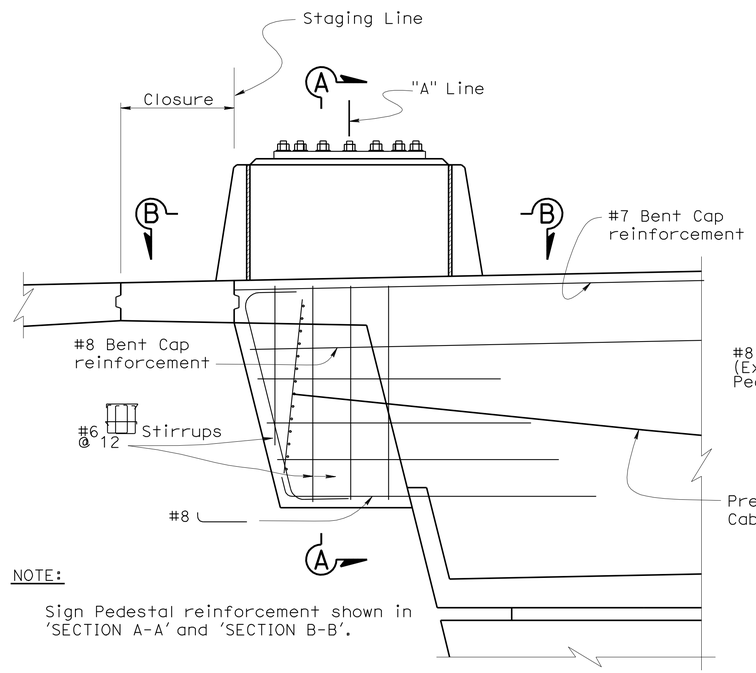

NOTE:

Sign Pedestal reinforcement shown in 'SECTION A-A' and 'SECTION B-B'.

DETAIL A

SCALE: 1/2" = 1'-0"

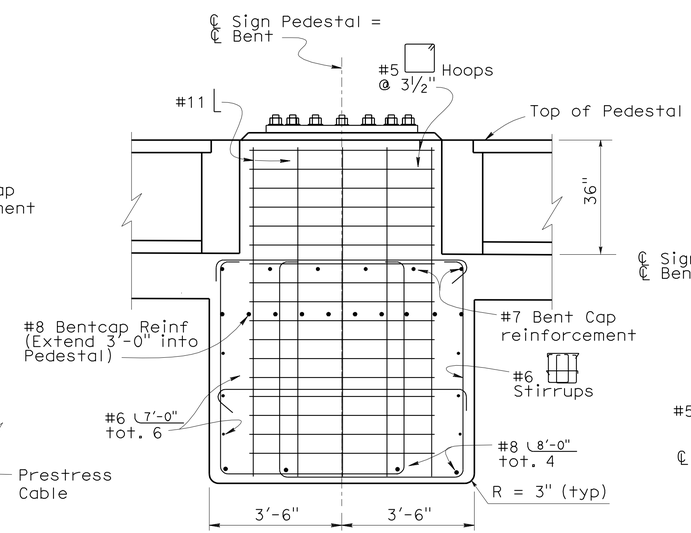

SECTION A-A

SCALE: 1/2" = 1'-0"

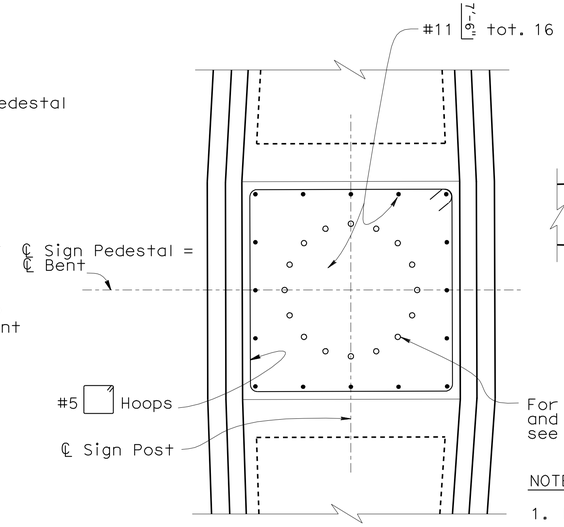

SECTION B-B

SCALE: 1/2" = 1'-0"

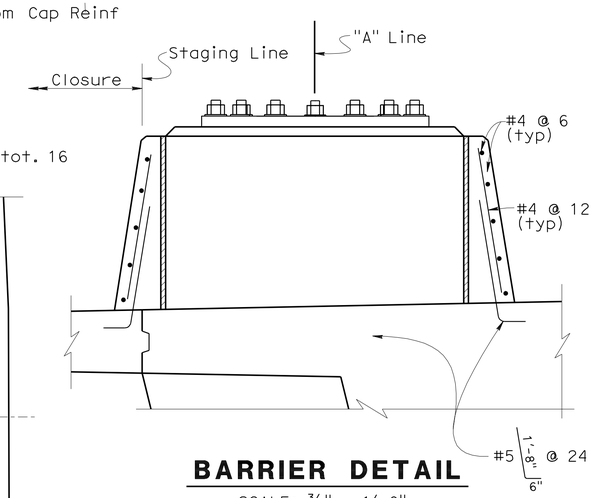

BARRIER DETAIL

SCALE: 3/4" = 1'-0"

NOTES:

1. For Prestressing Layout and Notes, see "BENT 11 LAYOUT No. 1" sheet.
2. For P/S Anchorage Zone Detail, see "TYPICAL SECTION No. 1" sheet.
3. Barrier Rails not shown.
4. Stirrups not shown.
5. For location of 'Detail A', see "BENT 11 LAYOUT No. 2" sheet
6. For additional reinforcement, see "BENT DETAILS No. 4" and "TYPICAL SECTION No. 1" sheets

	BY	CHECKED
DESIGN	J. Massoomi	T. Skreslet
DETAILS	T. Nguyen	T. Skreslet
QUANTITIES	J. Massoomi	L. Han

STATE OF CALIFORNIA
DEPARTMENT OF TRANSPORTATION

DIVISION OF ENGINEERING SERVICES
STRUCTURE DESIGN
DESIGN BRANCH 14

BRIDGE NO. 53-3032
POST MILE 3.58

SCHUYLER HEIM BRIDGE (REPLACE)

BENT 11 LAYOUT NO. 2

STRUCTURES DESIGN DETAIL SHEET (ENGLISH) (REV. 10/25/05)

ORIGINAL SCALE IN INCHES FOR REDUCED PLANS 0 1 2 3

CU 07-271
EA 138201

DISREGARD PRINTS BEARING EARLIER REVISION DATES

REVISION DATES: 03-26-10 3-5-10 4-13-10 4-26-10 4-28-10 05-03-10 5-18-10 07-15-10 07-16-10

SHEET 49 OF 247

FILE => 53-3032-h-b11_lo-no02.dgn

USERNAME => tripierce DATE PLOTTED => 19-OCT-2010 TIME PLOTTED => 10:28

DIST	COUNTY	ROUTE	POST MILES TOTAL PROJECT	SHEET No	TOTAL SHEETS
07	LA	47,103	3.5/4.6, 0.0/1.1	552	1003

REGISTERED CIVIL ENGINEER — 05-24-10 DATE

10-11-10
PLANS APPROVAL DATE

REGISTERED PROFESSIONAL ENGINEER — FOUED ZAYATI No. C57046 Exp. 06-30-11 CIVIL — STATE OF CALIFORNIA

The State of California or its officers or agents shall not be responsible for the accuracy or completeness of electronic copies of this plan sheet.

PRESTRESSING NOTES

270 KSI Low Relaxation Strand:

P_{jack} (Stage 1) = 3090 kips

Anchor Set = 3/8 in

P_{jack} (Stage 2) = 2660 kips

Anchor Set = 3/8 in

Concrete: f'_c = 5.0 ksi @ 28 days

f'_{ci} = 3.5 ksi @ time of stressing

Contractor shall submit elongation calculations based on initial stress at

⊠ = 0.892 times jacking stress.

One end stressing shall be performed.

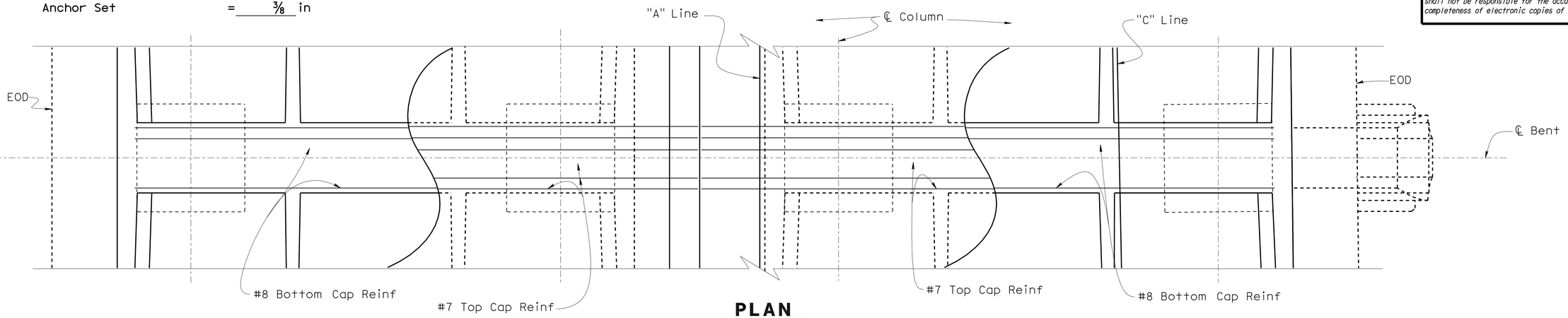

PLAN

SCALE: 3/16" = 1'-0"

NOTE: Not all bars shown
Top cap Reinf extend to 2'-0" from EOD

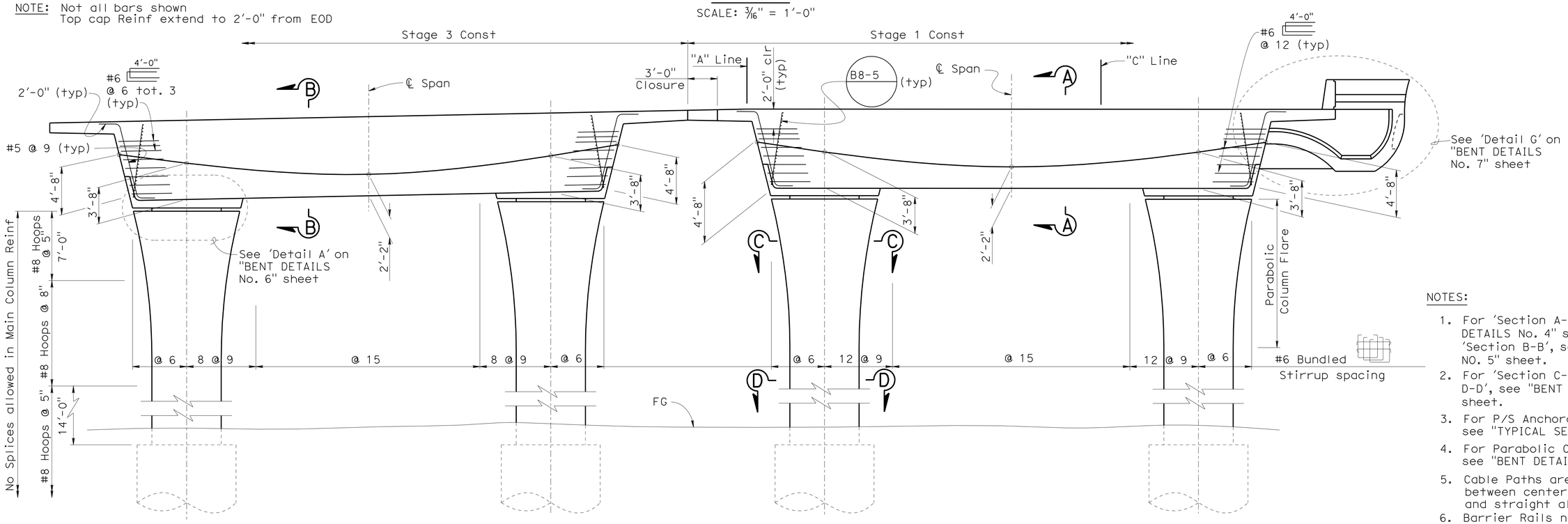

ELEVATION

SCALE: 3/16" = 1'-0"

NOTES:

1. For 'Section A-A', see "BENT DETAILS No. 4" sheet. For 'Section B-B', see "BENT DETAILS NO. 5" sheet.
2. For 'Section C-C' and 'Section D-D', see "BENT DETAILS No. 2" sheet.
3. For P/S Anchorage Zone detail, see "TYPICAL SECTION No. 1" sheet.
4. For Parabolic Column flare, see "BENT DETAILS No. 1" sheet
5. Cable Paths are parabolic between between centerline of Columns and straight all other locations.
6. Barrier Rails not shown.

	BY	CHECKED
DESIGN	J. Massoomi	T. Skreslet
DETAILS	T. Nguyen	T. Skreslet
QUANTITIES	J. Massoomi	L. Han

STATE OF CALIFORNIA
DEPARTMENT OF TRANSPORTATION

DIVISION OF ENGINEERING SERVICES
STRUCTURE DESIGN
DESIGN BRANCH 14

BRIDGE NO. 53-3032
POST MILE 3.58

SCHUYLER HEIM BRIDGE (REPLACE)

BENT 12 LAYOUT

STRUCTURES DESIGN DETAIL SHEET (ENGLISH) (REV. 10/25/05)

ORIGINAL SCALE IN INCHES FOR REDUCED PLANS 0 1 2 3

CU 07-271
EA 138201

DISREGARD PRINTS BEARING EARLIER REVISION DATES

REVISION DATES: 4-13-10 04-29-10 05-03-10 5-13-10 05-27-10 5-28-10 03-04-10 03-26-10 3-5-10

SHEET 50 OF 247

FILE => 53-3032-h-b12_lo.dgn

USERNAME => trpierce DATE PLOTTED => 19-OCT-2010 TIME PLOTTED => 10:28

DIST	COUNTY	ROUTE	POST MILES TOTAL PROJECT	SHEET No	TOTAL SHEETS
07	LA	47,103	3.5/4.6, 0.0/1.1	553	1003

Foued Zayati 05-24-10
REGISTERED CIVIL ENGINEER DATE

10-11-10
PLANS APPROVAL DATE

REGISTERED PROFESSIONAL ENGINEER FOUED ZAYATI No. C57046 Exp. 06-30-11 CIVIL STATE OF CALIFORNIA

The State of California or its officers or agents shall not be responsible for the accuracy or completeness of electronic copies of this plan sheet.

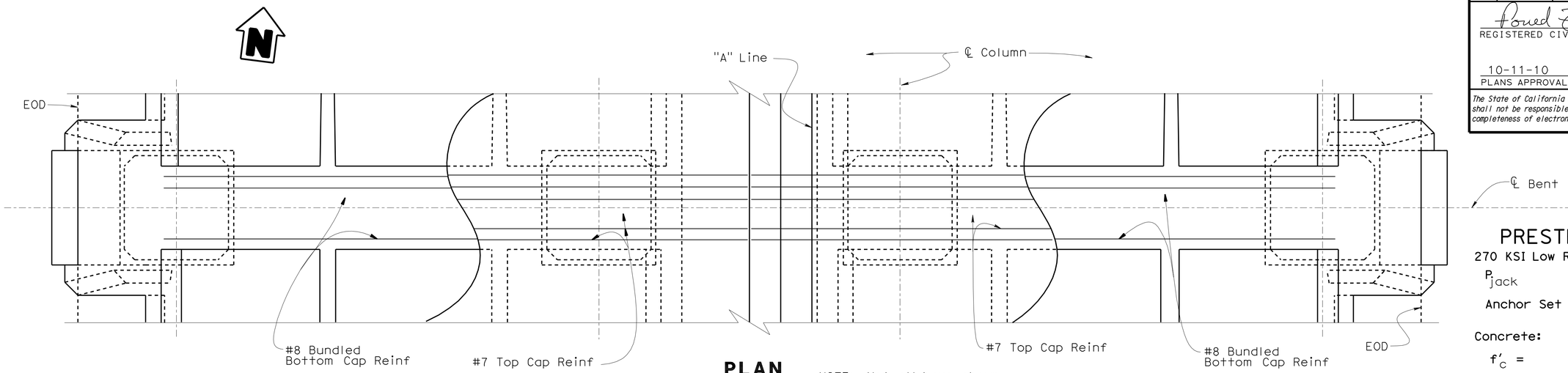

PLAN
SCALE: 3/16" = 1'-0"

NOTE: Not all bars shown
Top cap Reinf extend to 2'-0" from EOD

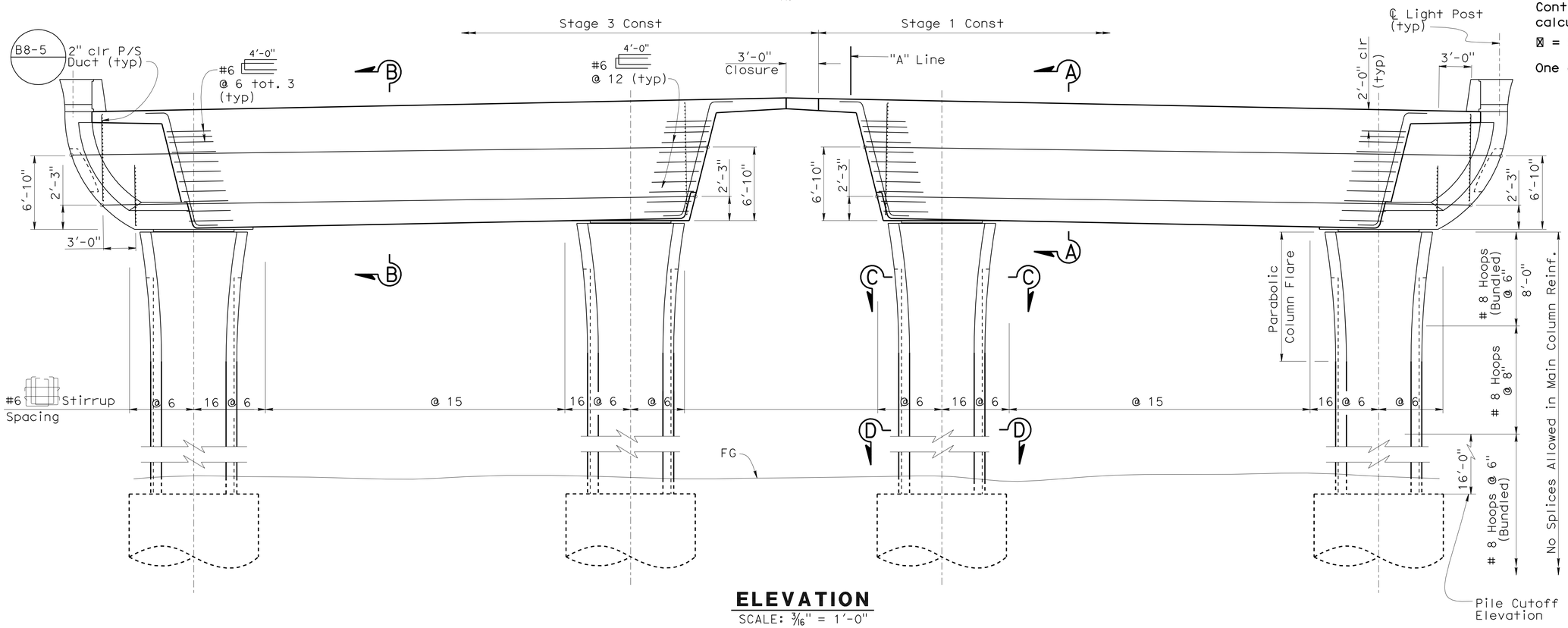

ELEVATION
SCALE: 3/16" = 1'-0"

PRESTRESSING NOTES

270 KSI Low Relaxation Strand:

P_{jack} = see P/S table (kips)

Anchor Set = 3/8 in

Concrete:

f'_c = 5.0 ksi @ 28 days

f'_{ci} = 3.5 ksi @ time of stressing

Contractor shall submit elongation calculations based on initial stress at ⊠ = See Table times jacking stress.

One end stressing shall be performed.

P/S TABLE

Bent No.	Stage	⊠	Jacking Force (Kips) Lower Cable	Jacking Force (Kips) Upper Cable
13	1	0.932	4000	1450
	2	0.932	4000	1450
14	1	0.932	4000	1370
	2	0.932	4000	1370
15	1	0.932	4000	1370
	2	0.932	4000	1450
16	1	0.929	4000	1480
	2	0.937	4000	1470

NOTES:

1. For 'Section A-A', see "BENT DETAILS No. 4" sheet. For 'Section B-B', see "BENT DETAILS No. 5" sheet.
2. For 'Section C-C' and 'Section D-D', see "BENT DETAILS No. 2 sheet.
3. For Parabolic Column flare, see "BENT DETAILS No. 1" sheet
4. Cable Paths are parabolic between centerline of Columns and straight all other locations.

DESIGN	BY J. Massoomi	CHECKED T. Skreslet	
DETAILS	BY T. Nguyen/ K. Kubo	CHECKED T. Skreslet	
QUANTITIES	BY J. Massoomi	CHECKED L. Han	

STATE OF CALIFORNIA
DEPARTMENT OF TRANSPORTATION

DIVISION OF ENGINEERING SERVICES
STRUCTURE DESIGN
DESIGN BRANCH 14

BRIDGE NO. 53-3032
POST MILE 3.58

SCHUYLER HEIM BRIDGE (REPLACE)
PIERS 13 THRU 16 LAYOUT

STRUCTURES DESIGN DETAIL SHEET (ENGLISH) (REV. 10/25/05)

ORIGINAL SCALE IN INCHES FOR REDUCED PLANS 0 1 2 3

CU 07-271
EA 138201

DISREGARD PRINTS BEARING EARLIER REVISION DATES

REVISION DATES: 4-1-10 4-13-10 4-19-10 04-28-10 05-03-10 05-06-10 5-18-10 05-20-10 5-28-10

FILE => 53-3032-h-b13&16_lo.dgn

USERNAME => trpierce DATE PLOTTED => 19-Oct-2010 TIME PLOTTED => 10:28

DIST	COUNTY	ROUTE	POST MILES TOTAL PROJECT	SHEET No	TOTAL SHEETS
07	LA	47,103	3.5/4.6, 0.0/1.1	554	1003

REGISTERED CIVIL ENGINEER 05-24-10 DATE

10-11-10
PLANS APPROVAL DATE

REGISTERED PROFESSIONAL ENGINEER FOUED ZAYATI No. C57046 Exp. 06-30-11 CIVIL STATE OF CALIFORNIA

The State of California or its officers or agents shall not be responsible for the accuracy or completeness of electronic copies of this plan sheet.

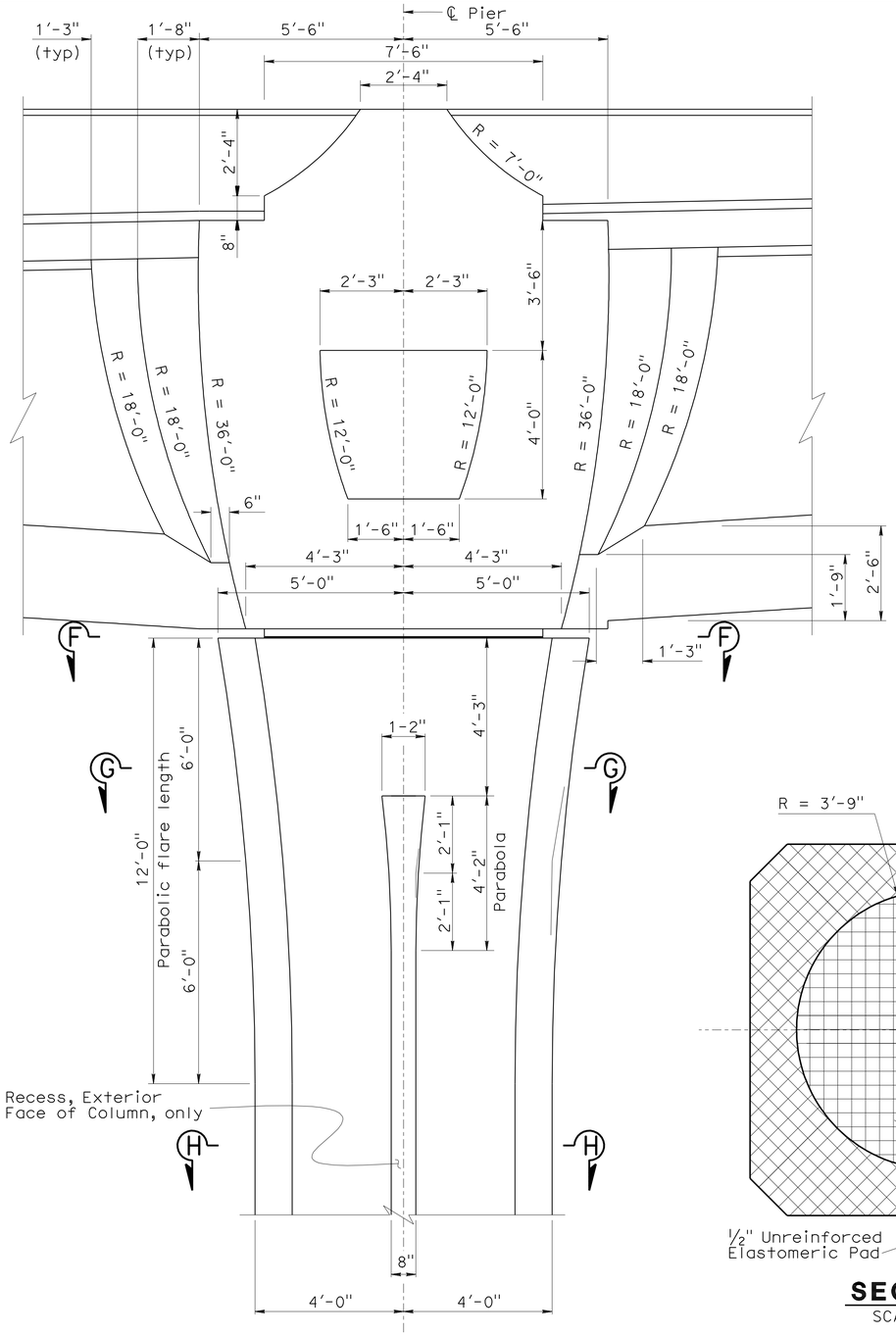

PIERS 13 TO 16 DETAILS - LONGITUDINAL

SCALE: ½" = 1'-0"

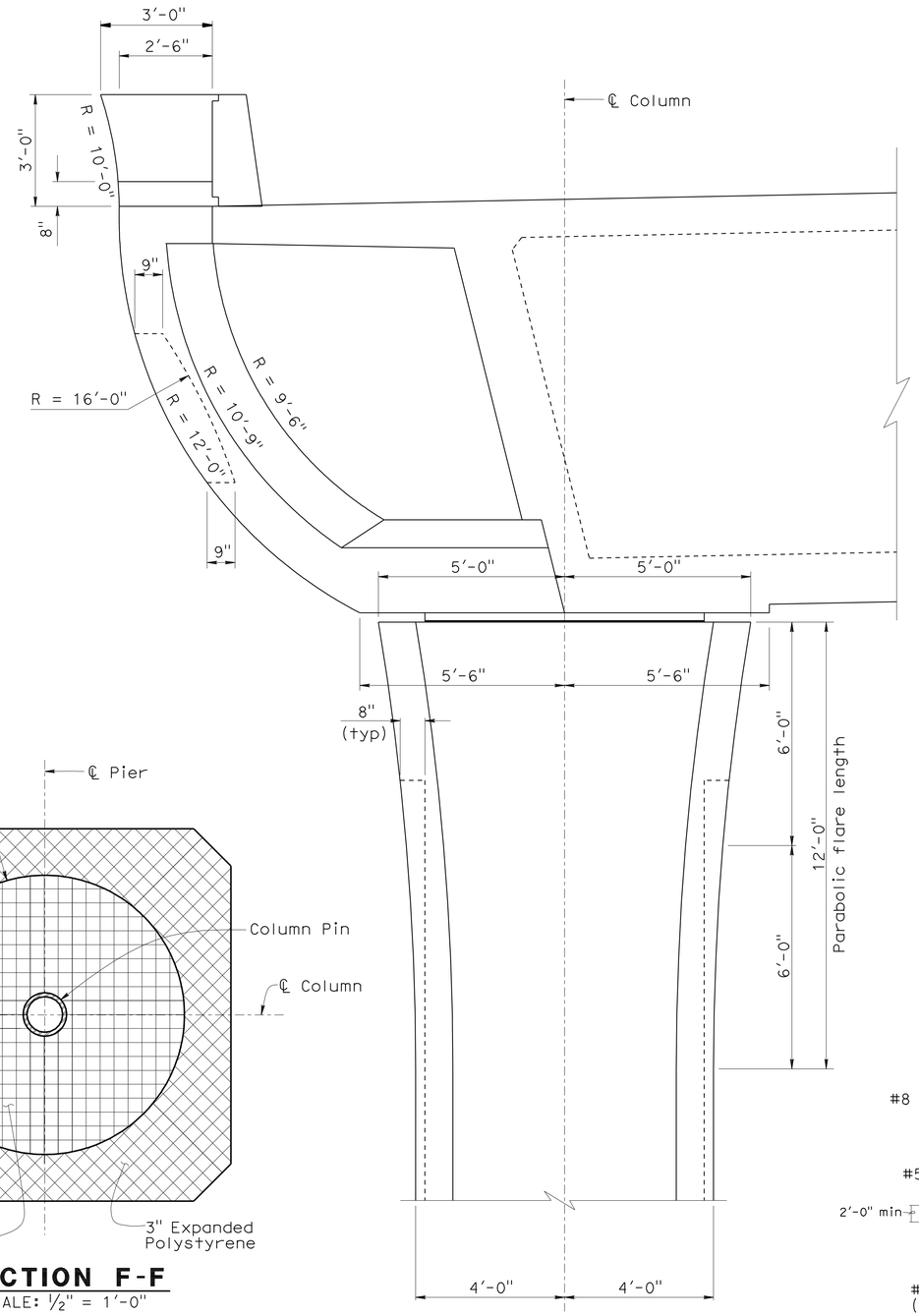

PIERS 13 TO 16 DETAILS - TRANSVERSE

SCALE: ½" = 1'-0"

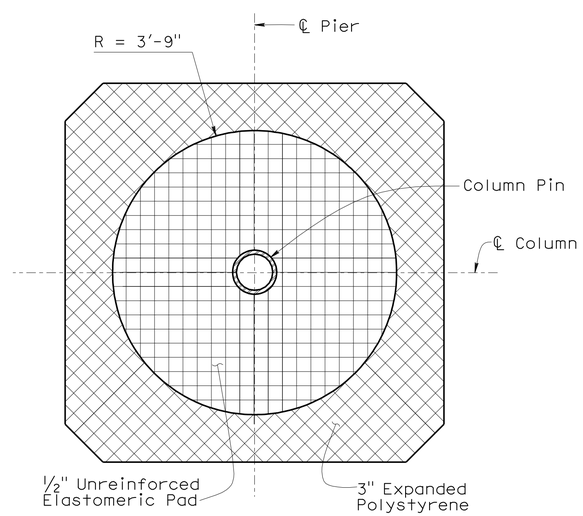

SECTION F-F

SCALE: ½" = 1'-0"

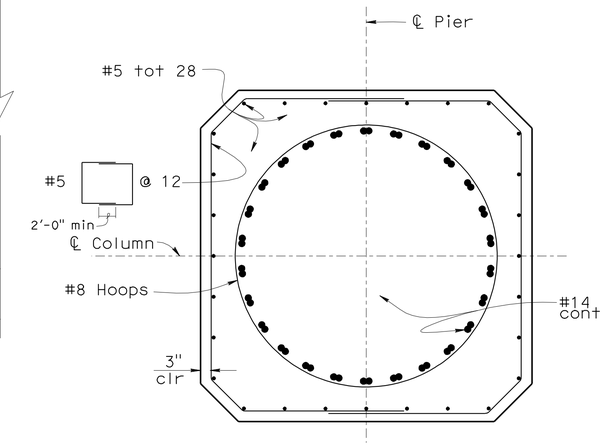

SECTION G-G

SCALE: ½" = 1'-0"

NOTE: All reinforcement shall be epoxy coated.

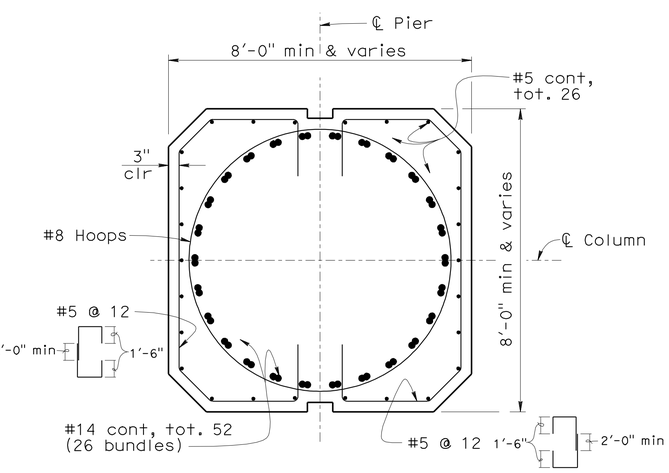

SECTION H-H

SCALE: ½" = 1'-0"

NOTE: All reinforcement shall be epoxy coated.

DESIGN	BY F. Zayati	CHECKED L. Bahia	
DETAILS	BY K. Kubo	CHECKED F. Zayati	
QUANTITIES	BY J. Massoomi	CHECKED L. Han	

STATE OF CALIFORNIA
DEPARTMENT OF TRANSPORTATION

DIVISION OF ENGINEERING SERVICES
STRUCTURE DESIGN
DESIGN BRANCH 14

BRIDGE NO. 53-3032
POST MILE 3.58

SCHUYLER HEIM BRIDGE (REPLACE)

PIERS 13 THRU 16 DETAILS NO. 1

STRUCTURES DESIGN DETAIL SHEET (ENGLISH) (REV. 10/25/05)

ORIGINAL SCALE IN INCHES FOR REDUCED PLANS 0 1 2 3

CU 07-271
EA 138201

DISREGARD PRINTS BEARING EARLIER REVISION DATES

REVISION DATES: 01-03-10, 02-26-10, 03-03-10, 05-03-10, 05-04-10, 05-19-10

SHEET 52 OF 247

FILE => 53-3032-h-b13&16det01.dgn

USERNAME => ttpierce DATE PLOTTED => 19-OCT-2010 TIME PLOTTED => 10:29

DIST	COUNTY	ROUTE	POST MILES TOTAL PROJECT	SHEET No	TOTAL SHEETS
07	LA	47,103	3.5/4.6, 0.0/1.1	555	1003

REGISTERED CIVIL ENGINEER — DATE 05-24-10

10-11-10
PLANS APPROVAL DATE

REGISTERED PROFESSIONAL ENGINEER — FOUED ZAYATI — No. C57046 — Exp. 06-30-11 — CIVIL — STATE OF CALIFORNIA

The State of California or its officers or agents shall not be responsible for the accuracy or completeness of electronic copies of this plan sheet.

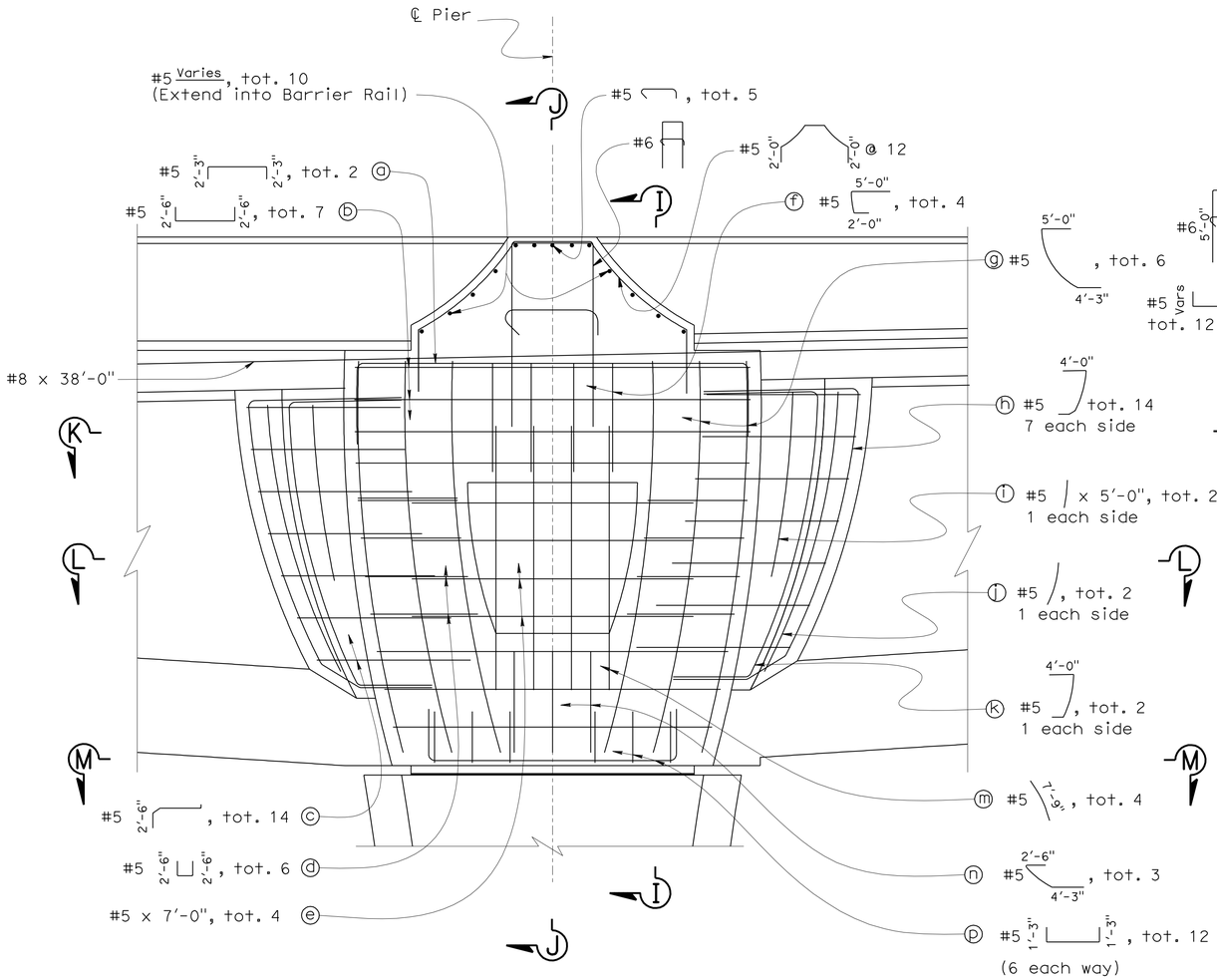

BENT 13 TO 16 BLISTER DETAIL

SCALE: 1/2" = 1'-0"

NOTE: Barrier Rail reinforcement continuous within limits of Pedestal

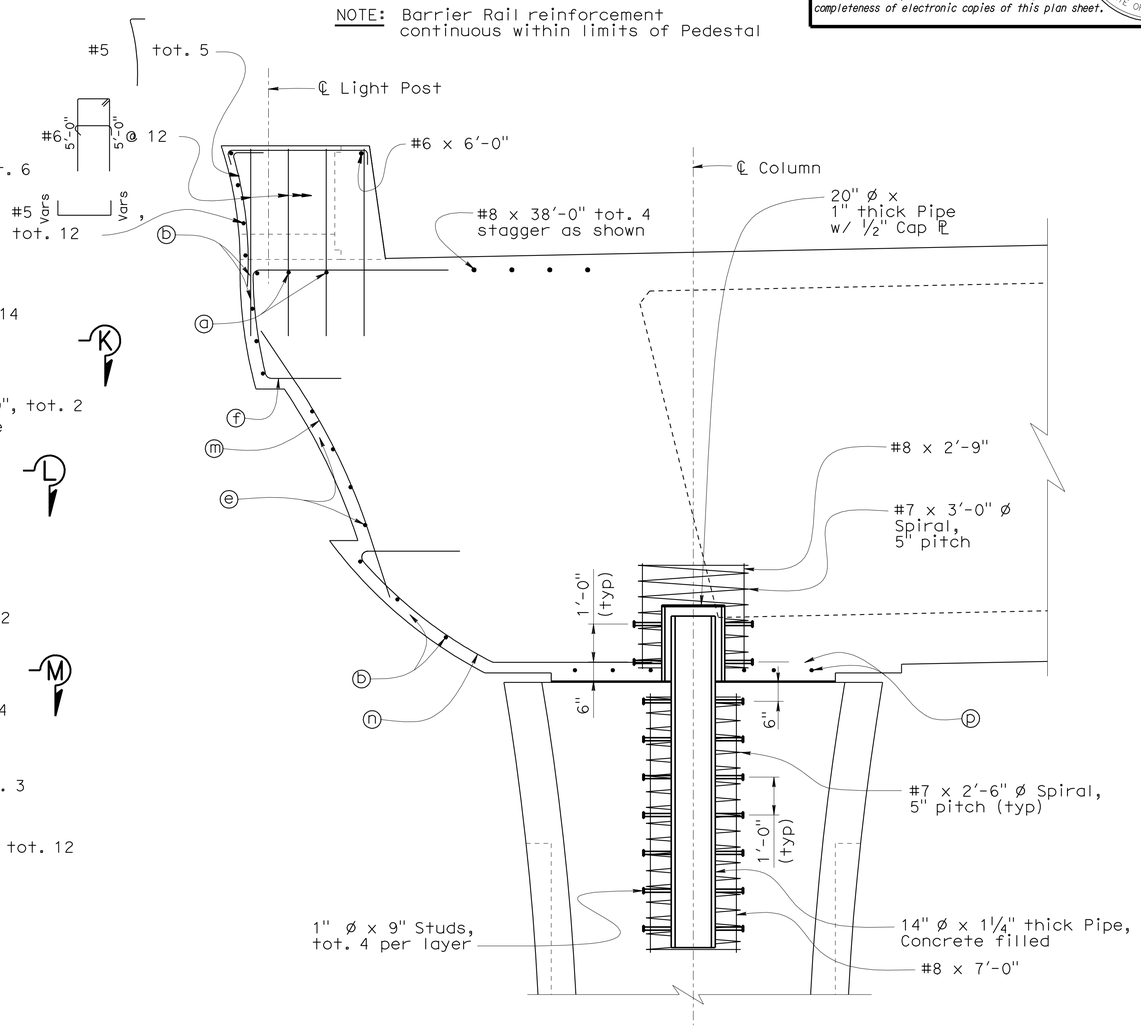

SECTION J-J

SCALE: 1/2" = 1'-0"

DESIGN	BY F. Zayati	CHECKED L. Bahia	
DETAILS	BY K. Kubo	CHECKED F. Zayati	
QUANTITIES	BY J. Massoomi	CHECKED L. Han	

STATE OF CALIFORNIA
DEPARTMENT OF TRANSPORTATION

DIVISION OF ENGINEERING SERVICES
STRUCTURE DESIGN
DESIGN BRANCH 14

BRIDGE NO. 53-3032
POST MILE 3.58

SCHUYLER HEIM BRIDGE (REPLACE)
PIERS 13 THRU 16 DETAILS NO. 2

STRUCTURES DESIGN DETAIL SHEET (ENGLISH) (REV. 10/25/05)

ORIGINAL SCALE IN INCHES FOR REDUCED PLANS 0 1 2 3

CU 07-271
EA 138201

DISREGARD PRINTS BEARING EARLIER REVISION DATES

REVISION DATES: 01-04-10, 02-04-10, 03-01-10, 03-02-10, 05-04-10, 05-06-10, 05-23-10

SHEET 53 OF 247

FILE => 53-3032-h-b13&16det02.dgn

USERNAME => frpierce DATE PLOTTED => 19-OCT-2010 TIME PLOTTED => 10:29

DIST	COUNTY	ROUTE	POST MILES TOTAL PROJECT	SHEET No	TOTAL SHEETS
07	LA	47,103	3.5/4.6, 0.0/1.1	556	1003

REGISTERED CIVIL ENGINEER 05-24-10 DATE

10-11-10
PLANS APPROVAL DATE

The State of California or its officers or agents shall not be responsible for the accuracy or completeness of electronic copies of this plan sheet.

REGISTERED PROFESSIONAL ENGINEER
FOUED ZAYATI
No. C57046
Exp. 06-30-11
CIVIL
STATE OF CALIFORNIA

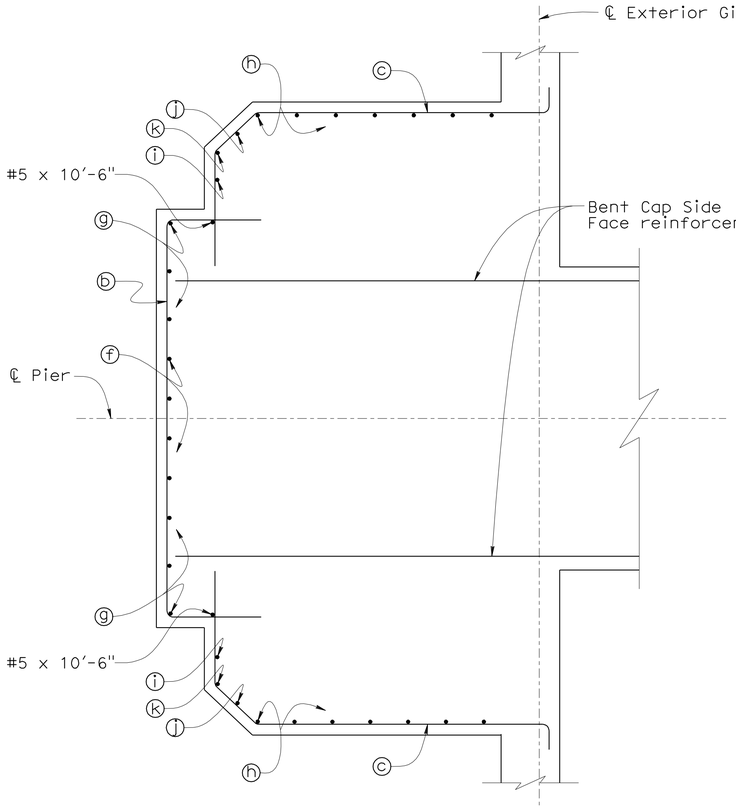

SECTION K-K

SCALE: ½" = 1'-0"

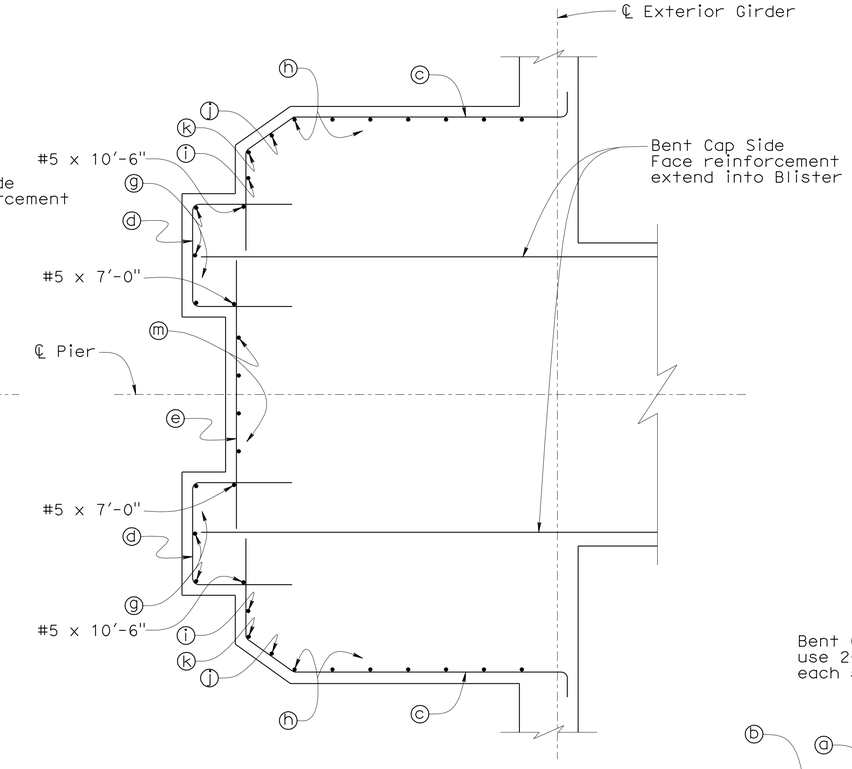

SECTION L-L

SCALE: ½" = 1'-0"

NOTES:

1. For the location of 'Section I-I', Section K-K', 'Section G-G' and 'Section M-M', see PIERS 13 THRU 16 DETAILS No. 2" sheet.
2. For additional reinforcement information, see Bent Layout sheets.

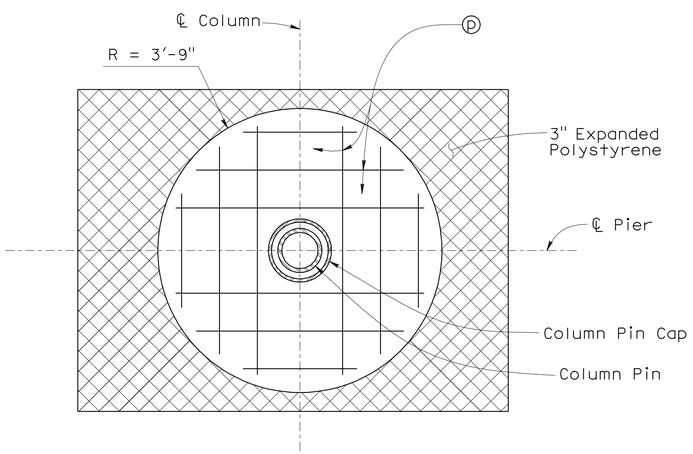

SECTION M-M

SCALE: ½" = 1'-0"

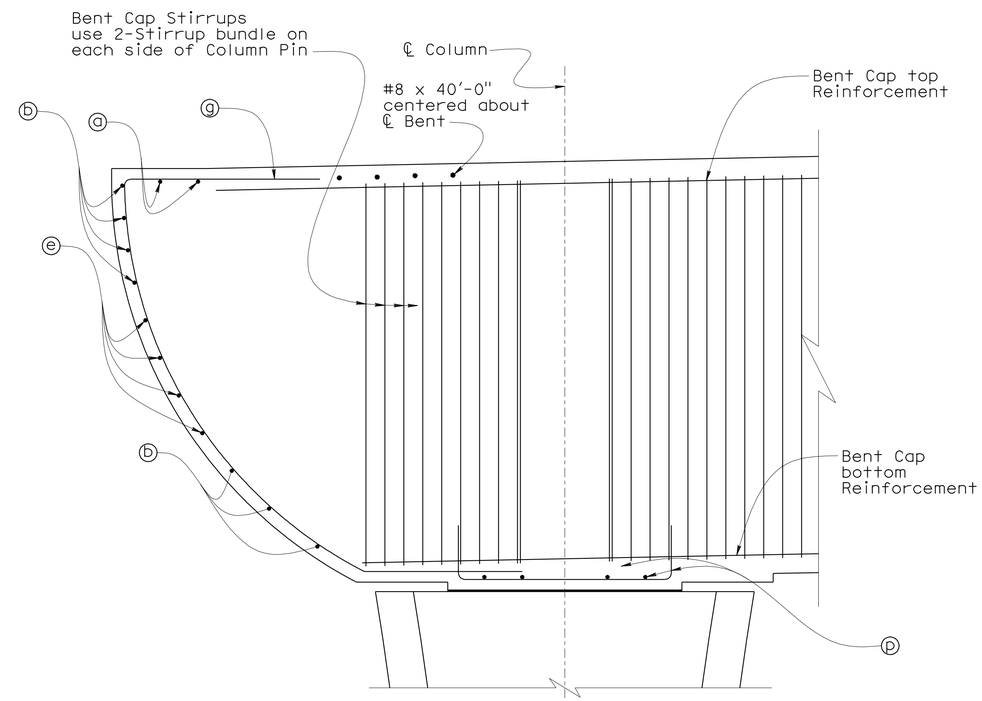

SECTION I-I

SCALE: ½" = 1'-0"

DESIGN	BY F. Zayati	CHECKED L. Bahia	
DETAILS	BY K. Kubo	CHECKED F. Zayati	
QUANTITIES	BY J. Massoomi	CHECKED L. Han	

STATE OF CALIFORNIA
DEPARTMENT OF TRANSPORTATION

DIVISION OF ENGINEERING SERVICES
STRUCTURE DESIGN
DESIGN BRANCH 14

BRIDGE NO. 53-3032
POST MILE 3.58

SCHUYLER HEIM BRIDGE (REPLACE)
PIERS 13 THRU 16 DETAILS NO. 3

STRUCTURES DESIGN DETAIL SHEET (ENGLISH) (REV. 10/25/05)

ORIGINAL SCALE IN INCHES FOR REDUCED PLANS 0 1 2 3

CU 07-271
EA 138201

DISREGARD PRINTS BEARING EARLIER REVISION DATES

REVISION DATES: 01-03-10 02-04-10 03-01-10 03-02-10 03-03-10

SHEET 54 OF 247

FILE => 53-3032-h-b13&16det03.dgn

USERNAME => trpierce DATE PLOTTED => 19-OCT-2010 TIME PLOTTED => 10:23

DIST	COUNTY	ROUTE	POST MILES TOTAL PROJECT	SHEET No	TOTAL SHEETS
07	LA	47,103	3.5/4.6, 0.0/1.1	557	1003

REGISTERED CIVIL ENGINEER 05-24-10 DATE

10-11-10
PLANS APPROVAL DATE

REGISTERED PROFESSIONAL ENGINEER FOUED ZAYATI No. C57046 Exp. 06-30-11 CIVIL STATE OF CALIFORNIA

The State of California or its officers or agents shall not be responsible for the accuracy or completeness of electronic copies of this plan sheet.

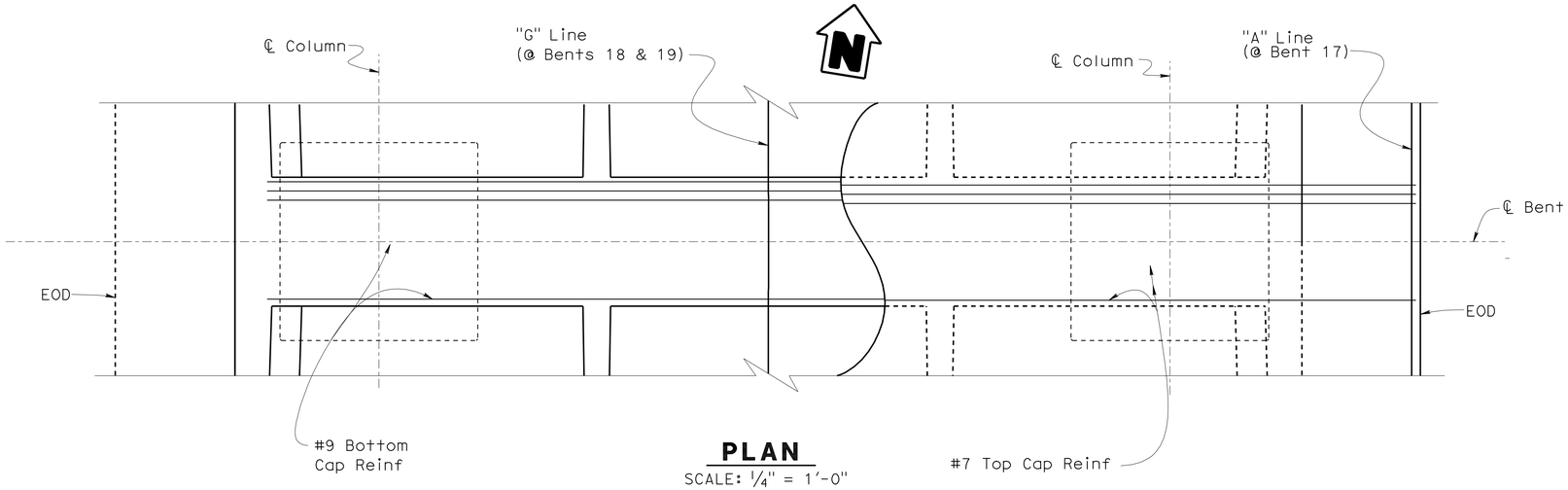

PLAN
SCALE: 1/4" = 1'-0"

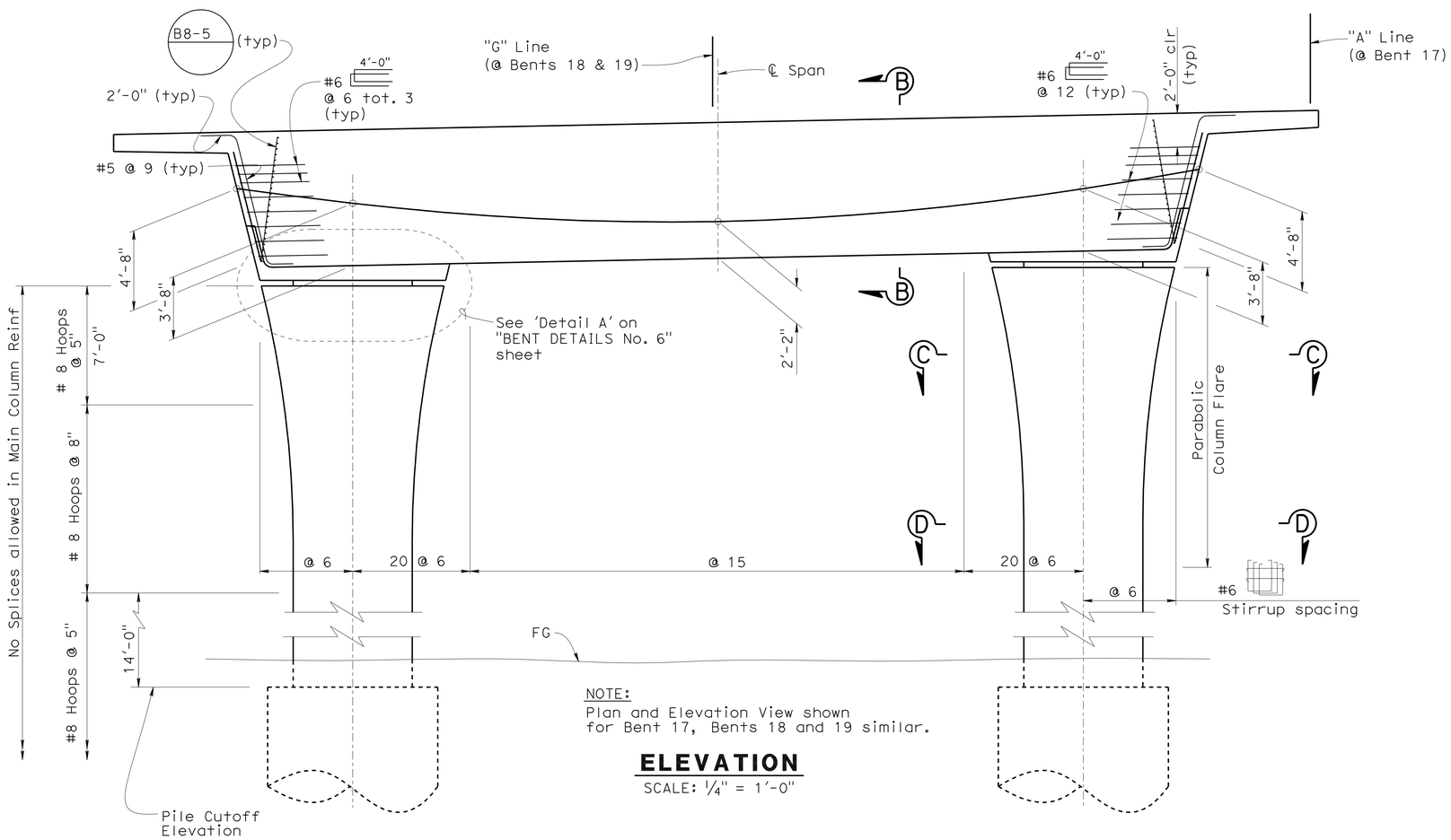

NOTE:
Plan and Elevation View shown for Bent 17, Bents 18 and 19 similar.

ELEVATION
SCALE: 1/4" = 1'-0"

PRESTRESSING NOTES

270 KSI Low Relaxation Strand:

P_{jack} (Bent 17) = 3320 kips

Anchor Set = 3/8 in

P_{jack} (Bent 18) = 3200 kips

Anchor Set = 3/8 in

P_{jack} (Bent 19) = 2770 kips

Anchor Set = 3/8 in

Concrete: f'_c = 5.0 ksi @ 28 days

f'_{ci} = 3.5 ksi @ time of stressing

Contractor shall submit elongation calculations based on initial stress at

⊠ = 0.892 times jacking stress.

One end stressing shall be performed.

NOTES:

1. For 'Section B-B', see "BENT DETAILS No. 5" sheet.
2. For 'Section C-C' and 'Section D-D', see "BENT DETAILS No. 2" sheet.
3. For P/S Anchorage Zone detail, see "TYPICAL SECTION No. 1" sheet.
4. For Parabolic Column flare, see "BENT DETAILS No. 1" sheet.
5. Cable Paths are parabolic between centerline of Columns and straight all other locations.

	BY	CHECKED
DESIGN	J. Massoomi	T. Skreslet
DETAILS	T. Nguyen	T. Skreslet
QUANTITIES	J. Massoomi	L. Han

STATE OF CALIFORNIA
DEPARTMENT OF TRANSPORTATION

DIVISION OF ENGINEERING SERVICES
STRUCTURE DESIGN
DESIGN BRANCH 14

BRIDGE NO. 53-3032
POST MILE 3.58

SCHUYLER HEIM BRIDGE (REPLACE)
BENTS 17 THRU 19 LAYOUT (STAGE 3)

STRUCTURES DESIGN DETAIL SHEET (ENGLISH) (REV. 10/25/05)

ORIGINAL SCALE IN INCHES FOR REDUCED PLANS 0 1 2 3

CU 07-271
EA 138201

DISREGARD PRINTS BEARING EARLIER REVISION DATES

REVISION DATES: 03-04-10 03-09-10 4-6-10 4-13-10 05-03-10 5-18-10 05-28-10

SHEET 55 OF 247

FILE => 53-3032-h-b17to19l_lo.dgn

USERNAME => trpierce DATE PLOTTED => 19-OCT-2010 TIME PLOTTED => 10:29

DIST	COUNTY	ROUTE	POST MILES TOTAL PROJECT	SHEET No	TOTAL SHEETS
07	LA	47,103	3.5/4.6, 0.0/1.1	558	1003

REGISTERED CIVIL ENGINEER 05-24-10 DATE

10-11-10
PLANS APPROVAL DATE

REGISTERED PROFESSIONAL ENGINEER FOUED ZAYATI No. C57046 Exp. 06-30-11 CIVIL STATE OF CALIFORNIA

The State of California or its officers or agents shall not be responsible for the accuracy or completeness of electronic copies of this plan sheet.

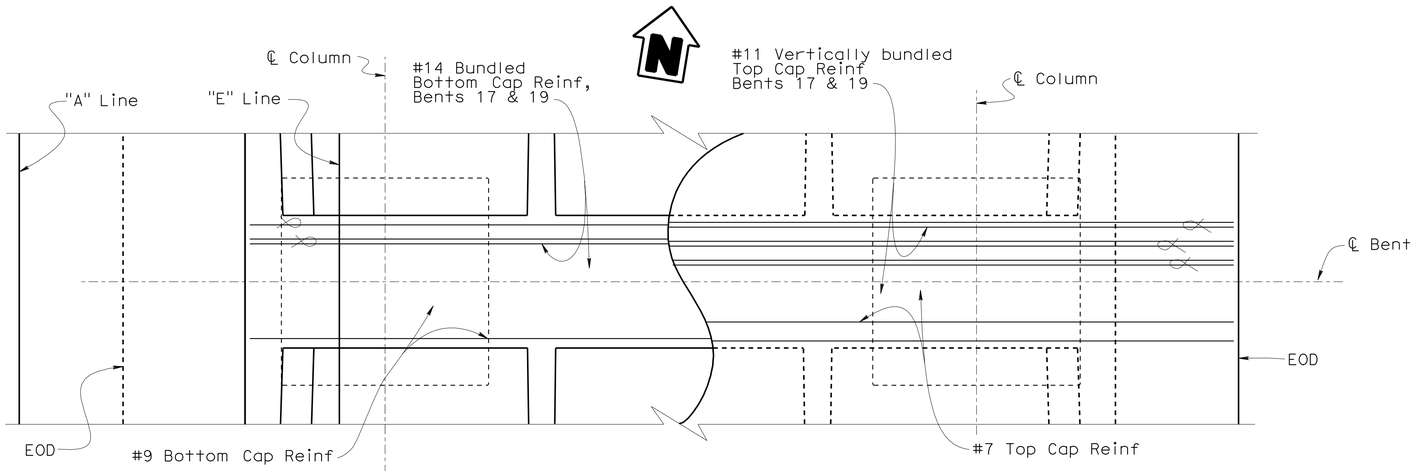

PLAN

SCALE: 1/4" = 1'-0"

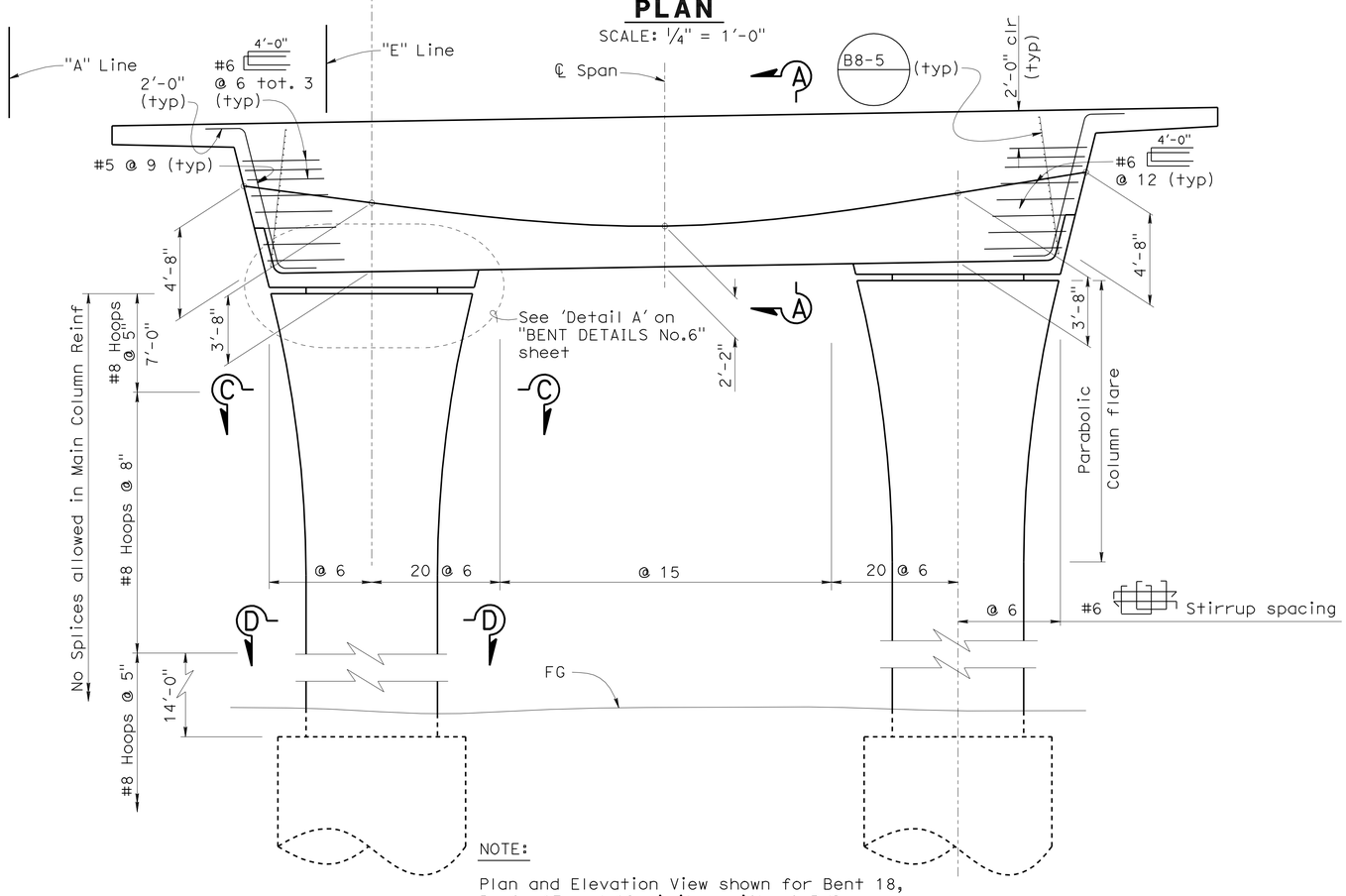

NOTE:

Plan and Elevation View shown for Bent 18, Bents 17 and 19 similar, without P/S

ELEVATION

SCALE: 1/4" = 1'-0"

PRESTRESSING NOTES

270 KSI Low Relaxation Strand:

P_{jack} (Bent 17) = 2900 kips

Anchor Set = 3/8 in

P_{jack} (Bent 18) = 2870 kips

Anchor Set = 3/8 in

P_{jack} (Bent 19) = 2490 kips

Anchor Set = 3/8 in

Concrete: f'_c = 5.0 ksi @ 28 days

f'_{ci} = 3.5 ksi @ time of stressing

Contractor shall submit elongation calculations based on initial stress at

Φ = 0.886 times jacking stress.

One end stressing shall be performed.

NOTES:

1. For 'Section A-A', see "BENT DETAILS No. 4" sheet.
2. For 'Section C-C' and 'Section D-D', see "BENT DETAILS No. 2" sheet.
3. For P/S Anchorage Zone detail, see "TYPICAL SECTION No. 1" sheet
4. For Parabolic Column flare, see "BENT DETAILS No. 1" sheet
5. The Cable Path is parabolic between centerline of Columns and straight all other locations.

	BY	CHECKED
DESIGN	J. Massoomi	T. Skreslet
DETAILS	T. Nguyen	T. Skreslet
QUANTITIES	J. Massoomi	L. Han

STATE OF CALIFORNIA
DEPARTMENT OF TRANSPORTATION

DIVISION OF ENGINEERING SERVICES
STRUCTURE DESIGN
DESIGN BRANCH 14

BRIDGE NO. 53-3032
POST MILE 3.58

SCHUYLER HEIM BRIDGE (REPLACE)
BENTS 17 THRU 19 LAYOUT (STAGE 1)

STRUCTURES DESIGN DETAIL SHEET (ENGLISH) (REV. 10/25/05)

ORIGINAL SCALE IN INCHES FOR REDUCED PLANS 0 1 2 3

CU 07-271
EA 138201

DISREGARD PRINTS BEARING EARLIER REVISION DATES

REVISION DATES: 03-04-10 4-5-10 04-29-10 05-04-10 5-18-10 01-11-10 02-04-10 2-11-10 03-04-10

SHEET 56 OF 247

FILE => 53-3032-h-b17to19r_lo.dgn

USERNAME => trpierce DATE PLOTTED => 19-OCT-2010 TIME PLOTTED => 10:29

DIST	COUNTY	ROUTE	POST MILES TOTAL PROJECT	SHEET No	TOTAL SHEETS
07	LA	47,103	3.5/4.6, 0.0/1.1	559	1003

REGISTERED CIVIL ENGINEER — DATE 05-24-10

10-11-10
PLANS APPROVAL DATE

The State of California or its officers or agents shall not be responsible for the accuracy or completeness of electronic copies of this plan sheet.

REGISTERED PROFESSIONAL ENGINEER — FOUED ZAYATI — No. C57046 — Exp. 06-30-11 — CIVIL — STATE OF CALIFORNIA

NOTES:

1. For 'Section B-B', see "BENT DETAILS No. 5" sheet.
2. For 'Section D-D' and 'Section E-E', see "BENT DETAILS No. 2" sheet.
3. For P/S Anchorage Zone detail, see "TYPICAL SECTION No. 1" sheet.
4. For Parabolic Column flare, see "BENT DETAILS No. 1" sheet.
5. Cable Paths are parabolic between centerline of Columns and straight all other locations.

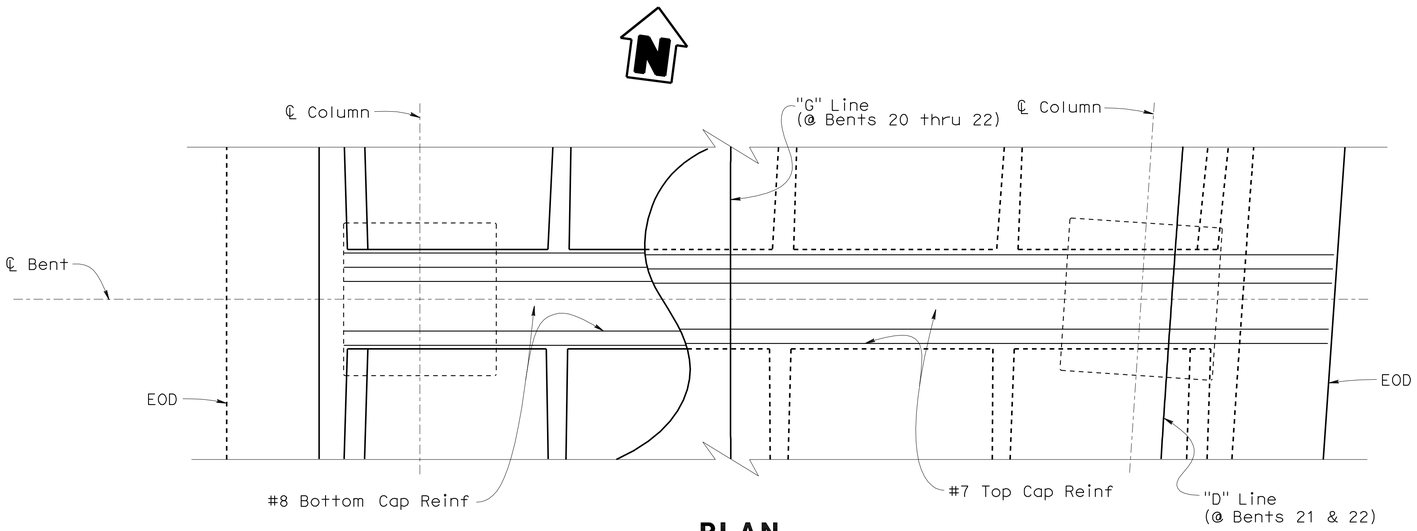

PLAN

SCALE: 3/16" = 1'-0"

NOTE: Not all bars shown
Top cap Reinf extend to 2'-0" from EOD

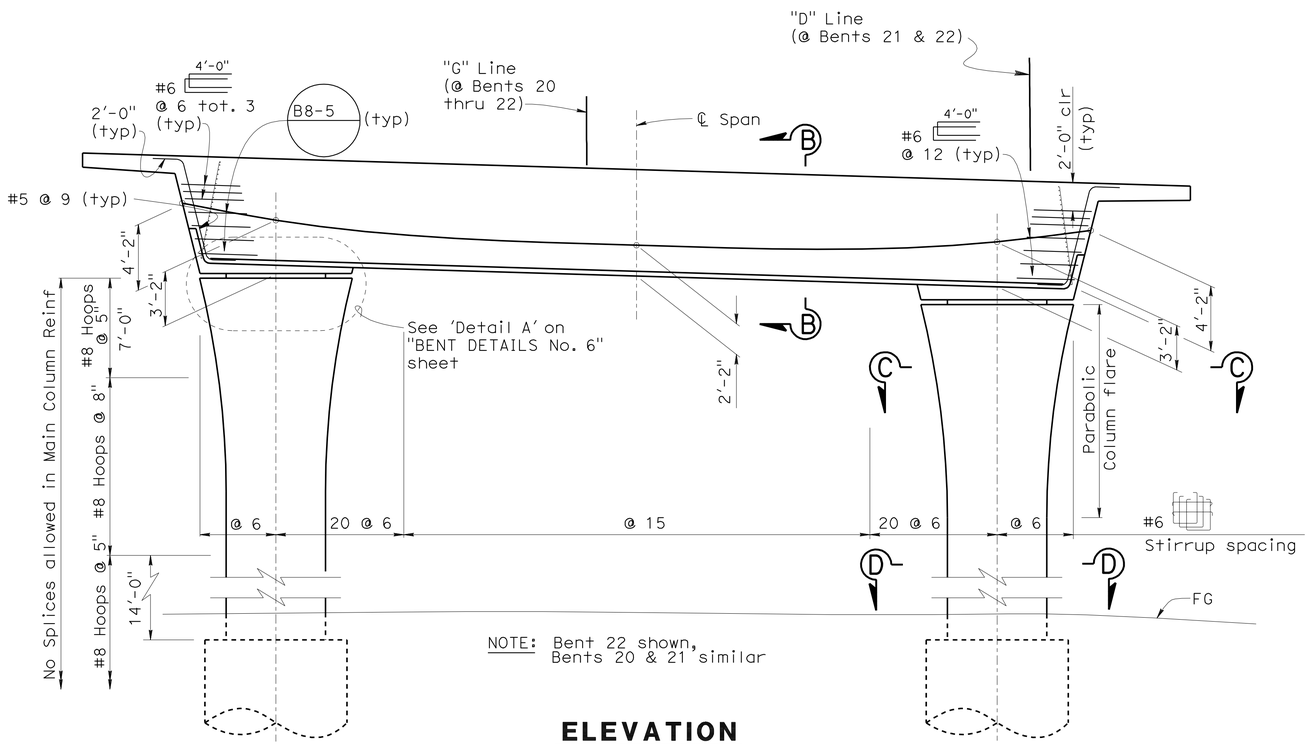

NOTE: Bent 22 shown,
Bents 20 & 21 similar

ELEVATION

SCALE: 3/16" = 1'-0"

PRESTRESSING NOTES

270 KSI Low Relaxation Strand:

P_{jack} (Bent 20) = 2480 kips

Anchor Set = 3/8 in

P_{jack} (Bent 21) = 4650 kips

Anchor Set = 3/8 in

P_{jack} (Bent 22) = 5700 kips

Anchor Set = 3/8 in

Concrete: f'_c = 5.0 ksi @ 28 days

f'_{ci} = 3.5 ksi @ time of stressing

Contractor shall submit elongation calculations based on initial stress at

⊠ = 0.891 times jacking stress.

One end stressing shall be performed.

DESIGN	BY J. Massoomi	CHECKED T. Skreslet	
DETAILS	BY T. Nguyen	CHECKED T. Skreslet	
QUANTITIES	BY J. Massoomi	CHECKED L. Han	

STATE OF CALIFORNIA
DEPARTMENT OF TRANSPORTATION

DIVISION OF ENGINEERING SERVICES
STRUCTURE DESIGN
DESIGN BRANCH 14

BRIDGE NO. 53-3032
POST MILE 3.58

SCHUYLER HEIM BRIDGE (REPLACE)
BENTS 20 THRU 22 LAYOUT (STAGE 3)

STRUCTURES DESIGN DETAIL SHEET (ENGLISH) (REV. 10/25/05)

ORIGINAL SCALE IN INCHES FOR REDUCED PLANS 0 1 2 3

CU 07-271
EA 138201

DISREGARD PRINTS BEARING EARLIER REVISION DATES

REVISION DATES: 4-6-10, 4-13-10, 04-29-10, 05-04-10, 5-18-10, 05-28-10, 1-11-10, 03-09-10

SHEET 57 OF 247

FILE => 53-3032-h-b20to22l_lo.dgn

USERNAME => tripierce DATE PLOTTED => 19-OCT-2010 TIME PLOTTED => 10:29

DIST	COUNTY	ROUTE	POST MILES TOTAL PROJECT	SHEET No	TOTAL SHEETS
07	LA	47,103	3.5/4.6, 0.0/1.1	560	1003

REGISTERED CIVIL ENGINEER — DATE 05-24-10

10-11-10
PLANS APPROVAL DATE

REGISTERED PROFESSIONAL ENGINEER — FOUED ZAYATI — No. C57046 — Exp. 06-30-11 — CIVIL — STATE OF CALIFORNIA

The State of California or its officers or agents shall not be responsible for the accuracy or completeness of electronic copies of this plan sheet.

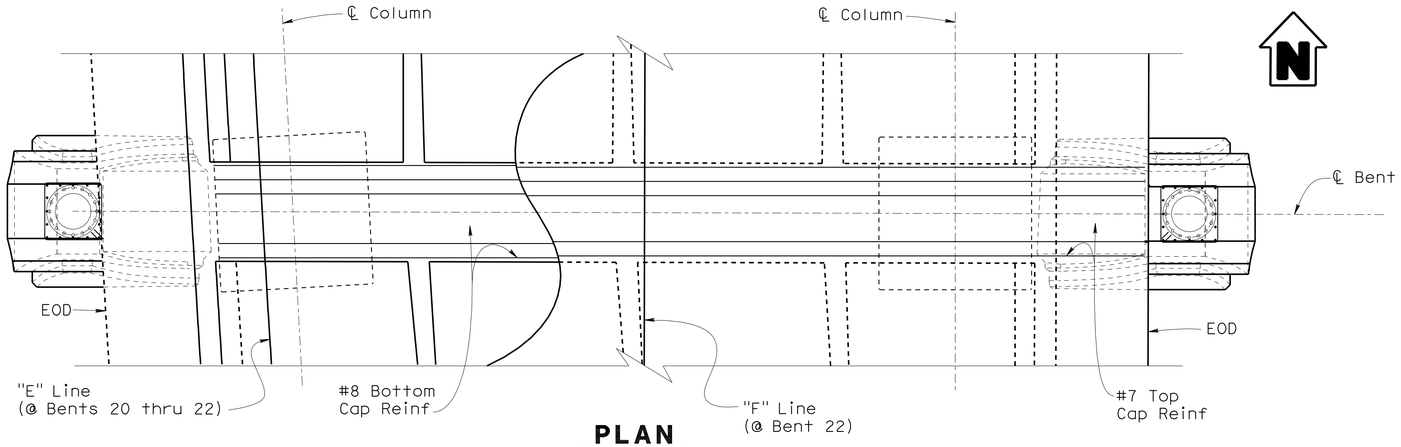

PLAN

SCALE: 3/16" = 1'-0"

NOTE: Not all bars shown
Top cap Reinf extend to 2'-0" from EOD

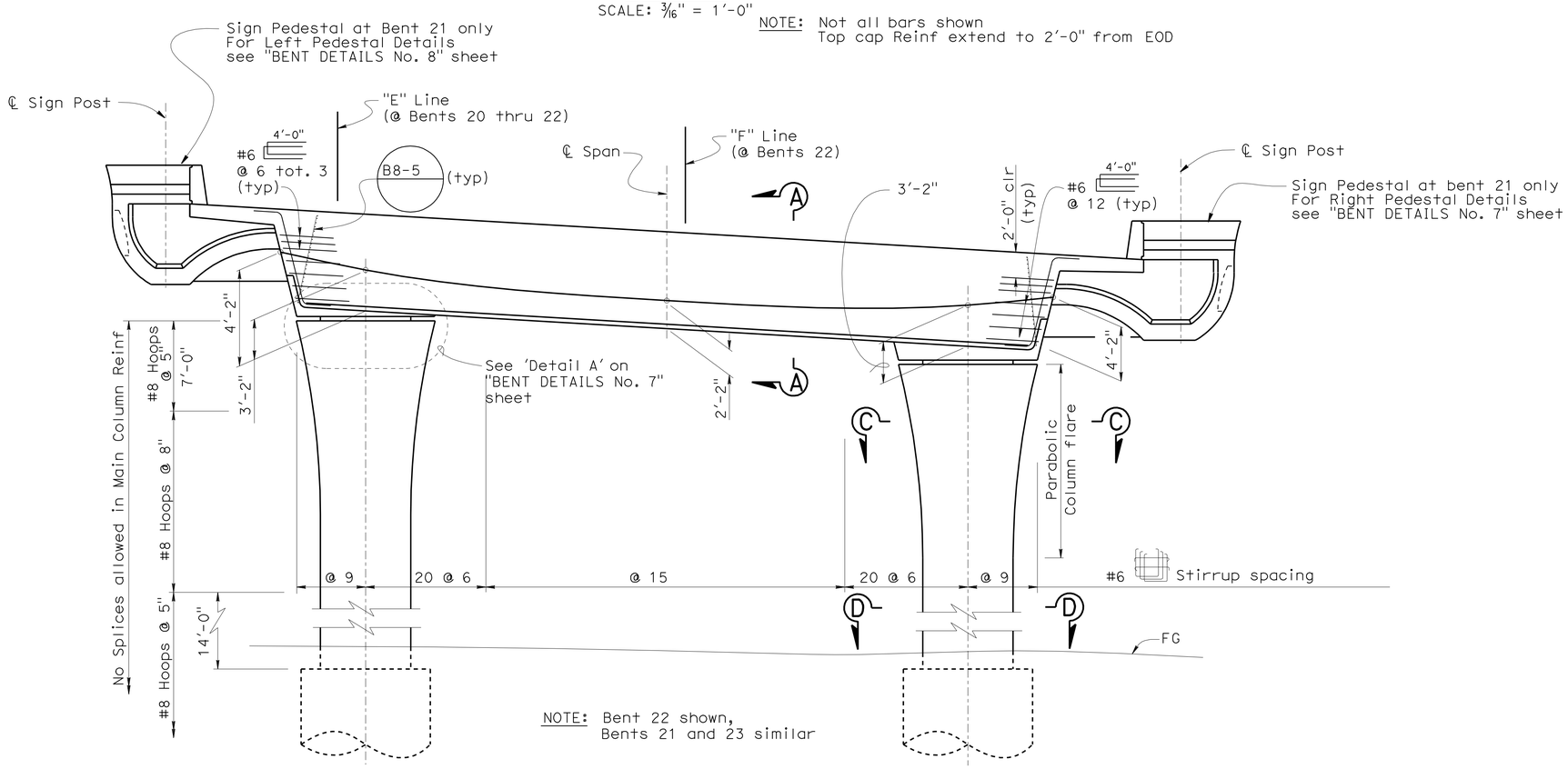

NOTE: Bent 22 shown,
Bents 21 and 23 similar

ELEVATION

SCALE: 3/16" = 1'-0"

PRESTRESSING NOTES

270 KSI Low Relaxation Strand:

P_{jack} (Bent 20) = 3870 kips

Anchor Set = 3/8 in

P_{jack} (Bent 21) = 3240 kips

Anchor Set = 3/8 in

P_{jack} (Bent 22) = 5200 kips

Anchor Set = 3/8 in

Concrete: f'_c = 5.0 ksi @ 28 days

f'_{ci} = 3.5 ksi @ time of stressing

Contractor shall submit elongation calculations based on initial stress at

⊠ = 0.890 times jacking stress.

One end stressing shall be performed.

NOTES:

1. For 'Section A-A', see "BENT DETAILS No. 4" sheet.
2. For 'Section C-C' and 'Section D-D', see "BENT DETAILS No. 2" sheet.
3. For P/S Anchorage Zone detail, see "TYPICAL SECTION No. 1" sheet
4. For Parabolic Column flare, see "BENT DETAILS No. 1" sheet
5. Cable Paths are parabolic between centerline of Columns and straight all other locations.

	BY	CHECKED
DESIGN	J. Massoomi	T. Skreslet
DETAILS	T. Nguyen	T. Skreslet
QUANTITIES	J. Massoomi	L. Han

STATE OF CALIFORNIA
DEPARTMENT OF TRANSPORTATION

DIVISION OF ENGINEERING SERVICES
STRUCTURE DESIGN
DESIGN BRANCH 14

BRIDGE NO. 53-3032
POST MILE 3.58

SCHUYLER HEIM BRIDGE (REPLACE)
BENTS 20 THRU 22 LAYOUT (STAGE 1)

STRUCTURES DESIGN DETAIL SHEET (ENGLISH) (REV. 10/25/05)

ORIGINAL SCALE IN INCHES FOR REDUCED PLANS 0 1 2 3

CU 07-271
EA 138201

DISREGARD PRINTS BEARING EARLIER REVISION DATES

REVISION DATES: 4-13-10 04-28-10 05-04-10 5-18-10 5-27-10 05-28-10 4-7-10

SHEET 58 OF 247

FILE => 53-3032-h-b21to22r_io.dgn

USERNAME => trpierce DATE PLOTTED => 19-OCT-2010 TIME PLOTTED => 10:29

DIST	COUNTY	ROUTE	POST MILES TOTAL PROJECT	SHEET No	TOTAL SHEETS
07	LA	47,103	3.5/4.6, 0.0/1.1	561	1003

REGISTERED CIVIL ENGINEER — DATE 05-24-10

10-11-10
PLANS APPROVAL DATE

REGISTERED PROFESSIONAL ENGINEER — FOUED ZAYATI — No. C57046 — Exp. 06-30-11 — CIVIL — STATE OF CALIFORNIA

The State of California or its officers or agents shall not be responsible for the accuracy or completeness of electronic copies of this plan sheet.

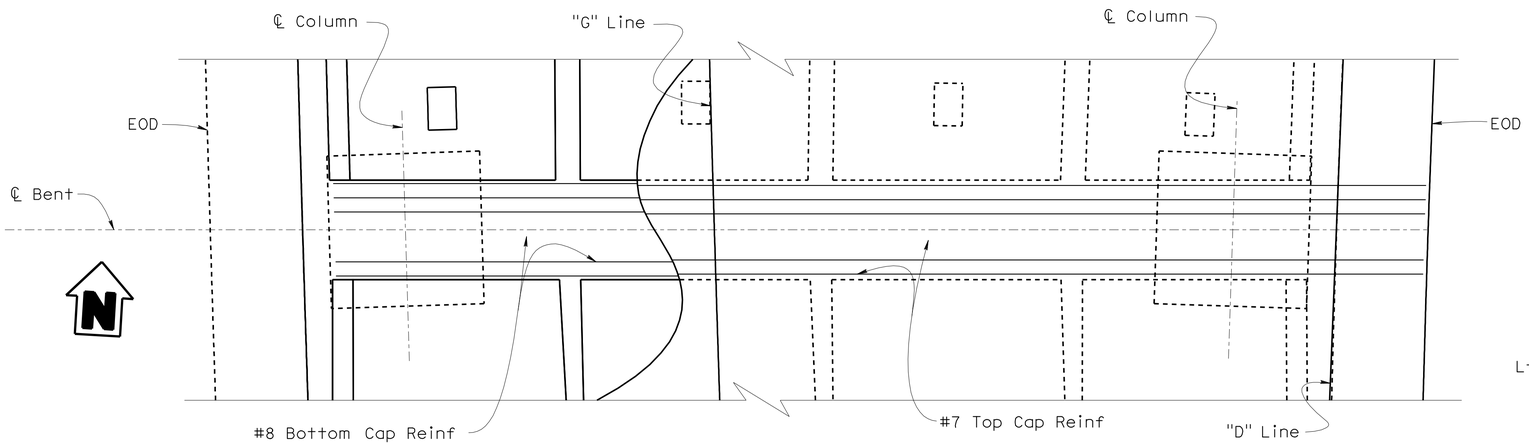

PLAN

SCALE: 3/16" = 1'-0"

NOTE: Not all bars shown
Top cap Reinf extend to 2'-0" from EOD

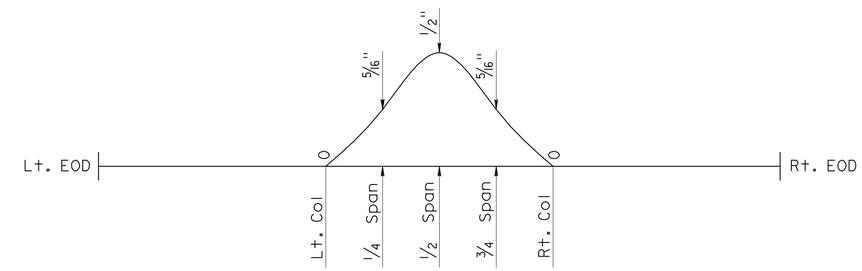

BENT 23, STAGE 2 CAMBER DIAGRAM

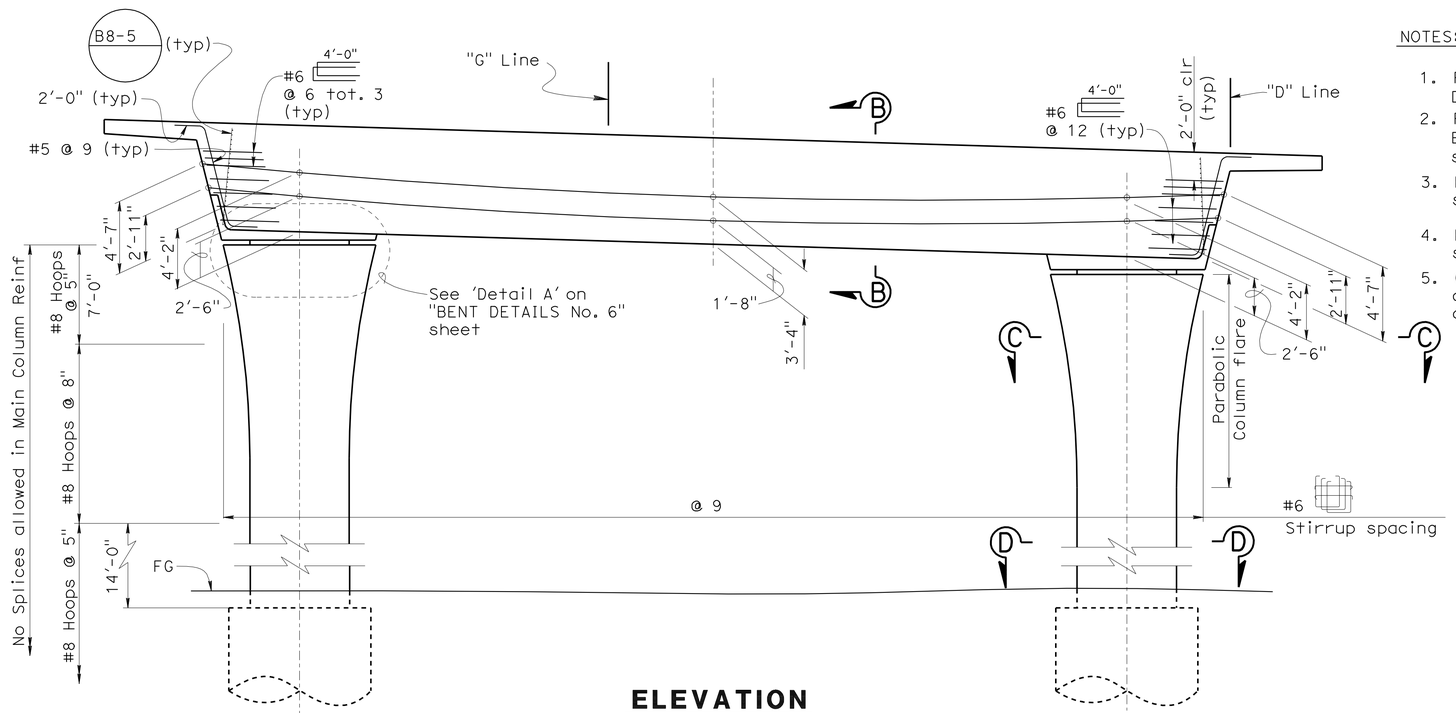

ELEVATION

SCALE: 3/16" = 1'-0"

NOTES:

1. For 'Section B-B', see "BENT DETAILS No. 5" sheet.
2. For 'Section C-C' and 'Section E-E', see "BENT DETAILS No. 2" sheet.
3. For P/S Anchorage Zone detail, see "TYPICAL SECTION No. 1" sheet.
4. For Parabolic Column flare, see "BENT DETAILS No. 1" sheet.
5. Cable Paths are parabolic between centerline of Columns and straight all other locations.

PRESTRESSING NOTES

270 KSI Low Relaxation Strand:

P_{jack}(Bent 23, Upper Cable)= 4450 kips

Anchor Set = 3/8 in

P_{jack}(Bent 23, Lower Cable)= 5500 kips

Anchor Set = 3/8 in

Concrete: f'_c = 5.0 ksi @ 28 days

f'_{ci} = 3.5 ksi @ time of stressing

Contractor shall submit elongation calculations based on initial stress at

☒ = 0.943 times jacking stress for lower Cable.

☒ = 0.945 times jacking stress for upper Cable.

One end stressing shall be performed.

DESIGN	BY J. Massoomi	CHECKED T. Skreslet	
DETAILS	BY T. Nguyen	CHECKED T. Skreslet	
QUANTITIES	BY J. Massoomi	CHECKED L. Han	

STATE OF CALIFORNIA
DEPARTMENT OF TRANSPORTATION

DIVISION OF ENGINEERING SERVICES
STRUCTURE DESIGN
DESIGN BRANCH 14

BRIDGE NO. 53-3032
POST MILE 3.58

SCHUYLER HEIM BRIDGE (REPLACE)

BENT 23 LAYOUT (STAGE 3)

STRUCTURES DESIGN DETAIL SHEET (ENGLISH) (REV. 10/25/05)

ORIGINAL SCALE IN INCHES FOR REDUCED PLANS 0 1 2 3

CU 07-271
EA 138201

DISREGARD PRINTS BEARING EARLIER REVISION DATES

REVISION DATES: 04-28-10 05-04-10 5-18-10 05-28-10 1-06-10 1-11-10 1-28-10 2-12-10 03-09-10 4-6-10

SHEET 59 OF 247

FILE => 53-3032-h-b23l_lo.dgn

USERNAME => trpierce DATE PLOTTED => 19-OCT-2010 TIME PLOTTED => 10:38

DIST	COUNTY	ROUTE	POST MILES TOTAL PROJECT	SHEET No	TOTAL SHEETS
07	LA	47,103	3.5/4.6, 0.0/1.1	562	1003

REGISTERED CIVIL ENGINEER 05-24-10 DATE

10-11-10
PLANS APPROVAL DATE

REGISTERED PROFESSIONAL ENGINEER FOUED ZAYATI No. C57046 Exp. 06-30-11 CIVIL STATE OF CALIFORNIA

The State of California or its officers or agents shall not be responsible for the accuracy or completeness of electronic copies of this plan sheet.

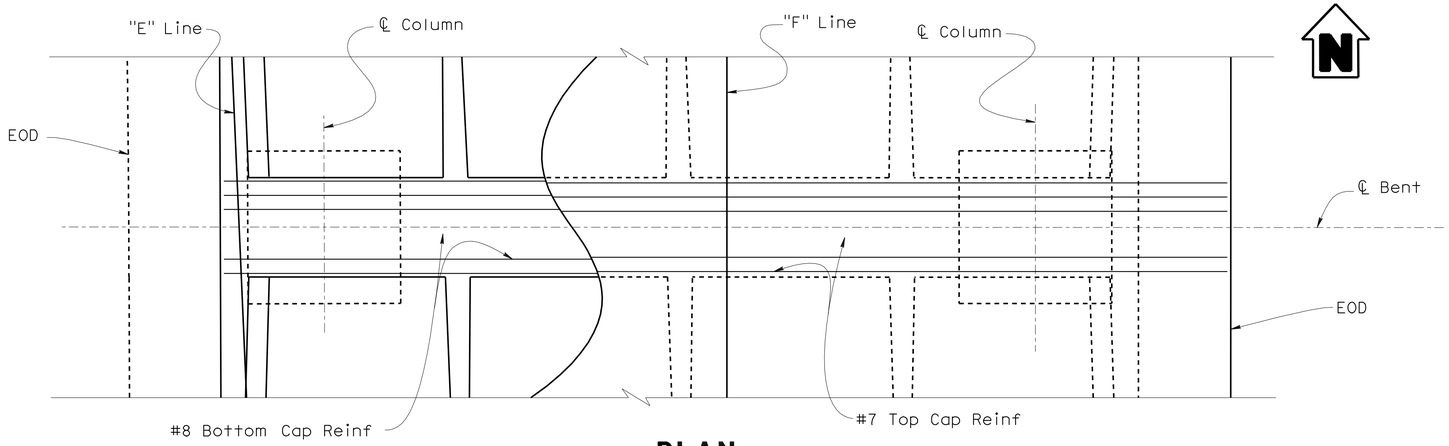

PLAN
SCALE: 3/16" = 1'-0"

NOTE: Not all bars shown
Top cap Reinf extend to 2'-0" from EOD

NOTES:

1. For 'Section A-A', see "BENT DETAILS No. 4" sheet.
2. For 'Section C-C' and 'Section D-D', see "BENT DETAILS No. 2" sheet.
3. For P/S Anchorage Zone detail, see "TYPICAL SECTION No. 1" sheet.
4. For Parabolic Column flare, see "BENT DETAILS NO. 1" sheet.
5. Cable Paths are parabolic between centerline of Columns and straight all other locations.

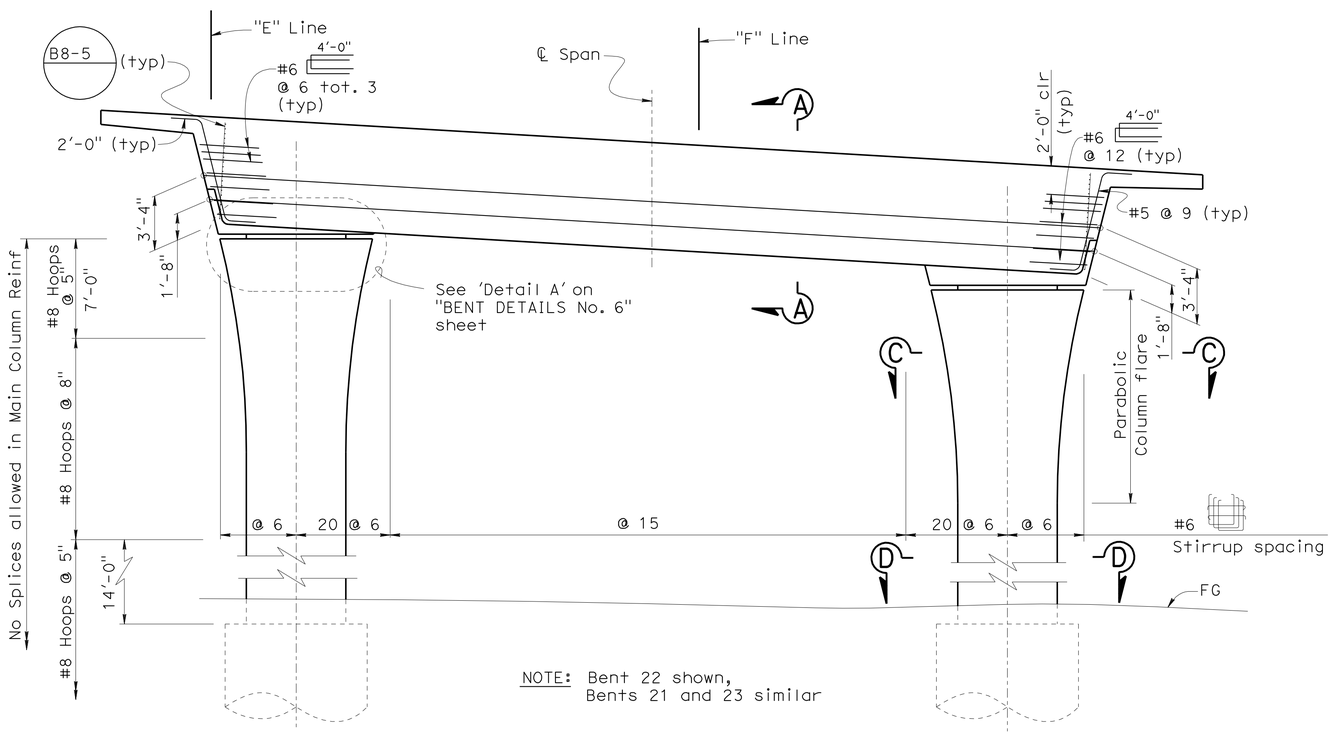

NOTE: Bent 22 shown,
Bents 21 and 23 similar

ELEVATION
SCALE: 3/16" = 1'-0"

PRESTRESSING NOTES

270 KSI Low Relaxation Strand:

P_{jack} (Bent 23, Upper Cable) = 3630 kips

Anchor Set = 3/8 in

270 KSI Low Relaxation Strand:

P_{jack} (Bent 23, Lower Cable) = 6000 kips

Anchor Set = 3/8 in

Concrete: f'_c = 5.0 ksi @ 28 days

f'_{ci} = 3.5 ksi @ time of stressing

Contractor shall submit elongation calculations based on initial stress at

⊠ = 0.945 times jacking stress.

One end stressing shall be performed.

DESIGN	BY J. Massoomi	CHECKED T. Skreslet	
DETAILS	BY T. Nguyen	CHECKED T. Skreslet	
QUANTITIES	BY J. Massoomi	CHECKED L. Han	

STATE OF CALIFORNIA
DEPARTMENT OF TRANSPORTATION

DIVISION OF ENGINEERING SERVICES
STRUCTURE DESIGN
DESIGN BRANCH 14

BRIDGE NO. 53-3032
POST MILE 3.58

SCHUYLER HEIM BRIDGE (REPLACE)
BENT 23 LAYOUT (STAGE 1)

STRUCTURES DESIGN DETAIL SHEET (ENGLISH) (REV. 10/25/05)

ORIGINAL SCALE IN INCHES FOR REDUCED PLANS 0 1 2 3

CU 07-271
EA 138201

DISREGARD PRINTS BEARING EARLIER REVISION DATES

REVISION DATES: 4-5-10, 4-20-10, 04-29-10, 05-04-10, 5-18-10, 05-28-10

SHEET 60 OF 247

FILE => 53-3032-h-b23r_lo.dgn

USERNAME => trpierce DATE PLOTTED => 19-OCT-2010 TIME PLOTTED => 10:30

DIST	COUNTY	ROUTE	POST MILES TOTAL PROJECT	SHEET No	TOTAL SHEETS
07	LA	47,103	3.5/4.6, 0.0/1.1	563	1003

REGISTERED CIVIL ENGINEER — DATE 05-24-10

10-11-10
PLANS APPROVAL DATE

REGISTERED PROFESSIONAL ENGINEER — FOUED ZAYATI — No. C57046 — Exp. 06-30-11 — CIVIL — STATE OF CALIFORNIA

The State of California or its officers or agents shall not be responsible for the accuracy or completeness of electronic copies of this plan sheet.

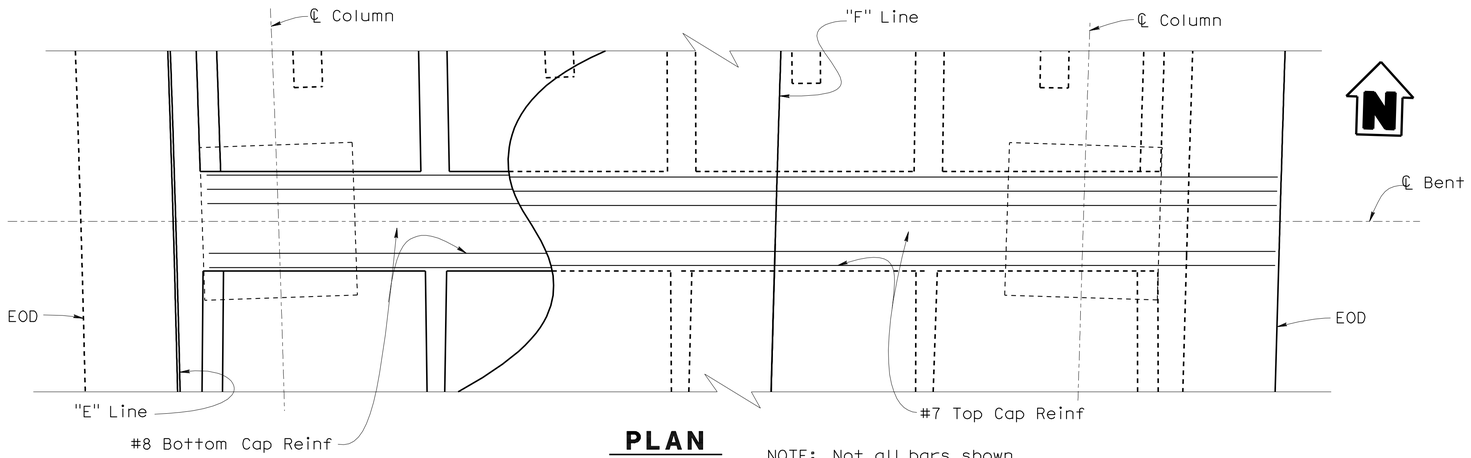

PLAN
SCALE: 3/16" = 1'-0"

NOTE: Not all bars shown
Top cap Reinf extend to 2'-0" from EOD

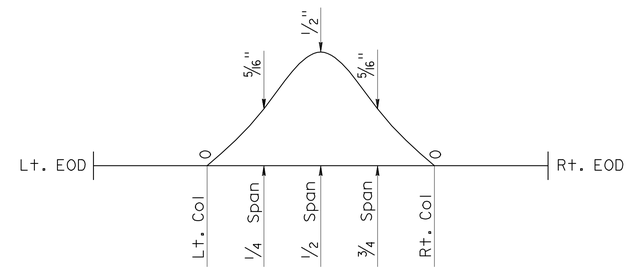

BENT 24, STAGE 1 CAMBER DIAGRAM

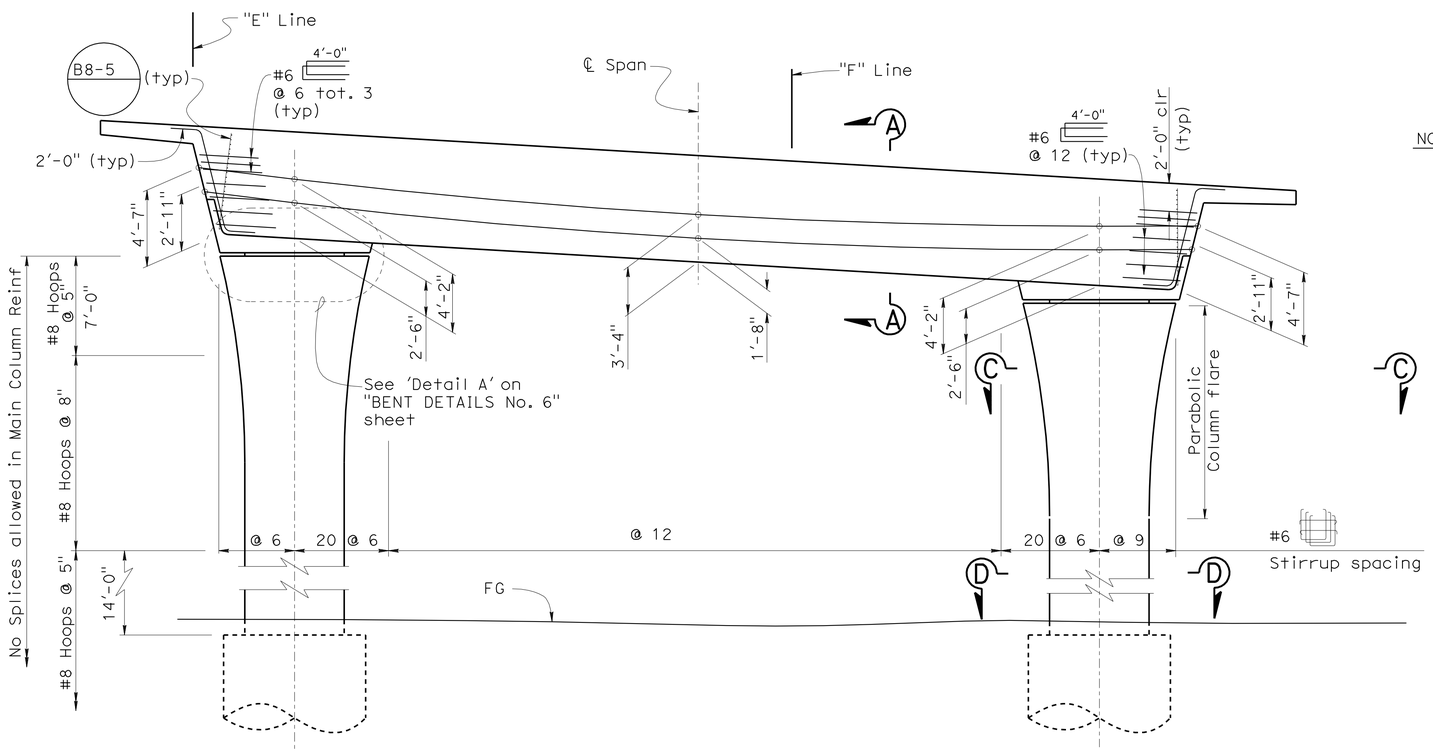

ELEVATION
SCALE: 3/16" = 1'-0"

NOTES:

1. For 'Section A-A', see "BENT DETAILS No. 4" sheet.
2. For 'Section C-C' and 'Section D-D', see "BENT DETAILS No. 2" sheet.
3. For P/S Anchorage Zone detail, see "TYPICAL SECTION No. 1" sheet.
4. For Parabolic Column flare, see "BENT DETAILS No. 1" sheet.
5. Cable Paths are parabolic between centerline of Columns and straight all other locations.

PRESTRESSING NOTES

270 KSI Low Relaxation Strand:

P_{jack}(Bent 24, Upper Cable)= 5230 kips

Anchor Set = 3/8 in

P_{jack}(Bent 24, Lower Cable)= 5500 kips

Anchor Set = 3/8 in

Concrete: f'_c = 5.0 ksi @ 28 days

f'_{ci} = 3.5 ksi @ time of stressing

Contractor shall submit elongation calculations based on initial stress at

⊠ = 0.943 times jacking stress.

One end stressing shall be performed.

DESIGN	BY J. Massoomi	CHECKED T. Skreslet	
DETAILS	BY T. Nguyen	CHECKED T. Skreslet	
QUANTITIES	BY	CHECKED	

STATE OF CALIFORNIA
DEPARTMENT OF TRANSPORTATION

DIVISION OF ENGINEERING SERVICES
STRUCTURE DESIGN
DESIGN BRANCH 14

BRIDGE NO. 53-3032
POST MILE 3.58

SCHUYLER HEIM BRIDGE (REPLACE)

BENT 24 LAYOUT (STAGE 1)

STRUCTURES DESIGN DETAIL SHEET (ENGLISH) (REV. 10/25/05)

ORIGINAL SCALE IN INCHES FOR REDUCED PLANS 0 1 2 3

CU 07-271
EA 138201

DISREGARD PRINTS BEARING EARLIER REVISION DATES

REVISION DATES: 4-14-10 4-20-10 05-04-10 5-18-10 05-28-10 03-18-10 4-7-10

SHEET 61 OF 247

FILE => 53-3032-h-b24r_lo.dgn

USERNAME => trpierce DATE PLOTTED => 19-OCT-2010 TIME PLOTTED => 10:30

DIST	COUNTY	ROUTE	POST MILES TOTAL PROJECT	SHEET No	TOTAL SHEETS
07	LA	47,103	3.5/4.6, 0.0/1.1	564	1003

REGISTERED CIVIL ENGINEER — DATE 05-24-10

10-11-10
PLANS APPROVAL DATE

REGISTERED PROFESSIONAL ENGINEER — FOUED ZAYATI — No. C57046 — Exp. 06-30-11 — CIVIL — STATE OF CALIFORNIA

The State of California or its officers or agents shall not be responsible for the accuracy or completeness of electronic copies of this plan sheet.

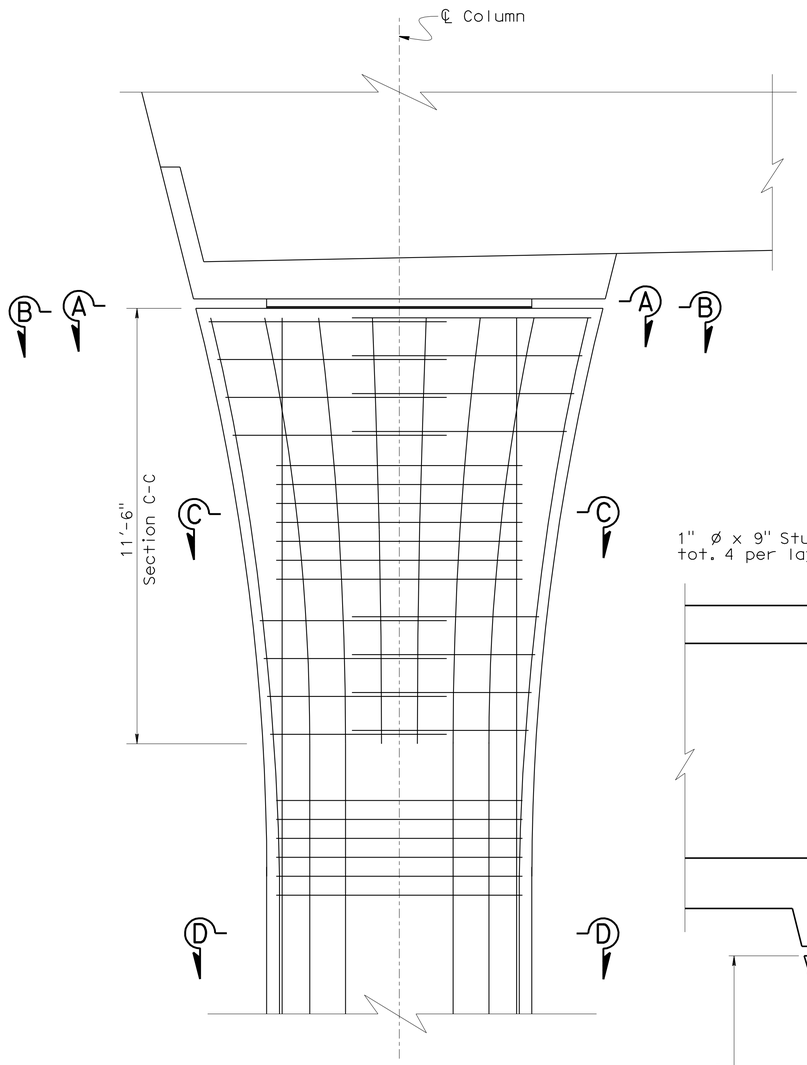

TYPICAL COLUMN ELEVATION

SCALE: ½" = 1'-0"

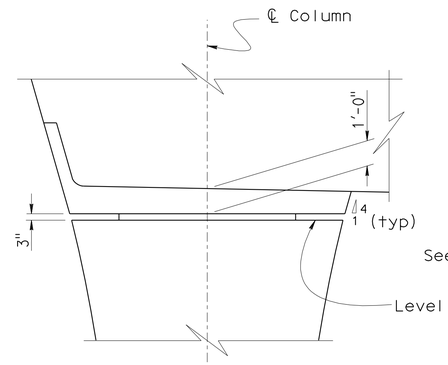

TRANSVERSE

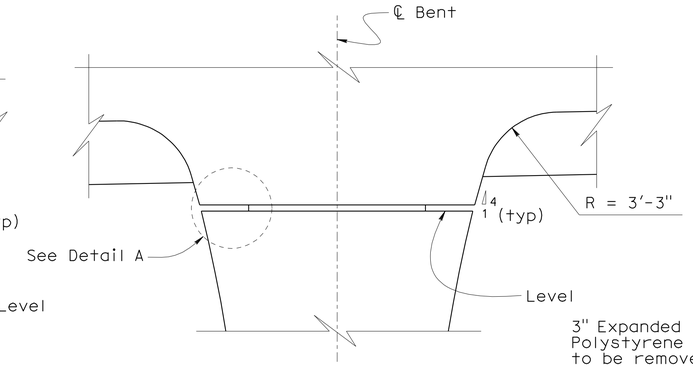

LONGITUDINAL

COLUMN CAPITAL GEOMETRY

SCALE: ⅜" = 1'-0"

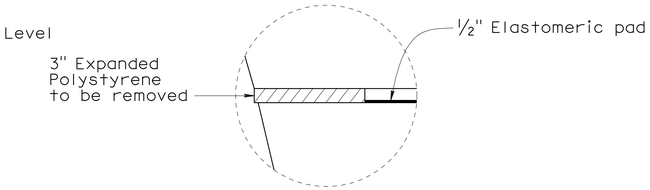

DETAIL A

SCALE: ¾" = 1'-0"

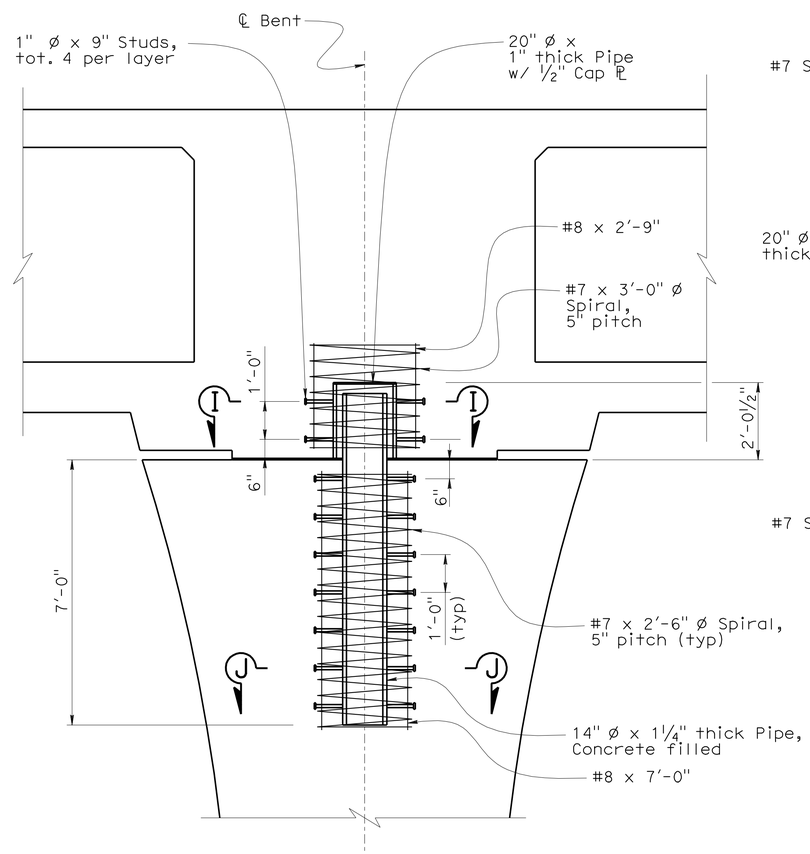

TYPICAL COLUMN PIN DETAIL

SCALE: ½" = 1'-0"

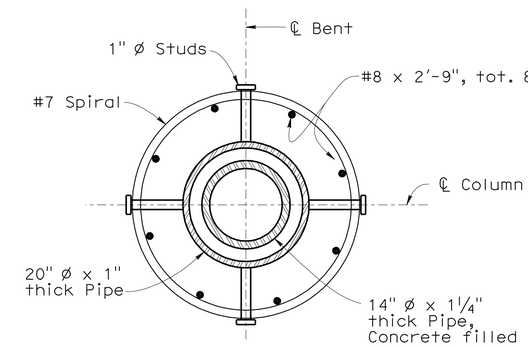

SECTION I-I

SCALE: 1" = 1'-0"

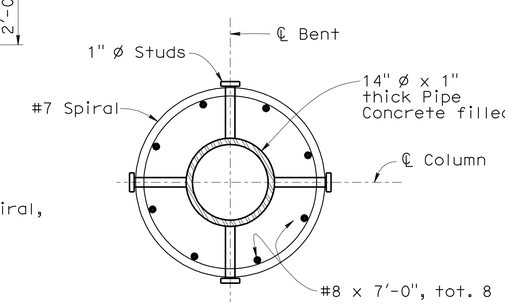

SECTION J-J

SCALE: 1" = 1'-0"

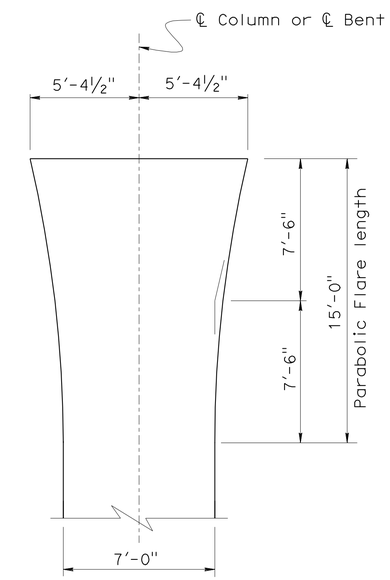

COLUMN FLARE DETAIL

No Scale

NOTES:

1. For 'Section A-A', 'Section B-B', 'Section C-C' and 'Section D-D', see "BENT DETAILS No. 2" sheet.
2. Column Pin not shown for clarity.
3. For Column Pin Details, see "BENT DETAILS No. 3" sheet.

DESIGN	BY F. Zayati	CHECKED L. Bahia	
DETAILS	BY K. Kubo	CHECKED F. Zayati	
QUANTITIES	BY J. Massoomi	CHECKED L. Han	

STATE OF CALIFORNIA
DEPARTMENT OF TRANSPORTATION

DIVISION OF ENGINEERING SERVICES
STRUCTURE DESIGN
DESIGN BRANCH 14

BRIDGE NO. 53-3032
POST MILE 3.58

SCHUYLER HEIM BRIDGE (REPLACE)

BENT DETAILS NO. 1

STRUCTURES DESIGN DETAIL SHEET (ENGLISH) (REV. 10/25/05)

ORIGINAL SCALE IN INCHES FOR REDUCED PLANS 0 1 2 3

CU 07-271
EA 138201

DISREGARD PRINTS BEARING EARLIER REVISION DATES

REVISION DATES: 01-22-10, 02-04-10, 02-25-10, 03-01-10, 03-02-10, 03-25-10, 04-23-10, 06-25-10

SHEET 62 OF 247

FILE => 53-3032-h-bdt01.dgn

USERNAME => trpierce DATE PLOTTED => 19-OCT-2010 TIME PLOTTED => 10:30

DIST	COUNTY	ROUTE	POST MILES TOTAL PROJECT	SHEET No	TOTAL SHEETS
07	LA	47,103	3.5/4.6, 0.0/1.1	565	1003

REGISTERED CIVIL ENGINEER — DATE 05-24-10

10-11-10
PLANS APPROVAL DATE

The State of California or its officers or agents shall not be responsible for the accuracy or completeness of electronic copies of this plan sheet.

REGISTERED PROFESSIONAL ENGINEER — FOUED ZAYATI — No. C57046 — Exp. 06-30-11 — CIVIL — STATE OF CALIFORNIA

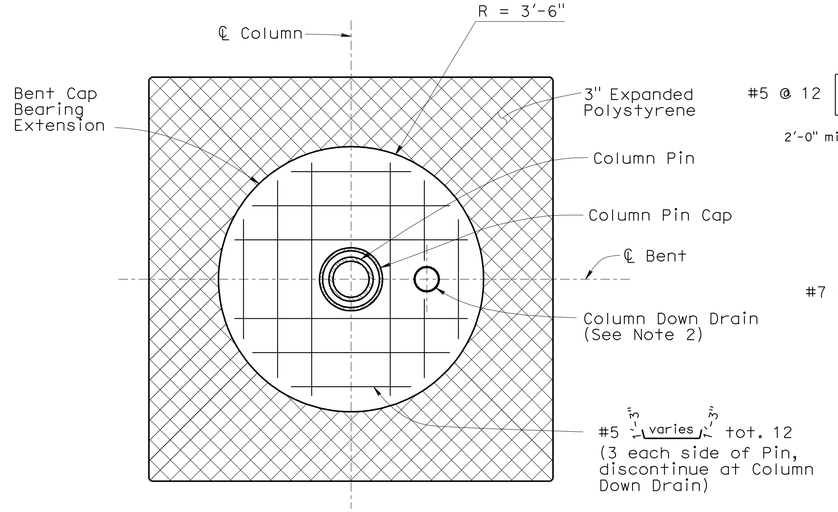

SECTION A-A

SCALE: ½" = 1'-0"

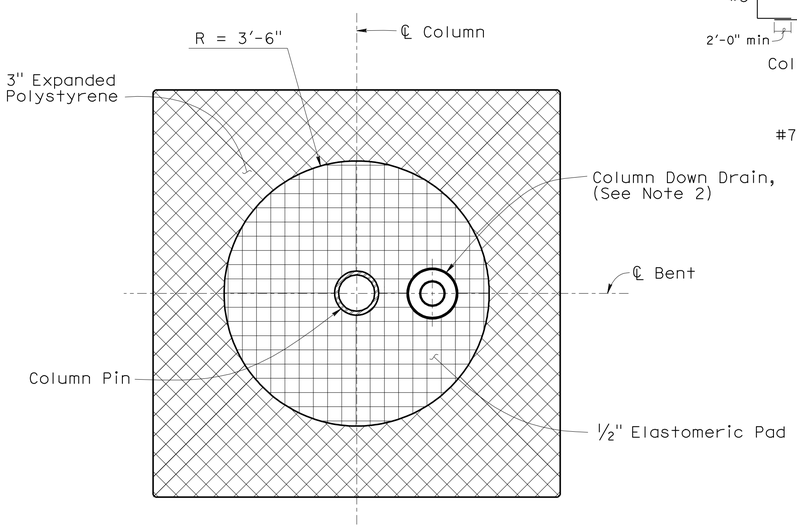

SECTION B-B

SCALE: ½" = 1'-0"

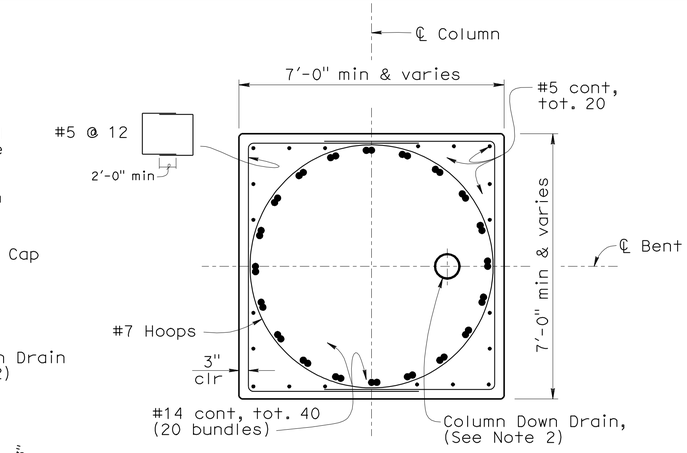

BENTS 2 thru 5, 7, 8 & 21 thru 24

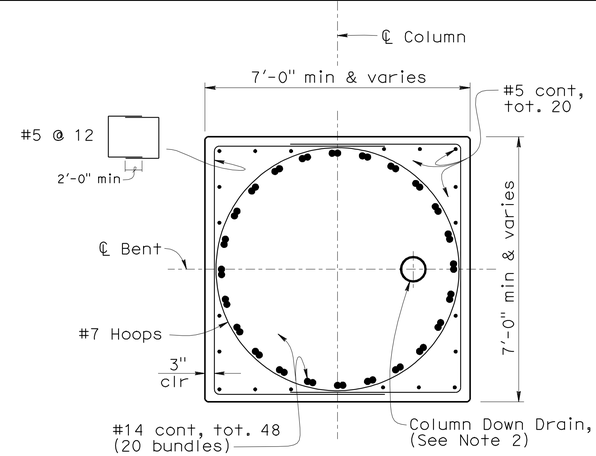

BENTS 9 thru 12 & 17 thru 20

SECTION D-D

SCALE: ½" = 1'-0"

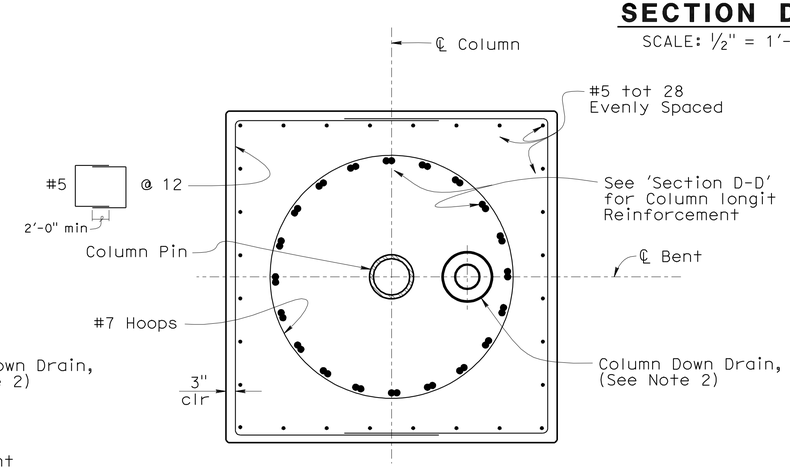

SECTION C-C

SCALE: ½" = 1'-0"

NOTES:

1. For the location of 'Sections A-A, B-B, C-C and D-D', see "BENT DETAILS No. 1" sheet.
2. For locations of columns with a Down Drain see Girder Layout sheets.

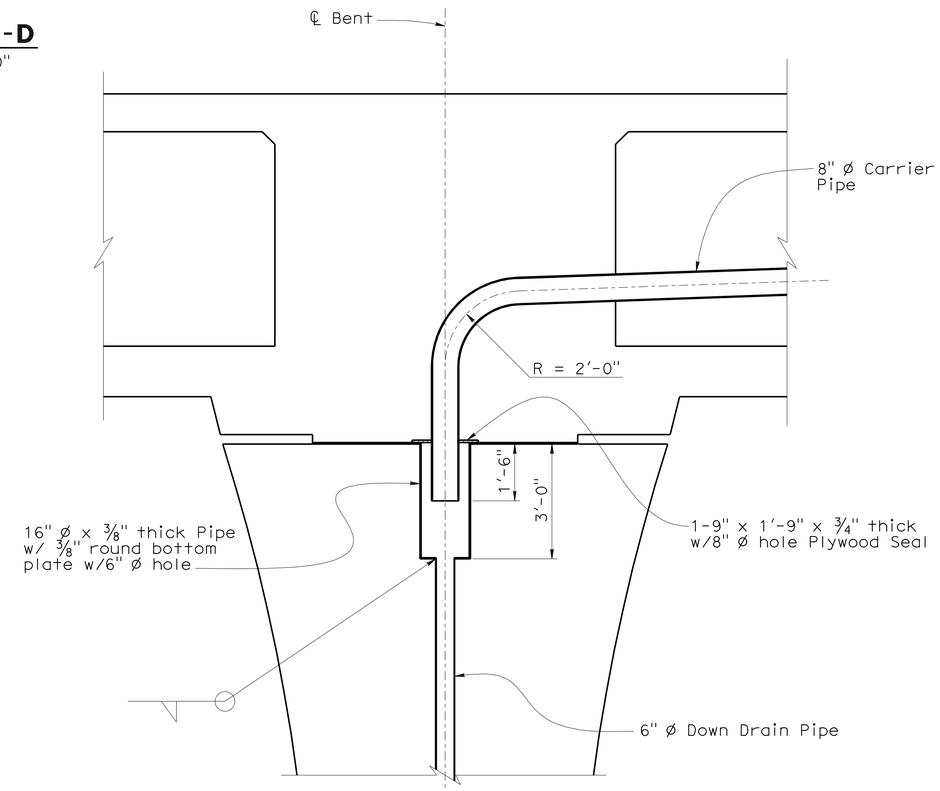

NOTE: For transverse location of Down Drain Pipe, see Girder Layout sheets.

COLUMN DOWN DRAIN DETAIL

SCALE: ½" = 1'-0"

	BY	CHECKED
DESIGN	F. Zayati	R. Bromenschenkel
DETAILS	K. Kubo	F. Zayati
QUANTITIES	J. Massoomi	L. Han

STATE OF CALIFORNIA
DEPARTMENT OF TRANSPORTATION

DIVISION OF ENGINEERING SERVICES
STRUCTURE DESIGN
DESIGN BRANCH 14

BRIDGE No. 53-3032
POST MILE 3.58

SCHUYLER HEIM BRIDGE (REPLACE)

BENT DETAILS No. 2

STRUCTURES DESIGN DETAIL SHEET (ENGLISH) (REV. 10/25/05)

ORIGINAL SCALE IN INCHES FOR REDUCED PLANS 0 1 2 3

CU 07-271
EA 138201

DISREGARD PRINTS BEARING EARLIER REVISION DATES

REVISION DATES: 01-03-10, 02-25-10, 03-01-10, 03-02-10, 03-03-10, 04-29-10, 05-04-10, 06-25-10

SHEET 63 OF 247

FILE => 53-3032-h-bdt02.dgn

USERNAME => trpierce DATE PLOTTED => 19-OCT-2010 TIME PLOTTED => 10:30

DIST	COUNTY	ROUTE	POST MILES TOTAL PROJECT	SHEET No	TOTAL SHEETS
07	LA	47,103	3.5/4.6, 0.0/1.1	566	1003

REGISTERED CIVIL ENGINEER — DATE 05-24-10

10-11-10
PLANS APPROVAL DATE

The State of California or its officers or agents shall not be responsible for the accuracy or completeness of electronic copies of this plan sheet.

REGISTERED PROFESSIONAL ENGINEER — FOUED ZAYATI — No. C57046 — Exp. 06-30-11 — CIVIL — STATE OF CALIFORNIA

NOTES:

1. Omit Stirrups inside Column Cage.
2. For Column Reinforcement, see "BENT DETAILS No. 2" sheet.
3. For Pile Reinforcement, see "10 FT CIDH PILE DETAILS No. 1" sheet.
4. For the purpose of measurement and payment, crashwalls shall be designated as "Structural Concrete, Bridge."

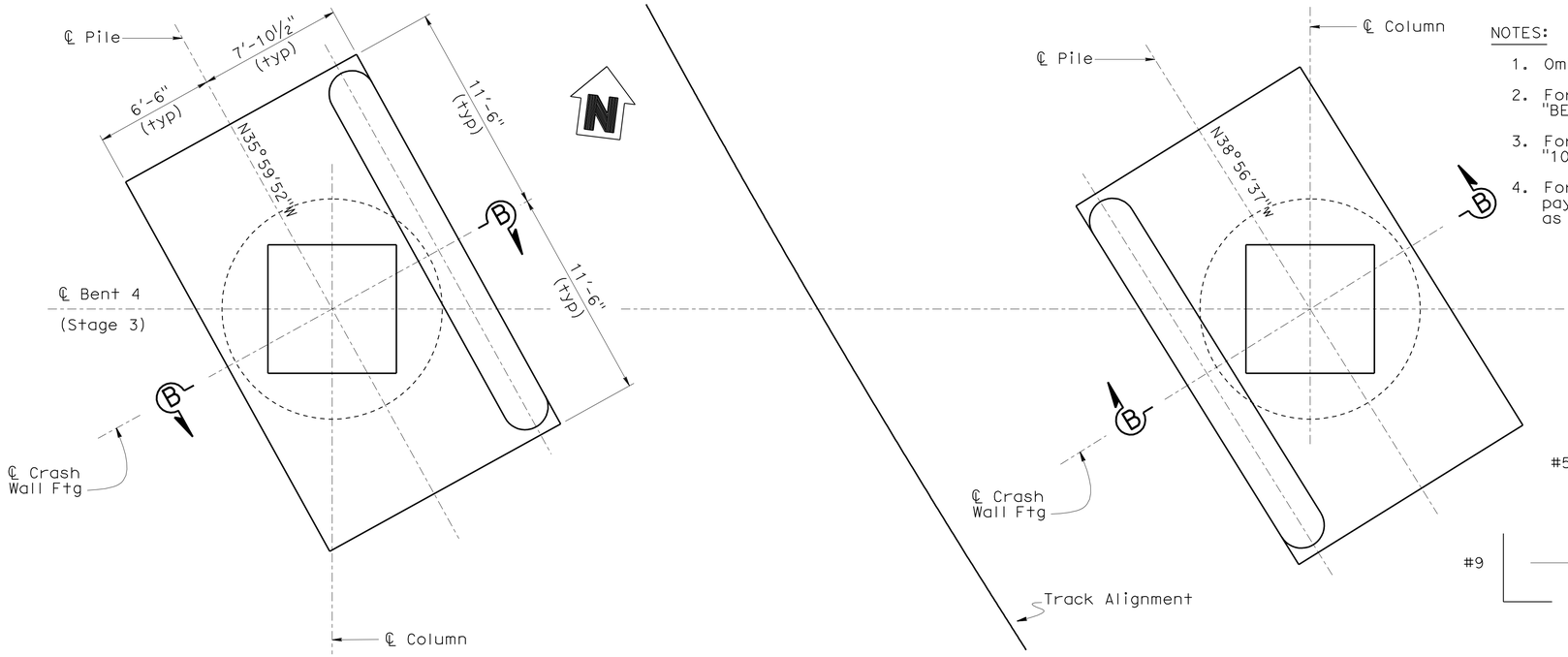

PLAN

SCALE: ¼" = 1'-0"

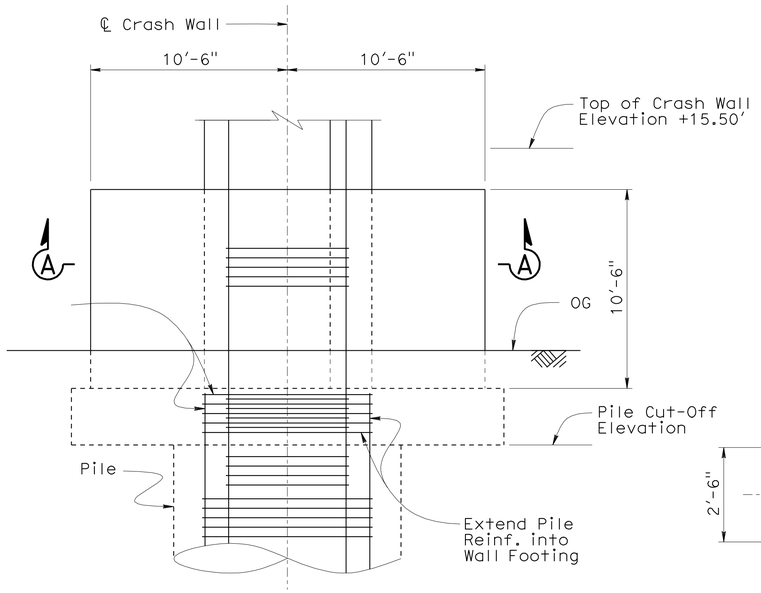

ELEVATION

SCALE: ¼" = 1'-0"

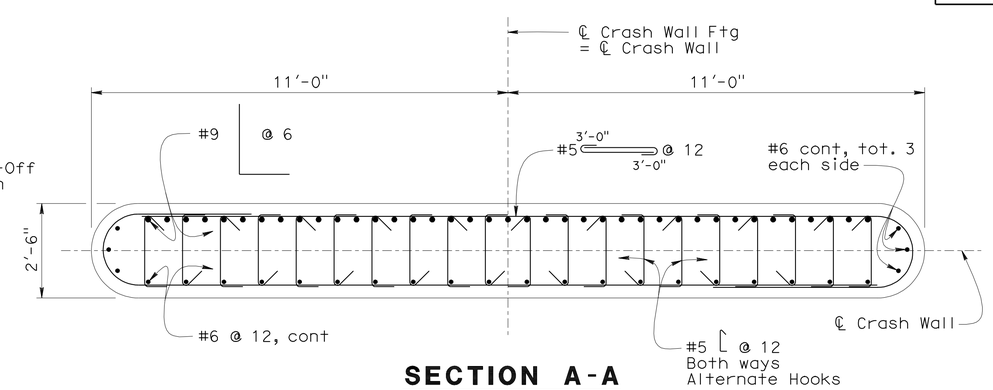

SECTION A-A

SCALE: ½" = 1'-0"

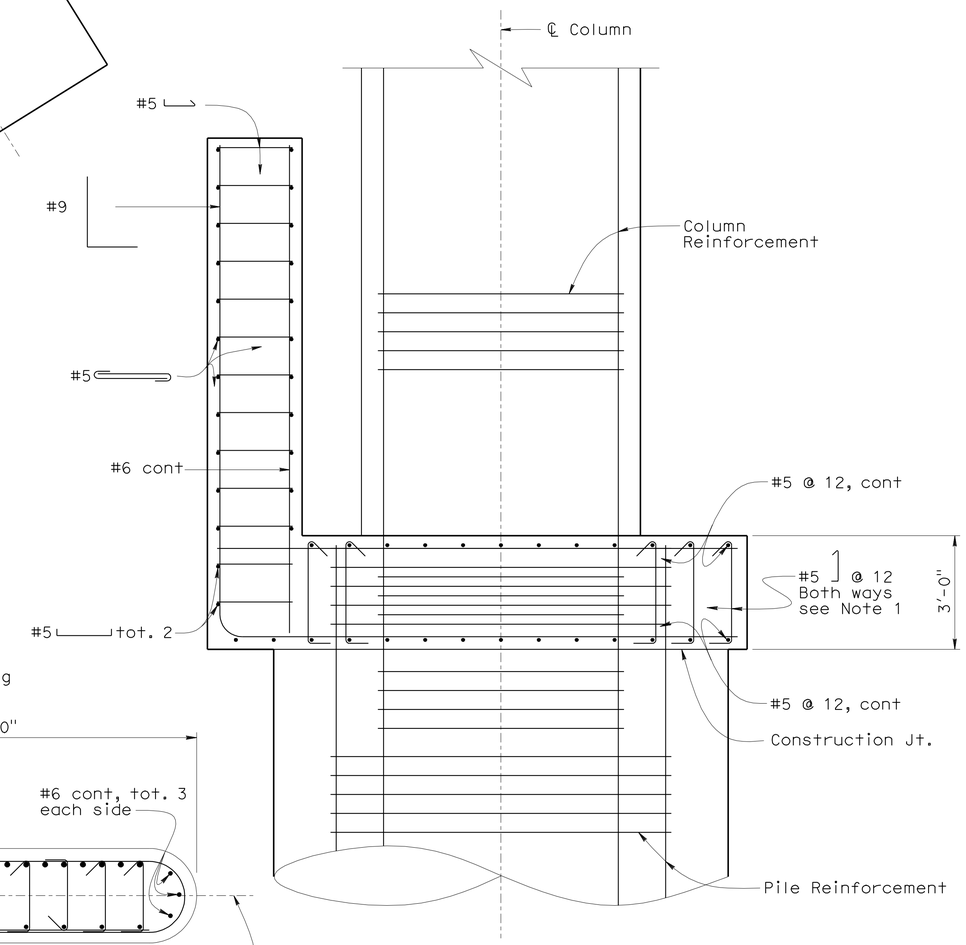

SECTION B-B

SCALE: ½" = 1'-0"

	BY	CHECKED
DESIGN	F. Zayati	R. Bromenschenkel
DETAILS	K. Kubo	F. Zayati
QUANTITIES	J. Massoomi	L. Han

STATE OF CALIFORNIA
DEPARTMENT OF TRANSPORTATION

DIVISION OF ENGINEERING SERVICES
STRUCTURE DESIGN
DESIGN BRANCH 14

BRIDGE NO. 53-3032
POST MILE 3.58

SCHUYLER HEIM BRIDGE (REPLACE)

BENT DETAILS NO. 3

STRUCTURES DESIGN DETAIL SHEET (ENGLISH) (REV. 10/25/05)

ORIGINAL SCALE IN INCHES FOR REDUCED PLANS 0 1 2 3

CU 07-271
EA 138201

DISREGARD PRINTS BEARING EARLIER REVISION DATES

REVISION DATES: 01-08-10 02-04-10 02-26-10 03-05-10 04-29-10 06-29-10 07-08-10

SHEET 64 OF 247

FILE => 53-3032-h-bdt03.dgn

USERNAME => trpierce DATE PLOTTED => 19-OCT-2010 TIME PLOTTED => 10:30

DIST	COUNTY	ROUTE	POST MILES TOTAL PROJECT	SHEET No	TOTAL SHEETS
07	LA	47,103	3.5/4.6, 0.0/1.1	567	1003

REGISTERED CIVIL ENGINEER — 05-24-10 DATE

10-11-10
PLANS APPROVAL DATE

REGISTERED PROFESSIONAL ENGINEER — FOUED ZAYATI — No. C57046 — Exp. 06-30-11 — CIVIL — STATE OF CALIFORNIA

The State of California or its officers or agents shall not be responsible for the accuracy or completeness of electronic copies of this plan sheet.

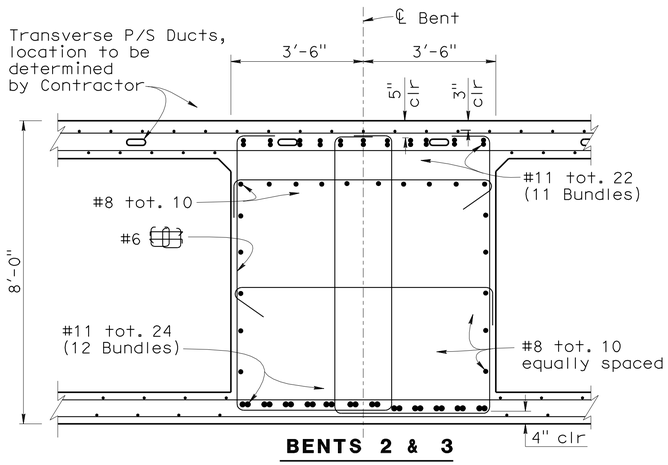

BENTS 2 & 3

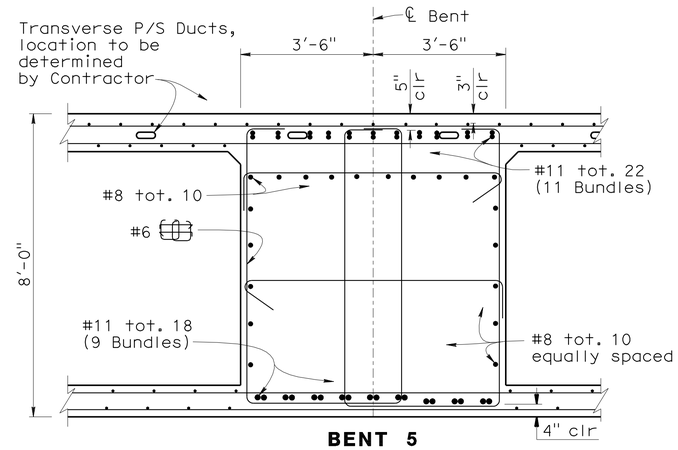

BENT 5

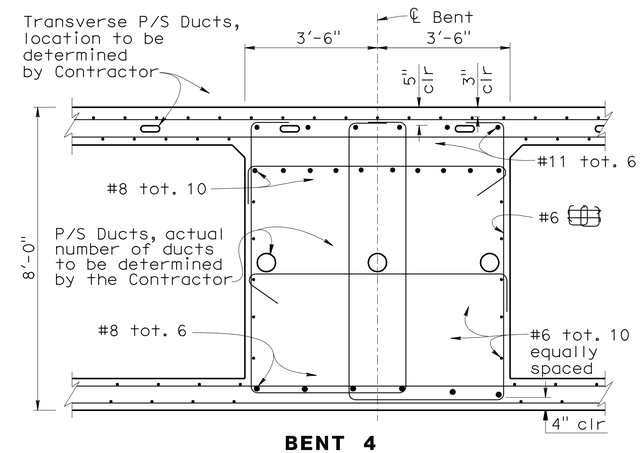

BENT 4

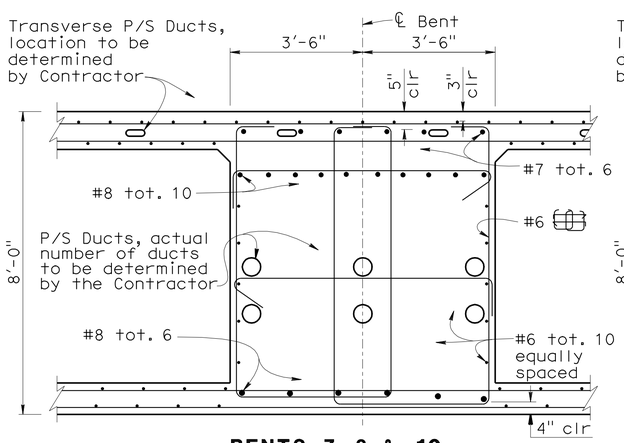

BENTS 7, 8 & 10

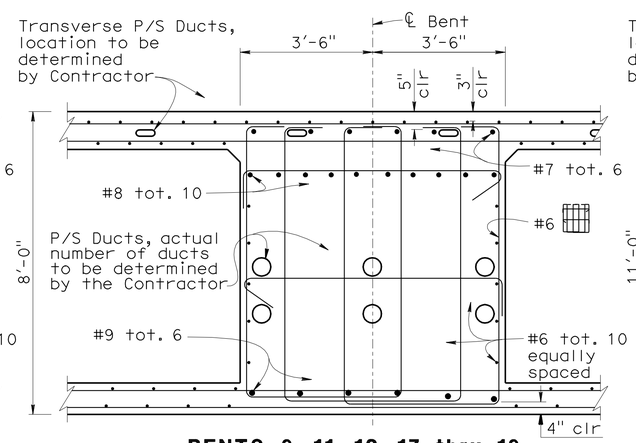

BENTS 9, 11, 12, 17 thru 19

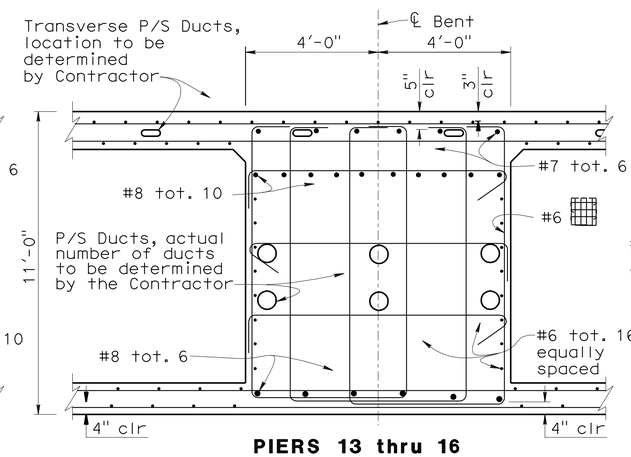

PIERS 13 thru 16

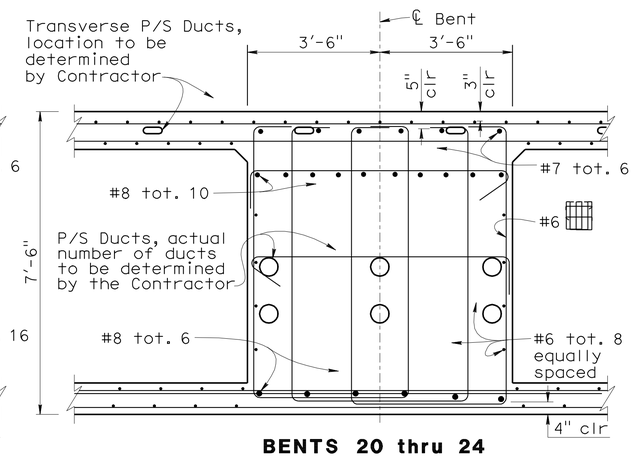

BENTS 20 thru 24

SECTION A-A (STAGE 1, RIGHT BRIDGE)

No Scale

DESIGN	BY J. Massoomi	CHECKED T. Skreslet	
DETAILS	BY L. Xiong	CHECKED T. Skreslet	
QUANTITIES	BY X	CHECKED X	

STATE OF CALIFORNIA
DEPARTMENT OF TRANSPORTATION

DIVISION OF ENGINEERING SERVICES
STRUCTURE DESIGN
DESIGN BRANCH 14

BRIDGE NO. 53-3032
POST MILE 3.58

SCHUYLER HEIM BRIDGE (REPLACE)

BENT DETAILS NO. 4

STRUCTURES DESIGN DETAIL SHEET (ENGLISH) (REV. 10/25/05)

ORIGINAL SCALE IN INCHES FOR REDUCED PLANS 0 1 2 3

CU 07
EA 238501

DISREGARD PRINTS BEARING EARLIER REVISION DATES

REVISION DATES: 04-29-10 05-28-10 02-16-10 03-08-10 03-15-10 04-13-10 4-28-10

SHEET 65 OF 247

FILE => 53-3032-h-bdt04.dgn

USERNAME => trpierce DATE PLOTTED => 19-OCT-2010 TIME PLOTTED => 10:31

DIST	COUNTY	ROUTE	POST MILES TOTAL PROJECT	SHEET No	TOTAL SHEETS
07	LA	47,103	3.5/4.6, 0.0/1.1	568	1003

REGISTERED CIVIL ENGINEER — DATE 05-24-10

10-11-10
PLANS APPROVAL DATE

REGISTERED PROFESSIONAL ENGINEER — FOUED ZAYATI — No. C57046 — Exp. 06-30-11 — CIVIL — STATE OF CALIFORNIA

The State of California or its officers or agents shall not be responsible for the accuracy or completeness of electronic copies of this plan sheet.

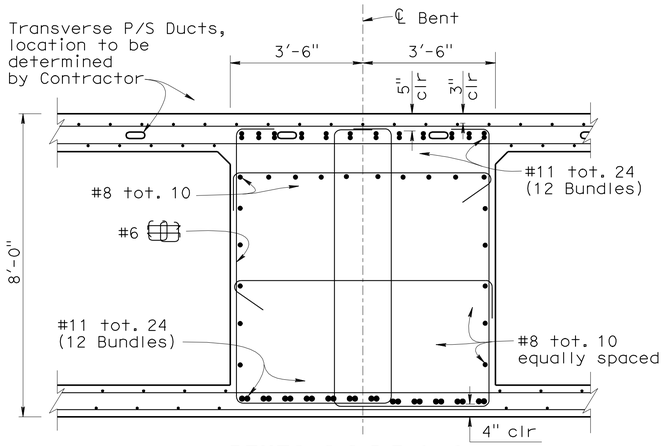

BENTS 2,3,5,7 & 8

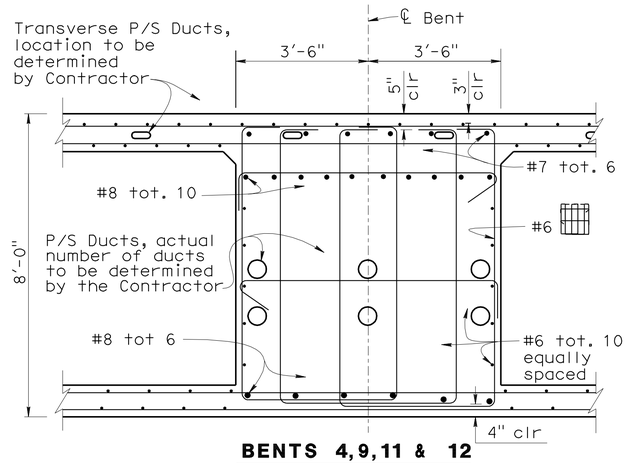

BENTS 4,9,11 & 12

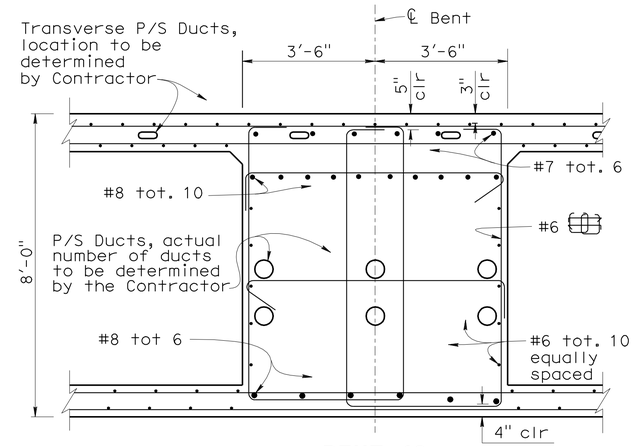

BENT 10

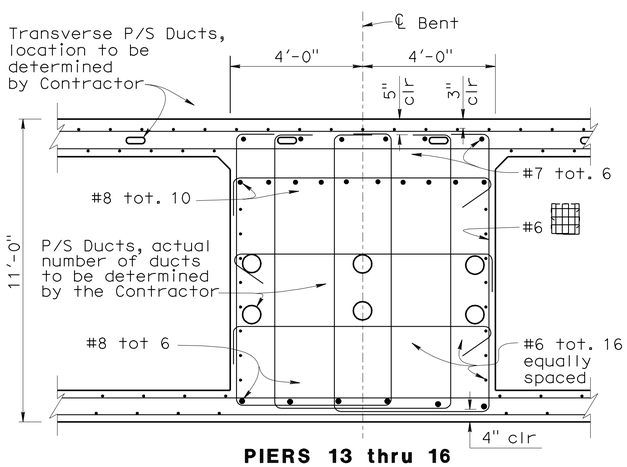

PIERS 13 thru 16

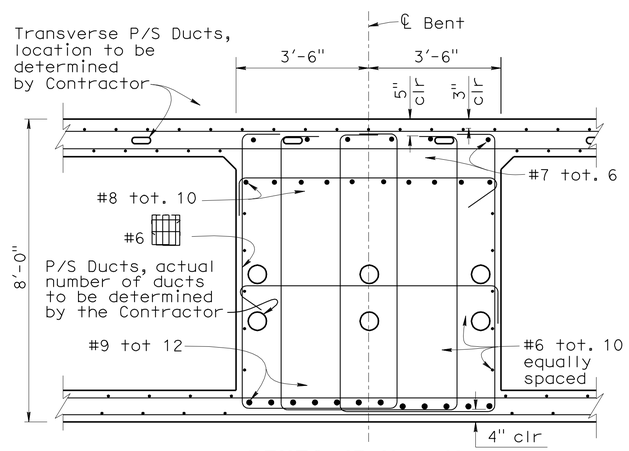

BENTS 17 thru 19

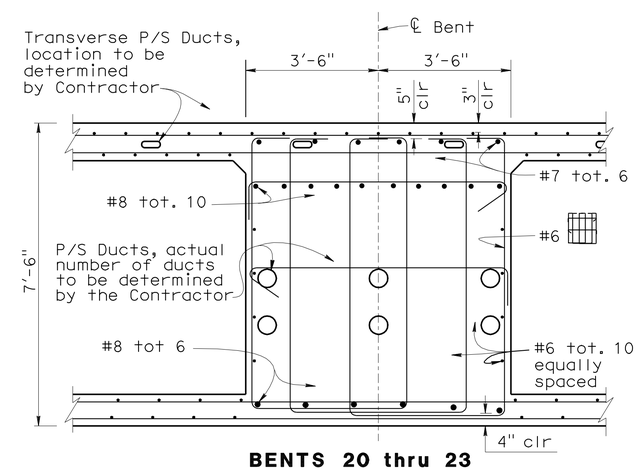

BENTS 20 thru 23

SECTION B-B (STAGE 2, LEFT BRIDGE)

No Scale

	BY	CHECKED
DESIGN	J. Massoomi	T. Skreslet
DETAILS	L. Xiong	T. Skreslet
QUANTITIES	X	X

STATE OF CALIFORNIA
DEPARTMENT OF TRANSPORTATION

DIVISION OF ENGINEERING SERVICES
STRUCTURE DESIGN
DESIGN BRANCH 14

BRIDGE NO. 53-3032
POST MILE 3.58

SCHUYLER HEIM BRIDGE (REPLACE)
BENT DETAILS NO. 5

STRUCTURES DESIGN DETAIL SHEET (ENGLISH) (REV. 10/25/05)

ORIGINAL SCALE IN INCHES FOR REDUCED PLANS 0 1 2 3

CU 07
EA 238501

DISREGARD PRINTS BEARING EARLIER REVISION DATES

REVISION DATES: 03-09-10 | 3-11-10 | 04-13-10 | 04-29-10 | 1-11-10 | 1-13-10 | 1-14-10 | 02-08-10 | 02-18-10

SHEET 66 OF 247

FILE => 53-3032-h-bdt05.dgn

USERNAME => trpierce DATE PLOTTED => 19-OCT-2010 TIME PLOTTED => 10:31

DIST	COUNTY	ROUTE	POST MILES TOTAL PROJECT	SHEET No	TOTAL SHEETS
07	LA	47,103	3.5/4.6, 0.0/1.1	569	1003

REGISTERED CIVIL ENGINEER — DATE 05-24-10

10-11-10
PLANS APPROVAL DATE

REGISTERED PROFESSIONAL ENGINEER — FOUED ZAYATI — No. C57046 — Exp. 06-30-11 — CIVIL — STATE OF CALIFORNIA

The State of California or its officers or agents shall not be responsible for the accuracy or completeness of electronic copies of this plan sheet.

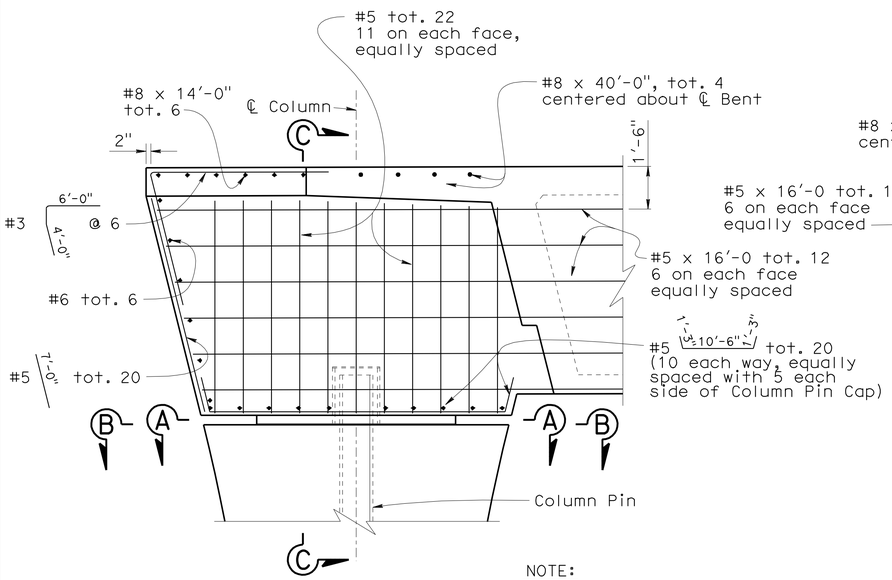

DETAIL B

SCALE: 3/8" = 1'-0"

NOTE:

P/S Grillage not shown
Bars cut at stress heads
to clear block out by 2"

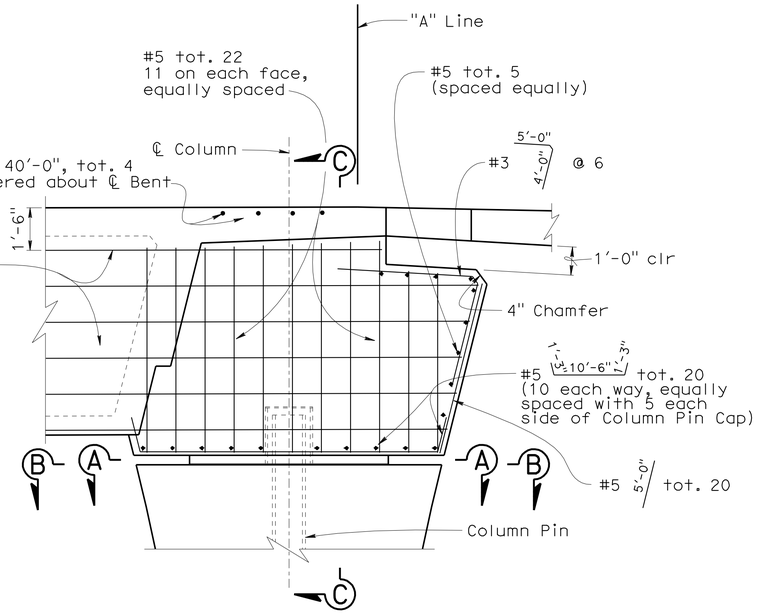

DETAIL C

SCALE: 3/8" = 1'-0"

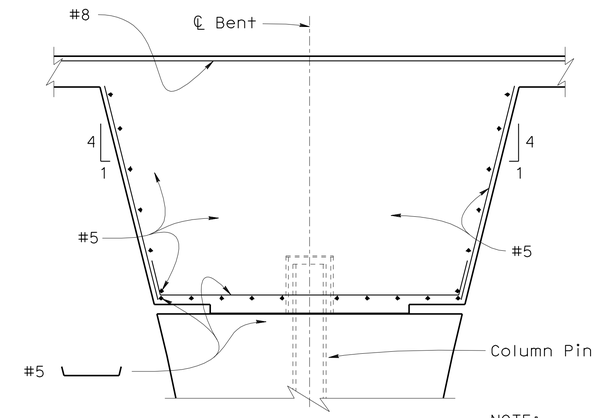

SECTION C-C

SCALE: 3/8" = 1'-0"

NOTE:

Typical Deck
reinforcement not shown

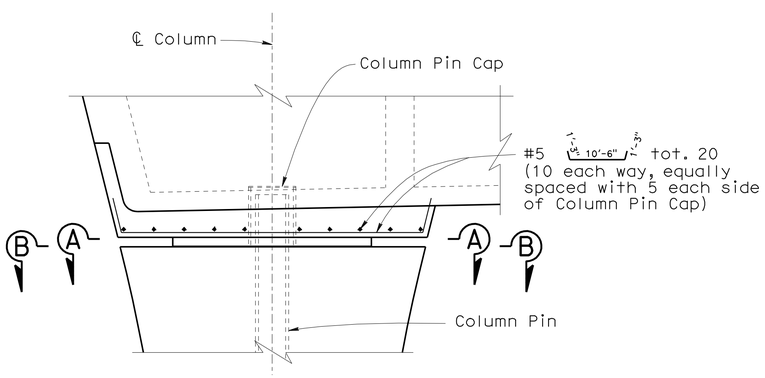

DETAIL A

SCALE: 3/8" = 1'-0"

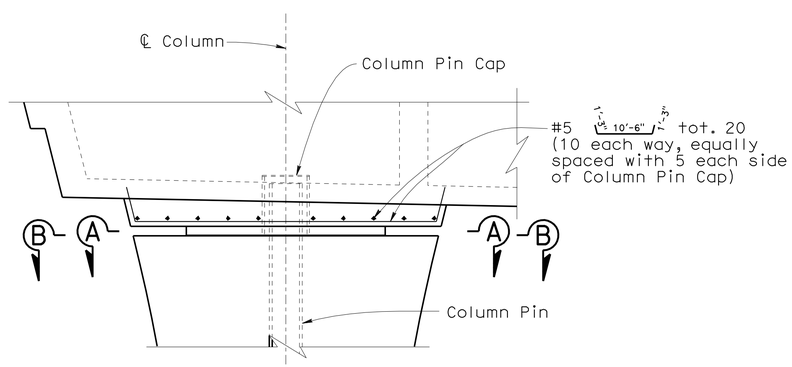

DETAIL D

SCALE: 3/8" = 1'-0"

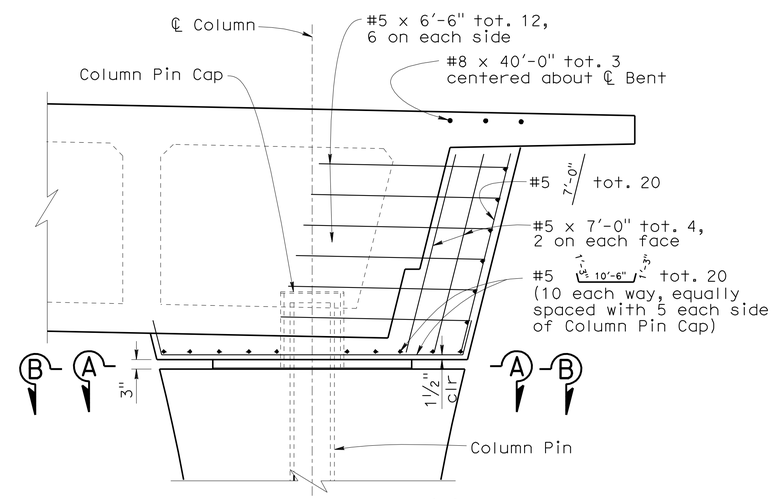

NOTES: Bent 4 shown, Bent 5 similar

DETAIL E

SCALE: 1/2" = 1'-0"

NOTES:

1. For location of 'Detail A', 'Detail D' and 'Detail E', see BENT LAYOUT sheets
2. For location of 'Detail B' and 'Detail C', see "BENT 4 LAYOUT" sheet
3. For location of 'Section A-A' and 'Section B-B', see "BENT DETAILS No. 2" sheet.
4. For Column Pin Details, see "BENT DETAILS No. 3" sheet.

	BY	CHECKED
DESIGN	J. Massoomi	T. Skreslet
DETAILS	L. Xiong	T. Skreslet
QUANTITIES	J. Massoomi	L. Han

STATE OF CALIFORNIA
DEPARTMENT OF TRANSPORTATION

DIVISION OF ENGINEERING SERVICES
STRUCTURE DESIGN
DESIGN BRANCH 14

BRIDGE NO. 53-3032
POST MILE 3.58

SCHUYLER HEIM BRIDGE (REPLACE)

BENT DETAILS NO.6

STRUCTURES DESIGN DETAIL SHEET (ENGLISH) (REV. 10/25/05)

ORIGINAL SCALE IN INCHES FOR REDUCED PLANS 0 1 2 3

CU 07-271
EA 138201

DISREGARD PRINTS BEARING EARLIER REVISION DATES 4-28-10 4-28-10

REVISION DATES

SHEET 67 OF 247

FILE => 53-3032-h-bdt06.dgn

USERNAME => trpierce DATE PLOTTED => 19-OCT-2010 TIME PLOTTED => 10:31

DIST	COUNTY	ROUTE	POST MILES TOTAL PROJECT	SHEET No	TOTAL SHEETS
07	LA	47,103	3.5/4.6, 0.0/1.1	570	1003

REGISTERED CIVIL ENGINEER — DATE 05-24-10

10-11-10
PLANS APPROVAL DATE

The State of California or its officers or agents shall not be responsible for the accuracy or completeness of electronic copies of this plan sheet.

REGISTERED PROFESSIONAL ENGINEER — FOUED ZAYATI — No. C57046 — Exp. 06-30-11 — CIVIL — STATE OF CALIFORNIA

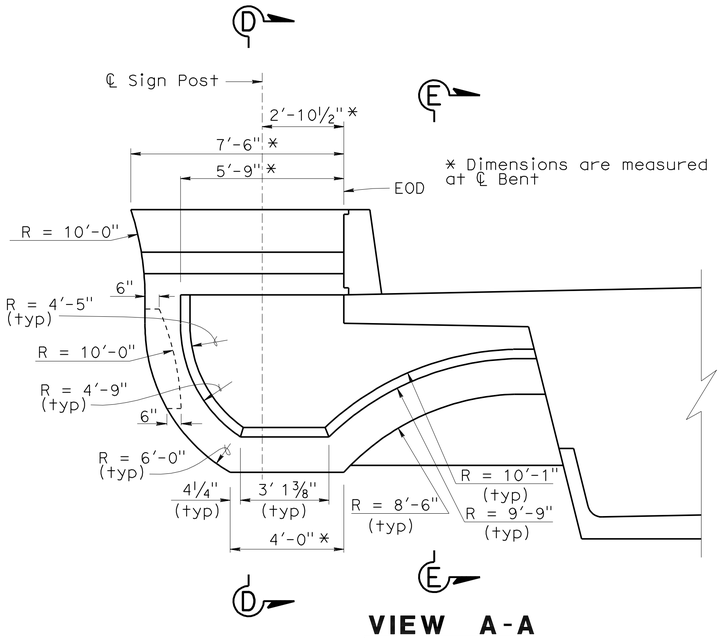

VIEW A-A

SCALE: ⅜" = 1'-0"

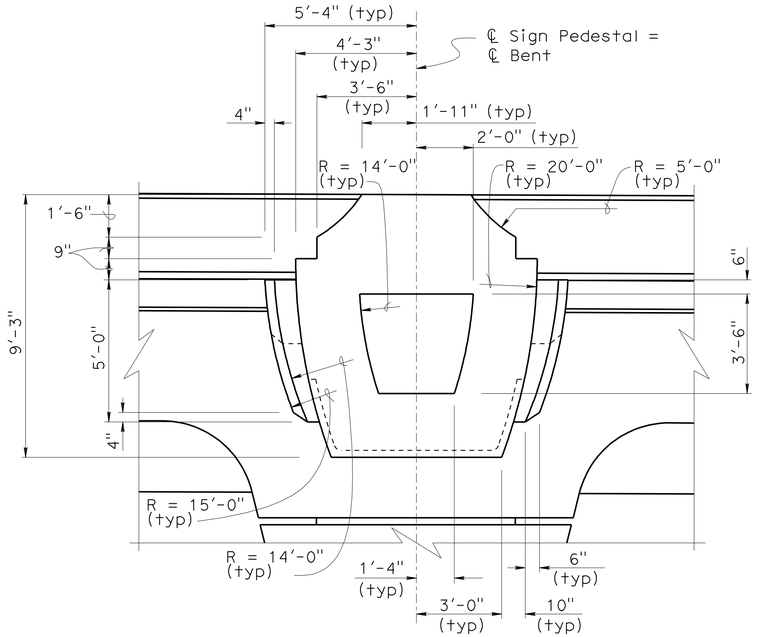

VIEW B-B

SCALE: ⅜" = 1'-0"

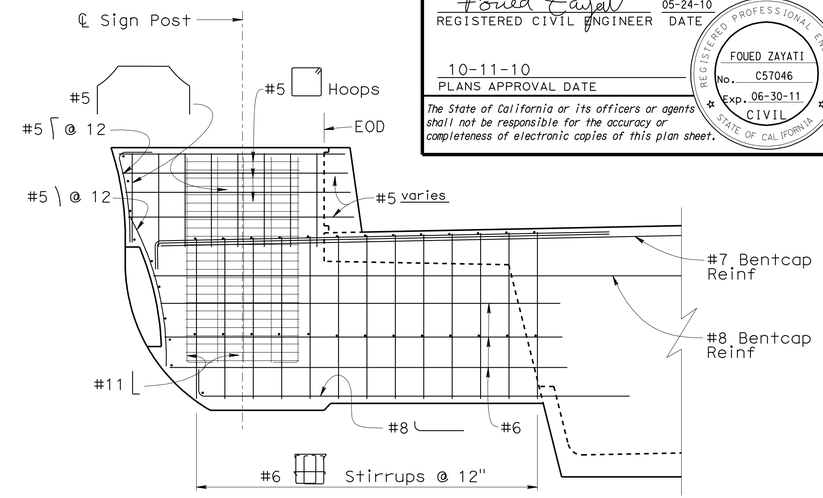

SECTION C-C

SCALE: ⅜" = 1'-0"

NOTES:

1. Details shown apply to the Sign Pedestals located at the following:

   * Bent 11 (Stage 2 @ Left EOD)
   * Bent 12 (Stage 1 @ Right EOD)
   * Bent 21 (Stage 1 @ Right EOD)

2. Bent 11 shown, Bents 12 & 21 similar

3. See "Roadway Plans" for sign post details.

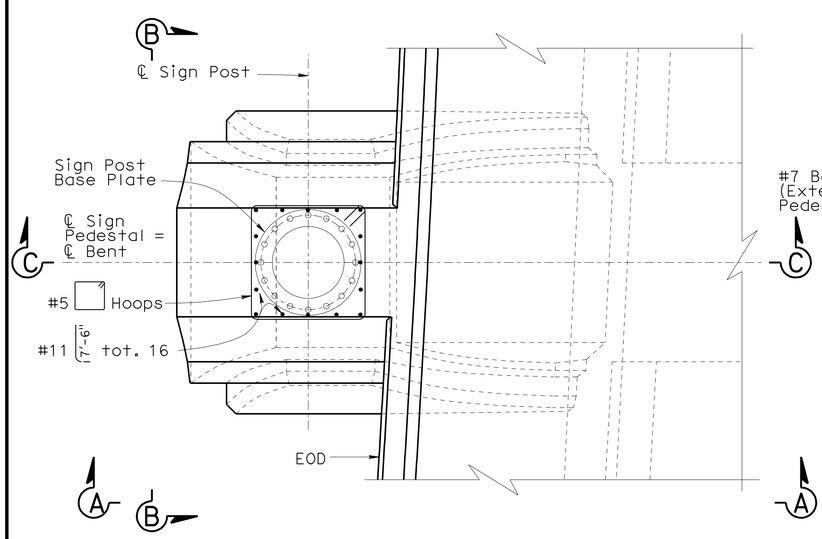

PLAN

SCALE: ⅜" = 1'-0"

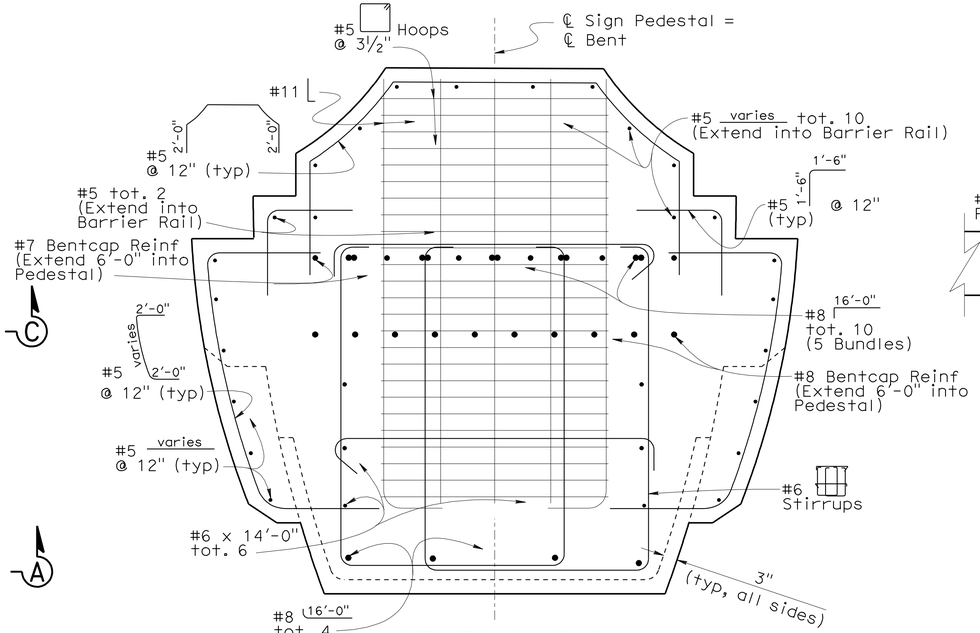

SECTION D-D

SCALE: ¾" = 1'-0"

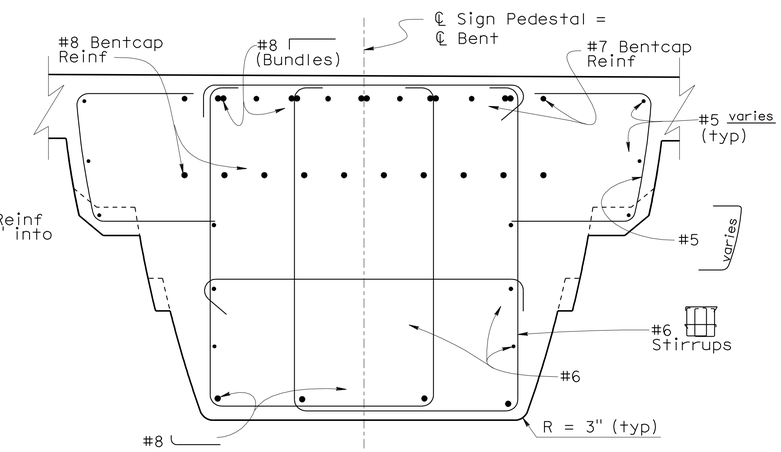

SECTION E-E

SCALE: ¾" = 1'-0"

DESIGN	BY F. Zayati	CHECKED T. Skreslet	
DETAILS	BY L. Xiong	CHECKED T. Skreslet	
QUANTITIES	BY J. Massoomi	CHECKED L. Han	

STATE OF CALIFORNIA
DEPARTMENT OF TRANSPORTATION

DIVISION OF ENGINEERING SERVICES
STRUCTURE DESIGN
DESIGN BRANCH 14

BRIDGE NO. 53-3032
POST MILE 3.58

SCHUYLER HEIM BRIDGE (REPLACE)

BENT DETAILS NO. 7

STRUCTURES DESIGN DETAIL SHEET (ENGLISH) (REV. 10/25/05)

ORIGINAL SCALE IN INCHES FOR REDUCED PLANS 0 1 2 3

CU 07-271
EA 238501

DISREGARD PRINTS BEARING EARLIER REVISION DATES

REVISION DATES: 05-14-10 05-12-10 07-19-10 03-26-10 04-02-10 5-4-10 5-5-10 05-06-10 05-07-10

SHEET 68 OF 247

FILE => 53-3032-h-bdt07.dgn

USERNAME => tfpierce DATE PLOTTED => 19-OCT-2010 TIME PLOTTED => 10:31

DIST	COUNTY	ROUTE	POST MILES TOTAL PROJECT	SHEET No	TOTAL SHEETS
07	LA	47,103	3.5/4.6, 0.0/1.1	571	1003

REGISTERED CIVIL ENGINEER — DATE 05-24-10

10-11-10
PLANS APPROVAL DATE

REGISTERED PROFESSIONAL ENGINEER — FOUED ZAYATI — No. C57046 — Exp. 06-30-11 — CIVIL — STATE OF CALIFORNIA

The State of California or its officers or agents shall not be responsible for the accuracy or completeness of electronic copies of this plan sheet.

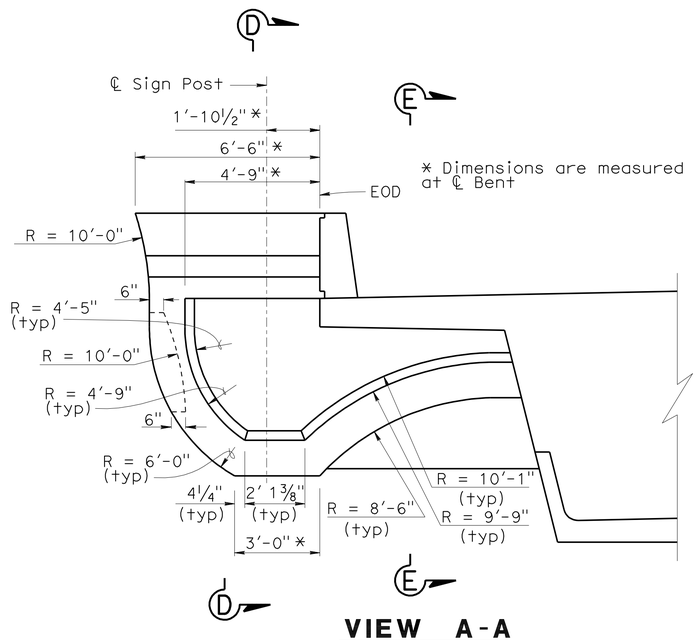

VIEW A-A

SCALE: ⅜" = 1'-0"

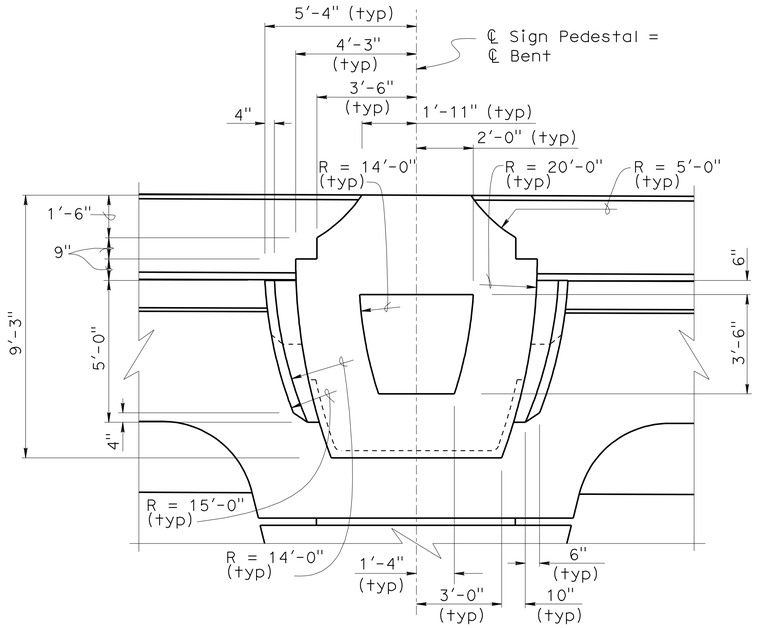

VIEW B-B

SCALE: ⅜" = 1'-0"

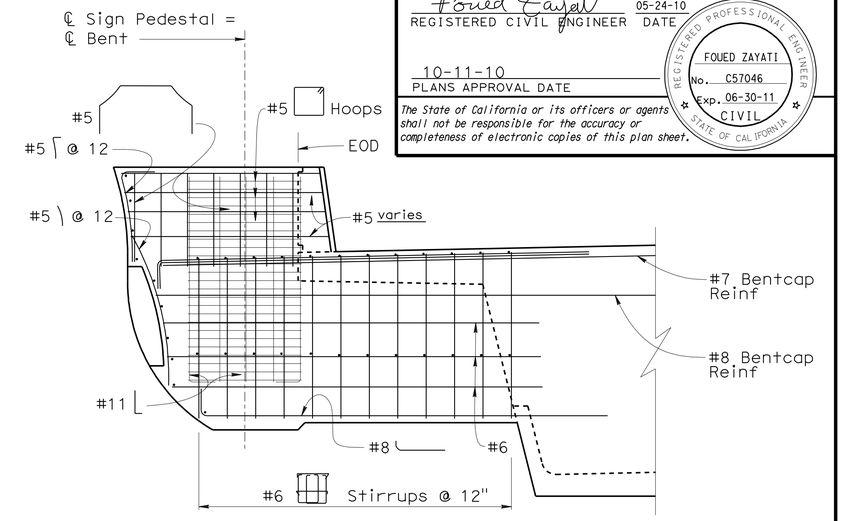

SECTION C-C

SCALE: ⅜" = 1'-0"

NOTE:

The details shown apply to the Sign Pedestal located at Bent 21 (Stage 1 @ Left EOD only)

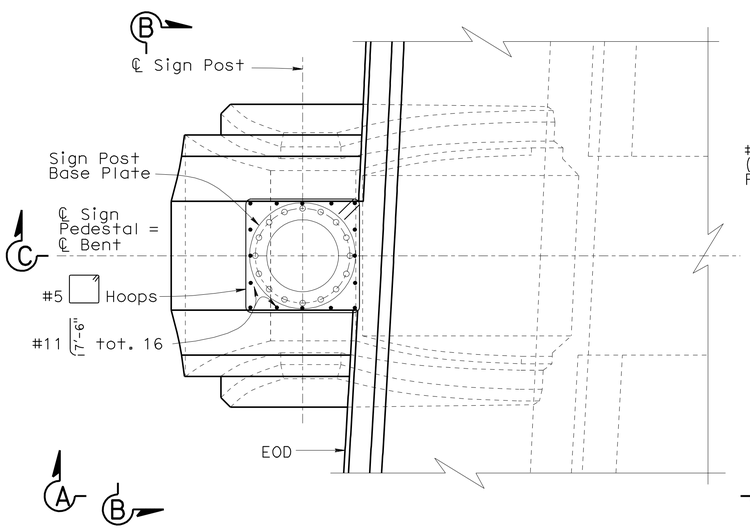

PLAN

SCALE: ⅜" = 1'-0"

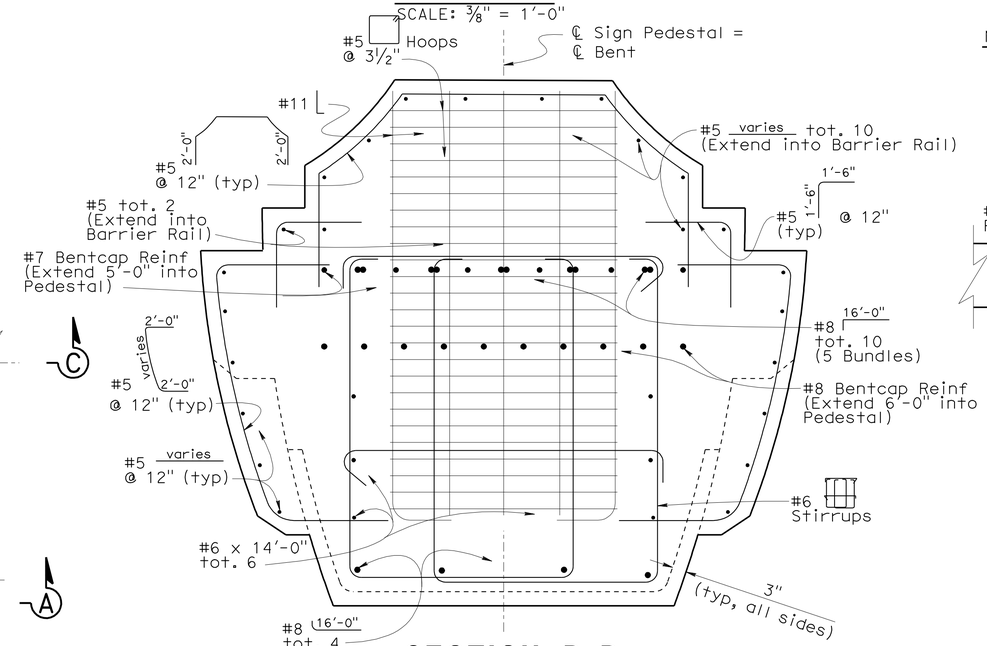

SECTION D-D

SCALE: ¾" = 1'-0"

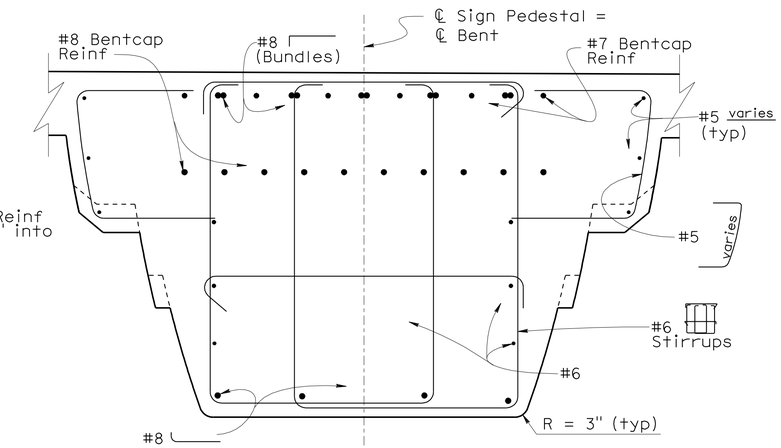

SECTION E-E

SCALE: ¾" = 1'-0"

DESIGN	BY	CHECKED	
DETAILS	BY	CHECKED	
QUANTITIES	BY	CHECKED	

STATE OF CALIFORNIA
DEPARTMENT OF TRANSPORTATION

DIVISION OF ENGINEERING SERVICES
STRUCTURE DESIGN
DESIGN BRANCH 14

BRIDGE NO. 53-3032
POST MILE 3.58

SCHUYLER HEIM BRIDGE (REPLACE)

BENT DETAILS NO. 8

STRUCTURES DESIGN DETAIL SHEET (ENGLISH) (REV. 10/25/05)

ORIGINAL SCALE IN INCHES FOR REDUCED PLANS 0 1 2 3

CU 07-271
EA 138201

DISREGARD PRINTS BEARING EARLIER REVISION DATES

REVISION DATES: 05-06-10 05-07-10 5-14-10

SHEET 69 OF 247

FILE => 53-3032-h-bdt08.dgn

USERNAME => trpierce DATE PLOTTED => 19-OCT-2010 TIME PLOTTED => 10:31

DIST	COUNTY	ROUTE	POST MILES TOTAL PROJECT	SHEET No	TOTAL SHEETS
07	LA	47,103	3.5/4.6, 0.0/1.1	572	1003

REGISTERED CIVIL ENGINEER 05-24-10 DATE

10-11-10
PLANS APPROVAL DATE

REGISTERED PROFESSIONAL ENGINEER FOUED ZAYATI No. C57046 Exp. 06-30-11 CIVIL STATE OF CALIFORNIA

The State of California or its officers or agents shall not be responsible for the accuracy or completeness of electronic copies of this plan sheet.

Note: Bicycle Railing not shown.

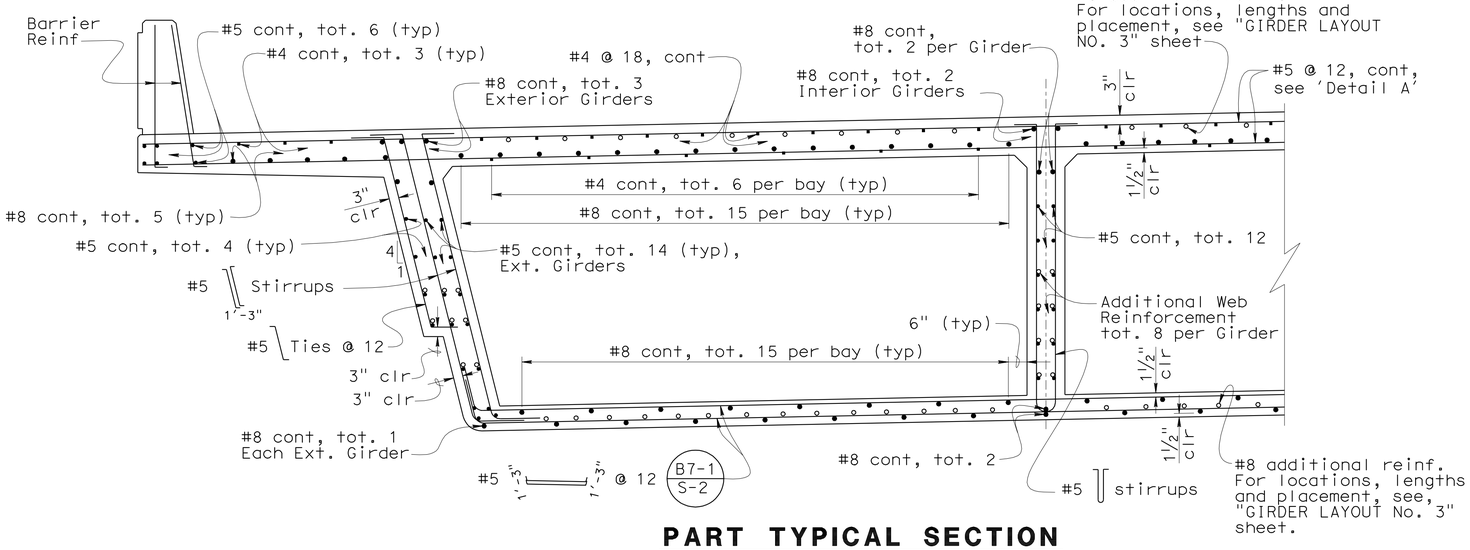

PART TYPICAL SECTION

SCALE: ½" = 1'-0"

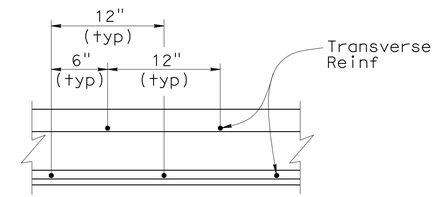

DETAIL A

No Scale

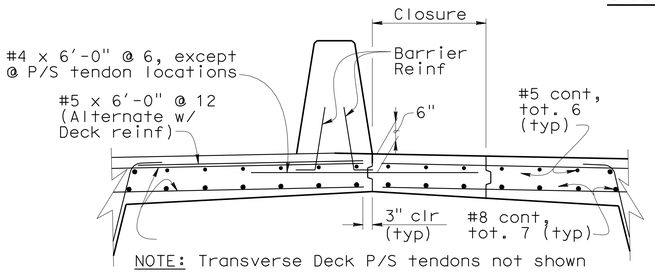

NOTE: Transverse Deck P/S tendons not shown

CLOSURE DETAIL

SCALE: ½" = 1'-0"

A76A | B0-5 5-2 | B7-1

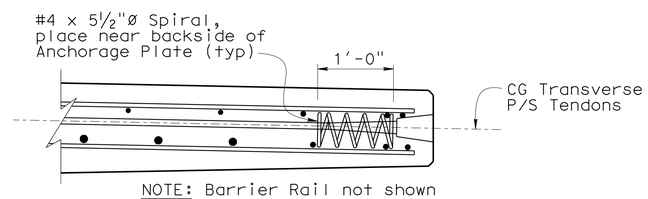

NOTE: Barrier Rail not shown

ANCHORAGE ZONE DETAIL

SCALE: 1" = 1'-0"

A76A

TRANSVERSE PRESTRESSING NOTES

1. 270 KSI Low Relaxation Strand:
2. Concrete: f'_c = 5.0 psi @ 28 days
   f'_{ci} = 3.5 psi @ time of stressing
3. P_f = Total force remaining after all losses including those due to creep, shrinkage, elastic shortening of concrete and relaxation of prestressing steel
   P_f = 39.0 Kips/ft
4. Maximum Tendon spacing shall not exceed 4'-0"
5. Place first tendon at Sta. "A" 4+33.00
6. Place last tendon at Sta. "E" 421+57.33, "G" 609+78.84
7. Place prestress tendons normal or radial to and space along left edge of Deck
8. One end stressing. Alternate stressing end
9. Transverse tendons shall be stressed prior to longitudinal tendons being stressed
10. Falsework shall not be released prior to stressing the transverse tendons

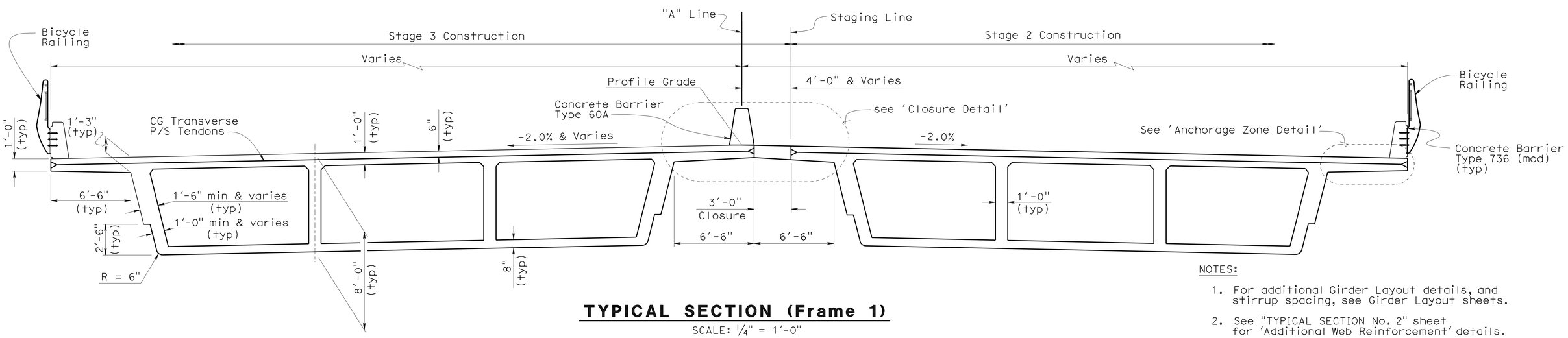

TYPICAL SECTION (Frame 1)

SCALE: ¼" = 1'-0"

NOTES:

1. For additional Girder Layout details, and stirrup spacing, see Girder Layout sheets.
2. See "TYPICAL SECTION No. 2" sheet for 'Additional Web Reinforcement' details.

	BY	CHECKED
DESIGN	T. Skreslet	F. Zayati
DETAILS	K. Kubo	F. Zayati
QUANTITIES	J/P. Peterson	J/P. Peterson

STATE OF CALIFORNIA DEPARTMENT OF TRANSPORTATION

DIVISION OF ENGINEERING SERVICES STRUCTURE DESIGN DESIGN BRANCH 14

BRIDGE NO. 53-3032 POST MILE 3.58

SCHUYLER HEIM BRIDGE (REPLACE)

TYPICAL SECTION NO. 1

STRUCTURES DESIGN DETAIL SHEET (ENGLISH) (REV. 10/25/05)

ORIGINAL SCALE IN INCHES FOR REDUCED PLANS 0 1 2 3

CU 07-271
EA 138201

DISREGARD PRINTS BEARING EARLIER REVISION DATES

REVISION DATES: 04-19-10 04-22-10 04-29-10 05-14-10 05-23-10 05-28-10 07-09-10 03-15-10 04-15-10

SHEET 70 OF 247

FILE => 53-3032-k-ts01.dgn

USERNAME => trpierce DATE PLOTTED => 19-OCT-2010 TIME PLOTTED => 10:32

DIST	COUNTY	ROUTE	POST MILES TOTAL PROJECT	SHEET No	TOTAL SHEETS
07	LA	47,103	3.5/4.6, 0.0/1.1	573	1003

REGISTERED CIVIL ENGINEER 05-24-10 DATE

10-11-10
PLANS APPROVAL DATE

REGISTERED PROFESSIONAL ENGINEER FOUED ZAYATI No. C57046 Exp. 06-30-11 CIVIL STATE OF CALIFORNIA

The State of California or its officers or agents shall not be responsible for the accuracy or completeness of electronic copies of this plan sheet.

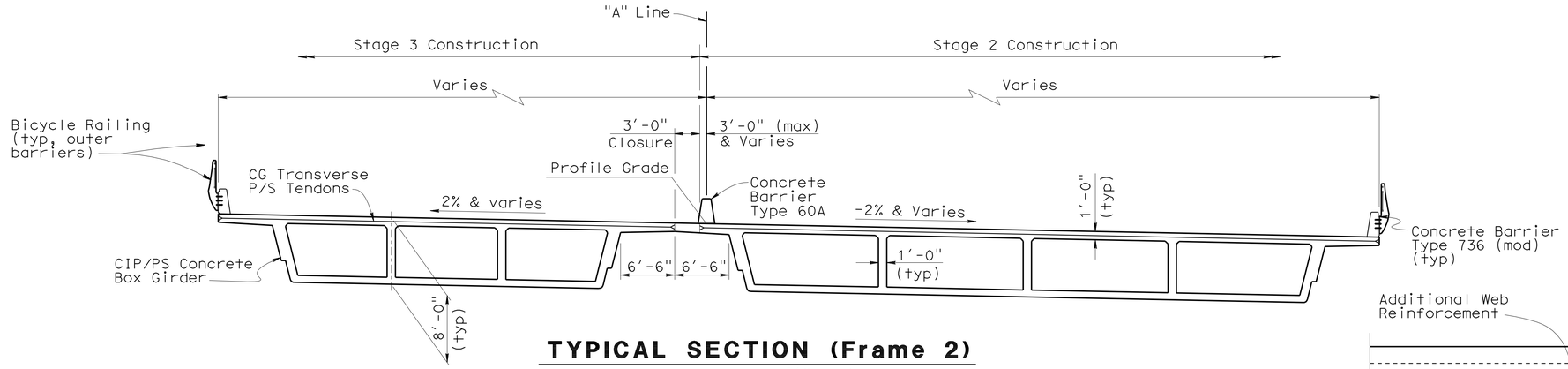

TYPICAL SECTION (Frame 2)

SCALE: 1/8" = 1'

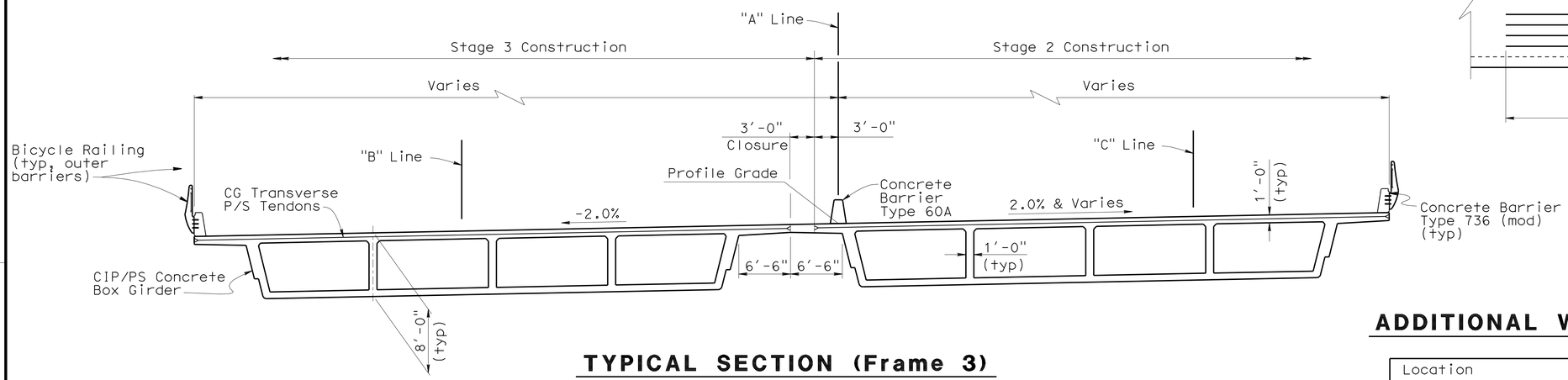

TYPICAL SECTION (Frame 3)

SCALE: 1/8" = 1'

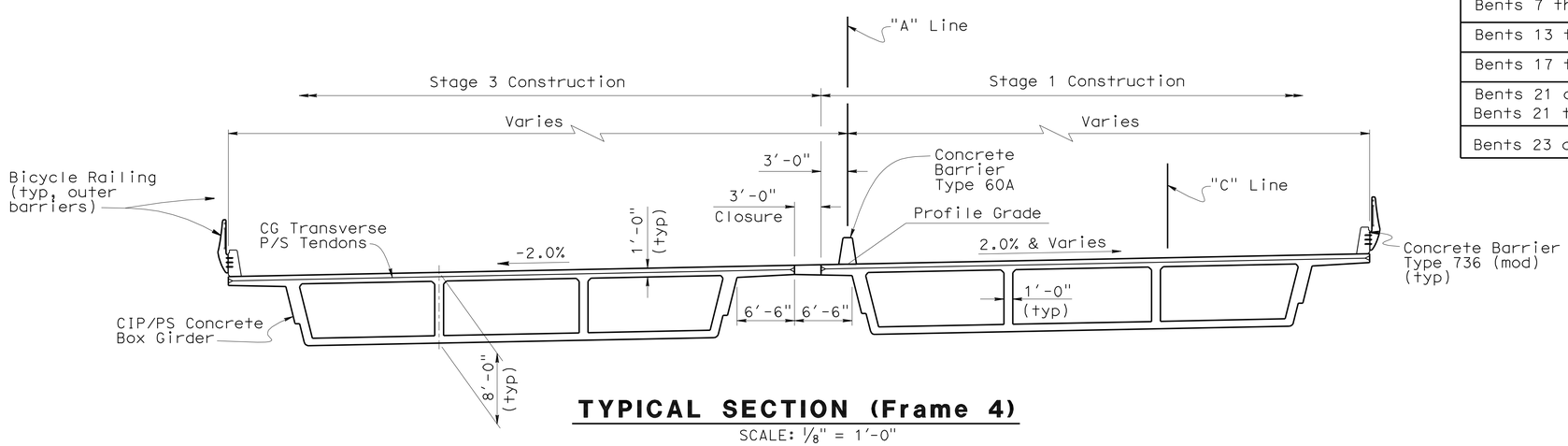

TYPICAL SECTION (Frame 4)

SCALE: 1/8" = 1'-0"

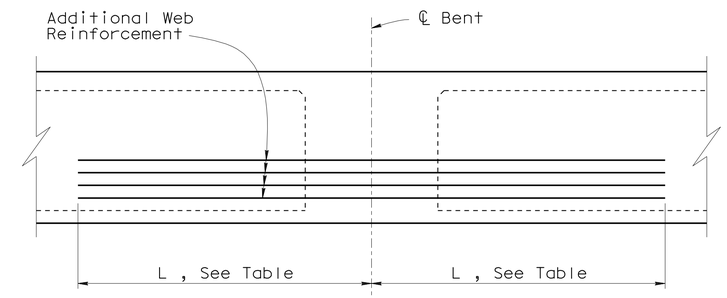

WEB REINFORCEMENT

ADDITIONAL WEB REINFORCEMENT DATA

Location	Bar Size	L
Bents 2 thru 6	# 5	13'-6"
Bents 7 thru 12	# 8	15'-0"
Bents 13 thru 16	# 9	18'-9"
Bents 17 thru 20	# 8	15'-0"
Bents 21 and 22 (Stage 1) Bents 21 thru 23 (Stage 3)	# 7	14'-0"
Bents 23 and 24 (Stage 1)	# 10	15'-6"

NOTES:

1. For additional Girder Layout information, see Girder Layout sheets.
2. For additional dimensions and reinforcement layout, see 'Part Typical Section' on "TYPICAL SECTION No. 1" sheet.

	BY	CHECKED
DESIGN	T. Skreslet	F. Zayati
DETAILS	K. Kubo	F. Zayati
QUANTITIES	J/P. Peterson	J/P. Peterson

STATE OF CALIFORNIA
DEPARTMENT OF TRANSPORTATION

DIVISION OF ENGINEERING SERVICES
STRUCTURE DESIGN
DESIGN BRANCH 14

BRIDGE NO. 53-3032
POST MILE 3.58

SCHUYLER HEIM BRIDGE (REPLACE)

TYPICAL SECTION NO. 2

STRUCTURES DESIGN DETAIL SHEET (ENGLISH) (REV. 10/25/05)

ORIGINAL SCALE IN INCHES FOR REDUCED PLANS 0 1 2 3

CU 07-271
EA 138201

DISREGARD PRINTS BEARING EARLIER REVISION DATES

REVISION DATES 11-26-07 11-29-07 11-30-07 12-03-07 12-18-09 03-15-10 04-29-10 05-14-10 07-09-10

SHEET 71 OF 247

FILE => 53-3032-k-ts02.dgn

USERNAME => trpierce DATE PLOTTED => 19-OCT-2010 TIME PLOTTED => 10:32

DIST	COUNTY	ROUTE	POST MILES TOTAL PROJECT	SHEET No	TOTAL SHEETS
07	LA	47,103	3.574.6, 0.0/1.1	574	1003

REGISTERED CIVIL ENGINEER — DATE 05-24-10

10-11-10
PLANS APPROVAL DATE

REGISTERED PROFESSIONAL ENGINEER — FOUED ZAYATI — No. C57046 — Exp. 06-30-11 — CIVIL — STATE OF CALIFORNIA

The State of California or its officers or agents shall not be responsible for the accuracy or completeness of electronic copies of this plan sheet.

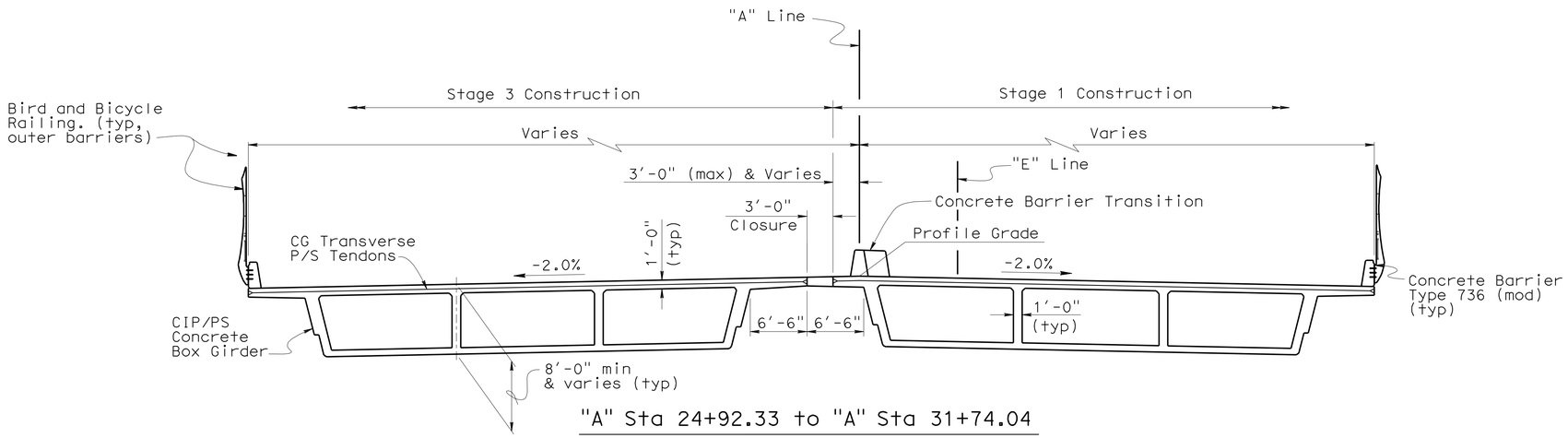

"A" Sta 24+92.33 to "A" Sta 31+74.04

TYPICAL SECTION (Frame 5)

SCALE: 1/8" = 1'-0"

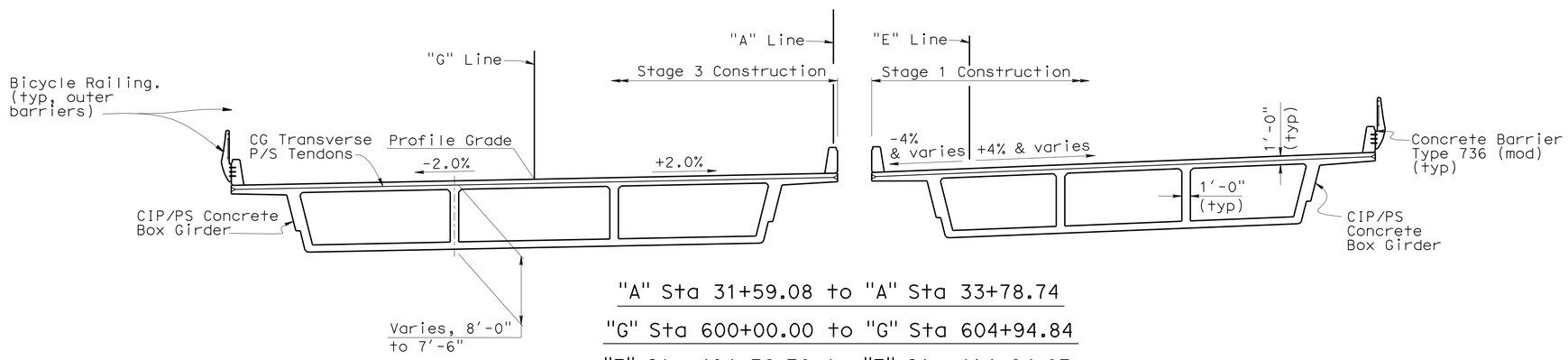

"A" Sta 31+59.08 to "A" Sta 33+78.74

"G" Sta 600+00.00 to "G" Sta 604+94.84

"E" Sta 404+32.78 to "E" Sta 414+94.83

TYPICAL SECTION (Frames 5 & 6)

SCALE: 1/8" = 1'-0"

NOTES:

1. For additional Girder layout information, see Girder layout sheets.
2. For additional dimensions and reinforcement layout, see 'Part Typical Section' on "TYPICAL SECTION No. 1" sheet.

DESIGN	BY T. Skreslet	CHECKED F. Zayati	
DETAILS	BY K. Kubo	CHECKED F. Zayati	
QUANTITIES	BY J/P. Peterson	CHECKED J/P. Peterson	

STATE OF CALIFORNIA
DEPARTMENT OF TRANSPORTATION

DIVISION OF ENGINEERING SERVICES
STRUCTURE DESIGN
DESIGN BRANCH 14

BRIDGE NO. 53-3032
POST MILE 3.58

SCHUYLER HEIM BRIDGE (REPLACE)

TYPICAL SECTION NO. 3

STRUCTURES DESIGN DETAIL SHEET (ENGLISH) (REV. 10/25/05)

ORIGINAL SCALE IN INCHES FOR REDUCED PLANS 0 1 2 3

CU 07-271
EA 138201

DISREGARD PRINTS BEARING EARLIER REVISION DATES

REVISION DATES: 07-09-10 11-26-07 11-28-07 12-04-07 12-05-07 08-27-08 09-15-08 12-16-09 04-29-10 05-14-10

SHEET 72 OF 247

FILE => 53-3032-k-ts03.dgn

USERNAME => trpierce DATE PLOTTED => 19-OCT-2010 TIME PLOTTED => 10:32

DIST	COUNTY	ROUTE	POST MILES TOTAL PROJECT	SHEET No	TOTAL SHEETS
07	LA	47,103	3.5/4.6, 0.0/1.1	575	1003

REGISTERED CIVIL ENGINEER — DATE 05-24-10

10-11-10
PLANS APPROVAL DATE

REGISTERED PROFESSIONAL ENGINEER — FOUED ZAYATI — No. C57046 — Exp. 06-30-11 — CIVIL — STATE OF CALIFORNIA

The State of California or its officers or agents shall not be responsible for the accuracy or completeness of electronic copies of this plan sheet.

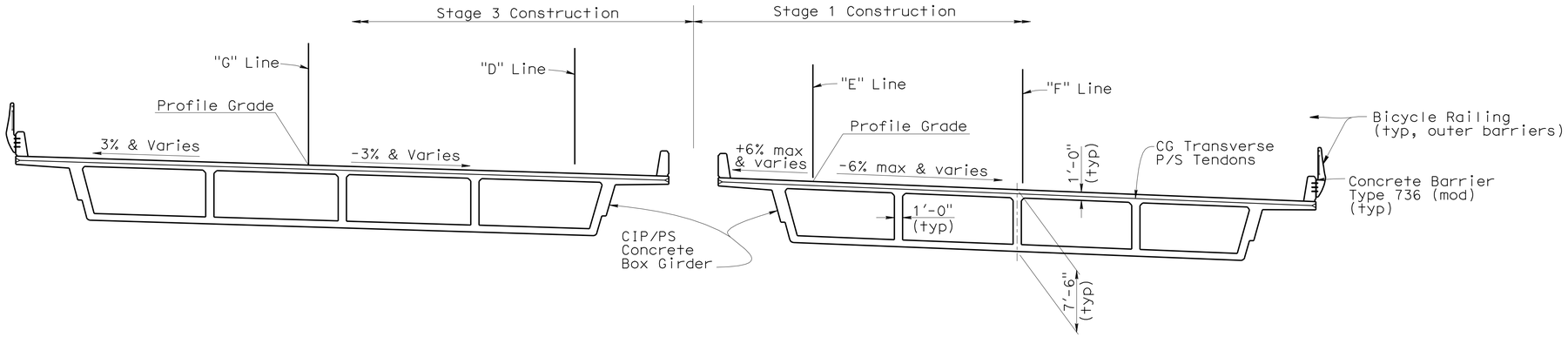

TYPICAL SECTION (Frame 7)

SCALE: 1/8" = 1'-0"

NOTES:

1. For additional Girder layout information, see Girder layout sheets.
2. For additional dimensions and reinforcement layout, see 'Part Typical Section' on "TYPICAL SECTION No. 1" sheet.

	BY	CHECKED
DESIGN	T. Skreslet	F. Zayati
DETAILS	K. Kubo	F. Zayati
QUANTITIES	J/P. Peterson	J/P. Peterson

STATE OF CALIFORNIA
DEPARTMENT OF TRANSPORTATION

DIVISION OF ENGINEERING SERVICES
STRUCTURE DESIGN
DESIGN BRANCH 14

BRIDGE NO. 53-3032
POST MILE 3.58

SCHUYLER HEIM BRIDGE (REPLACE)
TYPICAL SECTION NO. 4

STRUCTURES DESIGN DETAIL SHEET (ENGLISH) (REV. 10/25/05)

ORIGINAL SCALE IN INCHES FOR REDUCED PLANS 0 1 2 3

CU 07-271
EA 138201

DISREGARD PRINTS BEARING EARLIER REVISION DATES

REVISION DATES: 11-09-07, 11-27-07, 11-28-07, 12-04-07, 12-06-07, 12-28-09, 04-29-10, 05-14-10, 07-09-10

SHEET 73 OF 247

FILE => 53-3032-k-ts04.dgn

USERNAME => trpierce DATE PLOTTED => 19-OCT-2010 TIME PLOTTED => 10:32

DIST	COUNTY	ROUTE	POST MILES TOTAL PROJECT	SHEET No	TOTAL SHEETS
07	LA	47,103	3.5/4.6, 0.0/1.1	576	1003

REGISTERED CIVIL ENGINEER 05-24-10 DATE

10-11-10
PLANS APPROVAL DATE

The State of California or its officers or agents shall not be responsible for the accuracy or completeness of electronic copies of this plan sheet.

REGISTERED PROFESSIONAL ENGINEER FOUED ZAYATI No. C57046 Exp. 06-30-11 CIVIL STATE OF CALIFORNIA

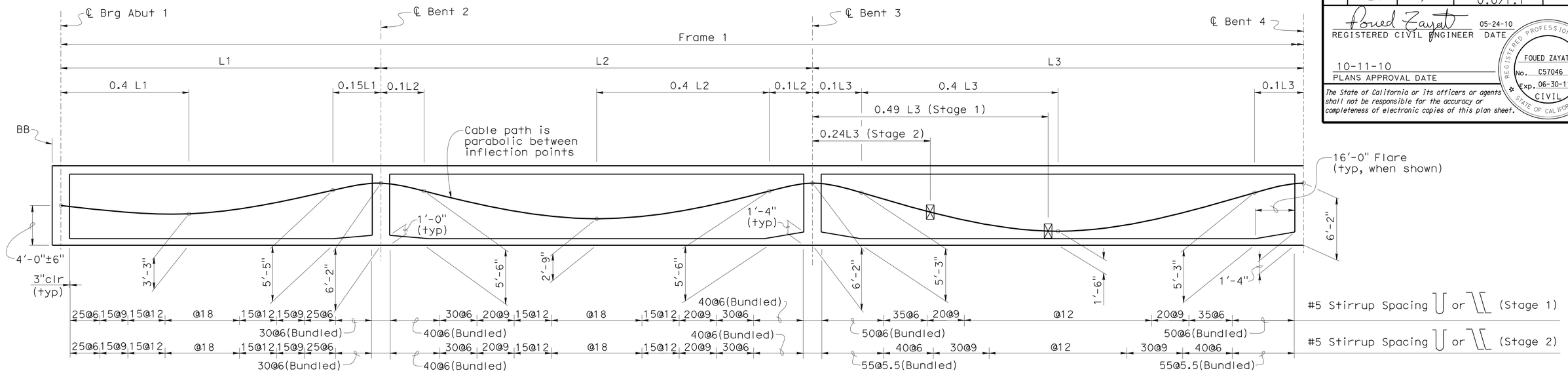

LONGITUDINAL SECTION (Stage 2 & 3)

B7-1 B8-5

No Scale

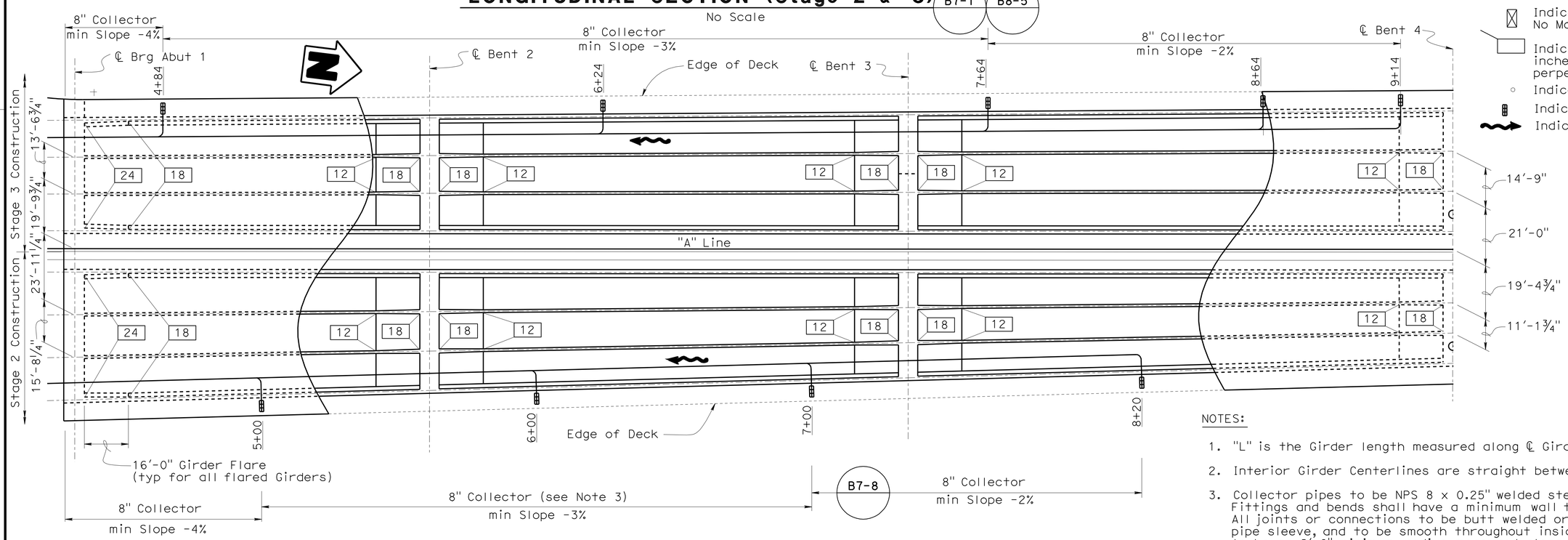

PLAN

1"=20'

LEGEND:

- Indicates Theoretical Point of No Movement
- Indicates Girder Stem width in inches measured at top of Girder, perpendicular to ℄ Girder
- Indicates Point of Inflection
- Indicates Deck Drain Type A
- Indicates direction of flow

NOTES:

1. "L" is the Girder length measured along ℄ Girder
2. Interior Girder Centerlines are straight between offsets shown.
3. Collector pipes to be NPS 8 x 0.25" welded steel pipe and galvanized. Fittings and bends shall have a minimum wall thickness of ¼". All joints or connections to be butt welded or connected by a steel pipe sleeve, and to be smooth throughout inside of pipe. All bends to be on 2'-0" minimum radius measured along ℄ pipe. Pipes to be supported by suitable galvanized hangers @ 10'-0" maximum spacing.

	BY	CHECKED
DESIGN	T. Skreslet	J. Massoomi
DETAILS	K. Kubo	J. Massoomi
QUANTITIES	J/P. Peterson	J/P. Peterson

STATE OF CALIFORNIA DEPARTMENT OF TRANSPORTATION

DIVISION OF ENGINEERING SERVICES STRUCTURE DESIGN DESIGN BRANCH 14

BRIDGE NO. 53-3032
POST MILE 3.58

SCHUYLER HEIM BRIDGE (REPLACE)
GIRDER LAYOUT NO. 1

STRUCTURES DESIGN DETAIL SHEET (ENGLISH) (REV. 10/25/05)

ORIGINAL SCALE IN INCHES FOR REDUCED PLANS 0 1 2 3

CU 07-271
EA 138201

DISREGARD PRINTS BEARING EARLIER REVISION DATES

REVISION DATES: 05-22-08 06-12-08 06-26-08 08-14-08 10-02-08 1-12-10 02-23-10 04-28-10 05-16-10 07-13-10

SHEET 74 OF 247

FILE => 53-3032-1-g_lo01.dgn

USERNAME => trmnguye DATE PLOTTED => 19-OCT-2010 TIME PLOTTED => 13:15

DIST	COUNTY	ROUTE	POST MILES TOTAL PROJECT	SHEET No	TOTAL SHEETS
07	LA	47,103	3.5/4.6, 0.0/1.1	577	1003

REGISTERED CIVIL ENGINEER 05-24-10 DATE

10-11-10
PLANS APPROVAL DATE

REGISTERED PROFESSIONAL ENGINEER FOUED ZAYATI No. C57046 Exp. 06-30-11 CIVIL STATE OF CALIFORNIA

The State of California or its officers or agents shall not be responsible for the accuracy or completeness of electronic copies of this plan sheet.

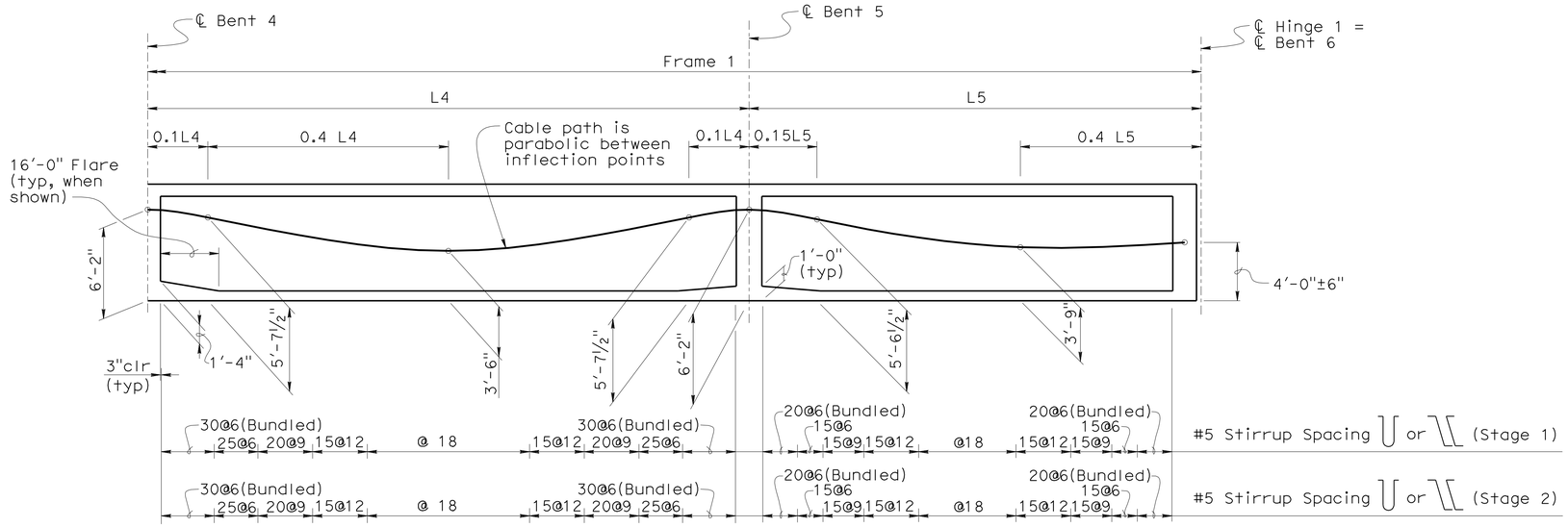

LONGITUDINAL SECTION (Stage 2 & 3) B7-1 B8-5

No Scale

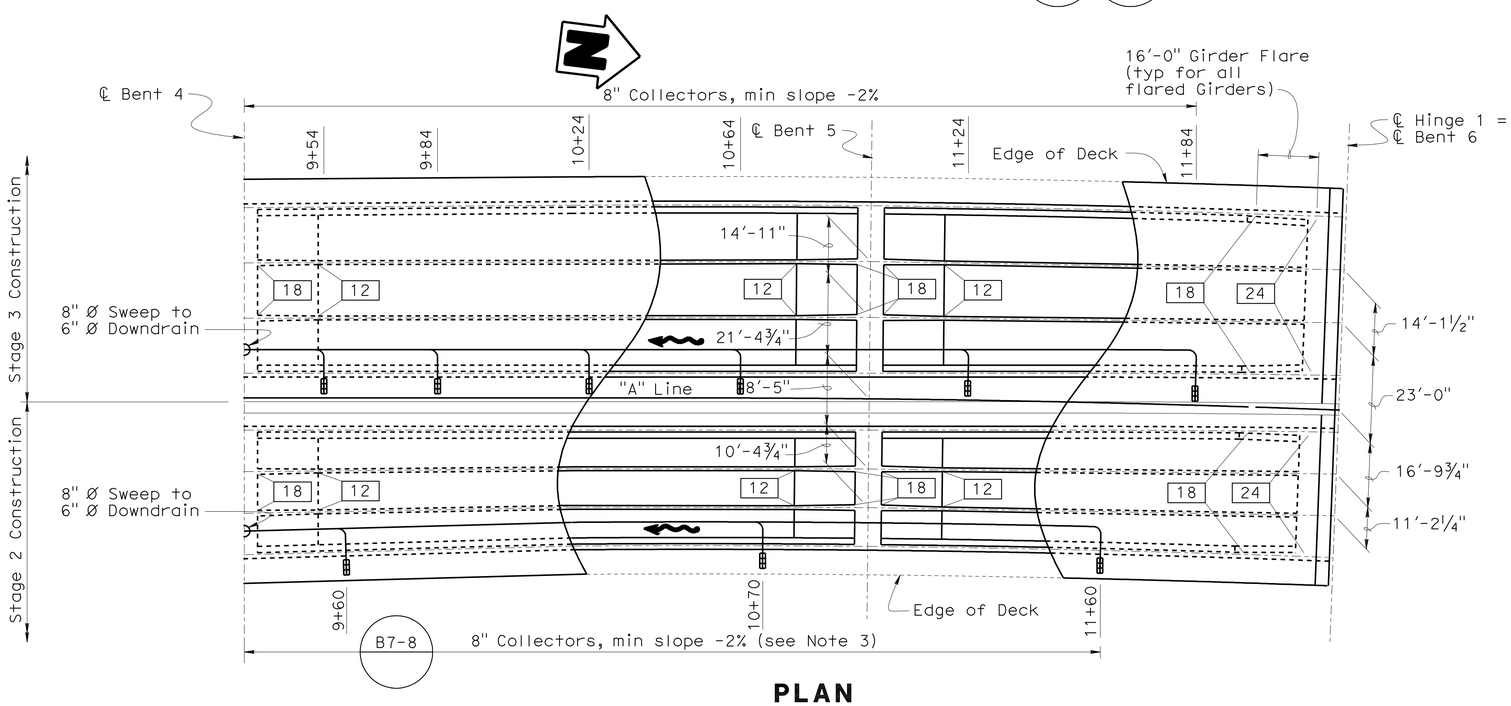

PLAN

1"=20'

NOTES:

1. "L" is the Girder length measured along ℄ Girder
2. Interior Girder Centerlines are straight between offsets shown.
3. Collector pipes to be NPS 8 x 0.25" welded steel pipe and galvanized. Fittings and bends shall have a minimum wall thickness of ¼". All joints or connections to be butt welded or connected by a steel pipe sleeve, and to be smooth throughout inside of pipe. All bends to be on 2'-0" minimum radius measured along ℄ pipe. Pipes to be supported by suitable galvanized hangers @ 10'-0" maximum spacing.

LEGEND:

- Indicates Theoretical Point of No Movement
- Indicates Girder Stem width in inches measured at top of Girder, perpendicular to ℄ Girder
- Indicates Point of Inflection
- Indicates Deck Drain Type A
- Indicates direction of flow

	BY	CHECKED
DESIGN	T. Skreslet	J. Massoomi
DETAILS	T. Nguyen/ K. Kubo	J. Massoomi
QUANTITIES	J/P. Peterson	J/P. Peterson

STATE OF CALIFORNIA DEPARTMENT OF TRANSPORTATION

DIVISION OF ENGINEERING SERVICES STRUCTURE DESIGN DESIGN BRANCH 14

BRIDGE NO. 53-3032
POST MILE 3.58

SCHUYLER HEIM BRIDGE (REPLACE)

GIRDER LAYOUT NO. 2

STRUCTURES DESIGN DETAIL SHEET (ENGLISH) (REV. 10/25/05)

ORIGINAL SCALE IN INCHES FOR REDUCED PLANS 0 1 2 3

CU 07-271
EA 138201

DISREGARD PRINTS BEARING EARLIER REVISION DATES

REVISION DATES: 1-13-10 02-25-10 04-29-10 05-14-10 07-13-10 06-26-08 08-14-08 10-02-08

SHEET 75 OF 247

FILE => 53-3032-1-g_lo02.dgn

USERNAME => trmnguye DATE PLOTTED => 19-OCT-2010 TIME PLOTTED => 13:16

DIST	COUNTY	ROUTE	POST MILES TOTAL PROJECT	SHEET No	TOTAL SHEETS
07	LA	47,103	3.5/4.6, 0.0/1.1	578	1003

REGISTERED CIVIL ENGINEER 05-24-10 DATE

10-11-10
PLANS APPROVAL DATE

REGISTERED PROFESSIONAL ENGINEER FOUED ZAYATI No. C57046 Exp. 06-30-11 CIVIL STATE OF CALIFORNIA

The State of California or its officers or agents shall not be responsible for the accuracy or completeness of electronic copies of this plan sheet.

LEGEND

- Indicates Deck Drain Type A
- Indicates Deck Drain Type B
- Indicates direction of flow
- Indicates Theoretical Point of No Movement
- Indicates Girder Stem width in inches measured at top of Girder, perpendicular to ℄ Girder
- Indicates Point of Inflection

NOTES:

1. "L" is the Girder length measured along ℄ Girder
2. Interior Girder Centerlines are straight between offsets shown.
3. Collector pipes to be NPS 8 x 0.25" welded steel pipe and galvanized. Fittings and bends shall have a minimum wall thickness of 1/4". All joints or connections to be butt welded or connected by a steel pipe sleeve, and to be smooth throughout inside of pipe. All bends to be on 2'-0" minimum radius measured along ℄ pipe. Pipes to be supported by suitable galvanized hangers @ 10'-0" maximum spacing.

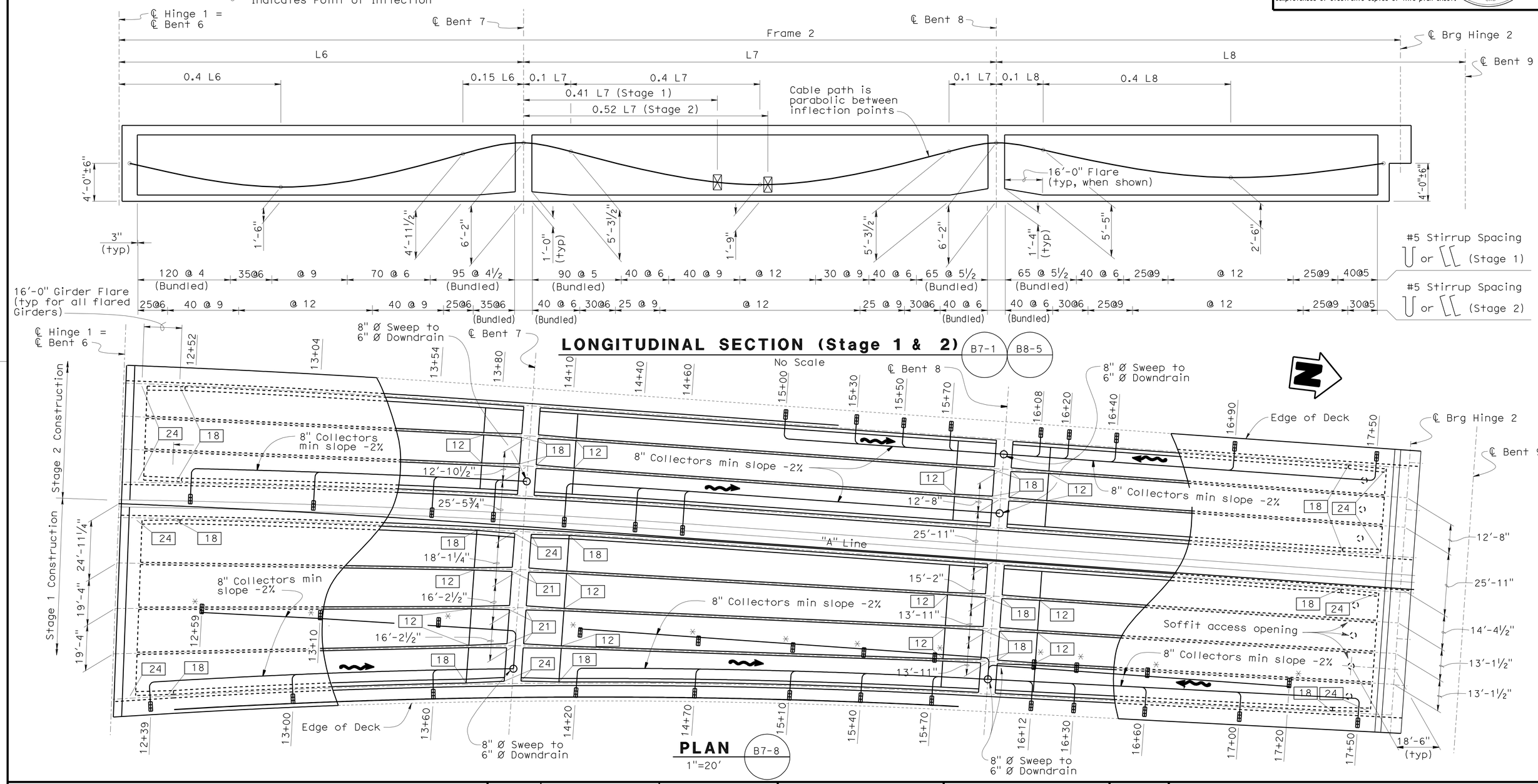

DESIGN	BY T. Skreslet	CHECKED J. Massoomi	
DETAILS	BY K. Kubo	CHECKED J. Massoomi	
QUANTITIES	BY J/P. Peterson	CHECKED J/P. Peterson	

STATE OF CALIFORNIA
DEPARTMENT OF TRANSPORTATION

DIVISION OF ENGINEERING SERVICES
STRUCTURE DESIGN
DESIGN BRANCH 14

BRIDGE NO. 53-3032
POST MILE 3.58

SCHUYLER HEIM BRIDGE (REPLACE)
GIRDER LAYOUT NO. 3

STRUCTURES DESIGN DETAIL SHEET (ENGLISH) (REV. 10/25/05)

ORIGINAL SCALE IN INCHES FOR REDUCED PLANS 0 1 2 3

CU 07-271
EA 138201

DISREGARD PRINTS BEARING EARLIER REVISION DATES

REVISION DATES: 06-09-08 06-12-08 06-26-08 08-14-08 10-02-08 1-13-10 03-23-10 04-29-10 05-16-10 07-13-10

SHEET 76 OF 247

FILE => 53-3032-1-g_1o03.dgn

USERNAME => trimmguye DATE PLOTTED => 19-OCT-2010 TIME PLOTTED => 13:16

DIST	COUNTY	ROUTE	POST MILES TOTAL PROJECT	SHEET No	TOTAL SHEETS
07	LA	47,103	3.5/4.6, 0.0/1.1	579	1003

REGISTERED CIVIL ENGINEER — DATE 05-24-10

10-11-10
PLANS APPROVAL DATE

REGISTERED PROFESSIONAL ENGINEER — FOUED ZAYATI — No. C57046 — Exp. 06-30-11 — CIVIL — STATE OF CALIFORNIA

The State of California or its officers or agents shall not be responsible for the accuracy or completeness of electronic copies of this plan sheet.

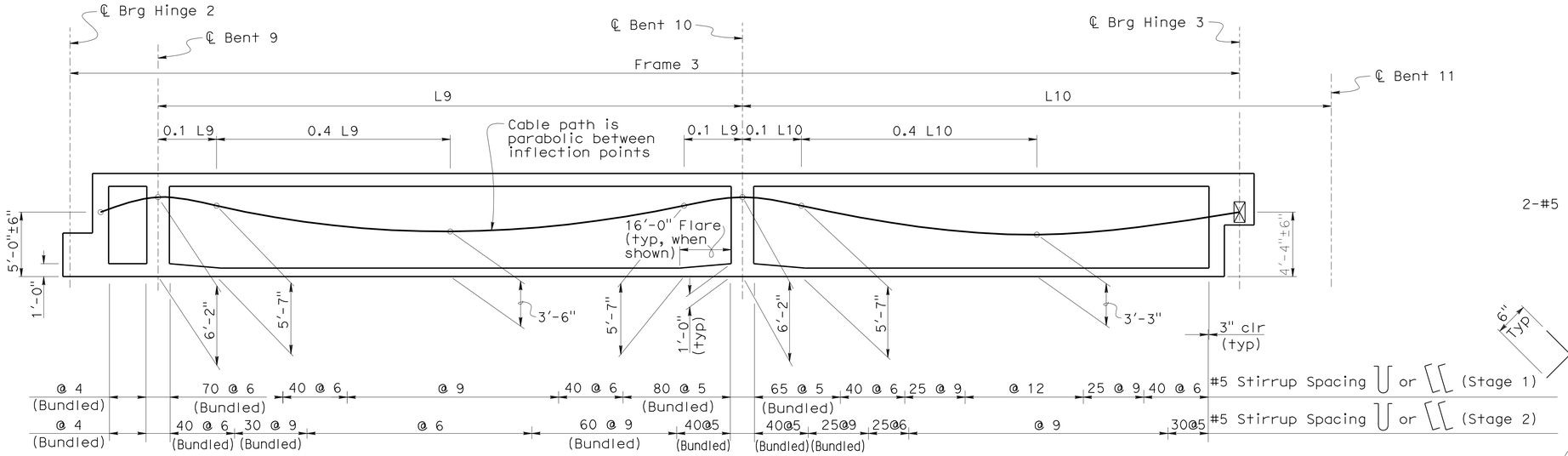

LONGITUDINAL SECTION (Stage 2 & 3)

B7-1 B8-5

No Scale

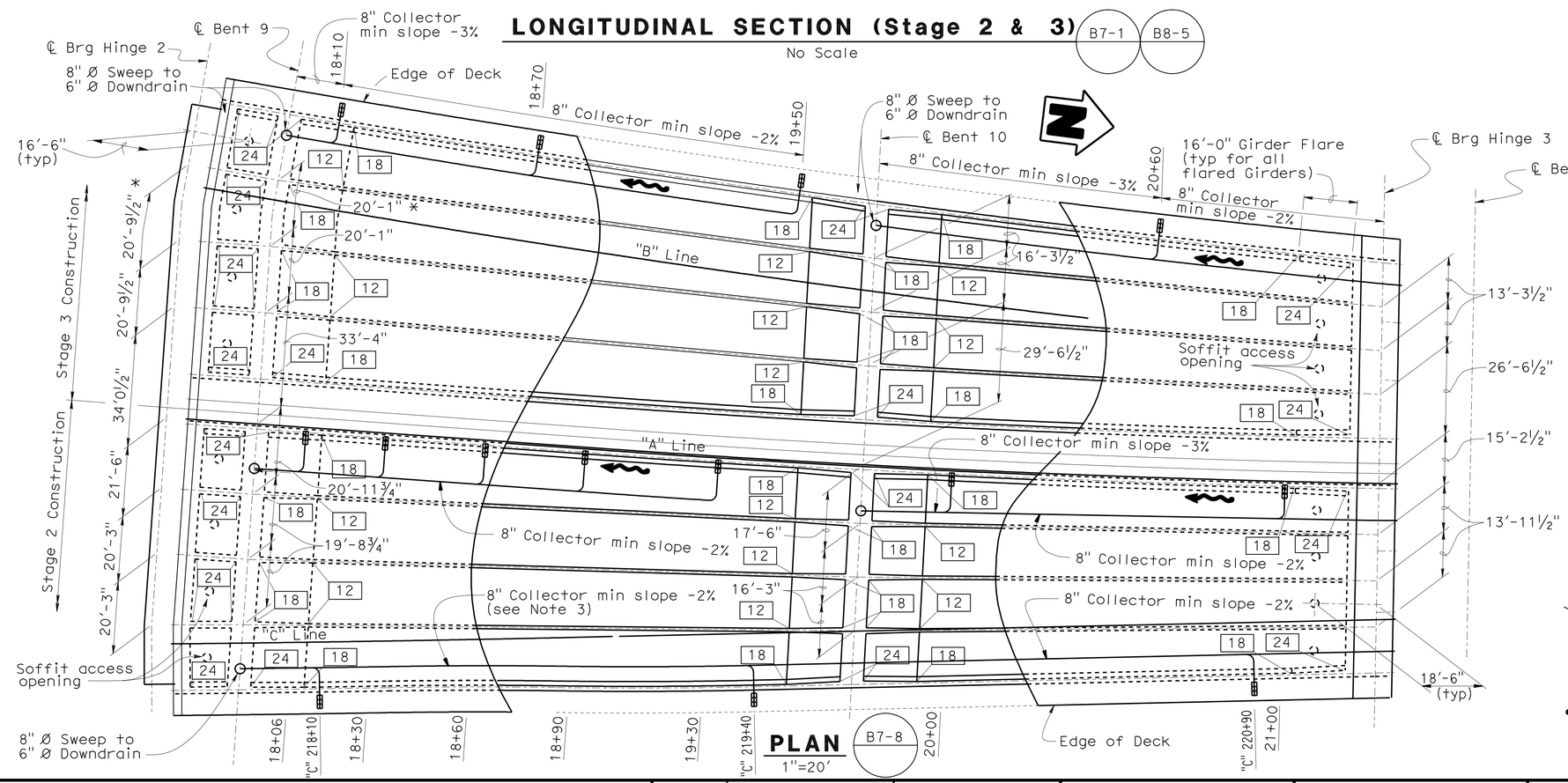

PLAN

1"=20'

B7-8

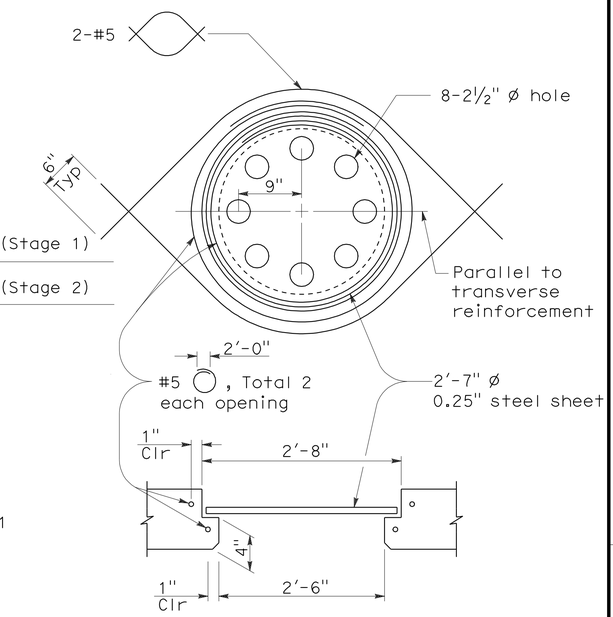

SOFFIT ACCESS OPENING DETAIL

No Scale

NOTES:

1. "L" is the Girder length measured along ℄ Girder.
2. Interior Girder Centerlines are straight between offsets shown.
3. Collector pipes to be NPS 8 x 0.25" welded steel pipe and galvanized. Fittings and bends shall have a minimum wall thickness of ¼". All joints or connections to be butt welded or connected by a steel pipe sleeve, and to be smooth throughout inside of pipe. All bends to be on 2'-0" minimum radius measured along ℄ pipe. Pipes to be supported by suitable galvanized hangers @ 10'-0" maximum spacing.

LEGEND:

- ☒ Indicates Theoretical Point of No Movement
- ▭ Indicates Girder Stem width in inches measured at top of Girder, perpendicular to ℄ Girder
- ○ Indicates Point of Inflection
- ▮ Indicates Deck Drain Type A
- ⟿ Indicates direction of flow
- * Dimension measured along Centerline of Support
- ◌ Indicates Soffit Access Opening.

	BY	CHECKED
DESIGN	T. Skreslet	J. Massoomi
DETAILS	K. Kubo	J. Massoomi
QUANTITIES	J/P. Peterson	J/P. Peterson

STATE OF CALIFORNIA
DEPARTMENT OF TRANSPORTATION

DIVISION OF ENGINEERING SERVICES
STRUCTURE DESIGN
DESIGN BRANCH 14

BRIDGE NO. 53-3032
POST MILE 3.58

SCHUYLER HEIM BRIDGE (REPLACE)

GIRDER LAYOUT NO. 4

STRUCTURES DESIGN DETAIL SHEET (ENGLISH) (REV. 10/25/05)

ORIGINAL SCALE IN INCHES FOR REDUCED PLANS 0 1 2 3

CU 07-271
EA 138201

DISREGARD PRINTS BEARING EARLIER REVISION DATES

REVISION DATES: 06-16-08 06-26-08 08-14-08 10-06-08 1-13-10 2-26-10 03-24-10 04-29-10 05-18-10 07-13-10

SHEET 77 OF 247

FILE => 53-3032-1-g_lo04.dgn

USERNAME => trmnguye DATE PLOTTED => 19-OCT-2010 TIME PLOTTED => 13:16

DIST	COUNTY	ROUTE	POST MILES TOTAL PROJECT	SHEET No	TOTAL SHEETS
07	LA	47,103	3.5/4.6, 0.0/1.1	580	1003

REGISTERED CIVIL ENGINEER 05-24-10 DATE

10-11-10
PLANS APPROVAL DATE

REGISTERED PROFESSIONAL ENGINEER FOUED ZAYATI No. C57046 Exp. 06-30-11 CIVIL STATE OF CALIFORNIA

The State of California or its officers or agents shall not be responsible for the accuracy or completeness of electronic copies of this plan sheet.

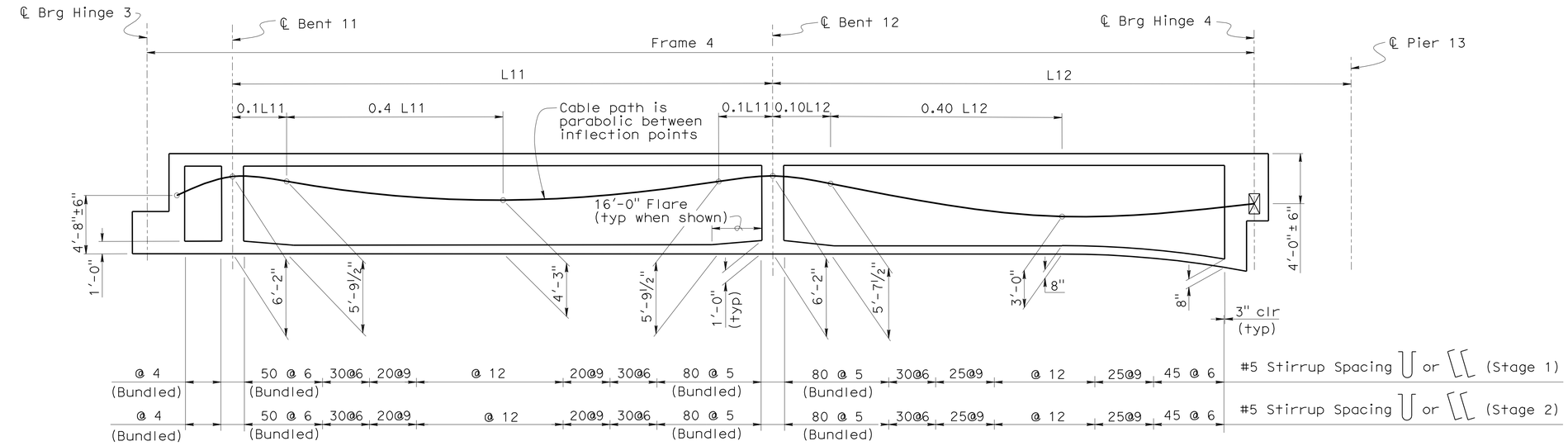

LONGITUDINAL SECTION (Stage 1 & 3)

B7-1 B8-5

No Scale

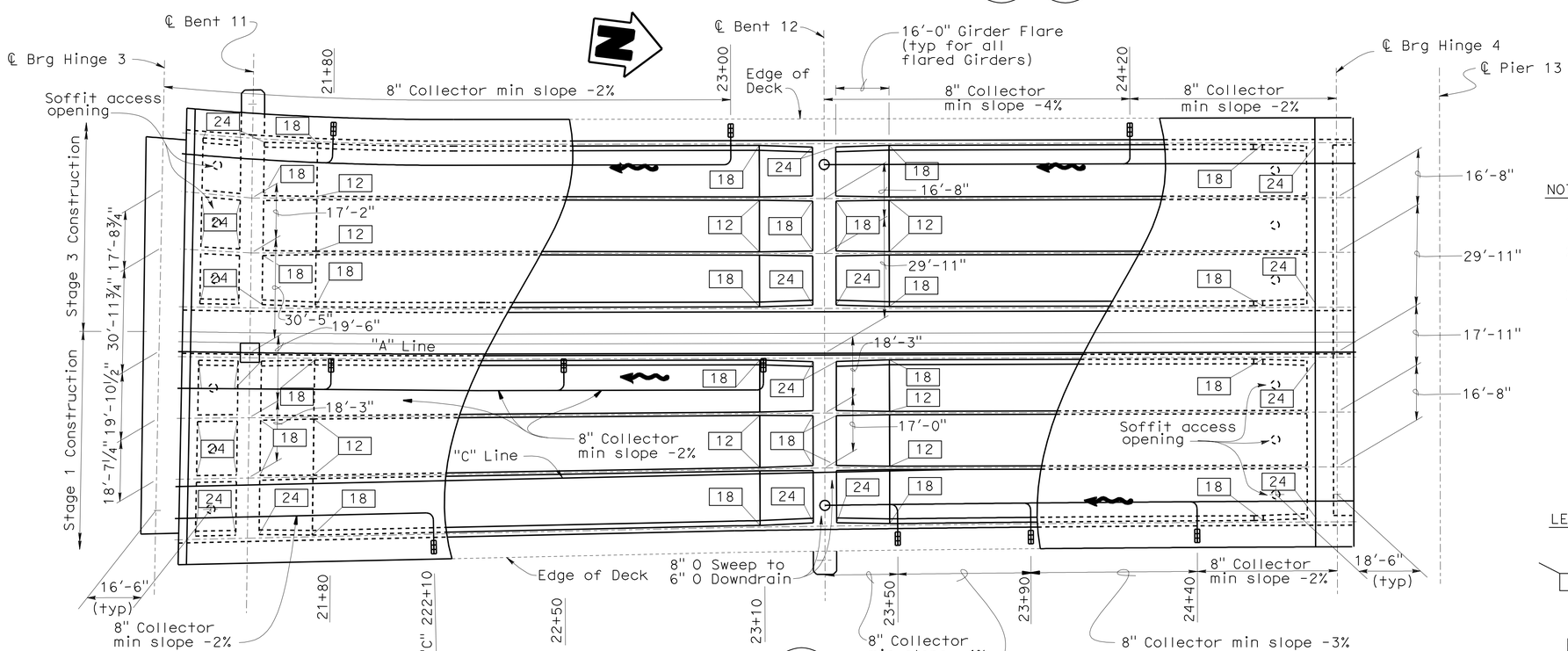

PLAN

1"=20'

B7-8

NOTES:

1. "L" is the Girder length measured along ℄ Girder
2. Interior Girder Centerlines are straight between offsets shown.
3. Collector pipes to be NPS 8 x 0.25" welded steel pipe and galvanized. Fittings and bends shall have a minimum wall thickness of ¼". All joints or connections to be butt welded or connected by a steel pipe sleeve, and to be smooth throughout inside of pipe. All bends to be on 2'-0" minimum radius measured along ℄ pipe. Pipes to be supported by suitable galvanized hangers @ 10'-0" maximum spacing.

LEGEND:

- Indicates Theoretical Point of No Movement
- Indicates Girder Stem width in inches measured at top of Girder, perpendicular to ℄ Girder
- Indicates Point of Inflection
- Indicates Deck Drain Type A
- Indicates direction of flow

	BY	CHECKED
DESIGN	T. Skreslet	J. Massoomi
DETAILS	T. Nguyen/ K. Kubo	J. Massoomi
QUANTITIES	J/P. Peterson	J/P. Peterson

STATE OF CALIFORNIA DEPARTMENT OF TRANSPORTATION

DIVISION OF ENGINEERING SERVICES STRUCTURE DESIGN DESIGN BRANCH 14

BRIDGE NO. 53-3032 POST MILE 3.58

SCHUYLER HEIM BRIDGE (REPLACE)

GIRDER LAYOUT NO. 5

STRUCTURES DESIGN DETAIL SHEET (ENGLISH) (REV. 10/25/05)

ORIGINAL SCALE IN INCHES FOR REDUCED PLANS 0 1 2 3

CU 07-271
EA 138201

DISREGARD PRINTS BEARING EARLIER REVISION DATES

REVISION DATES: 06-13-08 06-26-08 08-14-08 10-03-08 1-14-10 2-26-10 3-22-10 04-28-10 05-11-10 07-13-10

SHEET 78 OF 247

FILE => 53-3032-1-g_1o05.dgn

USERNAME => trmnguye DATE PLOTTED => 19-OCT-2010 TIME PLOTTED => 13:16

DIST	COUNTY	ROUTE	POST MILES TOTAL PROJECT	SHEET No	TOTAL SHEETS
07	LA	47,103	3.5/4.6, 0.0/1.1	581	1003

REGISTERED CIVIL ENGINEER 05-24-10 DATE

10-11-10
PLANS APPROVAL DATE

REGISTERED PROFESSIONAL ENGINEER FOUED ZAYATI No. C57046 Exp. 06-30-11 CIVIL STATE OF CALIFORNIA

The State of California or its officers or agents shall not be responsible for the accuracy or completeness of electronic copies of this plan sheet.

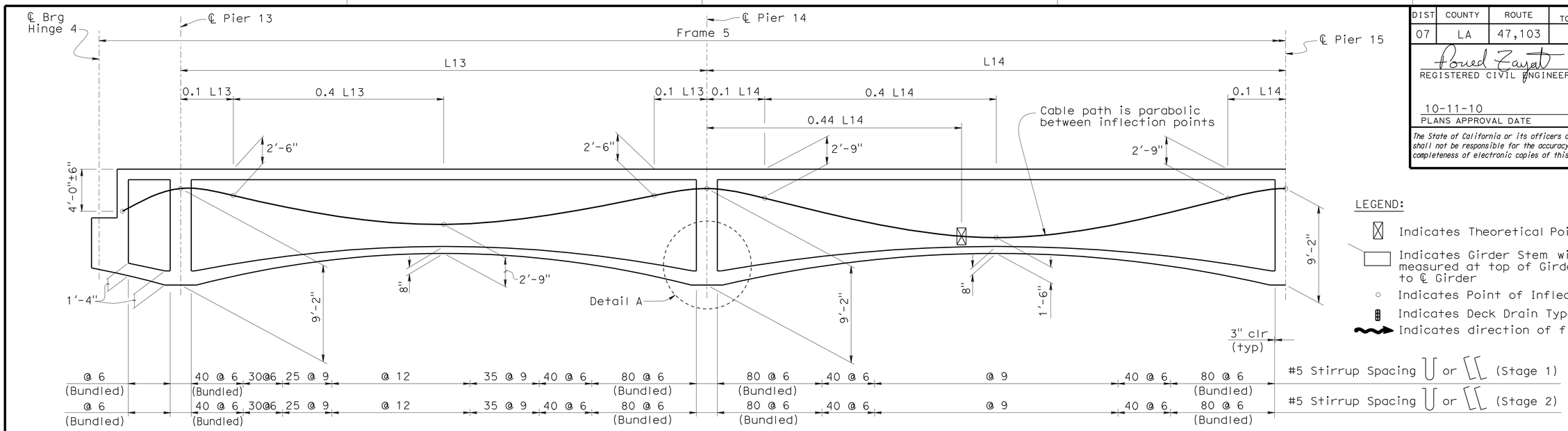

LONGITUDINAL SECTION (Stage 1 & 3)

B7-1 B8-5

No Scale

LEGEND:

- Indicates Theoretical Point of No Movement
- Indicates Girder Stem width in inches measured at top of Girder, perpendicular to ℄ Girder
- Indicates Point of Inflection
- Indicates Deck Drain Type A
- Indicates direction of flow

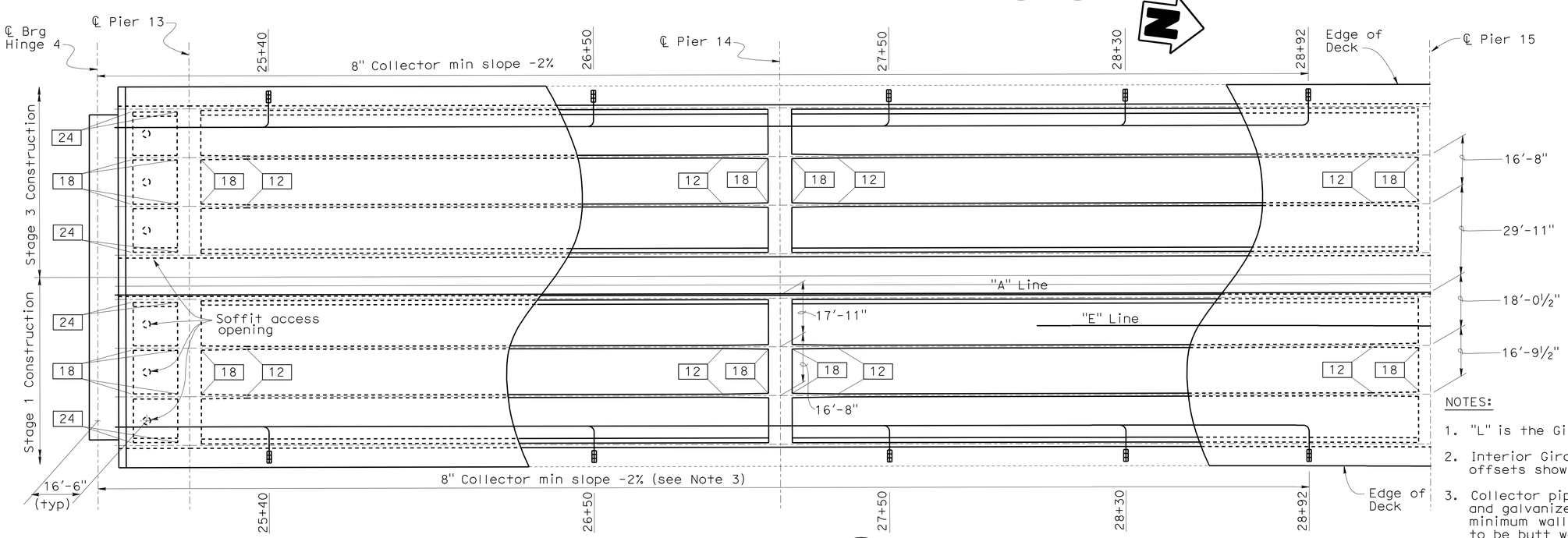

PLAN

B7-8

1"=20'

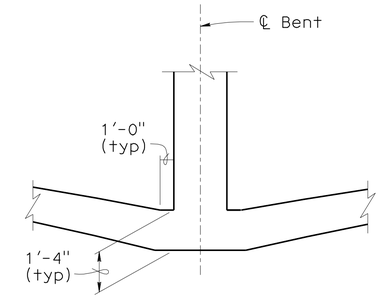

NOTE: Dimensions shown apply to Bents 13, 14, 15 and 16

DETAIL A

No Scale

NOTES:

1. "L" is the Girder length measured along ℄ Girder
2. Interior Girder Centerlines are straight between offsets shown.
3. Collector pipes to be NPS 8 x 0.25" welded steel pipe and galvanized. Fittings and bends shall have a minimum wall thickness of ¼". All joints or connections to be butt welded or connected by a steel pipe sleeve, and to be smooth throughout inside of pipe. All bends to be on 2'-0" minimum radius measured along ℄ pipe. Pipes to be supported by suitable galvanized hangers @ 10'-0" maximum spacing.

	BY	CHECKED
DESIGN	T. Skreslet	J. Massoomi
DETAILS	T. Nguyen/ K. Kubo	J. Massoomi
QUANTITIES	J/P. Peterson	J/P. Peterson

STATE OF CALIFORNIA DEPARTMENT OF TRANSPORTATION

DIVISION OF ENGINEERING SERVICES STRUCTURE DESIGN DESIGN BRANCH 14

BRIDGE NO. 53-3032
POST MILE 3.58

SCHUYLER HEIM BRIDGE (REPLACE)

GIRDER LAYOUT NO. 6

STRUCTURES DESIGN DETAIL SHEET (ENGLISH) (REV. 10/25/05)

ORIGINAL SCALE IN INCHES FOR REDUCED PLANS 0 1 2 3

CU 07-271
EA 138201

DISREGARD PRINTS BEARING EARLIER REVISION DATES

REVISION DATES: 07-13-10 08-14-08 10-03-08 1-14-10 02-25-10 03-05-10 04-29-10 05-17-10

SHEET 79 OF 247

FILE => 53-3032-1-g_1o06.dgn

USERNAME => trmnguye DATE PLOTTED => 19-OCT-2010 TIME PLOTTED => 13:16

DIST	COUNTY	ROUTE	POST MILES TOTAL PROJECT	SHEET No	TOTAL SHEETS
07	LA	47,103	3.5/4.6, 0.0/1.1	582	1003

REGISTERED CIVIL ENGINEER 05-24-10 DATE

10-11-10
PLANS APPROVAL DATE

REGISTERED PROFESSIONAL ENGINEER FOUED ZAYATI No. C57046 Exp. 06-30-11 CIVIL STATE OF CALIFORNIA

The State of California or its officers or agents shall not be responsible for the accuracy or completeness of electronic copies of this plan sheet.

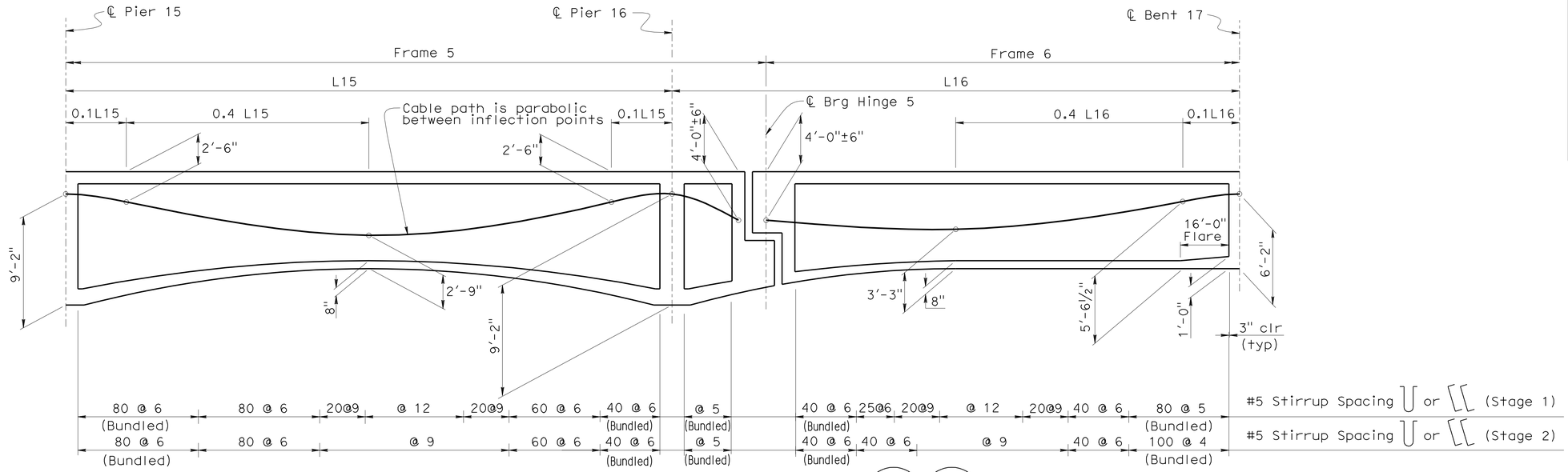

LONGITUDINAL SECTION (Stage 1 & 3)

B7-1 B8-5

No Scale

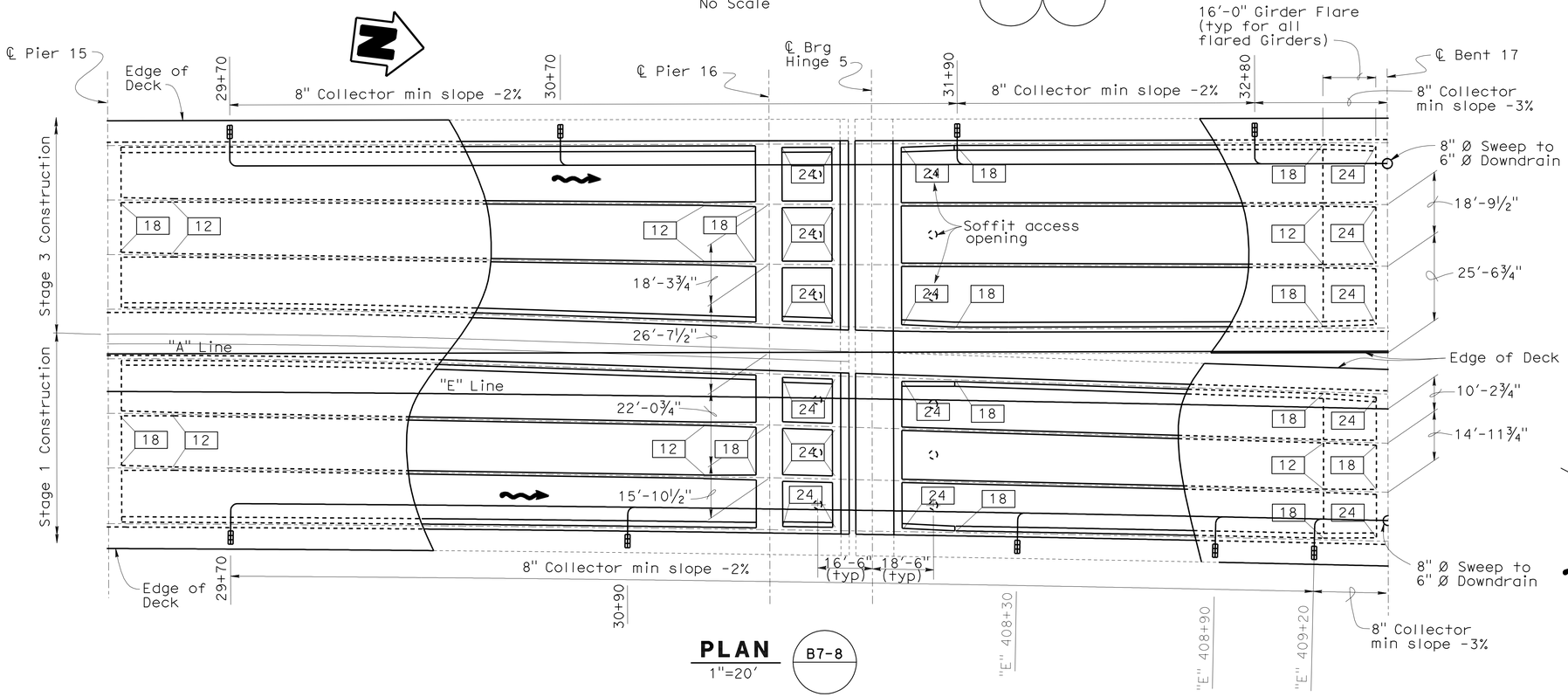

PLAN

1"=20'

B7-8

NOTES:

1. "L" is the Girder length measured along ℄ Girder
2. Interior Girder Centerlines are straight between offsets shown.
3. Collector pipes to be NPS 8 x 0.25" welded steel pipe and galvanized. Fittings and bends shall have a minimum wall thickness of ¼". All joints or connections to be butt welded or connected by a steel pipe sleeve, and to be smooth throughout inside of pipe. All bends to be on 2'-0" minimum radius measured along ℄ pipe. Pipes to be supported by suitable galvanized hangers @ 10'-0" maximum spacing.

LEGEND:

- ⊠ Indicates Theoretical Point of No Movement
- ▭ Indicates Girder Stem width in inches measured at top of Girder, perpendicular to ℄ Girder
- ○ Indicates Point of Inflection
- ▥ Indicates Deck Drain Type A
- ⇝ Indicates direction of flow
- * Dimension measured along Centerline of Support

	BY	CHECKED
DESIGN	T. Skreslet	J. Massoomi
DETAILS	T. Nguyen/ K. Kubo	J. Massoomi
QUANTITIES	J/P. Peterson	J/P. Peterson

STATE OF CALIFORNIA
DEPARTMENT OF TRANSPORTATION

DIVISION OF ENGINEERING SERVICES
STRUCTURE DESIGN
DESIGN BRANCH 14

BRIDGE NO. 53-3032
POST MILE 3.58

SCHUYLER HEIM BRIDGE (REPLACE)

GIRDER LAYOUT NO. 7

STRUCTURES DESIGN DETAIL SHEET (ENGLISH) (REV. 10/25/05)

ORIGINAL SCALE IN INCHES FOR REDUCED PLANS 0 1 2 3

CU 07-271
EA 138201

DISREGARD PRINTS BEARING EARLIER REVISION DATES

REVISION DATES: 06-13-08 06-30-08 07-18-08 10-05-08 1-14-10 02-25-10 03-03-10 04-23-10 05-14-10 07-13-10

SHEET 80 OF 247

FILE => 53-3032-1-g_lo07.dgn

USERNAME => trmnguye DATE PLOTTED => 19-OCT-2010 TIME PLOTTED => 13:17

DIST	COUNTY	ROUTE	POST MILES TOTAL PROJECT	SHEET No	TOTAL SHEETS
07	LA	47,103	3.5/4.6, 0.0/1.1	583	1003

REGISTERED CIVIL ENGINEER — DATE 05-24-10

10-11-10
PLANS APPROVAL DATE

The State of California or its officers or agents shall not be responsible for the accuracy or completeness of electronic copies of this plan sheet.

REGISTERED PROFESSIONAL ENGINEER — FOUED ZAYATI — No. C57046 — Exp. 06-30-11 — CIVIL — STATE OF CALIFORNIA

LEGEND:

- Indicates Theoretical Point of No Movement
- Indicates Girder Stem width in inches measured at top of Girder, perpendicular to ℄ Girder
- Indicates Point of Inflection
- Indicates Deck Drain Type A
- Indicates direction of flow

NOTES:

1. "L" is the Girder length measured along ℄ Girder
2. Interior Girder Centerlines are straight between offsets shown.
3. Collector pipes to be NPS 8 x 0.25" welded steel pipe and galvanized. Fittings and bends shall have a minimum wall thickness of 1/4". All joints or connections to be butt welded or connected by a steel pipe sleeve, and to be smooth throughout inside of pipe. All bends to be on 2'-0" minimum radius measured along ℄ pipe. Pipes to be supported by suitable galvanized hangers @ 10'-0" maximum spacing.

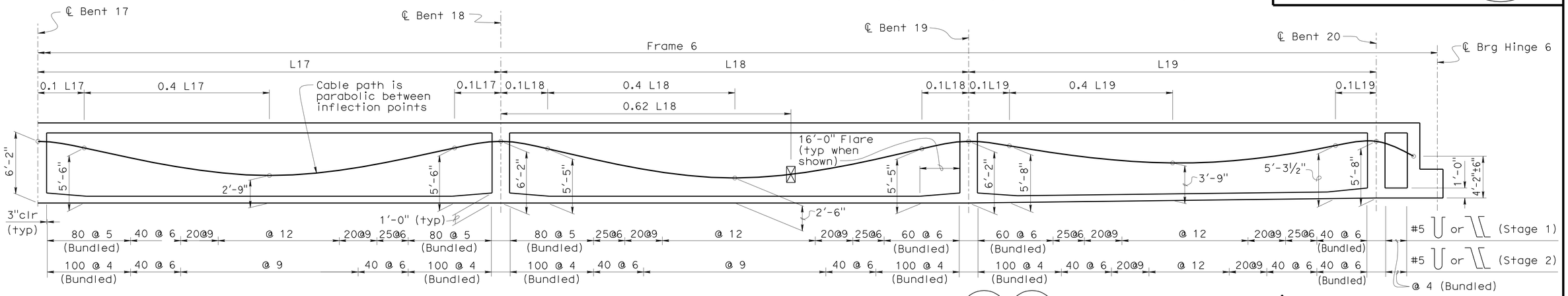

LONGITUDINAL SECTION (Stage 1 & 3)

B7-1 B8-5

No Scale

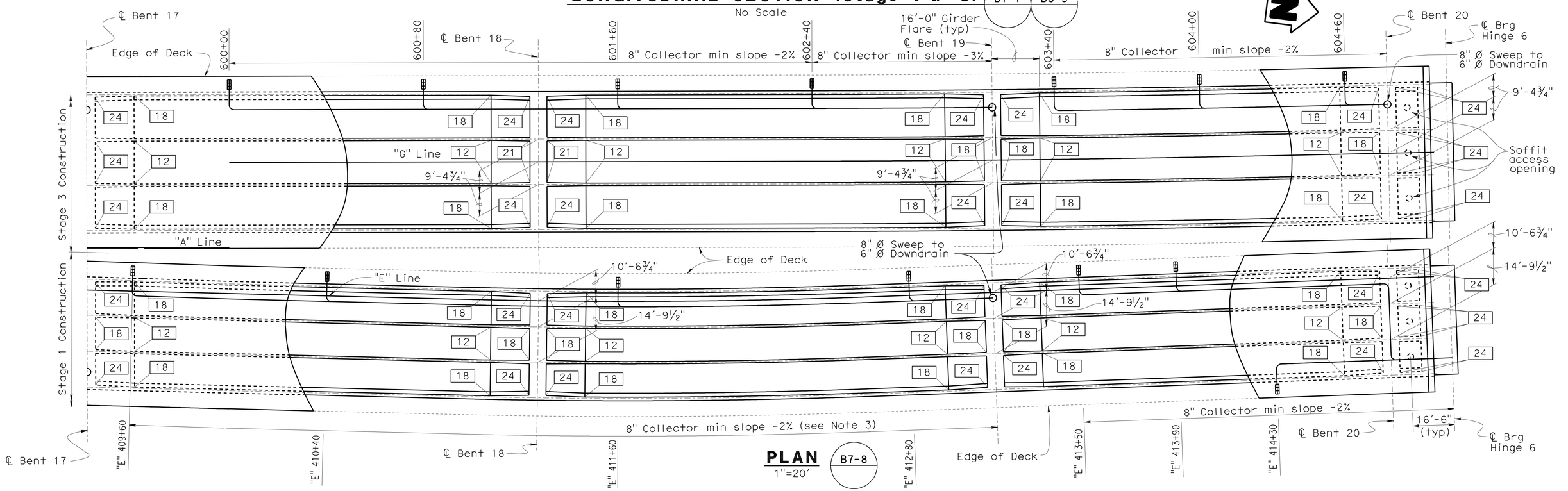

PLAN

1"=20'

B7-8

	BY	CHECKED
DESIGN	T. Skreslet	J. Massoomi
DETAILS	T. Nguyen/ K. Kubo	J. Massoomi
QUANTITIES	J/P. Peterson	J/P. Peterson

STATE OF CALIFORNIA
DEPARTMENT OF TRANSPORTATION

DIVISION OF ENGINEERING SERVICES
STRUCTURE DESIGN
DESIGN BRANCH 14

BRIDGE NO. 53-3032
POST MILE 3.58

SCHUYLER HEIM BRIDGE (REPLACE)

GIRDER LAYOUT NO. 8

STRUCTURES DESIGN DETAIL SHEET (ENGLISH) (REV. 10/25/05)

ORIGINAL SCALE IN INCHES FOR REDUCED PLANS 0 1 2 3

CU 07-271
EA 138201

DISREGARD PRINTS BEARING EARLIER REVISION DATES

REVISION DATES: 02-23-10 04-29-10 05-12-10 07-13-10 06-30-08 10-03-08 1-15-10

SHEET 81 OF 247

FILE => 53-3032-1-g_1o08.dgn

USERNAME => trmnguye DATE PLOTTED => 19-OCT-2010 TIME PLOTTED => 13:17

DIST	COUNTY	ROUTE	POST MILES TOTAL PROJECT	SHEET No	TOTAL SHEETS
07	LA	47,103	3.5/4.6, 0.0/1.1	584	1003

REGISTERED CIVIL ENGINEER 05-24-10 DATE

10-11-10
PLANS APPROVAL DATE

REGISTERED PROFESSIONAL ENGINEER FOUED ZAYATI No. C57046 Exp. 06-30-11 CIVIL STATE OF CALIFORNIA

The State of California or its officers or agents shall not be responsible for the accuracy or completeness of electronic copies of this plan sheet.

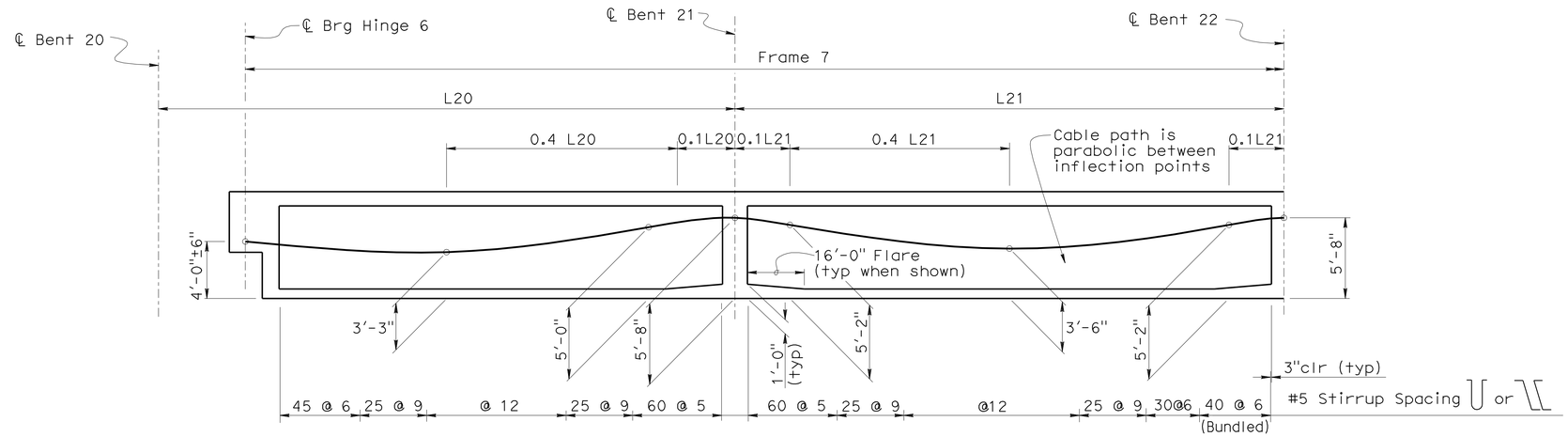

LONGITUDINAL SECTION (Stage 1)

B7-1 B8-5

No Scale

NOTES:

1. "L" is the Girder length measured along ℄ Girder
2. Interior Girder Centerlines are straight between offsets shown.
3. Collector pipes to be NPS 8 x 0.25" welded steel pipe and galvanized. Fittings and bends shall have a minimum wall thickness of 1/4". All joints or connections to be butt welded or connected by a steel pipe sleeve, and to be smooth throughout inside of pipe. All bends to be on 2'-0" minimum radius measured along ℄ pipe. Pipes to be supported by suitable galvanized hangers @ 10'-0" maximum spacing.

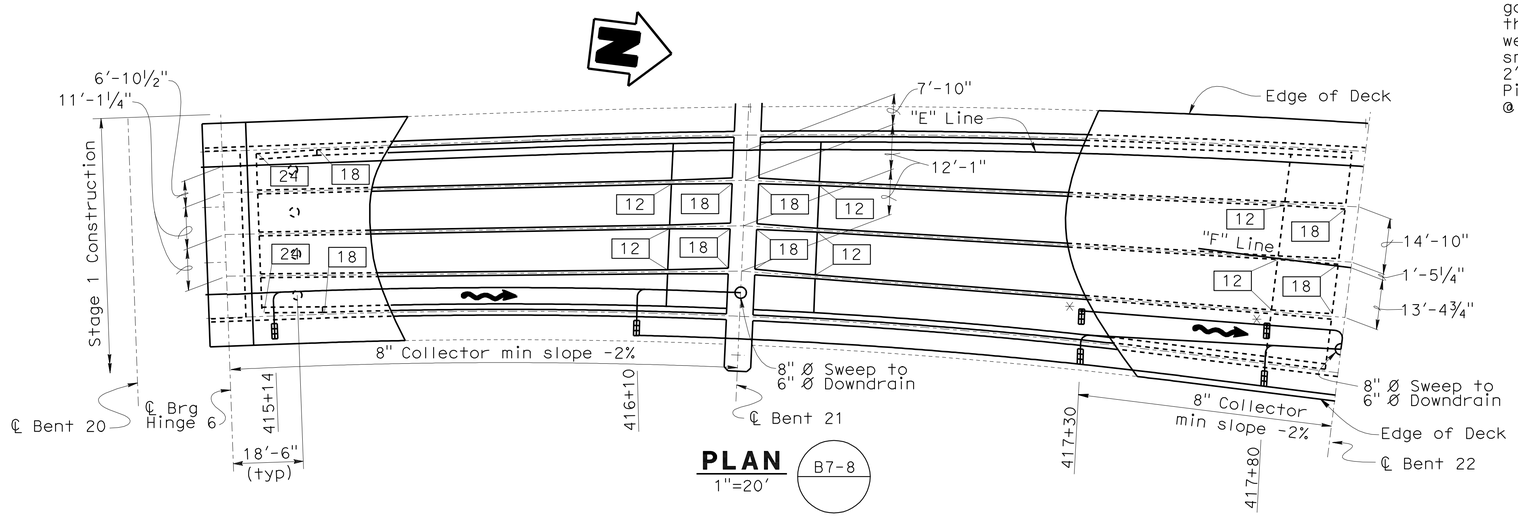

PLAN

1"=20'

B7-8

LEGEND:

- Indicates Theoretical Point of No Movement
- Indicates Girder Stem width in inches measured at top of Girder, perpendicular to ℄ Girder
- Indicates Point of Inflection
- Indicates Deck Drain Type A
- Indicates direction of flow
- Indicates Deck Drain Type B

	BY	CHECKED
DESIGN	T. Skreslet	J. Massoomi
DETAILS	K. Kubo	J. Massoomi
QUANTITIES	J/P. Peterson	J/P. Peterson

STATE OF CALIFORNIA DEPARTMENT OF TRANSPORTATION

DIVISION OF ENGINEERING SERVICES STRUCTURE DESIGN DESIGN BRANCH 14

BRIDGE NO. 53-3032 POST MILE 3.58

SCHUYLER HEIM BRIDGE (REPLACE)

GIRDER LAYOUT NO. 9

STRUCTURES DESIGN DETAIL SHEET (ENGLISH) (REV. 10/25/05)

ORIGINAL SCALE IN INCHES FOR REDUCED PLANS 0 1 2 3

CU 07-271
EA 138201

DISREGARD PRINTS BEARING EARLIER REVISION DATES

REVISION DATES: 06-30-08 10-03-08 1-15-10 02-23-10 04-28-10 05-17-10 07-13-10

SHEET 82 OF 247

FILE => 53-3032-1-g_1o09.dgn

USERNAME => trmnguye DATE PLOTTED => 19-OCT-2010 TIME PLOTTED => 13:17

DIST	COUNTY	ROUTE	POST MILES TOTAL PROJECT	SHEET No	TOTAL SHEETS
07	LA	47,103	3.5/4.6, 0.0/1.1	585	1003

REGISTERED CIVIL ENGINEER — 05-24-10 DATE

10-11-10
PLANS APPROVAL DATE

REGISTERED PROFESSIONAL ENGINEER — FOUED ZAYATI — No. C57046 — Exp. 06-30-11 — CIVIL — STATE OF CALIFORNIA

The State of California or its officers or agents shall not be responsible for the accuracy or completeness of electronic copies of this plan sheet.

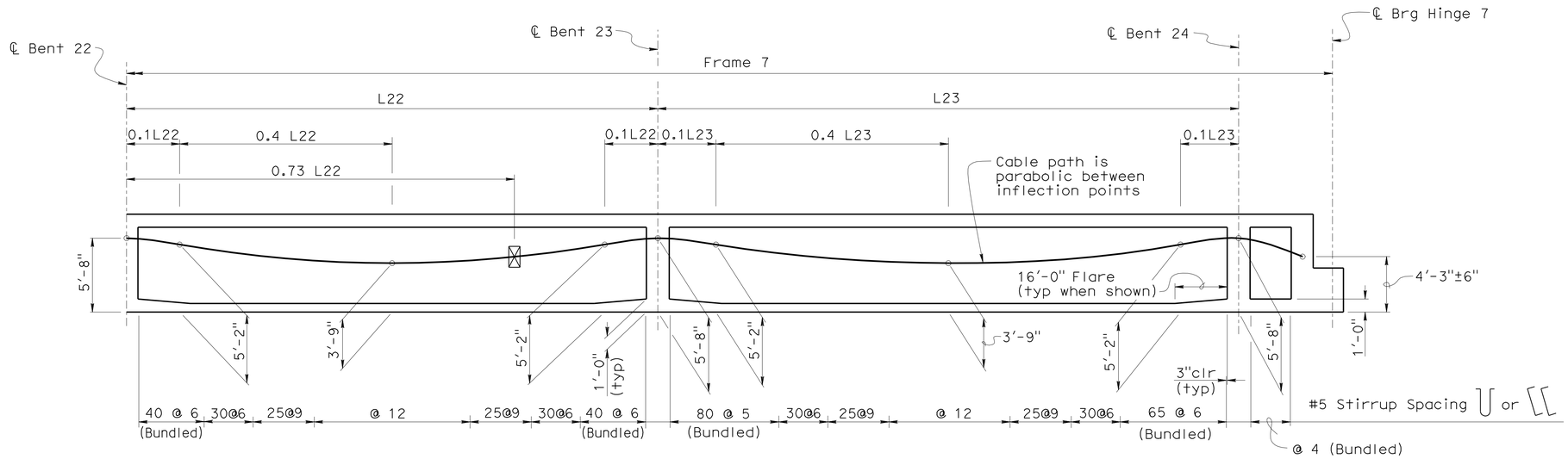

LONGITUDINAL SECTION (Stage 1)

B7-1 / B8-5

No Scale

NOTES:

1. "L" is the Girder length measured along ℄ Girder
2. Interior Girder Centerlines are straight between offsets shown.
3. Collector pipes to be NPS 8 x 0.25" welded steel pipe and galvanized. Fittings and bends shall have a minimum wall thickness of 1/4". All joints or connections to be butt welded or connected by a steel pipe sleeve, and to be smooth throughout inside of pipe. All bends to be on 2'-0" minimum radius measured along ℄ pipe. Pipes to be supported by suitable galvanized hangers @ 10'-0" maximum spacing.

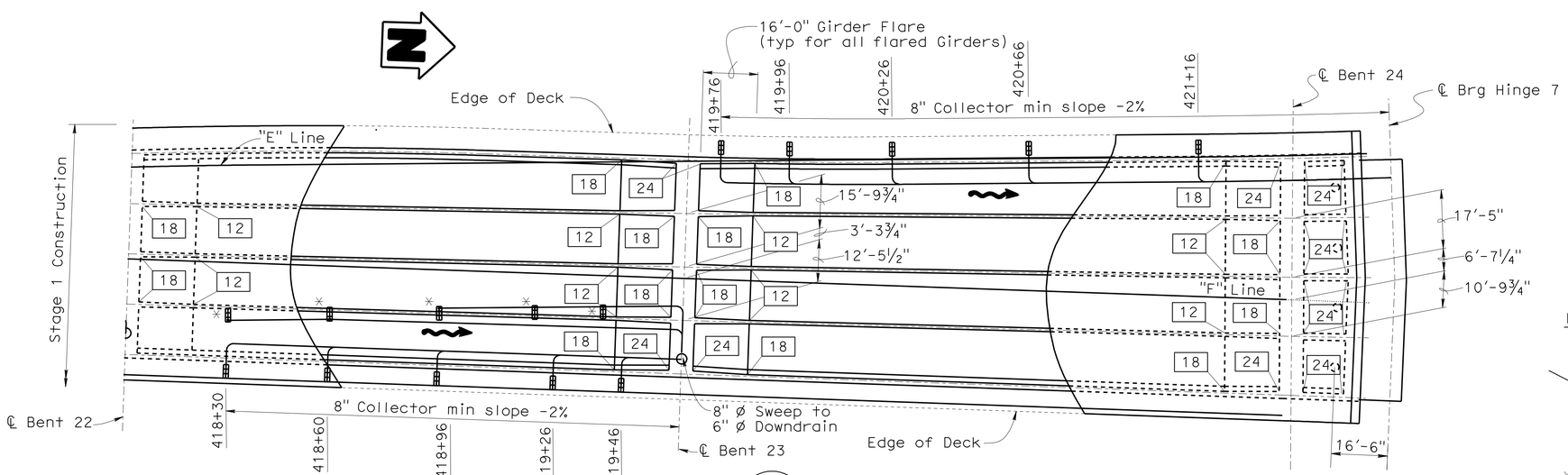

PLAN

1"=20'

B7-8

LEGEND:

- Indicates Theoretical Point of No Movement
- Indicates Girder Stem width in inches measured at top of Girder, perpendicular to ℄ Girder
- Indicates Point of Inflection
- Indicates Deck Drain Type A
- Indicates Deck Drain Type B
- Indicates direction of flow

	BY	CHECKED
DESIGN	T. Skreslet	J. Massoomi
DETAILS	T. Nguyen/ K. Kubo	J. Massoomi
QUANTITIES	J/P. Peterson	J/P. Peterson

STATE OF CALIFORNIA
DEPARTMENT OF TRANSPORTATION

DIVISION OF ENGINEERING SERVICES
STRUCTURE DESIGN
DESIGN BRANCH 14

BRIDGE NO. 53-3032
POST MILE 3.58

SCHUYLER HEIM BRIDGE (REPLACE)
GIRDER LAYOUT NO. 10

STRUCTURES DESIGN DETAIL SHEET (ENGLISH) (REV. 10/25/05)

ORIGINAL SCALE IN INCHES FOR REDUCED PLANS 0 1 2 3

CU 07-271
EA 138201

DISREGARD PRINTS BEARING EARLIER REVISION DATES

REVISION DATES: 1-15-10, 02-25-10, 04-29-10, 05-17-10, 07-13-10, 06-30-08, 10-03-08

SHEET 83 OF 247

FILE => 53-3032-1-g_lo10.dgn

USERNAME => s135318 DATE PLOTTED => 19-OCT-2010 TIME PLOTTED => 13:05

DIST	COUNTY	ROUTE	POST MILES TOTAL PROJECT	SHEET No	TOTAL SHEETS
07	LA	47,103	3.5/4.6, 0.0/1.1	586	1003

REGISTERED CIVIL ENGINEER — DATE 05-24-10

10-11-10
PLANS APPROVAL DATE

The State of California or its officers or agents shall not be responsible for the accuracy or completeness of electronic copies of this plan sheet.

REGISTERED PROFESSIONAL ENGINEER — FOUED ZAYATI — No. C57046 — Exp. 06-30-11 — CIVIL — STATE OF CALIFORNIA

NOTES:

1. "L" is the Girder length measured along ℄ Girder
2. Interior Girder Centerlines are straight between offsets shown.
3. Collector pipes to be NPS 8 x 0.25" welded steel pipe and galvanized. Fittings and bends shall have a minimum wall thickness of 1/4". All joints or connections to be butt welded or connected by a steel pipe sleeve, and to be smooth throughout inside of pipe. All bends to be on 2'-0" minimum radius measured along ℄ pipe. Pipes to be supported by suitable galvanized hangers @ 10'-0" maximum spacing.

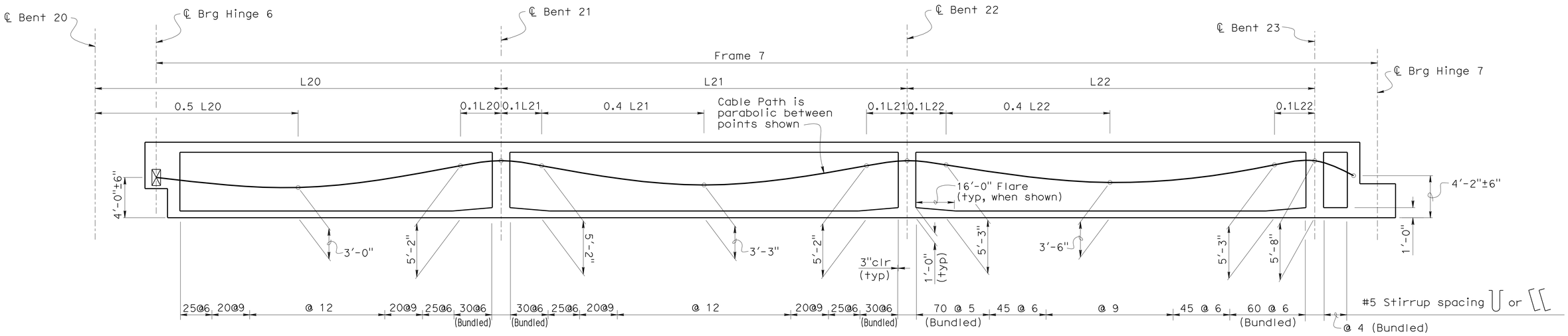

LONGITUDINAL SECTION (Stage 3)

B7-1 B8-5

No Scale

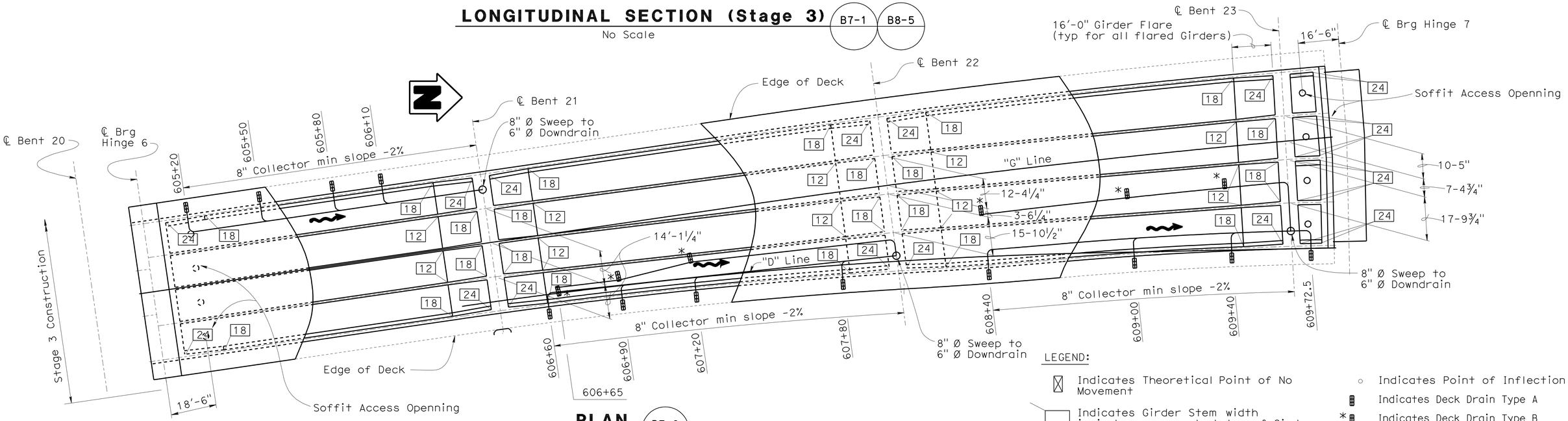

PLAN

1"=20'

B7-8

	BY	CHECKED
DESIGN	T. Skreslet	J. Massoomi
DETAILS	T. Nguyen/ K. Kubo	J. Massoomi
QUANTITIES	J/P. Peterson	J/P. Peterson

STATE OF CALIFORNIA
DEPARTMENT OF TRANSPORTATION

DIVISION OF ENGINEERING SERVICES
STRUCTURE DESIGN
DESIGN BRANCH 14

BRIDGE NO. 53-3032
POST MILE 3.58

SCHUYLER HEIM BRIDGE (REPLACE)
GIRDER LAYOUT NO. 11

STRUCTURES DESIGN DETAIL SHEET (ENGLISH) (REV. 10/25/05)

ORIGINAL SCALE IN INCHES FOR REDUCED PLANS 0 1 2 3

CU 07-271
EA 138201

DISREGARD PRINTS BEARING EARLIER REVISION DATES

REVISION DATES: 04-28-10 05-17-10 07-13-10 06-26-08 10-03-08 1-28-10 02-23-10

SHEET 84 OF 247

FILE => 53-3032-1-g_lo11.dgn

USERNAME => s135318 DATE PLOTTED => 19-OCT-2010 TIME PLOTTED => 13:03

DIST	COUNTY	ROUTE	POST MILES TOTAL PROJECT	SHEET No	TOTAL SHEETS
07	LA	47,103	3.5/4.6, 0.0/1.1	587	1003

REGISTERED CIVIL ENGINEER — DATE 05-24-10

10-11-10
PLANS APPROVAL DATE

REGISTERED PROFESSIONAL ENGINEER — FOUED ZAYATI — No. C57046 — Exp. 06-30-11 — CIVIL — STATE OF CALIFORNIA

The State of California or its officers or agents shall not be responsible for the accuracy or completeness of electronic copies of this plan sheet.

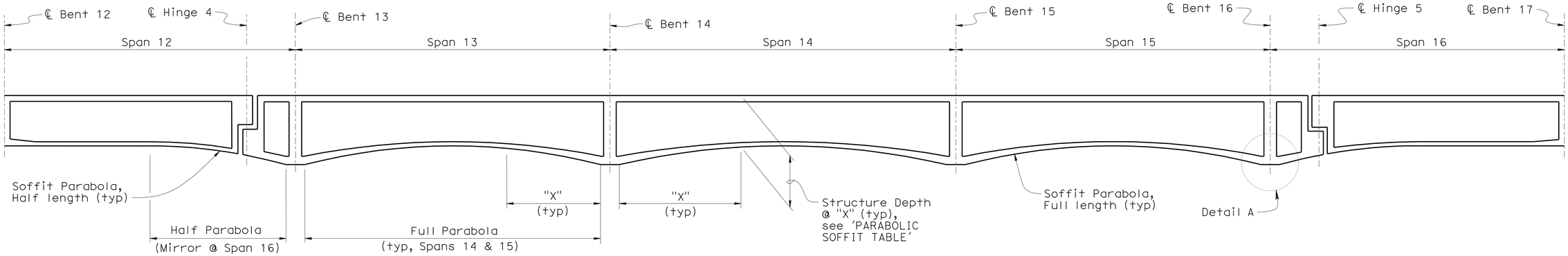

LONGITUDINAL SECTION (Stage 1 & 2)

No Scale

PARABOLIC SOFFIT TABLE

Span	Structure Depth @ "X" Formula
12	$11.0' - (3/43.50)(X) + (3/7569.00)(X)^2$
13 & 15	$11.0' - (3/47.25)(X) + (3/8930.25)(X)^2$
14	$11.0' - (3/52.25)(X) + (3/10920.25)(X)^2$
16	$11.0' - (3/44.00)(X) + (3/7744.00)(X)^2$

"X" indicates longitudinal dimension, measured in feet, from the beginning of the parabolic Soffit to any point within the length of the parabola. Spans 13, 14 and 15 have full length parabolas. Spans 12 and 16 have half length parabolas

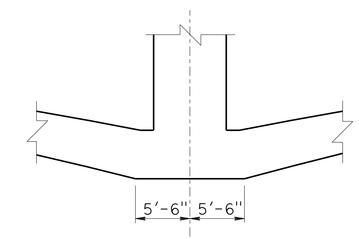

NOTE: Dimensions shown apply to Bents 13, 14, 15 and 16

DETAIL A

No Scale

PRESTRESSING NOTES

270 KSI Low Relaxation Strand:

P_{jack} = *

Anchor Set = 3/8 in

Total Number of Girders = *

Distribution of prestress force (Pjack) between girders shall not exceed the ratio of 3:2. Maximum final force variation between girders shall not exceed 650 kips.

Concrete: f'_c = 5.0 ksi @ 28 days

f'_{ci} = 3.5 ksi @ time of stressing

Contractor shall submit elongation calculations based on initial stress at

⊠ = * times jacking stress.

For Jacking End/s, see Chart.

* For values, see Chart.

PRESTRESSING TABLE

	FRAME 1		FRAME 2		FRAME 3		FRAME 4		FRAME 5		FRAME 6		FRAME 7	
	Stage 1	Stage 2	Stage 1	Stage 2	Stage 1	Stage 2	Stage 1	Stage 2	Stage 1	Stage 2	Stage 1	Stage 2	Stage 1	Stage 2
P_{jack} (kips)	14200	15400	19400	15000	23700	22900	19500	19200	17200	19300	17100	19300	26800	21000
No. of Girders	4	4	5	4	5	5	4	4	4	4	4	4	5	5
⊠	0.843	0.843	0.893	0.893	0.930	0.928	0.935	0.934	0.859	0.859	0.858	0.858	0.880	0.902
Jacking End/s	Both	Both	Both	Both	Begin	Begin	Begin	Begin	Both	Both	Both	Both	End	End

DESIGN	BY T. Skreslet	CHECKED J. Massoomi	
DETAILS	BY K. Kubo	CHECKED T. Skreslet	
QUANTITIES	BY J/P. Peterson	CHECKED J/P. Peterson	

STATE OF CALIFORNIA
DEPARTMENT OF TRANSPORTATION

DIVISION OF ENGINEERING SERVICES
STRUCTURE DESIGN
DESIGN BRANCH 14

BRIDGE NO. 53-3032
POST MILE 3.58

SCHUYLER HEIM BRIDGE (REPLACE)

GIRDER DETAILS NO. 1

STRUCTURES DESIGN DETAIL SHEET (ENGLISH) (REV. 10/25/05)

ORIGINAL SCALE IN INCHES FOR REDUCED PLANS 0 1 2 3

CU 07-271
EA 138201

DISREGARD PRINTS BEARING EARLIER REVISION DATES

REVISION DATES: 05-28-10 | 01-28-10 | 01-29-10 | 02-11-10 | 04-29-10

SHEET 85 OF 247

FILE => 53-3032-1-gdt01.dgn

USERNAME => s135318 DATE PLOTTED => 19-OCT-2010 TIME PLOTTED => 13:04

DIST	COUNTY	ROUTE	POST MILES TOTAL PROJECT	SHEET No	TOTAL SHEETS
07	LA	47,103	3.5/4.6, 0.0/1.1	588	1003

REGISTERED CIVIL ENGINEER — DATE 05-24-10

10-11-10
PLANS APPROVAL DATE

REGISTERED PROFESSIONAL ENGINEER — FOUED ZAYATI — No. C57046 — Exp. 06-30-11 — CIVIL — STATE OF CALIFORNIA

The State of California or its officers or agents shall not be responsible for the accuracy or completeness of electronic copies of this plan sheet.

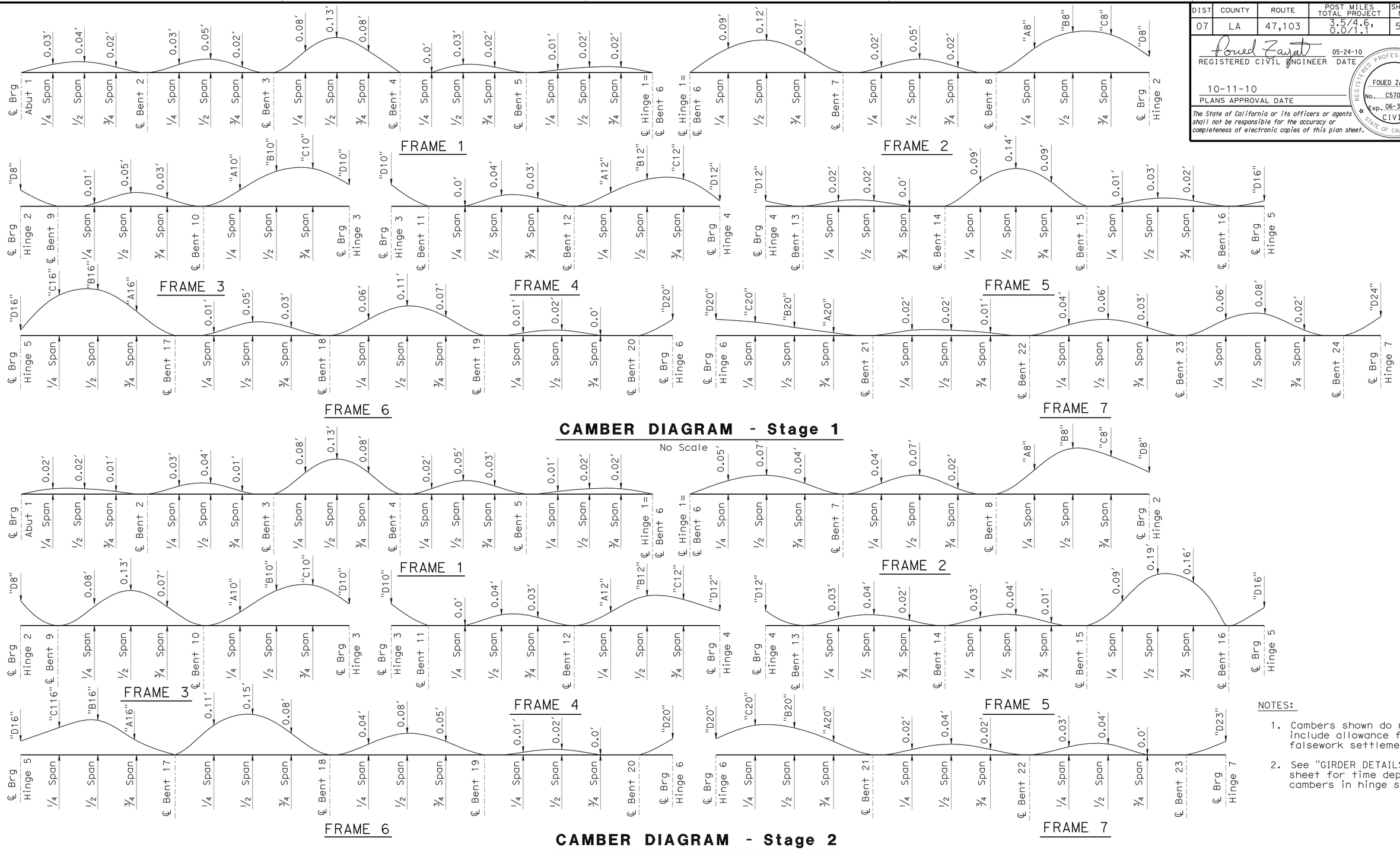

CAMBER DIAGRAM - Stage 1

No Scale

CAMBER DIAGRAM - Stage 2

No Scale

NOTES:

1. Cambers shown do not include allowance for falsework settlement.
2. See "GIRDER DETAILS NO. 3" sheet for time dependent cambers in hinge spans.

DESIGN	BY T. Skreslet	CHECKED J. Massoomi	
DETAILS	BY K. Kubo	CHECKED J. Massoomi	
QUANTITIES	BY J/P. Peterson	CHECKED J/P. Peterson	

STATE OF CALIFORNIA
DEPARTMENT OF TRANSPORTATION

DIVISION OF ENGINEERING SERVICES
STRUCTURE DESIGN
DESIGN BRANCH 14

BRIDGE NO. 53-3032
POST MILE 3.58

SCHUYLER HEIM BRIDGE (REPLACE)

GIRDER DETAILS NO. 2

STRUCTURES DESIGN DETAIL SHEET (ENGLISH) (REV. 10/25/05)

ORIGINAL SCALE IN INCHES FOR REDUCED PLANS 0 1 2 3

CU 07-271
EA 138201

DISREGARD PRINTS BEARING EARLIER REVISION DATES

REVISION DATES: 01-15-08 01-22-08 01-24-08 03-14-08 04-22-08 07-01-08 01-22-10 04-29-10 07-19-10

SHEET 86 OF 247

FILE => 53-3032-1-gdt02.dgn

USERNAME => s135318 DATE PLOTTED => 19-OCT-2010 TIME PLOTTED => 13:04

DIST	COUNTY	ROUTE	POST MILES TOTAL PROJECT	SHEET No	TOTAL SHEETS
07	LA	47,103	3.5/4.6, 0.0/1.1	589	1003

Foued Zayati 05-24-10
REGISTERED CIVIL ENGINEER DATE

10-11-10
PLANS APPROVAL DATE

REGISTERED PROFESSIONAL ENGINEER FOUED ZAYATI No. C57046 Exp. 06-30-11 CIVIL STATE OF CALIFORNIA

The State of California or its officers or agents shall not be responsible for the accuracy or completeness of electronic copies of this plan sheet.

TIME DEPENDENT SPAN CAMBERS

"T"	"A8"	"B8"	"C8"	"D8"	"A10"	"B10"	"C10"	"D10"	"A12"	"B12"	"C12"	"D12"	"A16"	"B16"	"C16"	"D16"	"A20"	"B20"	"C20"	"D20"	"D23"	"D24"
30	0.09′	0.17′	0.15′	0.05	0.06′	0.12′	0.13′	0.07′	0.05′	0.10′	0.10′	0.02′	0.09′	0.17′	0.15′	0.02′	0.01′	0.03′	0.04′	0.05′	0.04′	0.06′
60	0.09′	0.16′	0.03′	0.04′	0.05′	0.12′	0.12′	0.06′	0.05′	0.10′	0.10′	0.01′	0.09′	0.17′	0.15′	0.01′	0.01′	0.02′	0.03′	0.04′	0.04′	0.05′
90	0.08′	0.16′	0.14′	0.04′	0.05′	0.11′	0.12′	0.04′	0.05′	0.10′	0.09′	0.01′	0.09′	0.17′	0.14′	0.01′	0.00′	0.02′	0.03′	0.04′	0.03′	0.04′
120	0.08′	0.16′	0.14′	0.03′	0.05′	0.11′	0.11′	0.04′	0.05′	0.10′	0.09′	0.01′	0.09′	0.17′	0.14′	0.01′	0.00′	0.02′	0.03′	0.03′	0.03′	0.04′
180	0.08′	0.16′	0.14′	0.03′	0.05′	0.11′	0.11′	0.04′	0.05′	0.10′	0.09′	0.01′	0.09′	0.17′	0.14′	0.01′	0.00′	0.02′	0.03′	0.03′	0.03′	0.04′
240	0.08′	0.16′	0.14′	0.03′	0.05′	0.11′	0.11′	0.04′	0.05′	0.10′	0.09′	0.01′	0.09′	0.17′	0.14′	0.01′	0.00′	0.02′	0.03′	0.03′	0.03′	0.04′
360	0.08′	0.15′	0.14′	0.03′	0.05′	0.11′	0.11′	0.04′	0.05′	0.09′	0.09′	0.01′	0.09′	0.16′	0.14′	0.01′	0.00′	0.01′	0.03′	0.03′	0.02′	0.03′
720	0.08′	0.15′	0.13′	0.03′	0.05′	0.11′	0.11′	0.03′	0.05′	0.09	0.09′	0.01′	0.09′	0.16′	0.14′	0.01′	0.00′	0.01′	0.02′	0.03′	0.02′	0.03′

Note: "T" is elapsed time in days from prestressing short hinge side till hinge closure and load transfer.

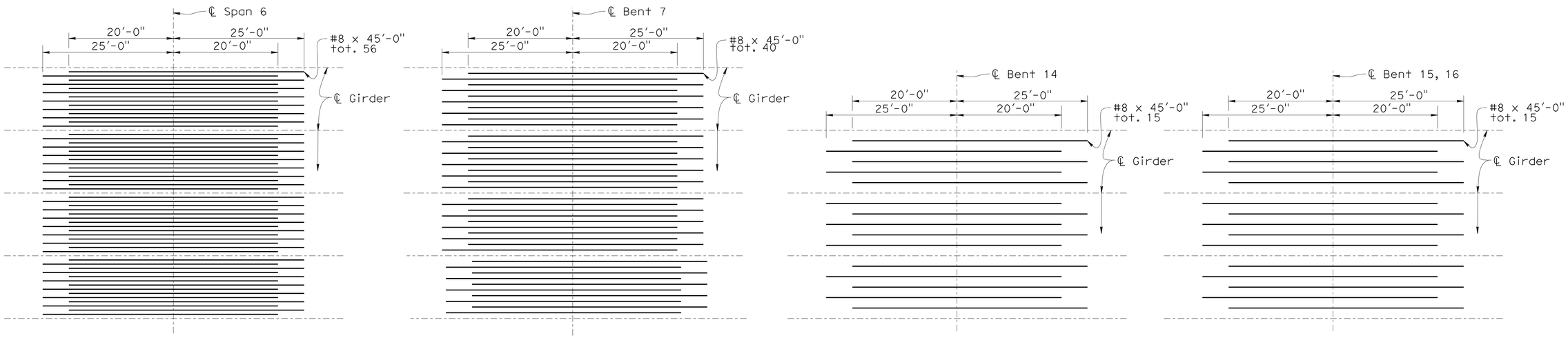

STAGE 1

No Scale

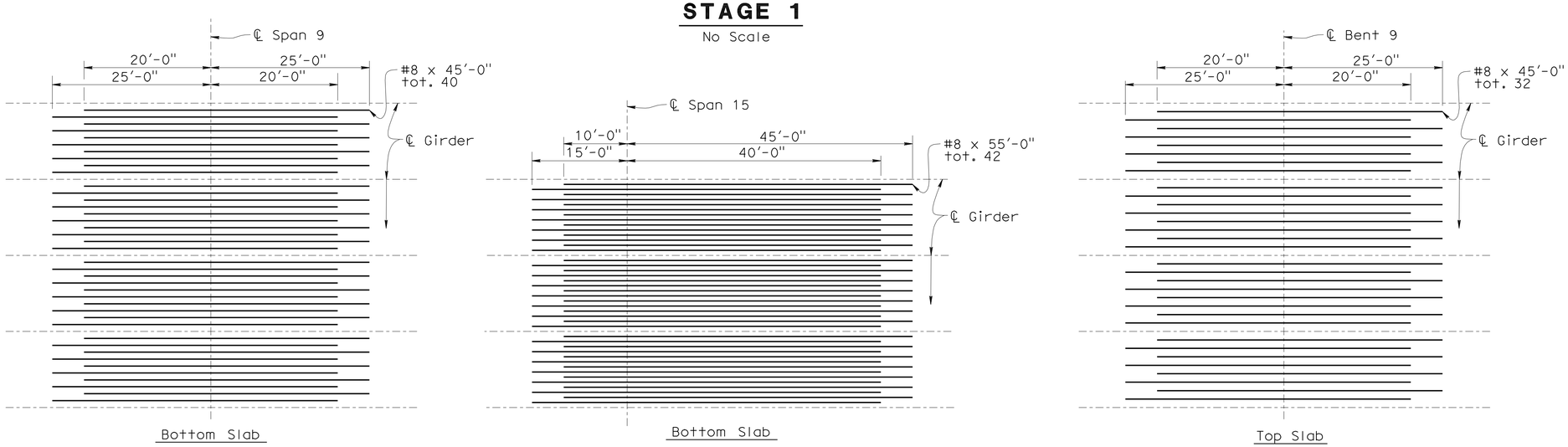

STAGE 2

No Scale

DESIGN	BY T. Skreslet	CHECKED J. Massoomi	
DETAILS	BY T. Nguyen	CHECKED J. Massoomi	
QUANTITIES	BY J. Massoomi	CHECKED L. Han	

STATE OF CALIFORNIA
DEPARTMENT OF TRANSPORTATION

DIVISION OF ENGINEERING SERVICES
STRUCTURE DESIGN
DESIGN BRANCH 14

BRIDGE NO. 53-3032
POST MILE 3.58

SCHUYLER HEIM BRIDGE (REPLACE)
GIRDER DETAILS NO. 3

STRUCTURES DESIGN DETAIL SHEET (ENGLISH) (REV. 10/25/05)

ORIGINAL SCALE IN INCHES FOR REDUCED PLANS 0 1 2 3

CU 07-271
EA 238501

DISREGARD PRINTS BEARING EARLIER REVISION DATES

REVISION DATES: 03-01-10 03-02-10 04-28-10 05-26-10 07-19-10

SHEET 87 OF 247

FILE => 53-3032-1-gdt03.dgn

USERNAME => s135318 DATE PLOTTED => 19-OCT-2010 TIME PLOTTED => 13:04

DIST	COUNTY	ROUTE	POST MILES TOTAL PROJECT	SHEET No	TOTAL SHEETS
07	LA	47,103	3.5/4.6, 0.0/1.1	590	1003

REGISTERED CIVIL ENGINEER — DATE 05-24-10

10-11-10
PLANS APPROVAL DATE

REGISTERED PROFESSIONAL ENGINEER — FOUED ZAYATI — No. C57046 — Exp. 06-30-11 — CIVIL — STATE OF CALIFORNIA

The State of California or its officers or agents shall not be responsible for the accuracy or completeness of electronic copies of this plan sheet.

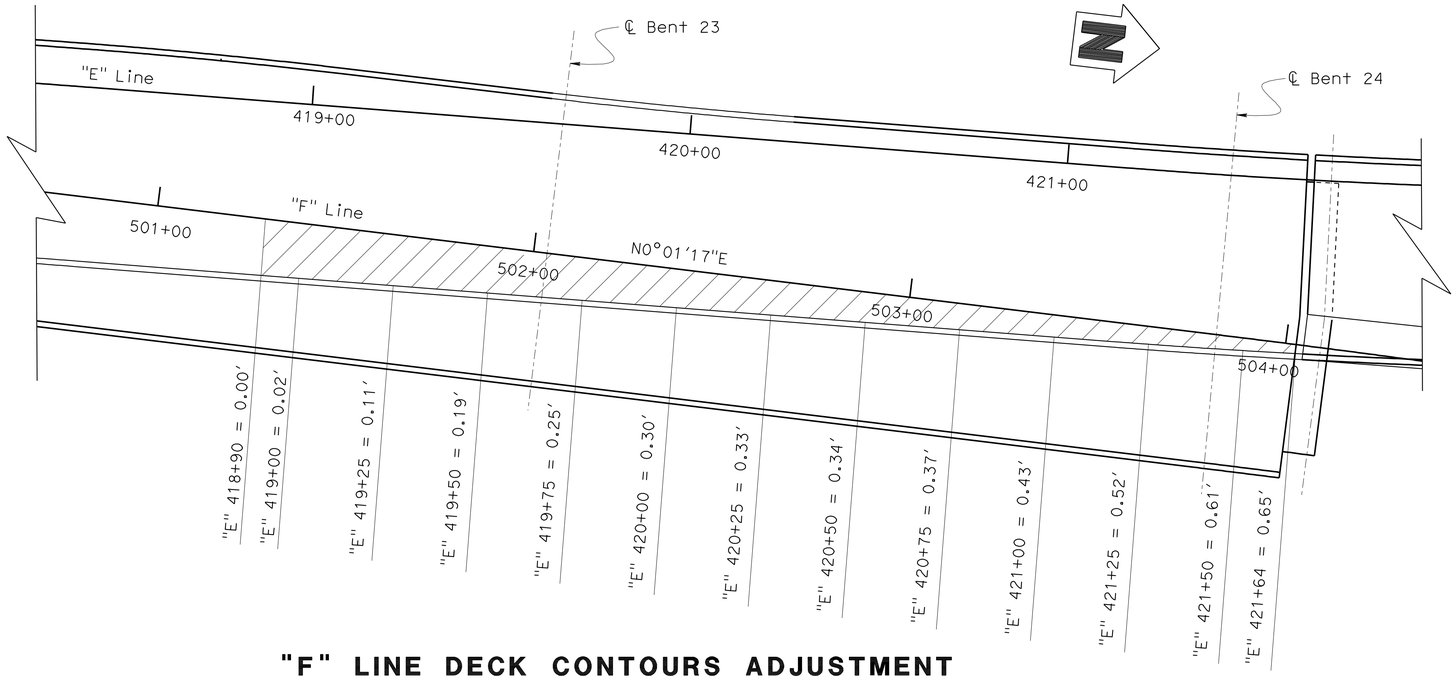

"F" LINE DECK CONTOURS ADJUSTMENT

1"=20'

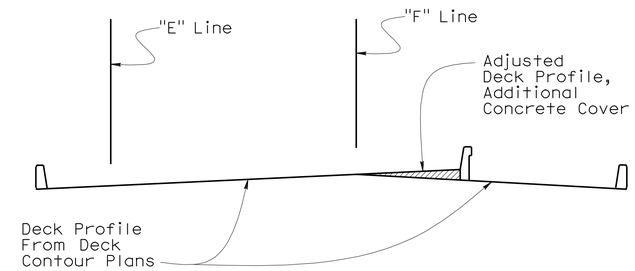

CONTOUR ADJUSTMENT DETAIL

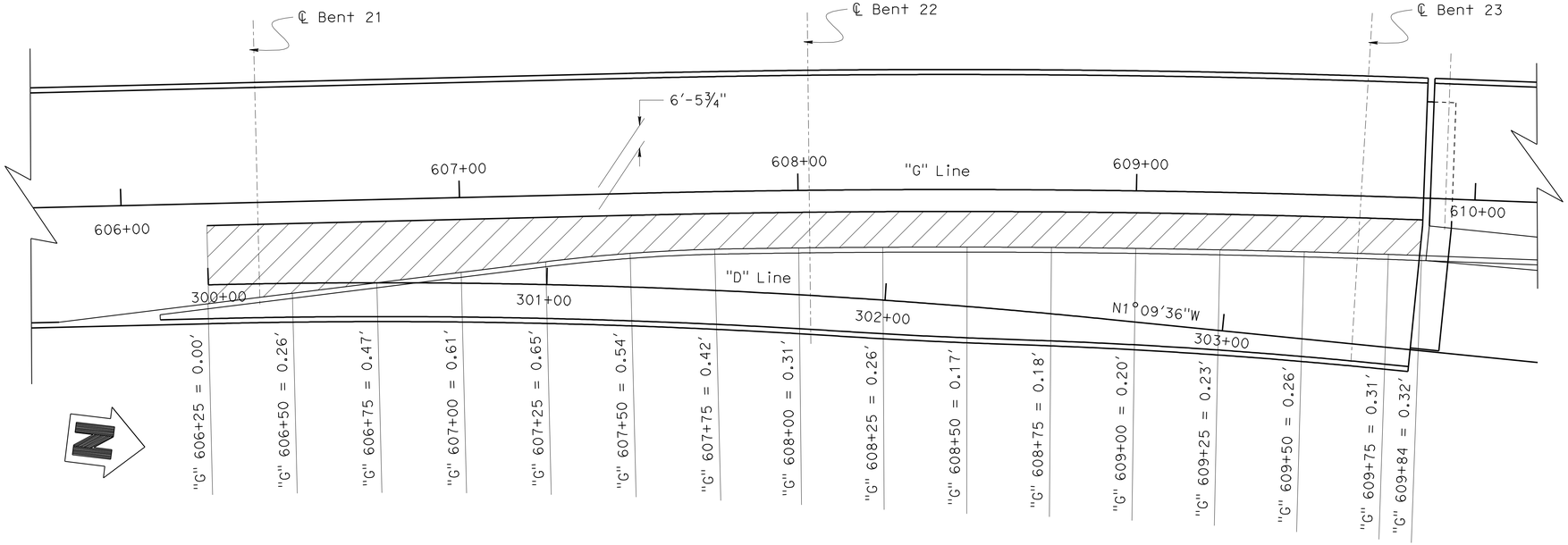

"G" LINE DECK CONTOURS ADJUSTMENT

1"=20'

NOTES:

1. Deck contour adjustment at "F" Line is 0.00'
2. Adjustment values given are at west face of concrete barrier.
3. Contour adjustments vary linearly from 0.00' at "F" Line to values given at face of barrier.
4. Deck contour adjustment at 6.48' right of "G" Line is 0.00'
5. Contour adjustments vary linearly from 0.00' at 6.48 right of "G" Line to values given at face of barrier.
6. Contour adjustment is achieved by adding extra concrete cover to the deck profile based on the Deck Contour Plans.
7. See 'Contour Adjustment Detail' for ian llustation of the contour adjustment

DESIGN	BY T. Skreslet	CHECKED J. Massoomi	
DETAILS	BY T. Nguyen	CHECKED J. Massoomi	
QUANTITIES	BY J. Massoomi	CHECKED L. Han	

STATE OF CALIFORNIA
DEPARTMENT OF TRANSPORTATION

DIVISION OF ENGINEERING SERVICES
STRUCTURE DESIGN
DESIGN BRANCH 14

BRIDGE NO. 53-3032
POST MILE 3.58

SCHUYLER HEIM BRIDGE (REPLACE)
GIRDER DETAILS NO. 4

STRUCTURES DESIGN DETAIL SHEET (ENGLISH) (REV. 10/25/05)

ORIGINAL SCALE IN INCHES FOR REDUCED PLANS 0 1 2 3

CU 07-271
EA 238501

DISREGARD PRINTS BEARING EARLIER REVISION DATES

REVISION DATES: 03-01-10 03-02-10 04-28-10 05-28-10

SHEET 88 OF 247

FILE => 53-3032-1-gdt04.dgn

USERNAME => s135318 DATE PLOTTED => 19-OCT-2010 TIME PLOTTED => 13:04

DIST	COUNTY	ROUTE	POST MILES TOTAL PROJECT	SHEET No	TOTAL SHEETS
07	LA	47,103	3.5/4.6, 0.0/1.1	591	1003

REGISTERED CIVIL ENGINEER 05-24-10 DATE

10-11-10
PLANS APPROVAL DATE

REGISTERED PROFESSIONAL ENGINEER
FOUED ZAYATI
No. C57046
Exp. 06-30-11
CIVIL
STATE OF CALIFORNIA

The State of California or its officers or agents shall not be responsible for the accuracy or completeness of electronic copies of this plan sheet.

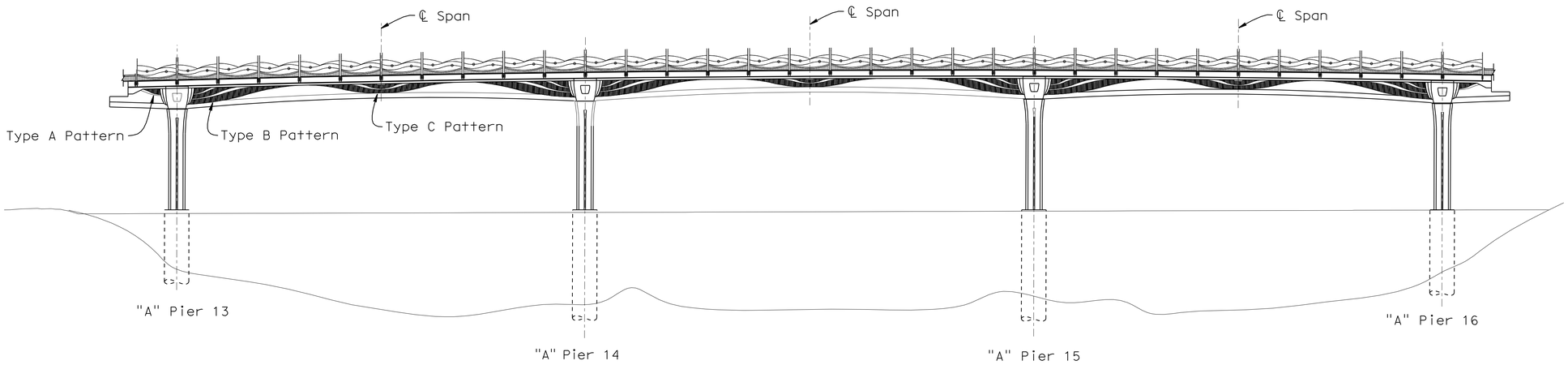

PART ELEVATION
No Scale

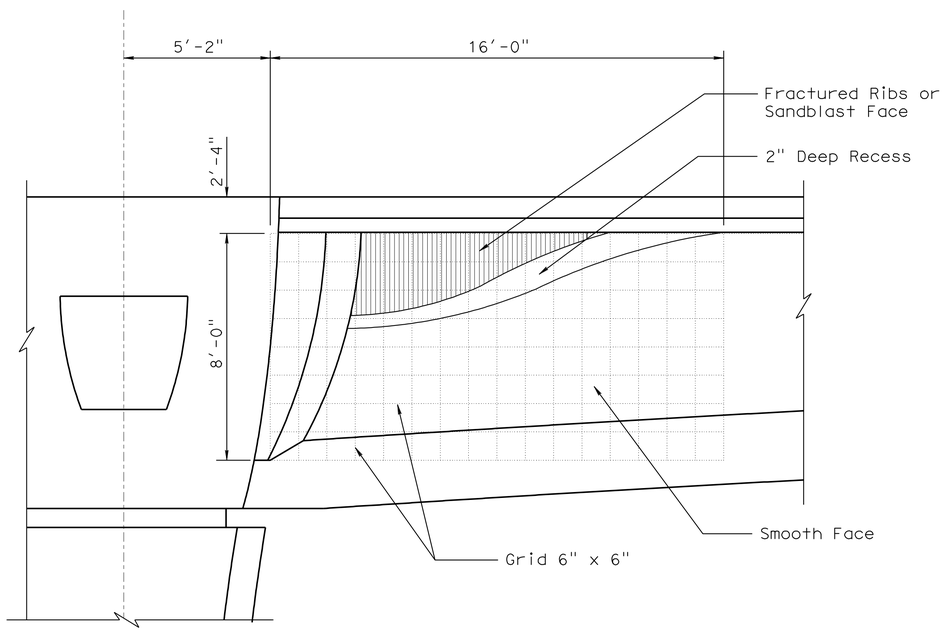

TYPE A PATTERN
No Scale

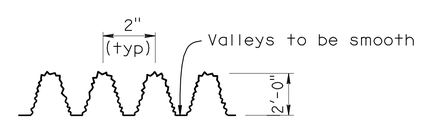

FRACTURED RIB DETAIL
No Scale

NOTE:

For details 'Type B Pattern' and 'Type C Pattern', see "GIRDER DETAILS NO. 6" sheet.

DESIGN	BY F. Zayati	CHECKED T. Skreslet	
DETAILS	BY T. Nguyen	CHECKED T. Skreslet	
QUANTITIES	BY J/P Peterson	CHECKED J/P Peterson	

STATE OF CALIFORNIA
DEPARTMENT OF TRANSPORTATION

DIVISION OF ENGINEERING SERVICES
STRUCTURE DESIGN
DESIGN BRANCH 14

BRIDGE NO. 53-3032
POST MILE 3.58

SCHUYLER HEIM BRIDGE (REPLACE)
GIRDER DETAILS NO. 5

STRUCTURES DESIGN DETAIL SHEET (ENGLISH) (REV. 10/25/05)

ORIGINAL SCALE IN INCHES FOR REDUCED PLANS 0 1 2 3

CU 07-271
EA 138201

DISREGARD PRINTS BEARING EARLIER REVISION DATES → 5-18-10 5-20-10 05-28-10

REVISION DATES

SHEET 89 OF 247

FILE => 53-3032-1-gdt05.dgn

USERNAME => s135318 DATE PLOTTED => 19-OCT-2010 TIME PLOTTED => 13:04

DIST	COUNTY	ROUTE	POST MILES TOTAL PROJECT	SHEET No	TOTAL SHEETS
07	LA	47,103	3.5/4.6, 0.0/1.1	592	1003

REGISTERED CIVIL ENGINEER 05-24-10 DATE

10-11-10
PLANS APPROVAL DATE

The State of California or its officers or agents shall not be responsible for the accuracy or completeness of electronic copies of this plan sheet.

REGISTERED PROFESSIONAL ENGINEER
FOUED ZAYATI
No. C57046
Exp. 06-30-11
CIVIL
STATE OF CALIFORNIA

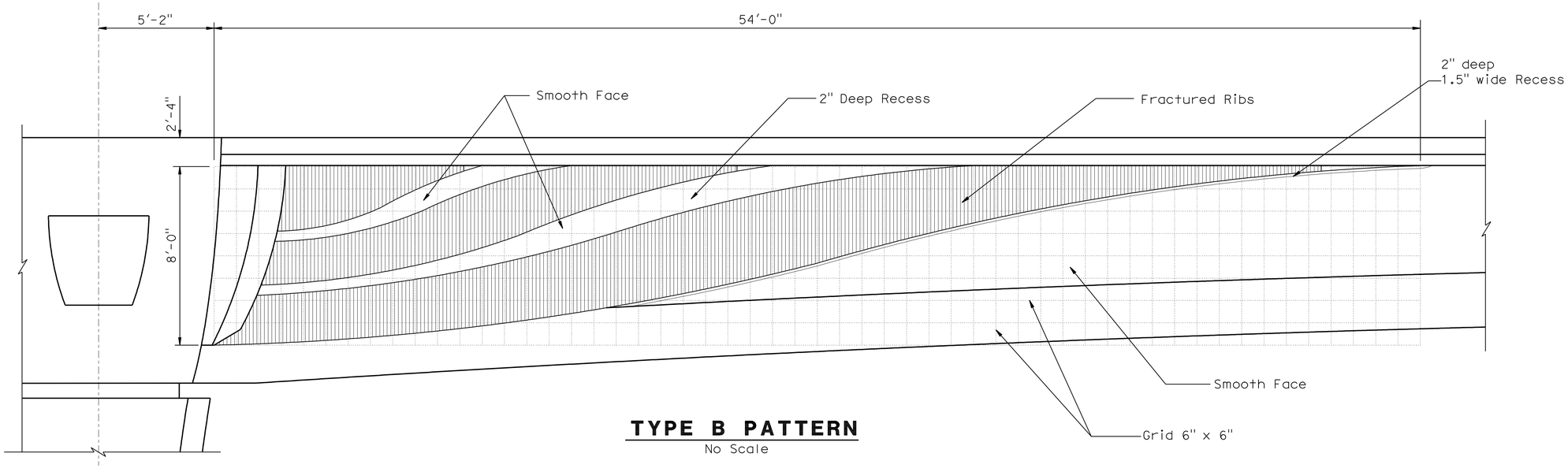

TYPE B PATTERN

No Scale

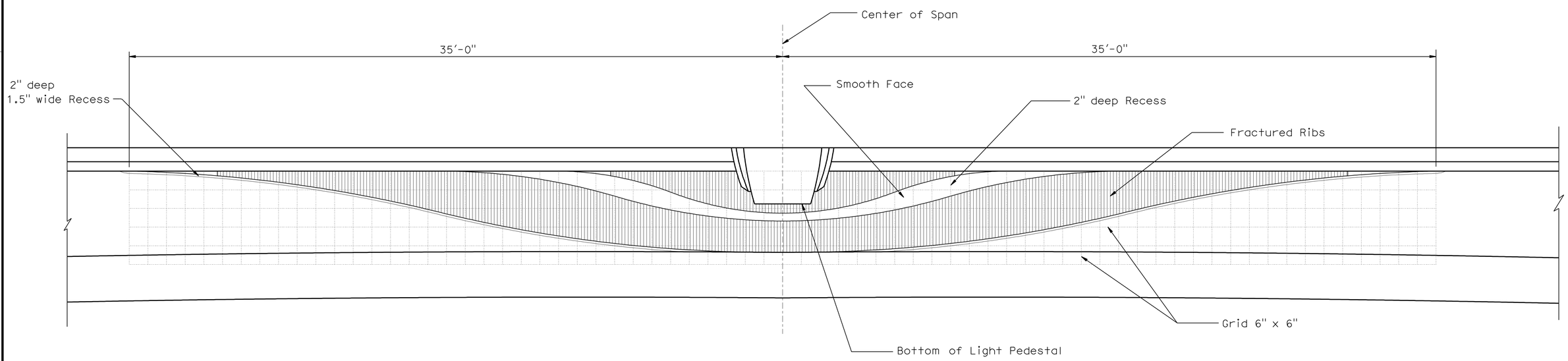

TYPE C PATTERN

No Scale

NOTE: For location of 'Type B Pattern' and 'Type C Pattern', see "GIRDER DETAILS NO. 5" sheet.

	BY	CHECKED
DESIGN	F. Zayati	T. Skreslet
DETAILS	T. Nguyen	T. Skreslet
QUANTITIES	J/P Peterson	J/P Peterson

STATE OF CALIFORNIA
DEPARTMENT OF TRANSPORTATION

DIVISION OF ENGINEERING SERVICES
STRUCTURE DESIGN
DESIGN BRANCH 14

BRIDGE NO. 53-3032
POST MILE 3.58

SCHUYLER HEIM BRIDGE (REPLACE)

GIRDER DETAILS NO. 6

STRUCTURES DESIGN DETAIL SHEET (ENGLISH) (REV. 10/25/05)

ORIGINAL SCALE IN INCHES FOR REDUCED PLANS 0 1 2 3

CU 07-271
EA 138201

DISREGARD PRINTS BEARING EARLIER REVISION DATES

REVISION DATES: 5-18-10 5-20-10

SHEET 90 OF 247

FILE => 53-3032-1-gdt06.dgn

USERNAME => s135318 DATE PLOTTED => 19-OCT-2010 TIME PLOTTED => 13:04

DIST	COUNTY	ROUTE	POST MILES TOTAL PROJECT	SHEET No	TOTAL SHEETS
07	LA	47,103	3.5/4.6, 0.0/1.1	593	1003

REGISTERED CIVIL ENGINEER 05-24-10 DATE

10-11-10
PLANS APPROVAL DATE

REGISTERED PROFESSIONAL ENGINEER FOUED ZAYATI No. C57046 Exp. 06-30-11 CIVIL STATE OF CALIFORNIA

The State of California or its officers or agents shall not be responsible for the accuracy or completeness of electronic copies of this plan sheet.

NOTES:

1. For 'Section A-A' and 'Section B-B', see "HINGE 2 (STAGE 1) DETAILS NO. 2" sheet.
2. For 'Section C-C', 'Section D-D', 'Section E-E' and 'Section F-F', see "HINGE 2 DETAILS NO. 3" sheet.
3. For 'Detail A' and 'Detail B', see "HINGE 2 DETAILS NO. 1" sheet.

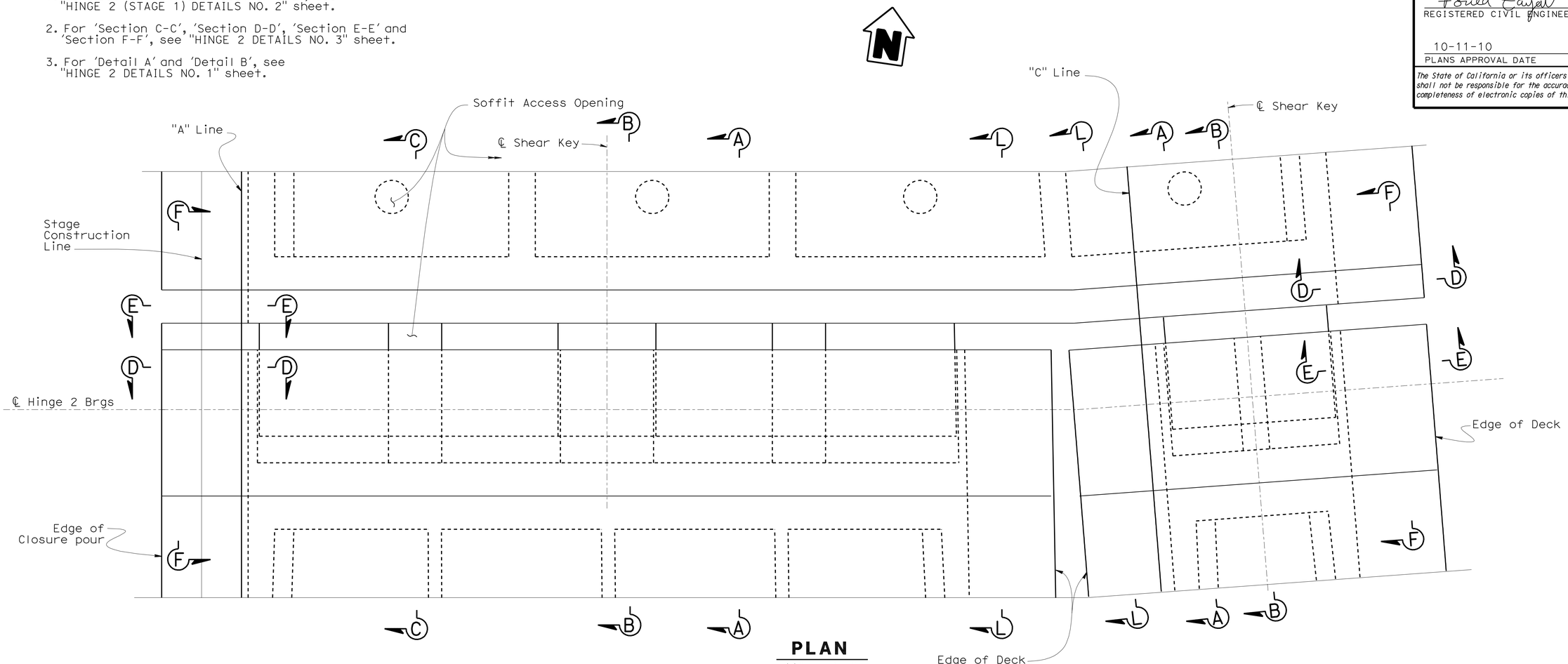

PLAN

1/4" = 1'-0"

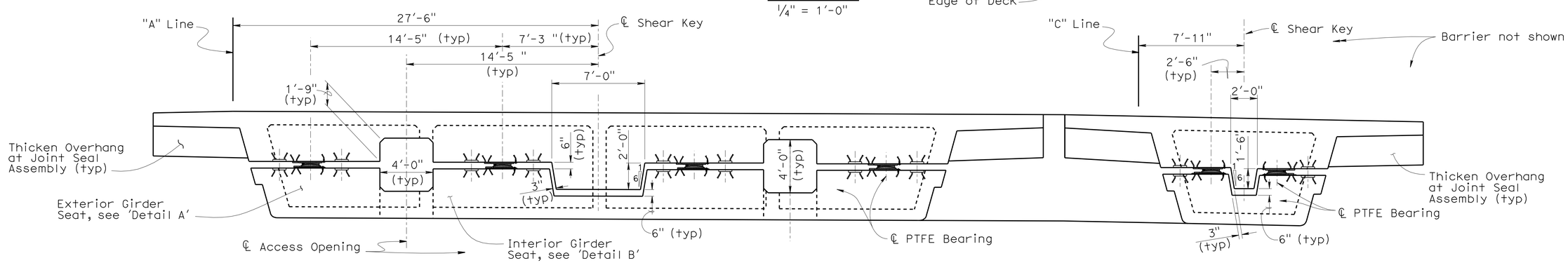

DEVELOPED ELEVATION

1/4" = 1'-0"

	BY	CHECKED
DESIGN	Ahmed M. M. Ibrahim	F. Zayati
DETAILS	T. Nguyen	F. Zayati
QUANTITIES	M. Friedheim	N. Tachta

STATE OF CALIFORNIA
DEPARTMENT OF TRANSPORTATION

DIVISION OF ENGINEERING SERVICES
STRUCTURE DESIGN
DESIGN BRANCH 14

BRIDGE NO. 53-3032
POST MILE 3.58

SCHUYLER HEIM BRIDGE (REPLACE)
HINGE 2 (STAGE 1) LAYOUT

STRUCTURES DESIGN DETAIL SHEET (ENGLISH) (REV. 10/25/05)

ORIGINAL SCALE IN INCHES FOR REDUCED PLANS 0 1 2 3

CU 07-271
EA 138201

DISREGARD PRINTS BEARING EARLIER REVISION DATES

REVISION DATES: 09-25-09, 11-9-09, 04-12-10, 04-16-10, 04-30-10, 05-20-10

SHEET 91 OF 247

FILE => 53-3032-1-p-jhinge2-1a1o.dgn

USERNAME => s135318 DATE PLOTTED => 19-OCT-2010 TIME PLOTTED => 13:04

DIST	COUNTY	ROUTE	POST MILES TOTAL PROJECT	SHEET No	TOTAL SHEETS
07	LA	47,103	3.5/4.6, 0.0/1.1	594	1003

REGISTERED CIVIL ENGINEER — DATE 05-24-10

10-11-10
PLANS APPROVAL DATE

REGISTERED PROFESSIONAL ENGINEER — FOUED ZAYATI No. C57046 Exp. 06-30-11 CIVIL — STATE OF CALIFORNIA

The State of California or its officers or agents shall not be responsible for the accuracy or completeness of electronic copies of this plan sheet.

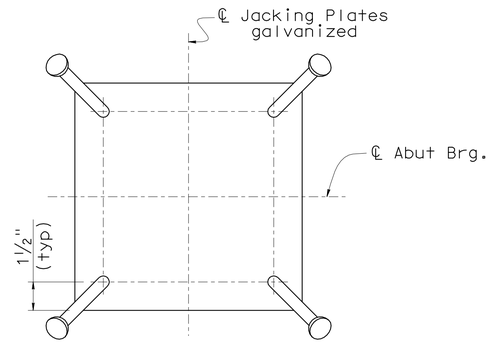

PLAN

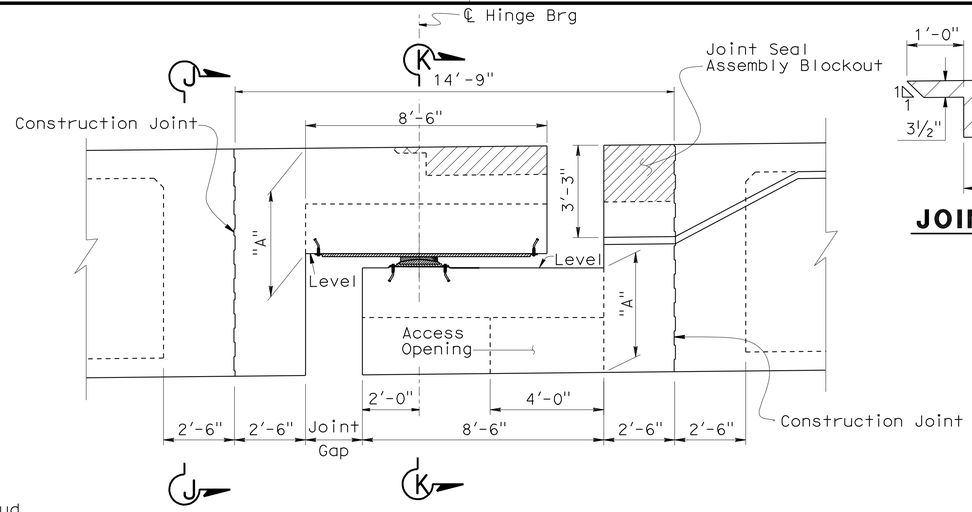

LONGITUDINAL ELEVATION

⅜" = 1'-0"

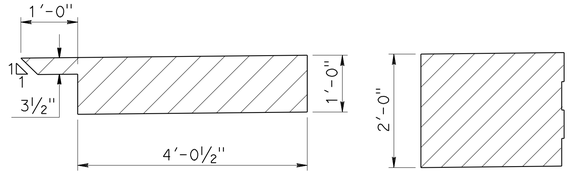

JOINT SEAL BLOCKOUT DETAIL

¾" = 1'-0"

NOTES:

1. For 'Section J-J', see "HINGE 2 (STAGE 1) DETAILS NO. 5" and "HINGE 2 (STAGE 2) DETAILS NO. 3" sheets. see "HINGE 6 DETAILS NO. 5" sheet
2. For 'Section K-K', see "HINGE 2 (STAGE 1) DETAILS NO. 4", "HINGE 2 (STAGE 2) DETAILS NO. 2", "HINGE 2 (NEW DOCK ON-RAMP) DETAILS NO. 7" and "HINGE 2 (NEW DOCK OFF-RAMP) DETAILS NO. 4" sheets.
3. For location of 'Detail A' and 'Detail B', see "HINGE 2 (STAGE 1) LAYOUT" and "HINGE 2 (STAGE 2) LAYOUT" sheets.
4. "A" is measured e ℄ bearing.

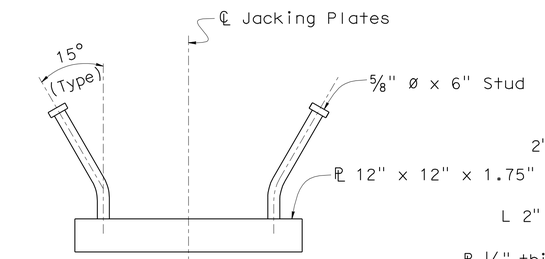

ELEVATION

JACKING PLATE DETAIL

3" = 1'-0"

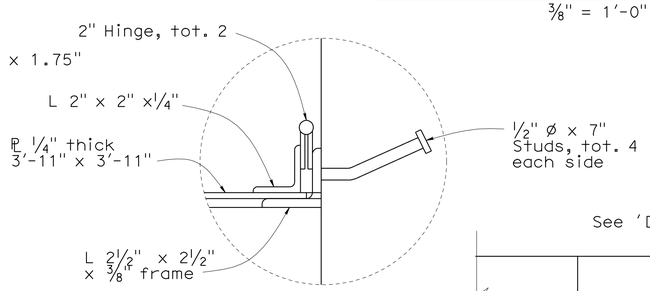

DETAIL C

No Scale

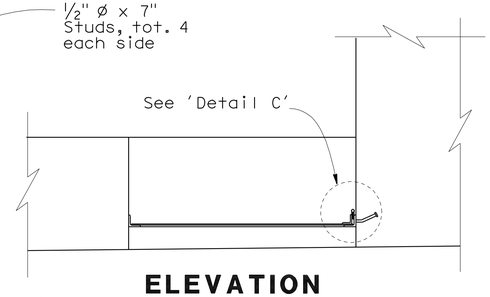

ELEVATION

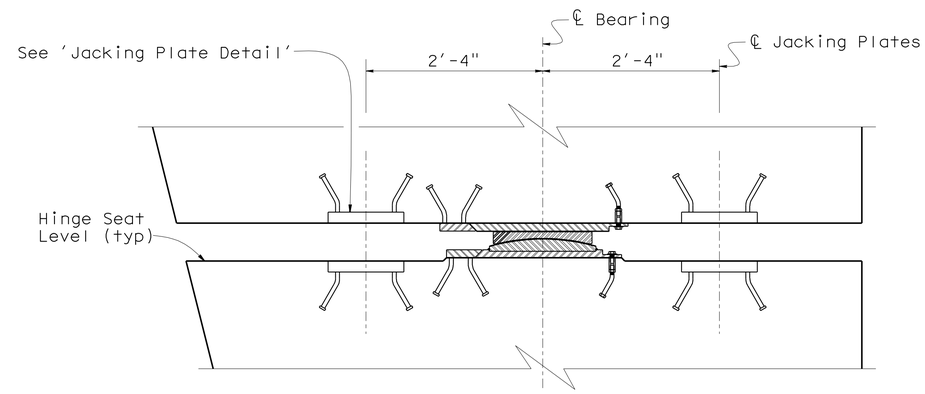

DETAIL A

1" = 1'-0"

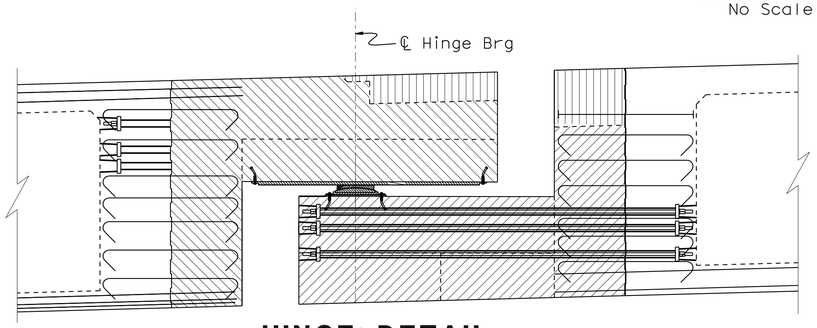

HINGE DETAIL

⅜" = 1'-0"

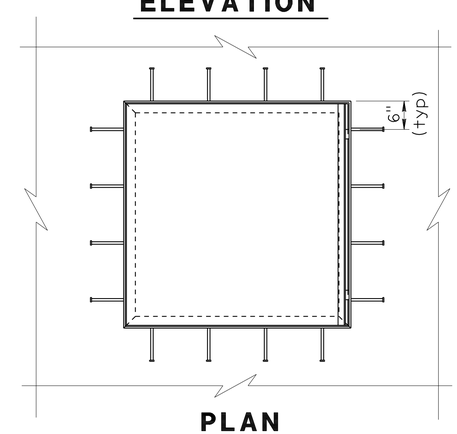

PLAN

ACCESS OPENING DETAIL

¾" = 1'-0"

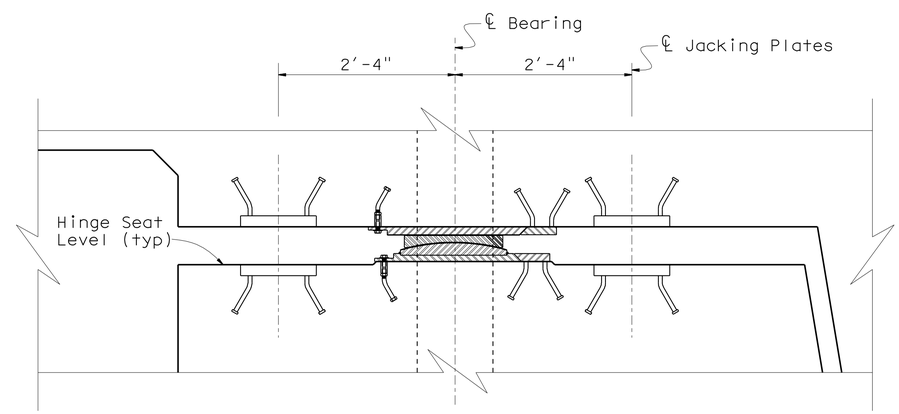

DETAIL B

1" = 1'-0"

Indicates Blockout and Closure Pour for Joint Seal Assemblies.

Indicates CIP concrete to be placed after both frames have been stressed.

Indicates CIP concrete to be placed after seat side of the Hinge is constructed and Bearings are properly positioned.

	BY	CHECKED
DESIGN	Ahmed M. M. Ibrahim	F. Zayati
DETAILS	T. Nguyen	F. Zayati
QUANTITIES	M. Friedheim	N. Tachta

STATE OF CALIFORNIA
DEPARTMENT OF TRANSPORTATION

DIVISION OF ENGINEERING SERVICES
STRUCTURE DESIGN
DESIGN BRANCH 14

BRIDGE NO. 53-3032
POST MILE 3.58

SCHUYLER HEIM BRIDGE (REPLACE)
HINGE 2 DETAIL NO. 1

STRUCTURES DESIGN DETAIL SHEET (ENGLISH) (REV. 10/25/05)

ORIGINAL SCALE IN INCHES FOR REDUCED PLANS 0 1 2 3

CU 07-271
EA 138201

DISREGARD PRINTS BEARING EARLIER REVISION DATES

REVISION DATES: 09-27-09 09-25-09 12-09-09 04-12-10 04-30-10 05-24-10 05-28-10

SHEET 92 OF 247

FILE => 53-3032-1-p-jhinge2-1det01.dgn

USERNAME => s133538 DATE PLOTTED => 19-OCT-2010 TIME PLOTTED => 13:09

DIST	COUNTY	ROUTE	POST MILES TOTAL PROJECT	SHEET No	TOTAL SHEETS
07	LA	47,103	3.5/4.6, 0.0/1.1	595	1003

REGISTERED CIVIL ENGINEER 05-24-10 DATE

10-11-10
PLANS APPROVAL DATE

The State of California or its officers or agents shall not be responsible for the accuracy or completeness of electronic copies of this plan sheet.

REGISTERED PROFESSIONAL ENGINEER FOUED ZAYATI No. C57046 Exp. 06-30-11 CIVIL STATE OF CALIFORNIA

NOTES:

1. For location of 'Section A-A' and 'Section B-B', see "HINGE 2 (STAGE 1) LAYOUT" sheet.

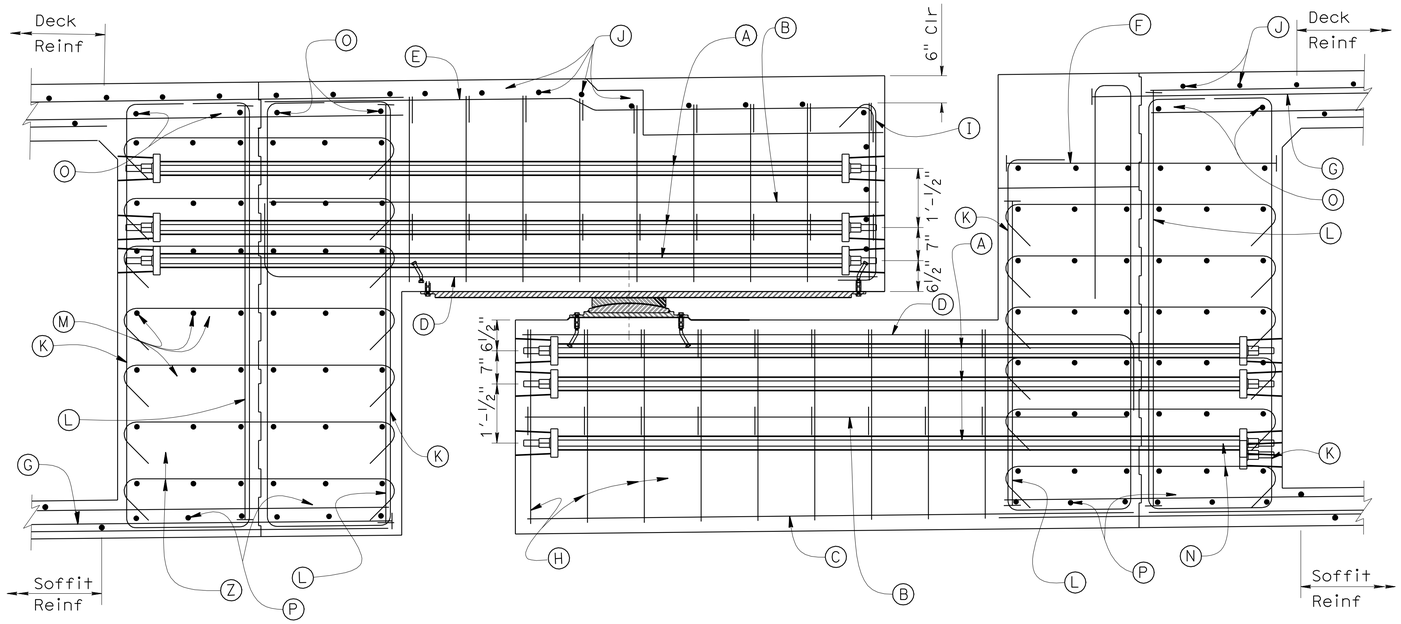

SECTION A-A

3/4" = 1'-0"

PRESTRESSING NOTES

1. 150 KSI HS bars:
2. Concrete: f'_c = 5.0 ksi @ 28 days
   f'_{ci} = 4.5 ksi @ time of stressing
3. Stress all HS bars using an alternating stessing sequence to a lockoff stress equal to 70% of Ultimate stress.
4. Stress HS bars from inside structure bays
5. Falsework shall not be released prior to stressing all HS bars.

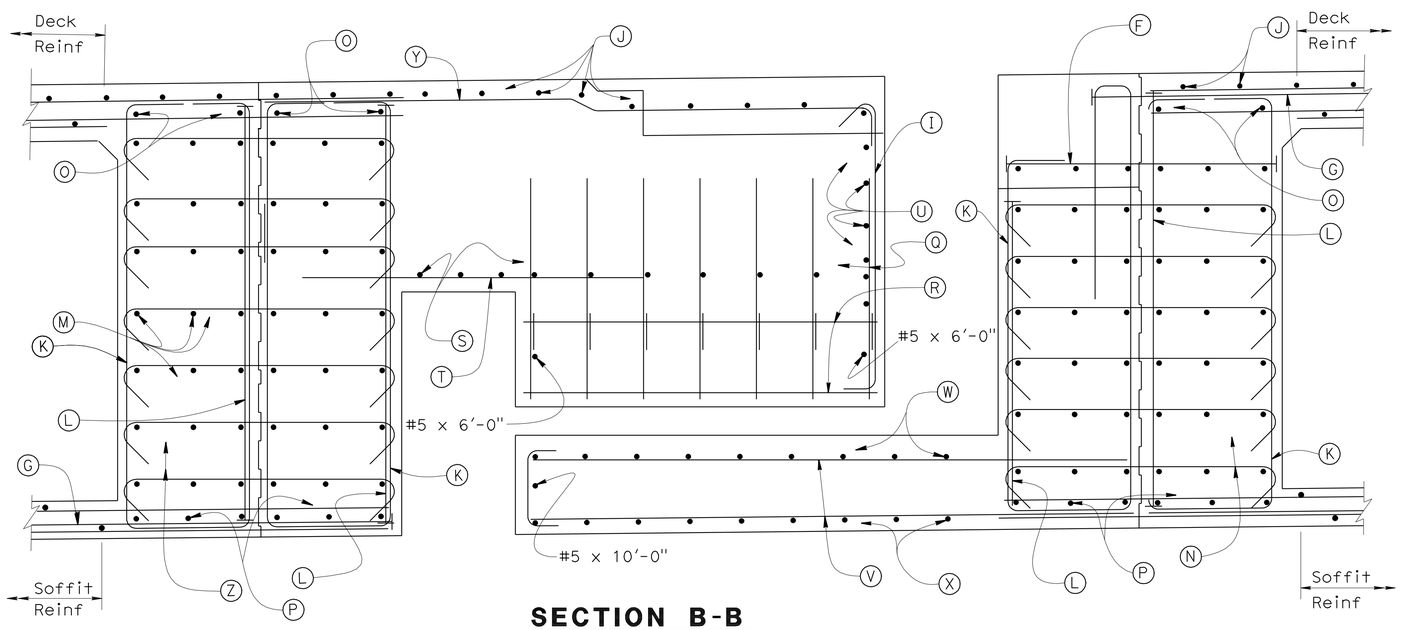

SECTION B-B

3/4" = 1'-0"

LEGEND:

- (A) 1 3/8" Dia. HS Stress bars, Tot 7 per layer, per Bearing (Typ)
- (B) #6 Cont, Tot 2 per Bearing
- (C) #6 Cont, Tot 6 per Bearing
- (D) #9 Tot 6 per Bearing (Typ)
- (E) #6 , Tot 6 per Bearing
- (F) #11 @ 6
- (G) #11 12'-6" @ 6
- (H) #6 or @ 12, at each Bearing Seat
- (I) #5 @ 12
- (J) #5 @ 12, Cont
- (K) #6 3'-9" @ 12 (Typ)
- (L) #9 @ 6 (Typ)
- (M) #5 Cont, Tot 6 per layer, Tot 7 layers
- (N) #5 Tot. 6, @ 12 (Typ)
- (O) #5 Cont, Tot 4 (Typ)
- (P) #5 4'-0" 4'-0" Tot 12
- (Q) #6 2'-0" @ 12
- (R) #5 x 6'-9", Tot 8
- (S) #8 2'-6" 2'-6" @ 12
- (T) #5 x 5'-0", @ 12
- (U) #5 Cont, Tot 4
- (V) #5 @ 12, Cont
- (W) #5 x 10'-0", @ 12
- (X) #5 10" 12'-0" @12
- (Y) #5 @ 12
- (Z) #5 Tot 7, @ 12 (Typ)

DESIGN	BY Ahmed M. M. Ibrahim	CHECKED F. Zayati	
DETAILS	BY T. Nguyen	CHECKED F. Zayati	
QUANTITIES	BY M. Friedheim	CHECKED N. Tachta	

STATE OF CALIFORNIA
DEPARTMENT OF TRANSPORTATION

DIVISION OF ENGINEERING SERVICES
STRUCTURE DESIGN
DESIGN BRANCH 14

BRIDGE NO. 53-3032
POST MILE 3.58

SCHUYLER HEIM BRIDGE (REPLACE)
HINGE 2 (STAGE 2) DETAILS NO. 2

STRUCTURES DESIGN DETAIL SHEET (ENGLISH) (REV. 10/25/05)

ORIGINAL SCALE IN INCHES FOR REDUCED PLANS 0 1 2 3

CU 07-271
EA 138201

DISREGARD PRINTS BEARING EARLIER REVISION DATES

REVISION DATES: 08-22-09 03-26-10 04-12-10 04-14-10 04-30-10

SHEET 93 OF 247

FILE => 53-3032-1-p-jhinge2-1det02.dgn

USERNAME => trmikesl DATE PLOTTED => 19-NOV-2010 TIME PLOTTED => 08:04

DIST	COUNTY	ROUTE	POST MILES TOTAL PROJECT	SHEET No	TOTAL SHEETS
07	LA	47,103	3.5/4.6, 0.0/1.1	596	1003

REGISTERED CIVIL ENGINEER — DATE 05-24-10

10-11-10
PLANS APPROVAL DATE

The State of California or its officers or agents shall not be responsible for the accuracy or completeness of electronic copies of this plan sheet.

REGISTERED PROFESSIONAL ENGINEER — FOUED ZAYATI — No. C57046 — Exp. 06-30-11 — CIVIL — STATE OF CALIFORNIA

NOTES:

1. Typical Section Reinforcement not shown. See "TYPICAL SECTION No. 1" sheet.
2. For location of 'Section C-C', 'Section D-D', 'Section E-E' and 'Section F-F', see "HINGE 2 (STAGE 1) LAYOUT" and "HINGE 2 (STAGE 2) LAYOUT" sheets.
3. For rebar designation see "HINGE 2 (STAGE 1) DETAILS No. 2" sheet.

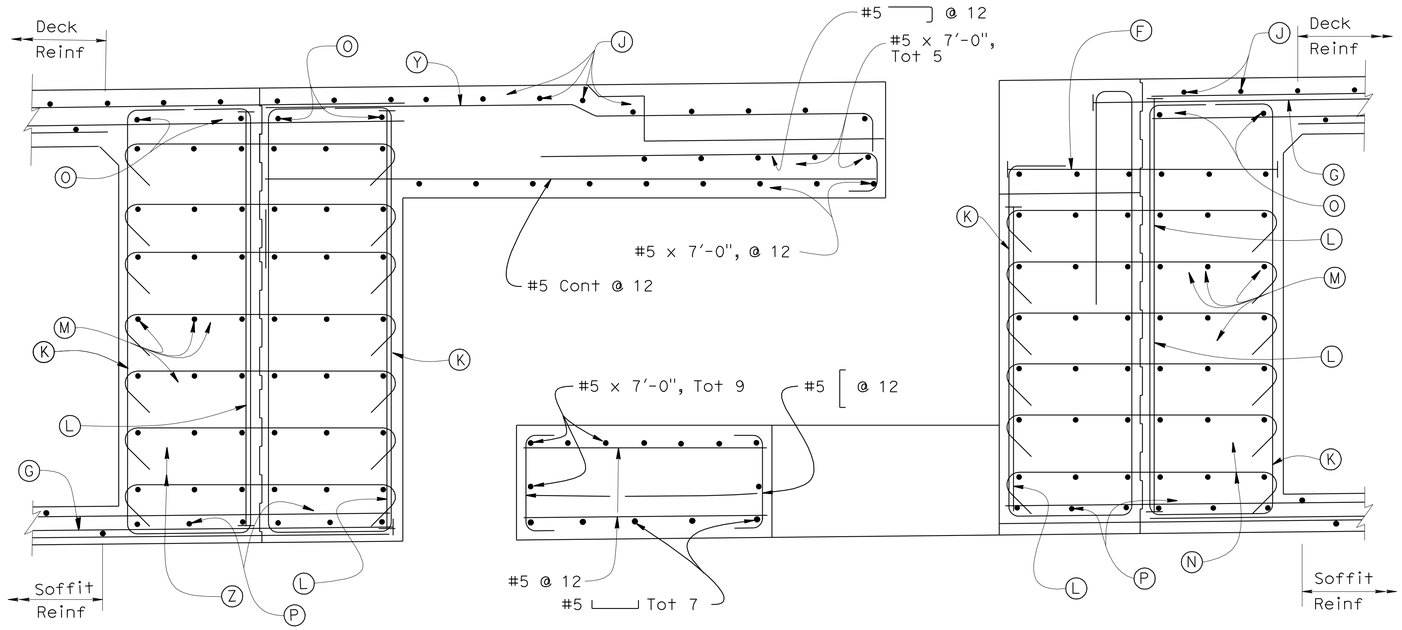

SECTION C-C
3/4" = 1'-0"

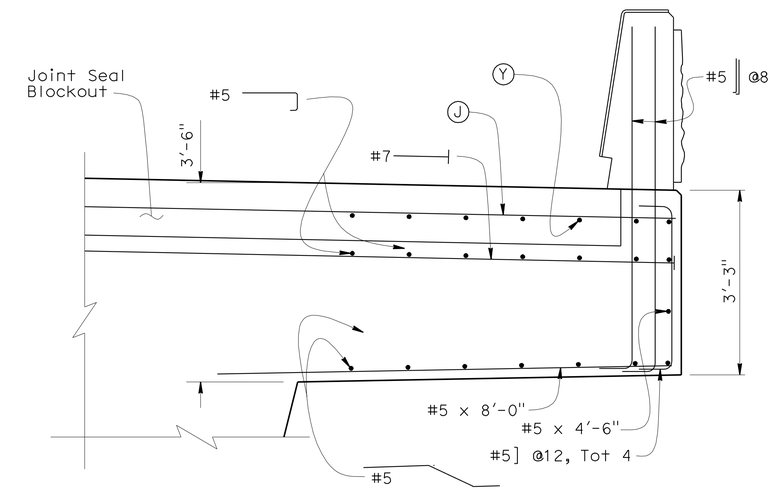

SECTION D-D
3/4" = 1'-0"

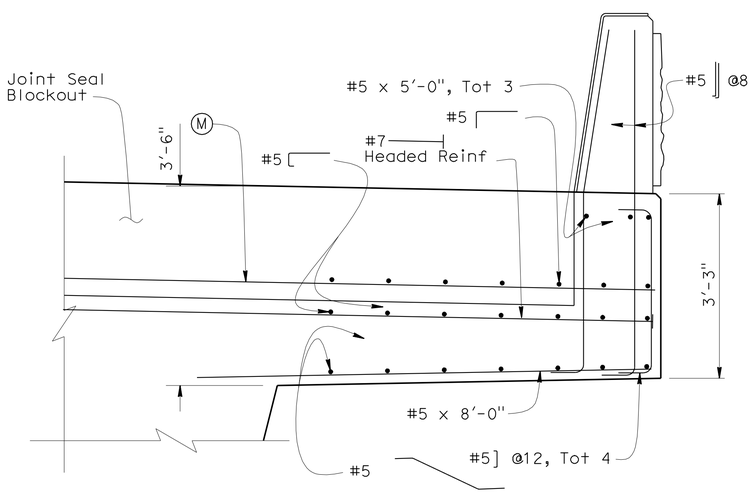

SECTION E-E
3/4" = 1'-0"

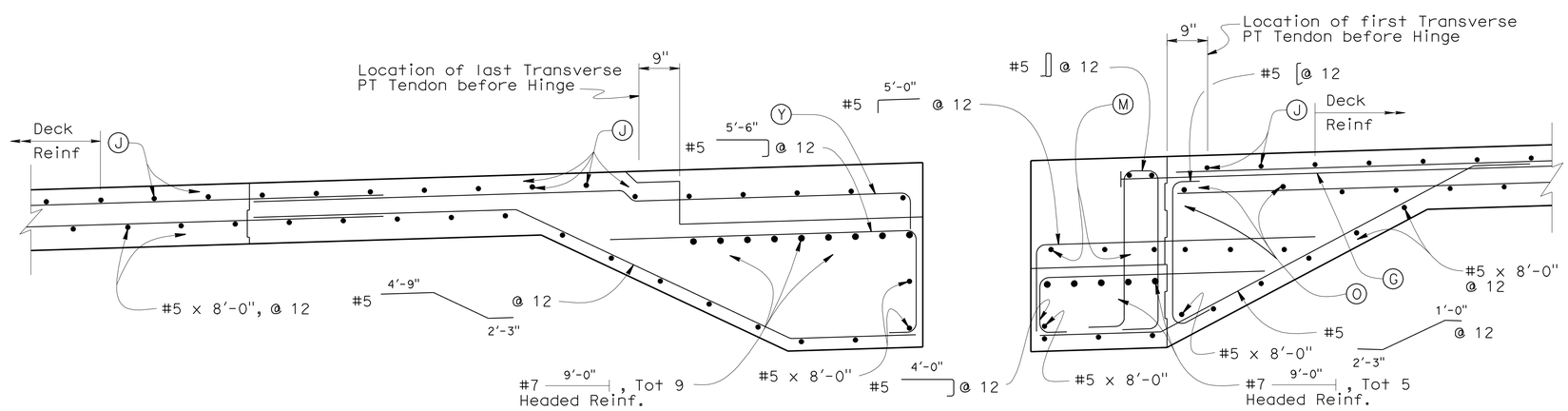

SECTION F-F
3/4" = 1'-0"

	BY	CHECKED
DESIGN	Ahmed M. M. Ibrahim	F. Zayati
DETAILS	T. Nguyen	F. Zayati
QUANTITIES	M. Friedheim	N. Tachta

STATE OF CALIFORNIA
DEPARTMENT OF TRANSPORTATION

DIVISION OF ENGINEERING SERVICES
STRUCTURE DESIGN
DESIGN BRANCH 14

BRIDGE NO. 53-3032
POST MILE 3.58

SCHUYLER HEIM BRIDGE (REPLACE)
HINGE 2 DETAILS NO. 3

STRUCTURES DESIGN DETAIL SHEET (ENGLISH) (REV. 10/25/05)

ORIGINAL SCALE IN INCHES FOR REDUCED PLANS 0 1 2 3

CU 07-271
EA 138201

DISREGARD PRINTS BEARING EARLIER REVISION DATES

REVISION DATES: 10-01-09 12-18-09 1-18-10 2-08-10 04-12-10 04-30-10

SHEET 94 OF 247

FILE => 53-3032-1-p-jhinge2-1det03.dgn

USERNAME => trmikesi DATE PLOTTED => 19-NOV-2010 TIME PLOTTED => 08:04

DIST	COUNTY	ROUTE	POST MILES TOTAL PROJECT	SHEET No	TOTAL SHEETS
07	LA	47,103	3.5/4.6, 0.0/1.1	597	1003

REGISTERED CIVIL ENGINEER 05-24-10 DATE

10-11-10
PLANS APPROVAL DATE

The State of California or its officers or agents shall not be responsible for the accuracy or completeness of electronic copies of this plan sheet.

REGISTERED PROFESSIONAL ENGINEER FOUED ZAYATI No. C57046 Exp. 06-30-11 CIVIL STATE OF CALIFORNIA

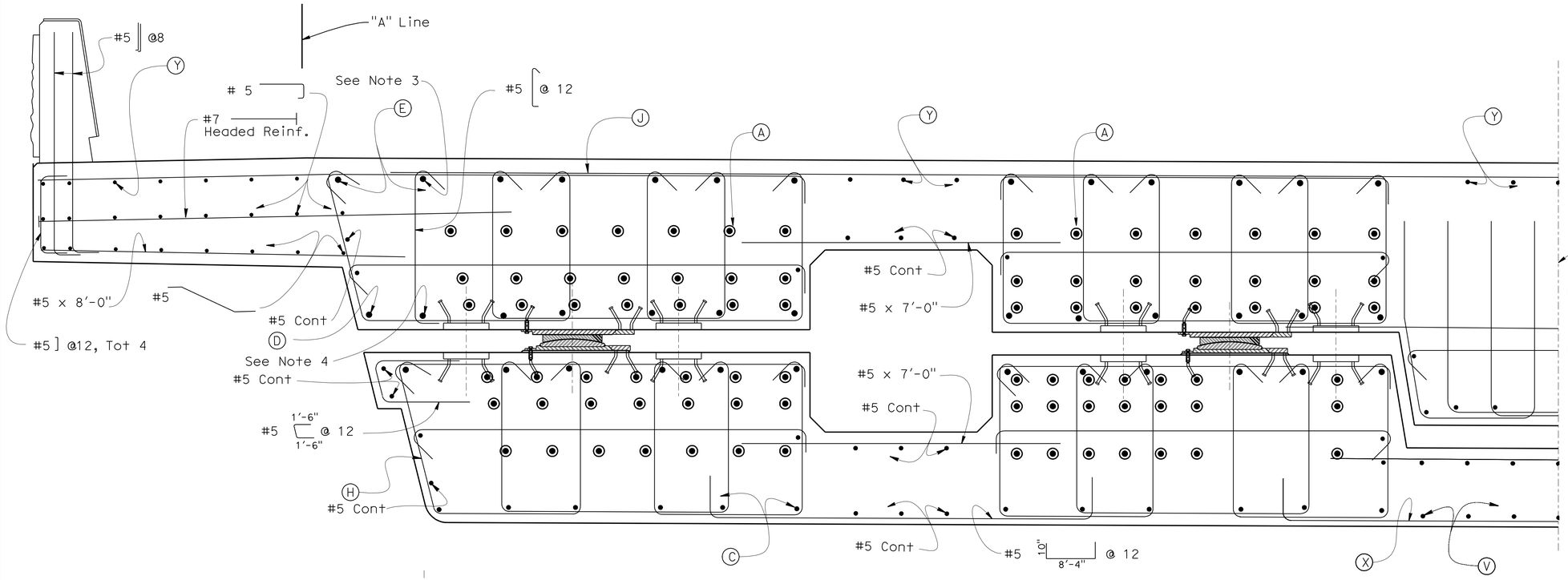

NOTES:

1. Typical Section Reinforcement not shown. See "TYPICAL SECTION No. 1" sheet.
2. For location of 'Section K-K', see "HINGE 2 DETAILS No. 1" sheet.
3. Add additional (E) bar
4. Add additional (D) bar
5. For rebar designation see "HINGE 2 (STAGE 1) DETAILS No. 2" sheet.

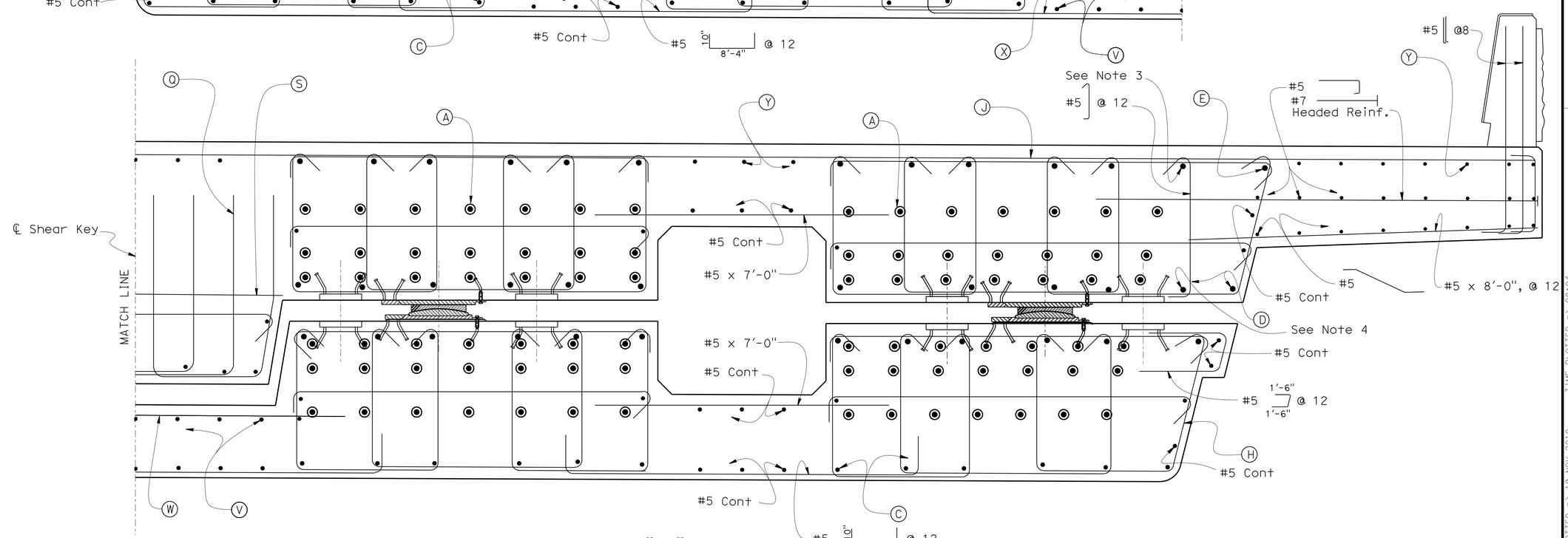

SECTION K-K ("A" Line)

3/4" = 1'-0"

DESIGN	BY Ahmed M. M.Ibrahim	CHECKED F. Zayati	
DETAILS	BY T. Nguyen	CHECKED F. Zayati	
QUANTITIES	BY M. Friedheim	CHECKED N. Tachta	

STATE OF CALIFORNIA DEPARTMENT OF TRANSPORTATION

DIVISION OF ENGINEERING SERVICES STRUCTURE DESIGN DESIGN BRANCH 14

BRIDGE NO. 53-3032
POST MILE 3.58

SCHUYLER HEIM BRIDGE (REPLACE)
HINGE 2 (STAGE 2) DETAILS NO. 4

STRUCTURES DESIGN DETAIL SHEET (ENGLISH) (REV. 10/25/05)

ORIGINAL SCALE IN INCHES FOR REDUCED PLANS 0 1 2 3

CU 07-271
EA 138201

DISREGARD PRINTS BEARING EARLIER REVISION DATES

REVISION DATES 01-07-10 04-12-10 04-16-10 04-30-10 05-12-10 05-25-10

SHEET 95 OF 247

FILE => 53-3032-1-p-jhinge2-1det04.dgn

USERNAME => trmikes1 DATE PLOTTED => 19-NOV-2010 TIME PLOTTED => 08:04

DIST	COUNTY	ROUTE	POST MILES TOTAL PROJECT	SHEET No	TOTAL SHEETS
07	LA	47,103	3.5/4.6, 0.0/1.1	598	1003

REGISTERED CIVIL ENGINEER 05-24-10 DATE

10-11-10
PLANS APPROVAL DATE

The State of California or its officers or agents shall not be responsible for the accuracy or completeness of electronic copies of this plan sheet.

REGISTERED PROFESSIONAL ENGINEER
FOUED ZAYATI
No. C57046
Exp. 06-30-11
CIVIL
STATE OF CALIFORNIA

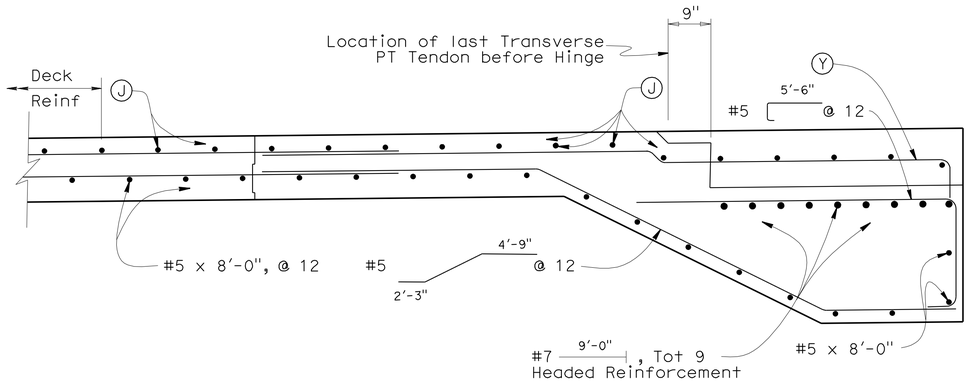

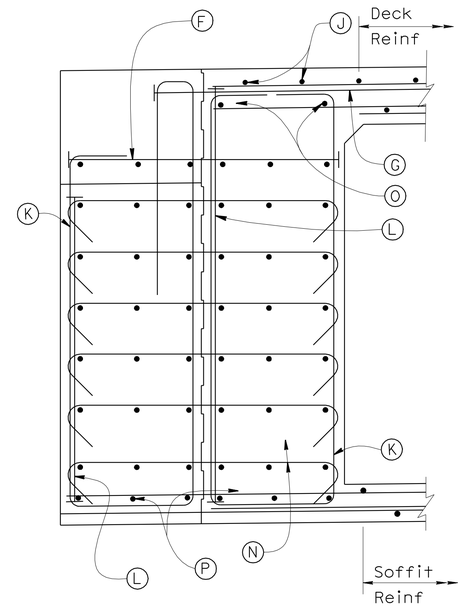

SECTION L-L

¾" = 1'-0"

NOTES:

1. Typical Section Reinforcement not shown. See "TYPICAL SECTION No. 1" sheet.
2. See "TYPICAL SECTION No. 1" sheet for transverse prestress details
3. Add additional (E) bar.
4. Add additional (D) bar.
5. For location of 'Section J-J ("A" Line)', see "HINGE 2 DETAILS No. 1" sheet.
6. For location of 'Section L-L', see "HINGE 2 (STAGE 1) LAYOUT" sheet.
7. Right Overhang reinforcement shown, left Overhang reinforcment similar.
8. For rebar designation, see " HINGE 2 (STAGE 1) DETAILS No. 2" sheet.

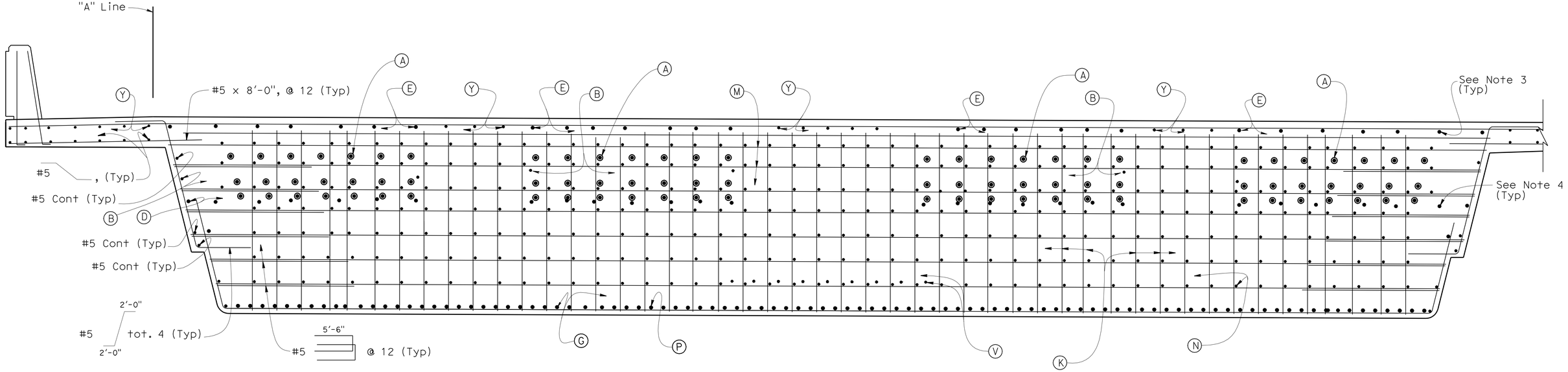

SECTION J-J ("A" Line)

½" = 1'-0"

DESIGN	BY Ahmed M. M. Ibrahim	CHECKED F. Zayati	
DETAILS	BY T. Nguyen	CHECKED F. Zayati	
QUANTITIES	BY M. Friedheim	CHECKED N. Tachta	

STATE OF CALIFORNIA
DEPARTMENT OF TRANSPORTATION

DIVISION OF ENGINEERING SERVICES
STRUCTURE DESIGN
DESIGN BRANCH 14

BRIDGE NO. 53-3032
POST MILE 3.58

SCHUYLER HEIM BRIDGE (REPLACE)
HINGE 2 (STAGE 2) DETAILS NO. 5

STRUCTURES DESIGN DETAIL SHEET (ENGLISH) (REV. 10/25/05)

ORIGINAL SCALE IN INCHES FOR REDUCED PLANS 0 1 2 3

CU 07-271
EA 138201

DISREGARD PRINTS BEARING EARLIER REVISION DATES

REVISION DATES: 01-06-10 02-11-10 04-12-10 04-16-10 04-30-10 05-25-10

SHEET 96 OF 247

FILE => 53-3032-1-p-jhinge2-1det05.dgn

USERNAME => ttmirkes1 DATE PLOTTED => 19-NOV-2010 TIME PLOTTED => 08:04

DIST	COUNTY	ROUTE	POST MILES TOTAL PROJECT	SHEET No	TOTAL SHEETS
07	LA	47,103	3.5/4.6, 0.0/1.1	599	1003

REGISTERED CIVIL ENGINEER 05-24-10 DATE

10-11-10
PLANS APPROVAL DATE

The State of California or its officers or agents shall not be responsible for the accuracy or completeness of electronic copies of this plan sheet.

REGISTERED PROFESSIONAL ENGINEER FOUED ZAYATI No. C57046 Exp. 06-30-11 CIVIL STATE OF CALIFORNIA

NOTES:

1. For location of 'Section A-A' and 'Section B-B', see "HINGE 2 (STAGE 1) LAYOUT" sheet.

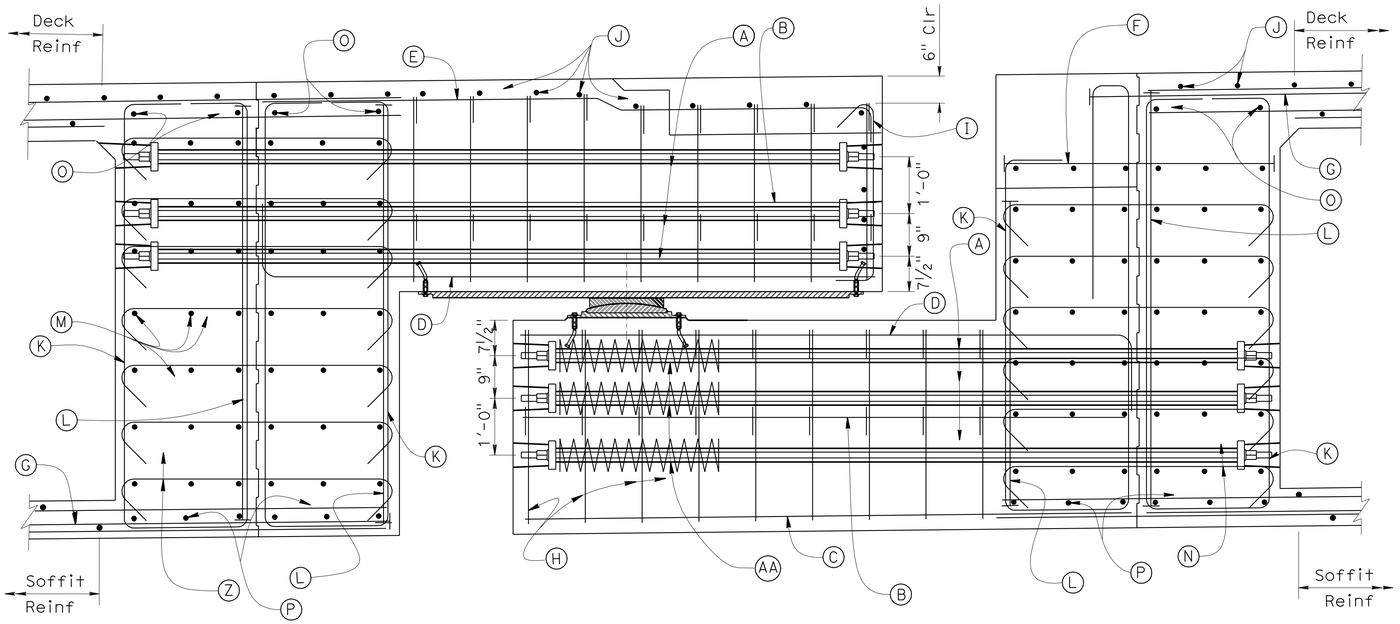

SECTION A-A

¾" = 1'-0"

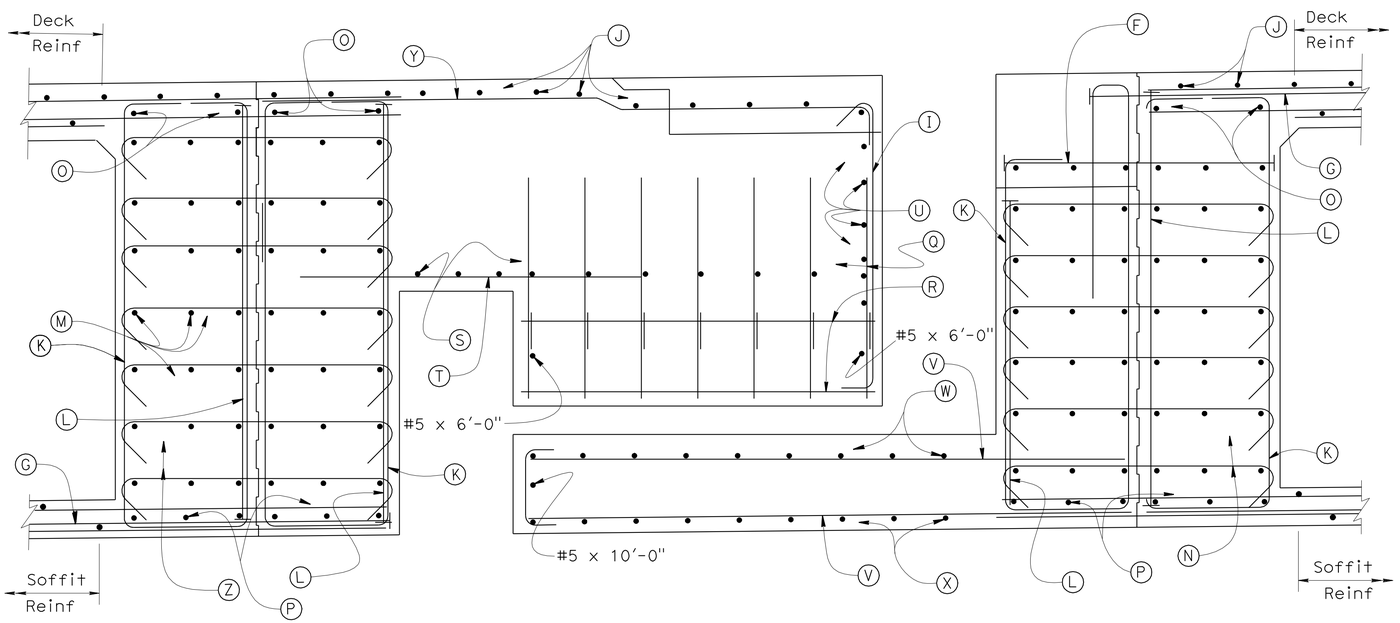

SECTION B-B

¾" = 1'-0"

LEGEND:

- (A) 1¾" Dia. HS Stress bars, Tot. 3 per layer, per Bearing (Typ)
- (B) #6 Cont, Tot 2 per Bearing
- (C) #6 Cont, Tot 6 per Bearing
- (D) #9 Tot 4 per Bearing (Typ)
- (E) #6 , Tot 4 per Bearing
- (F) #11 @ 6
- (G) #11 12'-6" @ 6
- (H) #5 @ 12, at each Bearing Seat
- (I) #5 @ 12
- (J) #5 @ 12, Cont
- (K) #6 3'-9" @ 12 (Typ)
- (L) #9 @ 6 (Typ)
- (M) #5 Cont, Tot 6 per layer, Tot 7 layers
- (N) #5 Tot 6, @ 12 (Typ)
- (O) #5 Cont, Tot 4 (Typ)
- (P) #5 4'-0" 4'-0" Tot 12
- (Q) #5 2'-0" @ 12
- (R) #5 x 6'-9", Tot 8
- (S) #8 2'-6" 2'-6" @ 12
- (T) #5 x 5'-0", @ 12
- (U) #5 Cont, Tot 4
- (V) #5 @ 12, Cont
- (W) #5 x 10'-0", @ 12
- (X) #5 10" 12'-0" @12
- (Y) #5 @ 12
- (Z) #5 Tot 7, @ 12 (Typ)
- (AA) #4 Spiral, 8" Ø, 2½" pitch by 1'-6" long

DESIGN	BY Ahmed M. M. Ibrahim	CHECKED F. Zayati	
DETAILS	BY T. Nguyen	CHECKED F. Zayati	
QUANTITIES	BY M. Friedheim	CHECKED N. Tachta	

STATE OF CALIFORNIA
DEPARTMENT OF TRANSPORTATION

DIVISION OF ENGINEERING SERVICES
STRUCTURE DESIGN
DESIGN BRANCH 14

BRIDGE NO. 53-3032
POST MILE 3.58

SCHUYLER HEIM BRIDGE (REPLACE)
HINGE 2 (NEW DOCK ON RAMP) DETAILS NO. 6

STRUCTURES DESIGN DETAIL SHEET (ENGLISH) (REV. 10/25/05)

ORIGINAL SCALE IN INCHES FOR REDUCED PLANS 0 1 2 3

CU 07-271
EA 138201

DISREGARD PRINTS BEARING EARLIER REVISION DATES

REVISION DATES: 3-25-10 4-12-10 4-16-10 4-30-10

SHEET 97 OF 247

FILE => 53-3032-1-p-jhinge2-1det06-on.dgn

USERNAME => trmikest DATE PLOTTED => 19-NOV-2010 TIME PLOTTED => 08:05

DIST	COUNTY	ROUTE	POST MILES TOTAL PROJECT	SHEET No	TOTAL SHEETS
07	LA	47,103	3.5/4.6, 0.0/1.1	600	1003

REGISTERED CIVIL ENGINEER 05-24-10 DATE

10-11-10
PLANS APPROVAL DATE

REGISTERED PROFESSIONAL ENGINEER FOUED ZAYATI No. C57046 Exp. 06-30-11 CIVIL STATE OF CALIFORNIA

The State of California or its officers or agents shall not be responsible for the accuracy or completeness of electronic copies of this plan sheet.

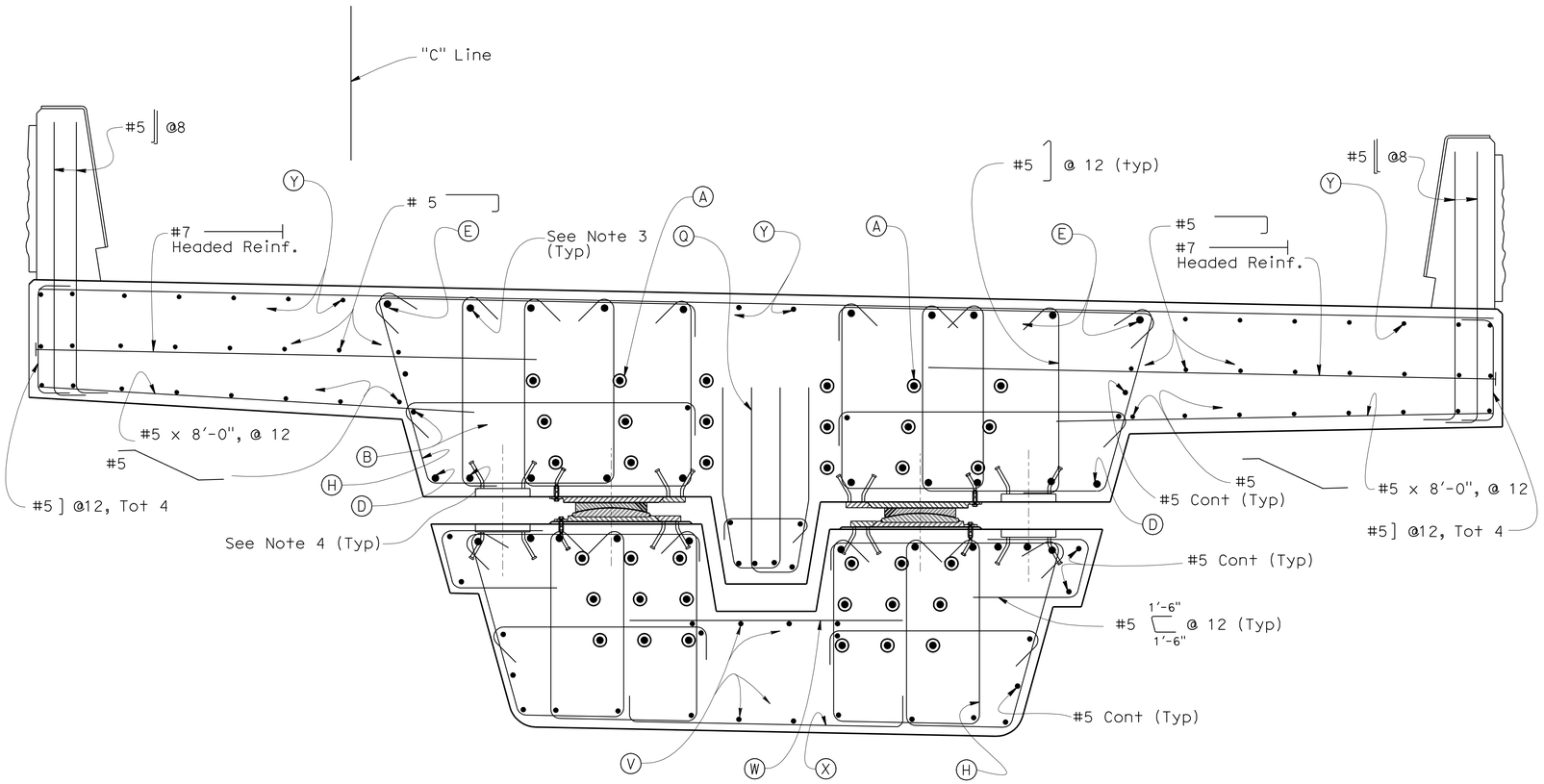

SECTION K-K ("C" Line)

3/4" = 1'-0"

NOTES:

1. Typical Section Reinforcement not shown. See "TYPICAL SECTION No. 1" sheet.
2. For location of 'Section K-K ("C" Line)', see "HINGE 2 DETAILS No. 1" sheet.
3. Add additional (E) bar
4. Add additional (D) bar
5. For rebar designation see "HINGE 2 (STAGE 1) DETAILS No. 2" sheet.

	BY	CHECKED
DESIGN	Ahmed M. M. Ibrahim	F. Zayati
DETAILS	T. Nguyen	F. Zayati
QUANTITIES	M. Friedheim	N. Tachta

STATE OF CALIFORNIA
DEPARTMENT OF TRANSPORTATION

DIVISION OF ENGINEERING SERVICES
STRUCTURE DESIGN
DESIGN BRANCH 14

BRIDGE NO. 53-3032
POST MILE 3.58

SCHUYLER HEIM BRIDGE (REPLACE)
HINGE 2 (NEW DOCK ON RAMP) DETAILS NO. 7

STRUCTURES DESIGN DETAIL SHEET (ENGLISH) (REV. 10/25/05)

ORIGINAL SCALE IN INCHES FOR REDUCED PLANS 0 1 2 3

CU 07-271
EA 138201

DISREGARD PRINTS BEARING EARLIER REVISION DATES

REVISION DATES: 4-16-10 4-30-10 05-25-10

SHEET 98 OF 247

FILE => 53-3032-1-p-jhinge2-1det07-on.dgn

USERNAME => trmikes1 DATE PLOTTED => 19-NOV-2010 TIME PLOTTED => 08:05