Dist	COUNTY	ROUTE	POST MILES TOTAL PROJECT	SHEET No.	TOTAL SHEETS
07	LA	47,103	3.5/4.6, 0.0/1.1	301	1003

REGISTERED LANDSCAPE ARCHITECT 7/19/10

PLANS APPROVAL DATE 10-11-10

LICENSED LANDSCAPE ARCHITECT — Victor H. Tatsumi 2653 — Signature — 08-31-10 Renewal Date — 07-19-10 Date — STATE OF CALIFORNIA

THE STATE OF CALIFORNIA OR ITS OFFICERS OR AGENTS SHALL NOT BE RESPONSIBLE FOR THE ACCURACY OR COMPLETENESS OF SCANNED COPIES OF THIS PLAN SHEET.

TATSUMI AND PARTNERS, INC.
5 CORPORATE PARK
SUITE 200
IRVINE, CA 92606

ALAMEDA CORRIDOR
TRANSPORTATION AUTHORITY
ONE CIVIL PLAZA, SUITE 350
CARSON, CA 90745

NOTES:

1. FOR COMPLETE RIGHT OF WAY AND ACCURATE ACCESS DATA, SEE RIGHT OF WAY RECORD MAPS AT DISTRICT OFFICE.

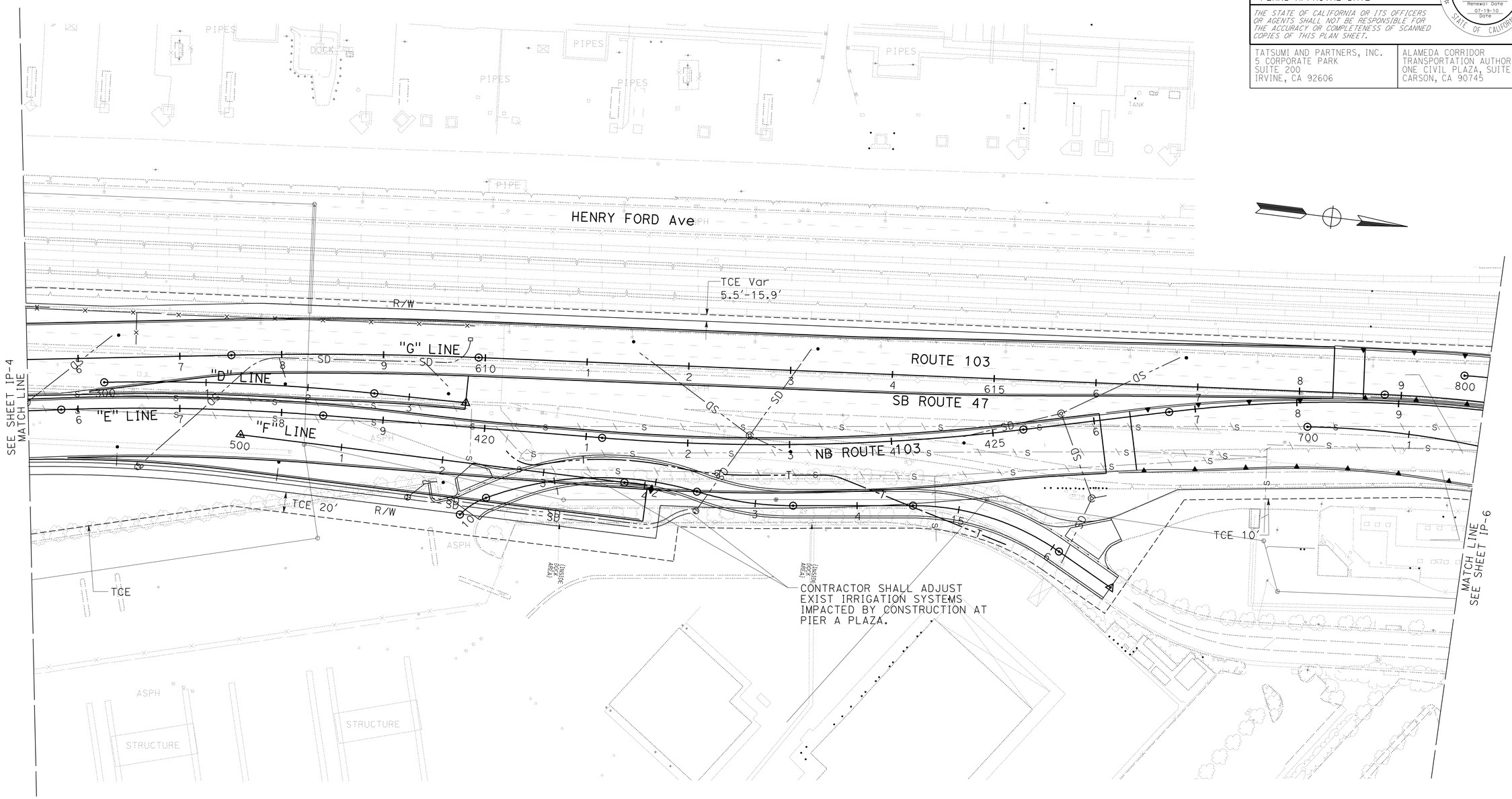

THIS PLAN ACCURATE FOR IRRIGATION WORK ONLY

IRRIGATION PLAN

SCALE: 1" = 50'

IP-5

STATE OF CALIFORNIA - DEPARTMENT OF TRANSPORTATION

Caltrans

PROJECT LANDSCAPE ARCHITECT: DAVID H. TATSUMI

CALCULATED-DESIGNED BY: RYOHEI OTA

CHECKED BY: MICHAEL ACEVES

REVISED BY

DATE REVISED

LAST REVISION 07-19-10

DATE PLOTTED => 18-OCT-2010

TIME PLOTTED => 10:07

Dist	COUNTY	ROUTE	POST MILES TOTAL PROJECT	SHEET No.	TOTAL SHEETS
07	LA	47,103	3.5/4.6, 0.0/1.1	302	1003

REGISTERED LANDSCAPE ARCHITECT 7/19/10

PLANS APPROVAL DATE 10-11-10

LICENSED LANDSCAPE ARCHITECT — Victor H. Tatsumi — Signature — 08-31-10 Renewal Date — 07-19-10 Date — STATE OF CALIFORNIA

THE STATE OF CALIFORNIA OR ITS OFFICERS OR AGENTS SHALL NOT BE RESPONSIBLE FOR THE ACCURACY OR COMPLETENESS OF SCANNED COPIES OF THIS PLAN SHEET.

TATSUMI AND PARTNERS, INC.
5 CORPORATE PARK
SUITE 200
IRVINE, CA 92606

ALAMEDA CORRIDOR
TRANSPORTATION AUTHORITY
ONE CIVIL PLAZA, SUITE 350
CARSON, CA 90745

NOTE:

1. FOR COMPLETE RIGHT OF WAY AND ACCURATE ACCESS DATA, SEE RIGHT OF WAY RECORD MAPS AT DISTRICT OFFICE.

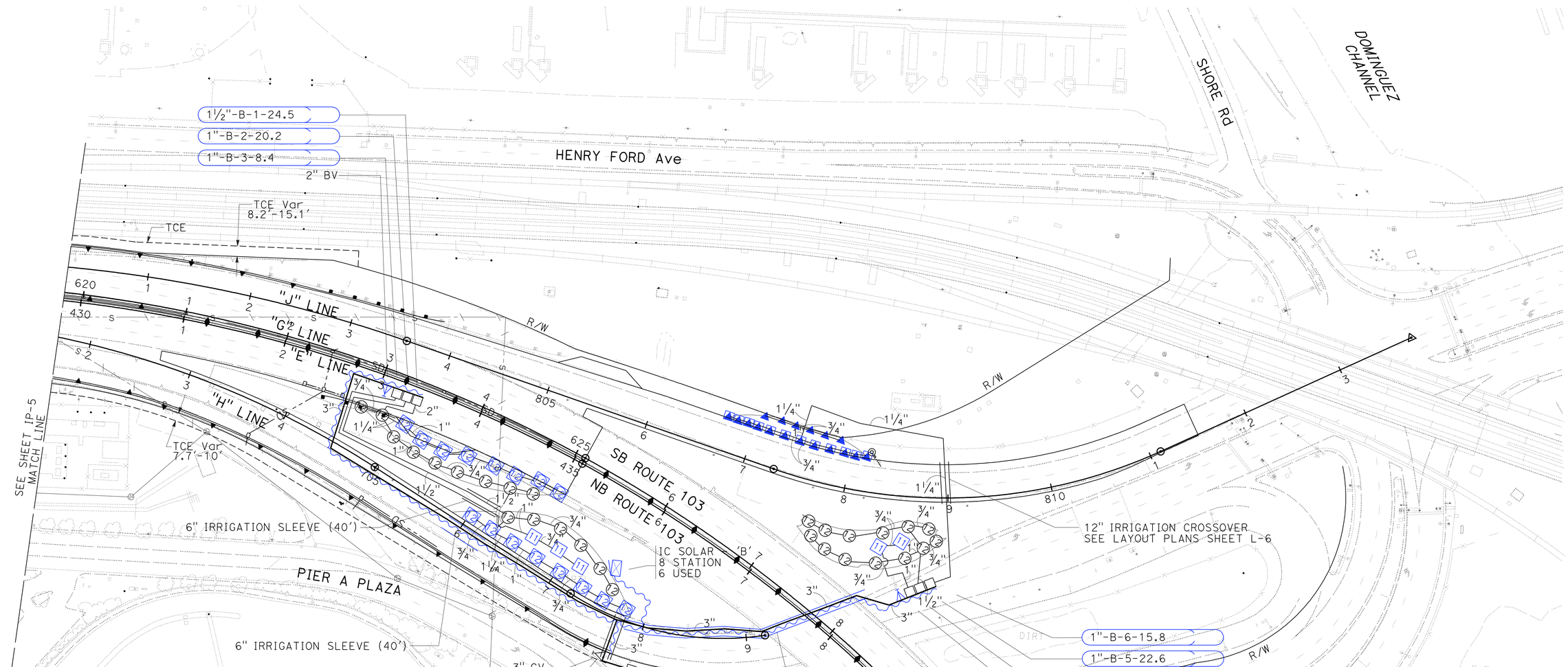

THIS PLAN ACCURATE FOR IRRIGATION WORK ONLY

IRRIGATION PLAN

SCALE: 1" = 50'

IP-6

STATE OF CALIFORNIA - DEPARTMENT OF TRANSPORTATION

Caltrans

PROJECT LANDSCAPE ARCHITECT: DAVID H. TATSUMI

CALCULATED-DESIGNED BY: RYOHEI OTA

CHECKED BY: MICHAEL ACEVES

REVISED BY

DATE REVISED

LAST REVISION DATE PLOTTED => 20-OCT-2010
07-19-10 TIME PLOTTED => 18:07

Dist	COUNTY	ROUTE	POST MILES TOTAL PROJECT	SHEET No.	TOTAL SHEETS
07	LA	47,103	3.5/4.6, 0.0/1.1	303	1003

REGISTERED LANDSCAPE ARCHITECT 7/19/10

PLANS APPROVAL DATE 10-11-10

LICENSED LANDSCAPE ARCHITECT Richard H. Tatsumi 2653 Signature 08-31-10 Renewal Date 07-19-10 Date STATE OF CALIFORNIA

THE STATE OF CALIFORNIA OR ITS OFFICERS OR AGENTS SHALL NOT BE RESPONSIBLE FOR THE ACCURACY OR COMPLETENESS OF SCANNED COPIES OF THIS PLAN SHEET.

TATSUMI AND PARTNERS, INC.
5 CORPORATE PARK
SUITE 200
IRVINE, CA 92606

ALAMEDA CORRIDOR TRANSPORTATION AUTHORITY
ONE CIVIL PLAZA, SUITE 350
CARSON, CA 90745

SPRINKLER SCHEDULE

SYMBOL	TYPE	DESCRIPTION	SPRAY PATTERN	OPERATING PRESSURE (PSI)	PRESSURE COMPENSATING	PLUS / MINUS 5% DISCHARGE: GALLONS PER SECOND (GPS)	GALLONS PER MINUTE (GPM)	GALLONS PER HOUR (GPH)	RADIUS (Ft)	WIDTH x LENGTH (Ft)	MATERIAL	NOZZLE SIZE (INCH)	INLET CONNECTION (NPT) (DN IN INCHES) (INCH)	POSITIVE-LOCKING ADJ ARC STOP	BACKSPLASH PREVENTER	DIFFUSER PIN	DISTANCE CONTROL FLAP	ADJ DISCHARGE	RISER: TYPE	MATERIAL: PLASTIC	GALVANIZED	SIZE (IPS INCH)	HEIGHT (INCH)	FLOW SHUTOFF DEVICE	⑤ SWING JOINT (TYPE)	RISER SUPPORT	SPRINKLER PROTECTOR (TYPE)	REMARKS
▲	B-2	SHRUB SPRAY POP-UP	F/P	30	-	-	0.23-1.16	-	10-15	-	PL	½	-	-	-	-	-	X	-	-	-	-	-	-	I	-	II	12" POP-UP
11 / ⑪	A-11	GEAR DRIVEN	F/P	25	-	-	0.74-4.24	-	23-29	-	PL	½	-	-	-	-	-	X	IV	-	X	½	18	-	I	X	-	RISER
12 / ⑫	A-12	GEAR DRIVEN POP-UP	F/P	25	-	-	0.74-4.24	-	23-29	-	PL	½	-	-	-	-	-	X	-	-	-	-	-	-	I	-	II	12" POP-UP

X IN BOX DENOTES REQUIREMENT

APPLICABLE WHEN CIRCLED BELOW:

1 - See Special Provisions.
2 - If a pressure compensating device is specified, the discharge and radii shown reflect its use.
3 - Arc Stop shall be fitted with a nut and bolt.
4 - Vinyl-coated cast iron housing.
⑤ - Swing Joints required adjacent to shoulders, curbs, sidewalks, and dikes.
6 - Unless otherwise shown on plans.
7 - Install two bubblers per tree.

ABBREVIATIONS

Adj — adjustable
B/B — brass/bronze
B/B/PL — brass/bronze/plastic
B/PL — brass/plastic
CST — center strip
DN — diameter nominal
EST — end strip
F — full circle
F/P — full/part circle
H — half circle
IPS — iron pipe size
GPH — gallons per hour
GPM — gallons per minute
GPS — gallons per second
Ft — feet
NPT — national pipe thread
P — part circle
PL — plastic
Q — quarter circle
SST — side strip
T — third circle
TQ — three quarter circle
TT — two thirds circle

PROPOSED	ITEM DESCRIPTION
⊠	WATER METER (WM) REFER TO UTILITY PLANS FOR WATER METER CONNECTION
	BACKFLOW PREVENTER ASSEMBLY IN ENCLOSURE (BPAE)
⊠	IRRIGATION CONTROLLER (IC) (SOLAR) IN CONTROLLER ENCLOSURE CABINET (ICC) DIG - LEIT XRC
	CONTROL AND NEUTRAL CONDUCTORS (CNC)
	CONDUIT (COND)
	IRRIGATION SLEEVE
	GALVANIZED STEEL PIPE (SUPPLY LINE) (MAIN) (GSP)
	GALVANIZED STEEL PIPE (SUPPLY LINE) (LATERAL) (GSP)
	PLASTIC PIPE (PR 200) (SUPPLY LINE) (MAIN)
	PLASTIC PIPE (SCH 40) (SUPPLY LINE) (LATERAL)
	REMOTE CONTROL VALVE (RCV) REMOTE CONTROL VALVE (MASTER) (RCVM)
	GATE VALVE (GV)
⑪	SPRINKLER W/ SPRINKLER PROTECTOR

VALVE CODE

2½"-A-2b-500-60

- RCV SIZE
- IRRIGATION CONTROLLER
- CONTROLLER STATION
- VALVE IN PARALLEL (IF APPLICABLE)
- L/min
- QUANTITY OF TYPE C, D, OR E SPRINKLERS

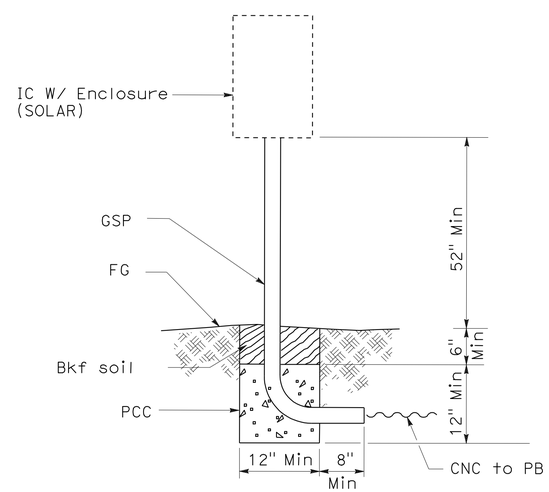

SECTION

SOLAR IRRIGATION CONTROLLER

SPRINKLER SCHEDULE AND DETAIL

LD-1

LAST REVISION 07-19-10 | DATE PLOTTED => 18-OCT-2010 | TIME PLOTTED => 10:08

STATE OF CALIFORNIA - DEPARTMENT OF TRANSPORTATION
Caltrans

PROJECT LANDSCAPE ARCHITECT: DAVID H. TATSUMI

CALCULATED-DESIGNED BY: MICHAEL ACEVES | CHECKED BY: RYOHEI OTA | REVISED BY | DATE REVISED

Dist	COUNTY	ROUTE	POST MILES TOTAL PROJECT	SHEET No.	TOTAL SHEETS
07	LA	47,103	3.5/4.6, 0.0/1.1	304	1003

REGISTERED LANDSCAPE ARCHITECT 7/19/10

PLANS APPROVAL DATE 10-11-10

LICENSED LANDSCAPE ARCHITECT — Victor H. Tatsumi 2653 — Signature 08-31-10 Renewal Date 07-19-10 Date — STATE OF CALIFORNIA

THE STATE OF CALIFORNIA OR ITS OFFICERS OR AGENTS SHALL NOT BE RESPONSIBLE FOR THE ACCURACY OR COMPLETENESS OF SCANNED COPIES OF THIS PLAN SHEET.

TATSUMI AND PARTNERS, INC.
5 CORPORATE PARK
SUITE 200
IRVINE, CA 92606

ALAMEDA CORRIDOR
TRANSPORTATION AUTHORITY
ONE CIVIL PLAZA, SUITE 350
CARSON, CA 90745

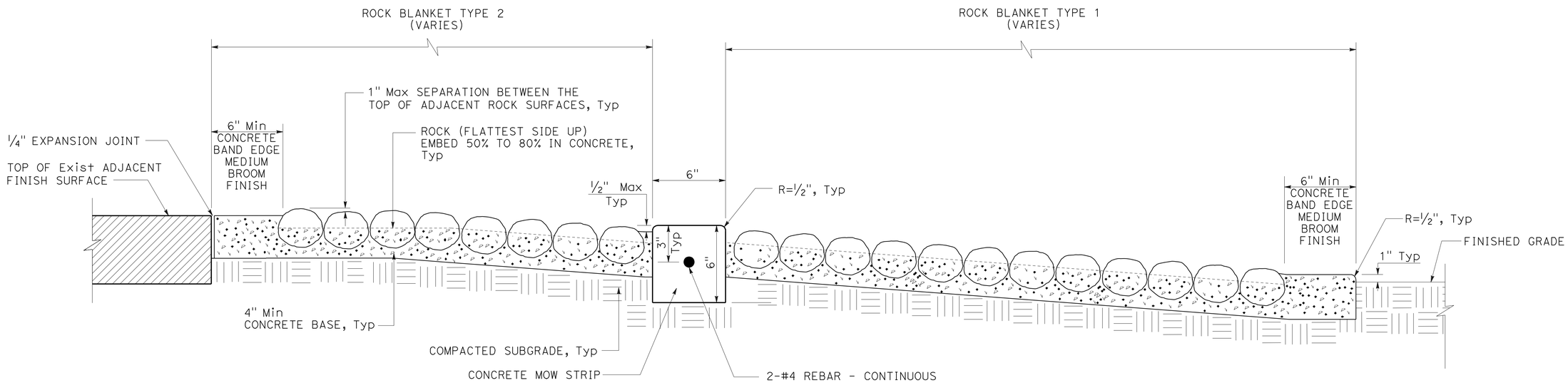

SECTION

ROCK BLANKET AND CONCRETE MOW STRIP

LANDSCAPE DETAIL

NO SCALE

LD-2

STATE OF CALIFORNIA - DEPARTMENT OF TRANSPORTATION

Caltrans

PROJECT LANDSCAPE ARCHITECT: DAVID H. TATSUMI

CALCULATED-DESIGNED BY: RYOHEI OTA

CHECKED BY: MICHAEL ACEVES

REVISED BY

DATE REVISED

LAST REVISION: DATE PLOTTED => 20-OCT-2010 TIME PLOTTED => 18:07

07-19-10

BORDER LAST REVISED 4/11/2008

RELATIVE BORDER SCALE IS IN INCHES 0 1 2 3

USERNAME => trstrk
DGN FILE => 713820tn002.dgn

CU 07271

EA 138201

Dist	COUNTY	ROUTE	POST MILES TOTAL PROJECT	SHEET No.	TOTAL SHEETS
07	LA	47,103	3.5/4.6, 0.0/1.1	305	1003

REGISTERED LANDSCAPE ARCHITECT 7/19/10

PLANS APPROVAL DATE 10-11-10

LICENSED LANDSCAPE ARCHITECT — David H. Tatsumi — Signature — 08-31-10 Renewal Date — 07-19-10 Date — STATE OF CALIFORNIA

THE STATE OF CALIFORNIA OR ITS OFFICERS OR AGENTS SHALL NOT BE RESPONSIBLE FOR THE ACCURACY OR COMPLETENESS OF SCANNED COPIES OF THIS PLAN SHEET.

TATSUMI AND PARTNERS, INC.
5 CORPORATE PARK
SUITE 200
IRVINE, CA 92606

ALAMEDA CORRIDOR
TRANSPORTATION AUTHORITY
ONE CIVIL PLAZA, SUITE 350
CARSON, CA 90745

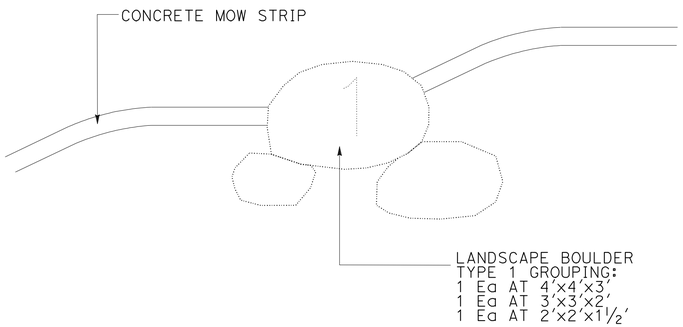

PLAN VIEW
(Typ)

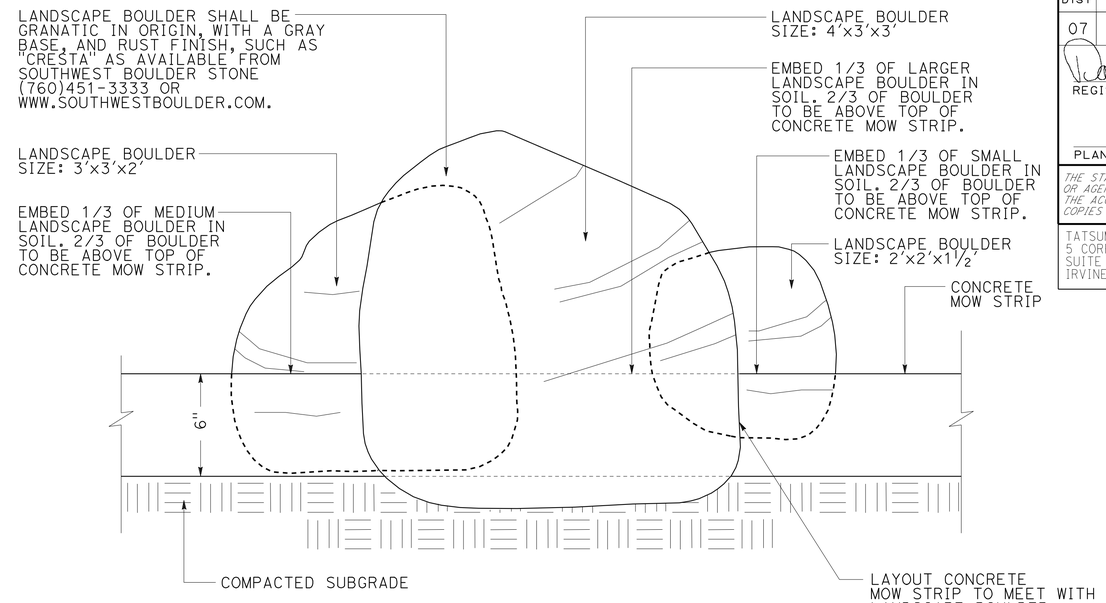

SECTION
(Typ)

LANDSCAPE BOULDER LAYOUT (BOULDER GROUP 1)

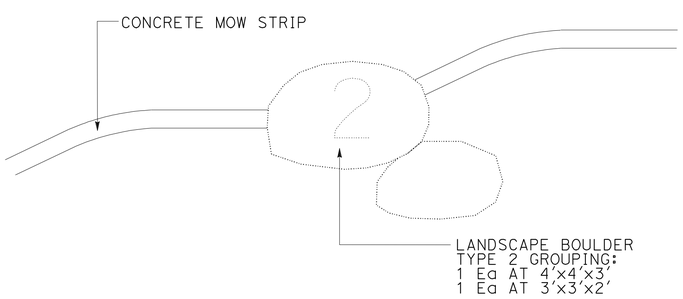

PLAN VIEW
(Typ)

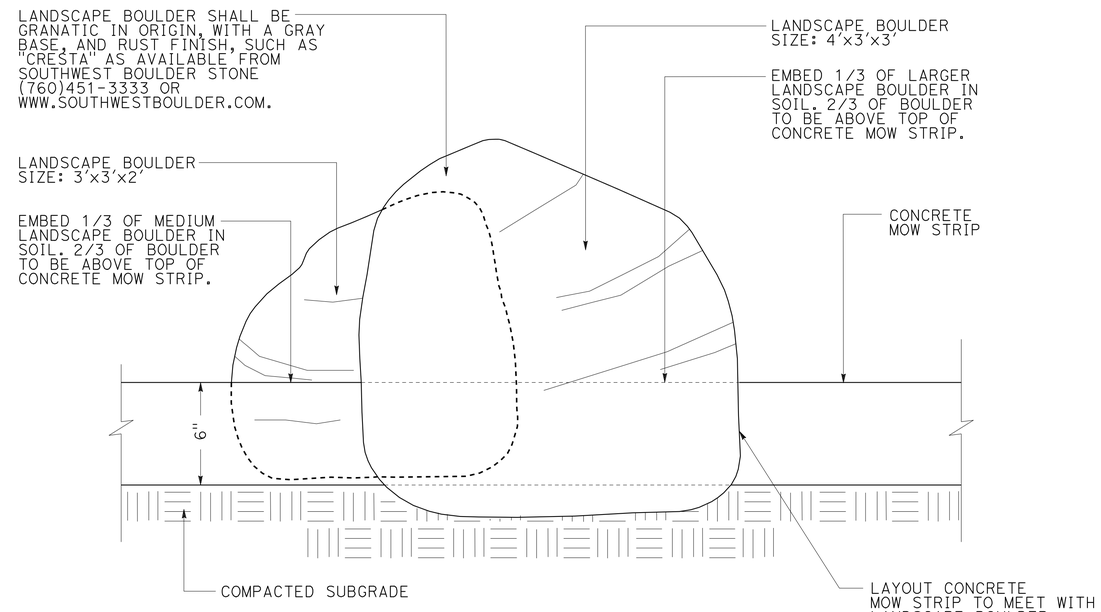

SECTION
(Typ)

LANDSCAPE BOULDER LAYOUT (BOULDER GROUP 2)

LANDSCAPE DETAIL

NO SCALE

LD-3

STATE OF CALIFORNIA - DEPARTMENT OF TRANSPORTATION
Caltrans®

PROJECT LANDSCAPE ARCHITECT: DAVID H. TATSUMI

CALCULATED-DESIGNED BY: RYOHEI OTA
CHECKED BY: MICHAEL ACEVES

REVISED BY | DATE REVISED

LAST REVISION 07-19-10 | DATE PLOTTED => 14-OCT-2010 | TIME PLOTTED => 13:38

Dist	COUNTY	ROUTE	POST MILES TOTAL PROJECT	SHEET No.	TOTAL SHEETS
07	LA	47,103	3.5/4.6, 0.0/1.1	306	1003

REGISTERED CIVIL ENGINEER 7/19/10 DATE

PLANS APPROVAL DATE

REGISTERED PROFESSIONAL ENGINEER DOUGLAS SMITH No. 43549 Exp 06/30/12 CIVIL STATE OF CALIFORNIA

THE STATE OF CALIFORNIA OR ITS OFFICERS OR AGENTS SHALL NOT BE RESPONSIBLE FOR THE ACCURACY OR COMPLETENESS OF SCANNED COPIES OF THIS PLAN SHEET.

URS CORPORATION
915 WILSHIRE BOULEVARD
SUITE 700
LOS ANGELES, CA 90017

ALAMEDA CORRIDOR TRANSPORTATION AUTHORITY
ONE CIVIL PLAZA, SUITE 350
CARSON, CA 90745

NOTE:

FOR ACCURATE RIGHT OF WAY AND ACCESS DATA, CONTACT RIGHT OF WAY ENGINEERING AT THE DISTRICT OFFICE.

GENERAL NOTES: (E-1 TO E-12)

1. SEE SIGN AND WALL PLANS FOR LIGHTING STANDARD FOUNDATION AND ANCHORAGE DETAILS ON RETAINING/SOUND WALLS.
2. ALL EXISTING SIGN ILLUMINATION, SOFFITS, LIGHTING STANDARDS AND ELECTRICAL EQUIPMENT WITHIN THE PROJECT LIMITS SHALL BE RC UNLESS OTHERWISE NOTED.
3. ALL EXISTING ELECTRICAL LIGHTING PULL BOXES WITHIN THE PROJECT LIMITS SHALL BE RC UNLESS OTHERWISE NOTED.
4. ALL EXISTING ELECTRICAL LIGHTING CONDUIT WITHIN THE PROJECT LIMITS SHALL BE AB IN PLACE OTHERWISE NOTED.
5. ALL LUMINAIRES SHALL BE LED.
6. SC1A CONTROL FOR LIGHTING AND SIGN ILLUMINATION CONTROL SHALL PROVIDE A NEMA 4X ENCLOSURE TO RESIST CORROSION.
7. INSTALL 1½"C RISER FROM PULL BOX TO NEMA 4X JUNCTION BOX OF WALL LUMINAIRE.

PROJECT NOTES: (E-1 TO E-6)

1 CONDUIT IN BARRIER RAIL TO BE INSTALLED PER Std PLAN B14-3.

2 CONDUITS IN BRIDGE DECK (SEE COMMUNICATION SYSTEM PLANS FOR DETAILS).

3 RR 120/240 V TYPE III-BF METERED SERVICE EQUIPMENT ENCLOSURE ON NEW FOUNDATION.
SERVICE METER ID: 07-53-47-0-005.553
- ADDRESS: 3413 OCEAN Blvd
- 100 A, 2P, 240 V, MAIN CB
- 50 A, 1P, 120 V, SIGNAL AND LIGHTING

4 RS 240/480 V TYPE III-BF METERED SERVICE EQUIPMENT ENCLOSURE. SERVICE METER ID: 07-53-47-0-005.555
- ADDRESS: 1401 ½ OCEAN Blvd

5 RS 120/240 V TYPE III-BF METERED SERVICE EQUIPMENT ENCLOSURE. DISCONNECT AND RP CIRCUITS 12, 14 AND 15. SERVICE METER ID: 07-53-47-0-005.554 KP
- ADDRESS: 3411 OCEAN Blvd

6 INSTALL 120/240 V TYPE III-CF METERED SERVICE EQUIPMENT ENCLOSURE. RECONNECT 6-100 W HPS SOFFIT LIGHTS (CIRCUIT 12), SIGN ILLUMINATION FOR 35142 AND 35146(2 ISL) ON CIRCUIT 14, AND 35157, 35154, AND 35155 (2 ISL) ON CIRCUIT 15. INSTALL NEW CIRCUIT BREAKERS FOR EXISTING CIRCUITS. SERVICE METER No. 1 ID: 07-53-47-0-003.501
- ADDRESS: 3411 OCEAN Blvd
- 100 A, 2P, 240 V, MAIN CB
- 30 A, 2P, 240 V, LIGHTING (CIRCUIT 1)
- 30 A, 2P, 240 V, LIGHTING (CIRCUIT 2)
- 30 A, 2P, 240 V, LIGHTING AND SIGN ILLUMINATION (CIRCUIT 3)
- 30 A, 2P, 240 V, SOFFITS (CIRCUIT 12)
- 30 A, 2P, 240 V, SIGN ILLUMINATION (CIRCUIT 14)
- 30 A, 2P, 240 V, SIGN ILLUMINATION (CIRCUIT 15)

SERVICE METER No. 2 ID: 07-53-47-0-003.502
- ADDRESS: 3461 OCEAN Blvd
- 100 A, 2P, 240 V, MAIN CB
- 30 A, 1P, 120 V, CCTV TI035
- 30 A, 1P, 120 V, LOWERING DEVICE
- 30 A, 1P, 120 V, CABLE NODE TI035

7 RS 120/240 V TYPE III-B UNMETERED SERVICE EQUIPMENT ENCLOSURE. SERVICE ID: P-13223-I

8 INSTALL 120/240 V TYPE III-BF METERED SERVICE EQUIPMENT ENCLOSURE. SERVICE METER ID: 07-53-47-0-003.702
- ADDRESS: 3389 NEW DOCK St
- 100 A, 2P, 240 V, MAIN CB
- 30 A, 2P, 240 V, LIGHTING AND SIGN ILLUMINATION (CIRCUIT 6)

9 INSTALL 120/240 V TYPE III-CF METERED SERVICE EQUIPMENT ENCLOSURE. SERVICE METER No. 1 ID: 07-53-47-0-003.752
- ADDRESS: 3381 NEW DOCK St
- 100 A, 2P, 240 V, MAIN CB
- 30 A, 2P, 240 V, LIGHTING (CIRCUIT 4)
- 30 A, 2P, 240 V, LIGHTING AND SIGN ILLUMINATION (CIRCUIT 5)

SERVICE METER No. 2 ID: 07-53-47-0-003.753
- ADDRESS: 3383 NEW DOCK St
- 100 A, 2P, 240 V, MAIN CB
- 30 A, 1P, 120 V, CCTV TI037
- 30 A, 1P, 120 V, RMS TI037

10 RS 120/240 V TYPE III-B UNMETERED SERVICE EQUIPMENT ENCLOSURE. SERVICE ID: P-13227-I

CONDUIT AND CONDUCTOR SCHEDULE

AWG OR CABLE	CONDUCTOR RUN	1	2	3	4	5	6	7
#8	SIGN ILLUMINATION	4	2	2	2		2	
	LIGHTING AND SIGN ILLUMINATION	4	2		2	2	2	
#4	LIGHTING	4				2	4	2
#8	GROUND	1	1	1	1	1	1	1
CONDUIT SIZE		2-3"	3"	2"	3"	3"	3"	2"

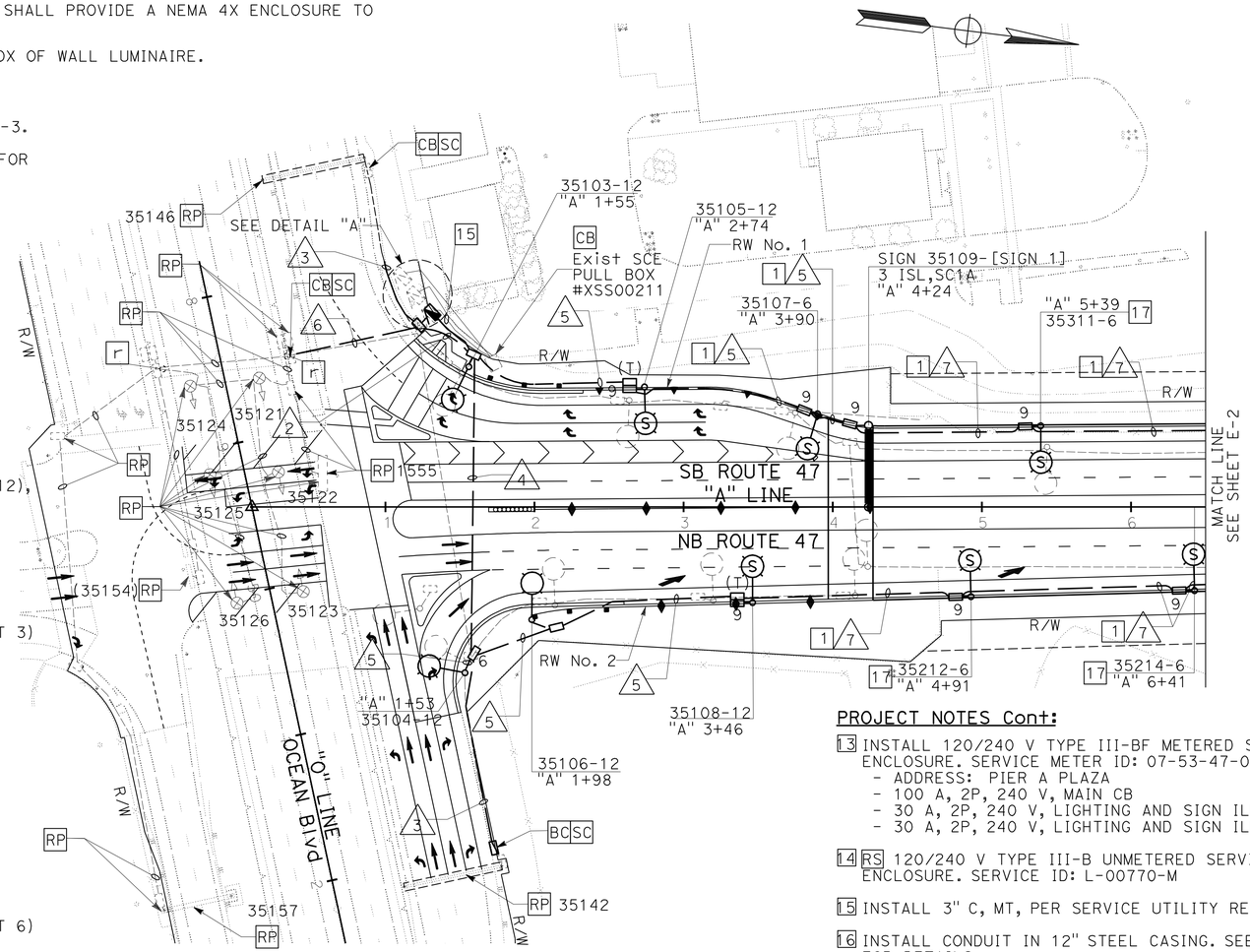

PROJECT NOTES Cont:

11 INSTALL 120/240 V TYPE III-CF METERED SERVICE EQUIPMENT ENCLOSURE. SERVICE METER No. 1 ID: 07-53-47-0-004.101
- ADDRESS: 695 PIER A PLAZA
- 100 A, 2P, 240 V, MAIN CB
- 30 A, 2P, 240 V, LIGHTING (CIRCUIT 7)
- 30 A, 2P, 240 V, LIGHTING AND SIGN ILLUMINATION (CIRCUIT 8)
- 30 A, 2P, 240 V, LIGHTING (NAVIGATION)

SERVICE METER No. 2 ID: 07-53-47-0-004.102
- ADDRESS: 697 PIER A PLAZA
- 30 A, 1P, 120 V, SEISMIC MONITORING
- 20 A, 1P, 120 V, TELEPHONE DEMARCATION CABINET

12 RS 120/240 V TYPE III-B UNMETERED SERVICE EQUIPMENT ENCLOSURE. SERVICE ID: P-132E0-I

LEGEND: (E-1 TO E-10)

RP = REMAIN IN PLACE

- Exist WALL STRUCTURE LUMINAIRE TO BE REMOVED

SCE - SOUTHERN CALIFORNIA EDISON

LADWP - LOS ANGELES DEPARTMENT OF WATER AND POWER

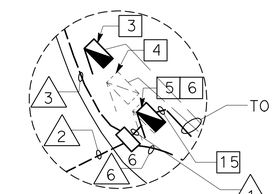

DETAIL "A"
NO SCALE

PROJECT NOTES Cont:

13 INSTALL 120/240 V TYPE III-BF METERED SERVICE EQUIPMENT ENCLOSURE. SERVICE METER ID: 07-53-47-0-004.401
- ADDRESS: PIER A PLAZA
- 100 A, 2P, 240 V, MAIN CB
- 30 A, 2P, 240 V, LIGHTING AND SIGN ILLUMINATION (CIRCUIT 9)
- 30 A, 2P, 240 V, LIGHTING AND SIGN ILLUMINATION (CIRCUIT 10)

14 RS 120/240 V TYPE III-B UNMETERED SERVICE EQUIPMENT ENCLOSURE. SERVICE ID: L-00770-M

15 INSTALL 3" C, MT, PER SERVICE UTILITY REQUIREMENTS.

16 INSTALL CONDUIT IN 12" STEEL CASING. SEE TRACK PLANS FOR DETAILS.

17 INSTALL ENVIRONMENTAL LIGHT SHIELD. SEE SHEET E-10 FOR DETAIL.

18 INSTALL NEMA 4X TYPE-B TELEPHONE DEMARCATION CABINET (TDC) COMPLETE.

19 INSTALL 120/240 V TYPE III-BF METERED SERVICE EQUIPMENT ENCLOSURE. SERVICE METER ID: 07-53-47-0-003.754
- ADDRESS: 3379 NEW DOCK STREET
- 100 A, 2P, 240 V, MAIN CB
- 30 A, 1P, 120 V, SEISMIC MONITORING
- 20 A, 1P, 120 V, TELEPHONE DEMARCATION CABINET

THIS PLAN ACCURATE FOR ELECTRICAL WORK ONLY.

LIGHTING AND SIGN ILLUMINATION

SCALE: 1"= 50'

E-1

REVISED BY	DATE REVISED
DAVID MADERA	DOUGLAS E. SMITH
CALCULATED-DESIGNED BY	CHECKED BY
CONSULTANT FUNCTIONAL SUPERVISOR	SHAHRAM VAHDAT

STATE OF CALIFORNIA - DEPARTMENT OF TRANSPORTATION Caltrans

LAST REVISION 00-00-00 | DATE PLOTTED => 21-OCT-2010 | TIME PLOTTED => 11:17

NOTE:

FOR ACCURATE RIGHT OF WAY AND ACCESS DATA, CONTACT RIGHT OF WAY ENGINEERING AT THE DISTRICT OFFICE.

Dist	COUNTY	ROUTE	POST MILES TOTAL PROJECT	SHEET No.	TOTAL SHEETS
07	LA	47,103	3.5/4.6, 0.0/1.1	307	1003

REGISTERED CIVIL ENGINEER 7/19/10 DATE

10-11-10
PLANS APPROVAL DATE

REGISTERED PROFESSIONAL ENGINEER DOUGLAS SMITH No. 43549 Exp 06/30/12 CIVIL STATE OF CALIFORNIA

THE STATE OF CALIFORNIA OR ITS OFFICERS OR AGENTS SHALL NOT BE RESPONSIBLE FOR THE ACCURACY OR COMPLETENESS OF SCANNED COPIES OF THIS PLAN SHEET.

URS CORPORATION
915 WILSHIRE BOULEVARD
SUITE 700
LOS ANGELES, CA 90017

ALAMEDA CORRIDOR
TRANSPORTATION AUTHORITY
ONE CIVIL PLAZA, SUITE 350
CARSON, CA 90745

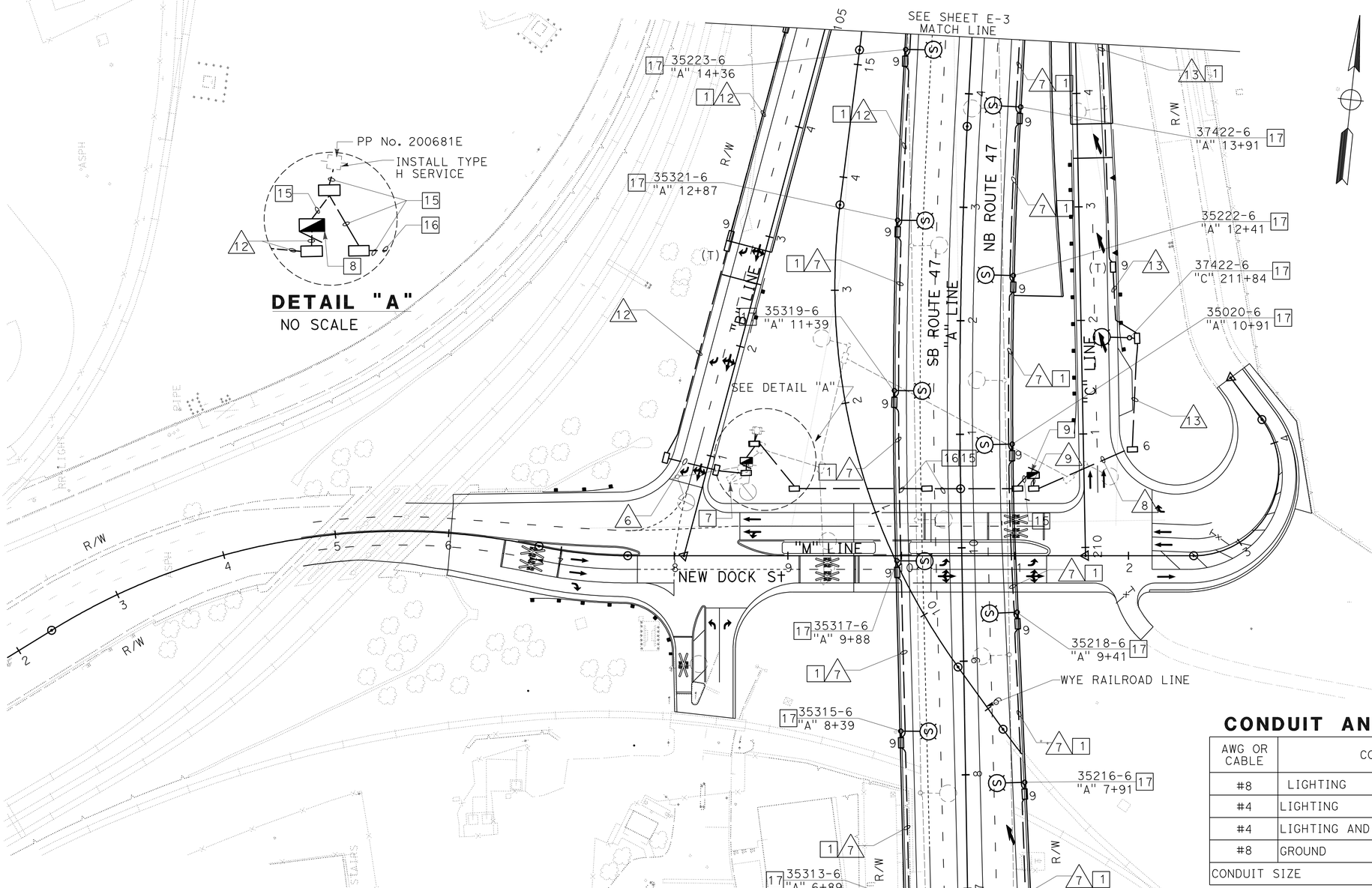

CONDUIT AND CONDUCTOR SCHEDULE

AWG OR CABLE	CONDUCTOR RUN	6	7	8	9	12	13
#8	LIGHTING			2	2		2
#4	LIGHTING		2				
#4	LIGHTING AND SIGN ILLUMINATION	2		2	2	2	2
#8	GROUND	1	1	1	1	1	1
CONDUIT SIZE		3"	2"	3"	2-3"	2"	2"

FOR NOTES AND LEGEND, SEE SHEET E-1.
THIS PLAN ACCURATE FOR ELECTRICAL WORK ONLY.

LIGHTING AND SIGN ILLUMINATION

SCALE: 1"= 50'

E-2

STATE OF CALIFORNIA - DEPARTMENT OF TRANSPORTATION
Caltrans

CONSULTANT FUNCTIONAL SUPERVISOR: SHAHRAM VAHDAT
CALCULATED-DESIGNED BY: DOUGLAS E. SMITH
CHECKED BY: DAVID MADERA
REVISED BY
DATE REVISED

LAST REVISION 00-00-00
DATE PLOTTED => 21-OCT-2010
TIME PLOTTED => 11:17

Dist	COUNTY	ROUTE	POST MILES TOTAL PROJECT	SHEET No.	TOTAL SHEETS
07	LA	47,103	3.5/4.6, 0.0/1.1	308	1003

REGISTERED CIVIL ENGINEER 7/19/10 DATE

10-11-10
PLANS APPROVAL DATE

REGISTERED PROFESSIONAL ENGINEER DOUGLAS SMITH No. 43549 Exp 06/30/12 CIVIL STATE OF CALIFORNIA

THE STATE OF CALIFORNIA OR ITS OFFICERS OR AGENTS SHALL NOT BE RESPONSIBLE FOR THE ACCURACY OR COMPLETENESS OF SCANNED COPIES OF THIS PLAN SHEET.

URS CORPORATION
915 WILSHIRE BOULEVARD
SUITE 700
LOS ANGELES, CA 90017

ALAMEDA CORRIDOR
TRANSPORTATION AUTHORITY
ONE CIVIL PLAZA, SUITE 350
CARSON, CA 90745

NOTE:

FOR ACCURATE RIGHT OF WAY AND ACCESS DATA, CONTACT RIGHT OF WAY ENGINEERING AT THE DISTRICT OFFICE.

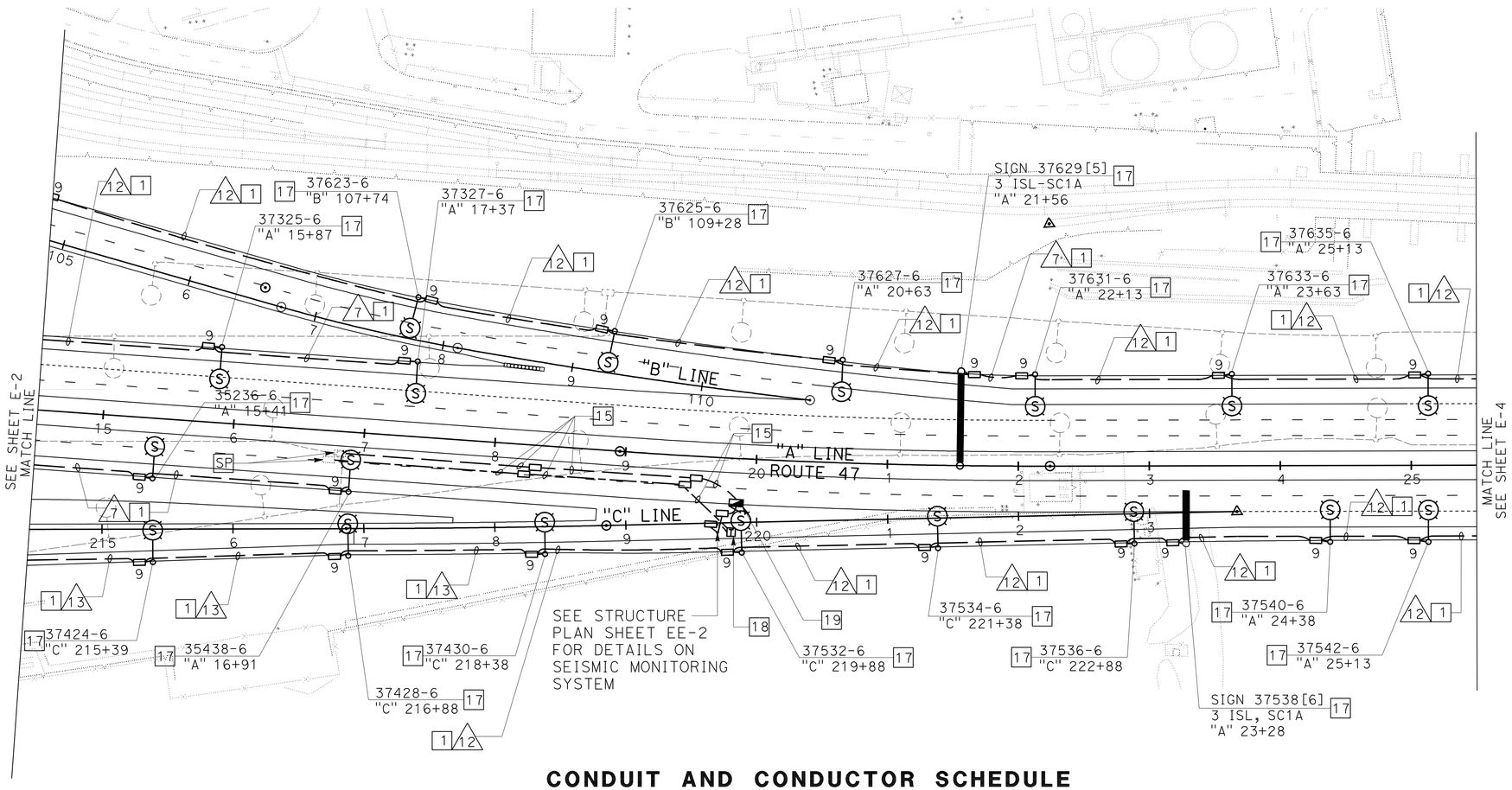

CONDUIT AND CONDUCTOR SCHEDULE

AWG OR CABLE	CONDUCTOR RUN	7	12	13
#8	LIGHTING			2
#4	LIGHTING AND SIGN ILLUMINATION		2	2
#4	LIGHTING	2		
#8	GROUND	1	1	1
CONDUIT SIZE		2"	2"	2"

FOR NOTES AND LEGEND, SEE SHEET E-1.
THIS PLAN ACCURATE FOR ELECTRICAL WORK ONLY.

SEISMIC MONITORING SYSTEM LIGHTING AND SIGN ILLUMINATION

SCALE: 1" = 50'

E-3

STATE OF CALIFORNIA - DEPARTMENT OF TRANSPORTATION
Caltrans

CONSULTANT FUNCTIONAL SUPERVISOR: SHAHRAM VAHDAT
CALCULATED-DESIGNED BY: DOUGLAS E. SMITH
CHECKED BY: DAVID MADERA
REVISED BY
DATE REVISED

LAST REVISION 00-00-00
DATE PLOTTED => 14-OCT-2010
TIME PLOTTED => 17:32

Dist	COUNTY	ROUTE	POST MILES TOTAL PROJECT	SHEET No.	TOTAL SHEETS
07	LA	47,103	3.5/4.6, 0.0/1.1	309	1003

REGISTERED CIVIL ENGINEER 7/19/10 DATE

10-11-10
PLANS APPROVAL DATE

REGISTERED PROFESSIONAL ENGINEER DOUGLAS SMITH No. 43549 Exp 06/30/12 CIVIL STATE OF CALIFORNIA

THE STATE OF CALIFORNIA OR ITS OFFICERS OR AGENTS SHALL NOT BE RESPONSIBLE FOR THE ACCURACY OR COMPLETENESS OF SCANNED COPIES OF THIS PLAN SHEET.

URS CORPORATION
915 WILSHIRE BOULEVARD
SUITE 700
LOS ANGELES, CA 90017

ALAMEDA CORRIDOR
TRANSPORTATION AUTHORITY
ONE CIVIL PLAZA, SUITE 350
CARSON, CA 90745

NOTE:

FOR ACCURATE RIGHT OF WAY AND ACCESS DATA, CONTACT RIGHT OF WAY ENGINEERING AT THE DISTRICT OFFICE.

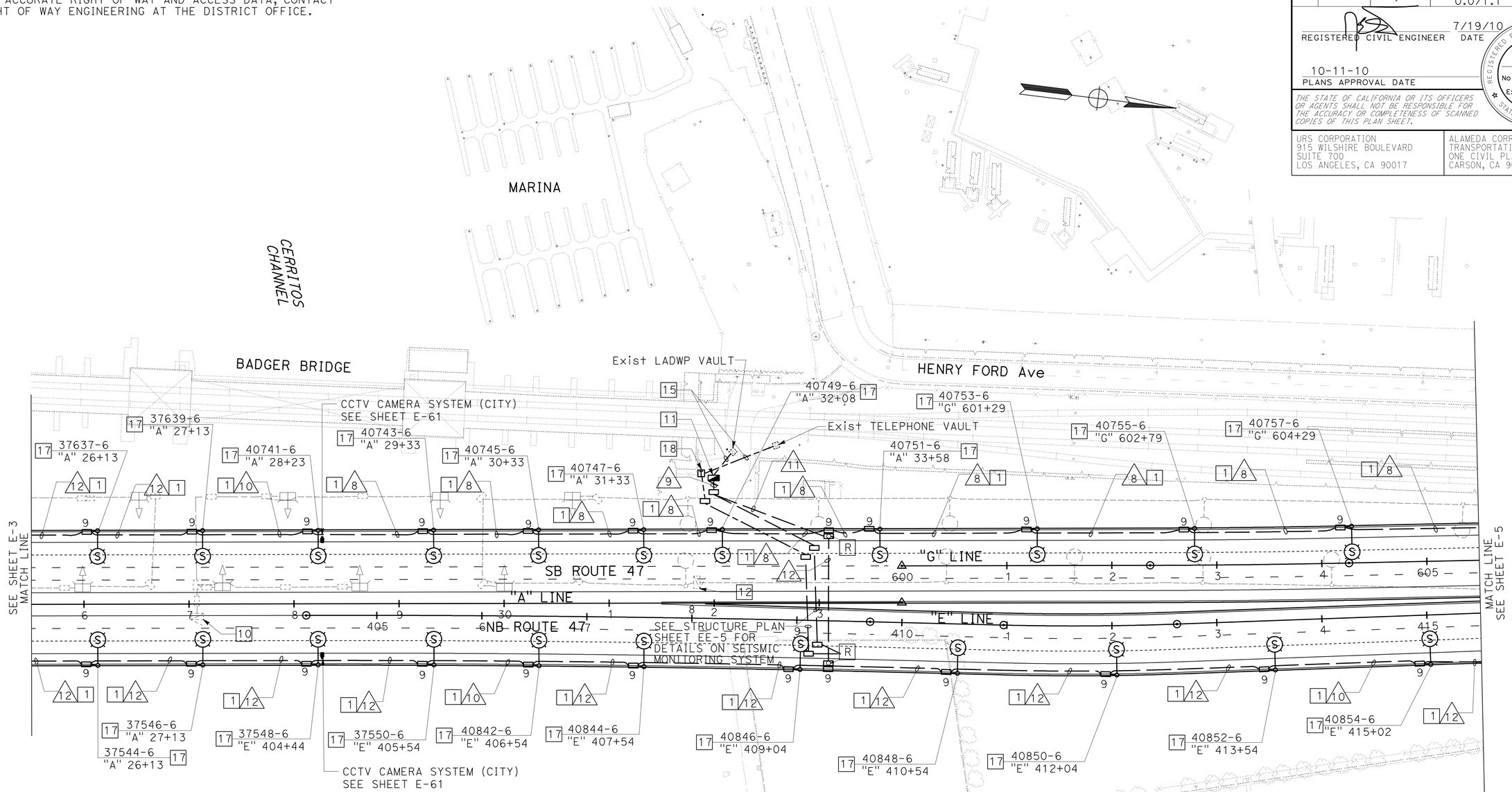

CONDUIT AND CONDUCTOR SCHEDULE

AWG OR CABLE	CONDUCTOR RUN	8	9	10	11	12
#6	LIGHTING	2	2		2	
#4	LIGHTING AND SIGN ILLUMINATION		2		2	2
#8	GROUND	1	1	1	1	1
CONDUIT SIZE		2"	2-3"	2"	2"	2"

FOR NOTES AND LEGEND, SEE SHEET E-1.
THIS PLAN ACCURATE FOR ELECTRICAL WORK ONLY.

SEISMIC MONITORING SYSTEM LIGHTING AND SIGN ILLUMINATION

SCALE: 1" = 50'

E-4

STATE OF CALIFORNIA - DEPARTMENT OF TRANSPORTATION
Caltrans

CONSULTANT FUNCTIONAL SUPERVISOR: SHAHRAM VAHDAT
CALCULATED-DESIGNED BY: DOUGLAS E. SMITH
CHECKED BY: DAVID MADERA
REVISED BY
DATE REVISED

LAST REVISION 00-00-00
DATE PLOTTED => 14-OCT-2010
TIME PLOTTED => 17:32

NOTE:

FOR ACCURATE RIGHT OF WAY AND ACCESS DATA, CONTACT RIGHT OF WAY ENGINEERING AT THE DISTRICT OFFICE.

CONDUIT AND CONDUCTOR SCHEDULE

AWG OR CABLE	CONDUCTOR RUN	8	9	10	11	12	14
#6	LIGHTING	2	2		2		
#6	LIGHTING AND SIGN ILLUMINATION		2				2
#4	LIGHTING AND SIGN ILLUMINATION		2		2	2	
#8	GROUND	1	1	1	1	1	1
CONDUIT SIZE		2"	2"	2"	2-3"	2"	2"

Dist	COUNTY	ROUTE	POST MILES TOTAL PROJECT	SHEET No.	TOTAL SHEETS
07	LA	47,103	3.5/4.6, 0.0/1.1	310	1003

REGISTERED CIVIL ENGINEER 7/19/10 DATE

10-11-10
PLANS APPROVAL DATE

REGISTERED PROFESSIONAL ENGINEER DOUGLAS SMITH No. 43549 Exp 06/30/12 CIVIL STATE OF CALIFORNIA

THE STATE OF CALIFORNIA OR ITS OFFICERS OR AGENTS SHALL NOT BE RESPONSIBLE FOR THE ACCURACY OR COMPLETENESS OF SCANNED COPIES OF THIS PLAN SHEET.

URS CORPORATION
915 WILSHIRE BOULEVARD
SUITE 700
LOS ANGELES, CA 90017

ALAMEDA CORRIDOR
TRANSPORTATION AUTHORITY
ONE CIVIL PLAZA, SUITE 350
CARSON, CA 90745

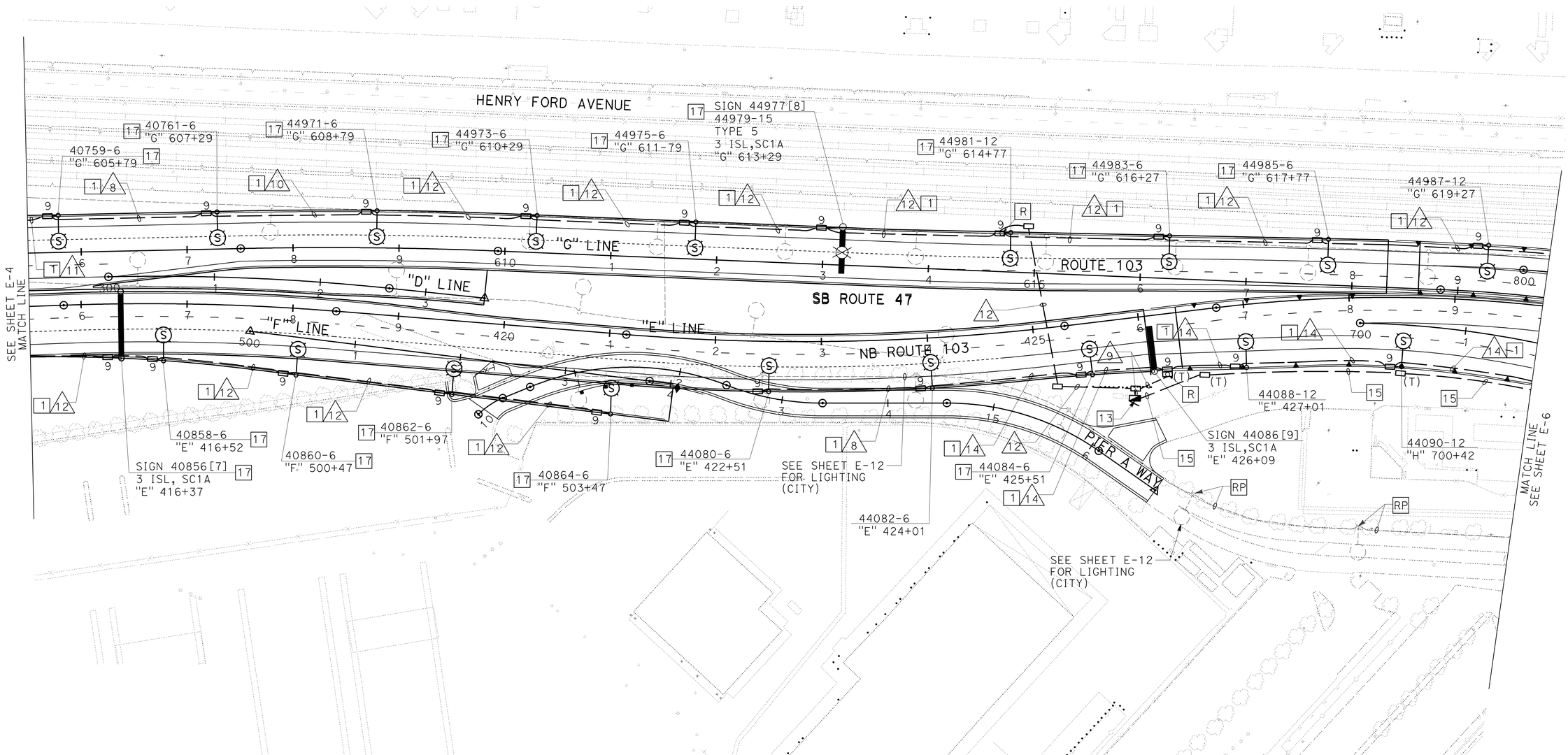

LIGHTING AND SIGN ILLUMINATION

SCALE: 1" = 50'

E-5

FOR NOTES AND LEGEND, SEE SHEET E-1.
THIS PLAN ACCURATE FOR ELECTRICAL WORK ONLY.

STATE OF CALIFORNIA - DEPARTMENT OF TRANSPORTATION

Caltrans

CONSULTANT FUNCTIONAL SUPERVISOR: SHAHRAM VAHDAT

CALCULATED-DESIGNED BY: DAVID MADERA

CHECKED BY: DOUGLAS E. SMITH

REVISED BY / DATE REVISED

LAST REVISION 00-00-00 | DATE PLOTTED => 14-OCT-2010 | TIME PLOTTED => 17:32

NOTE:

FOR ACCURATE RIGHT OF WAY AND ACCESS DATA, CONTACT RIGHT OF WAY ENGINEERING AT THE DISTRICT OFFICE.

CONDUIT AND CONDUCTOR SCHEDULE

AWG OR CABLE	CONDUCTOR RUN	8	11	12	14
#6	LIGHTING AND SIGN ILLUMINATION	2	2		2
#4	LIGHTING AND SIGN ILLUMINATION			2	
#8	GROUND	1	1	1	1
CONDUIT SIZE		2"	3"	2"	2"

Dist	COUNTY	ROUTE	POST MILES TOTAL PROJECT	SHEET No.	TOTAL SHEETS
07	LA	47,103	3.5/4.6, 0.0/1.1	311	1003

REGISTERED CIVIL ENGINEER 7/19/10 DATE

10-11-10
PLANS APPROVAL DATE

REGISTERED PROFESSIONAL ENGINEER DOUGLAS SMITH No. 43549 Exp 06/30/12 CIVIL STATE OF CALIFORNIA

THE STATE OF CALIFORNIA OR ITS OFFICERS OR AGENTS SHALL NOT BE RESPONSIBLE FOR THE ACCURACY OR COMPLETENESS OF SCANNED COPIES OF THIS PLAN SHEET.

URS CORPORATION
915 WILSHIRE BOULEVARD
SUITE 700
LOS ANGELES, CA 90017

ALAMEDA CORRIDOR
TRANSPORTATION AUTHORITY
ONE CIVIL PLAZA, SUITE 350
CARSON, CA 90745

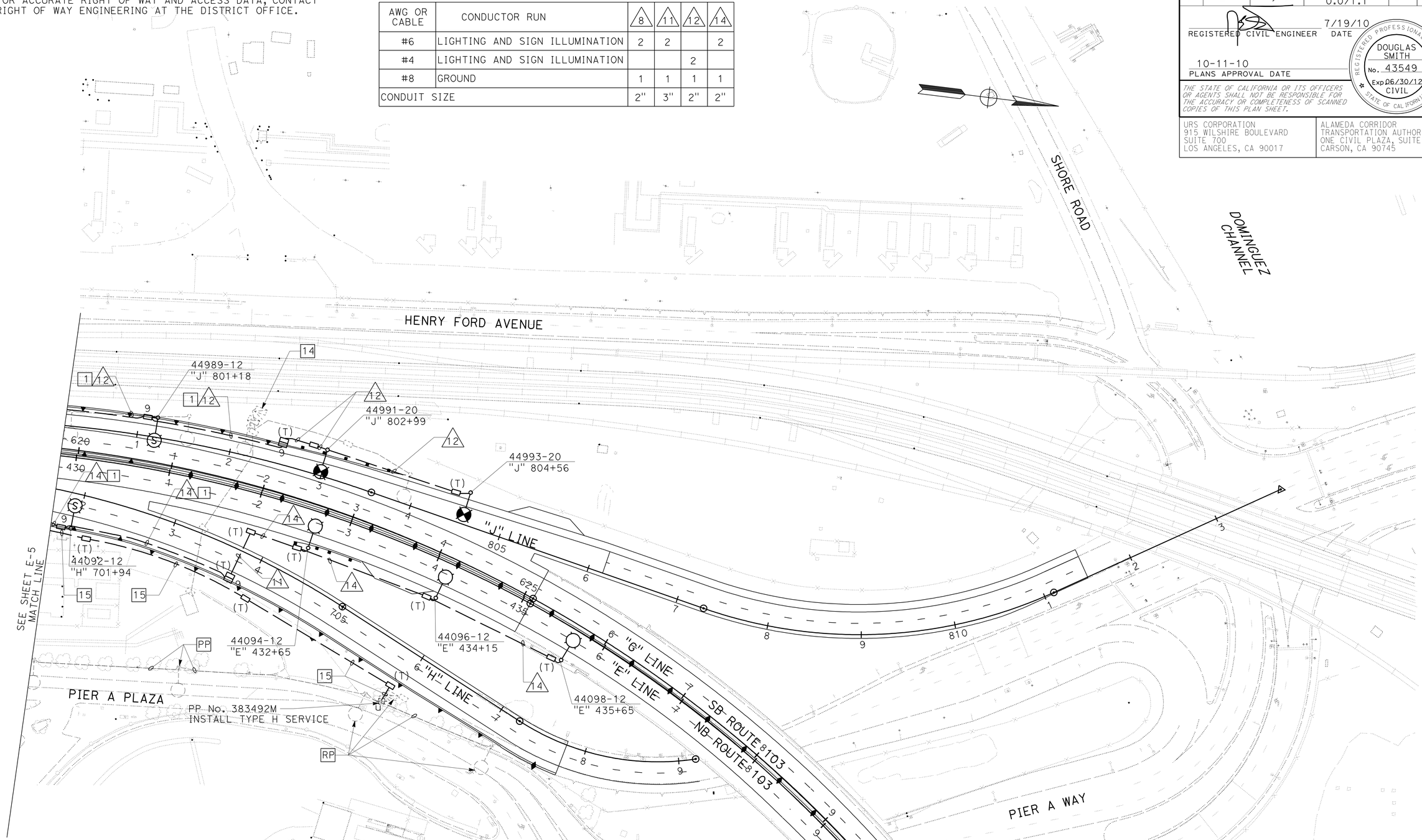

FOR NOTES AND LEGEND, SEE SHEET E-1.
THIS PLAN ACCURATE FOR ELECTRICAL WORK ONLY.

LIGHTING AND SIGN ILLUMINATION

SCALE: 1" = 50'

E-6

STATE OF CALIFORNIA - DEPARTMENT OF TRANSPORTATION
Caltrans

CONSULTANT FUNCTIONAL SUPERVISOR: SHAHRAM VAHDAT

CALCULATED-DESIGNED BY: DOUGLAS E. SMITH
CHECKED BY: DAVID MADERA

REVISED BY
DATE REVISED

LAST REVISION 00-00-00
DATE PLOTTED => 14-OCT-2010
TIME PLOTTED => 17:32

Dist	COUNTY	ROUTE	POST MILES TOTAL PROJECT	SHEET No.	TOTAL SHEETS
07	LA	47,103	3.5/4.6, 0.0/1.1	312	1003

REGISTERED CIVIL ENGINEER 7/19/10 DATE

10-11-10
PLANS APPROVAL DATE

REGISTERED PROFESSIONAL ENGINEER DOUGLAS SMITH No. 43549 Exp 06/30/12 CIVIL STATE OF CALIFORNIA

THE STATE OF CALIFORNIA OR ITS OFFICERS OR AGENTS SHALL NOT BE RESPONSIBLE FOR THE ACCURACY OR COMPLETENESS OF SCANNED COPIES OF THIS PLAN SHEET.

URS CORPORATION
915 WILSHIRE BOULEVARD
SUITE 700
LOS ANGELES, CA 90017

ALAMEDA CORRIDOR
TRANSPORTATION AUTHORITY
ONE CIVIL PLAZA, SUITE 350
CARSON, CA 90745

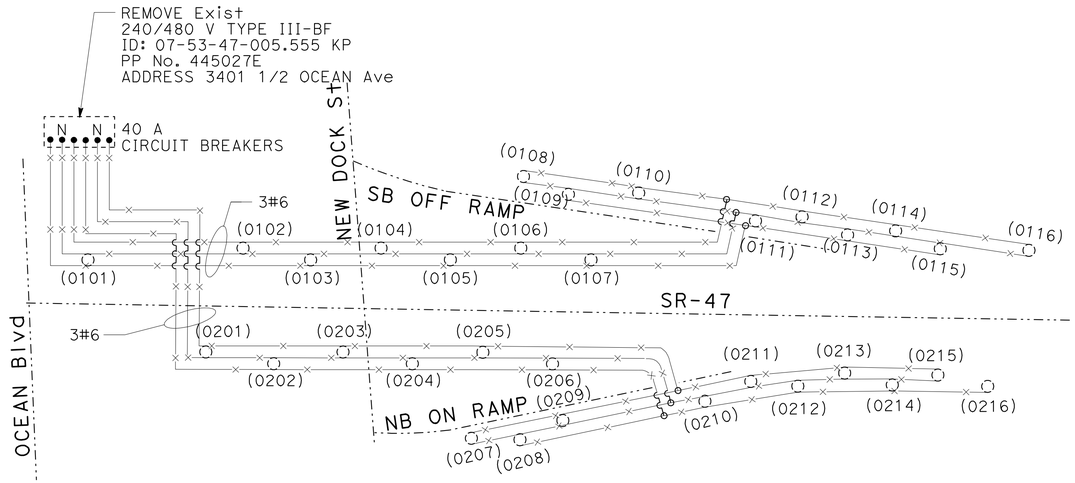

WIRING DIAGRAM
SOUTH SR-47 AT OCEAN Blvd
CIRCUITS 1 & 6
(REMOVE)

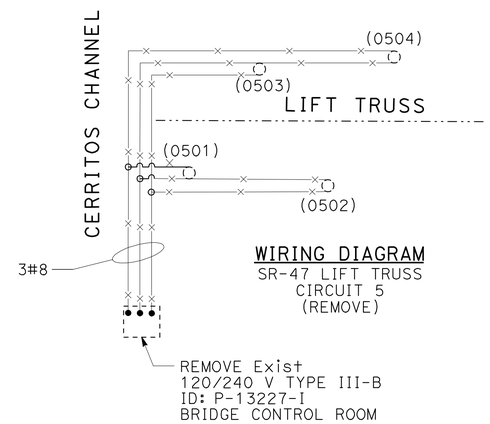

WIRING DIAGRAM
SR-47 LIFT TRUSS
CIRCUIT 5
(REMOVE)

WIRING DIAGRAM LEGEND: (E7 TO E10)

- = Exist TYPE 15, 200 W OR 310 W HPS
- = NEW 165 W LED LAMP AND BALLAST
- = NEW 235 W LED LAMP AND BALLAST
- = Exist SOFFIT LUM 70 W HPS
- = Exist CONDUCTORS TO BE REMOVED
- = Exist CONDUCTORS TO REMAIN
- = NEW CONDUCTORS
- = Exist SPLICE
- = NEW SPLICE
- = Exist OVERHEAD SIGN LIGHTING (ISL)
- = NEW OVERHEAD SIGN LIGHTING (ISL)

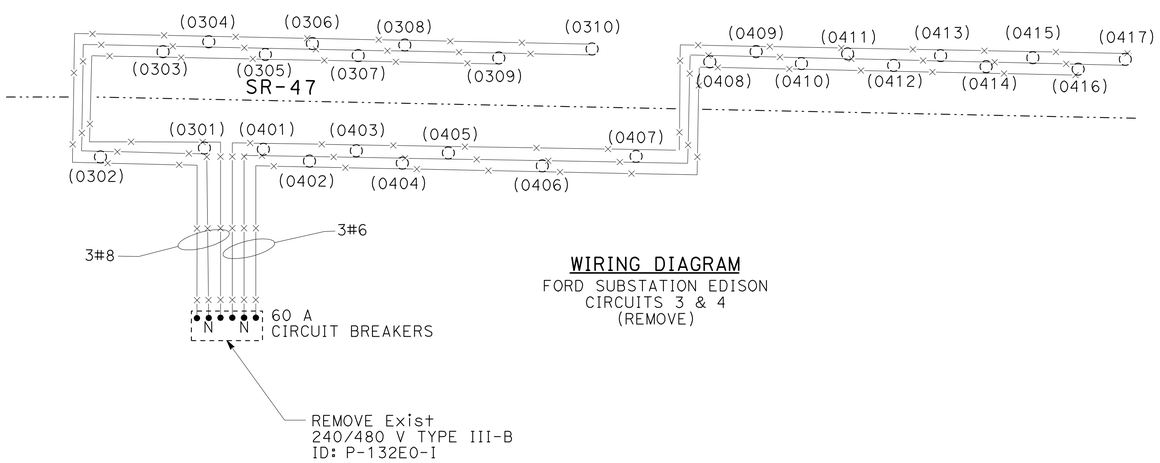

WIRING DIAGRAM
FORD SUBSTATION EDISON
CIRCUITS 3 & 4
(REMOVE)

LIGHTING AND SIGN ILLUMINATION
WIRING DIAGRAM

NO SCALE

E-7

THIS PLAN ACCURATE FOR ELECTRICAL WORK ONLY.

STATE OF CALIFORNIA - DEPARTMENT OF TRANSPORTATION
Caltrans

CONSULTANT FUNCTIONAL SUPERVISOR: SHAHRAM VAHDAT
CALCULATED-DESIGNED BY: DOUGLAS E. SMITH
CHECKED BY: DAVID MADERA
REVISED BY
DATE REVISED

LAST REVISION 00-00-00
DATE PLOTTED => 14-OCT-2010
TIME PLOTTED => 17:33

Dist	COUNTY	ROUTE	POST MILES TOTAL PROJECT	SHEET No.	TOTAL SHEETS
07	LA	47,103	3.5/4.6, 0.0/1.1	313	1003

REGISTERED CIVIL ENGINEER 7/19/10 DATE

10-11-10
PLANS APPROVAL DATE

REGISTERED PROFESSIONAL ENGINEER DOUGLAS SMITH No. 43549 Exp 06/30/12 CIVIL STATE OF CALIFORNIA

THE STATE OF CALIFORNIA OR ITS OFFICERS OR AGENTS SHALL NOT BE RESPONSIBLE FOR THE ACCURACY OR COMPLETENESS OF SCANNED COPIES OF THIS PLAN SHEET.

URS CORPORATION
915 WILSHIRE BOULEVARD
SUITE 700
LOS ANGELES, CA 90017

ALAMEDA CORRIDOR
TRANSPORTATION AUTHORITY
ONE CIVIL PLAZA, SUITE 350
CARSON, CA 90745

WIRING DIAGRAM
SB SR-47 ON RAMP
CIRCUIT 6
(REMOVE)

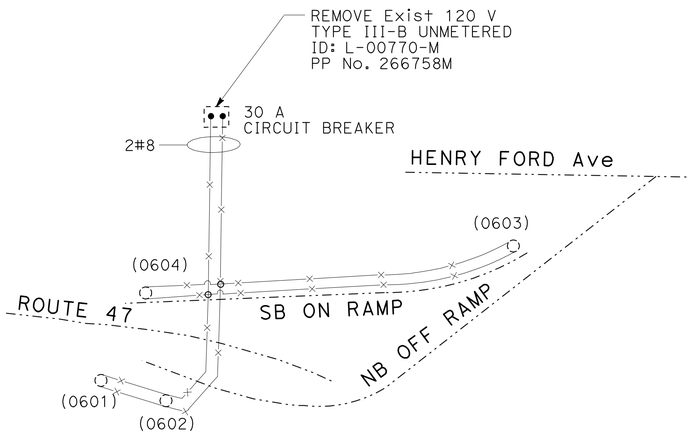

WIRING DIAGRAM
SB SR-47 OFF RAMP
CIRCUIT 10
(REMOVE)

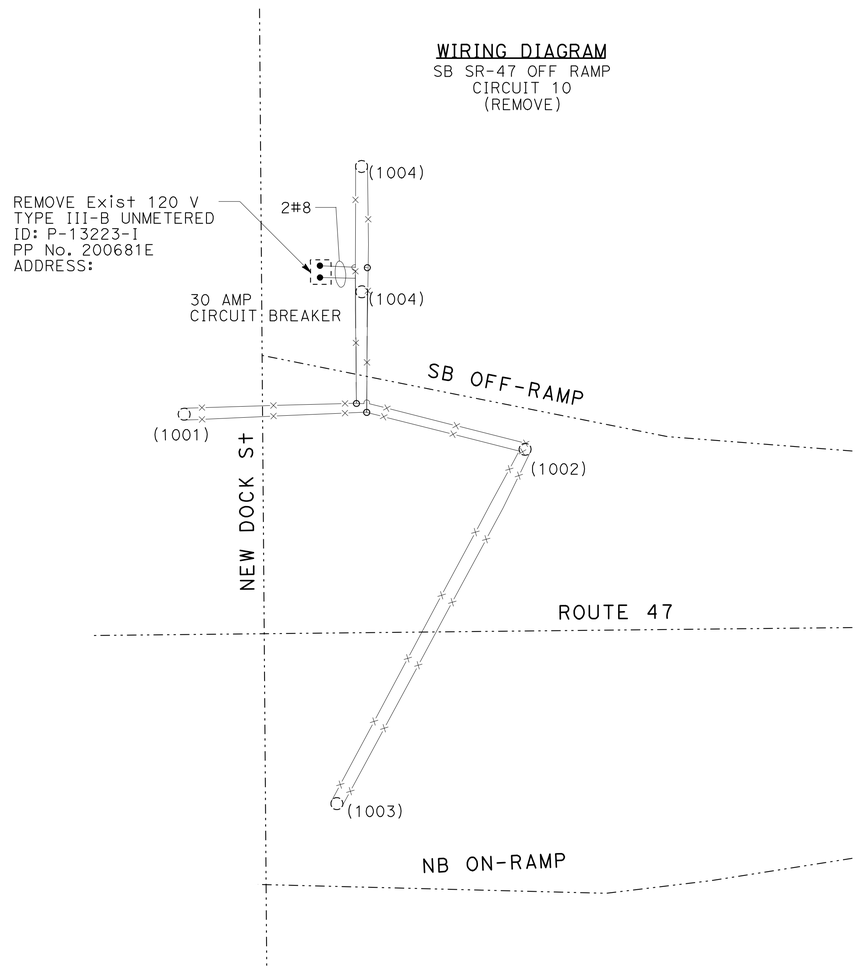

THIS PLAN ACCURATE FOR ELECTRICAL WORK ONLY.

LIGHTING AND SIGN ILLUMINATION
WIRING DIAGRAM
NO SCALE

E-8

STATE OF CALIFORNIA - DEPARTMENT OF TRANSPORTATION
Caltrans

CONSULTANT FUNCTIONAL SUPERVISOR: SHAHRAM VAHDAT
CALCULATED-DESIGNED BY: DOUGLAS E. SMITH
CHECKED BY: DAVID MADERA
REVISED BY
DATE REVISED

LAST REVISION 00-00-00
DATE PLOTTED => 14-OCT-2010
TIME PLOTTED => 17:33

Dist	COUNTY	ROUTE	POST MILES TOTAL PROJECT	SHEET No.	TOTAL SHEETS
07	LA	47,103	3.5/4.6, 0.0/1.1	314	1003

REGISTERED CIVIL ENGINEER 7/19/10 DATE

10-11-10
PLANS APPROVAL DATE

REGISTERED PROFESSIONAL ENGINEER DOUGLAS SMITH No. 43549 Exp 06/30/12 CIVIL STATE OF CALIFORNIA

THE STATE OF CALIFORNIA OR ITS OFFICERS OR AGENTS SHALL NOT BE RESPONSIBLE FOR THE ACCURACY OR COMPLETENESS OF SCANNED COPIES OF THIS PLAN SHEET.

URS CORPORATION
915 WILSHIRE BOULEVARD
SUITE 700
LOS ANGELES, CA 90017

ALAMEDA CORRIDOR
TRANSPORTATION AUTHORITY
ONE CIVIL PLAZA, SUITE 350
CARSON, CA 90745

WIRING DIAGRAM:
ROUTE 47 AT OCEAN Blvd
CIRCUITS 1, 2, 3, 12, 14, & 15

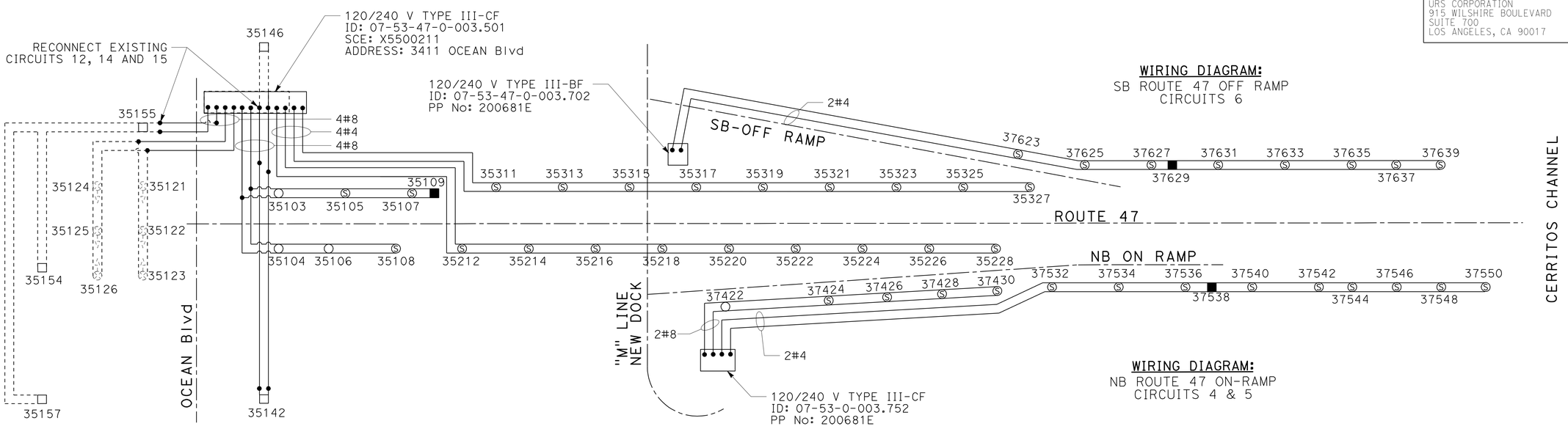

WIRING DIAGRAM:
SB ROUTE 47 OFF RAMP
CIRCUITS 6

WIRING DIAGRAM:
NB ROUTE 47 ON-RAMP
CIRCUITS 4 & 5

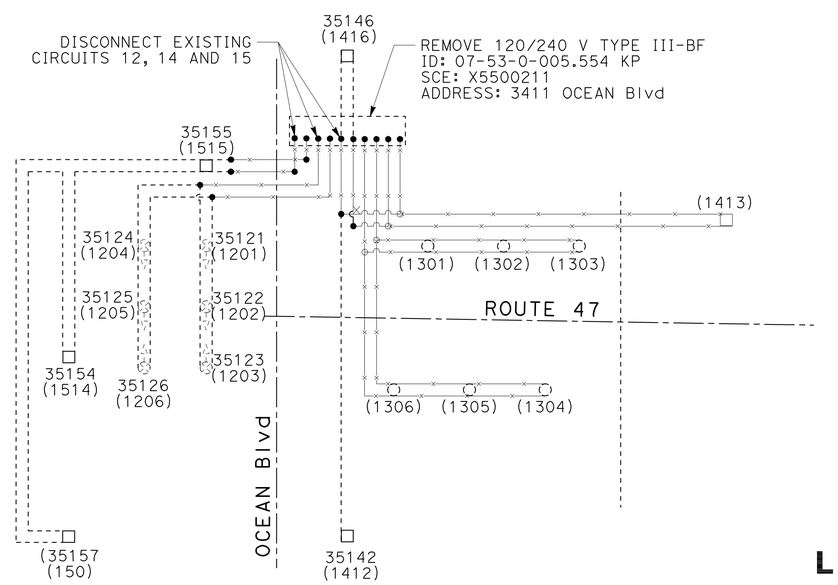

THIS PLAN ACCURATE FOR ELECTRICAL WORK ONLY.

LIGHTING AND SIGN ILLUMINATION
WIRING DIAGRAM
NO SCALE

E-9

STATE OF CALIFORNIA - DEPARTMENT OF TRANSPORTATION
Caltrans®
CONSULTANT FUNCTIONAL SUPERVISOR: SHAHRAM VAHDAT
CALCULATED-DESIGNED BY: DAVID MADERA
CHECKED BY: DOUGLAS E. SMITH
REVISED BY
DATE REVISED

LAST REVISION 00-00-00
DATE PLOTTED => 14-OCT-2010
TIME PLOTTED => 17:33

Dist	COUNTY	ROUTE	POST MILES TOTAL PROJECT	SHEET No.	TOTAL SHEETS
07	LA	47,103	3.5/4.6, 0.0/1.1	315	1003

REGISTERED CIVIL ENGINEER 7/19/10 DATE

10-11-10
PLANS APPROVAL DATE

REGISTERED PROFESSIONAL ENGINEER DOUGLAS SMITH No. 43549 Exp 06/30/12 CIVIL STATE OF CALIFORNIA

THE STATE OF CALIFORNIA OR ITS OFFICERS OR AGENTS SHALL NOT BE RESPONSIBLE FOR THE ACCURACY OR COMPLETENESS OF SCANNED COPIES OF THIS PLAN SHEET.

URS CORPORATION
915 WILSHIRE BOULEVARD
SUITE 700
LOS ANGELES, CA 90017

ALAMEDA CORRIDOR
TRANSPORTATION AUTHORITY
ONE CIVIL PLAZA, SUITE 350
CARSON, CA 90745

WIRING DIAGRAM
HENRY FORD SUBSTATION EDISON
CIRCUITS 7 & 8

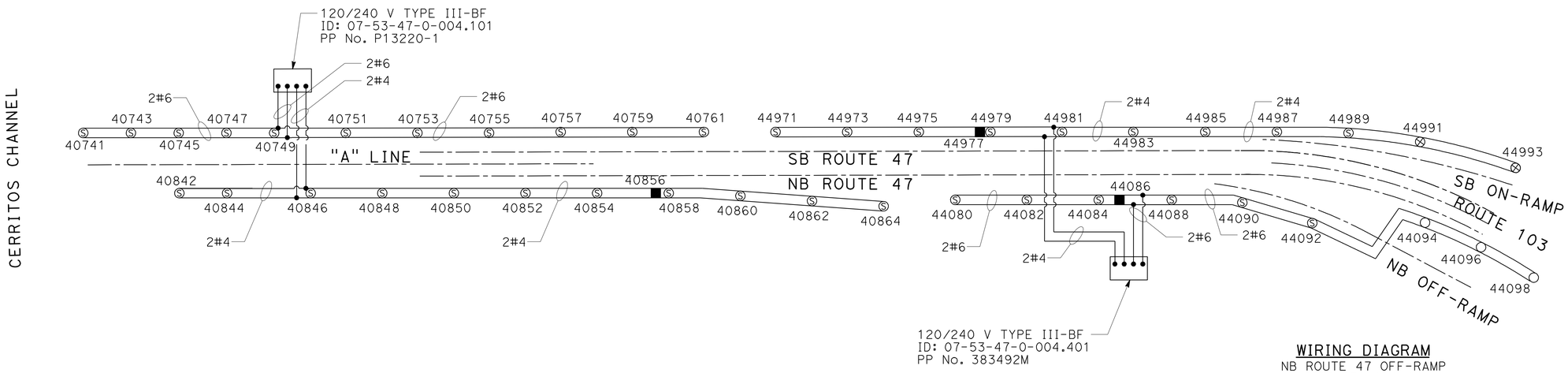

WIRING DIAGRAM
NB ROUTE 47 OFF-RAMP
CIRCUITS 9 & 10

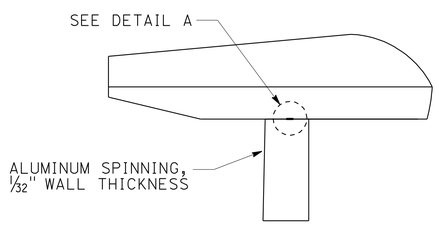

PROFILE

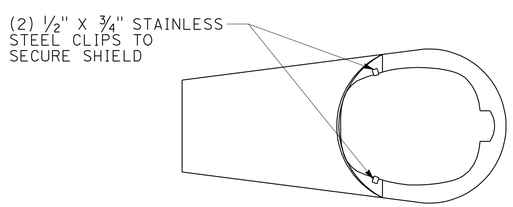

LAYOUT

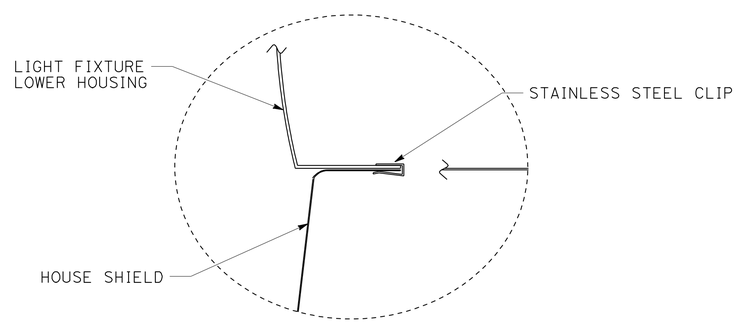

DETAIL A

CLIP ATTACHMENT DETAIL

ENVIRONMENTAL LIGHT SHIELD
NO SCALE

THIS PLAN ACCURATE FOR ELECTRICAL WORK ONLY.

LIGHTING AND SIGN ILLUMINATION AND LIGHTING DETAILS
WIRING DIAGRAM
NO SCALE

E-10

REVISED BY	DATE REVISED

DAVID MADERA — DOUGLAS E. SMITH
CALCULATED-DESIGNED BY — CHECKED BY
CONSULTANT FUNCTIONAL SUPERVISOR — SHAHRAM VAHDAT
STATE OF CALIFORNIA - DEPARTMENT OF TRANSPORTATION
Caltrans

LAST REVISION 00-00-00 | DATE PLOTTED => 14-OCT-2010 | TIME PLOTTED => 17:33

Dist	COUNTY	ROUTE	POST MILES TOTAL PROJECT	SHEET No.	TOTAL SHEETS
07	LA	47,103	3.5/4.6, 0.0/1.1	316	1003

REGISTERED CIVIL ENGINEER 7/19/10 DATE

10-11-10
PLANS APPROVAL DATE

REGISTERED PROFESSIONAL ENGINEER DOUGLAS SMITH No. 43549 Exp 06/30/12 CIVIL STATE OF CALIFORNIA

THE STATE OF CALIFORNIA OR ITS OFFICERS OR AGENTS SHALL NOT BE RESPONSIBLE FOR THE ACCURACY OR COMPLETENESS OF SCANNED COPIES OF THIS PLAN SHEET.

URS CORPORATION
915 WILSHIRE BOULEVARD
SUITE 700
LOS ANGELES, CA 90017

ALAMEDA CORRIDOR
TRANSPORTATION AUTHORITY
ONE CIVIL PLAZA, SUITE 350
CARSON, CA 90745

NOTE:

FOR ACCURATE RIGHT OF WAY AND ACCESS DATA, CONTACT RIGHT OF WAY ENGINEERING AT THE DISTRICT OFFICE.

CONDUIT AND CONDUCTOR SCHEDULE

AWG OR CABLE	CONDUCTOR RUN	4	7	15
#8	LIGHTING	2		2
#4	LIGHTING		2	
#8	GROUND	1	1	1
CONDUIT SIZE		2"	2"	2-3"

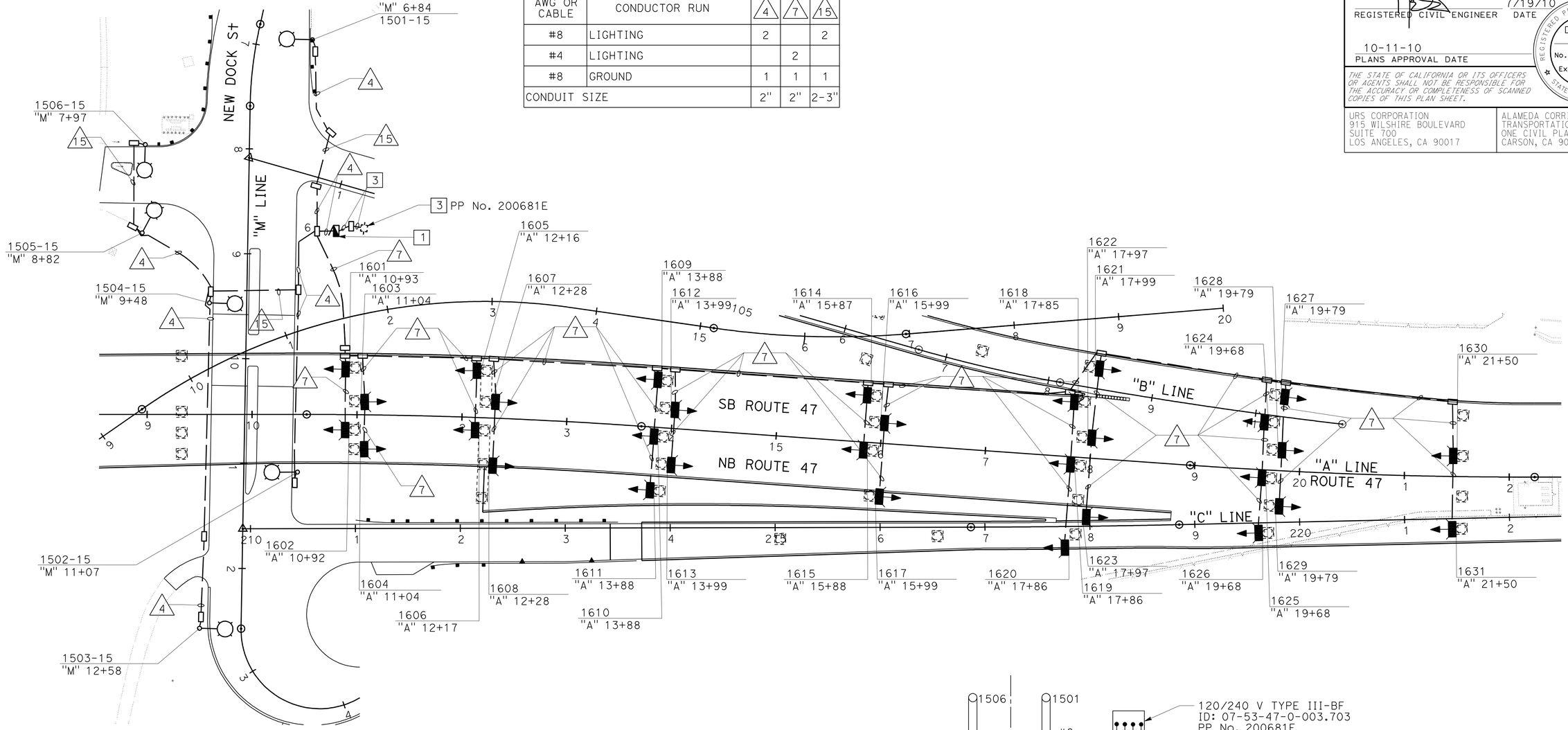

PROJECT NOTES: (E-11 TO E-12)

1. INSTALL 120/240 V TYPE III-BF METERED SERVICE EQUIPMENT ENCLOSURE. SERVICE ID: 07-53-47-0-003.703
   ADDRESS: 3387 NEW DOCK STREET
   - 100 A, 2P, 240 V, MAIN CB
   - 30 A, 2P, 240 V, LIGHTING (CITY)
   - 30 A, 2P, 240 V, LIGHTING (CITY)

2. INSTALL 120/240 V TYPE III-BF METERED SERVICE EQUIPMENT ENCLOSURE. SERVICE ID No. 1: 07-53-47-0-004.103
   - ADDRESS: 693 PIER A PLAZA
   - 100 A, 2P, 240 V, MAIN CB
   - 30 A, 2P, 240 V, LIGHTING (CITY)
   - 30 A, 2P, 240 V, LIGHTING (CITY)

   SERVICE ID No. 2: 07-53-47-0-004.104
   - ADDRESS: 691 PIER A PLAZA
   - 100 A, 2P, 240 V, MAIN CB
   - 30 A, 1P, 120 V, CCTV (CITY)

3. INSTALL 3" CONDUIT, MT, TO CABINET AND INSTALL TYPE H SERVICE PER SERVICE UTILITY REQUIREMENTS.

WIRING DIAGRAM LEGEND (E-11 TO E-12):

- = NEW TYPE 15, 200 W HPS
- = Exist TYPE 15 Mod, 200 W HPS
- = NEW WALL MOUNTED LUM 70 W HPS
- = Exist CONDUCTORS TO BE REMOVED
- = Exist CONDUCTORS TO REMAIN
- = NEW CONDUCTORS
- = NEW SPLICE

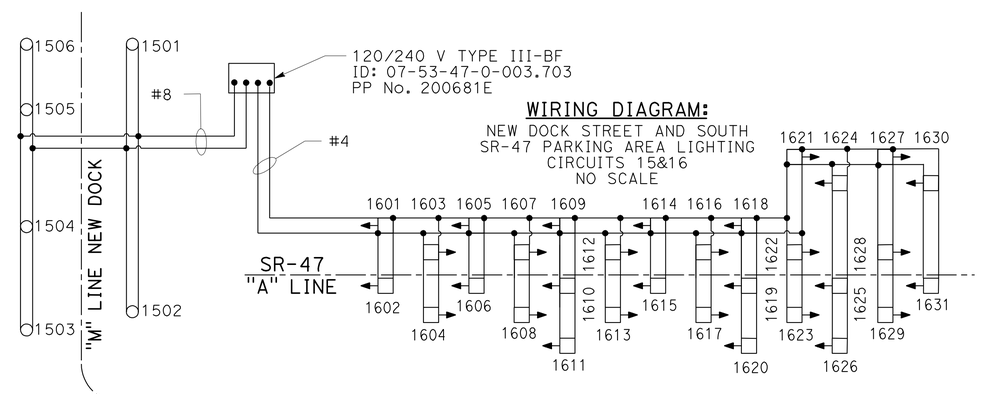

WIRING DIAGRAM:
NEW DOCK STREET AND SOUTH
SR-47 PARKING AREA LIGHTING
CIRCUITS 15&16
NO SCALE

THIS PLAN ACCURATE FOR ELECTRICAL WORK ONLY.

LIGHTING (CITY)

SCALE: 1" = 25'

E-11

STATE OF CALIFORNIA - DEPARTMENT OF TRANSPORTATION
Caltrans

CONSULTANT FUNCTIONAL SUPERVISOR: SHAHRAM VAHDAT
CALCULATED-DESIGNED BY: DAVID MADERA
CHECKED BY: DOUGLAS E. SMITH
REVISED BY
DATE REVISED

LAST REVISION 00-00-00
DATE PLOTTED => 14-OCT-2010
TIME PLOTTED => 17:33

Dist	COUNTY	ROUTE	POST MILES TOTAL PROJECT	SHEET No.	TOTAL SHEETS
07	LA	47,103	3.5/4.6, 0.0/1.1	317	1003

REGISTERED CIVIL ENGINEER 7/19/10 DATE

10-11-10
PLANS APPROVAL DATE

REGISTERED PROFESSIONAL ENGINEER DOUGLAS SMITH No. 43549 Exp 06/30/12 CIVIL STATE OF CALIFORNIA

THE STATE OF CALIFORNIA OR ITS OFFICERS OR AGENTS SHALL NOT BE RESPONSIBLE FOR THE ACCURACY OR COMPLETENESS OF SCANNED COPIES OF THIS PLAN SHEET.

URS CORPORATION
915 WILSHIRE BOULEVARD
SUITE 700
LOS ANGELES, CA 90017

ALAMEDA CORRIDOR
TRANSPORTATION AUTHORITY
ONE CIVIL PLAZA, SUITE 350
CARSON, CA 90745

NOTE:
FOR ACCURATE RIGHT OF WAY AND ACCESS DATA, CONTACT RIGHT OF WAY ENGINEERING AT THE DISTRICT OFFICE.

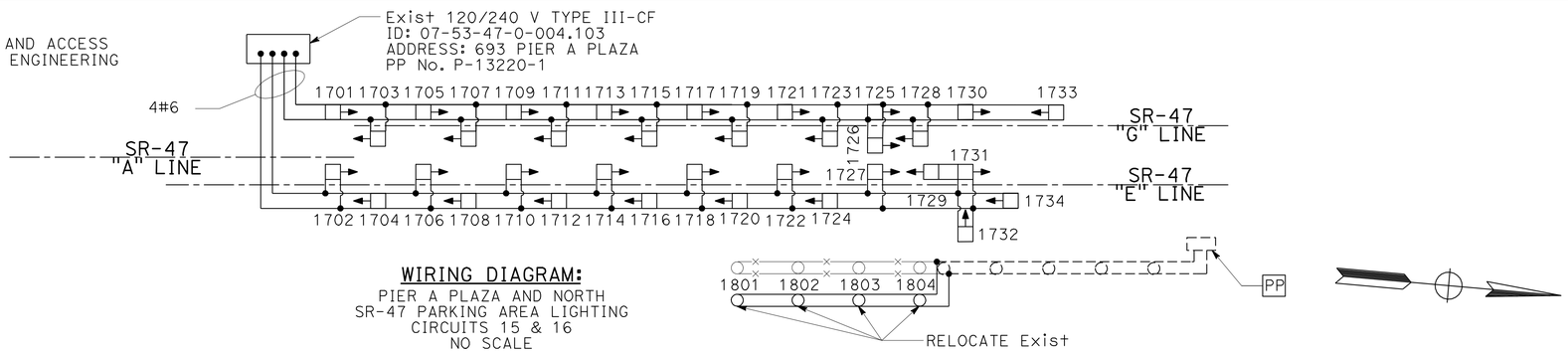

WIRING DIAGRAM:
PIER A PLAZA AND NORTH
SR-47 PARKING AREA LIGHTING
CIRCUITS 15 & 16
NO SCALE

CONDUIT AND CONDUCTOR SCHEDULE

AWG OR CABLE	CONDUCTOR RUN	11	17
#6	LIGHTING	2	2
#8	GROUND	1	1
CONDUIT SIZE		2"	3"

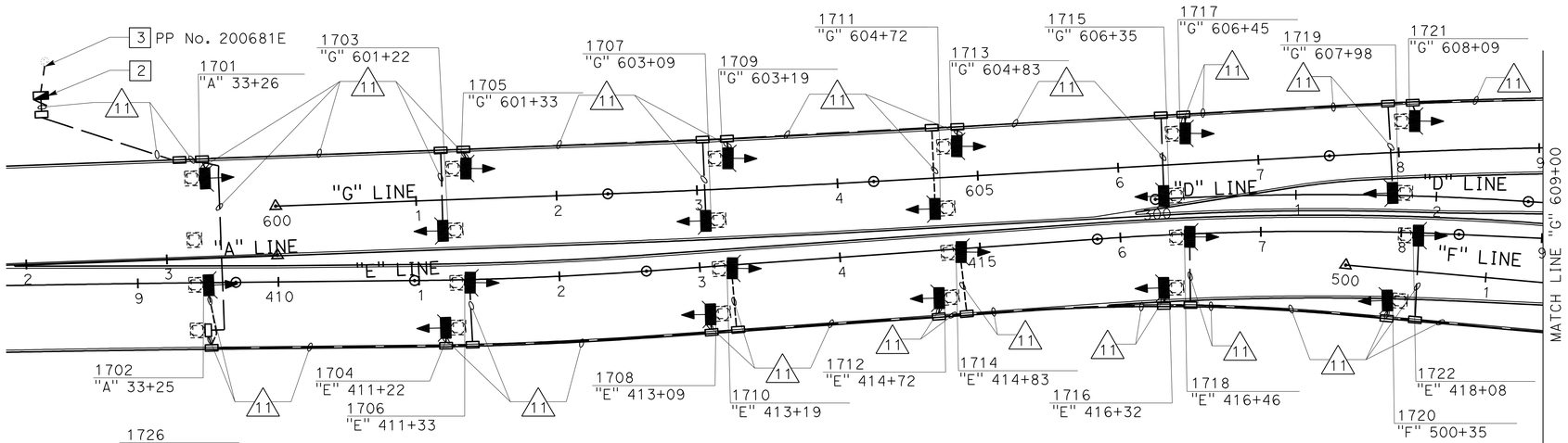

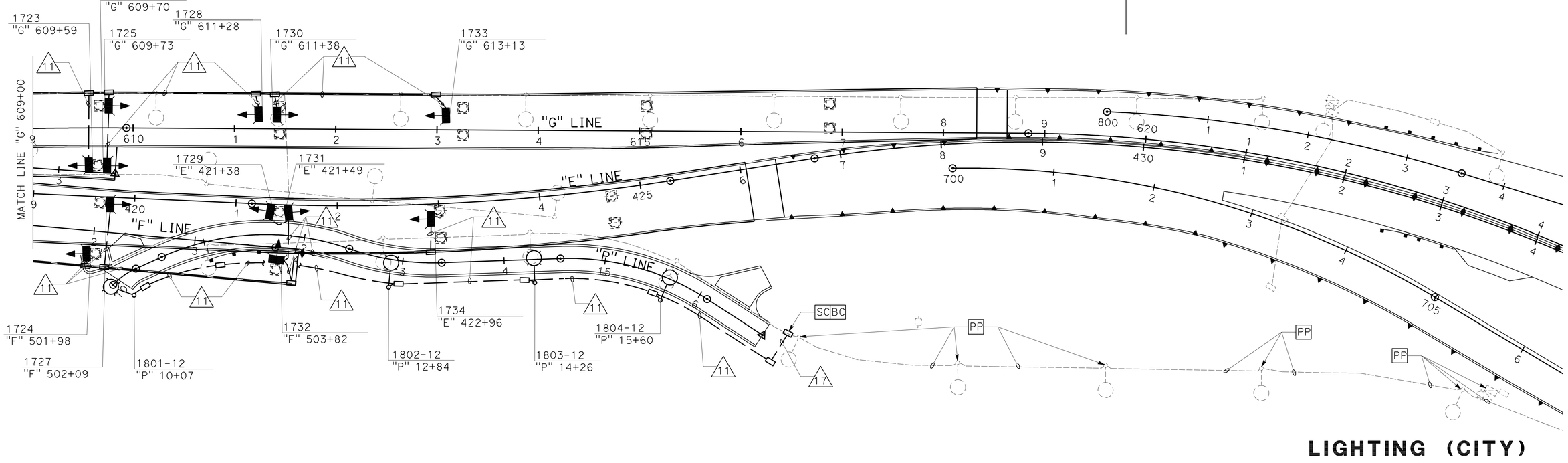

LIGHTING (CITY)

SCALE: 1" = 50'

E-12

FOR NOTES AND LEGEND, SEE SHEET E-11.
THIS PLAN ACCURATE FOR ELECTRICAL WORK ONLY.

STATE OF CALIFORNIA - DEPARTMENT OF TRANSPORTATION
Caltrans

CONSULTANT FUNCTIONAL SUPERVISOR: SHAHRAM VAHDAT
CALCULATED-DESIGNED BY: DOUGLAS E. SMITH
CHECKED BY: DAVID MADERA
REVISED BY
DATE REVISED

LAST REVISION 00-00-00
DATE PLOTTED => 14-OCT-2010
TIME PLOTTED => 17:33

Dist	COUNTY	ROUTE	POST MILES TOTAL PROJECT	SHEET No.	TOTAL SHEETS
07	LA	47,103	3.5/4.6, 0.0/1.1	318	1003

REGISTERED CIVIL ENGINEER 7/19/10 DATE

10-11-10
PLANS APPROVAL DATE

REGISTERED PROFESSIONAL ENGINEER DOUGLAS SMITH No. 43549 Exp 06/30/12 CIVIL STATE OF CALIFORNIA

THE STATE OF CALIFORNIA OR ITS OFFICERS OR AGENTS SHALL NOT BE RESPONSIBLE FOR THE ACCURACY OR COMPLETENESS OF SCANNED COPIES OF THIS PLAN SHEET.

URS CORPORATION
915 WILSHIRE BOULEVARD
SUITE 700
LOS ANGELES, CA 90017

ALAMEDA CORRIDOR TRANSPORTATION AUTHORITY
ONE CIVIL PLAZA, SUITE 350
CARSON, CA 90745

NOTE:
FOR ACCURATE RIGHT OF WAY AND ACCESS DATA, CONTACT RIGHT OF WAY ENGINEERING AT THE DISTRICT OFFICE.

PROJECT NOTES (SHEETS E-13 TO E-16):

1. FOR MOUNTING DETAILS, SEE SHEETS E-15 TO E-18.
2. EAST SIDE NAVIGATIONAL LIGHTS SHOWN. WEST SIDE SIMILAR.
3. INSTALL PULL BOXES AT 300' SPACING Max.
4. INSTALL EXPANSION/DEFLECTION FITINGS AT HINGES AND ABUTMENTS.
5. ADD CONDUCTORS IN BARRIER CONDUIT. SEE SHEET E-4.
6. INSTALL TYPE 2 CONDUIT, UNLESS OTHERWISE NOTED. SEE BRIDGE PLANS FOR DETAILS.
7. INSTALL PANEL BOARD "A".
8. INSTALL EACH PIECE OF STATE-FURNISHED EQUIPMENT AS RECOMMENDED BY MANUFACTURER'S INSTRUCTION SHEET SUPPLIED WITH EQUIPMENT.

ABBREVIATIONS (SHEETS E-13 TO E-18):

FLEX	FLEXIBLE CONDUIT
MB	MAIN BREAKER
MHHW	MEAN HIGHER HIGH WATER
MLLW	MEAN LOWER LOW WATER
(N)	NEW
Nav	NAVIGATION
S	SWITCH
SS	SELECTOR SWITCH
TB	TERMINAL BLOCK

LEGEND (SHEETS E-13 TO E-18):

- 1/16 DIAMETER
- CHANNEL CENTER GREEN LIGHT
- CHANNEL MARGIN RED LIGHT
- JB JUNCTION BOX
- DISCONNECT SWITCH
- —PVC— CONDUIT, TYPE 3, UNDERGROUND
- CONDUIT, TYPE 4
- ADAPTER, ONE TYPE CONDUIT TO ANOTHER
- -SECTION / ELEVATION LETTER -SHEET NUMBER WHERE SHOWN
- PANEL BOARD "A"

CONDUIT AND CONDUCTOR SCHEDULE

AWG OR CABLE	CONDUCTOR RUN	1	2	3	4
#6	Nav LIGHTING	2	2		2
#4	Nav POWER		3	3	
#8	GROUND	1	1	1	1
CONDUIT SIZE		2"	2"	2"(L)	2"(L)

(L) = LIGHTING CONDUIT

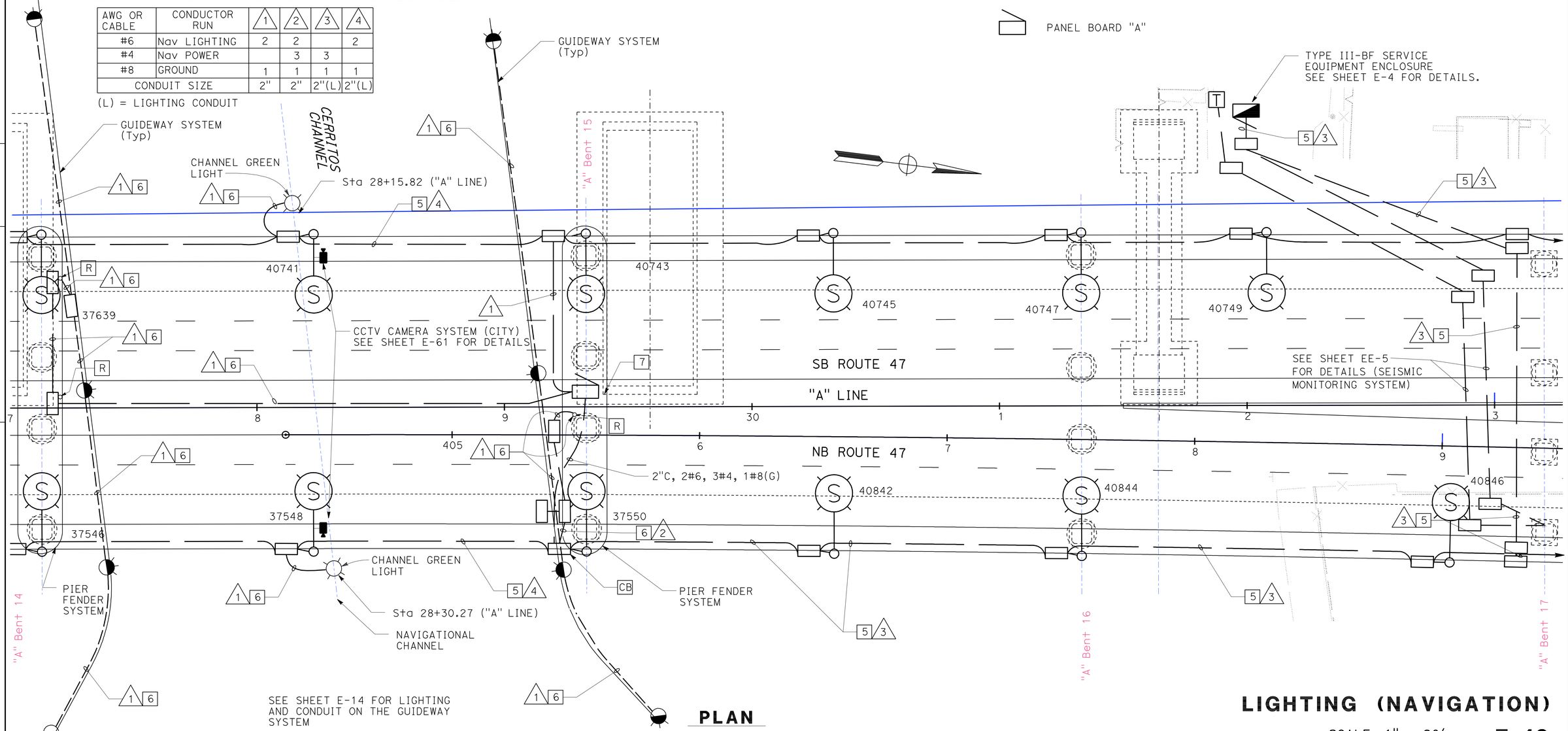

PLAN

THIS PLAN ACCURATE FOR ELECTRICAL WORK ONLY.

LIGHTING (NAVIGATION)

SCALE: 1" = 20'

E-13

STATE OF CALIFORNIA - DEPARTMENT OF TRANSPORTATION
Caltrans

CONSULTANT FUNCTIONAL SUPERVISOR: SHAHRAM VAHDAT
CALCULATED-DESIGNED BY: DOUGLAS E. SMITH
CHECKED BY: DAVID MADERA
REVISED BY
DATE REVISED

LAST REVISION 00-00-00
DATE PLOTTED => 21-OCT-2010
TIME PLOTTED => 11:18

Dist	COUNTY	ROUTE	POST MILES TOTAL PROJECT	SHEET No.	TOTAL SHEETS
07	LA	47,103	3.5/4.6, 0.0/1.1	319	1003

REGISTERED CIVIL ENGINEER 7/19/10 DATE

10-11-10
PLANS APPROVAL DATE

REGISTERED PROFESSIONAL ENGINEER DOUGLAS SMITH No. 43549 Exp 06/30/12 CIVIL STATE OF CALIFORNIA

THE STATE OF CALIFORNIA OR ITS OFFICERS OR AGENTS SHALL NOT BE RESPONSIBLE FOR THE ACCURACY OR COMPLETENESS OF SCANNED COPIES OF THIS PLAN SHEET.

URS CORPORATION
915 WILSHIRE BOULEVARD
SUITE 700
LOS ANGELES, CA 90017

ALAMEDA CORRIDOR
TRANSPORTATION AUTHORITY
ONE CIVIL PLAZA, SUITE 350
CARSON, CA 90745

NOTE:
FOR ACCURATE RIGHT OF WAY AND ACCESS DATA, CONTACT RIGHT OF WAY ENGINEERING AT THE DISTRICT OFFICE.

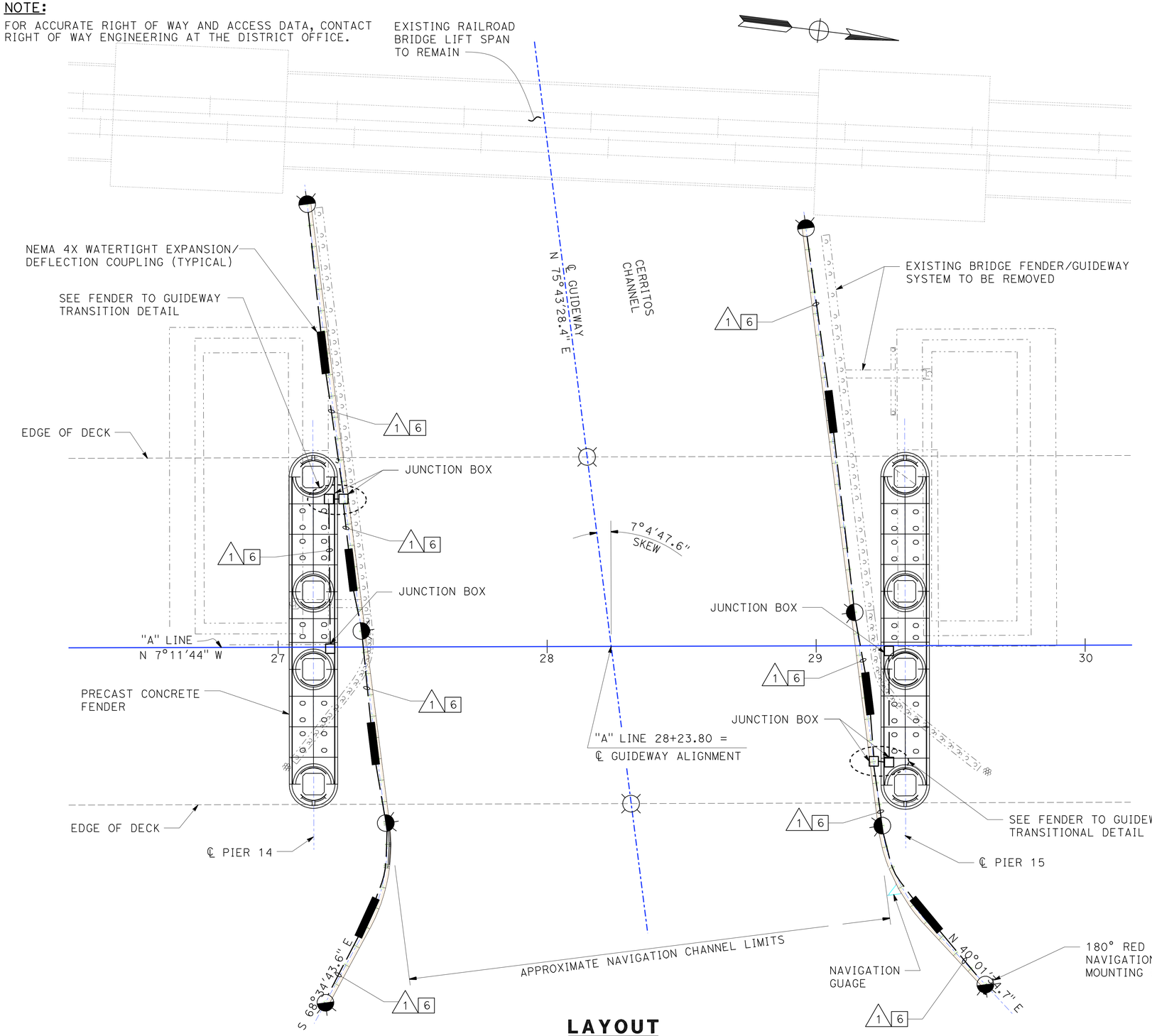

LAYOUT

PLAN

THIS PLAN ACCURATE FOR ELECTRICAL WORK ONLY.

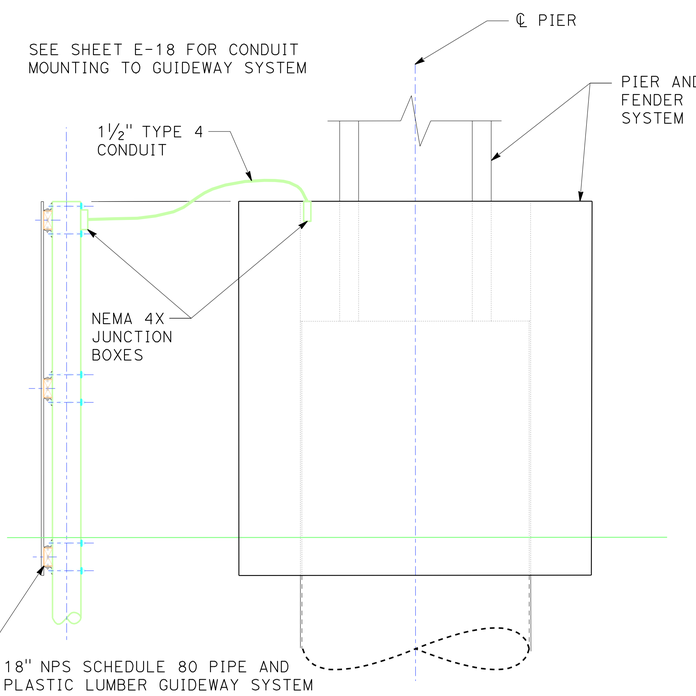

FENDER TO GUIDEWAY TRANSITION

NO SCALE

LIGHTING (NAVIGATION)

SCALE: 1" = 20'

E-14

REVISED BY	DATE REVISED
DAVID MADERA	DOUGLAS E. SMITH

CALCULATED-DESIGNED BY
CHECKED BY

CONSULTANT FUNCTIONAL SUPERVISOR
SHAHRAM VAHDAT

STATE OF CALIFORNIA - DEPARTMENT OF TRANSPORTATION
Caltrans

LAST REVISION 00-00-00 | DATE PLOTTED => 18-OCT-2010 | TIME PLOTTED => 08:50

Dist	COUNTY	ROUTE	POST MILES TOTAL PROJECT	SHEET No.	TOTAL SHEETS
07	LA	47,103	3.5/4.6, 0.0/1.1	320	1003

REGISTERED CIVIL ENGINEER 7/19/10 DATE

10-11-10
PLANS APPROVAL DATE

REGISTERED PROFESSIONAL ENGINEER DOUGLAS SMITH No. 43549 Exp 06/30/12 CIVIL STATE OF CALIFORNIA

THE STATE OF CALIFORNIA OR ITS OFFICERS OR AGENTS SHALL NOT BE RESPONSIBLE FOR THE ACCURACY OR COMPLETENESS OF SCANNED COPIES OF THIS PLAN SHEET.

URS CORPORATION
915 WILSHIRE BOULEVARD
SUITE 700
LOS ANGELES, CA 90017

ALAMEDA CORRIDOR
TRANSPORTATION AUTHORITY
ONE CIVIL PLAZA, SUITE 350
CARSON, CA 90745

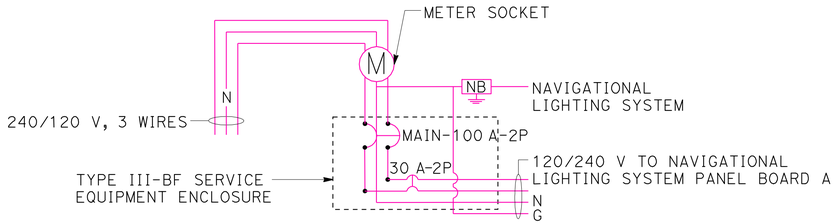

NOTE:
SERVICE EQUIPMENT ENCLOSURE LOCATED NEAR BADGER BRIDGE LIFT HOUSE. SEE E-4 FOR DETAILS.

NAVIGATIONAL SERVICE WIRING DIAGRAM
NO SCALE

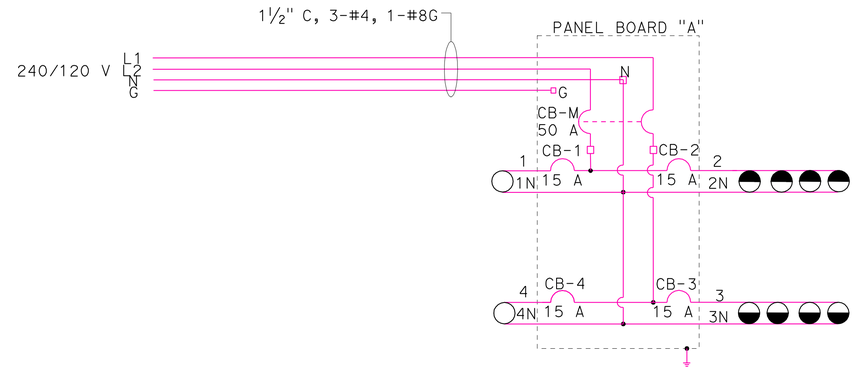

SCHEMATIC DIAGRAM
NO SCALE

LEGEND (WIRING DIAGRAM):

- CHANNEL CENTER GREEN LIGHT
- CHANNEL MARGIN RED LIGHT
- CB, SINGLE POLE
- CB, DOUBLE POLE

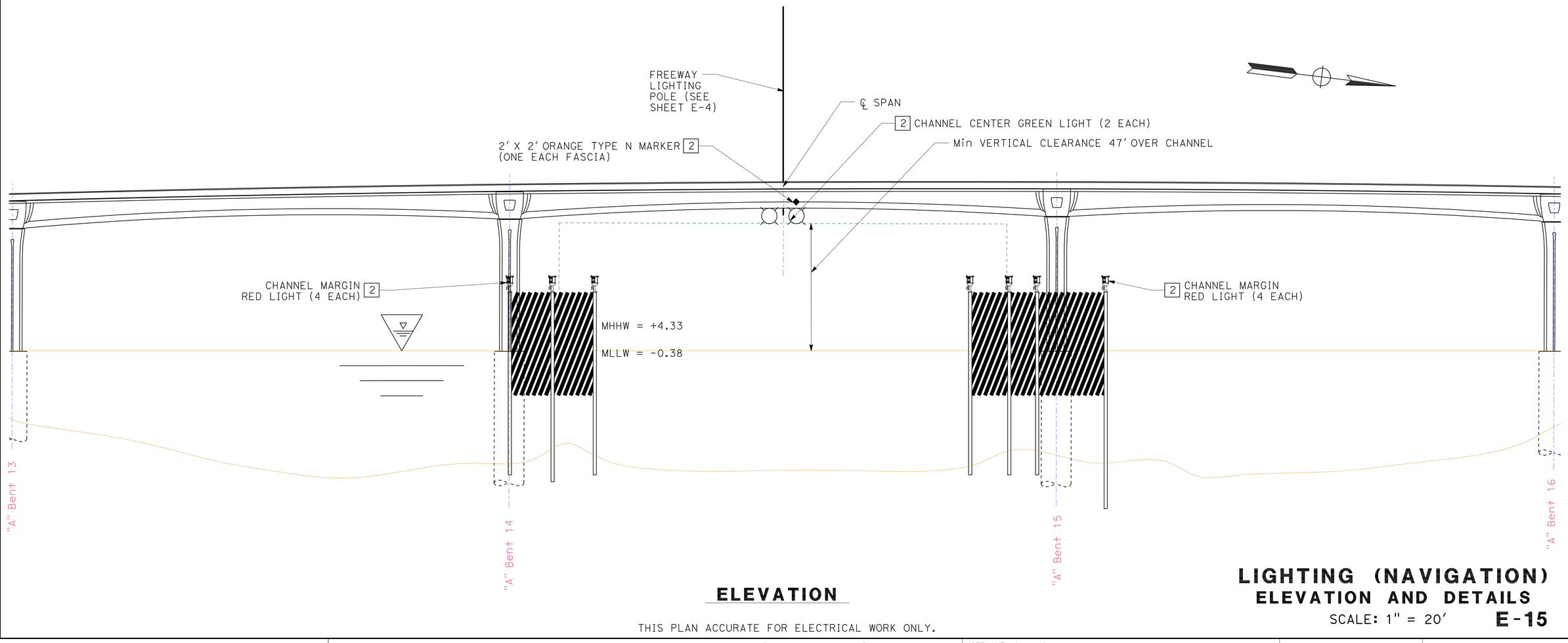

ELEVATION

THIS PLAN ACCURATE FOR ELECTRICAL WORK ONLY.

LIGHTING (NAVIGATION)
ELEVATION AND DETAILS
SCALE: 1" = 20'

E-15

STATE OF CALIFORNIA - DEPARTMENT OF TRANSPORTATION
Caltrans

CONSULTANT FUNCTIONAL SUPERVISOR: SHAHRAM VAHDAT
CALCULATED-DESIGNED BY: DAVID MADERA
CHECKED BY: DOUGLAS E. SMITH
REVISED BY
DATE REVISED

LAST REVISION 00-00-00
DATE PLOTTED => 18-OCT-2010
TIME PLOTTED => 08:50

Dist	COUNTY	ROUTE	POST MILES TOTAL PROJECT	SHEET No.	TOTAL SHEETS
07	LA	47,103	3.5/4.6, 0.0/1.1	321	1003

REGISTERED CIVIL ENGINEER 7/19/10 DATE

10-11-10
PLANS APPROVAL DATE

REGISTERED PROFESSIONAL ENGINEER DOUGLAS SMITH No. 43549 Exp 06/30/12 CIVIL STATE OF CALIFORNIA

THE STATE OF CALIFORNIA OR ITS OFFICERS OR AGENTS SHALL NOT BE RESPONSIBLE FOR THE ACCURACY OR COMPLETENESS OF SCANNED COPIES OF THIS PLAN SHEET.

URS CORPORATION
915 WILSHIRE BOULEVARD
SUITE 700
LOS ANGELES, CA 90017

ALAMEDA CORRIDOR
TRANSPORTATION AUTHORITY
ONE CIVIL PLAZA, SUITE 350
CARSON, CA 90745

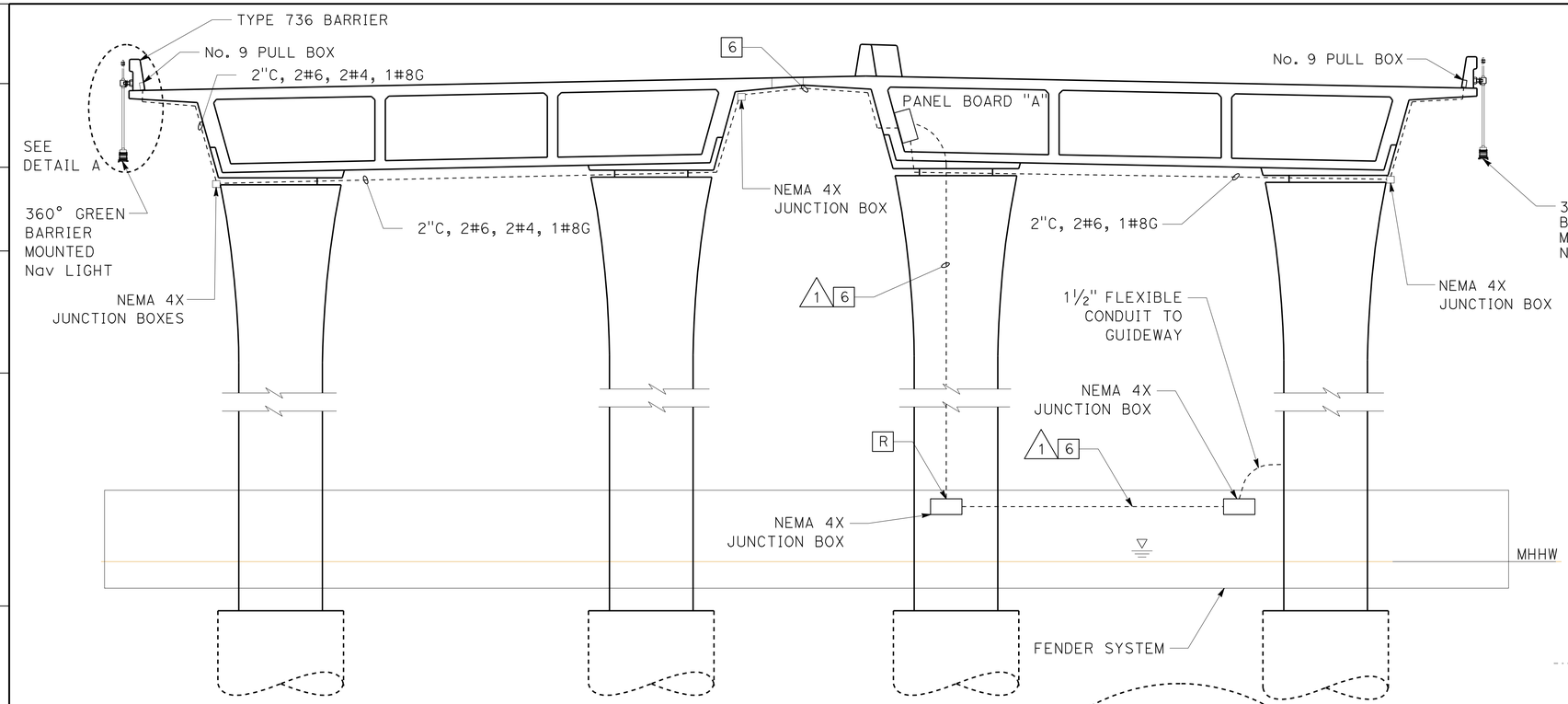

ELEVATION

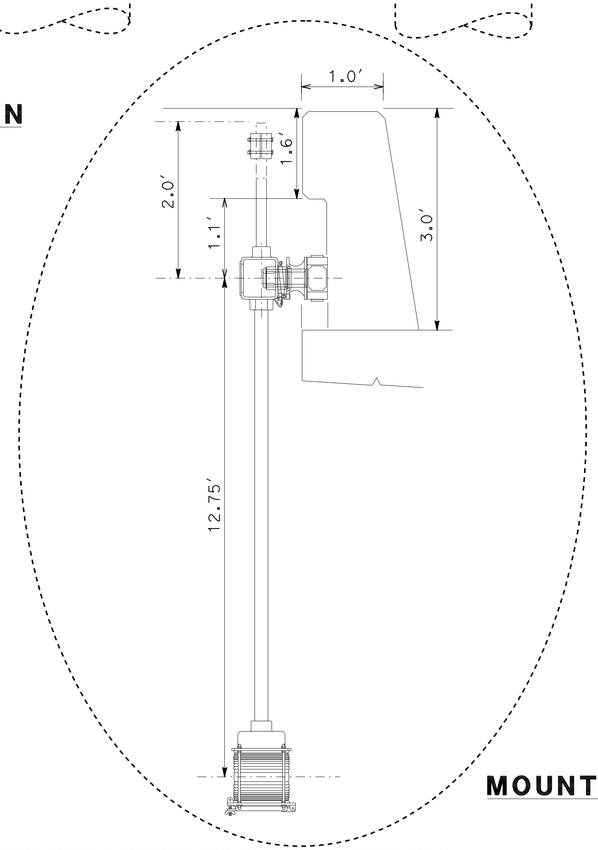

MOUNTING ON BARRIER DETAIL A

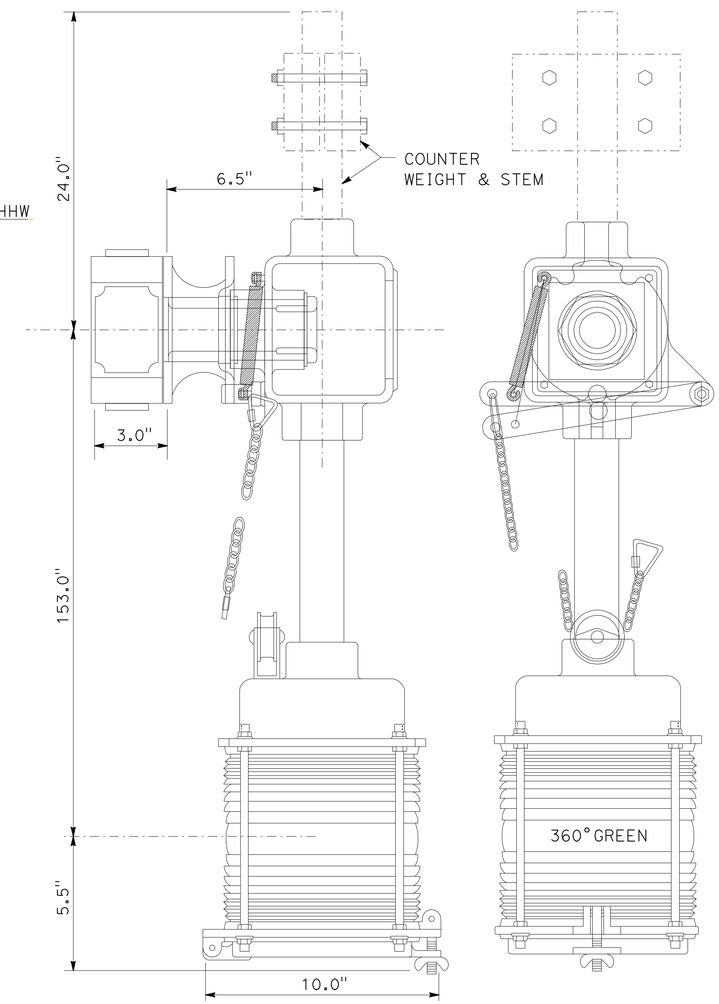

OVERALL DIMENSIONS

PROVIDE (4) STAINLESS STEEL BOLTS AND CONCRETE ANCHORS OF THE SIZE AND EMBEDMENT DEPTH PER MANUFACTURER'S RECOMMENDATION

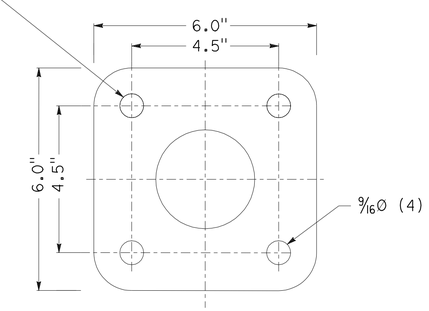

NAVIGATION LIGHT BASE PLATE TEMPLATE

THIS PLAN ACCURATE FOR ELECTRICAL WORK ONLY.

LIGHTING (NAVIGATION) DETAILS

NO SCALE

E-16

STATE OF CALIFORNIA - DEPARTMENT OF TRANSPORTATION
Caltrans

CONSULTANT FUNCTIONAL SUPERVISOR: SHAHRAM VAHDAT

CALCULATED-DESIGNED BY: DAVID MADERA
CHECKED BY: DOUGLAS E. SMITH

REVISED BY | DATE REVISED

LAST REVISION 00-00-00 | DATE PLOTTED => 18-OCT-2010 | TIME PLOTTED => 08:51

Dist	COUNTY	ROUTE	POST MILES TOTAL PROJECT	SHEET No.	TOTAL SHEETS
07	LA	47,103	3.5/4.6, 0.0/1.1	322	1003

REGISTERED CIVIL ENGINEER 7/19/10 DATE

10-11-10
PLANS APPROVAL DATE

REGISTERED PROFESSIONAL ENGINEER DOUGLAS SMITH No. 43549 Exp 06/30/12 CIVIL STATE OF CALIFORNIA

THE STATE OF CALIFORNIA OR ITS OFFICERS OR AGENTS SHALL NOT BE RESPONSIBLE FOR THE ACCURACY OR COMPLETENESS OF SCANNED COPIES OF THIS PLAN SHEET.

URS CORPORATION
915 WILSHIRE BOULEVARD
SUITE 700
LOS ANGELES, CA 90017

ALAMEDA CORRIDOR
TRANSPORTATION AUTHORITY
ONE CIVIL PLAZA, SUITE 350
CARSON, CA 90745

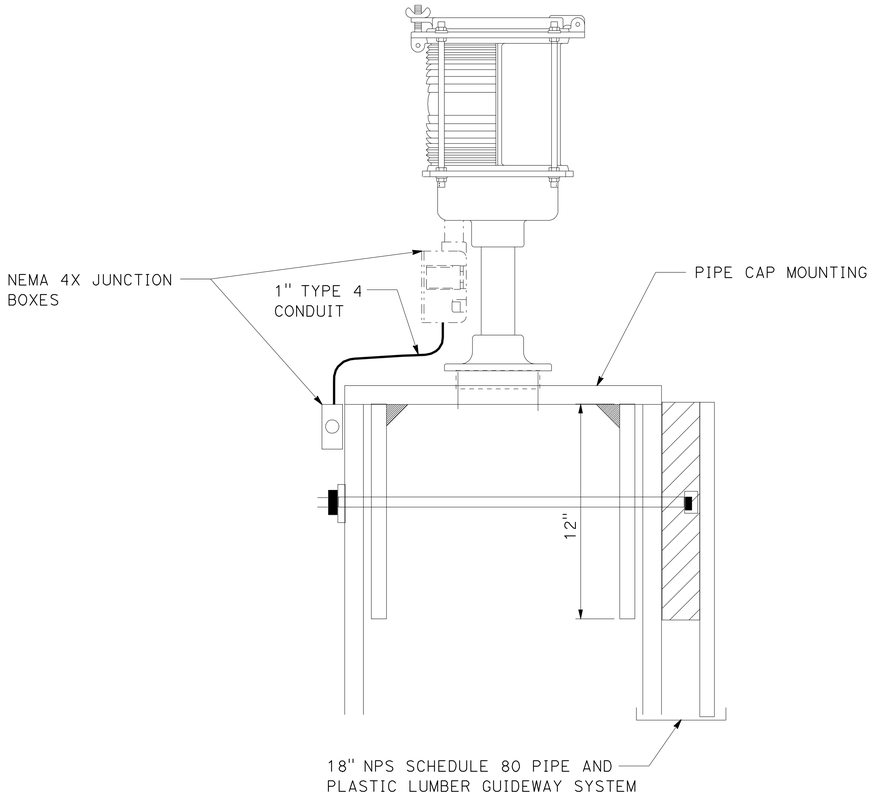

PIPE CAP MOUNTING DETAIL

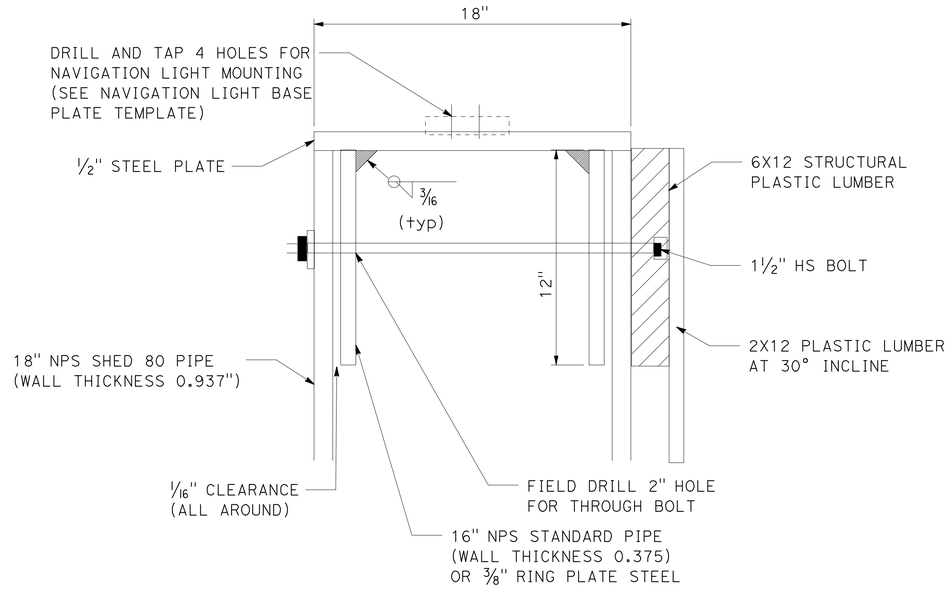

SECTION THROUGH PIPE CAP MOUNTING

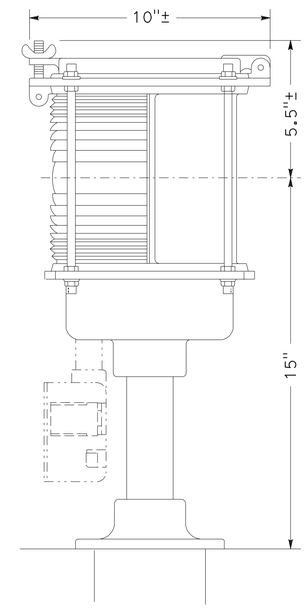

BASE MOUNTED NAVIGATION LIGHT

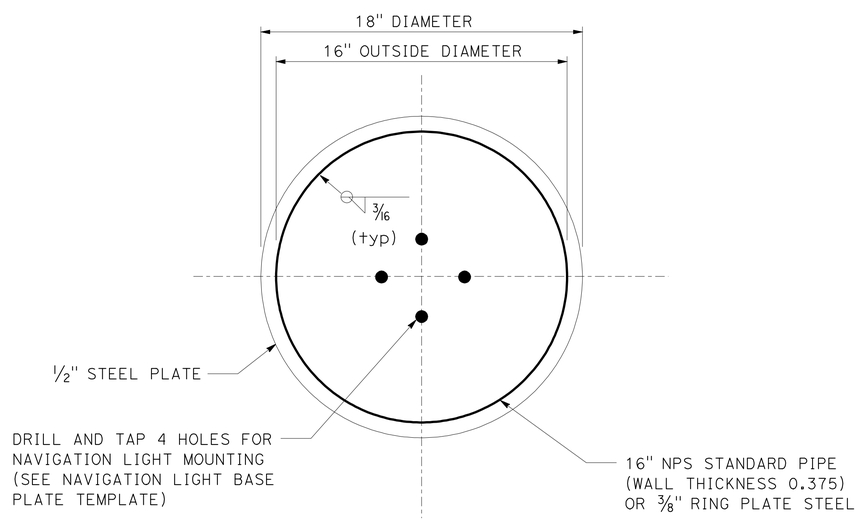

PLAN VIEW - PIPE CAP MOUNTING

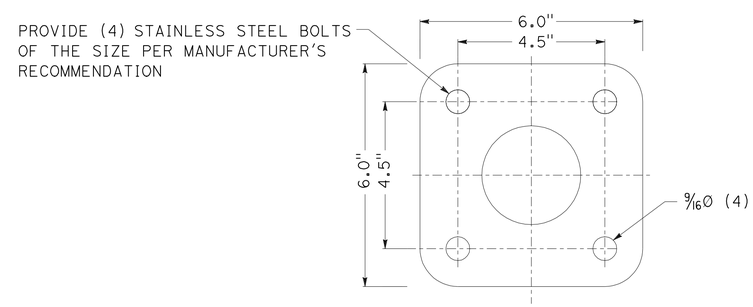

NAVIGATION LIGHT BASE PLATE TEMPLATE

THIS PLAN ACCURATE FOR ELECTRICAL WORK ONLY.

LIGHTING (NAVIGATION) DETAILS

NO SCALE

E-17

STATE OF CALIFORNIA - DEPARTMENT OF TRANSPORTATION
Caltrans

CONSULTANT FUNCTIONAL SUPERVISOR: SHAHRAM VAHDAT
CALCULATED-DESIGNED BY: DOUGLAS E. SMITH
CHECKED BY: DAVID MADERA
REVISED BY
DATE REVISED

LAST REVISION 00-00-00
DATE PLOTTED => 18-OCT-2010
TIME PLOTTED => 10:17

Dist	COUNTY	ROUTE	POST MILES TOTAL PROJECT	SHEET No.	TOTAL SHEETS
07	LA	47,103	3.5/4.6, 0.0/1.1	323	1003

REGISTERED CIVIL ENGINEER 7/19/10 DATE

10-11-10
PLANS APPROVAL DATE

REGISTERED PROFESSIONAL ENGINEER DOUGLAS SMITH No. 43549 Exp 06/30/12 CIVIL STATE OF CALIFORNIA

THE STATE OF CALIFORNIA OR ITS OFFICERS OR AGENTS SHALL NOT BE RESPONSIBLE FOR THE ACCURACY OR COMPLETENESS OF SCANNED COPIES OF THIS PLAN SHEET.

URS CORPORATION
915 WILSHIRE BOULEVARD
SUITE 700
LOS ANGELES, CA 90017

ALAMEDA CORRIDOR
TRANSPORTATION AUTHORITY
ONE CIVIL PLAZA, SUITE 350
CARSON, CA 90745

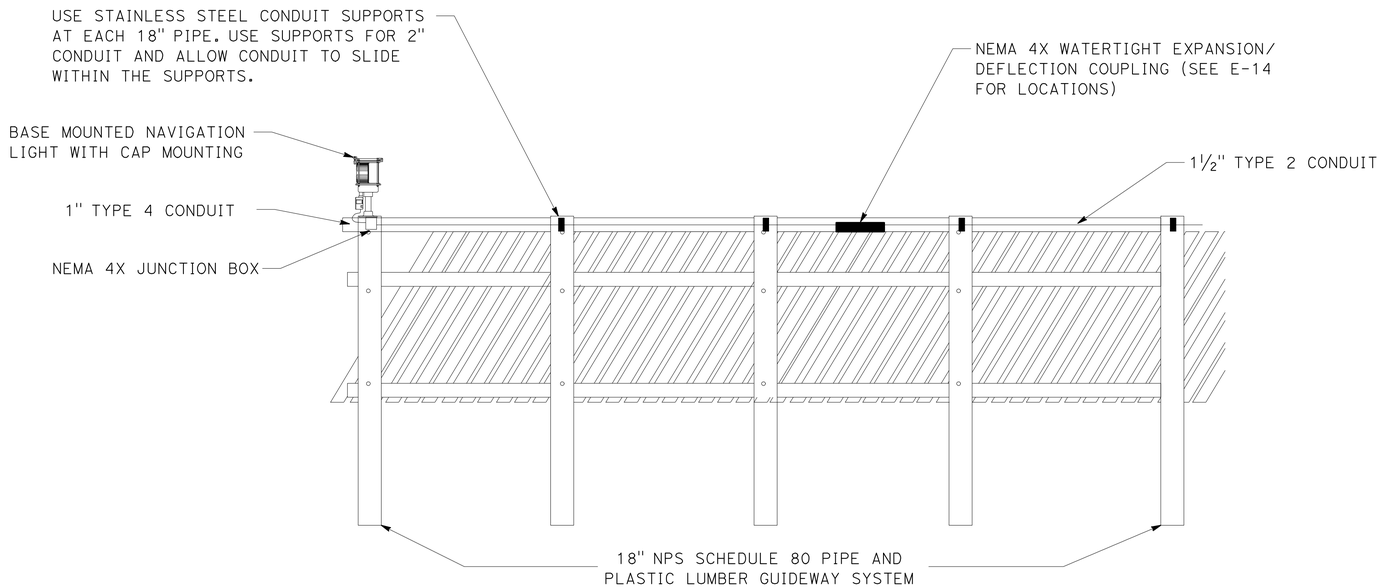

CONDUIT MOUNTING TO GUIDEWAY SYSTEM

(REAR ELEVATION OF GUIDEWAY SHOWN)

CONDUIT EXPANSION ASSEMBLY NOTES:

1. ALL OPEN JOINTS TO BE SEAL WELDED.
2. EXPANSION ASSEMBLY WITH EXTERNAL BOND SHOWN, BUT EXPANSION ASSEMBLY WITH INTERNAL BOND WILL BE ACCEPTABLE.
3. PROVIDE EXPANSION ASSEMBLY TO ALLOW MINIMUM OF ±2" OF EXPANSION.

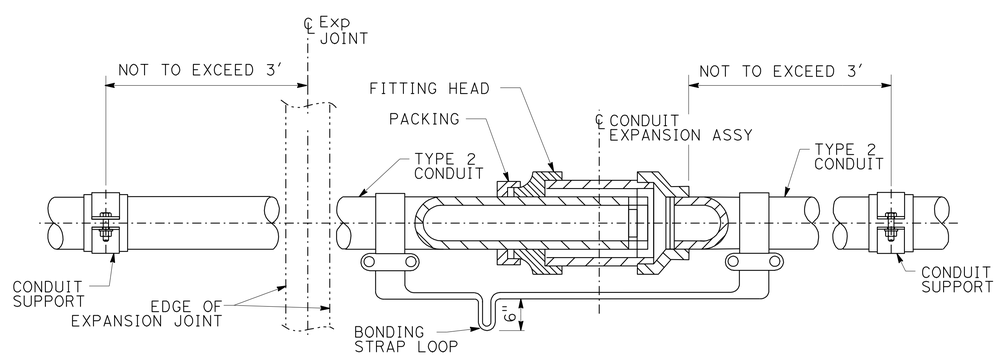

CONDUIT EXPANSION ASSEMBLY

LIGHTING (NAVIGATION)

CONDUIT IN BRIDGE RAILING

FLEXIBLE EXPANSION JOINT DETAIL

NO SCALE

E-18

THIS PLAN ACCURATE FOR ELECTRICAL WORK ONLY.

STATE OF CALIFORNIA - DEPARTMENT OF TRANSPORTATION

Caltrans

CONSULTANT FUNCTIONAL SUPERVISOR: SHAHRAM VAHDAT

CALCULATED-DESIGNED BY: DAVID MADERA

CHECKED BY: DOUGLAS E. SMITH

REVISED BY

DATE REVISED

LAST REVISION 00-00-00

DATE PLOTTED => 18-OCT-2010

TIME PLOTTED => 14:16

Dist	COUNTY	ROUTE	POST MILES TOTAL PROJECT	SHEET No.	TOTAL SHEETS
07	LA	47,103	3.5/4.6, 0.0/1.1	324	1003

REGISTERED CIVIL ENGINEER 7/19/10 DATE

10-11-10
PLANS APPROVAL DATE

REGISTERED PROFESSIONAL ENGINEER DOUGLAS SMITH No. 43549 Exp 06/30/12 CIVIL STATE OF CALIFORNIA

THE STATE OF CALIFORNIA OR ITS OFFICERS OR AGENTS SHALL NOT BE RESPONSIBLE FOR THE ACCURACY OR COMPLETENESS OF SCANNED COPIES OF THIS PLAN SHEET.

URS CORPORATION
915 WILSHIRE BOULEVARD
SUITE 700
LOS ANGELES, CA 90017

ALAMEDA CORRIDOR
TRANSPORTATION AUTHORITY
ONE CIVIL PLAZA, SUITE 350
CARSON, CA 90745

NOTE:

FOR ACCURATE RIGHT OF WAY AND ACCESS DATA, CONTACT RIGHT OF WAY ENGINEERING AT THE DISTRICT OFFICE.

PROJECT NOTES (THIS SHEET):

1. INSTALL 120/240 V TYPE III-BF METERED SERVICE EQUIPMENT ENCLOSURE. (ID:07-53-047-0-003.701)
   ADDRESS: 3391 NEW DOCK St
   - 100 A, 2P, 240 V, MAIN CB
   - 50 A, 1P, 120 V, SIGNALS
   - 30 A, 2P, 240 V, SAFETY LIGHTING

PROJECT NOTES (Cont):

2. INSTALL STATE-FURNISHED MODEL 2070L CONTROLLER ASSEMBLY. INSTALL BBS EXTERNAL CABINET, BATTERIES AND STATE-FURNISHED ELECTRONIC COMPONENTS.
3. INSTALL EMERGENCY VEHICLE DETECTOR ON SIGNAL MAST ARM.
4. INSTALL 3" C, MT, PER SERVICE UTILITY REQUIREMENTS.

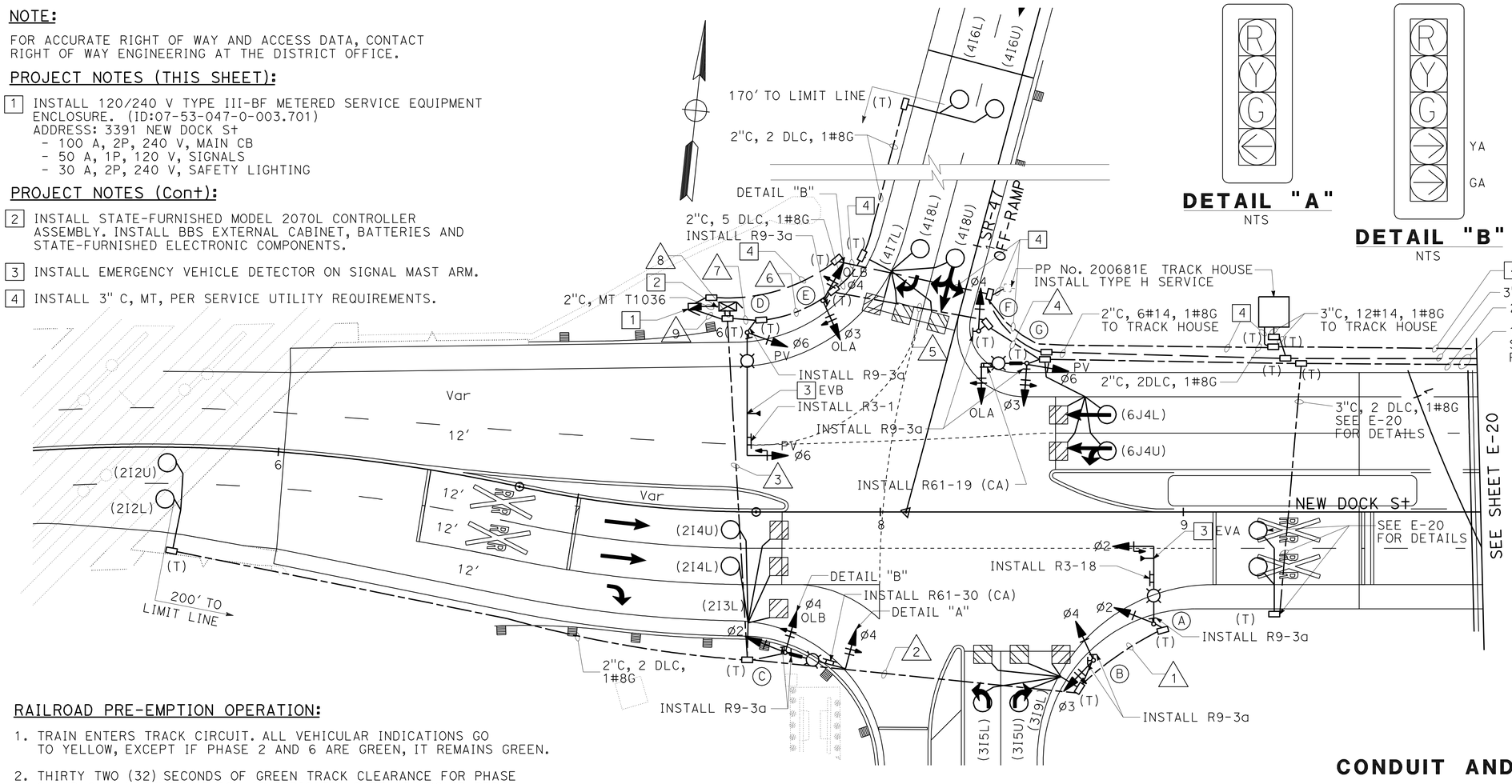

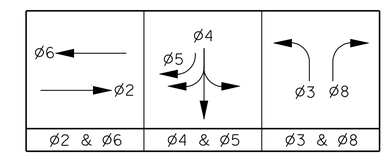

PHASE DIAGRAM

OLA=Ø3+Ø8
OLB=Ø4+Ø5
EVA= Ø2
EVB= Ø6

RAILROAD PRE-EMPTION OPERATION:

1. TRAIN ENTERS TRACK CIRCUIT. ALL VEHICULAR INDICATIONS GO TO YELLOW, EXCEPT IF PHASE 2 AND 6 ARE GREEN, IT REMAINS GREEN.
2. THIRTY TWO (32) SECONDS OF GREEN TRACK CLEARANCE FOR PHASE 2 AND 6. ALL OTHER VEHICULAR INDICATIONS REMAIN SOLID RED.
3. YELLOW CLEARANCE FOR PHASE 2 AND 6. ALL OTHER VEHICULAR INDICATIONS REMAIN SOLID RED.
4. LIMITED SERVICE OPERATION FOR PHASES 3, 5, 2 AND 6. SOLID RED FOR ALL OTHER VEHICULAR SIGNALS.
5. TRAIN LEAVES TRACK CIRCUIT. SIGNAL RETURNS TO NORMAL OPERATION WITH GREEN INDICATIONS FOR PHASE 2 AND PHASE 6.

POLE AND EQUIPMENT SCHEDULE

No.	STANDARD			VEHICLE SIGNAL MOUNTING				PEDESTRIAN SIGNAL		PPB		LUMINAIRE (WATTS) LED	SPECIAL REQUIREMENTS (RSNS)
	TYPE	SIG MA	LUM MA	Ø	MAST ARM	Ø	POLE	Ø	MOUNTING	Ø	ARROW		
Ⓐ	19-4-100	25'	12'	2	MAS	2	SV-1-T	-	-	-	-	165	-
Ⓑ	1-A	-	-	-	-	3 4	TV-2-T	-	-	-	-	-	-
Ⓒ	19-4-100	20'	12'	4	MAS	2 4	SV-2-T	-	-	-	-	165	NEW DOCK St
Ⓓ	26-4-100	40'	12'	6	MAS	6	SV-1-T	-	-	-	-	165	-
Ⓔ	1-A	-	-	-	-	3 4	TV-2-T	-	-	-	-	-	-
Ⓕ	1-A	-	-	-	-	4	TV-1-T	-	-	-	-	-	-
Ⓖ	19-4-100	15'	-	3	MAS	8 6	SV-2-T	-	-	-	-	165	NEW DOCK St

RSNS - REFLECTORIZED STREET NAME SIGN

CONDUIT AND CONDUCTOR SCHEDULE

CONDUCTOR DESIGNATION		RUN NUMBER								
		NUMBER OF CONDUCTORS								
CABLE TYPE	PHASE	1	2	3	4	5	6	7	8	9
28CSC	C1	1	1	1	1	1	1	1	1	
	C2	1	1	1	1	1	1	1	1	
TOTAL 28CSC		2	2	2	2	2	2	2	2	
#8	GROUND	1	1	1	1	1	1	1	1	1
#6	CONTROLLER POWER								2	2
#10	LUMINAIRE	2	2	2	2	2	2	2		2
#14	RAILROAD					6	6	6	6	
TYPE B DLC	Ø2			5					5	
	Ø3		3	3					3	
	Ø4						5	5	5	
	Ø6				2	4	4	4	4	
TOTAL DLCs PER RUN			3	8	2	4	9	9	17	
EVC		1	1	1				1	2	
CONDUIT SIZE		2"	3"	3"	3"	3"	2"	3"	2-3"	3"

SIGNAL AND LIGHTING (LOCATION 1)

SCALE: 1"= 20'

E-19

THIS PLAN ACCURATE FOR ELECTRICAL WORK ONLY.

STATE OF CALIFORNIA - DEPARTMENT OF TRANSPORTATION
Caltrans

CONSULTANT FUNCTIONAL SUPERVISOR: SHAHRAM VAHDAT
CALCULATED-DESIGNED BY: DOUGLAS E. SMITH
CHECKED BY: DAVID MADERA
REVISED BY
DATE REVISED

LAST REVISION 00-00-00
DATE PLOTTED => 18-OCT-2010
TIME PLOTTED => 14:53

Dist	COUNTY	ROUTE	POST MILES TOTAL PROJECT	SHEET No.	TOTAL SHEETS
07	LA	47,103	3.5/4.6, 0.0/1.1	325	1003

REGISTERED CIVIL ENGINEER 7/19/10 DATE

10-11-10
PLANS APPROVAL DATE

REGISTERED PROFESSIONAL ENGINEER DOUGLAS SMITH No. 43549 Exp 06/30/12 CIVIL STATE OF CALIFORNIA

THE STATE OF CALIFORNIA OR ITS OFFICERS OR AGENTS SHALL NOT BE RESPONSIBLE FOR THE ACCURACY OR COMPLETENESS OF SCANNED COPIES OF THIS PLAN SHEET.

URS CORPORATION
915 WILSHIRE BOULEVARD
SUITE 700
LOS ANGELES, CA 90017

ALAMEDA CORRIDOR
TRANSPORTATION AUTHORITY
ONE CIVIL PLAZA, SUITE 350
CARSON, CA 90745

NOTE:

FOR ACCURATE RIGHT OF WAY AND ACCESS DATA, CONTACT RIGHT OF WAY ENGINEERING AT THE DISTRICT OFFICE.

PROJECT NOTES (THIS SHEET):

1. INSTALL 120/240 V TYPE III-BF METERED SERVICE EQUIPMENT ENCLOSURE. (ID:07-53-047-0-003.751)
   ADDRESS: 3385 NEW DOCK STREET
   - 100 A, 2P, 240 V, MAIN CB
   - 50 A, 1P, 120 V, SIGNALS
   - 30 A, 2P, 240 V, SAFETY LIGHTING
2. INSTALL STATE-FURNISHED MODEL 2070L CONTROLLER ASSEMBLY. INSTALL BBS EXTERNAL CABINET, BATTERIES AND STATE-FURNISHED ELECTRONIC COMPONENTS.
3. INSTALL EMERGENCY VEHICLE DETECTOR ON SIGNAL MAST ARM.
4. INSTALL 3" C, MT, PER SERVICE UTILITY REQUIREMENTS.

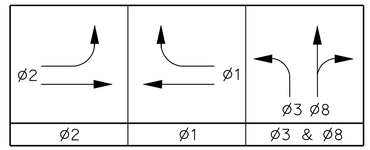

PHASE DIAGRAM

EVA= Ø2

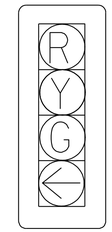

DETAIL "A"

NTS

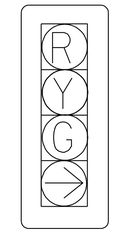

DETAIL "B"

NTS

POLE AND EQUIPMENT SCHEDULE

No.	STANDARD TYPE	STANDARD SIG MA	STANDARD LUM MA	VEHICLE SIGNAL Ø	VEHICLE SIGNAL MAST ARM	VEHICLE SIGNAL Ø	VEHICLE SIGNAL POLE	PEDESTRIAN Ø	PEDESTRIAN MOUNTING	PPB Ø	PPB ARROW	LUMINARE (WATTS) LED	SPECIAL REQUIREMENTS (RSNS)
Ⓐ	19-4-100	25′	12′		MAS	2	SV-1-T	-	-	-	-	165	(47) NORTH →
Ⓑ	15TS	-	12	-	-	1 2	SV-2-T	-	-	-	-	165	-
Ⓒ	19-4-100	25	12′	1	MAS	1	SV-1-T	-	-	-	-	165	← NORTH (47)
Ⓓ	1-A	-	-	-	-	3	TV-1-T	-	-	-	-	-	-
Ⓔ	24-4-100	35	12	8	MAS	8	SV-1-T	-	-	-	-	165	NEW DOCK St
Ⓕ	1-A	-	-	-	-	1 2	TV-2-T	-	-	-	-	-	-

RSNS - REFLECTORIZED STREET NAME SIGN

CONDUIT AND CONDUCTOR SCHEDULE

CONDUCTOR DESIGNATION		RUN NUMBER								
CABLE TYPE	PHASE	NUMBER OF CONDUCTORS								
		1	2	3	4	5	6	7	8	9
28CSC	C1	1	1	1	1	1	1	1		
	C2	1	1	1	1	1	1	1		
TOTAL 28 CSC		2	2	2	2	2	2	2		
#6	CONTROLLER POWER								2	
#8	GROUND	1	1	1	1	1	1	1	1	1
#10	LUMINAIRE	2	2		2	2		2		2
#14	RAILROAD							6		
TYPE B DLC	Ø1			3	3	3	3	3		
	Ø2		2					4		
TOTAL DLCs PER RUN			2	3	3	3	3	7		
VIDEO DETECTOR CABLE					1	1	1	1		
EVC		1	1		1	1	1	2		
CONDUIT SIZE (in)		3"	3"	2"	3"	3"	3"	2-3"	3"	2"

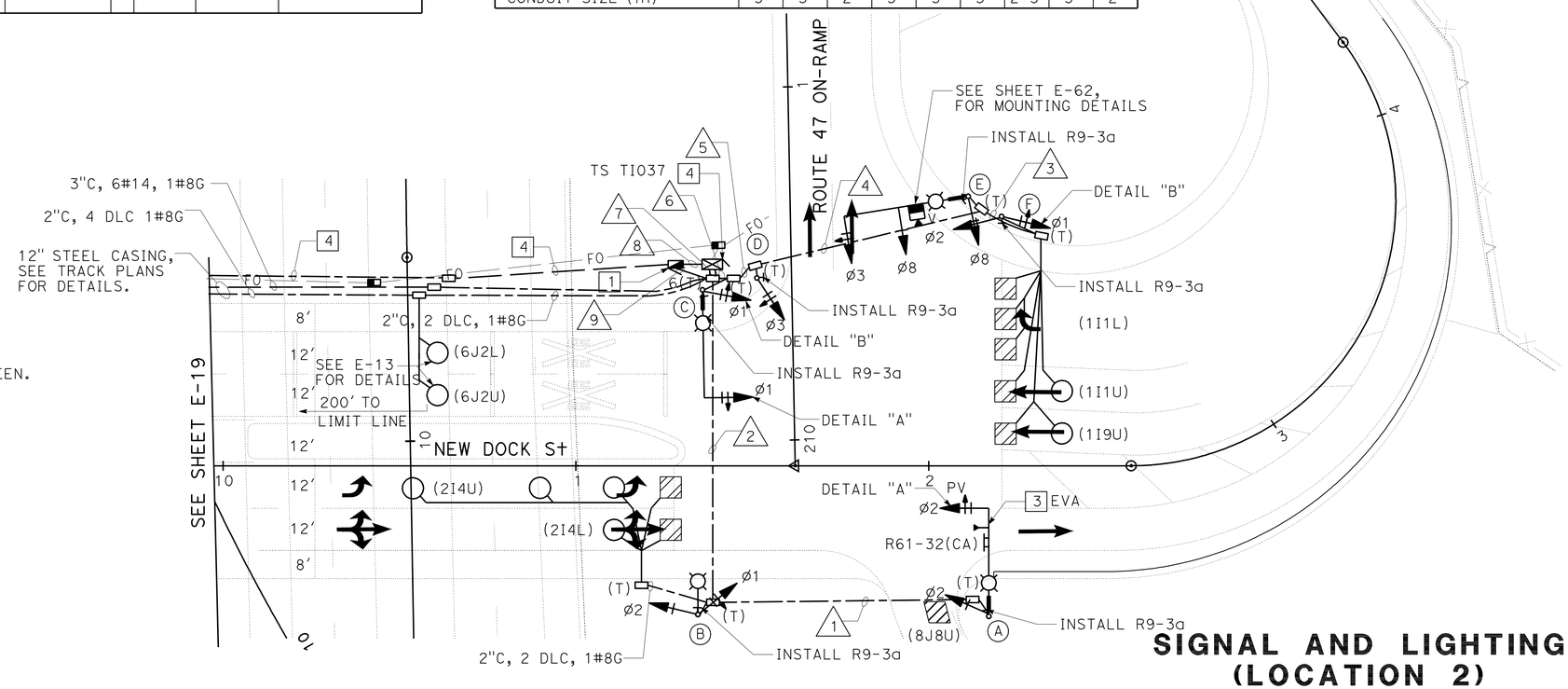

RAILROAD PRE-EMPTION OPERATION:

1. TRAIN ENTERS TRACK CIRCUIT. ALL VEHICULAR INDICATIONS GO TO YELLOW, EXCEPT IF PHASE 2 IS GREEN, IT REMAINS GREEN.
2. THIRTY (30) SECONDS OF GREEN TRACK CLEARANCE FOR PHASE 2. ALL OTHER VEHICULAR INDICATIONS REMAIN SOLID RED.
3. YELLOW CLEARANCE FOR PHASE 2. ALL OTHER VEHICULAR INDICATIONS REMAIN SOLID RED.
4. LIMITED SERVICE OPERATION FOR PHASES 2 AND 8. SOLID RED FOR ALL OTHER VEHICULAR SIGNALS.
5. TRAIN LEAVES TRACK CIRCUIT. SIGNAL RETURNS TO NORMAL OPERATION WITH GREEN INDICATIONS FOR PHASE 2.

THIS PLAN ACCURATE FOR ELECTRICAL WORK ONLY.

SIGNAL AND LIGHTING (LOCATION 2)

SCALE: 1" = 20′

E-20

STATE OF CALIFORNIA - DEPARTMENT OF TRANSPORTATION
Caltrans

CONSULTANT FUNCTIONAL SUPERVISOR: SHAHRAM VAHDAT
CALCULATED-DESIGNED BY: DOUGLAS E. SMITH
CHECKED BY: DAVID MADERA
REVISED BY
DATE REVISED

LAST REVISION 00-00-00
DATE PLOTTED => 21-OCT-2010
TIME PLOTTED => 11:18

Dist	COUNTY	ROUTE	POST MILES TOTAL PROJECT	SHEET No.	TOTAL SHEETS
07	LA	47,103	3.5/4.6, 0.0/1.1	326	1003

REGISTERED CIVIL ENGINEER 7/19/10 DATE

10-11-10
PLANS APPROVAL DATE

REGISTERED PROFESSIONAL ENGINEER DOUGLAS SMITH No. 43549 Exp 06/30/12 CIVIL STATE OF CALIFORNIA

THE STATE OF CALIFORNIA OR ITS OFFICERS OR AGENTS SHALL NOT BE RESPONSIBLE FOR THE ACCURACY OR COMPLETENESS OF SCANNED COPIES OF THIS PLAN SHEET.

URS CORPORATION
915 WILSHIRE BOULEVARD
SUITE 700
LOS ANGELES, CA 90017

ALAMEDA CORRIDOR
TRANSPORTATION AUTHORITY
ONE CIVIL PLAZA, SUITE 350
CARSON, CA 90745

NORMAL STATE- NO TRAIN APPROACHING

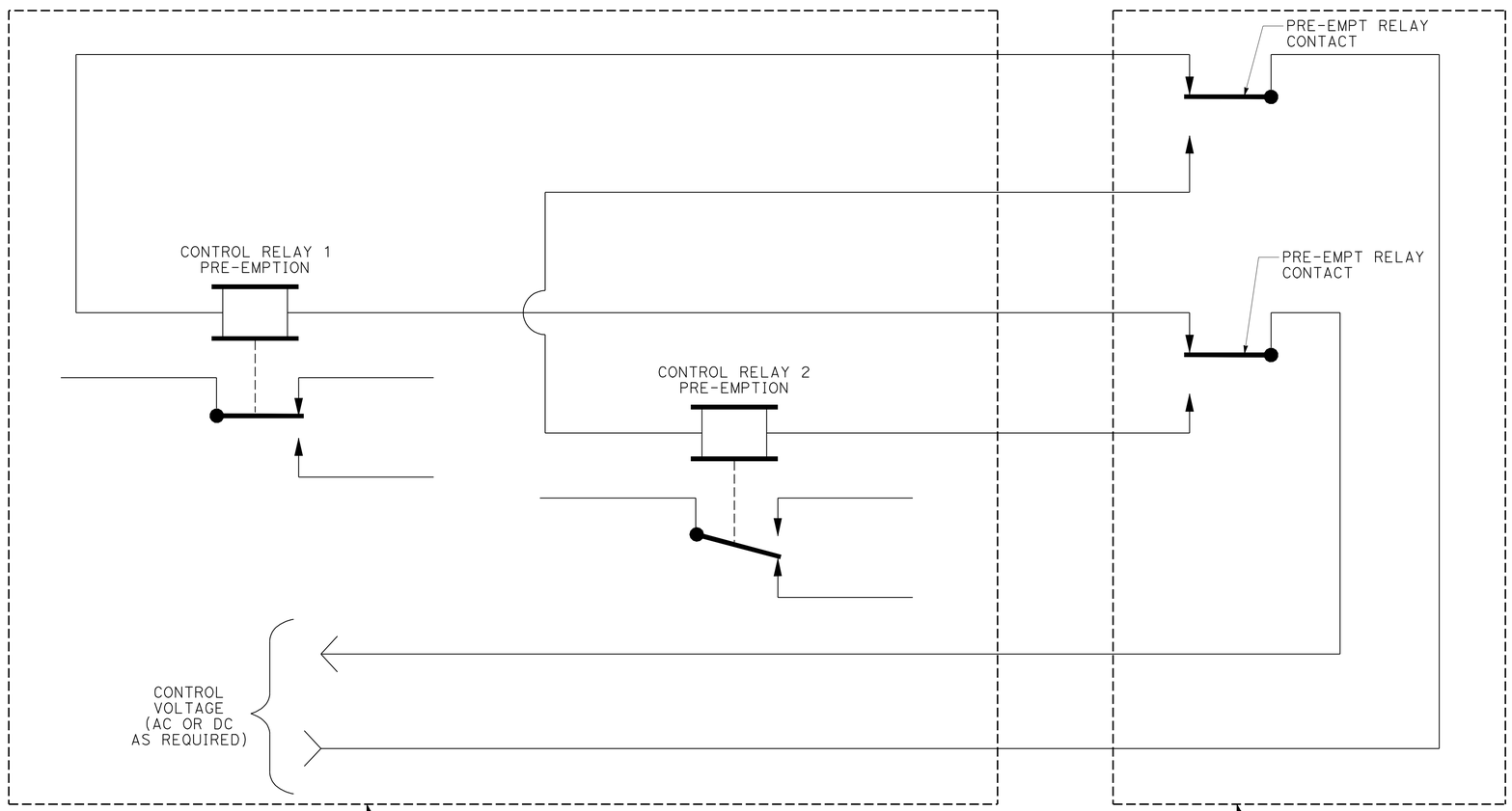

TRAFFIC SIGNAL EQUIPMENT AT T1035 (OCEAN Blvd @ SR-47) AND T1036 (NEW DOCK St @ SR-47

HIGHWAY RAIL GRADE CROSSING WARNING EQUIPMENT IN TRACK HOUSE (PREEMPT RELAY OPERATED BY WARNING EQUIPMENT CONTROL) (BY OTHERS)

SUPERVISED "DOUBLE-BREAK, SIX WIRE" INTERCONNECTION CIRCUIT

SIGNAL AND LIGHTING (LOCATION 1 AND 2)

RAILROAD PRE-EMPTION DETAILS

NO SCALE

E-21

THIS PLAN ACCURATE FOR ELECTRICAL WORK ONLY.

STATE OF CALIFORNIA - DEPARTMENT OF TRANSPORTATION
Caltrans

CONSULTANT FUNCTIONAL SUPERVISOR: SHAHRAM VAHDAT
CALCULATED-DESIGNED BY: DOUGLAS E. SMITH
CHECKED BY: DAVID MADERA
REVISED BY
DATE REVISED

LAST REVISION 00-00-00
DATE PLOTTED => 19-OCT-2010
TIME PLOTTED => 11:20

Dist	COUNTY	ROUTE	POST MILES TOTAL PROJECT	SHEET No.	TOTAL SHEETS
07	LA	47,103	3.5/4.6, 0.0/1.1	327	1003

REGISTERED CIVIL ENGINEER 7/19/10 DATE

10-11-10
PLANS APPROVAL DATE

REGISTERED PROFESSIONAL ENGINEER DOUGLAS SMITH No. 43549 Exp 06/30/12 CIVIL STATE OF CALIFORNIA

THE STATE OF CALIFORNIA OR ITS OFFICERS OR AGENTS SHALL NOT BE RESPONSIBLE FOR THE ACCURACY OR COMPLETENESS OF SCANNED COPIES OF THIS PLAN SHEET.

URS CORPORATION
915 WILSHIRE BOULEVARD
SUITE 700
LOS ANGELES, CA 90017

ALAMEDA CORRIDOR
TRANSPORTATION AUTHORITY
ONE CIVIL PLAZA, SUITE 350
CARSON, CA 90745

NOTE:

FOR ACCURATE RIGHT OF WAY AND ACCESS DATA, CONTACT RIGHT OF WAY ENGINEERING AT THE DISTRICT OFFICE.

GENERAL NOTES (THIS SHEET):

1. SEE SHEET E-23 FOR POLE AND CONDUIT AND CONDUCTOR SCHEDULES.
2. REPLACE ALL SIGNAL INDICATIONS TO LED TYPE.

PROJECT NOTES (THIS SHEET):

1. REPLACE FOUNDATION.
2. NOT USED
3. REMOVE AND REUSE CONDUCTORS, SC
4. RELOCATE MODEL 332 CONTROLLER CABINET. INSTALL BBS EXTERNAL CABINET, BATTERIES AND STATE-FURNISHED ELECTRONIC COMPONENTS.
5. TRANSITION CONDUIT FROM PULL BOX INTO BARRIER.
6. AB LOOPS AND INSTALL NEW LOOPS AS SHOWN.
7. RS MODEL 170 CONTROLLER. INSTALL STATE-FURNISHED MODEL 2070L CONTROLLER, FOTM, AND MODEL 2070-6A MODEM.

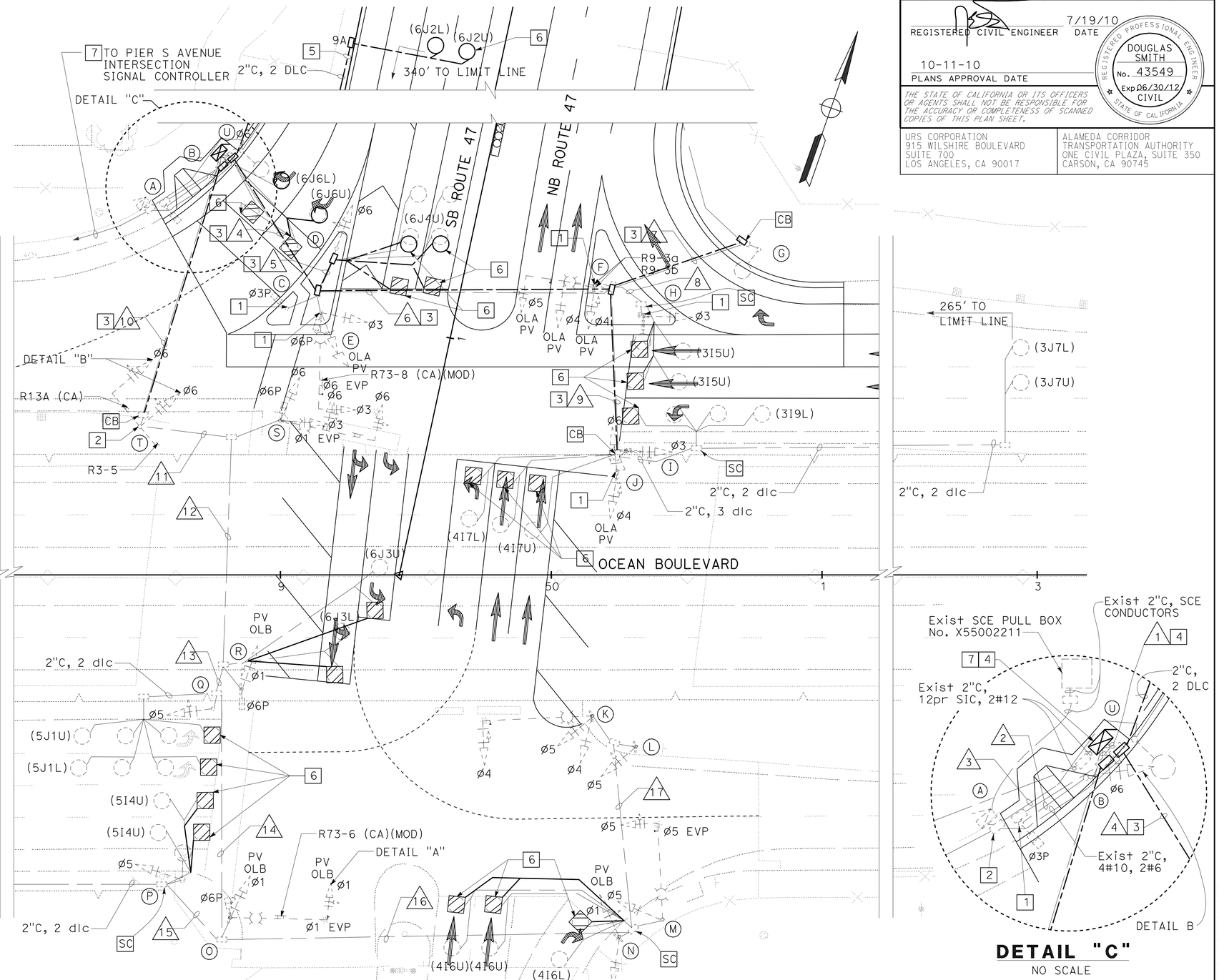

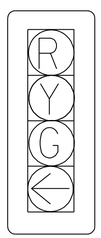

DETAIL "A"
NTS

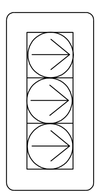

DETAIL "B"
NTS

DETAIL "C"
NO SCALE

THIS PLAN ACCURATE FOR ELECTRICAL WORK ONLY.

MODIFY SIGNAL AND LIGHTING

SCALE: 1"= 20'

E-22

STATE OF CALIFORNIA - DEPARTMENT OF TRANSPORTATION
Caltrans

CONSULTANT FUNCTIONAL SUPERVISOR: SHAHRAM VAHDAT
CALCULATED-DESIGNED BY: DOUGLAS E. SMITH
CHECKED BY: DAVID MADERA
REVISED BY / DATE REVISED

LAST REVISION 00-00-00
DATE PLOTTED => 21-OCT-2010
TIME PLOTTED => 11:18

Dist	COUNTY	ROUTE	POST MILES TOTAL PROJECT	SHEET No.	TOTAL SHEETS
07	LA	47,103	3.5/4.6, 0.0/1.1	328	1003

REGISTERED CIVIL ENGINEER 7/19/10 DATE

10-11-10
PLANS APPROVAL DATE

REGISTERED PROFESSIONAL ENGINEER DOUGLAS SMITH No. 43549 Exp 06/30/12 CIVIL STATE OF CALIFORNIA

THE STATE OF CALIFORNIA OR ITS OFFICERS OR AGENTS SHALL NOT BE RESPONSIBLE FOR THE ACCURACY OR COMPLETENESS OF SCANNED COPIES OF THIS PLAN SHEET.

URS CORPORATION
915 WILSHIRE BOULEVARD
SUITE 700
LOS ANGELES, CA 90017

ALAMEDA CORRIDOR
TRANSPORTATION AUTHORITY
ONE CIVIL PLAZA, SUITE 350
CARSON, CA 90745

EXISTING POLE AND EQUIPMENT SCHEDULE

NO.	STANDARD Type	STANDARD SMA	STANDARD LMA	VEH SIG MTG Mast Arm	VEH SIG MTG Pole	PED SIGNAL MTG	PPB ø	PPB ARROW	HPS LUMINAIRE	REFLECTIVE SNS LEGEND
A	1-A	-	-	-	-	TP-1-T	3	←	-	-
B	1-A	-	-	-	TV-1-T	-	-	-	-	-
C	1-A	-	-	-	-	TP-1-T	3	→	-	-
D	1-A	-	-	-	TV-1-T	-	-	-	-	-
E	24-4-80	25'	15'	MAS	SV-2-TA	SP-1-T	1	→	250 W	47 103 FWY → ← BERTH T136 GATE 2
F	24-4-80	35'	15'	2-MAT	SV-1-T	-	-	-	250 W	← 47 FWY
G	15	-	15'	-	-	-	-	-	250 W	-
H	15	-	15'	-	SV-1-T	-	-	-	250 W	-
I	1-A	-	-	-	TV-1-T	-	-	-	-	-
J	1-A	-	-	-	TV-2-T	-	-	-	-	-
K	26-4-80	40'	15'	MAT	SV-2-TA	-	-	-	250 W	710 FWY →
L	1-A	-	-	-	TV-1-T	-	-	-	-	-
M	24-3-80	35'	15'	-	SV-1-T	-	-	-	250 W	← 47 103 FWY BERTH T136 GATE 2 →
N	1-A	-	-	-	TV-2-T	-	-	-	-	-
O	24-4-80	35'	15'	MAT	SV-1-T	SP-1-T	-	-	250 W	← 710 FWY
P	15	-	15'	-	SV-1-T	-	1	→	250 W	-
Q	1-A	-	-	-	TV-1-T	-	1	←	-	-
R	1-A	-	-	-	TV-1-T	SP-1-T	-	-	-	-
S	26-4-80	35'	15'	-	SV-2-TA	SP-1-T	1	←	250 W	47 FWY →
T	33	-	-	MAS	SV-1-T	-	-	-	-	-
U	MODEL 2070 CONTROLLER ASSEMBLY (MODEL 332 CONTROLLER CABINET) WITH AUXILIARY OUTPUT FILE.									

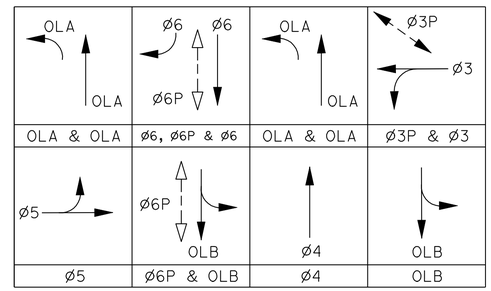

OLA= ø4+ø5+EXT

OLB= ø3+ø6+EXT

PHASE DIAGRAM

EXISTING CONDUIT AND CONDUCTOR SCHEDULE

AWG OR CABLE	CONDUCTOR RUN	1	2	3	4	5	6	7	8	9	10	11	12	13	14	15	16	17
12-CSC	VEH AND PED SIGNAL	21	2	1	8	1	4		1	2	11	10	8	7	6	1	4	2
3-CSC	PPB	6	1		2						3	3	2	2	1	1		
#6	SERVICE	3																
#8	GROUND				1(N)	1(N)	1(N)	1(N)		1(N)	1(N)							
#12	IISNS																	
#10	LUMINAIRE				2		2	2	2		2	2	2	2	2	2	2	2
DLC	ø3 DETECTOR	4			4		4		1	3								
	ø4 DETECTOR	4			2		2			2	2	2	2	2	2		2	
	ø5 DETECTOR	5									5	5	5	5	3	3		
	ø6 DETECTOR	4	2	2	1	1					1	1	1					
	TOTAL	17	2	2	7	1	6		1	5	8	8	8	7	5	3	2	
EVC		5/1			2		1				3/1	3/1	3	3	3		2	1
CONDUIT SIZE		2-3"	3"	2"	4"(N)	2"(N)	3"(N)	2"(N)	2"	3"(N)	4"(N)	4"	3"	3"	4"	2"	3"	3"

(N) - NEW

EXISTING FIRE STATION PRE-EMPTION OPERATION:

1. FORCE OFF ALL PHASES EXCEPT PHASE 2; ALL RED PEDESTRIAN INDICATIONS.
2. PHASE 2 REMAINS GREEN UNTIL EMERGENCY VEHICLE CLEARS; SOLID RED FOR ALL OTHER VEHICULAR AND PEDESTRIAN PHASES.
3. PHASE 2 YELLOW CHANGE INTERVAL.
4. ALL-RED INTERSECTION CLEARANCE INTERVAL.
5. ALL PHASES RETURN TO NORMAL OPERATION.

THIS PLAN ACCURATE FOR ELECTRICAL WORK ONLY.

MODIFY SIGNAL AND LIGHTING

NO SCALE

E-23

STATE OF CALIFORNIA - DEPARTMENT OF TRANSPORTATION
Caltrans

CONSULTANT FUNCTIONAL SUPERVISOR: SHAHRAM VAHDAT
CALCULATED-DESIGNED BY: DOUGLAS E. SMITH
CHECKED BY: DAVID MADERA
REVISED BY
DATE REVISED

LAST REVISION 00-00-00
DATE PLOTTED => 18-OCT-2010
TIME PLOTTED => 08:51

Dist	COUNTY	ROUTE	POST MILES TOTAL PROJECT	SHEET No.	TOTAL SHEETS
07	LA	47,103	3.5/4.6, 0.0/1.1	329	1003

REGISTERED CIVIL ENGINEER 7/19/10 DATE

10-11-10
PLANS APPROVAL DATE

REGISTERED PROFESSIONAL ENGINEER DOUGLAS SMITH No. 43549 Exp 06/30/12 CIVIL STATE OF CALIFORNIA

THE STATE OF CALIFORNIA OR ITS OFFICERS OR AGENTS SHALL NOT BE RESPONSIBLE FOR THE ACCURACY OR COMPLETENESS OF SCANNED COPIES OF THIS PLAN SHEET.

URS CORPORATION
915 WILSHIRE BOULEVARD
SUITE 700
LOS ANGELES, CA 90017

ALAMEDA CORRIDOR
TRANSPORTATION AUTHORITY
ONE CIVIL PLAZA, SUITE 350
CARSON, CA 90745

NOTE:

FOR ACCURATE RIGHT OF WAY AND ACCESS DATA, CONTACT RIGHT OF WAY ENGINEERING AT THE DISTRICT OFFICE.

PROJECT NOTES (THIS SHEET):

1. SEE LIGHTING PLANS, SHEET E-2.
2. INSTALL STATE-FURNISHED MODEL 2070 CONTROLLER ASSEMBLY (MODEL 334 CABINET). INSTALL FOTM.
3. TRANSITION CONDUIT FROM PULL BOX INTO BARRIER.

LEGEND: (E-24 TO E-25)

⊗ PREFORMED LOOP
FOTM - FIBER OPTIC TRAFFIC MODEM

CONDUIT AND CONDUCTOR SCHEDULE

AWG OR CABLE	CONDUCTOR RUN	1	2	3	4	5	6	7	8	9
#14	METER ON SIGN	2	2				2			
12CSC	RAMP SIGNAL					1	1			1
DLC	DEMAND DETECTOR					1	1			
	PASSAGE DETECTOR					1	1			
	COUNT DETECTOR			2	2	2	2			2
	SURVEILLANCE DETECTOR			6	10	10	10			10
	QUEUE DETECTOR		2				2			
TOTAL DLC			2	8	12	14	16			12
#6	SERVICE							2	4	
#6	GROUND	1	1	1	1	1	1	1	1	1
CONDUIT SIZE		3"	3"	3"	3"	3"	2-3"	2"	3"	3"

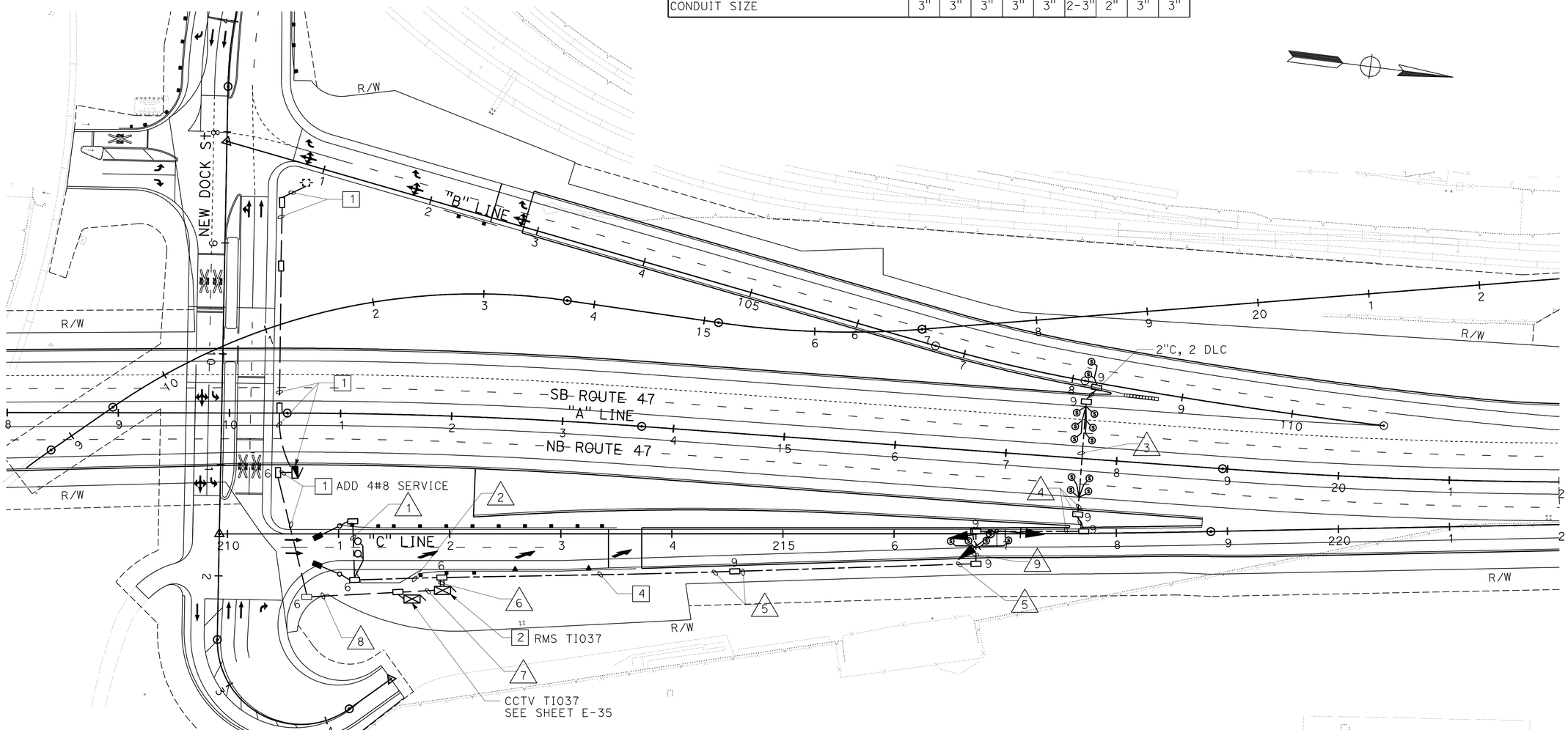

THIS PLAN ACCURATE FOR ELECTRICAL WORK ONLY.

RAMP METERING SYSTEM (LOCATION 1)

SCALE: 1" = 50'

E-24

STATE OF CALIFORNIA - DEPARTMENT OF TRANSPORTATION
Caltrans

CONSULTANT FUNCTIONAL SUPERVISOR: SHAHRAM VAHDAT
CALCULATED-DESIGNED BY: DAVID MADERA
CHECKED BY: DOUGLAS E. SMITH
REVISED BY
DATE REVISED

LAST REVISION 00-00-00
DATE PLOTTED => 18-OCT-2010
TIME PLOTTED => 14:17

Dist	COUNTY	ROUTE	POST MILES TOTAL PROJECT	SHEET No.	TOTAL SHEETS
07	LA	47,103	3.5/4.6, 0.0/1.1	330	1003

REGISTERED CIVIL ENGINEER 7/19/10 DATE

10-11-10
PLANS APPROVAL DATE

REGISTERED PROFESSIONAL ENGINEER DOUGLAS SMITH No. 43549 Exp 06/30/12 CIVIL STATE OF CALIFORNIA

THE STATE OF CALIFORNIA OR ITS OFFICERS OR AGENTS SHALL NOT BE RESPONSIBLE FOR THE ACCURACY OR COMPLETENESS OF SCANNED COPIES OF THIS PLAN SHEET.

URS CORPORATION
915 WILSHIRE BOULEVARD
SUITE 700
LOS ANGELES, CA 90017

ALAMEDA CORRIDOR
TRANSPORTATION AUTHORITY
ONE CIVIL PLAZA, SUITE 350
CARSON, CA 90745

NOTE:

FOR ACCURATE RIGHT OF WAY AND ACCESS DATA, CONTACT RIGHT OF WAY ENGINEERING AT THE DISTRICT OFFICE.

PROJECT NOTES (THIS SHEET):

1. INSTALL 3" C, MT, INSTALL TYPE H SERVICE PER SERVICE UTILITY REQUIREMENTS.
2. INSTALL 120/240 V TYPE III-BF METERED SERVICE EQUIPMENT ENCLOSURE.
   SERVICE METER (ID: 07-53-047-0-004.501, LADWP)
   ADDRESS: XXXX PIER A PLAZA
   - 100 A, 2P, 240 V, MAIN CB
   - 30 A, 1P, 120 V, RAMP METERING
3. INSTALL STATE-FURNISHED MODEL 2070 CONTROLLER ASSEMBLY IN NEW MODEL 334 CABINET. INSTALL FOTM.
4. 2" C, 2#8 SERVICE, 1#8G.

CONDUIT AND CONDUCTOR SCHEDULE

AWG OR CABLE	CONDUCTOR RUN	1	2	3	4	5	6	7	8	9
#14	METER ON SIGN	2	2				2		2	
12CSC	RAMP SIGNAL				1	2	2			
DLC	DEMAND DETECTOR					2	2			
	PASSAGE DETECTOR					2	2			
	COUNT DETECTOR			2			2		2	
	SURVEILLANCE DETECTOR			4	4	4	8		4	4
	QUEUE DETECTOR		2				2		2	
TOTAL DLC			2	6	4	8	16		8	4
#8	SERVICE							2		
#8	GROUND	1	1		1	1	1	1	1	
CONDUIT SIZE		3"	2"	3"	3"	3"	2-3"	3"	2"	2"

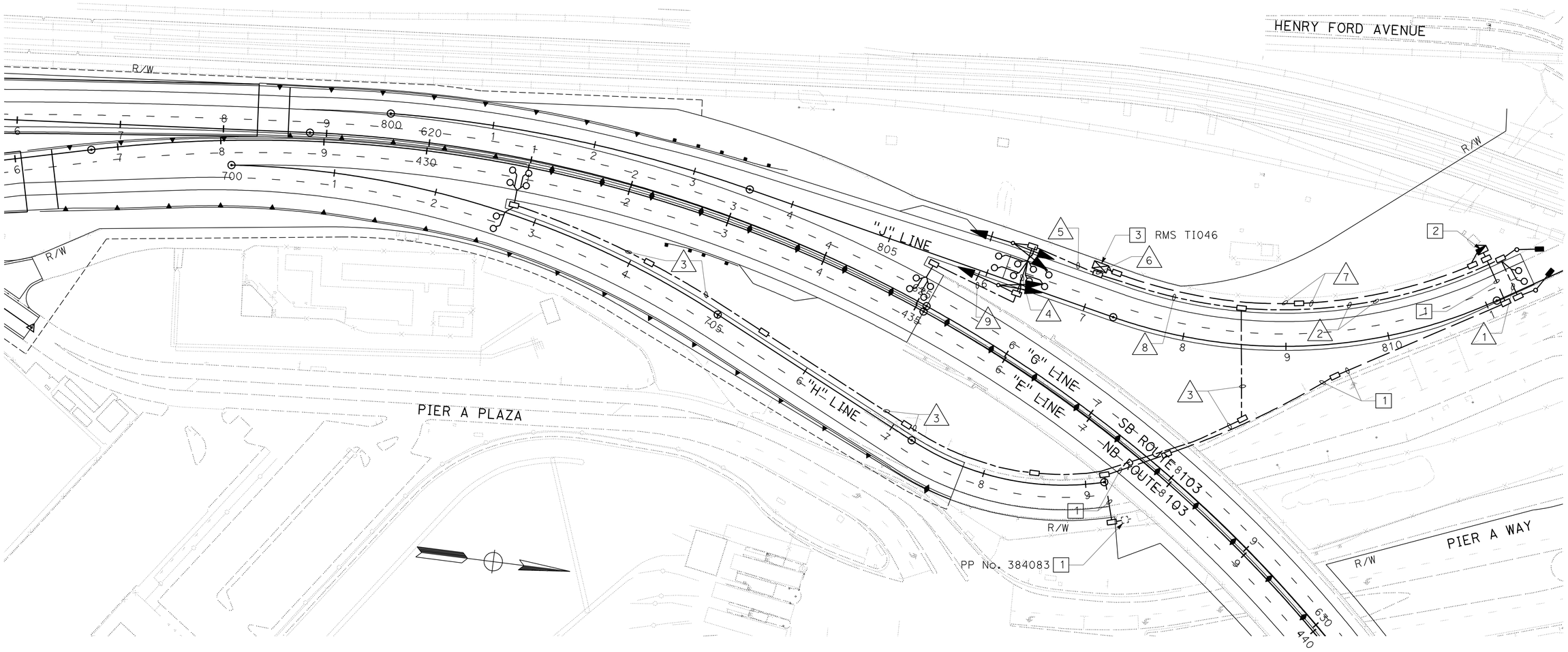

RAMP METERING SYSTEM (LOCATION 2)

SCALE: 1" = 50'

E-25

THIS PLAN ACCURATE FOR ELECTRICAL WORK ONLY.

STATE OF CALIFORNIA - DEPARTMENT OF TRANSPORTATION
Caltrans

CONSULTANT FUNCTIONAL SUPERVISOR: SHAHRAM VAHDAT
CALCULATED-DESIGNED BY: DAVID MADERA
CHECKED BY: DOUGLAS E. SMITH
REVISED BY
DATE REVISED

LAST REVISION 00-00-00
DATE PLOTTED => 21-OCT-2010
TIME PLOTTED => 11:18

Dist	COUNTY	ROUTE	POST MILES TOTAL PROJECT	SHEET No.	TOTAL SHEETS
07	LA	47,103	3.5/4.6, 0.0/1.1	331	1003

REGISTERED CIVIL ENGINEER 7/19/10 DATE

10-11-10
PLANS APPROVAL DATE

REGISTERED PROFESSIONAL ENGINEER DOUGLAS SMITH No. 43549 Exp 06/30/12 CIVIL STATE OF CALIFORNIA

THE STATE OF CALIFORNIA OR ITS OFFICERS OR AGENTS SHALL NOT BE RESPONSIBLE FOR THE ACCURACY OR COMPLETENESS OF SCANNED COPIES OF THIS PLAN SHEET.

URS CORPORATION
915 WILSHIRE BOULEVARD
SUITE 700
LOS ANGELES, CA 90017

ALAMEDA CORRIDOR
TRANSPORTATION AUTHORITY
ONE CIVIL PLAZA, SUITE 350
CARSON, CA 90745

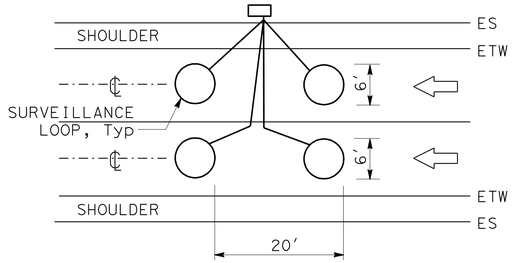

TYPICAL 2-LANE MAIN LINE INSTALLATION

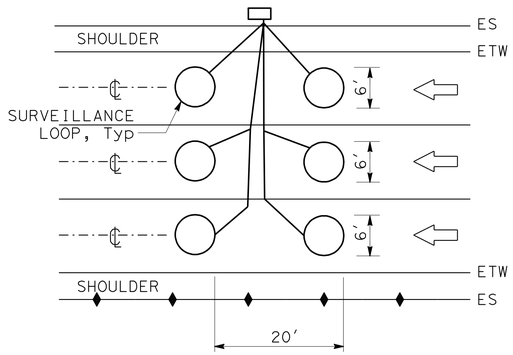

TYPICAL 3-LANE MAIN LINE INSTALLATION

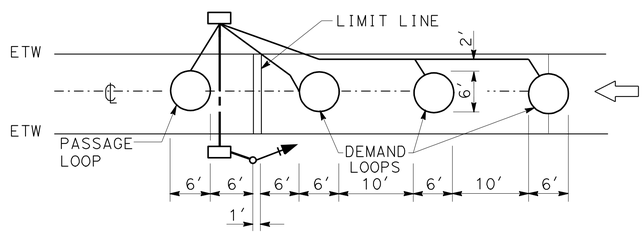

TYPICAL 1-LANE RAMP METER INSTALLATION

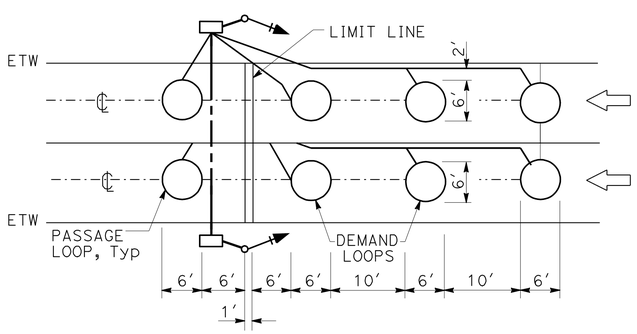

TYPICAL 2-LANE RAMP METER INSTALLATION

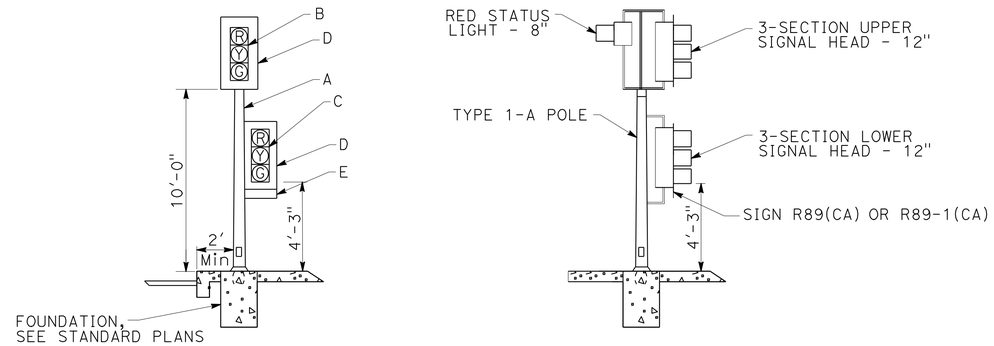

RAMP METERING SIGNAL DETAILS

GENERAL NOTES (RAMP METERING SIGNAL):

A. TYPE 1-A STANDARD. INSTALL ANCHOR BOLTS WITH SLEEVE NUTS.

B. 3-SECTION 12" SIGNAL HEAD (RED,YELLOW,GREEN). 18" x 12" ANGLED VISORS ARE REQUIRED WHERE SHOWN ON THE PLAN. TYPE TV-1-T POST-TOP MOUNTING.

C. 3-SECTION, 12" SIGNAL HEAD (RED, YELLOW, GREEN), 12" FULL CIRCLE VISOR TYPE SV-1-T BRACKET MOUNTING ON SIDE OF STANDARD AWAY FROM TRAFFIC.

D. BACKPLATE.

E. R89 (CA) SIGN FOR 1 LANE RAMP AND R89-1(CA) FOR 2 OR MORE LANES. MOUNTED ON THE BACK PLATE AND CENTERED BETWEEN GREEN SECTION AND BOTTOM OF BACK PLATE. ATTACH WITH 1/4" ALUMINUM BLIND RIVETS OR GALVANIZED 1/4" x 3/4" BOLTS, Hex NUTS, PLAIN AND LOCK WASHERS.

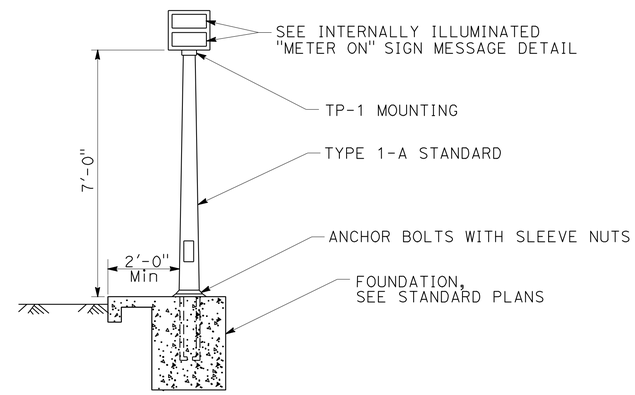

INTERNALLY ILLUMINATED "METER ON" SIGN DETAIL

1 CAR PER GREEN EACH LANE

R89-1 (CA) SERIES SIGNS

1 CAR PER GREEN

R89 (CA) SERIES SIGNS

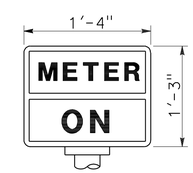

INTERNALLY ILLUMINATED "METER ON" SIGN MESSAGE DETAIL

THIS PLAN ACCURATE FOR ELECTRICAL WORK ONLY.

RAMP METERING SYSTEM
DETAILS

NO SCALE

E-26

STATE OF CALIFORNIA - DEPARTMENT OF TRANSPORTATION
Caltrans
CONSULTANT FUNCTIONAL SUPERVISOR: SHAHRAM VAHDAT
CALCULATED-DESIGNED BY: DAVID MADERA
CHECKED BY: DOUGLAS E. SMITH
REVISED BY
DATE REVISED

LAST REVISION 00-00-00
DATE PLOTTED => 18-OCT-2010
TIME PLOTTED => 15:09

Dist	COUNTY	ROUTE	POST MILES TOTAL PROJECT	SHEET No.	TOTAL SHEETS
07	LA	47,103	3.5/4.6, 0.0/1.1	332	1003

REGISTERED CIVIL ENGINEER 7/19/10 DATE

10-11-10
PLANS APPROVAL DATE

REGISTERED PROFESSIONAL ENGINEER DOUGLAS SMITH No. 43549 Exp 06/30/12 CIVIL STATE OF CALIFORNIA

THE STATE OF CALIFORNIA OR ITS OFFICERS OR AGENTS SHALL NOT BE RESPONSIBLE FOR THE ACCURACY OR COMPLETENESS OF SCANNED COPIES OF THIS PLAN SHEET.

URS CORPORATION
915 WILSHIRE BOULEVARD
SUITE 700
LOS ANGELES, CA 90017

ALAMEDA CORRIDOR
TRANSPORTATION AUTHORITY
ONE CIVIL PLAZA, SUITE 350
CARSON, CA 90745

PROJECT NOTES (SHEETS E-27 AND E-28):

1. RS EXISTING WIM STATION.
2. Exist 1½"C, 2#6, 2#8, 2#10. RC CONDUCTORS. CONDUCTORS PER SERVICE UTILITY REQUIREMENTS.
3. INSTALL WIM CABINET.
4. SEE COMMUNICATION SYSTEM PLANS FOR SERVICE DETAILS (SEE SHEET E-39).
5. NOT USED.
6. INSTALL 3"C, MT, PER SERVICE UTILITY REQUIREMENTS.
7. INSTALL PHOTOVOLTAIC PANEL SYSTEM ON CCTV 35 POLE WITH BATTERY ENCLOSURE. SEE E-30 TO E-32 FOR DETAILS.
8. INSTALL WIRELESS EQUIPMENT INCLUDING CELLULAR MODEM AND ANTENNA IN BATTERY ENCLOSURE PER MANUFACTRURER'S SPECIFICATIONS. SEE SHEET E-32 FOR DETAILS.
9. GRIND PCC PAVEMENT AS NEEDED TO MEET WIM TOLERANCE, 150 FEET BEFORE TO 50 FEET AFTER CENTER OF WIM SENSORS, AS NOTED ON THE PLANS.
10. GRIND EXISTING AC PAVEMENT AS NEEDED TO MEET WIM TOLERANCE, 150 FEET BEFORE TO 50 FEET AFTER CENTER OF WIM SENSORS, AS NOTED ON THE PLANS.

NOTE:

FOR ACCURATE RIGHT OF WAY AND ACCESS DATA, CONTACT RIGHT OF WAY ENGINEERING AT THE DISTRICT OFFICE.

ABBREVIATIONS:

WIM WEIGH-IN-MOTION
STC SCREENED TRANSMISSION CABLE
TC TELEPHONE CABLE

LEGEND:

WIM SENSOR
GRINDING SECTION

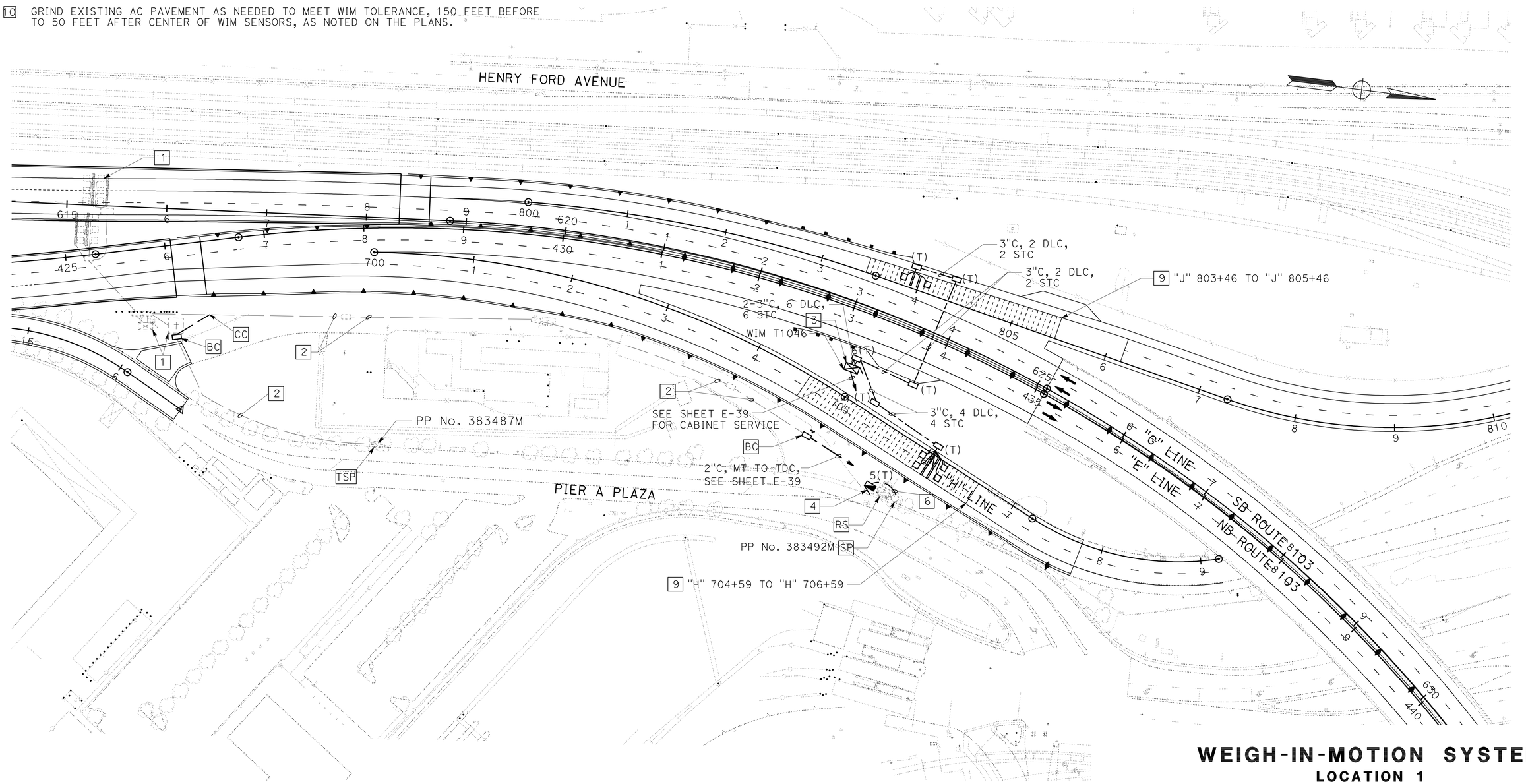

WEIGH-IN-MOTION SYSTEM
LOCATION 1

SCALE: 1" = 50'

E-27

THIS PLAN ACCURATE FOR ELECTRICAL WORK ONLY.

STATE OF CALIFORNIA - DEPARTMENT OF TRANSPORTATION
Caltrans

CONSULTANT FUNCTIONAL SUPERVISOR: SHAHRAM VAHDAT
CALCULATED-DESIGNED BY: DAVID MADERA
CHECKED BY: DOUGLAS E. SMITH
REVISED BY
DATE REVISED

LAST REVISION 00-00-00
DATE PLOTTED => 21-OCT-2010
TIME PLOTTED => 11:18

NOTE:

FOR ACCURATE RIGHT OF WAY AND ACCESS DATA, CONTACT RIGHT OF WAY ENGINEERING AT THE DISTRICT OFFICE.

Dist	COUNTY	ROUTE	POST MILES TOTAL PROJECT	SHEET No.	TOTAL SHEETS
07	LA	47,103	3.5/4.6, 0.0/1.1	333	1003

REGISTERED CIVIL ENGINEER 7/19/10 DATE

10-11-10
PLANS APPROVAL DATE

REGISTERED PROFESSIONAL ENGINEER DOUGLAS SMITH No. 43549 Exp 06/30/12 CIVIL STATE OF CALIFORNIA

THE STATE OF CALIFORNIA OR ITS OFFICERS OR AGENTS SHALL NOT BE RESPONSIBLE FOR THE ACCURACY OR COMPLETENESS OF SCANNED COPIES OF THIS PLAN SHEET.

URS CORPORATION
915 WILSHIRE BOULEVARD
SUITE 700
LOS ANGELES, CA 90017

ALAMEDA CORRIDOR
TRANSPORTATION AUTHORITY
ONE CIVIL PLAZA, SUITE 350
CARSON, CA 90745

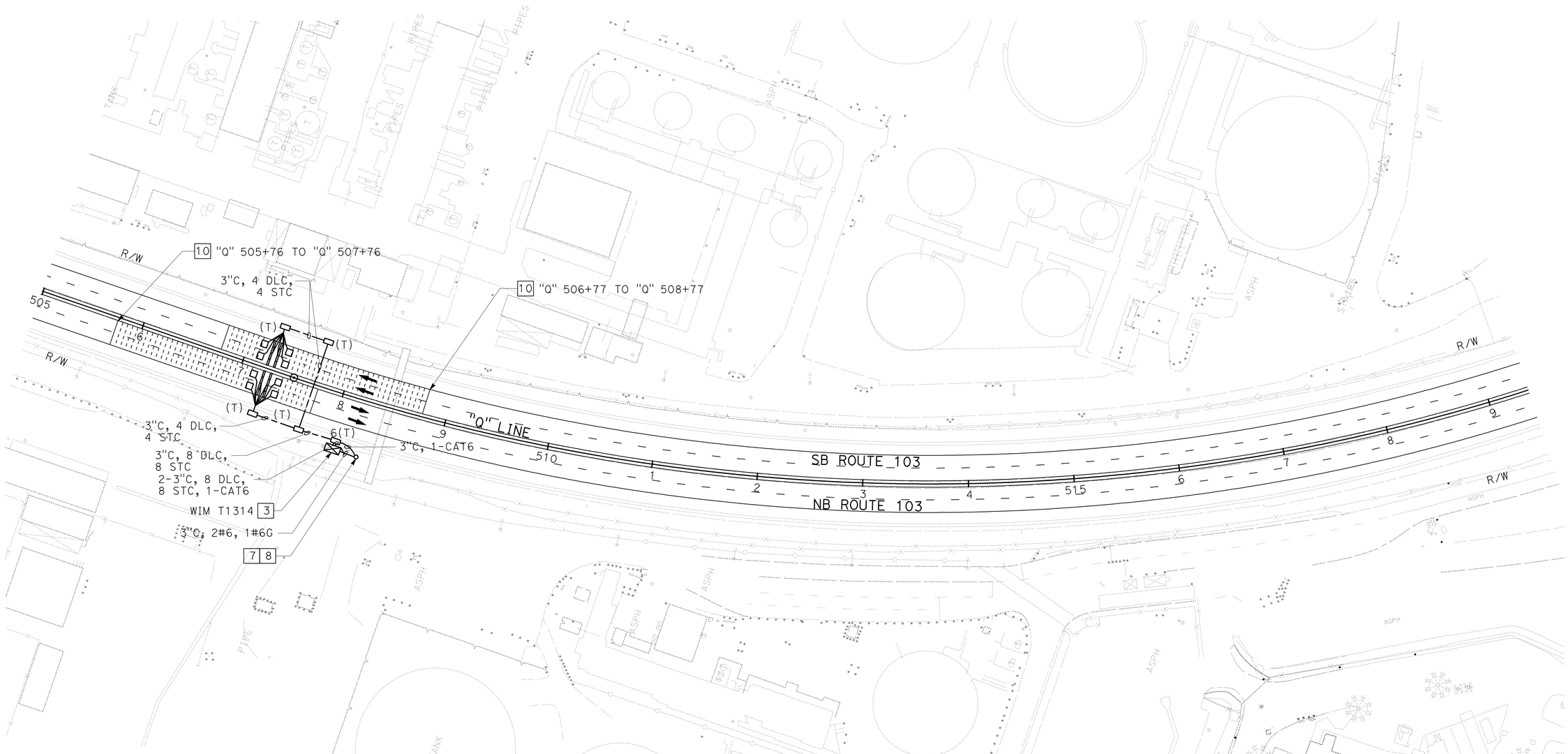

SEE SHEET E-27 FOR NOTES AND LEGEND.
THIS PLAN ACCURATE FOR ELECTRICAL WORK ONLY.

WEIGH-IN-MOTION SYSTEM

LOCATION 2

SCALE: 1" = 50'

E-28

STATE OF CALIFORNIA - DEPARTMENT OF TRANSPORTATION

Caltrans

CONSULTANT FUNCTIONAL SUPERVISOR: SHAHRAM VAHDAT

CALCULATED-DESIGNED BY: DAVID MADERA

CHECKED BY: DOUGLAS E. SMITH

REVISED BY

DATE REVISED

LAST REVISION 00-00-00

DATE PLOTTED => 18-OCT-2010
TIME PLOTTED => 15:20

Dist	COUNTY	ROUTE	POST MILES TOTAL PROJECT	SHEET No.	TOTAL SHEETS
07	LA	47,103	3.5/4.6, 0.0/1.1	334	1003

REGISTERED CIVIL ENGINEER 7/19/10 DATE

10-11-10
PLANS APPROVAL DATE

REGISTERED PROFESSIONAL ENGINEER DOUGLAS SMITH No. 43549 Exp 06/30/12 CIVIL STATE OF CALIFORNIA

THE STATE OF CALIFORNIA OR ITS OFFICERS OR AGENTS SHALL NOT BE RESPONSIBLE FOR THE ACCURACY OR COMPLETENESS OF SCANNED COPIES OF THIS PLAN SHEET.

URS CORPORATION
915 WILSHIRE BOULEVARD
SUITE 700
LOS ANGELES, CA 90017

ALAMEDA CORRIDOR
TRANSPORTATION AUTHORITY
ONE CIVIL PLAZA, SUITE 350
CARSON, CA 90745

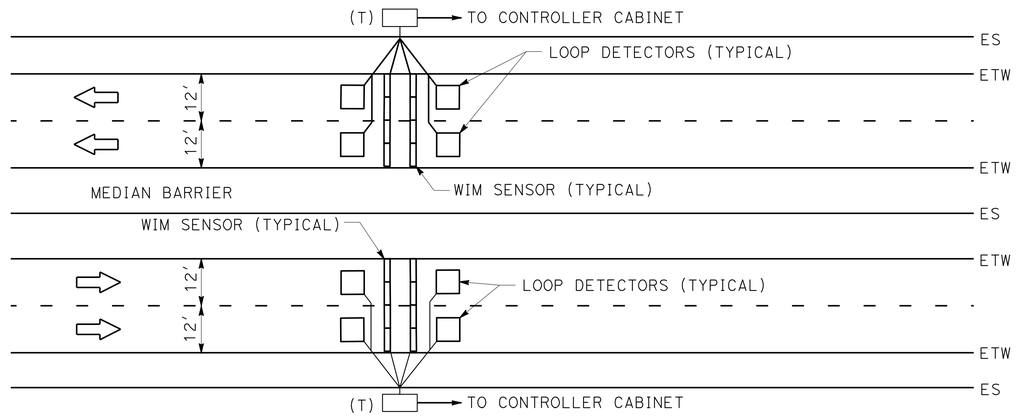

MAINLINE WIM PLAN

(TYPICAL)

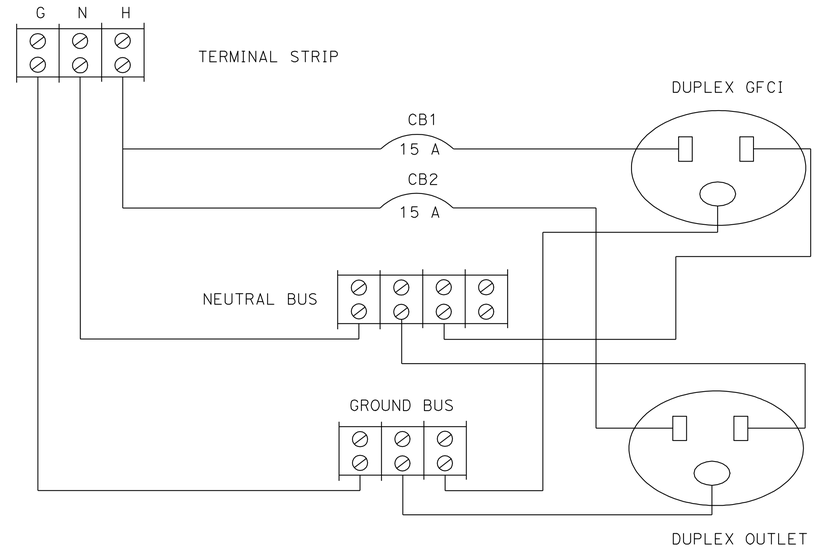

POWER DISTRIBUTION PANEL WIRING DIAGRAM

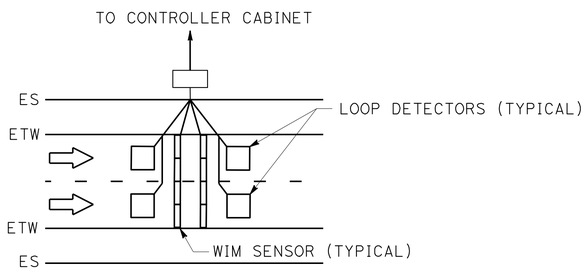

RAMP WIM PLAN

(TYPICAL)

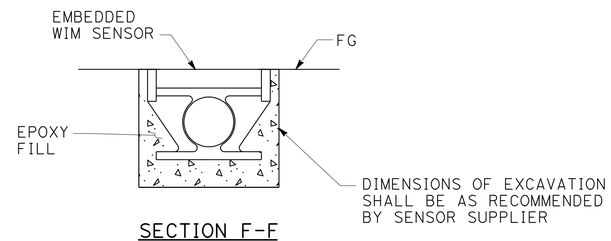

SECTION F-F

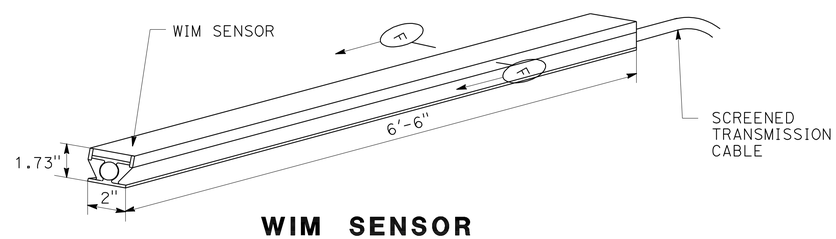

WIM SENSOR

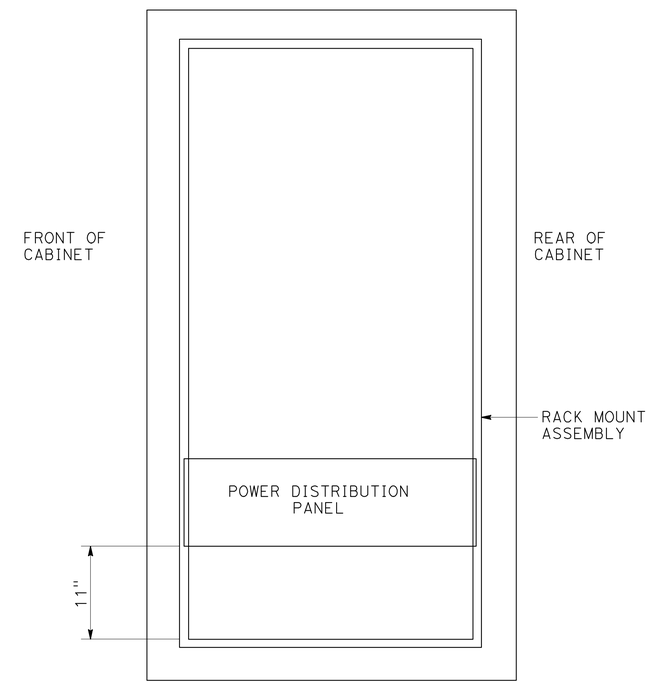

SIDE VIEW

WIM MODEL 334 CONTROLLER CABINET

GENERAL NOTES:

1. THE EXACT LOCATION OF THE WIM SENSORS SHALL BE DETERMINED BY THE ENGINEER. THE ENGINEER WILL VERIFY THE FINAL LOCATION OF THE WIM SENSORS PRIOR TO THE CONTRACTOR PERFORMING ANY WORK IN THE TRAVELED WAY OR SHOULDERS. STATIONS SHOWN ON THE PLANS ARE APPROXIMATE.
2. WIM SENSOR TO MATCH EXISTING ROADWAY PROFILE AND CROSS-SLOPE.
3. EXACT CONFIGURATION AND INSTALLATION PROCEDURES OF WIM SENSORS AND LOOP DETECTORS SHALL CONFORM TO THE REQUIREMENTS OF THE WIM SUPPLIER.
4. IN ADDITION TO THE REQUIREMENTS ON STANDARD PLAN ES-8, PULL BOX COVERS SHALL BE MARKED AS FOLLOWS:

"WIM POWER"	ON PULL BOXES BETWEEN SERVICE EQUIPMENT ENCLOSURE AND CONTROLLER CABINET.
"WIM TELEPHONE"	ON PULL BOXES BETWEEN TELEPHONE SERVICE AND CONTROLLER CABINET.
"WIM"	ON ALL OTHER PULL BOXES.

THIS PLAN ACCURATE FOR ELECTRICAL WORK ONLY.

WEIGH-IN-MOTION SYSTEM
DETAILS

NO SCALE

E-29

STATE OF CALIFORNIA - DEPARTMENT OF TRANSPORTATION
Caltrans®

CONSULTANT FUNCTIONAL SUPERVISOR: SHAHRAM VAHDAT
CALCULATED-DESIGNED BY: DAVID MADERA
CHECKED BY: DOUGLAS E. SMITH
REVISED BY
DATE REVISED

LAST REVISION 00-00-00
DATE PLOTTED => 18-OCT-2010
TIME PLOTTED => 14:49

Dist	COUNTY	ROUTE	POST MILES TOTAL PROJECT	SHEET No.	TOTAL SHEETS
07	LA	47,103	3.5/4.6, 0.0/1.1	335	1003

REGISTERED CIVIL ENGINEER 7/19/10 DATE

10-11-10
PLANS APPROVAL DATE

REGISTERED PROFESSIONAL ENGINEER
DOUGLAS SMITH
No. 43549
Exp 06/30/12
CIVIL
STATE OF CALIFORNIA

THE STATE OF CALIFORNIA OR ITS OFFICERS OR AGENTS SHALL NOT BE RESPONSIBLE FOR THE ACCURACY OR COMPLETENESS OF SCANNED COPIES OF THIS PLAN SHEET.

URS CORPORATION
915 WILSHIRE BOULEVARD
SUITE 700
LOS ANGELES, CA 90017

ALAMEDA CORRIDOR
TRANSPORTATION AUTHORITY
ONE CIVIL PLAZA, SUITE 350
CARSON, CA 90745

PROJECT NOTES (THIS SHEET ONLY):

1. CCTV 35 POLE.
2. PHOTOVOLTAIC PANEL FACE SHALL BE PLACED AND DIRECTED WHERE OBSTRUCTIONS TO SUNLIGHT ARE AVOIDED. ATTACH HARDWARE TO PANEL PER MANUFACTURER'S RECOMMENDATIONS. PHOTOVOLTAIC PANEL MAXIMUM AREA IS 11 SQFT. SEE DETAIL "B", SHEET E-31 FOR PHOTOVOLTAIC PANEL DETAILS.
3. EQUIPMENT AND BATTERY ENCLOSURE. SEE DETAIL "C", SHEET E-31 FOR ENCLOSURE MOUNTING DETAILS. SEE SHEET E-32 FOR ENCLOSURE EQUIPMENT DETAILS.
4. OFFSET FROM ETW PER MANUFACTURER'S RECOMMENDATIONS AND ENGINEER'S APPROVAL.

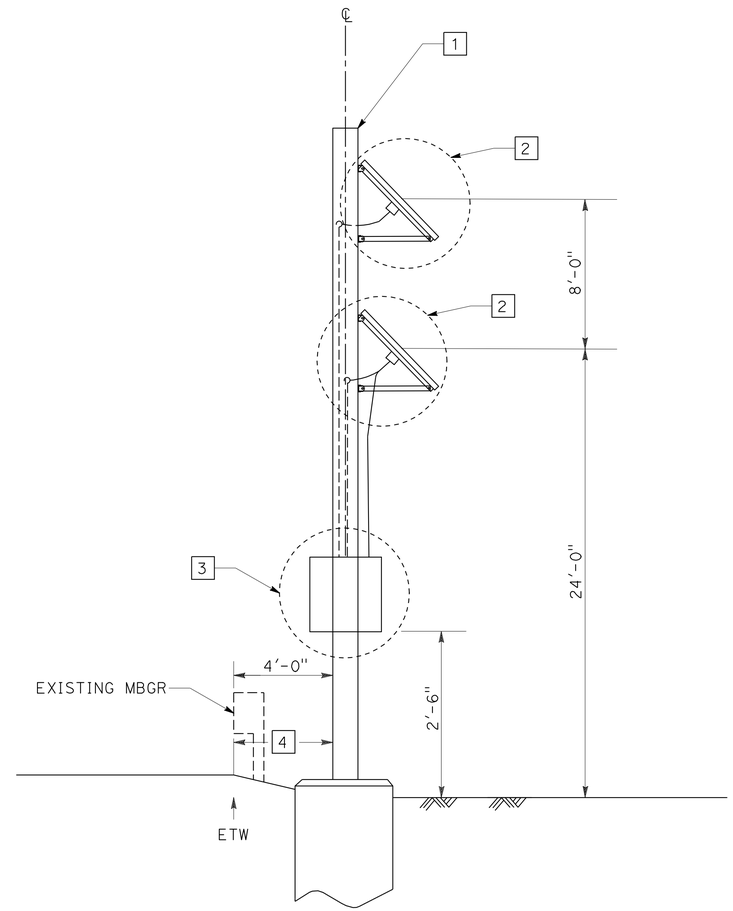

PHOTOVOLTAIC PANEL DETAILS

THIS PLAN ACCURATE FOR ELECTRICAL WORK ONLY.

WEIGH-IN-MOTION SYSTEM
(DETAILS)

NO SCALE

E-30

STATE OF CALIFORNIA - DEPARTMENT OF TRANSPORTATION
Caltrans

CONSULTANT FUNCTIONAL SUPERVISOR: SHAHRAM VAHDAT
CALCULATED-DESIGNED BY: DAVID MADERA
CHECKED BY: DOUGLAS E. SMITH
REVISED BY
DATE REVISED

LAST REVISION 00-00-00
DATE PLOTTED => 18-OCT-2010
TIME PLOTTED => 14:49

Dist	COUNTY	ROUTE	POST MILES TOTAL PROJECT	SHEET No.	TOTAL SHEETS
07	LA	47,103	3.5/4.6, 0.0/1.1	336	1003

REGISTERED CIVIL ENGINEER 7/19/10 DATE

10-11-10
PLANS APPROVAL DATE

REGISTERED PROFESSIONAL ENGINEER DOUGLAS SMITH No. 43549 Exp 06/30/12 CIVIL STATE OF CALIFORNIA

THE STATE OF CALIFORNIA OR ITS OFFICERS OR AGENTS SHALL NOT BE RESPONSIBLE FOR THE ACCURACY OR COMPLETENESS OF SCANNED COPIES OF THIS PLAN SHEET.

URS CORPORATION
915 WILSHIRE BOULEVARD
SUITE 700
LOS ANGELES, CA 90017

ALAMEDA CORRIDOR
TRANSPORTATION AUTHORITY
ONE CIVIL PLAZA, SUITE 350
CARSON, CA 90745

PROJECT NOTES (THIS SHEET ONLY):

1. ATTACH "L" BRACE TO SOLAR PANEL FRAME PER MANUFACTURER'S RECOMMENDATIONS.
2. JUNCTION BOX PER MANUFACTURER'S RECCOMENDATIONS.
3. ½"C, TYPE 4.
4. "U" CHANNEL WITH ANGLE BRACKET.
5. THE AREA, L X W, SHALL NOT EXCEED 11 SQFT. THE W DIMENSION SHALL BE GREATER THAN 2.2'. THE L DIMENSION SHALL BE THE LONGEST EDGE.
6. PHOTOVOLTAIC PANEL FACE.

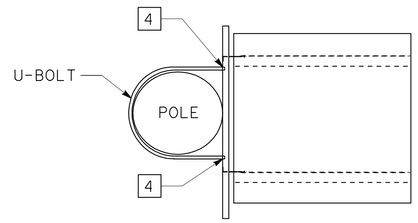

DETAIL "B"
PLAN VIEW
NO SCALE

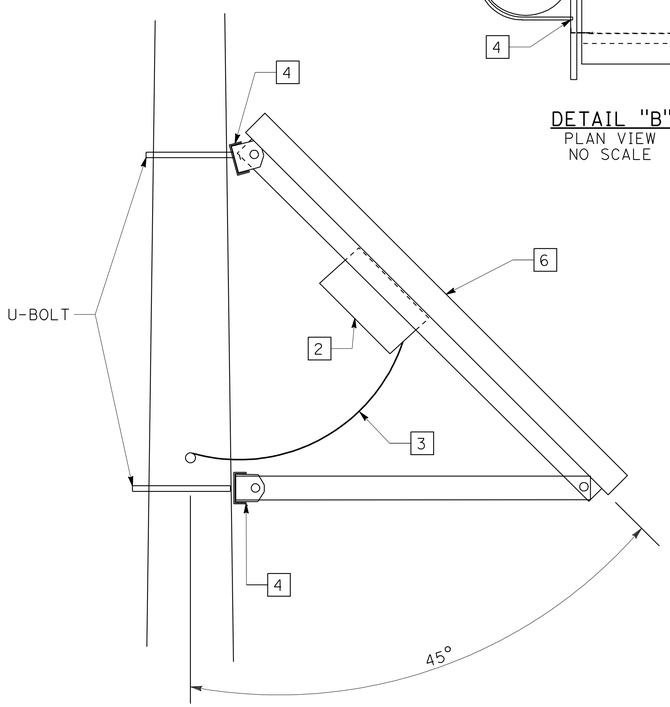

DETAIL "B"
PROFILE VIEW
NO SCALE

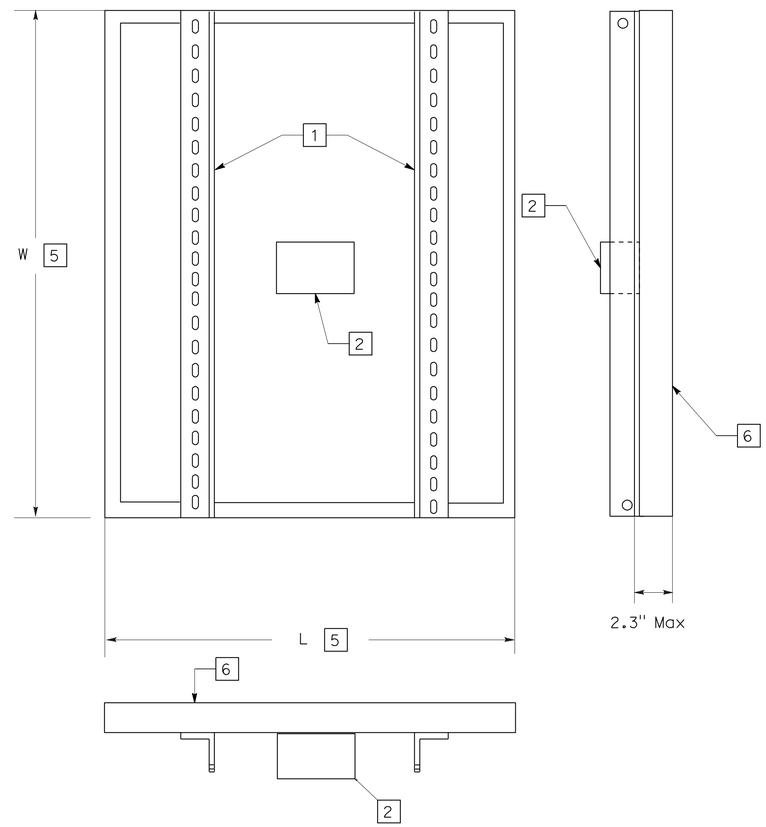

75 WATT SOLAR PANEL

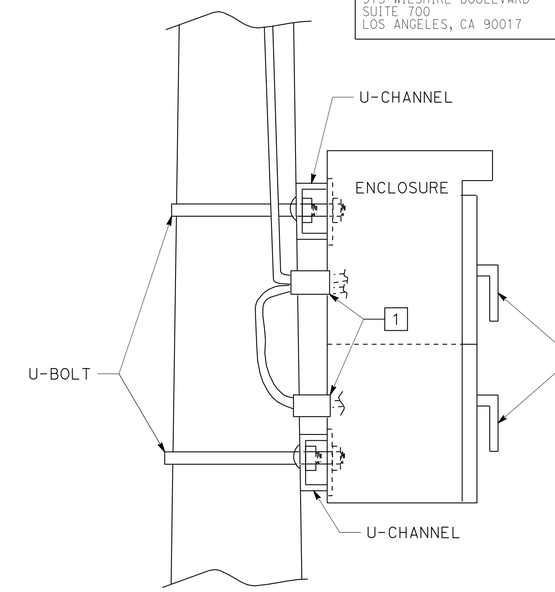

DETAIL "C"
PROFILE VIEW
NO SCALE

DIRECTION OF TRAVEL → ETW

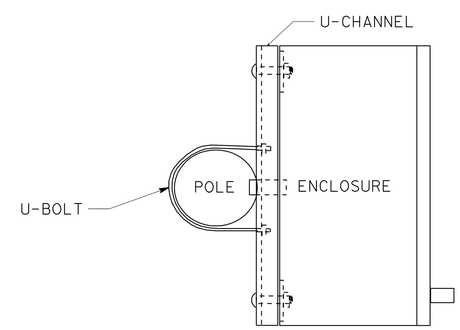

DETAIL "C"
PLAN VIEW
NO SCALE

WEIGH-IN-MOTION SYSTEM
(DETAILS)
NO SCALE

E-31

THIS PLAN ACCURATE FOR ELECTRICAL WORK ONLY.

REVISED BY	DATE REVISED

CALCULATED-DESIGNED BY	CHECKED BY
DAVID MADERA	DOUGLAS E. SMITH

CONSULTANT FUNCTIONAL SUPERVISOR: SHAHRAM VAHDAT

STATE OF CALIFORNIA - DEPARTMENT OF TRANSPORTATION
Caltrans

LAST REVISION 00-00-00 | DATE PLOTTED => 18-OCT-2010 | TIME PLOTTED => 14:49

Dist	COUNTY	ROUTE	POST MILES TOTAL PROJECT	SHEET No.	TOTAL SHEETS
07	LA	47,103	3.5/4.6, 0.0/1.1	337	1003

REGISTERED CIVIL ENGINEER 7/19/10 DATE

10-11-10
PLANS APPROVAL DATE

REGISTERED PROFESSIONAL ENGINEER DOUGLAS SMITH No. 43549 Exp 06/30/12 CIVIL STATE OF CALIFORNIA

THE STATE OF CALIFORNIA OR ITS OFFICERS OR AGENTS SHALL NOT BE RESPONSIBLE FOR THE ACCURACY OR COMPLETENESS OF SCANNED COPIES OF THIS PLAN SHEET.

URS CORPORATION
915 WILSHIRE BOULEVARD
SUITE 700
LOS ANGELES, CA 90017

ALAMEDA CORRIDOR
TRANSPORTATION AUTHORITY
ONE CIVIL PLAZA, SUITE 350
CARSON, CA 90745

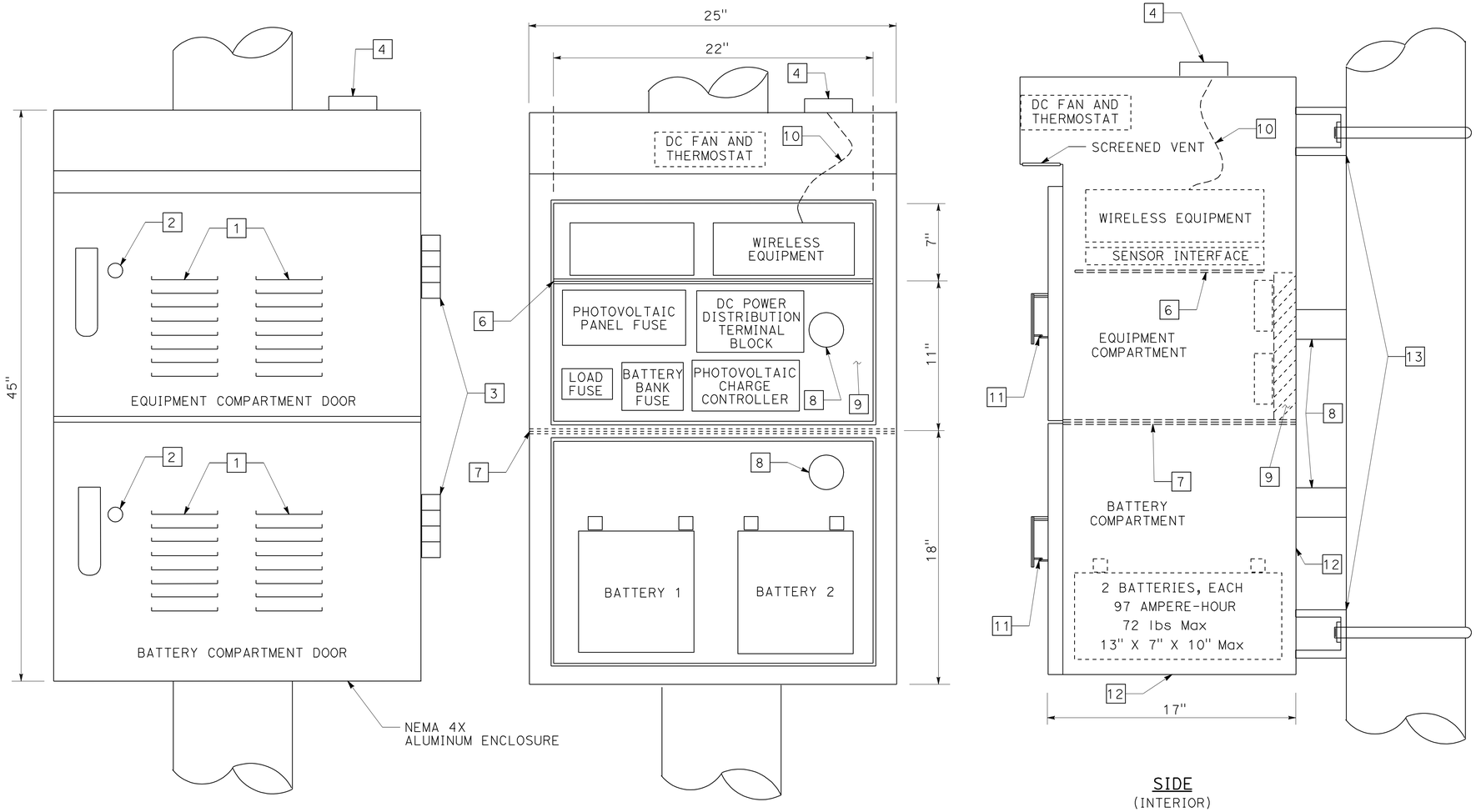

POLE MOUNTED EQUIPMENT ENCLOSURE AND EQUIPMENT LAYOUT

PROJECT NOTES: (THIS SHEET ONLY)

1. FILTERED VENTILATION LOUVERS.
2. KEY LOCK AND THREE POINT LOCKING SYSTEM SHALL BE INTEGRATED WITH DOOR HANDLE. ROLLERS SHALL BE USED IN CONJUNCTION WITH THE THREE POINT LOCKING SYSTEM.
3. DOOR HINGE.
4. INSTALL ANTENNA.
6. ALUMINUM SHELF REQUIRED FOR EQUIPMENT. 2" SPACE BETWEEN SHELF AND ENCLOSURE BACK WALL REQUIRED.
7. ALUMINUM SHELF REQUIRED TO PROVIDE SEPARATION OF EQUIPMENT AND BATTERY COMPARTMENTS. THE SHELF EDGE SHALL EXTEND TO ALL FOUR ENCLOSURE WALLS. SPACES BETWEEN THE SHELF AND ENCLOSURE WALLS SHALL BE SEALED.
8. SEAL OPENING AROUND CONDUCTORS.
9. BACK MOUNTING BOARD (1/2" THICK AND GRADE ACX PLYWOOD).
10. INSTALL ANTENNA CABLE.
11. DOOR HANDLE TO ENCLOSURE PADLOCK LATCH.
12. NEMA 4X ALUMINUM ENCLOSURE SHALL BE 1/4" THICK, BOTTOM AND BACK WALL OF ENCLOSURE.
13. SEE DETAIL "C", ON PREVIOUS PAGE FOR ENCLOSURE MOUNTING DETAILS.
14. THE CONTRACTOR SHALL VERIFY ALL CONTROLLING FIELD DIMENSIONS BEFORE ORDERING OR FABRICATING MATERIAL.
15. EQUIPMENT SHALL BE CONNECTED PER MANUFACTURER'S SPECIFICATIONS.
16. THE ENCLOSURE SHALL BE ALUMINUM WALLS, DOORS AND SHELVES WITH A THICKNESS OF 1/8", UNLESS OTHERWISE NOTED.

THIS PLAN ACCURATE FOR ELECTRICAL WORK ONLY.

WEIGH-IN-MOTION SYSTEM
(DETAILS)
NO SCALE

E-32

STATE OF CALIFORNIA - DEPARTMENT OF TRANSPORTATION
Caltrans

CONSULTANT FUNCTIONAL SUPERVISOR: SHAHRAM VAHDAT
CALCULATED-DESIGNED BY: DAVID MADERA
CHECKED BY: DOUGLAS E. SMITH
REVISED BY
DATE REVISED

LAST REVISION 00-00-00
DATE PLOTTED => 18-OCT-2010
TIME PLOTTED => 14:49

Dist	COUNTY	ROUTE	POST MILES TOTAL PROJECT	SHEET No.	TOTAL SHEETS
07	LA	47,103	3.5/4.6, 0.0/1.1	338	1003

REGISTERED CIVIL ENGINEER 7/19/10 DATE

10-11-10
PLANS APPROVAL DATE

REGISTERED PROFESSIONAL ENGINEER DOUGLAS SMITH No. 43549 Exp 06/30/12 CIVIL STATE OF CALIFORNIA

THE STATE OF CALIFORNIA OR ITS OFFICERS OR AGENTS SHALL NOT BE RESPONSIBLE FOR THE ACCURACY OR COMPLETENESS OF SCANNED COPIES OF THIS PLAN SHEET.

URS CORPORATION
915 WILSHIRE BOULEVARD
SUITE 700
LOS ANGELES, CA 90017

ALAMEDA CORRIDOR
TRANSPORTATION AUTHORITY
ONE CIVIL PLAZA, SUITE 350
CARSON, CA 90745

ABBREVIATIONS

ACTA	ALAMEDA CORRIDOR TRANSPORTATION AUTHORITY
C	CONNECTED TO FDU (CABLE NODE)
CAT6	CATEGORY 6 CABLE
CCM	CAMERA CONTROL MODEM
CCR	CAMERA CONTROL RECEIVER
CCT	CAMERA CONTROL TRANSMITTER
CDPD	CELLULAR DIGITAL PACKET DATA
CHAN #	CHANNEL NUMBER
CIA	CONTROLLER INTERFACE ASSEMBLY
CL	COIL IN CABINET
C-MIC	CABINET MOUNT INTERFACE CENTER
CN	CABLE NODE
CT	CONNECT FIBERS AT FIBER DISTRIBUTION UNIT
CTC	CENTRAL TRAIN CONTROL
DACCS	DIGITAL ACCESS AND CROSS-CONNECT SWITCH
DEMUX	DEMULTIPLEXER
DIST	DISTRIBUTION
DN	DATA NODE
D7	DISTRICT 7
E	ETHERNET PORT
FDU	FIBER DISTRIBUTION UNIT
FEP	FRONT END PROCESSOR
FEPT	FIELD ELEMENT PROTOCOL TRANSLATION
FOCM	FIBER OPTIC CONTROL MODEM
FOTM	FIBER OPTIC TRAFFIC MODEM; IFS MODEL D9130 OR EQUIVALENT
LADOT	LOS ANGELES DEPARTMENT OF TRANSPORTATION
LADWP	LOS ANGELES DEPARTMENT OF WATER AND POWER
LARTMC	LOS ANGELES REGIONAL TRAFFIC MANAGEMENT CENTER
LCU	LOCAL CONTROL UNIT
MOD	MODEM
MPEG-4	MOVING PICTURE EXPERTS GROUP LAYER-4 VIDEO
MUX	MULTIPLEXER
N	NORTH
(N)	NEW
NC	NO CONTACT
NTS	NOT TO SCALE
O	TERMINATED SPARE
OM	OPTICAL MODEM
OM-RX	CONNECT FIBER(S) TO "RECEIVE" PORT OF DS-1 OPTICAL MODEM
OM-TX	CONNECT FIBER(S) TO "TRANSMIT" PORT OF DS-1 OPTICAL MODEM
PDA	POWER DISTRIBUTION ASSEMBLY
PLC	PROGRAMMABLE LOGIC CONTROL
POLA	PORT OF LOS ANGELES
POLB	PORT OF LONG BEACH
PR OR P	PAIR
RMS	RAMP METERING SYSTEM
RX	RECEIVER
RX-1	RECEIVE FIBER IN DIRECTION OF MASTER FOTM
RX-2	RECEIVE FIBER IN OPPOSITE DIRECTION OF MASTER FOTM
S	SOUTH
SCE	SOUTHERN CALIFORNIA EDISON
SC GAS	SOUTHERN CALIFORNIA GAS
SMFO	SINGLEMODE FIBER OPTIC
T-1	1.544 MEGABITS PER SECOND (DATA RATE)
TCS	TRAFFIC CONTROL STATION
TDM	TIME DIVISION MULTIPLEXER
TELCO	TELEPHONE COMPANY
THRU	THROUGH
TS	TRAFFIC SIGNAL
TX	TRANSMITTER
TX-1	TRANSMIT FIBER IN DIRECTION OF MASTER FOTM
TX-2	TRANSMIT FIBER IN OPPOSITE DIRECTION OF MASTER FOTM
VMx OR VMUX	VIDEO MULTIPLEXER
VN	VIDEO NODE
VRx OR VRD	VIDEO RECEIVER/DATA
VTx OR VTD	VIDEO TRANSMITTER/ DATA RECIEVER
W/	WITH
WIM	WEIGH-IN-MOTION
X	TERMINATED ACTIVE
<>	ARROW POINTS TO THE DIRECTION OF TRANSMISSION
4WTO	4-WIRE TRANSMISSION ONLY
72SMFO	FIBER OPTIC CABLE, 72 SINGLEMODE FIBERS
36SMFO	FIBER OPTIC CABLE, 36 SINGLEMODE FIBERS
12SMFO	FIBER OPTIC CABLE, 12 SINGLEMODE FIBERS

LEGEND:

V NEW SPLICE VAULT WITH SPLICE CLOSURE

RP REMAIN IN PLACE

GENERAL NOTES:

1. SPLICE VAULTS AND COMMUNICATION PULL BOXES SHALL BE INSTALLED OFF SHOULDER UNLESS OTHERWISE DIRECTED BY THE ENGINEER.
2. THE CONTRACTOR SHALL GIVE 72 HOURS (3 WORKING DAYS) ADVANCE WRITTEN NOTICE TO THE ENGINEER AND ALL CONCERNED AGENCIES, PRIOR TO REMOVING AND MODIFYING ANY EXISTING ELECTRICAL FACILITIES.
3. REMOVE ALL EXISTING PULL BOXES AND ABANDON ALL EXISTING WIRES, CONDUIT, AND LOOP DETECTORS UNLESS OTHERWISE NOTED.
4. FOR CROSSINGS INTO BARRIER WALL THAT ARE NOT ON A BRIDGE STRUCTURE, INSTALL TYPE 5(T) (Std PLAN ES-8) IN SHOULDER BETWEEN THE CROSSING AND TYPE 9A (Std PLAN ES-9C) PULL BOX.
5. FIBER OPTIC CONDUIT SHALL PASS THROUGH 9A (Mod)) PULL BOXES WITHOUT BENDS.
6. INSTALL CONDUIT EXPANSION FITTING AT EACH BRIDGE ABUTMENT AND BRIDGE EXPANSION JOINT.

PROJECT NOTES (SHEETS E-34 THRU E-58):

1. INSTALL SPLICE VAULT AND SPLICE CLOSURES FOR FIBER OPTIC SPLICING.
2. NOT USED.
3. FIBER OPTIC CONDUIT IN BRIDGE BARRIER. SEE COMMUNICATION SYSTEM DETAILS AND BRIDGE STRUCTURE PLANS FOR DETAILS.
4. INSTALL 3"C IN BRIDGE. SEE BRIDGE STRUCTURE PLANS FOR DETAILS.
5. NOT USED.
6. NOT USED.
7. TERMINATE ENDS OF FIBER OPTIC CABLES TO FIBER DISTRIBUTION UNIT.
8. INSTALL 120/240 V TYPE III-CF METERED SERVICE EQUIPMENT ENCLOSURE.
   SERVICE METER No. 1 ID: 07-53-47-0-004.601
   - ADDRESS: 420½PIER A WAY
   - 100 A, 2P, 240 V, MAIN CB
   - 30 A, 1P, 120 V, CCTV / VIDEO NODE T1046
   - 30 A, 1P, 120 V, DATA NODE T1046
   - 30 A, 1P, 120 V, CABLE NODE T1046
   - 30 A, 1P, 120 V, WIM T1046
   - 30 A, 1P, 120 V, TDC
9. INSTALL CCTV 45 POLE AND CCTV CAMERA ASSEMBLY PER DETAILS ON SHEET E-43.
10. INSTALL FOTM.
11. INSTALL TX AND FOCM.
12. INSTALL MODEL 334-TV CONTROLLER CABINET FOR VIDEO NODE (T1046). INSTALL VIDEO MULTIPLEXER, VIDEO RECEIVERS, FIBER OPTIC TRAFFIC MODEM, AND TWO 72-FIBER FDU PER VIDEO NODE DETAILS.
13. INSTALL MODEL 334-TV CONTROLLER CABINET FOR DATA NODE (T1046). INSTALL D-4 CHANNEL BANK, FIBER OPTIC CONTROL MODEM, AND TWO 72-FIBER FDU PER DATA NODE DETAILS. TERMINATE TELEPHONE CABLE.
14. INSTALL STATE-FURNISHED MODEL 334-TV CONTROLLER CABINET FOR CABLE NODE (TI046). TERMINATE 72SMFO. TERMINATE TELEPHONE CABLE IN TERMINAL BLOCK.
15. SEE SHEET E-57 AND E-58 FOR DETAILS OF CONDUITS THROUGH THE WALLS.
16. INSTALL NEMA 4X TYPE B TDC (2-T1 LINES FOR COMMUNICATION SYSTEM AND ONE TELEPHONE LINE FOR WIM SYSTEM).
17. NOT USED.
18. INSTALL HIGH MAST CCTV 70 POLE. INSTALL CCTV CAMERA ASSEMBLY PER DETAILS ON E-45.
19. INSTALL MODEL 334-TV CONTROLLER CABINET FOR CCTV CAMERA SYSTEMS (T1035 AND TI037). INSTALL VIDEO RECEIVERS, FIBER OPTIC TRAFFIC MODEM, AND TWO 72-FIBER FDU PER CCTV CAMERA SYSTEM DETAILS.
20. INSTALL MODEL 334-TV CONTROLLER CABINET FOR CABLE NODE (TI035). TERMINATE 72SMFO.

LEGEND: (PDA)

SURGE PROTECTOR

CIRCUIT BREAKER

HT — RELAY COIL - * RELAY NAME

RELAY CONTACT N.C.

8 — WIRE SIZE, IF NOT INDICATED SHALL BE #14 AWG

F — FAN

L — INDICATOR LAMP

THERMOSTATIC CONTROL

THERMO. — ADJUSTABLE CALIBRATED THERMOSTAT

R — DUPLEX RECEPTACLE

W\GFI — WITH GROUND FAULT INTERRUPTOR

Q — QUAD RECEPTACLE

THIS PLAN ACCURATE FOR ELECTRICAL WORK ONLY.

COMMUNICATION SYSTEM
NOTES AND LEGEND

NO SCALE

E-33

REVISED BY	DATE REVISED
DAVID MADERA	DOUGLAS E. SMITH
CALCULATED-DESIGNED BY	CHECKED BY
CONSULTANT FUNCTIONAL SUPERVISOR	SHAHRAM VAHDAT

STATE OF CALIFORNIA - DEPARTMENT OF TRANSPORTATION

Caltrans

LAST REVISION 00-00-00 | DATE PLOTTED => 18-OCT-2010 | TIME PLOTTED => 14:49

FOR ACCURATE RIGHT OF WAY AND ACCESS DATA, CONTACT
RIGHT OF WAY ENGINEERING AT THE DISTRICT OFFICE.

Dist	COUNTY	ROUTE	POST MILES TOTAL PROJECT	SHEET No.	TOTAL SHEETS
07	LA	47,103	3.5/4.6, 0.0/1.1	339	1003

REGISTERED CIVIL ENGINEER 7/19/10 DATE

10-11-10
PLANS APPROVAL DATE

REGISTERED PROFESSIONAL ENGINEER DOUGLAS SMITH No. 43549 Exp 06/30/12 CIVIL STATE OF CALIFORNIA

THE STATE OF CALIFORNIA OR ITS OFFICERS OR AGENTS SHALL NOT BE RESPONSIBLE FOR THE ACCURACY OR COMPLETENESS OF SCANNED COPIES OF THIS PLAN SHEET.

URS CORPORATION
915 WILSHIRE BOULEVARD
SUITE 700
LOS ANGELES, CA 90017

ALAMEDA CORRIDOR
TRANSPORTATION AUTHORITY
ONE CIVIL PLAZA, SUITE 350
CARSON, CA 90745

CONDUIT AND CONDUCTOR SCHEDULE

CONDUCTOR TYPE	FUNCTION	1			2			3				5				7				15				16			
12SMFO CABLE	DATA / VIDEO / VOICE							1								1											
36SMFO CABLE	VIDEO DISTRIBUTION	1										1								1							
36SMFO CABLE	DATA DISTRIBUTION		1										1								1						
72SMFO CABLE	TRUNK CABLE			1			1							1					1			1					
PULL ROPE					1	1		1	1	1					1								1	1	1	1	1
INNERDUCT		1"	1"	1"	1"	1"	1"	1"	1"	1"	1"	1"	1"	1"	1"	1"	1"	1"	1"	1"	1"	1"	1"	1"	1"	1"	1"
CONDUIT SIZE		3½"			3½"			4"				4"				4"				4"				4"			

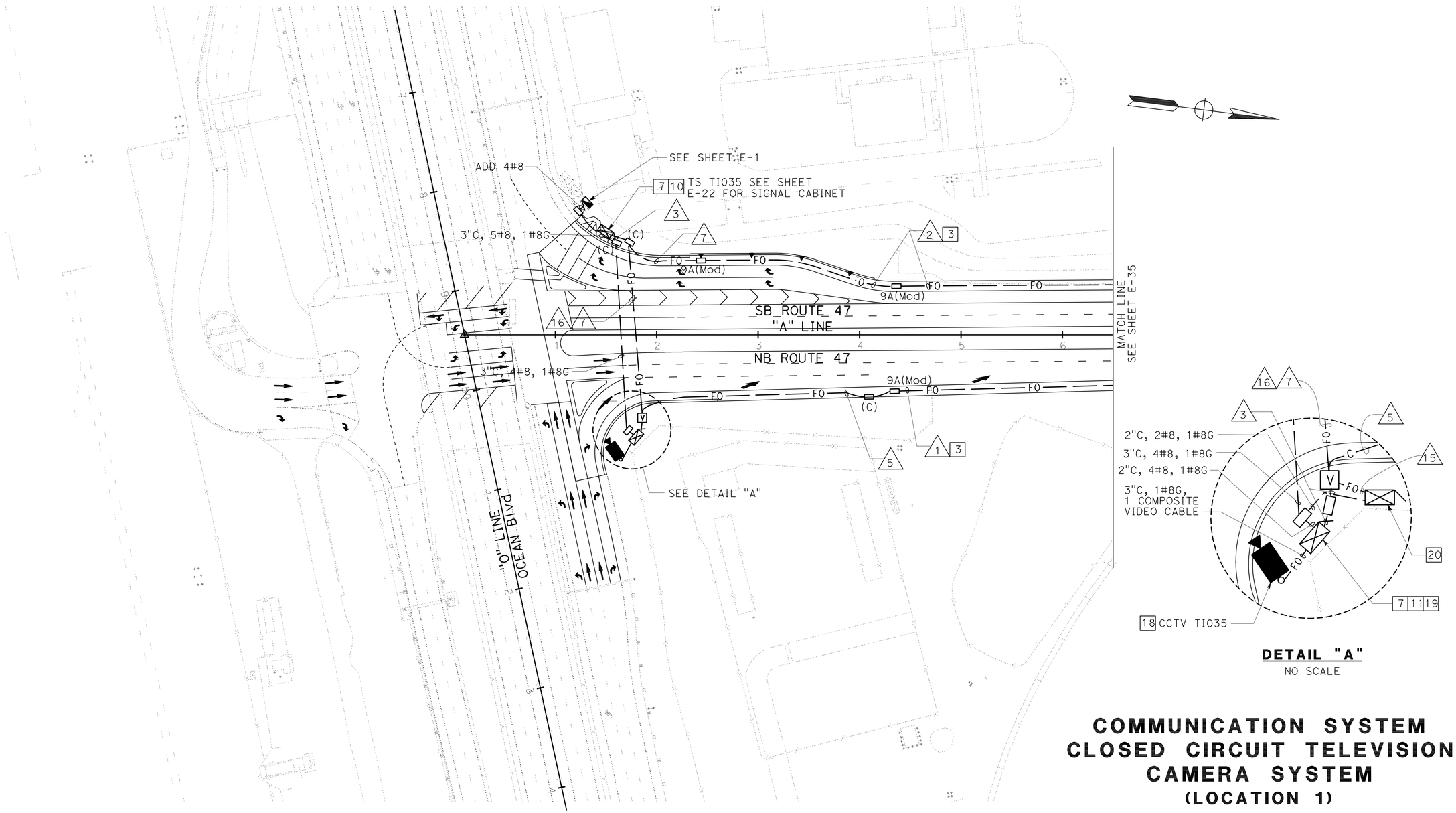

DETAIL "A"
NO SCALE

COMMUNICATION SYSTEM CLOSED CIRCUIT TELEVISION CAMERA SYSTEM (LOCATION 1)

SCALE: 1" = 50'

E-34

SEE COMMUNICATION SYSTEM (NOTES AND LEGEND) SHEET E-33
FOR ABBREVIATIONS, PROJECT NOTES, GENERAL NOTES, AND LEGEND.

THIS PLAN ACCURATE FOR ELECTRICAL WORK ONLY.

STATE OF CALIFORNIA - DEPARTMENT OF TRANSPORTATION
Caltrans

CONSULTANT FUNCTIONAL SUPERVISOR: SHAHRAM VAHDAT
CALCULATED-DESIGNED BY: DAVID MADERA
CHECKED BY: DOUGLAS E. SMITH
REVISED BY
DATE REVISED

LAST REVISION 00-00-00
DATE PLOTTED => 21-OCT-2010
TIME PLOTTED => 11:18

FOR ACCURATE RIGHT OF WAY AND ACCESS DATA, CONTACT
RIGHT OF WAY ENGINEERING AT THE DISTRICT OFFICE.

Dist	COUNTY	ROUTE	POST MILES TOTAL PROJECT	SHEET No.	TOTAL SHEETS
07	LA	47,103	3.5/4.6, 0.0/1.1	340	1003

REGISTERED CIVIL ENGINEER 7/19/10 DATE

10-11-10
PLANS APPROVAL DATE

REGISTERED PROFESSIONAL ENGINEER DOUGLAS SMITH No. 43549 Exp 06/30/12 CIVIL STATE OF CALIFORNIA

THE STATE OF CALIFORNIA OR ITS OFFICERS OR AGENTS SHALL NOT BE RESPONSIBLE FOR THE ACCURACY OR COMPLETENESS OF SCANNED COPIES OF THIS PLAN SHEET.

URS CORPORATION
915 WILSHIRE BOULEVARD
SUITE 700
LOS ANGELES, CA 90017

ALAMEDA CORRIDOR
TRANSPORTATION AUTHORITY
ONE CIVIL PLAZA, SUITE 350
CARSON, CA 90745

CONDUIT AND CONDUCTOR SCHEDULE

CONDUCTOR TYPE	FUNCTION	△1			△2			△3				△4			
12SMFO CABLE	DATA / VIDEO / VOICE							1				1	1		
36SMFO CABLE	VIDEO DISTRIBUTION	1													
36SMFO CABLE	DATA DISTRIBUTION		1												
72SMFO CABLE	TRUNK CABLE			1			1								
PULL ROPE					1	1									
INNERDUCT SIZE		1"	1"	1"	1"	1"	1"	1"	1"	1"	1"	1"	1"	1"	1"
CONDUIT SIZE		3½"			3½"			4"				4"			

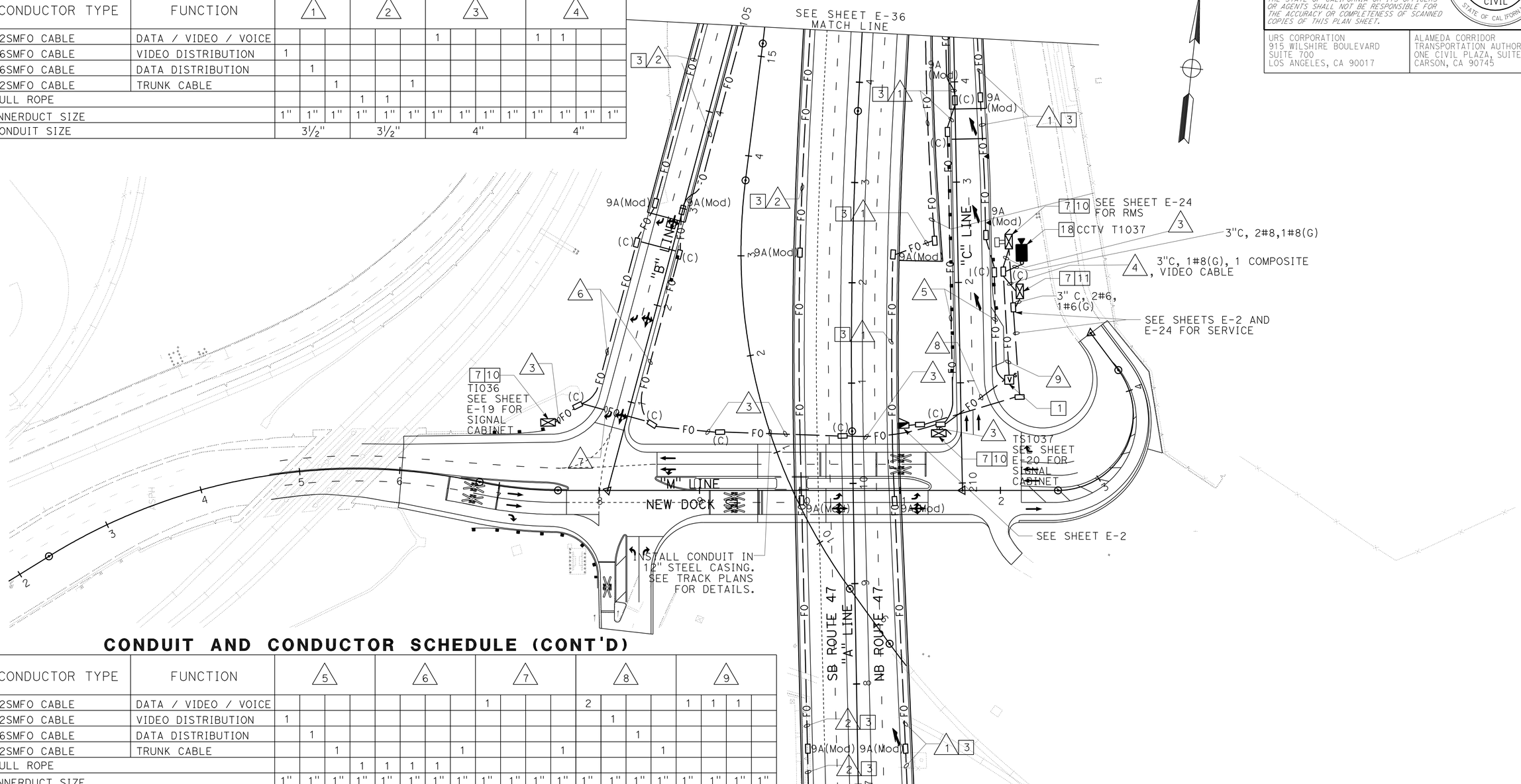

CONDUIT AND CONDUCTOR SCHEDULE (CONT'D)

CONDUCTOR TYPE	FUNCTION	△5				△6				△7				△8				△9			
12SMFO CABLE	DATA / VIDEO / VOICE									1				2				1	1	1	
12SMFO CABLE	VIDEO DISTRIBUTION	1													1						
36SMFO CABLE	DATA DISTRIBUTION		1													1					
72SMFO CABLE	TRUNK CABLE			1					1				1				1				
PULL ROPE					1	1	1	1													
INNERDUCT SIZE		1"	1"	1"	1"	1"	1"	1"	1"	1"	1"	1"	1"	1"	1"	1"	1"	1"	1"	1"	1"
CONDUIT SIZE		4"				4"				4"				4"				4"			

COMMUNICATION SYSTEM
CLOSED CIRCUIT TELEVISION
CAMERA SYSTEM
(LOCATION 2)

SCALE: 1" = 50'

E-35

SEE COMMUNICATION SYSTEM (NOTES AND LEGEND) SHEET E-33
FOR ABBREVIATIONS, PROJECT NOTES, GENERAL NOTES, AND LEGEND.

THIS PLAN ACCURATE FOR ELECTRICAL WORK ONLY.

STATE OF CALIFORNIA - DEPARTMENT OF TRANSPORTATION
Caltrans

CONSULTANT FUNCTIONAL SUPERVISOR: SHAHRAM VAHDAT
CALCULATED-DESIGNED BY: DOUGLAS E. SMITH
CHECKED BY: DAVID MADERA
REVISED BY
DATE REVISED

LAST REVISION 00-00-00
DATE PLOTTED => 21-OCT-2010
TIME PLOTTED => 11:18

FOR ACCURATE RIGHT OF WAY AND ACCESS DATA, CONTACT
RIGHT OF WAY ENGINEERING AT THE DISTRICT OFFICE.

Dist	COUNTY	ROUTE	POST MILES TOTAL PROJECT	SHEET No.	TOTAL SHEETS
07	LA	47,103	3.5/4.6, 0.0/1.1	341	1003

REGISTERED CIVIL ENGINEER 7/19/10 DATE

10-11-10
PLANS APPROVAL DATE

REGISTERED PROFESSIONAL ENGINEER DOUGLAS SMITH No. 43549 Exp 06/30/12 CIVIL STATE OF CALIFORNIA

THE STATE OF CALIFORNIA OR ITS OFFICERS OR AGENTS SHALL NOT BE RESPONSIBLE FOR THE ACCURACY OR COMPLETENESS OF SCANNED COPIES OF THIS PLAN SHEET.

URS CORPORATION
915 WILSHIRE BOULEVARD
SUITE 700
LOS ANGELES, CA 90017

ALAMEDA CORRIDOR
TRANSPORTATION AUTHORITY
ONE CIVIL PLAZA, SUITE 350
CARSON, CA 90745

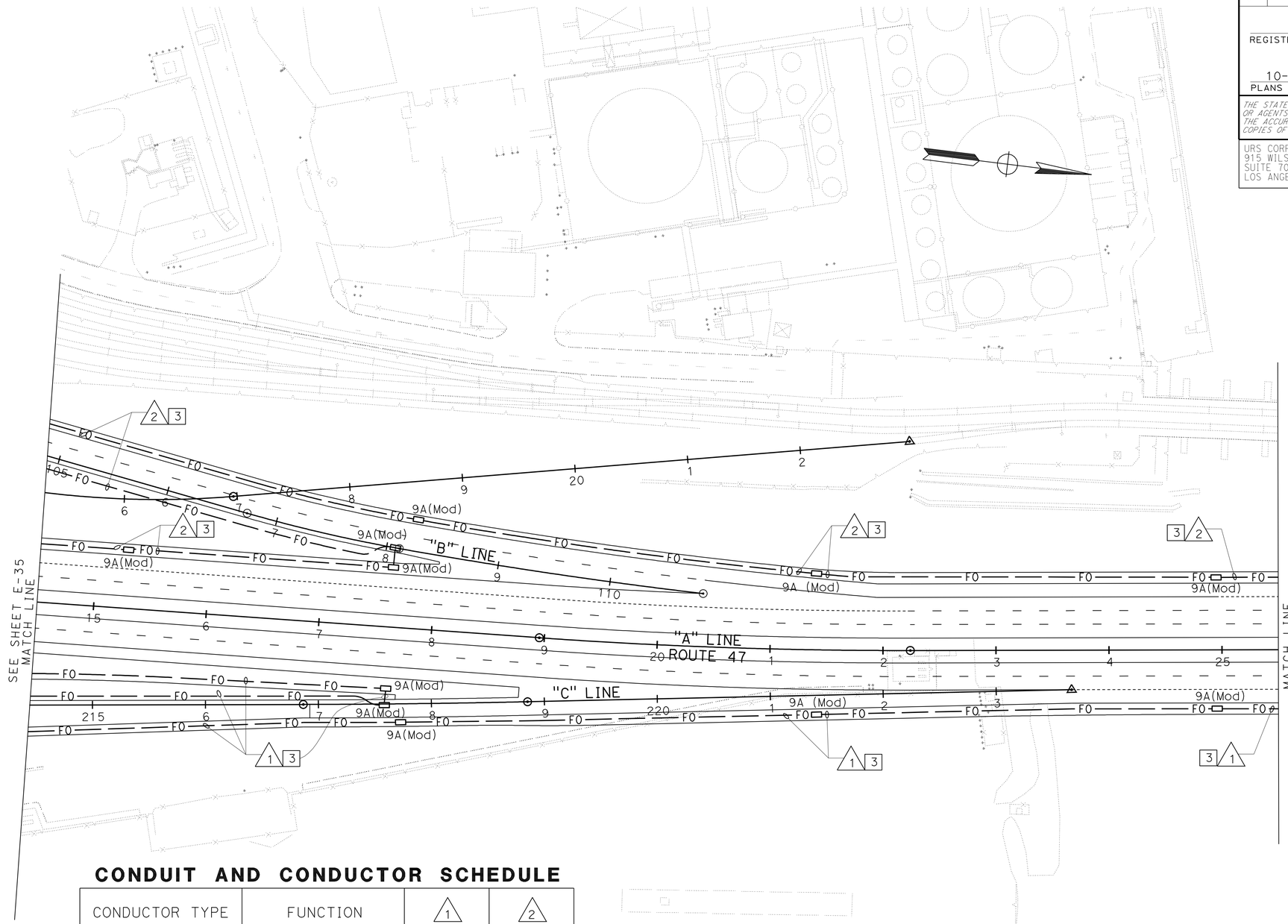

CONDUIT AND CONDUCTOR SCHEDULE

CONDUCTOR TYPE	FUNCTION	1			2		
12SMFO CABLE	DATA / VIDEO / VOICE						
36SMFO CABLE	VIDEO DISTRIBUTION	1					
36SMFO CABLE	DATA DISTRIBUTION		1				
72SMFO CABLE	TRUNK CABLE			1			1
PULL ROPE					1	1	
INNERDUCT		1"	1"	1"	1"	1"	1"
CONDUIT SIZE		3½"			3½"		

COMMUNICATION SYSTEM

SCALE: 1" = 50'

E-36

SEE COMMUNICATION SYSTEM (NOTES AND LEGEND) SHEET E-33
FOR ABBREVIATIONS, PROJECT NOTES, GENERAL NOTES, AND LEGEND.

THIS PLAN ACCURATE FOR ELECTRICAL WORK ONLY.

STATE OF CALIFORNIA - DEPARTMENT OF TRANSPORTATION
Caltrans

CONSULTANT FUNCTIONAL SUPERVISOR: SHAHRAM VAHDAT
CALCULATED-DESIGNED BY: DAVID MADERA
CHECKED BY: DOUGLAS E. SMITH
REVISED BY
DATE REVISED

LAST REVISION 00-00-00
DATE PLOTTED => 18-OCT-2010
TIME PLOTTED => 13:28

FOR ACCURATE RIGHT OF WAY AND ACCESS DATA, CONTACT
RIGHT OF WAY ENGINEERING AT THE DISTRICT OFFICE.

Dist	COUNTY	ROUTE	POST MILES TOTAL PROJECT	SHEET No.	TOTAL SHEETS
07	LA	47,103	3.5/4.6, 0.0/1.1	342	1003

REGISTERED CIVIL ENGINEER 7/19/10 DATE

10-11-10
PLANS APPROVAL DATE

REGISTERED PROFESSIONAL ENGINEER DOUGLAS SMITH No. 43549 Exp 06/30/12 CIVIL STATE OF CALIFORNIA

THE STATE OF CALIFORNIA OR ITS OFFICERS OR AGENTS SHALL NOT BE RESPONSIBLE FOR THE ACCURACY OR COMPLETENESS OF SCANNED COPIES OF THIS PLAN SHEET.

URS CORPORATION
915 WILSHIRE BOULEVARD
SUITE 700
LOS ANGELES, CA 90017

ALAMEDA CORRIDOR
TRANSPORTATION AUTHORITY
ONE CIVIL PLAZA, SUITE 350
CARSON, CA 90745

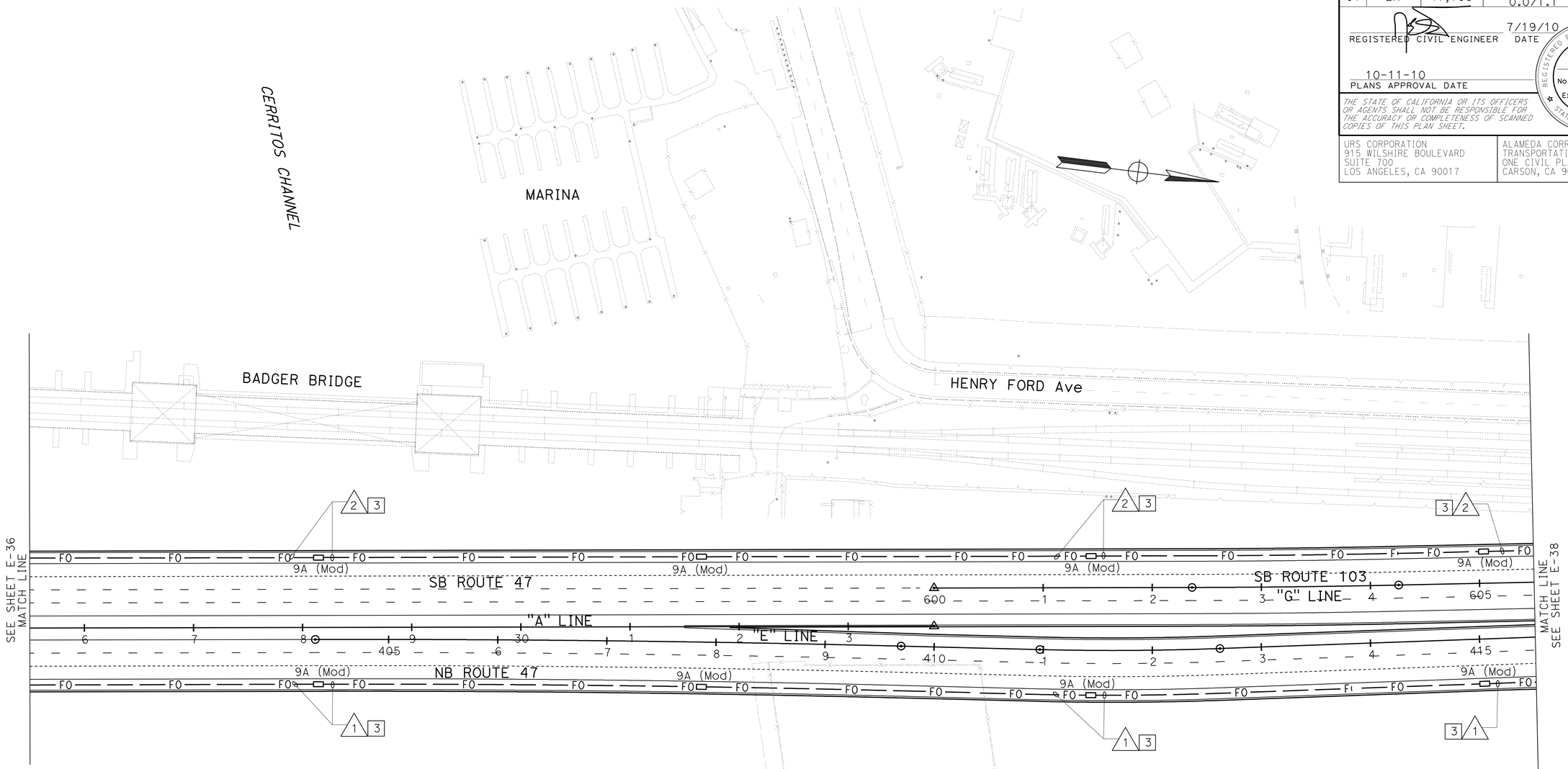

CONDUIT AND CONDUCTOR SCHEDULE

CONDUCTOR TYPE	FUNCTION	1			2		
12SMFO CABLE	DATA / VIDEO / VOICE						
36SMFO CABLE	VIDEO DISTRIBUTION	1					
36SMFO CABLE	DATA DISTRIBUTION		1				
72SMFO CABLE	TRUNK CABLE			1			1
PULL ROPE					1	1	
INNERDUCT		1"	1"	1"	1"	1"	1"
CONDUIT SIZE		3½"			3½"		

SEE COMMUNICATION SYSTEM ROUTING (NOTES AND LEGEND) SHEET E-33
FOR ABBREVIATIONS, PROJECT NOTES, GENERAL NOTES, AND LEGEND.

THIS PLAN ACCURATE FOR ELECTRICAL WORK ONLY.

COMMUNICATION SYSTEM

SCALE: 1" = 50'

E-37

STATE OF CALIFORNIA - DEPARTMENT OF TRANSPORTATION
Caltrans

CONSULTANT FUNCTIONAL SUPERVISOR: SHAHRAM VAHDAT
CALCULATED-DESIGNED BY: DAVID MADERA
CHECKED BY: DOUGLAS E. SMITH
REVISED BY
DATE REVISED

LAST REVISION 00-00-00
DATE PLOTTED => 18-OCT-2010
TIME PLOTTED => 13:28

FOR ACCURATE RIGHT OF WAY AND ACCESS DATA, CONTACT
RIGHT OF WAY ENGINEERING AT THE DISTRICT OFFICE.

Dist	COUNTY	ROUTE	POST MILES TOTAL PROJECT	SHEET No.	TOTAL SHEETS
07	LA	47,103	3.5/4.6, 0.0/1.1	343	1003

REGISTERED CIVIL ENGINEER 7/19/10 DATE

10-11-10
PLANS APPROVAL DATE

REGISTERED PROFESSIONAL ENGINEER DOUGLAS SMITH No. 43549 Exp 06/30/12 CIVIL STATE OF CALIFORNIA

THE STATE OF CALIFORNIA OR ITS OFFICERS OR AGENTS SHALL NOT BE RESPONSIBLE FOR THE ACCURACY OR COMPLETENESS OF SCANNED COPIES OF THIS PLAN SHEET.

URS CORPORATION
915 WILSHIRE BOULEVARD
SUITE 700
LOS ANGELES, CA 90017

ALAMEDA CORRIDOR
TRANSPORTATION AUTHORITY
ONE CIVIL PLAZA, SUITE 350
CARSON, CA 90745

CONDUIT AND CONDUCTOR SCHEDULE

CONDUCTOR TYPE	FUNCTION	1			2			14		
12SMFO CABLE	DATA / VIDEO / VOICE									
36SMFO CABLE	VIDEO DISTRIBUTION	1						1		
36SMFO CABLE	DATA DISTRIBUTION		1						1	
72SMFO CABLE	TRUNK CABLE			1			1			1
PULL ROPE					1	1				
INNERDUCT		1"	1"	1"	1"	1"	1"	1"	1"	1"
CONDUIT SIZE		3½"			3½"			3"		

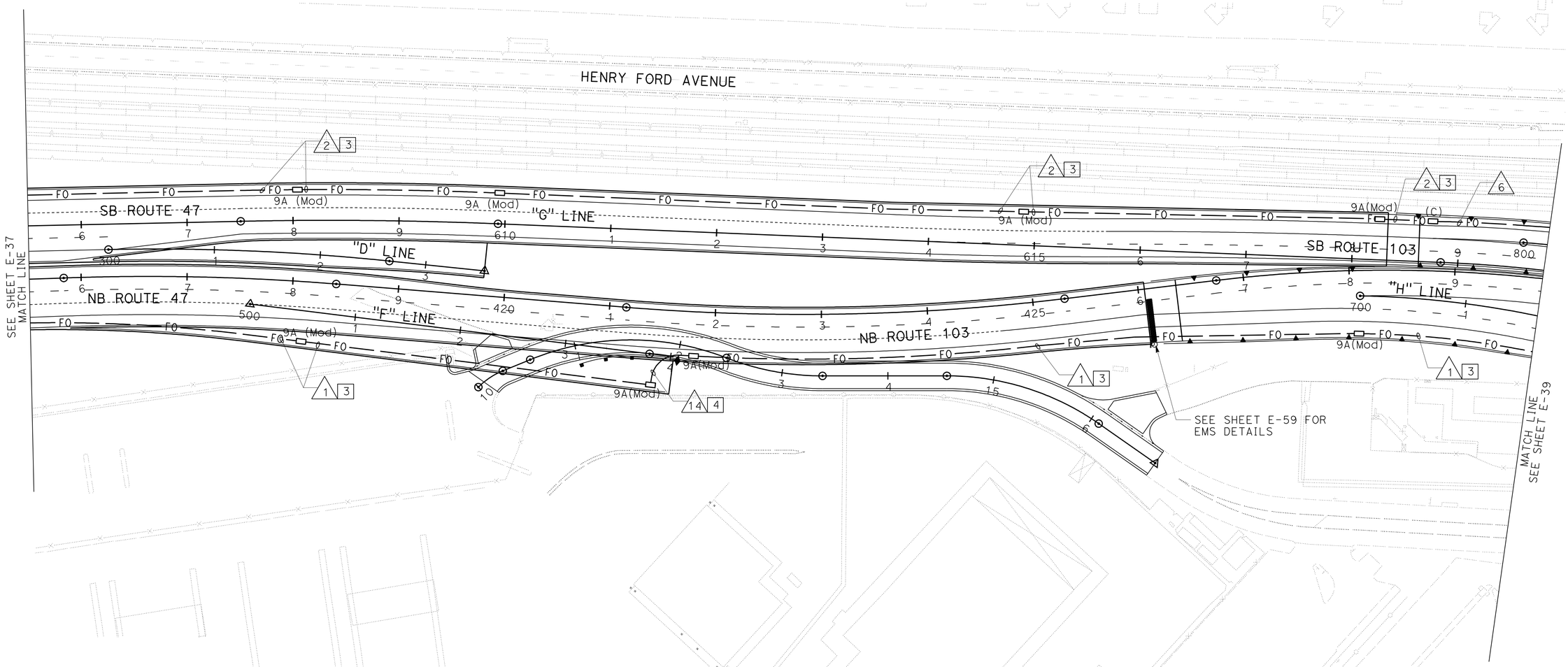

SEE COMMUNICATION SYSTEM (NOTES AND LEGEND) SHEET E-33
FOR ABBREVIATIONS, PROJECT NOTES, GENERAL NOTES, AND LEGEND.

THIS PLAN ACCURATE FOR ELECTRICAL WORK ONLY.

COMMUNICATION SYSTEM

SCALE: 1" = 50'

E-38

STATE OF CALIFORNIA - DEPARTMENT OF TRANSPORTATION
Caltrans

CONSULTANT FUNCTIONAL SUPERVISOR: SHAHRAM VAHDAT
CALCULATED-DESIGNED BY: DAVID MADERA
CHECKED BY: DOUGLAS E. SMITH
REVISED BY
DATE REVISED

LAST REVISION 00-00-00
DATE PLOTTED => 18-OCT-2010
TIME PLOTTED => 13:28

FOR ACCURATE RIGHT OF WAY AND ACCESS DATA, CONTACT
RIGHT OF WAY ENGINEERING AT THE DISTRICT OFFICE.

Dist	COUNTY	ROUTE	POST MILES TOTAL PROJECT	SHEET No.	TOTAL SHEETS
07	LA	47,103	3.5/4.6, 0.0/1.1	344	1003

REGISTERED CIVIL ENGINEER 7/19/10 DATE

10-11-10
PLANS APPROVAL DATE

REGISTERED PROFESSIONAL ENGINEER DOUGLAS SMITH No. 43549 Exp 06/30/12 CIVIL STATE OF CALIFORNIA

THE STATE OF CALIFORNIA OR ITS OFFICERS OR AGENTS SHALL NOT BE RESPONSIBLE FOR THE ACCURACY OR COMPLETENESS OF SCANNED COPIES OF THIS PLAN SHEET.

URS CORPORATION
915 WILSHIRE BOULEVARD
SUITE 700
LOS ANGELES, CA 90017

ALAMEDA CORRIDOR
TRANSPORTATION AUTHORITY
ONE CIVIL PLAZA, SUITE 350
CARSON, CA 90745

CONDUIT AND CONDUCTOR SCHEDULE

CONDUCTOR TYPE	FUNCTION	1			5				6				7				10				11				12				13	14				15				18	19
12SMFO CABLE	DATA / VIDEO / VOICE												1				1				1									1				1					
36SMFO CABLE	VIDEO DISTRIBUTION	1			1													2								1									2				
36SMFO CABLE	DATA DISTRIBUTION		1			1																2					1				2								
72SMFO CABLE	TRUNK CABLE			1			1					1				1												2											
CAT6 CABLE																			1				2						*3							4		2	1
PULL ROPE								1	1	1	1																												
INNERDUCT SIZE		1"	1"	1"	1"	1"	1"	1"	1"	1"	1"	1"	1"	1"	1"	1"	1"	1"	1"	1"	1"	1"	1"	1"	1"	1"	1"	1"		1"	1"	1"	1"	1"	1"	1"	1"		
CONDUIT SIZE		3½"			4"				4"				4"				4"				4"				4"				3"	4"				4"				2"	2"

* CAT6 CABLE DISTRIBUTION:
1. DATA NODE T1046
2. VIDEO NODE T1046
3. WIM T1046

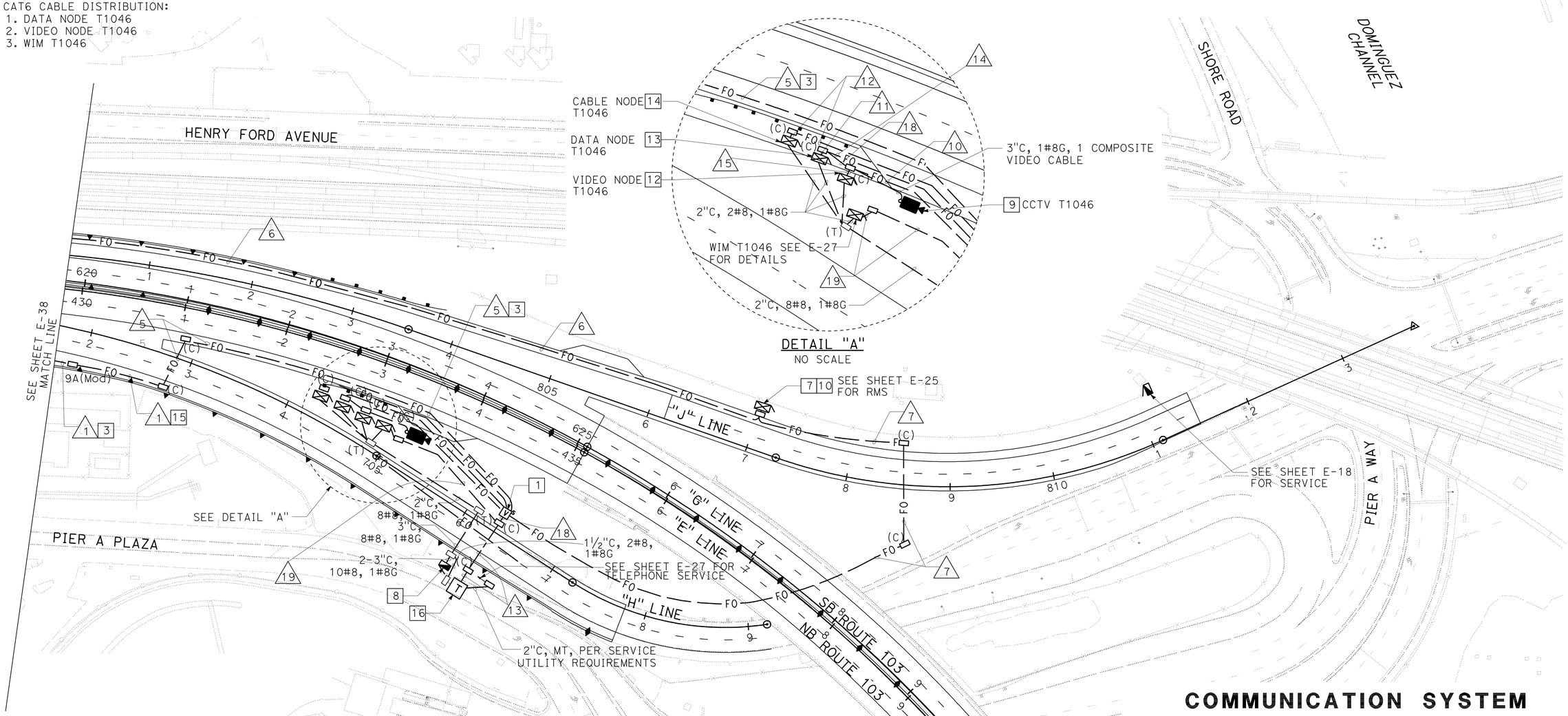

COMMUNICATION SYSTEM
CLOSED CIRCUIT TELEVISION CAMERA SYSTEM (LOCATION 3)
CABLE NODE, DATA NODE, VIDEO NODE
(LOCATION TI045)

SCALE: 1" = 50'

E-39

SEE COMMUNICATION SYSTEM (NOTES AND LEGEND) SHEET E-33 FOR ABBREVIATIONS, PROJECT NOTES, GENERAL NOTES, AND LEGEND.

THIS PLAN ACCURATE FOR ELECTRICAL WORK ONLY.

STATE OF CALIFORNIA - DEPARTMENT OF TRANSPORTATION
Caltrans

CONSULTANT FUNCTIONAL SUPERVISOR: SHAHRAM VAHDAT
CALCULATED-DESIGNED BY: DOUGLAS E. SMITH
CHECKED BY: DAVID MADERA
REVISED BY
DATE REVISED

LAST REVISION DATE PLOTTED => 21-OCT-2010
00-00-00 TIME PLOTTED => 11:19

Dist	COUNTY	ROUTE	POST MILES TOTAL PROJECT	SHEET No.	TOTAL SHEETS
07	LA	47,103	3.5/4.6, 0.0/1.1	345	1003

REGISTERED CIVIL ENGINEER 7/19/10 DATE

10-11-10
PLANS APPROVAL DATE

REGISTERED PROFESSIONAL ENGINEER DOUGLAS SMITH No. 43549 Exp 06/30/12 CIVIL STATE OF CALIFORNIA

THE STATE OF CALIFORNIA OR ITS OFFICERS OR AGENTS SHALL NOT BE RESPONSIBLE FOR THE ACCURACY OR COMPLETENESS OF SCANNED COPIES OF THIS PLAN SHEET.

URS CORPORATION
915 WILSHIRE BOULEVARD
SUITE 700
LOS ANGELES, CA 90017

ALAMEDA CORRIDOR
TRANSPORTATION AUTHORITY
ONE CIVIL PLAZA, SUITE 350
CARSON, CA 90745

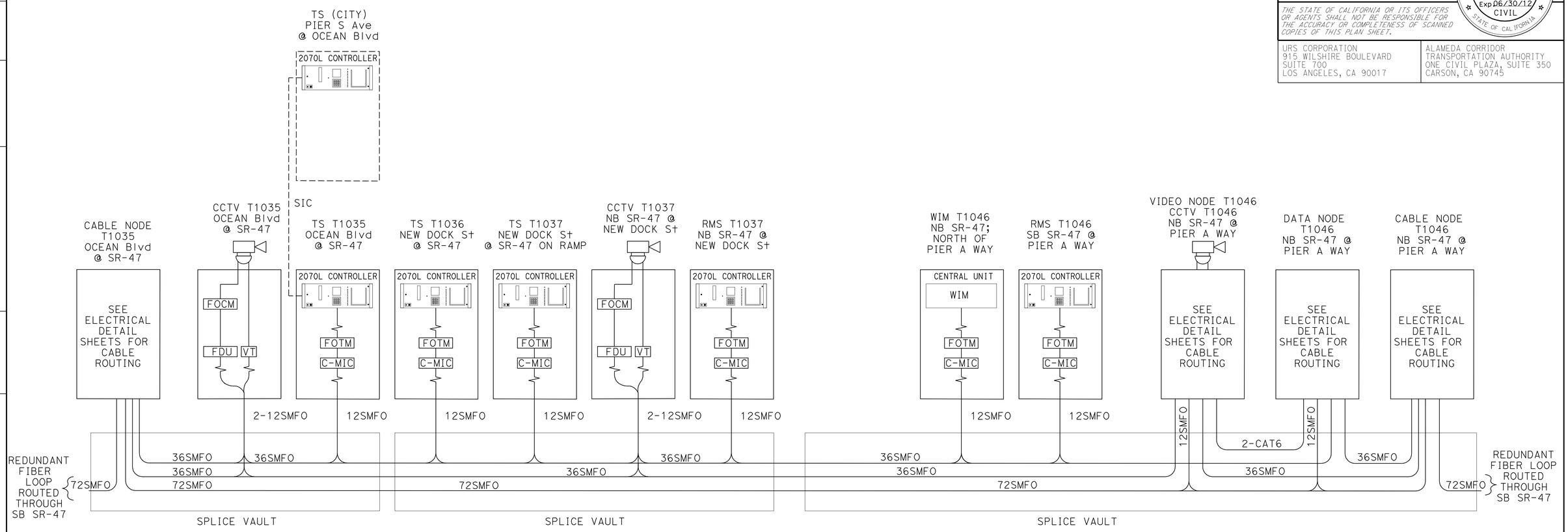

FOR NOTES AND ABBREVIATIONS, SEE SHEET E-33

THIS PLAN ACCURATE FOR ELECTRICAL WORK ONLY.

COMMUNICATION SYSTEM
FIELD ELEMENTS SCHEMATIC

NO SCALE

E-40

STATE OF CALIFORNIA - DEPARTMENT OF TRANSPORTATION
Caltrans

CONSULTANT FUNCTIONAL SUPERVISOR: SHAHRAM VAHDAT
CALCULATED-DESIGNED BY: DOUGLAS E. SMITH
CHECKED BY: DAVID MADERA
REVISED BY
DATE REVISED

LAST REVISION 00-00-00
DATE PLOTTED => 18-OCT-2010
TIME PLOTTED => 13:28

Dist	COUNTY	ROUTE	POST MILES TOTAL PROJECT	SHEET No.	TOTAL SHEETS
07	LA	47,103	3.5/4.6, 0.0/1.1	346	1003

REGISTERED CIVIL ENGINEER 7/19/10 DATE

10-11-10
PLANS APPROVAL DATE

REGISTERED PROFESSIONAL ENGINEER DOUGLAS SMITH No. 43549 Exp 06/30/12 CIVIL STATE OF CALIFORNIA

THE STATE OF CALIFORNIA OR ITS OFFICERS OR AGENTS SHALL NOT BE RESPONSIBLE FOR THE ACCURACY OR COMPLETENESS OF SCANNED COPIES OF THIS PLAN SHEET.

URS CORPORATION
915 WILSHIRE BOULEVARD
SUITE 700
LOS ANGELES, CA 90017

ALAMEDA CORRIDOR
TRANSPORTATION AUTHORITY
ONE CIVIL PLAZA, SUITE 350
CARSON, CA 90745

36SMFO CABLE: DATA DISTRIBUTION

FIBER No.	USE	CABLE NODE T1035 SR-47 RAMP @ OCEAN Blvd	CCTV T1035 SR-47 RAMP @ OCEAN Blvd	TS T1035 SR-47 RAMP @ OCEAN Blvd	TS T1036 SB SR-47 OFF RAMP @ NEW DOCK St	TS T1037 NB SR-47 ON RAMP @ NEW DOCK St	CCTV T1037 NB SR-47 @ NEW DOCK St	RMS T1037 NB SR-47 NORTH OF PIER A WAY	EMS T1045 NB SR-47 PIER A WAY	WIM T1046 NB SR-47 NORTH OF PIER A WAY	RMS T1046 SB SR-47 NORTH OF PIER A WAY	VIDEO NODE T1046 NB SR-47 @ PIER A WAY	DATA NODE T1046 NB SR-47 @ PIER A WAY	CABLE NODE T1046 NB SR-47 @ PIER A WAY	FIBER No.	NOTES
	PM	3.5	3.5	3.5	3.6	3.7	3.7	3.7	4.5	4.6	4.6	4.6	4.6	4.6		
1	RMS Tx	<C>						<X>			<X>		<X>	<C>	1	D4 CH1
2	RMS Rx	<C>						<X>			<X>		<X>	<C>	2	D4 CH1
3	WIM Tx	<C>								<X>			<X>	<C>	3	D4 CH2
4	WIM Rx	<C>								<X>			<X>	<C>	4	D4 CH2
5	CCR Tx	<C>	<X>				<X>					<X>	<X>	<C>	5	D4 CH3
6	CCR Rx	<C>	<X>				<X>					<X>	<X>	<C>	6	D4 CH3
7	TS Tx	<C>			<X>	<X>							<X>	<C>	7	D4 CH4
8	TS Rx	<C>			<X>	<X>							<X>	<C>	8	D4 CH4
9	TS Tx	<C>		<X>									<X>	<C>	9	D4 CH5
10	TS Rx	<C>		<X>									<X>	<C>	10	D4 CH5
11	EMS Tx	<C>							<X>				<X>	<C>	11	D4 CH6
12	EMS Rx	<C>							<X>				<X>	<C>	12	D4 CH6
13-30	SPARE														13-30	FUTURE
31	VOICE	<C>			<O>	<O>	<O>	<O>	<O>	<O>	<O>	<O>	<O>	<C>	31	VOICE
32-36	SPARE	<C>												<C>	32-36	SPARE

36SMFO CABLE: VIDEO DISTRIBUTION

FIBER No.	USE	CABLE NODE T1035 SR-47 RAMP @ OCEAN Blvd	CCTV T1035 NB SR-47 RAMP @ OCEAN Blvd	CCTV T1037 NB SR-47 @ NEW DOCK St	VIDEO NODE T1046 NB SR-47 @ PIER A WAY	DATA NODE T1046 NB SR-47 @ PIER A WAY	CABLE NODE T1046 NB SR-47 @ PIER A WAY	FIBER No.	NOTES
	PM	3.5	3.5	3.7	4.6	4.6	4.6		
1	CCTV T1035	<C>	<X>		<X>		<C>	1	
2	CCTV T1037	<C>		<X>	<X>		<C>	2	
3	CCTV T1046	<C>			<X>		<C>	3	
4-36	SPARE							4-36	SPARE

VIDEO NODE (T1046): ENCODER CHANNEL ASSIGNMENT

ENCODER CHANNEL NUMBER	CAMERA LOCATION	CAMERA IDENTIFICATION
1	NB SR-47 @ NEW DOCK St	CCTV (T1037)
2	NB SR-47 @ NEW DOCK St	CCTV (T1037)
3	NB SR-47 NORTH OF PIER A WAY	CCTV (T1046)
4-8	SPARE	

DATA NODE (T1046): CIRCUIT ASSIGNMENT

D4 CHANNEL NUMBER	TMC INTERFACE	DATA NODE (T1046) INTERFACE	TERMINATION CABLE-DA035 FIBER NUMBER		FUNCTION
			CABLE	FIBER	
1	4WTO	4WTO	A	1,2	RMS/TMS
2	4WTO	4WTO	A	5,6	WIM
3	4WTO	4WTO	A	7,8	CCR
4	4WTO	4WTO	A	9,10	TS
5	4WTO	4WTO	A	11,12	TS
6	4WTO	4WTO	A	13,14	EMS
7 - 16	4WTO	4WTO	A	15,16	SPARE

CABLE NODE (TI046): TRUNK CABLE ASSIGNMENT

FIBER No.	USE	DN / VN T1046 PM 4.6	CN T1046 PM 4.6	LARTMC SD213 (GA021)	ACTUAL LOSS BUDGET,	NOTES
1	VTB DN	10 dB	OM-RX	CT		
2	VTB DN	10 dB	OM-TX	CT		
3	VTB DN	10 dB	T-1	CT		
4-12	SPARE			CT		
13-72	SPARE			CL		

NOTE: FIBER NUMBERS MAY BE REASSIGNED BY THE ENGINEER DURING CONSTRUCTION.

FOR NOTES AND ABBREVIATIONS, SEE SHEET E-23

THIS PLAN ACCURATE FOR ELECTRICAL WORK ONLY.

COMMUNICATION SYSTEM
DATA AND VIDEO CABLE
FIBER ASSIGNMENTS AND DISTRIBUTION
VIDEO AND DATA CHANNEL ASSIGNMENT TABLES
VIDEO/DATA FIBER ASSIGNMENT TABLE

NO SCALE

E-41

STATE OF CALIFORNIA - DEPARTMENT OF TRANSPORTATION
Caltrans

CONSULTANT FUNCTIONAL SUPERVISOR: SHAHRAM VAHDAT
CALCULATED-DESIGNED BY: DOUGLAS E. SMITH
CHECKED BY: DAVID MADERA
REVISED BY
DATE REVISED

LAST REVISION 00-00-00
DATE PLOTTED => 18-OCT-2010
TIME PLOTTED => 13:28

Dist	COUNTY	ROUTE	POST MILES TOTAL PROJECT	SHEET No.	TOTAL SHEETS
07	LA	47,103	3.5/4.6, 0.0/1.1	347	1003

REGISTERED CIVIL ENGINEER 7/19/10 DATE

10-11-10
PLANS APPROVAL DATE

REGISTERED PROFESSIONAL ENGINEER DOUGLAS SMITH No. 43549 Exp 06/30/12 CIVIL STATE OF CALIFORNIA

THE STATE OF CALIFORNIA OR ITS OFFICERS OR AGENTS SHALL NOT BE RESPONSIBLE FOR THE ACCURACY OR COMPLETENESS OF SCANNED COPIES OF THIS PLAN SHEET.

URS CORPORATION
915 WILSHIRE BOULEVARD
SUITE 700
LOS ANGELES, CA 90017

ALAMEDA CORRIDOR TRANSPORTATION AUTHORITY
ONE CIVIL PLAZA, SUITE 350
CARSON, CA 90745

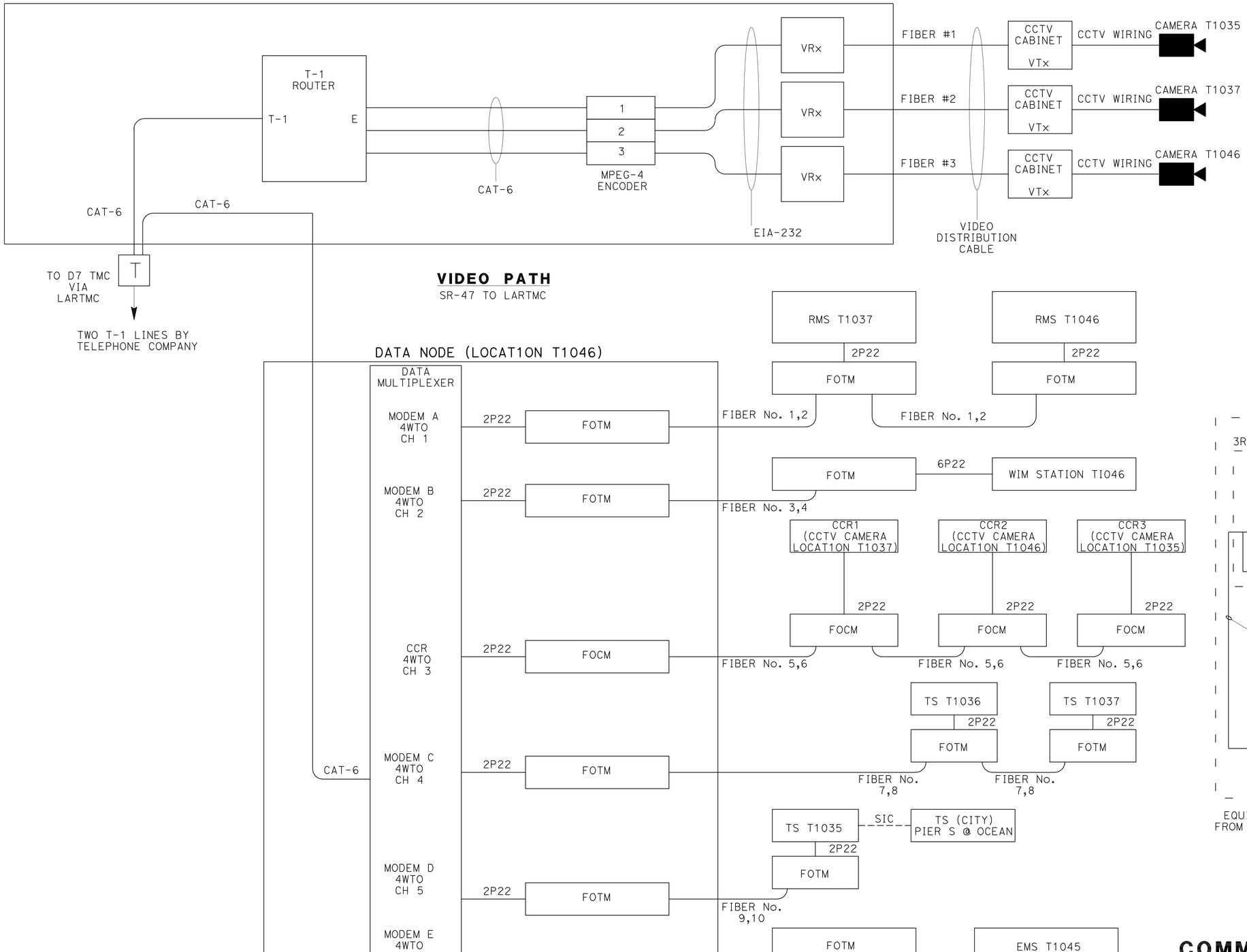

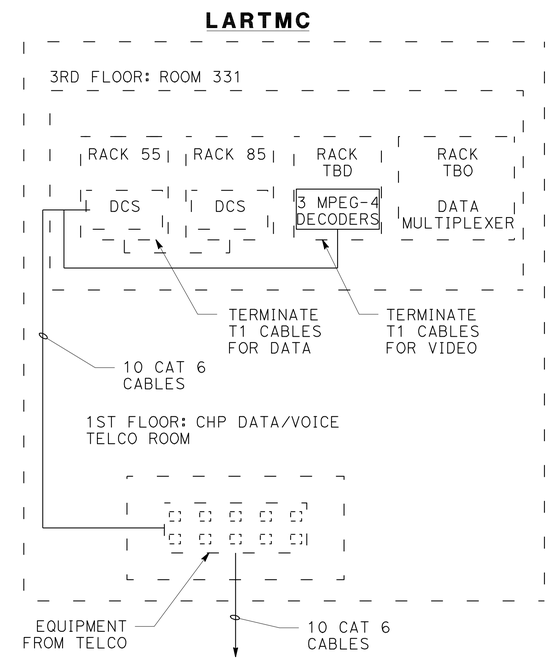

FOR NOTES AND ABBREVIATIONS, SEE SHEET E-33.

THIS PLAN ACCURATE FOR ELECTRICAL WORK ONLY.

COMMUNICATION SYSTEM WORK AT LOS ANGELES REGIONAL TRAFFIC MANAGEMENT CENTER

DATA AND VIDEO OVERALL DIAGRAM

NO SCALE

E-42

STATE OF CALIFORNIA - DEPARTMENT OF TRANSPORTATION
Caltrans

CONSULTANT FUNCTIONAL SUPERVISOR: SHAHRAM VAHDAT
CALCULATED-DESIGNED BY: DOUGLAS E. SMITH
CHECKED BY: DAVID MADERA
REVISED BY
DATE REVISED

LAST REVISION 00-00-00
DATE PLOTTED => 21-OCT-2010
TIME PLOTTED => 11:19

BORDER LAST REVISED 4/11/2008
RELATIVE BORDER SCALE IS IN INCHES 0 1 2 3
USERNAME => trmikesl
DGN FILE => 713820ua042.dgn
CU 07271
EA 138201

Dist	COUNTY	ROUTE	POST MILES TOTAL PROJECT	SHEET No.	TOTAL SHEETS
07	LA	47,103	3.5/4.6, 0.0/1.1	348	1003

REGISTERED CIVIL ENGINEER 7/19/10 DATE

10-11-10
PLANS APPROVAL DATE

REGISTERED PROFESSIONAL ENGINEER DOUGLAS SMITH No. 43549 Exp 06/30/12 CIVIL STATE OF CALIFORNIA

THE STATE OF CALIFORNIA OR ITS OFFICERS OR AGENTS SHALL NOT BE RESPONSIBLE FOR THE ACCURACY OR COMPLETENESS OF SCANNED COPIES OF THIS PLAN SHEET.

URS CORPORATION
915 WILSHIRE BOULEVARD
SUITE 700
LOS ANGELES, CA 90017

ALAMEDA CORRIDOR TRANSPORTATION AUTHORITY
ONE CIVIL PLAZA, SUITE 350
CARSON, CA 90745

NOTES: (WIRING DIAGRAM)

1. THE CONTRACTOR SHALL PROVIDE CABLE LENGTH FROM THE CAMERA ASSEMBLY TO THE LOCAL PATCH PANEL INCLUDING CONNECTORS AS SHOWN IN THIS SHEET.
2. THE CONTRACTOR SHALL PROVIDE ALL CABLES FROM THE LOCAL PATCH PANEL TO THE FIBER OPTIC VIDEO TRANSMITTER, FIBER OPTIC CONTROL MODEM, AND POWER DISTRIBUTION ASSEMBLY.
3. ALL CABLES SHALL BE ALUMINUM SHIELDED TO PREVENT CROSS-TALK.
4. IN THE CCTV CAMERA CONTROLLER CABINET, THE NUMBER INDENTIFIES THE SPECIFIC CONDUCTOR TO BE USED FOR THE INDICATED FUNCTION.
5. CONNECT ALL DRAIN WIRES OF SHIELDED-CONDUCTORS TO CABINET GROUND AT THE LOCAL PATCH PANEL.
6. INSTALL CONNECTORS IN ACCORDANCE WITH THE MANUFACTURER'S INSTRUCTIONS.
7. WATERPROOF ALL CONNECTORS AND CABLES USING WATER-TIGHT GROMMETS, SEALING COMPOUNDS, AND TAPE.
8. AS REQUIRED, CONTRACTOR SHALL INSTALL ADAPTER MOUNTING PLATES TO MOUNT CCTV CAMERA ON NEW POLE.

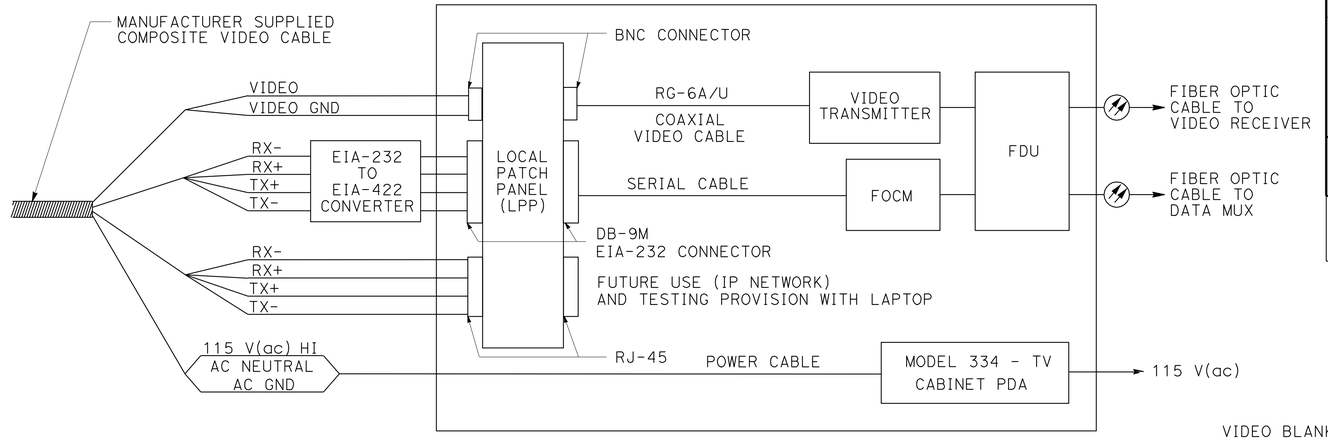

MODEL 334-TV CCTV CAMERA CONTROLLER CABINET

TYPICAL WIRING DIAGRAM

VIDEO BLANKING PRIVACY ZONES TO EXCLUDE NON-TRAFFIC FEATURES THAT ARE NOT TO BE VIEWED. THE PRIVACY ZONES SHALL BE ADJUSTED AS DIRECTED BY THE ENGINEER.

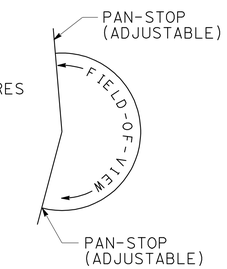

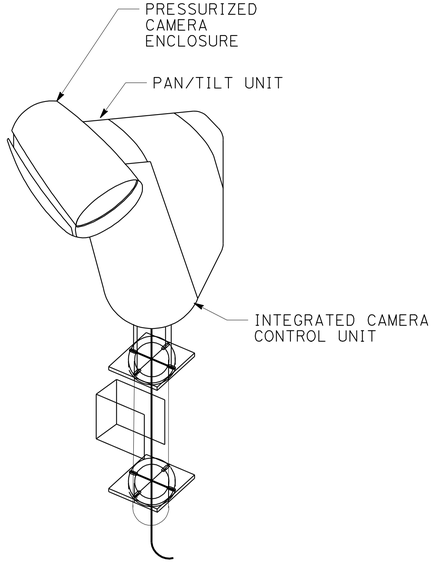

NEW TYPICAL CAMERA WITH PAN/TILT UNIT

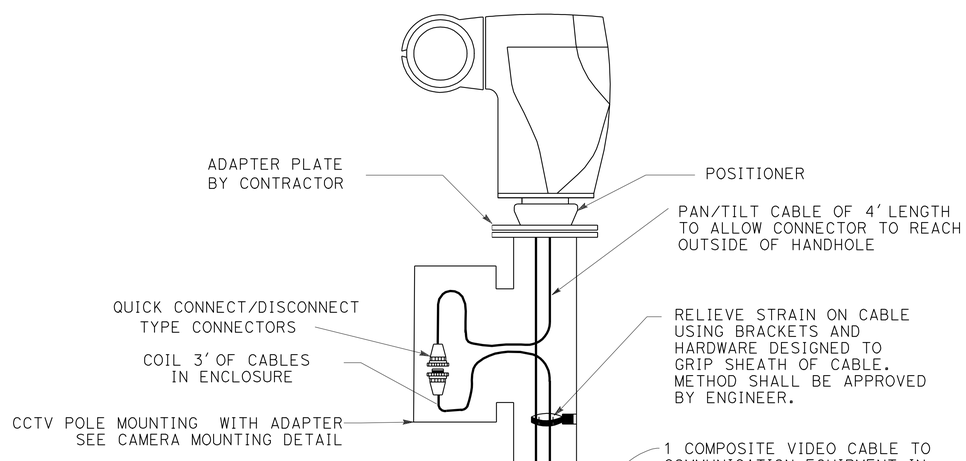

CCTV CAMERA ASSEMBLY MOUNTING DETAIL
FOR CCTV 45 POLES

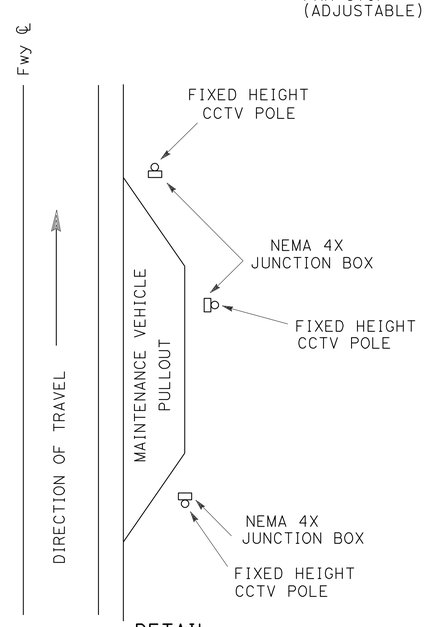

DETAIL

ORIENTATION OF JUNCTION BOX RELATIVE TO MVP. VARIOUS CCTV POLES LOCATIONS SHOWN. REFER TO LAYOUT PLAN FOR POLE ULTIMATE LOCATION.

NOTE: JUNCTION BOX TO FACE MAINTENANCE VEHICLE PULLOUT

CLOSED CIRCUIT TELEVISION CAMERA SYSTEM

CAMERA AND POWER DISTRIBUTION ASSEMBLY DETAILS

NO SCALE

E-43

FOR NOTES AND ABBREVIATIONS, SEE SHEET E-33.

THIS PLAN ACCURATE FOR ELECTRICAL WORK ONLY.

REVISED BY	DATE REVISED
DAVID MADERA	DOUGLAS E. SMITH
CALCULATED-DESIGNED BY	CHECKED BY
CONSULTANT FUNCTIONAL SUPERVISOR	SHAHRAM VAHDAT

STATE OF CALIFORNIA - DEPARTMENT OF TRANSPORTATION
Caltrans

LAST REVISION 00-00-00 | DATE PLOTTED => 19-OCT-2010 | TIME PLOTTED => 12:37

Dist	COUNTY	ROUTE	POST MILES TOTAL PROJECT	SHEET No.	TOTAL SHEETS
07	LA	47,103	3.5/4.6, 0.0/1.1	349	1003

REGISTERED CIVIL ENGINEER 7/19/10 DATE

10-11-10
PLANS APPROVAL DATE

REGISTERED PROFESSIONAL ENGINEER DOUGLAS SMITH No. 43549 Exp 06/30/12 CIVIL STATE OF CALIFORNIA

THE STATE OF CALIFORNIA OR ITS OFFICERS OR AGENTS SHALL NOT BE RESPONSIBLE FOR THE ACCURACY OR COMPLETENESS OF SCANNED COPIES OF THIS PLAN SHEET.

URS CORPORATION
915 WILSHIRE BOULEVARD
SUITE 700
LOS ANGELES, CA 90017

ALAMEDA CORRIDOR
TRANSPORTATION AUTHORITY
ONE CIVIL PLAZA, SUITE 350
CARSON, CA 90745

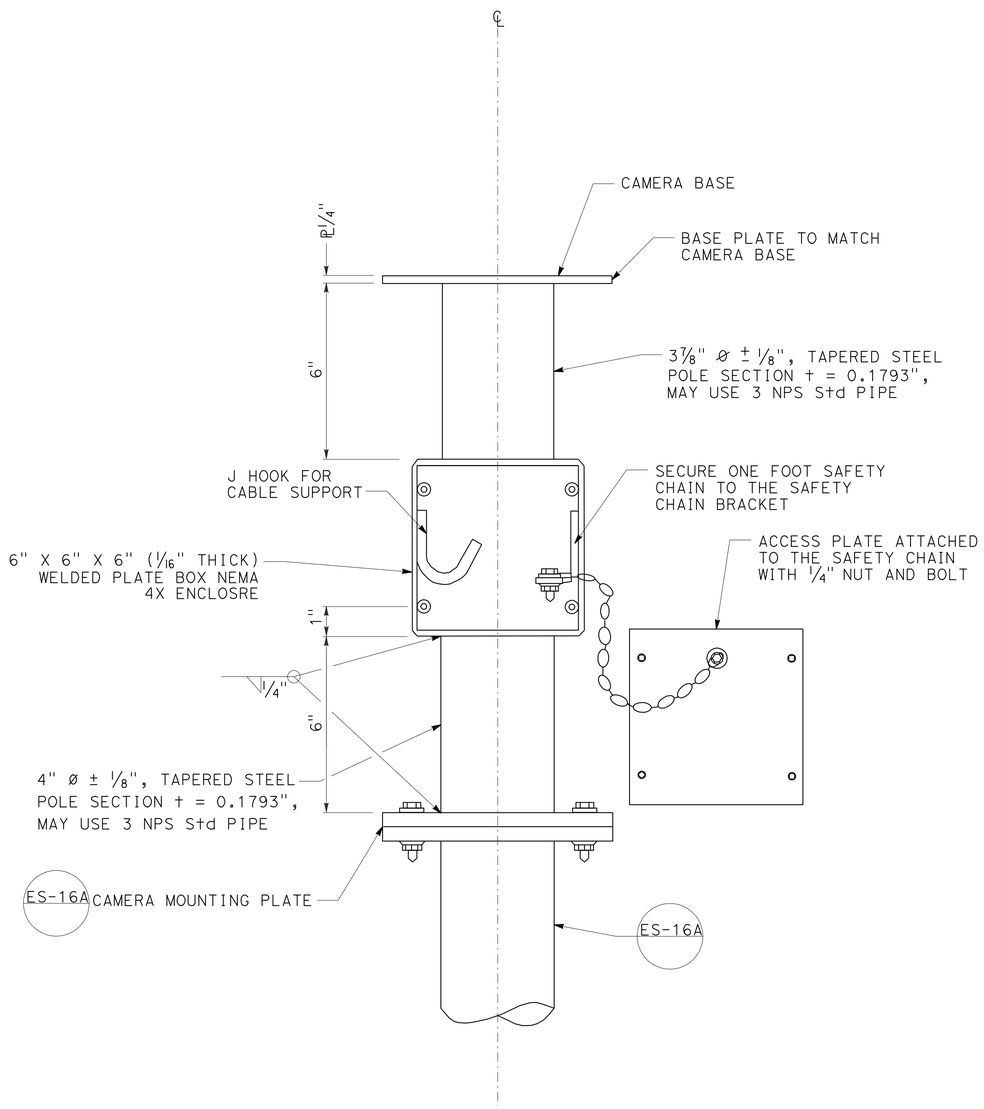

DETAIL A

CCTV POLE MOUNTING WITH ADAPTOR

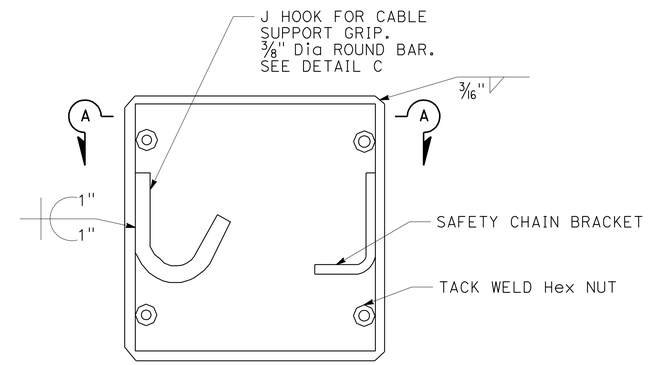

DETAIL B

BOX ENCLOSRUE

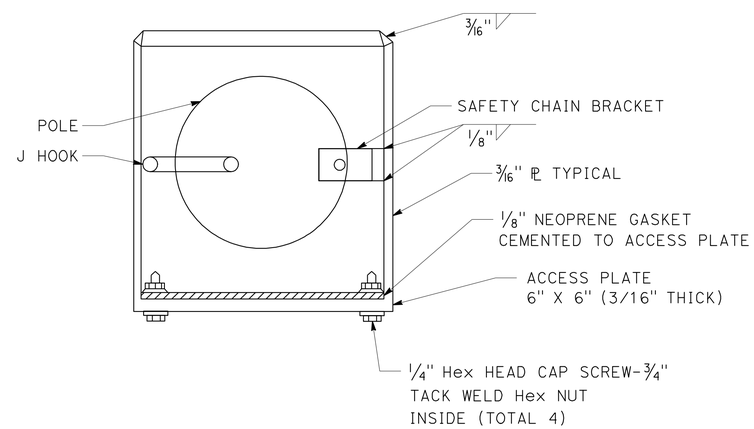

SECTION A-A

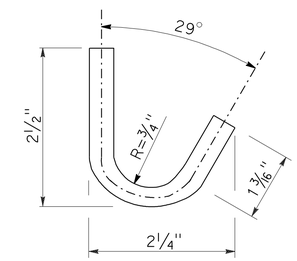

DETAIL C

J HOOK

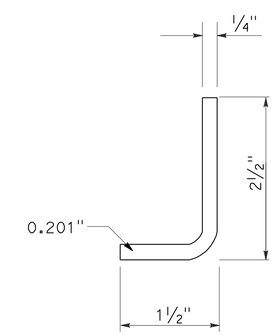

DETAIL D

SAFETY CHAIN BRACKET

FOR NOTES AND ABBREVIATIONS, SEE SHEET E-33.

THIS PLAN ACCURATE FOR ELECTRICAL WORK ONLY.

CLOSED CIRCUIT TELEVISION CAMERA SYSTEM

CAMERA AND POWER DISTRIBUTION ASSEMBLY DETAILS

NO SCALE

E-44

STATE OF CALIFORNIA - DEPARTMENT OF TRANSPORTATION
Caltrans

CONSULTANT FUNCTIONAL SUPERVISOR: SHAHRAM VAHDAT
CALCULATED-DESIGNED BY: DOUGLAS E. SMITH
CHECKED BY: DAVID MADERA
REVISED BY
DATE REVISED

LAST REVISION 00-00-00
DATE PLOTTED => 19-OCT-2010
TIME PLOTTED => 12:37

Dist	COUNTY	ROUTE	POST MILES TOTAL PROJECT	SHEET No.	TOTAL SHEETS
07	LA	47,103	3.5/4.6, 0.0/1.1	350	1003

REGISTERED CIVIL ENGINEER 7/19/10 DATE

10-11-10
PLANS APPROVAL DATE

REGISTERED PROFESSIONAL ENGINEER DOUGLAS SMITH No. 43549 Exp 06/30/12 CIVIL STATE OF CALIFORNIA

THE STATE OF CALIFORNIA OR ITS OFFICERS OR AGENTS SHALL NOT BE RESPONSIBLE FOR THE ACCURACY OR COMPLETENESS OF SCANNED COPIES OF THIS PLAN SHEET.

URS CORPORATION
915 WILSHIRE BOULEVARD
SUITE 700
LOS ANGELES, CA 90017

ALAMEDA CORRIDOR
TRANSPORTATION AUTHORITY
ONE CIVIL PLAZA, SUITE 350
CARSON, CA 90745

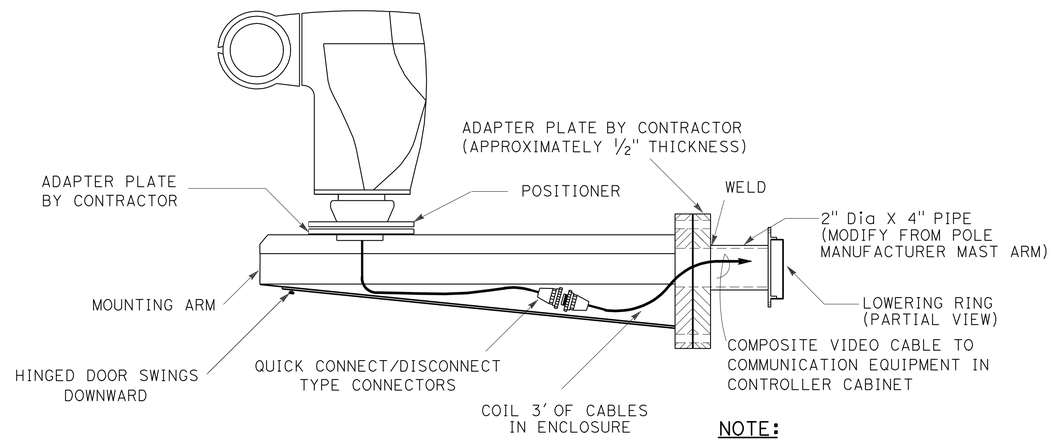

CCTV CAMERA ASSEMBLY
MOUNTING DETAIL

FOR HIGH MAST POLES

NOTE:

1. USE STAINLESS STEEL BOLTS AND NUTS TO SECURE MOUNTING ARM AND ADAPTER PLATE TO LOWERING RING.

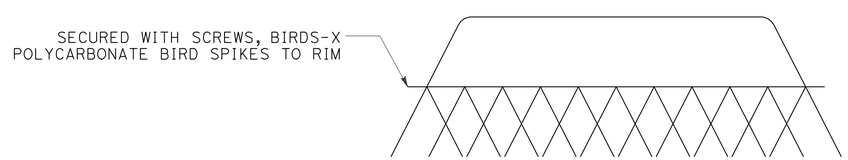

ALUMINUM COVER FOR RING ASSEMBLY
FOR HIGH MAST POLE WITH BIRD SPIKES

NOTE:

1. USE 1/2" HS STAINLESS STEEL BOLTS AND NUTS TO SECURE MOUNTING ARM AND ADAPTER PLATE TO LOWERING RING.

CLOSED CIRCUIT TELEVISION CAMERA SYSTEM

CAMERA AND POWER DISTRIBUTION

ASSEMBLY DETAILS FOR HIGH MAST POLE

NO SCALE

E-45

FOR NOTES AND ABBREVIATIONS, SEE SHEET E-33.

THIS PLAN ACCURATE FOR ELECTRICAL WORK ONLY.

STATE OF CALIFORNIA - DEPARTMENT OF TRANSPORTATION
Caltrans

CONSULTANT FUNCTIONAL SUPERVISOR: SHAHRAM VAHDAT

CALCULATED-DESIGNED BY: DAVID MADERA
CHECKED BY: DOUGLAS E. SMITH

REVISED BY
DATE REVISED

LAST REVISION 00-00-00
DATE PLOTTED => 19-OCT-2010
TIME PLOTTED => 12:37

Dist	COUNTY	ROUTE	POST MILES TOTAL PROJECT	SHEET No.	TOTAL SHEETS
07	LA	47,103	3.5/4.6, 0.0/1.1	351	1003

REGISTERED CIVIL ENGINEER 7/19/10 DATE

10-11-10
PLANS APPROVAL DATE

REGISTERED PROFESSIONAL ENGINEER DOUGLAS SMITH No. 43549 Exp 06/30/12 CIVIL STATE OF CALIFORNIA

THE STATE OF CALIFORNIA OR ITS OFFICERS OR AGENTS SHALL NOT BE RESPONSIBLE FOR THE ACCURACY OR COMPLETENESS OF SCANNED COPIES OF THIS PLAN SHEET.

URS CORPORATION
915 WILSHIRE BOULEVARD
SUITE 700
LOS ANGELES, CA 90017

ALAMEDA CORRIDOR
TRANSPORTATION AUTHORITY
ONE CIVIL PLAZA, SUITE 350
CARSON, CA 90745

NOTES:

1. CONNECTORIZING SHALL BE DONE BY THE CONTRACTOR AT THE MODEL 334-TV CCTV CONTROLLER CABINET.
2. ALL COMPONENTS AND CONNECTORS MUST MEET NEMA TS 2 2.1.5.1, 2.1.5.2, 3.3.3.1, 3.3.3.2, 5.2.5 AND 5.2.6.

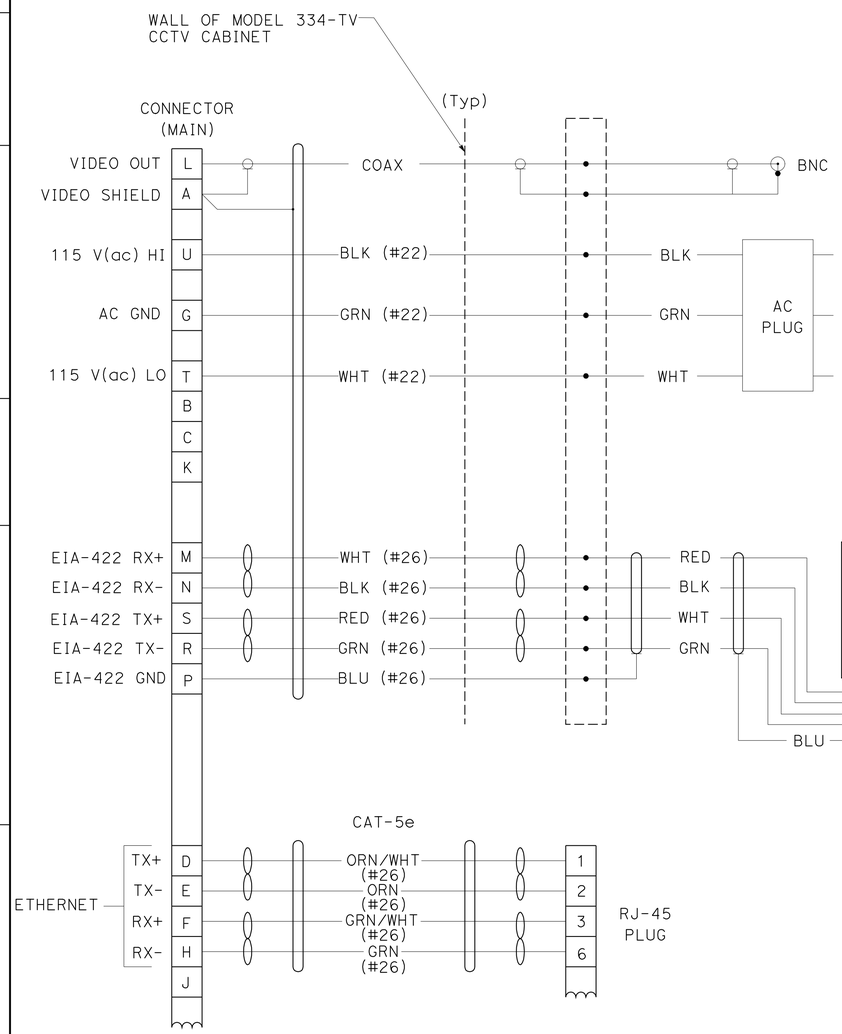

CABLE SCHEMATIC

SEE SHEET E-47 FOR DETAIL

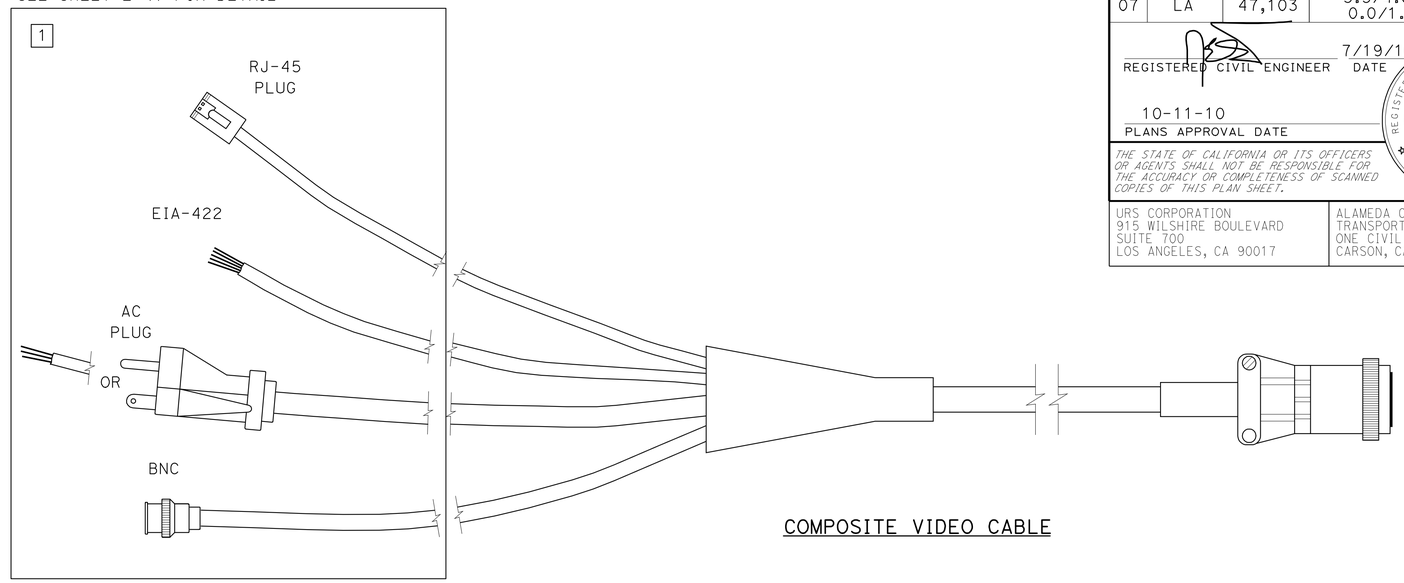

COMPOSITE VIDEO CABLE

EIA-232 TO EIA-422 CONVERTER

CONNECTOR (MAIN)

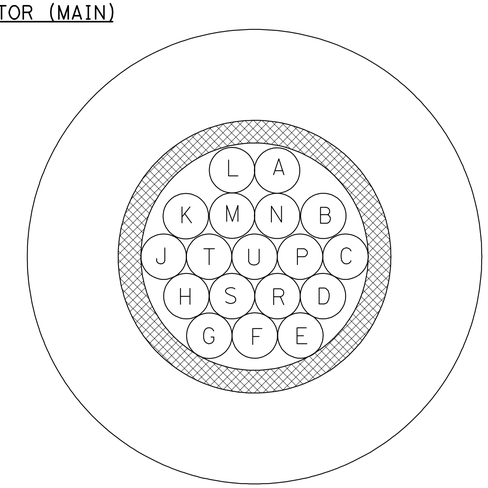

WIRING END VIEW

CLOSED CIRCUIT TELEVISION CAMERA SYSTEM

COMPOSITE VIDEO CABLE DETAILS

NO SCALE

E-46

FOR NOTES AND ABBREVIATIONS, SEE SHEET E-33.

THIS PLAN ACCURATE FOR ELECTRICAL WORK ONLY.

STATE OF CALIFORNIA - DEPARTMENT OF TRANSPORTATION

Caltrans

CONSULTANT FUNCTIONAL SUPERVISOR: SHAHRAM VAHDAT

CALCULATED-DESIGNED BY: DAVID MADERA

CHECKED BY: DOUGLAS E. SMITH

REVISED BY | DATE REVISED

LAST REVISION 00-00-00 | DATE PLOTTED => 19-OCT-2010 | TIME PLOTTED => 12:37

Dist	COUNTY	ROUTE	POST MILES TOTAL PROJECT	SHEET No.	TOTAL SHEETS
07	LA	47,103	3.5/4.6, 0.0/1.1	352	1003

REGISTERED CIVIL ENGINEER 7/19/10 DATE

10-11-10
PLANS APPROVAL DATE

REGISTERED PROFESSIONAL ENGINEER DOUGLAS SMITH No. 43549 Exp 06/30/12 CIVIL STATE OF CALIFORNIA

THE STATE OF CALIFORNIA OR ITS OFFICERS OR AGENTS SHALL NOT BE RESPONSIBLE FOR THE ACCURACY OR COMPLETENESS OF SCANNED COPIES OF THIS PLAN SHEET.

URS CORPORATION
915 WILSHIRE BOULEVARD
SUITE 700
LOS ANGELES, CA 90017

ALAMEDA CORRIDOR
TRANSPORTATION AUTHORITY
ONE CIVIL PLAZA, SUITE 350
CARSON, CA 90745

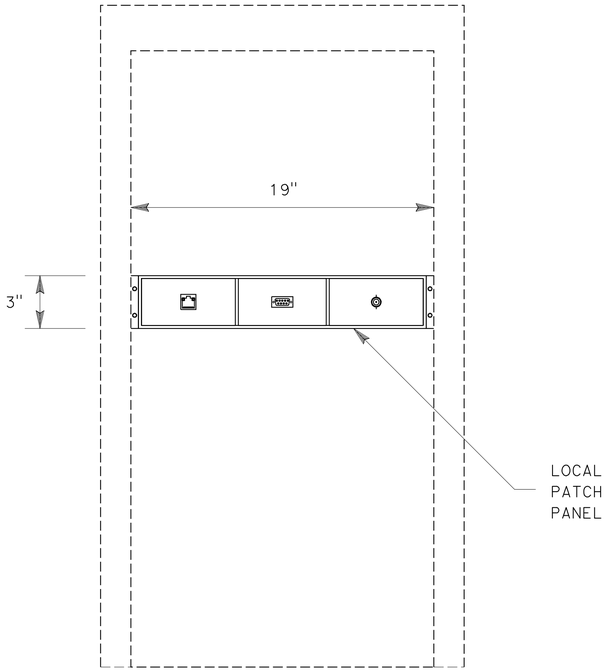

CABINET DETAIL

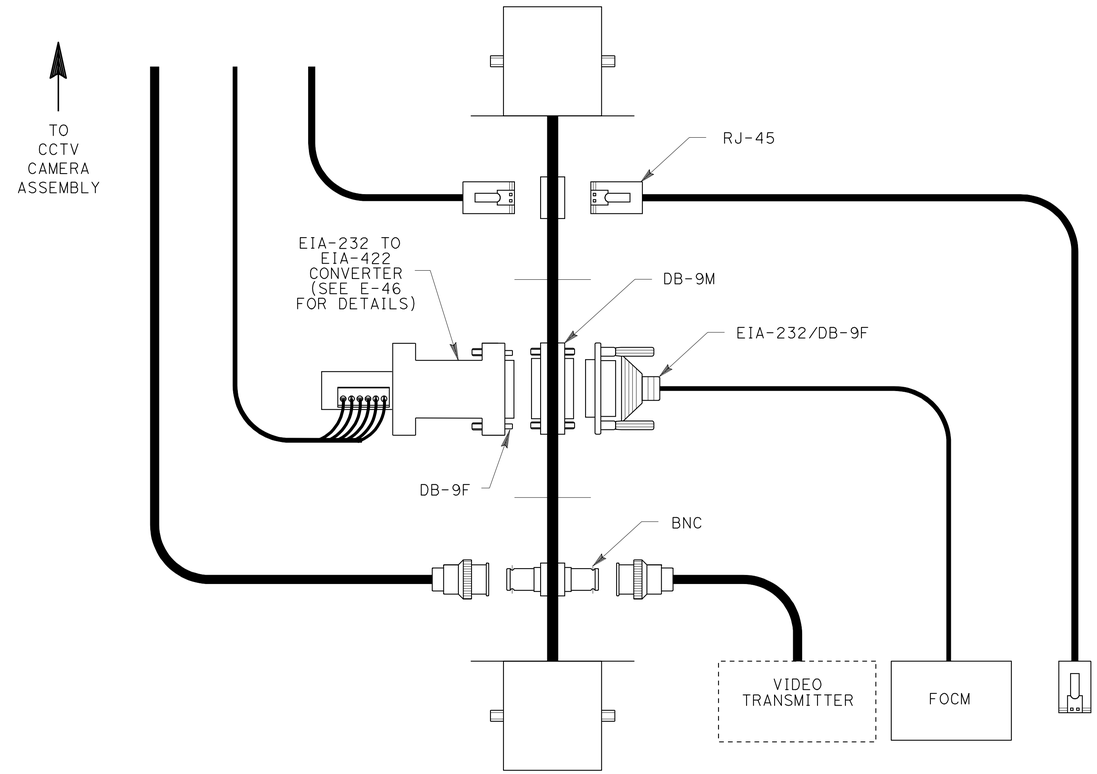

FUTURE USE (IP NETWORK) AND TESTING PROVISION WITH LAPTOP (COILED AND STORED IN THE CABINET).

TO
FIBER OPTIC
INTERFACE

TOP VIEW
LOCAL PATCH PANEL DETAIL

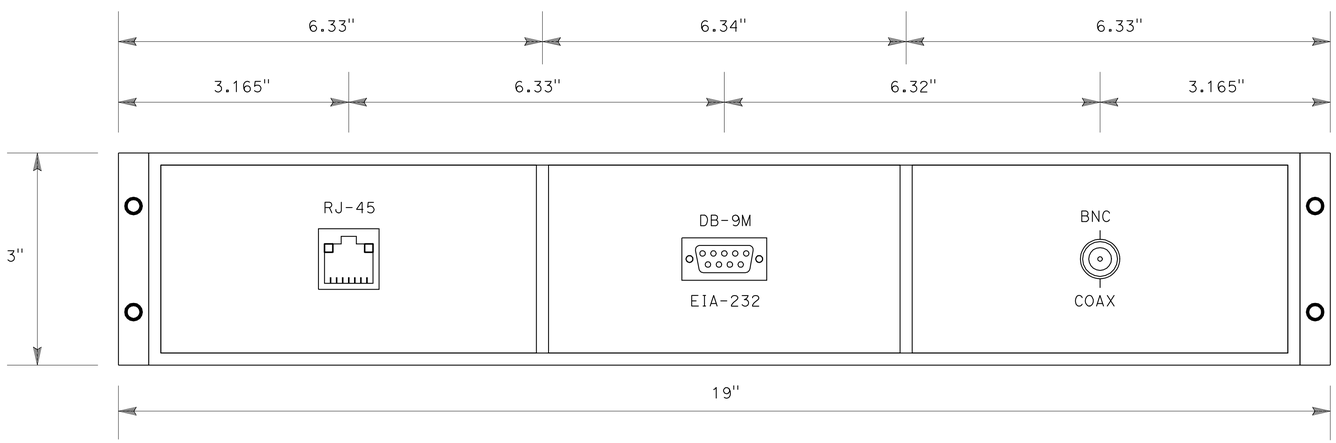

LOCAL PATCH PANEL DETAIL

NOTE:

1. ALL COMPONENTS AND CONNECTORS MUST MEET NEMA TS 2, 2.1.5.1, 2.1.5.2, 3.3.3.1, 3.3.3.2, 5.2.5 AND 5.2.6.

CLOSED CIRCUIT TELEVISION CAMERA SYSTEM

LOCAL PATCH PANEL DETAILS

NO SCALE

E-47

FOR NOTES AND ABBREVIATIONS, SEE SHEET E-33.

THIS PLAN ACCURATE FOR ELECTRICAL WORK ONLY.

STATE OF CALIFORNIA - DEPARTMENT OF TRANSPORTATION
Caltrans

CONSULTANT FUNCTIONAL SUPERVISOR: SHAHRAM VAHDAT
CALCULATED-DESIGNED BY: DAVID MADERA
CHECKED BY: DOUGLAS E. SMITH
REVISED BY
DATE REVISED

LAST REVISION 00-00-00
DATE PLOTTED => 19-OCT-2010
TIME PLOTTED => 12:37

Dist	COUNTY	ROUTE	POST MILES TOTAL PROJECT	SHEET No.	TOTAL SHEETS
07	LA	47,103	3.5/4.6, 0.0/1.1	353	1003

REGISTERED CIVIL ENGINEER 7/19/10 DATE

10-11-10
PLANS APPROVAL DATE

REGISTERED PROFESSIONAL ENGINEER DOUGLAS SMITH No. 43549 Exp 06/30/12 CIVIL STATE OF CALIFORNIA

THE STATE OF CALIFORNIA OR ITS OFFICERS OR AGENTS SHALL NOT BE RESPONSIBLE FOR THE ACCURACY OR COMPLETENESS OF SCANNED COPIES OF THIS PLAN SHEET.

URS CORPORATION
915 WILSHIRE BOULEVARD
SUITE 700
LOS ANGELES, CA 90017

ALAMEDA CORRIDOR
TRANSPORTATION AUTHORITY
ONE CIVIL PLAZA, SUITE 350
CARSON, CA 90745

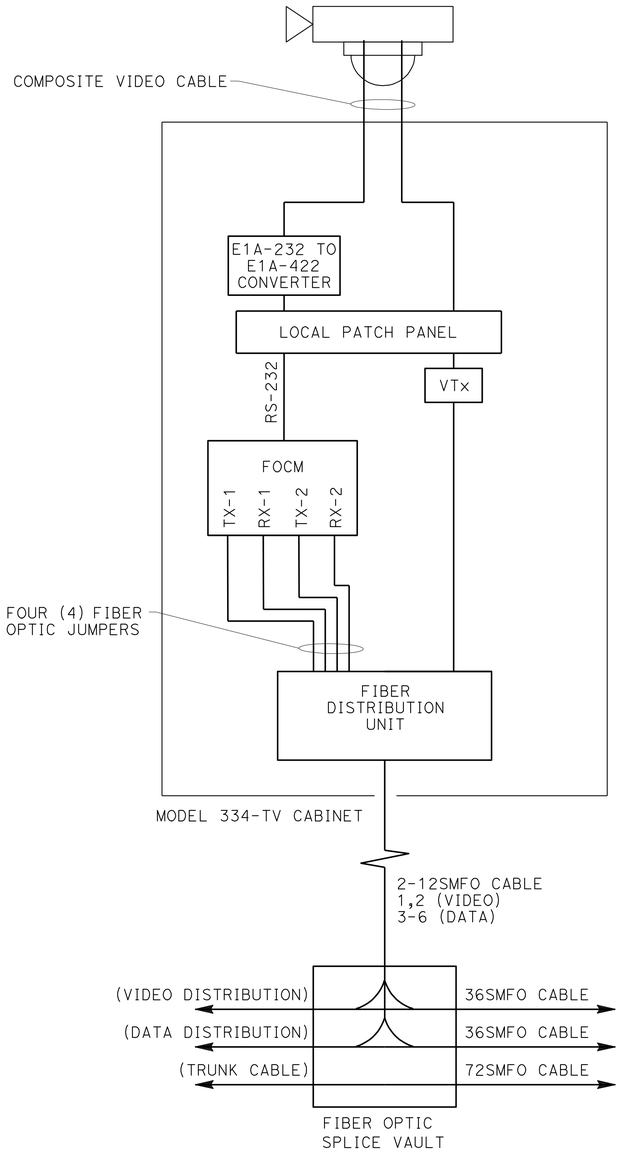

CAMERA ASSEMBLY AND CCTV MODEL 334-TV CABINET

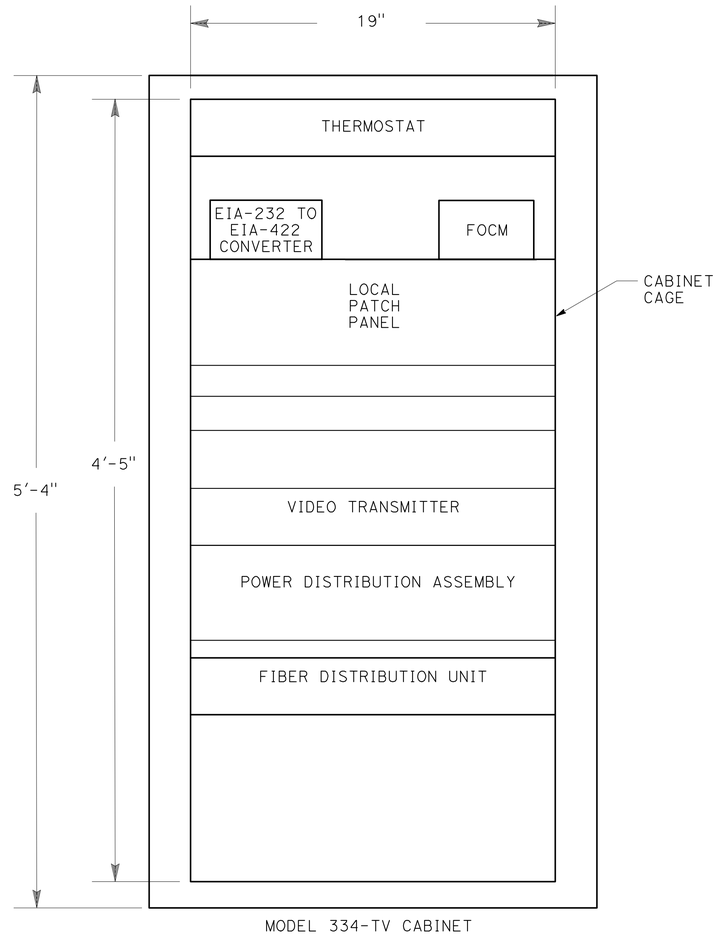

CCTV MODEL 334-TV CABINET EQUIPMENT RACK LAYOUT

LEGEND: (334-TV CABINET DETAILS)

TX-1 : TRANSMIT FIBER IN DIRECTION OF MASTER FOCM
RX-1 : RECEIVE FIBER IN DIRECTION OF MASTER FOCM
TX-2 : TRANSMIT FIBER IN OPPOSITE DIRECTION OF MASTER FOCM
RX-2 : RECEIVE FIBER IN OPPOSITE DIRECTION OF MASTER FOCM

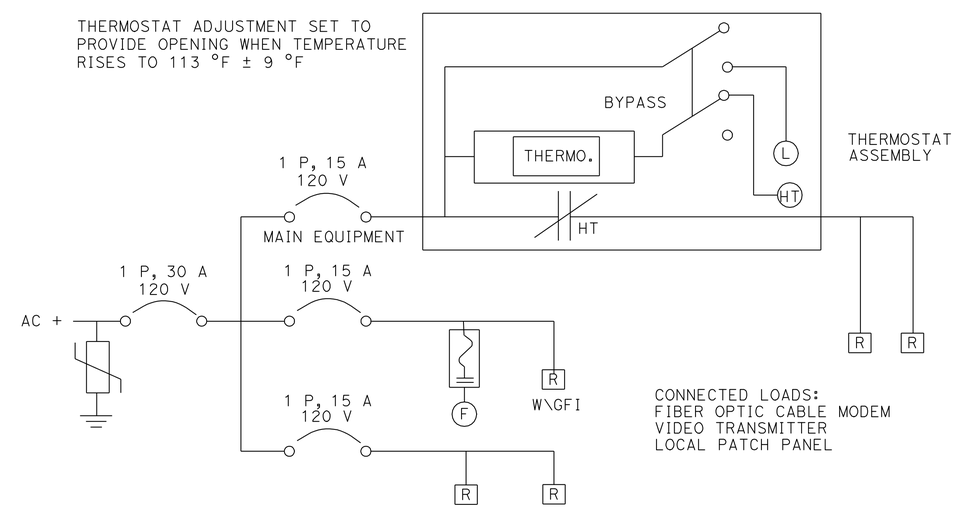

POWER DISTRIBUTION ASSEMBLY

COMMUNICATION SYSTEM
CLOSED CIRCUIT TELEVISION INTERFACE

NO SCALE

E-48

FOR NOTES AND ABBREVIATIONS, SEE SHEET E-33.

THIS PLAN ACCURATE FOR ELECTRICAL WORK ONLY.

STATE OF CALIFORNIA - DEPARTMENT OF TRANSPORTATION
Caltrans

CONSULTANT FUNCTIONAL SUPERVISOR: SHAHRAM VAHDAT
CALCULATED-DESIGNED BY: DAVID MADERA
CHECKED BY: DOUGLAS E. SMITH
REVISED BY
DATE REVISED

LAST REVISION 00-00-00
DATE PLOTTED => 19-OCT-2010
TIME PLOTTED => 12:37

Dist	COUNTY	ROUTE	POST MILES TOTAL PROJECT	SHEET No.	TOTAL SHEETS
07	LA	47,103	3.5/4.6, 0.0/1.1	354	1003

REGISTERED CIVIL ENGINEER 7/19/10 DATE

10-11-10
PLANS APPROVAL DATE

REGISTERED PROFESSIONAL ENGINEER DOUGLAS SMITH No. 43549 Exp 06/30/12 CIVIL STATE OF CALIFORNIA

THE STATE OF CALIFORNIA OR ITS OFFICERS OR AGENTS SHALL NOT BE RESPONSIBLE FOR THE ACCURACY OR COMPLETENESS OF SCANNED COPIES OF THIS PLAN SHEET.

URS CORPORATION
915 WILSHIRE BOULEVARD
SUITE 700
LOS ANGELES, CA 90017

ALAMEDA CORRIDOR
TRANSPORTATION AUTHORITY
ONE CIVIL PLAZA, SUITE 350
CARSON, CA 90745

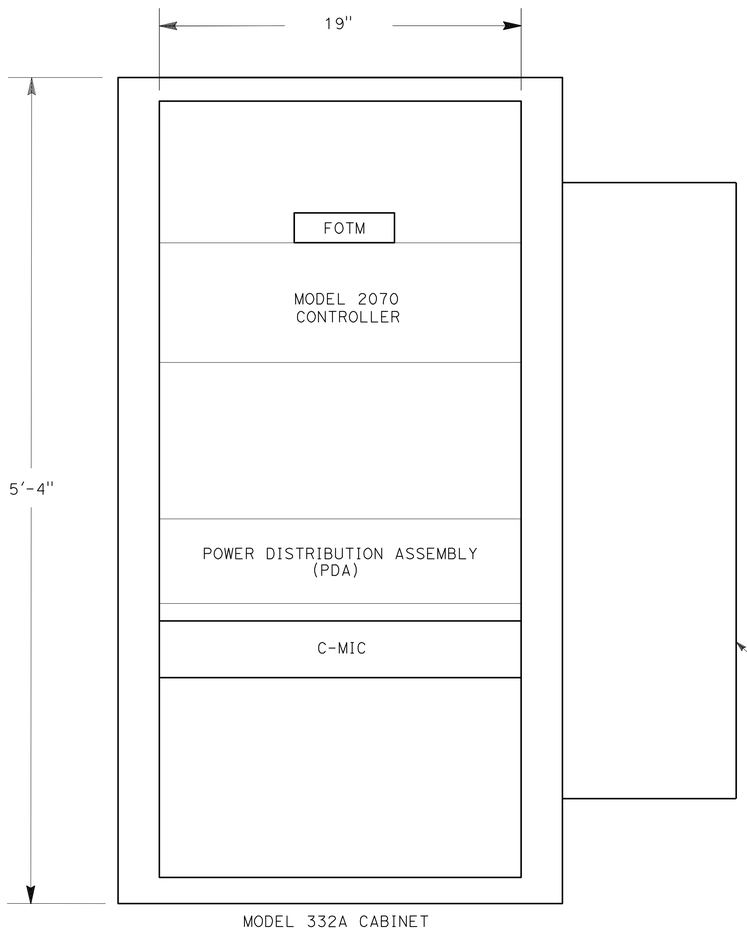

MODEL 2070 EQUIPMENT RACK LAYOUT
IN 332 CABINET

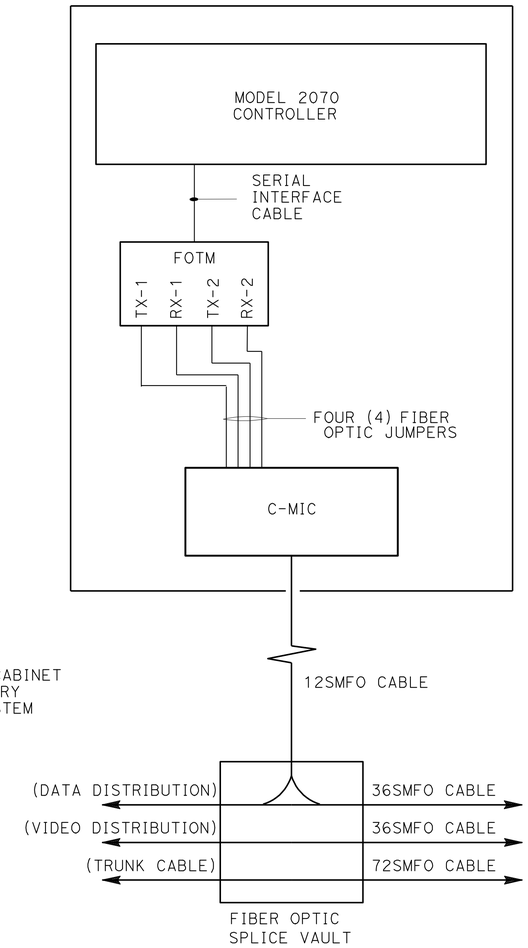

SCHEMATIC

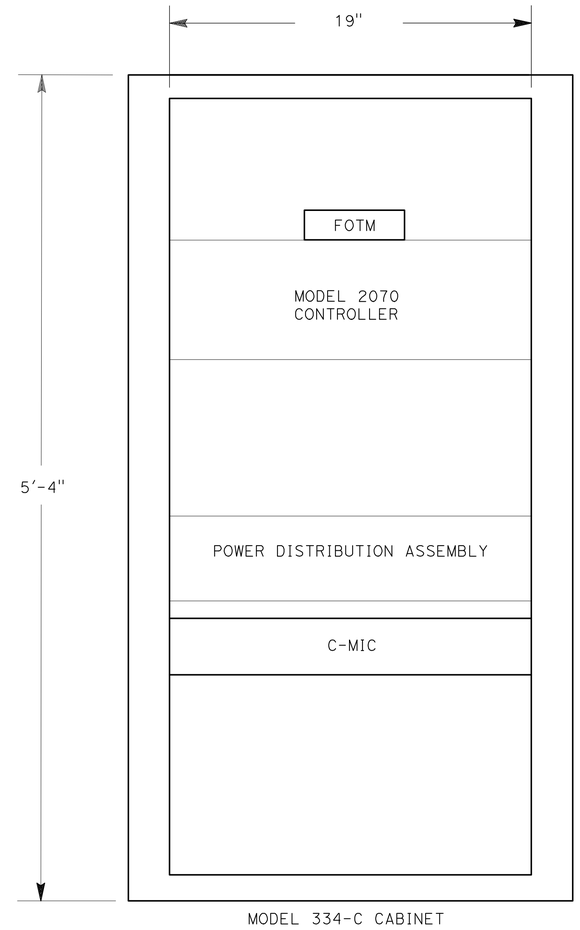

MODEL 2070 EQUIPMENT RACK LAYOUT
IN 334 CABINET

COMMUNICATION SYSTEM
2070 CONTROLLER INTERFACE

NO SCALE

E-49

FOR NOTES AND LEGEND, SEE SHEET E-33.

THIS PLAN ACCURATE FOR ELECTRICAL WORK ONLY.

STATE OF CALIFORNIA - DEPARTMENT OF TRANSPORTATION
Caltrans

CONSULTANT FUNCTIONAL SUPERVISOR: SHAHRAM VAHDAT
CALCULATED-DESIGNED BY: DOUGLAS E. SMITH
CHECKED BY: DAVID MADERA
REVISED BY
DATE REVISED

LAST REVISION 00-00-00
DATE PLOTTED => 19-OCT-2010
TIME PLOTTED => 12:37

Dist	COUNTY	ROUTE	POST MILES TOTAL PROJECT	SHEET No.	TOTAL SHEETS
07	LA	47,103	3.5/4.6, 0.0/1.1	355	1003

REGISTERED CIVIL ENGINEER 7/19/10 DATE

10-11-10
PLANS APPROVAL DATE

REGISTERED PROFESSIONAL ENGINEER DOUGLAS SMITH No. 43549 Exp 06/30/12 CIVIL STATE OF CALIFORNIA

THE STATE OF CALIFORNIA OR ITS OFFICERS OR AGENTS SHALL NOT BE RESPONSIBLE FOR THE ACCURACY OR COMPLETENESS OF SCANNED COPIES OF THIS PLAN SHEET.

URS CORPORATION
915 WILSHIRE BOULEVARD
SUITE 700
LOS ANGELES, CA 90017

ALAMEDA CORRIDOR
TRANSPORTATION AUTHORITY
ONE CIVIL PLAZA, SUITE 350
CARSON, CA 90745

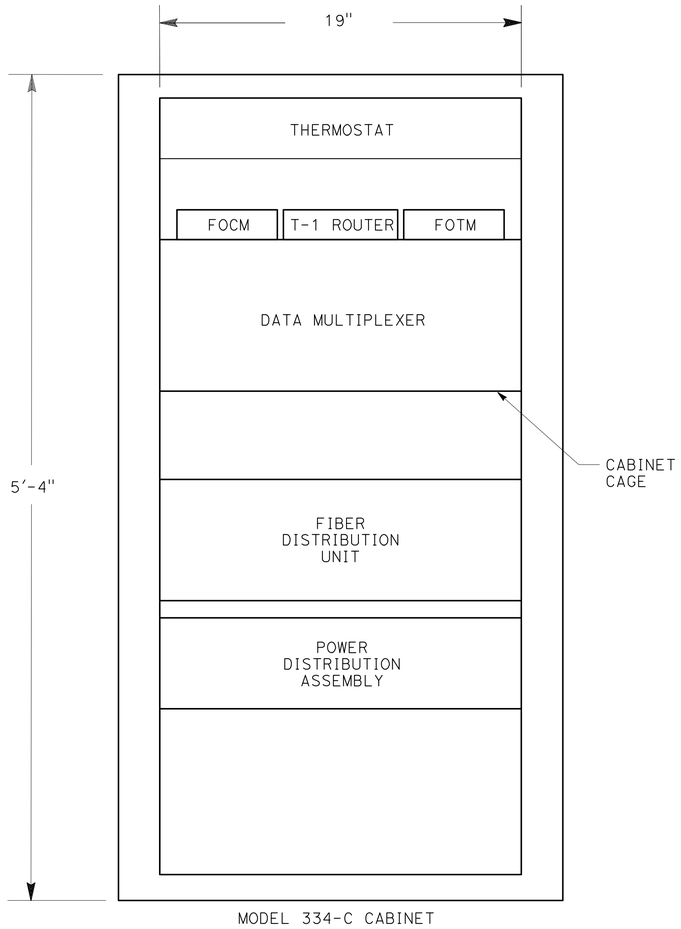

DATA NODE MODEL 334-TV CABINET EQUIPMENT RACK LAYOUT

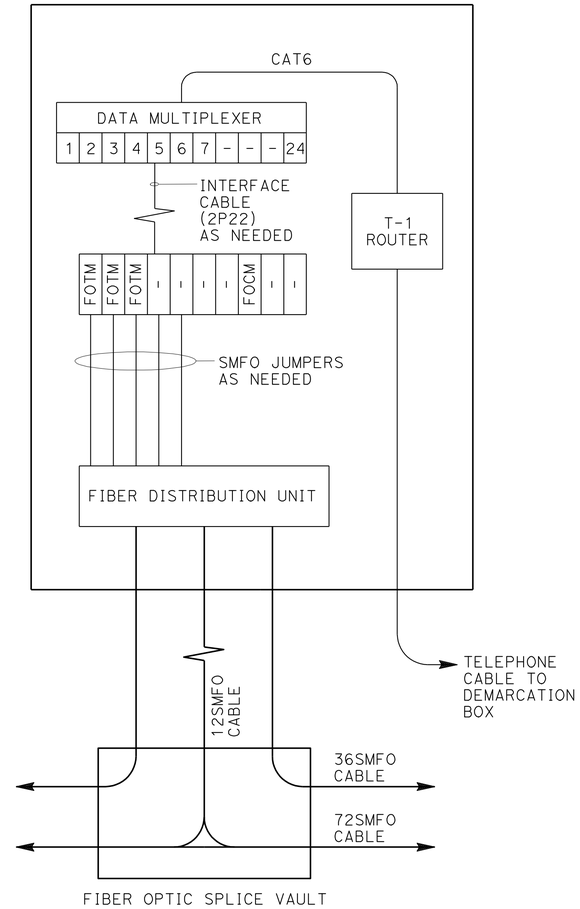

DATA NODE WIRING DIAGRAM

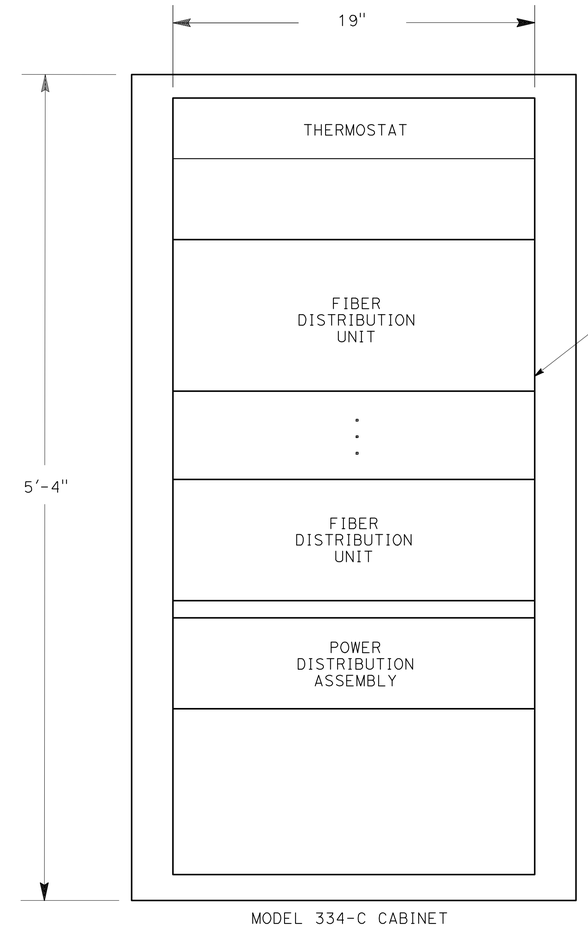

CABLE NODE MODEL 334-TV CABINET EQUIPMENT RACK LAYOUT

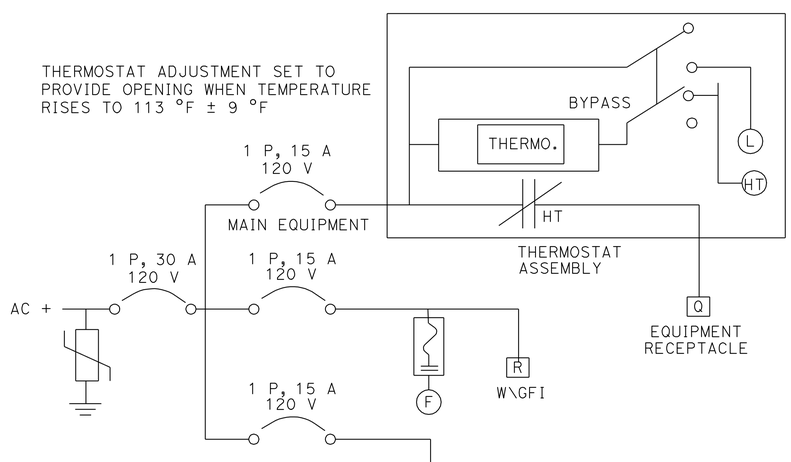

POWER DISTRIBUTION ASSEMBLY DATA NODE

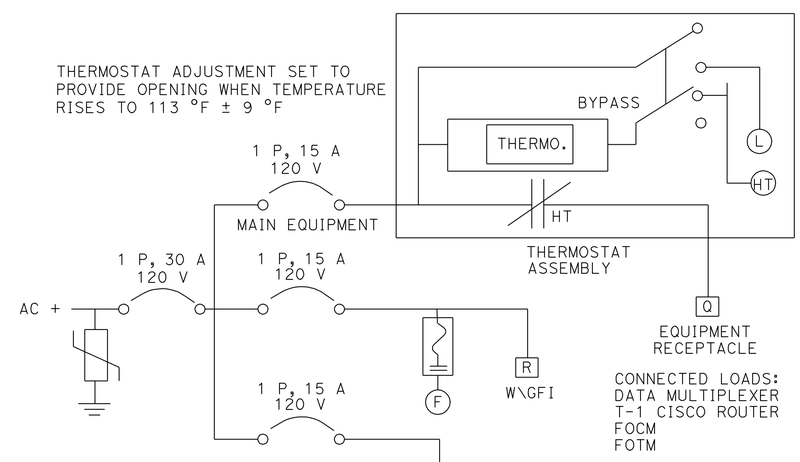

POWER DISTRIBUTION ASSEMBLY CABLE NODE

COMMUNICATION SYSTEM
DATA AND CABLE NODE DETAILS

NO SCALE

E-50

FOR NOTES AND ABBREVIATIONS, SEE SHEET E-33.

THIS PLAN ACCURATE FOR ELECTRICAL WORK ONLY.

STATE OF CALIFORNIA - DEPARTMENT OF TRANSPORTATION
Caltrans

CONSULTANT FUNCTIONAL SUPERVISOR: SHAHRAM VAHDAT
CALCULATED-DESIGNED BY: DOUGLAS E. SMITH
CHECKED BY: DAVID MADERA
REVISED BY
DATE REVISED

LAST REVISION 00-00-00
DATE PLOTTED => 19-OCT-2010
TIME PLOTTED => 12:37

Dist	COUNTY	ROUTE	POST MILES TOTAL PROJECT	SHEET No.	TOTAL SHEETS
07	LA	47,103	3.5/4.6, 0.0/1.1	356	1003

REGISTERED CIVIL ENGINEER 7/19/10 DATE

10-11-10
PLANS APPROVAL DATE

REGISTERED PROFESSIONAL ENGINEER DOUGLAS SMITH No. 43549 Exp 06/30/12 CIVIL STATE OF CALIFORNIA

THE STATE OF CALIFORNIA OR ITS OFFICERS OR AGENTS SHALL NOT BE RESPONSIBLE FOR THE ACCURACY OR COMPLETENESS OF SCANNED COPIES OF THIS PLAN SHEET.

URS CORPORATION
915 WILSHIRE BOULEVARD
SUITE 700
LOS ANGELES, CA 90017

ALAMEDA CORRIDOR
TRANSPORTATION AUTHORITY
ONE CIVIL PLAZA, SUITE 350
CARSON, CA 90745

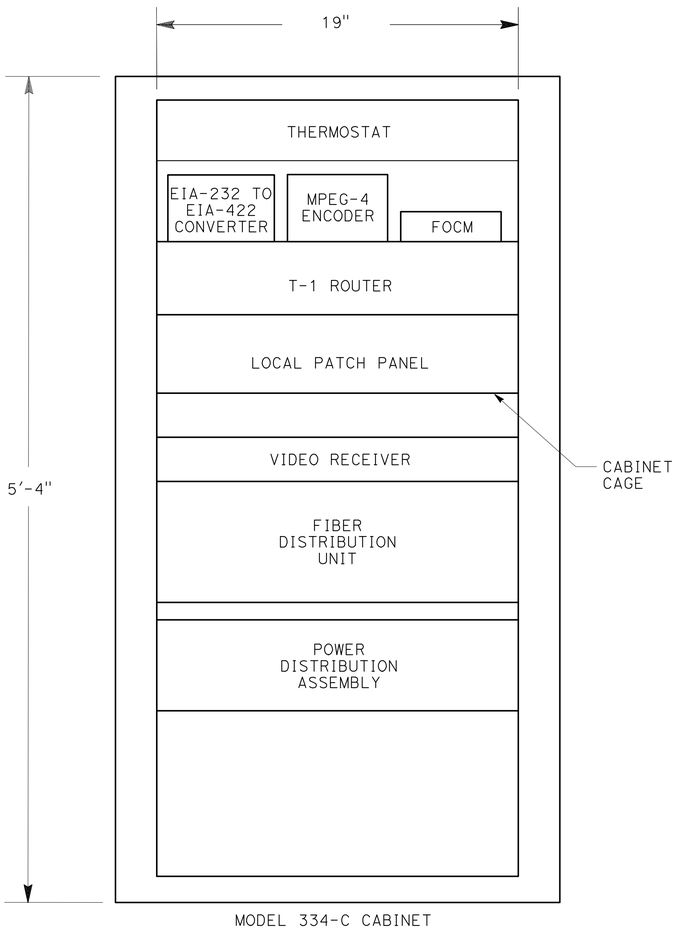

VIDEO NODE MODEL 334-TV CABINET
EQUIPMENT RACK LAYOUT

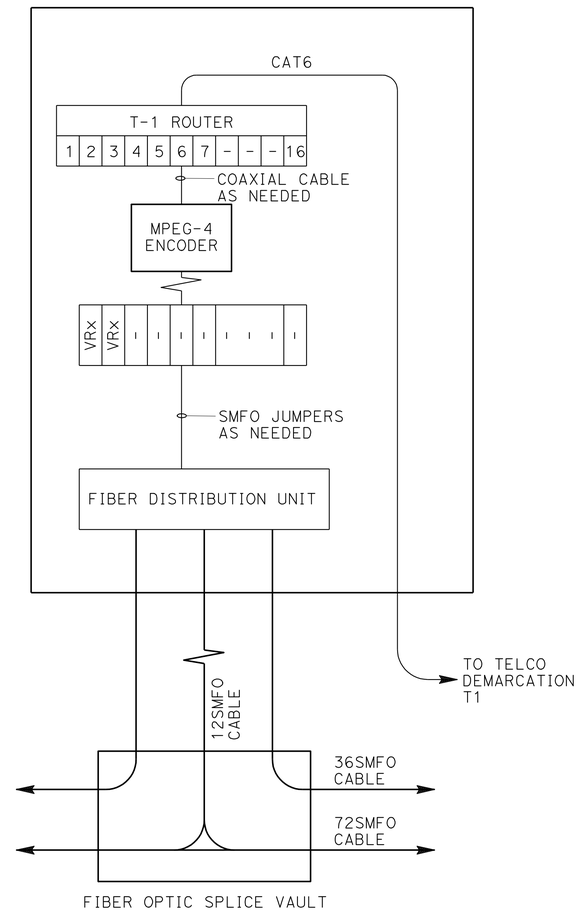

VIDEO NODE WIRING DIAGRAM

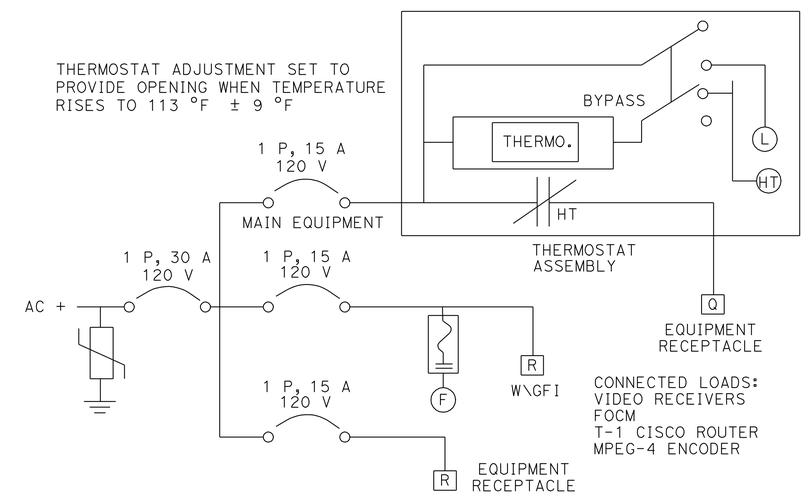

POWER DISTRIBUTION ASSEMBLY
VIDEO NODE

COMMUNICATION SYSTEM
VIDEO NODE CABINET DETAILS

NO SCALE

E-51

FOR NOTES AND ABBREVIATIONS, SEE SHEET E-33.

THIS PLAN ACCURATE FOR ELECTRICAL WORK ONLY.

STATE OF CALIFORNIA - DEPARTMENT OF TRANSPORTATION
Caltrans

CONSULTANT FUNCTIONAL SUPERVISOR: SHAHRAM VAHDAT
CALCULATED-DESIGNED BY: DAVID MADERA
CHECKED BY: DOUGLAS E. SMITH
REVISED BY
DATE REVISED

LAST REVISION 00-00-00
DATE PLOTTED => 21-OCT-2010
TIME PLOTTED => 11:19

Dist	COUNTY	ROUTE	POST MILES TOTAL PROJECT	SHEET No.	TOTAL SHEETS
07	LA	47,103	3.5/4.6, 0.0/1.1	357	1003

REGISTERED CIVIL ENGINEER 7/19/10 DATE

10-11-10
PLANS APPROVAL DATE

REGISTERED PROFESSIONAL ENGINEER DOUGLAS SMITH No. 43549 Exp 06/30/12 CIVIL STATE OF CALIFORNIA

THE STATE OF CALIFORNIA OR ITS OFFICERS OR AGENTS SHALL NOT BE RESPONSIBLE FOR THE ACCURACY OR COMPLETENESS OF SCANNED COPIES OF THIS PLAN SHEET.

URS CORPORATION
915 WILSHIRE BOULEVARD
SUITE 700
LOS ANGELES, CA 90017

ALAMEDA CORRIDOR
TRANSPORTATION AUTHORITY
ONE CIVIL PLAZA, SUITE 350
CARSON, CA 90745

GENERAL NOTES: (THIS SHEET)

1. WHEN TRENCH TRANSITIONS FROM ASPHALT TO DIRT AREAS, CONDUIT TO DROP FROM 9" Min DEPTH TO 30" Min DEPTH OVER A MINIMUM OF 6' HORIZONTAL DISTANCE WITHIN DIRT AREA.
2. FOR ADDITIONAL NOTES AND LEGEND, SEE SHEET E-33.
3. INSTALL A MINIMUM OF 4" THICK OF FINE SOIL OR SAND OVER THE CONDUIT WITH SAND SHADING ON TOP BEFORE ADDITIONAL BACKFILL MATERIAL IS PLACED.
4. INSTALL TRACER WIRE IN CONDUIT.

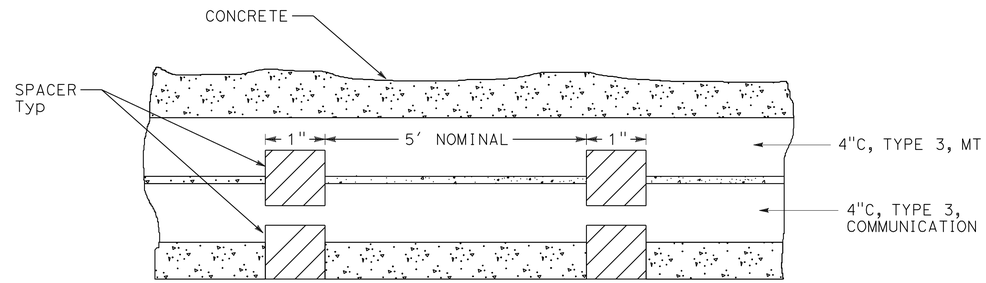

CONDUIT SPACER PLACEMENT

SIDE VIEW

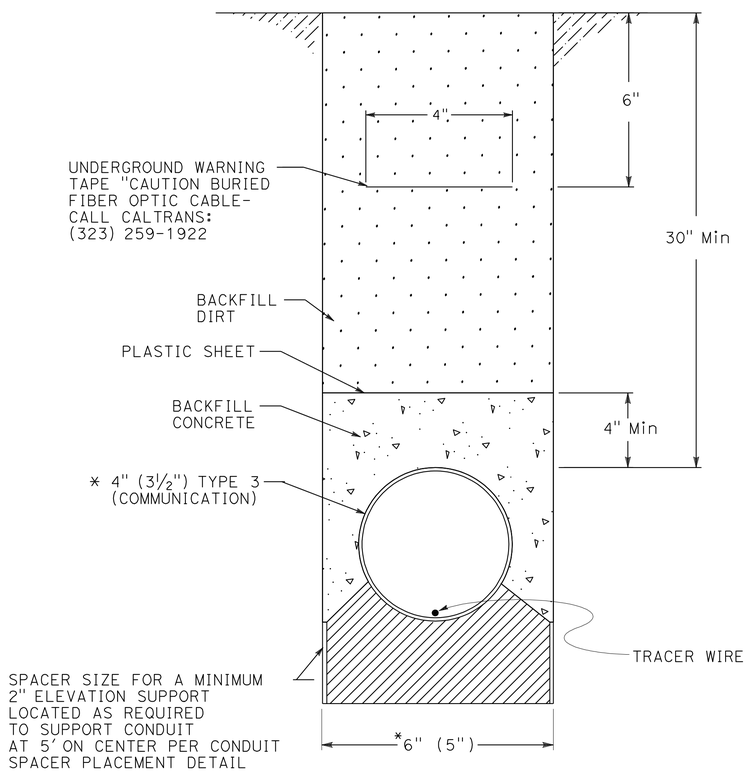

DETAIL 1

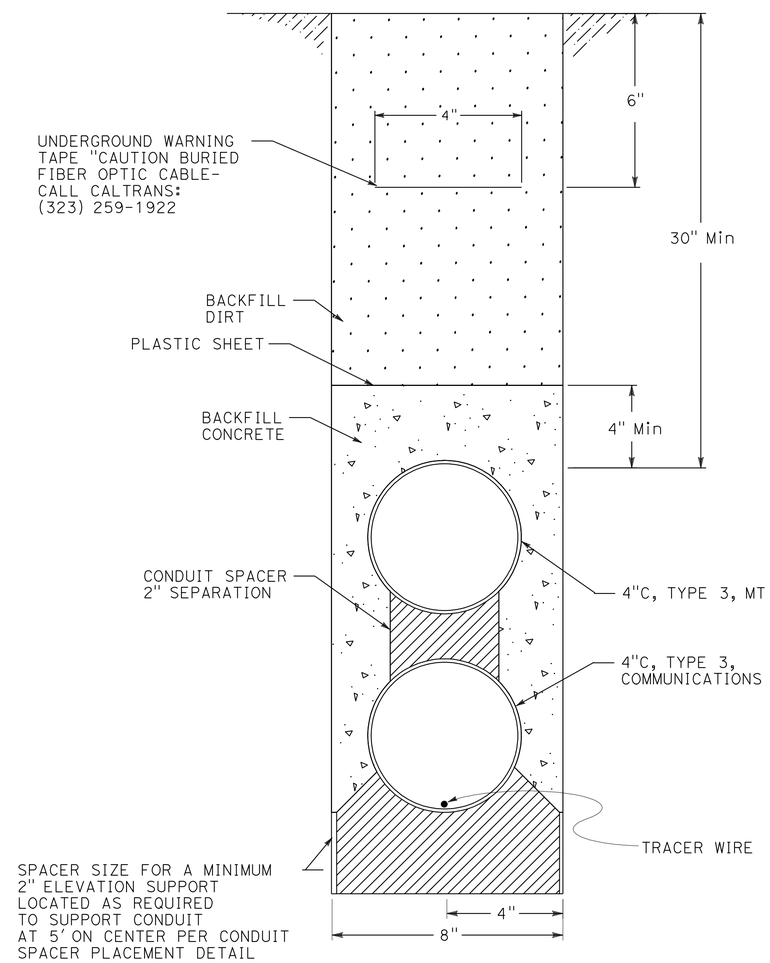

DETAIL 2

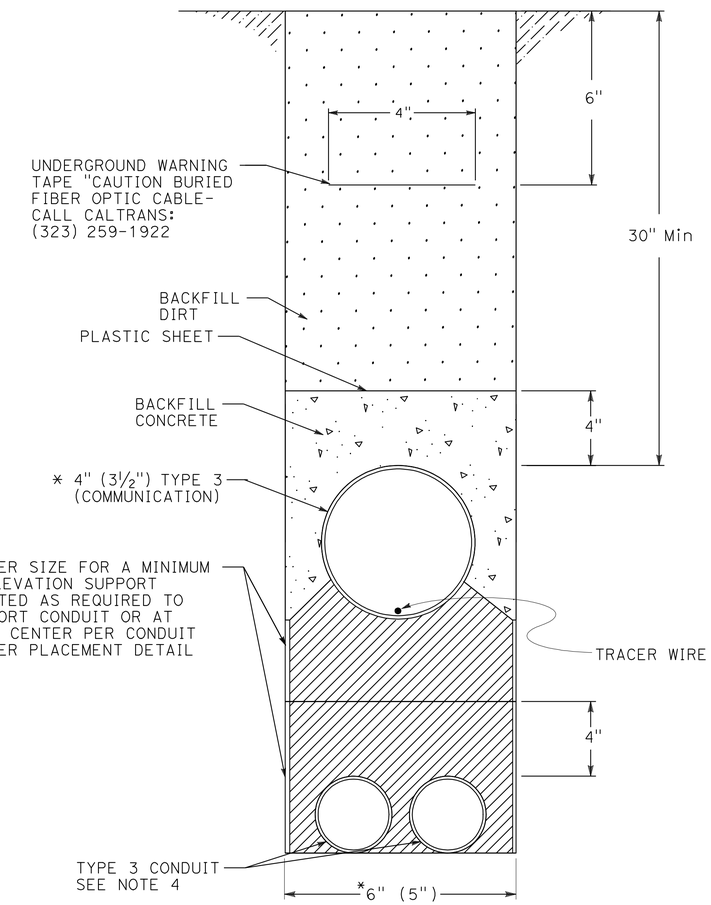

DETAIL 3

* NOTE: DIMENSION IN PARENTHESIS IS FOR 3" CONDUIT

COMMUNICATION SYSTEM
TRENCH IN DIRT DETAILS

NO SCALE

E-52

THIS PLAN ACCURATE FOR ELECTRICAL WORK ONLY.

STATE OF CALIFORNIA - DEPARTMENT OF TRANSPORTATION
Caltrans

CONSULTANT FUNCTIONAL SUPERVISOR: SHAHRAM VAHDAT
CALCULATED-DESIGNED BY: DOUGLAS E. SMITH
CHECKED BY: DAVID MADERA
REVISED BY
DATE REVISED

LAST REVISION 00-00-00
DATE PLOTTED => 19-OCT-2010
TIME PLOTTED => 12:37

Dist	COUNTY	ROUTE	POST MILES TOTAL PROJECT	SHEET No.	TOTAL SHEETS
07	LA	47,103	3.5/4.6, 0.0/1.1	358	1003

REGISTERED CIVIL ENGINEER 7/19/10 DATE

10-11-10
PLANS APPROVAL DATE

REGISTERED PROFESSIONAL ENGINEER DOUGLAS SMITH No. 43549 Exp 06/30/12 CIVIL STATE OF CALIFORNIA

THE STATE OF CALIFORNIA OR ITS OFFICERS OR AGENTS SHALL NOT BE RESPONSIBLE FOR THE ACCURACY OR COMPLETENESS OF SCANNED COPIES OF THIS PLAN SHEET.

URS CORPORATION
915 WILSHIRE BOULEVARD
SUITE 700
LOS ANGELES, CA 90017

ALAMEDA CORRIDOR
TRANSPORTATION AUTHORITY
ONE CIVIL PLAZA, SUITE 350
CARSON, CA 90745

GENERAL NOTES: (THIS SHEET)

1. REPLACE AC DIKE IN KIND, AS NECESSARY.
2. TRENCH TO BE CENTERED IN SHOULDER OR AS DIRECTED BY THE ENGINEER.
3. PULL BOX OR SPLICE VAULT SHALL BE LOCATED WITHIN 1′ OF EP, AC DIKE, OR RAILING, OR AS DIRECTED BY THE ENGINEER.
4. MAINTAIN 2′ MINIMUM COVER AND BACKFILL TRENCH WITH SLURRY CEMENT BETWEEN PULL BOX AND PAVED SHOULDER.
5. WHERE TRENCH TRANSITIONS FROM ASPHALT TO UNPAVED AREAS, EXCEPT AT PULL BOXES, CONDUIT TO GRADUALLY TRANSITION FROM 2′ MINIMUM DEPTH TO 30" MINIMUM DEPTH WITHIN THE ASPHALT AREA.
6. 2′ MINIMUM COVER MAY BE REDUCED TO 9" MINIMUM COVER IF NEEDED TO CLEAR A STORM DRAIN OR OTHER FIXED OBJECT AS DIRECTED BY THE ENGINEER.
7. PROVIDE A MINIMUM 5′ CLEARANCE BETWEEN ANY CONDUIT AND EXISTING STRUCTURE FOUNDATIONS.
8. ANCHOR/RESTRAIN TOP CONDUIT FROM FLOATING DURING CEMENT SLURRY BACKFILL.
9. WHEN TRENCH TRANSITIONS FROM ASPHALT TO UNPAVED AREAS, CONDUIT TO DROP FROM 9" Min DEPTH TO 30" Min DEPTH OVER A MINIMUM OF 6′ HORIZONTAL DISTANCE WITHIN DIRT AREA.
10. FOR NOTES AND ABBREVIATIONS, SEE SHEET E-33.
11. INSTALL TRACER WIRE IN CONDUIT.

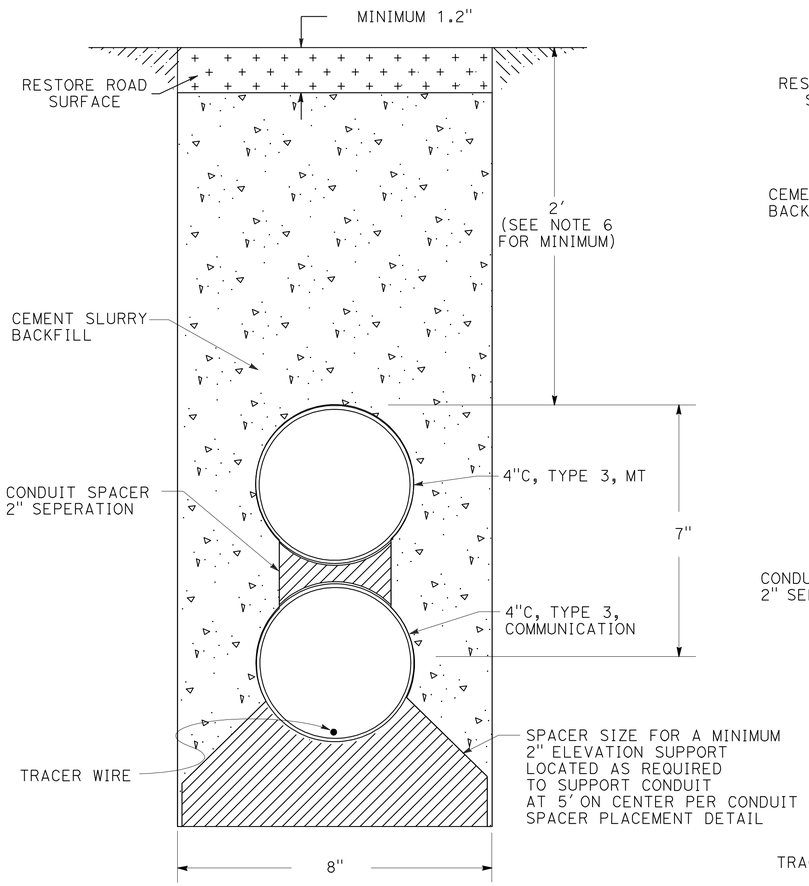

DETAIL 1

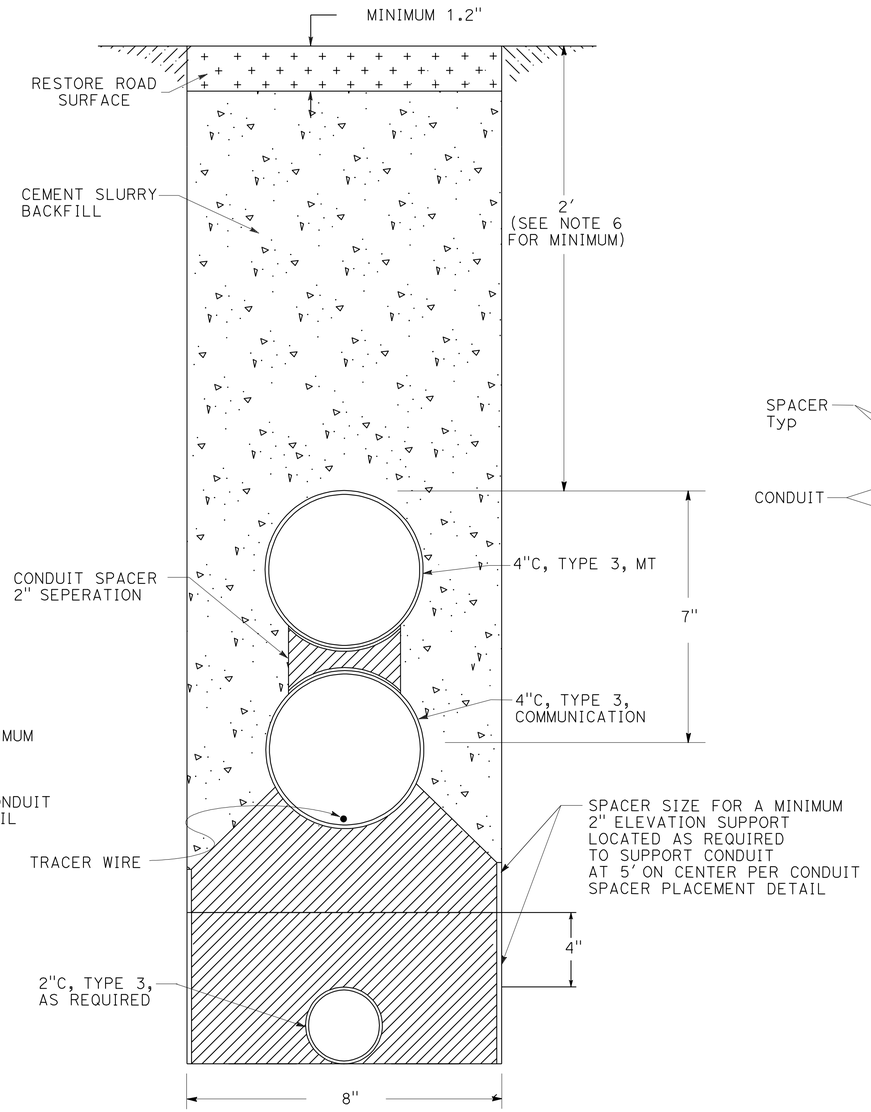

DETAIL 2

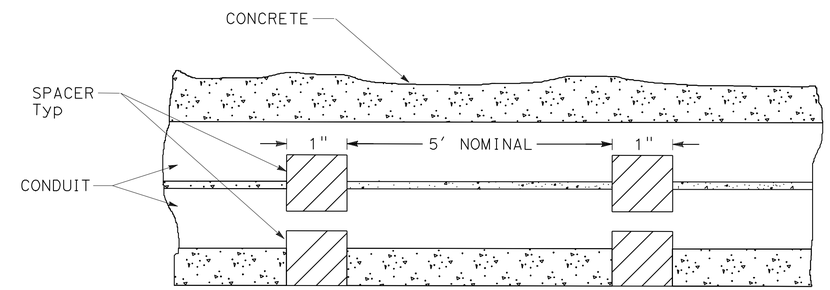

CONDUIT SPACER PLACEMENT

SIDE VIEW

COMMUNICATION SYSTEM
TRENCH IN PAVEMENT DETAILS

NO SCALE

E-53

THIS PLAN ACCURATE FOR ELECTRICAL WORK ONLY.

STATE OF CALIFORNIA - DEPARTMENT OF TRANSPORTATION
Caltrans

CONSULTANT FUNCTIONAL SUPERVISOR: SHAHRAM VAHDAT
CALCULATED-DESIGNED BY: DAVID MADERA
CHECKED BY: DOUGLAS E. SMITH
REVISED BY
DATE REVISED

LAST REVISION 00-00-00
DATE PLOTTED => 21-OCT-2010
TIME PLOTTED => 11:19

Dist	COUNTY	ROUTE	POST MILES TOTAL PROJECT	SHEET No.	TOTAL SHEETS
07	LA	47,103	3.5/4.6, 0.0/1.1	359	1003

REGISTERED CIVIL ENGINEER 7/19/10 DATE

10-11-10
PLANS APPROVAL DATE

REGISTERED PROFESSIONAL ENGINEER DOUGLAS SMITH No. 43549 Exp 06/30/12 CIVIL STATE OF CALIFORNIA

THE STATE OF CALIFORNIA OR ITS OFFICERS OR AGENTS SHALL NOT BE RESPONSIBLE FOR THE ACCURACY OR COMPLETENESS OF SCANNED COPIES OF THIS PLAN SHEET.

URS CORPORATION
915 WILSHIRE BOULEVARD
SUITE 700
LOS ANGELES, CA 90017

ALAMEDA CORRIDOR
TRANSPORTATION AUTHORITY
ONE CIVIL PLAZA, SUITE 350
CARSON, CA 90745

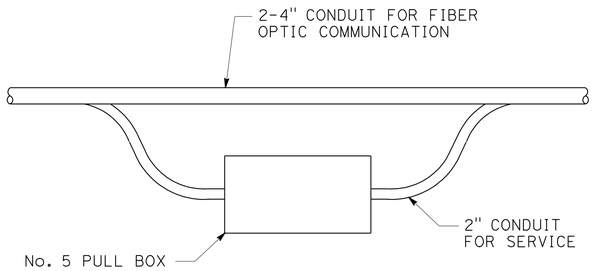

ROUTE SERVICE CONDUIT UP FROM BENEATH CONDUITS INTO No. 5 PULL BOX LOCATED ALONGSIDE CONDUITS REMAINING IN TRENCH.

TOP VIEW

DETAIL A

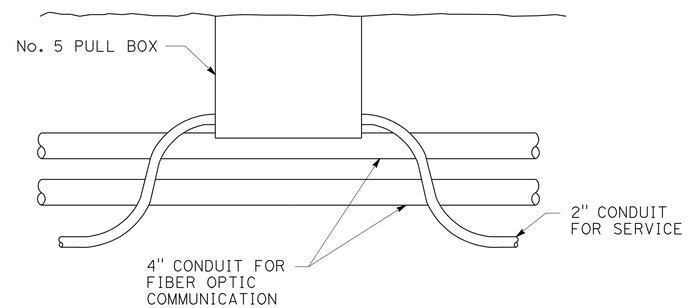

SIDE VIEW

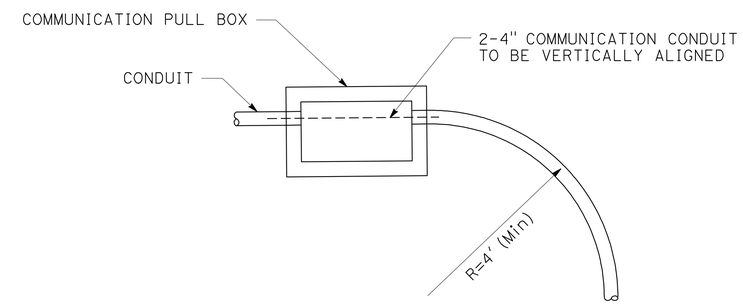

DETAIL B

GENERAL NOTES: (THIS SHEET)

1. ALL BENDS SHALL BE FACTORY BENDS.
2. TOP 4" CONDUIT SHALL BE MT.
3. FOR ADDITIONAL NOTES AND LEGEND, SEE SHEET E-33.

THIS PLAN ACCURATE FOR ELECTRICAL WORK ONLY.

COMMUNICATION SYSTEM
COMMUNICATION PULL BOX DETAILS

NO SCALE

E-54

STATE OF CALIFORNIA - DEPARTMENT OF TRANSPORTATION
Caltrans

CONSULTANT FUNCTIONAL SUPERVISOR: SHAHRAM VAHDAT
CALCULATED-DESIGNED BY: DAVID MADERA
CHECKED BY: DOUGLAS E. SMITH
REVISED BY
DATE REVISED

LAST REVISION 00-00-00
DATE PLOTTED => 19-OCT-2010
TIME PLOTTED => 12:37

Dist	COUNTY	ROUTE	POST MILES TOTAL PROJECT	SHEET No.	TOTAL SHEETS
07	LA	47,103	3.5/4.6, 0.0/1.1	360	1003

REGISTERED CIVIL ENGINEER 7/19/10 DATE

10-11-10
PLANS APPROVAL DATE

REGISTERED PROFESSIONAL ENGINEER DOUGLAS SMITH No. 43549 Exp 06/30/12 CIVIL STATE OF CALIFORNIA

THE STATE OF CALIFORNIA OR ITS OFFICERS OR AGENTS SHALL NOT BE RESPONSIBLE FOR THE ACCURACY OR COMPLETENESS OF SCANNED COPIES OF THIS PLAN SHEET.

URS CORPORATION
915 WILSHIRE BOULEVARD
SUITE 700
LOS ANGELES, CA 90017

ALAMEDA CORRIDOR
TRANSPORTATION AUTHORITY
ONE CIVIL PLAZA, SUITE 350
CARSON, CA 90745

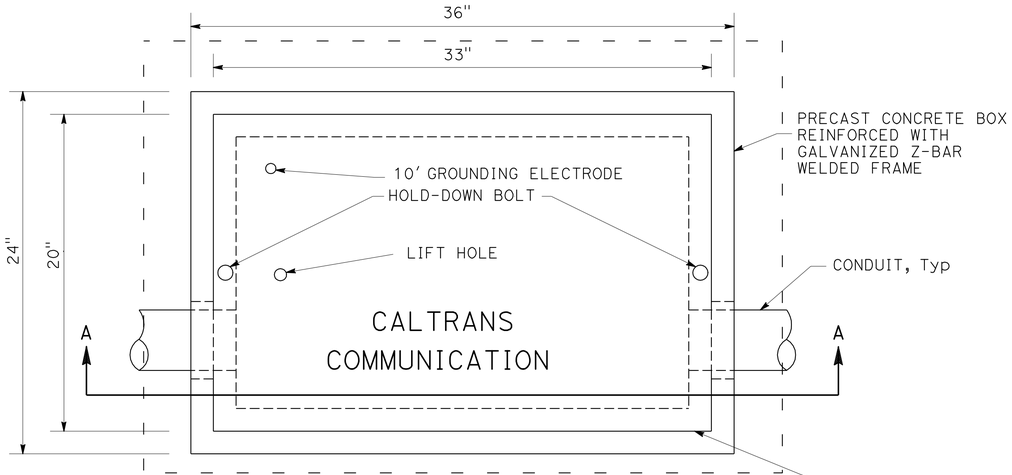

TOP VIEW

REINFORCED ½" STEEL PLATE COVER. SEE STANDARD PLAN ES-8

GENERAL NOTES: (THIS SHEET)

1. SERVICE CONDUITS APPEAR IN PULL BOXES AS SHOWN ON PLANS. WHEN SERVICE CONDUITS ARE PRESENT, GROUNDING SHALL BE AS SPECIFIED IN SECTION 86-2.10 OF STANDARD SPECIFICATIONS.
2. FOR ADDITIONAL NOTES AND LEGEND, SEE SHEET E-33.

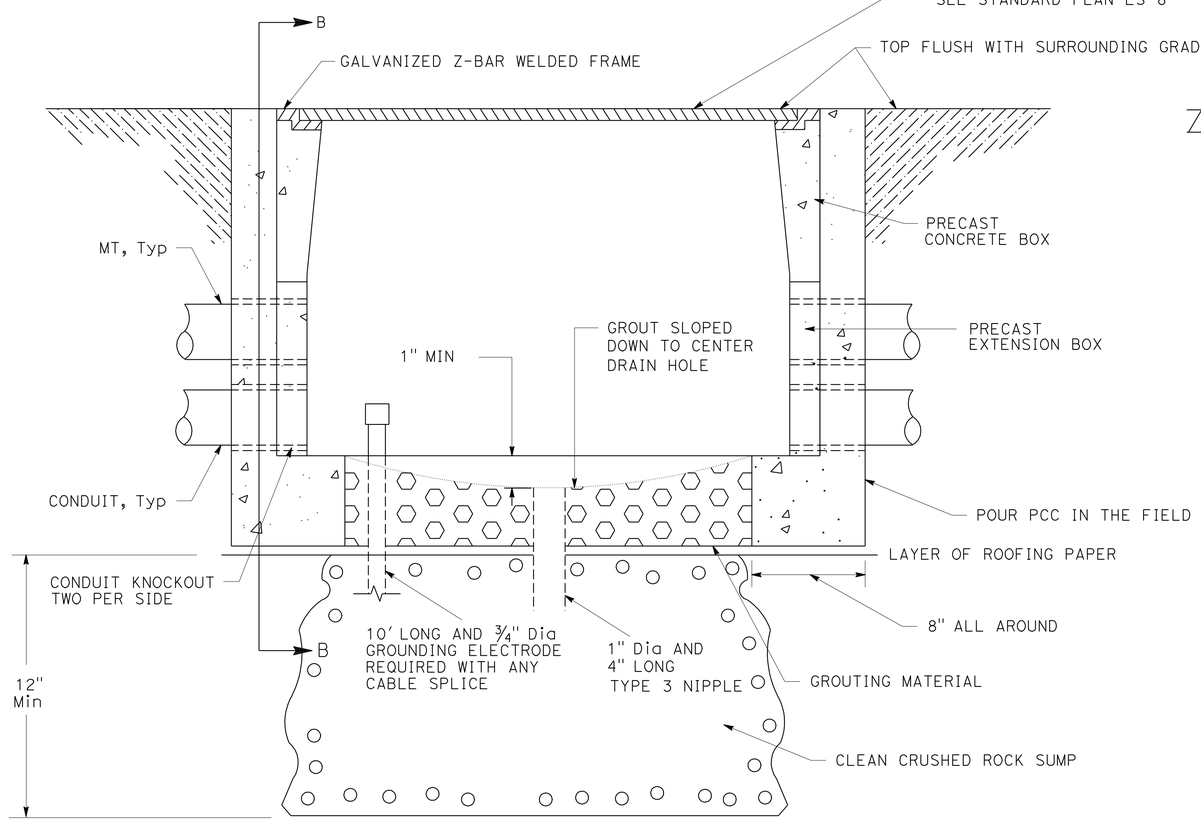

SECTION A-A

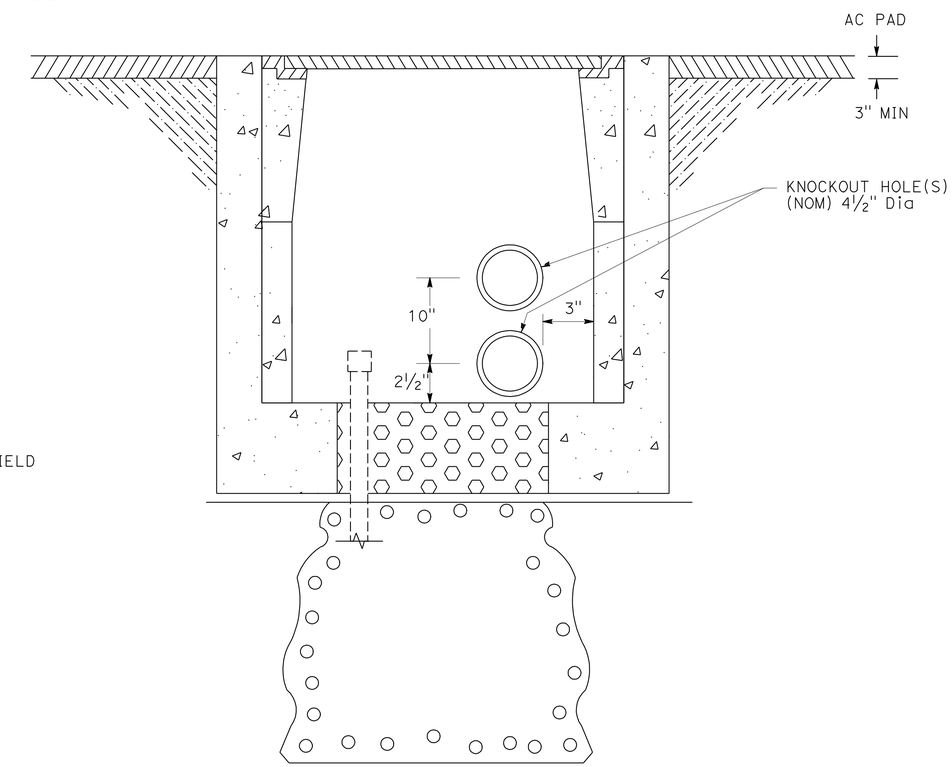

SECTION B-B

COMMUNICATION SYSTEM
COMMUNICATION PULL BOX DETAILS

NO SCALE

E-55

THIS PLAN ACCURATE FOR ELECTRICAL WORK ONLY.

STATE OF CALIFORNIA - DEPARTMENT OF TRANSPORTATION
Caltrans

CONSULTANT FUNCTIONAL SUPERVISOR: SHAHRAM VAHDAT
CALCULATED-DESIGNED BY: DAVID MADERA
CHECKED BY: DOUGLAS E. SMITH
REVISED BY
DATE REVISED

LAST REVISION 00-00-00
DATE PLOTTED => 19-OCT-2010
TIME PLOTTED => 12:49

Dist	COUNTY	ROUTE	POST MILES TOTAL PROJECT	SHEET No.	TOTAL SHEETS
07	LA	47,103	3.5/4.6, 0.0/1.1	361	1003

REGISTERED CIVIL ENGINEER 7/19/10 DATE

10-11-10
PLANS APPROVAL DATE

REGISTERED PROFESSIONAL ENGINEER DOUGLAS SMITH No. 43549 Exp 06/30/12 CIVIL STATE OF CALIFORNIA

THE STATE OF CALIFORNIA OR ITS OFFICERS OR AGENTS SHALL NOT BE RESPONSIBLE FOR THE ACCURACY OR COMPLETENESS OF SCANNED COPIES OF THIS PLAN SHEET.

URS CORPORATION
915 WILSHIRE BOULEVARD
SUITE 700
LOS ANGELES, CA 90017

ALAMEDA CORRIDOR TRANSPORTATION AUTHORITY
ONE CIVIL PLAZA, SUITE 350
CARSON, CA 90745

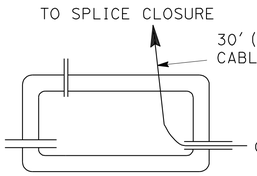

STEP 1

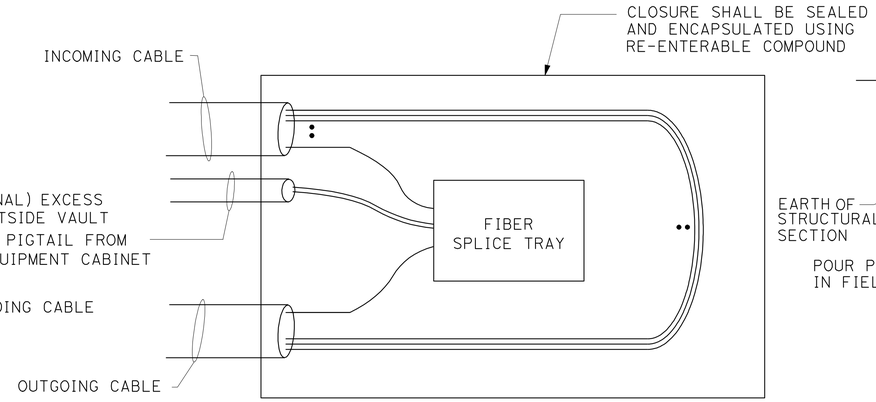

STEP 3

TYPICAL FIBER SPLICE CLOSURE

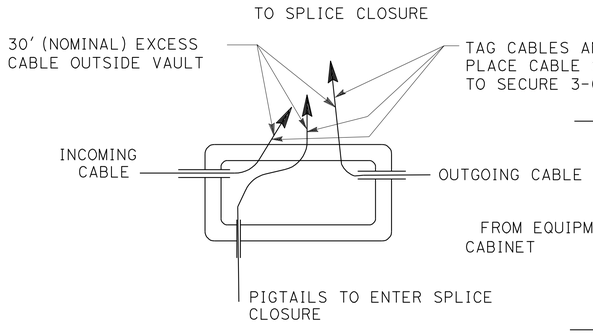

STEP 2

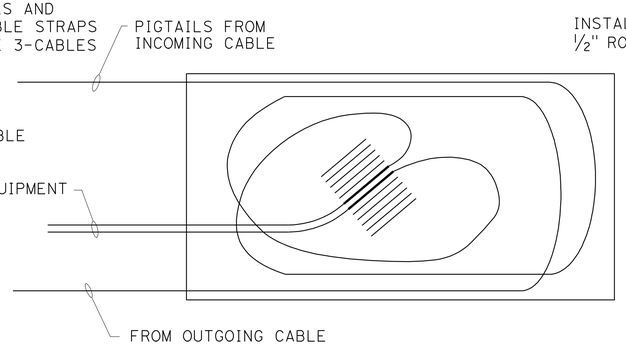

STEP 4

TYPICAL FIBER SPLICE TRAY

SPLICE PROCEDURE

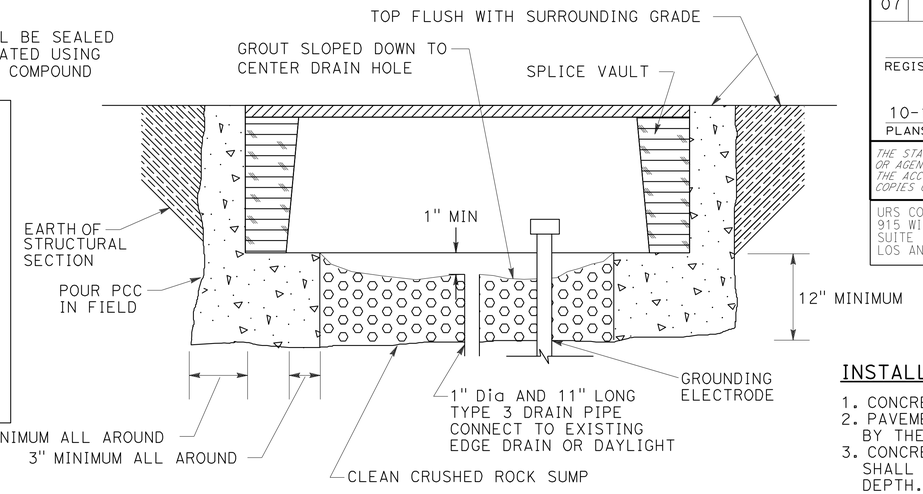

INSTALLATION NOTES (THIS SHEET)

1. CONCRETE RING SHALL BE MINOR CONCRETE.
2. PAVEMENT AND SUBGRADE TO BE AS DIRECTED BY THE ENGINEER.
3. CONCRETE ENCASEMENT RING DIMENSION SHALL BE EQUAL TO DESIGN PAVEMENT DEPTH.

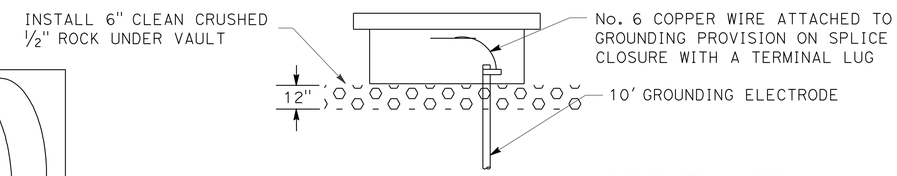

VAULT INSTALLATION

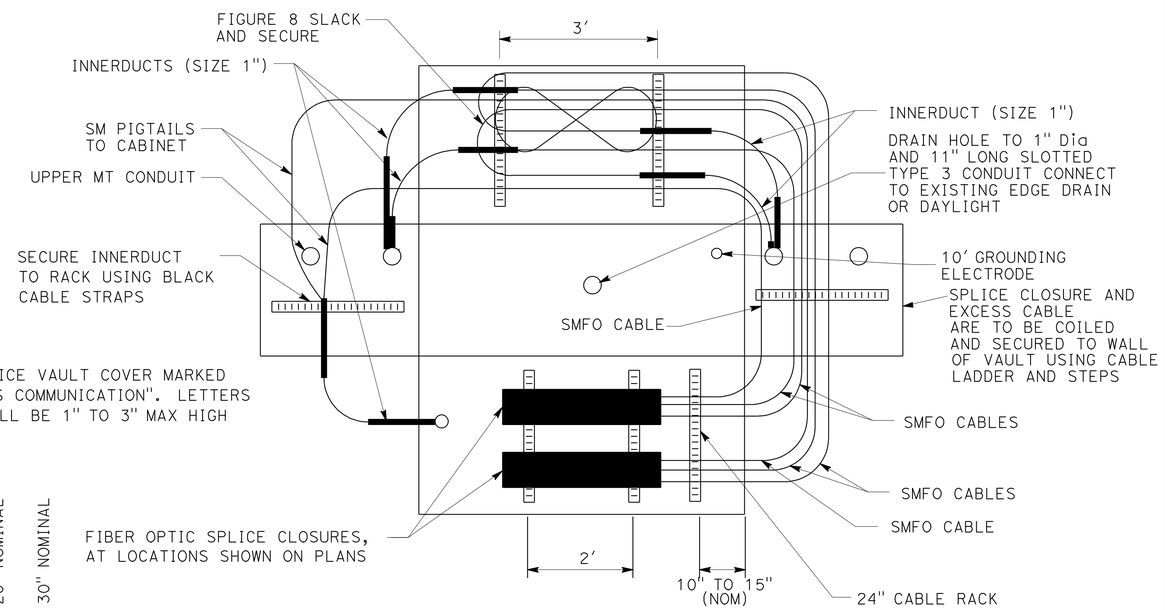

FIBER OPTIC CABLE INSTALLATION

TOP VIEW - WALLS FOLDED DOWN FOR CLARITY

GENERAL NOTES: (THIS SHEET)

1. UPON ACCEPTANCE OF THE WORK ALL CONDUITS SHALL BE SEALED WITH COMPATIBLE SEALANT MATERIAL.
2. ALL GROUND CONNECTIONS SHALL BE COATED WITH OXIDATION PROHIBITING COMPOUND
3. ALL CABLE STRAPS SHALL BE DESIGNED TO WITHSTAND ULTRA-VIOLET EXPOSURE.
4. THE VAULT SHALL BE CAULKED AFTER ALL KNOWN ENTRANCES HAVE BEEN MADE.
5. INSTALL ALL CABLES IN LOWER 4" CONDUIT.
6. UPPER 4" CONDUIT IS SPARE ONLY.
7. VAULT SHALL HAVE INTEGRAL BASE OR SHALL BE GROUTED PER STANDARD SPECIFICATION OF PULL BOXES.
8. NUMBER OF SPLICE CLOSURES AND INNERDUCTS MAY VARY.
9. FOR ADDITIONAL NOTES AND LEGEND, SEE SHEET E-33.

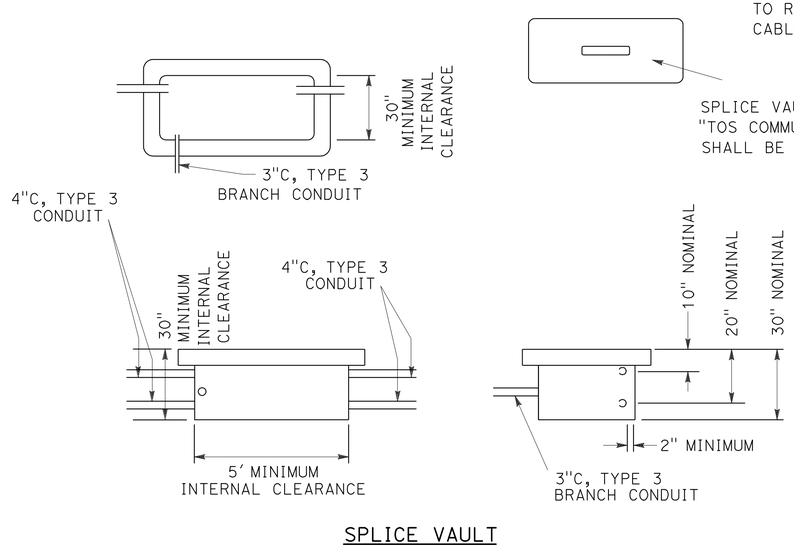

SPLICE VAULT

THIS PLAN ACCURATE FOR ELECTRICAL WORK ONLY.

COMMUNICATION SYSTEM
SPLICE VAULT DETAILS

NO SCALE

E-56

STATE OF CALIFORNIA - DEPARTMENT OF TRANSPORTATION
Caltrans

CONSULTANT FUNCTIONAL SUPERVISOR: SHAHRAM VAHDAT
CALCULATED-DESIGNED BY: DOUGLAS E. SMITH
CHECKED BY: DAVID MADERA
REVISED BY
DATE REVISED

LAST REVISION 00-00-00
DATE PLOTTED => 19-OCT-2010
TIME PLOTTED => 12:50

Dist	COUNTY	ROUTE	POST MILES TOTAL PROJECT	SHEET No.	TOTAL SHEETS
07	LA	47,103	3.5/4.6, 0.0/1.1	362	1003

REGISTERED CIVIL ENGINEER 7/19/10 DATE

10-11-10
PLANS APPROVAL DATE

REGISTERED PROFESSIONAL ENGINEER DOUGLAS SMITH No. 43549 Exp 06/30/12 CIVIL STATE OF CALIFORNIA

THE STATE OF CALIFORNIA OR ITS OFFICERS OR AGENTS SHALL NOT BE RESPONSIBLE FOR THE ACCURACY OR COMPLETENESS OF SCANNED COPIES OF THIS PLAN SHEET.

URS CORPORATION
915 WILSHIRE BOULEVARD
SUITE 700
LOS ANGELES, CA 90017

ALAMEDA CORRIDOR
TRANSPORTATION AUTHORITY
ONE CIVIL PLAZA, SUITE 350
CARSON, CA 90745

GENERAL NOTES: (THIS SHEET)

1. ELECTRICAL CONDUIT MAY BE STRAPPED TO OUTSIDE OF MSE RETAINING WALL IF INSTALLATION OF CONDUIT COMPROMISES PLACEMENT OF STRAPS AND BACKFILL.
2. FOR ADDITIONAL NOTES AND LEGEND, SEE SHEET E-33.

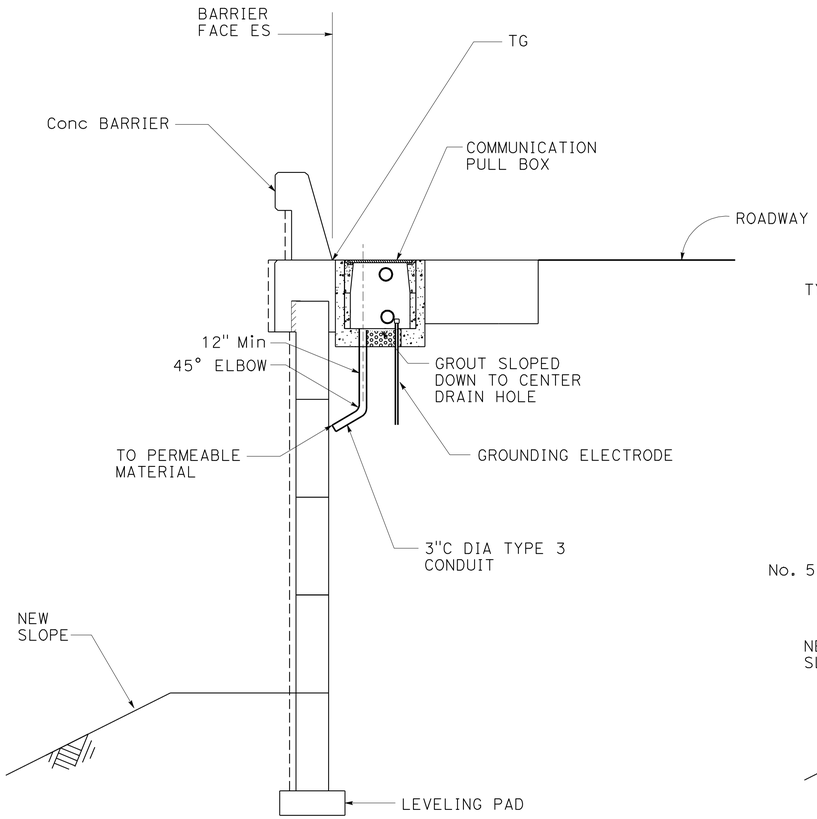

COMMUNICATION PULL BOX WALL DRAIN

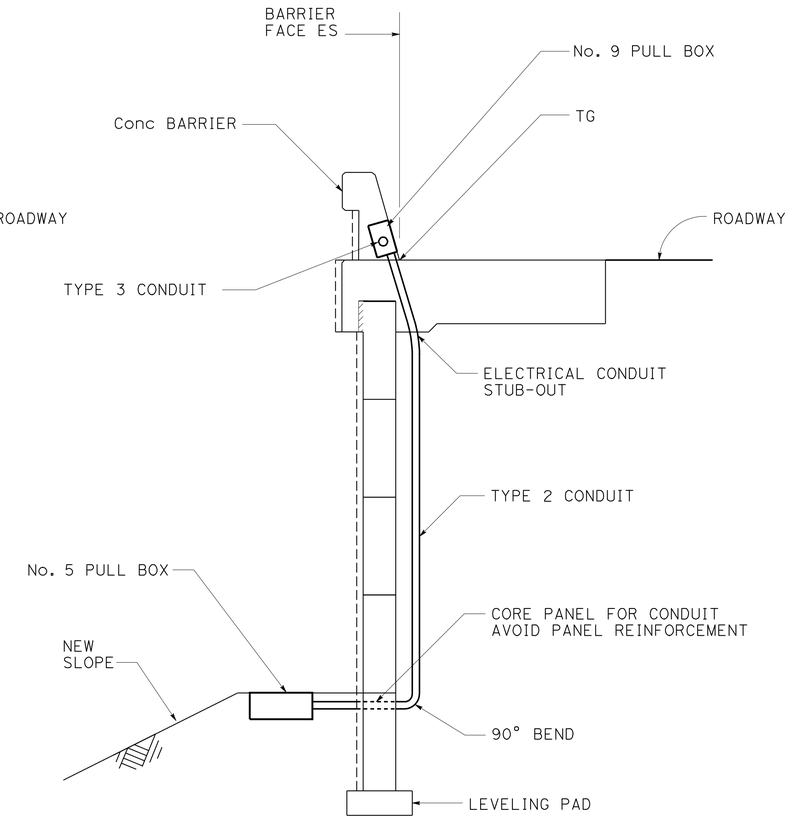

ELECTRICAL CONDUIT THROUGH WALL

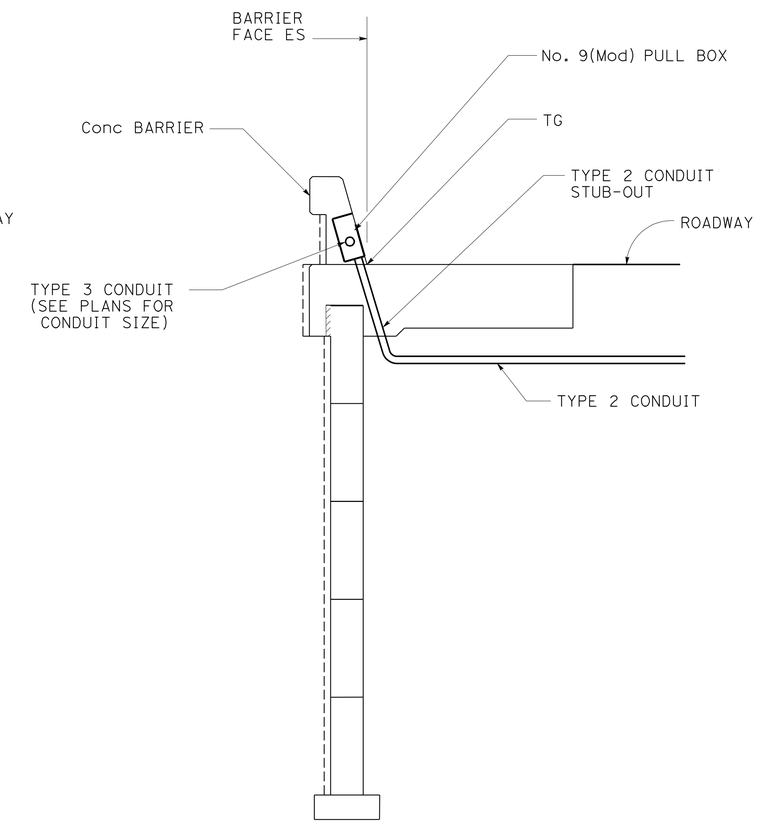

ELECTRICAL CONDUIT FREEWAY CROSSING

THIS PLAN ACCURATE FOR ELECTRICAL WORK ONLY.

COMMUNICATION SYSTEM
ELECTRICAL AND COMMUNICATION PULL BOX DETAILS
NO SCALE

E-57

STATE OF CALIFORNIA - DEPARTMENT OF TRANSPORTATION
Caltrans
CONSULTANT FUNCTIONAL SUPERVISOR: SHAHRAM VAHDAT
CALCULATED-DESIGNED BY: DOUGLAS E. SMITH
CHECKED BY: DAVID MADERA
REVISED BY
DATE REVISED

LAST REVISION 00-00-00
DATE PLOTTED => 19-OCT-2010
TIME PLOTTED => 12:50

Dist	COUNTY	ROUTE	POST MILES TOTAL PROJECT	SHEET No.	TOTAL SHEETS
07	LA	47,103	3.5/4.6, 0.0/1.1	363	1003

REGISTERED CIVIL ENGINEER 7/19/10 DATE

10-11-10
PLANS APPROVAL DATE

REGISTERED PROFESSIONAL ENGINEER DOUGLAS SMITH No. 43549 Exp 06/30/12 CIVIL STATE OF CALIFORNIA

THE STATE OF CALIFORNIA OR ITS OFFICERS OR AGENTS SHALL NOT BE RESPONSIBLE FOR THE ACCURACY OR COMPLETENESS OF SCANNED COPIES OF THIS PLAN SHEET.

URS CORPORATION
915 WILSHIRE BOULEVARD
SUITE 700
LOS ANGELES, CA 90017

ALAMEDA CORRIDOR
TRANSPORTATION AUTHORITY
ONE CIVIL PLAZA, SUITE 350
CARSON, CA 90745

GENERAL NOTES: (THIS SHEET)

1. FOR NOTES AND LEGEND, SEE SHEET E-33.
2. FOR OTHER DETAILS NOT SHOWN, SEE Std PLANS RSP ES-9C.

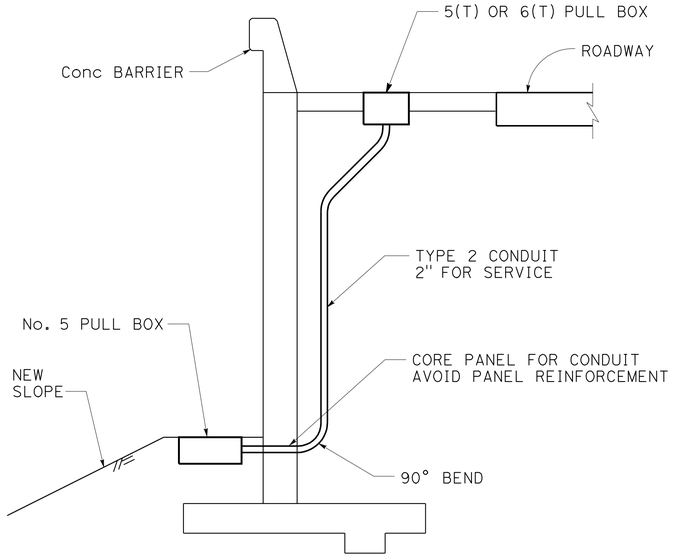

ELECTRICAL AND COMMUNICATION CONDUIT THROUGH WALL DETAIL

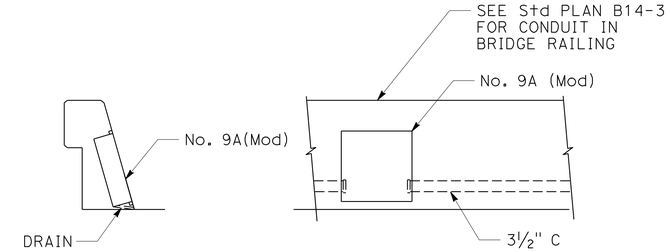

COMMUNICATION CONDUIT THROUGH BARRIER

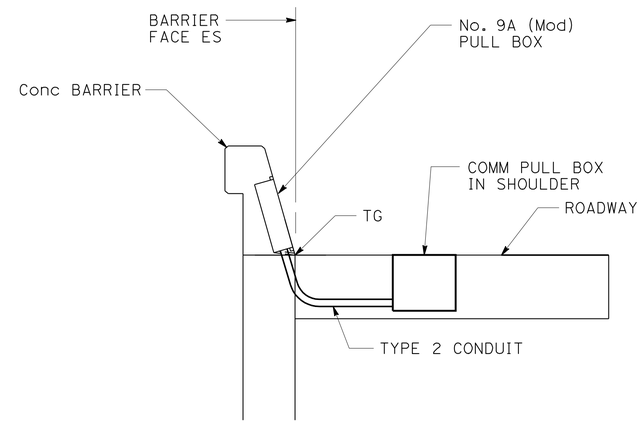

SECTION A-A

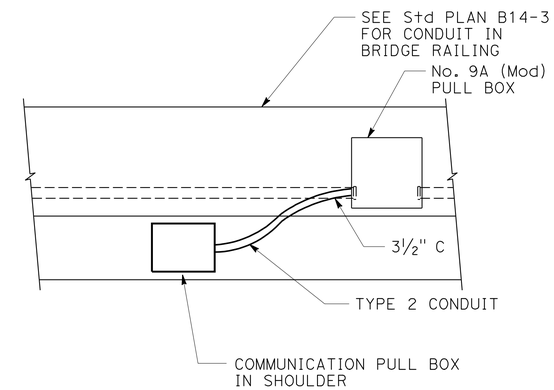

SIDE VIEW

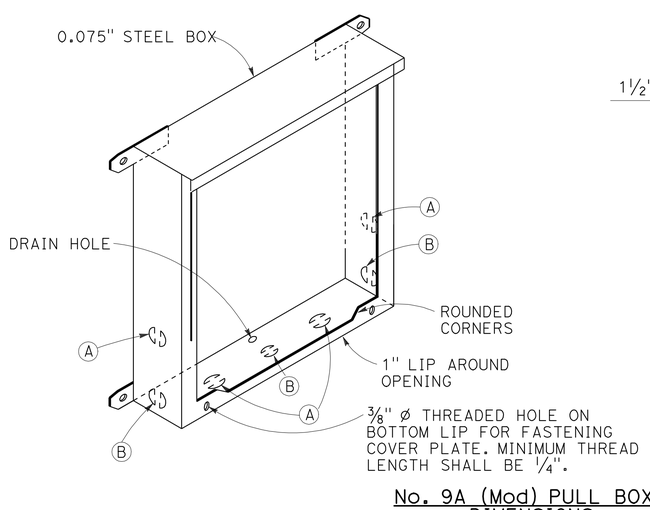

No. 9A (Mod) PULL BOX DIMENSIONS

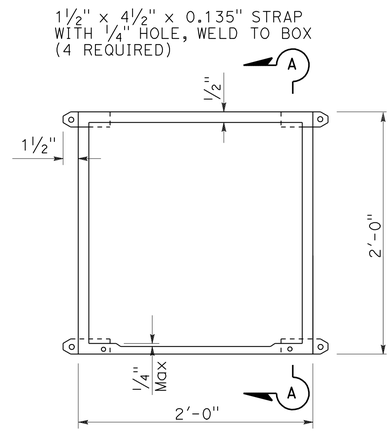

PLAN

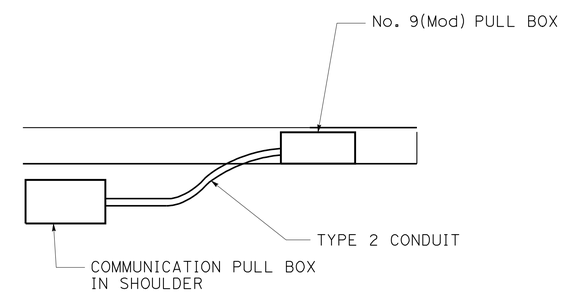

TOP VIEW

COMMUNICATION SYSTEM
WALL CONDUIT DETAILS

NO SCALE

E-58

THIS PLAN ACCURATE FOR ELECTRICAL WORK ONLY.

STATE OF CALIFORNIA - DEPARTMENT OF TRANSPORTATION
Caltrans
CONSULTANT FUNCTIONAL SUPERVISOR: SHAHRAM VAHDAT
CALCULATED-DESIGNED BY: DAVID MADERA
CHECKED BY: DOUGLAS E. SMITH
REVISED BY
DATE REVISED

LAST REVISION 00-00-00
DATE PLOTTED => 19-OCT-2010
TIME PLOTTED => 12:50

FOR ACCURATE RIGHT OF WAY AND ACCESS DATA, CONTACT
RIGHT OF WAY ENGINEERING AT THE DISTRICT OFFICE.

Dist	COUNTY	ROUTE	POST MILES TOTAL PROJECT	SHEET No.	TOTAL SHEETS
07	LA	47,103	3.5/4.6, 0.0/1.1	364	1003

REGISTERED CIVIL ENGINEER 7/19/10 DATE

10-11-10
PLANS APPROVAL DATE

REGISTERED PROFESSIONAL ENGINEER
DOUGLAS SMITH
No. 43549
Exp 06/30/12
CIVIL
STATE OF CALIFORNIA

THE STATE OF CALIFORNIA OR ITS OFFICERS OR AGENTS SHALL NOT BE RESPONSIBLE FOR THE ACCURACY OR COMPLETENESS OF SCANNED COPIES OF THIS PLAN SHEET.

URS CORPORATION
915 WILSHIRE BOULEVARD
SUITE 700
LOS ANGELES, CA 90017

ALAMEDA CORRIDOR
TRANSPORTATION AUTHORITY
ONE CIVIL PLAZA, SUITE 350
CARSON, CA 90745

PROJECT NOTES (THIS SHEET):

1. INSTALL LED EXTINGUISHABLE MESSAGE SIGN ON OVERHEAD SIGN TRUSS. SEE SHEET SDS-4 FOR SIGN TRUSS DETAILS. SEE E-60 FOR LED EMS DETAILS.
2. INSTALL 3"C, 7#10, 1#8G CONTROL WIRING FROM CTC SIGNAL HOUSE TO LED EMS.
3. EXISTING 4"C (POLA). INSTALL 7#10, 1#8G CONTROL WIRING.
4. INSTALL 120/240 V TYPE III-BF METERED SERVICE EQUIPMENT ENCLOSURE FOR EMS.
   - ADDRESS: PIER A PLAZA
   - 100 A, 2P, 240 V, MAIN CB
   - 30 A, 1P, 120 V, EMS (CITY)
5. INSTALL EMS CONTROL SYSTEM IN NEMA 4X ENCLOSURE. SEE E-60 FOR DETAILS.
6. INSTALL 3"C, MT, PER SERVICE EQUIPMENT REQUIREMENT.

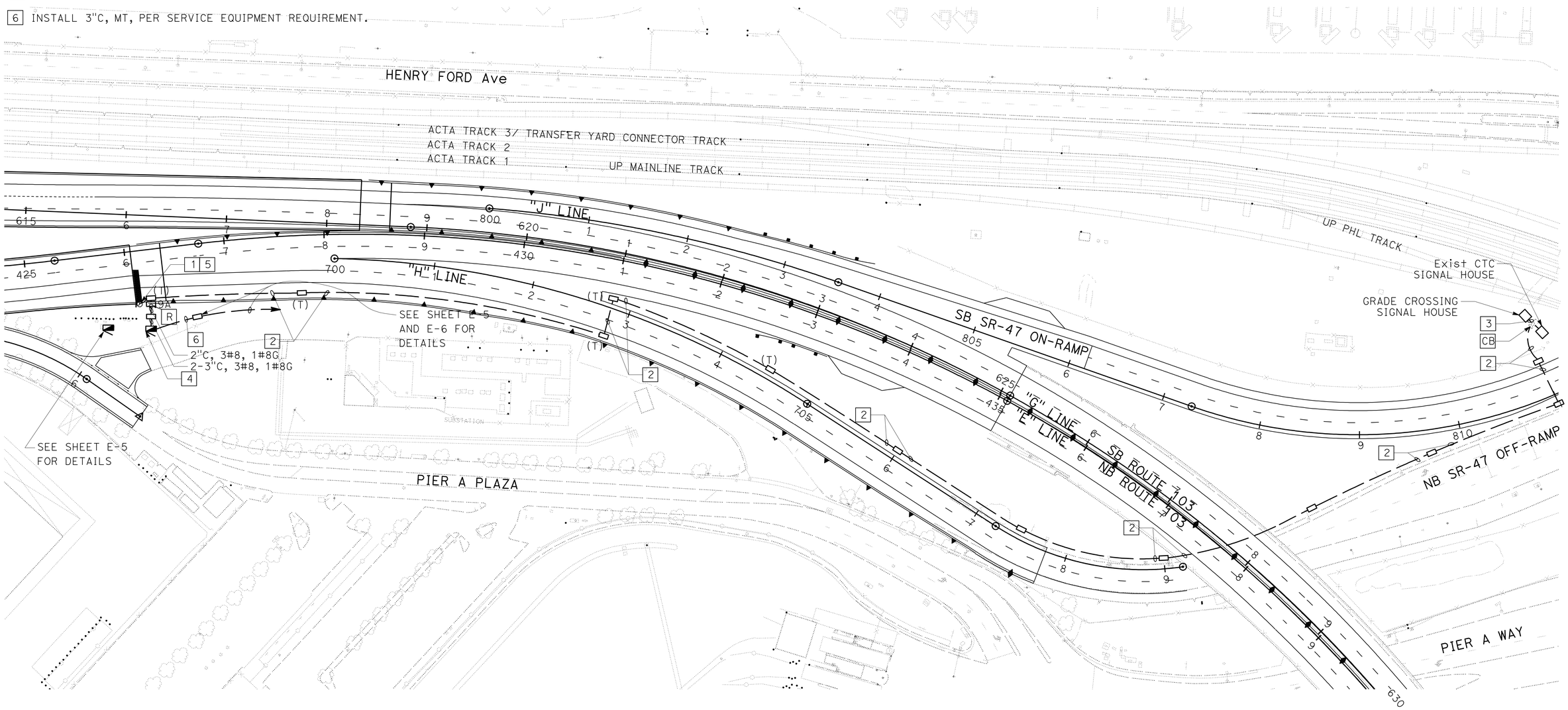

FOR ABBREVIATIONS SEE SHEET E-33

EXTINGUISHABLE MESSAGE SIGN

SCALE: 1" = 50'

E-59

THIS PLAN ACCURATE FOR ELECTRICAL WORK ONLY.

STATE OF CALIFORNIA - DEPARTMENT OF TRANSPORTATION
Caltrans

CONSULTANT FUNCTIONAL SUPERVISOR: SHAHRAM VAHDAT
CALCULATED-DESIGNED BY: DOUGLAS E. SMITH
CHECKED BY: DAVID MADERA
REVISED BY
DATE REVISED

LAST REVISION 00-00-00
DATE PLOTTED => 21-OCT-2010
TIME PLOTTED => 11:19

Dist	COUNTY	ROUTE	POST MILES TOTAL PROJECT	SHEET No.	TOTAL SHEETS
07	LA	47,103	3.5/4.6, 0.0/1.1	365	1003

REGISTERED CIVIL ENGINEER 7/19/10 DATE

10-11-10
PLANS APPROVAL DATE

REGISTERED PROFESSIONAL ENGINEER DOUGLAS SMITH No. 43549 Exp 06/30/12 CIVIL STATE OF CALIFORNIA

THE STATE OF CALIFORNIA OR ITS OFFICERS OR AGENTS SHALL NOT BE RESPONSIBLE FOR THE ACCURACY OR COMPLETENESS OF SCANNED COPIES OF THIS PLAN SHEET.

URS CORPORATION
915 WILSHIRE BOULEVARD
SUITE 700
LOS ANGELES, CA 90017

ALAMEDA CORRIDOR
TRANSPORTATION AUTHORITY
ONE CIVIL PLAZA, SUITE 350
CARSON, CA 90745

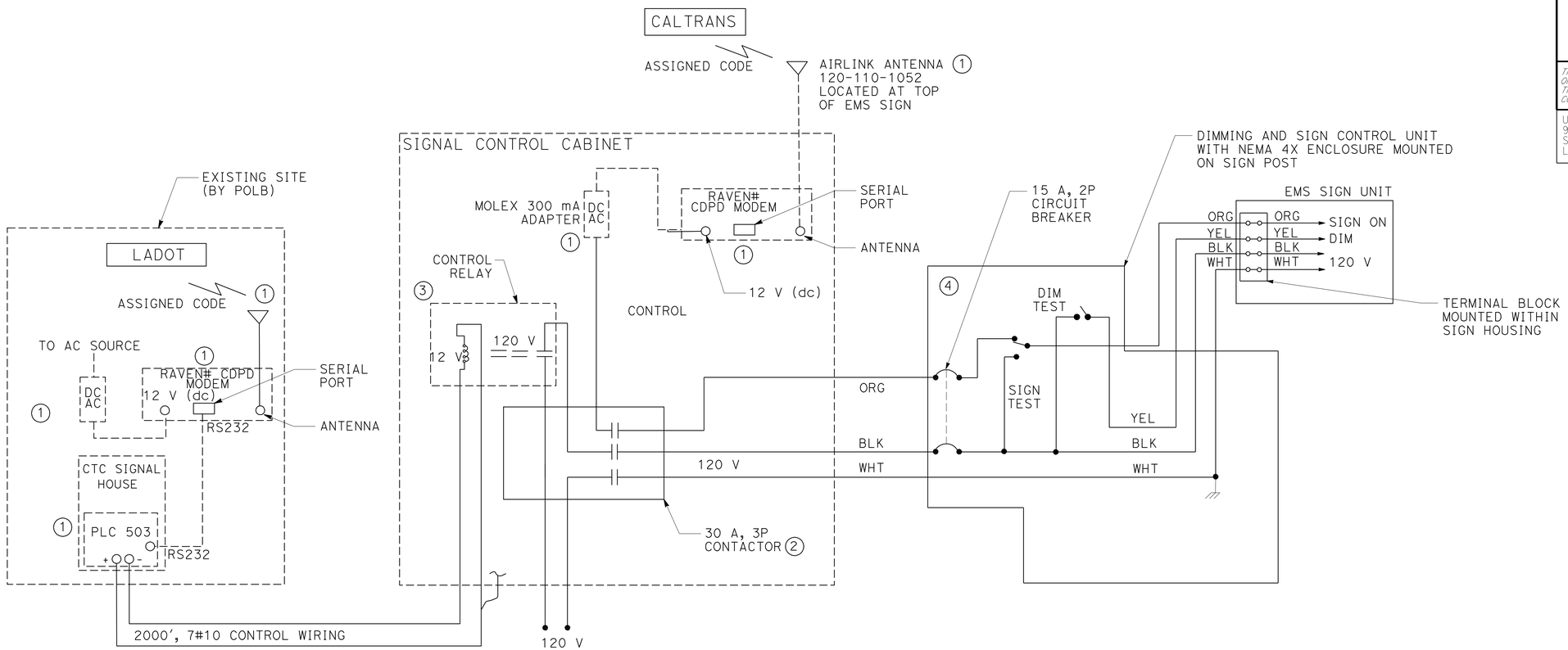

EMS POWER AND CONTROL WIRING DIAGRAM

PROJECT NOTES: (THIS SHEET)

1. INSTALL STATE-FURNISHED CIYT EMS COMPONENTS.
2. 30 A, 120 V, 3-POLE, ELECTRICALLY HELD, LIGHTING CONTRACTOR.
3. 12 V (dc) CONTROL RELAY, 3 POLE, DOUBLE THROW, CONTACTS RATED AT 15 A.
4. EMS DIMMING AND SIGN CONTROL UNIT ENCLOSURE SHALL BE MOUNTED NEXT TO SC1A SIGN CONTROL.

FOR ABBREVIATIONS SEE SHEET E-33.

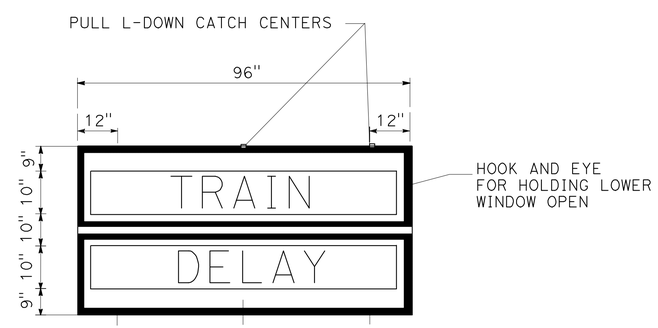

FRONT VIEW OF SIGN UNIT

EXTINGUISHABLE MESSAGE SIGN

REFERENCE CALTRANS Std PLAN RSP ES-14A.

EXTINGUISHABLE MESSAGE SIGN
DETAILS
NO SCALE

E-60

THIS PLAN ACCURATE FOR ELECTRICAL WORK ONLY.

STATE OF CALIFORNIA - DEPARTMENT OF TRANSPORTATION
Caltrans
CONSULTANT FUNCTIONAL SUPERVISOR: SHAHRAM VAHDAT
CALCULATED-DESIGNED BY: DOUGLAS E. SMITH
CHECKED BY: DAVID MADERA
REVISED BY
DATE REVISED

LAST REVISION 00-00-00
DATE PLOTTED => 21-OCT-2010
TIME PLOTTED => 11:19

FOR ACCURATE RIGHT OF WAY AND ACCESS DATA, CONTACT RIGHT OF WAY ENGINEERING AT THE DISTRICT OFFICE.

Dist	COUNTY	ROUTE	POST MILES TOTAL PROJECT	SHEET No.	TOTAL SHEETS
07	LA	47,103	3.5/4.6, 0.0/1.1	366	1003

REGISTERED CIVIL ENGINEER 7/19/10 DATE

10-11-10
PLANS APPROVAL DATE

REGISTERED PROFESSIONAL ENGINEER DOUGLAS SMITH No. 43549 Exp 06/30/12 CIVIL STATE OF CALIFORNIA

THE STATE OF CALIFORNIA OR ITS OFFICERS OR AGENTS SHALL NOT BE RESPONSIBLE FOR THE ACCURACY OR COMPLETENESS OF SCANNED COPIES OF THIS PLAN SHEET.

URS CORPORATION
915 WILSHIRE BOULEVARD
SUITE 700
LOS ANGELES, CA 90017

ALAMEDA CORRIDOR TRANSPORTATION AUTHORITY
ONE CIVIL PLAZA, SUITE 350
CARSON, CA 90745

PROJECT NOTES:

1. INSTALL STATE-FURNISHED CCTV CAMERA ASSEMBLY ON ELECTROLIER MAST ARM. SEE E-62 FOR DETAILS.
2. INSTALL 2"C, 1#8G, AND 1 STATE-FURNISHED COMPOSITE VIDEO CABLE IN BRIDGE BARRIER.
3. INSTALL 2" CONDUIT IN BRIDGE. SEE SHEET E-57 FOR DETAILS.
4. INSTALL SPLICE VAULT AND SPLICE CLOSURE. FIBER OPTIC SPLICING.
5. INSTALL MODEL 334-TV CONTROLLER CABINET FOR CCTV CAMERA SYSTEM (CITY). VIDEO RECEIVERS, FIBER OPTIC CONTROL MODEMS, AND FDU.

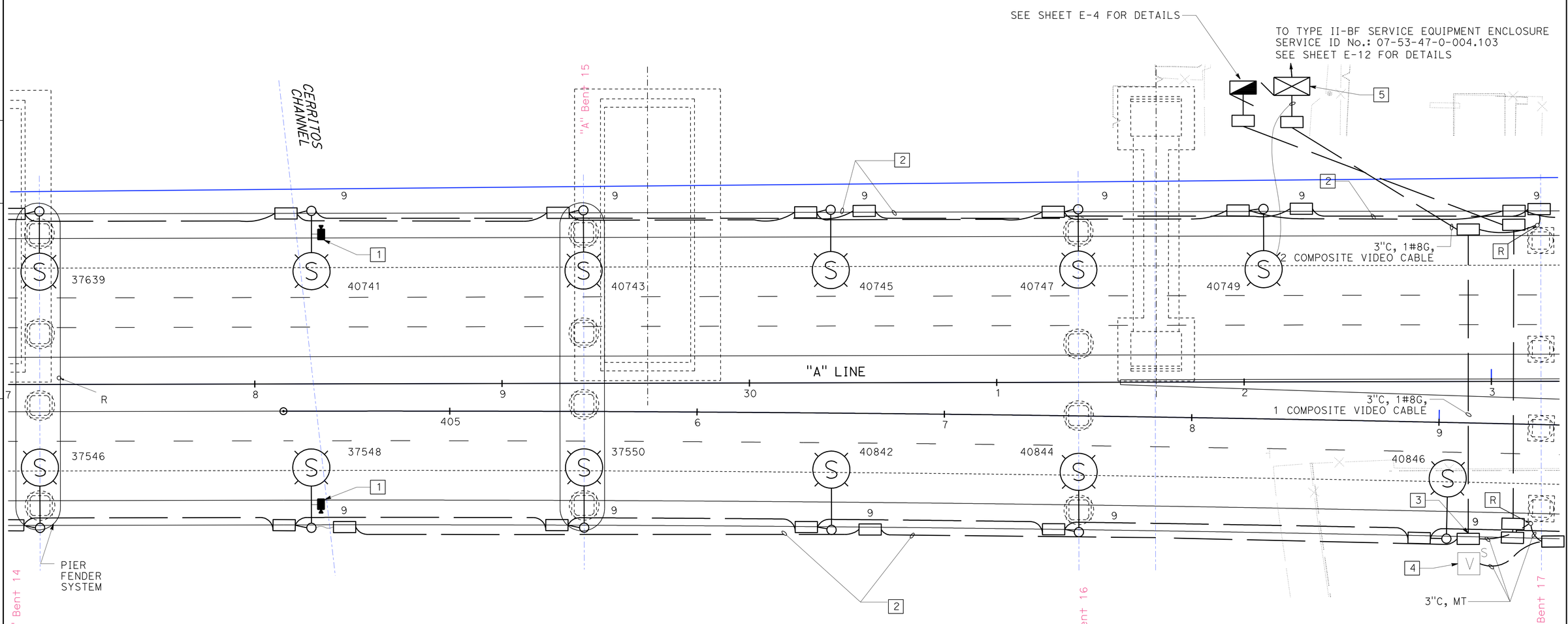

CLOSED CIRCUIT TELEVISION CAMERA SYSTEM (CITY)

SCALE: 1" = 20' **E-61**

THIS PLAN ACCURATE FOR ELECTRICAL WORK ONLY.

STATE OF CALIFORNIA - DEPARTMENT OF TRANSPORTATION
Caltrans

CONSULTANT FUNCTIONAL SUPERVISOR: SHAHRAM VAHDAT
CALCULATED-DESIGNED BY: DOUGLAS E. SMITH
CHECKED BY: DAVID MADERA
REVISED BY
DATE REVISED

LAST REVISION 00-00-00
DATE PLOTTED => 21-OCT-2010
TIME PLOTTED => 11:19

Dist	COUNTY	ROUTE	POST MILES TOTAL PROJECT	SHEET No.	TOTAL SHEETS
07	LA	47,103	3.5/4.6, 0.0/1.1	367	1003

REGISTERED CIVIL ENGINEER 7/19/10 DATE

10-11-10
PLANS APPROVAL DATE

REGISTERED PROFESSIONAL ENGINEER DOUGLAS SMITH No. 43549 Exp 06/30/12 CIVIL STATE OF CALIFORNIA

THE STATE OF CALIFORNIA OR ITS OFFICERS OR AGENTS SHALL NOT BE RESPONSIBLE FOR THE ACCURACY OR COMPLETENESS OF SCANNED COPIES OF THIS PLAN SHEET.

URS CORPORATION
915 WILSHIRE BOULEVARD
SUITE 700
LOS ANGELES, CA 90017

ALAMEDA CORRIDOR
TRANSPORTATION AUTHORITY
ONE CIVIL PLAZA, SUITE 350
CARSON, CA 90745

PROJECT NOTES:

1. ALL METALLIC CONDUITS, BOLTS STRAPS AND Misc HARDWARE SHALL BE GALVANIZED.
2. BACKPLATES ARE REQUIRED ON ALL SIGNAL FACES.
3. ELEMENTS (TOTAL CCTV ASSEMBLY) SHALL HAVE A MAXIMUM WEIGHT OF 10 LBS AND A MAXIMUM EFFECTIVE PRESSURE AREA OF 1 SQUARE FOOT.
4. MAXIMUM OF 2 ELEMENTS ADDED PER TRAFFIC SIGNAL STRUCTURE. MAXIMUM OF 1 ELEMENT PER ARM (LIGHTING ARM OR TRAFFIC SIGNAL ARM).

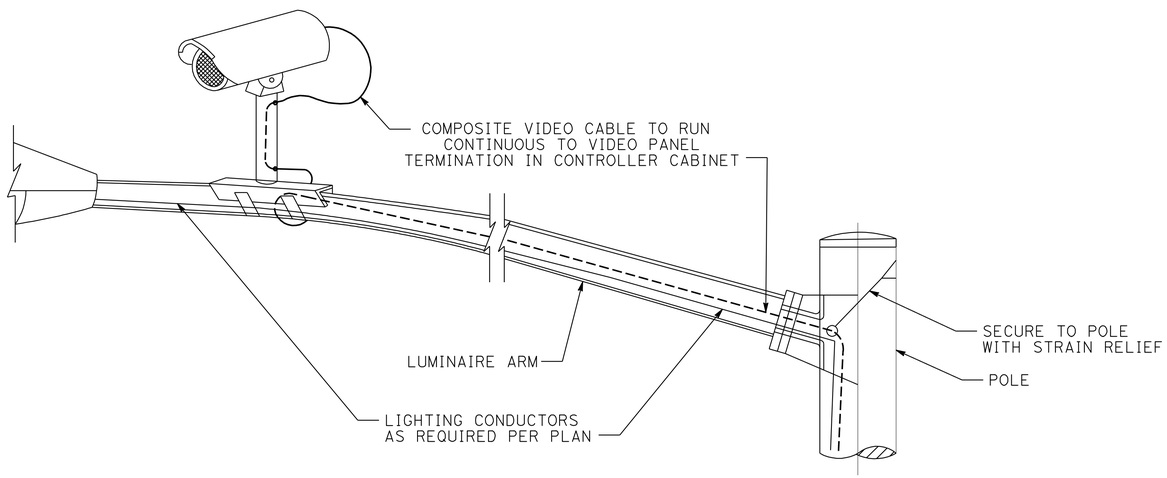

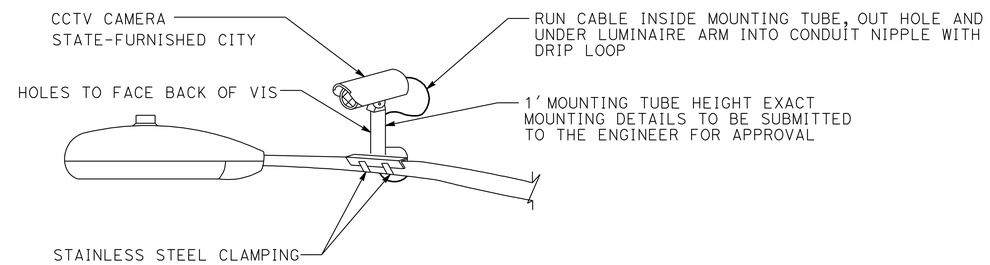

CAMERA MOUNTING DETAILS

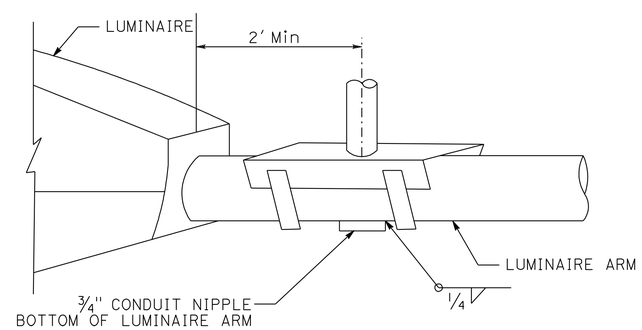

DETAIL A

CLOSED CIRCUIT TELEVISION CAMERA SYSTEM (CITY)

CAMERA MOUNTING DETAILS

NO SCALE

E-62

THIS PLAN ACCURATE FOR ELECTRICAL WORK ONLY.

STATE OF CALIFORNIA - DEPARTMENT OF TRANSPORTATION
Caltrans

CONSULTANT FUNCTIONAL SUPERVISOR: SHAHRAM VAHDAT
CALCULATED-DESIGNED BY: DOUGLAS E. SMITH
CHECKED BY: DAVID MADERA
REVISED BY
DATE REVISED

LAST REVISION 00-00-00
DATE PLOTTED => 19-OCT-2010
TIME PLOTTED => 07:16

Dist	COUNTY	ROUTE	POST MILES TOTAL PROJECT	SHEET No.	TOTAL SHEETS
07	LA	47,103	3.5/4.6, 0.0/1.1	368	1003

REGISTERED CIVIL ENGINEER 7/19/10 DATE

10-11-10
PLANS APPROVAL DATE

REGISTERED PROFESSIONAL ENGINEER DOUGLAS SMITH No. 43549 Exp 06/30/12 CIVIL STATE OF CALIFORNIA

THE STATE OF CALIFORNIA OR ITS OFFICERS OR AGENTS SHALL NOT BE RESPONSIBLE FOR THE ACCURACY OR COMPLETENESS OF SCANNED COPIES OF THIS PLAN SHEET.

URS CORPORATION
915 WILSHIRE BOULEVARD
SUITE 700
LOS ANGELES, CA 90017

ALAMEDA CORRIDOR
TRANSPORTATION AUTHORITY
ONE CIVIL PLAZA, SUITE 350
CARSON, CA 90745

NOTE:

FOR ACCURATE RIGHT OF WAY AND ACCESS DATA, CONTACT RIGHT OF WAY ENGINEERING AT THE DISTRICT OFFICE.

GENERAL NOTE:

1. SEE LIGHTING AND SIGN ILLUMINATION PLANS FOR REMOVAL OF Exist CONDUIT AND CONDUCTORS.

PROJECT NOTES: (E-63 TO E-64)

1 INSTALL 40′ WOOD POLE (WITHOUT LMA). SEE SHEET E-65 FOR DETAILS.

2 INSTALL 40′ WOOD POLE WITH 12′ LMA AND 310 W HPS LUMINAIRE. SEE SHEET E-65 FOR DETAILS.

3 INSTALL 1½" CONDUIT RISER, 2#8, 1#8G.

WIRING DIAGRAM LEGEND: (E-63 TO E-64)

◌ = Exist TYPE 15, 200 W OR 310 W HPS

Ⓣ = INSTALL Temp 310 W HPS LAMP WITH INTEGRAL BALLAST

-------- = Exist CONDUCTORS TO REMAIN

——— = NEW CONDUCTORS

○ = Exist SPLICE

● = NEW SPLICE

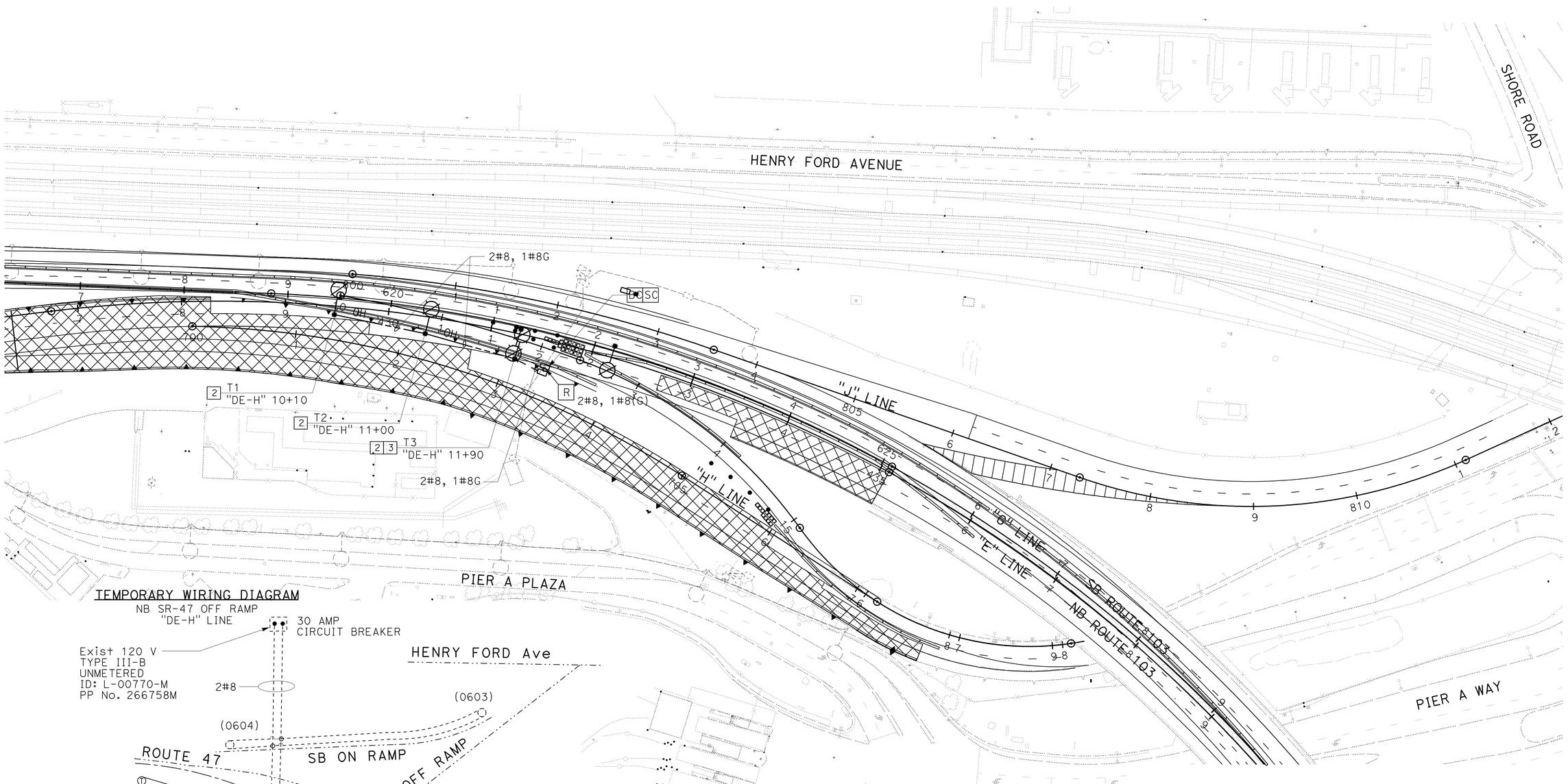

THIS PLAN ACCURATE FOR ELECTRICAL WORK ONLY.

LIGHTING (TEMPORARY)

STAGE 2A

SCALE: 1" = 50′

E-63

STATE OF CALIFORNIA - DEPARTMENT OF TRANSPORTATION

Caltrans

CONSULTANT FUNCTIONAL SUPERVISOR: SHAHRAM VAHDAT

CALCULATED-DESIGNED BY: DOUGLAS E. SMITH

CHECKED BY: DAVID MADERA

REVISED BY

DATE REVISED

LAST REVISION 00-00-00

DATE PLOTTED => 19-OCT-2010
TIME PLOTTED => 07:16

BORDER LAST REVISED 4/11/2008

RELATIVE BORDER SCALE IS IN INCHES 0 1 2 3

USERNAME => trpierce
DGN FILE => 713820ua063.dgn

CU 07271

EA 138201

Dist	COUNTY	ROUTE	POST MILES TOTAL PROJECT	SHEET No.	TOTAL SHEETS
07	LA	47,103	3.5/4.6, 0.0/1.1	369	1003

REGISTERED CIVIL ENGINEER 7/19/10 DATE

10-11-10
PLANS APPROVAL DATE

REGISTERED PROFESSIONAL ENGINEER DOUGLAS SMITH No. 43549 Exp 06/30/12 CIVIL STATE OF CALIFORNIA

THE STATE OF CALIFORNIA OR ITS OFFICERS OR AGENTS SHALL NOT BE RESPONSIBLE FOR THE ACCURACY OR COMPLETENESS OF SCANNED COPIES OF THIS PLAN SHEET.

URS CORPORATION
915 WILSHIRE BOULEVARD
SUITE 700
LOS ANGELES, CA 90017

ALAMEDA CORRIDOR
TRANSPORTATION AUTHORITY
ONE CIVIL PLAZA, SUITE 350
CARSON, CA 90745

NOTE:

FOR ACCURATE RIGHT OF WAY AND ACCESS DATA, CONTACT RIGHT OF WAY ENGINEERING AT THE DISTRICT OFFICE.

TEMPORARY WIRING DIAGRAM

SB SR-47 ON RAMP
"DE-J" LINE

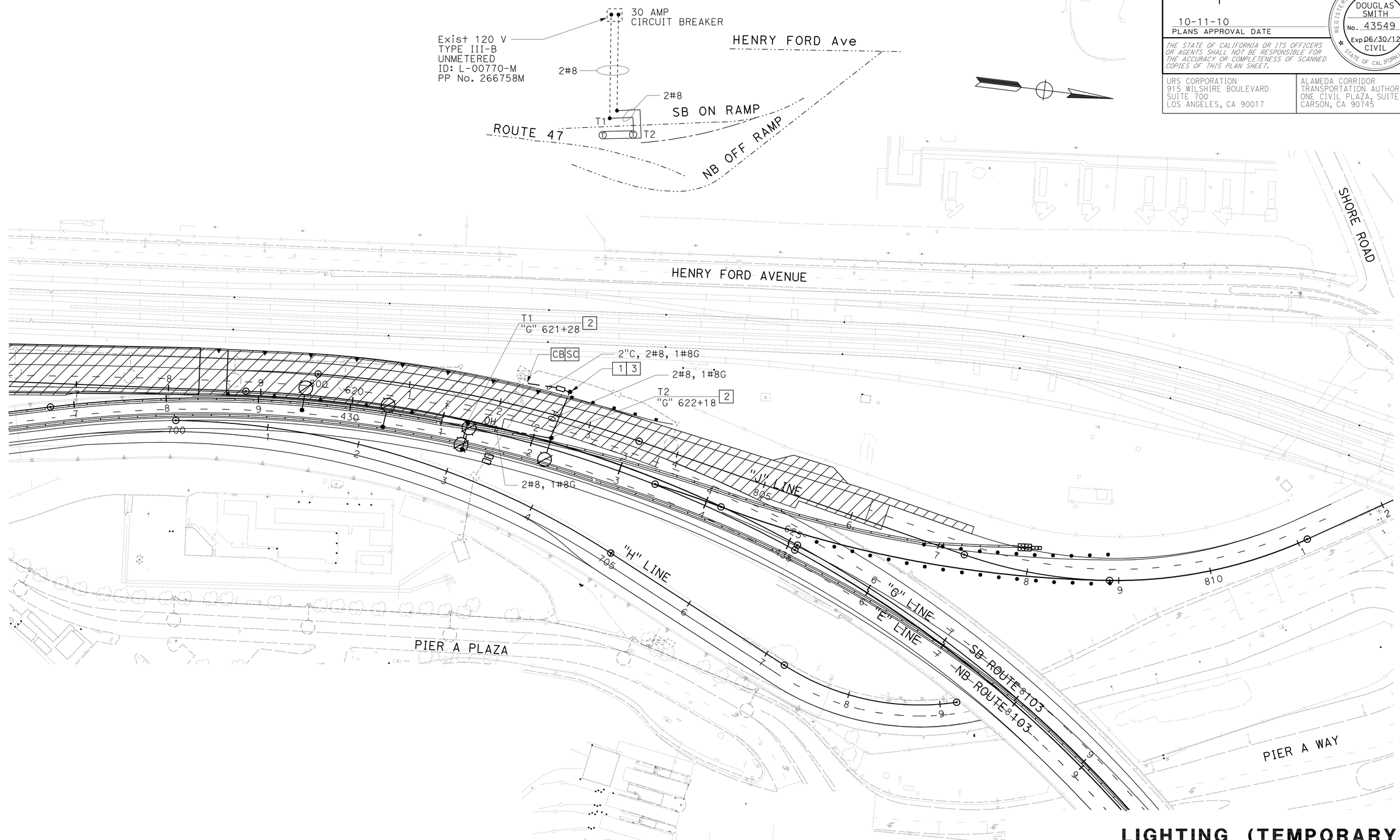

LIGHTING (TEMPORARY)

STAGE 3A

SCALE: 1" = 50'

E-64

FOR NOTES AND LEGEND, SEE SHEET E-63.
THIS PLAN ACCURATE FOR ELECTRICAL WORK ONLY.

STATE OF CALIFORNIA - DEPARTMENT OF TRANSPORTATION
Caltrans

CONSULTANT FUNCTIONAL SUPERVISOR: SHAHRAM VAHDAT

CALCULATED-DESIGNED BY: DAVID MADERA
CHECKED BY: DOUGLAS E. SMITH

REVISED BY | DATE REVISED

LAST REVISION 00-00-00 | DATE PLOTTED => 19-OCT-2010 | TIME PLOTTED => 07:16

Dist	COUNTY	ROUTE	POST MILES TOTAL PROJECT	SHEET No.	TOTAL SHEETS
07	LA	47,103	3.5/4.6, 0.0/1.1	370	1003

REGISTERED CIVIL ENGINEER 7/19/10 DATE

10-11-10
PLANS APPROVAL DATE

REGISTERED PROFESSIONAL ENGINEER DOUGLAS SMITH No. 43549 Exp 06/30/12 CIVIL STATE OF CALIFORNIA

THE STATE OF CALIFORNIA OR ITS OFFICERS OR AGENTS SHALL NOT BE RESPONSIBLE FOR THE ACCURACY OR COMPLETENESS OF SCANNED COPIES OF THIS PLAN SHEET.

URS CORPORATION
915 WILSHIRE BOULEVARD
SUITE 700
LOS ANGELES, CA 90017

ALAMEDA CORRIDOR
TRANSPORTATION AUTHORITY
ONE CIVIL PLAZA, SUITE 350
CARSON, CA 90745

NOTES:

1. WOOD POLES SHALL BE GUYED OR RAKED WHERE NECESSARY.
2. OVERHEAD LINE CONSTRUCTION NOT SPECIFICALLY COVERED HEREON SHALL CONFORM WITH THE PROVISIONS OF GENERAL ORDER No. 95 OF PUBLIC UTILITIES COMMISSION.

PROJECT NOTES:

1. ALL OVERHEAD CABLE/CONDUCTORS SHALL BE SLACK SPANNED WITH 25′ Min CLEARANCE AT CROSSINGS OF ROADWAY WITH VEHICULAR TRAVEL AND 10′ Min FOR OTHER OVERHEAD SPANS.
2. CABLE/CONDUCTORS SHALL BE SUSPENDED FROM SPAN-WIRE AS FOLLOWS:
   A) ACROSS ROADWAY: 3/8" - SPAN WIRE
   B) OTHER: BARE MESSENGER WIRE

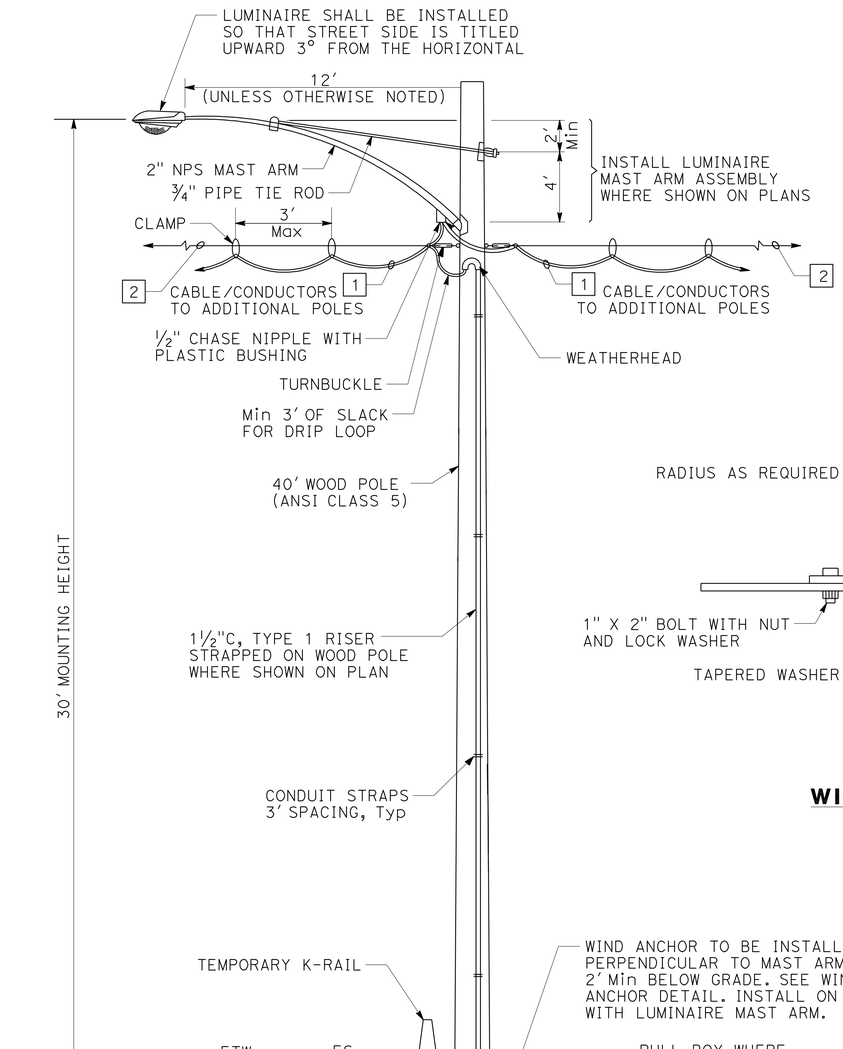

WOOD POLE MOUNTING DETAIL A

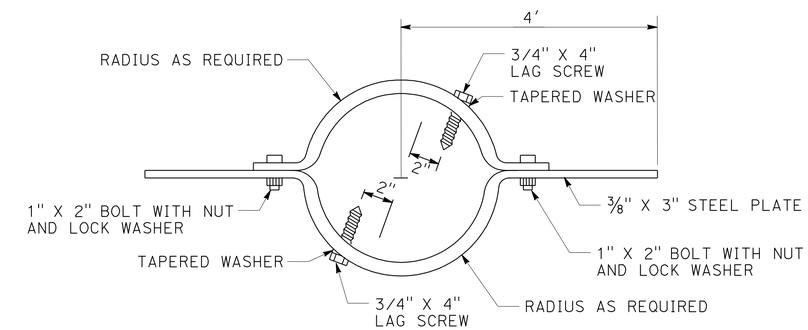

WIND ANCHOR DETAIL

FOR NOTES AND ABBREVIATIONS, SEE SHEET E-63.

THIS PLAN ACCURATE FOR ELECTRICAL WORK ONLY.

LIGHTING (TEMPORARY)
(ELECTRICAL DETAILS)

NO SCALE

E-65

STATE OF CALIFORNIA - DEPARTMENT OF TRANSPORTATION
Caltrans

CONSULTANT FUNCTIONAL SUPERVISOR: SHAHRAM VAHDAT
CALCULATED-DESIGNED BY: DOUGLAS E. SMITH
CHECKED BY: DAVID MADERA
REVISED BY
DATE REVISED

LAST REVISION 00-00-00
DATE PLOTTED => 19-OCT-2010
TIME PLOTTED => 07:16

Dist	COUNTY	ROUTE	POST MILES TOTAL PROJECT	SHEET No.	TOTAL SHEETS
07	LA	47,103	3.5/4.6, 0.0/1.1	371	1003

REGISTERED CIVIL ENGINEER 07/19/10 DATE

10-11-10
PLANS APPROVAL DATE

REGISTERED PROFESSIONAL ENGINEER RICHARD F. NORTON No. C41646 Exp. 12/31/11 CIVIL STATE OF CALIFORNIA

THE STATE OF CALIFORNIA OR ITS OFFICERS OR AGENTS SHALL NOT BE RESPONSIBLE FOR THE ACCURACY OR COMPLETENESS OF SCANNED COPIES OF THIS PLAN SHEET.

URS CORPORATION
915 WILSHIRE BOULEVARD
SUITE 700
LOS ANGELES, CA 90017

ALAMEDA CORRIDOR TRANSPORTATION AUTHORITY
ONE CIVIC PLAZA, SUITE 350
CARSON, CA 90745

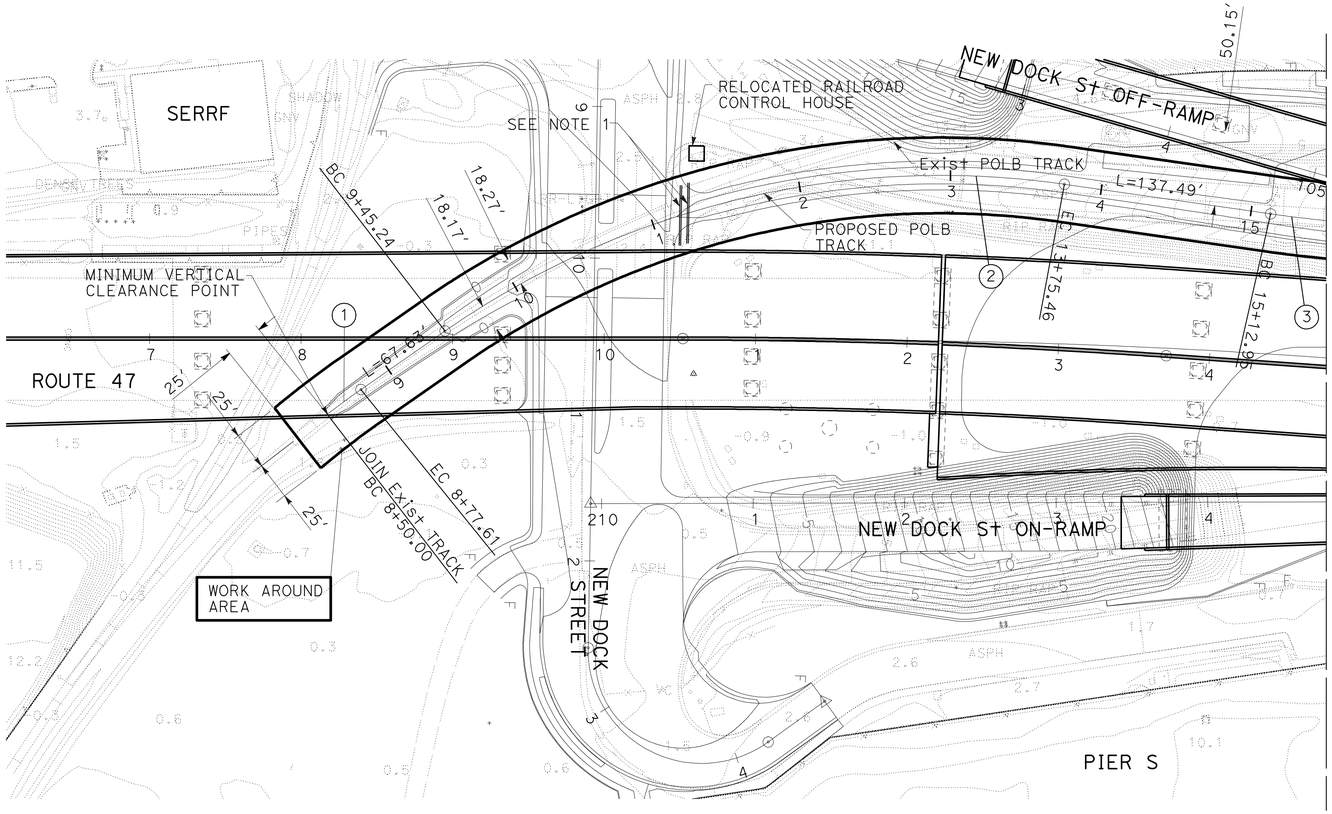

NOTE:

1. INSTALL 2 EACH 12" STEEL CASINGS 40' LENGTH AND 0.31" THICKNESS. CASINGS TO HAVE 5' MIN COVER FROM BASE OF RAILROAD TIE TO TOP OF CASING.

CURVE DATA					
	R	Δ	DEGREE OF CURVATURE	T	L
1	572.96	2°45'39.296"	10°00'00.000"	13.81	27.61
2	572.96	43°1'17.952"	10°00'00.000"	225.82	430.22
3	820.00	12°50'03.761"	6°59'14.245"	92.23	183.68

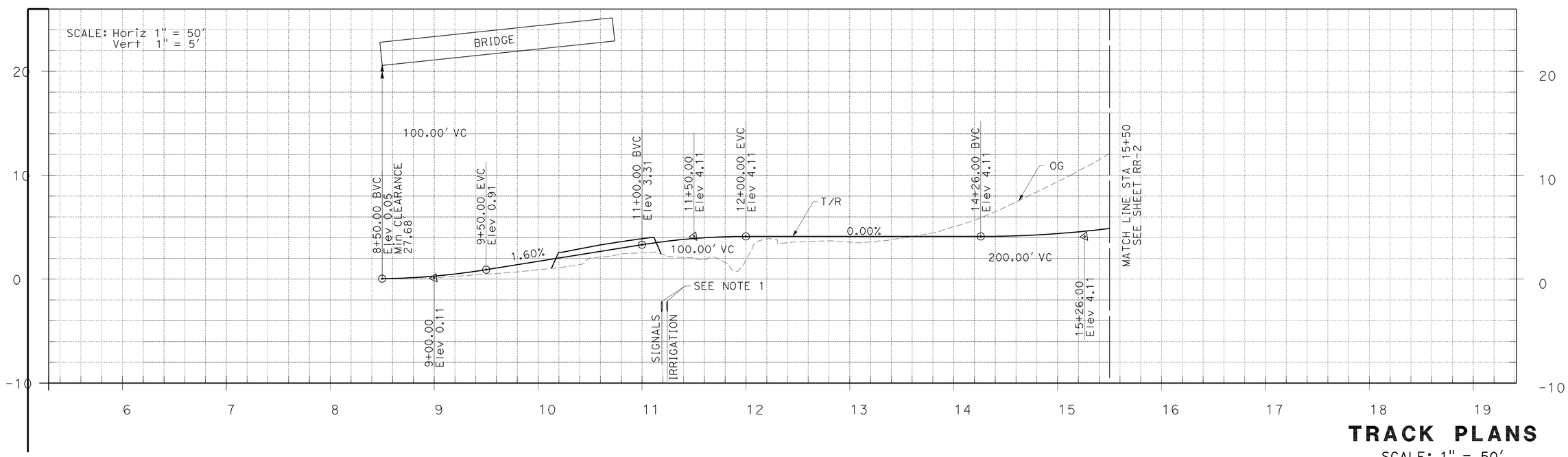

TRACK PLANS

SCALE: 1" = 50'

RR-1

STATE OF CALIFORNIA - DEPARTMENT OF TRANSPORTATION
Caltrans

CONSULTANT FUNCTIONAL SUPERVISOR: SHAHRAM VAHDAT

CALCULATED-DESIGNED BY | CHECKED BY | REVISED BY | DATE REVISED

LAST REVISION 00-00-00 | DATE PLOTTED => 19-OCT-2010 | TIME PLOTTED => 07:16

Dist	COUNTY	ROUTE	POST MILES TOTAL PROJECT	SHEET No.	TOTAL SHEETS
07	LA	47,103	3.5/4.6, 0.0/1.1	372	1003

REGISTERED CIVIL ENGINEER — DATE 07/19/10

10-11-10
PLANS APPROVAL DATE

REGISTERED PROFESSIONAL ENGINEER — RICHARD F. NORTON — No. C41646 — Exp. 12/31/11 — CIVIL — STATE OF CALIFORNIA

THE STATE OF CALIFORNIA OR ITS OFFICERS OR AGENTS SHALL NOT BE RESPONSIBLE FOR THE ACCURACY OR COMPLETENESS OF SCANNED COPIES OF THIS PLAN SHEET.

URS CORPORATION
915 WILSHIRE BOULEVARD
SUITE 700
LOS ANGELES, CA 90017

ALAMEDA CORRIDOR
TRANSPORTATION AUTHORITY
ONE CIVIC PLAZA, SUITE 350
CARSON, CA 90745

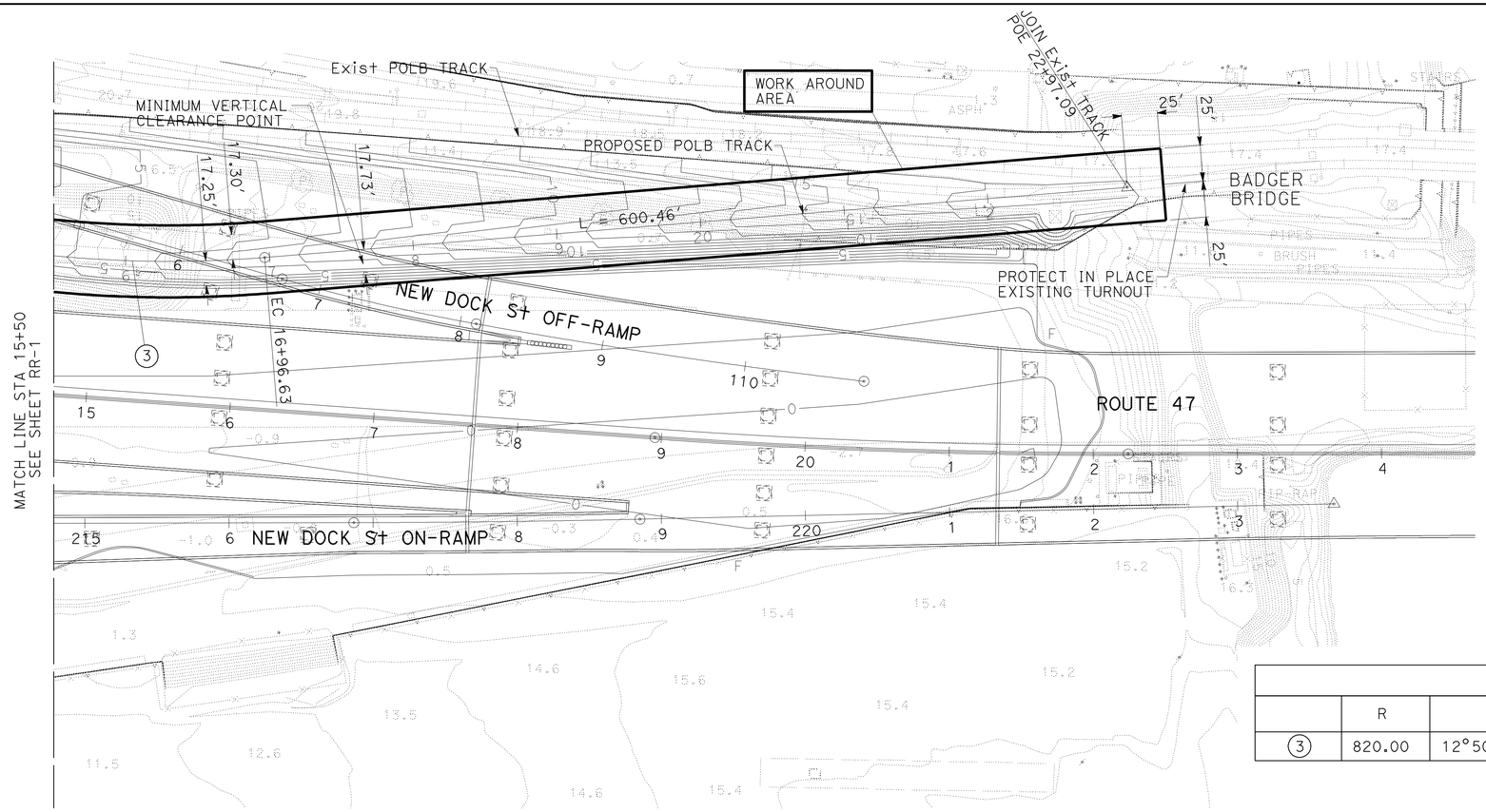

CURVE DATA					
	R	Δ	DEGREE OF CURVATURE	T	L
3	820.00	12°50'03.761"	6°59'14.245"	92.23	183.68

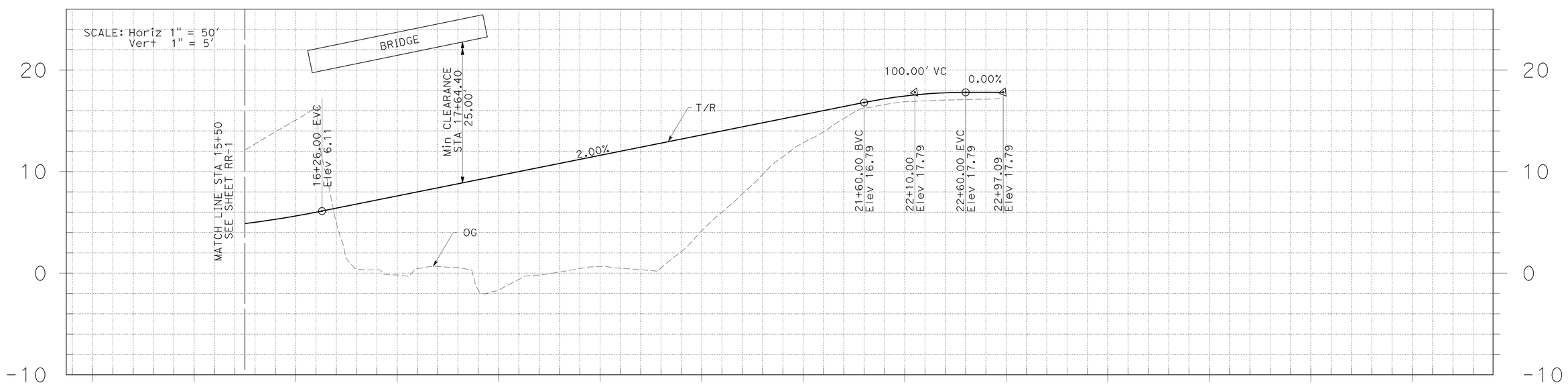

TRACK PLANS

SCALE: 1" = 50'

RR-2

STATE OF CALIFORNIA - DEPARTMENT OF TRANSPORTATION
Caltrans®
CONSULTANT FUNCTIONAL SUPERVISOR: SHAHRAM VAHDAT
CALCULATED-DESIGNED BY
CHECKED BY
REVISED BY
DATE REVISED

LAST REVISION 00-00-00
DATE PLOTTED => 19-OCT-2010
TIME PLOTTED => 07:25

Dist	COUNTY	ROUTE	POST MILES TOTAL PROJECT	SHEET No.	TOTAL SHEETS
07	LA	47,103	3.5/4.6, 0.0/1.1	373	1003

REGISTERED CIVIL ENGINEER 07/19/10 DATE

10-11-10
PLANS APPROVAL DATE

REGISTERED PROFESSIONAL ENGINEER RICHARD F. NORTON No. C41646 Exp. 12/31/11 CIVIL STATE OF CALIFORNIA

THE STATE OF CALIFORNIA OR ITS OFFICERS OR AGENTS SHALL NOT BE RESPONSIBLE FOR THE ACCURACY OR COMPLETENESS OF SCANNED COPIES OF THIS PLAN SHEET.

URS CORPORATION
915 WILSHIRE BOULEVARD
SUITE 700
LOS ANGELES, CA 90017

ALAMEDA CORRIDOR
TRANSPORTATION AUTHORITY
ONE CIVIC PLAZA, SUITE 350
CARSON, CA 90745

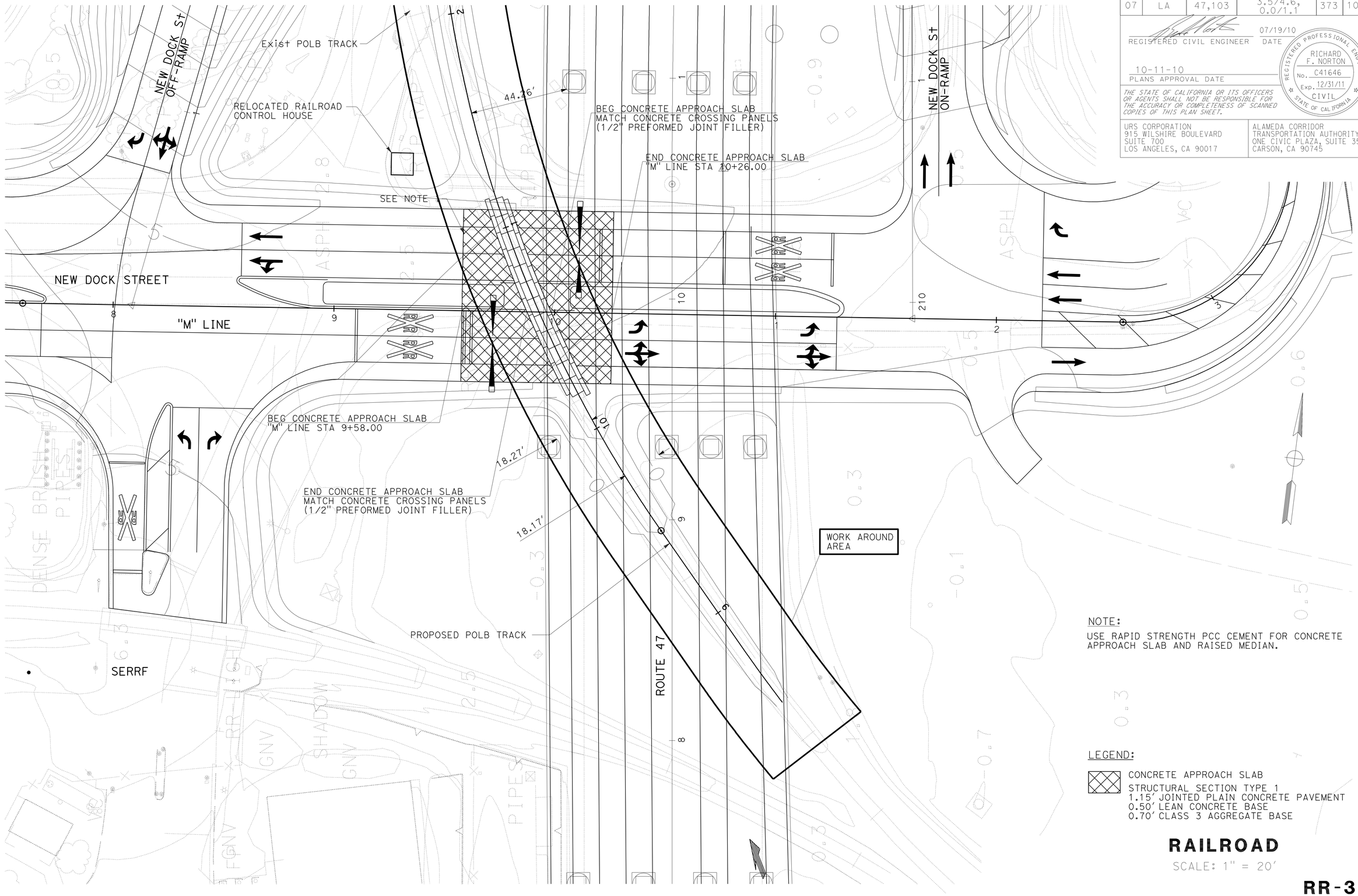

NOTE:

USE RAPID STRENGTH PCC CEMENT FOR CONCRETE APPROACH SLAB AND RAISED MEDIAN.

LEGEND:

CONCRETE APPROACH SLAB
STRUCTURAL SECTION TYPE 1
1.15' JOINTED PLAIN CONCRETE PAVEMENT
0.50' LEAN CONCRETE BASE
0.70' CLASS 3 AGGREGATE BASE

RAILROAD

SCALE: 1" = 20'

RR-3

REVISED BY | DATE REVISED

CALCULATED-DESIGNED BY | CHECKED BY

CONSULTANT FUNCTIONAL SUPERVISOR: SHAHRAM VAHDAT

STATE OF CALIFORNIA - DEPARTMENT OF TRANSPORTATION

Caltrans

LAST REVISION 00-00-00 | DATE PLOTTED => 19-OCT-2010 | TIME PLOTTED => 07:16

Dist	COUNTY	ROUTE	POST MILES TOTAL PROJECT	SHEET No.	TOTAL SHEETS
07	LA	47,103	3.5/4.6, 0.0/1.1	374	1003

REGISTERED CIVIL ENGINEER 07/19/10 DATE

10-11-10
PLANS APPROVAL DATE

REGISTERED PROFESSIONAL ENGINEER RICHARD F. NORTON No. C41646 Exp. 12/31/11 CIVIL STATE OF CALIFORNIA

THE STATE OF CALIFORNIA OR ITS OFFICERS OR AGENTS SHALL NOT BE RESPONSIBLE FOR THE ACCURACY OR COMPLETENESS OF SCANNED COPIES OF THIS PLAN SHEET.

URS CORPORATION
915 WILSHIRE BOULEVARD
SUITE 700
LOS ANGELES, CA 90017

ALAMEDA CORRIDOR
TRANSPORTATION AUTHORITY
ONE CIVIC PLAZA, SUITE 350
CARSON, CA 90745

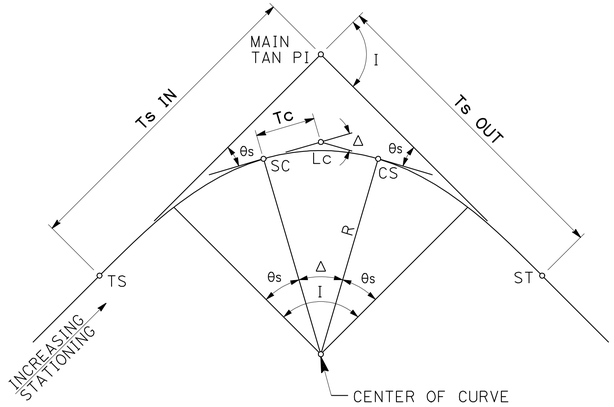

FIGURE A

CIRCULAR CURVES WITH SPIRAL TRANSITION

I - TOTAL INTERSECTION ANGLE

θs - SPIRAL ANGLE = $\frac{Ls\Delta}{200}$

Δ - CENTRAL ANGLE OF CIRCULAR CURVE = I -2θs
R - RADIUS OF CIRCULAR CURVE
Tc - TANGENT LENGTH OF CIRCULAR CURVE = R TAN $\frac{\Delta}{2}$

Lc - LENGTH OF CIRCULAR CURVE = $\frac{\Delta}{180}\pi R$

TS - TANGENT TO SPIRAL
SC - SPIRAL TO CURVE
CS - CURVE TO SPIRAL
ST - SPIRAL TO TANGENT
MAIN TAN PI - POINT OF INTERSECTION OF MAIN TANGENTS

(Ts IN)
(Ts OUT) - TANGENT LENGTH OF COMPLETE CURVE=(R+P) TAN $\frac{I}{2}$ + K

(WHEN SPIRALS OF EQUAL LENGTH ARE USED ON BOTH SIDES OF CIRCULAR CURVE. SEE FIGURE C FOR P AND K)

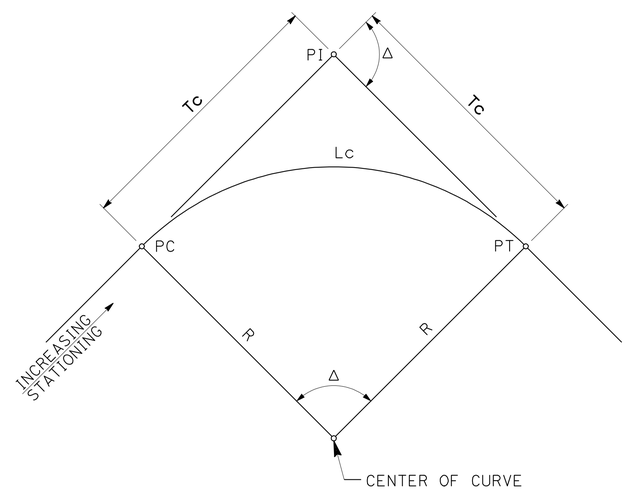

FIGURE B

SIMPLE CIRCULAR CURVE

CIRCULAR CURVES ARE DEFINED BY THE ARC DEFINITION OF CURVATURE (Dc), AND SPECIFIED BY THEIR RADIUS.

R - RADIUS OF CIRCULAR CURVE

Δ - CENTRAL ANGLE OF CIRCULAR CURVE

Tc - R TAN $\frac{\Delta}{2}$

Lc - $\frac{\Delta}{180}\pi R$

Dc - $\frac{5729.578}{R}$ (R IN FEET) (ARC DEFINITION)

PC - TANGENT TO SIMPLE CURVE

CC - COMPOUND CURVE TO CURVE

PT - SIMPLE CURVE TO TANGENT

NOTES:

I, Δ, AND θs ARE IN DEGREES.

ALL OTHER DIMENSIONS ARE IN FEET.

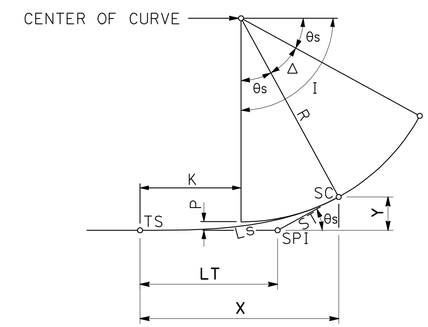

FIGURE C

SPIRAL TRANSITION CURVE

Ls - LENGTH OF SPIRAL (TS TO SC OR CS TO ST)

θs - $\frac{Ls\Delta}{200}$ (Ls IN FEET)

P - Y - R (1 - COS θs)
K - X - R SIN θs

ST - SHORT TANGENT = $\frac{Y}{\sin\theta s}$

LT - LONG TANGENT = X - $\frac{Y}{\tan\theta s}$

HORIZONTAL CURVE GEOMETRY

NO SCALE

RR-4

STATE OF CALIFORNIA - DEPARTMENT OF TRANSPORTATION
Caltrans

CONSULTANT FUNCTIONAL SUPERVISOR: SHAHRAM VAHDAT

CALCULATED-DESIGNED BY | CHECKED BY | REVISED BY | DATE REVISED

LAST REVISION 00-00-00 | DATE PLOTTED => 19-OCT-2010 | TIME PLOTTED => 07:16

DIST	COUNTY	ROUTE	POST MILES TOTAL PROJECT	SHEET NO.	TOTAL SHEETS
07	LA	47,103	3.5/4.6, 0.0/1.1	375	1003

REGISTERED CIVIL ENGINEER

June 6, 2008
PLANS APPROVAL DATE

REGISTERED PROFESSIONAL ENGINEER
Donald E. Howe
No. C46402
Exp. 3-31-09
CIVIL
STATE OF CALIFORNIA

The State of California or its officers or agents shall not be responsible for the accuracy or completeness of electronic copies of this plan sheet.

To accompany plans dated 10-11-10

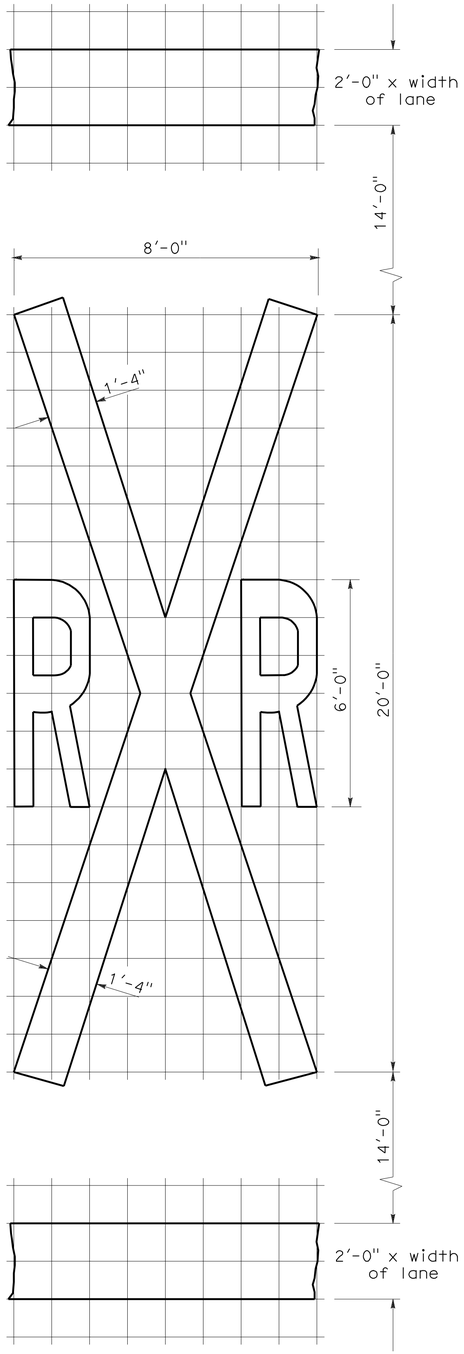

1'-0" GRID
A=70 sq ft ✳

RAILROAD CROSSING SYMBOL

✳70 sq ft DOES NOT INCLUDE THE 2'-0" x VARIABLE WIDTH TRANSVERSE LINES.

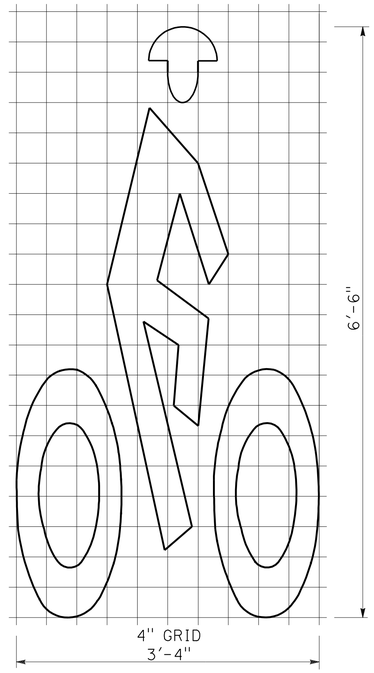

A=7 sq ft

BIKE LANE SYMBOL

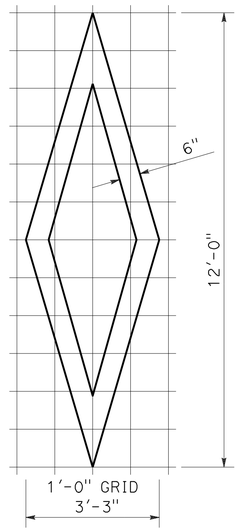

A=11 sq ft

DIAMOND SYMBOL

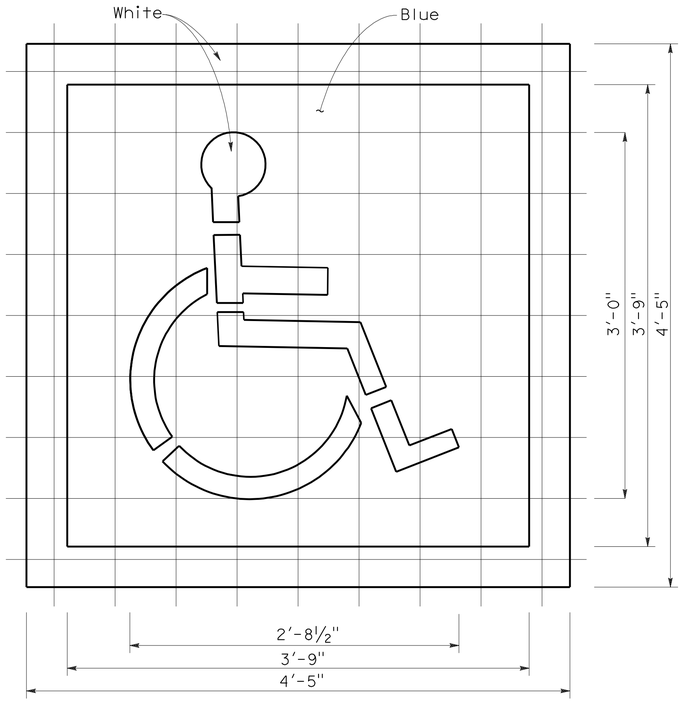

6" GRID
A (White) =9 sq ft
A (Blue) =14 sq ft

INTERNATIONAL SYMBOL OF ACCESSIBILITY MARKING

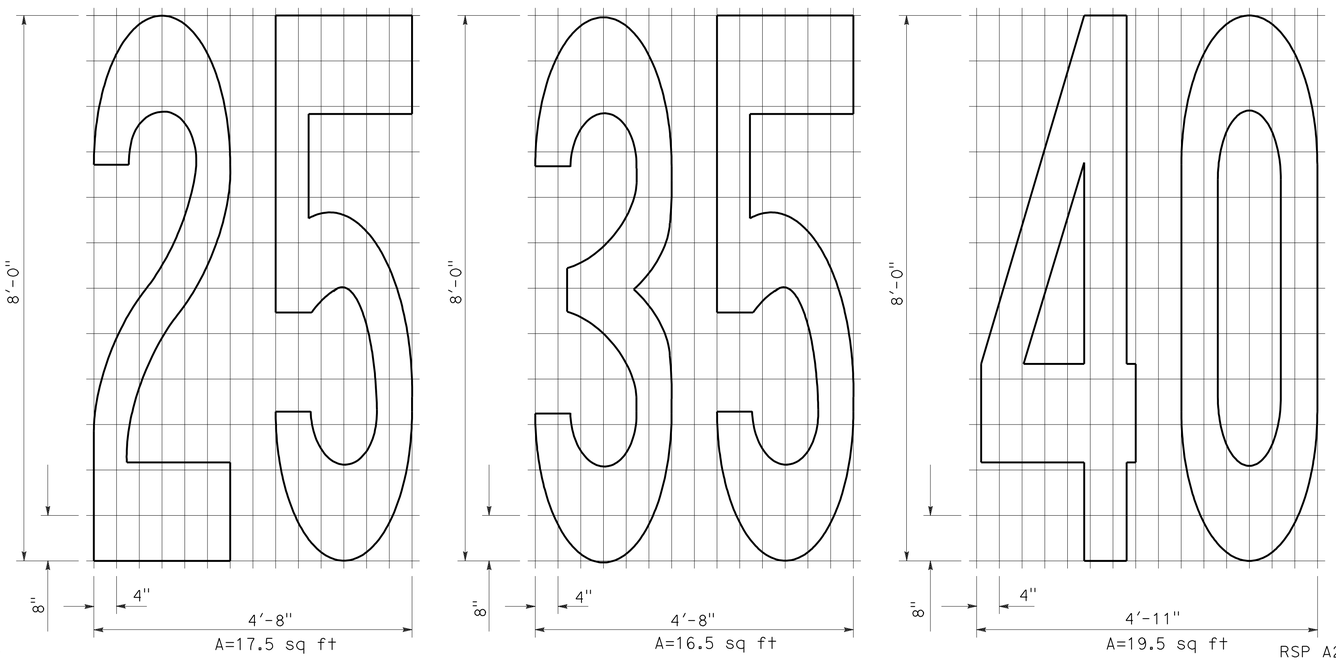

A=17.5 sq ft
A=16.5 sq ft
A=19.5 sq ft

NUMERALS

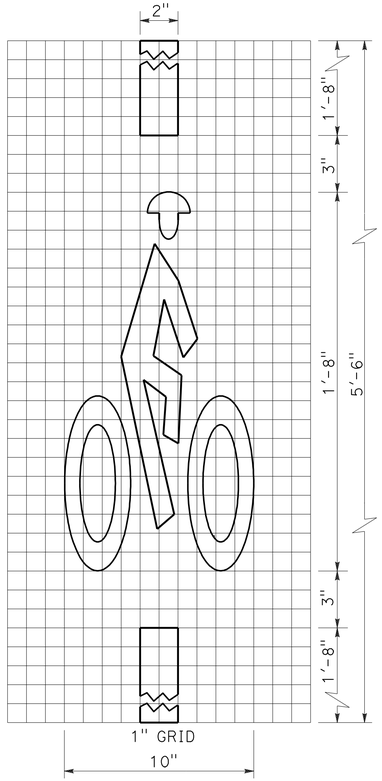

A=2 sq ft

BICYCLE LOOP DETECTOR SYMBOL

NOTE:

1. Minor variations in dimensions may be accepted by the Engineer.

STATE OF CALIFORNIA
DEPARTMENT OF TRANSPORTATION

PAVEMENT MARKINGS SYMBOLS AND NUMERALS

NO SCALE

RSP A24C DATED JUNE 6, 2008 SUPERSEDES STANDARD PLAN A24C DATED MAY 1, 2006 - PAGE 11 OF THE STANDARD PLANS BOOK DATED MAY 2006.

REVISED STANDARD PLAN RSP A24C

2006 REVISED STANDARD PLAN RSP A24C

5-27-08

DIST	COUNTY	ROUTE	POST MILES TOTAL PROJECT	SHEET NO.	TOTAL SHEETS
07	LA	47,103	3.5/4.6, 0.0/1.1	376	1003

REGISTERED CIVIL ENGINEER

November 17, 2006
PLANS APPROVAL DATE

REGISTERED PROFESSIONAL ENGINEER Dallas Forester No. C37765 Exp. 12-31-06 CIVIL STATE OF CALIFORNIA

The State of California or its officers or agents shall not be responsible for the accuracy or completeness of electronic copies of this plan sheet.

To accompany plans dated 10-11-10

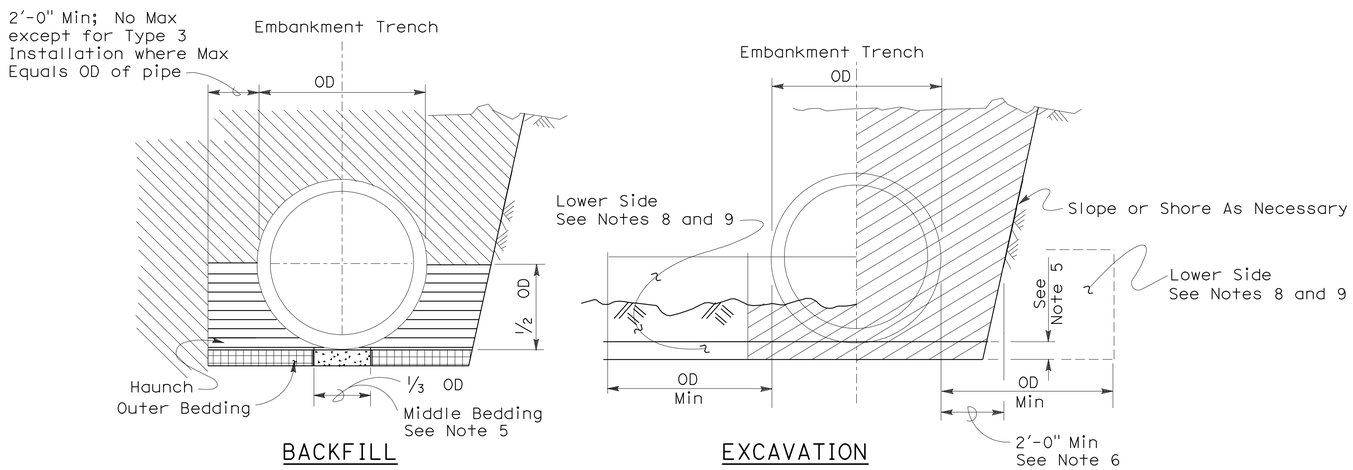

Roadway Embankment

Structure Backfill (Culvert) See Note 6

Structure Backfill (Culvert) See Note 6

Loose Backfill

Excavation Structure (Culvert)

TYPE 1 INSTALLATION:

The haunch and outer bedding shall be compacted to a minimum 90 percent relative compaction. In addition, the minimum sand equivalent in these areas shall be 30 and the maximum percentage passing the 75 μm sieve size shall be 12.

TYPE 2 INSTALLATION:

The haunch and outer bedding shall be compacted to a minimum 90 percent relative compaction. In addition, the minimum sand equivalent in these areas shall be 25.

TYPE 3 INSTALLATION:

The haunch and outer bedding shall be compacted to a minimum 85 percent relative compaction. 90 percent relative compaction will be required where the fill over the pipe is less than 4'-0" or 1/2 OD.

INSTALLATION TYPE 1

MINIMUM CLASS AND D-LOAD	COVER	
	108" Dia AND SMALLER	OVER 108" Dia
Class II 1000D	14.9'	12.9'
Class III 1350D	15.0' - 20.9'	13.0' - 18.9'
Class III Special 1700D	21.0' - 26.9'	19.0' - 24.9'
Class IV 2000D	27.0' - 31.9'	25.0' - 29.9'
Class IV Special 2500D	32.0' - 40.9'	30.0' - 38.9'
Class V 3000D	41.0' - 49.9'	39.0' - 46.9'
Class V Special 3600D	50.0' - 59.0'	47.0' - 58.0'

INSTALLATION TYPE 2

MINIMUM CLASS AND D-LOAD	COVER
Class II 1000D	9.9'
Class III 1350D	10.0'- 14.9'
Class III Special 1700D	15.0' - 19.9'
Class IV 2000D	20.0' - 24.9'
Class IV Special 2500D	25.0' - 31.9'
Class V 3000D	32.0' - 38.9'
Class V Special 3600D	39.0' - 47.0'

INSTALLATION TYPE 3

MINIMUM CLASS AND D-LOAD	COVER	
	48" Dia AND SMALLER	OVER 48" Dia
Class II 1000D	7.9'	5.9'
Class III 1350D	8.0' - 10.9'	6.0' - 8.9'
Class III Special 1700D	11.0' - 14.9'	9.0' - 12.9'
Class IV 2000D	15.0' - 17.9'	13.0' - 15.9'
Class IV Special 2500D	18.0' - 21.9'	16.0' - 19.9'
Class V 3000D	22.0' - 26.9'	20.0' - 24.9'
Class V Special 3600D	30.0' - 33.0'	25.0' - 31.0'

NOTES:

1. Unless otherwise shown on the plans or specified in the special provision, the Contractor shall have the option of selecting the class of RCP and the type of installation to be used, provided the height of cover does not exceed the value shown for the RCP selected.
   Example: 24" RCP culvert with maximum cover of 19'-0" the options are:
   a) Class III or stronger with Installation Type 1.
   b) Class III Special or stronger with Installation Type 2.
   c) Class IV Special or stronger with Installation Type 3.
   Cover is defined as the maximum vertical distance from top of the pipe to finished grade within the length of any given culvert.
2. The class of RCP and Installation Type selected shall be the same throughout the length of any given culvert.
3. The "length of any culvert" is defined as the culvert between:
   a) Successive drainage structure (inlets, junction boxes, headwalls, etc.).
   b) A drainage structure and the inlet or outlet end of the culvert.
   c) The inlet and outlet end of the culvert when there are no intervening drainage structures.
4. Oval and arch shaped RCP shall not be used.
5. 1/25 OD Min, not less than 3".
6. Slurry cement backfill may be substituted for backfill in the outer bedding and haunch areas. If slurry is used the outer and middle beddings shall be omitted. Prior to installation the soil under the middle 1/3 of the outside diameter of the pipe shall be softened by scarifying or other means to a minimum depth of 1/25 OD, but not less than 3". Where slurry cement backfill is used clear distance to trench wall may be reduced as set forth in Section 19-3.062 of the Standard Specifications.
7. Backfill shall be placed full width of excavation except where dimensions are shown for backfill width or thickness. Dimensions shown are minimums.
8. Lower side shall be suitable material as determined by the Engineer. Otherwise it shall be considered unsuitable as set forth in Section 19-2.02 of the Standard Specifications. See Note 9.
9. Where the pipe is placed in a trench, if the trench walls are sloped at 5 vertical to 1 horizontal or steeper for at least 90 percent of the trench height or up to not less than 12" from the grading plane, the firmness of the soil in the lower side need not be considered.
10. Non-reinforced precast concrete pipe sizes 3'-0" or smaller may be placed under installation Types 1, 2 or 3.

STATE OF CALIFORNIA
DEPARTMENT OF TRANSPORTATION

EXCAVATION AND BACKFILL CONCRETE PIPE CULVERTS

NO SCALE

RSP A62DA DATED NOVEMBER 17, 2006 SUPERSEDES STANDARD PLAN A62DA DATED MAY 1, 2006 - PAGE 20 OF THE STANDARD PLANS BOOK DATED MAY 2006.

REVISED STANDARD PLAN RSP A62DA

2006 REVISED STANDARD PLAN RSP A62DA

10-26-06

DIST	COUNTY	ROUTE	POST MILES TOTAL PROJECT	SHEET NO.	TOTAL SHEETS
07	LA	47,103	3.5/4.6, 0.0/1.1	377	1003

Mark S. Turner
PROFESSIONAL LAND SURVEYOR

June 30, 2006
PLANS APPROVAL DATE

LICENSED LAND SURVEYOR
Mark S. Turner
No. 6228
Exp. 3-31-08
STATE OF CALIFORNIA

The State of California or its officers or agents shall not be responsible for the accuracy or completeness of electronic copies of this plan sheet.

To accompany plans dated 10-11-10

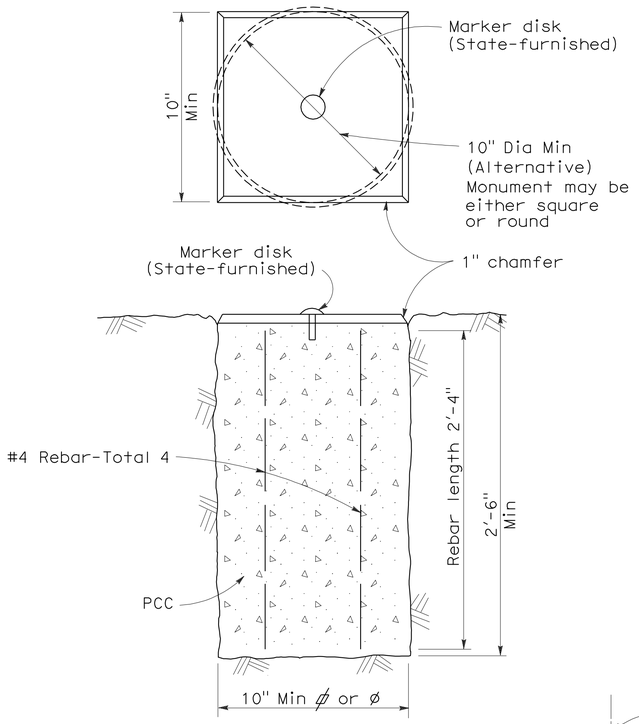

TYPE A

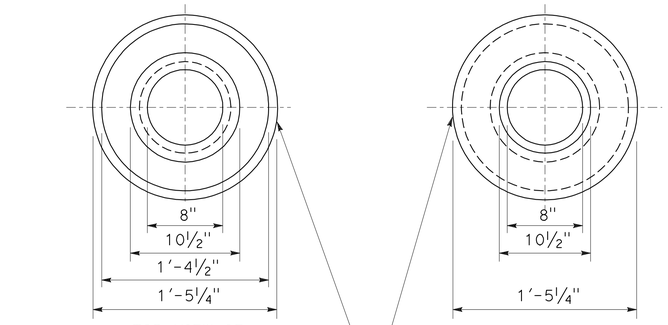

TOP VIEW OF
MONUMENT OF WELL RING

BOTTOM VIEW OF
MONUMENT OF WELL RING

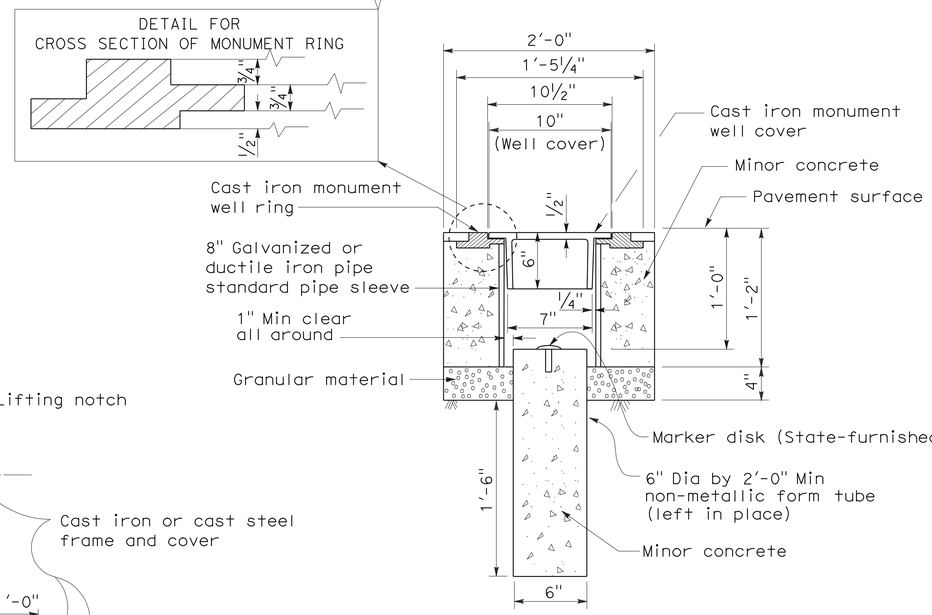

TYPE B

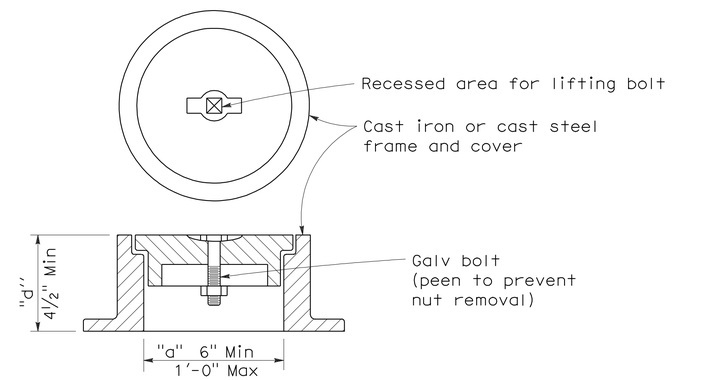

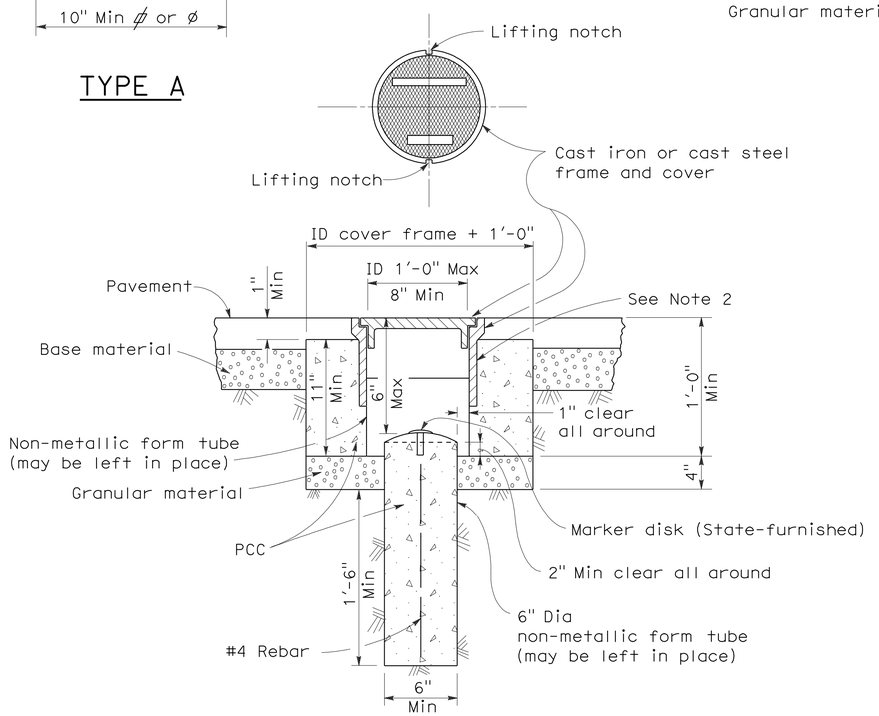

TYPE D
Alternative No. 1

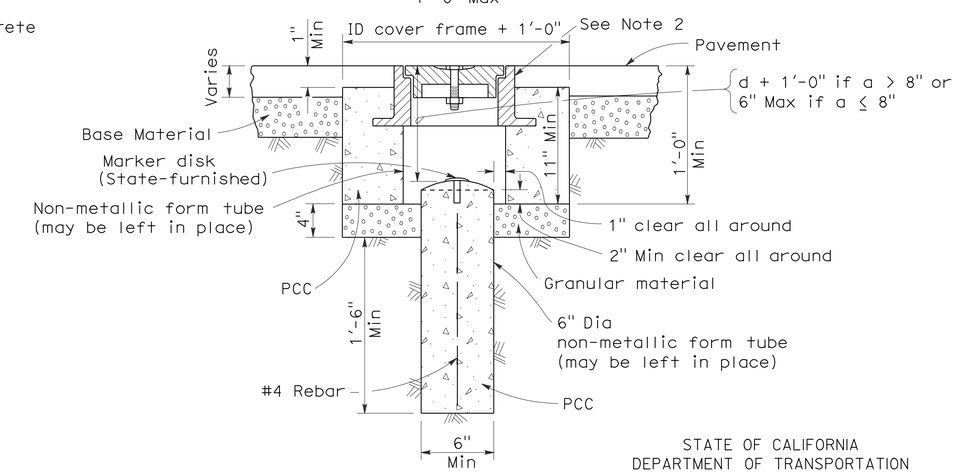

TYPE D
Alternative No. 2

NOTES:

1. The configuration of the cast iron or cast steel frame and cover may vary from that shown.
2. Frame shall be embedded in the concrete a minimum of 3".
3. Type D monument shall be either Alternative No. 1 or Alternative No. 2 at the contractor's option.
4. All portland cement concrete shall be Class 2 or minor concrete with 1" maximum aggregate.

STATE OF CALIFORNIA
DEPARTMENT OF TRANSPORTATION

SURVEY MONUMENTS

NO SCALE

RSP A74 DATED JUNE 30, 2006 SUPERSEDES STANDARD PLAN DATED MAY 1, 2006 - PAGE 28 OF THE STANDARD PLANS BOOK DATED MAY 2006.

REVISED STANDARD PLAN RSP A74

2006 REVISED STANDARD PLAN RSP A74

5-24-06

DIST	COUNTY	ROUTE	POST MILES TOTAL PROJECT	SHEET NO.	TOTAL SHEETS
07	LA	47,103	3.5/4.6, 0.0/1.1	378	1003

Randell D. Hiatt
REGISTERED CIVIL ENGINEER

June 6, 2008
PLANS APPROVAL DATE

REGISTERED PROFESSIONAL ENGINEER
Randell D. Hiatt
No. C50200
Exp. 6-30-09
CIVIL
STATE OF CALIFORNIA

The State of California or its officers or agents shall not be responsible for the accuracy or completeness of electronic copies of this plan sheet.

To accompany plans dated 10-11-10

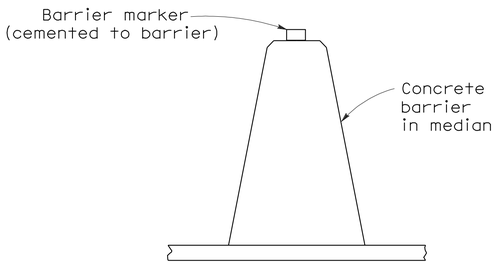

CONCRETE BARRIER TYPE 60 DELINEATION

See Notes 7 and 8

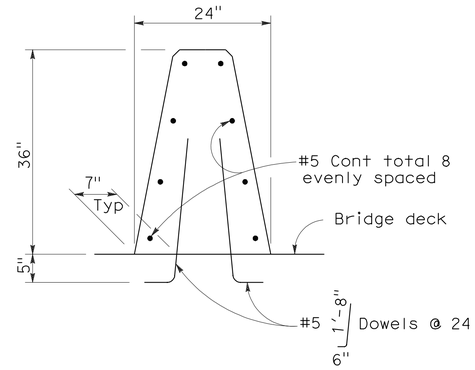

CONCRETE BARRIER TYPE 60A

Details similar to Type 60 except as noted.

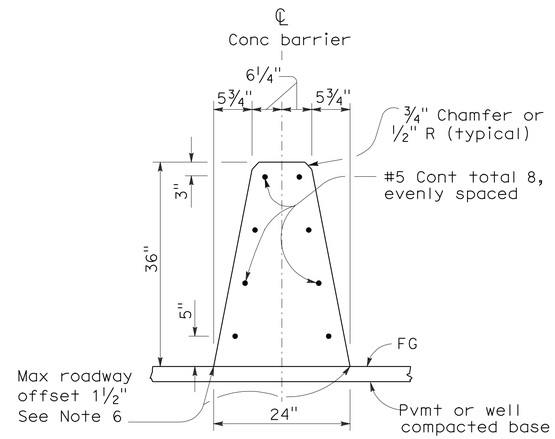

CONCRETE BARRIER TYPE 60

NOTES:

1. See Standard Plan A76B for details of Concrete Barrier Type 60 end anchors, connection to structures and transitions to Concrete Barrier Type 50 and Concrete Barrier Type 60S.
2. See Standard Plan A76C for Concrete Barrier Type 60 transitions at bridge column and sign pedestals.
3. Where glare screen is required on Concrete Barrier Type 60, use Concrete Barrier Type 60G.
4. Where the concrete barrier is added to the face of existing concrete structure, match existing weep holes.
5. Expansion joints in concrete barrier shall be located at all deck, pavement and principal wall joints. Expansion joint filler material shall be the same size as joint or ½" minimum.
6. Where roadway offset is greater than 1½", see Concrete Barrier Type 60C.
7. Barrier delineation to be used when required by the Special Provisions.
8. Spacing of barrier markers to match spacing of raised pavement markers on the adjacent median edgeline pavement delineation.
9. Reinforcing stirrup not required for roadway offsets less than 1'-0".
10. For roadway surfaces offset greater than 1½" to 3", no rebars required. For roadway surfaces offset greater than 3" to 8" use two #4 rebars at 3" above the lower roadway surface. For roadway surfaces offset greater than 8" to 12", use two #4 rebars at 3" above the lower roadway surface and two #4 rebars at 8" above the lower roadway surface. For roadway surfaces offset greater than 12" to 36", use two #4 rebars at 3" above the lower roadway surface and two #4 rebars at every 8" increment vertical spacing above the first two #4 rebars.

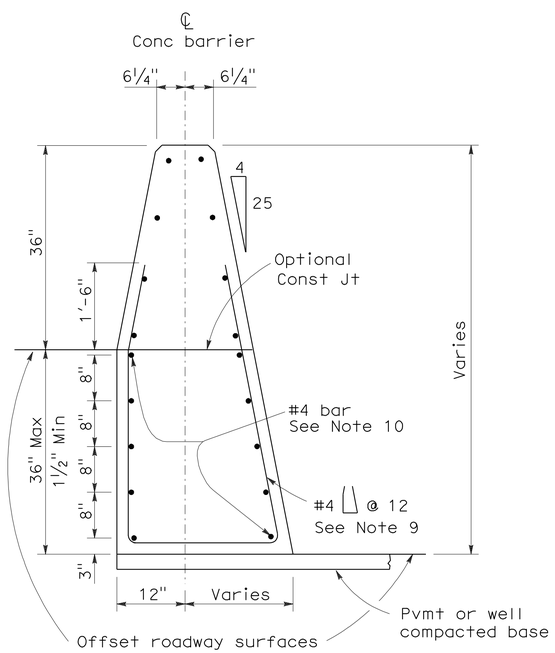

CONCRETE BARRIER TYPE 60C

Details similar to Type 60 except as noted.
Concrete barrier end anchor when necessary.
36" roadway surfaces offset shown.

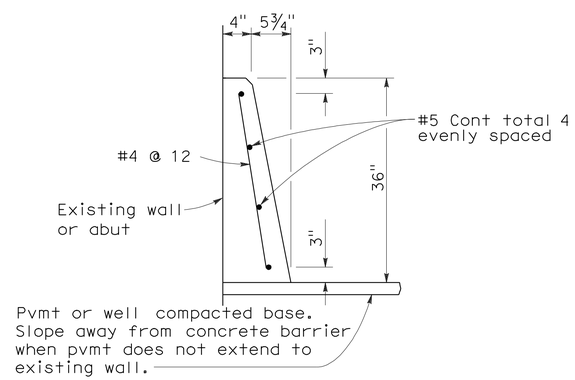

CONCRETE BARRIER TYPE 60D

STATE OF CALIFORNIA
DEPARTMENT OF TRANSPORTATION

CONCRETE BARRIER TYPE 60

NO SCALE

RSP A76A DATED JUNE 6, 2008 SUPERSEDES STANDARD PLAN A76A
DATED MAY 1, 2006 - PAGE 29 OF THE STANDARD PLANS BOOK DATED MAY 2006.

REVISED STANDARD PLAN RSP A76A

2006 REVISED STANDARD PLAN RSP A76A

5-21-08

DIST	COUNTY	ROUTE	POST MILES TOTAL PROJECT	SHEET NO.	TOTAL SHEETS
07	LA	47,103	3.5/4.6, 0.0/1.1	379	1003

Randell D. Hiatt
REGISTERED CIVIL ENGINEER

June 6, 2008
PLANS APPROVAL DATE

REGISTERED PROFESSIONAL ENGINEER
Randell D. Hiatt
No. C50200
Exp. 6-30-09
CIVIL
STATE OF CALIFORNIA

The State of California or its officers or agents shall not be responsible for the accuracy or completeness of electronic copies of this plan sheet.

To accompany plans dated 10-11-10

NOTES:

1. When necessary to place dike in front of face of guard railing, only Type C dike may be used. For dike details, see Standard Plan A87B.
2. For standard railing post embedment, see Standard Plans A77C3.
3. Guard railing delineation to be used where shown on the Project Plans.
4. When dike or curb is placed under guard railing, the maximum height of the dike or curb shall be 4". Mountable dike should not be used. For dike and curb details, see Revised Standard Plans RSP A87A and Standard Plan A87B.
5. For details of typical distance between the face of rail and hinge point, see Standard Plan A77C3.

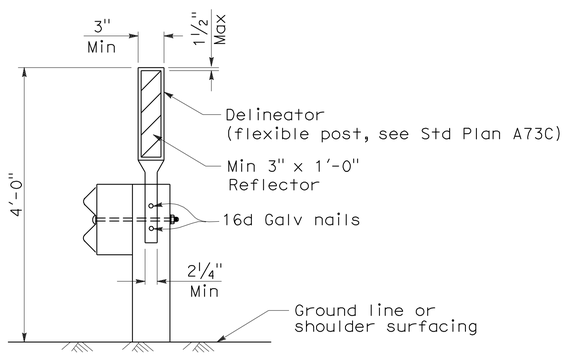

GUARD RAILING DELINEATION

See Note 3

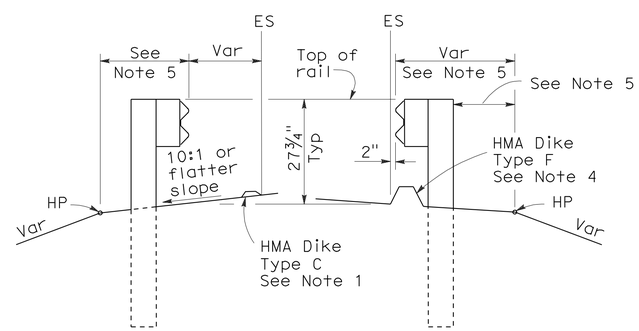

DIKE POSITIONING

See Note 1

STATE OF CALIFORNIA
DEPARTMENT OF TRANSPORTATION

METAL BEAM GUARD RAILING TYPICAL RAILING DELINEATION AND DIKE POSITIONING DETAILS

NO SCALE

RSP A77C4 DATED JUNE 6, 2008 SUPERSEDES STANDARD PLAN A77C4
DATED MAY 1, 2006 - PAGE 47 OF THE STANDARD PLANS BOOK DATED MAY 2006.

REVISED STANDARD PLAN RSP A77C4

2006 REVISED STANDARD PLAN RSP A77C4

12-10-07

DIST	COUNTY	ROUTE	POST MILES TOTAL PROJECT	SHEET NO.	TOTAL SHEETS
07	LA	47,103	3.5/4.6, 0.0/1.1	380	1003

Randell D. Hiatt
REGISTERED CIVIL ENGINEER

June 6, 2008
PLANS APPROVAL DATE

REGISTERED PROFESSIONAL ENGINEER
Randell D. Hiatt
No. C50200
Exp. 6-30-09
CIVIL
STATE OF CALIFORNIA

The State of California or its officers or agents shall not be responsible for the accuracy or completeness of electronic copies of this plan sheet.

To accompany plans dated 10-11-10

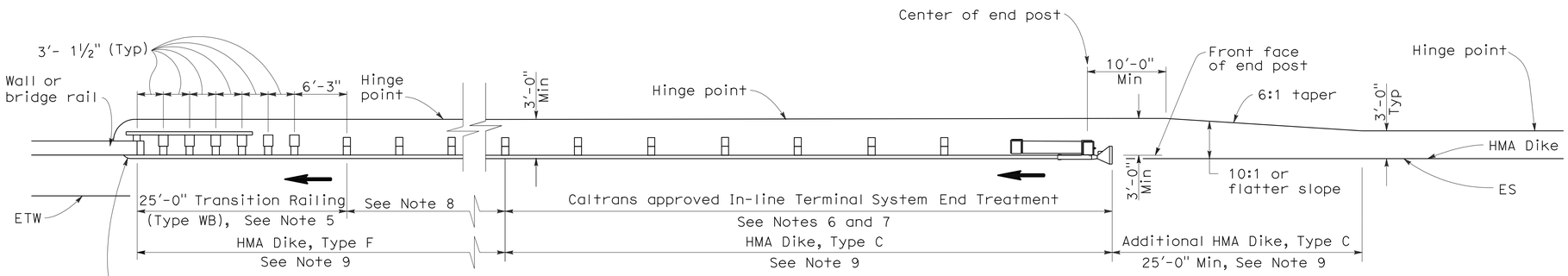

TYPE 12A LAYOUT

(GUARD RAILING INSTALLATION AT STRUCTURE APPROACH WITH AN IN-LINE END TREATMENT AT TRAFFIC APPROACH END OF RAILING)
See Notes 10

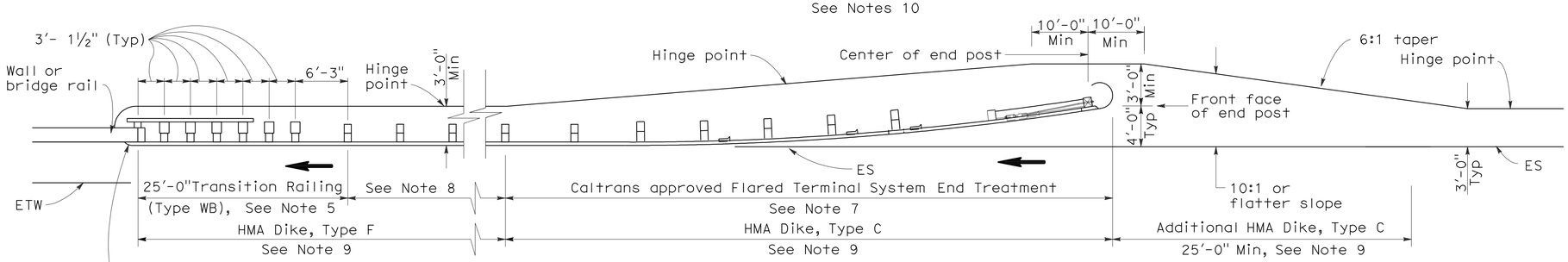

TYPE 12B LAYOUT

(GUARD RAILING INSTALLATION AT STRUCTURE APPROACH WITH A FLARED END TREATMENT AT TRAFFIC APPROACH END OF RAILING)
See Notes 10

NOTES:

1. Line post, blocks and hardware to be used are shown on Standard Plans A77A1, A77A2, A77B1, A77C1 and A77C2.
2. Guard rail post spacing to be 6'-3" center to center, except as otherwise noted.
3. Except as noted, line posts are 6" x 8" x 6'-0" wood with 6" x 8" x 1'-2" wood blocks. W6 x 9 steel posts, 6'-0" in length, with 6" x 8" x 1'-2" notched wood blocks or plastic blocks may be used for 6" x 8" x 6'-0" wood posts with 6" x 8" x 1'-2" wood blocks where applicable and when specified.
4. Direction of adjacent traffic indicated by ➡.
5. For Transition Railing (Type WB) details for Types 12A and 12B Layouts, see Standard Plan A77J4.
6. In-line Terminal System End Treatments are used where site conditions will not accommodate a flared end treatment.
7. The type of terminal system end treatment to be used will be shown on the Project Plans.
8. Dependent on site conditions (embankment height, side slopes, or other fixed objects), it may be advisable to construct additional guard railing (a length equal to multiples of 12'-6" with 6'-3" post spacing) between the transition railing and end treatment.
9. Where placement of dike is required with guard railing installations, see Revised Standard Plan RSP A77C4 for dike positioning details.
10. Type 12A or Type 12B Layouts are typically used:
    a. To the right of approaching traffic, at the end of a structure, on two-lane conventional highway where the roadbed width across the structure is less than 40 feet.
    b. To the left of approaching traffic, at the end of a structure, on two-lane conventional highway where the roadbed width across the structure is less than 40 feet.
    c. To the right of approaching traffic at the end of each structure on multilane freeways or expressways with separate adjacent or parallel bridges.
    d. To the right of approaching traffic at the end of the structure on multilane freeways or expressways with decked median on the bridge.
11. See Revised Standard Plan RSP A77F3 for typical layout used left of approaching traffic at the ends of each structure on multilane freeways or expressways with separate adjacent or parallel bridges.
12. For additional details of typical connections to bridge rail, see Connection Detail AA on Revised Standard Plans RSP A77J1 and RSP A77J2 and Connection Detail FF on Standard Plans A77K1 and A77K2.
13. For additional details of a typical connection to walls or abutments, see Standard Plan A77J3.

STATE OF CALIFORNIA
DEPARTMENT OF TRANSPORTATION

METAL BEAM GUARD RAILING TYPICAL LAYOUTS FOR STRUCTURE APPROACH

NO SCALE

RSP A77F1 DATED JUNE 6, 2008 SUPERSEDES STANDARD PLAN A77F1
DATED MAY 1, 2006 - PAGE 54 OF THE STANDARD PLANS BOOK DATED MAY 2006.

REVISED STANDARD PLAN RSP A77F1

2006 REVISED STANDARD PLAN RSP A77F1

12-10-07

DIST	COUNTY	ROUTE	POST MILES TOTAL PROJECT	SHEET NO.	TOTAL SHEETS
07	LA	47,103	3.5/4.6, 0.0/1.1	381	1003

Randell D. Hiatt
REGISTERED CIVIL ENGINEER

June 6, 2008
PLANS APPROVAL DATE

REGISTERED PROFESSIONAL ENGINEER
Randell D. Hiatt
No. C50200
Exp. 6-30-09
CIVIL
STATE OF CALIFORNIA

The State of California or its officers or agents shall not be responsible for the accuracy or completeness of electronic copies of this plan sheet.

To accompany plans dated 10-11-10

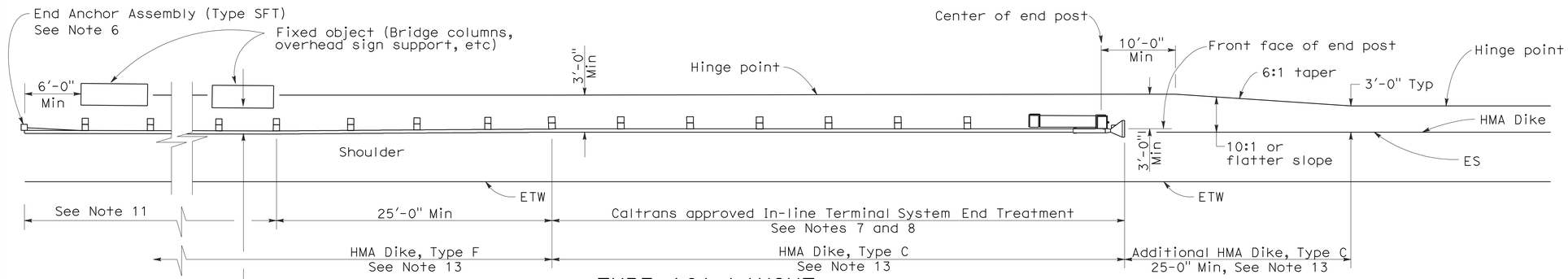

TYPE 16A LAYOUT

(GUARD RAILING INSTALLATION AT ROADSIDE FIXED OBJECT OR OBJECTS WITH AN IN-LINE END TREATMENT AT TRAFFIC APPROACH END OF RAILING)
See Notes 12 and 13

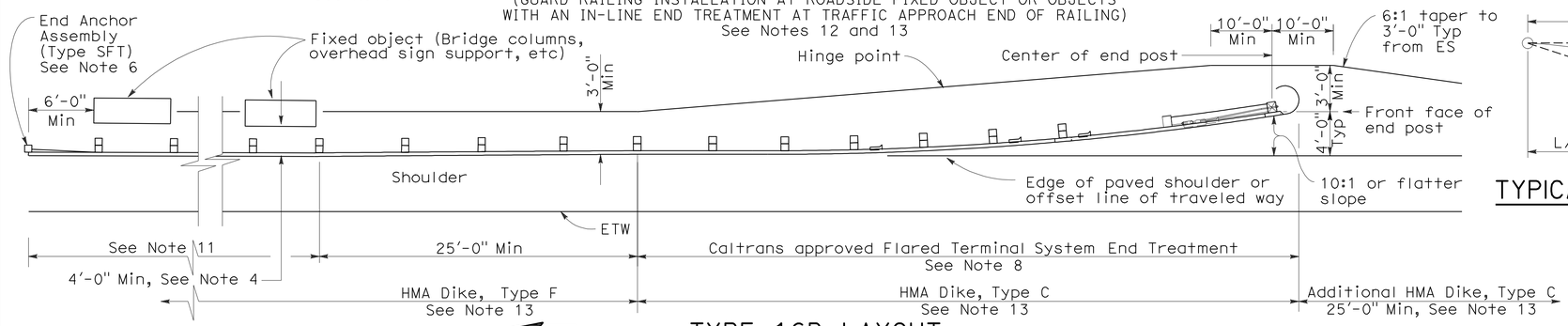

TYPE 16B LAYOUT

(GUARD RAILING INSTALLATION AT ROADSIDE FIXED OBJECT OR OBJECTS WITH A FLARED END TREATMENT AT TRAFFIC APPROACH END OF RAILING)
See Notes 12 and 13

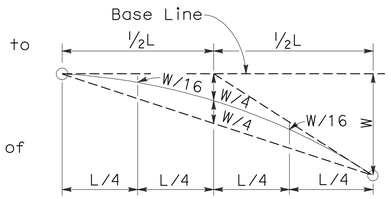

TYPICAL PARABOLIC LAYOUT

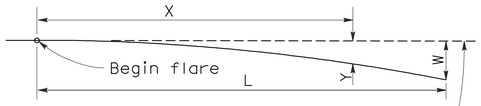

Base Line (Edge of paved shoulder or offset line of edge of traveled way)

$$Y = \frac{WX^2}{L^2}$$

Y = Offset from base line
W = Maximum offset
X = Distance along base line
L = Length of flare

PARABOLIC FLARE OFFSETS

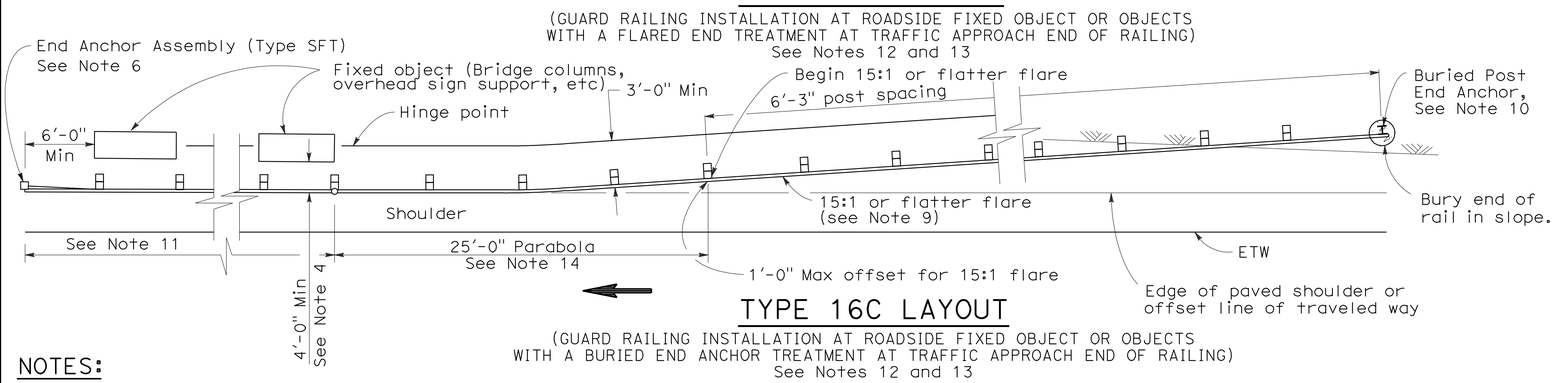

TYPE 16C LAYOUT

(GUARD RAILING INSTALLATION AT ROADSIDE FIXED OBJECT OR OBJECTS WITH A BURIED END ANCHOR TREATMENT AT TRAFFIC APPROACH END OF RAILING)
See Notes 12 and 13

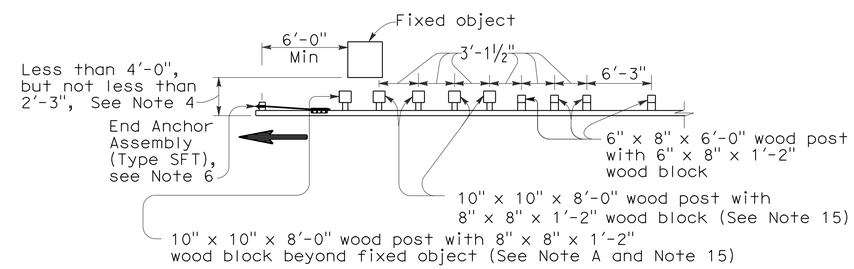

NOTE A: For a series of fixed objects (bridge columns, overhead sign supports, etc.) additional 10" x 10" x 8'-0" wood post with 8" x 8" x 1'-2" wood blocks at 3'-1½" center to center spacing are to be used between fixed objects.

STRENGTHENED RAILING SECTIONS FOR FIXED OBJECT

Use strengthened railing sections with Types 16A, 16B or 16C Layouts where minimum clearance between the face of the guard railing and fixed object(s) is less than 4'-0", but not less than 2'-3". See Note 4

NOTES:

1. Line post, blocks and hardware to be used are shown on Revised Standard Plans A77A1, A77A2, A77B1, A77C1 and A77C2.
2. Guard railing post spacing to be 6'-3" center to center, except as otherwise noted.
3. Except as noted, line posts are 6" x 8" x 6'-0" wood with 6" x 8" x 1'-2" wood blocks. W6 x 9 steel posts, 6'-0" in length, with 6" x 8" x 1'-2" notched wood blocks or notched recycled plastic blocks may be used for 6" x 8" x 6'-0" wood line posts with 6" x 8" x 1'-2" wood blocks where applicable and when specified.
4. A 4'-0" minimum clearance is required between the face of the railing and the face of a fixed object located directly behind standard guard railing sections with post spacing of 6'-3". Construct guard railing as shown in the detail "Strengthened Railing Sections for Fixed Objects" on this plan, where the clearance between the face of the railing and the face of a fixed object is less than 4'-0", but not less than 2'-3". Where the clearance is less than 2'-3", a concrete wall or barrier should be constructed to shield the fixed object(s).
5. Direction of adjacent traffic indicated by ⟶.
6. For End Anchor Assembly (Type SFT) details, see Standard Plan A77H1.
7. In-line Terminal System End Treatments are used where site conditions will not accommodate a flared end treatment.
8. The type of terminal system to be used will be shown on the Project Plans.
9. The 15:1 or flatter flare used with Type 16C Layout is based on the edge of the paved shoulder or offset line of edge of the traveled way. The length of guard railing within the 15:1 or flatter flare is based on site conditions and should be a length equal to multiples of 12'-6".
10. For details of the Buried Post End Anchor used with Type 16C Layout, see Standard Plan A77I2.
11. As site conditions dictate, construct additional guard railing to shield fixed object(s). Additional guard railing length equal to multiples of 12'-6". Post spacing at 6'-3" except as specified in Note 4.
12. Layout Types 16A, 16B or 16C are typically used where guard railing is recommended to shield roadside fixed object(s) and a crashworthy end treatment is required for only one direction of traffic.
13. Where placement of dike is required with guard railing, see Revised Standard Plan RSP A77C4 for dike positioning details.
14. For typical flare offsets for 25'-0" length parabola with maximum offset of 1'-0", see Revised Standard Plan RSP A77E1.
15. W6 x 15 steel post, 8'-0" in length, with 8" x 8" x 1'-2" notched wood block or notched recycled plastic blocks may be used in place of the 10" x 10" x 8'-0" wood post with 8" x 8" x 1'-2" wood block shown in the "Strengthened Railing Sections Detail".

STATE OF CALIFORNIA
DEPARTMENT OF TRANSPORTATION

METAL BEAM GUARD RAILING TYPICAL LAYOUTS FOR ROADSIDE FIXED OBJECTS

NO SCALE

RSP A77G3 DATED JUNE 6, 2008 SUPERSEDES STANDARD PLAN A77G3 DATED MAY 1, 2006 - PAGE 61 OF THE STANDARD PLANS BOOK DATED MAY 2006.

REVISED STANDARD PLAN RSP A77G3

2006 REVISED STANDARD PLAN RSP A77G3

12-10-07

DIST	COUNTY	ROUTE	POST MILES TOTAL PROJECT	SHEET NO.	TOTAL SHEETS
07	LA	47,103	3.5/4.6, 0.0/1.1	382	1003

Randell D. Hiatt
REGISTERED CIVIL ENGINEER

June 6, 2008
PLANS APPROVAL DATE

REGISTERED PROFESSIONAL ENGINEER
Randell D. Hiatt
No. C50200
Exp. 6-30-09
CIVIL
STATE OF CALIFORNIA

The State of California or its officers or agents shall not be responsible for the accuracy or completeness of electronic copies of this plan sheet.

To accompany plans dated 10-11-10

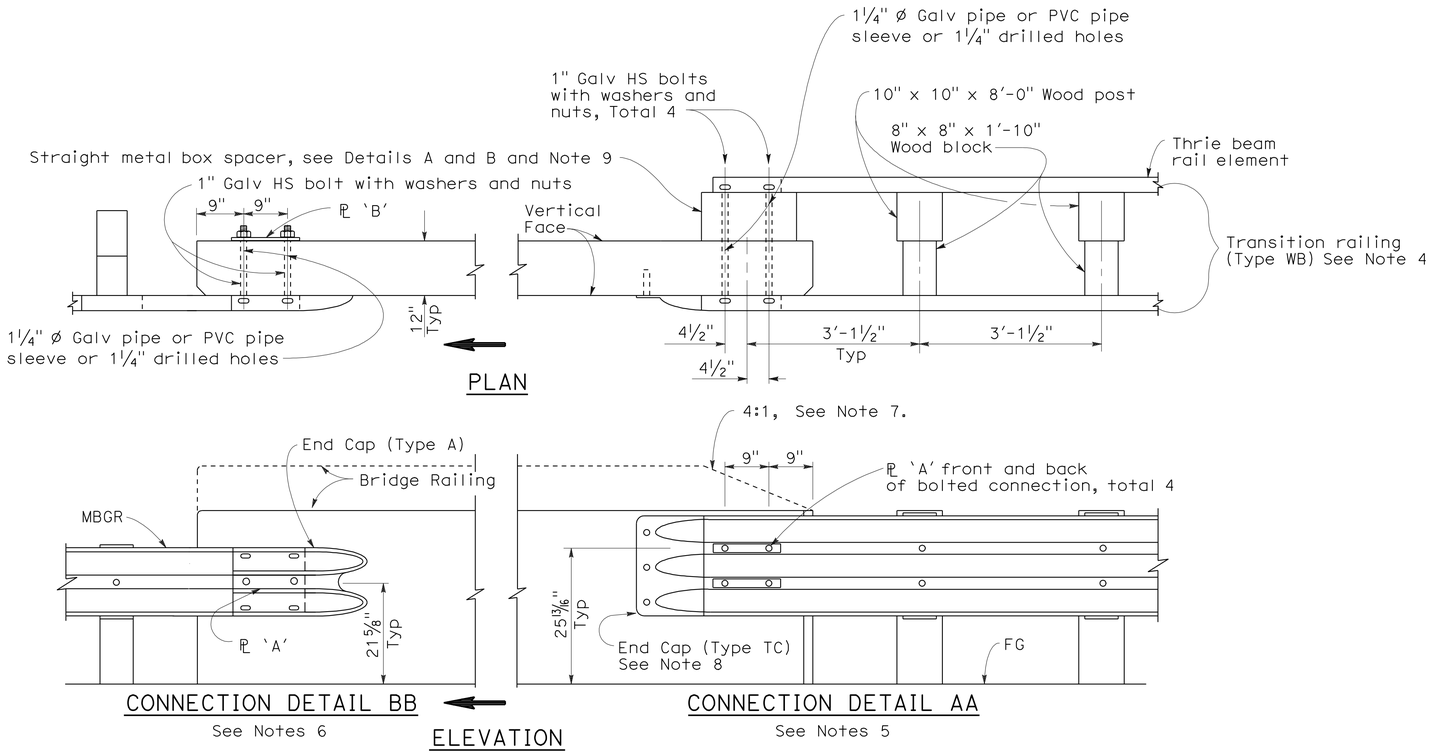

GUARD RAILING CONNECTION TO BRIDGE RAILING WITHOUT SIDEWALK

NOTES:

1. See Revised Standard Plan RSP A77J2 for additional connection details to bridges without sidewalks.
2. Additional details of posts, blocks and hardware are shown on Standard Plan A77B1, A77C1 and A77C2.
3. Direction of adjacent traffic indicated by ➡.
4. For additional details of Transition Railing (Type WB), see Standard Plan A77J4. Transition Railing (Type WB) transitions the 12 gage w-beam standard railing section of guard railing to a heavier gage nested thrie beam railing section which is connected to the concrete bridge railing.
5. For typical use of Connection Detail AA, see Layout Types 12A and 12B on Revised Standard Plan RSP A77F1, Layout Types 12C and 12D on Standard Plan A77F2, and Layout Type 12E on Revised Standard Plan RSP A77F3.
6. For typical use of Connection Detail BB, see Layout Type 12D (structure departure railing connection) on Standard Plan A77F2 and Layout Type 12DD on Standard Plan A77F5.
7. Where the height of the bridge railing exceeds the height of the thrie beam railing by more than 1" at Connection Detail AA, taper the top of the end of the bridge railing at 4:1 to match the top elevation of the thrie beam rail.
8. For details of End Cap (Type TC), see Standard Plan A77J4.
9. See Standard Plan A77J4 for additional details regarding depth dimension for straight metal box spacer.

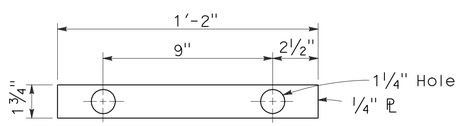

PLATE 'A'

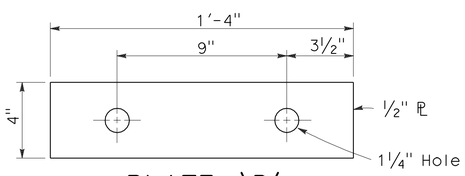

PLATE 'B'
(For backside of connection BB)

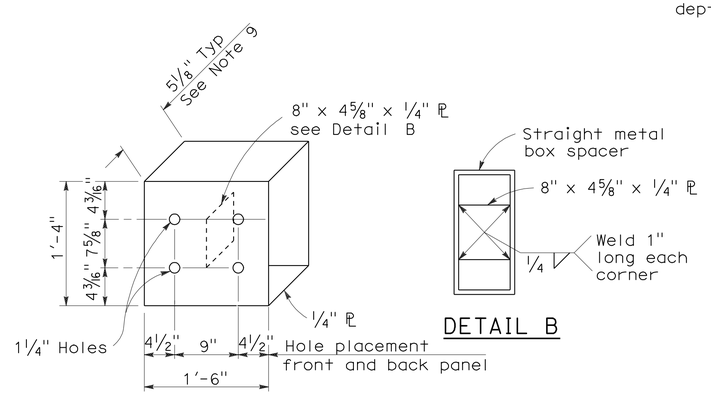

DETAIL A

DETAIL B

STRAIGHT METAL BOX SPACER

STATE OF CALIFORNIA
DEPARTMENT OF TRANSPORTATION

METAL BEAM GUARD RAILING CONNECTIONS TO BRIDGE RAILINGS WITHOUT SIDEWALKS DETAILS No.1

NO SCALE

RSP A77J1 DATED JUNE 6, 2008 SUPERSEDES STANDARD PLAN A77J1
DATED MAY 1, 2006 - PAGE 72 OF THE STANDARD PLANS BOOK DATED MAY 2006.

REVISED STANDARD PLAN RSP A77J1

2006 REVISED STANDARD PLAN RSP A77J1

12-10-07

DIST	COUNTY	ROUTE	POST MILES TOTAL PROJECT	SHEET NO.	TOTAL SHEETS
07	LA	47,103	3.5/4.6, 0.0/1.1	383	1003

Randell D. Hiatt
REGISTERED CIVIL ENGINEER

June 6, 2008
PLANS APPROVAL DATE

REGISTERED PROFESSIONAL ENGINEER
Randell D. Hiatt
No. C50200
Exp. 6-30-09
CIVIL
STATE OF CALIFORNIA

The State of California or its officers or agents shall not be responsible for the accuracy or completeness of electronic copies of this plan sheet.

To accompany plans dated 10-11-10

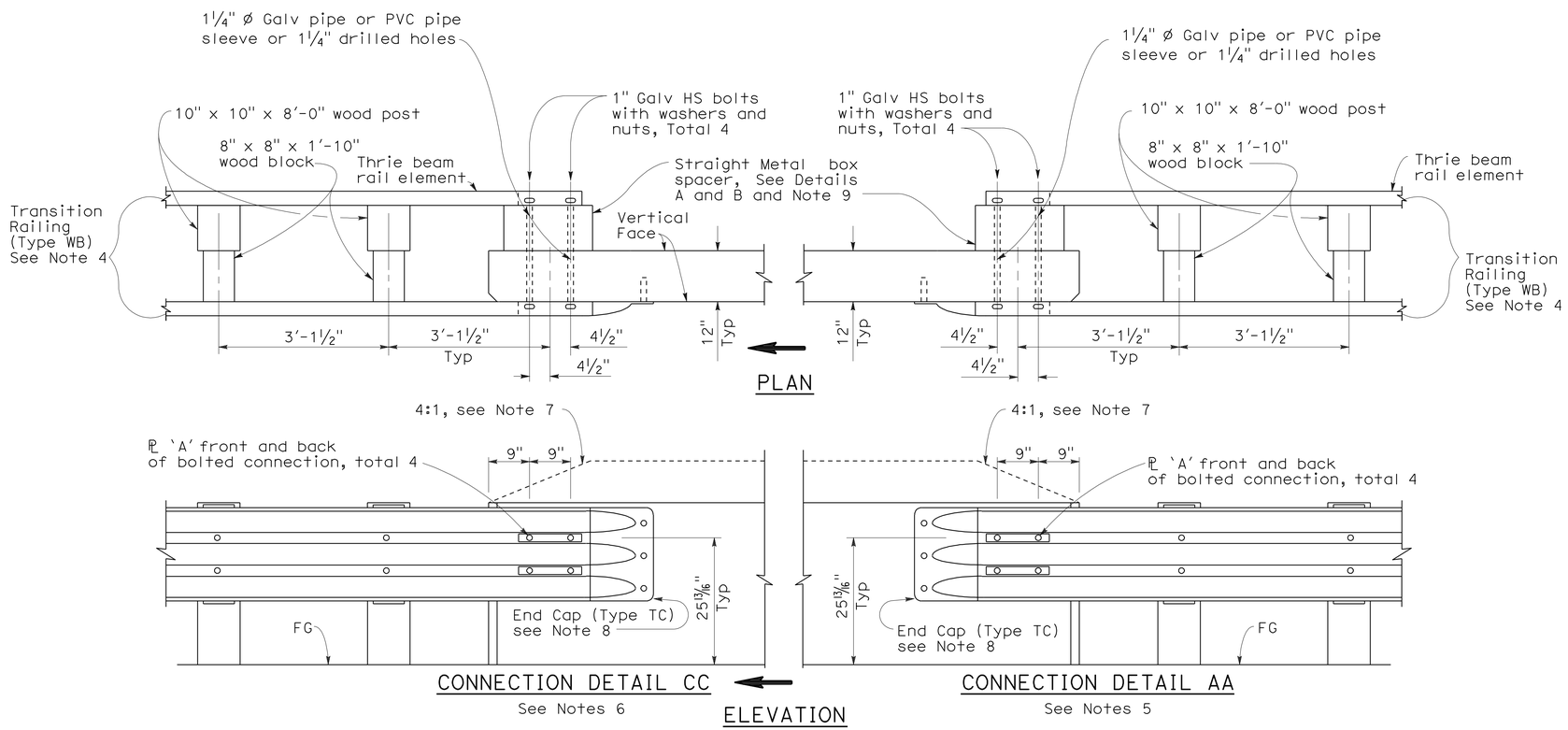

GUARD RAILING CONNECTION TO BRIDGE RAILING WITHOUT SIDEWALK

NOTES:

1. See Revised Standard Plan RSP A77J1 for additional connection details to bridges without sidewalks.
2. Additional details of posts, blocks and hardware are shown on Standard Plan A77B1, A77C1 and A77C2.
3. Direction of adjacent traffic indicated by ⟹.
4. For additional details of Transition Railing (Type WB), see Standard Plan A77J4. Transition Railing (Type WB) transitions the 12 gage w-beam standard railing section of guard railing to a heavier gage nested thrie beam railing section which is connected to the concrete bridge railing.
5. For typical use of Connection Detail AA, see Layout Types 12A and 12B on Revised Standard Plan RSP A77F1, Layout Types 12C and 12D on Standard Plan A77F2, and Layout Type 12E on Revised Standard Plan RSP A77F3.
6. For typical use of Connection Detail CC, see Layout Types 12AA and 12BB on Standard Plan A77F4 and Layout Type 12CC on Standard Plan A77F5.
7. Where the height of the bridge railing exceeds the height of the thrie beam railing by more than 1" at Connection Detail AA and connection Detail CC, taper the top of the end of the bridge railing at 4:1 to match the top elevation of the thrie beam railing.
8. For details of End Cap (Type TC), see Standard Plans A77J4.
9. See Standard Plans A77J4 for additional details regarding depth dimension for straight metal box spacer.

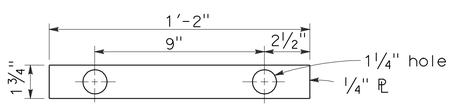

PLATE 'A'

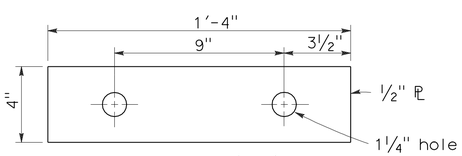

PLATE 'B'
(For backside of connection BB)

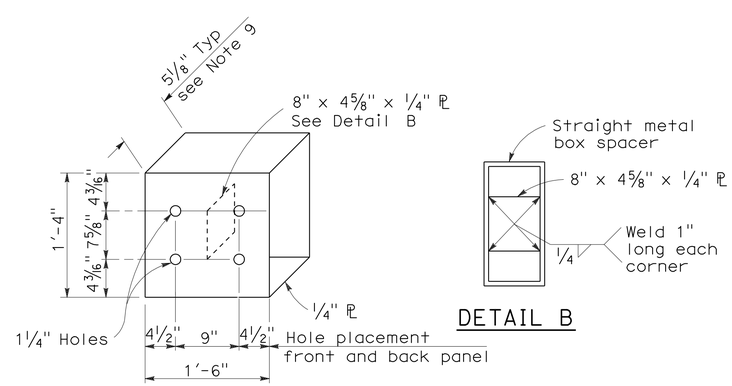

DETAIL A

DETAIL B

STRAIGHT METAL BOX SPACER

STATE OF CALIFORNIA
DEPARTMENT OF TRANSPORTATION

METAL BEAM GUARD RAILING CONNECTIONS TO BRIDGE RAILINGS WITHOUT SIDEWALKS DETAILS No.2

NO SCALE

RSP A77J2 DATED JUNE 6, 2008 SUPERSEDES STANDARD PLAN A77J2 DATED MAY 1, 2006 - PAGE 73 OF THE STANDARD PLANS BOOK DATED MAY 2006.

REVISED STANDARD PLAN RSP A77J2

2006 REVISED STANDARD PLAN RSP A77J2

12-10-07

DIST	COUNTY	ROUTE	POST MILES TOTAL PROJECT	SHEET NO.	TOTAL SHEETS
07	LA	47,103	3.5/4.6, 0.0/1.1	384	1003

Randell D. Hiatt
REGISTERED CIVIL ENGINEER

June 5, 2009
PLANS APPROVAL DATE

REGISTERED PROFESSIONAL ENGINEER
Randell D. Hiatt
No. C50200
Exp. 6-30-09
CIVIL
STATE OF CALIFORNIA

The State of California or its officers or agents shall not be responsible for the accuracy or completeness of electronic copies of this plan sheet.

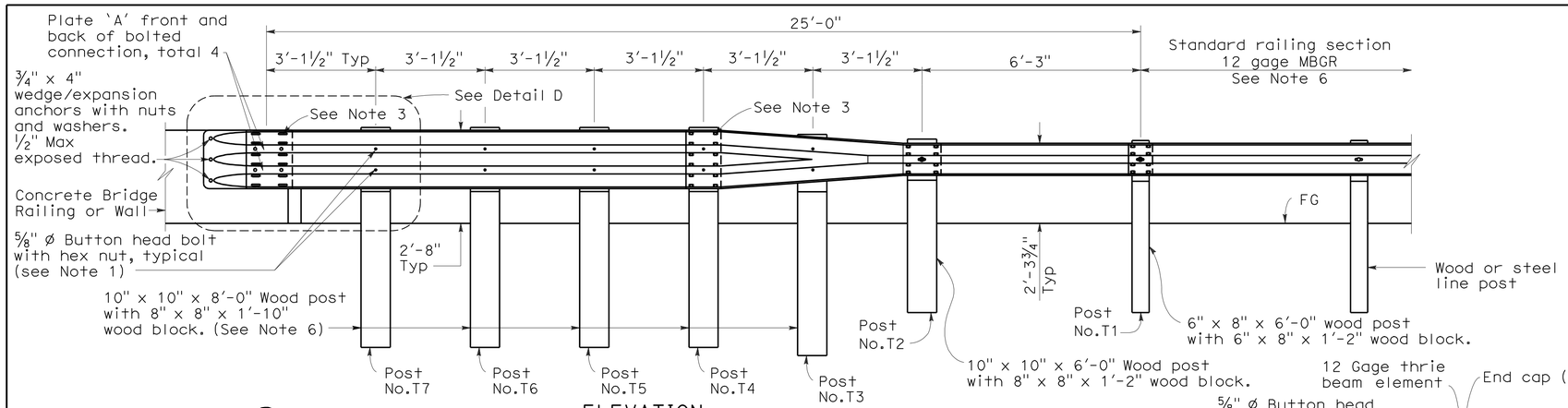

ELEVATION

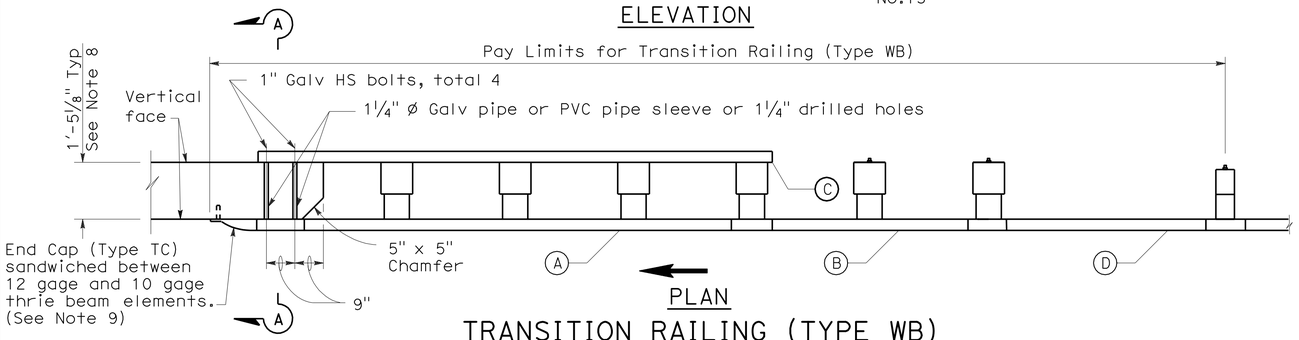

PLAN

TRANSITION RAILING (TYPE WB)

(No Blockout Attachment)

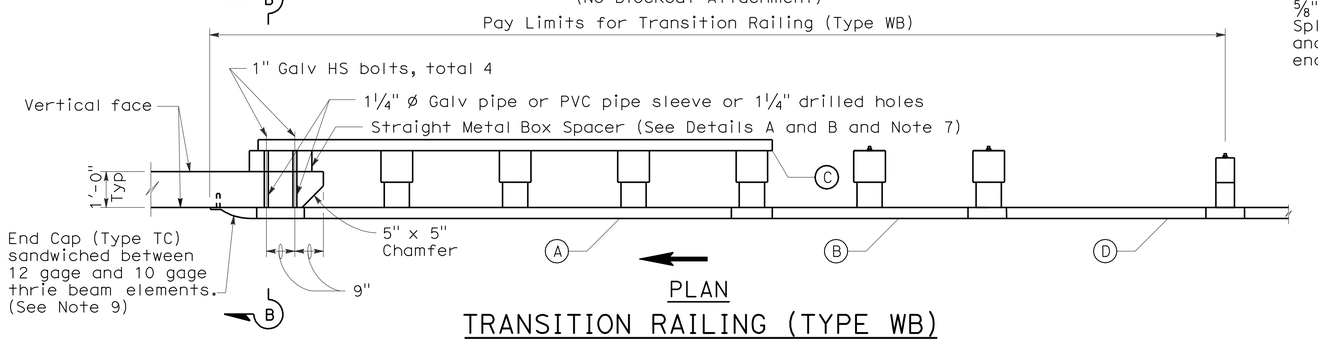

PLAN

TRANSITION RAILING (TYPE WB)

(Blockout Attachment)

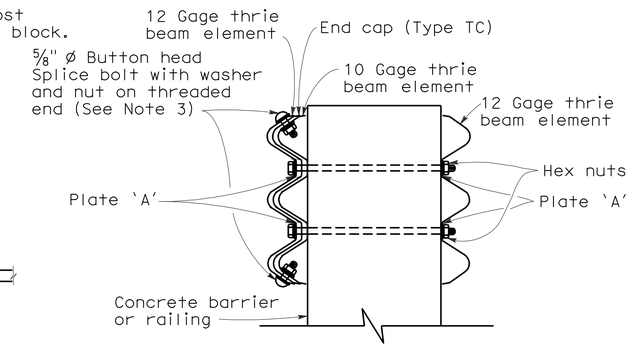

SECTION A-A

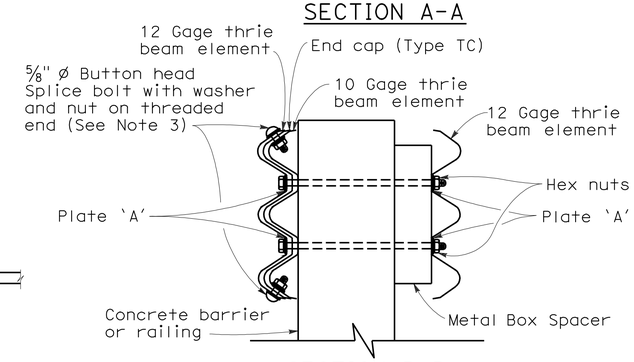

SECTION B-B

LEGEND

(A) Nested thrie beam elements (one 12 gage element nested over one 10 gage element).

(B) One 10 gage "W" beam to thrie beam element.

(C) One 12 gage thrie beam element.

(D) One 10 gage "W" beam rail element (7'-3½" length)

10 gage = 0.135" thick

12 gage = 0.108" thick

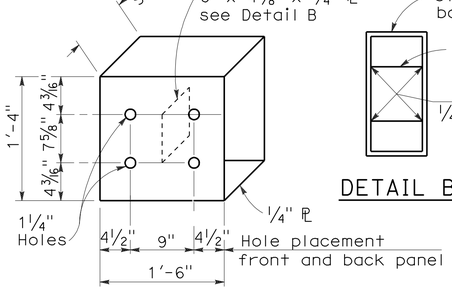

DETAIL A

STRAIGHT METAL BOX SPACER

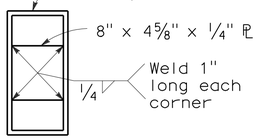

DETAIL B

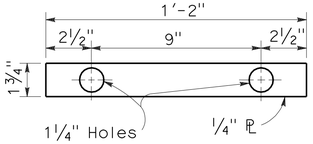

DETAIL C

PLATE 'A'

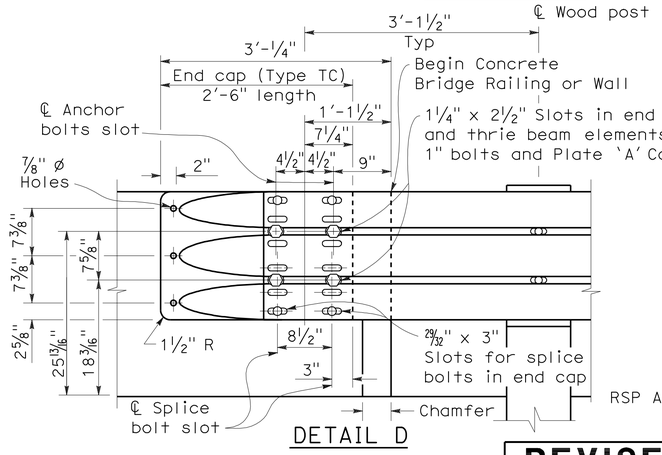

DETAIL D

NOTES:

To accompany plans dated 10-11-10

1. Use 5/8 " ø Button head bolts and hex nuts for connections to posts. No washer on rail face for bolted connections to post.
2. The nested rail elements, end cap, and 'W' beam to thrie beam element may be spliced together prior to bolting the elements to the wood post and concrete barrier or railing.
3. Exterior splice bolt holes for rail element splices at Post No.T4 and the connection to the concrete barrier or railing shall be the standard 29/32 " x 1 1/8 " slot size. Interior splice bolt holes at these locations may be increased up to 1 1/4 " ø. Only the top 2 and the bottom 2 splice bolts with washers and nuts are required for rail splices at Post No.T4 and the connection to the concrete barrier or railing.
4. Direction of adjacent traffic indicated by →.
5. The top elevation of Post Nos.T2 through T7 shall not project more than 1" above the top elevation of the rail element.
6. Typically, the railing connected to Transition Railing (Type WB) will be either standard railing section of metal beam guard railing or an approved Caltrans end treatment attached to Post No.T1.
7. The depth of the metal box spacer varies from the 5 1/8 " to 1 1/2 " and is dependent on the width of the concrete railing or wall. The combined dimension for the depth of the metal box spacer plus the width of railing or wall is typically 17 1/8 ". Where the space between the backside of the concrete railing or wall and the rear thrie beam element is less than 1 1/2 ", metal plates similar to Plate 'A' are to be used as spacers.
8. Where the width of the concrete railing or wall is greater than 17 1/8 ", wood blocks are to be used to fill the space created between the backside of Posts No.4 through No.7 and the rear thrie beam element. These wood blocks shall be 8" in width and 1'-2" in length. The dimension between the front thrie beam element and the rear thrie beam element is to match the width of the concrete railing or wall.
9. End cap may be installed over 12 gage and 10 gage thrie beam elements where transition railing is installed on the departure end of bridge railing.

STATE OF CALIFORNIA
DEPARTMENT OF TRANSPORTATION

METAL BEAM GUARD RAILING TRANSITION RAILING (TYPE WB)

NO SCALE

RSP A77J4 DATED JUNE 5, 2009 SUPERSEDES RSP A77J4 DATED JUNE 6, 2008 AND STANDARD PLAN A77J4 DATED MAY 1, 2006 - PAGE 75 OF THE STANDARD PLANS BOOK DATED MAY 2006.

REVISED STANDARD PLAN RSP A77J4

2006 REVISED STANDARD PLAN RSP A77J4

DIST	COUNTY	ROUTE	POST MILES TOTAL PROJECT	SHEET NO.	TOTAL SHEETS
07	LA	47,103	3.5/4.6, 0.0/1.1	385	1003

Randell D. Hiatt
REGISTERED CIVIL ENGINEER

June 6, 2008
PLANS APPROVAL DATE

REGISTERED PROFESSIONAL ENGINEER
Randell D. Hiatt
No. C50200
Exp. 6-30-09
CIVIL
STATE OF CALIFORNIA

The State of California or its officers or agents shall not be responsible for the accuracy or completeness of electronic copies of this plan sheet.

To accompany plans dated 10-11-10

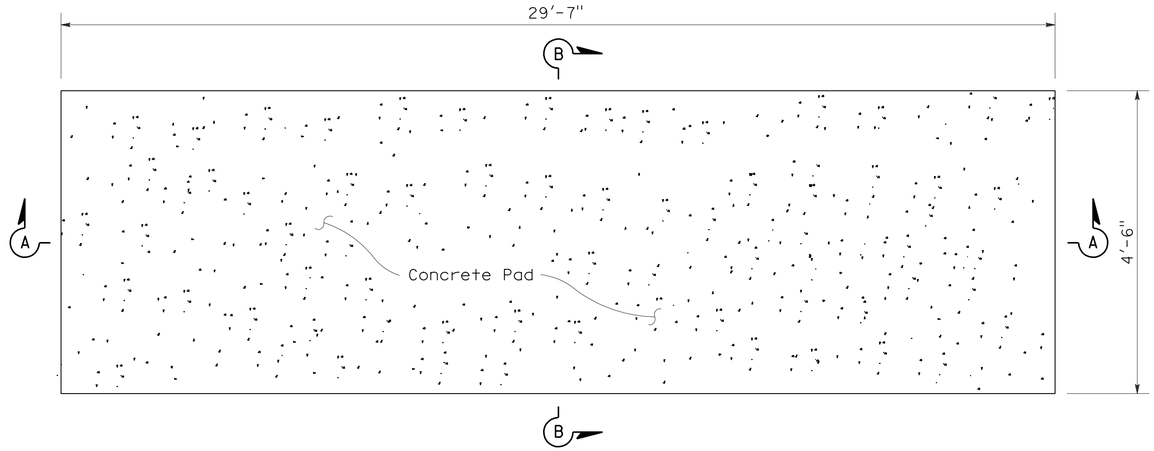

PLAN VIEW

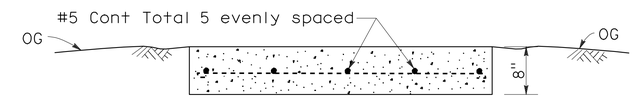

SECTION B-B

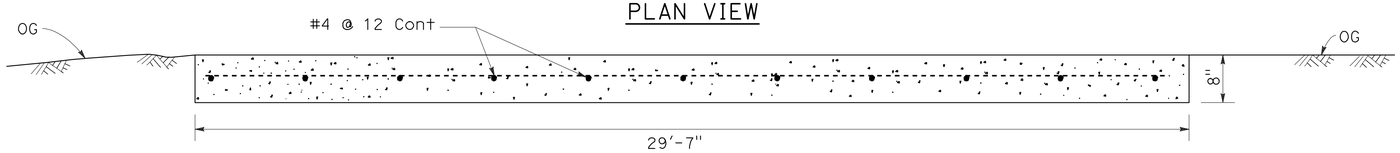

SECTION A-A

CONCRETE ANCHOR SLAB

NOTES:

1. For additional details of this crash cushion, refer to manufacturer's installation instructions.
2. For details of the REACT Crash Cushion with self contained backup support (no concrete backup block), see Standard Plan A82D1.
3. The base track frame with cylinders attached comes from the manufacturer as a completely pre-assembled unit.
4. Place the crash cushion unit on the cured concrete anchor slab and use the base track frame of the crash cushion as a template for drilling anchor bolt holes. Drill holes in slab and attach crash cushion with wedge anchor bolts supplied by the manufacturer.
5. Attach last cylinder to concrete backup block with manufacturer supplied fastener in such manner as recommended by the manufacturer.
6. Attach the manufacturer supplied side cable anchor plates to the cured concrete backup block with the manufacturer supplied bolts in such manner as recommended by the manufacturer.
7. Place manufacturer supplied cover over cylinders and attach cover to cylinders with manufacturer supplied fasteners.

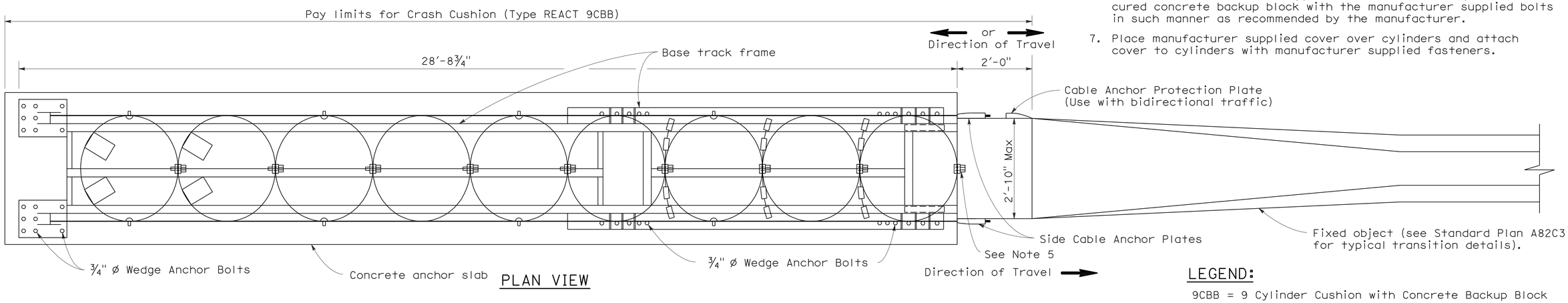

PLAN VIEW

LEGEND:

9CBB = 9 Cylinder Cushion with Concrete Backup Block

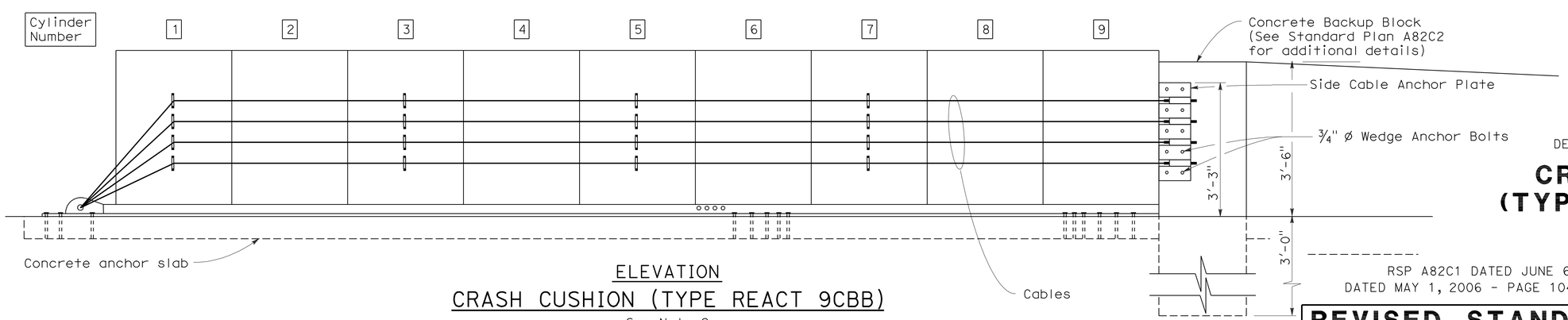

ELEVATION

CRASH CUSHION (TYPE REACT 9CBB)

See Note 2

STATE OF CALIFORNIA
DEPARTMENT OF TRANSPORTATION

CRASH CUSHION (TYPE REACT 9CBB)

NO SCALE

RSP A82C1 DATED JUNE 6, 2008 SUPERSEDES STANDARD PLAN A82C1
DATED MAY 1, 2006 - PAGE 104 OF THE STANDARD PLANS BOOK DATED MAY 2006.

REVISED STANDARD PLAN RSP A82C1

2006 REVISED STANDARD PLAN RSP A82C1

4-21-08

DIST	COUNTY	ROUTE	POST MILES TOTAL PROJECT	SHEET NO.	TOTAL SHEETS
07	LA	47,103	3.5/4.6, 0.0/1.1	386	1003

Glenn DeCou
REGISTERED CIVIL ENGINEER

June 5, 2009
PLANS APPROVAL DATE

REGISTERED PROFESSIONAL ENGINEER Glenn DeCou No. C34547 Exp. 9-30-09 CIVIL STATE OF CALIFORNIA

The State of California or its officers or agents shall not be responsible for the accuracy or completeness of electronic copies of this plan sheet.

To accompany plans dated 10-11-10

2006 REVISED STANDARD PLAN RSP A85

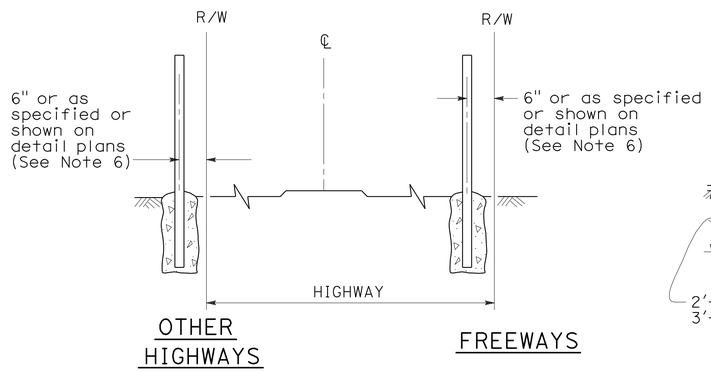

FENCE LOCATION

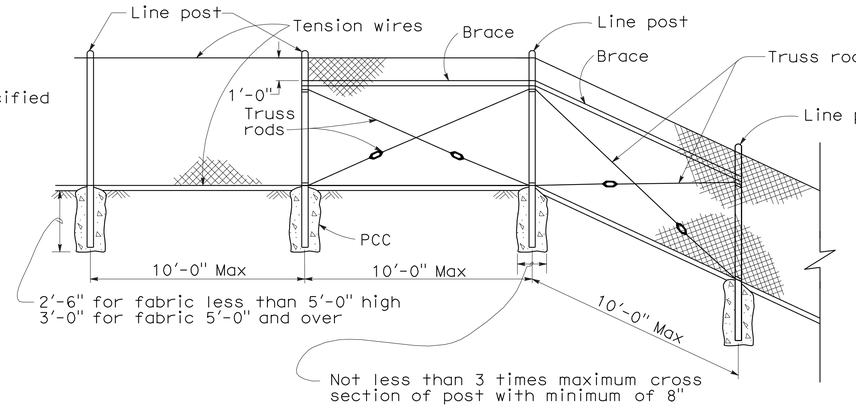

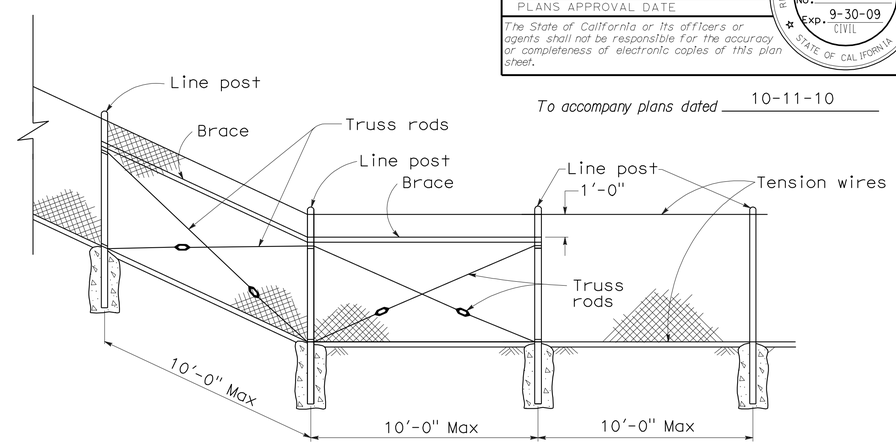

CHAIN LINK FENCE ON SHARP BREAK IN GRADE

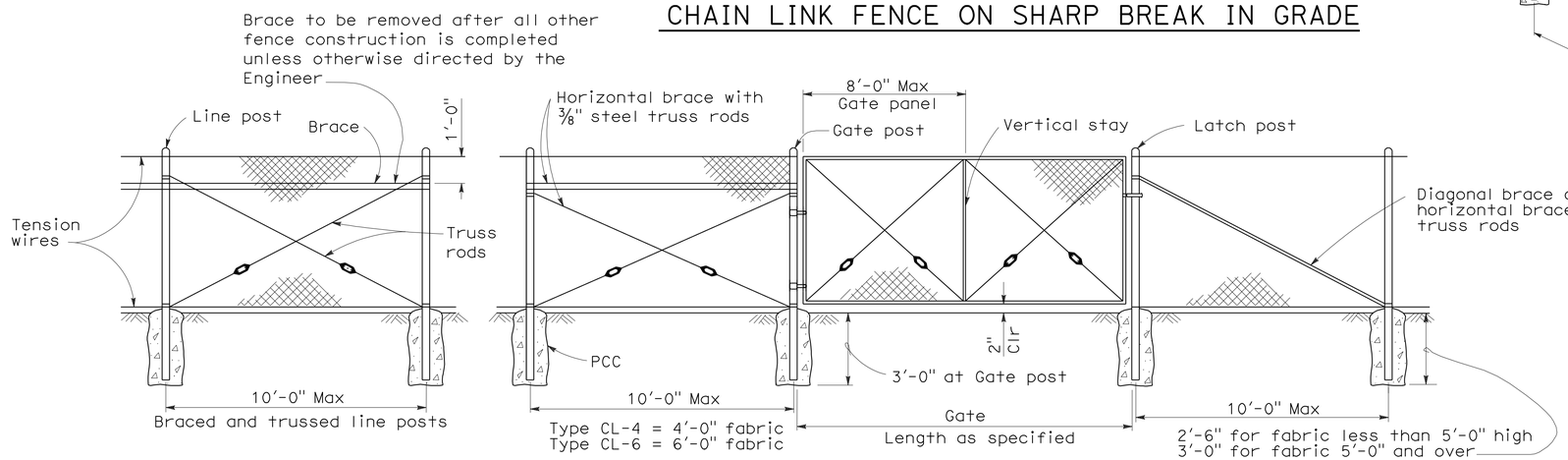

CHAIN LINK GATE INSTALLATION

GATE POST			
FENCE HEIGHT	GATE WIDTHS	NOMINAL ID	WEIGHT PER FOOT
6'-0" and Less	Up thru 6'-0"	2½"	4.95 LB
	Over 6'-0" thru 12'-0"	4"	10.79 LB
	Over 12'-0" thru 18'-0"	5"	14.62 LB
	Over 18'-0" to 24'-0" Max	6"	18.97 LB
Over 6'-0"	Up thru 6'-0"	3"	7.58 LB
	Over 6'-0" thru 12'-0"	5"	14.62 LB
	Over 12'-0" thru 18'-0"	6"	18.97 LB
	Over 18'-0" to 24'-0" Max	8"	28.55 LB

Above post dimensions and weights are minimums. Larger sizes may be used on approval of the Engineer.

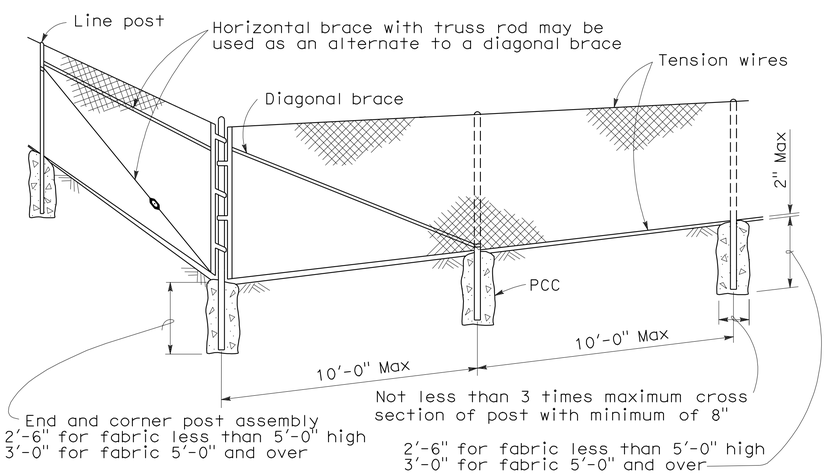

CORNER POST

NOTES:

1. The below table shows examples of post and brace sections which may comply with the Specifications.
2. Sections shown in the tables must also comply with the strength requirements and other provisions of the Specifications.
3. Other sections which comply with the strength requirements and other provisions of the Specifications may be used on approval of the Engineer.
4. Options exercised shall be uniform on any one project.
5. Dimensions shown are nominal.
6. Offset to be 2'-0" at monument locations, measured at right angles to R/W lines. Taper to achieve offset to be at least 20'-0" long.

TYPICAL MEMBER DIMENSIONS (See Notes)											
FENCE HEIGHT	LINE POSTS			END, LATCH & CORNER POSTS				BRACES			
	ROUND ID	H	ROLL FORMED	ROUND ID	ROLL FORMED			ROUND ID	H	ROLL FORMED	
6' & less	1½"	1⅞" × 1⅝"	1⅞" × 1⅝"	2"	3½" × 3½"	2" × 1¾"		1¼"	1½" × 1 5/16"	1⅝" × 1¼"	1¾" × 1¼"
Over 6'	2"	2¼" × 2"	2" × 1¾"	2½"	3½" × 3½"	2½" × 2½"		1¼"	1½" × 1 5/16"	1⅝" × 1¼"	1¾" × 1¼"

STATE OF CALIFORNIA
DEPARTMENT OF TRANSPORTATION

CHAIN LINK FENCE

NO SCALE

RSP A85 DATED JUNE 5, 2009 SUPERSEDES STANDARD PLAN A85
DATED MAY 1, 2006 - PAGE 111 OF THE STANDARD PLANS BOOK DATED MAY 2006.

REVISED STANDARD PLAN RSP A85

5-7-09

DIST	COUNTY	ROUTE	POST MILES TOTAL PROJECT	SHEET NO.	TOTAL SHEETS
07	LA	47,103	3.5/4.6, 0.0/1.1	387	1003

REGISTERED CIVIL ENGINEER

June 5, 2009
PLANS APPROVAL DATE

REGISTERED PROFESSIONAL ENGINEER Glenn DeCou No. C34547 Exp. 9-30-09 CIVIL STATE OF CALIFORNIA

The State of California or its officers or agents shall not be responsible for the accuracy or completeness of electronic copies of this plan sheet.

To accompany plans dated 10-11-10

NOTES:

1. H is 2'-6" for fabric less than 5'-0" high. H is 3'-0" for fabric 5'-0" and over.
2. T is not less than 3 times maximum cross section of post with minimum of 8".
3. Arms with barbed wire to be used where shown on plans.
4. See Revised Standard Plan RSP A85 for Chain Link Fencing dimensions.
5. Reinforcing must comply with ASTM A 706.
6. See Detail A on New Standard Plan NSP A86B for connection at headwall.

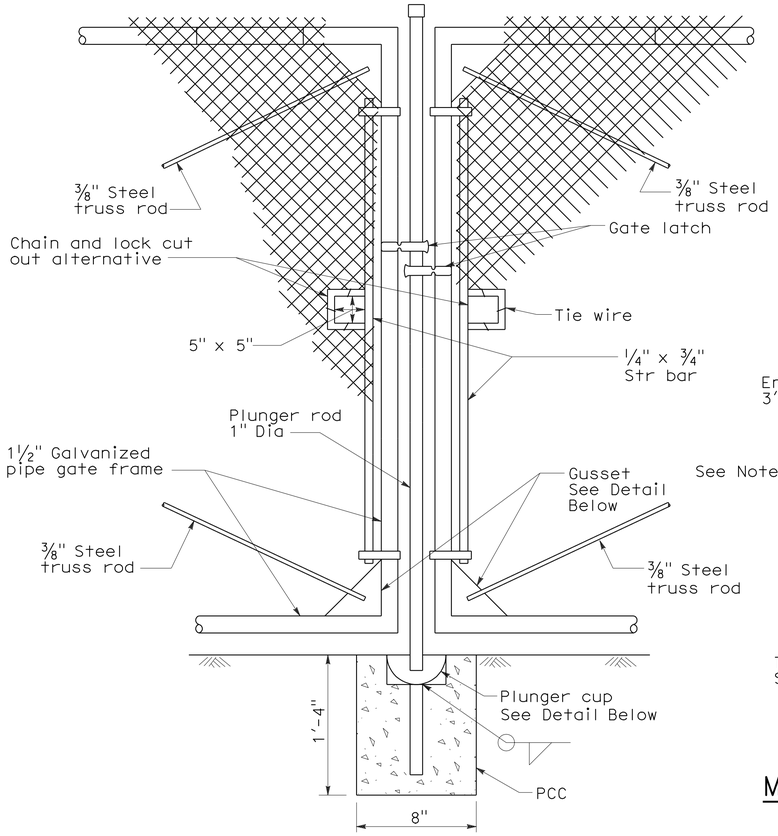

TYPICAL DOUBLE GATE REMOVABLE CENTER POST

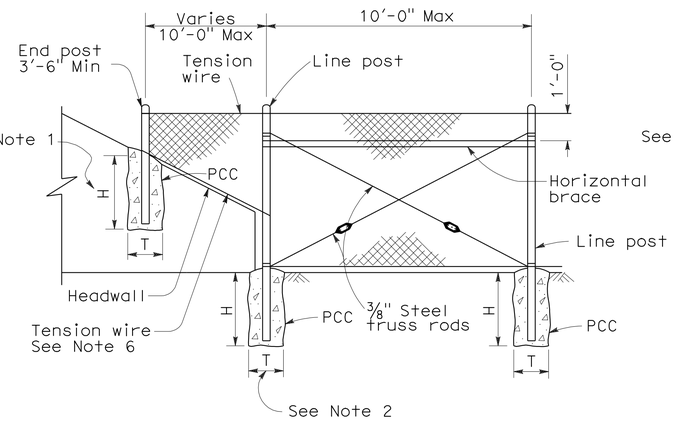

METHOD OF TYING FENCE TO HEADWALL

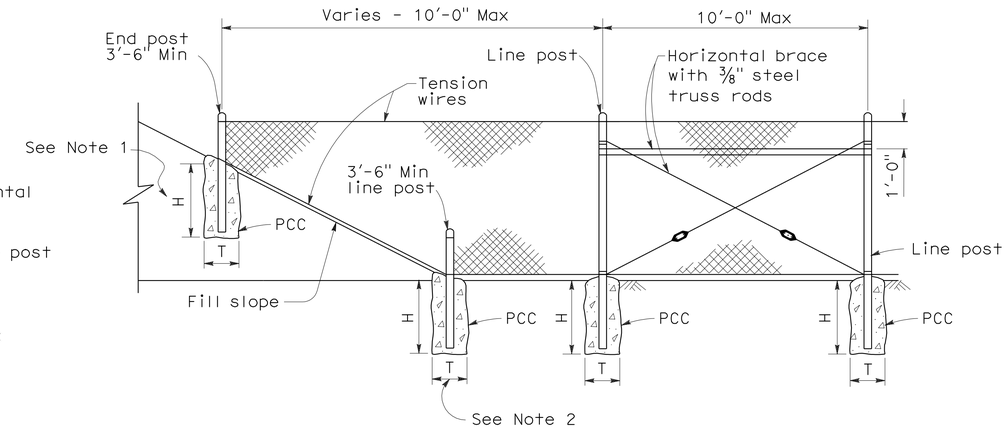

METHOD OF ERECTING FENCE FOR FILL SLOPE

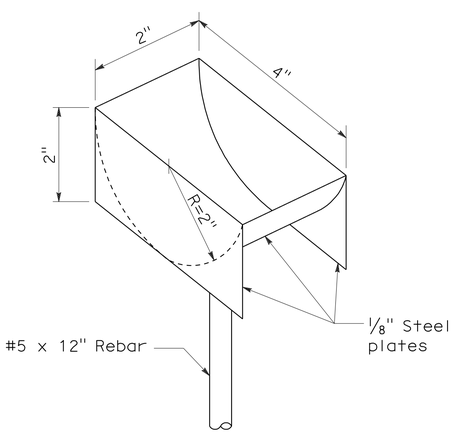

PLUNGER CUP DETAIL

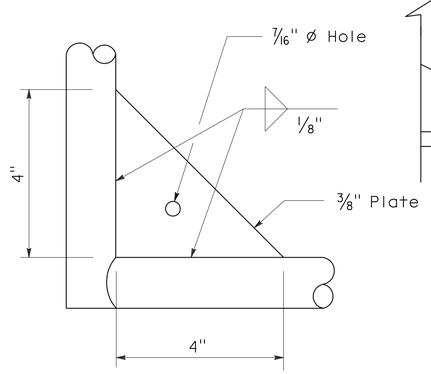

GUSSET DETAIL

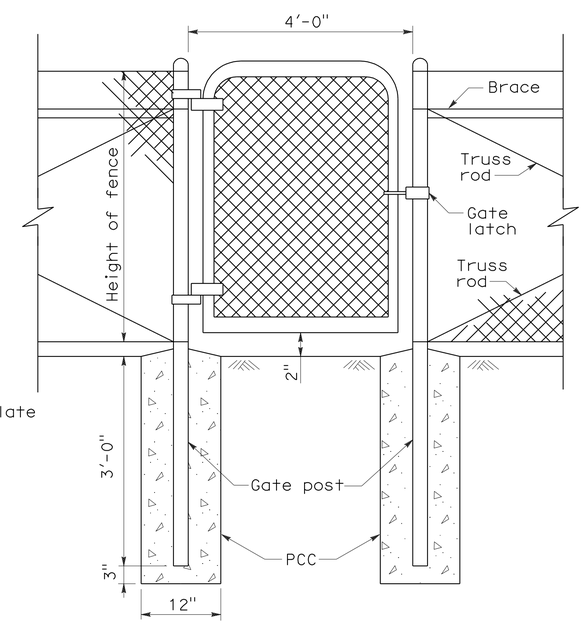

WALK GATE

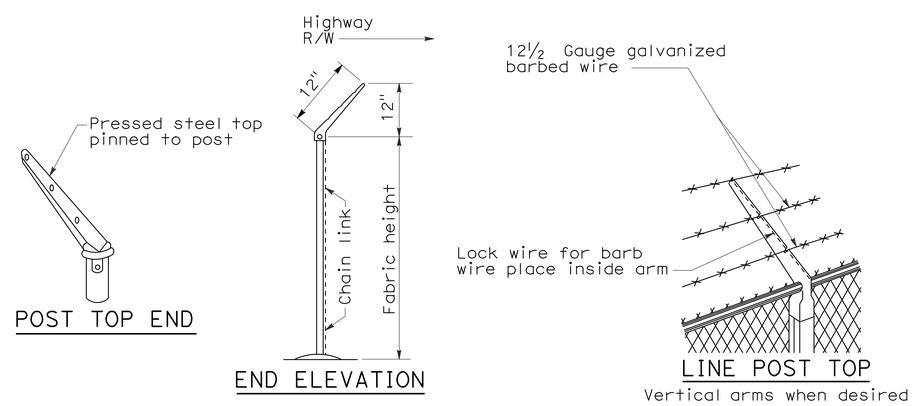

POST TOP END

END ELEVATION

LINE POST TOP
Vertical arms when desired

BARBED WIRE POST TOP
See Note 3

STATE OF CALIFORNIA
DEPARTMENT OF TRANSPORTATION

CHAIN LINK FENCE DETAILS

NO SCALE

NSP A85A DATED JUNE 5, 2009 SUPPLEMENTS THE STANDARD PLANS BOOK DATED MAY 2006.

NEW STANDARD PLAN NSP A85A

2006 NEW STANDARD PLAN NSP A85A

5-7-09

DIST	COUNTY	ROUTE	POST MILES TOTAL PROJECT	SHEET NO.	TOTAL SHEETS
07	LA	47,103	3.5/4.6, 0.0/1.1	388	1003

Glenn DeCou
REGISTERED CIVIL ENGINEER

June 5, 2009
PLANS APPROVAL DATE

REGISTERED PROFESSIONAL ENGINEER
Glenn DeCou
No. C34547
Exp. 9-30-09
CIVIL
STATE OF CALIFORNIA

The State of California or its officers or agents shall not be responsible for the accuracy or completeness of electronic copies of this plan sheet.

To accompany plans dated 10-11-10

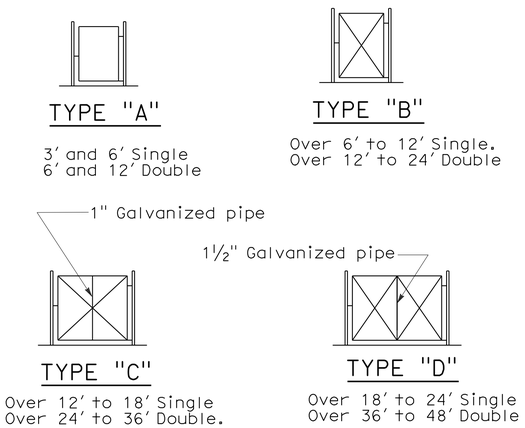

TYPICAL FRAMEWORK SHOWING NUMBER OF BAYS IN GATE

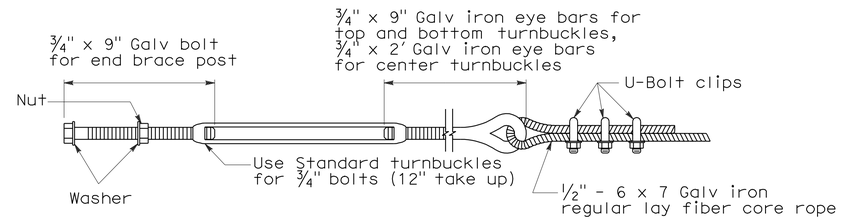

TURNBUCKLE A

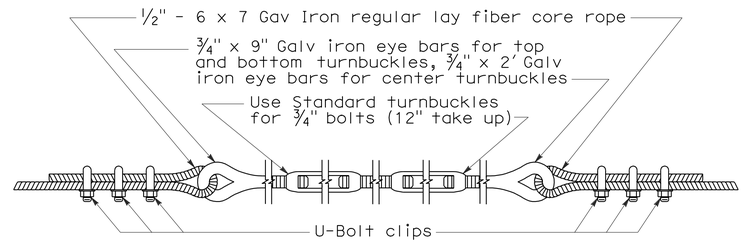

TURNBUCKLE B

NOTES:

1. All material for abutment connection to be galvanized.
2. The chain link fabric shall be replaced by barbed wire strands at 12" maximum centers between the double posts.
3. When the width of the culvert makes it necessary to anchor a post to the top of the culvert, a cast iron shoe or other device approved by the Engineer shall be used.
4. Fencing over stream and around headwall may also use Barbed Wire or Wire Mesh fencing with either wood post or steel post installation.
5. See Revised Standard Plan RSP A85 for Chain Link fence dimensions. See Standard Plan A86 for Barbed Wire and Wire Mesh fence dimensions and for wood post and steel post installation.

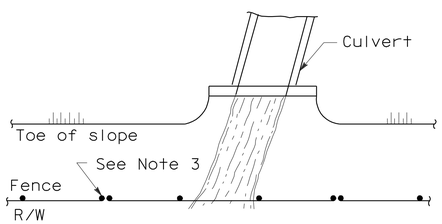

PLAN

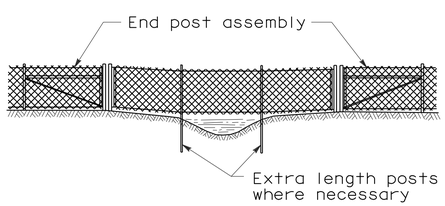

ELEVATION

INSTALLATION OVER STREAM

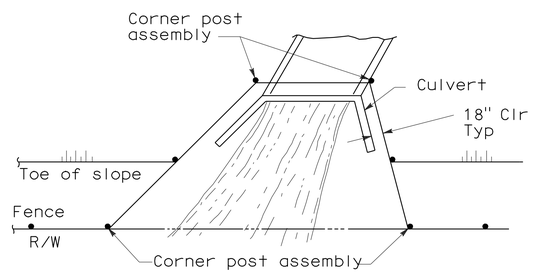

PLAN

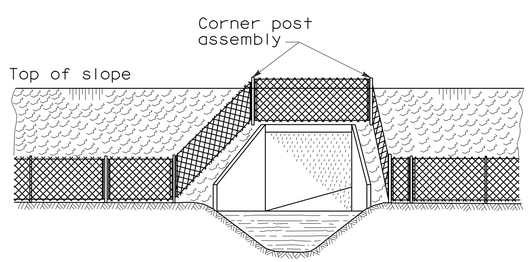

ELEVATION

INSTALLATION AROUND HEADWALL

See Note 4

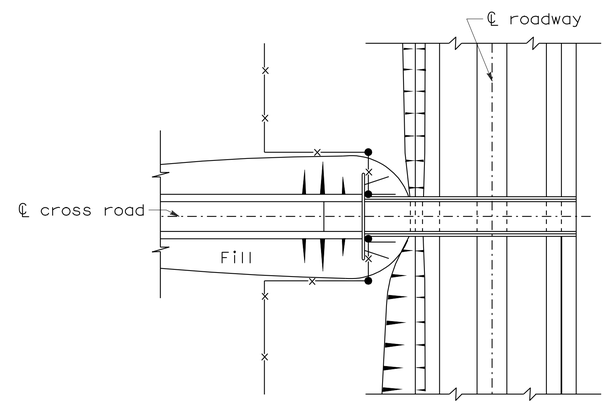

PLAN OF ROADWAY - UNDERPASS

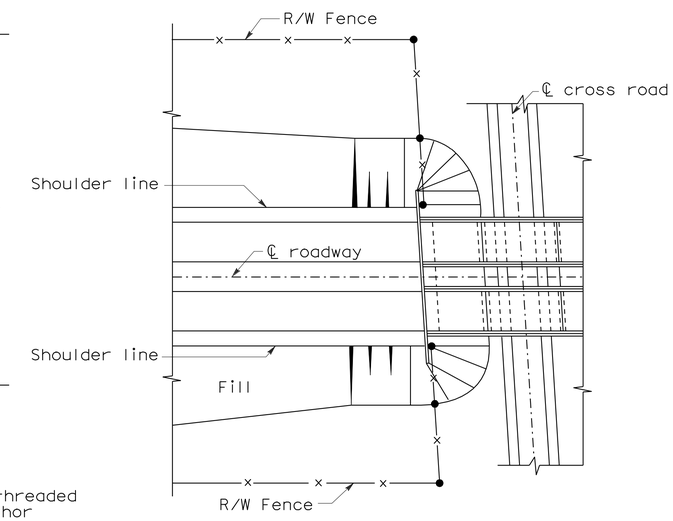

PLAN OF ROADWAY - OVERPASS

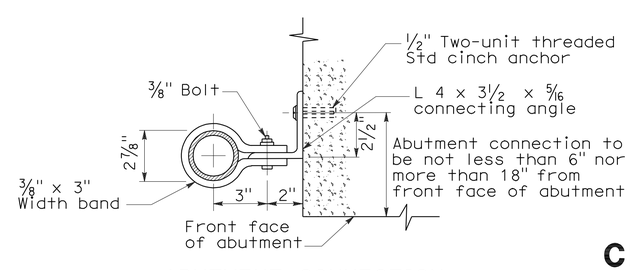

ABUTMENT CONNECTION

TYPICAL INSTALLATION AT BRIDGES

STATE OF CALIFORNIA
DEPARTMENT OF TRANSPORTATION

CHAIN LINK FENCE DETAILS

NO SCALE

NSP A85B DATED JUNE 5, 2009 SUPPLEMENTS THE STANDARD PLANS BOOK DATED MAY 2006.

NEW STANDARD PLAN NSP A85B

2006 NEW STANDARD PLAN NSP A85B

5-12-09

DIST	COUNTY	ROUTE	POST MILES TOTAL PROJECT	SHEET NO.	TOTAL SHEETS
07	LA	47,103	3.5/4.6, 0.0/1.1	389	1003

REGISTERED CIVIL ENGINEER

November 17, 2006
PLANS APPROVAL DATE

REGISTERED PROFESSIONAL ENGINEER Michael Janzen No. 44788 Exp. 03-31-08 CIVIL STATE OF CALIFORNIA

The State of California or its officers or agents shall not be responsible for the accuracy or completeness of electronic copies of this plan sheet.

To accompany plans dated 10-11-10

2006 REVISED STANDARD PLAN RSP A87A

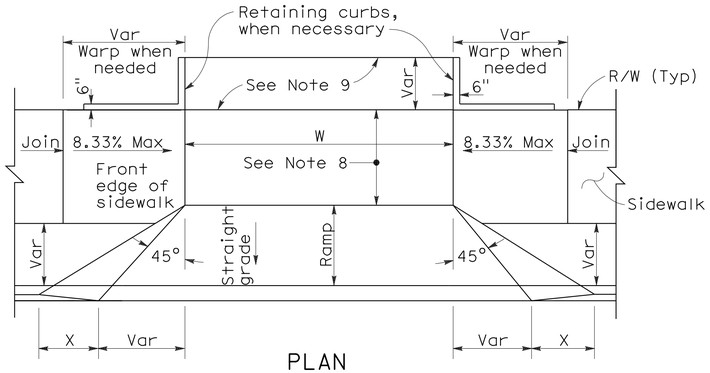

PLAN

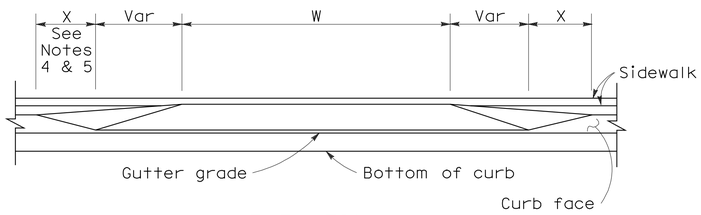

ELEVATION

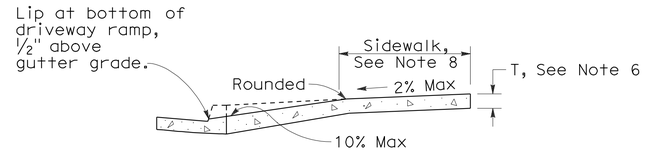

CASE A

Typical driveway, sidewalk not depressed

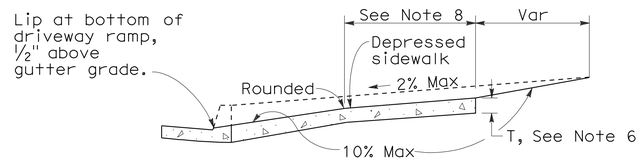

CASE B

Driveway with depressed sidewalk

SECTIONS

DRIVEWAYS

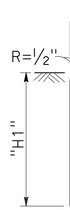

TYPE A1 CURBS

See Table A

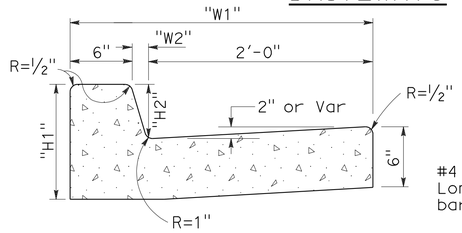

TYPE A2 CURBS

See Table A

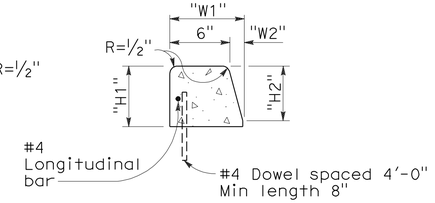

TYPE A3 CURBS

Superimposed on existing pavement
See Table A

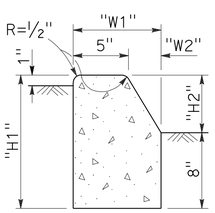

TYPE B1 CURBS

See Table A

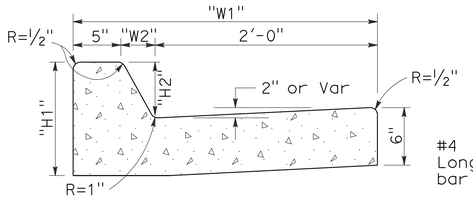

TYPE B2 CURBS

See Table A

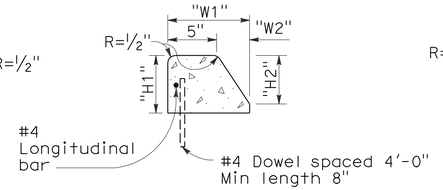

TYPE B3 CURBS

Superimposed on existing pavement
See Table A

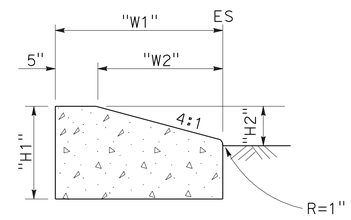

TYPE D CURBS

See Table A

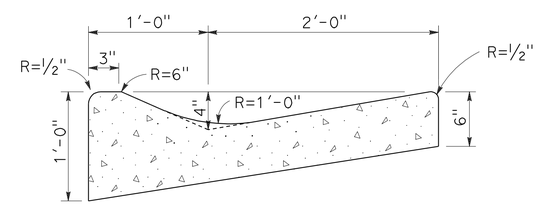

TYPE E CURB

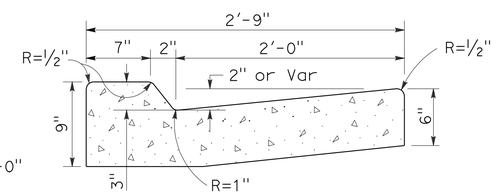

TYPE B4 CURBS

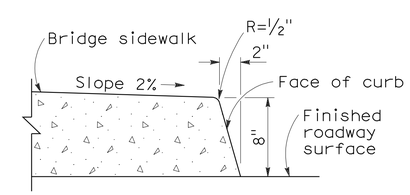

TYPE H CURB

On Bridges

CURBS

CURB QUANTITIES

TYPE	CUBIC YARDS PER LINEAR FOOT
A1-6	0.02585
A1-8	0.03084
A2-6	0.05903
A2-8	0.06379
A3-6	0.01036
A3-8	0.01435
B1-4	0.02185
B1-6	0.02930
B2-4	0.05515
B2-6	0.06171
B3-4	0.00641
B3-6	0.01074
B4	0.05709
D-4	0.04083
D-6	0.06804
E	0.06661

TABLE A

CURB TYPE	DIMENSIONS "H1"	"H2"	"W1"	"W2"
A1-6	1'-2"	6"	7½"	1½"
A1-8	1'-4"	8"	8"	2"
A2-6	1'-0"	6"	2'-7½"	1½"
A2-8	1'-2"	8"	2'-8"	2"
A3-6	6"	5"	7¼"	1¼"
A3-8	8"	7"	7¾"	1¾"
B1-4	1'-0"	4"	7½"	2½"
B1-6	1'-2"	6"	9"	4"
B2-4	10"	4"	2'-7½"	2½"
B2-6	1'-0"	6"	2'-9"	4"
B3-4	4"	3"	7"	2"
B3-6	6"	5"	8½"	3½"
D-4	10"	4"	1'-6"	1'-1"
D-6	1'-0"	6"	2'-2"	1'-8"

NOTES:

1. Case A driveway section typically applies.
2. Use Case B driveway section when ramp slopes would exceed 10% in Case A.
3. Use Case B driveway section when sidewalk cross slope would exceed 2% in Case A.
4. X=3'-0" except for curb heights over 10" where 4:1 slopes shall be used on curb slope.
5. X is a variable when sidewalk is located where wheelchairs may traverse the surface. Slopes shall not exceed 8.33%.
6. Sidewalk and ramp thickness "T" at driveway shall be 4" for residental and 6" for commercial.
7. Difference in slope of the driveway ramp and the slope of a line between the gutter and a point on the roadway 5'-0" from gutter line shall not exceed 15%. Reduce driveway ramp slope, not gutter slope, where required.
8. Minimum width of clear passageway for sidewalk shall be 4'-0".
9. Retaining curbs and acquisition of construction easement may be necessary for narrow sidewalks or curb heights in excess of 6".
10. Across the pedestrian route at curb ramp locations, the gutter pan slope shall not exceed 1" of depth for each 2'-0" of width.

STATE OF CALIFORNIA
DEPARTMENT OF TRANSPORTATION

CURBS AND DRIVEWAYS

NO SCALE

RSP A87A DATED NOVEMBER 17, 2006 SUPERSEDES STANDARD PLAN A87A DATED MAY 1, 2006 - PAGE 113 OF THE STANDARD PLANS BOOK DATED MAY 2006.

REVISED STANDARD PLAN RSP A87A

10-25-06

DIST	COUNTY	ROUTE	POST MILES TOTAL PROJECT	SHEET NO.	TOTAL SHEETS
07	LA	47,103	3.5/4.6, 0.0/1.1	390	1003

REGISTERED CIVIL ENGINEER

September 1, 2006
PLANS APPROVAL DATE

REGISTERED PROFESSIONAL ENGINEER Hector David Cordova No. C41957 Exp. 3-31-08 CIVIL STATE OF CALIFORNIA

The State of California or its officers or agents shall not be responsible for the accuracy or completeness of electronic copies of this plan sheet.

To accompany plans dated 10-11-10

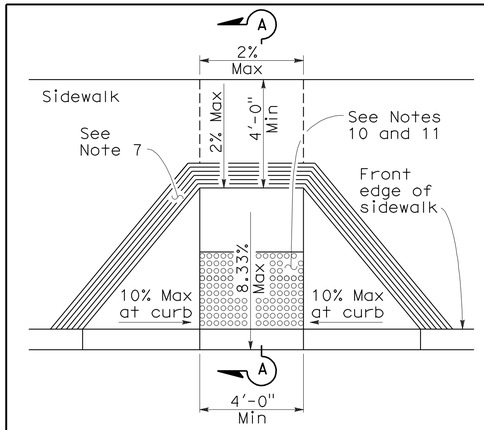

CASE A

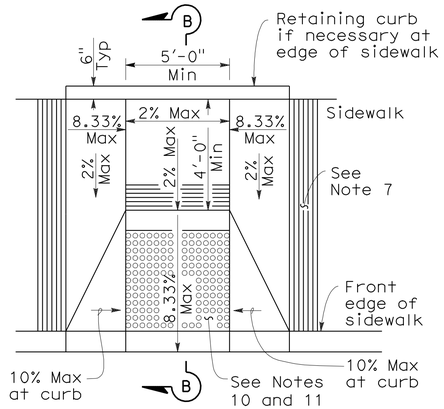

CASE B

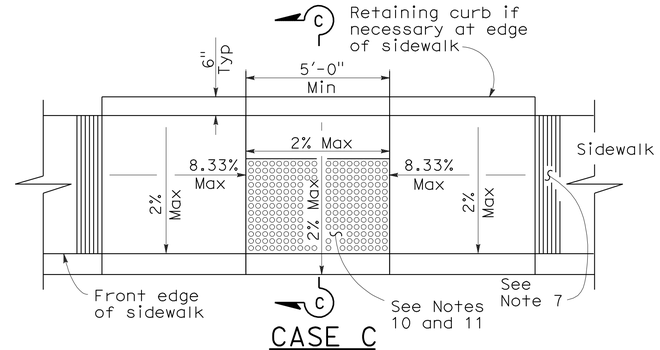

CASE C

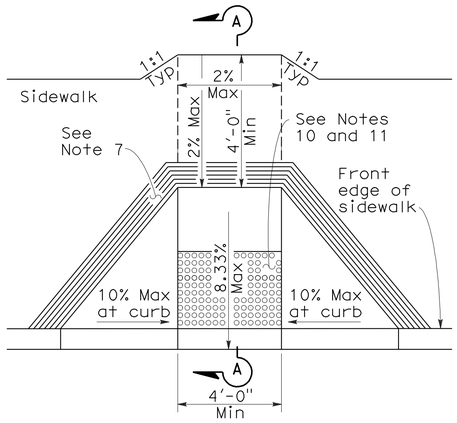

CASE D

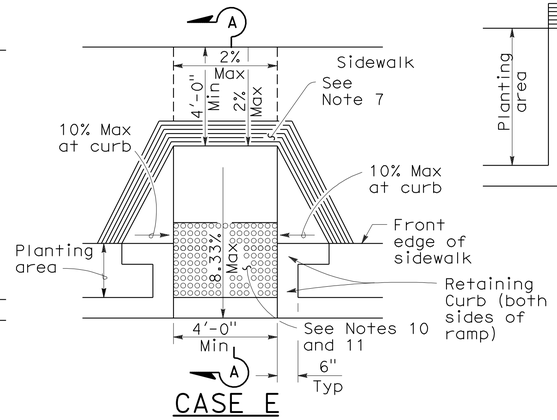

CASE E

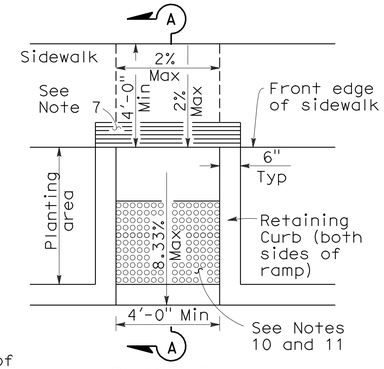

CASE F

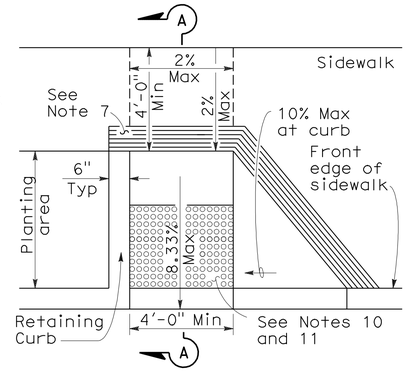

CASE G
See Note 4

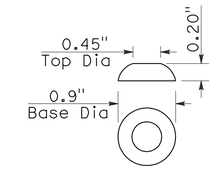

RAISED TRUNCATED DOME

SECTION A-A

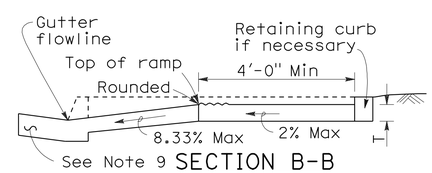

SECTION B-B
Depress entire sidewalk as required

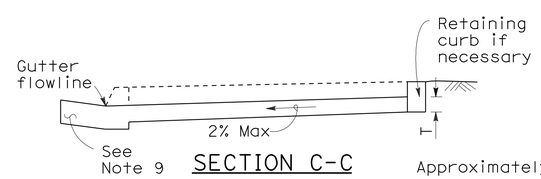

SECTION C-C

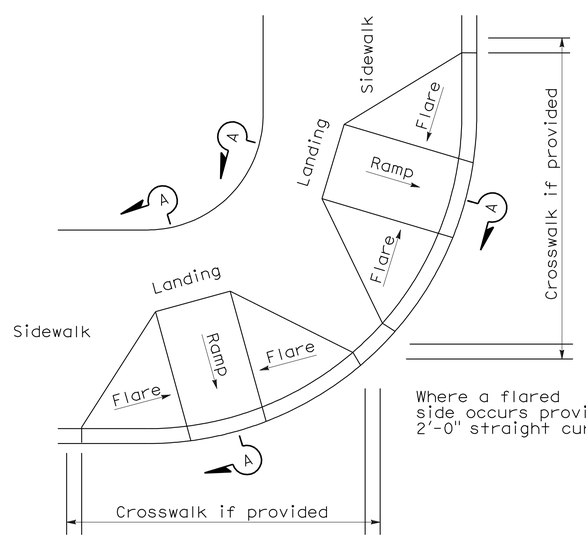

DETAIL A

TYPICAL TWO-RAMP CORNER INSTALLATION
See Note 1

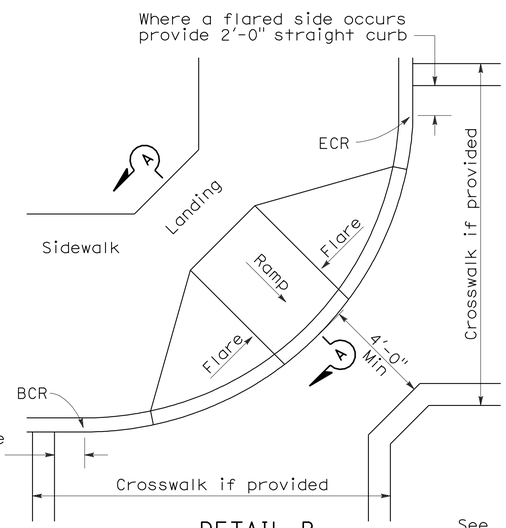

DETAIL B

TYPICAL ONE-RAMP CORNER INSTALLATION
See Notes 1 and 3

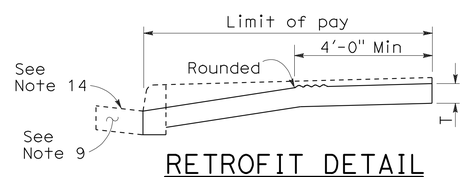

RETROFIT DETAIL
Existing curb and sidewalk

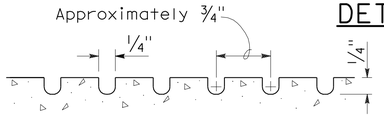

GROOVING DETAIL

NOTES:

1. As site conditions dictate, Case A through Case G curb ramps may be used for corner installations similar to those shown in Detail A and Detail B. The case of curb ramps used in Detail A do not have to be the same. Case A through Case G curb ramps also may be used at mid block locations, as site conditions dictate.
2. If distance from curb to back of sidewalk is too short to accommodate ramp and 4'-0" platform (landing) as shown in Case A, the sidewalk may be depressed longitudinally as in Case B, or C or may be widened as in Case D.
3. When ramp is located in center of curb return, crosswalk configuration must be similar to that shown for Detail B.
4. As site conditions dictate, the retaining curb side and the flared side of the Case G ramp shall be constructed in reversed position.
5. If located on a curve, the sides of the ramp need not be parallel, but the minimum width of the ramp shall be 4'-0".
6. Side slope of ramp flares vary uniformly from a maximum of 10% at curb to conform with longitudinal sidewalk slope adjacent to top of the ramp, except in Case C and Case F.
7. The curb ramp shall be outlined, as shown, with a 1'-0" wide border with 1/4" grooves approximately 3/4" on center. See grooving detail.
8. Transitions from ramps and landing to walks, gutters or streets shall be flush and free of abrupt changes.
9. Maximum slopes of adjoining gutters, the road surface immediately adjacent to the curb ramp or accessible route shall not exceed 5 percent within 4'-0" of the top and bottom of the curb ramp.
10. Curb ramps shall have a detectable warning surface that extends the full width and 3'-0" depth of the ramp. Detectable Warning Surfaces shall conform to the details on this plan and the requirements in the Special Provisions.
11. The edge of the detectable warning surface nearest the street shall be between 6" and 8" from the gutter flowline.
12. Sidewalk and ramp thickness, "T", shall be 3½" minimum.
13. Utility pull boxes, manholes, vaults and all other utility facilities within the boundaries of the curb ramp will be relocated or adjusted to grade by the owner prior to, or in conjunction with, curb ramp construction.
14. For retrofit conditions, removal and replacement of curb apron will be at the Contractor's option, unless otherwise shown on project plans.

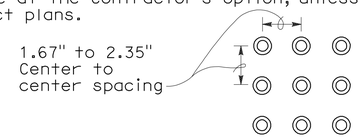

RAISED TRUNCATED DOME PATTERN (IN-LINE)

DETECTABLE WARNING SURFACE
See Note 10

STATE OF CALIFORNIA
DEPARTMENT OF TRANSPORTATION

CURB RAMP DETAILS

NO SCALE

RSP A88A DATED SEPTEMBER 1, 2006 SUPERSEDES STANDARD PLAN A88A DATED MAY 1, 2006 - PAGE 115 OF THE STANDARD PLANS BOOK DATED MAY 2006.

REVISED STANDARD PLAN RSP A88A

2006 REVISED STANDARD PLAN RSP A88A

8-3-06

DIST	COUNTY	ROUTE	POST MILES TOTAL PROJECT	SHEET NO.	TOTAL SHEETS
07	LA	47,103	3.5/4.6, 0.0/1.1	391	1003

REGISTERED CIVIL ENGINEER

May 15, 2009
PLANS APPROVAL DATE

REGISTERED PROFESSIONAL ENGINEER William K. Farnbach No. C49042 Exp. 9-30-10 CIVIL STATE OF CALIFORNIA

The State of California or its officers or agents shall not be responsible for the accuracy or completeness of electronic copies of this plan sheet.

To accompany plans dated 10-11-10

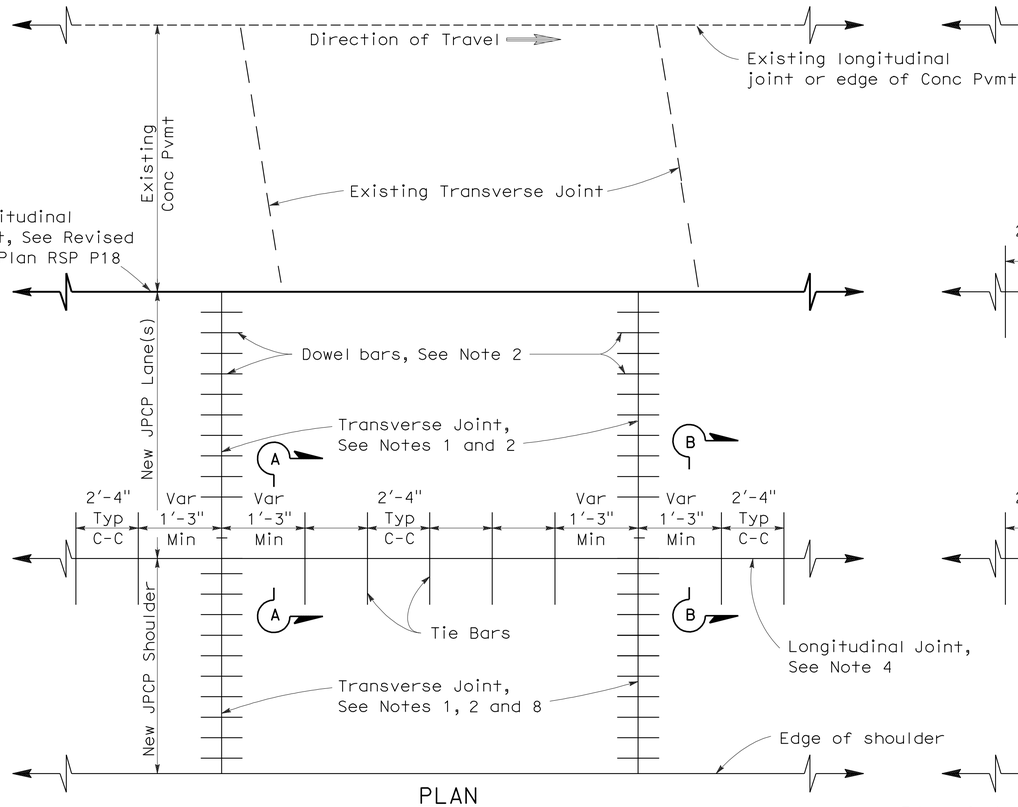

PLAN

LANE/SHOULDER ADDITION OR RECONSTRUCTION

See Notes 6 and 7

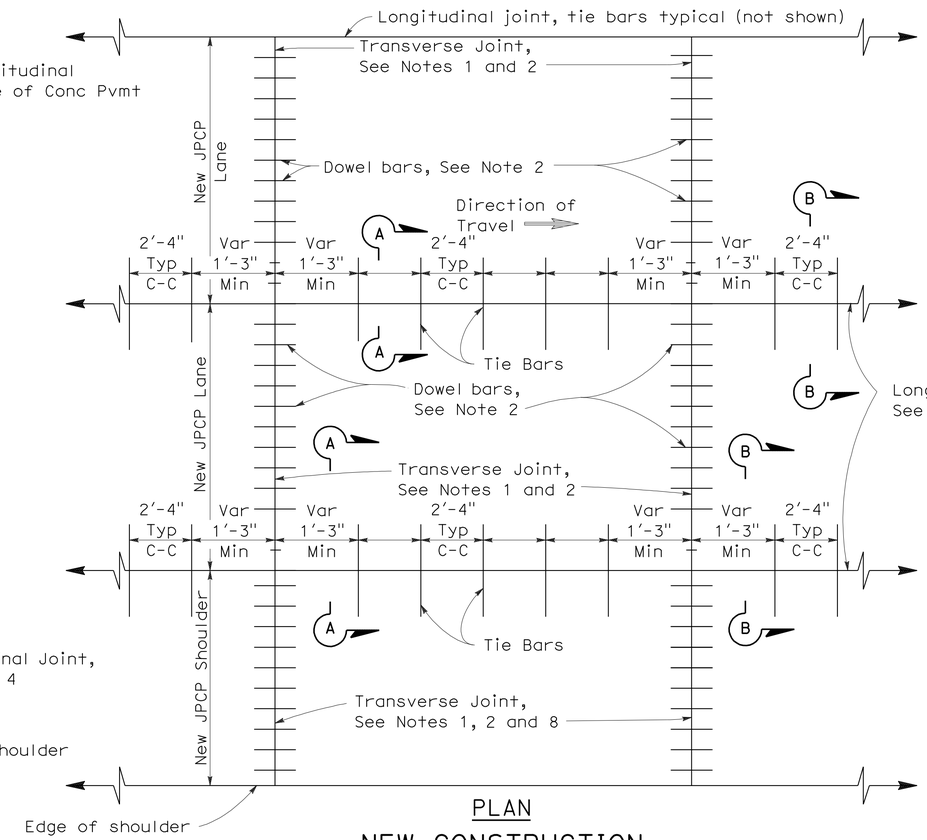

PLAN

NEW CONSTRUCTION

See Notes 6 and 7

NOTES:

1. Transverse joints shall be constructed at right angles to the longitudinal pavement joints in new jointed plain concrete pavement and spaced at successive repeated intervals of 12', 15', 13' and 14'.
2. For transverse joint and dowel bar details not shown, See Revised Standard Plan RSP P10.
3. Construct longitudinal contraction joints as shown in Section A-A when more than one lane or shoulder widths are placed at one time. If constructing one lane at a time, use longitudinal construction joint, as shown in Section B-B.
4. For additional longitudinal joint details, see Revised Standard Plan RSP P18.
5. If fresh concrete is placed adjacent to existing concrete, the top corner of the new hardened concrete does not need to be rounded to the 1/4" radius as shown.
6. Joint spacing patterns do not apply to intersections.
7. Details can also apply to inside widening.
8. Dowel bars may be omitted from shoulders when the shoulder cross slope is not the same as the adjacent traffic lane.

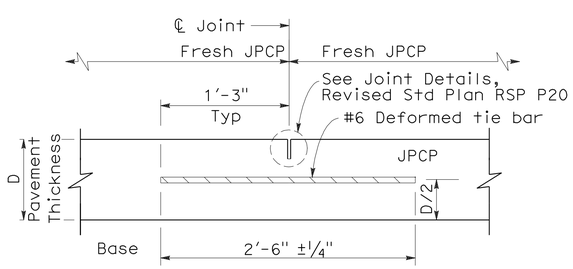

SECTION A-A

LONGITUDINAL CONTRACTION JOINT

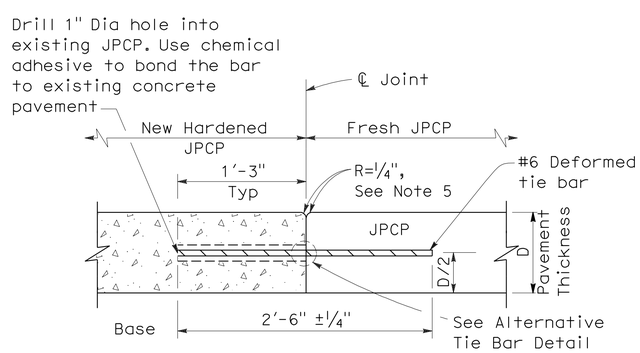

SECTION B-B

LONGITUDINAL CONSTRUCTION JOINT

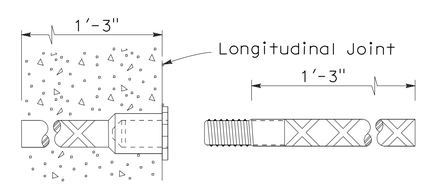

ALTERNATIVE TIE BAR SPLICE DETAIL

(Splice Coupler)

TIE BAR DETAILS

STATE OF CALIFORNIA
DEPARTMENT OF TRANSPORTATION

JOINTED PLAIN CONCRETE PAVEMENT

NO SCALE

RSP P1 DATED MAY 15, 2009 SUPERSEDES STANDARD PLAN P1
DATED MAY 1, 2006 - PAGE 119 OF THE STANDARD PLANS BOOK DATED MAY 2006.

REVISED STANDARD PLAN RSP P1

2006 REVISED STANDARD PLAN RSP P1

5-8-09

DIST	COUNTY	ROUTE	POST MILES TOTAL PROJECT	SHEET NO.	TOTAL SHEETS
07	LA	47,103	3.5/4.6, 0.0/1.1	392	1003

William K. Farnbach
REGISTERED CIVIL ENGINEER

June 5, 2009
PLANS APPROVAL DATE

REGISTERED PROFESSIONAL ENGINEER
William K. Farnbach
No. C49042
Exp. 9-30-10
CIVIL
STATE OF CALIFORNIA

The State of California or its officers or agents shall not be responsible for the accuracy or completeness of electronic copies of this plan sheet.

To accompany plans dated 10-11-10

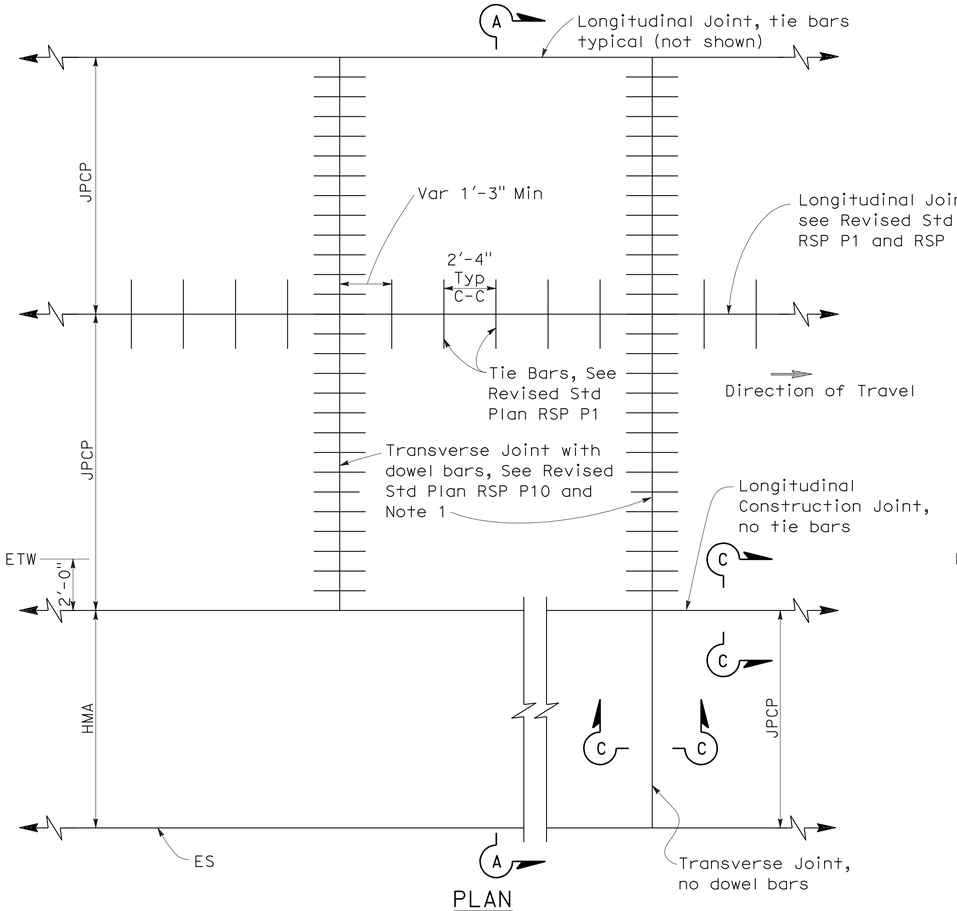

PLAN

NEW CONSTRUCTION

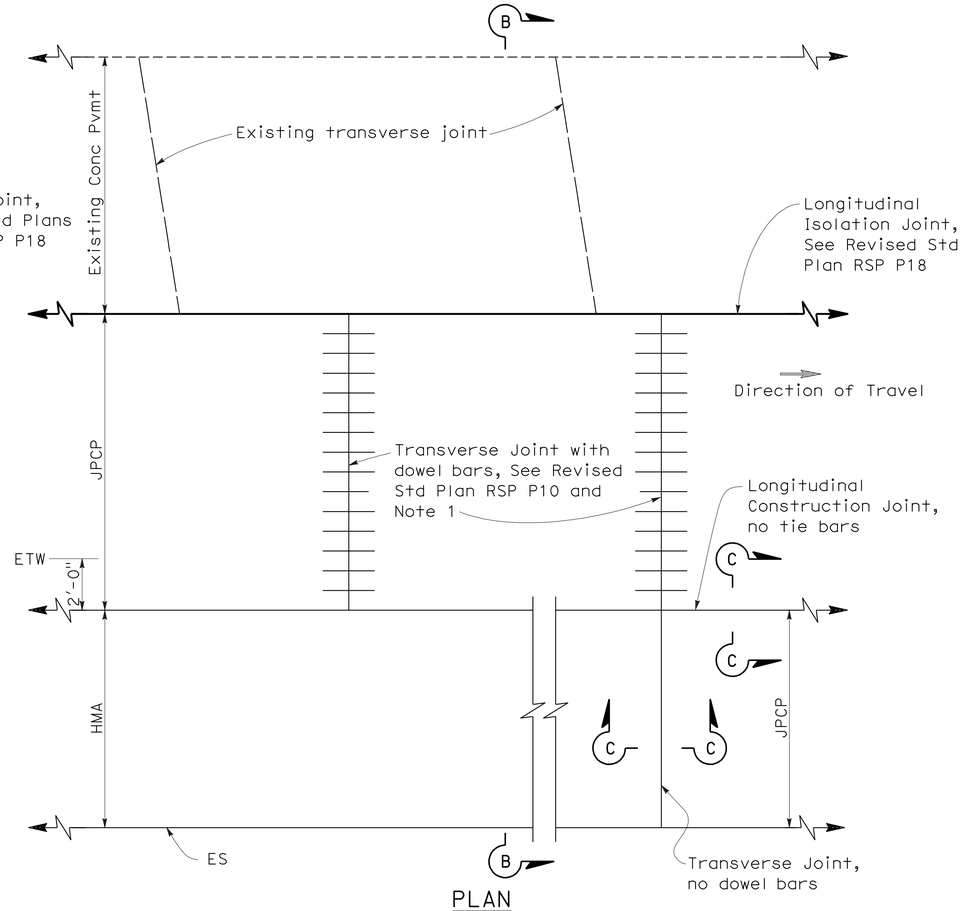

PLAN

LANE/SHOULDER ADDITION OR RECONSTRUCTION

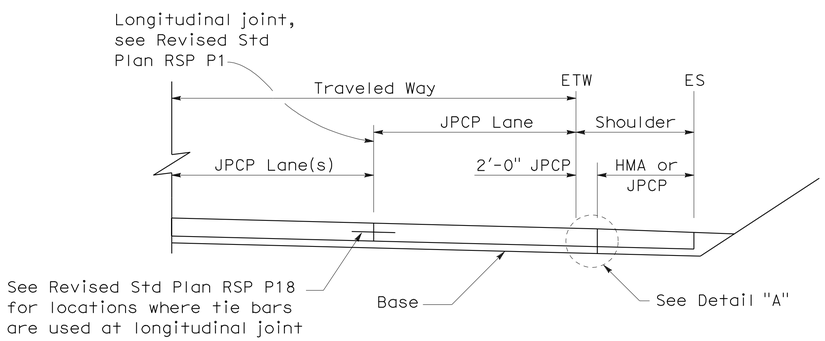

SECTION A-A

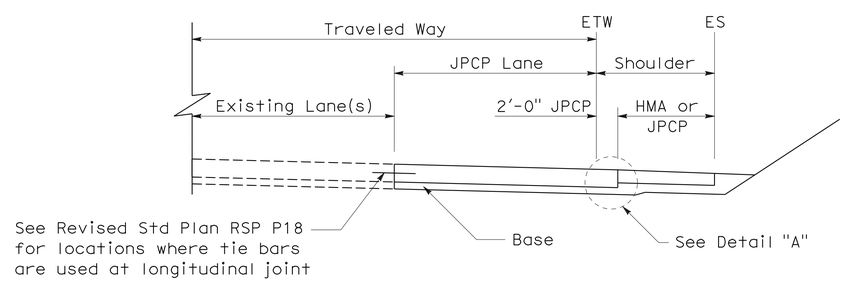

SECTION B-B

NOTES:

1. Transverse joints shall be constructed at right angles to the longitudinal pavement joints in new Jointed Plain Concrete Pavement and spaced at successive repeated intervals of 12', 15', 13' and 14'.
2. For locations of rumble strips, see project plans. For rumble strip details not shown, see Standard Plans A40A and A40B.
3. Joint spacing patterns do not apply to intersections.

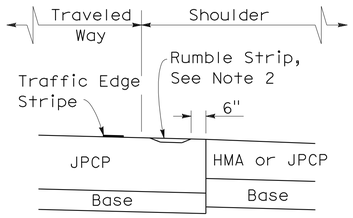

DETAIL "A"

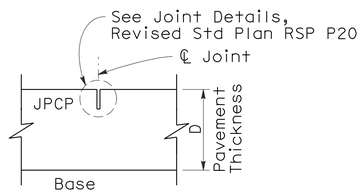

SECTION C-C

TRANSVERSE/LONGITUDINAL JOINT

(no dowel bars/tie bars)

STATE OF CALIFORNIA
DEPARTMENT OF TRANSPORTATION

JOINTED PLAIN CONCRETE PAVEMENT-WIDENED SLAB DETAILS

NO SCALE

RSP P2 DATED JUNE 5, 2009 SUPERCEDES STANDARD PLAN P2
DATED MAY 1, 2006 - PAGE 120 OF THE STANDARD PLANS BOOK DATED MAY 2006.

REVISED STANDARD PLAN RSP P2

2006 REVISED STANDARD PLAN RSP P2

5-19-09

DIST	COUNTY	ROUTE	POST MILES TOTAL PROJECT	SHEET NO.	TOTAL SHEETS
07	LA	47,103	3.5/4.6, 0.0/1.1	393	1003

William K. Farnbach
REGISTERED CIVIL ENGINEER

May 15, 2009
PLANS APPROVAL DATE

REGISTERED PROFESSIONAL ENGINEER William K. Farnbach No. C49042 Exp. 9-30-10 CIVIL STATE OF CALIFORNIA

The State of California or its officers or agents shall not be responsible for the accuracy or completeness of electronic copies of this plan sheet.

To accompany plans dated 10-11-10

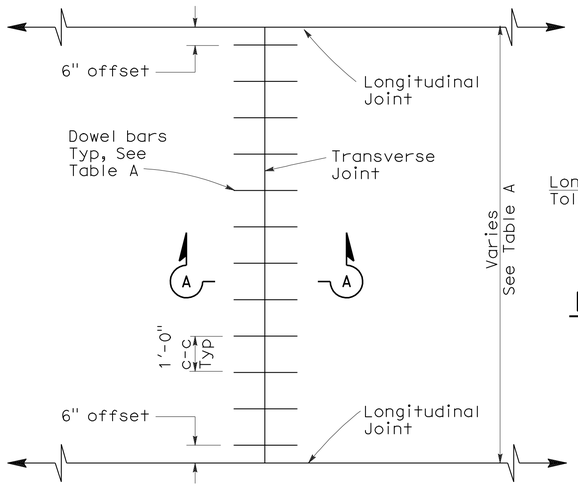

TRANSVERSE JOINT DOWEL BAR LAYOUT

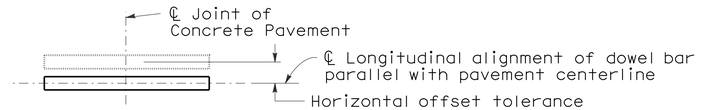

PLAN

HORIZONTAL OFFSET TOLERANCE

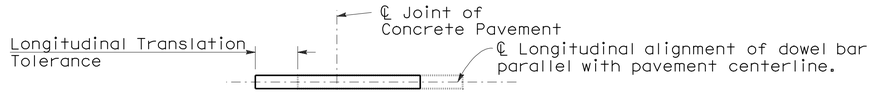

PLAN

LONGITUDINAL TRANSLATION TOLERANCE

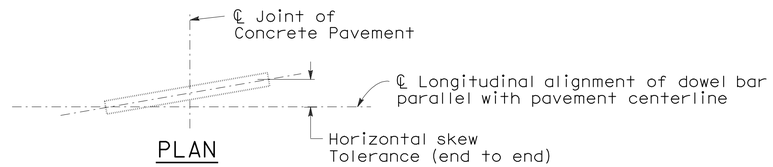

PLAN

HORIZONTAL SKEW TOLERANCE

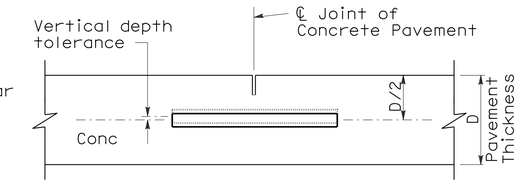

ELEVATION

VERTICAL DEPTH TOLERANCE

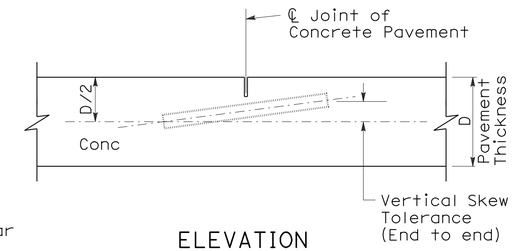

ELEVATION

VERTICAL SKEW TOLERANCE

NOTES:

1. See Revised Standard Plan RSP P1 for typical dowel bar placement and locations.
2. 1½" Dia smooth dowel bars are to be used with a pavement thickness, D, equal to or greater than 0.70 feet. For pavement thickness, D, less than 0.70 feet, use 1¼" Dia smooth dowel bars.
3. For widths not shown, see Project Plans.
4. If fresh concrete pavement is placed adjacent to existing concrete pavement, the top corner of the existing concrete pavement does not need to be rounded to the ¼" radius, as shown.

TABLE A (See Note 3)

Dowel Bar Transverse Spacing Table	
Width between Longitudinal Joints	Number of Dowels between Longitudinal Joints
14'-0"	14
13'-0"	13
12'-0"	12
11'-0"	11
10'-0"	10
8'-0"	8
5'-0"	5
4'-0"	4

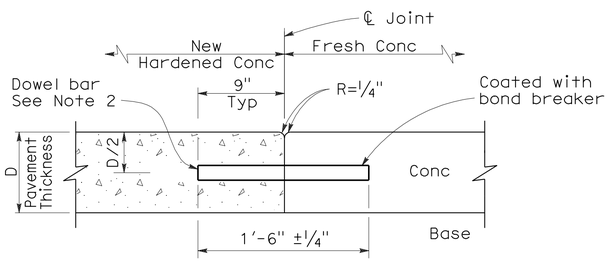

SECTION A-A

TRANSVERSE CONSTRUCTION JOINT DETAIL

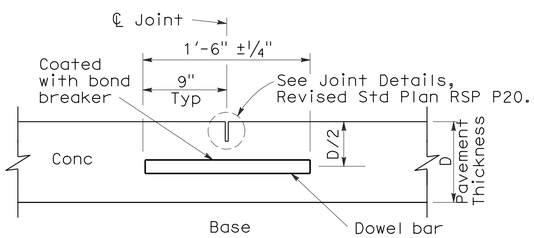

TRANSVERSE CONTRACTION JOINT

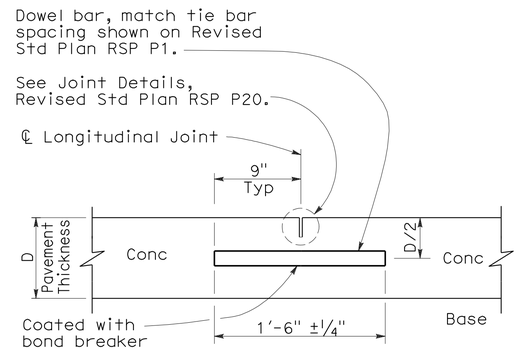

LONGITUDINAL CONTRACTION JOINT WITH DOWEL BARS

(See Revised Std Plan RSP P18)

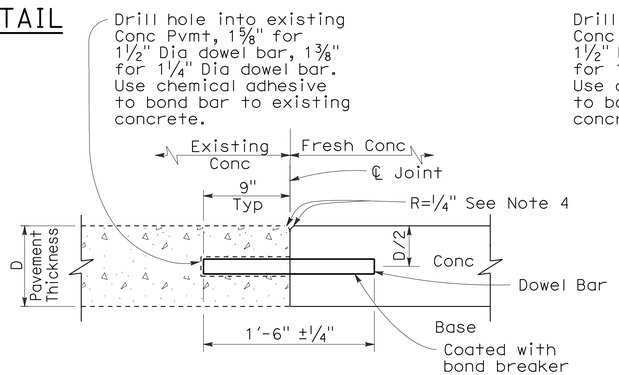

TRANSVERSE CONSTRUCTION JOINT FOR EXISTING CONCRETE PAVEMENT

(Drill and bond locations)

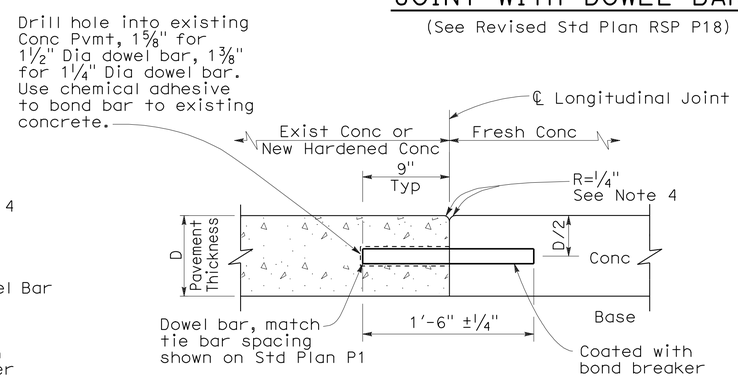

LONGITUDINAL CONSTRUCTION JOINT WITH DOWEL BARS

(See Revised Std Plan RSP P18)

STATE OF CALIFORNIA
DEPARTMENT OF TRANSPORTATION

CONCRETE PAVEMENT-DOWEL BAR DETAILS

NO SCALE

RSP P10 DATED MAY 15, 2009 SUPERSEDES STANDARD PLAN P10 DATED MAY 1, 2006 - PAGE 124 OF THE STANDARD PLANS BOOK DATED MAY 2006.

REVISED STANDARD PLAN RSP P10

2006 REVISED STANDARD PLAN RSP P10

5-8-09

DIST	COUNTY	ROUTE	POST MILES TOTAL PROJECT	SHEET NO.	TOTAL SHEETS
07	LA	47,103	3.5/4.6, 0.0/1.1	394	1003

William K. Farnbach
REGISTERED CIVIL ENGINEER

May 15, 2009
PLANS APPROVAL DATE

REGISTERED PROFESSIONAL ENGINEER
William K. Farnbach
No. C49042
Exp. 9-30-10
CIVIL
STATE OF CALIFORNIA

The State of California or its officers or agents shall not be responsible for the accuracy or completeness of electronic copies of this plan sheet.

To accompany plans dated 10-11-10

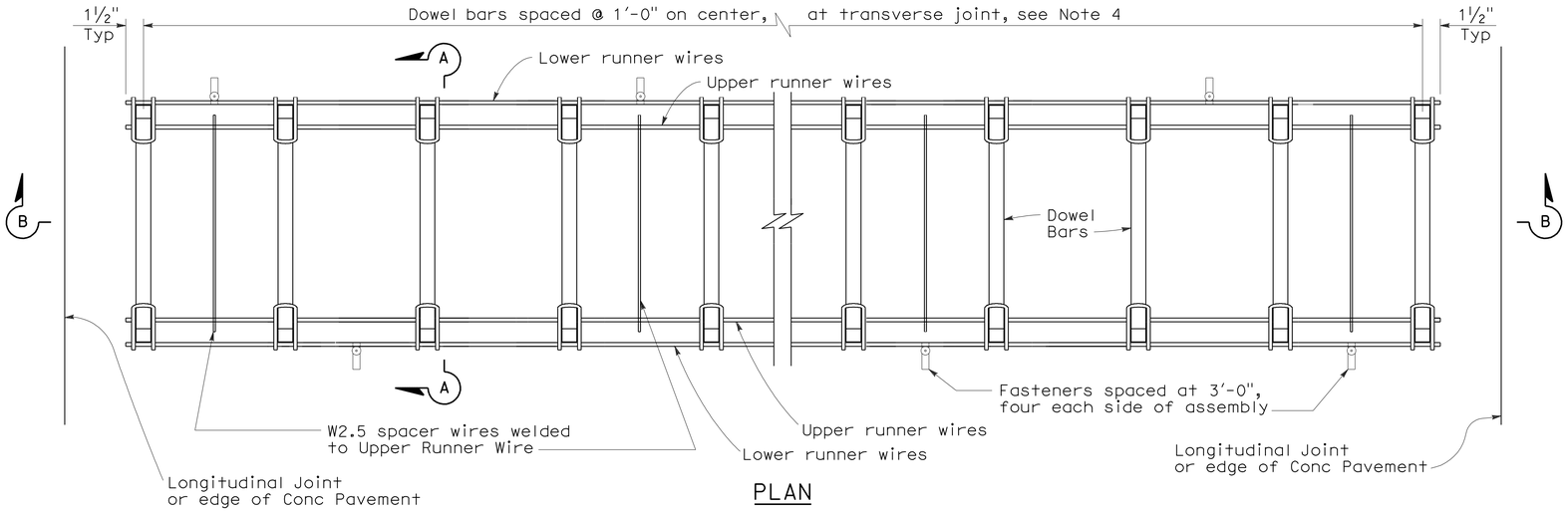

PLAN

DOWEL BAR BASKET (TRANSVERSE JOINT)

See Note 1

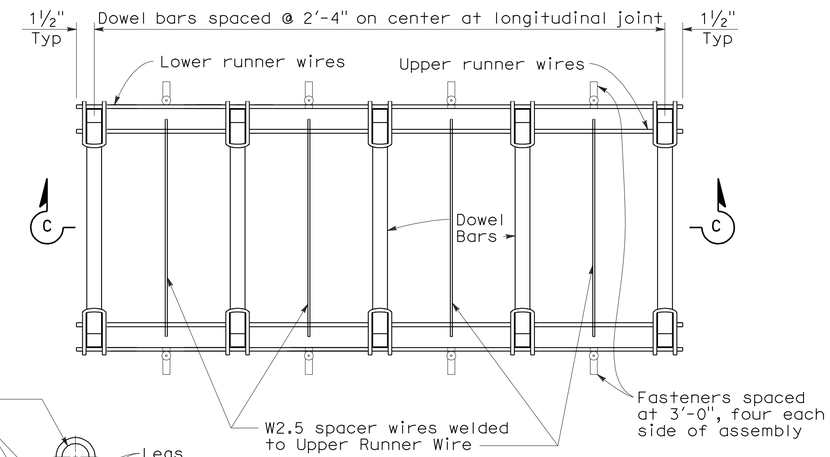

PLAN

DOWEL BAR BASKET (LONGITUDINAL JOINT)

See Note 1

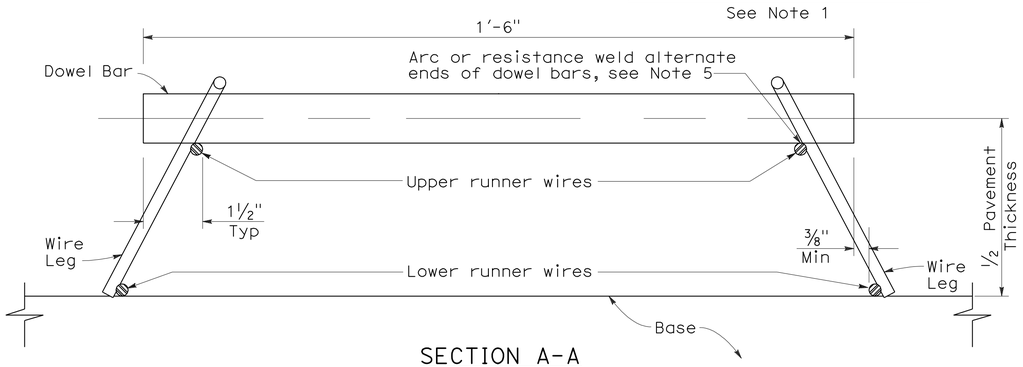

SECTION A-A

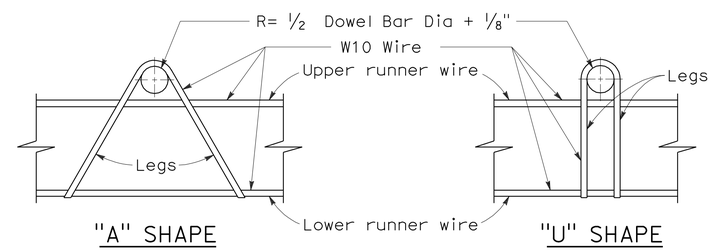

ASSEMBLY FRAME DETAILS

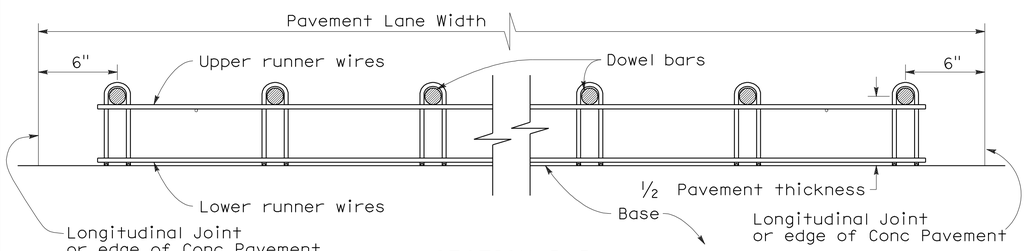

SECTION B-B

See Note 1

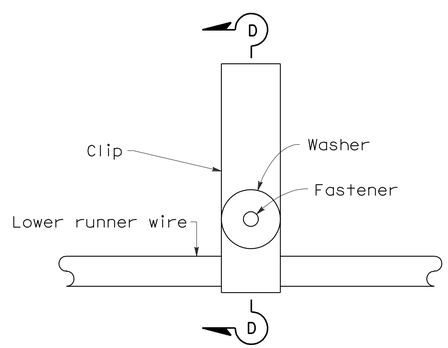

PLAN

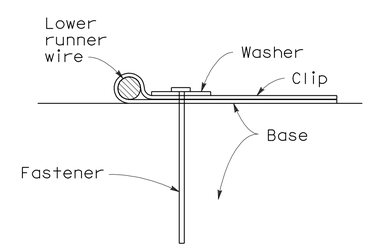

SECTION D-D

FASTENER DETAIL

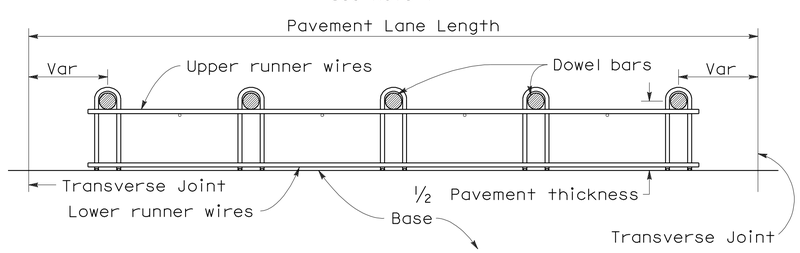

SECTION C-C

See Notes 1 and 4

NOTES:

1. "U" frame shape assembly shown. "U" frame shape or "A" frame shape are acceptable.
2. Wire sizes shown are minimum required.
3. All wire intersections are to be resistance welded.
4. Use tie bar spacing for longitudinal dowel bar locations. See Revised Std Plans RSPs P1, P2, and P3 for tie bar requirements.
5. Weld may be at top or bottom of dowel bar.

STATE OF CALIFORNIA
DEPARTMENT OF TRANSPORTATION

CONCRETE PAVEMENT-DOWEL BAR BASKET DETAILS

NO SCALE

RSP P12 DATED MAY 15, 2009 SUPERSEDES RSP P12 DATED NOVEMBER 17, 2006 AND STANDARD PLAN P12 DATED MAY 1, 2006 - PAGE 125 OF THE STANDARD PLANS BOOK DATED MAY 2006.

REVISED STANDARD PLAN RSP P12

2006 REVISED STANDARD PLAN RSP P12

5-8-09

DIST	COUNTY	ROUTE	POST MILES TOTAL PROJECT	SHEET NO.	TOTAL SHEETS
07	LA	47,103	3.5/4.6, 0.0/1.1	395	1003

William K. Farnbach
REGISTERED CIVIL ENGINEER

May 15, 2009
PLANS APPROVAL DATE

REGISTERED PROFESSIONAL ENGINEER
William K. Farnbach
No. C49042
Exp. 9-30-10
CIVIL
STATE OF CALIFORNIA

The State of California or its officers or agents shall not be responsible for the accuracy or completeness of electronic copies of this plan sheet.

To accompany plans dated 10-11-10

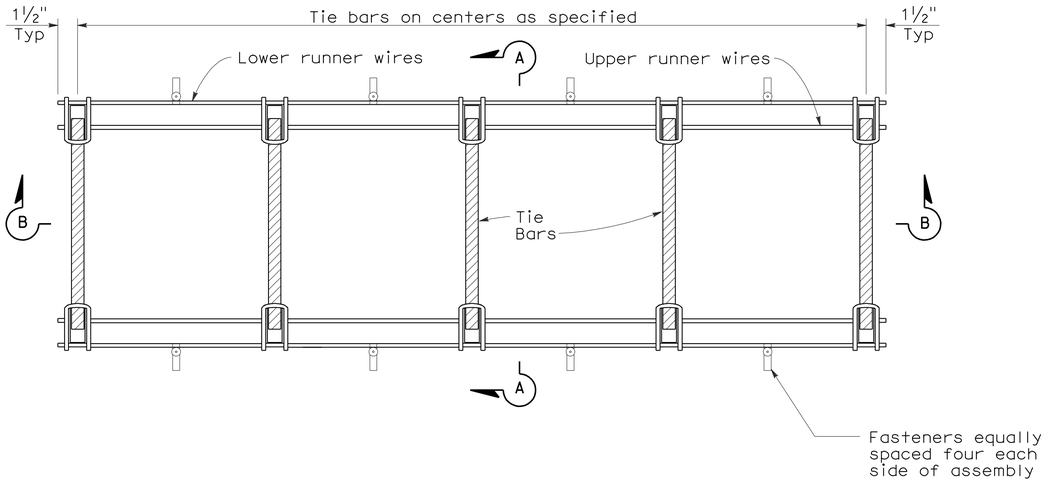

PLAN

TIE BAR BASKET

(TIE BARS AT LONGITUDINAL JOINT)
See Note 1

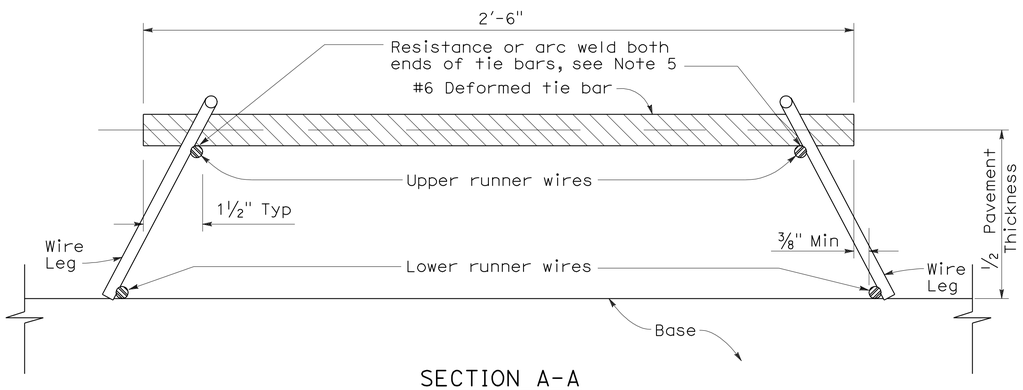

SECTION A-A

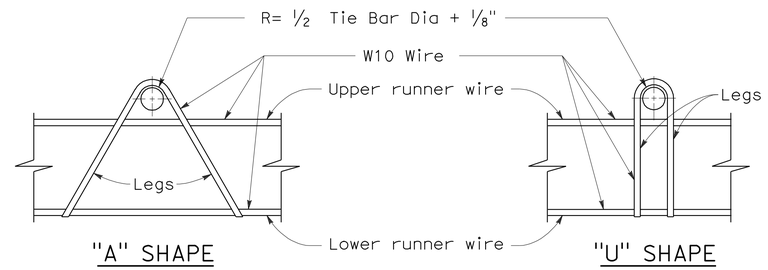

ASSEMBLY FRAME DETAILS

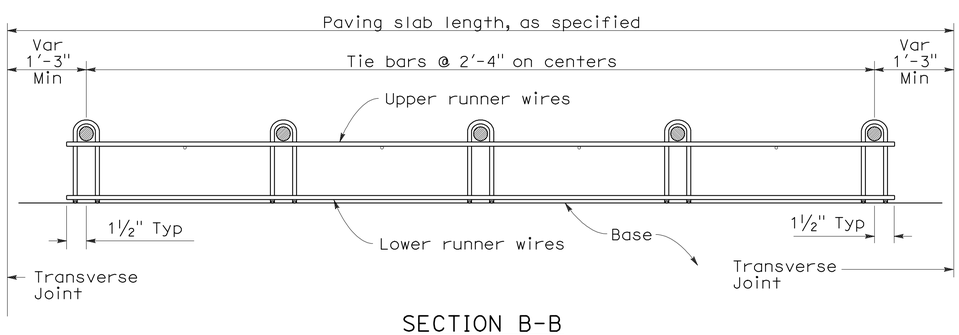

SECTION B-B
See Note 1

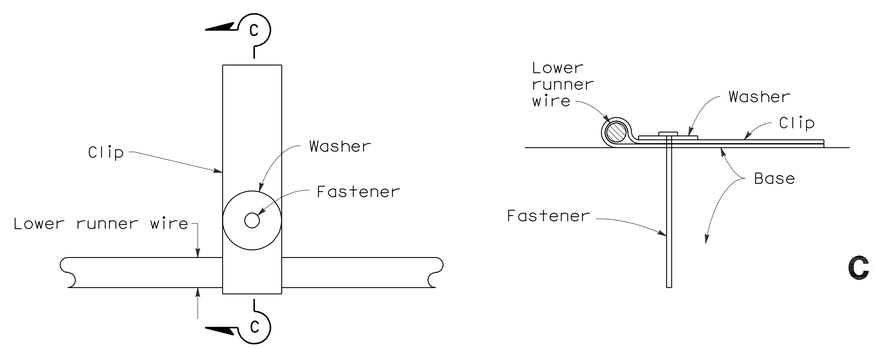

PLAN

SECTION C-C

FASTENER DETAIL

NOTES:

1. "U" frame shape assembly shown. "U" frame shape or "A" frame shape are acceptable.
2. Wire sizes shown are minimum required.
3. All wire intersections are to be resistance welded.
4. Not for use on nondoweled skewed jointed plain concrete pavement.
5. Weld may be at top or bottom of tie bar.

STATE OF CALIFORNIA
DEPARTMENT OF TRANSPORTATION

CONCRETE PAVEMENT-TIE BAR BASKET DETAILS

NO SCALE

RSP P17 DATED MAY 15, 2009 SUPERSEDES RSP P17 DATED NOVEMBER 17, 2006 AND STANDARD PLAN P17 DATED MAY 1, 2006 - PAGE 126 OF THE STANDARD PLANS BOOK DATED MAY 2006.

REVISED STANDARD PLAN RSP P17

2006 REVISED STANDARD PLAN RSP P17

5-8-09

DIST	COUNTY	ROUTE	POST MILES TOTAL PROJECT	SHEET NO.	TOTAL SHEETS
07	LA	47,103	3.5/4.6, 0.0/1.1	396	1003

William K. Farnbach
REGISTERED CIVIL ENGINEER

June 5, 2009
PLANS APPROVAL DATE

REGISTERED PROFESSIONAL ENGINEER William K. Farnbach No. C49042 Exp. 9-30-10 CIVIL STATE OF CALIFORNIA

The State of California or its officers or agents shall not be responsible for the accuracy or completeness of electronic copies of this plan sheet.

To accompany plans dated 10-11-10

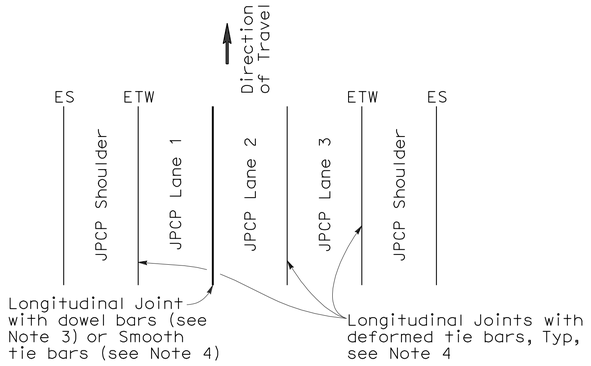

3 LANES WITH TIED CONCRETE SHOULDERS
PLAN

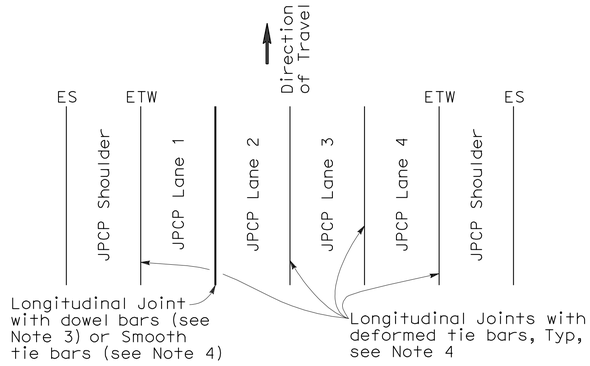

4 LANES WITH TIED CONCRETE SHOULDERS
PLAN

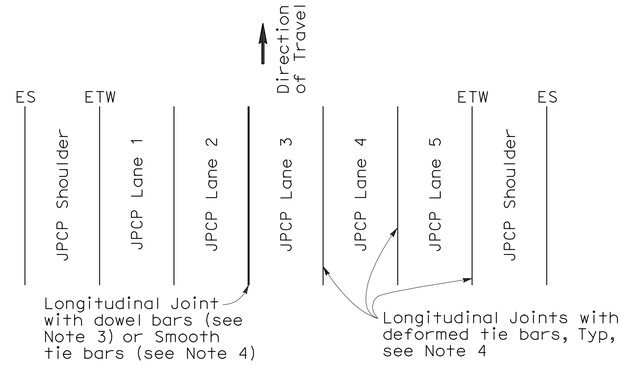

5 LANES WITH TIED CONCRETE SHOULDERS
PLAN

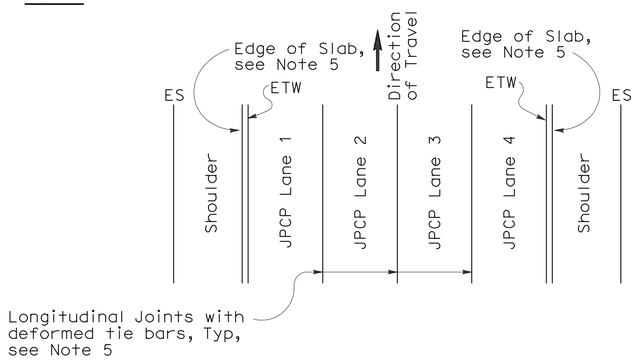

4 LANES OR LESS WITH WIDENED SLAB
PLAN

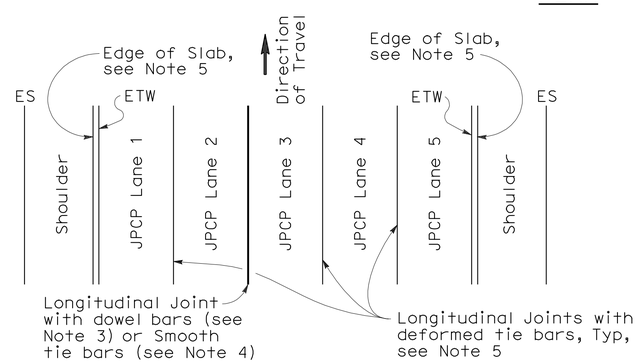

5 LANES WITH WIDENED SLAB
PLAN

NEW CONSTRUCTION

Location of Longitudinal Joints
(For JPCP)

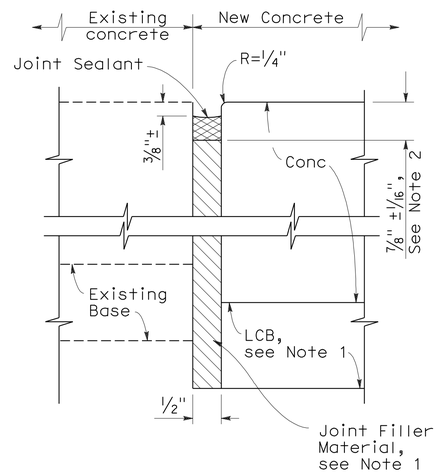

DETAIL A

ISOLATION JOINT

NOTES:

1. Where Lean Concrete Base is not used as base material, the joint filler material used for the longitudinal isolation joint shall only extend to the bottom of the new concrete slab. See Detail A.
2. Use 5/8" ±1/16" dimension for silicone sealant.
3. See Revised Standard Plan RSP P10 for longitudinal joint with dowel bars.
4. See Revised Standard Plan RSP P1.
5. See Revised Standard Plan RSP P2.

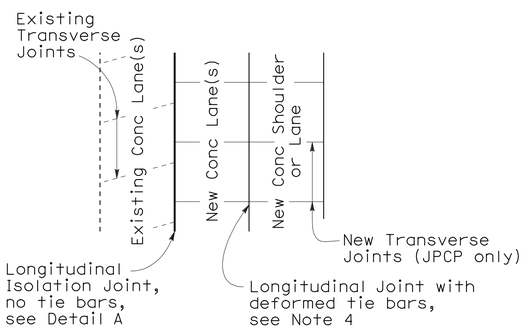

CASE 1
PLAN

Transverse Joints do not align between new and existing

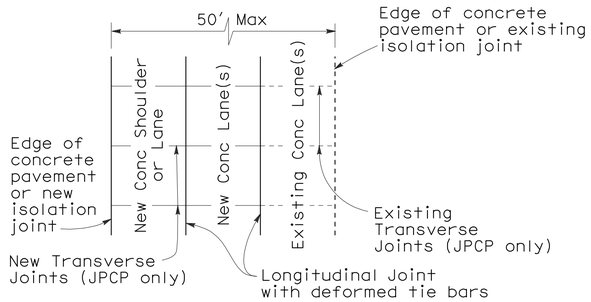

CASE 2
PLAN

Transverse Joints align between new and existing

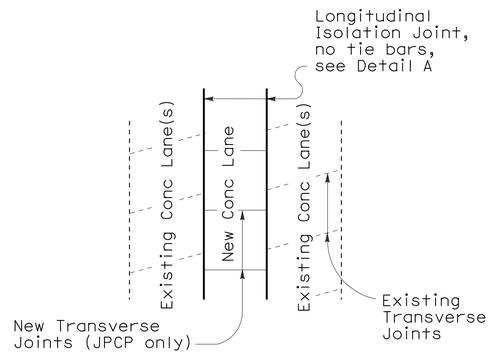

CASE 3 (INTERIOR LANE REPLACEMENT)
PLAN

Transverse Joints do not align between new and existing

LANE/SHOULDER ADDITION OR RECONSTRUCTION

(For JPCP and CRCP)

STATE OF CALIFORNIA
DEPARTMENT OF TRANSPORTATION

CONCRETE PAVEMENT-LANE SCHEMATICS AND ISOLATION JOINT DETAIL

NO SCALE

RSP P18 DATED JUNE 5, 2009 SUPERSEDES RSP P18 DATED MAY 15, 2009, RSP P18 DATED NOVEMBER 17, 2006 AND STANDARD PLAN P18 DATED MAY 1, 2006 - PAGE 127 OF THE STANDARD PLANS BOOK DATED MAY 2006.

REVISED STANDARD PLAN RSP P18

2006 REVISED STANDARD PLAN RSP P18

5-14-09

NOTE:

1. Tie bars, dowel bars, and reinforcement are not shown in joint seal details, see Revised Standard Plans RSP P1, RSP P3, RSP P10, RSP P35, RSP P45, or RSP P46 as applicable.

DIST	COUNTY	ROUTE	POST MILES TOTAL PROJECT	SHEET NO.	TOTAL SHEETS
07	LA	47,103	3.5/4.6, 0.0/1.1	397	1003

William K. Farnbach
REGISTERED CIVIL ENGINEER

May 15, 2009
PLANS APPROVAL DATE

REGISTERED PROFESSIONAL ENGINEER William K. Farnbach No. C49042 Exp. 9-30-10 CIVIL STATE OF CALIFORNIA

The State of California or its officers or agents shall not be responsible for the accuracy or completeness of electronic copies of this plan sheet.

To accompany plans dated 10-11-10

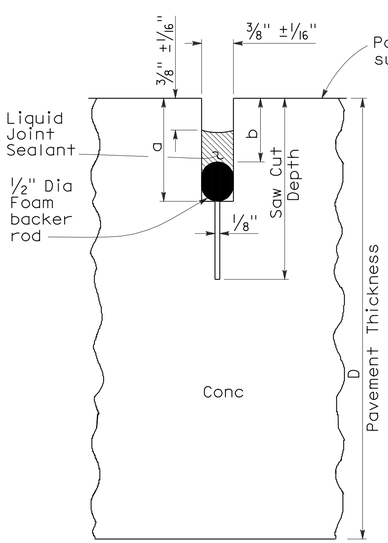

LIQUID SEALANT

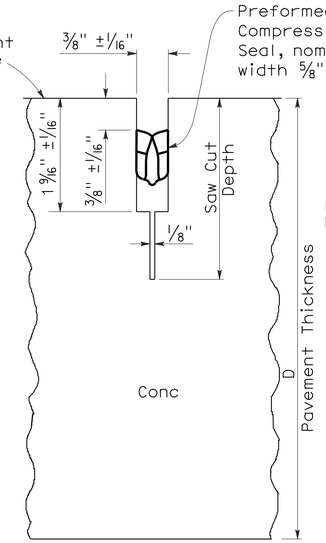

COMPRESSION SEAL

TYPE A1

Transverse Contraction Joints

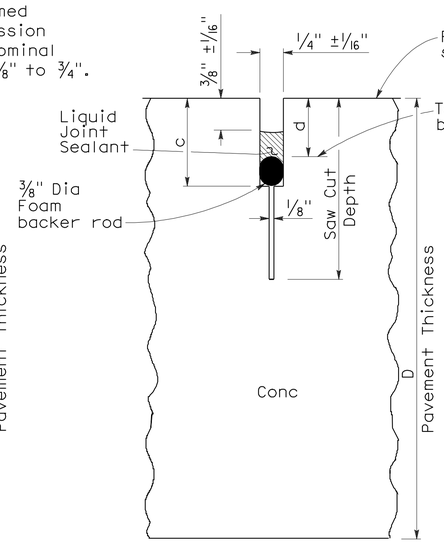

LIQUID SEALANT

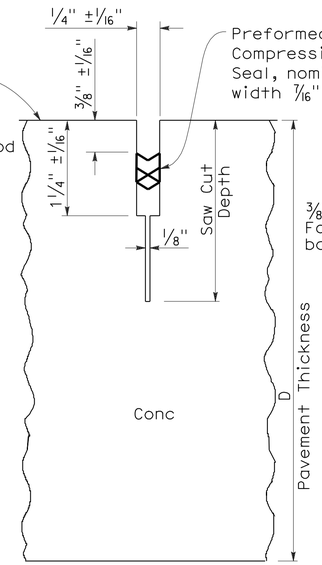

COMPRESSION SEAL

TYPE A2

Longitudinal Contraction Joints

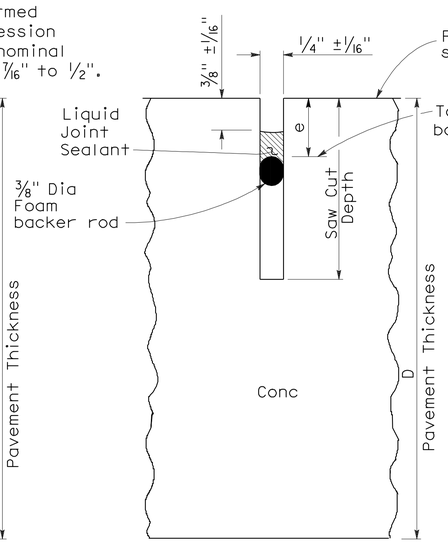

LIQUID SEALANT

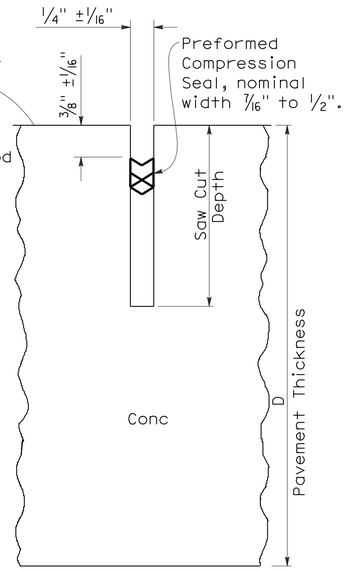

COMPRESSION SEAL

TYPE B

Longitudinal or Transverse Contraction Joint

LIQUID SEALANT RESERVOIR DEPTH

LIQUID SEALANT MATERIAL	3/8" Joint Width Type A1		1/4" Joint Width Type A2		1/4" Joint Width Type B
	DIMENSION		DIMENSION		DIMENSION
	a	b	c	d	e
SILCONE	1" ±1/16"	5/8" ±1/16"	15/16" ±1/16"	9/16" ±1/16"	9/16" ±1/16"
ASPHALT RUBBER	1 3/16" ±1/16"	3/4" ±1/16"	1 1/16" ±1/16"	11/16" ±1/16"	11/16" ±1/16"

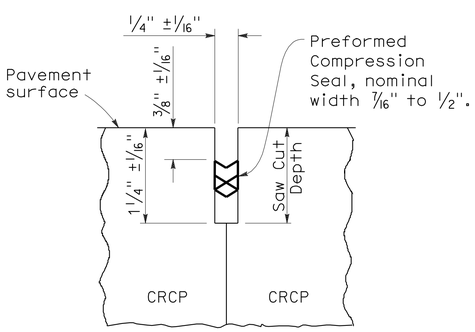

COMPRESSION SEAL

TYPE C

Transverse and Longitudinal Construction Joints (For CRCP)

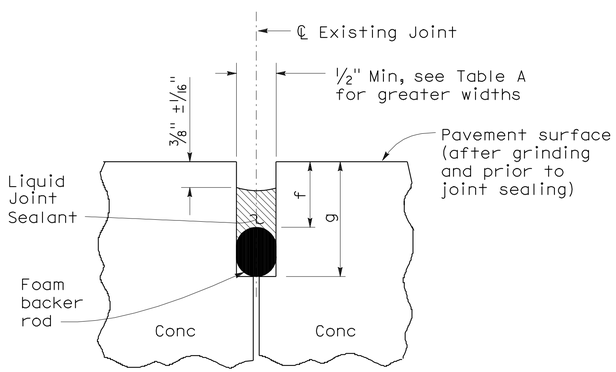

LIQUID SEALANT

TYPE R

Retrofit Transverse and Longitudinal Joints

TABLE A (TYPE R JOINT)

Sawn Joint Width	Backer Rod Diameter ± 1/16"	DIMENSION "f"	DIMENSION "g"
1"	1 5/16"	7/8"	2 1/4"
7/8"	1 3/16"	13/16"	2"
3/4"	1"	3/4"	1 3/4"
5/8"	7/8"	11/16"	1 1/2"
1/2"	11/16"	5/8"	1 1/4"

STATE OF CALIFORNIA
DEPARTMENT OF TRANSPORTATION

CONCRETE PAVEMENT-JOINT DETAILS

NO SCALE

RSP P20 DATED MAY 15, 2009 SUPERSEDES STANDARD PLAN P20
DATED MAY 1, 2006 - PAGE 128 OF THE STANDARD PLANS BOOK DATED MAY 2006.

REVISED STANDARD PLAN RSP P20

2006 REVISED STANDARD PLAN RSP P20

5-8-09

DIST	COUNTY	ROUTE	POST MILES TOTAL PROJECT	SHEET NO.	TOTAL SHEETS
07	LA	47,103	3.5/4.6, 0.0/1.1	398	1003

William K. Farnbach
REGISTERED CIVIL ENGINEER

May 15, 2009
PLANS APPROVAL DATE

REGISTERED PROFESSIONAL ENGINEER
William K. Farnbach
No. C49042
Exp. 9-30-10
CIVIL
STATE OF CALIFORNIA

The State of California or its officers or agents shall not be responsible for the accuracy or completeness of electronic copies of this plan sheet.

To accompany plans dated 10-11-10

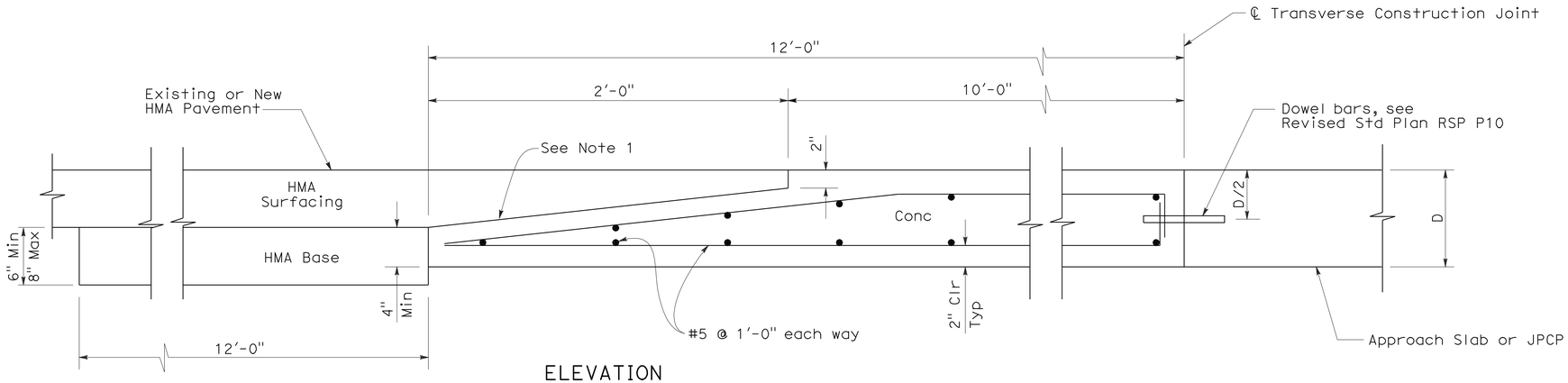

ELEVATION

CONCRETE PAVEMENT TO HOT MIXED ASPHALT PAVEMENT TRANSITION PANEL

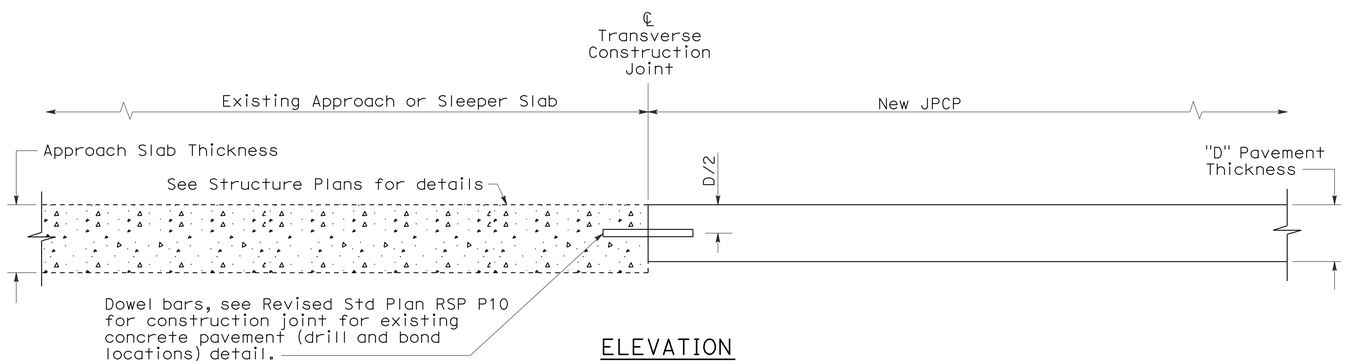

ELEVATION

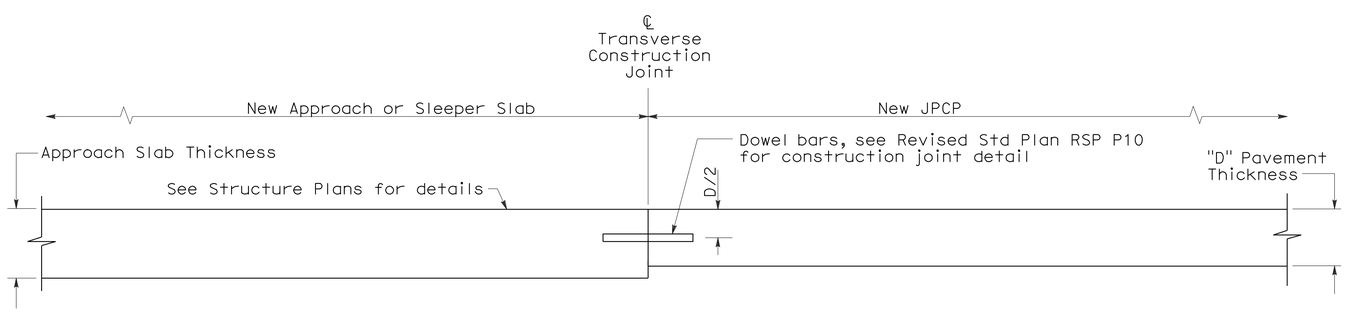

ELEVATION

CONCRETE PAVEMENT TRANSITION TO APPROACH OR SLEEPER SLAB

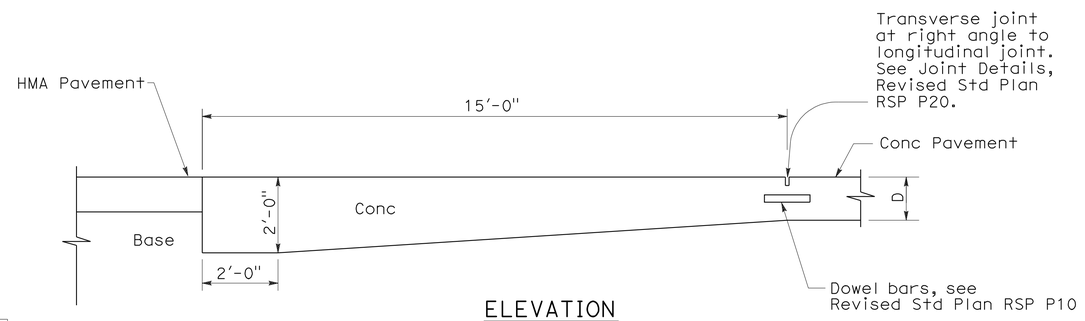

ELEVATION

PAVEMENT END ANCHOR

NOTE:

1. Heavy broom finish.

STATE OF CALIFORNIA
DEPARTMENT OF TRANSPORTATION

JOINTED PLAIN CONCRETE PAVEMENT-END PANEL PAVEMENT TRANSITIONS

NO SCALE

RSP P30 DATED MAY 15, 2009 SUPERSEDES STANDARD PLAN P30
DATED MAY 1, 2006 - PAGE 129 OF THE STANDARD PLANS BOOK DATED MAY 2006.

REVISED STANDARD PLAN RSP P30

2006 REVISED STANDARD PLAN RSP P30

5-8-09

DIST	COUNTY	ROUTE	POST MILES TOTAL PROJECT	SHEET NO.	TOTAL SHEETS
07	LA	47,103	3.5/4.6, 0.0/1.1	399	1003

William K. Farnbach
REGISTERED CIVIL ENGINEER

May 15, 2009
PLANS APPROVAL DATE

REGISTERED PROFESSIONAL ENGINEER
William K. Farnbach
No. C49042
Exp. 9-30-10
CIVIL
STATE OF CALIFORNIA

The State of California or its officers or agents shall not be responsible for the accuracy or completeness of electronic copies of this plan sheet.

To accompany plans dated 10-11-10

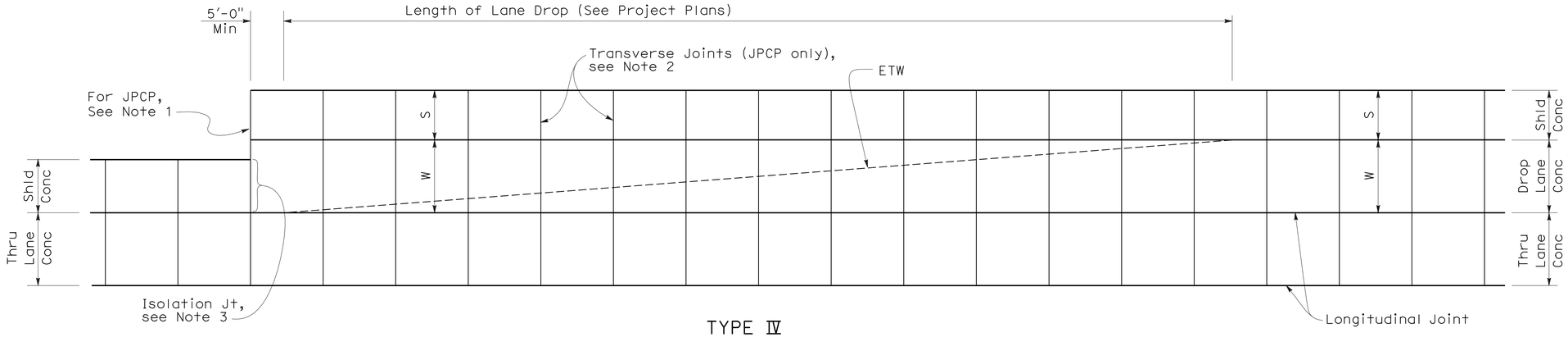

TYPE Ⅳ

JOINTED PLAIN AND CONTINUOUSLY REINFORCED CONCRETE PAVEMENT

(See Revised Std Plans RSP P1, RSP P2, or New Std Plan NSP P4 for details not shown)

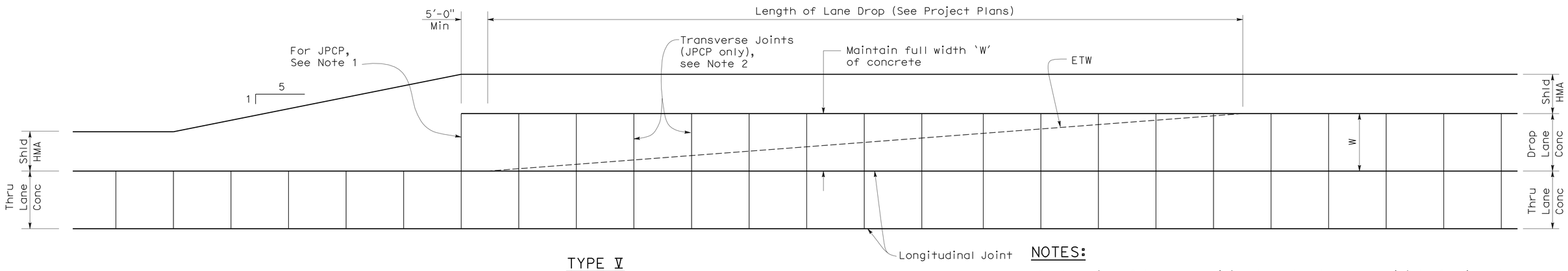

TYPE Ⅴ

JOINTED PLAIN AND CONTINUOUSLY REINFORCED CONCRETE PAVEMENT

(See Revised Std Plans RSP P1, RSP P2, or New Std Plan NSP P4 for details not shown)

NOTES:

1. Location of transverse joint to match transverse joint of adjacent lane.
2. Place transverse joint of lane and shoulder perpendicular to longitudinal joint of through lane.
3. Isolation joint detail shown on Revised Standard Plan RSP P18.

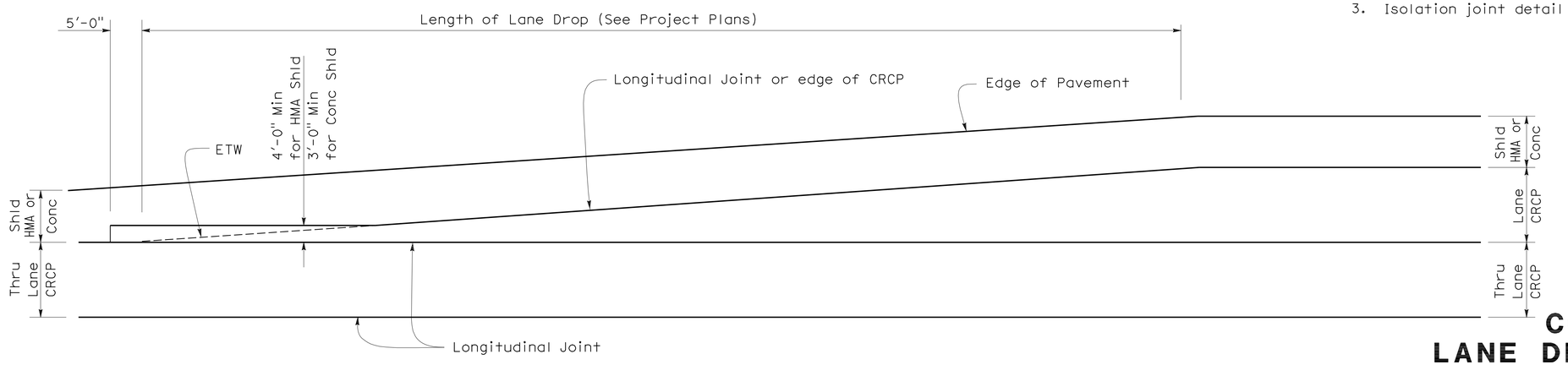

TYPE Ⅵ

CONTINUOUSLY REINFORCED CONCRETE PAVEMENT

(See New Std Plan NSP P4 for details not shown)

LEGEND

S - Shoulder width
W - Lane width

STATE OF CALIFORNIA
DEPARTMENT OF TRANSPORTATION

CONCRETE PAVEMENT-
LANE DROP PAVING DETAILS No. 2

NO SCALE

NSP P34 DATED MAY 15, 2009 SUPPLEMENTS THE STANDARD PLANS BOOK DATED MAY 2006.

NEW STANDARD PLAN NSP P34

2006 NEW STANDARD PLAN NSP P34

5-8-09

DIST	COUNTY	ROUTE	POST MILES TOTAL PROJECT	SHEET NO.	TOTAL SHEETS
07	LA	47,103	3.5/4.6, 0.0/1.1	400	1003

William K. Farnbach
REGISTERED CIVIL ENGINEER

May 15, 2009
PLANS APPROVAL DATE

REGISTERED PROFESSIONAL ENGINEER
William K. Farnbach
No. C49042
Exp. 9-30-10
CIVIL
STATE OF CALIFORNIA

The State of California or its officers or agents shall not be responsible for the accuracy or completeness of electronic copies of this plan sheet.

To accompany plans dated 10-11-10

2006 REVISED STANDARD PLAN RSP P35

NOTES:

1. Details for gore area paving are applicable to both exit and entrance ramps.
2. Transverse Joint Layouts are not shown. Refer to Revised Standard Plan RSP P1 or Project Plans for details regarding joint layouts, tie bars, and dowel bars not shown.
3. WWF 4 x 4 - W4.0 x W4.0 can be used in place of steel reinforcement for gore area paving only.
4. Omit longitudinal joint when concrete on ramp shoulder is less than 3'-0".
5. Place joint perpendicular to ramp longitudinal joints. Match location of joint with ramp transverse joints.
6. Place joint perpendicular to ramp longitudinal joints. Match location of joint with mainline transverse joints.
7. Isolation joint detail shown on Revised Standard Plan RSP P18.
8. For jointed plain concrete pavement, transverse joints to be spaced from fixed transverse joint and shall follow spacing pattern on Revised Standard Plan RSP P1. Minimum spacing shall be 6 feet.

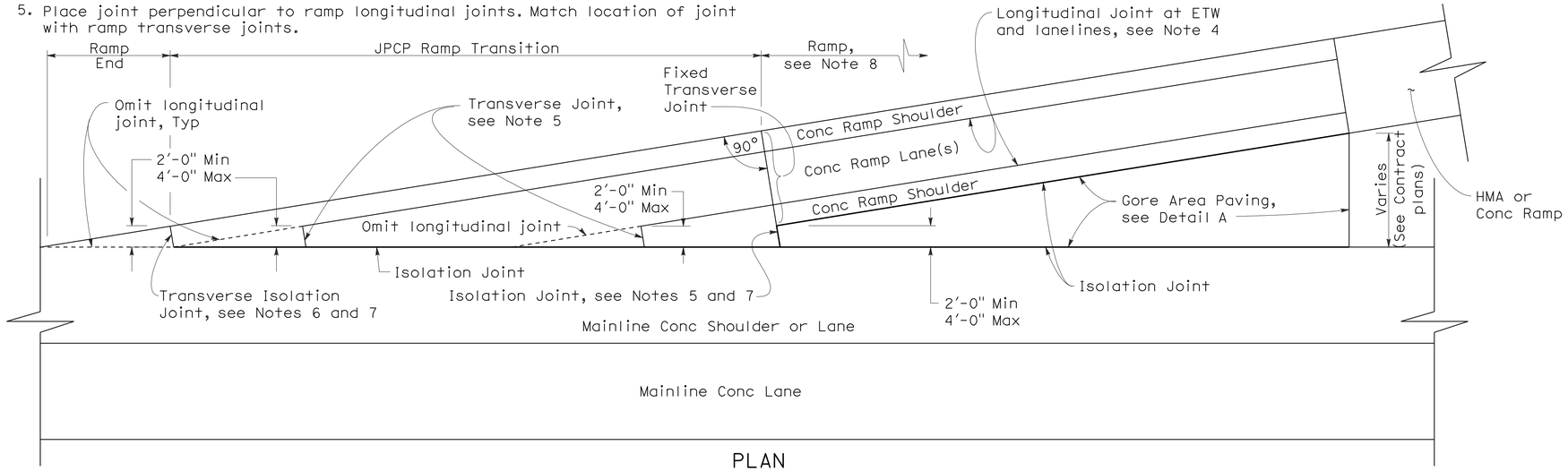

PLAN

RAMP TRANSITION DETAIL

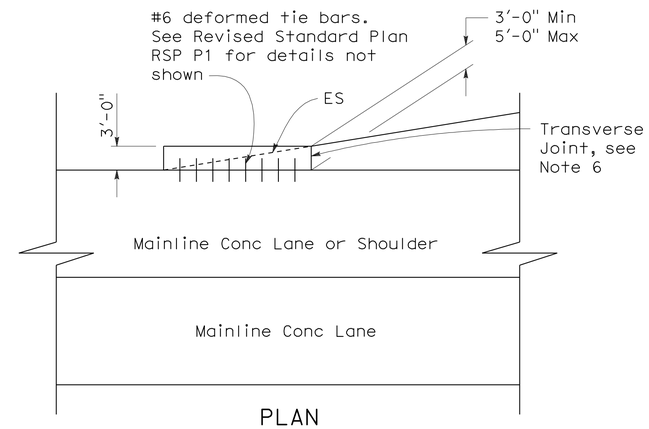

PLAN

ALTERNATE RAMP END DETAIL

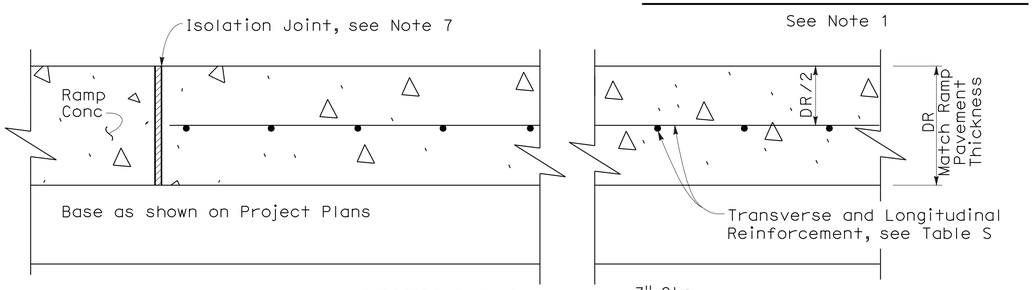

SECTION A-A

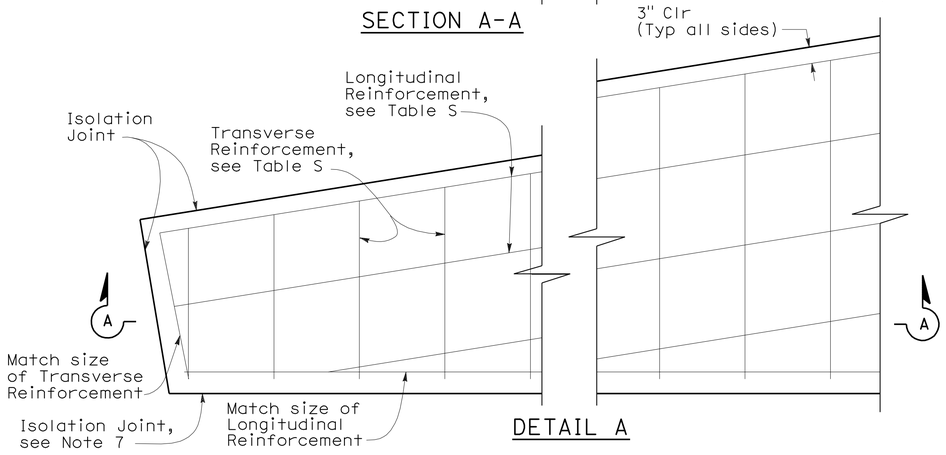

DETAIL A

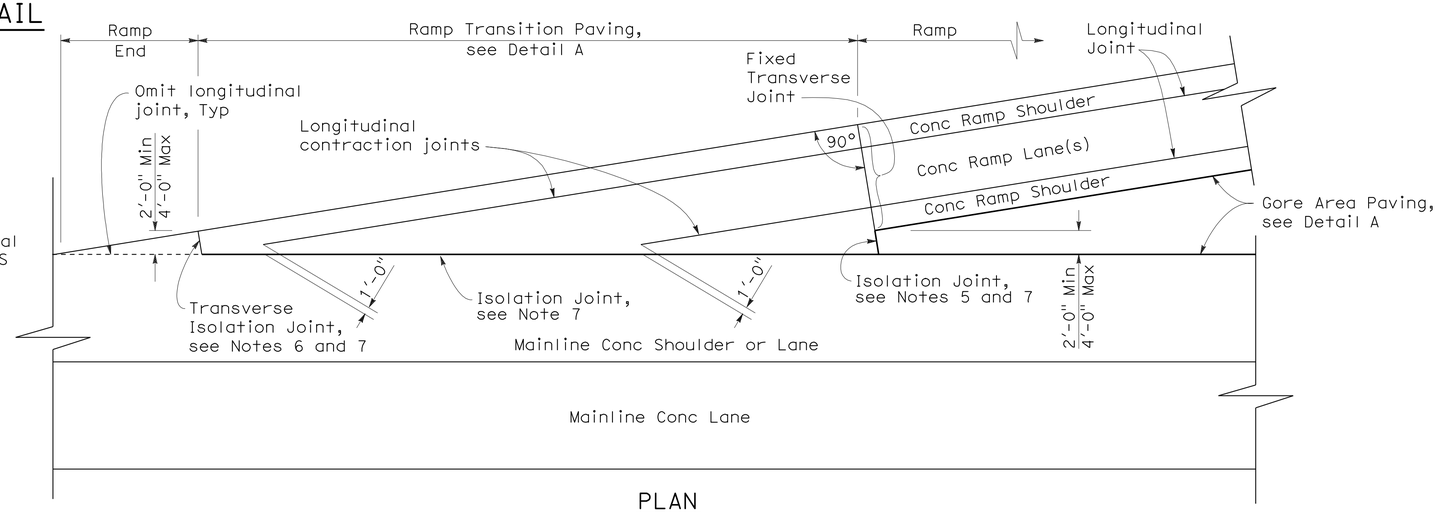

PLAN

ALTERNATE RAMP TRANSITION DETAIL

(For JPCP and CRCP)

TABLE S

Location	Transverse Reinf	Longitudinal Reinf
Gore Area Paving	#4 @ 1'-0" *	#4 @ 1'-0" *
Ramp Transition (JPCP)	#6 @ 1'-6"	#6 @ 9"
Ramp Transition (CRCP)	See NSP P4, Table No. 2	See NSP P4, Table No. 1

* See Note 3

STATE OF CALIFORNIA
DEPARTMENT OF TRANSPORTATION

CONCRETE PAVEMENT-RAMP TRANSITION PAVING DETAILS

NO SCALE

RSP P35 DATED MAY 15, 2009 SUPERSEDES STANDARD PLAN P35 DATED MAY 1, 2006 - PAGE 131 OF THE STANDARD PLANS BOOK DATED MAY 2006.

REVISED STANDARD PLAN RSP P35

5-8-09