Dist	COUNTY	ROUTE	POST MILES TOTAL PROJECT	SHEET No.	TOTAL SHEETS
07	LA	47,103	3.5/4.6, 0.0/1.1	64A	1003

REGISTERED CIVIL ENGINEER 01/31/11 DATE

10-11-10
PLANS APPROVAL DATE

REGISTERED PROFESSIONAL ENGINEER RICHARD F. NORTON No. C41646 Exp. 12/31/11 CIVIL STATE OF CALIFORNIA

THE STATE OF CALIFORNIA OR ITS OFFICERS OR AGENTS SHALL NOT BE RESPONSIBLE FOR THE ACCURACY OR COMPLETENESS OF SCANNED COPIES OF THIS PLAN SHEET.

URS CORPORATION
915 WILSHIRE BOULEVARD
SUITE 700
LOS ANGELES, CA 90017

ALAMEDA CORRIDOR
TRANSPORTATION AUTHORITY
ONE CIVIC PLAZA, SUITE 350
CARSON, CA 90745

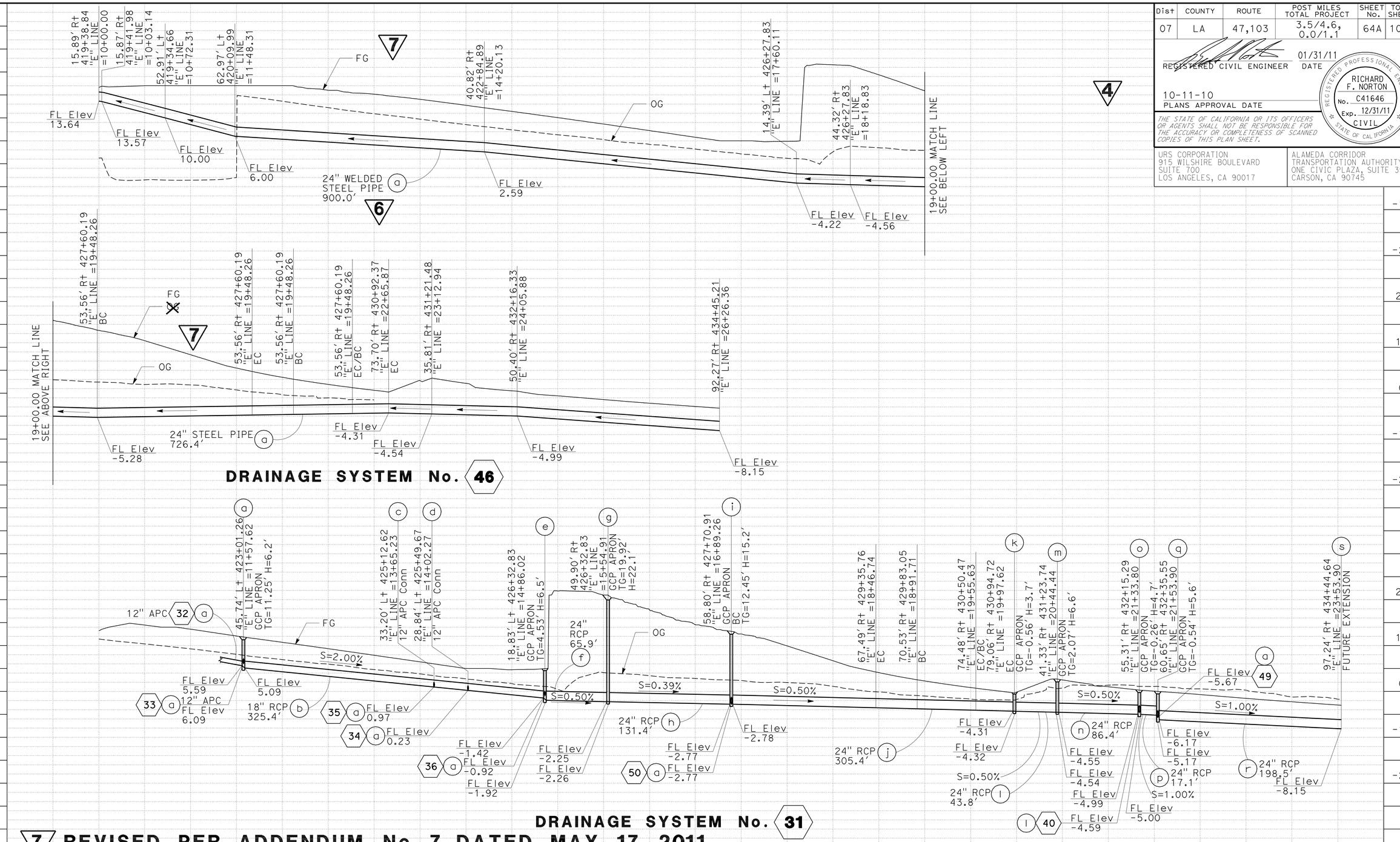

7 REVISED PER ADDENDUM No. 7 DATED MAY 17, 2011

6 REVISED PER ADDENDUM No. 6 DATED MAY 5, 2011

4 ADDED PER ADDENDUM No. 4 DATED APRIL 8, 2011

DRAINAGE PROFILE

SCALE: Horiz 1" = 50'
Vert 1" = 10'

DP-7

STATION		TOTAL
CY	Exc	
	Emb	

STATE OF CALIFORNIA - DEPARTMENT OF TRANSPORTATION

CONSULTANT FUNCTIONAL SUPERVISOR: SHAHRAM VAHDAT

CALCULATED-DESIGNED BY: YOUNG YOON

CHECKED BY: JERRY GANTNY

REVISED BY / DATE REVISED

LAST REVISION 00-00-00 | DATE PLOTTED => 16-MAY-2011 | TIME PLOTTED => 10:45

Dist	COUNTY	ROUTE	POST MILES TOTAL PROJECT	SHEET No.	TOTAL SHEETS
07	LA	47,103	3.5/4.6, 0.0/1.1	66	1003

REGISTERED CIVIL ENGINEER 01/31/11 DATE

10-11-10
PLANS APPROVAL DATE

REGISTERED PROFESSIONAL ENGINEER RICHARD F. NORTON No. C41646 Exp. 12/31/11 CIVIL STATE OF CALIFORNIA

THE STATE OF CALIFORNIA OR ITS OFFICERS OR AGENTS SHALL NOT BE RESPONSIBLE FOR THE ACCURACY OR COMPLETENESS OF SCANNED COPIES OF THIS PLAN SHEET.

URS CORPORATION
915 WILSHIRE BOULEVARD
SUITE 700
LOS ANGELES, CA 90017

ALAMEDA CORRIDOR
TRANSPORTATION AUTHORITY
ONE CIVIC PLAZA, SUITE 350
CARSON, CA 90745

12" APC DESIGN CHART

NORtHBOUND BRIDGE FROM Abut No. 1 TO Abut No. 27

BRIDGE BENT No.	LINE	STATION	DRAINAGE SHEET No.	DRAINAGE SYSTEM No. ⬡	DRAINAGE UNIT ○	12" APC LENGTH	12" APC BEARING	FL Elev "C" BRIDGE DOWN DRAIN OUTLET	FL Elev "A" 12" APC TO BRIDGE DOWN DRAIN CONNECTION	FL Elev "B" AT 12" APC OUTLET	12" APC SLOPE
						LF		FT	FT	FT	%
Abut #1	A	4+27.0, Rt	D-1	2	d	99.00	N15°00'10"W		12.90	9.20	3.74%
BENT 4	A	9+27.8, Rt	D-2	3	h	44.87	S07°04'37"E	-2.40	-2.65	-3.10	1.00%
BENT 7	A	13+98.3, Rt	D-2/3	9	a	70.29	N11°25'22"E	-0.90	-1.15	-1.31	0.23%
BENT 8	A	15+93.0, Rt	D-3	10	a	14.37	N69°29'47"W	-1.15	-1.40	-1.65	1.74%
BENT 9	A	17+91.3, Rt	D-3	12	a	11.07	N70°55'54"E	-1.95	-2.20	-2.25	0.45%
BENT 10	A	19+73.3, Rt	D-3	14	a	6.72	N72°13'10"E	-2.35	-2.60	-2.73	1.93%
BENT 12	A	23+22.8, Rt	D-3	17	d	111.85	SEE DD-14				2% min.
BENT 17	E	409+42.3, Rt	D-4	19	a	78.72	N83°50'43"W	12.33	12.08	2.00	12.81%
				19	c	32.05	S28°47'16"W		2.00	-8.00	31.20%
BENT 19	E	413+08.1, Rt	D-4	22	a	22.98	S45°12'03"E	13.30	13.05	12.02	4.48%
BENT 21	E	416+38.6, Rt	D-4	25	a	15.57	N36°06'28"E	14.10	13.85	12.86	6.36%
BENT 22	E	418+00.8, Rt	D-5	26	a	31.47	N42°03'31"E	14.13	13.88	13.24	2.03%
BENT 23	E	419+57.7, Rt	D-5	29	a	51.84	N42°03'31"E	14.10	13.85	13.59	-9.45%
BENT 25	E	423+00.8, Rt	D-5	33	a	44.96	S82°55'23"W	8.19	7.94	6.09	4.12%
BENT 26	E	424+70.8, Rt	D-5	35	a	53.56	N52°10'11"W	4.26	4.01	0.97	5.68%

SOUTHBOUND BRIDGE FROM Abut No. 1 TO Abut No. 28

Abut #1	A	4+27.0, Lt	D-1	1	f	96.11	N15°48'11"E		13.10	9.20	4.06%
BENT 4	A	9+27.8, Lt	D-2	3	b	60.21	N48°53'33"W	-2.25	-2.50	-3.10	1.00%
			D-2	3	e	149.33	N48°53'33"W		-3.10	-4.00	0.60%
BENT 7	A	13+98.3, Lt	D2/3	44	a	121.59	N24°11'42"E	-0.55	-0.80	-1.46	0.54%
BENT 8	A	15+98.2, Lt	D-3	11	a	77.47	N67°10'46"E	-0.51	-0.76	-1.79	1.33%
BENT 8	A	15+98.2, Lt	D-3	11	c	11.96	N22°10'46"E		-1.10	-1.38	2.34%
BENT 9	A	17+99.1, Lt	D-3	13	a	115.72	N67°10'46"E	-0.47	-0.72	-2.36	1.42%
BENT 10	A	19+78.7, Lt	D-3	15	a	95.80	N67°10'46"E	-0.68	-0.93	-2.82	1.97%
BENT 12	A	23+22.8, Lt	D-3	17	a	171.50	S22°39'46"E	4.95	4.70	-3.21	4.61%
			D-3	17	a	3.00	N71°32'13"E		-3.21	-3.25	1.33%
BENT 17	A	33+20.1, Lt	D-4	20	a	6.25	S83°19'10"E	-6.95	-7.20	-8.00	12.80%
BENT 19	G	603+08.1, Lt	D-4	21	a	131.21	S53°11'25"E	14.09	13.84	11.84	1.52%
BENT 20	G	604+71.1, Lt	D-4	23	a	129.10	S53°11'25"E	14.10	13.85	12.25	1.24%
BENT 21	G	606+34.1, Lt	D4/5	24	a	136.88	N49°08'51"W	14.74	14.49	12.63	1.36%
BENT 22	G	607+97.0, Rt	D-5	27	a	63.06	N47°56'29"W	14.75	14.50	13.17	2.11%
BENT 23	G	609+58.9, Rt	D-5	28	a	66.21	N47°56'29"W	15.11	14.86	13.56	1.96%
BENT 24	G	611+51.1, Lt	D-5	32	a	156.12	S13°21'07"W	12.10	11.85	5.59	4.01%
BENT 26	G	615+06.8, Lt	D-5	34	a	52.38	N37°55'23"E	3.01	2.76	0.23	4.83%
BENT 27	G	616+81.6, Lt	D-5	36	a	67.20	N43°18'41"W	3.13	2.88	-0.92	5.65%

NEW DOCK STREET OFF-RAMP

BENT 4	B	103+56.2, Lt	D-2	4	c	45.78	S45°46'07"W	2.85	2.60	2.03	1.25%
			D-2	4	c	3.00	S89°13'53"W		2.03	2.00	1.00%
BENT 6	B	105+26.9, Lt	D2/3	4	y	60.09	N18°34'04"W	3.25	3.00	2.70	0.50%

4

APC ALLOWABLE PIPE MATERIAL	
12" APC	
HDPE	12" CORRUGATED DOUBLE WALL HDPE
PVC	12" CORRUGATED PVC

NOTES:
HDPE - HIGH DENSITY POLYETHYLENE

RCP D-LOAD CHART

DRAINAGE SHEET No.	DRAINAGE SYSTEM No. ⬡	DRAINAGE UNIT ○	PIPE SIZE (INCH)	D-LOAD
DP-2	4	s	24	4250
~~DP-4~~	~~21~~	~~a~~	~~18~~	~~4500~~
~~DP-4~~	~~30~~	~~a~~	~~30~~	~~3500~~
~~DP-4~~	~~34~~	~~b~~	~~24~~	~~4250~~

7

NOTES:
ALL OTHER RCP NOT SHOWN
HEREON SHALL USE D-LOAD 3000

7 REVISED PER ADDENDUM No. 7 DATED MAY 17, 2011

4 REVISED PER ADDENDUM No. 4 DATED APRIL 8, 2011

DRAINAGE DETAILS

NO SCALE

DD-2

REVISED BY | DATE REVISED
YOUNG YOON | JERRY GANTNY
CALCULATED-DESIGNED BY | CHECKED BY
CONSULTANT FUNCTIONAL SUPERVISOR
SHAHRAM VAHDAT

STATE OF CALIFORNIA - DEPARTMENT OF TRANSPORTATION
Caltrans

LAST REVISION 00-00-00
DATE PLOTTED => 16-MAY-2011
TIME PLOTTED => 11:24

Dist	COUNTY	ROUTE	POST MILES TOTAL PROJECT	SHEET No.	TOTAL SHEETS
07	LA	47,103	3.5/4.6, 0.0/1.1	77	1003

REGISTERED CIVIL ENGINEER — DATE 07/19/10

10-11-10
PLANS APPROVAL DATE

REGISTERED PROFESSIONAL ENGINEER — HUA LIN McCAFFREY — No. C49405 — Exp. 9/30/10 — CIVIL — STATE OF CALIFORNIA

THE STATE OF CALIFORNIA OR ITS OFFICERS OR AGENTS SHALL NOT BE RESPONSIBLE FOR THE ACCURACY OR COMPLETENESS OF SCANNED COPIES OF THIS PLAN SHEET.

URS CORPORATION
915 WILSHIRE BOULEVARD
SUITE 700
LOS ANGELES, CA 90017

ALAMEDA CORRIDOR
TRANSPORTATION AUTHORITY
ONE CIVIC PLAZA, SUITE 350
CARSON, CA 90745

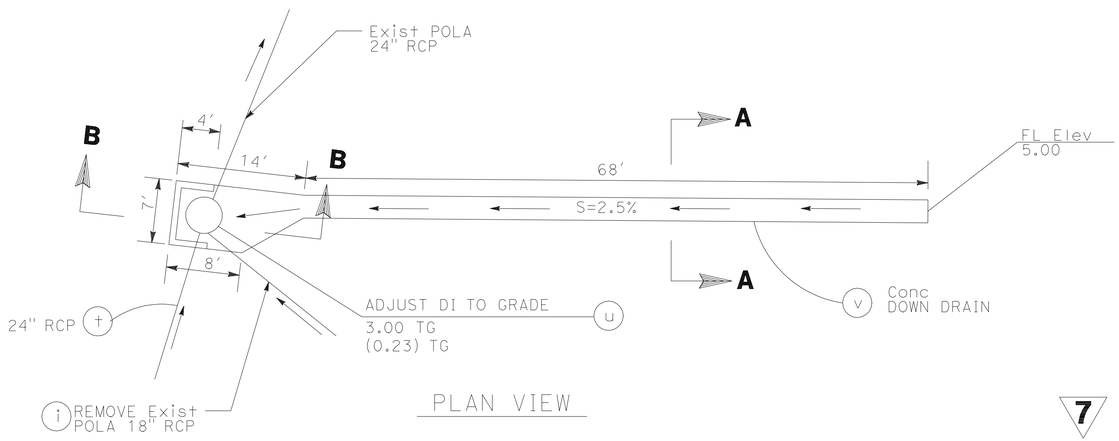

PLAN VIEW

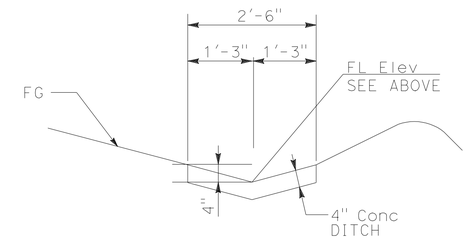

7 4 v 47 (a)(b) SECTION A-A

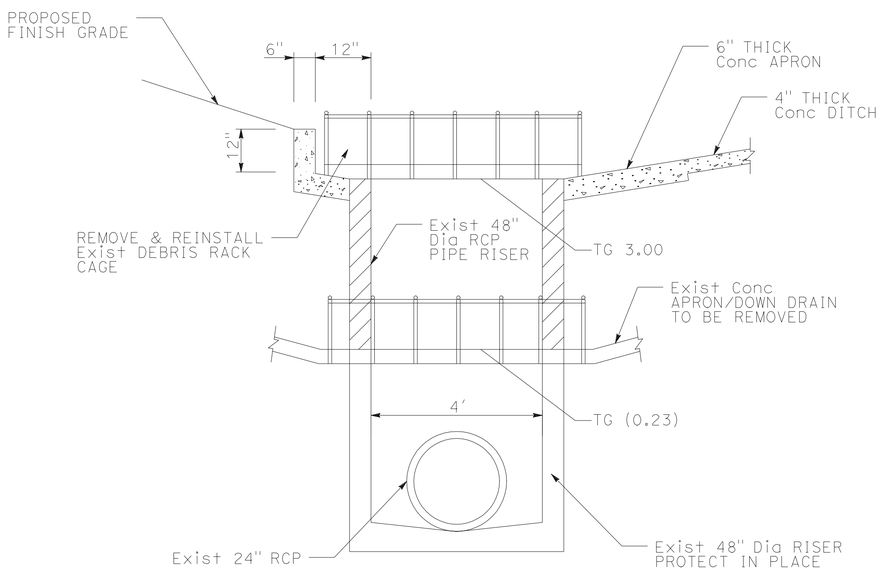

SECTION B-B

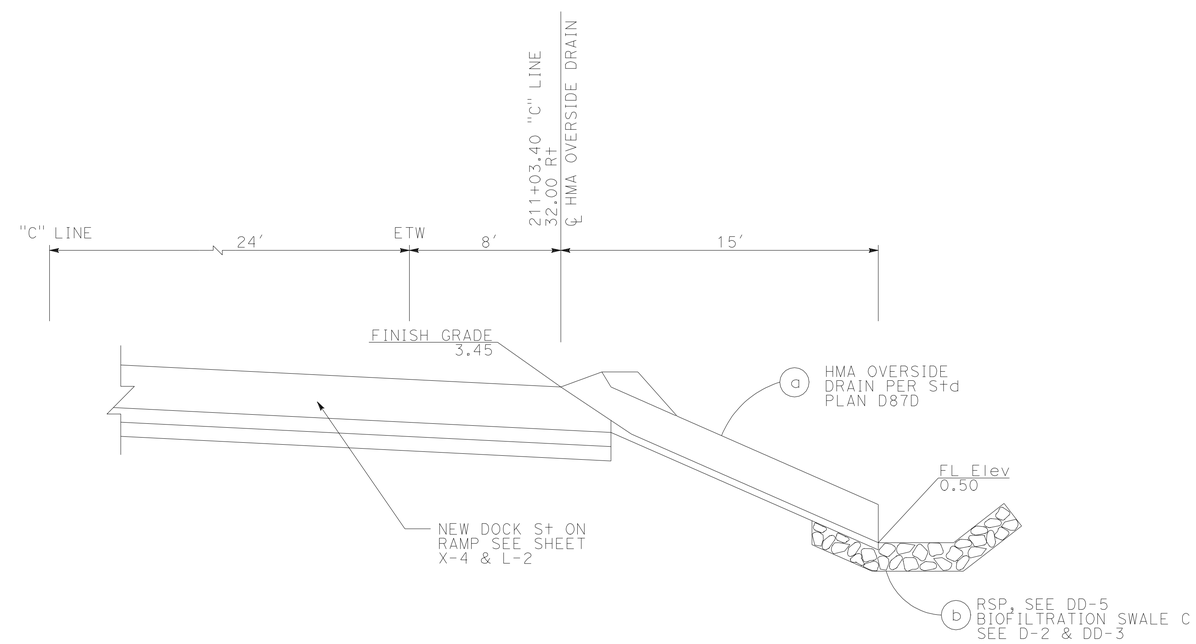

4 v u **CONCRETE DOWN DRAIN**
ADJUST INLET TO GRADE

6 a b **HMA OVERSIDE DRAIN**

7 **REVISED PER ADDENDUM No. 7 DATED MAY 17, 2011**

DRAINAGE DETAILS

NOT SCALE

DD-13

STATE OF CALIFORNIA – DEPARTMENT OF TRANSPORTATION | CONSULTANT FUNCTIONAL SUPERVISOR: SHAHRAM VAHDAT | CALCULATED-DESIGNED BY: YOUNG YOON | CHECKED BY: JERRY GANTNY | REVISED BY | DATE REVISED

LAST REVISION 00-00-00 | DATE PLOTTED => 16-MAY-2011 | TIME PLOTTED => 10:59

Dist	COUNTY	ROUTE	POST MILES TOTAL PROJECT	SHEET No.	TOTAL SHEETS
07	LA	47,103	3.5/4.6, 0.0/1.1	85	1003

REGISTERED CIVIL ENGINEER 01/31/11 DATE

10-11-10
PLANS APPROVAL DATE

REGISTERED PROFESSIONAL ENGINEER RICHARD F. NORTON No. C41646 Exp. 12/31/11 CIVIL STATE OF CALIFORNIA

THE STATE OF CALIFORNIA OR ITS OFFICERS OR AGENTS SHALL NOT BE RESPONSIBLE FOR THE ACCURACY OR COMPLETENESS OF SCANNED COPIES OF THIS PLAN SHEET.

URS CORPORATION
915 WILSHIRE BOULEVARD
SUITE 700
LOS ANGELES, CA 90017

ALAMEDA CORRIDOR
TRANSPORTATION AUTHORITY
ONE CIVIC PLAZA, SUITE 350
CARSON, CA 90745

4

DRAINAGE SHEET No.	DRAINAGE SYSTEM No.	DRAINAGE UNIT	REMOVE PIPE	REMOVE MANHOLE	REMOVE INLET	ABANDON PIPELINE	ABANDON INLET	APC 12"	Conc FLARED END SECTION 18"	RCP 18"	RCP 24"	RCP 30"	RCP 36"	RCP 48"	RCP 51"	WSP 30"	WSP 42"	STEEL 24"	DRAINAGE MANHOLE	DRAINAGE INLET MARKER	ADJUST INLET	ADJUST MANHOLE TO GRADE	CLEANOUT	PLUG PIPE	Misc IRON AND STEEL	MINOR Conc (MINOR STRUCTURE)	ROCK SLOPE PROTECTION (GRANULAR MATERIAL)	ROCK SLOPE PROTECTION FABRIC	15" SLOTTED CORRUGATED STEEL PIPE	HOT MIX ASPHALT (TYPE A)	PLACE HOT MIX ASPHALT (Misc AREA)	(N) DRAINAGE INLET	(N) Conc COLLAR	(N) HEIGHT OF INLET	(N) HEIGHT OF COVER	DESCRIPTION	STATION	DRAINAGE SHEET No.	DRAINAGE SYSTEM No.	DRAINAGE UNIT
			LF	EA	EA	LF	EA	LF	EA	LF						LF		LF	EA	EA	EA	EA	EA	EA	LB	CY	CY	SQYD	LF	TON	SQYD	EA	EA	LF	LF					
D-4	19	a						78.7					~~6.3~~																							12" APC		D-4	19	a
		b								~~254.7~~													1													CO, Conn TO BRIDGE DOWN DRAIN				b
		c						32.1																												12" APC				c
D-4	20	a						6.3					~~4.5~~																							12" APC		D-4	20	a
		b									~~309.5~~												1													CO, Conn TO BRIDGE DOWN DRAIN				b
		c											~~3.3~~																							APC CONNECTION				c
											~~265.7~~																													
D-4	21	a						131.2					~~2.6~~																							12" APC		D-4	21	a
		b									~~44.4~~												1													CO, Conn TO BRIDGE DOWN DRAIN				b
													~~5.6~~																											
D-4	22	a						23.0			~~86.4~~																									12" APC		D-4	22	a
		b											~~4.5~~										1													CO, Conn TO BRIDGE DOWN DRAIN				b
											~~17.1~~																													
D-4	23	a						129.1					~~4.7~~																							12" APC		D-4	23	a
		b									~~198.5~~												1													CO, Conn TO BRIDGE DOWN DRAIN				b
D-5	24	a						136.9																												12" APC		D-5	24	a
		b																					1													CO, Conn TO BRIDGE DOWN DRAIN				b
D-5	25	a						15.6																												12" APC		D-5	25	a
		b																					1													CO, Conn TO BRIDGE DOWN DRAIN				b
D-5	26	a						31.5																												12" APC		D-5	26	a
		b																					1													CO, Conn TO BRIDGE DOWN DRAIN				b
D-5	27	a						63.1																												12" APC		D-5	27	a
		b																					1													CO, Conn TO BRIDGE DOWN DRAIN				b
D-5	28	a						66.2																												12" APC		D-5	28	a
		b																					1													CO, Conn TO BRIDGE DOWN DRAIN				b
D-5	29	a						51.8																												12" APC		D-5	29	a
		b																					1													CO, Conn TO BRIDGE DOWN DRAIN				b
SUBTOTAL								765.3		~~254.7~~	~~921.6~~		~~31.5~~										11																	

7 7 7

7 **REVISED PER ADDENDUM No. 7 DATED MAY 17, 2011**

4 **REVISED PER ADDENDUM No. 4 DATED APRIL 8, 2011**

DRAINAGE QUANTITIES

DQ-5

STATE OF CALIFORNIA - DEPARTMENT OF TRANSPORTATION
Caltrans

CONSULTANT FUNCTIONAL SUPERVISOR: SHAHRAM VAHDAT

CALCULATED-DESIGNED BY: YOUNG YOON
CHECKED BY: JERRY GANTNY

REVISED BY
DATE REVISED

LAST REVISION 00-00-00
DATE PLOTTED => 16-MAY-2011
TIME PLOTTED => 14:19

Dist	COUNTY	ROUTE	POST MILES TOTAL PROJECT	SHEET No.	TOTAL SHEETS
07	LA	47,103	3.5/4.6, 0.0/1.1	89	1003

REGISTERED CIVIL ENGINEER 01/31/11 DATE

10-11-10
PLANS APPROVAL DATE

REGISTERED PROFESSIONAL ENGINEER RICHARD F. NORTON No. C41646 Exp. 12/31/11 CIVIL STATE OF CALIFORNIA

THE STATE OF CALIFORNIA OR ITS OFFICERS OR AGENTS SHALL NOT BE RESPONSIBLE FOR THE ACCURACY OR COMPLETENESS OF SCANNED COPIES OF THIS PLAN SHEET.

URS CORPORATION
915 WILSHIRE BOULEVARD
SUITE 700
LOS ANGELES, CA 90017

ALAMEDA CORRIDOR
TRANSPORTATION AUTHORITY
ONE CIVIC PLAZA, SUITE 350
CARSON, CA 90745

4

DRAINAGE SHEET No.	DRAINAGE SYSTEM No.	DRAINAGE UNIT	REMOVE PIPE	REMOVE MANHOLE	REMOVE INLET	ABANDON PIPELINE	ABANDON INLET	APC 12"	Conc FLARED END SECTION 18"	RCP 18"	RCP 24"	RCP 30"	RCP 36"	RCP 48"	RCP 51"	WSP 30"	WSP 42"	STEEL 24"	DRAINAGE MANHOLE	DRAINAGE INLET MARKER	ADJUST INLET	ADJUST MANHOLE TO GRADE	CLEANOUT	PLUG PIPE	Misc IRON AND STEEL	MINOR Conc (MINOR STRUCTURE)	ROCK SLOPE PROTECTION (GRANULAR MATERIAL)	ROCK SLOPE PROTECTION FABRIC	15" SLOTTED CORRUGATED STEEL PIPE	HOT MIX ASPHALT (TYPE A)	PLACE HOT MIX ASPHALT (Misc AREA)	(N) DRAINAGE INLET	(N) Conc COLLAR	(N) HEIGHT OF INLET	(N) HEIGHT OF COVER	DESCRIPTION	STATION	DRAINAGE SHEET No.	DRAINAGE SYSTEM No.	DRAINAGE UNIT
			LF	EA	EA	LF	EA	LF	EA	LF						LF		LF	EA	EA	EA	EA	EA	EA	LB	CY	CY	SQYD	LF	TON	SQYD	EA	EA	LF	LF					
D5/D6	46	a																1626.4																		FORCE MAIN 24" WSP (0.250" THICK)	6	D5/D6	46	a
D4/D5	47	a																								28.8										CONCRETE V-DITCH		D4/D5	47	a
		b																								16.1										CONCRETE V-DITCH				b
D-5	48	a										199.5																								30" RCP		D-5	48	a
		b																																		Conn TO MH No. 2				b
		c																	1																	MANHOLE No. 2	419+22.85 "E" LINE			c
		d										72.6																								30" RCP				d
		e																																		Conn TO MH No. 2				e
		f																	1																	MANHOLE No. 2	419+99.49 "E" LINE			f
		g										46.9																								30" RCP				g
		h																																		Conn TO MH No. 2				h
		i																	1																	MANHOLE No. 2	419+78.33 "E" LINE			i
D-6	49	a								53.1																										18" RCP		D-6	49	a
D-5	50	a								171.5																										18" RCP		D-5	50	a
		b																																		NOT USED				b
		c											6.2												236	~~6.2~~ 0.6	7					1.0		6.2		GCP APRON	426+28.90 "E" LINE			c
		d								120.0																										18" RCP				d
		e																	1																	MANHOLE No. 2	425+05.60 "E" LINE			e
		f								68.0																										18" RCP				f
		g																																		Conn TO MH No. 2				g
		h																	1																	MANHOLE No. 2	424+31.78 "E" LINE			h
		i								195.3																										18" RCP				i
		j																																		Conn TO MH No. 2				j
		k																	1																	MANHOLE No. 2	422+24.17 "E" LINE			k
		l								195.3																										18" RCP				l
		m																																		Conn TO MH No. 2				m
		n																	1																	MANHOLE No. 2	420+19.89 "E" LINE			n
		o								35.0																										18" RCP				o
		p								2.0										1					236	0.6						1.0		2.0		GCP APRON	419+91.35 "E" LINE			p
		q								17.0																										18" RCP				q
		r								2.5										1					236	0.6						1.0		2.5		GCP APRON	425+02.11 "E" LINE			r
SUBTOTAL										859.7		319.0	6.2					1626.4	7	2					708.0	46.7						3.0								

7 **REVISED PER ADDENDUM No. 7 DATED MAY 17, 2011**

6 **REVISED PER ADDENDUM No. 6 DATED MAY 5, 2011**

4 **REVISED PER ADDENDUM No. 4 DATED APRIL 8, 2011**

DRAINAGE QUANTITIES

DQ-9

STATE OF CALIFORNIA - DEPARTMENT OF TRANSPORTATION
Caltrans

CONSULTANT FUNCTIONAL SUPERVISOR: SHAHRAM VAHDAT
CALCULATED-DESIGNED BY: YOUNG YOON
CHECKED BY: JERRY GANTNY
REVISED BY
DATE REVISED

LAST REVISION 00-00-00
DATE PLOTTED => 16-MAY-2011
TIME PLOTTED => 11:11

Dist	COUNTY	ROUTE	POST MILES TOTAL PROJECT	SHEET No.	TOTAL SHEETS
07	LA	47,103	3.5/4.6, 0.0/1.1	89A	1003

REGISTERED CIVIL ENGINEER 01/31/11 DATE

10-11-10
PLANS APPROVAL DATE

REGISTERED PROFESSIONAL ENGINEER RICHARD F. NORTON No. C41646 Exp. 12/31/11 CIVIL STATE OF CALIFORNIA

THE STATE OF CALIFORNIA OR ITS OFFICERS OR AGENTS SHALL NOT BE RESPONSIBLE FOR THE ACCURACY OR COMPLETENESS OF SCANNED COPIES OF THIS PLAN SHEET.

URS CORPORATION
915 WILSHIRE BOULEVARD
SUITE 700
LOS ANGELES, CA 90017

ALAMEDA CORRIDOR
TRANSPORTATION AUTHORITY
ONE CIVIC PLAZA, SUITE 350
CARSON, CA 90745

4

DRAINAGE SHEET No.	DRAINAGE SYSTEM No.	DRAINAGE UNIT	REMOVE PIPE	REMOVE MANHOLE	REMOVE INLET	ABANDON PIPELINE	ABANDON INLET	APC 12"	Conc FLARED END SECTION 18"	RCP 18"	RCP 24"	RCP 30"	RCP 36"	RCP 48"	RCP 51"	WSP 30"	WSP 42"	STEEL 24"	DRAINAGE MANHOLE	DRAINAGE INLET MARKER	ADJUST INLET	ADJUST MANHOLE TO GRADE	CLEANOUT	PLUG PIPE	Misc IRON AND STEEL	MINOR Conc (MINOR STRUCTURE)	ROCK SLOPE PROTECTION (GRANULAR MATERIAL)	ROCK SLOPE PROTECTION FABRIC	15" SLOTTED CORRUGATED STEEL PIPE	HOT MIX ASPHALT (TYPE A)	PLACE HOT MIX ASPHALT (Misc AREA)	(N) DRAINAGE INLET	(N) Conc COLLAR	(N) HEIGHT OF INLET	(N) HEIGHT OF COVER	DESCRIPTION	STATION	DRAINAGE SHEET No.	DRAINAGE SYSTEM No.	DRAINAGE UNIT
			LF	EA	EA	LF	EA	LF	EA	LF						LF		LF	EA	EA	EA	EA	EA	EA	LB	CY	CY	SQYD	LF	TON	SQYD	EA	EA	LF	LF					
D-1	513	a																															1			Conc COLLAR	1+20.67 "A" LINE	D-1	513	a
		b									29.7																									24" RCP				b
		c																															1			Conc COLLAR	1+49.75 "A" LINE			c
		d									50.0																									24" RCP				d
		e																															1			Conc COLLAR	1+86.01 "A" LINE			e
		f									20.0																									24" RCP				f
		g									138.0																									24" RCP				g
SUBTOTAL											237.8																						3.0						

7 7

7

STRUCTURE EXCAVATION (TYPE DC) (N)	CY	220
STRUCTURE EXCAVATION (TYPE GC) (N)	GAL	13,000.000
STRUCTURE EXCAVATION (TYPE SC) (N)	CY	180
STRUCTURE EXCAVATION (TYPE A) (N)	CY	3500
STRUCTURE EXCAVATION (TYPE Z-2) (AERIALLY DEPOSITED LAED) (N))	CY	2300

(N) NOT A SEPARATE PAY ITEM, FOR INFORMATION ONLY.

7 **REVISED PER ADDENDUM No. 7 DATED MAY 17, 2011**

4 **ADDED PER ADDENDUM No. 4 DATED APRIL 8, 2011**

DRAINAGE QUANTITIES

DQ-10

STATE OF CALIFORNIA - DEPARTMENT OF TRANSPORTATION
Caltrans

CONSULTANT FUNCTIONAL SUPERVISOR: SHAHRAM VAHDAT
CALCULATED-DESIGNED BY: YOUNG YOON
CHECKED BY: JERRY GANTNY
REVISED BY
DATE REVISED

LAST REVISION 00-00-00
DATE PLOTTED => 16-MAY-2011
TIME PLOTTED => 11:02

Dist	COUNTY	ROUTE	POST MILES TOTAL PROJECT	SHEET No.	TOTAL SHEETS
07	LA	47,103	3.5/4.6, 0.0/1.1	287	1003

Jeffrey M. Mills 7-19-10
REGISTERED CIVIL ENGINEER DATE

10-11-10
PLANS APPROVAL DATE

REGISTERED PROFESSIONAL ENGINEER JEFFREY M. MILLS No. C60168 Exp. 6/30/12 CIVIL STATE OF CALIFORNIA

THE STATE OF CALIFORNIA OR ITS OFFICERS OR AGENTS SHALL NOT BE RESPONSIBLE FOR THE ACCURACY OR COMPLETENESS OF SCANNED COPIES OF THIS PLAN SHEET.

URS CORPORATION
915 WILSHIRE BOULEVARD
SUITE 700
LOS ANGELES, CA 90017

ALAMEDA CORRIDOR
TRANSPORTATION AUTHORITY
ONE CIVIL PLAZA, SUITE 350
CARSON, CA 90745

PAVEMENT STRUCTURAL SECTION

SHEET	LINE	STATION FROM	STATION TO	SIDE L+/R+	AREA (N) SQFT	HOT MIX ASPHALT (TYPE A) TON	CL 2 AB CY	CL 3 AB CY	JPCP CY	LEAN CONCRETE BASE CY	CONCRETE PAVEMENT (RAPID STRENGTH CONCRETE) CY	LEAN CONCRETE BASE (RAPID SETTING) CY	TACK COAT TON	SEAL Pvmt JOINT LF	SEAL LONGITUDINAL ISOLATION JOINT LF
L-1	"A"	0+89.06	2+40.04		23340.3			605.1	994.1	432.2					
L-1	"A"	1+48.73	2+60.00	R+	1277.0			33.1	54.4	23.6					
L-1	"A"	1+19.14	2+40.04	L+	976.8			25.3	41.6	18.1					
L-1	"A"	2+40.04	3+96.00		18518.9			480.1	788.8	342.9					
L-1	"A"	2+60.05	3+96.00	R+	1361.3			35.3	58.0	25.2					
L-1	"A"	2+40.04	3+96.00	L+	635.6			16.5	27.1	11.8					
L-1	"A"	0+89.06	3+96.00											3415.5	3842.5
L-2	"M"	6+01.92	9+94.98		35338.7			916.2	1505.2	654.4					
L-2	"M"	6+01.25	8+00.44	R+	1108.8			28.7	47.2	20.5					
L-2	"M"	6+01.25	7+95.99	L+	1637.4			42.5	69.7	30.3					
L-2	"M"	9+94.98	11+60.09		9192.1			238.3	391.5	170.2					
L-2	"M"	8+53.78	11+89.26	R+	2673.6			69.3	113.9	49.5					
L-2	"M"	8+30.03	11+56.94	L+	2703.5			70.1	115.1	50.1					
L-2	"M"	11+60.09	14+69.32		19696.8			510.7	838.9	364.8					
L-2	"M"	12+09.64	14+22.27	R+	771.2			20.0	32.8	14.3					
L-2	"M"	12+01.07	12+41.97	L+	413.8			10.7	17.6	7.7					
L-2	"M"	12+41.97	14+62.43	L+	427.9			11.1	18.2	7.9					
L-2	"M"	6+01.25	14+62.43											5478.8	6163.6
L-2	"B"	100+77.34	102+57.16		4254.4			110.3	181.2	78.8					
L-2	"B"	100+77.34	102+57.16	R+	719.3			18.6	30.6	13.3					
L-2	"B"	100+85.28	102+57.16	L+	1383.3			35.9	58.9	25.6					
L-2	"B"	100+71.13	102+57.16											470.9	529.7
L-2	"C"	210+54.08	213+42.87		6886.8			178.5	293.3	127.5					
L-2	"C"	210+75.43	213+05.95	R+	1875.9			48.6	79.9	34.7					
L-2	"C"	213+05.77	213+42.87	R+	74.3			1.9	3.2	1.4					
L-2	"C"	210+54.08	213+42.87	L+	1155.1			29.9	49.2	21.4					
L-2	"C"	210+48.08	213+42.87											740.2	832.7
L-5	"P"	10+07.19	16+69.17		16035.9	661.5	742.4								
L-5	"P"	10+16.68	10+30.28	L+	528.5	21.8	24.5								
L-5	"P"	16+36.18	16+54.40	L+	1165.9	48.1	54.0								
L-5,6	"E"	426+33.33	435+08.79		23891.3			619.4	1017.6	442.4					
L-5	"E"	426+33.33	428+10.00	R+	1564.7			40.6	66.6	29.0					
L-5,6	"E"	428+10.00	430+84.90	R+	2523.0			65.4	107.5	46.7					
L-5,6	"E"	428+35.19	431+00.96	L+	532.0			13.8	22.7	9.9					
L-6	"E"	430+84.90	435+08.91	R+	4147.6			107.5	176.7	76.8					
L-6	"E"	431+00.96	435+08.79	L+	816.3			21.2	34.8	15.1					
L-5,6	"E"	426+33.33	435+08.79											2479.6	2789.6
L-5,6	"G"	614+64.84	625+09.88		16683.4			432.5	710.6	309.0					
L-5,6	"G"	618+64.84	621+00.00	R+	872.2			22.6	37.1	16.2					
L-5	"G"	618+64.84	619+60.00	L+	205.7			5.3	8.8	3.8					
L-6	"G"	621+00.00	625+09.88	R+	1961.1			50.8	83.5	36.3					
L-5,6	"G"	619+60.00	624+88.78	L+	3650.9			94.7	155.5	67.6					
L-6	"G"	624+88.78	625+09.89	L+	215.5			5.6	9.2	4.0					
L-5,6	"G"	614+64.84	625+09.88											1747.3	1965.7
L-5,6	"H"	700+00.00	702+69.17		6401.5			166.0	272.7	118.5					
L-5,6	"H"	700+00.00	702+90.00	R+	2201.8			57.1	93.8	40.8					
L-6	"H"	702+69.17	707+79.00		12183.9			315.9	518.9	225.6					
L-6	"H"	702+90.00	707+79.00	R+	4634.7			120.2	197.4	85.8					
L-6	"H"	702+69.64	707+79.00	L+	2040.8			52.9	86.9	37.8					
L-6	"H"	700+00.00	707+79.00											2034.3	2288.6
L-5,6	"J"	800+00.00	805+45.04		7973.0			206.7	339.6	147.6					
L-5,6	"J"	800+00.00	802+49.85	L+	503.7			13.1	21.5	9.3					
L-6	"J"	802+49.85	805+46.28	L+	2379.3			61.7	101.3	44.1					
L-6	"J"	805+45.04	811+50.00		14265.8			369.9	607.6	264.2					
L-6	"J"	805+41.08	811+50.00	R+	2232.0			57.9	95.1	41.3					
L-6	"J"	805+46.28	811+50.00	L+	4667.6			121.0	198.8	86.4					
L-5,6	"J"	800+00.00	811+50.00											2372.0	2668.5
L-2	"C"	211+15.00	211+85.00	R+	600.0			15.6	25.6	11.1					
L-6	"E"	432+47.50	433+32.50	R+	758.8			19.7	32.3	14.1					
L-6	"J"	805+00.00	805+84.95	L+	780.0			20.2	33.2	14.4					
SC-26	"A"	0+94.00	1+40.00	R+	1602.0						68.2	29.7			
SC-35	"A"	0+72.19	3+58.35	L+	14009.0						596.7	259.4			
TOTAL						731.4	820.9	6613.9	10865.8	4724.2	664.9	289.1	2	18738.6	21080.9

STRUCTURE EXCAVATION FOR UTILITY SEWER SYSTEM, WATER SYSTEM, AND STORM DRAIN TRENCHING (N)

~~CONTAMINATED MATERIALS FOR UTILITY AND STORM DRAIN TRENCHING~~

7

TYPE	CY	GALLON
SC	~~150~~	180
DC	~~500~~	3700
GC		~~500,000~~ 17,200,000
A	4960	
Z-2	3230	

HOT MIX ASPHALT DIKE

SHEET	LINE	STATION FROM	STATION TO	SIDE L+/R+	PLACE HOT MIX ASPHALT DIKE (LF) TYPE C	TYPE E	TYPE F	HOT MIX ASPHALT (TYPE A) TON
L-2	"B"	100+96.87	102+63.67	L+		166.8		4.4
L-2	"C"	211+03.40	211+20.00	R+		25.0		0.7
L-2	"C"	211+75.00	212+08.90	R+	34.0			0.3
L-2	"C"	212+08.90	212+33.90	R+			25.0	0.3
L-6	"E"	430+84.90	432+20.00	R+		135.1		3.6
L-6	"E"	432+20.00	432+86.49	R+	66.5			0.5
L-6	"E"	432+86.49	433+25.00	R+			37.5	0.5
L-6	"E"	433+25.00	433+45.00	R+		23.0		0.6
L-6	"E"	434+10.00	435+08.79	R+		96.3		2.5
TOTAL					100.5	446.2	62.5	13.4

MINOR CONCRETE

SHEET	LINE	STATION FROM	STATION TO	SIDE L+/R+	CURB RAMP CY	CURB (TYPE A1-6) CY	CURB (TYPE A2-6) CY	CURB (TYPE A2-8) CY	CURB (TYPE B1-6) CY	CURB (TYPE B2-4) CY	CURB (TYPE B2-6) CY	SIDEWALK CY	CROSS GUTTER CY	ISLAND PAVING CY	CL 3 AB CY
C-7	"A"	1+32.61		L+	1.5										
L-1	"O","A"	"O" 51+08	"A" 1+96.02	R+							6.0				
L-1	"A"	1+96.02	2+60.05	R+						3.5					
L-1	"A"	1+20.64	1+58.75	L+							2.9				
L-1	"A"	1+58.75	2+32.54	L+						4.1					
C-7	"A"	0+97.00		L+		1.0								1.4	6.6
C-7	"A"	1+11.00		L+		2.3								5.7	26.8
C-7	"A"	1+31.00		R+		2.9								10.9	51.0
L-2	"M"	12+18.43	14+69.32	R+			19.1								
C-8	"M"	8+20.00		R+		1.4								3.2	15.0
C-8,9	"M"	10+07.00		L+		6.6								21.4	100.7
C-8	"M"	8+95.00		L+		4.7								15.1	71.0
L-5	"P"	10+13.20	11+00.00	R+			5.1								
L-5	"P"	11+00.00	11+67.00	R+						3.7					
L-5	"P"	12+27.00	16+73.31	R+			26.3								
L-5	"P"	10+00.79	10+15.09	L+			3.3								
L-5	"P"	10+32.54	16+34.38	L+			37.7								
L-5	"P"	16+56.15	16+73.31	L+			2.9								
L-6	"J"	811+10.65	811+50.00	R+					1.2						
L-1	"A"	1+20.64	1+51.14	L+								3.1			
L-2	"M"	13+49.06	14+69.32	R+								12.8			
C-10	"P"	10+06.66	10+78.38	L+									11.0		
C-11	"P"	15+77.96	16+64.96	L+									14.6		
TOTAL					1.5	18.8	75.3	19.1	1.2	11.4	8.9	15.8	25.6	57.7	271.1

SUMMARY OF QUANTITIES

(N) NOT A SEPARATE PAY ITEM, FOR INFORMATION ONLY

7 REVISED PER ADDENDUM No. 7 DATED MAY 17, 2011

Q-1

STATE OF CALIFORNIA - DEPARTMENT OF TRANSPORTATION
Caltrans®
CONSULTANT FUNCTIONAL SUPERVISOR: SHAHRAM VAHDAT
CALCULATED-DESIGNED BY: JEFF DIETZLER
CHECKED BY: CONRAD WILLIAMS
REVISED BY
DATE REVISED

LAST REVISION 00-00-00
DATE PLOTTED => 16-MAY-2011
TIME PLOTTED => 14:19