Dist	COUNTY	ROUTE	KILOMETER POST TOTAL PROJECT	SHEET No.	TOTAL SHEETS
07	LA	138	87.2/88.9	1	156

NH-P138(044)E

STATE OF CALIFORNIA
DEPARTMENT OF TRANSPORTATION

PROJECT PLANS FOR CONSTRUCTION ON
STATE HIGHWAY

IN LOS ANGELES COUNTY
AT LITTLEROCK
FROM 77TH STREET EAST TO 0.2 KM EAST OF 87TH STREET EAST

TO BE SUPPLEMENTED BY STANDARD PLANS DATED JULY 2004

INDEX OF SHEETS

SHEET No.	DESCRIPTION
1	TITLE AND LOCATION MAP
2-3	TYPICAL CROSS SECTIONS
4-9	LAYOUTS
10-17	PROFILES
18-22	CONSTRUCTION DETAILS
23-26	TEMPORARY WATER POLLUTION CONTROL DETAILS
27-57	DRAINAGE PLANS, PROFILES, DETAILS AND QUANTITIES
58-63	UTILITY PLANS
64	CONSTRUCTION AREA SIGNS
65-92	STAGE CONSTRUCTION AND TRAFFIC HANDLING PLAN AND QUANTITIES
93-95	DETOUR PLAN AND QUANTITIES
96-107	PAVEMENT DELINEATION AND SIGN PLANS, DETAILS AND QUANTITIES
108	SUMMARY OF QUANTITIES
109-119	ELECTRICAL PLANS
120-156	REVISED STANDARD PLANS

THE STANDARD PLANS LIST APPLICABLE TO THIS CONTRACT IS INCLUDED IN THE NOTICE TO BIDDERS AND SPECIAL PROVISIONS BOOK.

LOCATION MAP

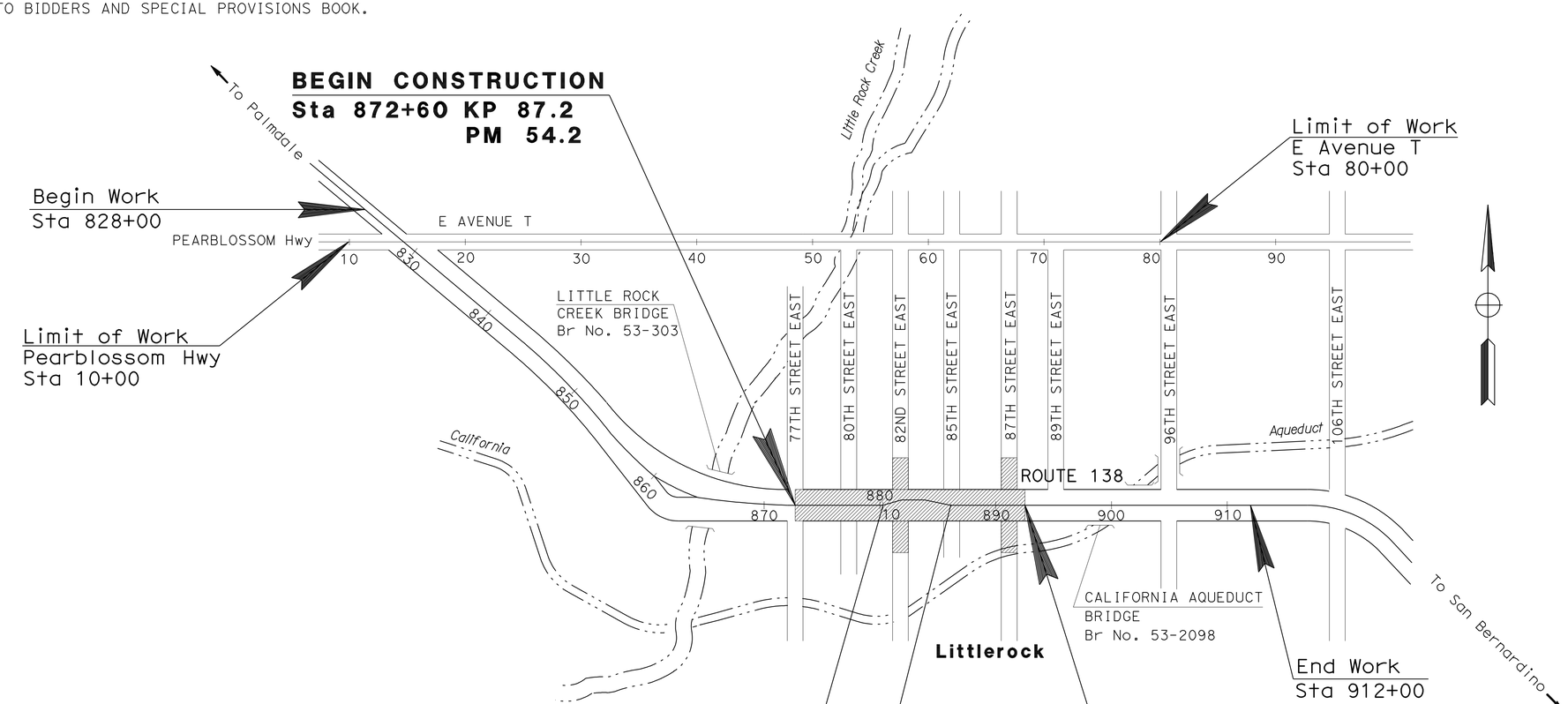

NO SCALE

Caltrans Metric

Quang Thai 1-11-10
PROJECT ENGINEER DATE
REGISTERED CIVIL ENGINEER

May 17, 2010
PLANS APPROVAL DATE

REGISTERED PROFESSIONAL ENGINEER
QUANG THAI
No. C66223
Exp. 6-30-10
CIVIL
STATE OF CALIFORNIA

THE STATE OF CALIFORNIA OR ITS OFFICERS OR AGENTS SHALL NOT BE RESPONSIBLE FOR THE ACCURACY OR COMPLETENESS OF ELECTRONIC COPIES OF THIS PLAN SHEET.

PROJECT MANAGER OSAMA MEGALLA
DESIGN ENGINEER QUANG THAI

THE CONTRACTOR SHALL POSSESS THE CLASS (OR CLASSES) OF LICENSE AS SPECIFIED IN THE ''NOTICE TO BIDDERS.''

CONTRACT No.	07-127224
PROJECT ID	0700000128

LAST REVISION 09-23-09
DATE PLOTTED => 25-FEB-2011
TIME PLOTTED => 13:27

Dist	COUNTY	ROUTE	KILOMETER POST TOTAL PROJECT	SHEET No.	TOTAL SHEETS
07	LA	138	87.2/88.9	2	156

REGISTERED CIVIL ENGINEER 1-11-10 DATE

5-17-10
PLANS APPROVAL DATE

REGISTERED PROFESSIONAL ENGINEER QUANG THAI No. C66223 Exp. 6-30-10 CIVIL STATE OF CALIFORNIA

THE STATE OF CALIFORNIA OR ITS OFFICERS OR AGENTS SHALL NOT BE RESPONSIBLE FOR THE ACCURACY OR COMPLETENESS OF ELECTRONIC COPIES OF THIS PLAN SHEET.

Caltrans Metric

NOTES:

1. DIMENSIONS OF THE STRUCTURAL SECTIONS ARE SUBJECT TO TOLERANCES SPECIFIED IN THE STANDARD SPECIFICATIONS.
2. SUPERELEVATION AS SHOWN OR AS DIRECTED BY THE ENGINEER.

EXISTING STRUCTURAL SECTION:

A — 150-305 mm DENSE GRADE ASPHALT CONCRETE

TYPICAL STRUCTURAL SECTION:

1 — 120-450 mm HOT MIX ASPHALT (TYPE A)

2 — 300 mm HOT MIX ASPHALT (TYPE A)
105 mm CLASS 3 AGGREGATE BASE

3 — 105 mm MINOR CONCRETE (SIDEWALK)
150 mm CLASS 3 AGGREGATE BASE

4 — 240 mm HOT MIX ASPHALT (TYPE A)
105 mm CLASS 3 AGGREGATE BASE

5 — 75 mm IMPORTED MATERIAL (SHOULDER BACKING)

6 — COLD PLANE AC Pvmt (90 mm Max)
120-450 mm HOT MIX ASPHALT (TYPE A)

7 — 150 mm RAPID STRENGTH CONCRETE (RSC)
150 mm CLASS 3 AGGREGATE BASE

8 — 255 mm RAPID STRENGTH CONCRETE (RSC)
150 mm LEAN CONCRETE BASE RAPID SETTING (LCBRS)
150 mm CLASS 3 AGGREGATE BASE

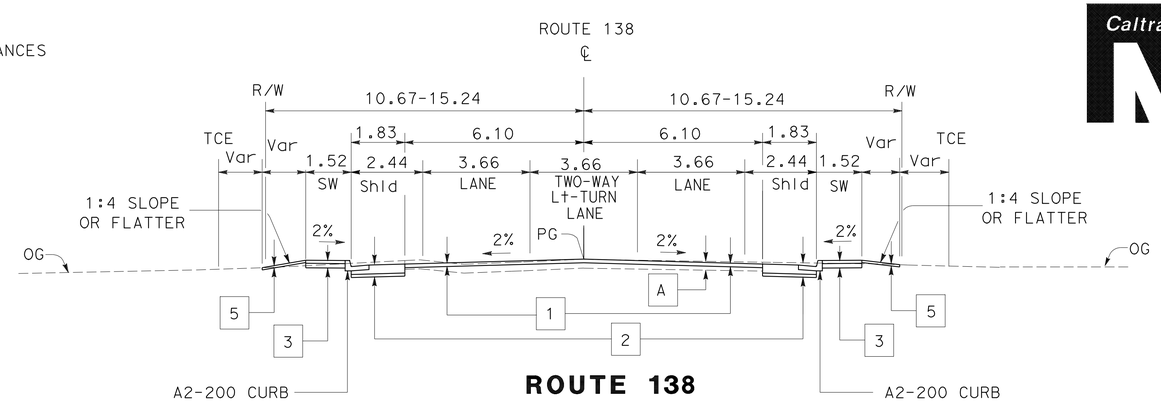

ROUTE 138

Sta 874+00.00 TO 874+29.76
874+66.26 TO 876+00.00
876+80.00 TO 877+54.155
877+88.980 TO 878+80.00
879+40.00 TO 880+10.00
"A" 10+10.00 TO 10+60.00
886+80.00 TO 889+48.276

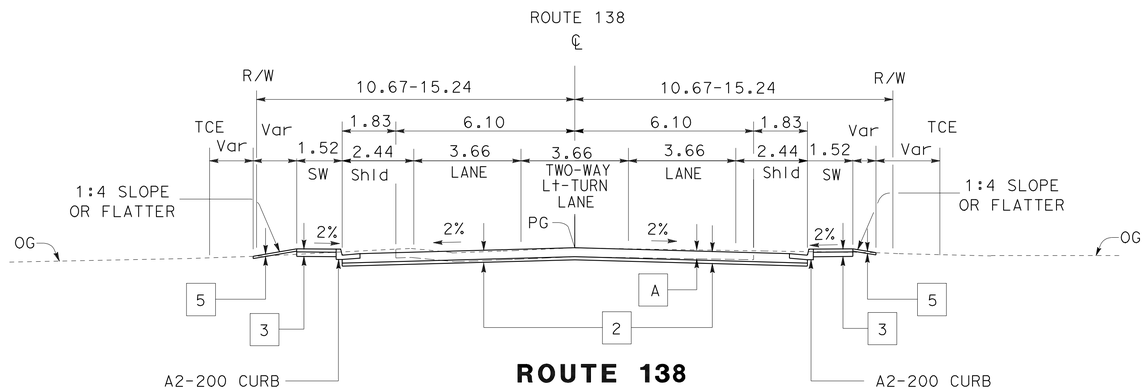

ROUTE 138

Sta 876+00.00 TO 876+80.00
"A" 13+13.013 TO 14+00.00

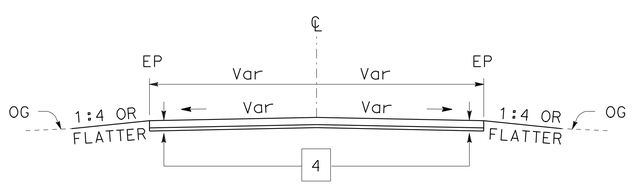

MINOR STREETS

Sta 53+19.471 TO 53+84.00 82ND St EAST
57+18.087 TO 57+80.00 87TH St EAST
58+33.318 TO 59+43.355 87TH St EAST

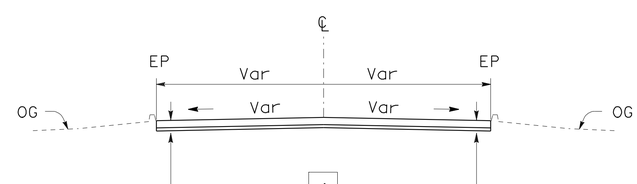

82ND St EAST

Sta 54+67.675 TO 54+91.864 82ND St EAST

ALL DIMENSIONS ARE IN METERS
UNLESS OTHERWISE SHOWN

TYPICAL CROSS SECTIONS

NO SCALE

X-1

STATE OF CALIFORNIA - DEPARTMENT OF TRANSPORTATION
Caltrans OFFICE OF DESIGN B

FUNCTIONAL SUPERVISOR: M. OJI KALU
CALCULATED-DESIGNED BY: QUANG THAI
CHECKED BY: M. OJI KALU
REVISED BY
DATE REVISED

LAST REVISION 12-29-09 | DATE PLOTTED => 20-MAY-2010 | TIME PLOTTED => 12:56

Dist	COUNTY	ROUTE	KILOMETER POST TOTAL PROJECT	SHEET No.	TOTAL SHEETS
07	LA	138	87.2/88.9	3	156

Caltrans Metric

REGISTERED CIVIL ENGINEER 1-11-10 DATE

5-17-10
PLANS APPROVAL DATE

REGISTERED PROFESSIONAL ENGINEER QUANG THAI No. C66223 Exp. 6-30-10 CIVIL STATE OF CALIFORNIA

THE STATE OF CALIFORNIA OR ITS OFFICERS OR AGENTS SHALL NOT BE RESPONSIBLE FOR THE ACCURACY OR COMPLETENESS OF ELECTRONIC COPIES OF THIS PLAN SHEET.

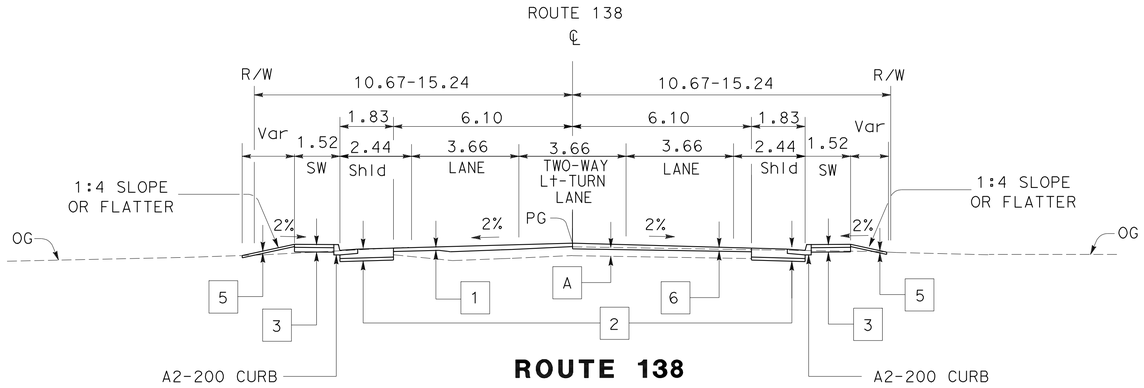

ROUTE 138

STA 878+80.00 TO 879+40.00
"A" 14+00.00 TO 15+36.311
886+00.00 TO 886+80.00

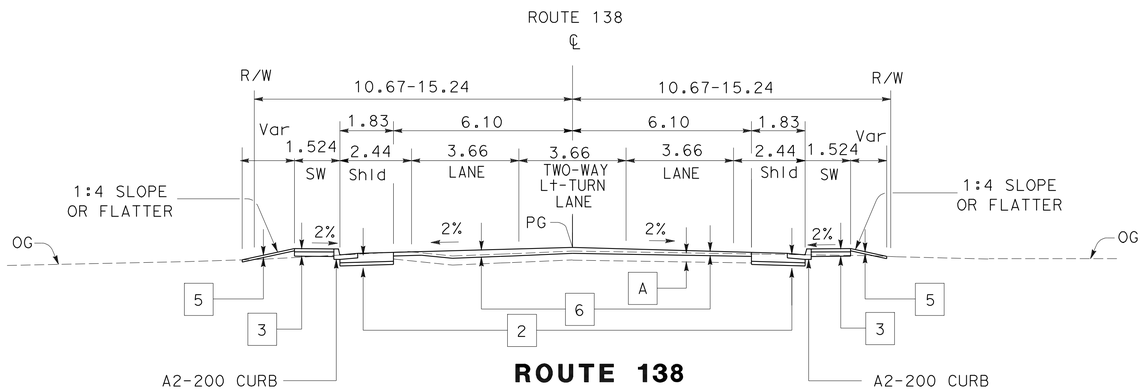

ROUTE 138

STA 880+10.00 TO 880+37.03

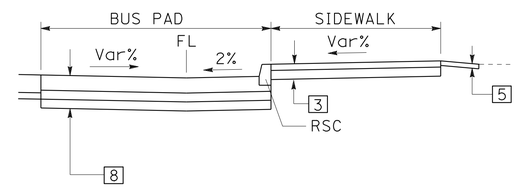

ROUTE 138

TYPICAL BUSPAD

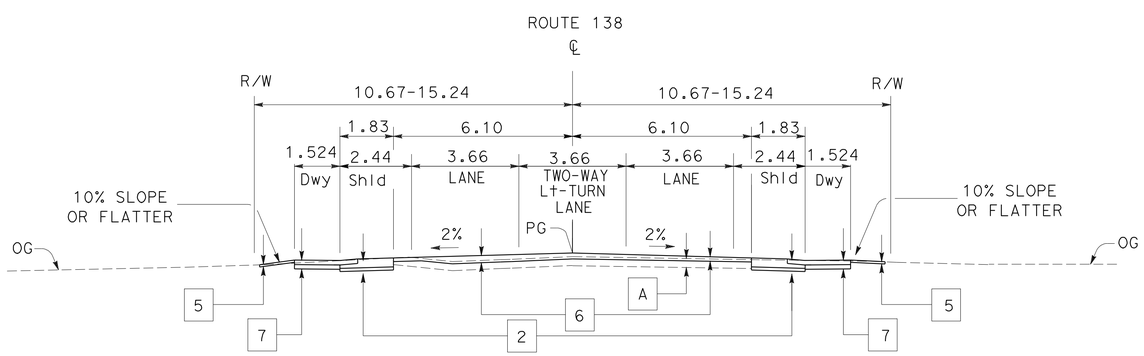

ROUTE 138

TYPICAL DRIVEWAY

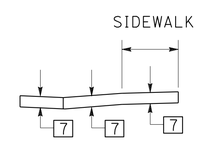

ROUTE 138

CASE B - DRIVEWAY WITH DEPRESSED SIDEWALK

ALL DIMENSIONS ARE IN METERS
UNLESS OTHERWISE SHOWN

TYPICAL CROSS SECTIONS

NO SCALE

X-2

		REVISED BY	DATE REVISED
CALCULATED-DESIGNED BY	QUANG THAI		
CHECKED BY	M. OJI KALU		
FUNCTIONAL SUPERVISOR	M. OJI KALU		

STATE OF CALIFORNIA - DEPARTMENT OF TRANSPORTATION
Caltrans OFFICE OF DESIGN B

LAST REVISION 12-29-09 | DATE PLOTTED => 20-MAY-2010 | TIME PLOTTED => 12:56

Dist	COUNTY	ROUTE	KILOMETER POST TOTAL PROJECT	SHEET No.	TOTAL SHEETS
07	LA	138	87.2/88.9	4	156

Quang Thai 1-11-10
REGISTERED CIVIL ENGINEER DATE

5-17-10
PLANS APPROVAL DATE

REGISTERED PROFESSIONAL ENGINEER
QUANG THAI
No. C66223
Exp. 6-30-10
CIVIL
STATE OF CALIFORNIA

THE STATE OF CALIFORNIA OR ITS OFFICERS OR AGENTS SHALL NOT BE RESPONSIBLE FOR THE ACCURACY OR COMPLETENESS OF ELECTRONIC COPIES OF THIS PLAN SHEET.

Caltrans Metric

NOTES:

1. FOR ACCURATE RIGHT OF WAY DATA, CONTACT RIGHT OF WAY ENGINEERING AT THE DISTRICT OFFICE.
2. SEE CONSTRUCTION DETAILS FOR CURB RAMPS AND BUS PAD DETAILS.
3. NO EXCAVATION OR PARKING ARE ALLOWED ON TOP OF THE LEACH PIT.
4. FOR DRIVEWAY DETAILS, SEE STD PLAN A87A CASE B.

CURVE DATA

No.	R	Δ	T	L
1	12.19	89°57′21″	12.18	19.14
2	12.19	90°1′54″	12.20	19.16
3	12.19	90°2′27″	12.20	19.16
4	12.19	89°58′18″	12.19	19.15

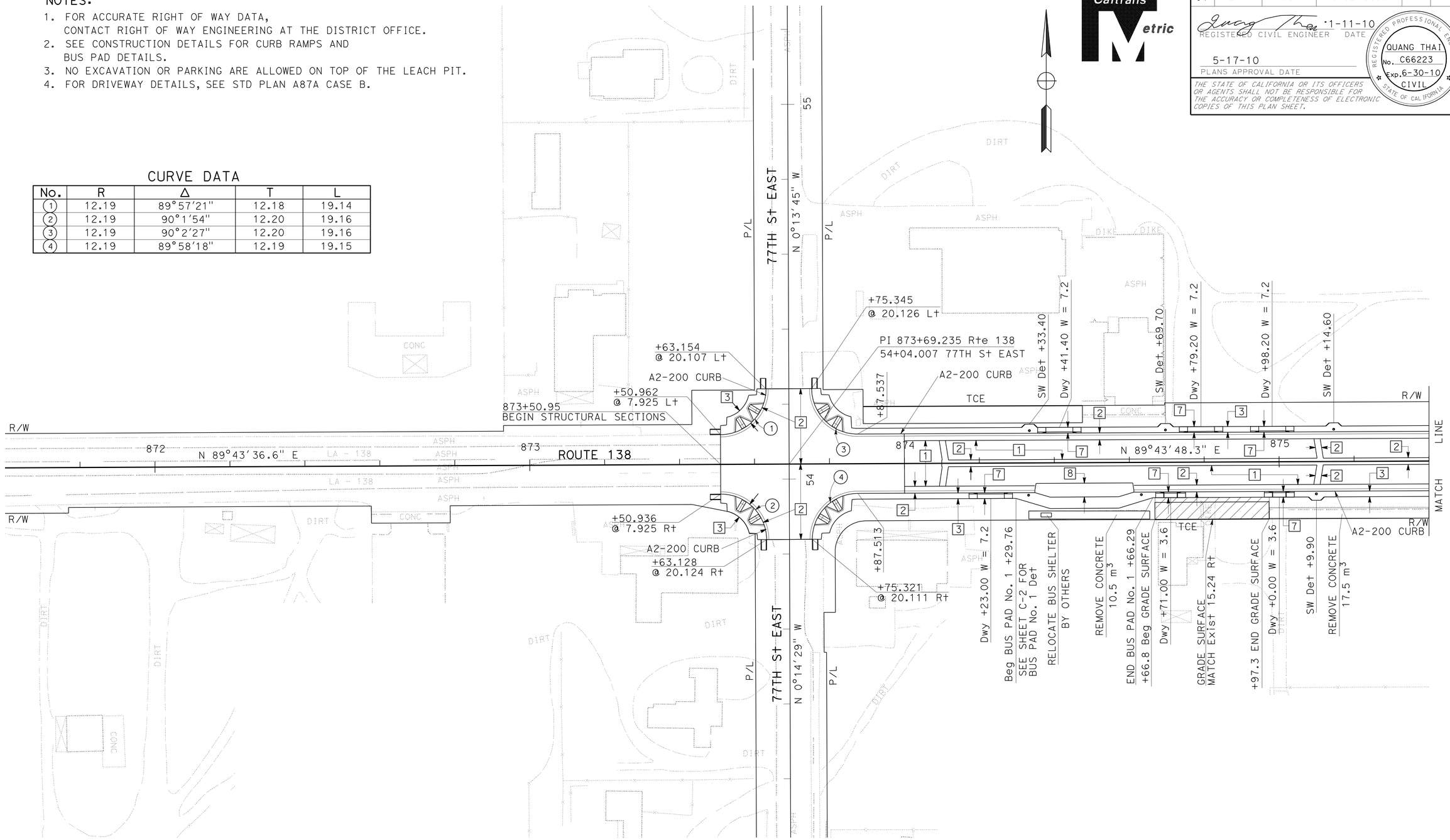

ALL DIMENSIONS ARE IN METERS UNLESS OTHERWISE SHOWN

LAYOUT

SCALE 1:500

L-1

REVISED BY	DATE REVISED
QUANG THAI	M. OJI KALU
CALCULATED-DESIGNED BY	CHECKED BY
FUNCTIONAL SUPERVISOR	M. OJI KALU

STATE OF CALIFORNIA - DEPARTMENT OF TRANSPORTATION
Caltrans OFFICE OF DESIGN B

LAST REVISION 12-29-09 | DATE PLOTTED => 20-MAY-2010 | TIME PLOTTED => 12:56

Dist	COUNTY	ROUTE	KILOMETER POST TOTAL PROJECT	SHEET No.	TOTAL SHEETS
07	LA	138	87.2/88.9	5	156

REGISTERED CIVIL ENGINEER 1-11-10 DATE

5-17-10
PLANS APPROVAL DATE

REGISTERED PROFESSIONAL ENGINEER QUANG THAI No. C66223 Exp. 6-30-10 CIVIL STATE OF CALIFORNIA

THE STATE OF CALIFORNIA OR ITS OFFICERS OR AGENTS SHALL NOT BE RESPONSIBLE FOR THE ACCURACY OR COMPLETENESS OF ELECTRONIC COPIES OF THIS PLAN SHEET.

Caltrans Metric

NOTE:

FOR ACCURATE RIGHT OF WAY DATA, CONTACT RIGHT OF WAY ENGINEERING AT THE DISTRICT OFFICE.

CURVE DATA

No.	R	Δ	T	L
5	13.11	89°53'28"	13.08	20.56
6	13.11	90°6'24"	13.13	20.61
7	13.11	90°6'21"	13.13	20.61
8	13.11	89°53'46"	13.08	20.56

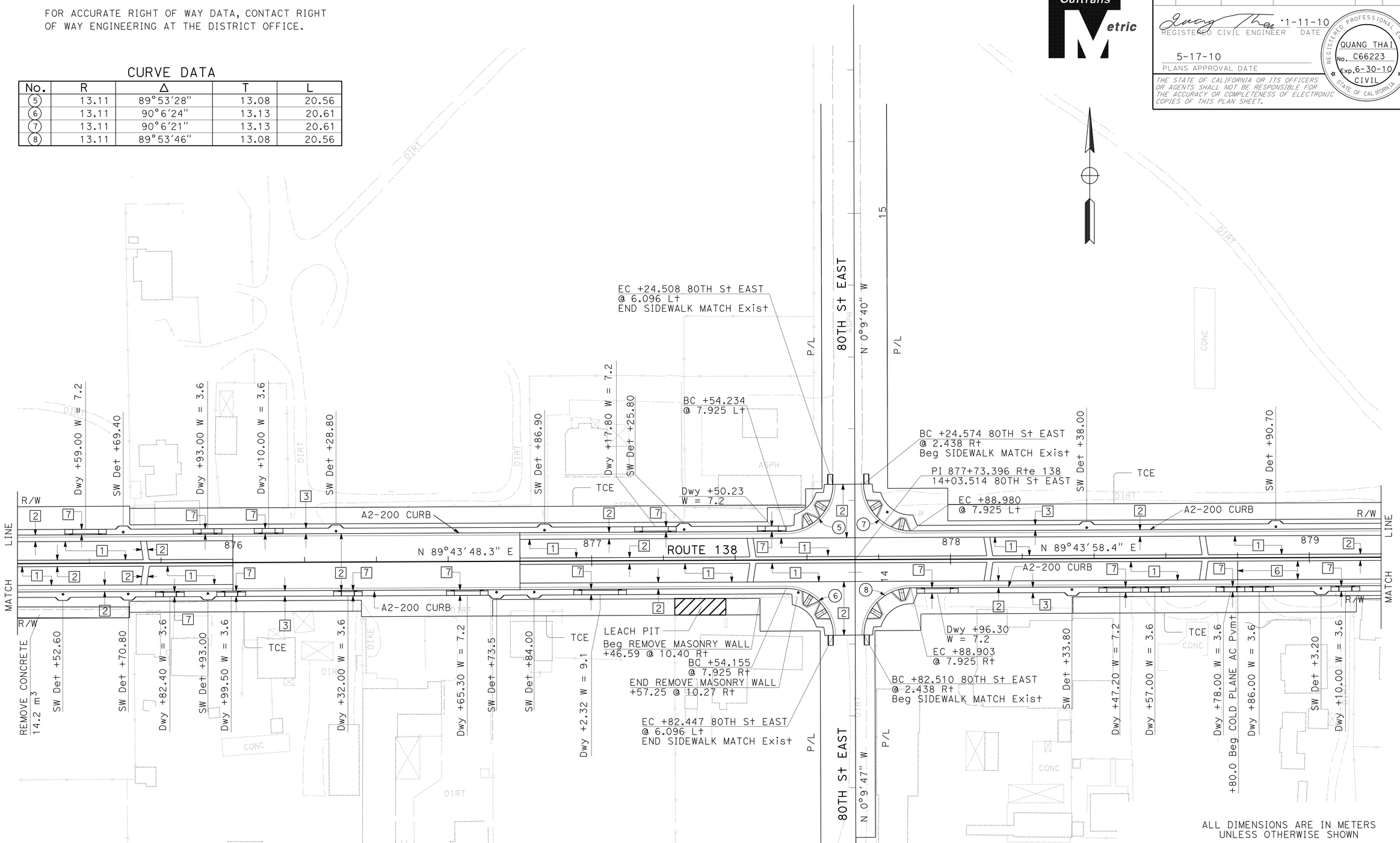

ALL DIMENSIONS ARE IN METERS
UNLESS OTHERWISE SHOWN

LAYOUT
SCALE 1:500

L-2

STATE OF CALIFORNIA - DEPARTMENT OF TRANSPORTATION
Caltrans **OFFICE OF DESIGN B**

FUNCTIONAL SUPERVISOR: M. OJI KALU
CALCULATED-DESIGNED BY: QUANG THAI
CHECKED BY: M. OJI KALU
REVISED BY
DATE REVISED

LAST REVISION 12-29-09 | DATE PLOTTED => 20-MAY-2010 | TIME PLOTTED => 12:56

Dist	COUNTY	ROUTE	KILOMETER POST TOTAL PROJECT	SHEET No.	TOTAL SHEETS
07	LA	138	87.2/88.9	6	156

REGISTERED CIVIL ENGINEER 1-11-10 DATE

5-17-10
PLANS APPROVAL DATE

REGISTERED PROFESSIONAL ENGINEER QUANG THAI No. C66223 Exp. 6-30-10 CIVIL STATE OF CALIFORNIA

THE STATE OF CALIFORNIA OR ITS OFFICERS OR AGENTS SHALL NOT BE RESPONSIBLE FOR THE ACCURACY OR COMPLETENESS OF ELECTRONIC COPIES OF THIS PLAN SHEET.

Caltrans Metric

NOTE:

FOR ACCURATE RIGHT OF WAY DATA, CONTACT RIGHT OF WAY ENGINEERING AT THE DISTRICT OFFICE.

CURVE DATA

No.	R	Δ	T	L
9	10.06	87°19'58"	9.60	15.33
10	12.19	83°17'28"	10.84	17.72
11	10.67	90°10'22"	10.70	16.79
12	12.19	83°48'20"	10.94	17.83

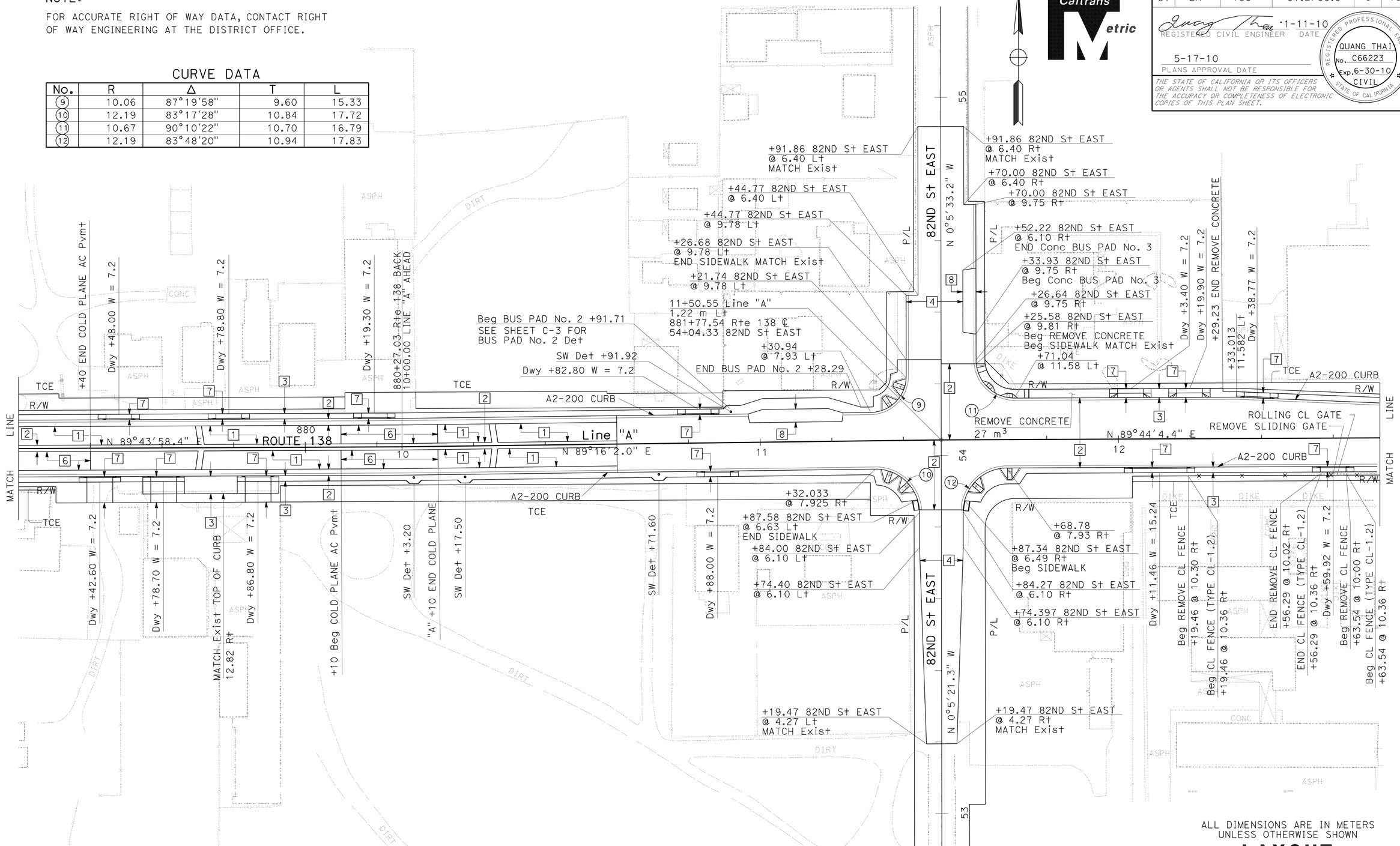

ALL DIMENSIONS ARE IN METERS UNLESS OTHERWISE SHOWN

LAYOUT

SCALE 1:500

L-3

STATE OF CALIFORNIA - DEPARTMENT OF TRANSPORTATION
Caltrans **OFFICE OF DESIGN B**

FUNCTIONAL SUPERVISOR: M. OJI KALU
CALCULATED-DESIGNED BY: QUANG THAI
CHECKED BY: M. OJI KALU
REVISED BY / DATE REVISED

LAST REVISION 12-29-09 | DATE PLOTTED => 20-MAY-2010 | TIME PLOTTED => 13:58

Dist	COUNTY	ROUTE	KILOMETER POST TOTAL PROJECT	SHEET No.	TOTAL SHEETS
07	LA	138	87.2/88.9	7	156

Quang Thai 1-11-10
REGISTERED CIVIL ENGINEER DATE

5-17-10
PLANS APPROVAL DATE

REGISTERED PROFESSIONAL ENGINEER
QUANG THAI
No. C66223
Exp. 6-30-10
CIVIL
STATE OF CALIFORNIA

THE STATE OF CALIFORNIA OR ITS OFFICERS OR AGENTS SHALL NOT BE RESPONSIBLE FOR THE ACCURACY OR COMPLETENESS OF ELECTRONIC COPIES OF THIS PLAN SHEET.

Caltrans Metric

NOTE:

FOR ACCURATE RIGHT OF WAY DATA, CONTACT RIGHT OF WAY ENGINEERING AT THE DISTRICT OFFICE.

CURVE DATA

No.	R	Δ	T	L
13	12.19	90°5'54"	12.21	19.17
14	12.19	90°15'13"	12.25	19.21

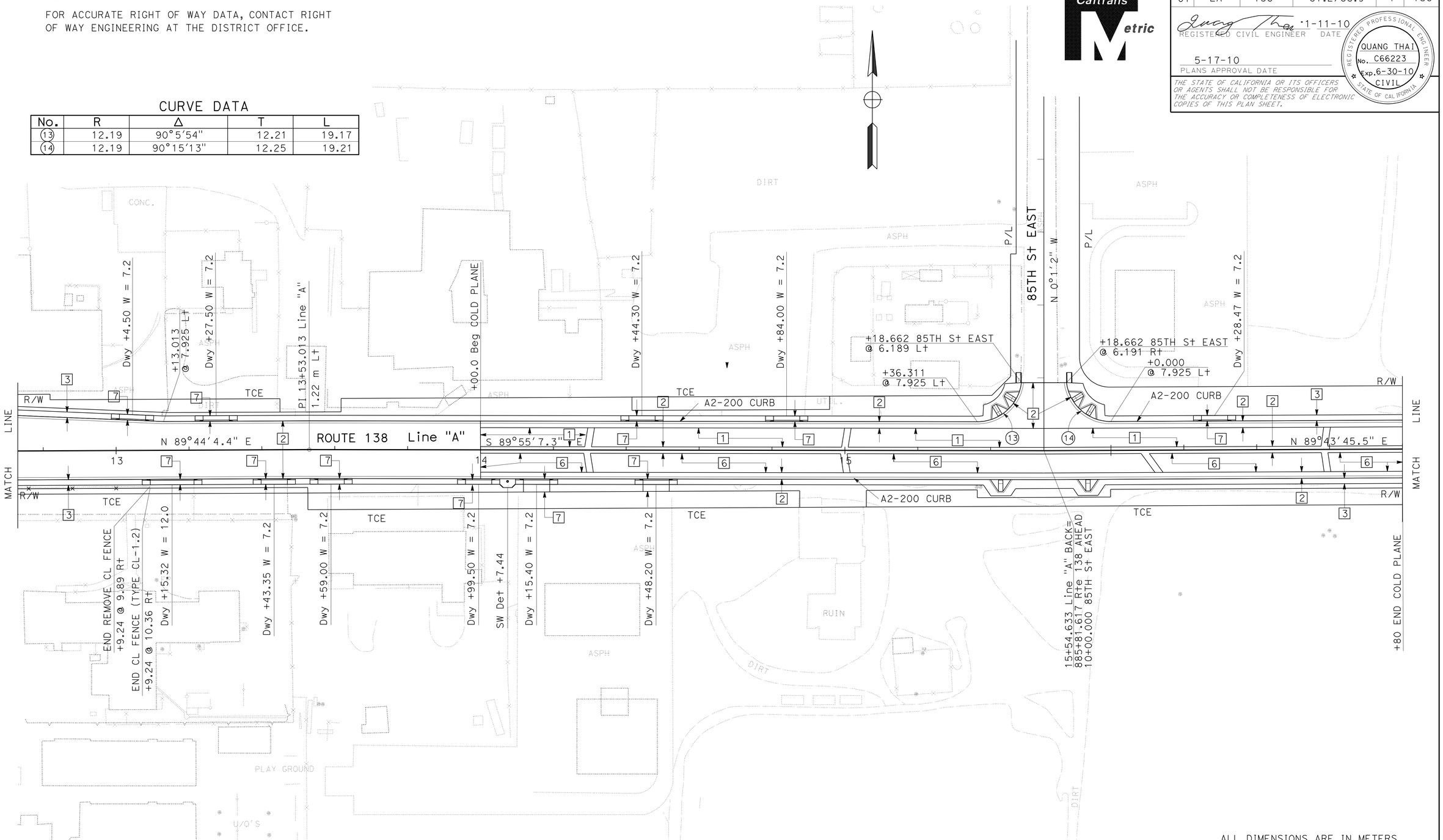

ALL DIMENSIONS ARE IN METERS UNLESS OTHERWISE SHOWN

LAYOUT

SCALE 1:500

L-4

STATE OF CALIFORNIA - DEPARTMENT OF TRANSPORTATION
Caltrans **OFFICE OF DESIGN B**

FUNCTIONAL SUPERVISOR: M. OJI KALU
CALCULATED-DESIGNED BY: QUANG THAI
CHECKED BY: M. OJI KALU
REVISED BY / DATE REVISED

LAST REVISION DATE PLOTTED => 20-MAY-2010
12-29-09 TIME PLOTTED => 13:59

Dist	COUNTY	ROUTE	KILOMETER POST TOTAL PROJECT	SHEET No.	TOTAL SHEETS
07	LA	138	87.2/88.9	8	156

Quang Thai 1-11-10
REGISTERED CIVIL ENGINEER DATE

5-17-10
PLANS APPROVAL DATE

REGISTERED PROFESSIONAL ENGINEER QUANG THAI No. C66223 Exp. 6-30-10 CIVIL STATE OF CALIFORNIA

THE STATE OF CALIFORNIA OR ITS OFFICERS OR AGENTS SHALL NOT BE RESPONSIBLE FOR THE ACCURACY OR COMPLETENESS OF ELECTRONIC COPIES OF THIS PLAN SHEET.

Caltrans Metric

NOTE:

FOR ACCURATE RIGHT OF WAY DATA, CONTACT RIGHT OF WAY ENGINEERING AT THE DISTRICT OFFICE.

CURVE DATA

No.	R	Δ	T	L
15	14.63	54°5'36"	7.47	13.81
16	12.19	83°7'57"	10.81	17.69
17	12.19	82°51'07"	10.76	17.63
18	14.63	71°36'30"	10.55	18.29

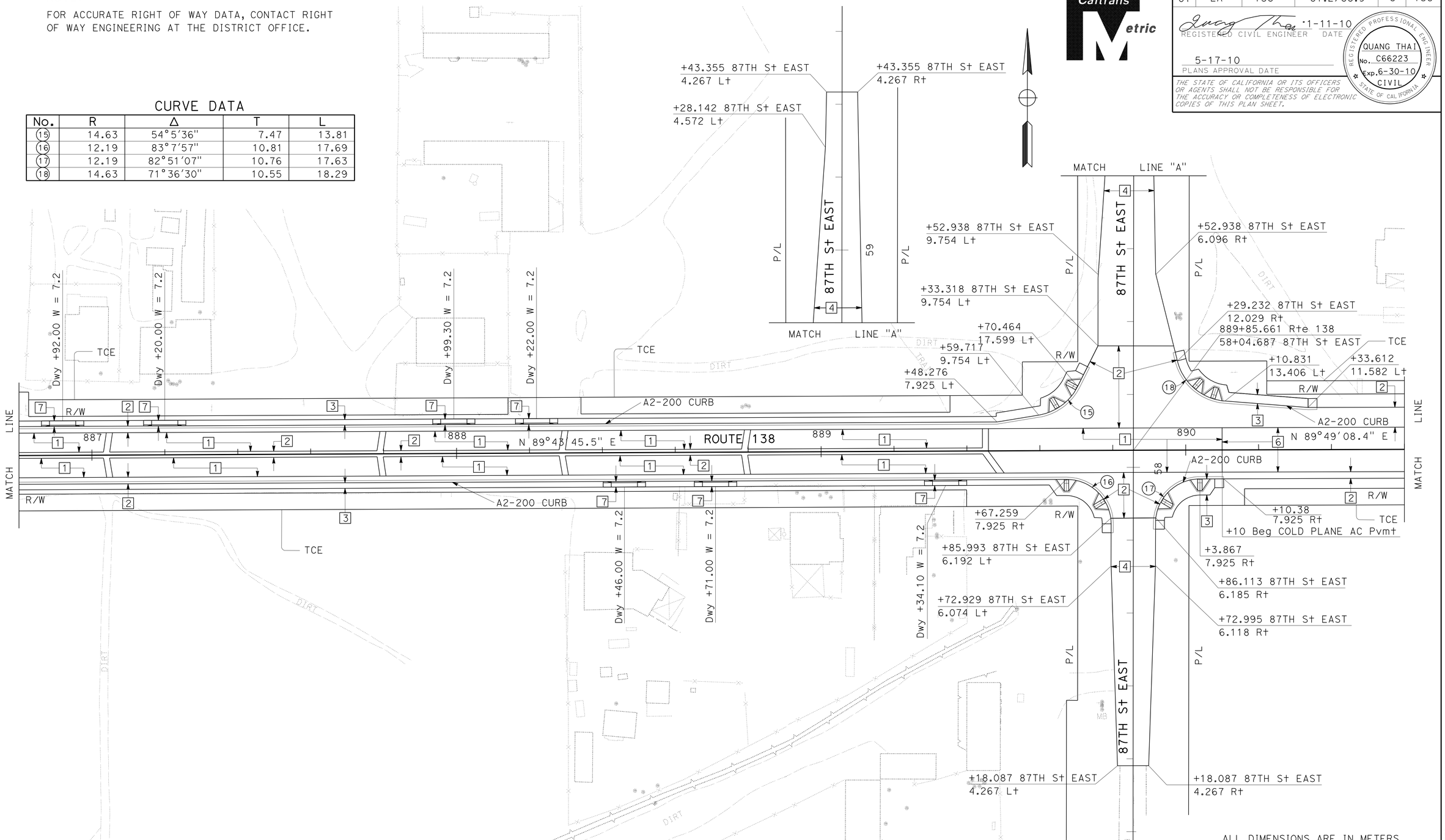

ALL DIMENSIONS ARE IN METERS UNLESS OTHERWISE SHOWN

LAYOUT

SCALE 1:500

L-5

STATE OF CALIFORNIA - DEPARTMENT OF TRANSPORTATION
Caltrans OFFICE OF DESIGN B

FUNCTIONAL SUPERVISOR: M. OJI KALU
CALCULATED-DESIGNED BY: QUANG THAI
CHECKED BY: M. OJI KALU
REVISED BY / DATE REVISED

LAST REVISION 12-29-09 | DATE PLOTTED => 20-MAY-2010 | TIME PLOTTED => 1257

Dist	COUNTY	ROUTE	KILOMETER POST TOTAL PROJECT	SHEET No.	TOTAL SHEETS
07	LA	138	87.2/88.9	9	156

Quang Thai 1-11-10
REGISTERED CIVIL ENGINEER DATE

5-17-10
PLANS APPROVAL DATE

REGISTERED PROFESSIONAL ENGINEER
QUANG THAI
No. C66223
Exp. 6-30-10
CIVIL
STATE OF CALIFORNIA

THE STATE OF CALIFORNIA OR ITS OFFICERS OR AGENTS SHALL NOT BE RESPONSIBLE FOR THE ACCURACY OR COMPLETENESS OF ELECTRONIC COPIES OF THIS PLAN SHEET.

Caltrans Metric

NOTE:

FOR ACCURATE RIGHT OF WAY DATA, CONTACT RIGHT OF WAY ENGINEERING AT THE DISTRICT OFFICE.

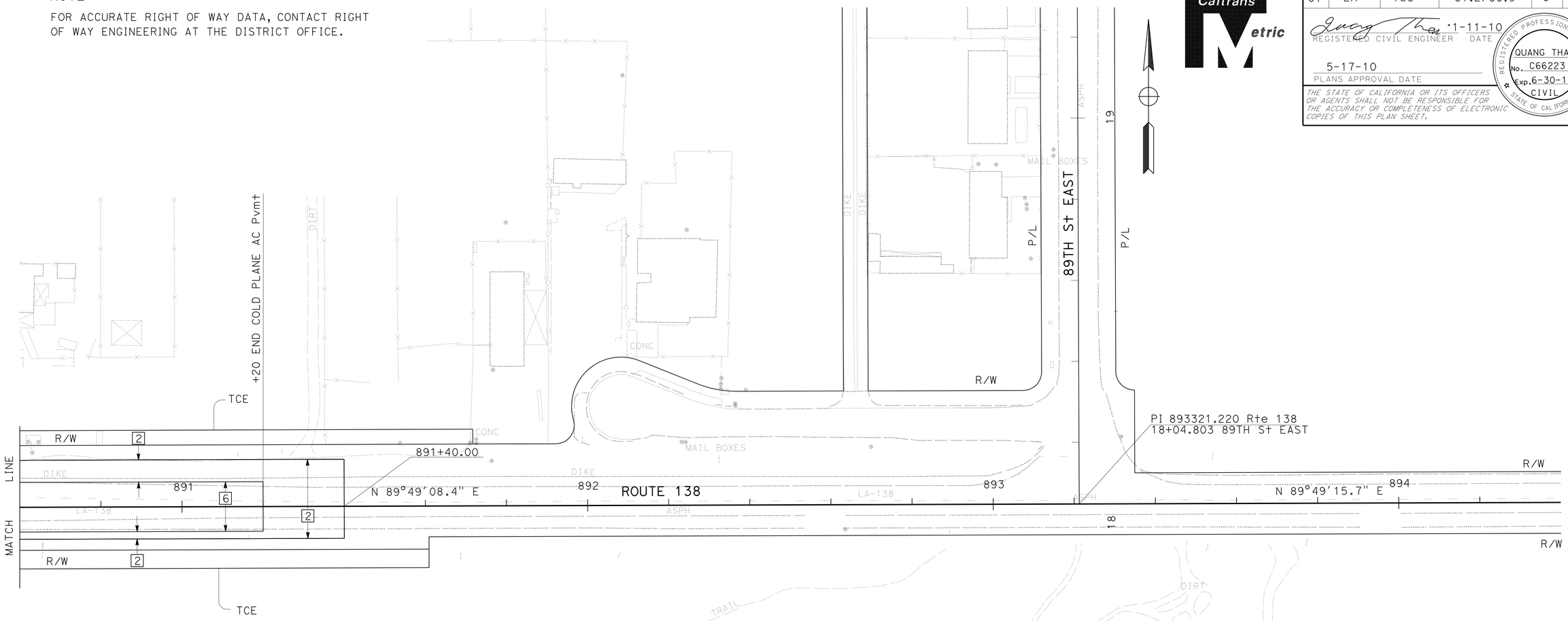

ALL DIMENSIONS ARE IN METERS UNLESS OTHERWISE SHOWN

LAYOUT

SCALE 1:500

L-6

STATE OF CALIFORNIA - DEPARTMENT OF TRANSPORTATION
Caltrans **OFFICE OF DESIGN B**

FUNCTIONAL SUPERVISOR: M. OJI KALU
CALCULATED-DESIGNED BY: QUANG THAI
CHECKED BY: M. OJI KALU
REVISED BY / DATE REVISED

LAST REVISION 12-29-09
DATE PLOTTED => 20-MAY-2010
TIME PLOTTED => 12:57

Dist	COUNTY	ROUTE	KILOMETER POST TOTAL PROJECT	SHEET No.	TOTAL SHEETS
07	LA	138	87.2/88.9	10	156

Caltrans Metric

Quang Thai 1-11-10
REGISTERED CIVIL ENGINEER DATE

5-17-10
PLANS APPROVAL DATE

REGISTERED PROFESSIONAL ENGINEER
QUANG THAI
No. C66223
Exp. 6-30-10
CIVIL
STATE OF CALIFORNIA

THE STATE OF CALIFORNIA OR ITS OFFICERS OR AGENTS SHALL NOT BE RESPONSIBLE FOR THE ACCURACY OR COMPLETENESS OF ELECTRONIC COPIES OF THIS PLAN SHEET.

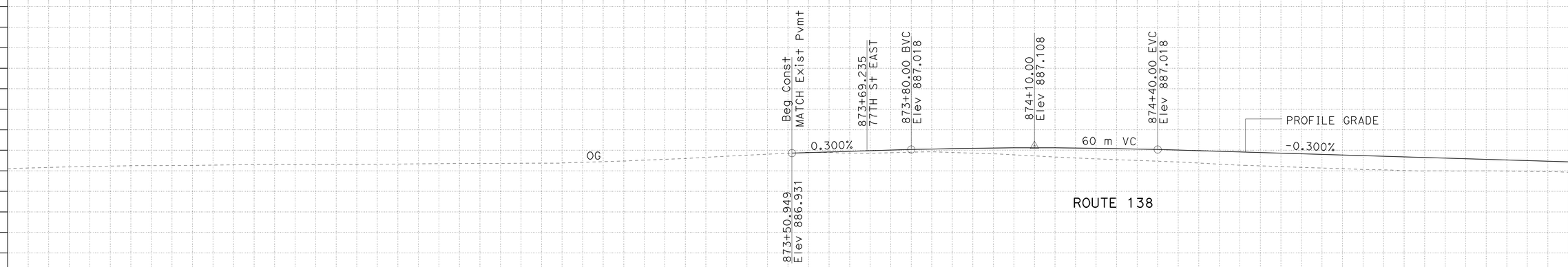

ALL DIMENSIONS ARE IN METERS
UNLESS OTHERWISE SHOWN

PROFILE

SCALE 1:500 Horiz
1:50 Vert

P-1

Station	873+00	+20	+40	+60	+80	874+00	+20	+40	+60	+80	875+00	+20	+40
m^3 Exc				358									
m^3 Emb				588									

STATE OF CALIFORNIA - DEPARTMENT OF TRANSPORTATION
Caltrans OFFICE OF DESIGN B

FUNCTIONAL SUPERVISOR: M. OJI KALU
CALCULATED-DESIGNED BY: QUANG THAI
CHECKED BY: M. OJI KALU
REVISED BY
DATE REVISED

LAST REVISION 08-24-09
DATE PLOTTED => 20-MAY-2010
TIME PLOTTED => 12:57

Dist	COUNTY	ROUTE	KILOMETER POST TOTAL PROJECT	SHEET No.	TOTAL SHEETS
07	LA	138	87.2/88.9	11	156

Caltrans Metric

Quang Thai 1-11-10
REGISTERED CIVIL ENGINEER DATE

5-17-10
PLANS APPROVAL DATE

REGISTERED PROFESSIONAL ENGINEER
QUANG THAI
No. C66223
Exp. 6-30-10
CIVIL
STATE OF CALIFORNIA

THE STATE OF CALIFORNIA OR ITS OFFICERS OR AGENTS SHALL NOT BE RESPONSIBLE FOR THE ACCURACY OR COMPLETENESS OF ELECTRONIC COPIES OF THIS PLAN SHEET.

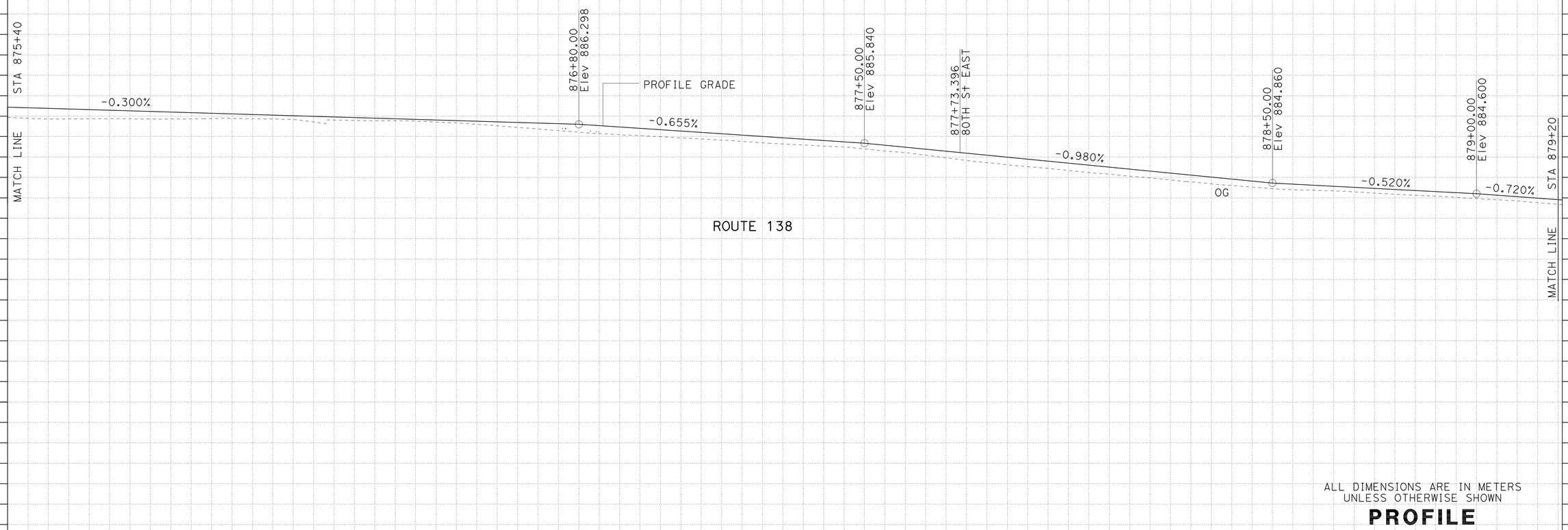

ALL DIMENSIONS ARE IN METERS
UNLESS OTHERWISE SHOWN

PROFILE

SCALE 1:500 Horiz
1:50 Vert

P-2

Station	+40	+60	+80	876+00	+20	+40	+60	+80	877+00	+20	+40	+60	+80	878+00	+20	+40	+60	+80	879+00	+20

m^3 Exc ← 318 →
m^3 Emb ← 723 →

STATE OF CALIFORNIA - DEPARTMENT OF TRANSPORTATION
Caltrans OFFICE OF DESIGN B

FUNCTIONAL SUPERVISOR: M.OJI KALU
CALCULATED-DESIGNED BY: QUANG THAI
CHECKED BY: M. OJI KALU
REVISED BY
DATE REVISED

LAST REVISION 08-24-09
DATE PLOTTED => 20-MAY-2010
TIME PLOTTED => 13:28

Dist	COUNTY	ROUTE	KILOMETER POST TOTAL PROJECT	SHEET No.	TOTAL SHEETS
07	LA	138	87.2/88.9	12	156

REGISTERED CIVIL ENGINEER 1-11-10 DATE

5-17-10
PLANS APPROVAL DATE

REGISTERED PROFESSIONAL ENGINEER
QUANG THAI
No. C66223
Exp. 6-30-10
CIVIL
STATE OF CALIFORNIA

THE STATE OF CALIFORNIA OR ITS OFFICERS OR AGENTS SHALL NOT BE RESPONSIBLE FOR THE ACCURACY OR COMPLETENESS OF ELECTRONIC COPIES OF THIS PLAN SHEET.

Caltrans Metric

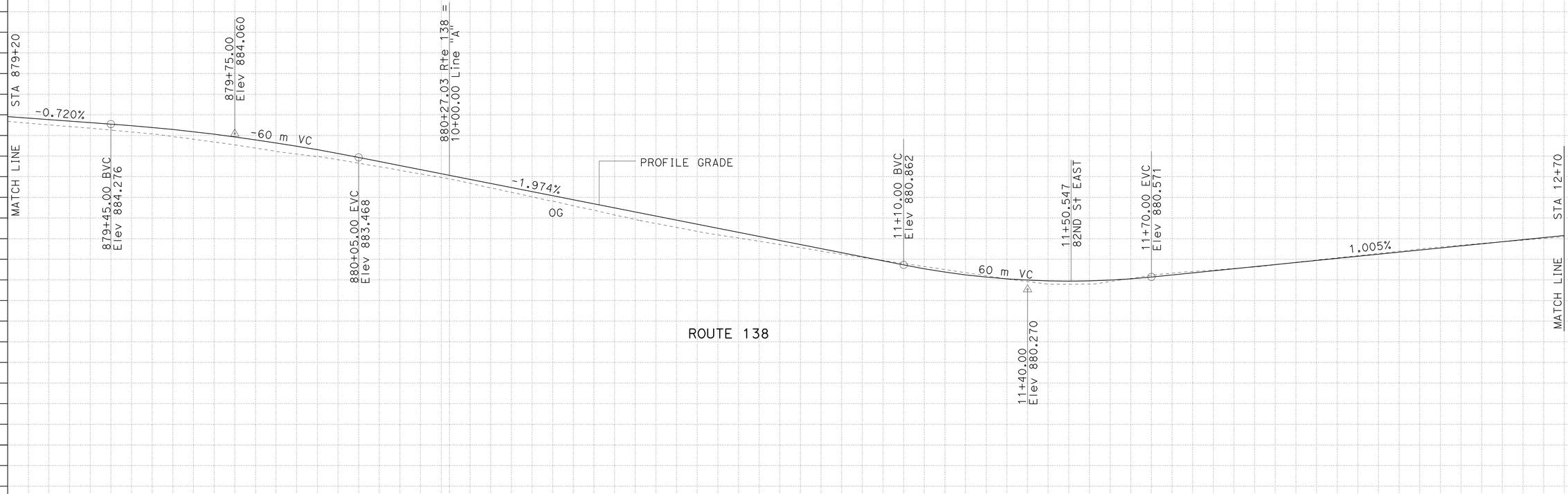

ALL DIMENSIONS ARE IN METERS
UNLESS OTHERWISE SHOWN

PROFILE

SCALE 1:500 Horiz
1:50 Vert

P-3

Station	+20	+40	+60	+80	880+00	10+00	+20	+40	+60	+80	11+00	+20	+40	+60	+80	12+00	+20	+40	+60

m^3		
Exc	1647	
Emb	567	

CALCULATED-DESIGNED BY
CHECKED BY
QUANG THAI
REVISED BY
DATE REVISED
M. OJI KALU

FUNCTIONAL SUPERVISOR
M. OJI KALU

STATE OF CALIFORNIA - DEPARTMENT OF TRANSPORTATION
Caltrans OFFICE OF DESIGN B

LAST REVISION 08-24-09
DATE PLOTTED => 20-MAY-2010
TIME PLOTTED => 13:28

Dist	COUNTY	ROUTE	KILOMETER POST TOTAL PROJECT	SHEET No.	TOTAL SHEETS
07	LA	138	87.2/88.9	13	156

Caltrans Metric

Quang Thai 1-11-10
REGISTERED CIVIL ENGINEER DATE

5-17-10
PLANS APPROVAL DATE

REGISTERED PROFESSIONAL ENGINEER
QUANG THAI
No. C66223
Exp. 6-30-10
CIVIL
STATE OF CALIFORNIA

THE STATE OF CALIFORNIA OR ITS OFFICERS OR AGENTS SHALL NOT BE RESPONSIBLE FOR THE ACCURACY OR COMPLETENESS OF ELECTRONIC COPIES OF THIS PLAN SHEET.

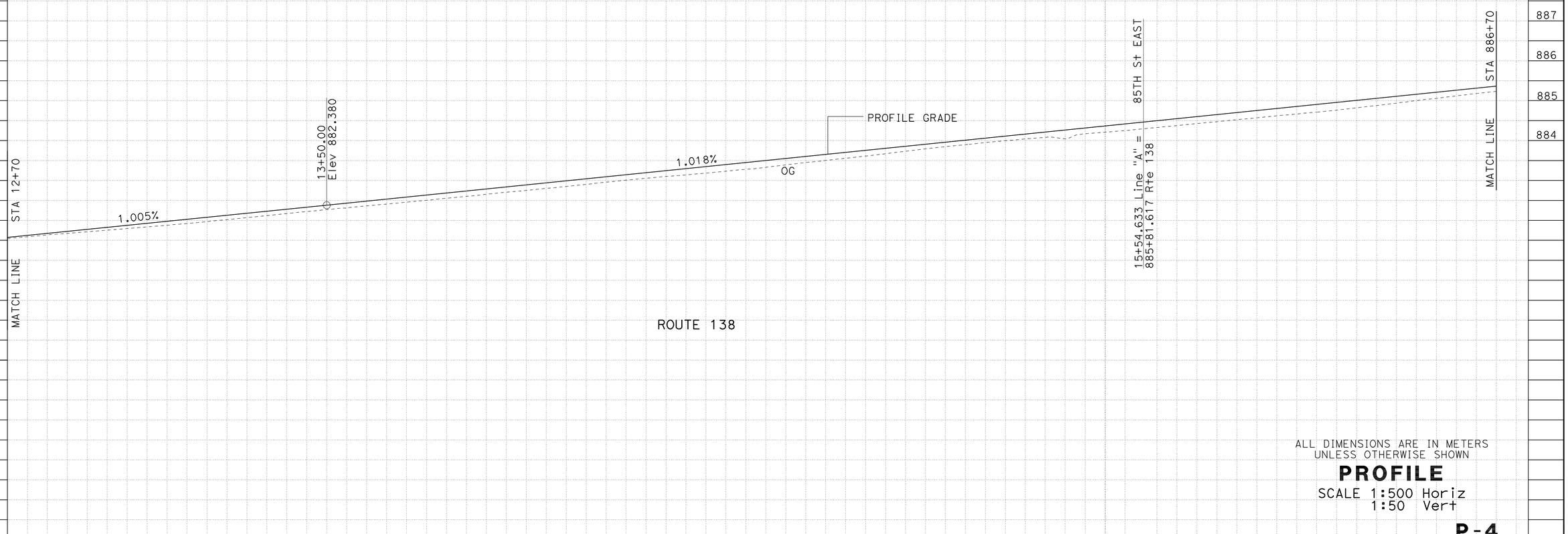

ALL DIMENSIONS ARE IN METERS
UNLESS OTHERWISE SHOWN

PROFILE

SCALE 1:500 Horiz
1:50 Vert

P-4

Station	+80	13+00	+20	+40	+60	+80	14+00	+20	+40	+60	+80	15+00	+20	+40	886+00	+20	+40	+60
m^3 Exc	681																	
m^3 Emb	812																	

STATE OF CALIFORNIA - DEPARTMENT OF TRANSPORTATION
Caltrans OFFICE OF DESIGN B

FUNCTIONAL SUPERVISOR: M. OJI KALU
CALCULATED-DESIGNED BY: QUANG THAI
CHECKED BY: M. OJI KALU
REVISED BY
DATE REVISED

LAST REVISION 08-24-09
DATE PLOTTED => 20-MAY-2010
TIME PLOTTED => 13:29

Dist	COUNTY	ROUTE	KILOMETER POST TOTAL PROJECT	SHEET No.	TOTAL SHEETS
07	LA	138	87.2/88.9	14	156

REGISTERED CIVIL ENGINEER 1-11-10 DATE

5-17-10
PLANS APPROVAL DATE

REGISTERED PROFESSIONAL ENGINEER
QUANG THAI
No. C66223
Exp. 6-30-10
CIVIL
STATE OF CALIFORNIA

THE STATE OF CALIFORNIA OR ITS OFFICERS OR AGENTS SHALL NOT BE RESPONSIBLE FOR THE ACCURACY OR COMPLETENESS OF ELECTRONIC COPIES OF THIS PLAN SHEET.

Caltrans Metric

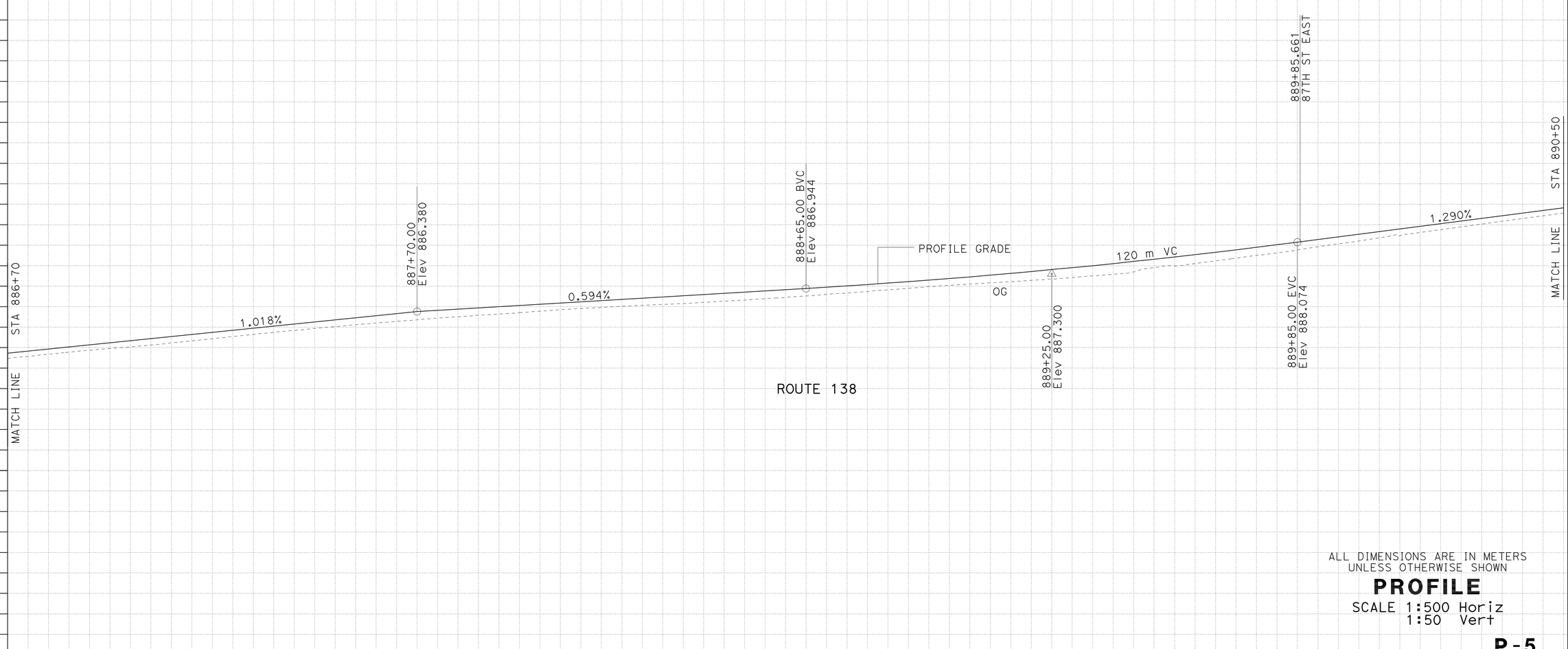

ALL DIMENSIONS ARE IN METERS
UNLESS OTHERWISE SHOWN

PROFILE

SCALE 1:500 Horiz
1:50 Vert

P-5

Station	+80	887+00	+20	+40	+60	+80	888+00	+20	+40	+60	+80	889+00	+20	+40	+60	+80	890+00	+20	+40

m^3 Exc 311
Emb 751

STATE OF CALIFORNIA - DEPARTMENT OF TRANSPORTATION
Caltrans OFFICE OF DESIGN B

FUNCTIONAL SUPERVISOR: M. OJI KALU
CALCULATED-DESIGNED BY: QUANG THAI
CHECKED BY: M. OJI KALU
REVISED BY
DATE REVISED

LAST REVISION 08-24-09
DATE PLOTTED => 20-MAY-2010
TIME PLOTTED => 13:29

Dist	COUNTY	ROUTE	KILOMETER POST TOTAL PROJECT	SHEET No.	TOTAL SHEETS
07	LA	138	87.2/88.9	15	156

REGISTERED CIVIL ENGINEER 1-11-10 DATE

5-17-10
PLANS APPROVAL DATE

REGISTERED PROFESSIONAL ENGINEER
QUANG THAI
No. C66223
Exp. 6-30-10
CIVIL
STATE OF CALIFORNIA

THE STATE OF CALIFORNIA OR ITS OFFICERS OR AGENTS SHALL NOT BE RESPONSIBLE FOR THE ACCURACY OR COMPLETENESS OF ELECTRONIC COPIES OF THIS PLAN SHEET.

Caltrans Metric

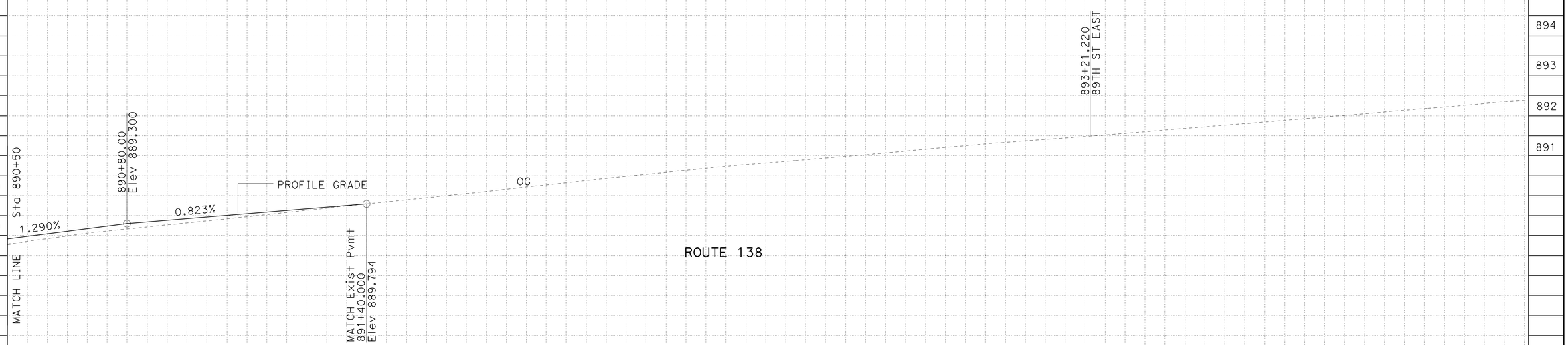

ALL DIMENSIONS ARE IN METERS
UNLESS OTHERWISE SHOWN

PROFILE

SCALE 1:500 Horiz
1:50 Vert

P-6

Station	+60	+80	891+00	+20	+40	+60	+80	892+00	+20	+40	+60	+80	893+00	+20	+40	+60	+80	894+00	+20

m^3	
Exc	185
Emb	63

STATE OF CALIFORNIA - DEPARTMENT OF TRANSPORTATION
Caltrans OFFICE OF DESIGN B

FUNCTIONAL SUPERVISOR: M. OJI KALU
CALCULATED-DESIGNED BY: QUANG THAI
CHECKED BY: M. OJI KALU
REVISED BY
DATE REVISED

LAST REVISION 08-24-09
DATE PLOTTED => 20-MAY-2010
TIME PLOTTED => 13:59

BORDER LAST REVISED 3/1/2007
RELATIVE BORDER SCALE IS IN MILLIMETERS 0 20 40 60 80
USERNAME => trcarol
DGN FILE => 712722fa06.dgn
CU 07244
EA 127221

Dist	COUNTY	ROUTE	KILOMETER POST TOTAL PROJECT	SHEET No.	TOTAL SHEETS
07	LA	138	87.2/88.9	16	156

Quang Thai 1-11-10
REGISTERED CIVIL ENGINEER DATE

5-17-10
PLANS APPROVAL DATE

REGISTERED PROFESSIONAL ENGINEER
QUANG THAI
No. C66223
Exp. 6-30-10
CIVIL
STATE OF CALIFORNIA

THE STATE OF CALIFORNIA OR ITS OFFICERS OR AGENTS SHALL NOT BE RESPONSIBLE FOR THE ACCURACY OR COMPLETENESS OF ELECTRONIC COPIES OF THIS PLAN SHEET.

Caltrans Metric

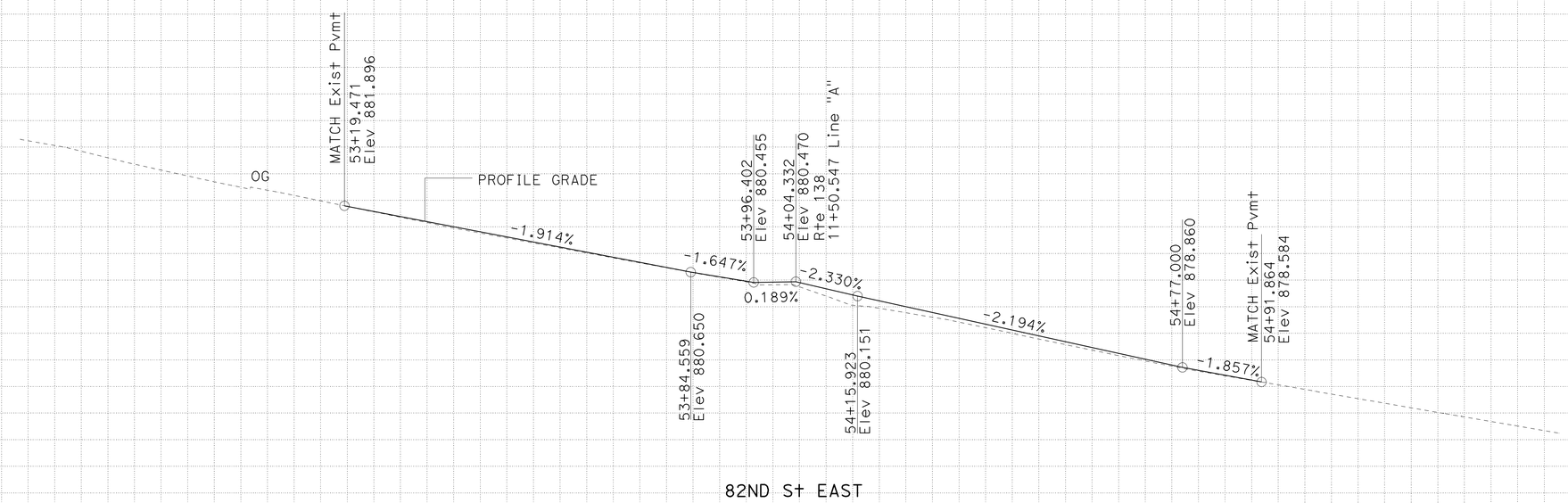

ALL DIMENSIONS ARE IN METERS
UNLESS OTHERWISE SHOWN

PROFILE

SCALE 1:500 Horiz
1:50 Vert

P-7

Station		+60	+80	53+00	+20	+40	+60	+80	54+00	+20	+40	+60	+80	55+00	+20	+40
m^3	Exc				000.00											
	Emb				000.00											

STATE OF CALIFORNIA - DEPARTMENT OF TRANSPORTATION
Caltrans OFFICE OF DESIGN B

FUNCTIONAL SUPERVISOR: M. OJI KALU

CALCULATED-DESIGNED BY: QUANG THAI
CHECKED BY: M. OJI KALU

REVISED BY
DATE REVISED

LAST REVISION 08-24-09
DATE PLOTTED => 20-MAY-2010
TIME PLOTTED => 13:29

Dist	COUNTY	ROUTE	KILOMETER POST TOTAL PROJECT	SHEET No.	TOTAL SHEETS
07	LA	138	87.2/88.9	17	156

Caltrans Metric

Quang Thai 1-11-10
REGISTERED CIVIL ENGINEER DATE

5-17-10
PLANS APPROVAL DATE

REGISTERED PROFESSIONAL ENGINEER
QUANG THAI
No. C66223
Exp. 6-30-10
CIVIL
STATE OF CALIFORNIA

THE STATE OF CALIFORNIA OR ITS OFFICERS OR AGENTS SHALL NOT BE RESPONSIBLE FOR THE ACCURACY OR COMPLETENESS OF ELECTRONIC COPIES OF THIS PLAN SHEET.

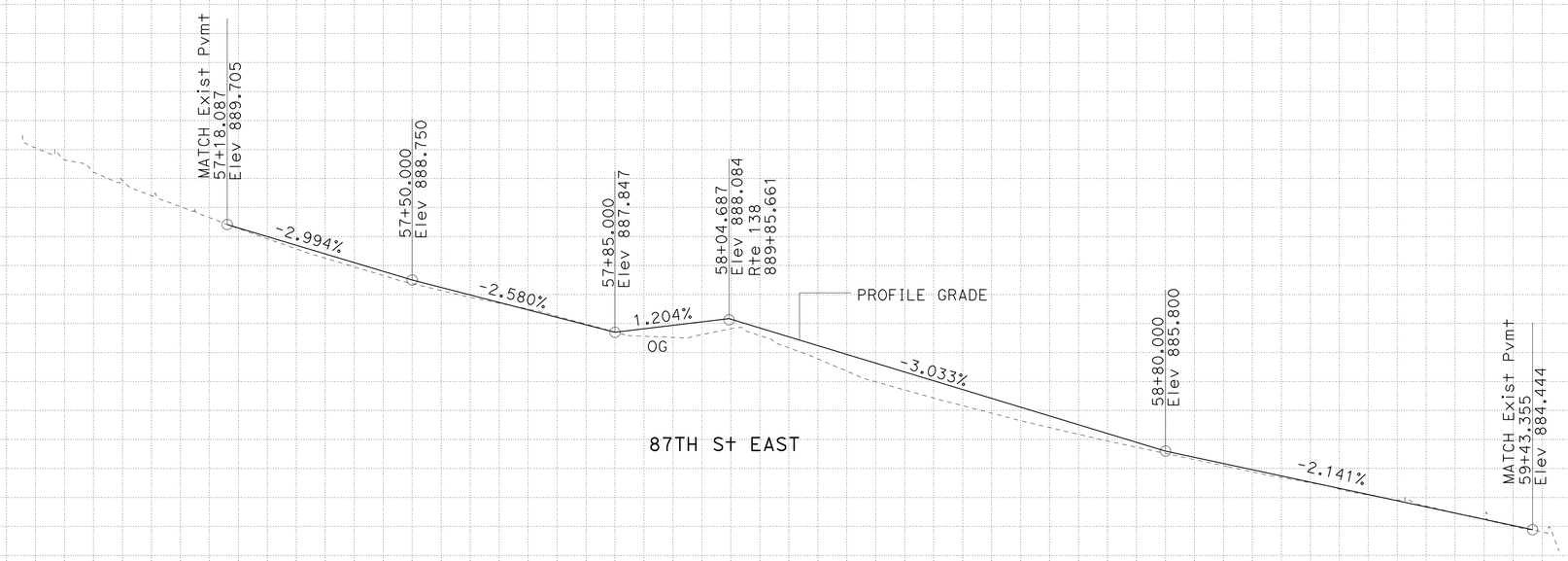

ALL DIMENSIONS ARE IN METERS
UNLESS OTHERWISE SHOWN

PROFILE

SCALE 1:500 Horiz
1:50 Vert

P-8

Station		+60	+80	57+00	+20	+40	+60	+80	58+00	+20	+40	+60	+80	59+00	+20	+40	+60	+80
m^3	Exc				000.00													
	Emb				000.00													

STATE OF CALIFORNIA - DEPARTMENT OF TRANSPORTATION
Caltrans OFFICE OF DESIGN B

FUNCTIONAL SUPERVISOR: M. OJI KALU

CALCULATED-DESIGNED BY: QUANG THAI
CHECKED BY: M. OJI KALU

REVISED BY
DATE REVISED

LAST REVISION DATE PLOTTED => 20-MAY-2010
TIME PLOTTED => 13:29
08-24-09

Dist	COUNTY	ROUTE	KILOMETER POST TOTAL PROJECT	SHEET No.	TOTAL SHEETS
07	LA	138	87.2/88.9	18	156

REGISTERED CIVIL ENGINEER 1-11-10 DATE

5-17-10
PLANS APPROVAL DATE

REGISTERED PROFESSIONAL ENGINEER QUANG THAI No. C66223 Exp. 6-30-10 CIVIL STATE OF CALIFORNIA

THE STATE OF CALIFORNIA OR ITS OFFICERS OR AGENTS SHALL NOT BE RESPONSIBLE FOR THE ACCURACY OR COMPLETENESS OF ELECTRONIC COPIES OF THIS PLAN SHEET.

Caltrans Metric

CURVE DATA

No.	R	Δ	T	L
1	12.19	89°57′21"	12.18	19.14
2	12.19	90°1′54"	12.20	19.16
3	12.19	90°2′27"	12.20	19.16
4	12.19	89°58′18"	12.19	19.15

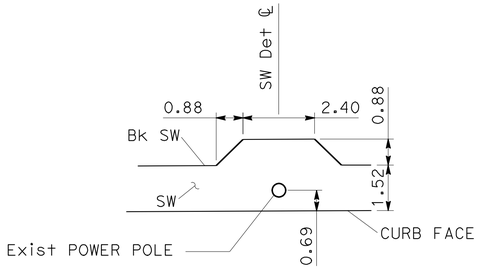

SIDEWALK DETAIL 1
NO SCALE

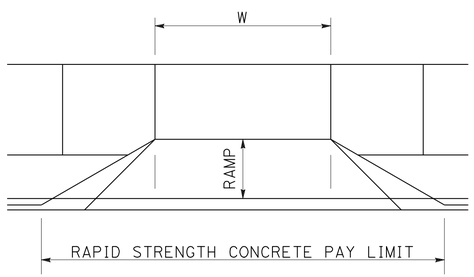

DRIVEWAY DETAIL 1
NO SCALE

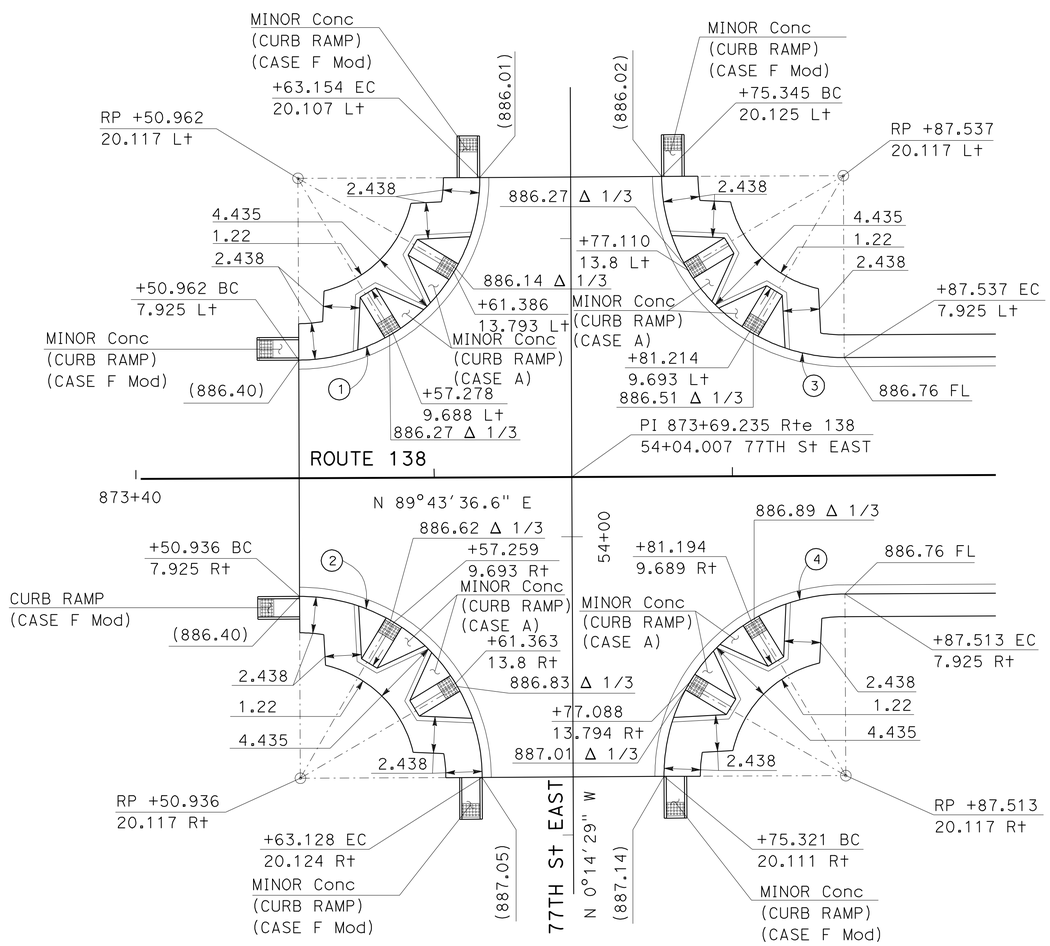

77TH St EAST INTERSECTION
SCALE 1:200

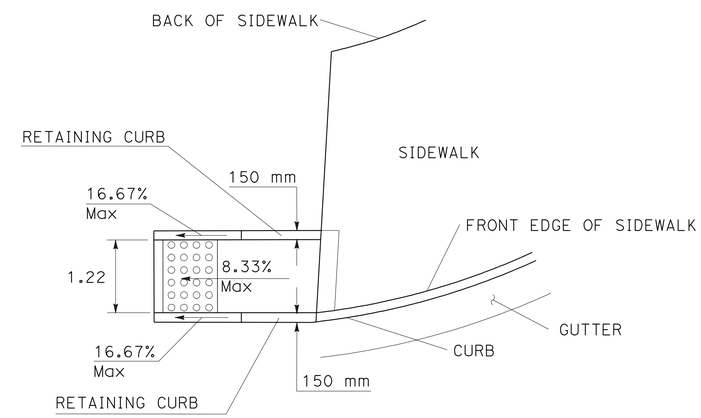

CURB RAMP (CASE F Mod) DETAIL
NO SCALE

ALL DIMENSIONS ARE IN METERS
UNLESS OTHERWISE SHOWN

CONSTRUCTION DETAILS

SCALE AS SHOWN

C-1

REVISED BY	DATE REVISED

CALCULATED-DESIGNED BY: QUANG THAI
CHECKED BY: M. OJI KALU
FUNCTIONAL SUPERVISOR: M. OJI KALU

STATE OF CALIFORNIA - DEPARTMENT OF TRANSPORTATION
Caltrans OFFICE OF DESIGN B

LAST REVISION 12-29-09 | DATE PLOTTED => 20-MAY-2010 | TIME PLOTTED => 13:29

Dist	COUNTY	ROUTE	KILOMETER POST TOTAL PROJECT	SHEET No.	TOTAL SHEETS
07	LA	138	87.2/88.9	19	156

REGISTERED CIVIL ENGINEER 1-11-10 DATE

5-17-10
PLANS APPROVAL DATE

REGISTERED PROFESSIONAL ENGINEER QUANG THAI No. C66223 Exp. 6-30-10 CIVIL STATE OF CALIFORNIA

THE STATE OF CALIFORNIA OR ITS OFFICERS OR AGENTS SHALL NOT BE RESPONSIBLE FOR THE ACCURACY OR COMPLETENESS OF ELECTRONIC COPIES OF THIS PLAN SHEET.

Caltrans Metric

CURVE DATA

No.	R	Δ	T	L
5	13.11	89°53'28"	13.08	20.56
6	13.11	90°6'24"	13.13	20.61
7	13.11	90°6'21"	13.13	20.61
8	13.11	89°53'46"	13.08	20.56

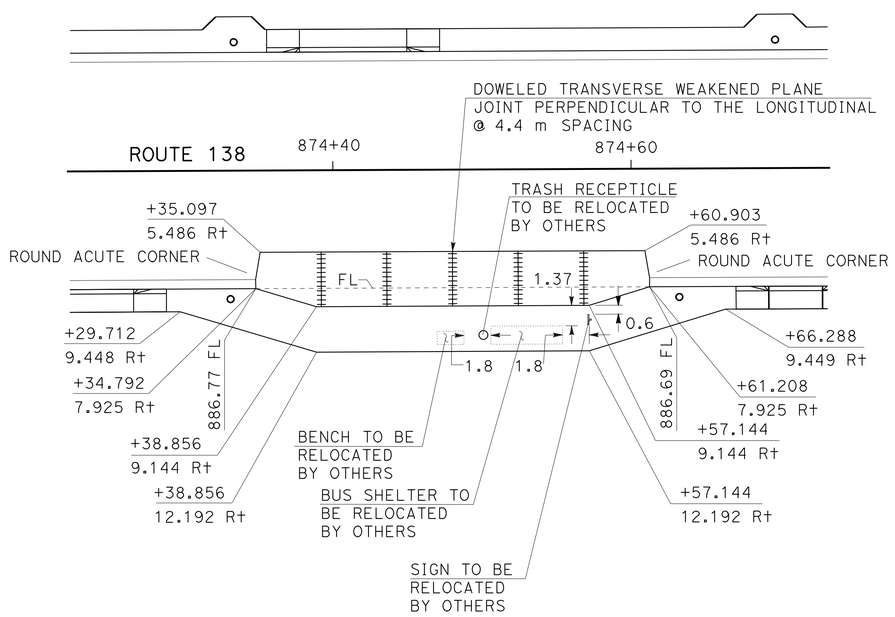

BUS PAD No. 1 DETAIL
SCALE 1:200

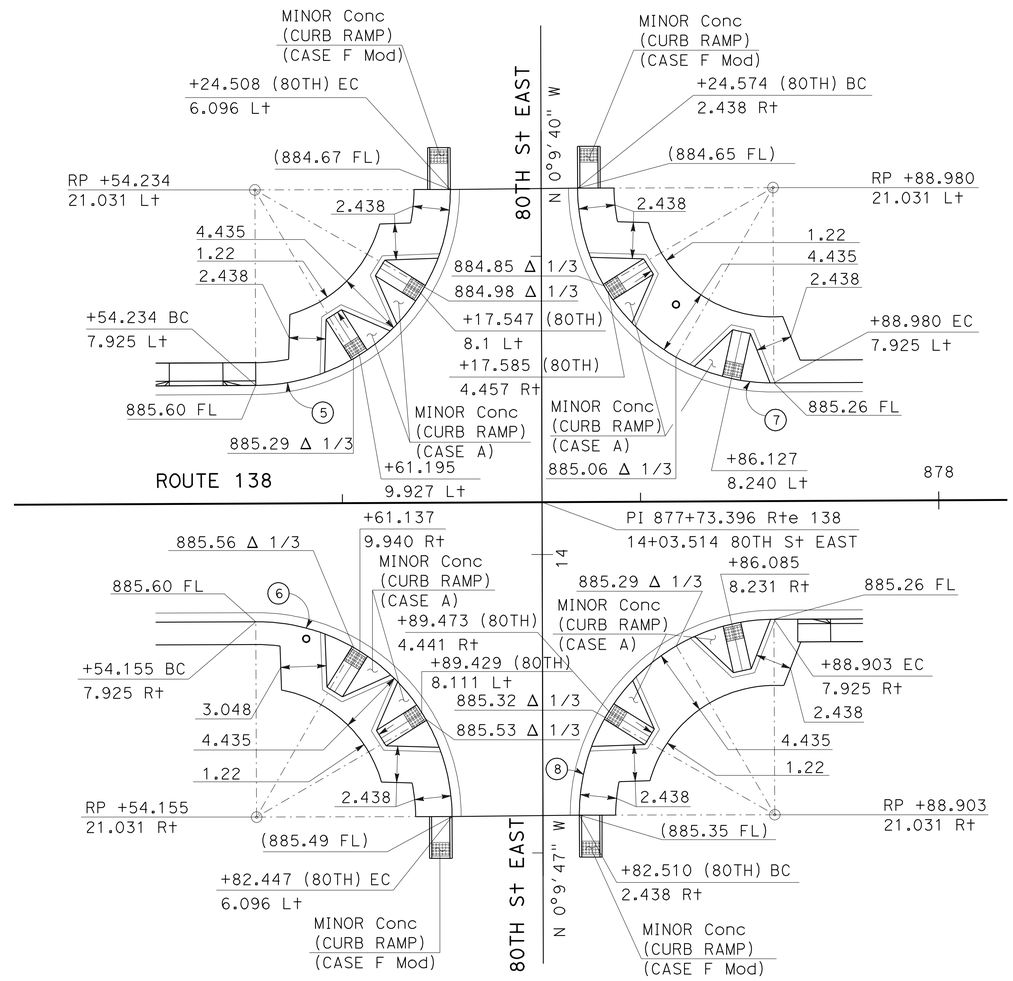

80TH St EAST INTERSECTION
SCALE 1:200

ALL DIMENSIONS ARE IN METERS UNLESS OTHERWISE SHOWN

CONSTRUCTION DETAILS

SCALE AS SHOWN

C-2

STATE OF CALIFORNIA - DEPARTMENT OF TRANSPORTATION
Caltrans OFFICE OF DESIGN B

FUNCTIONAL SUPERVISOR M. OJI KALU
CALCULATED-DESIGNED BY QUANG THAI
CHECKED BY M. OJI KALU
REVISED BY
DATE REVISED

LAST REVISION 12-29-09 DATE PLOTTED => 20-MAY-2010 TIME PLOTTED => 11:14

Dist	COUNTY	ROUTE	KILOMETER POST TOTAL PROJECT	SHEET No.	TOTAL SHEETS
07	LA	138	87.2/88.9	20	156

Caltrans Metric

Quang Thai 1-11-10
REGISTERED CIVIL ENGINEER DATE

5-17-10
PLANS APPROVAL DATE

REGISTERED PROFESSIONAL ENGINEER QUANG THAI No. C66223 Exp. 6-30-10 CIVIL STATE OF CALIFORNIA

THE STATE OF CALIFORNIA OR ITS OFFICERS OR AGENTS SHALL NOT BE RESPONSIBLE FOR THE ACCURACY OR COMPLETENESS OF ELECTRONIC COPIES OF THIS PLAN SHEET.

CURVE DATA

No.	R	Δ	T	L
9	10.06	87°19'58"	9.60	15.33
10	12.19	90°38'35"	12.33	19.29
11	10.67	90°10'22"	10.70	16.79
12	12.19	83°48'20"	10.94	17.83

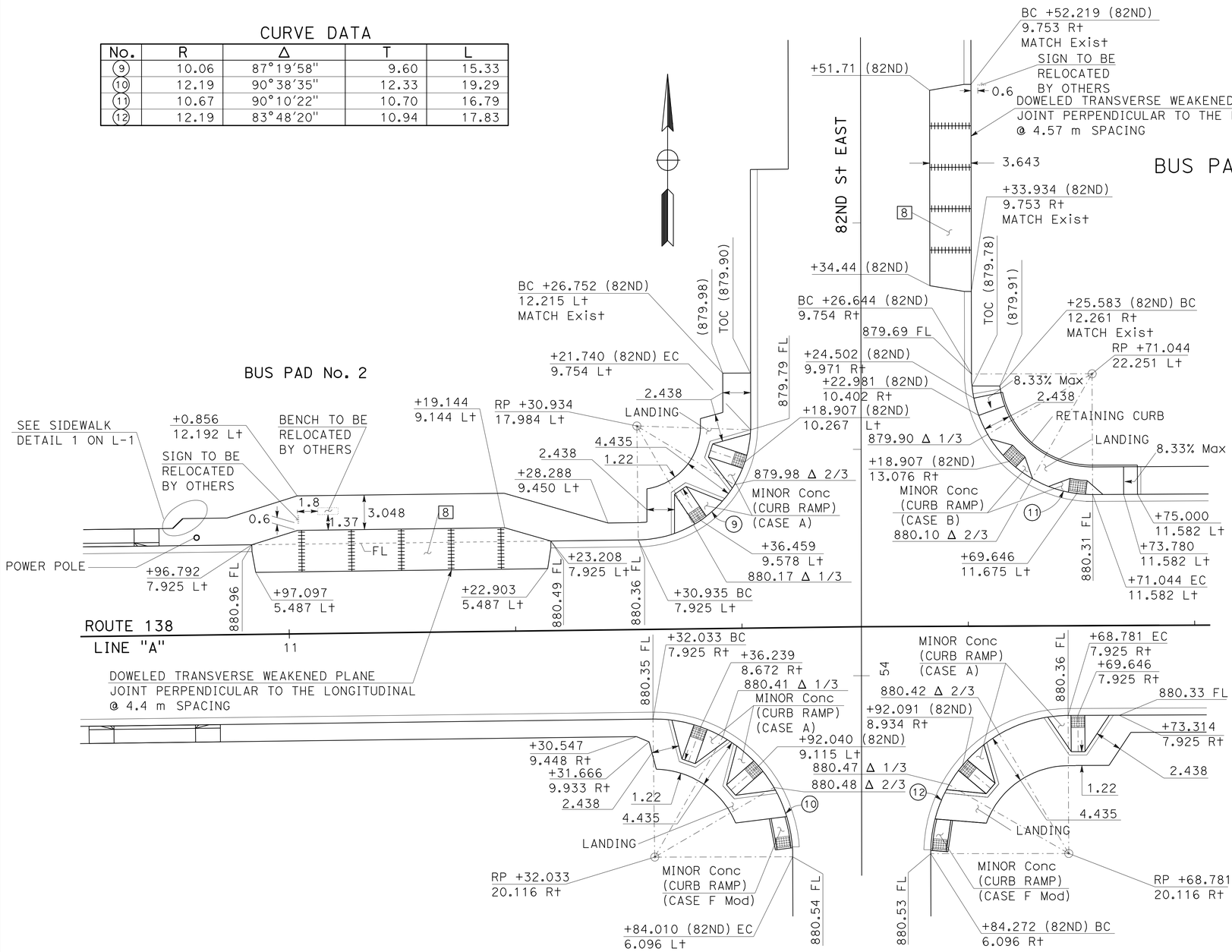

82ND St EAST INTERSECTION
SCALE 1:200

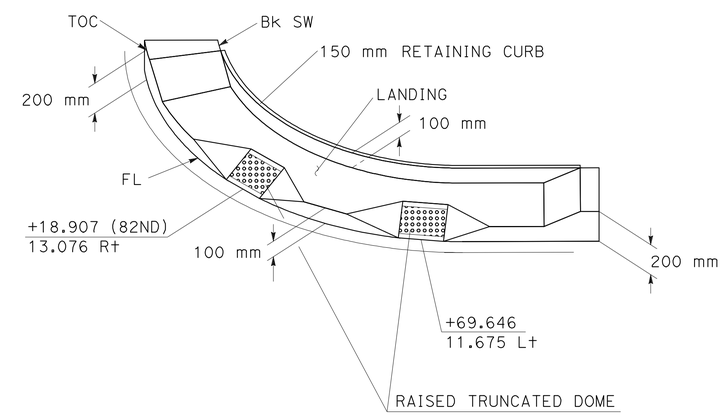

82ND St EAST
NORTH-EAST CORNER DETAIL
NO SCALE

ALL DIMENSIONS ARE IN METERS UNLESS OTHERWISE SHOWN

CONSTRUCTION DETAILS

SCALE AS SHOWN

C-3

STATE OF CALIFORNIA - DEPARTMENT OF TRANSPORTATION
Caltrans OFFICE OF DESIGN B

FUNCTIONAL SUPERVISOR: M. OJI KALU
CALCULATED-DESIGNED BY: QUANG THAI
CHECKED BY: M. OJI KALU
REVISED BY / DATE REVISED

LAST REVISION 12-29-09 | DATE PLOTTED => 20-MAY-2010 | TIME PLOTTED => 11:14

Dist	COUNTY	ROUTE	KILOMETER POST TOTAL PROJECT	SHEET No.	TOTAL SHEETS
07	LA	138	87.2/88.9	21	156

REGISTERED CIVIL ENGINEER 1-11-10 DATE

5-17-10
PLANS APPROVAL DATE

REGISTERED PROFESSIONAL ENGINEER QUANG THAI No. C66223 Exp. 6-30-10 CIVIL STATE OF CALIFORNIA

THE STATE OF CALIFORNIA OR ITS OFFICERS OR AGENTS SHALL NOT BE RESPONSIBLE FOR THE ACCURACY OR COMPLETENESS OF ELECTRONIC COPIES OF THIS PLAN SHEET.

Caltrans Metric

CURVE DATA

No.	R	Δ	T	L
13	12.19	90°5'54"	12.21	19.17
14	12.19	90°15'13"	12.25	19.21

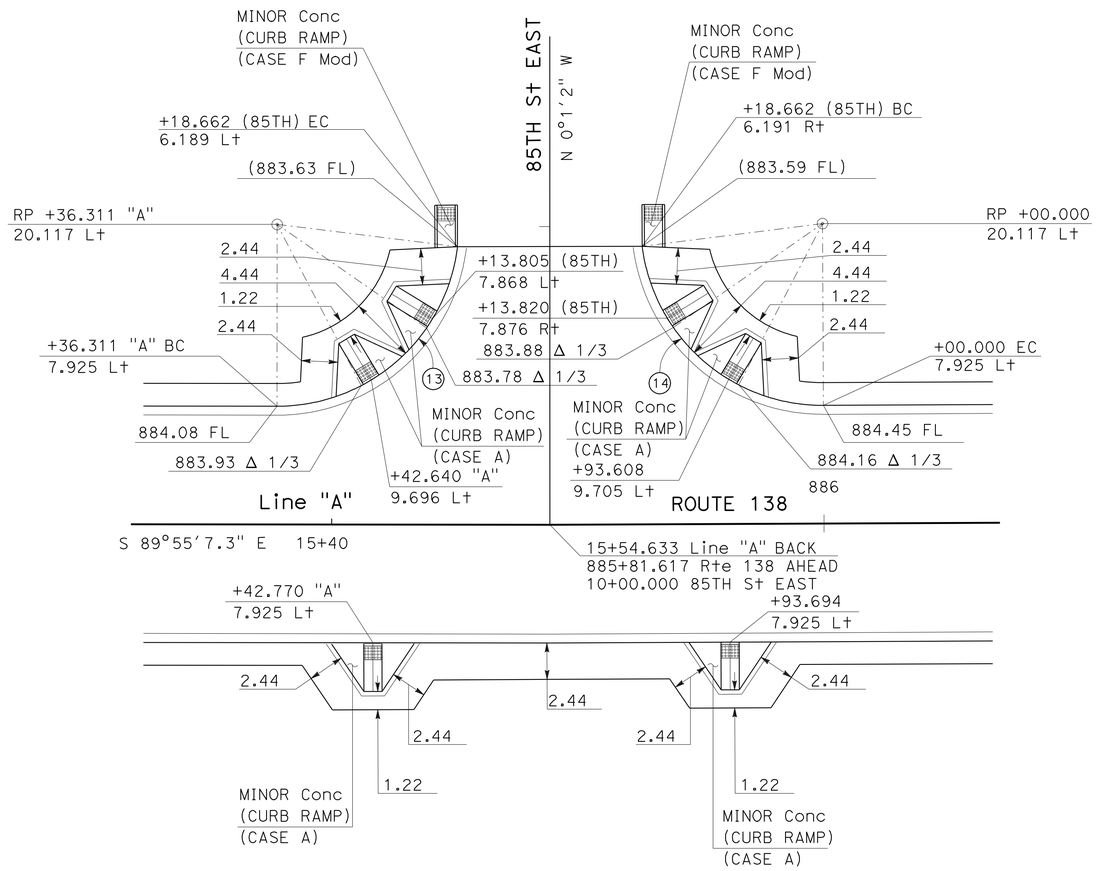

85TH St EAST INTERSECTION
SCALE 1:200

ALL DIMENSIONS ARE IN METERS
UNLESS OTHERWISE SHOWN

CONSTRUCTION DETAILS

SCALE AS SHOWN

C-4

STATE OF CALIFORNIA - DEPARTMENT OF TRANSPORTATION
Caltrans OFFICE OF DESIGN B

FUNCTIONAL SUPERVISOR: M. OJI KALU
CALCULATED-DESIGNED BY: QUANG THAI
CHECKED BY: M. OJI KALU
REVISED BY
DATE REVISED

LAST REVISION 12-29-09 | DATE PLOTTED => 20-MAY-2010 | TIME PLOTTED => 11:14

Dist	COUNTY	ROUTE	KILOMETER POST TOTAL PROJECT	SHEET No.	TOTAL SHEETS
07	LA	138	87.2/88.9	22	156

Caltrans Metric

REGISTERED CIVIL ENGINEER 1-11-10 DATE

5-17-10
PLANS APPROVAL DATE

REGISTERED PROFESSIONAL ENGINEER QUANG THAI No. C66223 Exp. 6-30-10 CIVIL STATE OF CALIFORNIA

THE STATE OF CALIFORNIA OR ITS OFFICERS OR AGENTS SHALL NOT BE RESPONSIBLE FOR THE ACCURACY OR COMPLETENESS OF ELECTRONIC COPIES OF THIS PLAN SHEET.

CURVE DATA

No.	R	Δ	T	L
15	14.63	54°5′36″	7.47	13.81
16	12.19	83°7′57″	10.81	17.69
17	12.21	85°55′21″	11.37	18.31
18	14.63	71°36′30″	10.55	18.29

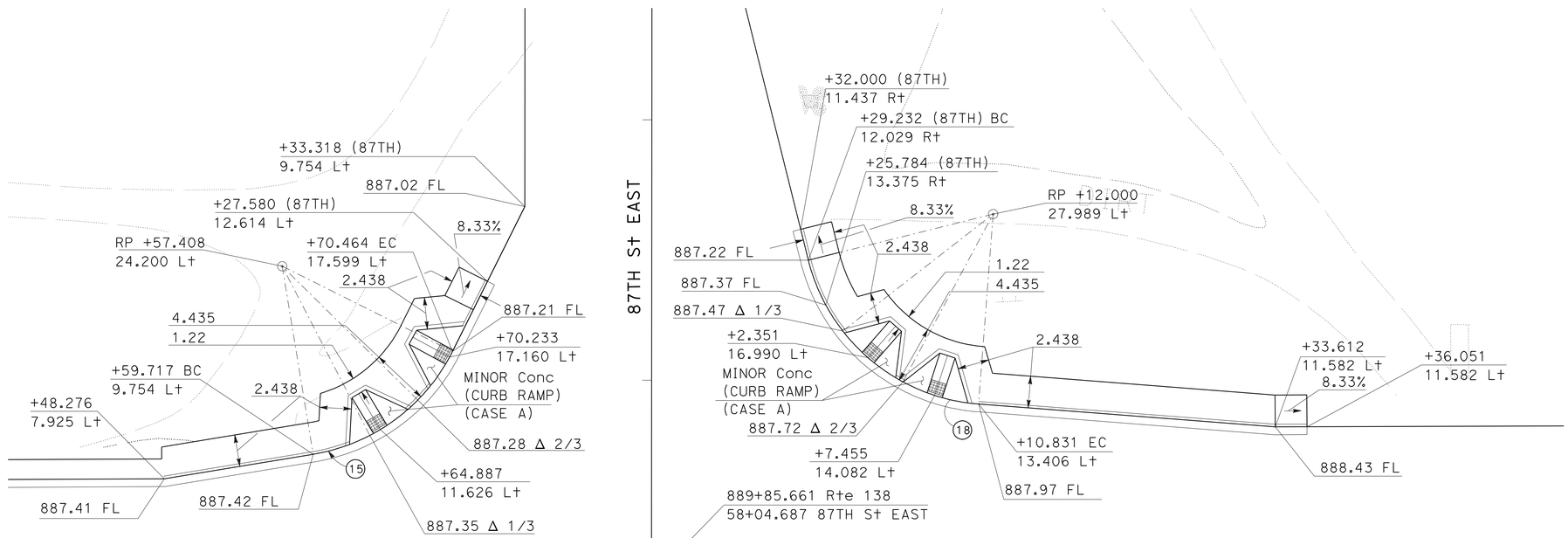

87TH St EAST INTERSECTION
SCALE 1:200

ALL DIMENSIONS ARE IN METERS
UNLESS OTHERWISE SHOWN

CONSTRUCTION DETAILS

SCALE AS SHOWN

C-5

REVISED BY	DATE REVISED

CALCULATED-DESIGNED BY: QUANG THAI
CHECKED BY: M. OJI KALU
FUNCTIONAL SUPERVISOR: M. OJI KALU

STATE OF CALIFORNIA - DEPARTMENT OF TRANSPORTATION
Caltrans OFFICE OF DESIGN B

LAST REVISION 12-29-09 | DATE PLOTTED => 20-MAY-2010 | TIME PLOTTED => 11:14

Dist	COUNTY	ROUTE	KILOMETER POST TOTAL PROJECT	SHEET No.	TOTAL SHEETS
07	LA	138	87.2/88.9	23	156

Quang Thai 4-21-10
REGISTERED CIVIL ENGINEER DATE

5-17-10
PLANS APPROVAL DATE

REGISTERED PROFESSIONAL ENGINEER QUANG THAI No. C66223 Exp. 6-30-10 CIVIL STATE OF CALIFORNIA

THE STATE OF CALIFORNIA OR ITS OFFICERS OR AGENTS SHALL NOT BE RESPONSIBLE FOR THE ACCURACY OR COMPLETENESS OF ELECTRONIC COPIES OF THIS PLAN SHEET.

Caltrans Metric

NOTES:

1. See Standard Plan T51 for Temporary Silt Fence.
2. Dimensions may vary to fit field conditions.

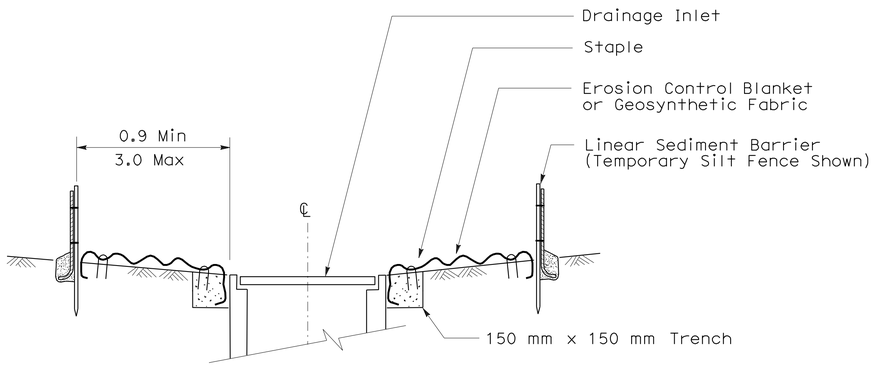

SECTION A-A

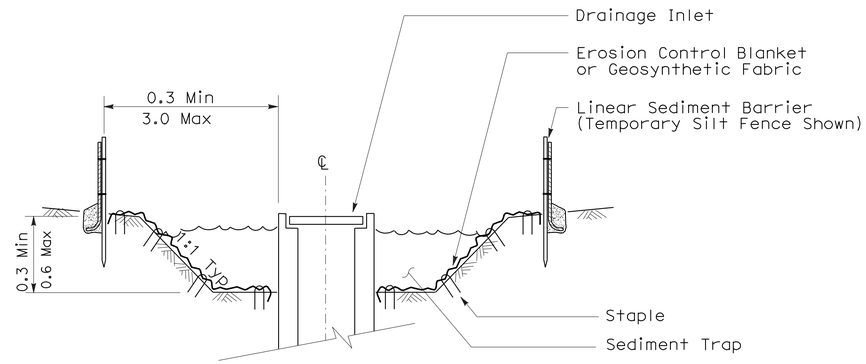

SECTION B-B

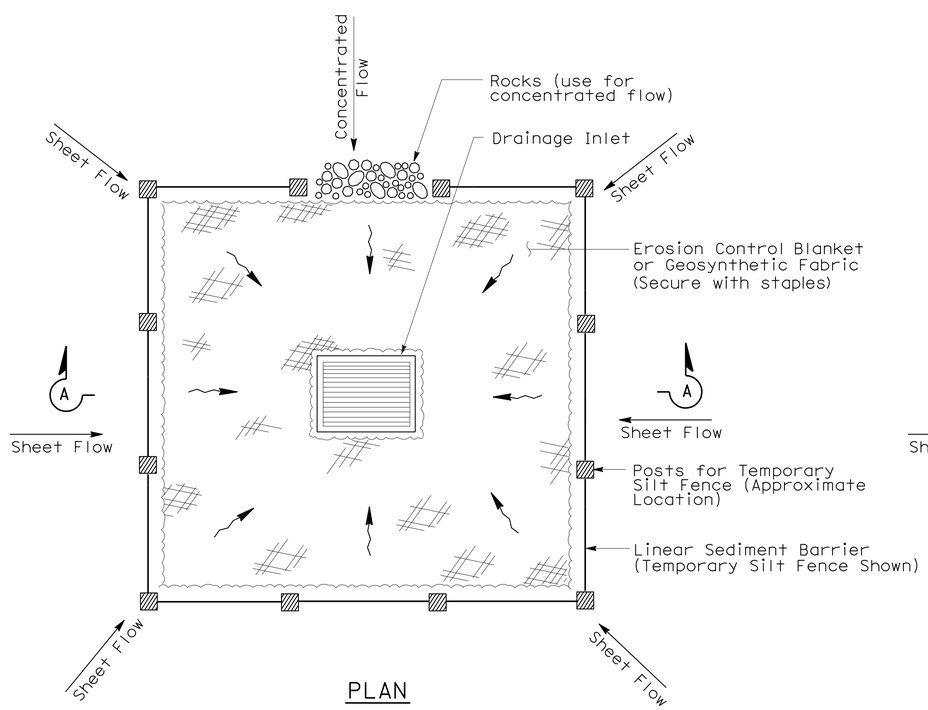

PLAN

TEMPORARY DRAINAGE INLET PROTECTION (TYPE 1)

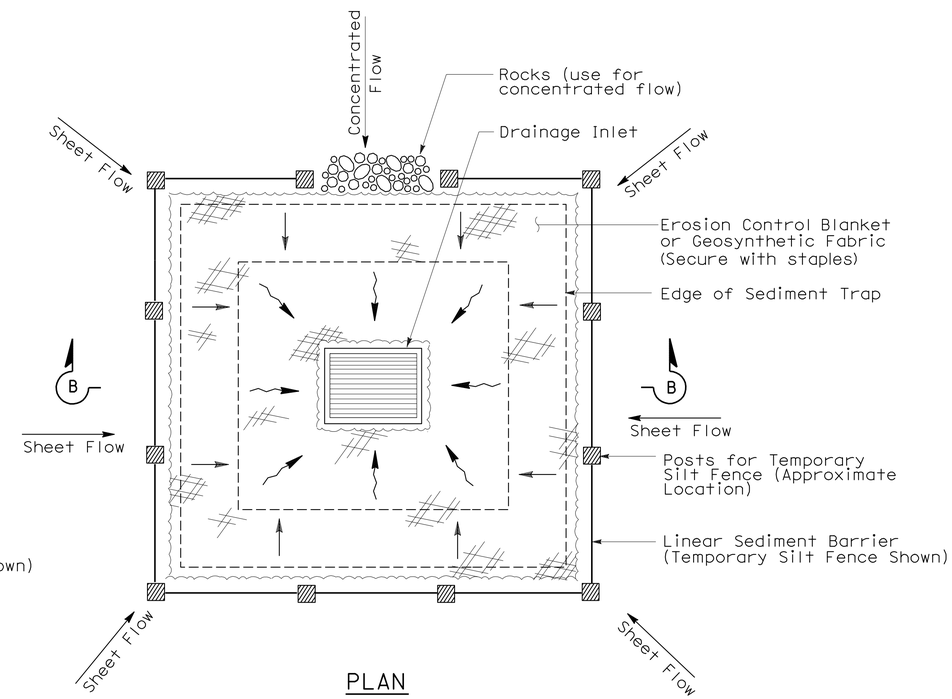

PLAN

TEMPORARY DRAINAGE INLET PROTECTION (TYPE 2) (EXCAVATED SEDIMENT TRAP)

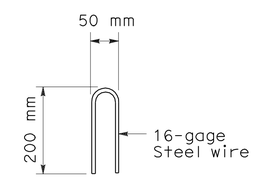

STAPLE DETAIL

ALL DIMENSIONS ARE IN METERS UNLESS OTHERWISE SHOWN

TEMPORARY WATER POLLUTION CONTROL DETAILS (TEMPORARY DRAINAGE INLET PROTECTION)

NO SCALE

WPCD-1

QUANG THAI	M. OJI KALU	REVISED BY / DATE REVISED
CALCULATED-DESIGNED BY	M. OJI KALU	FUNCTIONAL SUPERVISOR
CHECKED BY		

STATE OF CALIFORNIA - DEPARTMENT OF TRANSPORTATION
Caltrans OFFICE OF DESIGN B

LAST REVISION 04-20-10 | DATE PLOTTED => 20-MAY-2010 | TIME PLOTTED => 11:14

Dist	COUNTY	ROUTE	KILOMETER POST TOTAL PROJECT	SHEET No.	TOTAL SHEETS
07	LA	138	87.2/88.9	24	156

Quang Thai 4-21-10
REGISTERED CIVIL ENGINEER DATE

5-17-10
PLANS APPROVAL DATE

REGISTERED PROFESSIONAL ENGINEER QUANG THAI No. C66223 Exp. 6-30-10 CIVIL STATE OF CALIFORNIA

THE STATE OF CALIFORNIA OR ITS OFFICERS OR AGENTS SHALL NOT BE RESPONSIBLE FOR THE ACCURACY OR COMPLETENESS OF ELECTRONIC COPIES OF THIS PLAN SHEET.

Caltrans Metric

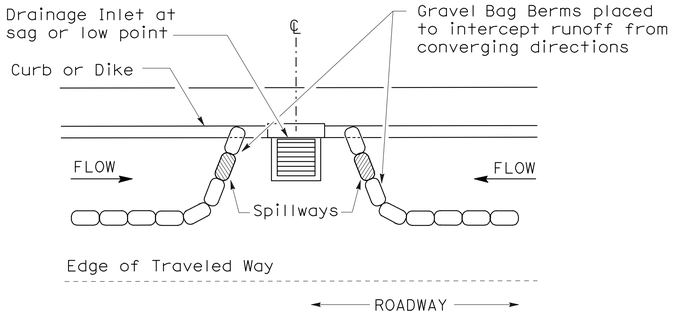

PLAN

CONFIGURATION FOR SAG POINT INLET (GRAVEL BAG BERM)

GRAVEL BAG BERM (TYPE 3A) SPACING TABLE

SLOPE OF ROADWAY (PERCENT)	1 to 3.9	4 to 5.9	6 to 7.9	8 to 10	10+
INTERVAL BETWEEN BERM	30	22.5	15	7.5	3.6

For slope of less than 1%, install barriers only if erosion/sediment is prevalent

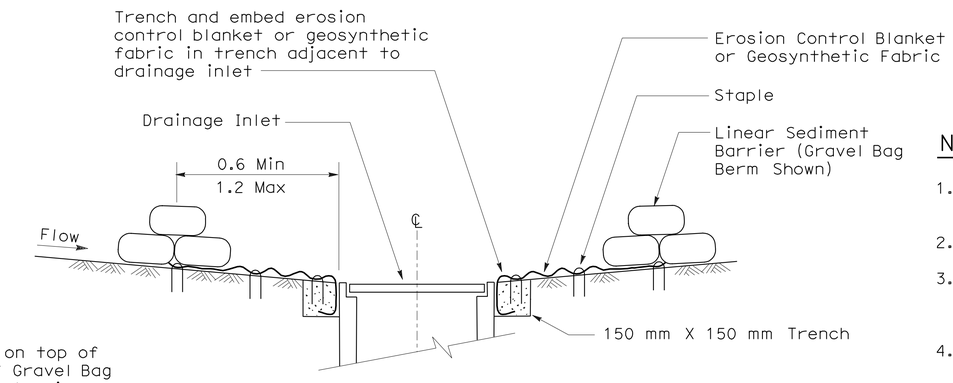

SECTION A-A

NOTES:

1. Place safety cones adjacent to drainage inlet protection.
2. Dimensions may vary to fit field conditions.
3. Install a minimum of 3 gravel bag berms upstream of each drainage inlet to be protected.
4. Position erosion control blanket or geosynthetic fabric at edge of concrete apron and secure in trench.
5. Erosion control blanket or geosynthetic fabric is not required if the area adjacent to the drainage inlet is vegetated or paved.

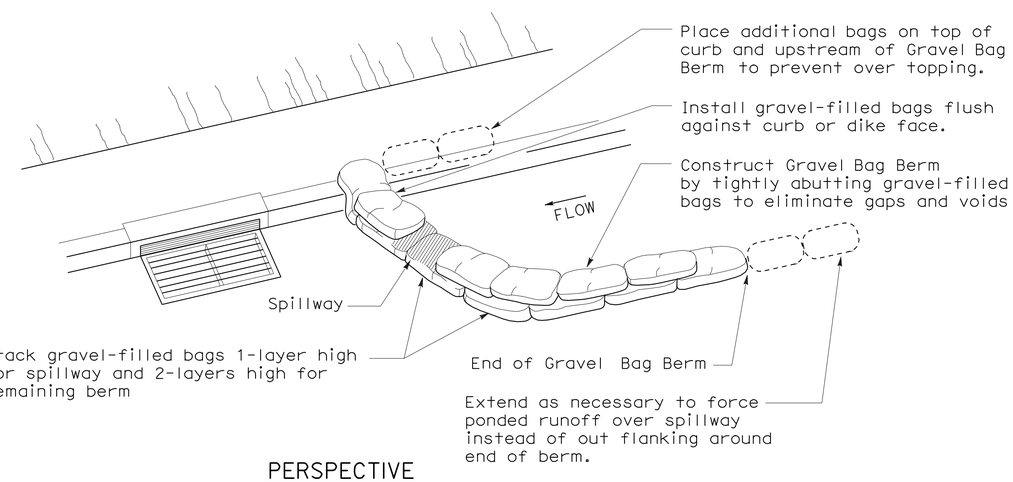

PERSPECTIVE

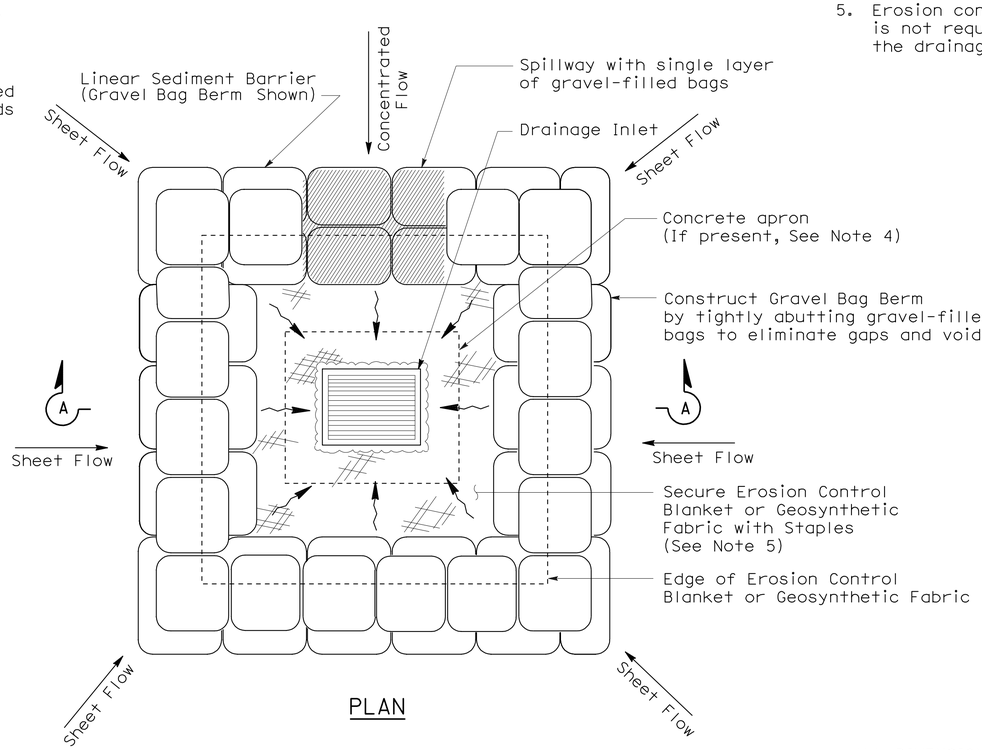

PLAN

TEMPORARY DRAINAGE INLET PROTECTION (TYPE 3B)

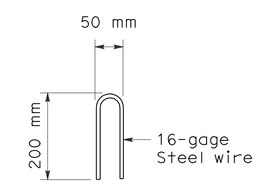

STAPLE DETAIL

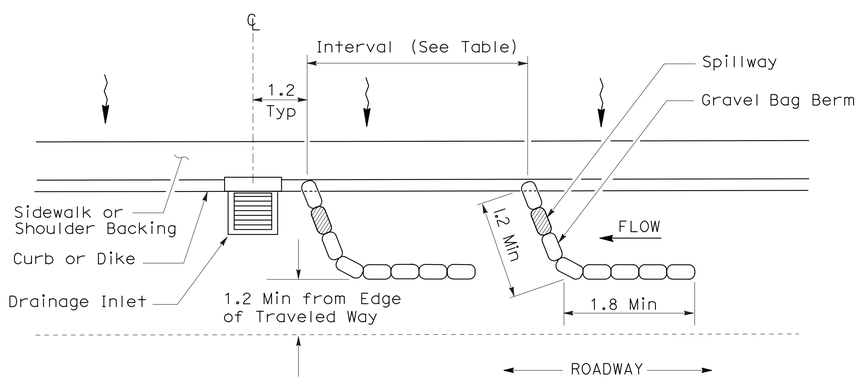

PLAN

TEMPORARY DRAINAGE INLET PROTECTION (TYPE 3A) (GRAVEL BAG BERM)

ALL DIMENSIONS ARE IN METERS UNLESS OTHERWISE SHOWN

TEMPORARY WATER POLLUTION CONTROL DETAILS (TEMPORARY DRAINAGE INLET PROTECTION)

NO SCALE

WPCD-2

STATE OF CALIFORNIA - DEPARTMENT OF TRANSPORTATION
Caltrans OFFICE OF DESIGN B

FUNCTIONAL SUPERVISOR: M. OJI KALU
CALCULATED-DESIGNED BY: QUANG THAI
CHECKED BY: M. OJI KALU
REVISED BY / DATE REVISED

LAST REVISION 04-20-10 | DATE PLOTTED => 20-MAY-2010 | TIME PLOTTED => 11:14

Dist	COUNTY	ROUTE	KILOMETER POST TOTAL PROJECT	SHEET No.	TOTAL SHEETS
07	LA	138	87.2/88.9	25	156

Quang Thai 4-21-10
REGISTERED CIVIL ENGINEER DATE

5-17-10
PLANS APPROVAL DATE

REGISTERED PROFESSIONAL ENGINEER QUANG THAI No. C66223 Exp. 6-30-10 CIVIL STATE OF CALIFORNIA

THE STATE OF CALIFORNIA OR ITS OFFICERS OR AGENTS SHALL NOT BE RESPONSIBLE FOR THE ACCURACY OR COMPLETENESS OF ELECTRONIC COPIES OF THIS PLAN SHEET.

Caltrans Metric

FLEXIBLE SEDIMENT BARRIER SPACING TABLE

SLOPE OF ROADWAY (PERCENT)	0 to 0.9	1 to 1.9	2 to 2.9	3 to 4	5+
INTERVAL BETWEEN BARRIERS	15.2	10.6	9.1	7.6	6.1
ANGLE FROM FACE OF CURB	70°	70°	70°	45°	45°
SUGGESTED BARRIER LENGTH	1.8	1.8	1.8	1.8	1.8

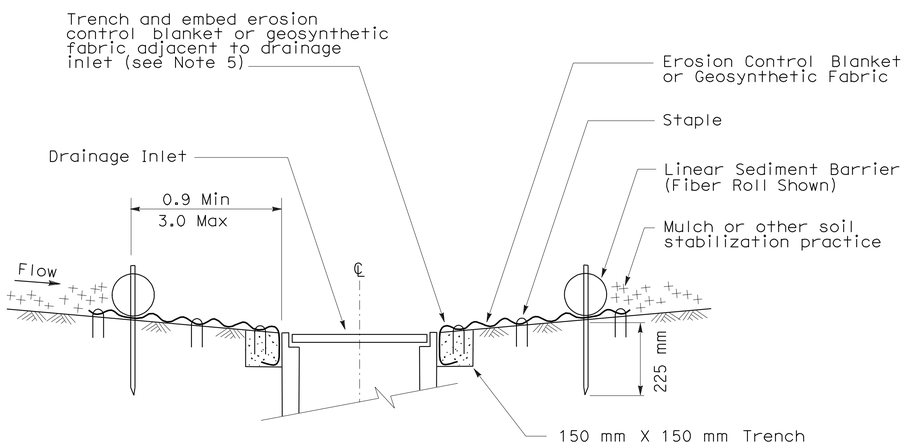

SECTION A-A

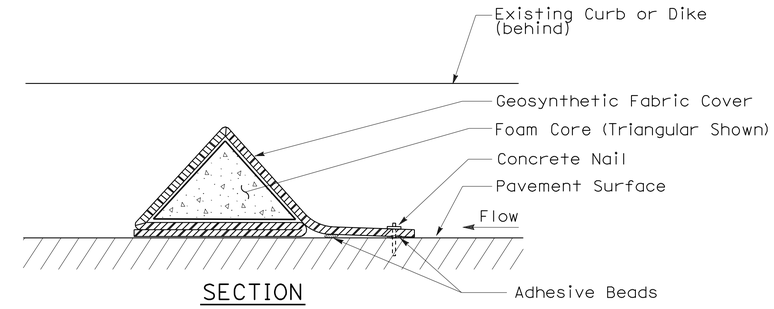

SECTION

FLEXIBLE SEDIMENT BARRIER DETAIL (FOAM BARRIER SHOWN)

NOTES:

1. See Standard Plan T51 for Temporary Silt Fence.
2. Dimensions may vary to fit field conditions.
3. Install a minimum of 3 flexible sediment barriers upstream of each drainage inlet to be protected.
4. Position erosion control blanket or geosynthetic fabric at edge of concrete apron and secure in trench.
5. Erosion control blanket or geosynthetic fabric is not required if the area adjacent to the drainage inlet is vegetated.

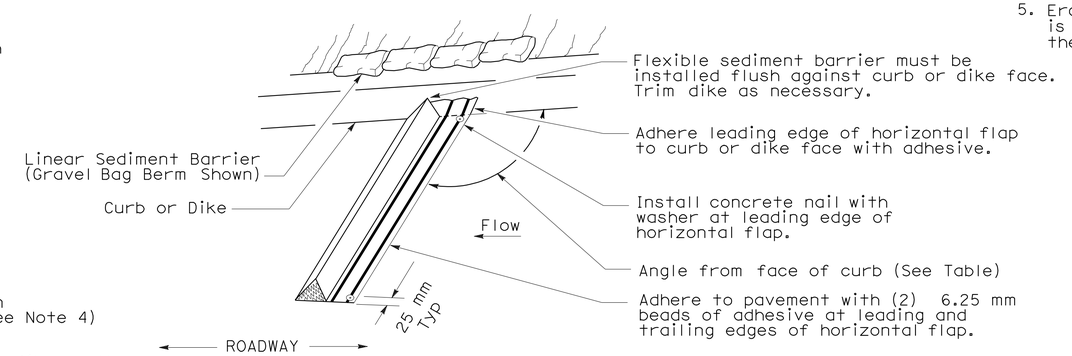

PERSPECTIVE

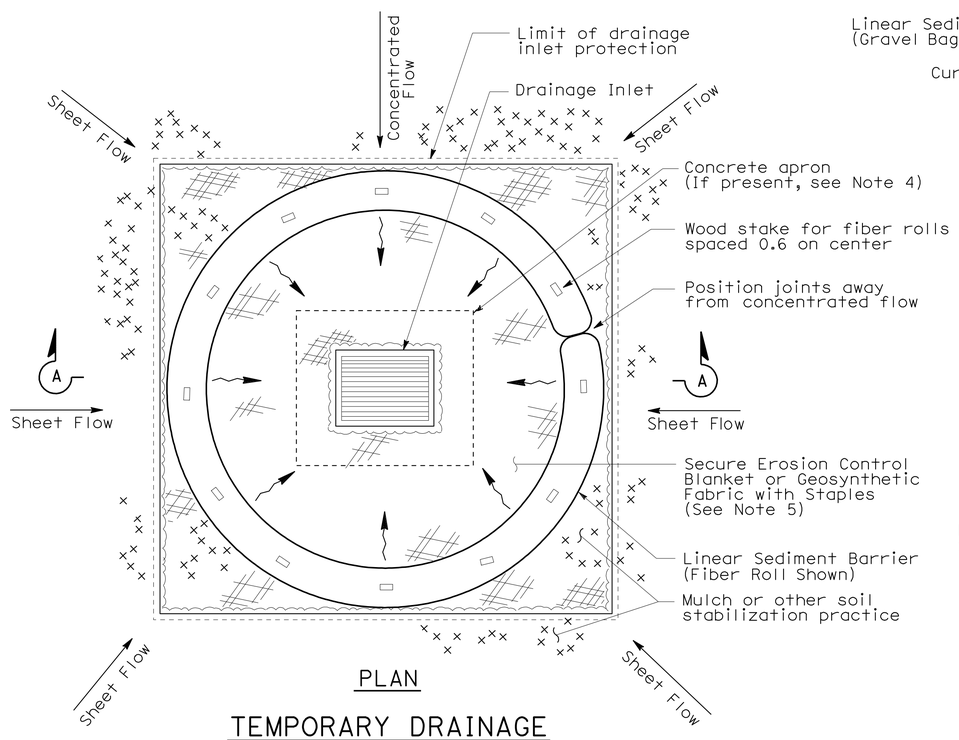

PLAN

TEMPORARY DRAINAGE INLET PROTECTION (TYPE 4A)

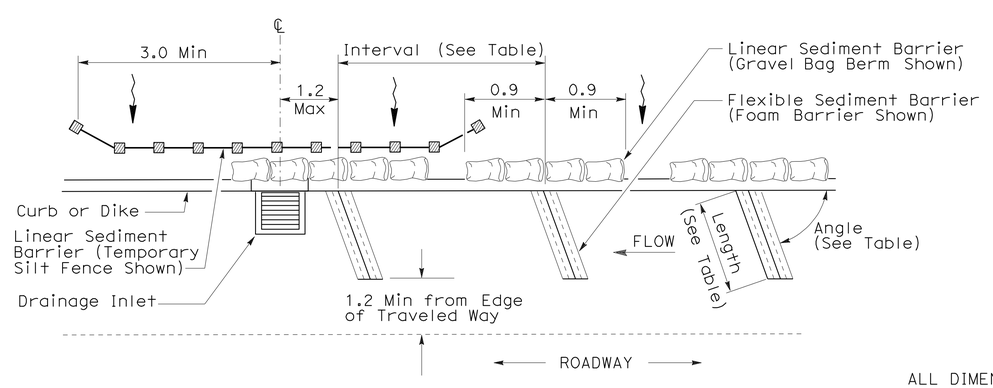

PLAN

TEMPORARY DRAINAGE INLET PROTECTION (TYPE 4B) FLEXIBLE SEDIMENT BARRIER

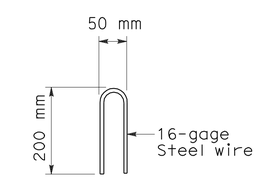

STAPLE DETAIL

ALL DIMENSIONS ARE IN METERS UNLESS OTHERWISE SHOWN

TEMPORARY WATER POLLUTION CONTROL DETAILS (TEMPORARY DRAINAGE INLET PROTECTION)

NO SCALE

WPCD-3

STATE OF CALIFORNIA - DEPARTMENT OF TRANSPORTATION
Caltrans OFFICE OF DESIGN B

FUNCTIONAL SUPERVISOR: M. OJI KALU
CALCULATED-DESIGNED BY: QUANG THAI
CHECKED BY: M. OJI KALU
REVISED BY / DATE REVISED

LAST REVISION 04-20-10 DATE PLOTTED => 20-MAY-2010 TIME PLOTTED => 1:14

Dist	COUNTY	ROUTE	KILOMETER POST TOTAL PROJECT	SHEET No.	TOTAL SHEETS
07	LA	138	87.2/88.9	26	156

Caltrans Metric

REGISTERED CIVIL ENGINEER 4-21-10 DATE

5-17-10
PLANS APPROVAL DATE

REGISTERED PROFESSIONAL ENGINEER QUANG THAI No. C66223 Exp. 6-30-10 CIVIL STATE OF CALIFORNIA

THE STATE OF CALIFORNIA OR ITS OFFICERS OR AGENTS SHALL NOT BE RESPONSIBLE FOR THE ACCURACY OR COMPLETENESS OF ELECTRONIC COPIES OF THIS PLAN SHEET.

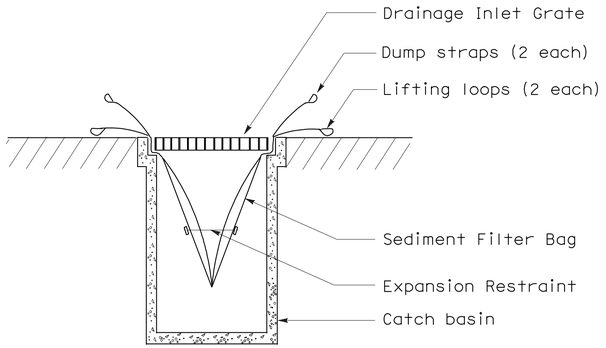

SECTION B-B

SEDIMENT FILTER BAG DETAIL

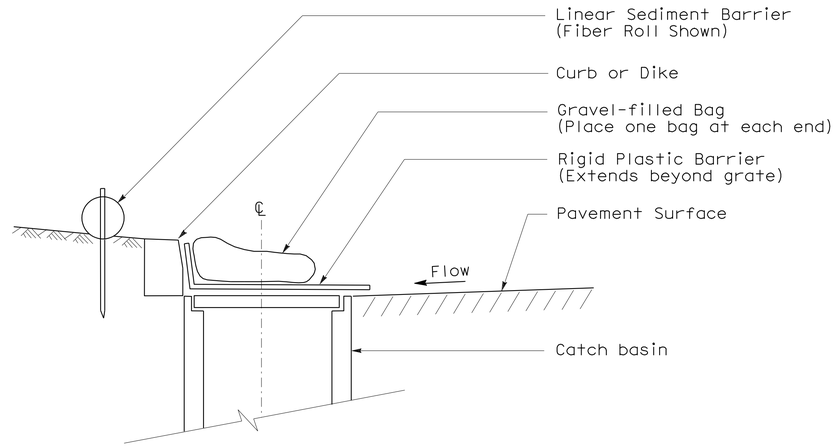

SECTION

TEMPORARY DRAINAGE INLET PROTECTION (TYPE 6A) (CATCH BASIN WITH GRATE)

NOTES:

1. See Standard Plan T51 for Temporary Silt Fence.
2. Dimensions may vary to fit field conditions.

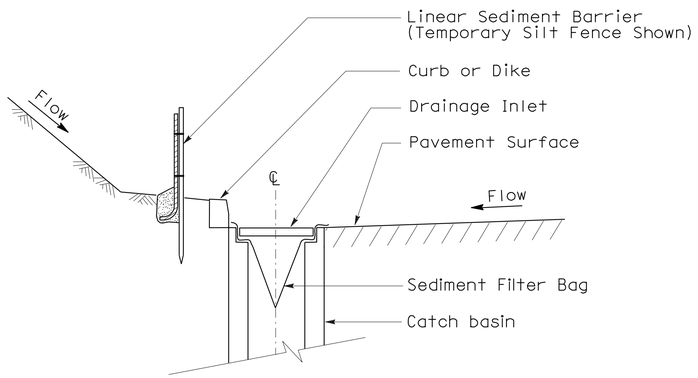

SECTION A-A

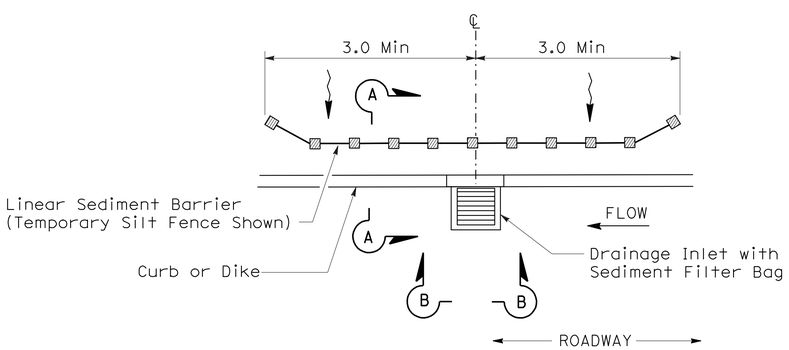

PLAN

TEMPORARY DRAINAGE INLET PROTECTION (TYPE 5) (SEDIMENT FILTER BAG)

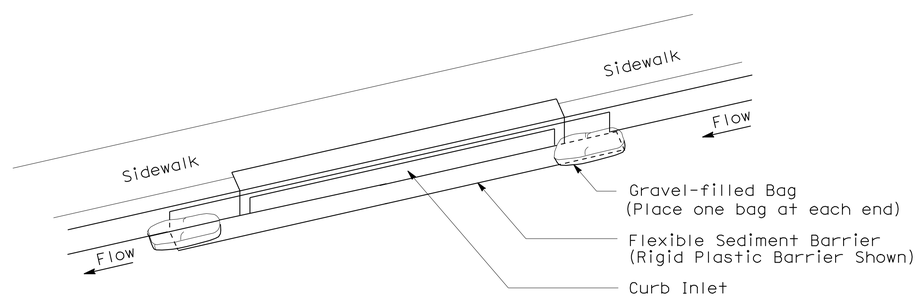

PERSPECTIVE

TEMPORARY DRAINAGE INLET PROTECTION (TYPE 6B) (CURB INLET WITHOUT GRATE)

ALL DIMENSIONS ARE IN METERS
UNLESS OTHERWISE SHOWN

TEMPORARY WATER POLLUTION CONTROL DETAILS (TEMPORARY DRAINAGE INLET PROTECTION)

NO SCALE

WPCD-4

STATE OF CALIFORNIA - DEPARTMENT OF TRANSPORTATION
Caltrans OFFICE OF DESIGN B

FUNCTIONAL SUPERVISOR M. OJI KALU
CALCULATED-DESIGNED BY QUANG THAI
CHECKED BY M. OJI KALU
REVISED BY
DATE REVISED

LAST REVISION DATE PLOTTED => 20-MAY-2010
04-20-10 TIME PLOTTED => 11:14

Dist	COUNTY	ROUTE	KILOMETER POST TOTAL PROJECT	SHEET No.	TOTAL SHEETS
07	LA	138	87.2/88.9	27	156

REGISTERED CIVIL ENGINEER 1/07/10 DATE

5-17-10
PLANS APPROVAL DATE

REGISTERED PROFESSIONAL ENGINEER BALDEV K BHALLA No. 34350 Exp. 9-30-11 CIVIL STATE OF CALIFORNIA

THE STATE OF CALIFORNIA OR ITS OFFICERS OR AGENTS SHALL NOT BE RESPONSIBLE FOR THE ACCURACY OR COMPLETENESS OF ELECTRONIC COPIES OF THIS PLAN SHEET.

Caltrans Metric

NOTES:

1. FOR ACCURATE RIGHT OF WAY DATA, CONTACT RIGHT OF WAY ENGINEERING AT THE DTSTRICT OFFICE.
2. THE CONTRACTOR SHALL VERIFY LOCATIONS AND ELEVATIONS OF EXISTING DRAINAGE SYSTEMS BEFORE COMMENCEMENT OF WORK.

LEGEND:

(X) DRAINAGE SYSTEM No.

(X) DRAINAGE UNIT

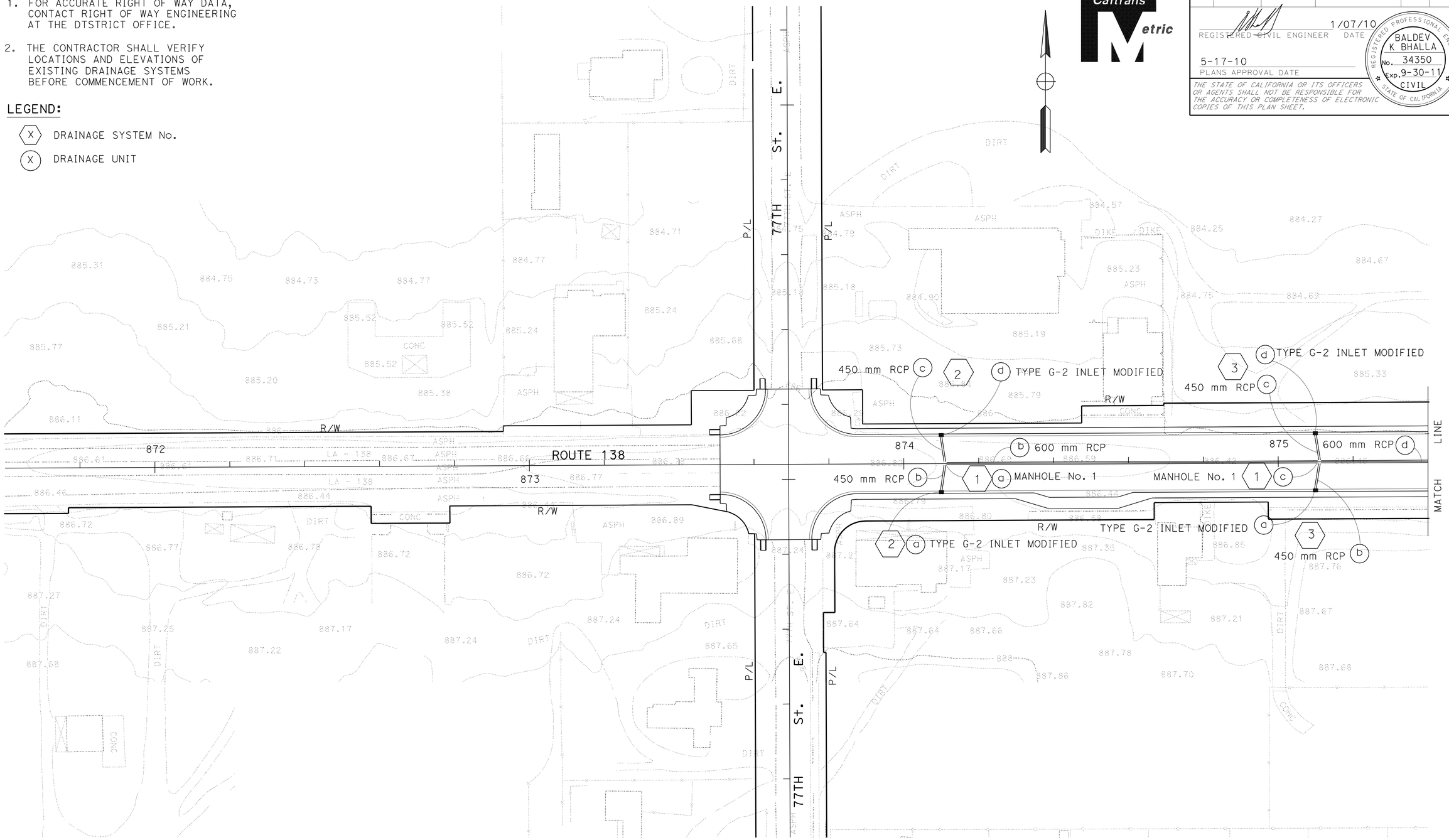

ALL DIMENSIONS ARE IN METERS UNLESS OTHERWISE SHOWN.

DRAINAGE PLAN

SCALE 1:500

D-1

THIS PLAN ACCURATE FOR DRAINAGE WORK ONLY

STATE OF CALIFORNIA - DEPARTMENT OF TRANSPORTATION
Caltrans
HYDRAULICS

FUNCTIONAL SUPERVISOR: DAVE BHALLA
CALCULATED-DESIGNED BY: VIC T. VALIDO
CHECKED BY: FUSUNG CHANG
REVISED BY / DATE REVISED

LAST REVISION 3-25-08
DATE PLOTTED => 20-MAY-2010
TIME PLOTTED => 11:15

Dist	COUNTY	ROUTE	KILOMETER POST TOTAL PROJECT	SHEET No.	TOTAL SHEETS
07	LA	138	87.2/88.9	28	156

REGISTERED CIVIL ENGINEER 1/07/10 DATE

5-17-10
PLANS APPROVAL DATE

REGISTERED PROFESSIONAL ENGINEER BALDEV K. BHALLA No. 34350 Exp. 9-30-11 CIVIL STATE OF CALIFORNIA

THE STATE OF CALIFORNIA OR ITS OFFICERS OR AGENTS SHALL NOT BE RESPONSIBLE FOR THE ACCURACY OR COMPLETENESS OF ELECTRONIC COPIES OF THIS PLAN SHEET.

Caltrans Metric

NOTES:

1. FOR ACCURATE RIGHT OF WAY DATA, CONTACT RIGHT OF WAY ENGINEERING AT THE DTSTRICT OFFICE.
2. THE CONTRACTOR SHALL VERIFY LOCATIONS AND ELEVATIONS OF EXISTING DRAINAGE SYSTEMS BEFORE COMMENCEMENT OF WORK.

LEGEND:

(X) DRAINAGE SYSTEM No.

(X) DRAINAGE UNIT

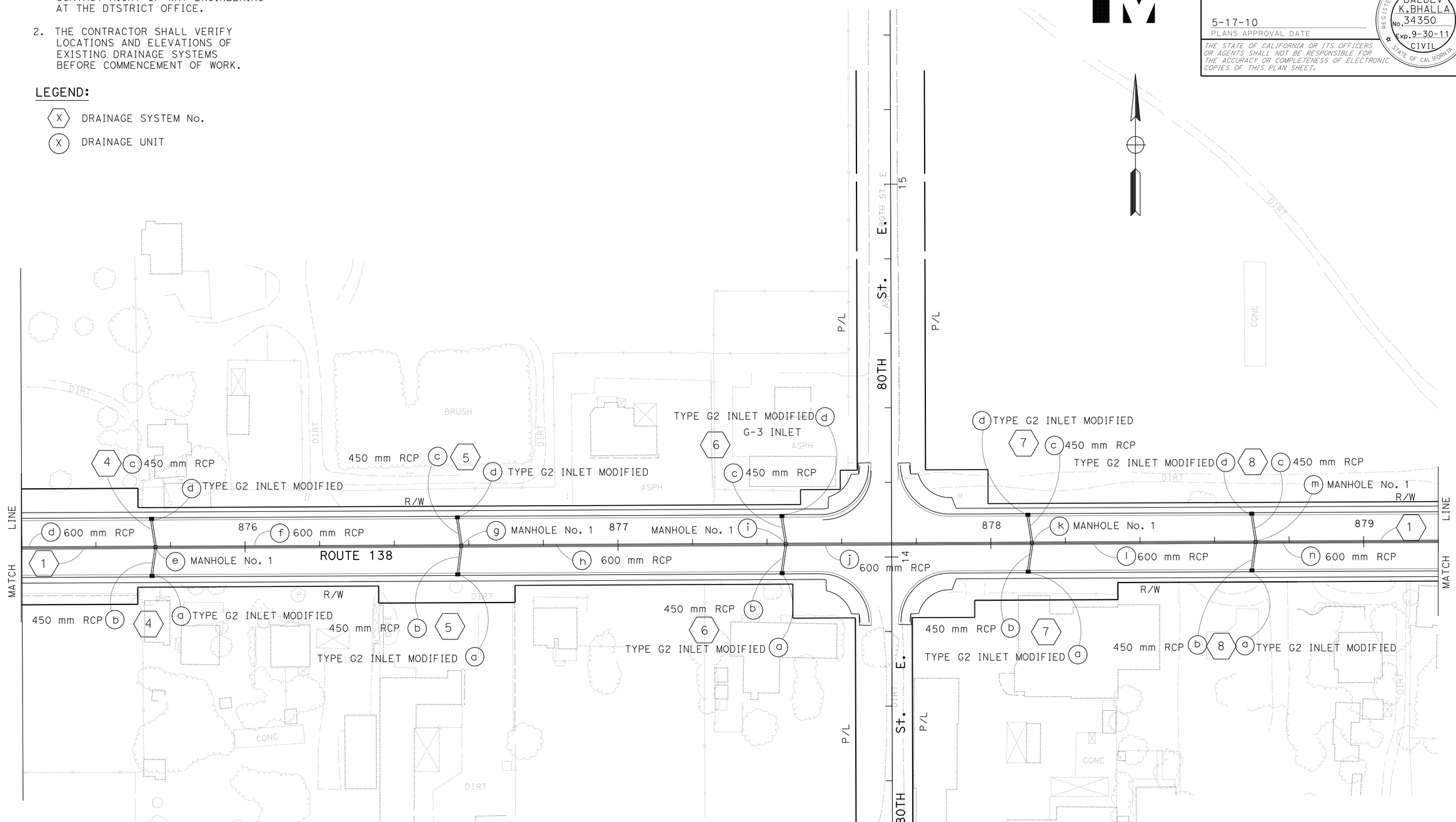

ALL DIMENSIONS ARE IN METERS UNLESS OTHERWISE SHOWN.

DRAINAGE PLAN

SCALE 1:500

THIS PLAN ACCURATE FOR DRAINAGE WORK ONLY.

D-2

STATE OF CALIFORNIA - DEPARTMENT OF TRANSPORTATION
Caltrans
HYDRAULICS

FUNCTIONAL SUPERVISOR: DAVE BHALLA
CALCULATED-DESIGNED BY: VIC T. VALIDO
CHECKED BY: FUSUNG CHANG
REVISED BY / DATE REVISED

LAST REVISION 00-00-00 | DATE PLOTTED => 20-MAY-2010 | TIME PLOTTED => 11:15

Dist	COUNTY	ROUTE	KILOMETER POST TOTAL PROJECT	SHEET No.	TOTAL SHEETS
07	LA	138	87.2/88.9	29	156

REGISTERED CIVIL ENGINEER 1/07/10 DATE

5-17-10
PLANS APPROVAL DATE

REGISTERED PROFESSIONAL ENGINEER BALDEV K.BHALLA No. 34350 Exp. 9-30-11 CIVIL STATE OF CALIFORNIA

THE STATE OF CALIFORNIA OR ITS OFFICERS OR AGENTS SHALL NOT BE RESPONSIBLE FOR THE ACCURACY OR COMPLETENESS OF ELECTRONIC COPIES OF THIS PLAN SHEET.

Caltrans Metric

NOTES:

1. FOR ACCURATE RIGHT OF WAY DATA, CONTACT RIGHT OF WAY ENGINEERING AT THE DTSTRICT OFFICE.
2. THE CONTRACTOR SHALL VERIFY LOCATIONS AND ELEVATIONS OF EXISTING DRAINAGE SYSTEMS BEFORE COMMENCEMENT OF WORK.

LEGEND:

(X) DRAINAGE SYSTEM No.

(X) DRAINAGE UNIT

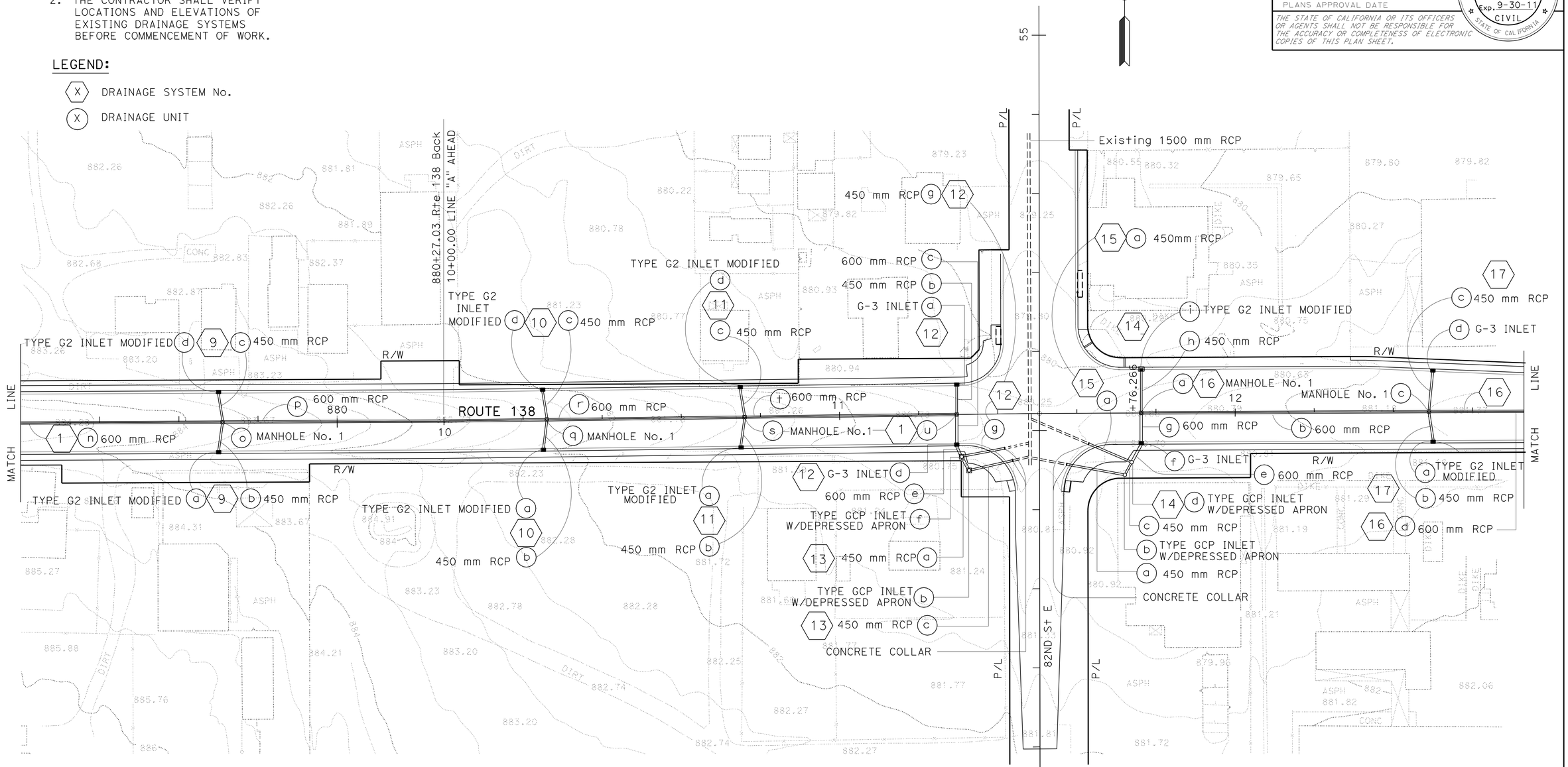

ALL DIMENSIONS ARE IN METERS UNLESS OTHERWISE SHOWN.

DRAINAGE PLAN

SCALE 1:500

D-3

THIS PLAN ACCURATE FOR DRAINAGE WORK ONLY.

STATE OF CALIFORNIA - DEPARTMENT OF TRANSPORTATION
Caltrans
HYDRAULICS

FUNCTIONAL SUPERVISOR: DAVE BHALLA
CALCULATED-DESIGNED BY: VIC T. VALIDO
CHECKED BY: FUSUNG CHANG
REVISED BY / DATE REVISED

LAST REVISION 00-00-00
DATE PLOTTED => 20-MAY-2010
TIME PLOTTED => 11:15

Dist	COUNTY	ROUTE	KILOMETER POST TOTAL PROJECT	SHEET No.	TOTAL SHEETS
07	LA	138	87.2/88.9	30	156

REGISTERED CIVIL ENGINEER 1/07/10 DATE

5-17-10
PLANS APPROVAL DATE

REGISTERED PROFESSIONAL ENGINEER BALDEV K. BHALLA No. 34350 Exp. 9-30-11 CIVIL STATE OF CALIFORNIA

THE STATE OF CALIFORNIA OR ITS OFFICERS OR AGENTS SHALL NOT BE RESPONSIBLE FOR THE ACCURACY OR COMPLETENESS OF ELECTRONIC COPIES OF THIS PLAN SHEET.

Caltrans Metric

NOTES:

1. FOR ACCURATE RIGHT OF WAY DATA, CONTACT RIGHT OF WAY ENGINEERING AT THE DTSTRICT OFFICE.
2. THE CONTRACTOR SHALL VERIFY LOCATIONS AND ELEVATIONS OF EXISTING DRAINAGE SYSTEMS BEFORE COMMENCEMENT OF WORK.

LEGEND:

(X) DRAINAGE SYSTEM No.

(X) DRAINAGE UNIT

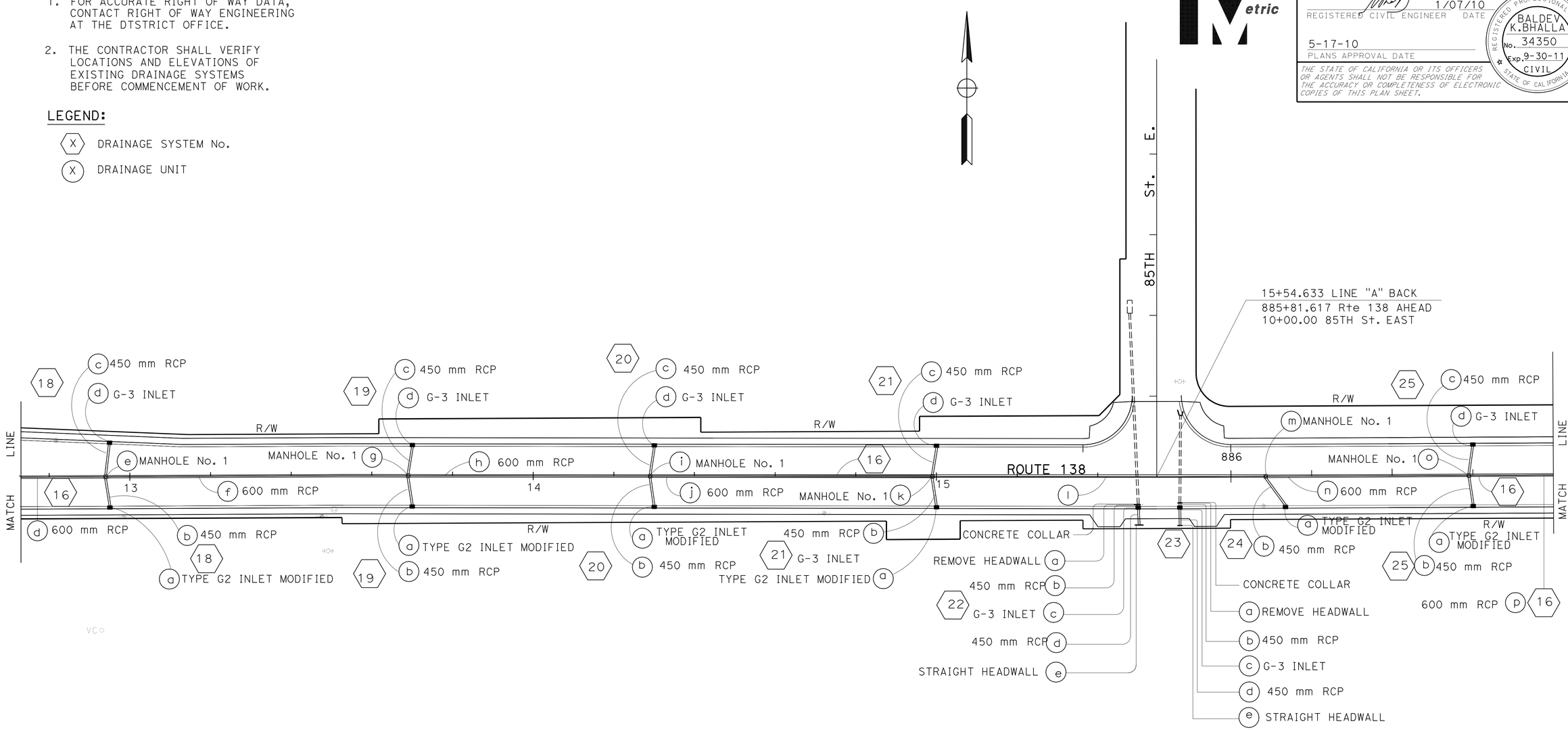

ALL DIMENSIONS ARE IN METERS UNLESS OTHERWISE SHOWN.

DRAINAGE PLAN

SCALE 1:500

D-4

THIS PLAN ACCURATE FOR DRAINAGE WORK ONLY.

REVISED BY	DATE REVISED

CALCULATED-DESIGNED BY: VIC T. VALIDO
CHECKED BY: FUSUNG CHANG
FUNCTIONAL SUPERVISOR: DAVE BHALLA

STATE OF CALIFORNIA - DEPARTMENT OF TRANSPORTATION
Caltrans HYDRAULICS

LAST REVISION 00-00-00
DATE PLOTTED => 20-MAY-2010
TIME PLOTTED => 11:15

DIST	COUNTY	ROUTE	KILOMETER POST TOTAL PROJECT	SHEET No	TOTAL SHEETS
07	LA	138	87.2/88.9	31	156

REGISTERED CIVIL ENGINEER 1/07/10

5-17-10
PLANS APPROVAL DATE

REGISTERED PROFESSIONAL ENGINEER BALDEV K. BHALLA No. 34350 Exp. 9-30-11 CIVIL STATE OF CALIFORNIA

The State of California or its officers or agents shall not be responsible for the accuracy or completeness of electronic copies of this plan sheet.

Caltrans Metric

NOTES:

1. FOR ACCURATE RIGHT OF WAY DATA, CONTACT RIGHT OF WAY ENGINEERING AT THE DTSTRICT OFFICE.
2. THE CONTRACTOR SHALL VERIFY LOCATIONS AND ELEVATIONS OF EXISTING DRAINAGE SYSTEMS BEFORE COMMENCEMENT OF WORK.

LEGEND:

(X) DRAINAGE SYSTEM No.

(X) DRAINAGE UNIT

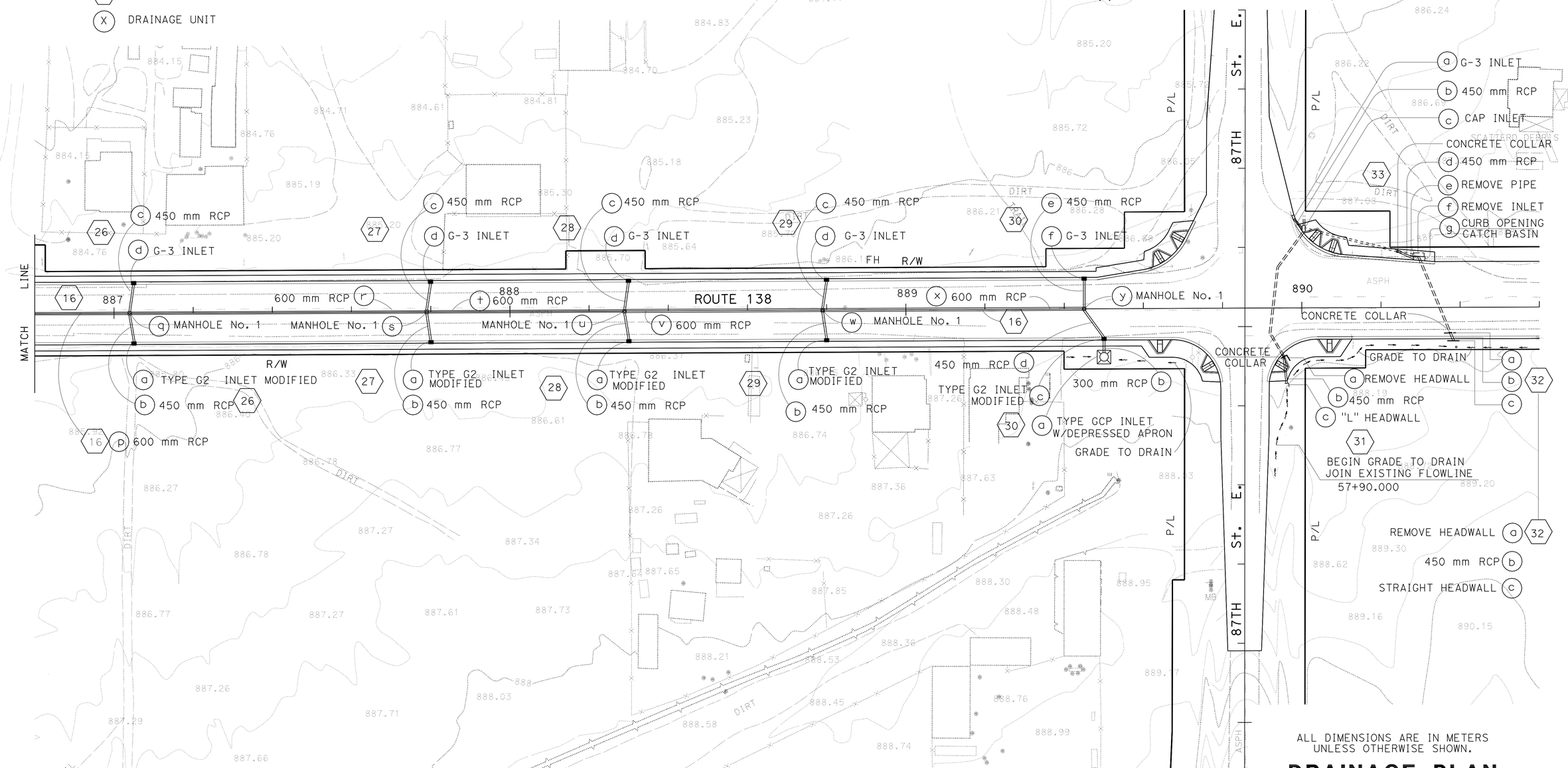

ALL DIMENSIONS ARE IN METERS UNLESS OTHERWISE SHOWN.

DRAINAGE PLAN

SCALE 1:500

D-5

THIS PLAN ACCURATE FOR DRAINAGE WORK ONLY.

REVISED BY	DATE REVISED

CALCULATED/DESIGNED BY	VIC T. VALIDO
CHECKED BY	FUSUNG CHANG

PROJECT ENGINEER DAVE BHALLA

STATE OF CALIFORNIA - DEPARTMENT OF TRANSPORTATION

Caltrans HYDRAULICS

LAST REVISION 2-23-09 DATE PLOTTED => 20-MAY-2010 TIME PLOTTED => 13:38

Dist	COUNTY	ROUTE	KILOMETER POST TOTAL PROJECT	SHEET No.	TOTAL SHEETS
07	LA	138	87.2/88.9	32	156

REGISTERED CIVIL ENGINEER 1/07/10 DATE

5-17-10
PLANS APPROVAL DATE

REGISTERED PROFESSIONAL ENGINEER BALDEV K. BHALLA No. 34350 Exp. 9-30-11 CIVIL STATE OF CALIFORNIA

THE STATE OF CALIFORNIA OR ITS OFFICERS OR AGENTS SHALL NOT BE RESPONSIBLE FOR THE ACCURACY OR COMPLETENESS OF ELECTRONIC COPIES OF THIS PLAN SHEET.

Caltrans Metric

NOTE:

THE CONTRACTOR SHALL VERIFY LOCATIONS AND ELEVATIONS OF EXISTING DRAINAGE SYSTEMS BEFORE COMMENCEMENT OF WORK.

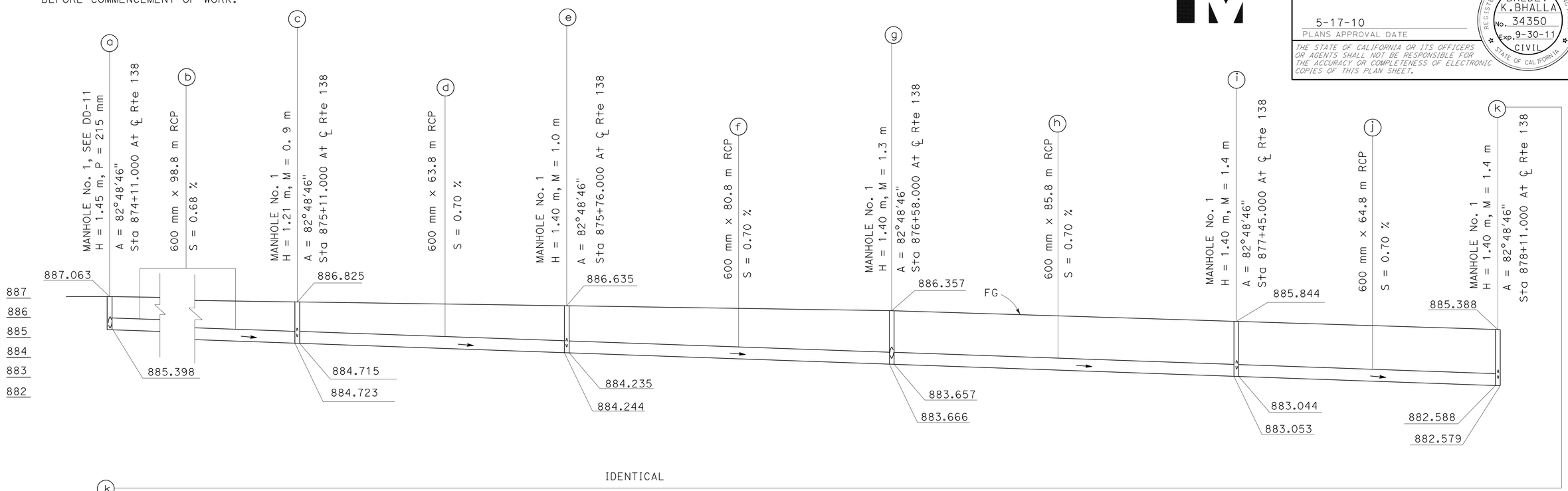

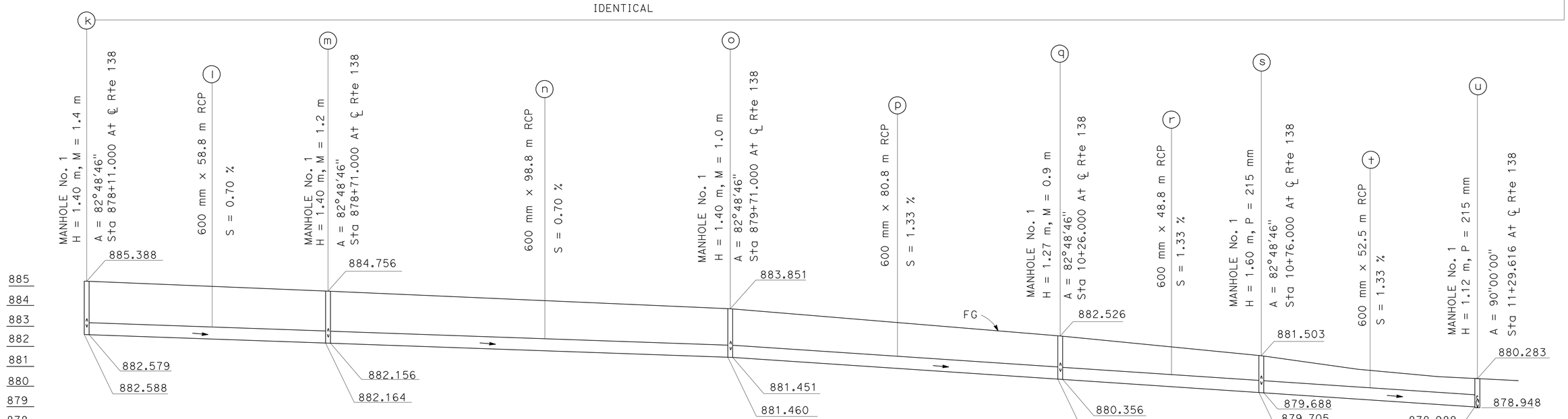

DRAINAGE SYSTEM No. 1

SCALE: 1:500 Horiz.
1:100 Vert.

THIS PLAN ACCURATE FOR DRAINAGE WORK ONLY.

ALL DIMENSIONS ARE IN METERS UNLESS OTHERWISE SHOWN

DRAINAGE PROFILE

DP-1

STATE OF CALIFORNIA - DEPARTMENT OF TRANSPORTATION
Caltrans
HYDRAULICS

FUNCTIONAL SUPERVISOR: DAVE BHALLA
CALCULATED-DESIGNED BY: VIC T. VALIDO
CHECKED BY: FUSUNG CHANG
REVISED BY / DATE REVISED

LAST REVISION 00-00-00
DATE PLOTTED => 20-MAY-2010
TIME PLOTTED => 13:38

Dist	COUNTY	ROUTE	KILOMETER POST TOTAL PROJECT	SHEET No.	TOTAL SHEETS
07	LA	138	87.2/88.9	33	156

REGISTERED CIVIL ENGINEER 1/07/10 DATE

5-17-10
PLANS APPROVAL DATE

REGISTERED PROFESSIONAL ENGINEER BALDEV K. BHALLA No. 34350 Exp. 9-30-11 CIVIL STATE OF CALIFORNIA

THE STATE OF CALIFORNIA OR ITS OFFICERS OR AGENTS SHALL NOT BE RESPONSIBLE FOR THE ACCURACY OR COMPLETENESS OF ELECTRONIC COPIES OF THIS PLAN SHEET.

Caltrans Metric

NOTE:

THE CONTRACTOR SHALL VERIFY LOCATIONS AND ELEVATIONS OF EXISTING DRAINAGE SYSTEMS BEFORE COMMENCEMENT OF WORK.

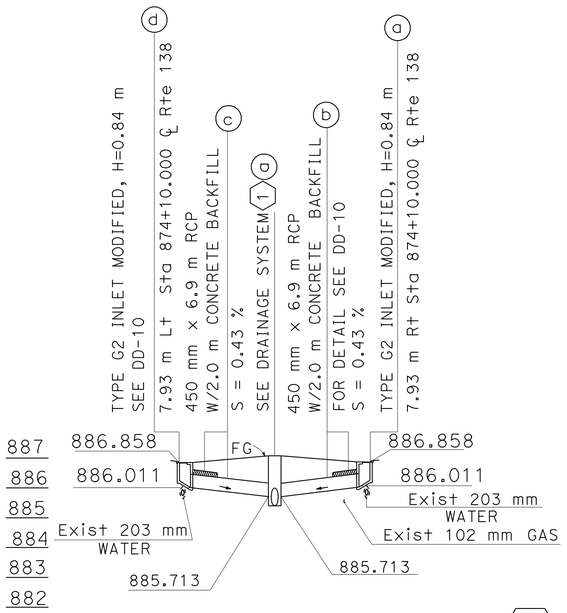

DRAINAGE SYSTEM No. 2

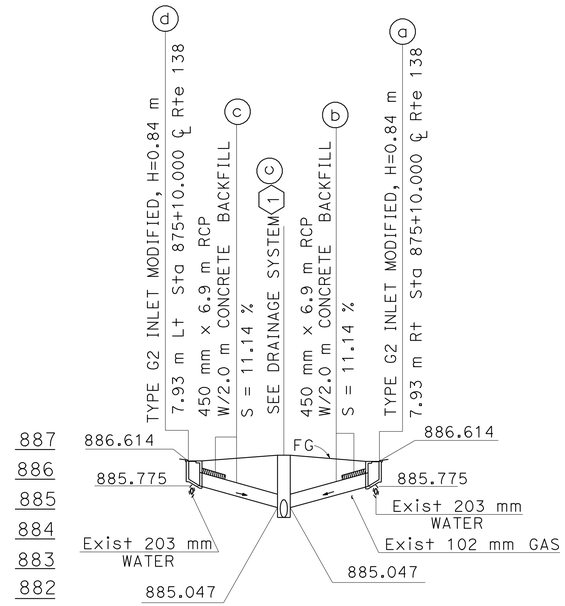

DRAINAGE SYSTEM No. 3

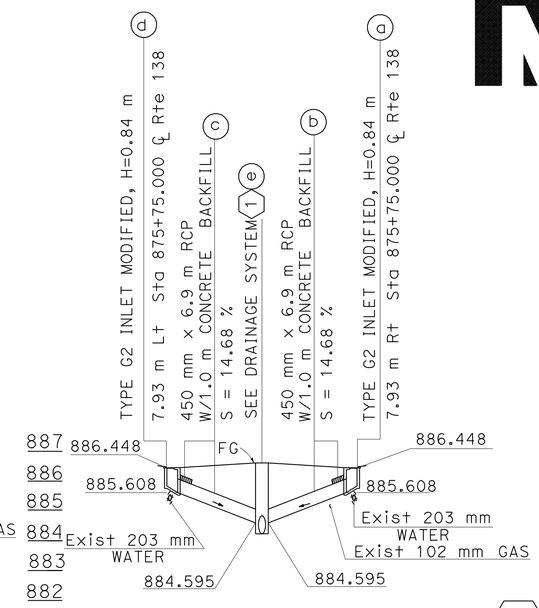

DRAINAGE SYSTEM No. 4

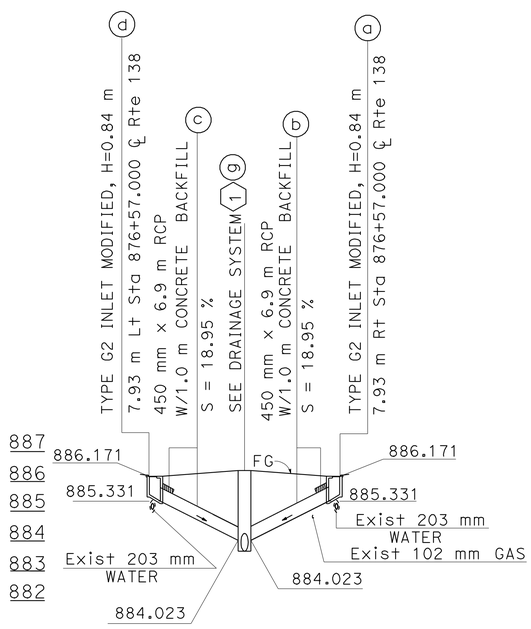

DRAINAGE SYSTEM No. 5

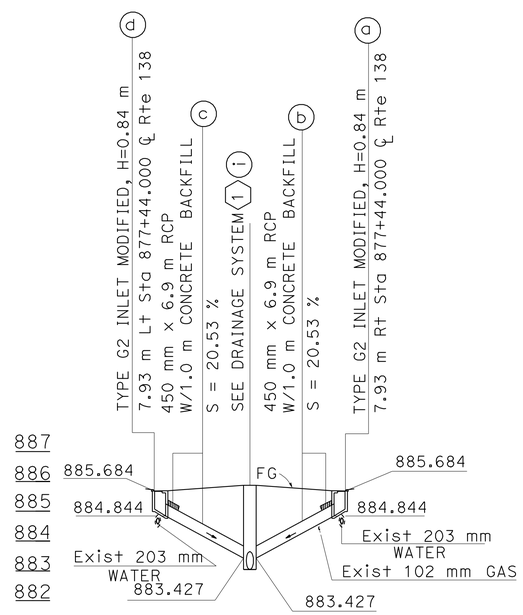

DRAINAGE SYSTEM No. 6

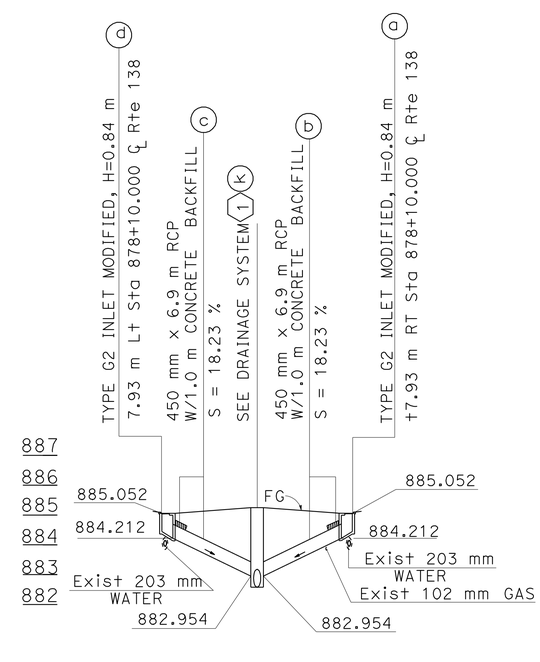

DRAINAGE SYSTEM No. 7

ALL DIMENSIONS ARE IN METERS UNLESS OTHERWISE SHOWN

DRAINAGE PROFILE

SCALE: 1:250 Horiz.
1:100 Vert.

DP-2

THIS PLAN ACCURATE FOR DRAINAGE WORK ONLY.

STATE OF CALIFORNIA - DEPARTMENT OF TRANSPORTATION
Caltrans
HYDRAULICS

FUNCTIONAL SUPERVISOR: DAVE BHALLA
CALCULATED-DESIGNED BY: VIC T. VALIDO
CHECKED BY: FUSUNG CHANG
REVISED BY / DATE REVISED

LAST REVISION 00-00-00 | DATE PLOTTED => 20-MAY-2010 | TIME PLOTTED => 13:38

Dist	COUNTY	ROUTE	KILOMETER POST TOTAL PROJECT	SHEET No.	TOTAL SHEETS
07	LA	138	87.2/88.9	34	156

REGISTERED CIVIL ENGINEER 1/07/10 DATE

5-17-10
PLANS APPROVAL DATE

REGISTERED PROFESSIONAL ENGINEER BALDEV K. BHALLA No. 34350 Exp. 9-30-11 CIVIL STATE OF CALIFORNIA

THE STATE OF CALIFORNIA OR ITS OFFICERS OR AGENTS SHALL NOT BE RESPONSIBLE FOR THE ACCURACY OR COMPLETENESS OF ELECTRONIC COPIES OF THIS PLAN SHEET.

Caltrans Metric

NOTE:

THE CONTRACTOR SHALL VERIFY LOCATIONS AND ELEVATIONS OF EXISTING DRAINAGE SYSTEMS BEFORE COMMENCEMENT OF WORK.

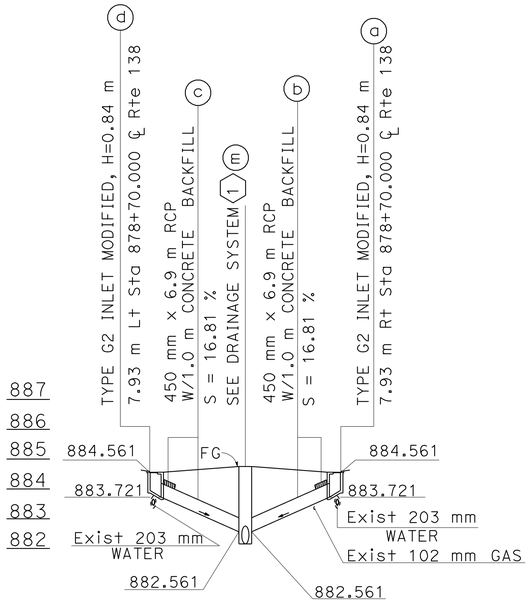

DRAINAGE SYSTEM No. 8
SCALE: 1:250 Horiz.
1:100 Vert.

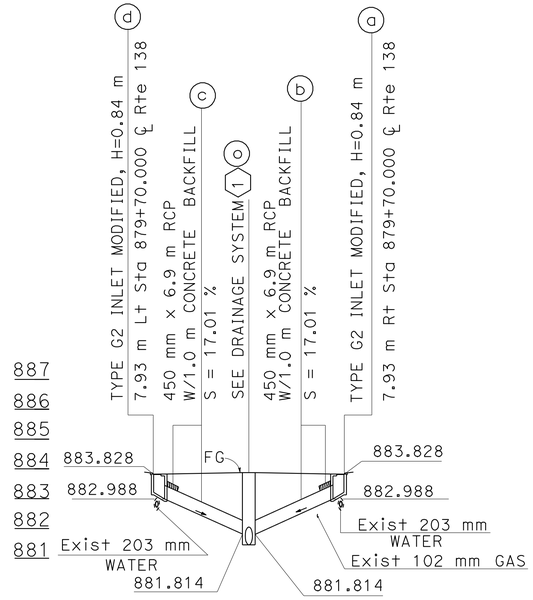

DRAINAGE SYSTEM No. 9
SCALE: 1:250 Horiz.
1:100 Vert.

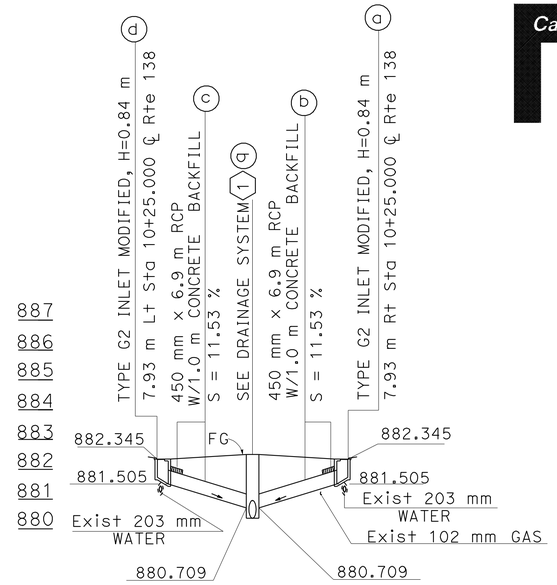

DRAINAGE SYSTEM No. 10
SCALE: 1:250 Horiz.
1:100 Vert.

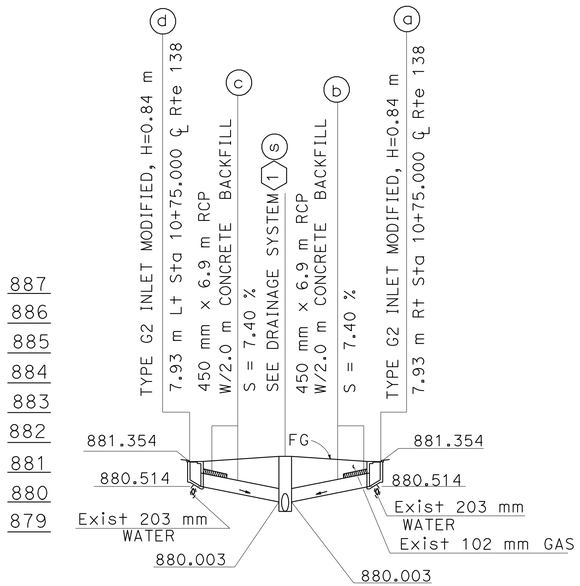

DRAINAGE SYSTEM No. 11
SCALE: 1:250 Horiz.
1:100 Vert.

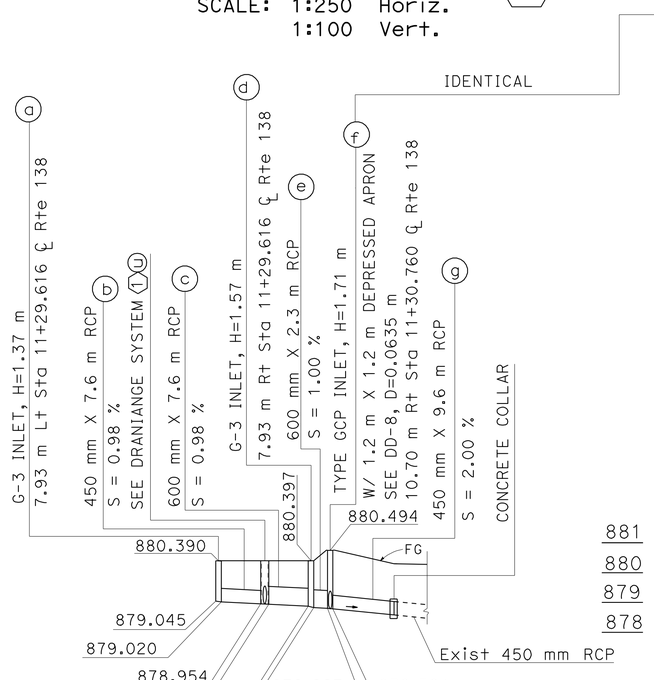

DRAINAGE SYSTEM No. 12
SCALE: 1:500 Horiz.
1:100 Vert.

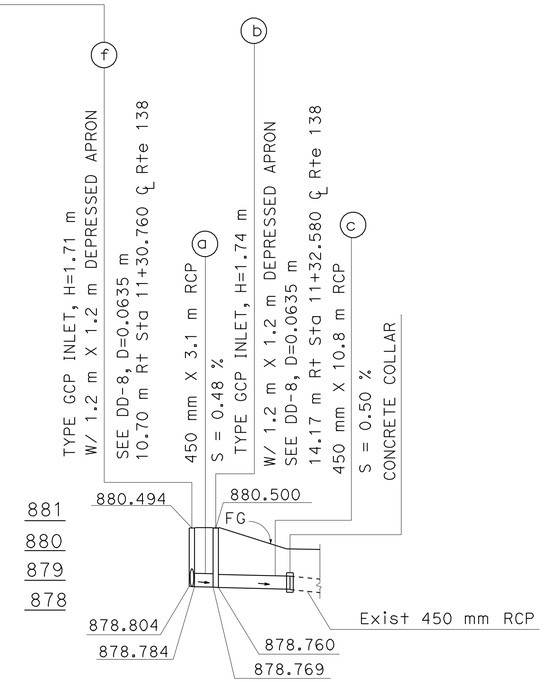

DRAINAGE SYSTEM No. 13
SCALE: 1:500 Horiz.
1:100 Vert.

ALL DIMENSIONS ARE IN METERS UNLESS OTHERWISE SHOWN

DRAINAGE PROFILE

THIS PLAN ACCURATE FOR DRAINAGE WORK ONLY.

DP-3

STATE OF CALIFORNIA - DEPARTMENT OF TRANSPORTATION
Caltrans HYDRAULICS

FUNCTIONAL SUPERVISOR: DAVE BHALLA
CALCULATED-DESIGNED BY: VIC T. VALIDO
CHECKED BY: FUSUNG CHANG
REVISED BY / DATE REVISED

LAST REVISION 00-00-00
DATE PLOTTED => 20-MAY-2010
TIME PLOTTED => 13:43

Dist	COUNTY	Rte	KILOMETER POST TOTAL PROJECT	SHEET No.	TOTAL SHEETS
07	LA	138	87.2/88.9	35	156

REGISTERED CIVIL ENGINEER 1/07/10 DATE

5-17-10
PLANS APPROVAL DATE

REGISTERED PROFESSIONAL ENGINEER BALDEV K. BHALLA No. 34350 Exp. 9-30-11 CIVIL STATE OF CALIFORNIA

THE STATE OF CALIFORNIA OR ITS OFFICERS OR AGENTS SHALL NOT BE RESPONSIBLE FOR THE ACCURACY OR COMPLETENESS OF ELECTRONIC COPIES OF THIS PLAN SHEET.

Caltrans Metric

NOTE:

THE CONTRACTOR SHALL VERIFY LOCATIONS AND ELEVATIONS OF EXISTING DRAINAGE SYSTEMS BEFORE COMMENCEMENT OF WORK.

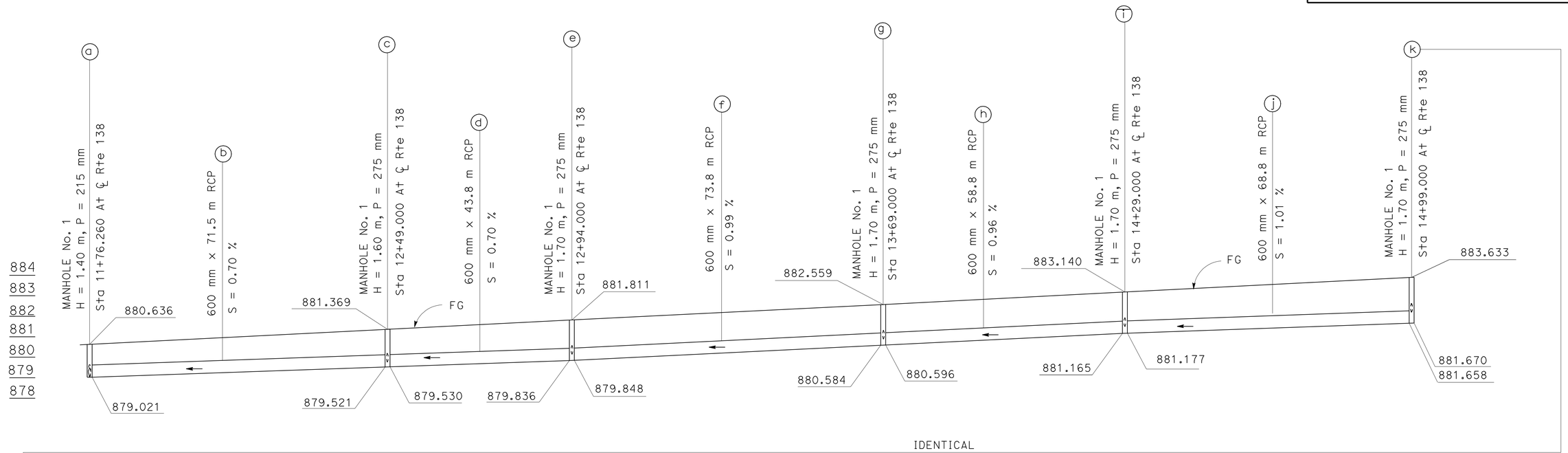

IDENTICAL

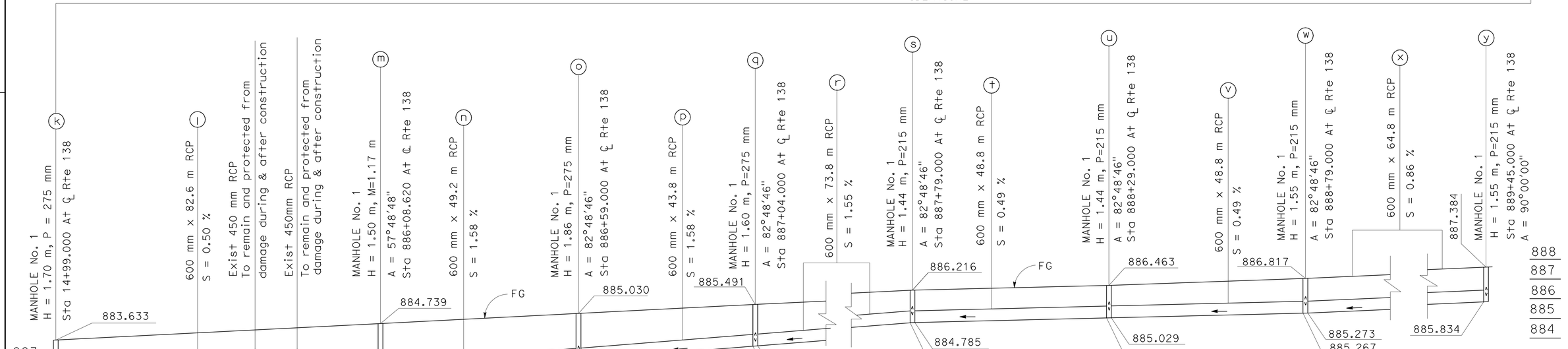

ALL DIMENSIONS ARE IN METERS UNLESS OTHERWISE SHOWN

DRAINAGE SYSTEM No. 16

DRAINAGE PROFILE

SCALE: 1:500 Horiz.
1:100 Vert.

DP-4

THIS PLAN ACCURATE FOR DRAINAGE WORK ONLY.

CALCULATED-DESIGNED BY	VIC T. VALIDO
CHECKED BY	FUSUNG CHANG
REVISED BY	
DATE REVISED	
FUNCTIONAL SUPERVISOR	DAVE BHALLA

STATE OF CALIFORNIA - DEPARTMENT OF TRANSPORTATION
Caltrans HYDRAULICS

LAST REVISION 00-00-00 | DATE PLOTTED => 20-MAY-2010 | TIME PLOTTED => 13:43

Dist	COUNTY	ROUTE	KILOMETER POST TOTAL PROJECT	SHEET No.	TOTAL SHEETS
07	LA	138	87.2/88.9	36	156

REGISTERED CIVIL ENGINEER 1/07/10 DATE

PLANS APPROVAL DATE 5-17-10

REGISTERED PROFESSIONAL ENGINEER BALDEV K. BHALLA No. 34350 Exp. 9-30-11 CIVIL STATE OF CALIFORNIA

THE STATE OF CALIFORNIA OR ITS OFFICERS OR AGENTS SHALL NOT BE RESPONSIBLE FOR THE ACCURACY OR COMPLETENESS OF ELECTRONIC COPIES OF THIS PLAN SHEET.

Caltrans Metric

NOTE:

THE CONTRACTOR SHALL VERIFY LOCATIONS AND ELEVATIONS OF EXISTING DRAINAGE SYSTEMS BEFORE COMMENCEMENT OF WORK.

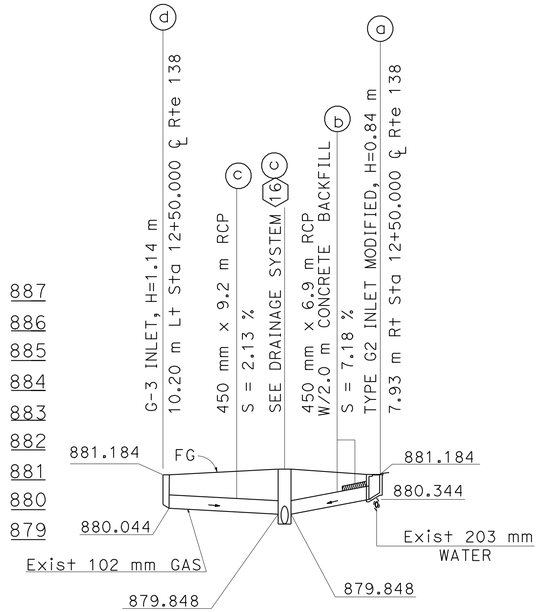

DRAINAGE SYSTEM No. 17

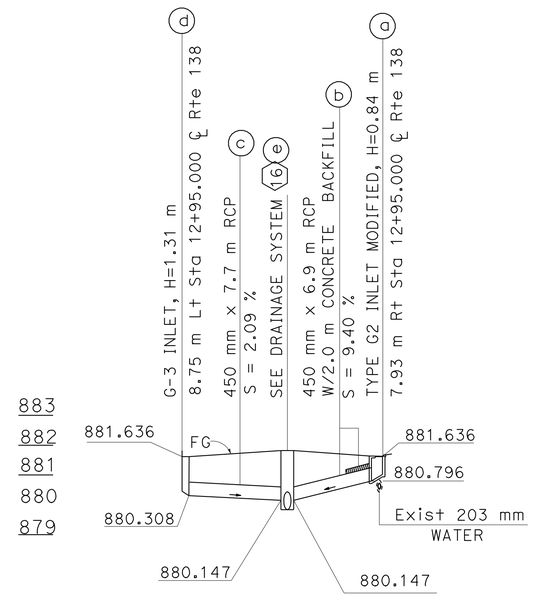

DRAINAGE SYSTEM No. 18

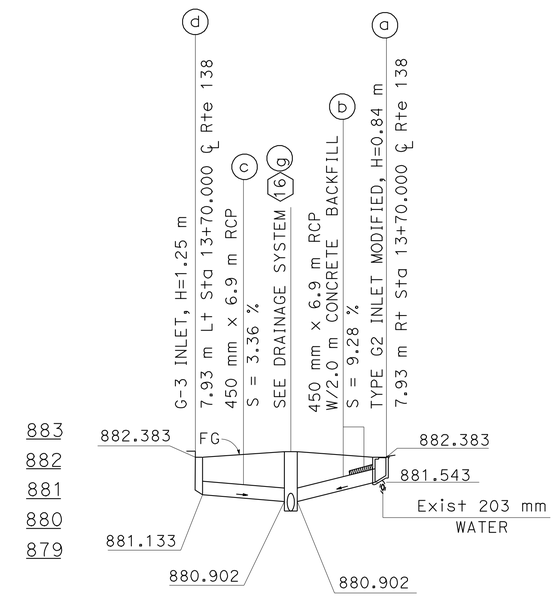

DRAINAGE SYSTEM No. 19

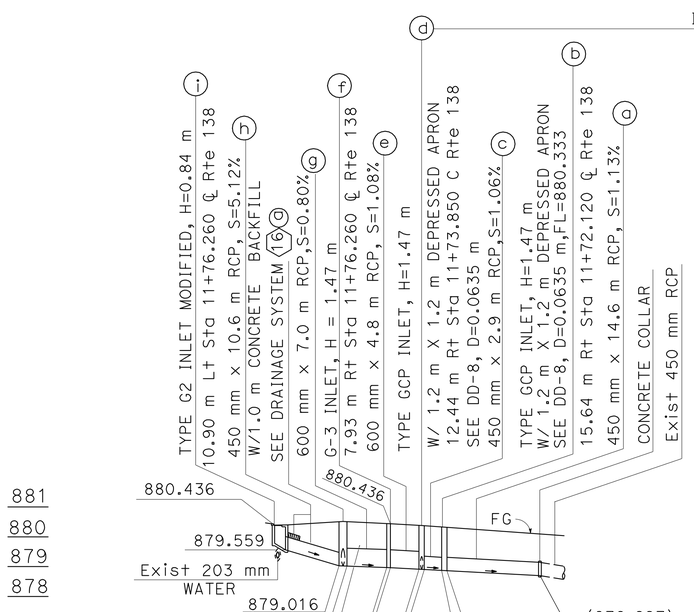

DRAINAGE SYSTEM No. 14

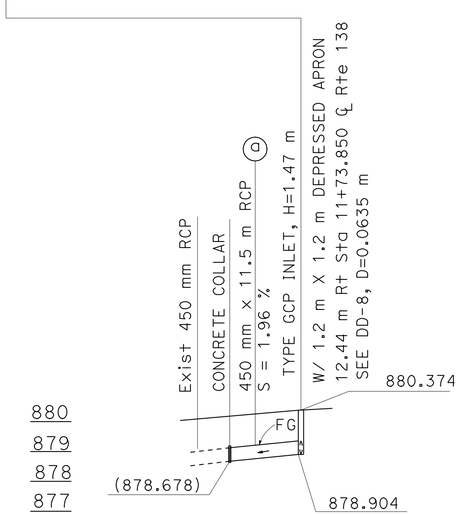

DRAINAGE SYSTEM No. 15

ALL DIMENSIONS ARE IN METERS UNLESS OTHERWISE SHOWN

DRAINAGE PROFILE

SCALE: 1:250 Horiz.
1:100 Vert.

DP-5

THIS PLAN ACCURATE FOR DRAINAGE WORK ONLY.

STATE OF CALIFORNIA - DEPARTMENT OF TRANSPORTATION
Caltrans **HYDRAULICS**

FUNCTIONAL SUPERVISOR: DAVE BHALLA
CALCULATED-DESIGNED BY: VIC T. VALIDO
CHECKED BY: FUSUNG CHANG
REVISED BY / DATE REVISED

LAST REVISION 00-00-00
DATE PLOTTED => 20-MAY-2010
TIME PLOTTED => 13:39

Dist	COUNTY	ROUTE	KILOMETER POST TOTAL PROJECT	SHEET No.	TOTAL SHEETS
07	LA	138	87.2/88.9	37	156

REGISTERED CIVIL ENGINEER 1/07/10 DATE

5-17-10
PLANS APPROVAL DATE

REGISTERED PROFESSIONAL ENGINEER BALDEV K. BHALLA No. 34350 Exp. 9-30-11 CIVIL STATE OF CALIFORNIA

THE STATE OF CALIFORNIA OR ITS OFFICERS OR AGENTS SHALL NOT BE RESPONSIBLE FOR THE ACCURACY OR COMPLETENESS OF ELECTRONIC COPIES OF THIS PLAN SHEET.

NOTE:

THE CONTRACTOR SHALL VERIFY LOCATIONS AND ELEVATIONS OF EXISTING DRAINAGE SYSTEMS BEFORE COMMENCEMENT OF WORK.

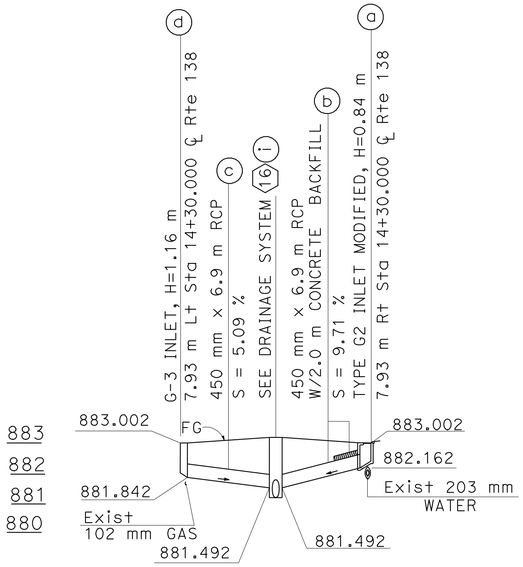

DRAINAGE SYSTEM No. 20

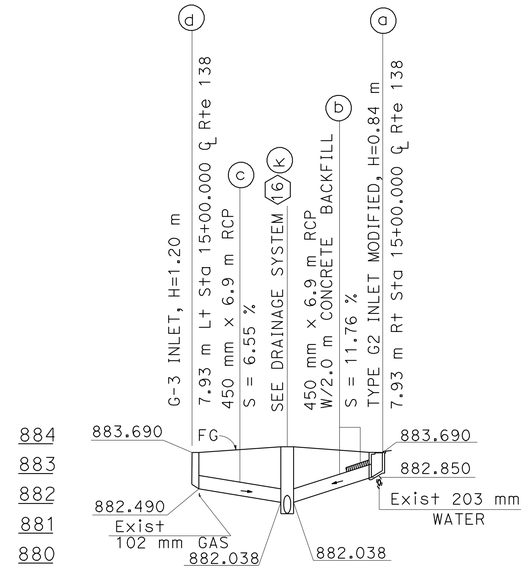

DRAINAGE SYSTEM No. 21

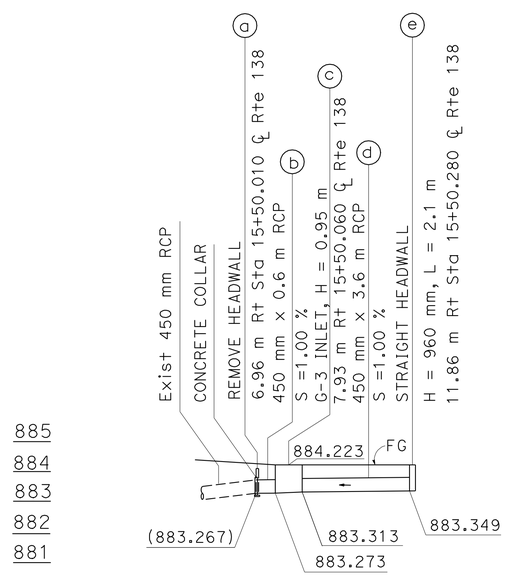

DRAINAGE SYSTEM No. 22

SCALE: 1:250 Horiz.
1:100 Vert.

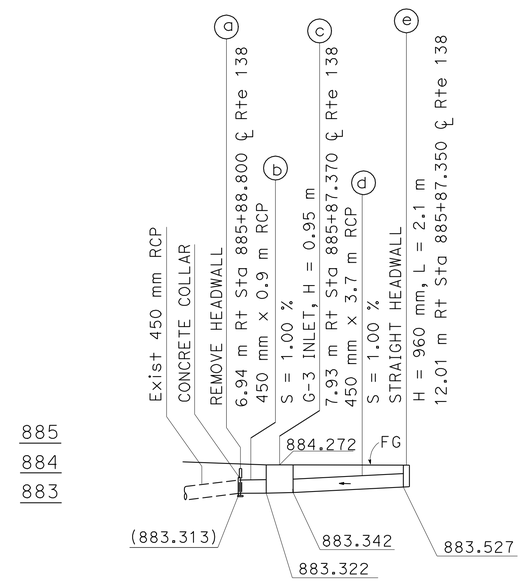

DRAINAGE SYSTEM No. 23

SCALE: 1:250 Horiz.
1:100 Vert.

ALL DIMENSIONS ARE IN METERS UNLESS OTHERWISE SHOWN

DRAINAGE PROFILE

DP-6

THIS PLAN ACCURATE FOR DRAINAGE WORK ONLY

STATE OF CALIFORNIA - DEPARTMENT OF TRANSPORTATION
Caltrans HYDRAULICS

FUNCTIONAL SUPERVISOR: DAVE BHALLA
CALCULATED-DESIGNED BY: VIC T. VALIDO
CHECKED BY: FUSUNG CHANG
REVISED BY / DATE REVISED

LAST REVISION 00-00-00
DATE PLOTTED => 20-MAY-2010
TIME PLOTTED => 13:39

Dist	COUNTY	ROUTE	KILOMETER POST TOTAL PROJECT	SHEET No.	TOTAL SHEETS
07	LA	138	87.2/88.9	38	156

REGISTERED CIVIL ENGINEER 1/07/10 DATE

5-17-10
PLANS APPROVAL DATE

REGISTERED PROFESSIONAL ENGINEER BALDEV K. BHALLA No. 34350 Exp. 9-30-11 CIVIL STATE OF CALIFORNIA

THE STATE OF CALIFORNIA OR ITS OFFICERS OR AGENTS SHALL NOT BE RESPONSIBLE FOR THE ACCURACY OR COMPLETENESS OF ELECTRONIC COPIES OF THIS PLAN SHEET.

Caltrans Metric

NOTE:
THE CONTRACTOR SHALL VERIFY LOCATIONS AND ELEVATIONS OF EXISTING DRAINAGE SYSTEMS BEFORE COMMENCEMENT OF WORK.

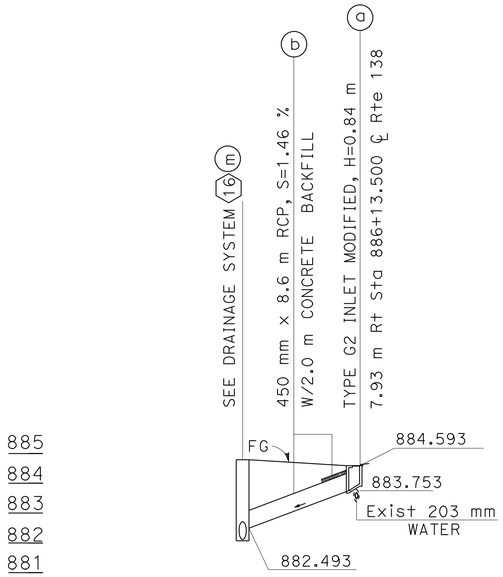

DRAINAGE SYSTEM No. 24

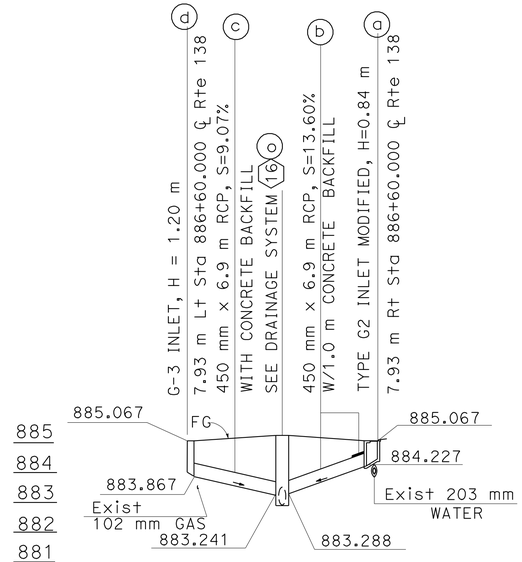

DRAINAGE SYSTEM No. 25

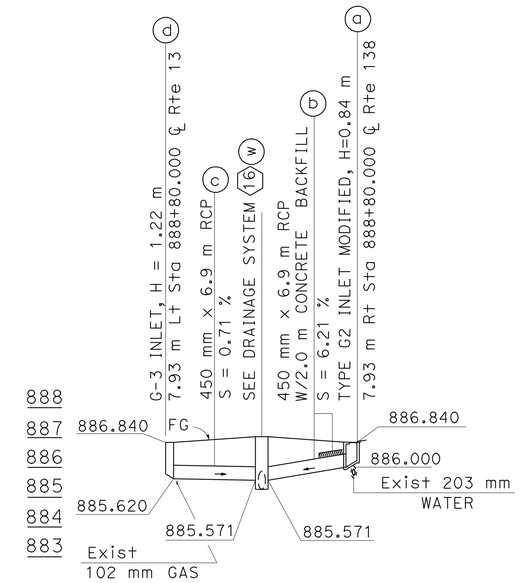

DRAINAGE SYSTEM No. 29

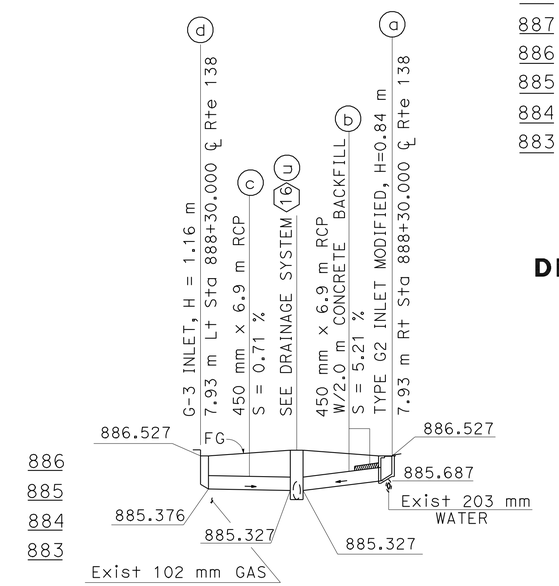

DRAINAGE SYSTEM No. 28

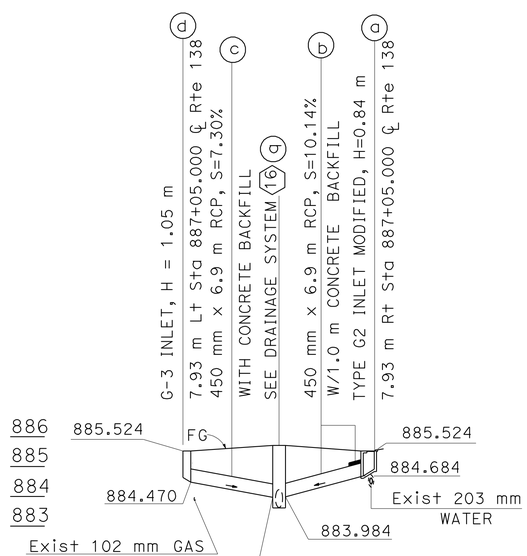

DRAINAGE SYSTEM No. 26

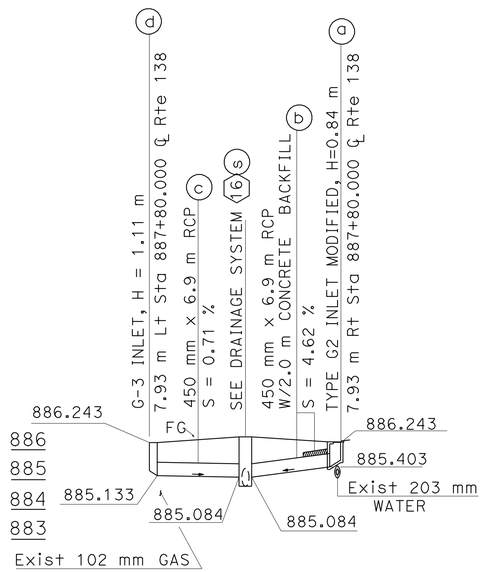

DRAINAGE SYSTEM No. 27

ALL DIMENSIONS ARE IN METERS UNLESS OTHERWISE SHOWN

DRAINAGE PROFILE

SCALE: 1:250 Horiz
1:100 Vert

DP-7

THIS PLAN ACCURATE FOR DRAINAGE WORK ONLY.

STATE OF CALIFORNIA - DEPARTMENT OF TRANSPORTATION
Caltrans
HYDRAULICS
FUNCTIONAL SUPERVISOR: DAVE BHALLA
CALCULATED-DESIGNED BY: VIC T. VALIDO
CHECKED BY: FRANK CHANG
REVISED BY / DATE REVISED

LAST REVISION 00-00-00
DATE PLOTTED => 20-MAY-2010
TIME PLOTTED => 13:39

Dist	COUNTY	Rte	KILOMETER POST TOTAL PROJECT	SHEET No.	TOTAL SHEETS
07	LA	138	87.2/88.9	39	156

REGISTERED CIVIL ENGINEER 1/07/10 DATE

5-17-10
PLANS APPROVAL DATE

REGISTERED PROFESSIONAL ENGINEER BALDEV K.BHALLA No. 34350 Exp. 9-30-11 CIVIL STATE OF CALIFORNIA

THE STATE OF CALIFORNIA OR ITS OFFICERS OR AGENTS SHALL NOT BE RESPONSIBLE FOR THE ACCURACY OR COMPLETENESS OF ELECTRONIC COPIES OF THIS PLAN SHEET.

Caltrans Metric

NOTE:

THE CONTRACTOR SHALL VERIFY LOCATIONS AND ELEVATIONS OF EXISTING DRAINAGE SYSTEMS BEFORE COMMENCEMENT OF WORK.

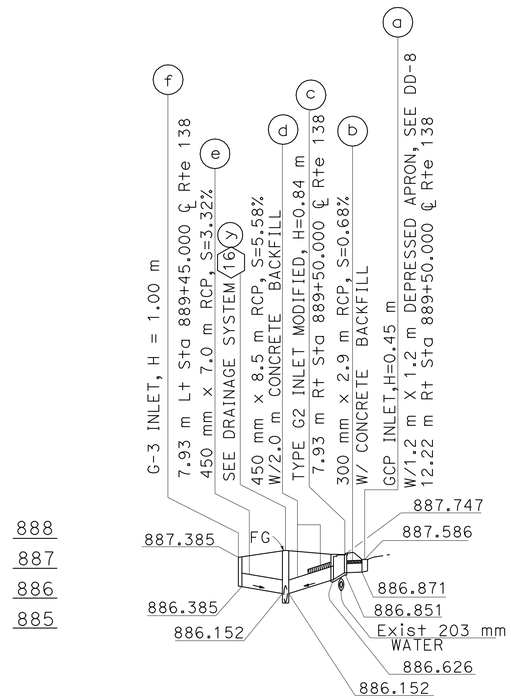

DRAINAGE SYSTEM No. 30

SCALE: 1:500 Horiz
1:100 Vert

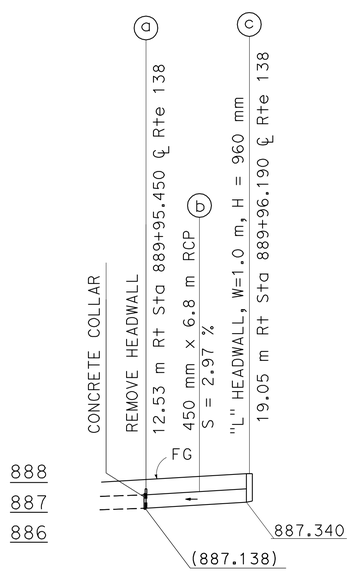

DRAINAGE SYSTEM No. 31

SCALE: 1:250 Horiz
1:100 Vert

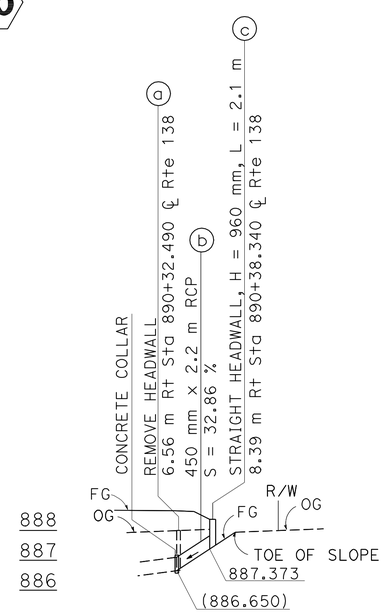

DRAINAGE SYSTEM No. 32

SCALE: 1:250 Horiz
1:100 Vert

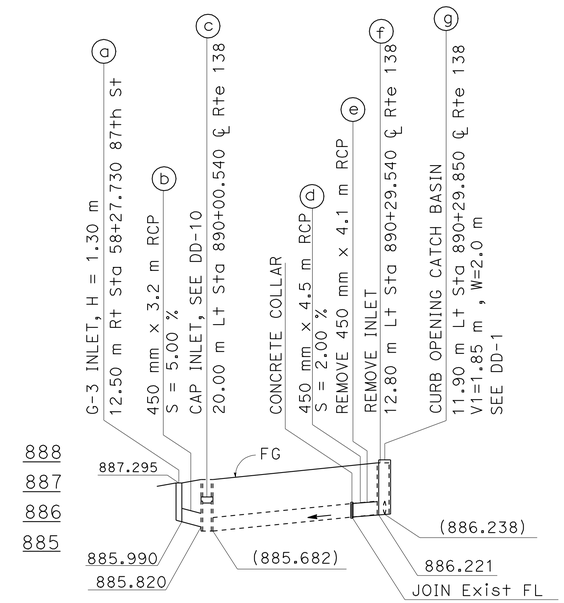

DRAINAGE SYSTEM No. 33

SCALE: 1:500 Horiz
1:100 Vert

ALL DIMENSIONS ARE IN METERS UNLESS OTHERWISE SHOWN

DRAINAGE PROFILE

DP-8

THIS PLAN ACCURATE FOR DRAINAGE WORK ONLY.

CALCULATED-DESIGNED BY	VIC T. VALIDO	REVISED BY	
CHECKED BY	FUSUNG CHANG	DATE REVISED	
FUNCTIONAL SUPERVISOR	DAVE BHALLA		

STATE OF CALIFORNIA - DEPARTMENT OF TRANSPORTATION
Caltrans
HYDRAULICS

LAST REVISION 00-00-00 | DATE PLOTTED => 24-MAY-2010 | TIME PLOTTED => 10:39

Dist	COUNTY	ROUTE	KILOMETER POST TOTAL PROJECT	SHEET No.	TOTAL SHEETS
07	LA	138	87.2/88.9	40	156

REGISTERED CIVIL ENGINEER 1/07/10 DATE

5-17-10
PLANS APPROVAL DATE

REGISTERED PROFESSIONAL ENGINEER BALDEV K. BHALLA No. 34350 Exp. 9-30-11 CIVIL STATE OF CALIFORNIA

THE STATE OF CALIFORNIA OR ITS OFFICERS OR AGENTS SHALL NOT BE RESPONSIBLE FOR THE ACCURACY OR COMPLETENESS OF ELECTRONIC COPIES OF THIS PLAN SHEET.

Caltrans Metric

NOTE:
"USE WITH STANDARD SPECIFICATIONS FOR PUBLIC WORKS CONSTRUCTION" SHALL NOT APPLY TO THIS CONTRACT.

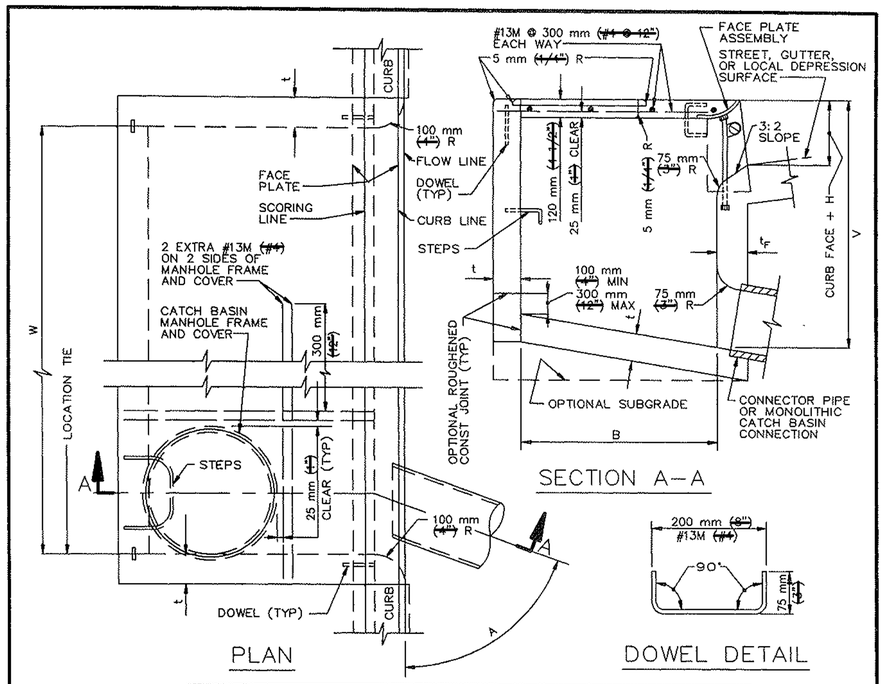

STRUCTURAL DATA

WALL AND SLAB DIMENSIONS AND REINFORCEMENT REQUIREMENTS

MAX W	MAX V	t	t_F	REINFORCEMENT REQUIRED IN: FRONT WALL	REAR WALL	BOTTOM SLAB	END WALL
1.0 m (3.5')	2.4 m (8')	150 mm (6")	150 mm (6")	NO REINFORCEMENT REQUIRED			
1.0 m (3.5')	3.5 m (12')	200 mm (8")	200 mm (8")				
2.0 m (7')	1.8 m (6')	150 mm (6")	150 mm (6")				
2.0 m (7')	3.5 m (12')	200 mm (8")	200 mm (8")				
4.0 m (14')	1.2 m (4')	150 mm (6")	150 mm (6")	REINFORCEMENT REQUIRED			
	2.4 m (8')	150 mm (6")	200 mm (8")				
4.0 m (14')	3.5 m (12')	200 mm (8")	250 mm (10")				
6 m (20') AND 9 m (30')	1.2 m (4')	150 mm (6")	150 mm (6")				
	1.8 m (6')	150 mm (6")	200 mm (8")				
	2.4 m (8')	200 mm (8")	200 mm (8")				
	3.0 m (10')	200 mm (8")	250 mm (10")				
	3.5 m (12')	200 mm (8")	250 mm (10")				

FOR W > 9 m (30'), V > 3.5 m (12') OR B > 1.2 m (4') SEE PLANS

STANDARD PLANS FOR PUBLIC WORKS CONSTRUCTION

PROMULGATED BY THE PUBLIC WORKS STANDARDS, INC., GREENBOOK COMMITTEE 1984 REV. 1992, 1996

CURB OPENING CATCH BASIN

USE WITH STANDARD SPECIFICATIONS FOR PUBLIC WORKS CONSTRUCTION

STANDARD PLAN METRIC 300-2 SHEET 1 OF 2

NOTES:

1. WHERE THE BASIN IS TO BE CONSTRUCTED WITHIN THE LIMITS OF EXISTING OR PROPOSED SIDEWALK OR IS CONTIGUOUS TO SUCH SIDEWALK, THE TOP SLAB OF THE BASIN MAY BE POURED EITHER MONOLITHIC WITH THE SIDEWALK OR SEPARATELY, USING THE SAME CLASS OF CONCRETE AS IN THE BASIN. WHEN POURED MONOLITHICALLY, THE SIDEWALK SHALL BE PROVIDED WITH A WEAKENED PLANE OR A 25 mm (1") DEEP SAWCUT CONTINUOUSLY AROUND THE EXTERNAL PERIMETER OF THE CATCH BASIN WALLS, INCLUDING ACROSS THE FULL WIDTH OF THE SIDEWALK. SURFACE OF ALL EXPOSED CONCRETE SHALL CONFORM IN SLOPE, GRADE, COLOR, FINISH, AND SCORING TO EXISTING OR PROPOSED CURB AND WALK ADJACENT TO THE BASIN.
2. ALL CURVED CONCRETE SURFACES SHALL BE FORMED BY CURVED FORMS, AND SHALL NOT BE SHAPED BY PLASTERING.
3. FLOOR OF BASIN SHALL BE GIVEN A STEEL TROWEL FINISH AND SHALL HAVE A LONGITUDINAL AND LATERAL SLOPE OF 1:12 MINIMUM AND 1:3 MAXIMUM, EXCEPT WHERE THE GUTTER GRADE EXCEEDS 8%, IN WHICH CASE THE LONGITUDINAL SLOPE OF THE FLOOR SHALL BE THE SAME AS THE GUTTER GRADE. SLOPE FLOOR FROM ALL DIRECTIONS TO THE OUTLET.
4. DIMENSIONS:
   - B = 970 mm (3'-2")
   - V = THE DIFFERENCE IN ELEVATION BETWEEN THE TOP OF THE CURB AND THE INVERT OF THE CATCH BASIN AT THE OUTLET = 1.35 m (4.5').
   - V_U = THE DIFFERENCE IN ELEVATION BETWEEN THE TOP OF THE CURB AND THE INVERT AT THE UPSTREAM END OF THE BASIN, AND SHALL BE DETERMINED BY THE REQUIREMENTS OF NOTE 3, BUT SHALL NOT BE LESS THAN CURB FACE PLUS 300 mm (12").
   - V_I = THE DIFFERENCE IN ELEVATION BETWEEN THE TOP OF THE CURB AND THE INVERT OF THE INLET, NOTED ON THE PLANS.
   - H = NOTED ON THE PLANS.
   - W = NOTED ON THE PLANS.
   - A = THE ANGLE, IN DEGREES, INTERCEPTED BY THE CENTERLINE OF THE CONNECTOR PIPE AND THE CATCH BASIN WALL TO WHICH THE CONNECTOR PIPE IS ATTACHED.
5. PLACE CONNECTOR PIPES AS INDICATED ON THE PLANS. UNLESS OTHERWISE SPECIFIED, THE CONNECTOR PIPE SHALL BE LOCATED AT THE DOWNSTREAM END OF THE BASIN. WHERE THE CONNECTOR PIPE IS SHOWN AT A CORNER, THE CENTERLINE OF THE PIPE SHALL INTERSECT THE INSIDE CORNER OF THE BASIN. THE PIPE MAY BE CUT AND TRIMMED AT A SKEW NECESSARY TO INSURE MINIMUM 80 mm (3") PIPE EMBEDMENT, ALL AROUND, WITHIN THE CATCH BASIN WALL, AND 75 mm (3") RADIUS OF ROUNDING OF STRUCTURE CONCRETE, ALL AROUND, ADJACENT TO PIPE ENDS. A MONOLITHIC CATCH BASIN CONNECTION SHALL BE USED TO JOIN THE CONNECTOR PIPE TO THE CATCH BASIN WHENEVER ANGLE "A" IS LESS THAN 70° OR GREATER THAN 110°, OR WHENEVER THE CONNECTOR PIPE IS LOCATED IN A CORNER. THE OPTIONAL USE OF A MONOLITHIC CATCH BASIN CONNECTION IN ANY CASE IS PERMITTED. MONOLITHIC CATCH BASIN CONNECTIONS MAY BE CONSTRUCTED TO AVOID CUTTING STANDARD LENGTHS OF PIPE.
6. STEPS SHALL BE LOCATED AS SHOWN. IF THE CONNECTOR PIPE INTERFERES WITH THE STEPS, THEY SHALL BE LOCATED AT THE CENTERLINE OF THE DOWNSTREAM END WALL. STEPS SHALL BE SPACED 300 mm (12") APART. THE TOP STEP SHALL BE 175 mm (7") BELOW THE TOP OF THE MANHOLE AND PROJECT 65 mm (2 1/2"). ALL OTHER STEPS SHALL PROJECT 130 mm (6").
7. DOWELS ARE REQUIRED AT EACH CORNER AND AT 2 m (7') ON CENTER (MAXIMUM) ALONG THE BACKWALL.
8. THE FOLLOWING SPPWC ARE INCORPORATED HEREIN:
   - 308 MONOLITHIC CATCH BASIN CONNECTION
   - 309 CATCH BASIN REINFORCEMENT
   - 310 CATCH BASIN FACE PLATE ASSEMBLY AND PROTECTION BAR
   - 312 CATCH BASIN MANHOLE FRAME AND COVER
   - 635 STEEL STEP
   - 636 POLYPROPYLENE PLASTIC STEP

STANDARD PLANS FOR PUBLIC WORKS CONSTRUCTION

CURB OPENING CATCH BASIN

STANDARD PLAN METRIC 300-2 SHEET 2 OF 2

ALL DIMENSIONS ARE IN METERS UNLESS OTHERWISE SHOWN

DRAINAGE DETAILS

NO SCALE **DD-1**

STATE OF CALIFORNIA - DEPARTMENT OF TRANSPORTATION
Caltrans HYDRAULICS

FUNCTIONAL SUPERVISOR: DAVE BHALLA
CALCULATED-DESIGNED BY: VIC T. VALIDO
CHECKED BY: FUSUNG CHANG
REVISED BY / DATE REVISED

LAST REVISION 00-00-00 DATE PLOTTED => 20-MAY-2010 TIME PLOTTED => 13:39

NOTE: "USE WITH STANDARD SPECIFICATIONS FOR PUBLIC WORKS CONSTRUCTION" SHALL NOT APPLY TO THIS CONTRACT.

Caltrans Metric

Dist	COUNTY	ROUTE	KILOMETER POST TOTAL PROJECT	SHEET No.	TOTAL SHEETS
07	LA	138	87.2/88.9	41	156

REGISTERED CIVIL ENGINEER 1/07/10 DATE

5-17-10
PLANS APPROVAL DATE

REGISTERED PROFESSIONAL ENGINEER BALDEV K.BHALLA No. 34350 Exp. 9-30-11 CIVIL STATE OF CALIFORNIA

THE STATE OF CALIFORNIA OR ITS OFFICERS OR AGENTS SHALL NOT BE RESPONSIBLE FOR THE ACCURACY OR COMPLETENESS OF ELECTRONIC COPIES OF THIS PLAN SHEET.

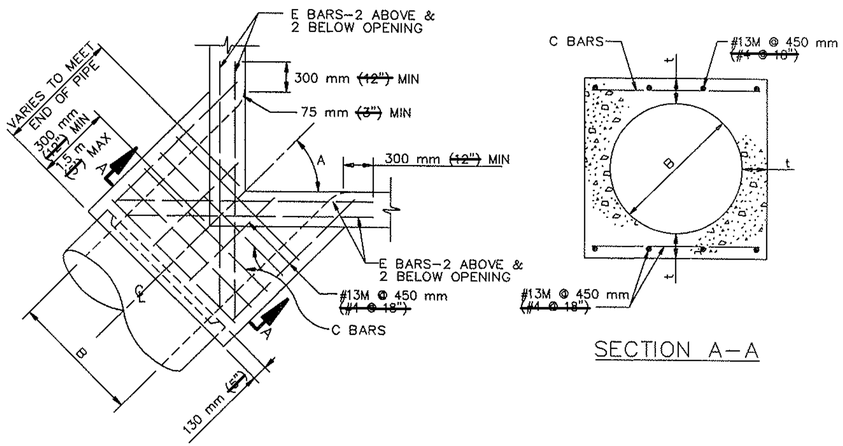

PLAN
CORNER CONNECTION

SECTION A–A

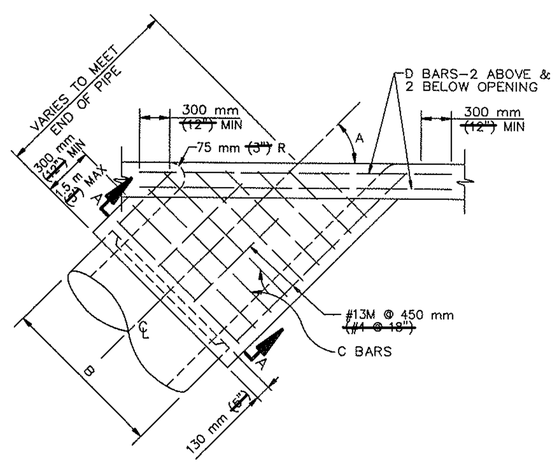

PLAN
SIDE CONNECTION

STANDARD PLANS FOR PUBLIC WORKS CONSTRUCTION

PROMULGATED BY THE PUBLIC WORKS STANDARDS, INC., GREENBOOK COMMITTEE 1984 REV. 1996

MONOLITHIC CATCH BASIN CONNECTION

USE WITH STANDARD SPECIFICATIONS FOR PUBLIC WORKS CONSTRUCTION

STANDARD PLAN METRIC **308–1** SHEET 1 OF 2

STRUCTURAL DATA

B	t	C BARS	D&E BARS	B	t	C BARS	D&E BARS
300 mm (12")	115 mm (4")	#13M @ 150 mm (#4 @ 6")	#16M (#5)	1050 mm (42")	190 mm (7 1/2")	#16M @ 150 mm (#5 @ 6")	#19M (#6)
375 mm (15")	115 mm (4 1/4")			1125 mm (45")	190 mm (7 3/4")		
450 mm (18")	115 mm (4 1/2")			1200 mm (48")	215 mm (8")		
525 mm (21")	140 mm (5")			1275 mm (51")	215 mm (8 1/2")		
600 mm (24")	140 mm (5 1/4")			1350 mm (54")	240 mm (9")		
675 mm (27")	140 mm (5 1/2")			1425 mm (57")	240 mm (9 1/4")		
750 mm (30")	165 mm (6")			1500 mm (60")	240 mm (9 1/2")		
825 mm (33")	165 mm (6 1/4")			1575 mm (63")	260 mm (10")		
900 mm (36")	165 mm (6 1/2")			1650 mm (66")	260 mm (10 1/4")		
975 mm (39")	190 mm (7")			1725 mm (69")	280 mm (10 3/4")		
				1800 mm (72")	280 mm (11")		
FOR B GREATER THAN 1800 mm (72") SEE PLANS							

NOTES

1. REINFORCING STEEL SHALL BE 40 mm (1 1/2") CLEAR FROM FACE OF CONCRETE UNLESS OTHERWISE SHOWN.
2. REINFORCING STEEL FOR INSIDE FACE OF CATCH BASIN SHALL BE CUT AT CENTER OF OPENING AND BENT INTO WALLS OF MONOLITHIC CATCH BASIN CONNECTION. REINFORCING STEEL FOR OUTSIDE FACE OF CATCH BASIN SHALL BE CUT 50 mm (2") CLEAR OF OPENING.
3. CONNECTION SHALL BE PLACED MONOLITHIC WITH CATCH BASIN. THE ROUNDED EDGE OF OUTLET SHALL BE CONSTRUCTED BY PLACING CONCRETE WITH THE SAME CLASS OF CONCRETE AS THE CATCH BASIN AGAINST A CURVED FORM WITH A RADIUS OF 75 mm (3").
4. CONNECTIONS SHALL BE CONSTRUCTED WHEN:
   (A) PIPES INLET OR OUTLET THROUGH CORNER OF CATCH BASIN
   (B) ANGLE A FOR PIPES THROUGH 750 mm (30") IN DIAMETER IS LESS THAN 70° OR GREATER THAN 110°.

STANDARD PLANS FOR PUBLIC WORKS CONSTRUCTION

MONOLITHIC CATCH BASIN CONNECTION

STANDARD PLAN METRIC **308–1** SHEET 2 OF 2

ALL DIMENSIONS ARE IN METERS UNLESS OTHERWISE SHOWN

DRAINAGE DETAILS
NO SCALE **DD-2**

STATE OF CALIFORNIA - DEPARTMENT OF TRANSPORTATION
Caltrans **HYDRAULICS**
FUNCTIONAL SUPERVISOR: DAVE BHALLA
CALCULATED-DESIGNED BY: VIC T. VALIDO
CHECKED BY: FUSUNG CHANG
REVISED BY / DATE REVISED

LAST REVISION 00-00-00 | DATE PLOTTED => 20-MAY-2010 | TIME PLOTTED => 11:30

NOTE: "USE WITH STANDARD SPECIFICATIONS FOR PUBLIC WORKS CONSTRUCTION" SHALL NOT APPLY TO THIS CONTRACT.

Caltrans Metric

Dist	COUNTY	ROUTE	KILOMETER POST TOTAL PROJECT	SHEET No.	TOTAL SHEETS
07	LA	138	87.2/88.9	42	156

REGISTERED CIVIL ENGINEER 1/07/10 DATE

5-17-10
PLANS APPROVAL DATE

REGISTERED PROFESSIONAL ENGINEER BALDEV K. BHALLA No. 34350 Exp. 9-30-11 CIVIL STATE OF CALIFORNIA

THE STATE OF CALIFORNIA OR ITS OFFICERS OR AGENTS SHALL NOT BE RESPONSIBLE FOR THE ACCURACY OR COMPLETENESS OF ELECTRONIC COPIES OF THIS PLAN SHEET.

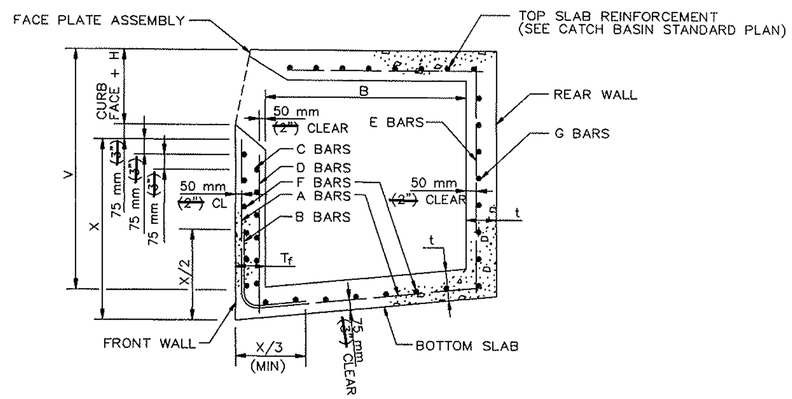

TYPICAL REINFORCEMENT DETAILS

MAX. W	MAX. V	t	tf	A & B BARS	C BARS	D BARS	E BARS	F BARS	G BARS
1 m (3.5')	2.4 m (8')	150 mm (6")	150 mm (6")	—	—	—	—	—	—
1 m (3.5')	3.5 m (12')	200 mm (8")	200 mm (8")	—	—	—	—	—	—
2 m (7')	1.8 m (6")	150 mm (6")	150 mm (6")	—	—	—	—	—	—
2 m (7')	3.5 m (12')	200 mm (8")	200 mm (8")	—	—	—	—	—	—
4 m (14')	1.2 m (4')	150 mm (6")	150 mm (6")	—	13M @ 300 mm (#4 @ 12")	13M @ 450 mm (#4 @ 18")	—	—	—
4 m (14')	2.4 m (8')	150 mm (6")	200 mm (8")	—	13M @ 300 mm (#4 @ 12")	13M @ 450 mm (#4 @ 18")	—	—	—
4 m (14')	3.5 m (12')	200 mm (8")	250 mm (10")	—	13M @ 150 mm (#4 @ 6")	13M @ 450 mm (#4 @ 18")	—	—	—
9 m (29')	1.2 m (4')	150 mm (6")	150 mm (6")	13M @ 600 mm (#4 @ 24")	—	—	—	13M @ 450 mm (#4 @ 18")	—
9 m (29')	1.5 m (5')	150 mm (6")	200 mm (8")	13M @ 600 mm (#4 @ 24")	—	—	—	13M @ 450 mm (#4 @ 18")	—
9 m (29')	1.8 m (6')	150 mm (6")	200 mm (8")	13M @ 450 mm (#4 @ 18")	—	—	—	13M @ 450 mm (#4 @ 18")	—
9 m (29')	2.1 m (7')	200 mm (8")	200 mm (8")	13M @ 425 mm (#4 @ 17")	—	—	—	13M @ 450 mm (#4 @ 18")	—
9 m (29')	2.4 m (8')	200 mm (8")	200 mm (8")	13M @ 325 mm (#4 @ 13")	—	—	—	13M @ 450 mm (#4 @ 18")	—
9 m (29')	2.7 m (9')	200 mm (8")	250 mm (10")	13M @ 375 mm (#4 @ 15")	—	—	—	13M @ 450 mm (#4 @ 18")	—
9 m (29')	3.0 m (10')	200 mm (8")	250 mm (10")	13M @ 300 mm (#4 @ 12")	—	—	—	13M @ 450 mm (#4 @ 18")	—
9 m (29')	3.3 m (11')	200 mm (8")	250 mm (10")	16M @ 375 mm (#5 @ 15")	—	—	13M @ 250 mm (#4 @ 10")	13M @ 450 mm (#4 @ 18")	13M @ 450 mm (#4 @ 18")
9 m (29')	3.5 m (12')	200 mm (8")	250 mm (10")	19M @ 450 mm (#6 @ 18")	—	—	13M @ 225 mm (#4 @ 9")	13M @ 450 mm (#4 @ 18")	13M @ 450 mm (#4 @ 18")
FOR W > 9 m (29') OR B > 1200 mm (4') SEE PLANS									

CURB OPENING CATCH BASIN REINFORCEMENT

STANDARD PLANS FOR PUBLIC WORKS CONSTRUCTION

PROMULGATED BY THE PUBLIC WORKS STANDARDS, INC., GREENBOOK COMMITTEE 1984 REV. 1998

CATCH BASIN REINFORCEMENT

USE WITH STANDARD SPECIFICATIONS FOR PUBLIC WORKS CONSTRUCTION

STANDARD PLAN METRIC **309-1** SHEET 1 OF 2

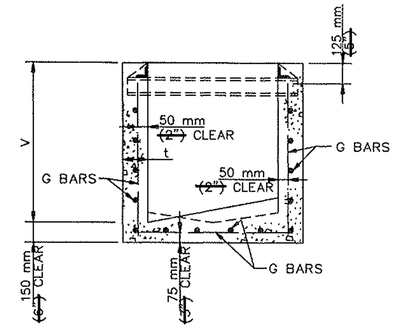

TYPICAL REINFORCEMENT DETAILS

V MAX	t	SIDE AND END WALL STEEL G BARS
1.2 m (4')	150 mm (6")	#13M @ 250 mm (#4 @ 10")
2.4 m (8')	200 mm (8")	#13M @ 150 mm (#4 @ 6")
3.5 m (12')	250 mm (10")	#16M @ 150 mm (#5 @ 6")
FOR V > 3.5 m (12') SEE PLANS		

GRATING CATCH BASIN REINFORCEMENT

NOTE

UNLESS OTHERWISE SPECIFIED, REINFORCEMENT FOR CURB OPENINGS AND GRATING CATCH BASINS SHALL TERMINATE 50 mm (2") FROM FACE OF CONCRETE.

STANDARD PLANS FOR PUBLIC WORKS CONSTRUCTION

CATCH BASIN REINFORCEMENT

STANDARD PLAN METRIC **309-1** SHEET 2 OF 2

ALL DIMENSIONS ARE IN METERS UNLESS OTHERWISE SHOWN

DRAINAGE DETAILS

NO SCALE **DD-3**

STATE OF CALIFORNIA - DEPARTMENT OF TRANSPORTATION
Caltrans **HYDRAULICS**

FUNCTIONAL SUPERVISOR: DAVE BHALLA
CALCULATED-DESIGNED BY: VIC T. VALIDO
CHECKED BY: FUSUNG CHANG
REVISED BY / DATE REVISED

LAST REVISION 00-00-00 | DATE PLOTTED => 20-MAY-2010 | TIME PLOTTED => 11:30

NOTE: "USE WITH STANDARD SPECIFICATIONS FOR PUBLIC WORKS CONSTRUCTION" SHALL NOT APPLY TO THIS CONTRACT.

Caltrans Metric

Dist	COUNTY	ROUTE	KILOMETER POST TOTAL PROJECT	SHEET No.	TOTAL SHEETS
07	LA	138	87.2/88.9	43	156

REGISTERED CIVIL ENGINEER 1/07/10 DATE

5-17-10
PLANS APPROVAL DATE

REGISTERED PROFESSIONAL ENGINEER BALDEV K. BHALLA No. 34350 Exp. 9-30-11 CIVIL STATE OF CALIFORNIA

THE STATE OF CALIFORNIA OR ITS OFFICERS OR AGENTS SHALL NOT BE RESPONSIBLE FOR THE ACCURACY OR COMPLETENESS OF ELECTRONIC COPIES OF THIS PLAN SHEET.

SUPPORT BOLT AND FACE PLATE 120 mm ~~(4 1/2")~~ TOP SLAB

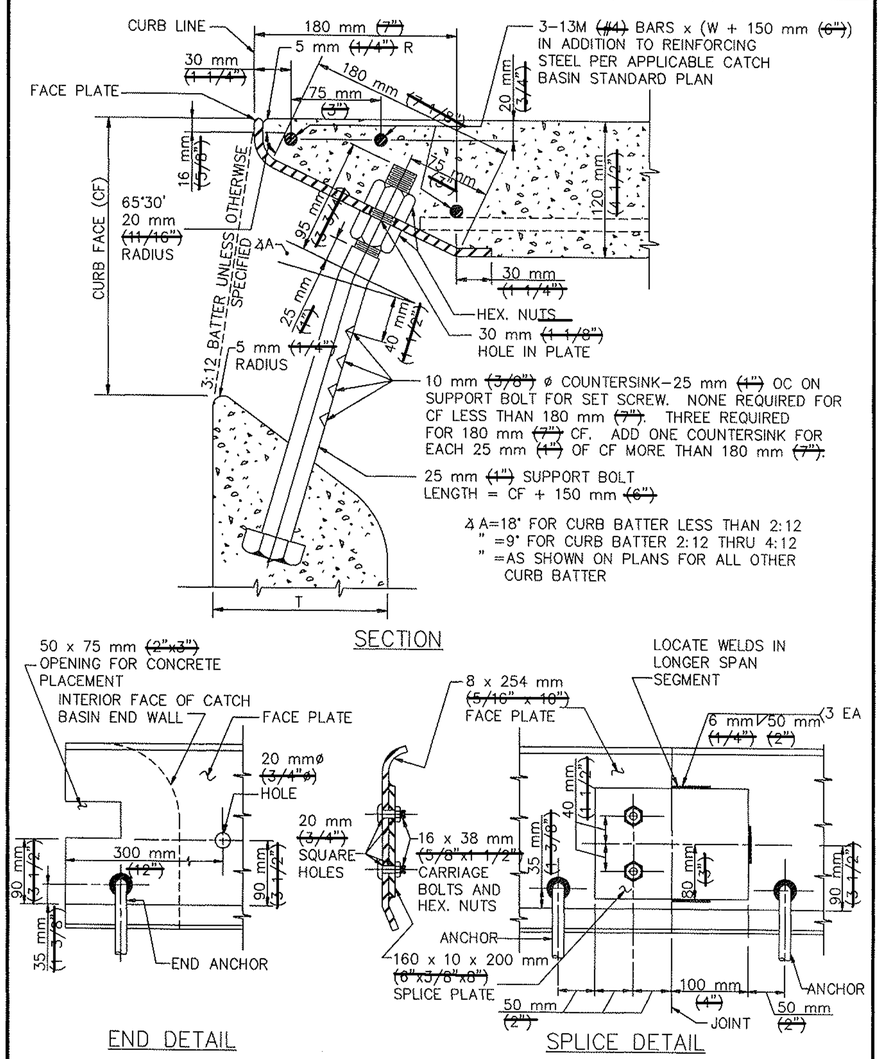

STANDARD PLANS FOR PUBLIC WORKS CONSTRUCTION

PROMULGATED BY THE PUBLIC WORKS STANDARDS INC. GREENBOOK COMMITTEE 1984 REV. 1996, 2005

CATCH BASIN FACE PLATE ASSEMBLY AND PROTECTION BAR

USE WITH STANDARD SPECIFICATIONS FOR PUBLIC WORKS CONSTRUCTION

STANDARD PLAN METRIC **310-2** SHEET 1 OF 6

SUPPORT BOLT AND FACE PLATE 150 mm ~~(6")~~ TOP SLAB

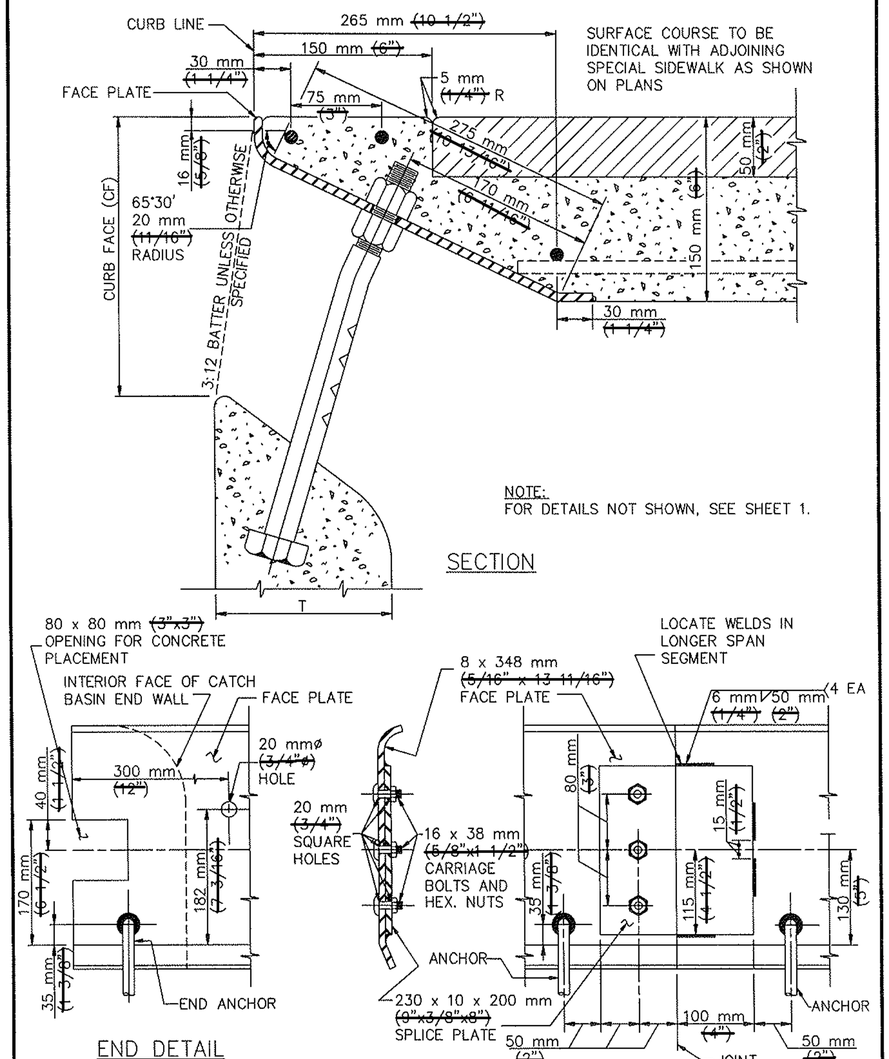

STANDARD PLANS FOR PUBLIC WORKS CONSTRUCTION

CATCH BASIN FACE PLATE ASSEMBLY AND PROTECTION BAR

STANDARD PLAN METRIC **310-2** SHEET 2 OF 6

ALL DIMENSIONS ARE IN METERS UNLESS OTHERWISE SHOWN

DRAINAGE DETAILS

NO SCALE **DD-4**

STATE OF CALIFORNIA - DEPARTMENT OF TRANSPORTATION
Caltrans **HYDRAULICS**

FUNCTIONAL SUPERVISOR: DAVE BHALLA
CALCULATED-DESIGNED BY: VIC T. VALIDO
CHECKED BY: FUSUNG CHANG
REVISED BY / DATE REVISED

LAST REVISION 00-00-00 DATE PLOTTED => 20-MAY-2010 TIME PLOTTED => 11:30

NOTE: "USE WITH STANDARD SPECIFICATIONS FOR PUBLIC WORKS CONSTRUCTION" SHALL NOT APPLY TO THIS CONTRACT.

Caltrans Metric

Dist	COUNTY	ROUTE	KILOMETER POST TOTAL PROJECT	SHEET No.	TOTAL SHEETS
07	LA	138	87.2/88.9	44	156

REGISTERED CIVIL ENGINEER 1/07/10 DATE

5-17-10
PLANS APPROVAL DATE

REGISTERED PROFESSIONAL ENGINEER BALDEV K. BHALLA No. 34350 Exp. 9-30-11 CIVIL STATE OF CALIFORNIA

THE STATE OF CALIFORNIA OR ITS OFFICERS OR AGENTS SHALL NOT BE RESPONSIBLE FOR THE ACCURACY OR COMPLETENESS OF ELECTRONIC COPIES OF THIS PLAN SHEET.

FACE PLATE ANCHORS

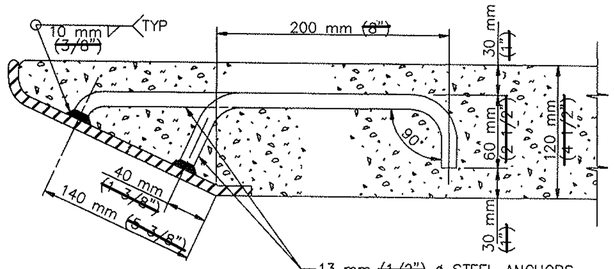

HOOK ANCHOR – 120 mm (4 1/2") TOP SLAB

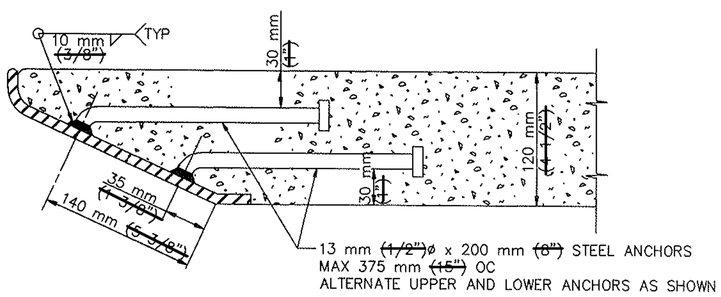

ROUND HEAD ANCHOR – 120 mm (4 1/2") TOP SLAB

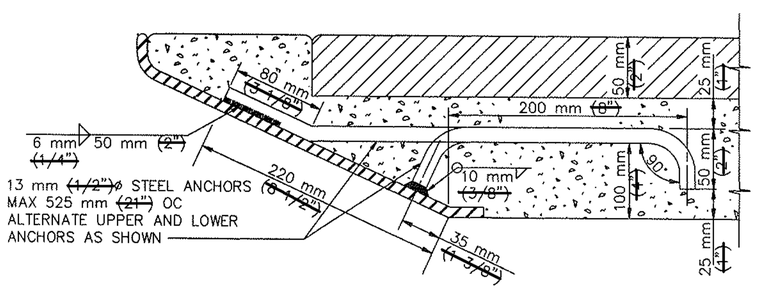

HOOK ANCHOR – 150 mm (6") TOP SLAB

STANDARD PLANS FOR PUBLIC WORKS CONSTRUCTION

CATCH BASIN FACE PLATE ASSEMBLY AND PROTECTION BAR

STANDARD PLAN METRIC **310-2** SHEET 3 OF 6

PROTECTION BAR AND SUPPORT BOLT(S) WITH ADJUSTABLE STIRRUP(S) – (TYPE A)

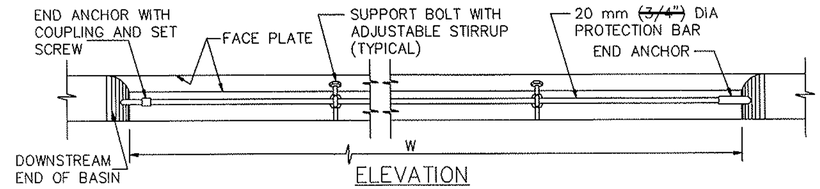

ELEVATION

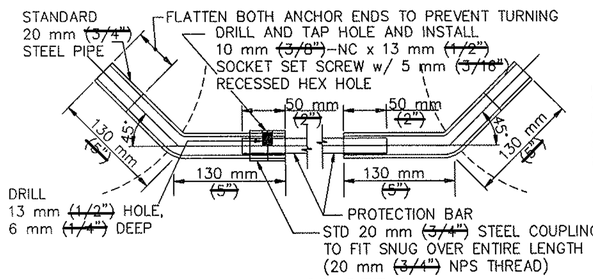

END ANCHOR DETAIL

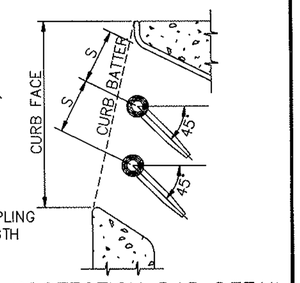

DOUBLE PROTECTION BAR DETAIL

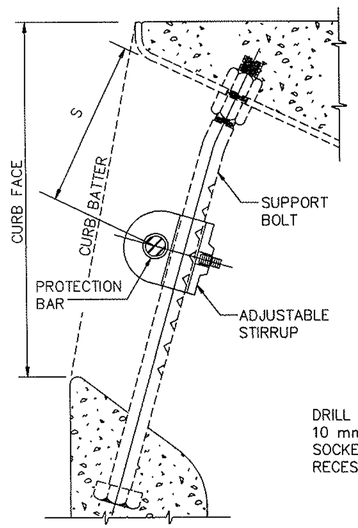

PROTECTION BAR & STIRRUP LOCATION

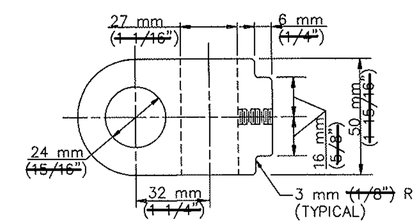

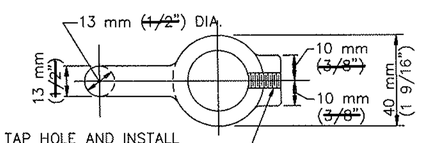

STIRRUP DETAIL

STANDARD PLANS FOR PUBLIC WORKS CONSTRUCTION

CATCH BASIN FACE PLATE ASSEMBLY AND PROTECTION BAR

STANDARD PLAN METRIC **310-2** SHEET 4 OF 6

ALL DIMENSIONS ARE IN METERS UNLESS OTHERWISE SHOWN

DRAINAGE DETAILS

NO SCALE **DD-5**

STATE OF CALIFORNIA - DEPARTMENT OF TRANSPORTATION	Caltrans HYDRAULICS	
FUNCTIONAL SUPERVISOR	DAVE BHALLA	
CALCULATED-DESIGNED BY	VIC T. VALIDO	REVISED BY
CHECKED BY	FUSUNG CHANG	DATE REVISED

LAST REVISION 00-00-00 DATE PLOTTED => 20-MAY-2010 TIME PLOTTED => 11:30

NOTE: "USE WITH STANDARD SPECIFICATIONS FOR PUBLIC WORKS CONSTRUCTION" SHALL NOT APPLY TO THIS CONTRACT.

Caltrans Metric

Dist	COUNTY	ROUTE	KILOMETER POST TOTAL PROJECT	SHEET No.	TOTAL SHEETS
07	LA	138	87.2/88.9	45	156

REGISTERED CIVIL ENGINEER 1/07/10 DATE

5-17-10
PLANS APPROVAL DATE

REGISTERED PROFESSIONAL ENGINEER BALDEV K. BHALLA No. 34350 Exp. 9-30-11 CIVIL STATE OF CALIFORNIA

THE STATE OF CALIFORNIA OR ITS OFFICERS OR AGENTS SHALL NOT BE RESPONSIBLE FOR THE ACCURACY OR COMPLETENESS OF ELECTRONIC COPIES OF THIS PLAN SHEET.

PROTECTION BAR AND SUPPORT BOLT(S) WITH FIXED STIRRUP(S) – (TYPE B)

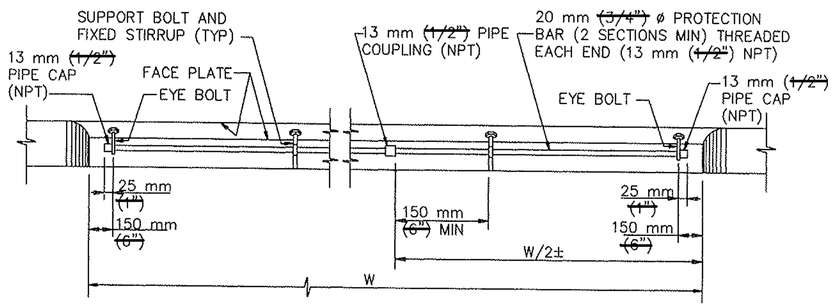

ELEVATION

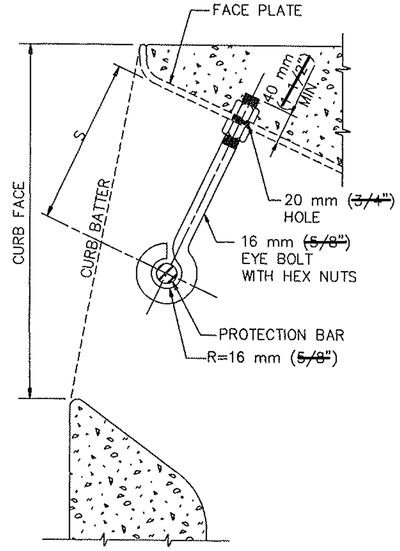

EYE BOLT DETAIL

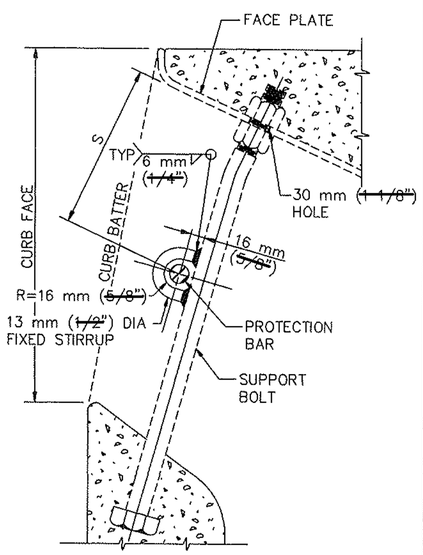

STIRRUP DETAIL

STANDARD PLANS FOR PUBLIC WORKS CONSTRUCTION

CATCH BASIN FACE PLATE ASSEMBLY AND PROTECTION BAR

STANDARD PLAN METRIC **310–2** SHEET 5 OF 6

NOTES:

GENERAL

1. ALL PARTS SHALL BE STEEL, EXCEPT SET SCREWS, WHICH SHALL BE STAINLESS STEEL OR BRASS.
2. EXCLUDING SET SCREWS, ALL EXPOSED METAL PARTS SHALL BE GALVANIZED AFTER FABRICATION.
3. CURB FACE SHALL BE AS NOTED ON THE PLANS.
4. CURB BATTER SHALL BE 3:12 UNLESS OTHERWISE SPECIFIED.

FACE PLATE

5. FACE PLATE LENGTHS SHALL BE CATCH BASIN W PLUS 300 mm (12") EXCEPT AS MODIFIED FOR A "CURB OPENING CATCH BASIN AT DRIVEWAY".
6. WHEN THE LENGTH OF THE FACE PLATE IS BETWEEN 6.5 m (22') AND 13 m (43'), TWO SECTIONS MAY BE USED. WHEN THE LENGTH EXCEEDS 13 m (43'), THREE SECTIONS MAY BE USED. SECTIONS SHALL BE SPLICED ACCORDING TO THE APPLICABLE SPLICE DETAIL. SPLICE SHALL BE PLACED 300 mm (1') FROM A SUPPORT BOLT.
7. WHERE CATCH BASINS ARE TO BE CONSTRUCTED ON CURVES, THE MAXIMUM CHORD LENGTH FOR THE FACE PLATE SHALL BE SUCH THAT THE MAXIMUM PERPENDICULAR DISTANCE TO THE TRUE CURVE SHALL NOT EXCEED 25 mm (1"). WHERE MORE THAN ONE CHORD IS REQUIRED, CHORD LENGTHS SHALL BE EQUAL. CHORD SECTIONS SHALL BE SPLICED ACCORDING TO THE APPLICABLE SPLICE DETAIL (MODIFIED TO FIT THE CHORD DEFLECTION) AND A SUPPORT BOLT SHALL BE PLACED 300 mm (1') FROM THE SPLICE.
8. ROUND HEAD ANCHORS FOR THE FACE PLATE SHALL BE NELSON H–4F SHEAR CONNECTOR, KSN WELDING SYSTEMS DIVISION SHEAR CONNECTOR OR EQUAL.

SUPPORT BOLT

9. SUPPORT BOLTS ARE REQUIRED WHEN THE LENGTH OF THE CATCH BASIN OPENING IS 2 m (7') OR GREATER, AND SHALL BE EVENLY SPACED ACROSS THE OPENING. SPACING SHALL NOT BE LESS THAN 1 m (3'–6") ON CENTER NOR GREATER THAN 1.5 m (5') ON CENTER.

STIRRUP

10. FOR TYPE A, MATERIAL SHALL BE CAST STEEL.

PROTECTION BAR

11. TYPE A SHALL BE USED UNLESS OTHERWISE SPECIFIED.
12. FOR TYPE A, THE BAR SHALL BE CUT TO FIT IN THE FIELD. WHEN "W" IS OVER 6 m (21'), THE PROTECTION BAR SHALL CONSIST OF 2 OR MORE SECTIONS. A SPECIAL CONNECTOR BETWEEN THE PROTECTION BAR PIECES SHALL CONSIST OF A 125 mm (5") LENGTH OF STANDARD 20 mm (3/4") PIPE WITH STANDARD COUPLINGS FULLY THREADED ONTO EACH END DRILLED AND TAPPED FOR A SOCKET SET SCREW AS DETAILED FOR THE DOWNSTREAM END ANCHOR.
13. FOR TYPE B, THE BAR SHALL BE TWO PIECES. TWO EYE BOLTS AND A WELDED STIRRUP ON EACH SUPPORT BOLT ARE REQUIRED.
14. NUMBER OF PROTECTION BARS AND LOCATIONS ARE AS FOLLOWS:

CURB BATTER	MAXIMUM CURB FACE, mm (INCHES)													S DIMENSION
	150 (6")	175 (7")	200 (8")	225 (9")	250 (10")	275 (11")	300 (12")	325 (13")	350 (14")	375 (15")	400 (16")	425 (17")	450 (18")	
0:12	0	0	90 (3.5")	90 (3.5")	115 (4.5")	115 (4.5")	115 (4.5")	140 (5.5")	90 (3.5")	90 (3.5")	115 (4.5")	115 (4.5")	115 (4.5")	
1:12	0	0	90 (3.5")	90 (3.5")	115 (4.5")	115 (4.5")	115 (4.5")	140 (5.5")	90 (3.5")	90 (3.5")	115 (4.5")	115 (4.5")	140 (5.5")	
2:12	0	0	90 (3.5")	90 (3.5")	115 (4.5")	115 (4.5")	140 (5.5")	90 (3.5")	90 (3.5")	115 (4.5")	115 (4.5")	140 (5.5")	140 (5.5")	
3:12	0	0	90 (3.5")	90 (3.5")	115 (4.5")	115 (4.5")	140 (5.5")	90 (3.5")	115 (4.5")	115 (4.5")	140 (5.5")	140 (5.5")	115 (4.5")	
4:12	0	90 (3.5")	90 (3.5")	115 (4.5")	115 (4.5")	140 (5.5")	90 (3.5")	90 (3.5")	115 (4.5")	115 (4.5")	140 (5.5")	115 (4.5")	115 (4.5")	
NUMBER OF PROTECTION BARS	0	1					2*					3*		

FOR OTHER CURB FACE OR BATTER SEE PLANS
* TYPE A PROTECTION BAR ONLY

STANDARD PLANS FOR PUBLIC WORKS CONSTRUCTION

CATCH BASIN FACE PLATE ASSEMBLY AND PROTECTION BAR

STANDARD PLAN METRIC **310–2** SHEET 6 OF 6

ALL DIMENSIONS ARE IN METERS UNLESS OTHERWISE SHOWN

DRAINAGE DETAILS
NO SCALE **DD-6**

STATE OF CALIFORNIA - DEPARTMENT OF TRANSPORTATION
Caltrans **HYDRAULICS**
FUNCTIONAL SUPERVISOR: DAVE BHALLA
CALCULATED-DESIGNED BY: VIC T. VALIDO
CHECKED BY: FUSUNG CHANG
REVISED BY / DATE REVISED

LAST REVISION 00-00-00 | DATE PLOTTED => 20-MAY-2010 | TIME PLOTTED => 11:30

NOTE: "USE WITH STANDARD SPECIFICATIONS FOR PUBLIC WORKS CONSTRUCTION" SHALL NOT APPLY TO THIS CONTRACT.

Caltrans Metric

Dist	COUNTY	ROUTE	KILOMETER POST TOTAL PROJECT	SHEET No.	TOTAL SHEETS
07	LA	138	87.2/88.9	46	156

REGISTERED CIVIL ENGINEER 1/07/10 DATE

5-17-10
PLANS APPROVAL DATE

REGISTERED PROFESSIONAL ENGINEER BALDEV K.BHALLA No. 34350 Exp. 9-30-11 CIVIL STATE OF CALIFORNIA

THE STATE OF CALIFORNIA OR ITS OFFICERS OR AGENTS SHALL NOT BE RESPONSIBLE FOR THE ACCURACY OR COMPLETENESS OF ELECTRONIC COPIES OF THIS PLAN SHEET.

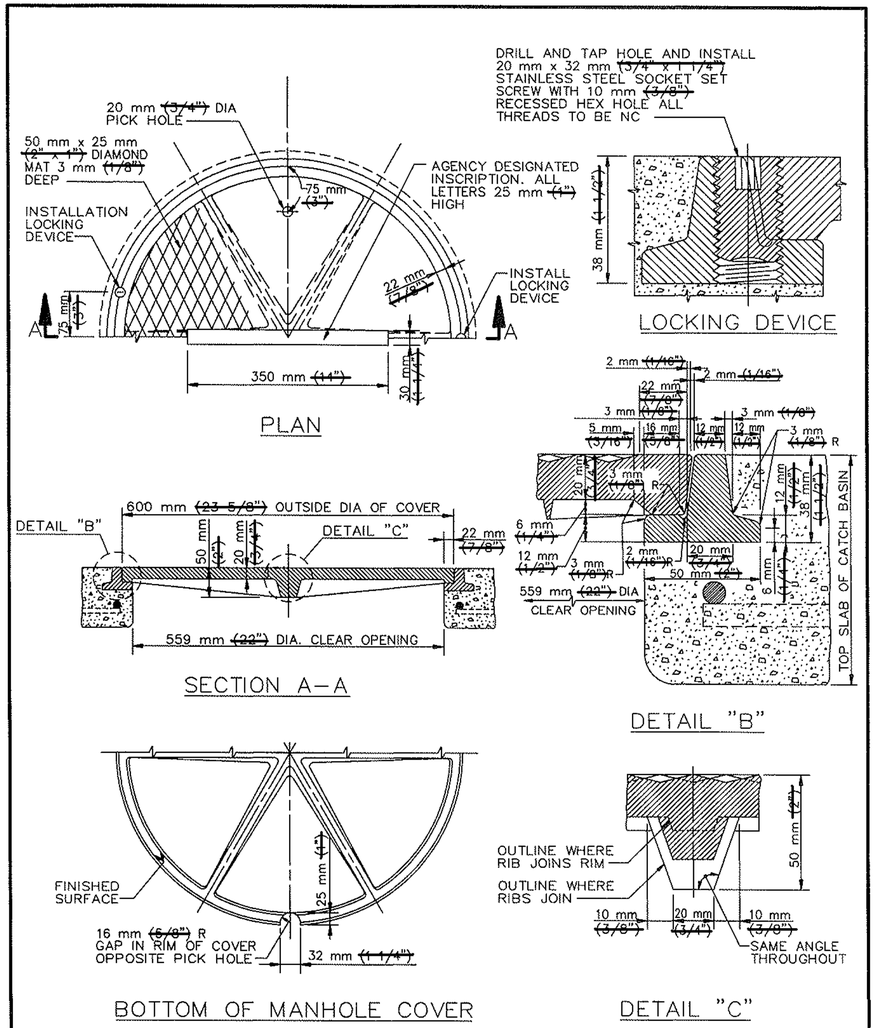

STANDARD PLANS FOR PUBLIC WORKS CONSTRUCTION

PROMULGATED BY THE PUBLIC WORKS STANDARDS INC. GREENBOOK COMMITTEE 1984 REV. 1993, 1998

CATCH BASIN MANHOLE FRAME AND COVER

USE WITH STANDARD SPECIFICATIONS FOR PUBLIC WORKS CONSTRUCTION

STANDARD PLAN METRIC **312–2** SHEET 1 OF 2

NOTES

1. THE CAST IRON USED SHALL CONFORM TO ASTM A48M CLASS 35B.
2. THE FRAME AND COVER SHALL BE COATED WITH ASPHALTUM OR BITUMINOUS PAINT AFTER TESTING AND INSPECTION.
3. FOUNDRY IDENTIFYING MARK, HEAT AND DATE SHALL BE CAST ON THE BOTTOM OF THE COVER AND ON THE INSIDE OF THE FRAME.
4. IMPORTED COVERS AND FRAMES SHALL HAVE THE COUNTRY OF ORIGIN MARKING IN COMPLIANCE WITH FEDERAL REGULATIONS.
5. ~~WEIGHT~~ MASS OF FRAME SHALL BE 15 Kg ~~(30 POUNDS)~~. ~~WEIGHT~~ MASS OF COVER SHALL BE 40 kg ~~(85 POUNDS)~~. ACTUAL WEIGHTS SHALL BE WITHIN A RANGE OF 95% TO 110%.
6. THE MANHOLE FRAME AND COVER SHALL BE INSPECTED BY THE ENGINEER PRIOR TO SHIPMENT TO THE WORK SITE. ACCEPTANCE WILL BE INDICATED BY THE AGENCY'S MARK.
7. THE PROOF–LOAD FOR TEST METHOD B OF SSPWC 206–3.2 IS 127 kN ~~(28,600 POUNDS)~~.
8. AGENCY INSCRIPTION SHALL BE AS SPECIFIED ON THE PLANS OR SPECIAL PROVISIONS.

STANDARD PLANS FOR PUBLIC WORKS CONSTRUCTION

CATCH BASIN MANHOLE FRAME AND COVER

STANDARD PLAN METRIC **312–2** SHEET 2 OF 2

ALL DIMENSIONS ARE IN METERS UNLESS OTHERWISE SHOWN

DRAINAGE DETAILS

NO SCALE **DD-7**

STATE OF CALIFORNIA - DEPARTMENT OF TRANSPORTATION
Caltrans **HYDRAULICS**

FUNCTIONAL SUPERVISOR: DAVE BHALLA
CALCULATED-DESIGNED BY: FUSUNG CHANG
CHECKED BY: VIC T. VALIDO
REVISED BY / DATE REVISED

LAST REVISION 00-00-00 DATE PLOTTED => 20-MAY-2010 TIME PLOTTED => 11:30

NOTE: "USE WITH STANDARD SPECIFICATIONS FOR PUBLIC WORKS CONSTRUCTION" SHALL NOT APPLY TO THIS CONTRACT.

Caltrans Metric

Dist	COUNTY	ROUTE	KILOMETER POST TOTAL PROJECT	SHEET No.	TOTAL SHEETS
07	LA	138	87.2/88.9	47	156

REGISTERED CIVIL ENGINEER 1/07/10 DATE

5-17-10
PLANS APPROVAL DATE

REGISTERED PROFESSIONAL ENGINEER BALDEV K. BHALLA No. 34350 Exp. 9-30-11 CIVIL STATE OF CALIFORNIA

THE STATE OF CALIFORNIA OR ITS OFFICERS OR AGENTS SHALL NOT BE RESPONSIBLE FOR THE ACCURACY OR COMPLETENESS OF ELECTRONIC COPIES OF THIS PLAN SHEET.

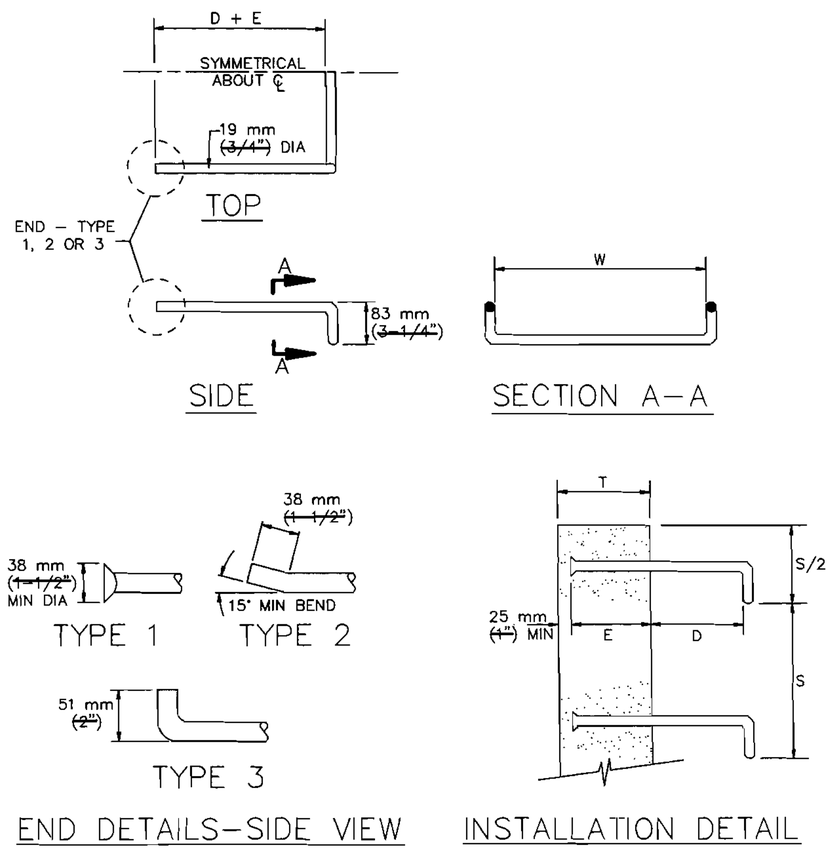

UNLESS OTHERWISE NOTED:

D = 175 mm (7")
E = 150 mm (6") OR T – 25 mm (1"), WHICHEVER IS LESS
MINIMUM E IS 75 mm (3")
S = 300 mm (12") MAX, EVENLY SPACED
W = 400 mm (16") MIN

FOR MANHOLES AND UNDERGROUND VAULTS:
S = 400 mm (16") MAX, EVENLY SPACED
W = 350 mm (14") MIN

STANDARD PLANS FOR PUBLIC WORKS CONSTRUCTION

PROMULGATED BY THE PUBLIC WORKS STANDARDS INC. GREENBOOK COMMITTEE 1984 REV. 1992, 1996

STEEL STEP

USE WITH STANDARD SPECIFICATIONS FOR PUBLIC WORKS CONSTRUCTION

STANDARD PLAN METRIC **635–2** SHEET 1 OF 2

NOTES:

1. STEPS SHALL BE STEEL CONFORMING TO ASTM A307 AND SHALL BE GALVANIZED AFTER FABRICATION. UNLESS OTHERWISE NOTED, STEPS MAY ALSO BE POLYPROPYLENE STEPS, STEEL REINFORCED, CONFORMING TO SPPWC 636.
2. IF STAINLESS STEEL STEPS ARE REQUIRED, THE MATERIAL SHALL CONFORM TO ASTM A276, 300 SERIES.
3. STEP ENDS MAY BE TYPE 1, 2 OR 3, AS SHOWN.
4. BOTTOM STEP SHALL BE A MAXIMUM OF 600 mm (2') ABOVE FLOOR OR SHELF.
5. STEPS WITH TYPE 1 OR 2 ENDS MAY BE CAST IN PLACE, OR PLACED IN THE CENTER OF 40 mm (1-1/2") MIN DIA DRILLED OR FORMED HOLES AND SET WITH HIGH STRENGTH NON-SHRINK GROUT, 40 MPa (6000 PSI) MIN. STEPS WITH TYPE 3 ENDS SHALL BE CAST IN PLACE.

STANDARD PLANS FOR PUBLIC WORKS CONSTRUCTION

STEEL STEP

STANDARD PLAN METRIC **635–2** SHEET 2 OF 2

ALL DIMENSIONS ARE IN METERS UNLESS OTHERWISE SHOWN

DRAINAGE DETAILS
NO SCALE **DD-8**

STATE OF CALIFORNIA - DEPARTMENT OF TRANSPORTATION
Caltrans **HYDRAULICS**

FUNCTIONAL SUPERVISOR: DAVE BHALLA
CALCULATED-DESIGNED BY: VIC T. VALIDO
CHECKED BY: FUSUNG CHANG
REVISED BY / DATE REVISED

LAST REVISION 00-00-00 DATE PLOTTED => 20-MAY-2010 TIME PLOTTED => 11:30

NOTE: "USE WITH STANDARD SPECIFICATIONS FOR PUBLIC WORKS CONSTRUCTION" SHALL NOT APPLY TO THIS CONTRACT.

Caltrans Metric

Dist	COUNTY	ROUTE	KILOMETER POST TOTAL PROJECT	SHEET No.	TOTAL SHEETS
07	LA	138	87.2/88.9	48	156

REGISTERED CIVIL ENGINEER 1/07/10 DATE

5-17-10
PLANS APPROVAL DATE

REGISTERED PROFESSIONAL ENGINEER BALDEV K. BHALLA No. 34350 Exp. 9-30-11 CIVIL STATE OF CALIFORNIA

THE STATE OF CALIFORNIA OR ITS OFFICERS OR AGENTS SHALL NOT BE RESPONSIBLE FOR THE ACCURACY OR COMPLETENESS OF ELECTRONIC COPIES OF THIS PLAN SHEET.

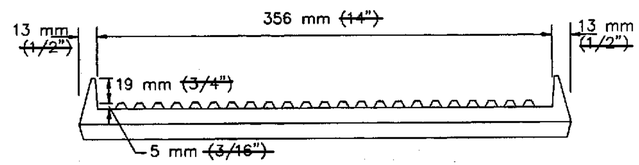

FRONT

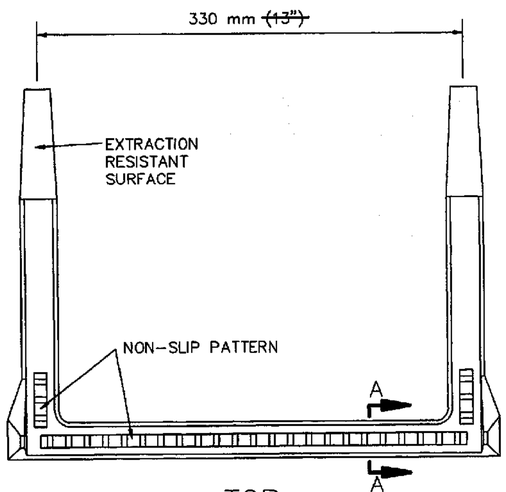

TOP

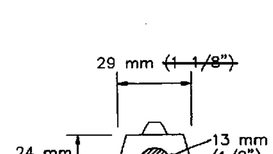

SECTION A–A

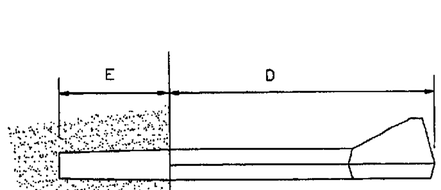

SIDE

STANDARD PLANS FOR PUBLIC WORKS CONSTRUCTION

PROMULGATED BY THE PUBLIC WORKS STANDARDS INC. GREENBOOK COMMITTEE 1991 REV. 1996

POLYPROPYLENE PLASTIC STEP

USE WITH STANDARD SPECIFICATIONS FOR PUBLIC WORKS CONSTRUCTION

STANDARD PLAN METRIC **636-1** SHEET 1 OF 2

NOTES:

1. STEPS SHALL BE STEEL-REINFORCED COPOLYMER POLYPROPYLENE PLASTIC CONFORMING TO:

   (A) ASTM D478 AND C497, EXCEPT THAT THE MINIMUM HORIZONTAL PULLOUT LOAD SHALL BE 6.7 kN ~~(1500 LBS)~~.
   (B) ASTM A615 GRADE 60 DEFORMED REINFORCING STEEL BAR.
   (C) CALIFORNIA CODE OF REGULATIONS TITLE 8, GENERAL INDUSTRY SAFETY ORDERS.

2. STEPS SHALL BE CAPABLE OF WITHSTANDING AN IMPACT LOAD OF 95 N.m ~~(70 FT-LBS)~~ AT −7°C ~~(20°F)~~ WITHOUT CRACKING OR FRACTURING.

3. THE MINIMUM TOTAL CROSS-SECTIONAL AREA OF THE EXPOSED PORTION OF THE STEP, INCLUDING THE DEFORMED STEEL BAR AND EXCLUDING THE NON-SLIP TREAD SURFACE, SHALL BE 645 mm2 ~~(1.0 SQ IN)~~.

4. THE ENTIRE POLYPROPYLENE PLASTIC MATERIAL SURROUNDING THE REINFORCING STEEL BAR SHALL BE CAST MONOLITHICALLY. MINIMUM COVER SHALL BE 5 mm ~~(3/16")~~.

5. A CERTIFICATION OF COMPLIANCE WITH THE REQUIREMENTS OF NOTES 1 THROUGH 4 PREPARED BY AN INDEPENDENT CERTIFIED LABORATORY SHALL BE SUBMITTED TO THE ENGINEER CONCURRENTLY WITH A REQUEST FOR APPROVAL.

6. E = 86 mm ~~(3 3/8")~~. FOR VAULTS AND MANHOLES, D = 140 mm ~~(5 1/2")~~. FOR OTHER INSTALLATIONS, D = 190 mm ~~(7 1/2")~~. THESE DIMENSIONS MAY BE PLUS OR MINUS 6 mm ~~(1/4")~~.

7. STEPS SHALL BE EVENLY SPACED. MAXIMUM VERTICAL SPACING OF STEPS SHALL BE 400 mm ~~(16")~~, WITH THE BOTTOM STEP A MAXIMUM OF 600 mm ~~(2')~~ ABOVE FLOOR OR SHELF.

8. IF TAPERED STEPS ARE INSTALLED INTO STRAIGHT DRILLED OR FORMED HOLES, APPROVED NON-SHRINK GROUT SHALL BE INJECTED INTO THE HOLE PRIOR TO INSTALLATION. HOLES SHALL BE STRAIGHT AND PARALLEL. EXCEPT AS OTHERWISE NOTED, STEPS SHALL BE INSTALLED IN ACCORDANCE WITH MANUFACTURER'S RECOMMENDED PROCEDURES.

9. A DROP STEP WITH A MINIMUM DROP OF 19 mm ~~(3/4")~~ MAY BE USED. THE DROP STEP SHALL MEET ALL OTHER CRITERIA OF THIS PLAN.

STANDARD PLANS FOR PUBLIC WORKS CONSTRUCTION

POLYPROPYLENE PLASTIC STEP

STANDARD PLAN METRIC **636-1** SHEET 2 OF 2

ALL DIMENSIONS ARE IN METERS UNLESS OTHERWISE SHOWN

DRAINAGE DETAILS

NO SCALE **DD-9**

STATE OF CALIFORNIA - DEPARTMENT OF TRANSPORTATION
Caltrans **HYDRAULICS**

FUNCTIONAL SUPERVISOR: DAVE BHALLA
CALCULATED-DESIGNED BY: VIC T. VALIDO
CHECKED BY: FUSUNG CHANG
REVISED BY / DATE REVISED

LAST REVISION 00-00-00 DATE PLOTTED => 20-MAY-2010 TIME PLOTTED => 11:30

Dist	COUNTY	ROUTE	KILOMETER POST TOTAL PROJECT	SHEET No.	TOTAL SHEETS
07	LA	138	87.2/88.9	49	156

REGISTERED CIVIL ENGINEER 1/07/10 DATE

5-17-10
PLANS APPROVAL DATE

REGISTERED PROFESSIONAL ENGINEER BALDEV K. BHALLA No. 34350 Exp. 9-30-11 CIVIL STATE OF CALIFORNIA

THE STATE OF CALIFORNIA OR ITS OFFICERS OR AGENTS SHALL NOT BE RESPONSIBLE FOR THE ACCURACY OR COMPLETENESS OF ELECTRONIC COPIES OF THIS PLAN SHEET.

Caltrans Metric

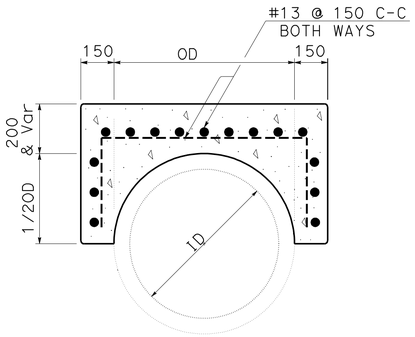

REINFORCED CONCRETE BACKFILL

ID = Inside Diameter
OD = Outside Diameter

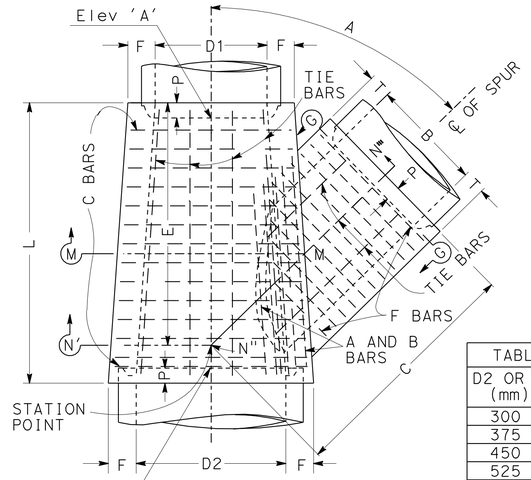

PLAN

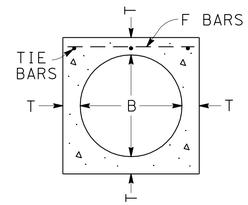

SECTION G-G

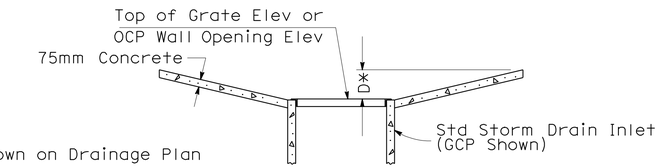

* Shown on Drainage Plan

SECTION A-A

TABLE OF VALUES FOR F AND T			
D2 OR B (mm)	F OR T (mm)	D2 OR B (mm)	F OR T (mm)
300	100	1575	250
375	107	1650	257
450	115	1725	272
525	125	1800	275
600	132	1950	297
675	140	2100	315
750	150	2250	332
825	157	2400	350
900	165	2550	390
975	180	2700	400
1050	190	2850	415
1125	195	3000	430
1200	200	3150	430
1275	215	3300	445
1350	230	3450	445
1425	235	3600	460
1500	240		

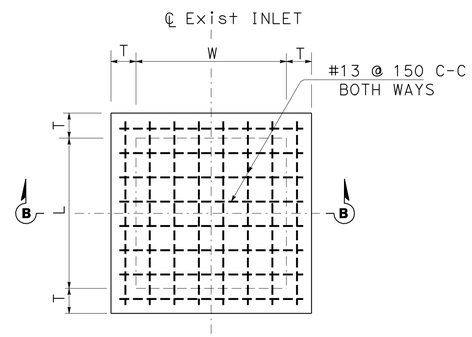

PLAN

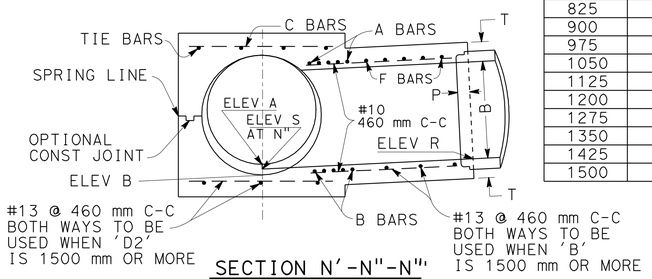

SECTION N'-N"-N"
PROJECTED ON M-M-N"

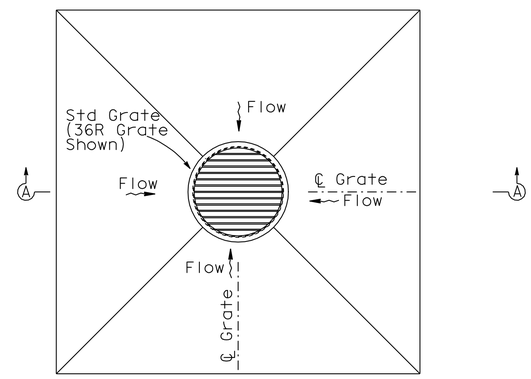

PLAN

DEPRESSED APRON DETAIL

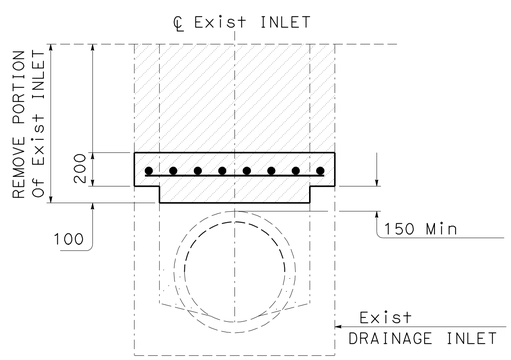

SECTION B-B

CAP INLET

NOTE:

1. W(WIDTH), L(LENGTH) AND T(THICKNESS) SHALL MATCH EXISTING DIMENSIONS.

NOTES

1. VALUES FOR 'A', 'B', 'C', 'D1', 'D2', 'E', 'L', ELEV 'A', ELEV 'B', ELEV 'R' AND ELEV 'S' ARE SHOWN ON DRAINAGE PLANS.
2. EMBEDMENT 'P' SHALL BE 125 mm FOR PIPE DIAMETERS 300 mm TO 2400 mm AND 200 mm FOR PIPE DIAMETERS 2550 mm TO 3600 mm.
3. FLOOR OF STRUCTURE SHALL BE STEEL - TROWELED TO SPRING LINE.
4. REINFORCING STEEL SHALL BE 40 mm CLEAR FROM FACE OF CONCRETE UNLESS OTHERWISE SHOWN. A AND B BARS NEED NOT BE LONGER THAN THE OUTSIDE DIAGONAL WIDTH OF THE LATERAL SPUR.
5. STEEL SCHEDULE:

DIA B OR D2	A OR B BARS	C OR F BARS
300 TO 975	#20 @ 75 mm	#15 @ 150 mm
1050 TO 2100	#25 @ 75 mm	#20 @ 150 mm
2250 TO 3600	#30 @ 75 mm	#25 @ 150 mm
TIE BARS - #10 @ 460 mm C-C		

6. ELEVATION 'S' APPLIES AT CENTER OF MAIN LINE ON PROLONGATION OF INVERT OF SPUR.
7. JUNCTION STRUCTURE SHALL BE POURED IN ONE CONTINUOUS OPERATION, EXCEPT THAT THE CONTRACTOR SHALL HAVE THE OPTION OF PLACING AT THE SPRING LINE A CONSTRUCTION JOINT WITH A LONGITUDINAL KEYWAY.
8. LATERALS - WHERE LATERALS ENTER ON BOTH SIDES OF STRUCTURE, THEY SHALL BE DESIGNATED ON THE DRAINAGE PLAN AS RIGHT OR LEFT, FACING IN THE DIRECTION OF STATIONING.

JUNCTION STRUCTURE No. 2 (JS 2)

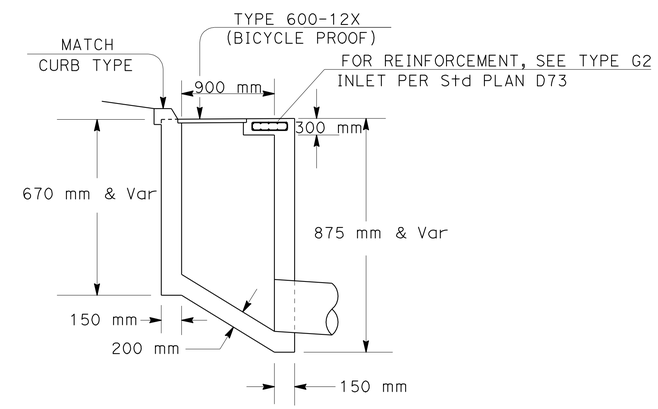

TYPE G2 INLET (MODIFIED)

NO SCALE

NOTE:
FOR DETAILS AND INFORMATION NOT SHOWN, REFER TO TYPE G2 INLET ON STANDARD PLAN D73.

ALL DIMENSIONS ARE IN METERS UNLESS OTHERWISE SHOWN

DRAINAGE DETAILS
NO SCALE **DD-10**

STATE OF CALIFORNIA - DEPARTMENT OF TRANSPORTATION
Caltrans **HYDRAULICS**
FUNCTIONAL SUPERVISOR: DAVE BHALLA
CALCULATED-DESIGNED BY: VIC T. VALIDO
CHECKED BY: FUSUNG CHANG
REVISED BY / DATE REVISED

LAST REVISION 00-00-00 | DATE PLOTTED => 20-MAY-2010 | TIME PLOTTED => 11:30

Dist	COUNTY	ROUTE	KILOMETER POST TOTAL PROJECT	SHEET No.	TOTAL SHEETS
07	LA	138	87.2/88.9	50	156

REGISTERED CIVIL ENGINEER 1/07/10 DATE

5-17-10
PLANS APPROVAL DATE

REGISTERED PROFESSIONAL ENGINEER BALDEV K.BHALLA No. 34350 Exp. 9-30-11 CIVIL STATE OF CALIFORNIA

THE STATE OF CALIFORNIA OR ITS OFFICERS OR AGENTS SHALL NOT BE RESPONSIBLE FOR THE ACCURACY OR COMPLETENESS OF ELECTRONIC COPIES OF THIS PLAN SHEET.

Caltrans Metric

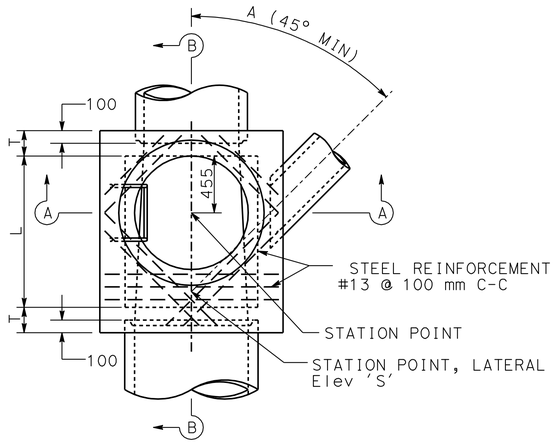

PLAN
(SHAFT NOT SHOWN)

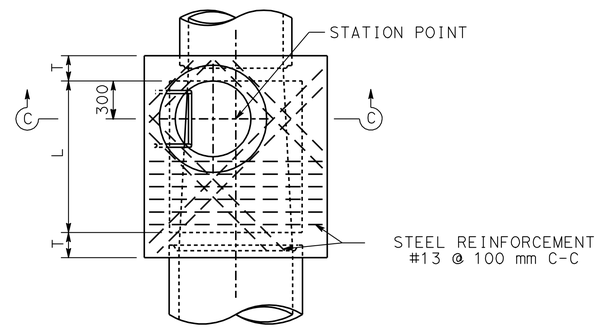

PLAN
DETAIL N
(SHAFT NOT SHOWN)

NOTES

1. HEIGHT "H" (IN SEC A-A AND SEC B-B) SHALL BE NOT LESS THAN 1.40 m, BUT MAY BE INCREASED PROVIDED THAT THE VALUE OF "M" SHALL NOT BE LESS THAN THE MINIMUM SPECIFIED AND THAT THE REDUCER SHALL BE USED. FOR "H" (IN SEC C-C) SEE NOTE 4.
2. LENGTH "L" SHALL BE 1.20 m UNLESS SHOWN OTHERWISE ON DRAINAGE PLAN.
3. SHAFT SHALL BE CONSTRUCTED AS PER SEC C-C AND DETAIL N WHEN DEPTH "M" FROM STREET GRADE TO TOP OF BOX IS LESS THAN 0.87 m FOR PAVED STREETS OR 1.05 m FOR UNPAVED STREETS.
4. DEPTH "P" MAY BE REDUCED TO 150 mm WHEN LARGER VALUES OF "P" WOULD REDUCE "H" (IN SEC C-C) TO 1.05 m OR LESS.
5. "T" SHALL BE 200 mm FOR VALUES OF "H" UP TO AND INCLUDING 2.40 m. "T" SHALL BE 250 mm FOR VALUES OF "H" OVER 2.40 m.
6. UNLESS OTHERWISE SHOWN, STEPS SHALL BE PLACED ON 300 mm ON CENTERS. THE LOWEST STEP SHALL BE NOT MORE THAN 400 mm ABOVE THE LEDGE AT THE SIDE OF MANHOLE FLOOR.
7. BODY OF MANHOLE SHALL BE POURED IN ONE CONTINUOUS OPERATION, EXCEPT THAT THE CONTRACTOR SHALL HAVE THE OPTION OF PLACING AT THE SPRING LINE A CONSTRUCTION JOINT WITH A LONGITUDINAL KEYWAY.
8. REINFORCING STEEL SHALL BE 40 mm CLEAR FROM FACE OF CONCRETE.
9. FLOOR OF MANHOLE SHALL BE STEEL-TROWELED TO SPRING LINE.
10. RINGS, REDUCER, AND PIPE FOR ACCESS SHAFT SHALL BE SEATED IN 1:2 CEMENT MORTAR AND NEATLY POINTED OR WIPED INSIDE SHAFT.
11. MANHOLE FRAME AND COVER PER STANDARD PLAN B7-11 DETAIL U45.
12. STEP DETAIL PER STANDARD PLANS D74C AND D75A.

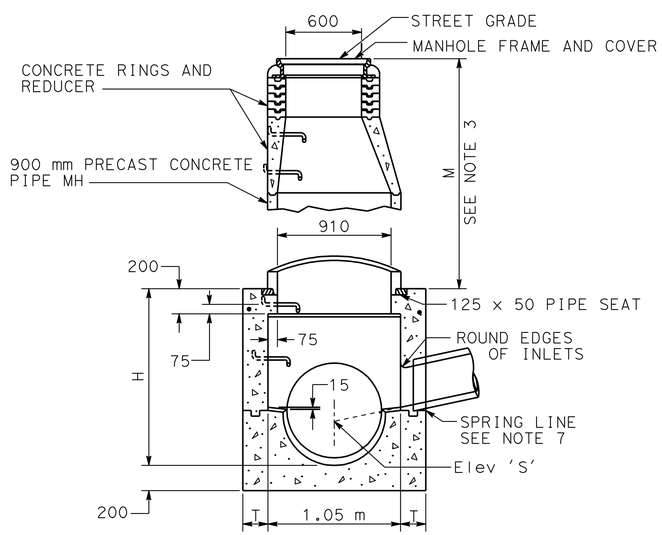

SECTION A-A

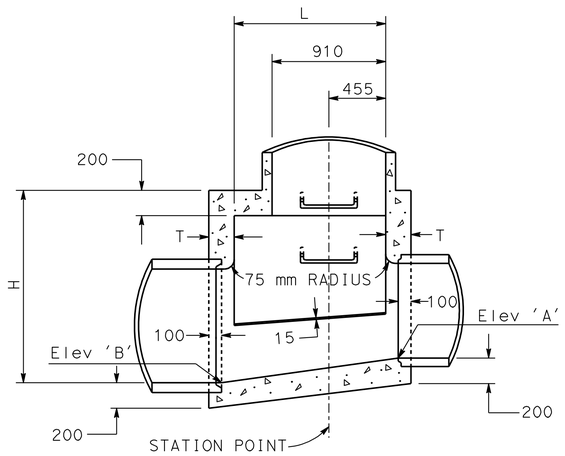

SECTION B-B

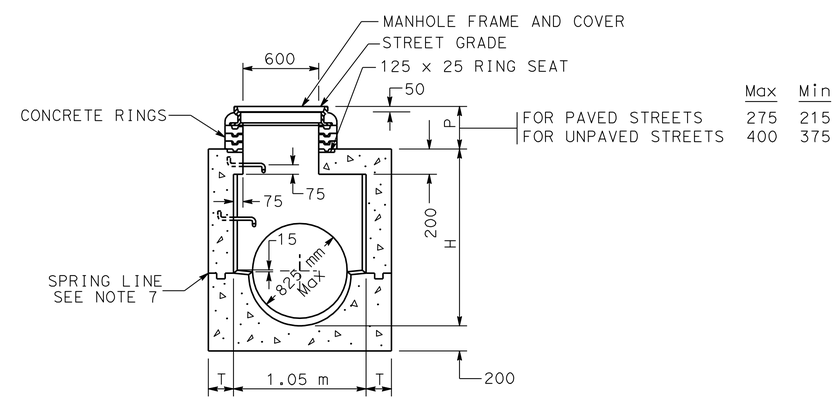

	Max	Min
FOR PAVED STREETS	275	215
FOR UNPAVED STREETS	400	375

SECTION C-C

MANHOLE No. 1 (MH No. 1)

ALL DIMENSIONS ARE IN METERS UNLESS OTHERWISE SHOWN

DRAINAGE DETAILS

NO SCALE **DD-11**

STATE OF CALIFORNIA - DEPARTMENT OF TRANSPORTATION
Caltrans
HYDRAULICS

FUNCTIONAL SUPERVISOR: DAVE BHALLA
CALCULATED-DESIGNED BY: VIC T. VALIDO
CHECKED BY: FUSUNG CHANG
REVISED BY / DATE REVISED

LAST REVISION 00-00-00
DATE PLOTTED => 20-MAY-2010
TIME PLOTTED => 11:30

ABBREVIATIONS:

(N) NOT A SEPARATE PAY ITEM, FOR INFORMATION ONLY.

NOTE:

ALL JOINTS ARE STANDARD JOINT TYPE

Caltrans Metric

Dist	COUNTY	ROUTE	KILOMETER POST TOTAL PROJECT	SHEET No.	TOTAL SHEETS
07	LA	138	87.2/88.9	51	156

REGISTERED CIVIL ENGINEER 1/07/10 DATE

5-17-10
PLANS APPROVAL DATE

REGISTERED PROFESSIONAL ENGINEER BALDEV K. BHALLA No. 34350 Exp. 9-30-11 CIVIL STATE OF CALIFORNIA

THE STATE OF CALIFORNIA OR ITS OFFICERS OR AGENTS SHALL NOT BE RESPONSIBLE FOR THE ACCURACY OR COMPLETENESS OF ELECTRONIC COPIES OF THIS PLAN SHEET.

DRAINAGE QUANTITIES

DRAINAGE PLAN SHEET No.	DRAINAGE SYSTEM No. ⬡	DRAINAGE UNIT ○	HEIGHT OF INLET "H" OR "V1" m	MINOR CONCRETE (MINOR STRUCTURE) m3	MINOR CONCRETE (BACKFILL) m3	Misc IRON & STEEL kg	REMOVE INLET EA	REMOVE PIPE m	REMOVE CONCRETE m3	CAP INLET EA	300 mm RCP m	450 mm RCP m	600 mm RCP m	900 mm PRECAST CONCRETE PIPE MANHOLE m	(N) MANHOLE FRAME AND COVER EA	(N) TYPE 600-12X GRATE (BICYCLE PROOF) EA	(N) TYPE 900RX GRATE (BICYCLE PROOF) EA	(N) MAXIMUM COVER m	DESCRIPTION	STATION	DRAINAGE PLAN SHEET No.	DRAINAGE SYSTEM No. ⬡	DRAINAGE UNIT ○
D-1	1	a	1.45	2.49		200								0.2	1				MANHOLE No. 1	Sta 874+11.000 At ℄ Rte 138	D-1	1	a
		b											98.8					1.7	600 mm RCP				b
		c	1.21	2.24		200								0.9	1				MANHOLE No. 1	Sta 875+11.000 At ℄ Rte 138			c
D-1 D-2		d											63.8					1.7	600 mm RCP		D-1 D-2		d
D-2		e	1.40	2.44		200								1.0	1				MANHOLE No. 1	Sta 875+76.000 At ℄ Rte 138	D-2		e
		f											80.8					2.5	600 mm RCP				f
		g	1.40	2.44		200								1.3	1				MANHOLE No. 1	Sta 876+58.000 At ℄ Rte 138			g
		h											85.8					2.6	600 mm RCP				h
		i	1.40	2.44		200								1.4	1				MANHOLE No. 1	Sta 877+45.000 At ℄ Rte 138			i
		j											64.8					2.6	600 mm RCP				j
		k	1.40	2.44		200								1.4	1				MANHOLE No. 1	Sta 878+11.000 At ℄ Rte 138			k
		l											58.8					2.6	600 mm RCP				l
		m	1.40	2.44		200								1.2	1				MANHOLE No. 1	Sta 878+71.000 At ℄ Rte 138			m
D-2 D-3		n											98.8					2.4	600 mm RCP		D-2 D-3		n
D-3		o	1.40	2.44		200								1.0	1				MANHOLE No. 1	Sta 879+71.000 At ℄ Rte 138	D-3		o
		p											80.8					2.4	600 mm RCP				p
		q	1.27	2.29		200								0.9	1				MANHOLE No. 1	Sta 10+26.000 At ℄ Rte 138			q
		r											48.8					1.9	600 mm RCP				r
		s	1.60	2.57		200								0.2	1				MANHOLE No. 1	Sta 10+76.000 At ℄ Rte 138			s
		t											52.5					1.6	600 mm RCP				t
D-3	1	u	1.12	2.12		200								0.2	1				MANHOLE No. 1	Sta 11+29.616 At ℄ Rte 138	D-3	1	u
D-1	2	a	0.84	1.10		108										1			TYPE G2 INLET (MODIFIED)	7.93m Rt Sta 874+10.000 ℄ Rte 138	D-1	2	a
		b			0.56							6.9						1.5	450 mm RCP W/CONCRETE BACKFILL				b
		c			0.56							6.9						1.5	450 mm RCP W/CONCRETE BACKFILL				c
D-1	2	d	0.84	1.10		108										1			TYPE G2 INLET (MODIFIED)	7.93m Lt Sta 874+10.000 ℄ Rte 138	D-1	2	d
D-1	3	a	0.84	1.10		108										1			TYPE G2 INLET (MODIFIED)	7.93m Rt Sta 875+10.000 ℄ Rte 138	D-1	3	a
		b			0.56							6.9						1.5	450 mm RCP W/CONCRETE BACKFILL				b
		c			0.56							6.9						1.5	450 mm RCP W/CONCRETE BACKFILL				c
D-1	3	d	0.84	1.10		108										1			TYPE G2 INLET (MODIFIED)	7.93m Lt Sta 875+10.000 ℄ Rte 138	D-1	3	d
SHEET TOTAL				30.75	2.24	2632						27.6	733.7	9.7	11	4							

VIC T. VALIDO — REVISED BY
FUSUNG CHANG — DATE REVISED
CALCULATED-DESIGNED BY
CHECKED BY
FUNCTIONAL SUPERVISOR
DAVE BHALLA

STATE OF CALIFORNIA - DEPARTMENT OF TRANSPORTATION
Caltrans
HYDRAULICS

DRAINAGE QUANTITIES
DQ-1

LAST REVISION 00-00-00
DATE PLOTTED => 20-MAY-2010
TIME PLOTTED => 13:36

ABBREVIATIONS

(N) NOT A SEPARATE PAY ITEM, FOR INFORMATION ONLY.

NOTE:

ALL JOINTS ARE STANDARD JOINT TYPE

Caltrans Metric

Dist	COUNTY	ROUTE	KILOMETER POST TOTAL PROJECT	SHEET No.	TOTAL SHEETS
07	LA	138	87.2/88.9	52	156

REGISTERED CIVIL ENGINEER 1/07/10 DATE

5-17-10
PLANS APPROVAL DATE

REGISTERED PROFESSIONAL ENGINEER BALDEV K. BHALLA No. 34350 Exp. 9-30-11 CIVIL STATE OF CALIFORNIA

THE STATE OF CALIFORNIA OR ITS OFFICERS OR AGENTS SHALL NOT BE RESPONSIBLE FOR THE ACCURACY OR COMPLETENESS OF ELECTRONIC COPIES OF THIS PLAN SHEET.

DRAINAGE QUANTITIES

DRAINAGE PLAN SHEET No.	DRAINAGE SYSTEM No. ⬡	DRAINAGE UNIT ○	HEIGHT OF INLET "H" OR "V1"	MINOR CONCRETE (MINOR STRUCTURE)	MINOR CONCRETE (BACKFILL)	Misc IRON & STEEL	REMOVE INLET	REMOVE PIPE	REMOVE CONCRETE	CAP INLET	300 mm RCP	450 mm RCP	600 mm RCP	900 mm PRECAST CONCRETE PIPE MANHOLE	(N) MANHOLE FRAME AND COVER	(N) TYPE 600-12X GRATE (BICYCLE PROOF)	(N) TYPE 900RX GRATE (BICYCLE PROOF)	(N) MAXIMUM COVER	DESCRIPTION	STATION	DRAINAGE PLAN SHEET No.	DRAINAGE SYSTEM No. ⬡	DRAINAGE UNIT ○
			m	m3	m3	kg	EA	m	m3	EA	m	m	m	m	EA	EA	EA	m					
D-2	4	a	0.84	1.10		108										1			TYPE G2 INLET (MODIFIED)	7.93m Rt Sta 875+75.000 ℄ Rte 138	D-2	4	a
		b			0.28							6.9						1.5	450 mm RCP W/CONCRETE BACKFILL				b
		c			0.28							6.9						1.5	450 mm RCP W/CONCRETE BACKFILL				c
D-2	4	d	0.84	1.10		108										1			TYPE G2 INLET (MODIFIED)	7.93m Lt Sta 875+75.000 ℄ Rte 138	D-2	4	d
D-2	5	a	0.84	1.10		108										1			TYPE G2 INLET (MODIFIED)	7.93m Rt Sta 876+57.000 ℄ Rte 138	D-2	5	a
		b			0.28							6.9						2.1	450 mm RCP W/CONCRETE BACKFILL				b
		c			0.28							6.9						2.1	450 mm RCP W/CONCRETE BACKFILL				c
D-2	5	d	0.84	1.10		108										1			TYPE G2 INLET (MODIFIED)	7.93m Lt Sta 876+57.000 ℄ Rte 138	D-2	5	d
D-2	6	a	0.84	1.10		108										1			TYPE G2 INLET (MODIFIED)	7.93m Rt Sta 877+44.000 ℄ Rte 138	D-2	6	a
		b			0.28							6.9						2.4	450 mm RCP W/CONCRETE BACKFILL				b
		c			0.28							6.9						2.4	450 mm RCP W/CONCRETE BACKFILL				c
D-2	6	d	0.84	1.10		108										1			TYPE G2 INLET (MODIFIED)	7.93m Lt Sta 877+44.000 ℄ Rte 138	D-2	6	d
D-2	7	a	0.84	1.10		108										1			TYPE G2 INLET (MODIFIED)	7.93m Rt Sta 878+10.000 ℄ Rte 138	D-2	7	a
		b			0.28							6.9						2.4	450 mm RCP W/CONCRETE BACKFILL				b
		c			0.28							6.9						2.4	450 mm RCP W/CONCRETE BACKFILL				c
D-2	7	d	0.84	1.10		108										1			TYPE G2 INLET (MODIFIED)	7.93m Lt Sta 878+10.000 ℄ Rte 138	D-2	7	d
D-2	8	a	0.84	1.10		108										1			TYPE G2 INLET (MODIFIED)	7.93m Rt Sta 878+70.000 ℄ Rte 138	D-2	8	a
		b			0.28							6.9						2.4	450 mm RCP W/CONCRETE BACKFILL				b
		c			0.28							6.9						2.4	450 mm RCP W/CONCRETE BACKFILL				c
D-2	8	d	0.84	1.10		108										1			TYPE G2 INLET (MODIFIED)	7.93m Lt Sta 878+70.000 ℄ Rte 138	D-2	8	d
D-3	9	a	0.84	1.10		108										1			TYPE G2 INLET (MODIFIED)	7.93m Rt Sta 879+70.000 ℄ Rte 138	D-3	9	a
		b			0.28							6.9						2.2	450 mm RCP W/CONCRETE BACKFILL				b
		c			0.28							6.9						2.2	450 mm RCP W/CONCRETE BACKFILL				c
D-3	9	d	0.84	1.10		108										1			TYPE G2 INLET (MODIFIED)	7.93m Lt Sta 879+70.000 ℄ Rte 138	D-3	9	d
SHEET TOTAL				13.20	3.36	1296						82.8				12							

VIC T. VALIDO — FUNCTIONAL SUPERVISOR
FUSUNG CHANG — CALCULATED-DESIGNED BY
DAVE BHALLA — CHECKED BY
REVISED BY — DATE REVISED

STATE OF CALIFORNIA - DEPARTMENT OF TRANSPORTATION
Caltrans
HYDRAULICS

DRAINAGE QUANTITIES
DQ-2

LAST REVISION 00-00-00
DATE PLOTTED => 20-MAY-2010
TIME PLOTTED => 13:36

ABBREVIATIONS:

(N) NOT A SEPARATE PAY ITEM, FOR INFORMATION ONLY.

NOTE:

ALL JOINTS ARE STANDARD JOINT TYPE

Caltrans Metric

Dist	COUNTY	ROUTE	KILOMETER POST TOTAL PROJECT	SHEET No.	TOTAL SHEETS
07	LA	138	87.2/88.9	53	156

REGISTERED CIVIL ENGINEER 1/07/10 DATE

5-17-10
PLANS APPROVAL DATE

REGISTERED PROFESSIONAL ENGINEER BALDEV K. BHALLA No. 34350 Exp. 9-30-11 CIVIL STATE OF CALIFORNIA

THE STATE OF CALIFORNIA OR ITS OFFICERS OR AGENTS SHALL NOT BE RESPONSIBLE FOR THE ACCURACY OR COMPLETENESS OF ELECTRONIC COPIES OF THIS PLAN SHEET.

DRAINAGE QUANTITIES

DRAINAGE PLAN SHEET No.	DRAINAGE SYSTEM No. ⬡	DRAINAGE UNIT ○	HEIGHT OF INLET "H" OR "V1" m	MINOR CONCRETE (MINOR STRUCTURE) m3	MINOR CONCRETE (BACKFILL) m3	Misc IRON & STEEL kg	REMOVE INLET EA	REMOVE PIPE m	REMOVE CONCRETE m3	CAP INLET EA	300 mm RCP m	450 mm RCP m	600 mm RCP m	900 mm PRECAST CONCRETE PIPE MANHOLE m	(N) MANHOLE FRAME AND COVER EA	(N) TYPE 600-12X GRATE (BICYCLE PROOF) EA	(N) TYPE 900RX GRATE (BICYCLE PROOF) EA	(N) MAXIMUM COVER m	DESCRIPTION	STATION	DRAINAGE PLAN SHEET No.	DRAINAGE SYSTEM No. ⬡	DRAINAGE UNIT ○
D-3	10	a	0.84	1.10		108										1			TYPE G2 INLET (MODIFIED)	7.93m Rt Sta 10+25.000 ℄ Rte 138	D-3	10	a
		b			0.28							6.9						2.2	450 mm RCP W/CONCRETE BACKFILL				b
		c			0.28							6.9						2.2	450 mm RCP W/CONCRETE BACKFILL				c
D-3	10	d	0.84	1.10		108										1			TYPE G2 INLET (MODIFIED)	7.93m Lt Sta 10+25.000 ℄ Rte 138	D-3	10	d
D-3	11	a	0.84	1.10		108										1			TYPE G2 INLET (MODIFIED)	7.93m Rt Sta 10+75.000 ℄ Rte 138	D-3	11	a
		b			0.56							6.9						1.7	450 mm RCP W/CONCRETE BACKFILL				b
		c			0.56							6.9						1.7	450 mm RCP W/CONCRETE BACKFILL				c
D-3	11	d	0.84	1.10		108										1			TYPE G2 INLET (MODIFIED)	7.93m Lt Sta 10+75.000 ℄ Rte 138	D-3	11	d
D-3	12	a	1.37	1.01		108										1			G-3 INLET	7.93m Lt Sta 11+29.616 ℄ Rte 138	D-3	12	a
		b										7.6						1.4	450 mm RCP				b
		c											7.6					1.4	600 mm RCP				c
		d	1.57	1.12		108										1			G-3 INLET	7.93m Rt Sta 11+29.616 ℄ Rte 138			d
		e											2.3					1.5	600 mm RCP				e
		f	1.71	0.11		98								1.9			1		TYPE GCP INLET, W/DEPRESSED APRON	10.70m Rt Sta 11+30.760 ℄ Rte 138			f
D-3	12	g										9.6						1.5	450 mm RCP		D-3	12	g
D-3	13	a										3.1						1.5	450 mm RCP		D-3	13	a
		b	1.74	0.11		98								1.9			1		TYPE GCP INLET, W/DEPRESSED APRON	14.17m Rt Sta 11+32.580 ℄ Rte 138			b
D-3	13	c										10.8						1.5	450 mm RCP		D-3	13	c
D-3	14	a										14.6						1.2	450 mm RCP		D-3	14	a
		b	1.47	0.11		98								1.7			1		TYPE GCP INLET, W/DEPRESSED APRON	15.64m Rt Sta 11+72.120 ℄ Rte 138			b
		c										2.9						1.2	450 mm RCP				c
		d	1.47	0.11		98								1.7			1		TYPE GCP INLET, W/DEPRESSED APRON	12.44m Rt Sta 11+73.850 ℄ Rte 138			d
		e											4.8					1.2	600 mm RCP				e
		f	1.47	1.06		108										1			G-3 INLET	7.93m Rt Sta 11+76.260 ℄ Rte 138			f
		g											7.0					1.2	600 mm RCP				g
		h			0.28							10.6						1.2	450 mm RCP W/CONCRETE BACKFILL				h
D-3	14	i	0.84	1.10		108										1			TYPE G2 INLET (MODIFIED)	7.93m Lt Sta 11+76.260 ℄ Rte 138	D-3	14	i
SHEET TOTAL				9.13	1.96	1256						86.8	21.7	7.2		8	4						

STATE OF CALIFORNIA - DEPARTMENT OF TRANSPORTATION
Caltrans HYDRAULICS

FUNCTIONAL SUPERVISOR: DAVE BHALLA
CALCULATED-DESIGNED BY: VIC T. VALIDO
CHECKED BY: FUSUNG CHANG
REVISED BY / DATE REVISED

DRAINAGE QUANTITIES
DQ-3

LAST REVISION 00-00-00
DATE PLOTTED => 20-MAY-2010
TIME PLOTTED => 13:36

ABBREVIATIONS:

(N) NOT A SEPARATE PAY ITEM, FOR INFORMATION ONLY.

NOTE:

ALL JOINTS ARE STANDARD JOINT TYPE

Caltrans Metric

Dist	COUNTY	ROUTE	KILOMETER POST TOTAL PROJECT	SHEET No.	TOTAL SHEETS
07	LA	138	87.2/88.9	54	156

REGISTERED CIVIL ENGINEER 1/07/10 DATE

5-17-10
PLANS APPROVAL DATE

REGISTERED PROFESSIONAL ENGINEER BALDEV K.BHALLA No. 34350 Exp. 9-30-11 CIVIL STATE OF CALIFORNIA

THE STATE OF CALIFORNIA OR ITS OFFICERS OR AGENTS SHALL NOT BE RESPONSIBLE FOR THE ACCURACY OR COMPLETENESS OF ELECTRONIC COPIES OF THIS PLAN SHEET.

DRAINAGE QUANTITIES

DRAINAGE PLAN SHEET No.	DRAINAGE SYSTEM No. ⬡	DRAINAGE UNIT ○	HEIGHT OF INLET "H" OR "V1" m	MINOR CONCRETE (MINOR STRUCTURE) m3	MINOR CONCRETE (BACKFILL) m3	Misc IRON & STEEL kg	REMOVE INLET EA	REMOVE PIPE m	REMOVE CONCRETE m3	CAP INLET EA	300 mm RCP m	450 mm RCP m	600 mm RCP m	900 mm PRECAST CONCRETE PIPE MANHOLE m	(N) MANHOLE FRAME AND COVER EA	(N) TYPE 600-12X GRATE (BICYCLE PROOF) EA	(N) TYPE 900RX GRATE (BICYCLE PROOF) EA	(N) MAXIMUM COVER m	DESCRIPTION	STATION	DRAINAGE PLAN SHEET No.	DRAINAGE SYSTEM No. ⬡	DRAINAGE UNIT ○
D-3	15	a										11.5						1.2	450 mm RCP		D-3	15	a
D-3	16	a	1.40	2.44		200								0.2	1				MANHOLE No. 1	Sta 11+76.260 At ℄ Rte 138		16	a
		b											71.5					1.4	600 mm RCP				b
		c	1.60	2.60		200								0.3	1				MANHOLE No. 1	Sta 12+49.000 At ℄ Rte 138			c
D-3 D-4		d											43.8					1.8	600 mm RCP		D-3 D-4		d
D-4		e	1.70	2.70		200								0.3	1				MANHOLE No. 1	Sta 12+94.000 At ℄ Rte 138	D-4		e
		f											73.8					1.8	600 mm RCP				f
		g	1.70	2.70		200								0.3	1				MANHOLE No. 1	Sta 13+69.000 At ℄ Rte 138			g
		h											58.8					1.8	600 mm RCP				h
		i	1.70	2.70		200								0.3	1				MANHOLE No. 1	Sta 14+29.000 At ℄ Rte 138			i
		j											68.8					1.8	600 mm RCP				j
		k	1.70	2.70		200								0.3	1				MANHOLE No. 1	Sta 14+99.000 At ℄ Rte 138			k
		l											82.6					2.0	600 mm RCP				l
		m	1.50	2.50		200								1.2	1				MANHOLE No. 1	Sta 886+08.620 At ℄ Rte 138			m
		n											49.2					2.0	600 mm RCP				n
		o	1.86	2.85		200								0.3	1				MANHOLE No. 1	Sta 886+59.000 At ℄ Rte 138			o
D-4 D-5		p											43.8					1.2	600 mm RCP		D-4 D-5		p
D-5		q	1.60	2.16		200								0.3	1				MANHOLE No. 1	Sta 887+04.000 At ℄ Rte 138	D-5		q
		r											73.8					1.4	600 mm RCP				r
		s	1.44	2.49		200								0.2	1				MANHOLE No. 1	Sta 887+79.000 At ℄ Rte 138			s
		t											48.8					1.4	600 mm RCP				t
		u	1.44	2.49		200								0.2	1				MANHOLE No. 1	Sta 888+29.000 At ℄ Rte 138			u
		v											48.8					1.5	600 mm RCP				v
		w	1.55	2.55		200								0.2	1				MANHOLE No. 1	Sta 888+79.000 At ℄ Rte 138			w
		x											64.8					1.5	600 mm RCP				x
D-5	16	y	1.55	2.55		200								0.2	1				MANHOLE No. 1	Sta 889+45.000 At ℄ Rte 138	D-5	16	y
D-3	17	a	0.84	1.10		108										1			TYPE G2 INLET (MODIFIED)	7.93m Rt Sta 12+50.000 ℄ Rte 138	D-3	17	a
		b			0.56							6.9						1.6	450 mm RCP W/CONCRETE BACKFILL				b
		c										9.2						1.6	450 mm RCP				c
D-3	17	d	1.14	0.88		108										1			G-3 INLET	10.20m Lt Sta 12+50.000 ℄ Rte 138	D-3	17	d
SHEET TOTAL				35.41	0.56	2816						27.6	728.5	4.3	13	2							

STATE OF CALIFORNIA - DEPARTMENT OF TRANSPORTATION
Caltrans
HYDRAULICS

FUNCTIONAL SUPERVISOR: DAVE BHALLA

CALCULATED-DESIGNED BY: VIC T. VALIDO
CHECKED BY: FUSUNG CHANG

REVISED BY / DATE REVISED

LAST REVISION 00-00-00 | DATE PLOTTED => 20-MAY-2010 | TIME PLOTTED => 13:36

DRAINAGE QUANTITIES
DQ-4

ABBREVIATIONS:

(N) NOT A SEPARATE PAY ITEM, FOR INFORMATION ONLY.

NOTE:

ALL JOINTS ARE STANDARD JOINT TYPE

Caltrans Metric

Dist	COUNTY	ROUTE	KILOMETER POST TOTAL PROJECT	SHEET No.	TOTAL SHEETS
07	LA	138	87.2/88.9	55	156

REGISTERED CIVIL ENGINEER 1/07/10 DATE

5-17-10
PLANS APPROVAL DATE

REGISTERED PROFESSIONAL ENGINEER BALDEV K. BHALLA No. 34350 Exp. 9-30-11 CIVIL STATE OF CALIFORNIA

THE STATE OF CALIFORNIA OR ITS OFFICERS OR AGENTS SHALL NOT BE RESPONSIBLE FOR THE ACCURACY OR COMPLETENESS OF ELECTRONIC COPIES OF THIS PLAN SHEET.

DRAINAGE QUANTITIES

DRAINAGE PLAN SHEET No.	⬡ DRAINAGE SYSTEM No.	○ DRAINAGE UNIT	HEIGHT OF INLET "H" OR "V1" m	MINOR CONCRETE (MINOR STRUCTURE) m3	MINOR CONCRETE (BACKFILL) m3	Misc IRON & STEEL kg	REMOVE INLET EA	REMOVE PIPE m	REMOVE CONCRETE m3	CAP INLET EA	300 mm RCP m	450 mm RCP m	600 mm RCP m	900 mm PRECAST CONCRETE PIPE MANHOLE m	(N) MANHOLE FRAME AND COVER EA	(N) TYPE 600-12X GRATE (BICYCLE PROOF) EA	(N) TYPE 900RX GRATE (BICYCLE PROOF) EA	(N) MAXIMUM COVER m	DESCRIPTION	STATION	DRAINAGE PLAN SHEET No.	⬡ DRAINAGE SYSTEM No.	○ DRAINAGE UNIT
D-4	18	a	0.84	1.10		108										1			TYPE G2 INLET (MODIFIED)	7.93m Rt Sta 12+95.000 ℄ Rte 138	D-4	18	a
		b			0.56							6.9						1.8	450 mm RCP W/CONCRETE BACKFILL				b
		c										6.9						1.8	450 mm RCP				c
D-4	18	d	1.31	0.97		108										1			G-3 INLET	8.75m Lt Sta 12+95.000 ℄ Rte 138	D-4	18	d
D-4	19	a	0.84	1.10		108										1		1.6	TYPE G2 INLET (MODIFIED)	7.93m Rt Sta 13+70.000 ℄ Rte 138	D-4	19	a
		b			0.56							6.9						1.6	450 mm RCP W/CONCRETE BACKFILL				b
		c										6.9							450 mm RCP				c
D-4	19	d	1.25	0.94		108										1			G-3 INLET	7.93m Lt Sta 13+70.000 ℄ Rte 138	D-4	19	d
D-4	20	a	0.84	1.10		108										1			TYPE G2 INLET (MODIFIED)	7.93m Rt Sta 14+30.000 ℄ Rte 138	D-4	20	a
		b			0.56							6.9						1.6	450 mm RCP W/CONCRETE BACKFILL				b
		c										6.9						1.6	450 mm RCP				c
D-4	20	d	1.16	0.89		108										1			G-3 INLET	7.93m Lt Sta 14+30.000 ℄ Rte 138	D-4	20	d
D-4	21	a	0.84	1.10		108										1			TYPE G2 INLET (MODIFIED)	7.93m Rt Sta 15+00.000 ℄ Rte 138	D-4	21	a
		b			0.56							6.9						1.6	450 mm RCP W/CONCRETE BACKFILL				b
		c										6.9						1.6	450 mm RCP				c
D-4	21	d	1.20	0.91		108										1			G-3 INLET	7.93m Lt Sta 15+00.000 ℄ Rte 138	D-4	21	d
D-4	22	a							0.70										REMOVE HEADWALL	6.96m Rt Sta 15+50.010 ℄ Rte 138	D-4	22	a
		b										0.6						1.0	450 mm RCP				b
		c	0.95	0.78		108										1			G-3 INLET	7.93m Rt Sta 15+50.060 ℄ Rte 138			c
		d										3.6						1.0	450 mm RCP				d
D-4	22	e		0.70															STRAIGHT HEADWALL	11.86m Rt Sta 15+50.280 ℄ Rte 138	D-4	22	e
D-4	23	a							0.70										REMOVE HEADWALL	6.94m Rt Sta 885+88.800 ℄ Rte 138	D-4	23	a
		b										0.9						1.0	450 mm RCP				b
		c	0.95	0.78		108										1			G-3 INLET	7.93m Rt Sta 885+87.370 ℄ Rte 138			c
		d										3.7						1.0	450 mm RCP				d
D-4	23	e		0.70															STRAIGHT HEADWALL	12.01m Rt Sta 885+87.350 ℄ Rte 138	D-4	23	e
SHEET TOTAL				11.07	2.24	1080			1.40			64.0				10							

VIC T. VALIDO — REVISED BY
FUSUNG CHANG — DATE REVISED
CALCULATED-DESIGNED BY
CHECKED BY
FUNCTIONAL SUPERVISOR
DAVE BHALLA

STATE OF CALIFORNIA - DEPARTMENT OF TRANSPORTATION
Caltrans
HYDRAULICS

DRAINAGE QUANTITIES
DQ-5

LAST REVISION 00-00-00
DATE PLOTTED => 20-MAY-2010
TIME PLOTTED => 13:36

ABBREVIATIONS:

(N) NOT A SEPARATE PAY ITEM, FOR INFORMATION ONLY.

NOTE:

ALL JOINTS ARE STANDARD JOINT TYPE

Caltrans Metric

Dist	COUNTY	ROUTE	KILOMETER POST TOTAL PROJECT	SHEET No.	TOTAL SHEETS
07	LA	138	87.2/88.9	56	156

REGISTERED CIVIL ENGINEER 1/07/10 DATE

5-17-10
PLANS APPROVAL DATE

REGISTERED PROFESSIONAL ENGINEER BALDEV K. BHALLA No. 34350 Exp. 9-30-11 CIVIL STATE OF CALIFORNIA

THE STATE OF CALIFORNIA OR ITS OFFICERS OR AGENTS SHALL NOT BE RESPONSIBLE FOR THE ACCURACY OR COMPLETENESS OF ELECTRONIC COPIES OF THIS PLAN SHEET.

DRAINAGE QUANTITIES

DRAINAGE PLAN SHEET No.	DRAINAGE SYSTEM No. ⬡	DRAINAGE UNIT ○	HEIGHT OF INLET "H" OR "V1"	MINOR CONCRETE (MINOR STRUCTURE)	MINOR CONCRETE (BACKFILL)	Misc IRON & STEEL	REMOVE INLET	REMOVE PIPE	REMOVE CONCRETE	CAP INLET	300 mm RCP	450 mm RCP	600 mm RCP	900 mm PRECAST CONCRETE PIPE MANHOLE	MANHOLE FRAME AND COVER (N)	TYPE 600-12X GRATE (BICYCLE PROOF) (N)	TYPE 900RX GRATE (BICYCLE PROOF) (N)	MAXIMUM COVER (N)	DESCRIPTION	STATION	DRAINAGE PLAN SHEET No.	DRAINAGE SYSTEM No. ⬡	DRAINAGE UNIT ○
			m	m3	m3	kg	EA	m	m3	EA	m	m	m	m	EA	EA	EA	m					
D-4	24	a	0.84	1.10		108										1			TYPE G2 INLET (MODIFIED)	7.93m Rt Sta 886+13.500 ℄ Rte 138	D-4	24	a
D-4	24	b			0.56							8.6						1.0	450 mm RCP/ W CONCRETE BACKFILL		D-4	24	b
D-4	25	a	0.84	1.10		108										1			TYPE G2 INLET (MODIFIED)	7.93m Rt Sta 886+60.000 ℄ Rte 138	D-4	25	a
		b			0.28							6.9						1.0	450 mm RCP W/CONCRETE BACKFILL				b
		c										6.9						1.0	450 mm RCP				c
D-4	25	d	1.20	0.92		108										1			G-3 INLET	7.93m Lt Sta 886+60.000 ℄ Rte 138	D-4	25	d
D-5	26	a	0.84	1.10		108										1			TYPE G2 INLET (MODIFIED)	7.93m Rt Sta 887+05.000 ℄ Rte 138	D-5	26	a
		b			0.28							6.9						1.0	450 mm RCP W/CONCRETE BACKFILL				b
		c										6.9						1.0	450 mm RCP				c
D-5	26	d	1.05	0.84		108										1			G-3 INLET	7.93m Lt Sta 887+05.000 ℄ Rte 138	D-5	26	d
D-5	27	a	0.84	1.10		108										1			TYPE G2 INLET (MODIFIED)	7.93m Rt Sta 887+80.000 ℄ Rte 138	D-5	27	a
		b			0.56							6.9						1.2	450 mm RCP W/CONCRETE BACKFILL				b
		c										6.9						1.2	450 mm RCP				c
D-5	27	d	1.11	0.87		108										1			G-3 INLET	7.93m Lt Sta 887+80.000 ℄ Rte 138	D-5	27	d
D-5	28	a	0.84	1.10		108										1			TYPE G2 INLET (MODIFIED)	7.93m Rt Sta 888+30.000 ℄ Rte 138	D-5	28	a
		b			0.56							6.9						1.2	450 mm RCP W/CONCRETE BACKFILL				b
		c										6.9						1.2	450 mm RCP				c
D-5	28	d	1.16	0.89		108										1			G-3 INLET	7.93m Lt Sta 888+30.000 ℄ Rte 138	D-5	28	d
D-5	29	a	0.84	1.10		108										1			TYPE G2 INLET (MODIFIED)	7.93m Rt Sta 888+80.000 ℄ Rte 138	D-5	29	a
		b			0.56							6.9						1.3	450 mm RCP W/CONCRETE BACKFILL				b
		c										6.9						1.3	450 mm RCP				c
D-5	29	d	1.22	0.93		108										1			G-3 INLET	7.93m Lt Sta 888+80.000 ℄ Rte 138	D-5	29	d
D-5	30	a	0.45	0.11		98								0.6			1		TYPE GCP INLET, W/DEPRESSED APRON	12.22m Rt Sta 889+50.000 ℄ Rte 138	D-5	30	a
		b			0.81						2.9							1.0	300 mm RCP W/CONCRETE BACKFILL				b
		c	0.84	1.10		108										1			TYPE G2 INLET (MODIFIED)	7.93m Rt Sta 889+50.000 ℄ Rte 138			c
D-5	30	d			0.56							8.5						1.3	450 mm RCP W/CONCRETE BACKFILL			30	d
SHEET TOTAL				12.26	4.17	1394					2.9	86.1		0.6		12	1						

REVISED BY | DATE REVISED

VIC T. VALIDO | FUSUNG CHANG

CALCULATED-DESIGNED BY | CHECKED BY

FUNCTIONAL SUPERVISOR: DAVE BHALLA

STATE OF CALIFORNIA - DEPARTMENT OF TRANSPORTATION

Caltrans HYDRAULICS

DRAINAGE QUANTITIES
DQ-6

LAST REVISION 00-00-00 | DATE PLOTTED => 20-MAY-2010 | TIME PLOTTED => 13:36

ABBREVIATIONS:

(N) NOT A SEPARATE PAY ITEM, FOR INFORMATION ONLY.

NOTE:

ALL JOINTS ARE STANDARD JOINT TYPE

Caltrans Metric

Dist	COUNTY	ROUTE	KILOMETER POST TOTAL PROJECT	SHEET No.	TOTAL SHEETS
07	LA	138	87.2/88.9	57	156

REGISTERED CIVIL ENGINEER 1/07/10 DATE

5-17-10
PLANS APPROVAL DATE

REGISTERED PROFESSIONAL ENGINEER BALDEV K. BHALLA No. 34350 Exp. 9-30-11 CIVIL STATE OF CALIFORNIA

THE STATE OF CALIFORNIA OR ITS OFFICERS OR AGENTS SHALL NOT BE RESPONSIBLE FOR THE ACCURACY OR COMPLETENESS OF ELECTRONIC COPIES OF THIS PLAN SHEET.

DRAINAGE QUANTITIES

DRAINAGE PLAN SHEET No.	DRAINAGE SYSTEM No. ⬡	DRAINAGE UNIT ○	HEIGHT OF INLET "H" OR "V1"	MINOR CONCRETE (MINOR STRUCTURE)	MINOR CONCRETE (BACKFILL)	Misc IRON & STEEL	REMOVE INLET	REMOVE PIPE	REMOVE CONCRETE	CAP INLET	300 mm RCP	450 mm RCP	600 mm RCP	900 mm PRECAST CONCRETE PIPE MANHOLE	(N) MANHOLE FRAME AND COVER	(N) TYPE 600-12X GRATE (BICYCLE PROOF)	(N) TYPE 900RX GRATE (BICYCLE PROOF)	(N) MAXIMUM COVER	DESCRIPTION	STATION	DRAINAGE PLAN SHEET No.	DRAINAGE SYSTEM No. ⬡	DRAINAGE UNIT ○
			m	m3	m3	kg	EA	m	m3	EA	m	m	m	m	EA	EA	EA	m					
D-5	30	e										7.0						1.3	450 mm RCP				e
		f	1.00	0.81		108										1			G-3 INLET	7.93m Lt Sta 889+45.000 ℄ Rte 138	D-5	30	f
D-5	31	a							0.78										REMOVE HEADWALL	12.53m Rt Sta 889+95.450 ℄ Rte 138	D-5	31	a
		b										6.8						0.9	450 mm RCP				b
D-5	31	c		0.78															"L" HEADWALL	19.05m Rt Sta 889+96.190 ℄ Rte 138	D-5	31	c
D-5	32	a							0.68										REMOVE HEADWALL	6.56m Rt Sta 890+32.490 ℄ Rte 138	D-5	32	a
		b										6.8						1.8	450 mm RCP				b
D-5	32	c		0.68															STRAIGHT HEADWALL	8.39m Rt Sta 890+38.340 ℄ Rte 138	D-5	32	c
D-5	33	a	1.30	0.97		108										1			G-3 INLET	12.50m Rt Sta 58+27.730 ℄ 87TH St	D-5	33	a
		b										3.2						1.5	450 mm RCP				b
		c								1									CAP INLET	20.00m Lt Sta 890+00.540 ℄ Rte 138			c
		d										4.5						1.9	450 mm RCP				d
		e						4.1											REMOVE PIPE				e
		f					1												REMOVE INLET	12.80m Lt Sta 890+29.540 ℄ Rte 138			f
D-5	33	g	1.85	2.07		59									1				CURB OPENING CATCH BASIN	11.90m Lt Sta 890+29.850 ℄ Rte 138	D-5	33	g
SHEET TOTAL				5.31		275	1	4.1	1.46	1		28.3			1	2							
GRAND TOTAL				117.13	14.53	10749	1	4.1	2.86	1	2.9	403.2	1483.9	21.8	25	50	5						

DRAINAGE QUANTITIES
DQ-7

STATE OF CALIFORNIA - DEPARTMENT OF TRANSPORTATION
Caltrans HYDRAULICS

FUNCTIONAL SUPERVISOR: DAVE BHALLA
CALCULATED-DESIGNED BY: VIC T. VALIDO
CHECKED BY: FUSUNG CHANG
REVISED BY / DATE REVISED

LAST REVISION 00-00-00
DATE PLOTTED => 20-MAY-2010
TIME PLOTTED => 13:36

Dist	COUNTY	ROUTE	KILOMETER POST TOTAL PROJECT	SHEET No.	TOTAL SHEETS
07	LA	138	87.2/88.9	58	156

REGISTERED CIVIL ENGINEER 1-12-10 DATE

PLANS APPROVAL DATE 5-17-10

REGISTERED PROFESSIONAL ENGINEER PARVIZ YEGANEH No. C53797 Exp. 6/30/11 CIVIL STATE OF CALIFORNIA

THE STATE OF CALIFORNIA OR ITS OFFICERS OR AGENTS SHALL NOT BE RESPONSIBLE FOR THE ACCURACY OR COMPLETENESS OF ELECTRONIC COPIES OF THIS PLAN SHEET.

Caltrans Metric

NOTES:

1. LOCATIONS OF UTILITY FACILITIES SHOWN ON THESE PLANS ARE APPROXIMATE AND SHALL BE VERIFIED BY THE CONTRACTOR PRIOR TO CONSTRUCTION.
2. EXCAVATION WITHIN 0.6 METER OF UTILITIES SHALL BE DONE BY HAND TOOLS UNLESS SPECIFIED BY THE RESIDENT ENGINEER.
3. FOR ACCURATE RIGHT OF WAY DATA, CONTACT RIGHT OF WAY ENGINEERING AT THE DISTRICT OFFICE.

LEGEND AND ABBBREVIATIONS

LCID	LITTLEROCK CREEK IRRIGATION DISTRICT	BU CA	BURIED CABLE
LADPW	LOS ANGELES COUNTY DEPARTMENT OF PUBLIC WORKS	C I	CAST IRON
LAFCD	LOS ANGELES COUNTY FLOOD CONTROL DISTRICT		FH-FIRE HYDRANT
LACWWD	LOS ANGELES COUNTY WATER WORKS DISTRICT		FH-FIRE HYDRANT (ENCLOSED BY CONCRETE BARRICADES)
ATT	AT&T INCORPORATED	E OH	OVERHEAD UTILITY LINE
SCE	SOUTHERN CALIFORNIA EDISON	S I	STEEL
SO CAL GAS	SOUTHERN CALIFORNIA GAS COMPANY	VC	WATER VALVES
		PUM	POLY UPONOR MEDIUM
		AC	ASBESTOS CEMENT

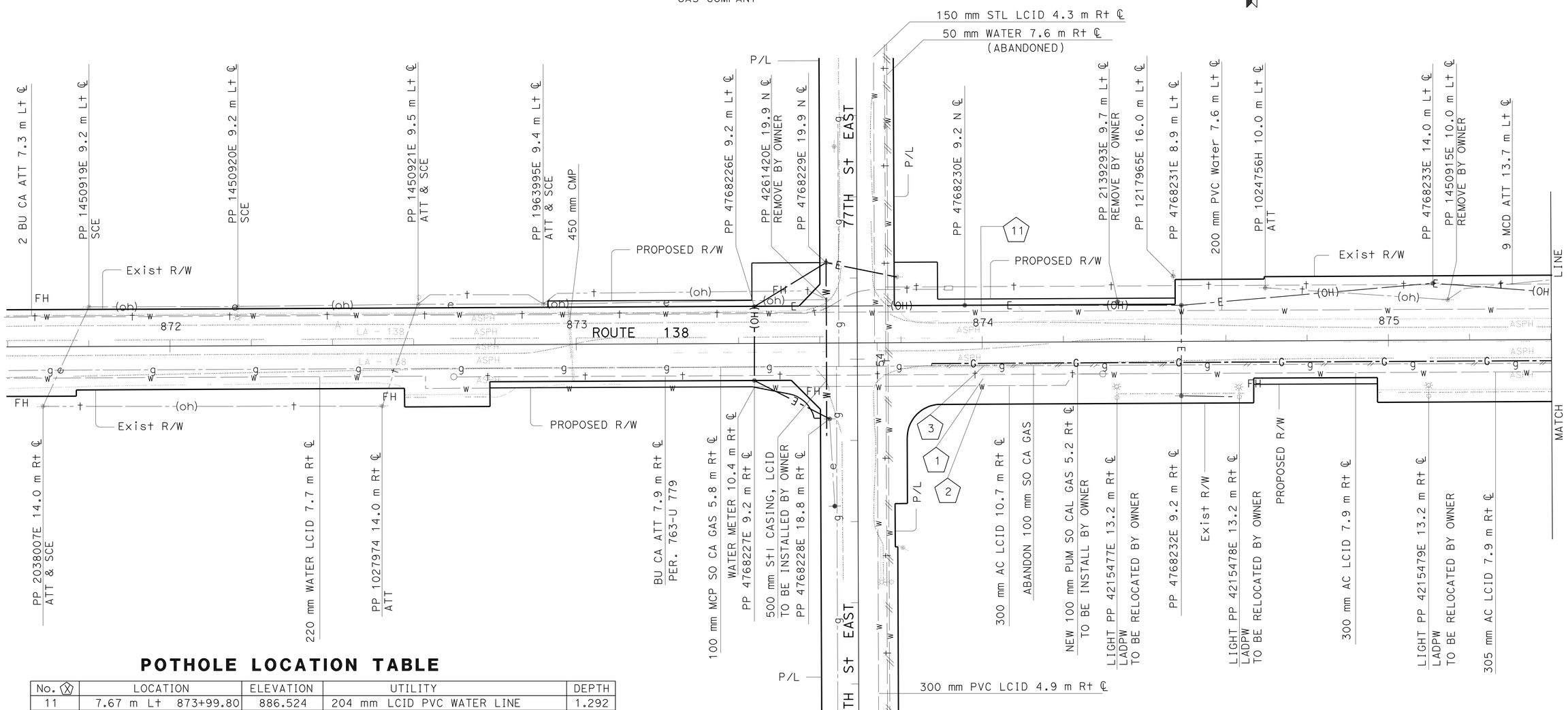

POTHOLE LOCATION TABLE

No. (X)	LOCATION	ELEVATION	UTILITY	DEPTH
11	7.67 m Lt 873+99.80	886.524	204 mm LCID PVC WATER LINE	1.292
1	8.91 m Rt 874+00.17	886.894	305 mm LCID ACP WATER LINE	1.311
2	10.75 m Rt 874+00.18	886.908	51 mm LCID STEEL GAS LINE	0.908
3	5.85 m Rt 874+00.32	886.817	102 mm LCID STEEL GAS LINE	1.177

ALL DIMENSIONS ARE IN METERS UNLESS OTHERWISE SHOWN

UTILITY PLAN

SCALE 1:500

THIS PLAN ACCURATE FOR UTILITY WORK ONLY.

U-1

CALCULATED-DESIGNED BY PARVIZ YEGANEH
CHECKED BY UGO ANAKWENZE
REVISED BY
DATE REVISED
FUNCTIONAL SUPERVISOR UGO ANAKWENZE

STATE OF CALIFORNIA - DEPARTMENT OF TRANSPORTATION
Caltrans ENGINEERING SERVICES

LAST REVISION 9-23-09
DATE PLOTTED => 20-MAY-2010
TIME PLOTTED => 13:37

Dist	COUNTY	ROUTE	KILOMETER POST TOTAL PROJECT	SHEET No.	TOTAL SHEETS
07	LA	138	87.2/88.9	59	156

Caltrans Metric

REGISTERED CIVIL ENGINEER 1-12-10 DATE

5-17-10
PLANS APPROVAL DATE

REGISTERED PROFESSIONAL ENGINEER PARVIZ YEGANEH No. C53797 Exp. 6/30/11 CIVIL STATE OF CALIFORNIA

THE STATE OF CALIFORNIA OR ITS OFFICERS OR AGENTS SHALL NOT BE RESPONSIBLE FOR THE ACCURACY OR COMPLETENESS OF ELECTRONIC COPIES OF THIS PLAN SHEET.

NOTES:

1. LOCATIONS OF UTILITY FACILITIES SHOWN ON THESE PLANS ARE APPROXIMATE AND SHALL BE VERIFIED BY THE CONTRACTOR PRIOR TO CONSTRUCTION.
2. EXCAVATION WITHIN 0.6 METER OF UTILITIES SHALL BE DONE BY HAND TOOLS UNLESS SPECIFIED BY THE RESIDENT ENGINEER.
3. FOR ACCURATE RIGHT OF WAY DATA, CONTACT RIGHT OF WAY ENGINEERING AT THE DISTRICT OFFICE.
4. ④ TRENCH 13.7 NORTH AND 13.7 SOUTH OF STATION 877+78 2 DU ATT.

POTHOLE LOCATION TABLE ON 80TH St EAST

No. (EX)	LOCATION	ELEVATION	UTILITY	DEPTH
E17	25.59 m R+ 877+74.51	885.493	152 mm WATER LINE	1.245
E18	18.24 m L+ 877+75.90	884.688	152 mm WATER LINE	1.397
E21	4.65 m R+ 877+66.64	885.497	51 mm GAS LINE	1.016
E20	18.87 m L+ 877+66.75	884.723	102 mm GAS LINE	0.940
E16	26.13 m R+ 877+75.83	885.470	ATT	0.991
E19	22.95 m L+ 877+76.45	884.524	ATT	0.914

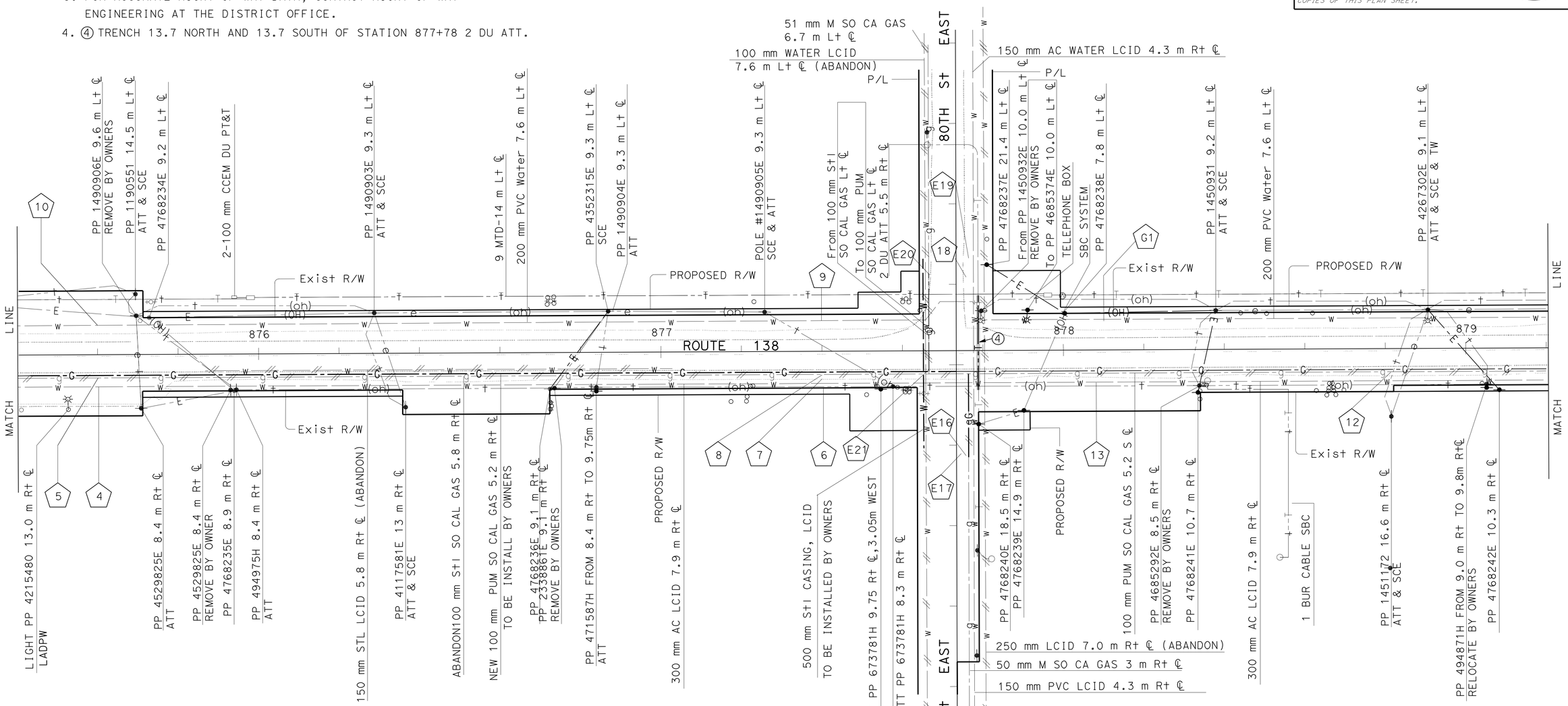

POTHOLE LOCATION TABLE

No. (X)	LOCATION	ELEVATION	UTILITY	DEPTH
10	7.29 m Lt 875+59.87	886.068	204 mm LCID PVC WATER LINE	1.292
4	8.07 m Rt 875+60.22	886.225	305 mm LCID ACP WATER LINE	1.170
9	7.62 m Lt 877+40.00	885.469	204 mm LCID PVC WATER LINE	1.262
7	6.67 m Rt 877+40.11	885.565	152 mm LCID WATER LINE	1.036
6	8.08 m Rt 877+40.37	885.606	305 mm LCID ACP WATER LINE	1.256
13	8.09 m Rt 878+08.14	884.479	305 mm LCID ACP WATER LINE	1.366
G1	7.16 m Lt 878+10.08	884.749	WATER LINE	1.346
5	5.74 m Rt 875+60.13	886.373	102 mm LCID STEEL GAS LINE	1.090
8	5.82 m Rt 877+40.19	885.627	102 mm LCID STEEL GAS LINE	1.109
12	5.80 m Rt 878+81.33	884.414	102 mm LCID STEEL GAS LINE	1.097

THIS PLAN ACCURATE FOR UTILITY WORK ONLY.

ALL DIMENSIONS ARE IN METERS UNLESS OTHERWISE SHOWN

UTILITY PLAN

SCALE 1:500

U-2

STATE OF CALIFORNIA - DEPARTMENT OF TRANSPORTATION
Caltrans ENGINEERING SERVICES

FUNCTIONAL SUPERVISOR: UGO ANAKWENZE
CALCULATED-DESIGNED BY: PARVIZ YEGANEH
CHECKED BY: UGO ANAKWENZE
REVISED BY / DATE REVISED

LAST REVISION 1-14-10
DATE PLOTTED => 20-MAY-2010
TIME PLOTTED => 13:37

Dist	COUNTY	ROUTE	KILOMETER POST TOTAL PROJECT	SHEET No.	TOTAL SHEETS
07	LA	138	87.2/88.9	60	156

Caltrans Metric

REGISTERED CIVIL ENGINEER 1-12-10 DATE

5-17-10
PLANS APPROVAL DATE

REGISTERED PROFESSIONAL ENGINEER PARVIZ YEGANEH No. C53797 Exp. 6/30/11 CIVIL STATE OF CALIFORNIA

THE STATE OF CALIFORNIA OR ITS OFFICERS OR AGENTS SHALL NOT BE RESPONSIBLE FOR THE ACCURACY OR COMPLETENESS OF ELECTRONIC COPIES OF THIS PLAN SHEET.

NOTES:

1. LOCATIONS OF UTILITY FACILITIES SHOWN ON THESE PLANS ARE APPROXIMATE AND SHALL BE VERIFIED BY THE CONTRACTOR PRIOR TO CONSTRUCTION.
2. EXCAVATION WITHIN 0.6 METER OF UTILITIES SHALL BE DONE BY HAND TOOLS UNLESS SPECIFIED BY THE RESIDENT ENGINEER.
3. FOR ACCURATE RIGHT OF WAY DATA, CONTACT RIGHT OF WAY ENGINEERING AT THE DISTRICT OFFICE.
4. ④ TRENCH 1.5 WEST AND 1.5 EAST OF STATION 11+29.6 AND LOWER 100 mm LCID.

POTHOLE LOCATION TABLE

No. ⓧ	LOCATION	ELEVATION	UTILITY	DEPTH
14	7.98 m Rt 879+99.02	882.968	305 mm LCID ACP WATER LINE	1.219
17	8.62 m Rt 10+93.15	880.987	305 mm LCID ACP WATER LINE	1.237
G2	7.64 m Lt 879+68.71	883.543	WATER LINE	1.270
G3	8.61 m Rt 11+27.71	880.380	WATER LINE	1.295
15	5.79 m Rt 879+98.44	883.234	102 mm STEEL GAS LINE	1.024
18	6.49 m Rt 10+92.19	881.113	102 mm STEEL GAS LINE	1.079
33	6.64 m Lt 11+92.91	880.697	102 mm STEEL GAS LINE	1.207
16	6.96 m Rt 10+33.21	881.934	DRY	

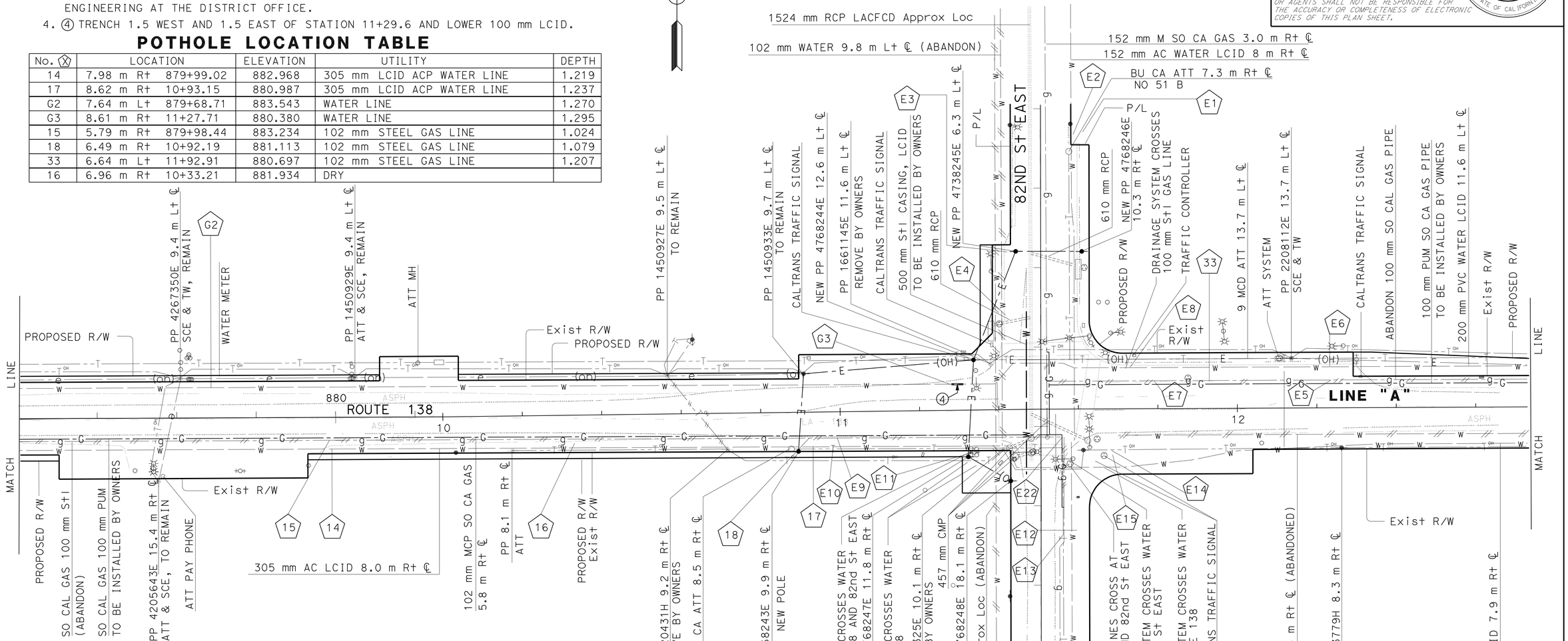

POTHOLE LOCATION TABLE ON 82ND St EAST

No. ⓔⓧ	LOCATION	ELEVATION	UTILITY	DEPTH
E10	8.45 m Rt 10+98.21	880.996	204 mm WATER LINE	1.422
E11	10.20 m Rt 11+34.89	880.639	WATER LINE	DRY
E4	23.77 m Lt 11+41.74	879.762	WATER LINE	DRY
E3	39.71 m Lt 11+42.18	879.402	WATER LINE	DRY
E12	30.53 m Rt 11+59.46	880.896	204 mm WATER LINE	0.965
E1	69.77 m Lt 11+61.31	878.971	152 mm WATER LINE	1.524
E14	10.46 m Rt 11+68.25	880.724	WATER LINE	DRY
E15	11.55 m Rt 11+68.51	880.802	WATER LINE	DRY
E8	10.49 m Lt 11+73.00	880.520	204 mm WATER LINE	1.321
E6	10.46 m Lt 12+23.26	880.836	204 mm WATER LINE	1.219
E9	6.53 m Rt 10+99.19	880.971	102 mm GAS LINE	1.092
E22	7.06 m Rt 11+55.89	880.465	51 mm GAS LINE	1.041
E22	7.06 m Rt 11+55.89	880.465	102 mm GAS LINE	0.914
E13	31.58 m Rt 11+56.03	880.732	51 mm GAS LINE	1.092
E7	7.00 m Lt 11+79.16	880.239	102 mm GAS LINE	1.575
E5	7.03 m Lt 12+23.62	880.954	102 mm GAS LINE	1.092
E2	69.13 m Lt 11+58.89	879.025	ATT	1.194

THIS PLAN ACCURATE FOR UTILITY WORK ONLY.

ALL DIMENSIONS ARE IN METERS UNLESS OTHERWISE SHOWN

UTILITY PLAN

SCALE 1:500

U-3

REVISED BY | DATE REVISED

PARVIZ YEGANEH | UGO ANAKWENZE

CALCULATED-DESIGNED BY | CHECKED BY

FUNCTIONAL SUPERVISOR: UGO ANAKWENZE

STATE OF CALIFORNIA - DEPARTMENT OF TRANSPORTATION
Caltrans ENGINEERING SERVICES

LAST REVISION 1-13-10 | DATE PLOTTED => 20-MAY-2010 | TIME PLOTTED => 13:37

Dist	COUNTY	ROUTE	KILOMETER POST TOTAL PROJECT	SHEET No.	TOTAL SHEETS
07	LA	138	87.2/88.9	61	156

REGISTERED CIVIL ENGINEER 1-12-10 DATE

5-17-10
PLANS APPROVAL DATE

REGISTERED PROFESSIONAL ENGINEER PARVIZ YEGANEH No. C53797 Exp. 6/30/11 CIVIL STATE OF CALIFORNIA

THE STATE OF CALIFORNIA OR ITS OFFICERS OR AGENTS SHALL NOT BE RESPONSIBLE FOR THE ACCURACY OR COMPLETENESS OF ELECTRONIC COPIES OF THIS PLAN SHEET.

Caltrans Metric

NOTES:

1. LOCATIONS OF UTILITY FACILITIES SHOWN ON THESE PLANS ARE APPROXIMATE AND SHALL BE VERIFIED BY THE CONTRACTOR PRIOR TO CONSTRUCTION.
2. EXCAVATION WITHIN 0.6 METER OF UTILITIES SHALL BE DONE BY HAND TOOLS UNLESS SPECIFIED BY THE RESIDENT ENGINEER.
3. FOR ACCURATE RIGHT OF WAY DATA, CONTACT RIGHT OF WAY ENGINEERING AT THE DISTRICT OFFICE.

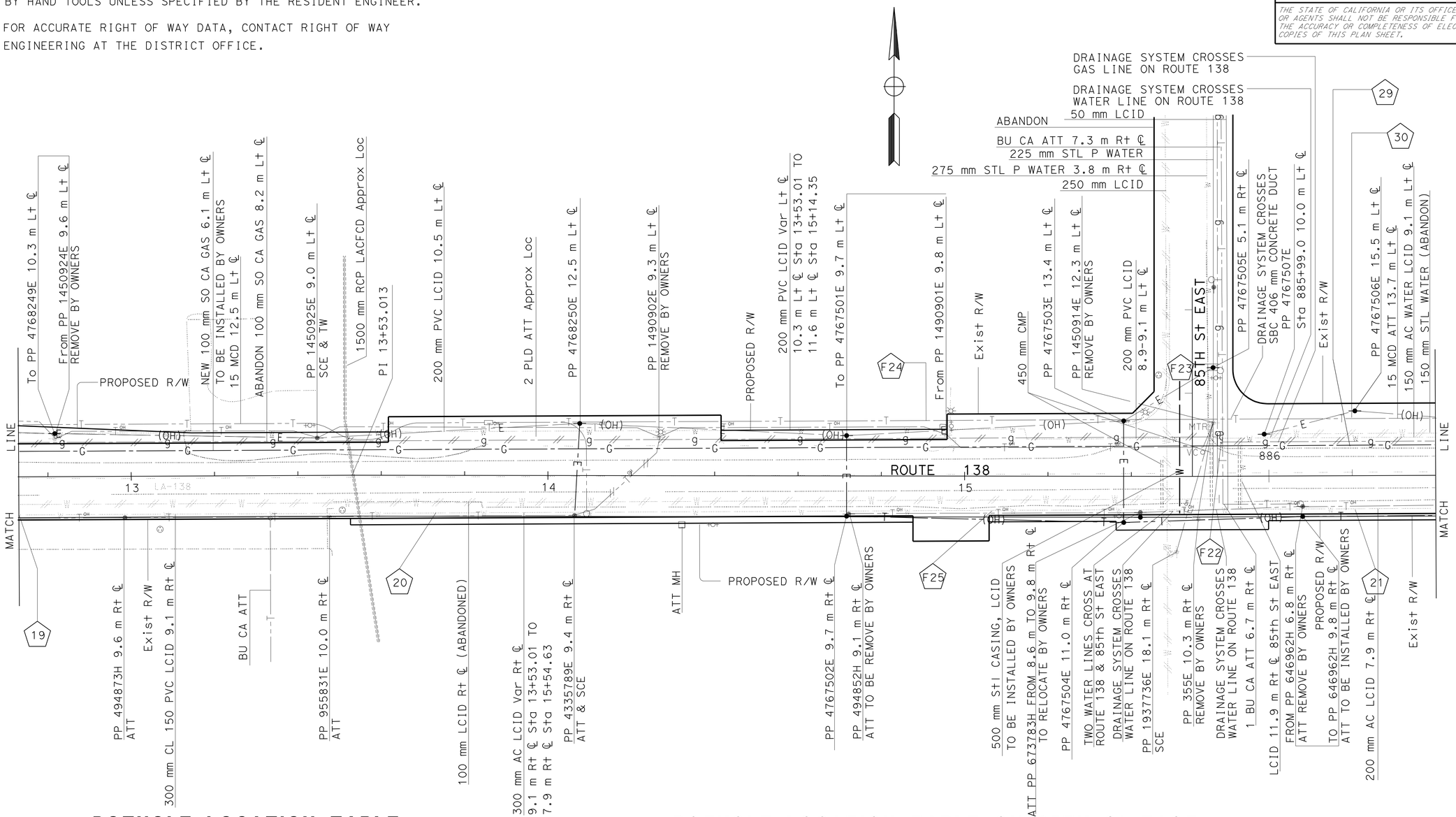

POTHOLE LOCATION TABLE

No. (X)	LOCATION	ELEVATION	UTILITY	DEPTH
19	9.21 m R+ 12+73.08	881.333	300 mm LCID ACP WATER LINE	1.250
20	8.96 m R+ 13+73.05	882.384	300 mm LCID ACP WATER LINE	1.298
21	8.12 m R+ 886+20.66	884.504	200 mm LCID ACP WATER LINE	1.280
29	7.07 m L+ 886+19.48	884.437	100 mm STEEL GAS LINE	1.237
30	13.94 m L+ 886+19.94	884.493	SBC 400 mm CONCRETE DUCT	1.274

POTHOLE LOCATION TABLE ON 85TH St EAST

No. (EX)	LOCATION	ELEVATION	UTILITY	DEPTH
F25	8.30 m R+ 15+06.51	883.572	300 mm WATER LINE	1.321
F23	26.930 m L+ 885+88.150	883.405	75 mm GAS LINE	1.321
F22	8.383 m L+ 885+88.626	883.923	75 mm GAS LINE	1.295
F24	13.25 m L+ 14+90.77	882.826	ATT	0.711

ALL DIMENSIONS ARE IN METERS UNLESS OTHERWISE SHOWN

UTILITY PLAN

SCALE 1:500

THIS PLAN ACCURATE FOR UTILITY WORK ONLY.

U-4

CALCULATED-DESIGNED BY	PARVIZ YEGANEH
CHECKED BY	UGO ANAKWENZE
REVISED BY	
DATE REVISED	
FUNCTIONAL SUPERVISOR	UGO ANAKWENZE

STATE OF CALIFORNIA - DEPARTMENT OF TRANSPORTATION
Caltrans ENGINEERING SERVICES

LAST REVISION 1-13-10
DATE PLOTTED => 20-MAY-2010
TIME PLOTTED => 13:37

Dist	COUNTY	ROUTE	KILOMETER POST TOTAL PROJECT	SHEET No.	TOTAL SHEETS
07	LA	138	87.2/88.9	62	156

Parviz Yeganeh 1-12-10
REGISTERED CIVIL ENGINEER DATE

5-17-10
PLANS APPROVAL DATE

REGISTERED PROFESSIONAL ENGINEER PARVIZ YEGANEH No. C53797 Exp. 6/30/11 CIVIL STATE OF CALIFORNIA

THE STATE OF CALIFORNIA OR ITS OFFICERS OR AGENTS SHALL NOT BE RESPONSIBLE FOR THE ACCURACY OR COMPLETENESS OF ELECTRONIC COPIES OF THIS PLAN SHEET.

Caltrans Metric

NOTES:

1. LOCATIONS OF UTILITY FACILITIES SHOWN ON THESE PLANS ARE APPROXIMATE AND SHALL BE VERIFIED BY THE CONTRACTOR PRIOR TO CONSTRUCTION.
2. EXCAVATION WITHIN 0.6 METER OF UTILITIES SHALL BE DONE BY HAND TOOLS UNLESS SPECIFIED BY THE RESIDENT ENGINEER.
3. FOR ACCURATE RIGHT OF WAY DATA, CONTACT RIGHT OF WAY ENGINEERING AT THE DISTRICT OFFICE.

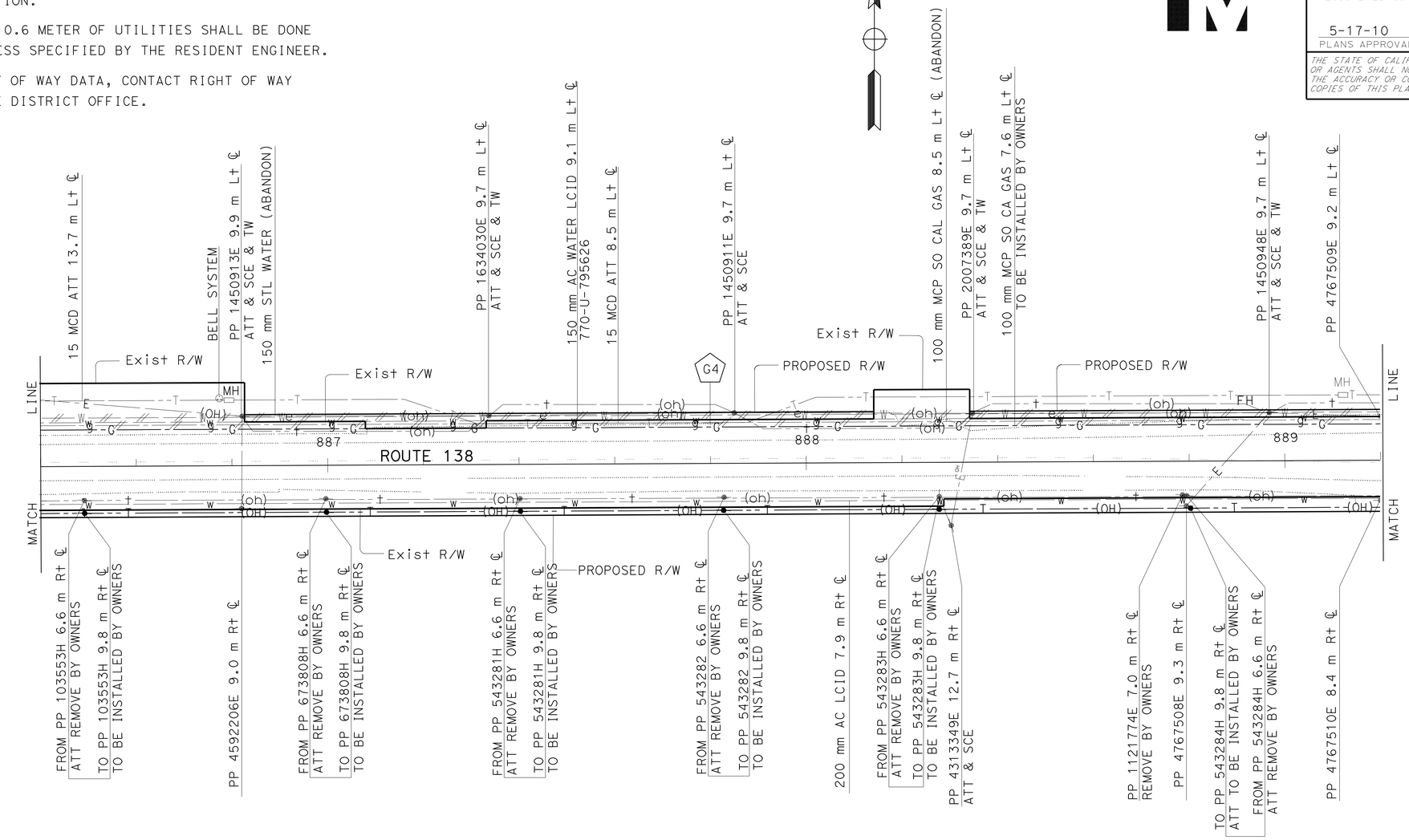

POTHOLE LOCATION TABLE

No. ⓧ	LOCATION	ELEVATION	UTILITY	DEPTH
G4	8.01 m Rt 887+79.99	886.265	WATER LINE	1.448

ALL DIMENSIONS ARE IN METERS UNLESS OTHERWISE SHOWN

UTILITY PLAN

SCALE 1:500

THIS PLAN ACCURATE FOR UTILITY WORK ONLY.

U-5

STATE OF CALIFORNIA - DEPARTMENT OF TRANSPORTATION
Caltrans ENGINEERING SERVICES

FUNCTIONAL SUPERVISOR: UGO ANAKWENZE
CALCULATED-DESIGNED BY: PARVIZ YEGANEH
CHECKED BY: UGO ANAKWENZE
REVISED BY / DATE REVISED

LAST REVISION 9-23-09
DATE PLOTTED => 20-MAY-2010
TIME PLOTTED => 13:37

Dist	COUNTY	ROUTE	KILOMETER POST TOTAL PROJECT	SHEET No.	TOTAL SHEETS
07	LA	138	87.2/88.9	63	156

Caltrans Metric

REGISTERED CIVIL ENGINEER 1-12-10 DATE

5-17-10
PLANS APPROVAL DATE

REGISTERED PROFESSIONAL ENGINEER PARVIZ YEGANEH No. C53797 Exp. 6/30/11 CIVIL STATE OF CALIFORNIA

THE STATE OF CALIFORNIA OR ITS OFFICERS OR AGENTS SHALL NOT BE RESPONSIBLE FOR THE ACCURACY OR COMPLETENESS OF ELECTRONIC COPIES OF THIS PLAN SHEET.

NOTES:

1. LOCATIONS OF UTILITY FACILITIES SHOWN ON THESE PLANS ARE APPROXIMATE AND SHALL BE VERIFIED BY THE CONTRACTOR PRIOR TO CONSTRUCTION.
2. EXCAVATION WITHIN 0.6 METER OF UTILITIES SHALL BE DONE BY HAND TOOLS UNLESS SPECIFIED BY THE RESIDENT ENGINEER.
3. FOR ACCURATE RIGHT OF WAY DATA, CONTACT RIGHT OF WAY ENGINEERING AT THE DISTRICT OFFICE.

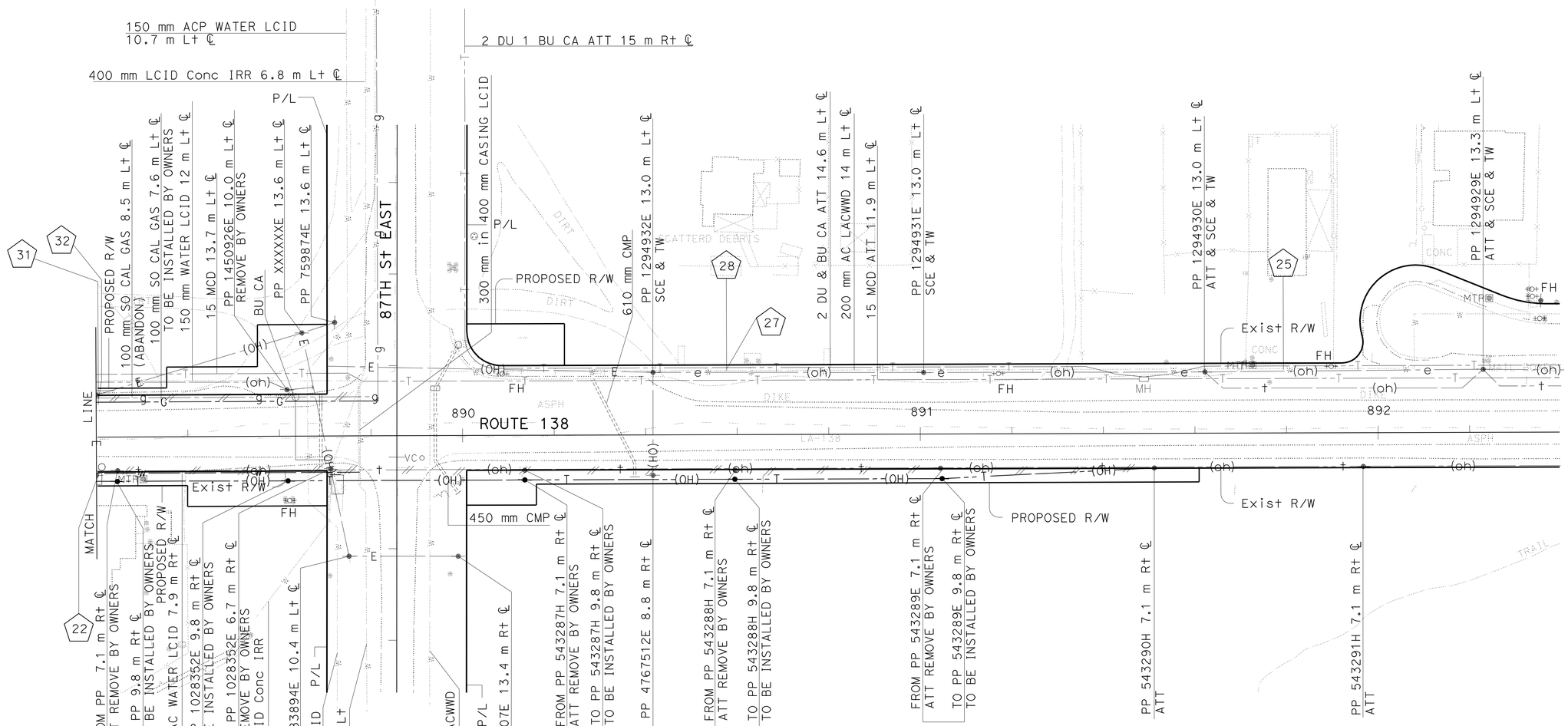

POTHOLE LOCATION TABLE

No. ⓧ	LOCATION	ELEVATION	UTILITY	DEPTH
32	8.38 m Lt 889+20.50	886.952	150 mm LCID ACP WATER LINE	1.372
22	8.11 m Rt 889+20.52	887.144	200 mm LCID ACP WATER LINE	1.414
28	13.97 m Lt 890+57.66	888.470	200 mm LCID ACP WATER LINE	1.628
25	13.84 m Lt 891+79.32	889.977	200 mm LCID ACP WATER LINE	1.353
31	7.08 m Lt 889+20.44	886.98	100 mm S+I SO CAL GAS	1.091
27	14.46 m Lt 890+57.78	888.423	SBC 1½" BURIED CABLE	1.036

ALL DIMENSIONS ARE IN METERS UNLESS OTHERWISE SHOWN

UTILITY PLAN

SCALE 1:500

THIS PLAN ACCURATE FOR UTILITY WORK ONLY.

U-6

STATE OF CALIFORNIA - DEPARTMENT OF TRANSPORTATION
Caltrans ENGINEERING SERVICES

FUNCTIONAL SUPERVISOR: UGO ANAKWENZE
CALCULATED-DESIGNED BY: PARVIZ YEGANEH
CHECKED BY: UGO ANAKWENZE
REVISED BY / DATE REVISED

LAST REVISION 1-13-10
DATE PLOTTED => 20-MAY-2010
TIME PLOTTED => 13:37

Dist	COUNTY	ROUTE	KILOMETER POST TOTAL PROJECT	SHEET No.	TOTAL SHEETS
07	LA	138	87.2/88.9	64	156

REGISTERED CIVIL ENGINEER 1-11-10 DATE

5-17-10
PLANS APPROVAL DATE

REGISTERED PROFESSIONAL ENGINEER QUANG THAI No. C66223 Exp. 6-30-10 CIVIL STATE OF CALIFORNIA

THE STATE OF CALIFORNIA OR ITS OFFICERS OR AGENTS SHALL NOT BE RESPONSIBLE FOR THE ACCURACY OR COMPLETENESS OF ELECTRONIC COPIES OF THIS PLAN SHEET.

Caltrans Metric

NOTE:

1. SIGN LOCATIONS ARE APPROXIMATE. EXACT LOCATIONS WILL BE DETERMINED BY THE ENGINEER.
2. ADDITIONAL CONSTRUCTION AREA SIGNS ARE SHOWN ON DETOUR PLANS.

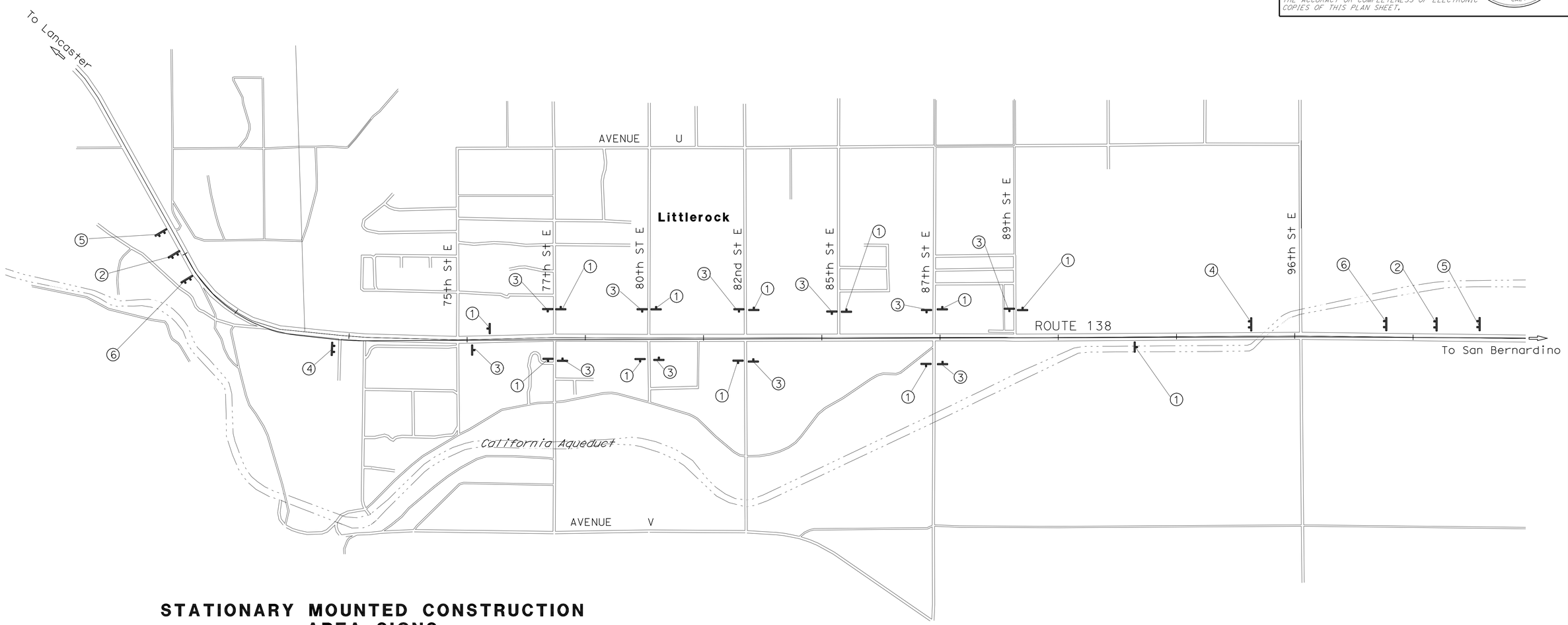

STATIONARY MOUNTED CONSTRUCTION AREA SIGNS

SIGN No.	SIGN CODE	PANEL SIZE (mm)	SIGN MESSAGE	No. OF POSTS AND SIZE (mm)	No. OF SIGNS
1	G20-2	900 x 450	END ROAD WORK	1-89 x 89	12
2	G20-1	1200 x 1200	ROAD WORK AHEAD 1 MILE	2-140 x 140	2
3	W20-1	900 x 900	ROAD WORK AHEAD	1-89 x 140	11
4	G20-1	1200 x 1200	ROAD WORK AHEAD 1/2 MILE	2-140 x 140	2
5	C40 (CA)	3660 x 1500	TRAFFIC FINES DOUBLED IN CONSTRUCTION ZONES	2-140 x 184	2
6	PFIS	2250 x 1500	CONSTRUCTION PROJECT FUNDING IDENTIFICATION SIGN	2-140 x 140	2

ALL DIMENSIONS ARE IN METERS UNLESS OTHERWISE SHOWN

THIS PLAN ACCURATE FOR CONSTRUCTION AREA SIGN WORK ONLY

CONSTRUCTION AREA SIGNS

NO SCALE

CS-1

REVISED BY | DATE REVISED

QUANG THAI | CALCULATED-DESIGNED BY

M. OJI KALU | CHECKED BY

FUNCTIONAL SUPERVISOR

M. OJI KALU

STATE OF CALIFORNIA - DEPARTMENT OF TRANSPORTATION

Caltrans OFFICE OF DESIGN B

LAST REVISION 12-29-09 | DATE PLOTTED => 20-MAY-2010 | TIME PLOTTED => 13:37

Dist	COUNTY	ROUTE	KILOMETER POST TOTAL PROJECT	SHEET No.	TOTAL SHEETS
07	LA	138	87.2/88.9	65	156

Quang Thai 1-11-10
REGISTERED CIVIL ENGINEER DATE

5-17-10
PLANS APPROVAL DATE

REGISTERED PROFESSIONAL ENGINEER QUANG THAI No. C66223 Exp. 6-30-10 CIVIL STATE OF CALIFORNIA

THE STATE OF CALIFORNIA OR ITS OFFICERS OR AGENTS SHALL NOT BE RESPONSIBLE FOR THE ACCURACY OR COMPLETENESS OF ELECTRONIC COPIES OF THIS PLAN SHEET.

Caltrans Metric

NOTES:

1. DIMENSIONS OF THE STRUCTURAL SECTIONS ARE SUBJECT TO TOLERANCES SPECIFIED IN THE STANDARD SPECIFICATIONS.
2. 2* STRUCTURAL SECTION No. 2 PAVE UP TO EXISTING SURFACE

LEGEND:

Temp FENCE

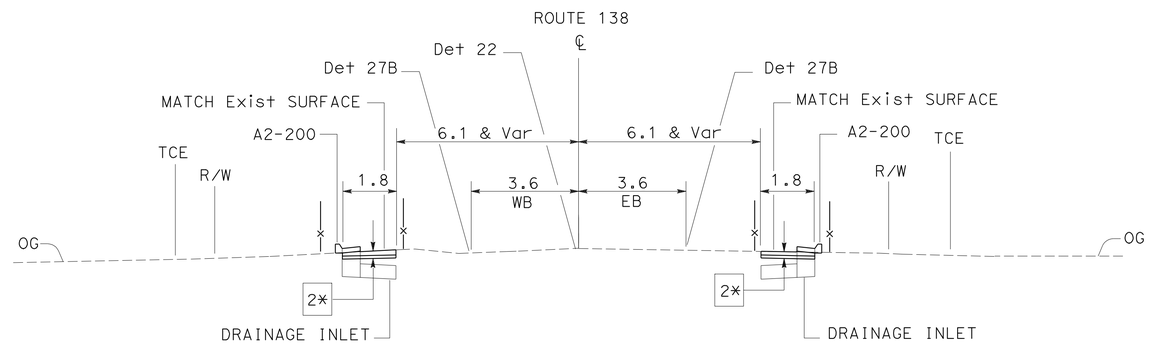

STAGE 1
WIDEN OUTSIDE

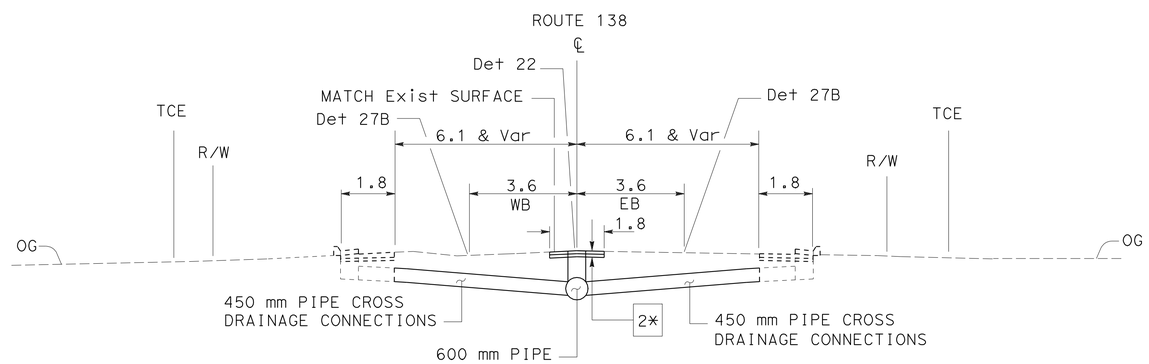

STAGE 2
MEDIAN DRAINAGE WORK

ALL DIMENSIONS ARE IN METERS
UNLESS OTHERWISE SHOWN

STAGE 1, 2, 3, 4, 5

STAGE CONSTRUCTION AND TRAFFIC HANDLING PLAN

NO SCALE

THIS PLAN ACCURATE FOR STAGE CONSTRUCTION AND TRAFFIC HANDLING WORK ONLY

SC-1

REVISED BY	DATE REVISED

CALCULATED-DESIGNED BY	CHECKED BY
QUANG THAI	M. OJI KALU

FUNCTIONAL SUPERVISOR
M. OJI KALU

STATE OF CALIFORNIA - DEPARTMENT OF TRANSPORTATION
Caltrans OFFICE OF DESIGN B

LAST REVISION 12-29-09 | DATE PLOTTED => 20-MAY-2010 TIME PLOTTED => 13:38

Dist	COUNTY	ROUTE	KILOMETER POST TOTAL PROJECT	SHEET No.	TOTAL SHEETS
07	LA	138	87.2/88.9	66	156

Caltrans Metric

Quang Thai 1-11-10
REGISTERED CIVIL ENGINEER DATE

5-17-10
PLANS APPROVAL DATE

REGISTERED PROFESSIONAL ENGINEER QUANG THAI No. C66223 Exp. 6-30-10 CIVIL STATE OF CALIFORNIA

THE STATE OF CALIFORNIA OR ITS OFFICERS OR AGENTS SHALL NOT BE RESPONSIBLE FOR THE ACCURACY OR COMPLETENESS OF ELECTRONIC COPIES OF THIS PLAN SHEET.

NOTES:

1. DIMENSIONS OF THE STRUCTURAL SECTIONS ARE SUBJECT TO TOLERANCES SPECIFIED IN THE STANDARD SPECIFICATIONS.
2. 2** STRUCTURAL SECTION No. 2 PAVE UP TO PROPOSED SURFACE

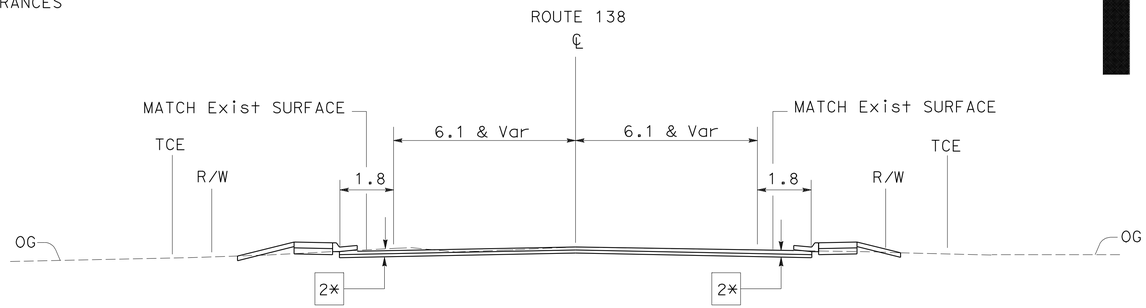

STAGE 3
INTERSECTION CONSTRUCTION

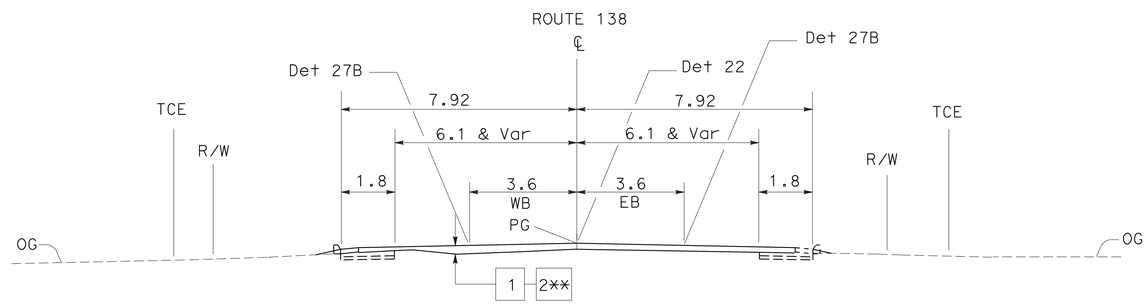

STAGE 4
OVERLAY PAVEMENT

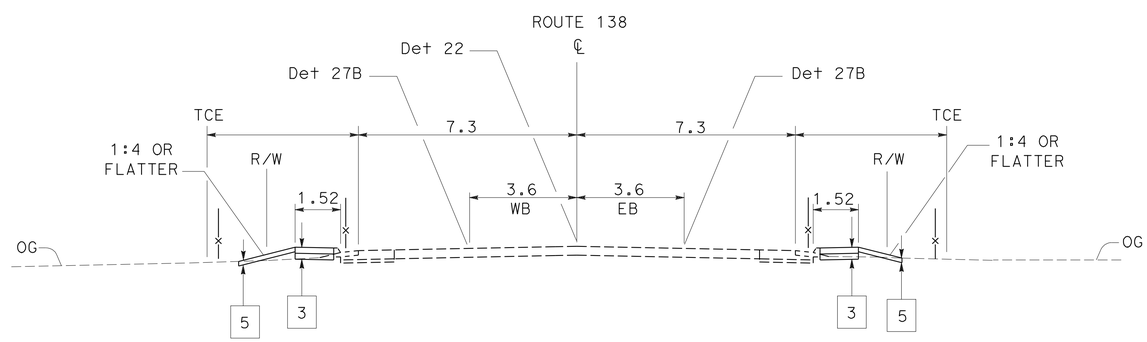

STAGE 5
SIDEWALK, DRIVEWAY CONSTRUCTION

ALL DIMENSIONS ARE IN METERS
UNLESS OTHERWISE SHOWN

STAGE 1, 2, 3, 4, 5

STAGE CONSTRUCTION AND TRAFFIC HANDLING PLAN

NO SCALE

THIS PLAN ACCURATE FOR STAGE CONSTRUCTION AND TRAFFIC HANDLING WORK ONLY

SC-2

STATE OF CALIFORNIA - DEPARTMENT OF TRANSPORTATION
Caltrans OFFICE OF DESIGN B

FUNCTIONAL SUPERVISOR: M. OJI KALU
CALCULATED-DESIGNED BY: QUANG THAI
CHECKED BY: M. OJI KALU
REVISED BY
DATE REVISED

LAST REVISION 12-29-09 | DATE PLOTTED => 20-MAY-2010 | TIME PLOTTED => 13:38

Dist	COUNTY	ROUTE	KILOMETER POST TOTAL PROJECT	SHEET No.	TOTAL SHEETS
07	LA	138	87.2/88.9	67	156

REGISTERED CIVIL ENGINEER 1-11-10 DATE

5-17-10
PLANS APPROVAL DATE

REGISTERED PROFESSIONAL ENGINEER QUANG THAI No. C66223 Exp. 6-30-10 CIVIL STATE OF CALIFORNIA

THE STATE OF CALIFORNIA OR ITS OFFICERS OR AGENTS SHALL NOT BE RESPONSIBLE FOR THE ACCURACY OR COMPLETENESS OF ELECTRONIC COPIES OF THIS PLAN SHEET.

Caltrans Metric

NOTE: CONFLICTING STRIPING SHALL BE REMOVED.

LEGEND:

- WORK AREA
- XXX — TEMPORARY STRIPING DETAIL NUMBER PER Std PLAN
- TRAFFIC DIRECTION
- TYPE IV ARROW
- TYPE VII ARROW

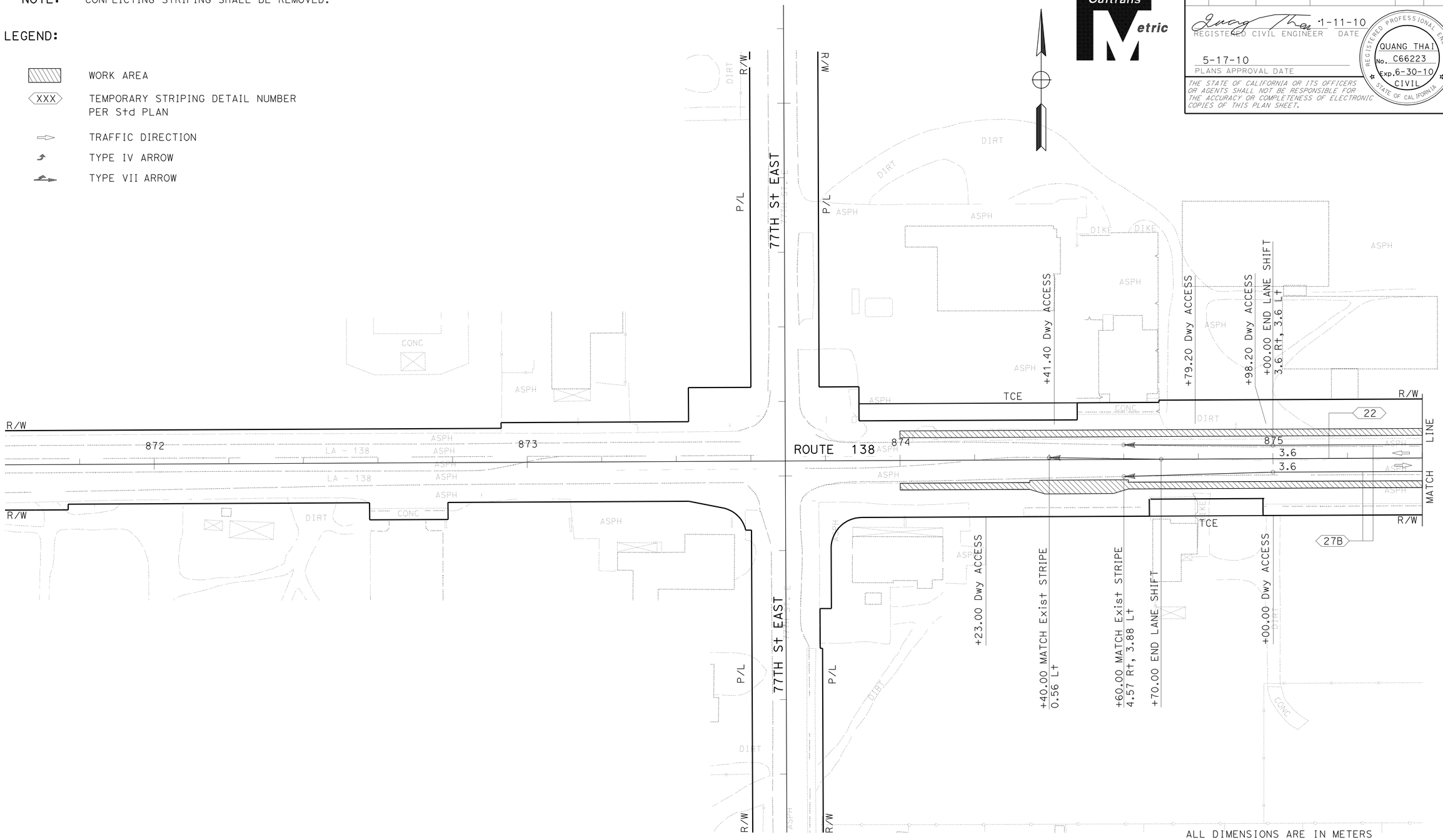

ALL DIMENSIONS ARE IN METERS
UNLESS OTHERWISE SHOWN

STAGE 1

STAGE CONSTRUCTION AND TRAFFIC HANDLING PLAN

SCALE 1:500

THIS PLAN ACCURATE FOR STAGE CONSTRUCTION AND TRAFFIC HANDLING WORK ONLY

SC-3

REVISED BY	DATE REVISED

CALCULATED-DESIGNED BY: QUANG THAI
CHECKED BY: M. OJI KALU
FUNCTIONAL SUPERVISOR: M. OJI KALU

STATE OF CALIFORNIA - DEPARTMENT OF TRANSPORTATION
Caltrans OFFICE OF DESIGN B

LAST REVISION 12-29-09 | DATE PLOTTED => 20-MAY-2010 | TIME PLOTTED => 13:38

Dist	COUNTY	ROUTE	KILOMETER POST TOTAL PROJECT	SHEET No.	TOTAL SHEETS
07	LA	138	87.2/88.9	68	156

Caltrans Metric

1-11-10
REGISTERED CIVIL ENGINEER DATE

5-17-10
PLANS APPROVAL DATE

REGISTERED PROFESSIONAL ENGINEER
QUANG THAI
No. C66223
Exp. 6-30-10
CIVIL
STATE OF CALIFORNIA

THE STATE OF CALIFORNIA OR ITS OFFICERS OR AGENTS SHALL NOT BE RESPONSIBLE FOR THE ACCURACY OR COMPLETENESS OF ELECTRONIC COPIES OF THIS PLAN SHEET.

CURVE DATA

No.	R	Δ	T	L
1	9.14	90°0'00"	9.14	14.36
2	9.14	90°0'00"	9.14	14.36
3	9.14	89°59'50"	9.14	14.36
4	9.14	90°0'10"	9.14	14.36

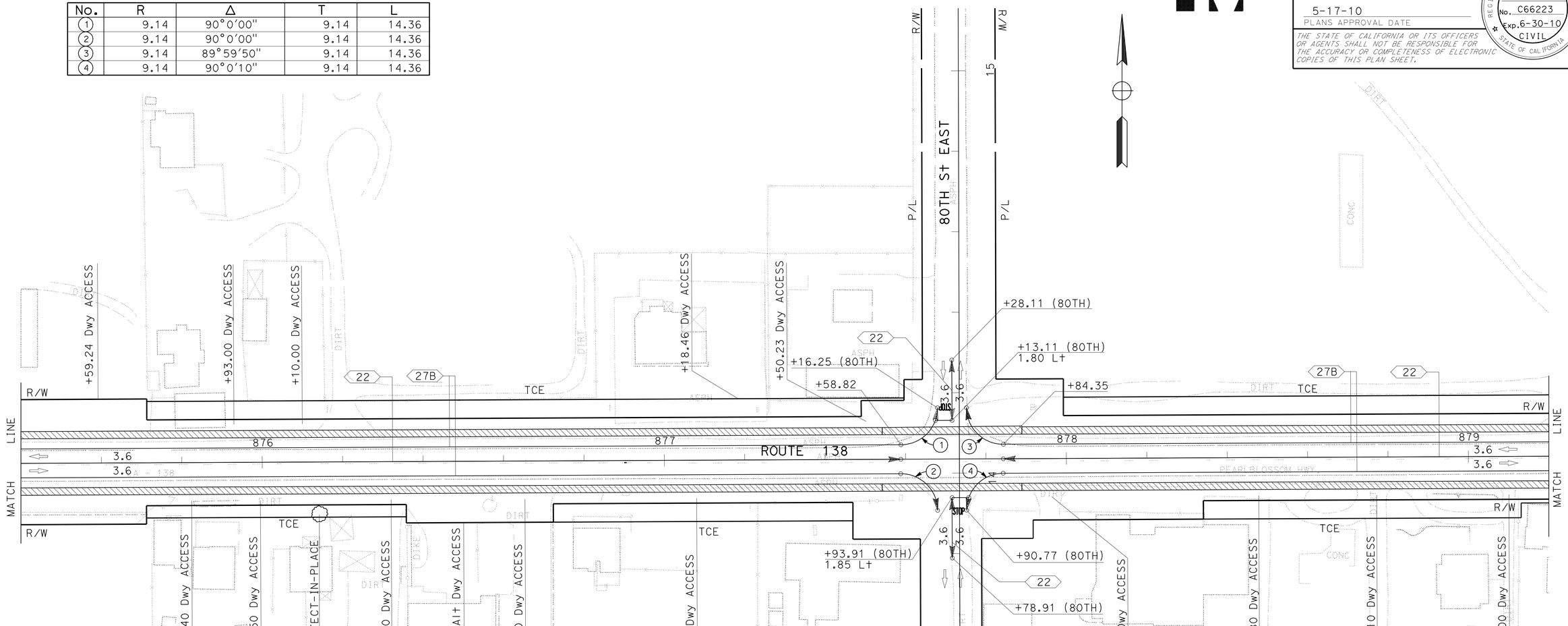

ALL DIMENSIONS ARE IN METERS
UNLESS OTHERWISE SHOWN

STAGE 1

STAGE CONSTRUCTION AND TRAFFIC HANDLING PLAN

SCALE 1:500

THIS PLAN ACCURATE FOR STAGE CONSTRUCTION AND TRAFFIC HANDLING WORK ONLY

SC-4

STATE OF CALIFORNIA - DEPARTMENT OF TRANSPORTATION
Caltrans OFFICE OF DESIGN B

FUNCTIONAL SUPERVISOR: M. OJI KALU
CALCULATED-DESIGNED BY: QUANG THAI
CHECKED BY: M. OJI KALU
REVISED BY
DATE REVISED

LAST REVISION 12-29-09
DATE PLOTTED => 20-MAY-2010
TIME PLOTTED => 13:38

BORDER LAST REVISED 3/1/2007
RELATIVE BORDER SCALE IS IN MILLIMETERS 0 20 40 60 80
USERNAME => trpierce
DGN FILE => 712722ma04.dgn
CU 07244
EA 127221

Dist	COUNTY	ROUTE	KILOMETER POST TOTAL PROJECT	SHEET No.	TOTAL SHEETS
07	LA	138	87.2/88.9	69	156

REGISTERED CIVIL ENGINEER 1-11-10 DATE

5-17-10
PLANS APPROVAL DATE

REGISTERED PROFESSIONAL ENGINEER QUANG THAI No. C66223 Exp. 6-30-10 CIVIL STATE OF CALIFORNIA

THE STATE OF CALIFORNIA OR ITS OFFICERS OR AGENTS SHALL NOT BE RESPONSIBLE FOR THE ACCURACY OR COMPLETENESS OF ELECTRONIC COPIES OF THIS PLAN SHEET.

Caltrans Metric

CURVE DATA

No.	R	Δ	T	L
5	9.14	84°13′49″	8.27	13.44
6	9.14	90°38′31″	9.25	14.47
7	9.14	90°10′21″	9.17	14.39
8	9.14	89°49′26″	9.12	14.34

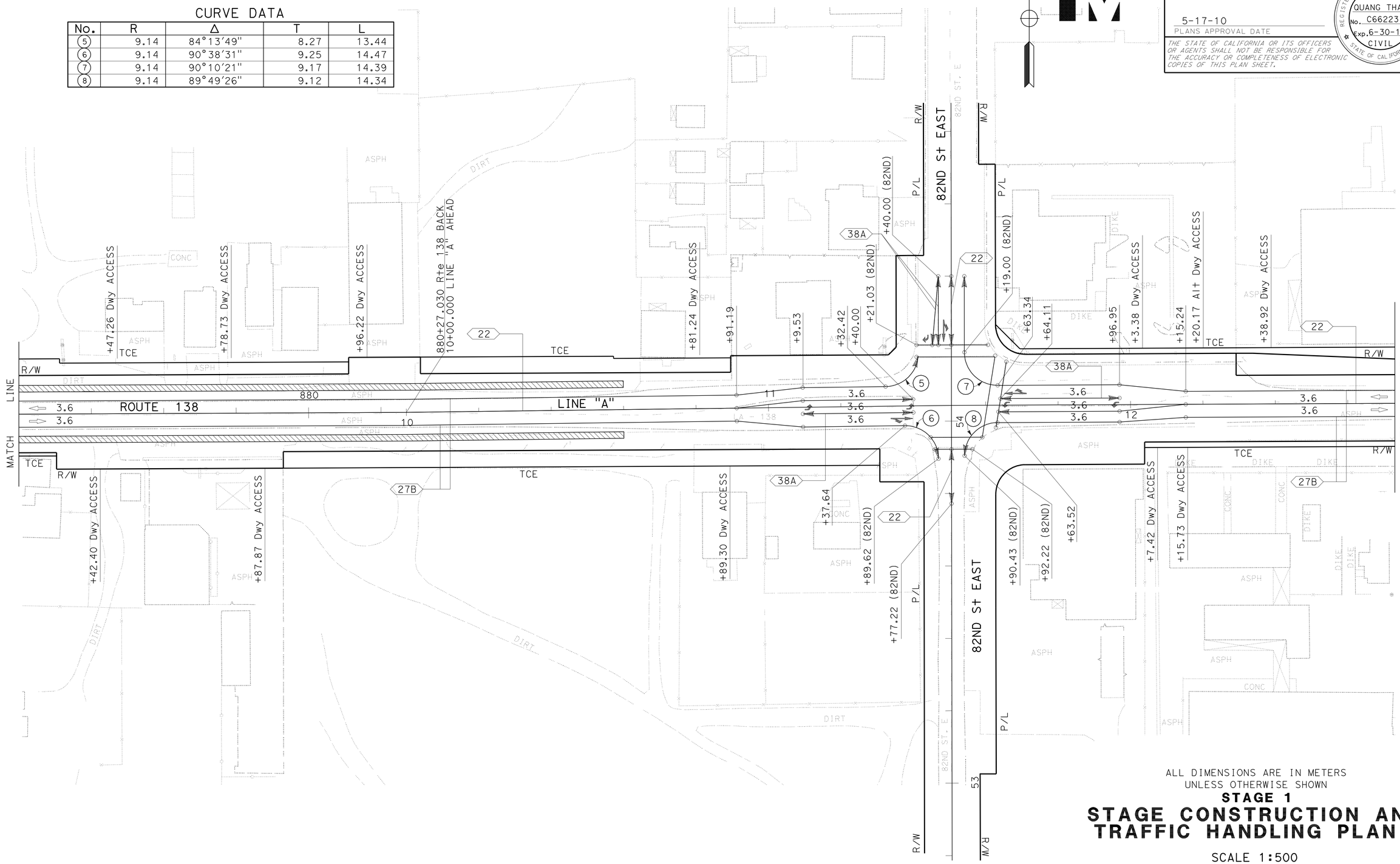

ALL DIMENSIONS ARE IN METERS
UNLESS OTHERWISE SHOWN

STAGE 1

STAGE CONSTRUCTION AND TRAFFIC HANDLING PLAN

SCALE 1:500

THIS PLAN ACCURATE FOR STAGE CONSTRUCTION AND TRAFFIC HANDLING WORK ONLY

SC-5

REVISED BY	DATE REVISED

CALCULATED-DESIGNED BY: QUANG THAI
CHECKED BY: M. OJI KALU
FUNCTIONAL SUPERVISOR: M. OJI KALU

STATE OF CALIFORNIA - DEPARTMENT OF TRANSPORTATION
Caltrans OFFICE OF DESIGN B

LAST REVISION 12-29-09 | DATE PLOTTED => 20-MAY-2010 | TIME PLOTTED => 13:38

BORDER LAST REVISED 3/1/2007 | RELATIVE BORDER SCALE IS IN MILLIMETERS 0 20 40 60 80 | USERNAME => trpierce | DGN FILE => 712722ma05.dgn | CU 07244 | EA 127221

Dist	COUNTY	ROUTE	KILOMETER POST TOTAL PROJECT	SHEET No.	TOTAL SHEETS
07	LA	138	87.2/88.9	70	156

Caltrans Metric

Quang Thai 1-11-10
REGISTERED CIVIL ENGINEER DATE

5-17-10
PLANS APPROVAL DATE

REGISTERED PROFESSIONAL ENGINEER QUANG THAI No. C66223 Exp. 6-30-10 CIVIL STATE OF CALIFORNIA

THE STATE OF CALIFORNIA OR ITS OFFICERS OR AGENTS SHALL NOT BE RESPONSIBLE FOR THE ACCURACY OR COMPLETENESS OF ELECTRONIC COPIES OF THIS PLAN SHEET.

CURVE DATA

No.	R	Δ	T	L
9	9.14	90°5'54"	9.16	14.38
10	9.14	90°15'13"	9.18	14.40

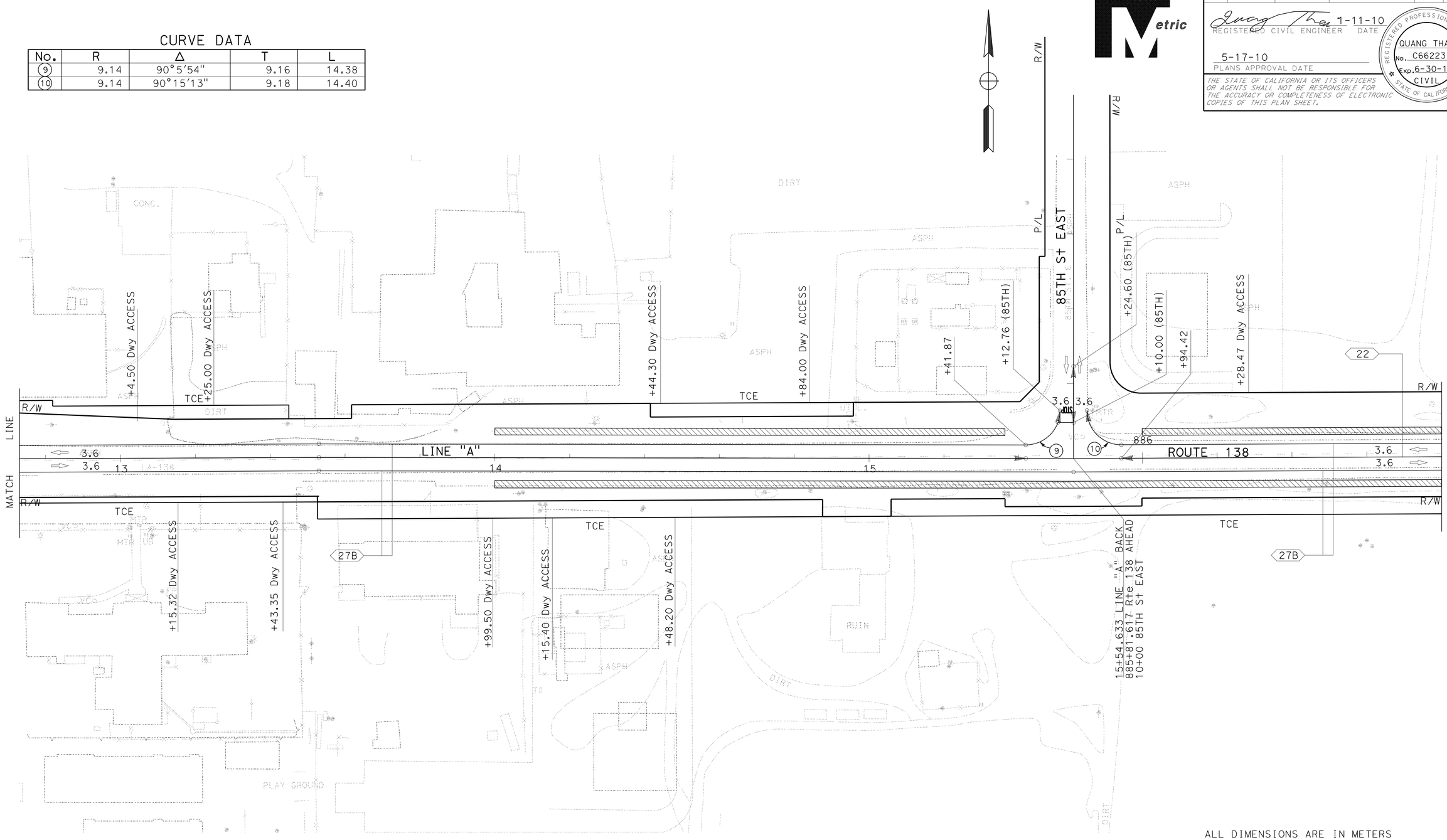

ALL DIMENSIONS ARE IN METERS
UNLESS OTHERWISE SHOWN

STAGE 1

STAGE CONSTRUCTION AND TRAFFIC HANDLING PLAN

SCALE 1:500

THIS PLAN ACCURATE FOR STAGE CONSTRUCTION AND TRAFFIC HANDLING WORK ONLY

SC-6

STATE OF CALIFORNIA - DEPARTMENT OF TRANSPORTATION
Caltrans OFFICE OF DESIGN B

FUNCTIONAL SUPERVISOR: M. OJI KALU
CALCULATED-DESIGNED BY: QUANG THAI
CHECKED BY: M. OJI KALU
REVISED BY / DATE REVISED

LAST REVISION 12-29-09
DATE PLOTTED => 20-MAY-2010
TIME PLOTTED => 13:38

Dist	COUNTY	ROUTE	KILOMETER POST TOTAL PROJECT	SHEET No.	TOTAL SHEETS
07	LA	138	87.2/88.9	71	156

Quang Thai 1-11-10
REGISTERED CIVIL ENGINEER DATE

5-17-10
PLANS APPROVAL DATE

REGISTERED PROFESSIONAL ENGINEER
QUANG THAI
No. C66223
Exp. 6-30-10
CIVIL
STATE OF CALIFORNIA

THE STATE OF CALIFORNIA OR ITS OFFICERS OR AGENTS SHALL NOT BE RESPONSIBLE FOR THE ACCURACY OR COMPLETENESS OF ELECTRONIC COPIES OF THIS PLAN SHEET.

Caltrans Metric

CURVE DATA

No.	R	Δ	T	L
11	9.14	89°40'30"	9.09	14.31
12	9.14	90°19'31"	9.20	14.42
13	9.14	90°14'07"	9.18	14.40
14	9.14	89°45'52"	9.11	14.33

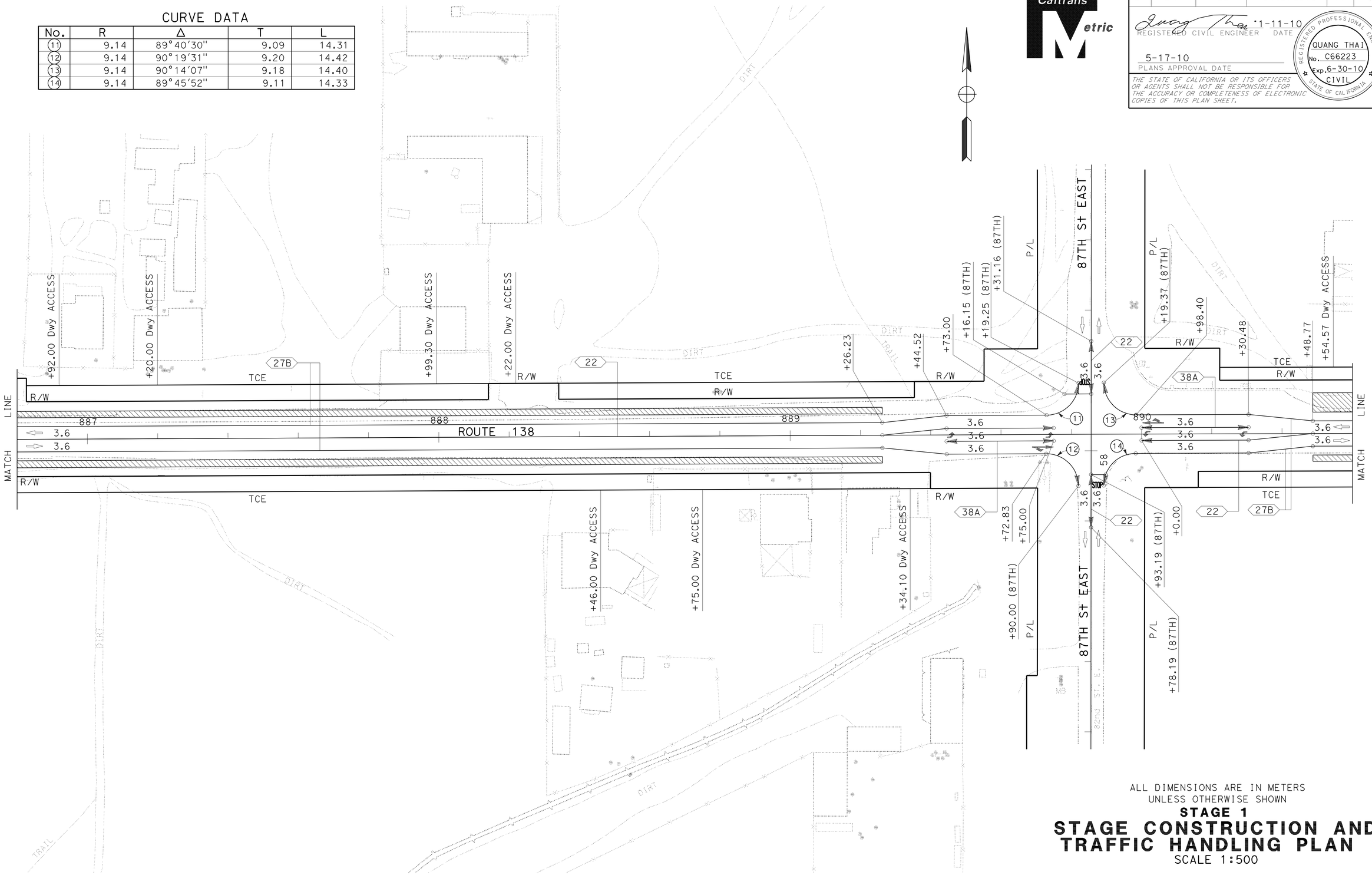

ALL DIMENSIONS ARE IN METERS
UNLESS OTHERWISE SHOWN

STAGE 1

STAGE CONSTRUCTION AND TRAFFIC HANDLING PLAN

SCALE 1:500

THIS PLAN ACCURATE FOR STAGE CONSTRUCTION AND TRAFFIC HANDLING WORK ONLY

SC-7

STATE OF CALIFORNIA - DEPARTMENT OF TRANSPORTATION
Caltrans OFFICE OF DESIGN B

FUNCTIONAL SUPERVISOR: M. OJI KALU
CALCULATED-DESIGNED BY: QUANG THAI
CHECKED BY: M. OJI KALU
REVISED BY
DATE REVISED

LAST REVISION DATE PLOTTED => 20-MAY-2010
12-29-09 TIME PLOTTED => 13:38

Dist	COUNTY	ROUTE	KILOMETER POST TOTAL PROJECT	SHEET No.	TOTAL SHEETS
07	LA	138	87.2/88.9	72	156

Quang Thai 1-11-10
REGISTERED CIVIL ENGINEER DATE

5-17-10
PLANS APPROVAL DATE

REGISTERED PROFESSIONAL ENGINEER
QUANG THAI
No. C66223
Exp. 6-30-10
CIVIL
STATE OF CALIFORNIA

THE STATE OF CALIFORNIA OR ITS OFFICERS OR AGENTS SHALL NOT BE RESPONSIBLE FOR THE ACCURACY OR COMPLETENESS OF ELECTRONIC COPIES OF THIS PLAN SHEET.

Caltrans Metric

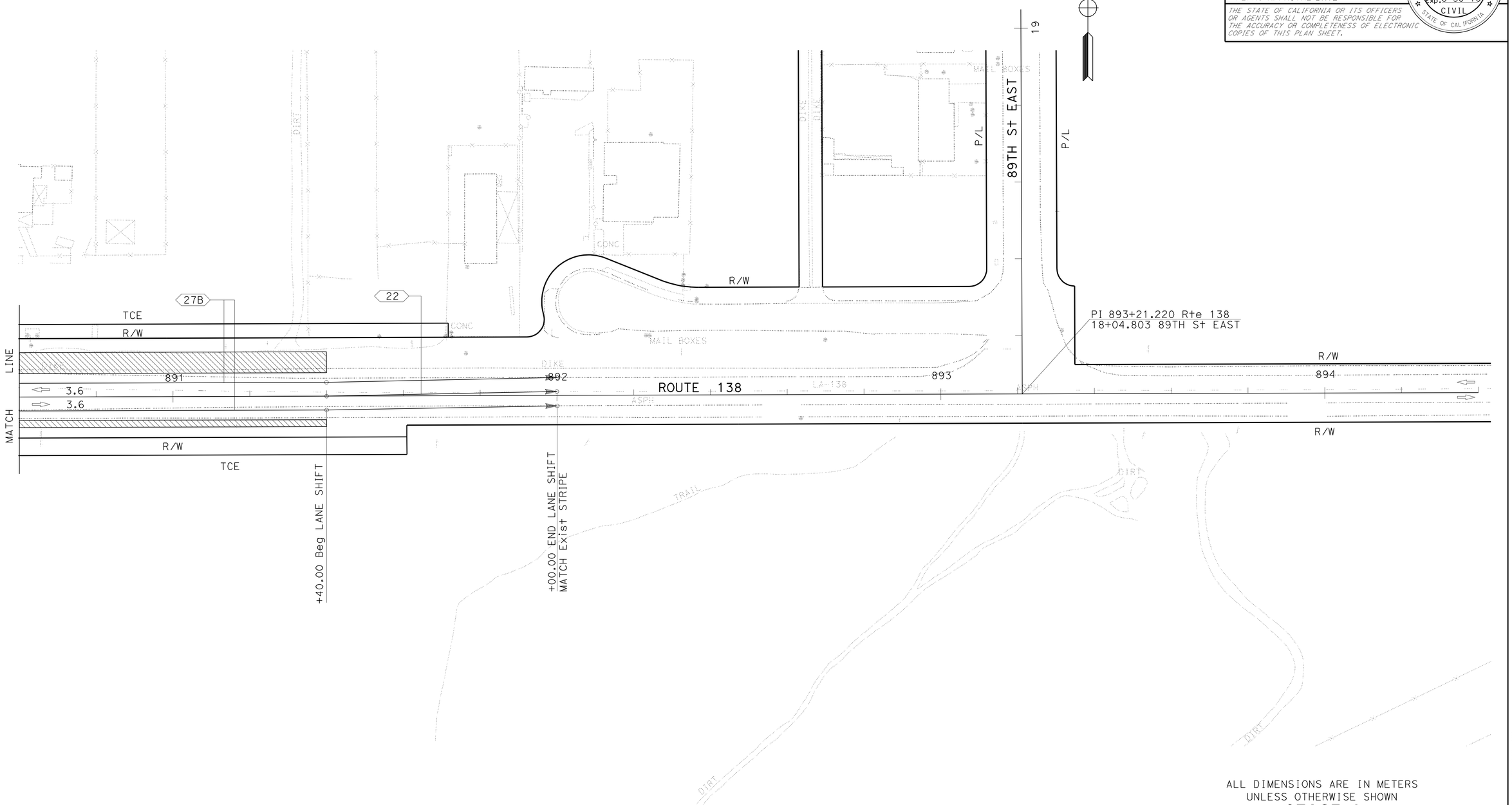

ALL DIMENSIONS ARE IN METERS
UNLESS OTHERWISE SHOWN

STAGE 1

STAGE CONSTRUCTION AND TRAFFIC HANDLING PLAN

SCALE 1:500

SC-8

THIS PLAN ACCURATE FOR STAGE CONSTRUCTION AND TRAFFIC HANDLING WORK ONLY

STATE OF CALIFORNIA - DEPARTMENT OF TRANSPORTATION
Caltrans OFFICE OF DESIGN B

FUNCTIONAL SUPERVISOR: M. OJI KALU

CALCULATED-DESIGNED BY: QUANG THAI
CHECKED BY: M. OJI KALU

REVISED BY
DATE REVISED

LAST REVISION 12-29-09
DATE PLOTTED => 20-MAY-2010
TIME PLOTTED => 11:16

Dist	COUNTY	ROUTE	KILOMETER POST TOTAL PROJECT	SHEET No.	TOTAL SHEETS
07	LA	138	87.2/88.9	73	156

REGISTERED CIVIL ENGINEER 1-11-10 DATE

5-17-10
PLANS APPROVAL DATE

REGISTERED PROFESSIONAL ENGINEER QUANG THAI No. C66223 Exp. 6-30-10 CIVIL STATE OF CALIFORNIA

THE STATE OF CALIFORNIA OR ITS OFFICERS OR AGENTS SHALL NOT BE RESPONSIBLE FOR THE ACCURACY OR COMPLETENESS OF ELECTRONIC COPIES OF THIS PLAN SHEET.

Caltrans Metric

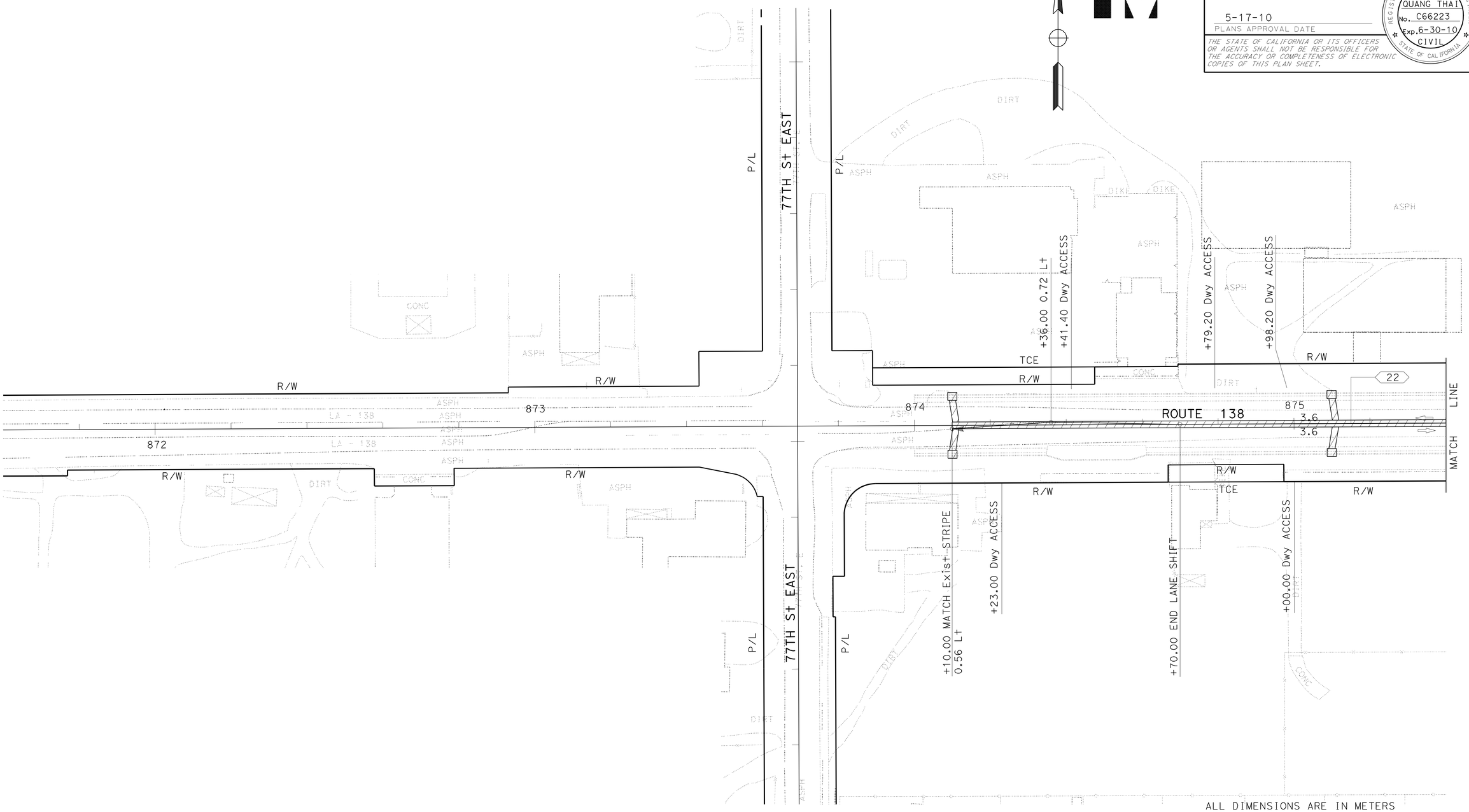

ALL DIMENSIONS ARE IN METERS
UNLESS OTHERWISE SHOWN

STAGE 2

STAGE CONSTRUCTION AND TRAFFIC HANDLING PLAN

SCALE 1:500

THIS PLAN ACCURATE FOR STAGE CONSTRUCTION AND TRAFFIC HANDLING WORK ONLY

SC-9

REVISED BY	DATE REVISED

CALCULATED-DESIGNED BY: QUANG THAI
CHECKED BY: M. OJI KALU
FUNCTIONAL SUPERVISOR: M. OJI KALU

STATE OF CALIFORNIA - DEPARTMENT OF TRANSPORTATION
Caltrans OFFICE OF DESIGN B

LAST REVISION DATE PLOTTED => 20-MAY-2010
12-29-09 TIME PLOTTED => 11:16

Dist	COUNTY	ROUTE	KILOMETER POST TOTAL PROJECT	SHEET No.	TOTAL SHEETS
07	LA	138	87.2/88.9	74	156

Caltrans Metric

REGISTERED CIVIL ENGINEER 1-11-10 DATE

5-17-10
PLANS APPROVAL DATE

REGISTERED PROFESSIONAL ENGINEER QUANG THAI No. C66223 Exp. 6-30-10 CIVIL STATE OF CALIFORNIA

THE STATE OF CALIFORNIA OR ITS OFFICERS OR AGENTS SHALL NOT BE RESPONSIBLE FOR THE ACCURACY OR COMPLETENESS OF ELECTRONIC COPIES OF THIS PLAN SHEET.

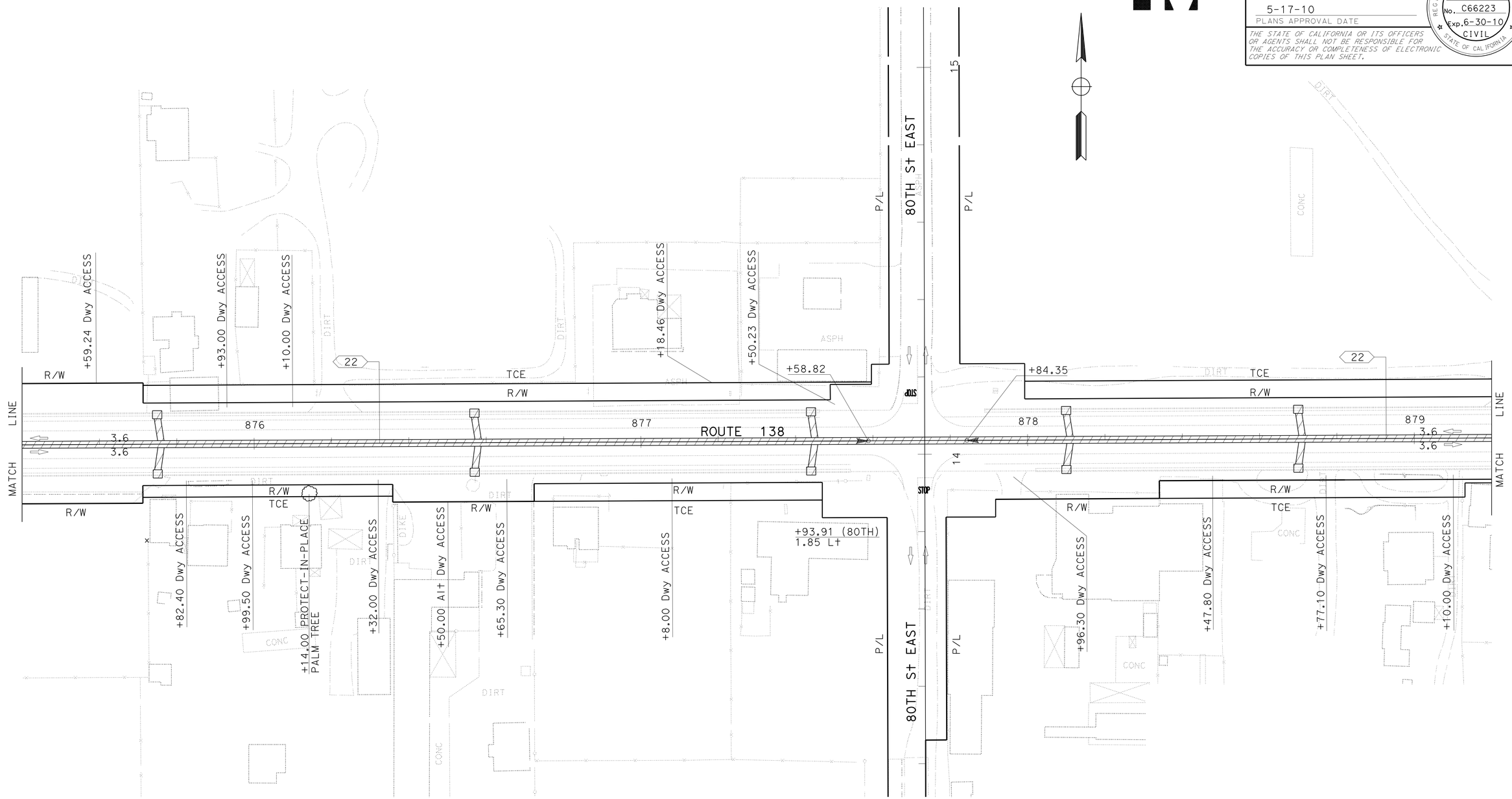

ALL DIMENSIONS ARE IN METERS
UNLESS OTHERWISE SHOWN

STAGE 2

STAGE CONSTRUCTION AND TRAFFIC HANDLING PLAN

SCALE 1:500

THIS PLAN ACCURATE FOR STAGE CONSTRUCTION AND TRAFFIC HANDLING WORK ONLY

SC-10

STATE OF CALIFORNIA - DEPARTMENT OF TRANSPORTATION
Caltrans **OFFICE OF DESIGN B**

FUNCTIONAL SUPERVISOR: M. OJI KALU
CALCULATED-DESIGNED BY: QUANG THAI
CHECKED BY: M. OJI KALU
REVISED BY / DATE REVISED

LAST REVISION 12-29-09
DATE PLOTTED => 20-MAY-2010
TIME PLOTTED => 11:17

Dist	COUNTY	ROUTE	KILOMETER POST TOTAL PROJECT	SHEET No.	TOTAL SHEETS
07	LA	138	87.2/88.9	75	156

Caltrans Metric

REGISTERED CIVIL ENGINEER 1-11-10 DATE

5-17-10
PLANS APPROVAL DATE

REGISTERED PROFESSIONAL ENGINEER QUANG THAI No. C66223 Exp. 6-30-10 CIVIL STATE OF CALIFORNIA

THE STATE OF CALIFORNIA OR ITS OFFICERS OR AGENTS SHALL NOT BE RESPONSIBLE FOR THE ACCURACY OR COMPLETENESS OF ELECTRONIC COPIES OF THIS PLAN SHEET.

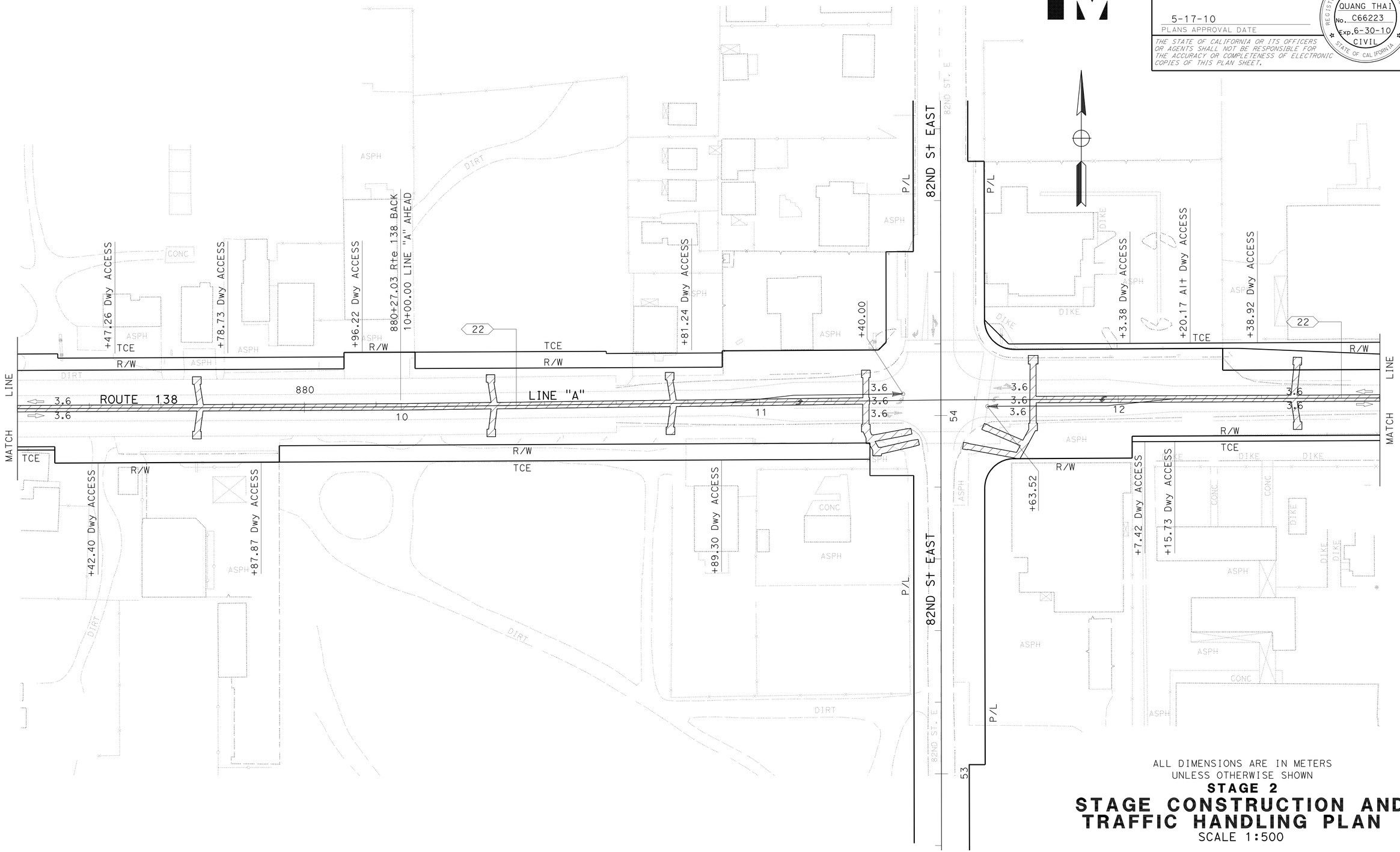

ALL DIMENSIONS ARE IN METERS
UNLESS OTHERWISE SHOWN

STAGE 2

STAGE CONSTRUCTION AND TRAFFIC HANDLING PLAN

SCALE 1:500

THIS PLAN ACCURATE FOR STAGE CONSTRUCTION AND TRAFFIC HANDLING WORK ONLY

SC-11

STATE OF CALIFORNIA - DEPARTMENT OF TRANSPORTATION
Caltrans OFFICE OF DESIGN B

FUNCTIONAL SUPERVISOR: M. OJI KALU
CALCULATED-DESIGNED BY: QUANG THAI
CHECKED BY: M. OJI KALU
REVISED BY
DATE REVISED

LAST REVISION 12-29-09
DATE PLOTTED => 20-MAY-2010
TIME PLOTTED => 11:17

Dist	COUNTY	ROUTE	KILOMETER POST TOTAL PROJECT	SHEET No.	TOTAL SHEETS
07	LA	138	87.2/88.9	76	156

Quang Thai 1-11-10
REGISTERED CIVIL ENGINEER DATE

5-17-10
PLANS APPROVAL DATE

REGISTERED PROFESSIONAL ENGINEER
QUANG THAI
No. C66223
Exp. 6-30-10
CIVIL
STATE OF CALIFORNIA

THE STATE OF CALIFORNIA OR ITS OFFICERS OR AGENTS SHALL NOT BE RESPONSIBLE FOR THE ACCURACY OR COMPLETENESS OF ELECTRONIC COPIES OF THIS PLAN SHEET.

Caltrans Metric

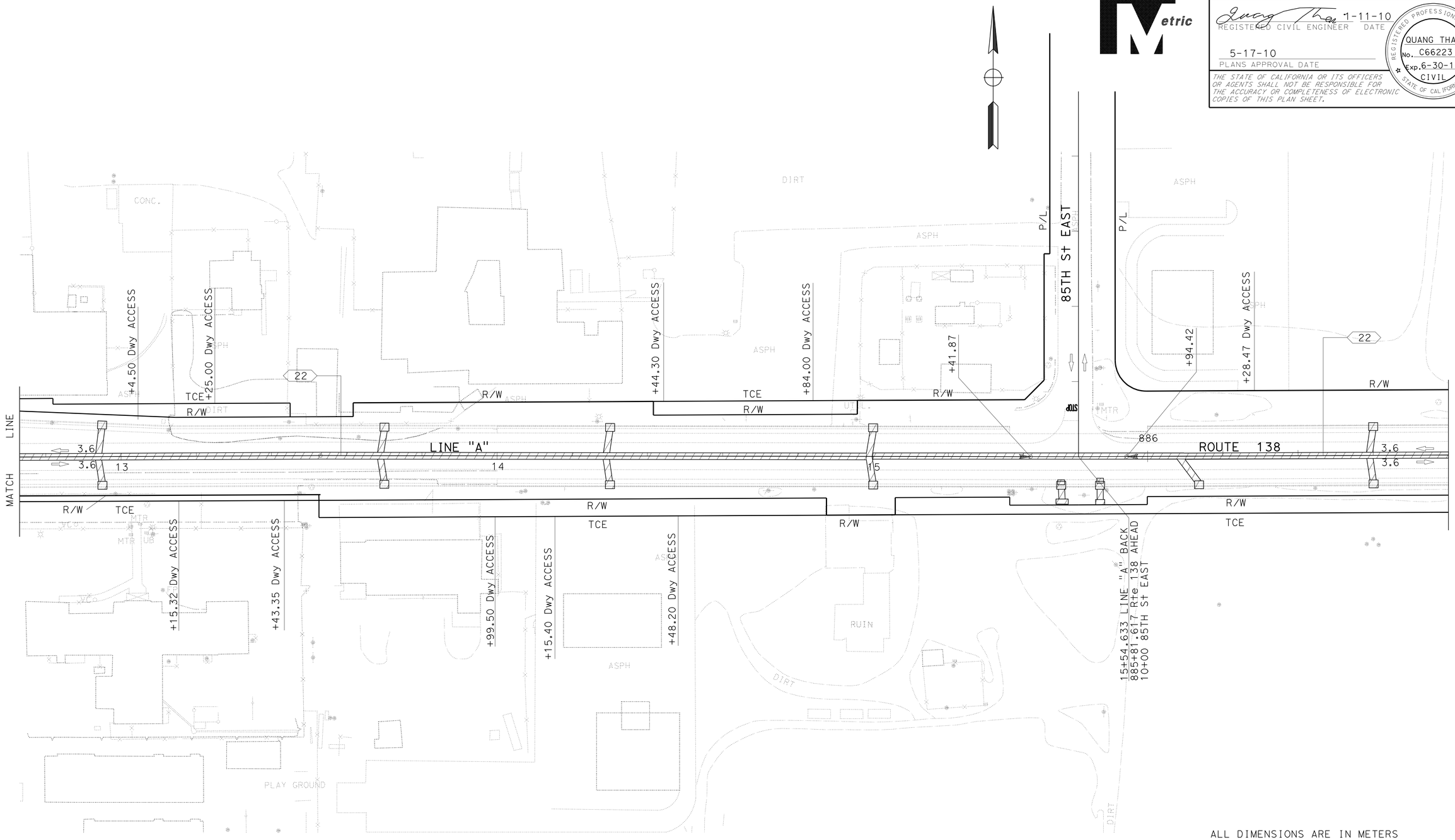

ALL DIMENSIONS ARE IN METERS
UNLESS OTHERWISE SHOWN

STAGE 2

STAGE CONSTRUCTION AND TRAFFIC HANDLING PLAN

SCALE 1:500

SC-12

THIS PLAN ACCURATE FOR STAGE CONSTRUCTION AND TRAFFIC HANDLING WORK ONLY

STATE OF CALIFORNIA - DEPARTMENT OF TRANSPORTATION
Caltrans OFFICE OF DESIGN B

FUNCTIONAL SUPERVISOR: M. OJI KALU
CALCULATED-DESIGNED BY: QUANG THAI
CHECKED BY: M. OJI KALU
REVISED BY
DATE REVISED

LAST REVISION 12-29-09
DATE PLOTTED => 20-MAY-2010
TIME PLOTTED => 11:17

Dist	COUNTY	ROUTE	KILOMETER POST TOTAL PROJECT	SHEET No.	TOTAL SHEETS
07	LA	138	87.2/88.9	77	156

Quang Thai 1-11-10
REGISTERED CIVIL ENGINEER DATE

5-17-10
PLANS APPROVAL DATE

REGISTERED PROFESSIONAL ENGINEER
QUANG THAI
No. C66223
Exp. 6-30-10
CIVIL
STATE OF CALIFORNIA

THE STATE OF CALIFORNIA OR ITS OFFICERS OR AGENTS SHALL NOT BE RESPONSIBLE FOR THE ACCURACY OR COMPLETENESS OF ELECTRONIC COPIES OF THIS PLAN SHEET.

Caltrans Metric

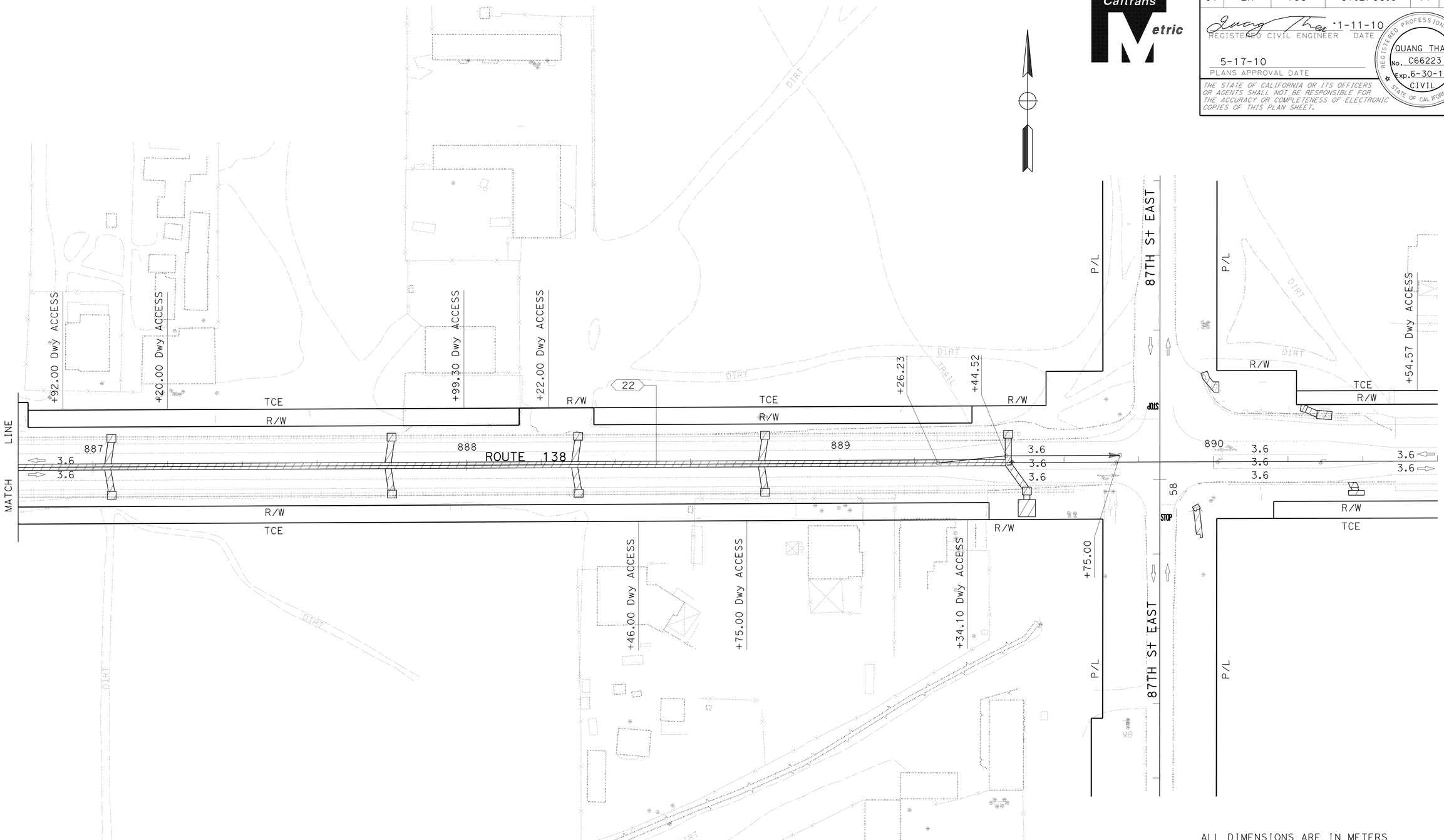

ALL DIMENSIONS ARE IN METERS
UNLESS OTHERWISE SHOWN

STAGE 2

STAGE CONSTRUCTION AND TRAFFIC HANDLING PLAN

SCALE 1:500

THIS PLAN ACCURATE FOR STAGE CONSTRUCTION AND TRAFFIC HANDLING WORK ONLY

SC-13

CALCULATED-DESIGNED BY	QUANG THAI
CHECKED BY	M. OJI KALU
REVISED BY	
DATE REVISED	
FUNCTIONAL SUPERVISOR	M. OJI KALU

STATE OF CALIFORNIA - DEPARTMENT OF TRANSPORTATION
Caltrans OFFICE OF DESIGN B

LAST REVISION 12-29-09 | DATE PLOTTED => 20-MAY-2010 | TIME PLOTTED => 11:17

Dist	COUNTY	ROUTE	KILOMETER POST TOTAL PROJECT	SHEET No.	TOTAL SHEETS
07	LA	138	87.2/88.9	78	156

Quang Thai 1-11-10
REGISTERED CIVIL ENGINEER DATE

5-17-10
PLANS APPROVAL DATE

REGISTERED PROFESSIONAL ENGINEER
QUANG THAI
No. C66223
Exp. 6-30-10
CIVIL
STATE OF CALIFORNIA

THE STATE OF CALIFORNIA OR ITS OFFICERS OR AGENTS SHALL NOT BE RESPONSIBLE FOR THE ACCURACY OR COMPLETENESS OF ELECTRONIC COPIES OF THIS PLAN SHEET.

Caltrans Metric

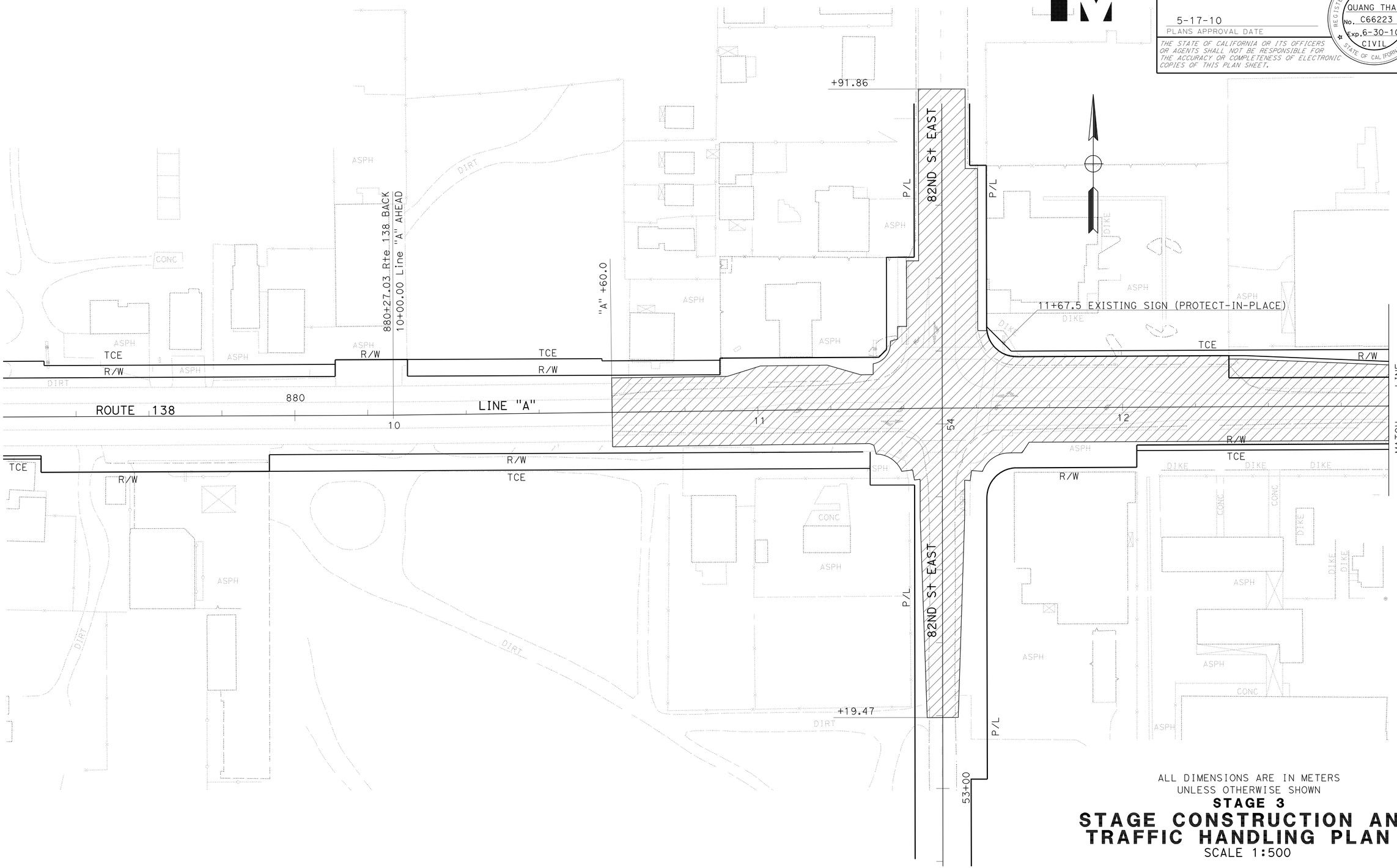

ALL DIMENSIONS ARE IN METERS
UNLESS OTHERWISE SHOWN

STAGE 3

STAGE CONSTRUCTION AND TRAFFIC HANDLING PLAN

SCALE 1:500

THIS PLAN ACCURATE FOR STAGE CONSTRUCTION AND TRAFFIC HANDLING WORK ONLY

SC-14

REVISED BY	DATE REVISED

CALCULATED-DESIGNED BY: QUANG THAI
CHECKED BY: M. OJI KALU
FUNCTIONAL SUPERVISOR: M. OJI KALU

STATE OF CALIFORNIA - DEPARTMENT OF TRANSPORTATION
Caltrans OFFICE OF DESIGN B

LAST REVISION 12-29-09 | DATE PLOTTED => 20-MAY-2010 | TIME PLOTTED => 11:17

Dist	COUNTY	ROUTE	KILOMETER POST TOTAL PROJECT	SHEET No.	TOTAL SHEETS
07	LA	138	87.2/88.9	79	156

REGISTERED CIVIL ENGINEER 1-11-10 DATE

5-17-10
PLANS APPROVAL DATE

REGISTERED PROFESSIONAL ENGINEER QUANG THAI No. C66223 Exp. 6-30-10 CIVIL STATE OF CALIFORNIA

THE STATE OF CALIFORNIA OR ITS OFFICERS OR AGENTS SHALL NOT BE RESPONSIBLE FOR THE ACCURACY OR COMPLETENESS OF ELECTRONIC COPIES OF THIS PLAN SHEET.

Caltrans Metric

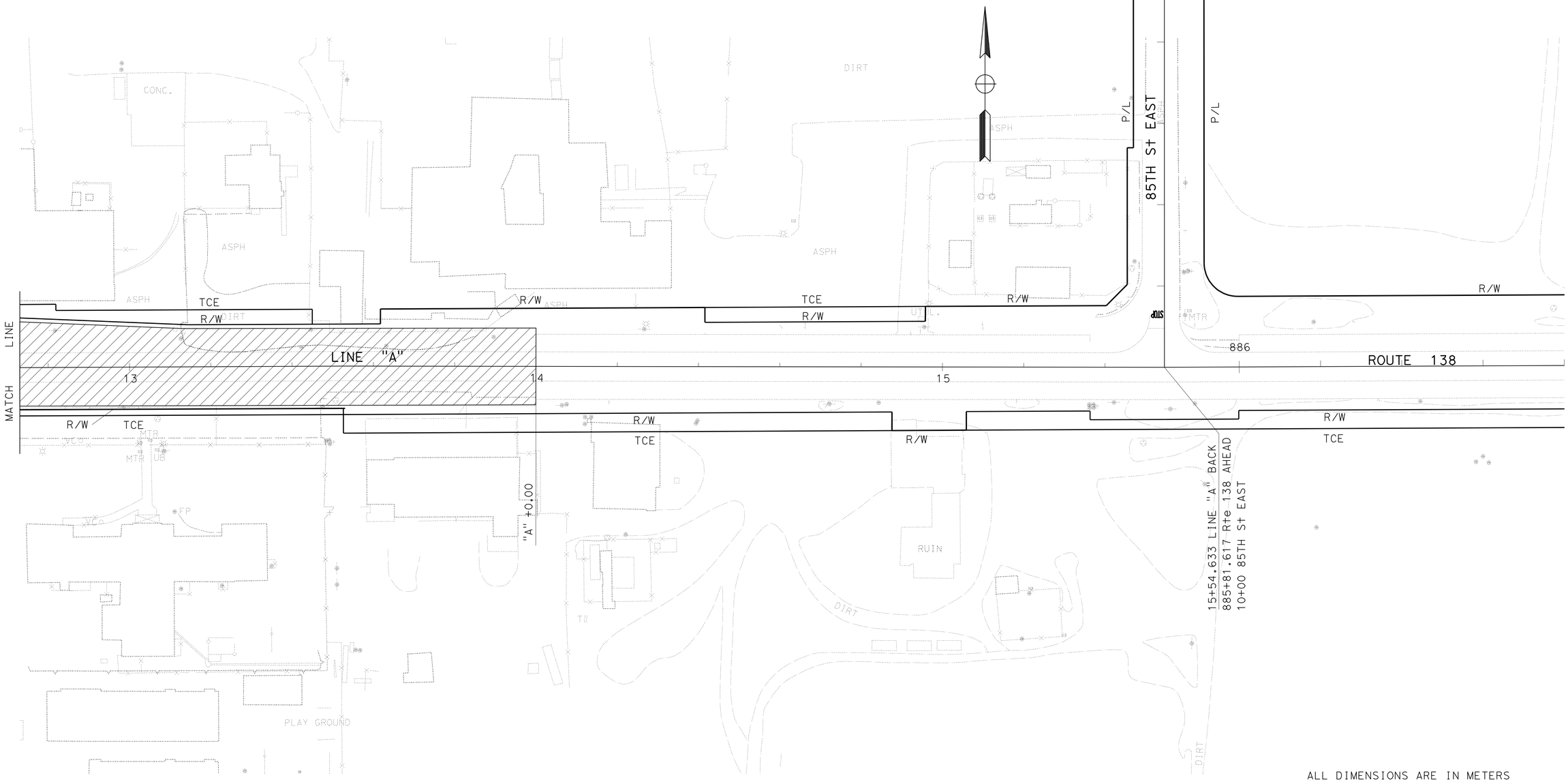

ALL DIMENSIONS ARE IN METERS
UNLESS OTHERWISE SHOWN

STAGE 3

STAGE CONSTRUCTION AND TRAFFIC HANDLING PLAN

SCALE 1:500

THIS PLAN ACCURATE FOR STAGE CONSTRUCTION AND TRAFFIC HANDLING WORK ONLY

SC-15

REVISED BY	DATE REVISED

CALCULATED-DESIGNED BY: QUANG THAI
CHECKED BY: M. OJI KALU
FUNCTIONAL SUPERVISOR: M. OJI KALU

STATE OF CALIFORNIA - DEPARTMENT OF TRANSPORTATION
Caltrans OFFICE OF DESIGN B

LAST REVISION 12-29-09 | DATE PLOTTED => 20-MAY-2010 | TIME PLOTTED => 11:17

Dist	COUNTY	ROUTE	KILOMETER POST TOTAL PROJECT	SHEET No.	TOTAL SHEETS
07	LA	138	87.2/88.9	80	156

Caltrans Metric

REGISTERED CIVIL ENGINEER 1-11-10 DATE

5-17-10
PLANS APPROVAL DATE

REGISTERED PROFESSIONAL ENGINEER QUANG THAI No. C66223 Exp. 6-30-10 CIVIL STATE OF CALIFORNIA

THE STATE OF CALIFORNIA OR ITS OFFICERS OR AGENTS SHALL NOT BE RESPONSIBLE FOR THE ACCURACY OR COMPLETENESS OF ELECTRONIC COPIES OF THIS PLAN SHEET.

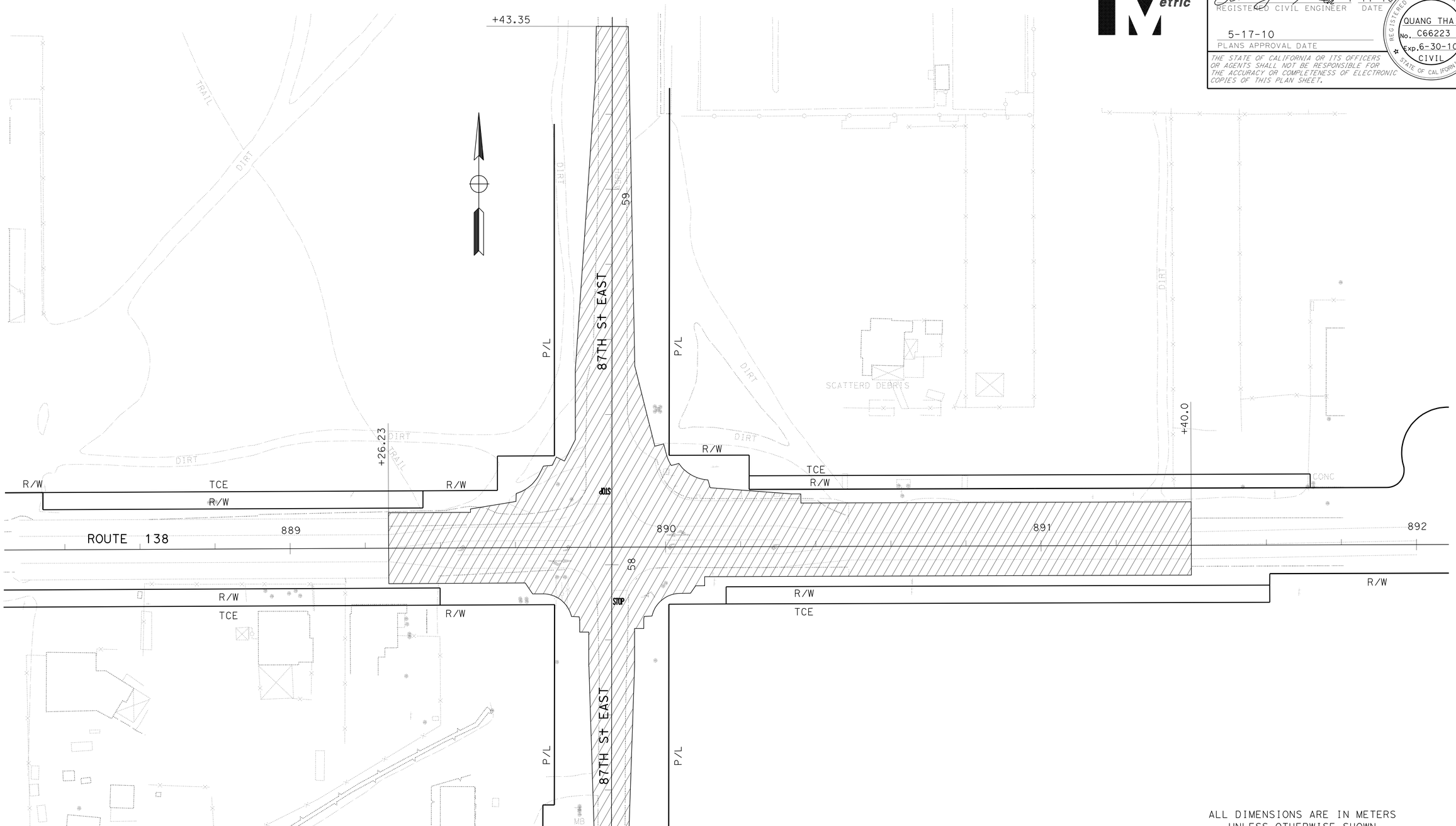

ALL DIMENSIONS ARE IN METERS
UNLESS OTHERWISE SHOWN

STAGE 3

STAGE CONSTRUCTION AND TRAFFIC HANDLING PLAN

SCALE 1:500

THIS PLAN ACCURATE FOR STAGE CONSTRUCTION AND TRAFFIC HANDLING WORK ONLY

SC-16

STATE OF CALIFORNIA - DEPARTMENT OF TRANSPORTATION
Caltrans **OFFICE OF DESIGN B**

FUNCTIONAL SUPERVISOR: M. OJI KALU

CALCULATED-DESIGNED BY: QUANG THAI
CHECKED BY: M. OJI KALU

REVISED BY / DATE REVISED

LAST REVISION 12-29-09 | DATE PLOTTED => 20-MAY-2010 | TIME PLOTTED => 11:17

BORDER LAST REVISED 3/1/2007

RELATIVE BORDER SCALE IS IN MILLIMETERS 0 20 40 60 80

USERNAME => trstrk
DGN FILE => 712722ma16.dgn

CU 07244 | EA 127221

Dist	COUNTY	ROUTE	KILOMETER POST TOTAL PROJECT	SHEET No.	TOTAL SHEETS
07	LA	138	87.2/88.9	81	156

Quang Thai 1-11-10
REGISTERED CIVIL ENGINEER DATE

5-17-10
PLANS APPROVAL DATE

REGISTERED PROFESSIONAL ENGINEER QUANG THAI No. C66223 Exp. 6-30-10 CIVIL STATE OF CALIFORNIA

THE STATE OF CALIFORNIA OR ITS OFFICERS OR AGENTS SHALL NOT BE RESPONSIBLE FOR THE ACCURACY OR COMPLETENESS OF ELECTRONIC COPIES OF THIS PLAN SHEET.

Caltrans Metric

LEGEND:

WORK AREA

TRAFFIC DIRECTION

CURVE DATA

No.	R	Δ	T	L
15	12.19	89°57'21"	12.18	19.14
16	12.19	90°1'54"	12.20	19.16
17	12.19	90°2'28"	12.20	19.16
18	12.19	89°58'18"	12.19	19.15

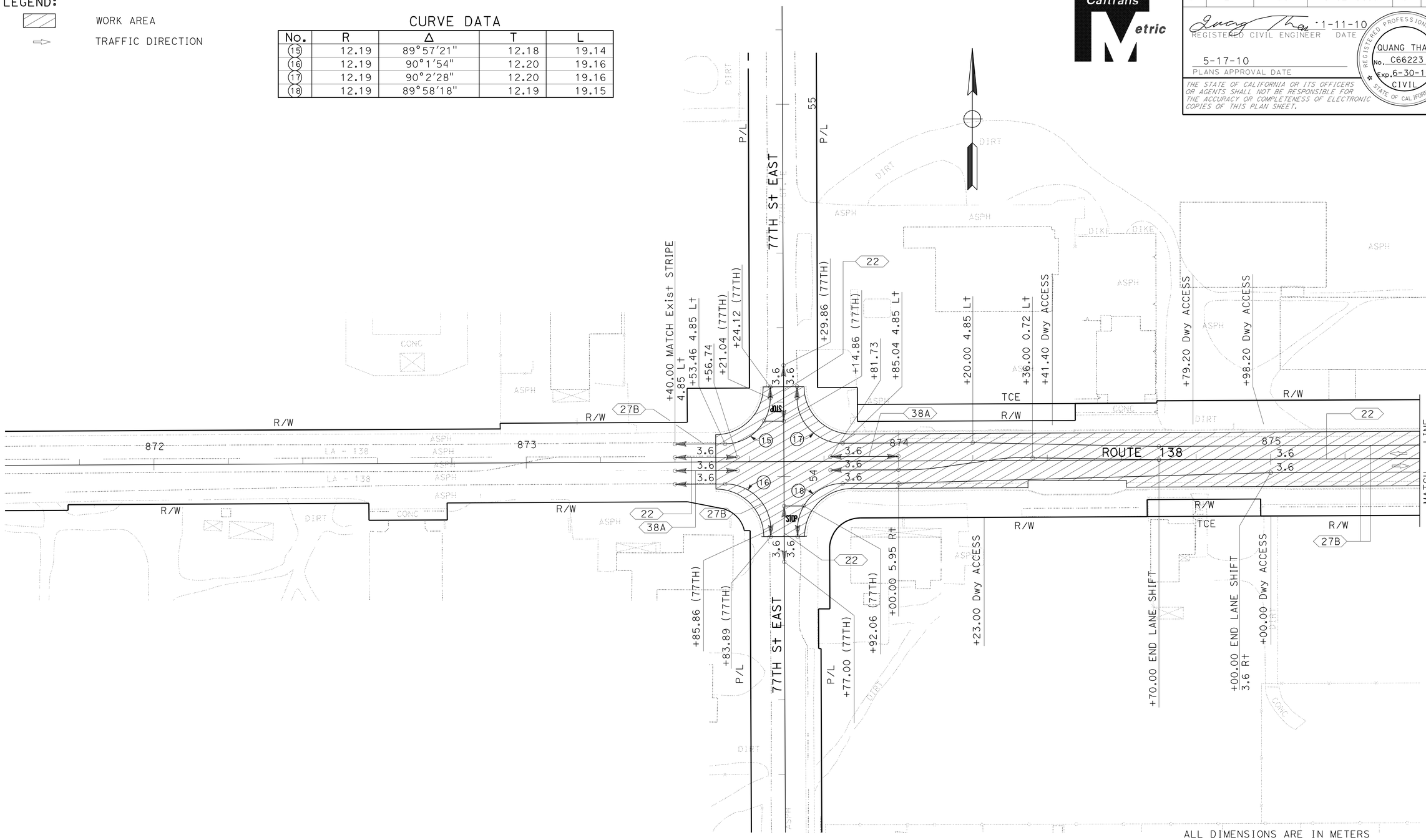

ALL DIMENSIONS ARE IN METERS
UNLESS OTHERWISE SHOWN

STAGE 4

STAGE CONSTRUCTION AND TRAFFIC HANDLING PLAN

SCALE 1:500

THIS PLAN ACCURATE FOR STAGE CONSTRUCTION AND TRAFFIC HANDLING WORK ONLY

SC-17

STATE OF CALIFORNIA - DEPARTMENT OF TRANSPORTATION
Caltrans OFFICE OF DESIGN B

FUNCTIONAL SUPERVISOR: M. OJI KALU
CALCULATED-DESIGNED BY: QUANG THAI
CHECKED BY: M. OJI KALU
REVISED BY / DATE REVISED

LAST REVISION DATE PLOTTED => 20-MAY-2010
12-29-09 TIME PLOTTED => 11:21

Dist	COUNTY	ROUTE	KILOMETER POST TOTAL PROJECT	SHEET No.	TOTAL SHEETS
07	LA	138	87.2/88.9	82	156

Quang Thai 1-11-10
REGISTERED CIVIL ENGINEER DATE

5-17-10
PLANS APPROVAL DATE

REGISTERED PROFESSIONAL ENGINEER QUANG THAI No. C66223 Exp. 6-30-10 CIVIL STATE OF CALIFORNIA

THE STATE OF CALIFORNIA OR ITS OFFICERS OR AGENTS SHALL NOT BE RESPONSIBLE FOR THE ACCURACY OR COMPLETENESS OF ELECTRONIC COPIES OF THIS PLAN SHEET.

Caltrans Metric

CURVE DATA

No.	R	Δ	T	L
19	9.14	90°0'00"	9.14	14.36
20	9.14	90°0'00"	9.14	14.36
21	9.14	89°59'50"	9.14	14.36
22	9.14	90°0'10"	9.14	14.36

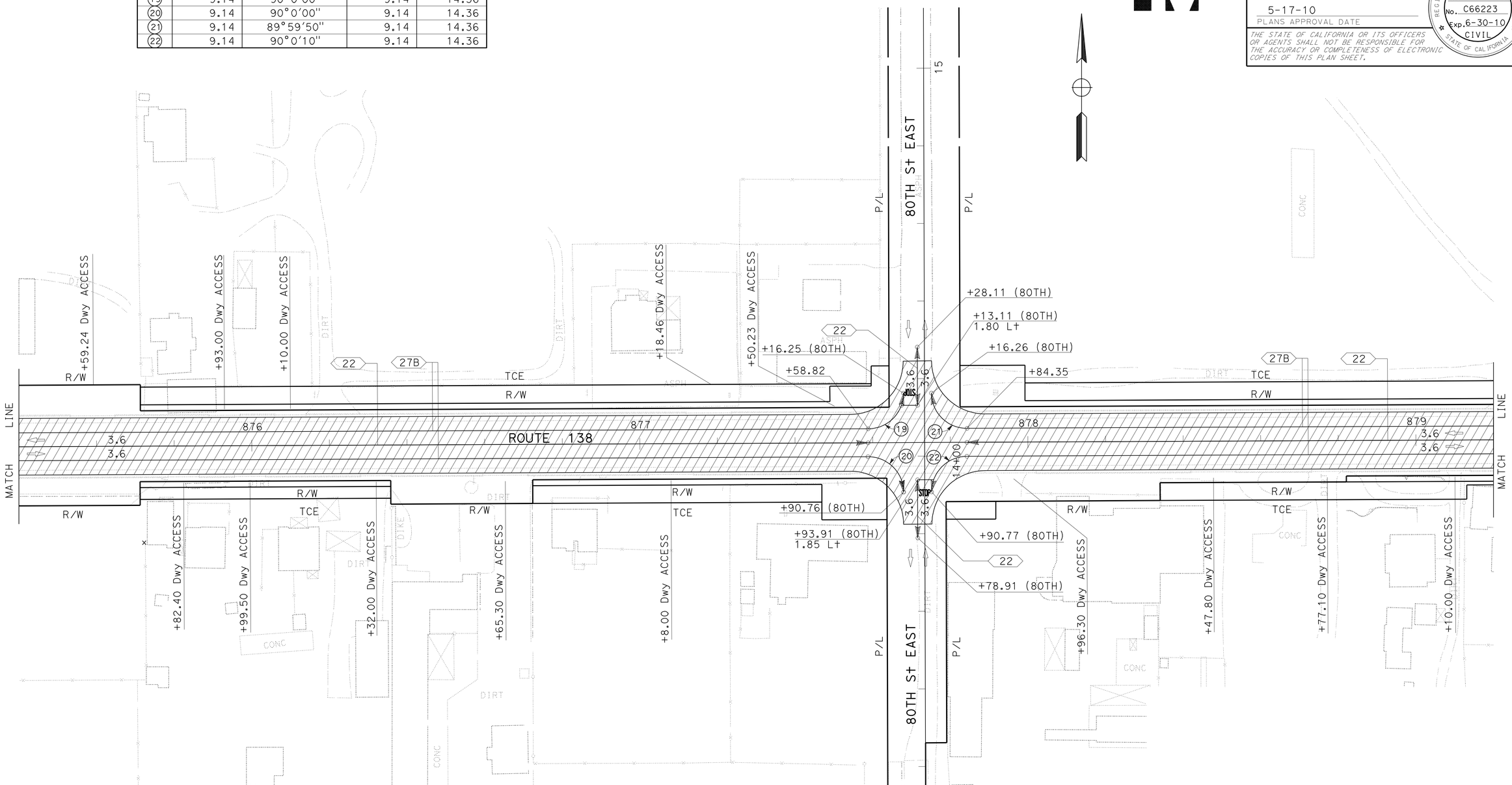

ALL DIMENSIONS ARE IN METERS
UNLESS OTHERWISE SHOWN

STAGE 4

STAGE CONSTRUCTION AND TRAFFIC HANDLING PLAN

SCALE 1:500

THIS PLAN ACCURATE FOR STAGE CONSTRUCTION AND TRAFFIC HANDLING WORK ONLY

SC-18

STATE OF CALIFORNIA - DEPARTMENT OF TRANSPORTATION
Caltrans OFFICE OF DESIGN B

FUNCTIONAL SUPERVISOR: M. OJI KALU
CALCULATED-DESIGNED BY: QUANG THAI
CHECKED BY: M. OJI KALU
REVISED BY / DATE REVISED

LAST REVISION 12-29-09
DATE PLOTTED => 20-MAY-2010
TIME PLOTTED => 11:21

BORDER LAST REVISED 3/1/2007
RELATIVE BORDER SCALE IS IN MILLIMETERS 0 20 40 60 80
USERNAME => trstrk
DGN FILE => 712722ma18.dgn
CU 07244
EA 127221

Dist	COUNTY	ROUTE	KILOMETER POST TOTAL PROJECT	SHEET No.	TOTAL SHEETS
07	LA	138	87.2/88.9	83	156

Quang Thai 1-11-10
REGISTERED CIVIL ENGINEER DATE

5-17-10
PLANS APPROVAL DATE

REGISTERED PROFESSIONAL ENGINEER
QUANG THAI
No. C66223
Exp. 6-30-10
CIVIL
STATE OF CALIFORNIA

THE STATE OF CALIFORNIA OR ITS OFFICERS OR AGENTS SHALL NOT BE RESPONSIBLE FOR THE ACCURACY OR COMPLETENESS OF ELECTRONIC COPIES OF THIS PLAN SHEET.

Caltrans Metric

CURVE DATA

No.	R	Δ	T	L
23	9.14	84°13′49″	8.27	13.44
24	9.14	90°38′31″	9.25	14.47
25	9.14	90°10′21″	9.17	14.39
26	9.14	89°49′26″	9.12	14.34

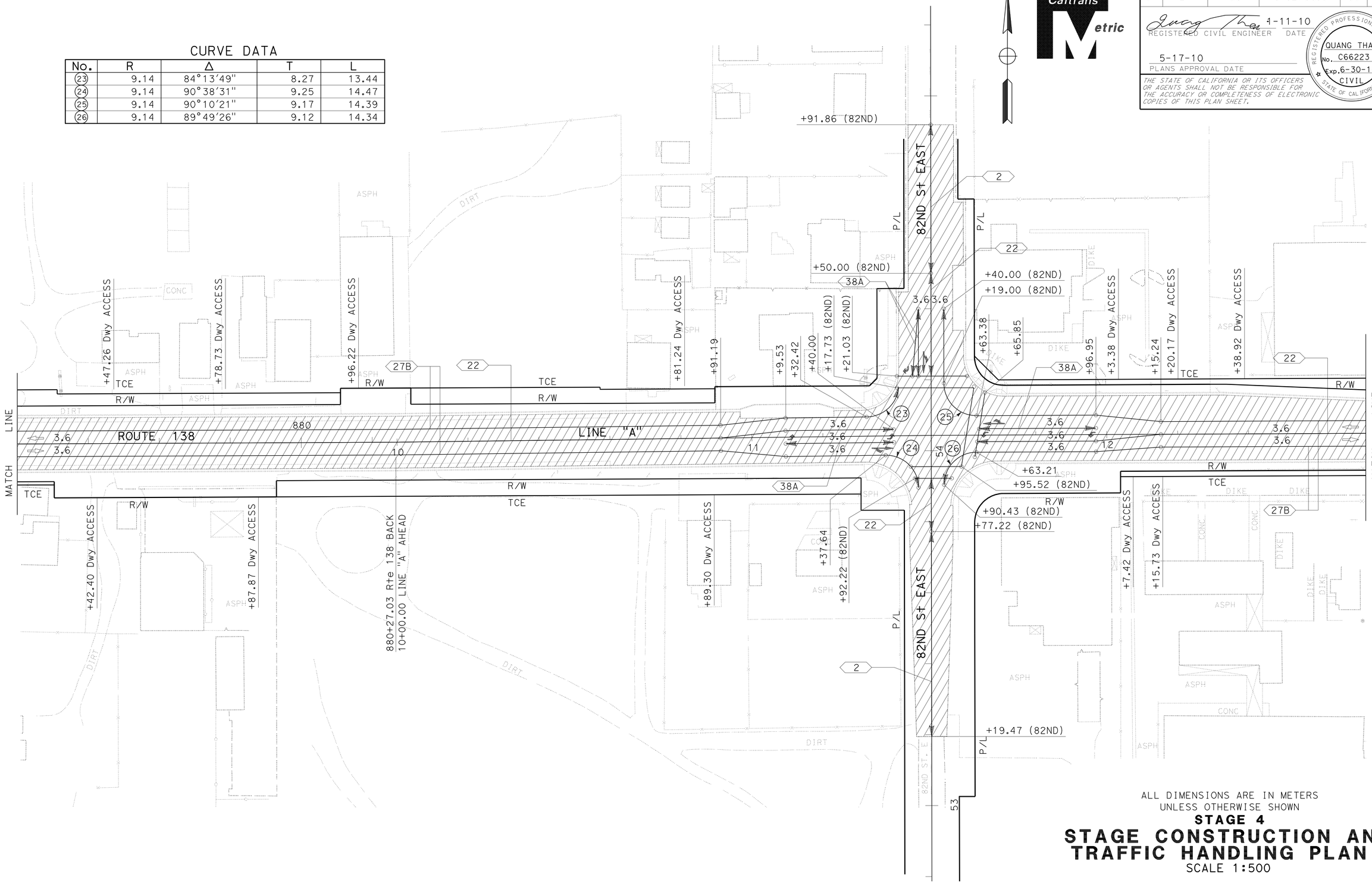

ALL DIMENSIONS ARE IN METERS
UNLESS OTHERWISE SHOWN

STAGE 4

STAGE CONSTRUCTION AND TRAFFIC HANDLING PLAN

SCALE 1:500

THIS PLAN ACCURATE FOR STAGE CONSTRUCTION AND TRAFFIC HANDLING WORK ONLY

SC-19

REVISED BY	DATE REVISED

CALCULATED-DESIGNED BY: QUANG THAI
CHECKED BY: M. OJI KALU
FUNCTIONAL SUPERVISOR: M. OJI KALU

STATE OF CALIFORNIA - DEPARTMENT OF TRANSPORTATION
Caltrans OFFICE OF DESIGN B

LAST REVISION 12-29-09 | DATE PLOTTED => 20-MAY-2010 | TIME PLOTTED => 11:22

Dist	COUNTY	ROUTE	KILOMETER POST TOTAL PROJECT	SHEET No.	TOTAL SHEETS
07	LA	138	87.2/88.9	84	156

Quang Thai 1-11-10
REGISTERED CIVIL ENGINEER DATE

5-17-10
PLANS APPROVAL DATE

REGISTERED PROFESSIONAL ENGINEER
QUANG THAI
No. C66223
Exp. 6-30-10
CIVIL
STATE OF CALIFORNIA

THE STATE OF CALIFORNIA OR ITS OFFICERS OR AGENTS SHALL NOT BE RESPONSIBLE FOR THE ACCURACY OR COMPLETENESS OF ELECTRONIC COPIES OF THIS PLAN SHEET.

Caltrans Metric

CURVE DATA

No.	R	Δ	T	L
27	9.14	90°5'54"	9.16	14.38
28	9.14	90°15'13"	9.18	14.40

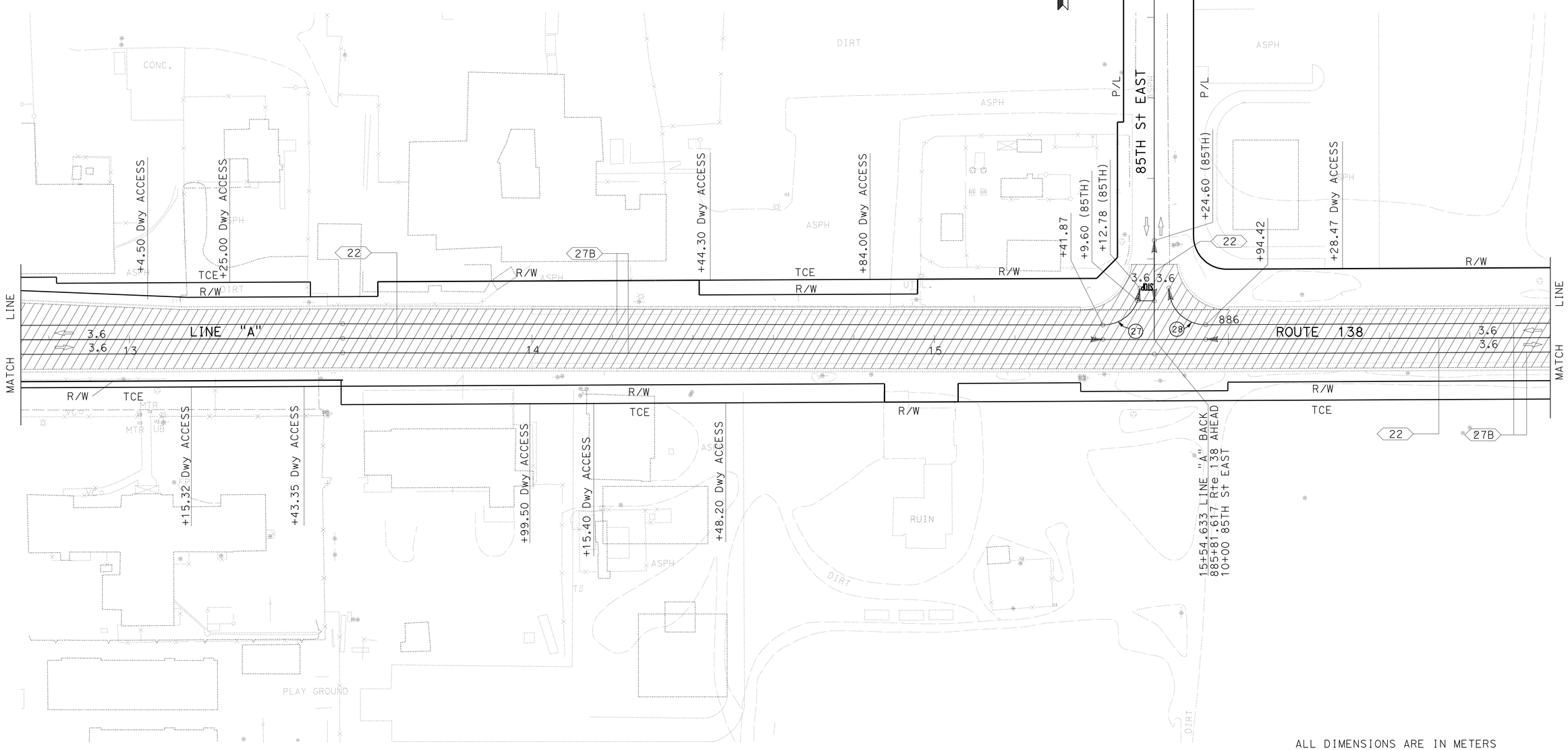

ALL DIMENSIONS ARE IN METERS
UNLESS OTHERWISE SHOWN

STAGE 4

STAGE CONSTRUCTION AND TRAFFIC HANDLING PLAN

SCALE 1:500

SC-20

THIS PLAN ACCURATE FOR STAGE CONSTRUCTION AND TRAFFIC HANDLING WORK ONLY

REVISED BY	DATE REVISED
QUANG THAI	M. OJI KALU
CALCULATED-DESIGNED BY	CHECKED BY
FUNCTIONAL SUPERVISOR	M. OJI KALU

STATE OF CALIFORNIA - DEPARTMENT OF TRANSPORTATION
Caltrans OFFICE OF DESIGN B

LAST REVISION 12-29-09 | DATE PLOTTED => 20-MAY-2010 | TIME PLOTTED => 11:22

Dist	COUNTY	ROUTE	KILOMETER POST TOTAL PROJECT	SHEET No.	TOTAL SHEETS
07	LA	138	87.2/88.9	85	156

Quang Thai 1-11-10
REGISTERED CIVIL ENGINEER DATE

5-17-10
PLANS APPROVAL DATE

REGISTERED PROFESSIONAL ENGINEER
QUANG THAI
No. C66223
Exp. 6-30-10
CIVIL
STATE OF CALIFORNIA

THE STATE OF CALIFORNIA OR ITS OFFICERS OR AGENTS SHALL NOT BE RESPONSIBLE FOR THE ACCURACY OR COMPLETENESS OF ELECTRONIC COPIES OF THIS PLAN SHEET.

Caltrans Metric

CURVE DATA

No.	R	Δ	T	L
29	9.14	89°40'30"	9.09	14.31
30	9.14	90°19'31"	9.20	14.42
31	9.14	90°14'07"	9.18	14.40
32	9.14	89°45'52"	9.11	14.33

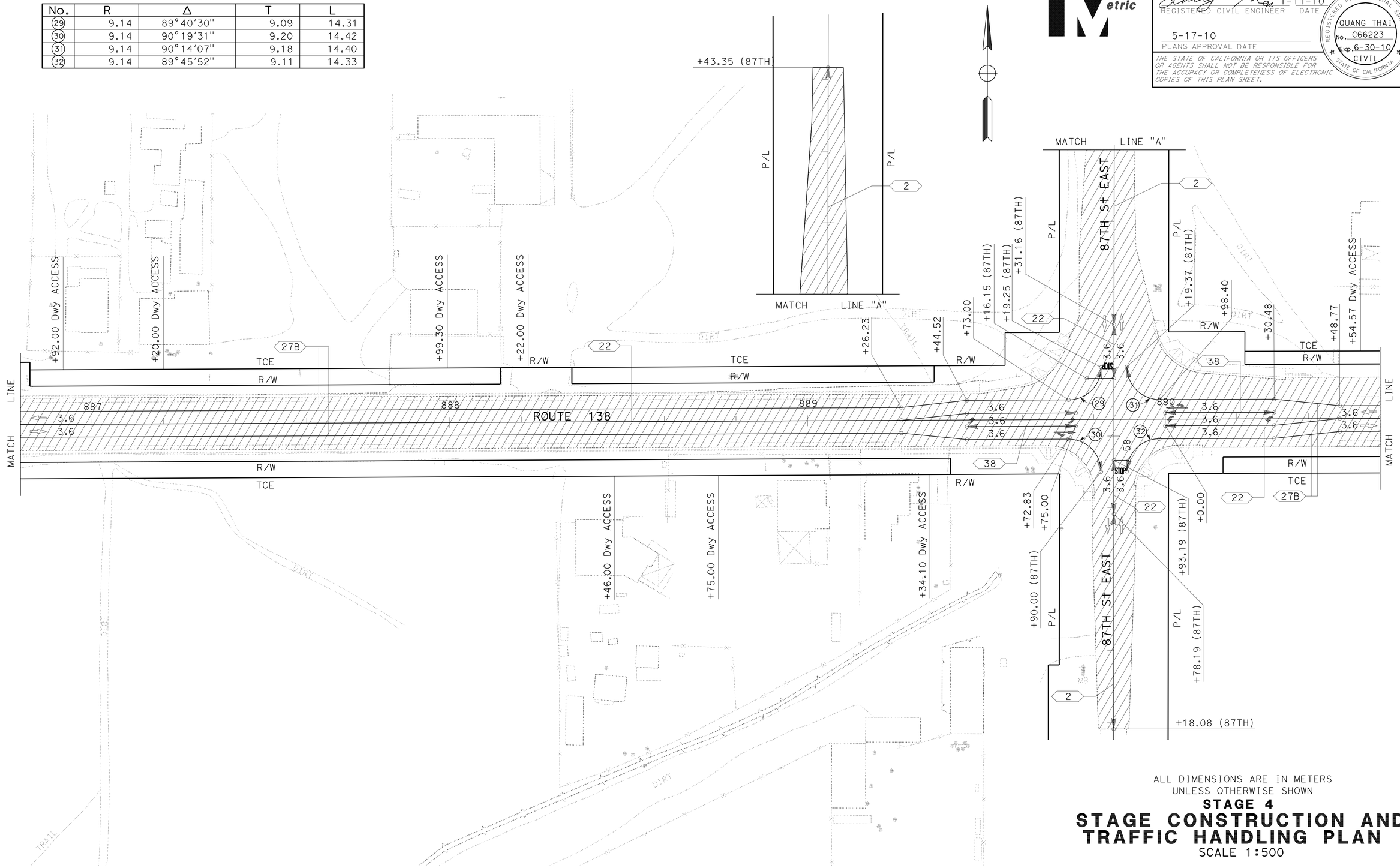

ALL DIMENSIONS ARE IN METERS
UNLESS OTHERWISE SHOWN

STAGE 4

STAGE CONSTRUCTION AND TRAFFIC HANDLING PLAN

SCALE 1:500

THIS PLAN ACCURATE FOR STAGE CONSTRUCTION AND TRAFFIC HANDLING WORK ONLY

SC-21

REVISED BY	DATE REVISED

CALCULATED-DESIGNED BY: QUANG THAI
CHECKED BY: M. OJI KALU
FUNCTIONAL SUPERVISOR: M. OJI KALU

STATE OF CALIFORNIA - DEPARTMENT OF TRANSPORTATION
Caltrans OFFICE OF DESIGN B

LAST REVISION 12-29-09 | DATE PLOTTED => 20-MAY-2010 | TIME PLOTTED => 11:22

Dist	COUNTY	ROUTE	KILOMETER POST TOTAL PROJECT	SHEET No.	TOTAL SHEETS
07	LA	138	87.2/88.9	86	156

Quang Thai 1-11-10
REGISTERED CIVIL ENGINEER DATE

5-17-10
PLANS APPROVAL DATE

REGISTERED PROFESSIONAL ENGINEER
QUANG THAI
No. C66223
Exp. 6-30-10
CIVIL
STATE OF CALIFORNIA

THE STATE OF CALIFORNIA OR ITS OFFICERS OR AGENTS SHALL NOT BE RESPONSIBLE FOR THE ACCURACY OR COMPLETENESS OF ELECTRONIC COPIES OF THIS PLAN SHEET.

Caltrans Metric

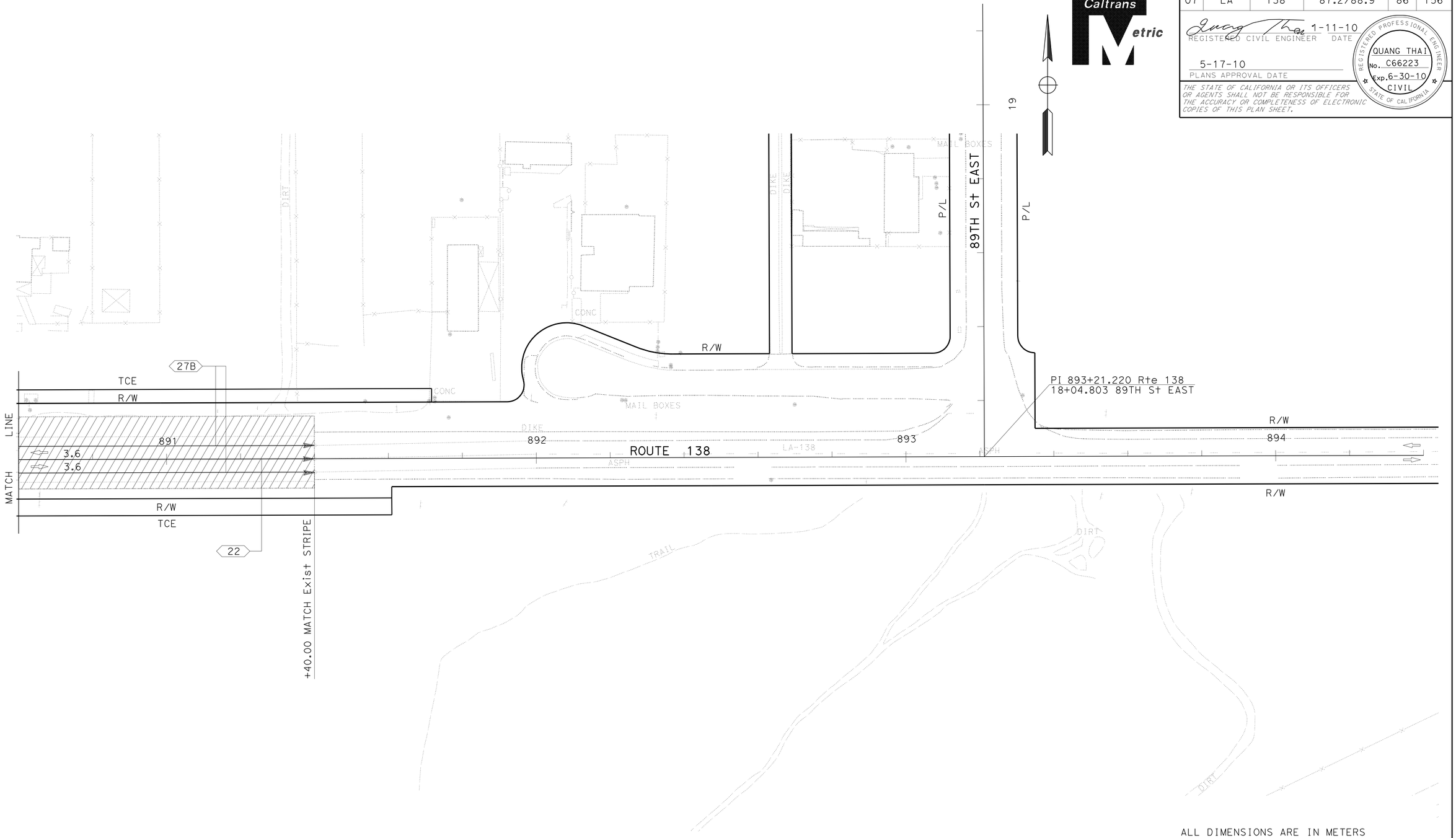

ALL DIMENSIONS ARE IN METERS
UNLESS OTHERWISE SHOWN

STAGE 4

STAGE CONSTRUCTION AND TRAFFIC HANDLING PLAN

SCALE 1:500

SC-22

THIS PLAN ACCURATE FOR STAGE CONSTRUCTION AND TRAFFIC HANDLING WORK ONLY

REVISED BY	DATE REVISED

CALCULATED-DESIGNED BY	QUANG THAI
CHECKED BY	M. OJI KALU
FUNCTIONAL SUPERVISOR	M. OJI KALU

STATE OF CALIFORNIA - DEPARTMENT OF TRANSPORTATION
Caltrans OFFICE OF DESIGN B

LAST REVISION 12-29-09 | DATE PLOTTED => 20-MAY-2010 | TIME PLOTTED => 11:22

Dist	COUNTY	ROUTE	KILOMETER POST TOTAL PROJECT	SHEET No.	TOTAL SHEETS
07	LA	138	87.2/88.9	87	156

1-11-10
REGISTERED CIVIL ENGINEER DATE

5-17-10
PLANS APPROVAL DATE

REGISTERED PROFESSIONAL ENGINEER
QUANG THAI
No. C66223
Exp. 6-30-10
CIVIL
STATE OF CALIFORNIA

THE STATE OF CALIFORNIA OR ITS OFFICERS OR AGENTS SHALL NOT BE RESPONSIBLE FOR THE ACCURACY OR COMPLETENESS OF ELECTRONIC COPIES OF THIS PLAN SHEET.

Caltrans Metric

LEGEND:

WORK AREA

TRAFFIC DIRECTION

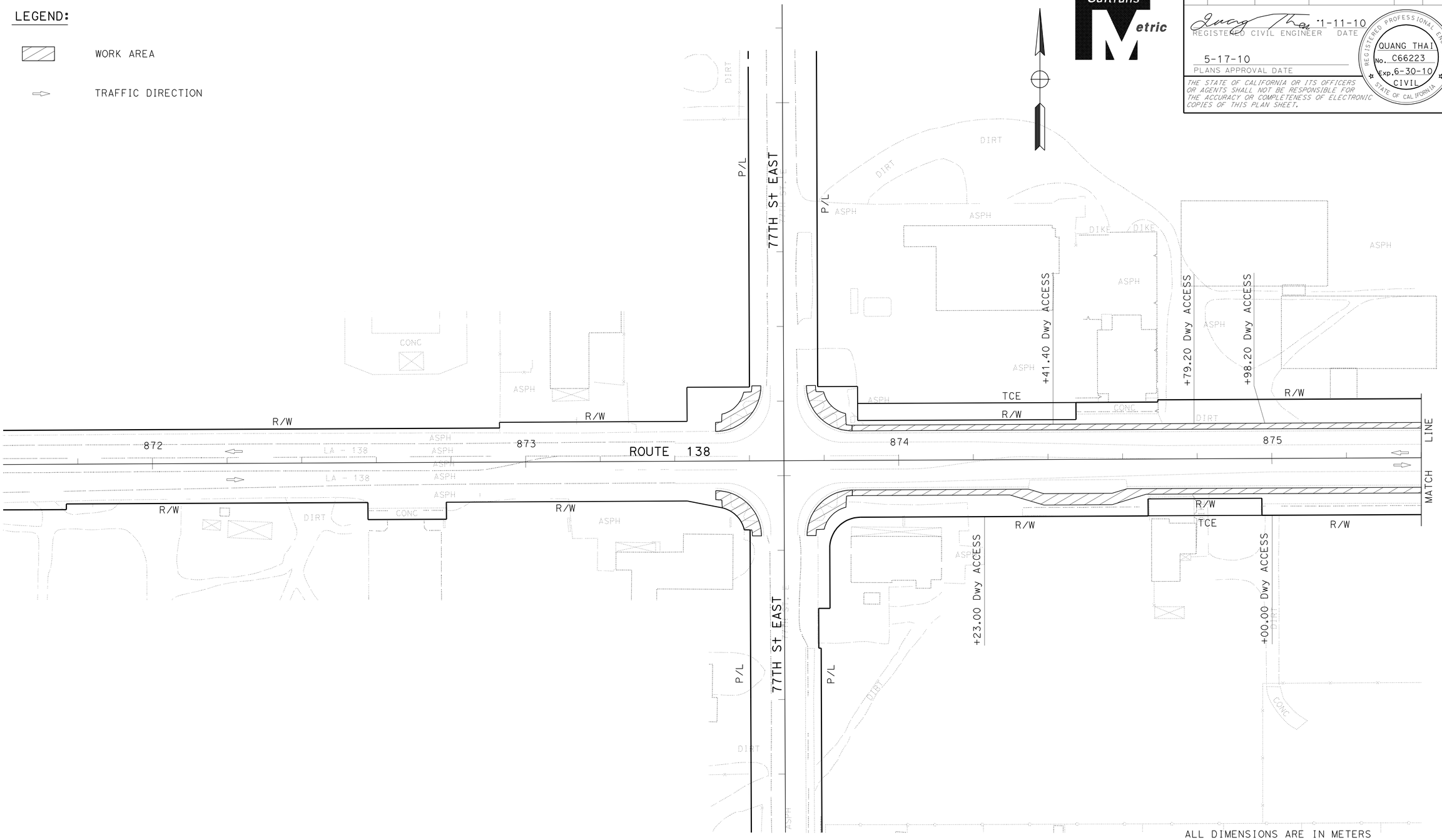

ALL DIMENSIONS ARE IN METERS
UNLESS OTHERWISE SHOWN

STAGE 5

STAGE CONSTRUCTION AND TRAFFIC HANDLING PLAN

SCALE 1:500

THIS PLAN ACCURATE FOR STAGE CONSTRUCTION AND TRAFFIC HANDLING WORK ONLY

SC-23

REVISED BY	DATE REVISED

CALCULATED-DESIGNED BY: QUANG THAI
CHECKED BY: M. OJI KALU
FUNCTIONAL SUPERVISOR: M. OJI KALU

STATE OF CALIFORNIA - DEPARTMENT OF TRANSPORTATION
Caltrans OFFICE OF DESIGN B

LAST REVISION 12-29-09 | DATE PLOTTED => 20-MAY-2010 | TIME PLOTTED => 11:22

Dist	COUNTY	ROUTE	KILOMETER POST TOTAL PROJECT	SHEET No.	TOTAL SHEETS
07	LA	138	87.2/88.9	88	156

Caltrans Metric

REGISTERED CIVIL ENGINEER 1-11-10 DATE

5-17-10
PLANS APPROVAL DATE

REGISTERED PROFESSIONAL ENGINEER QUANG THAI No. C66223 Exp. 6-30-10 CIVIL STATE OF CALIFORNIA

THE STATE OF CALIFORNIA OR ITS OFFICERS OR AGENTS SHALL NOT BE RESPONSIBLE FOR THE ACCURACY OR COMPLETENESS OF ELECTRONIC COPIES OF THIS PLAN SHEET.

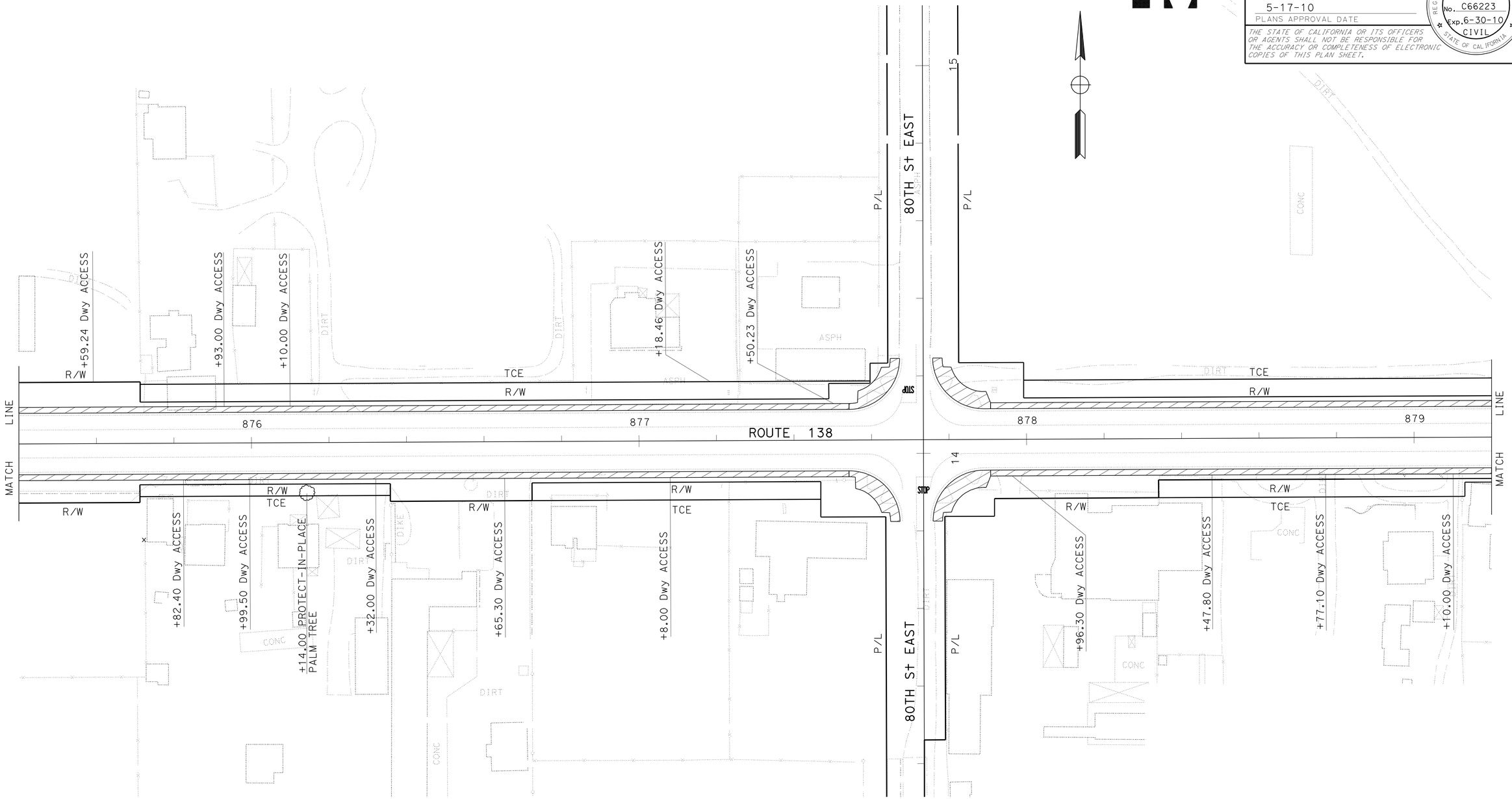

ALL DIMENSIONS ARE IN METERS
UNLESS OTHERWISE SHOWN

STAGE 5

STAGE CONSTRUCTION AND TRAFFIC HANDLING PLAN

SCALE 1:500

THIS PLAN ACCURATE FOR STAGE CONSTRUCTION AND TRAFFIC HANDLING WORK ONLY

SC-24

STATE OF CALIFORNIA - DEPARTMENT OF TRANSPORTATION
Caltrans OFFICE OF DESIGN B

FUNCTIONAL SUPERVISOR: M. OJI KALU
CALCULATED-DESIGNED BY: QUANG THAI
CHECKED BY: M. OJI KALU
REVISED BY / DATE REVISED

LAST REVISION 12-29-09 | DATE PLOTTED => 20-MAY-2010 | TIME PLOTTED => 11:22

Dist	COUNTY	ROUTE	KILOMETER POST TOTAL PROJECT	SHEET No.	TOTAL SHEETS
07	LA	138	87.2/88.9	89	156

REGISTERED CIVIL ENGINEER 1-11-10 DATE

5-17-10
PLANS APPROVAL DATE

REGISTERED PROFESSIONAL ENGINEER QUANG THAI No. C66223 Exp. 6-30-10 CIVIL STATE OF CALIFORNIA

THE STATE OF CALIFORNIA OR ITS OFFICERS OR AGENTS SHALL NOT BE RESPONSIBLE FOR THE ACCURACY OR COMPLETENESS OF ELECTRONIC COPIES OF THIS PLAN SHEET.

Caltrans Metric

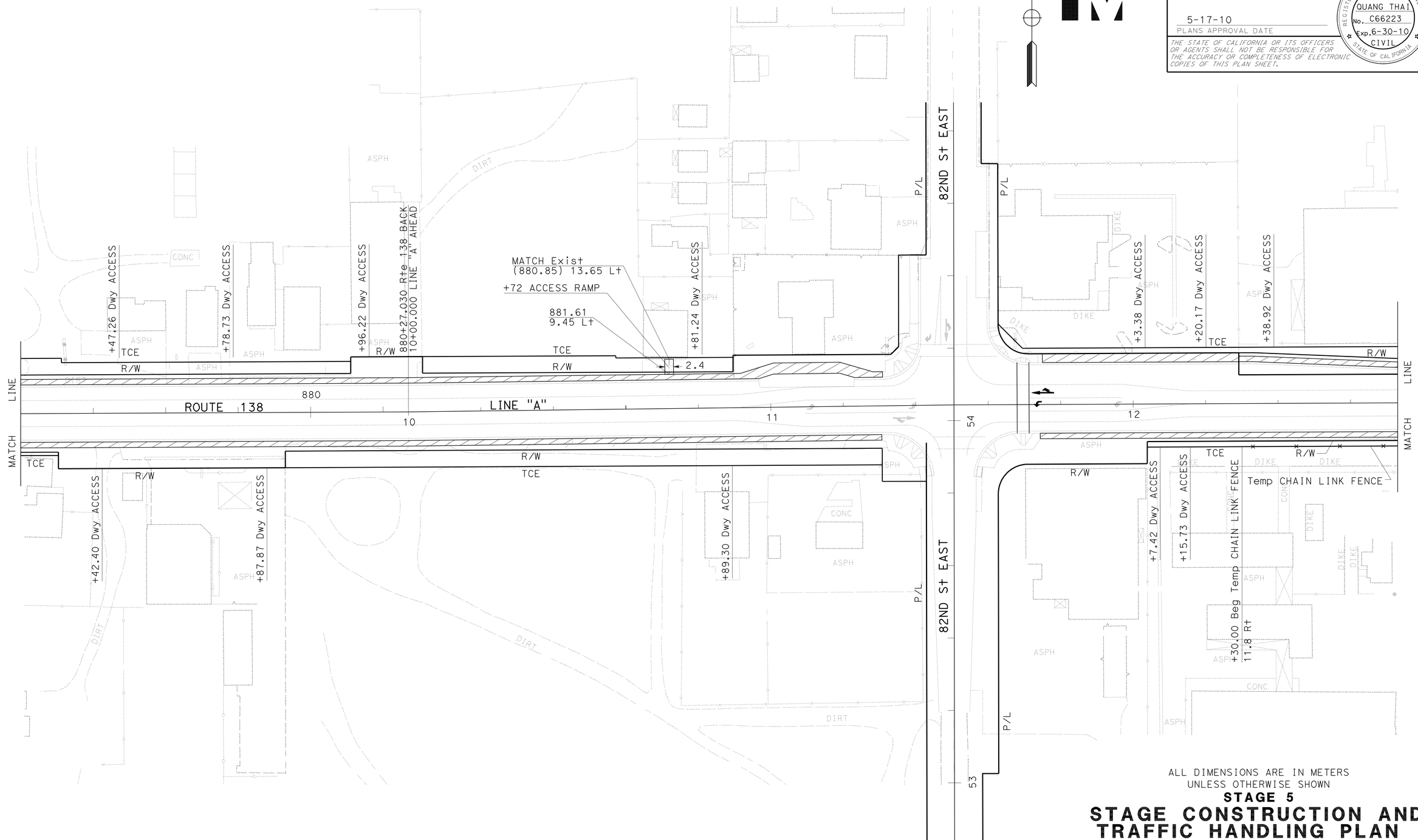

ALL DIMENSIONS ARE IN METERS
UNLESS OTHERWISE SHOWN

STAGE 5

STAGE CONSTRUCTION AND TRAFFIC HANDLING PLAN

SCALE 1:500

THIS PLAN ACCURATE FOR STAGE CONSTRUCTION AND TRAFFIC HANDLING WORK ONLY

SC-25

REVISED BY	DATE REVISED

CALCULATED-DESIGNED BY: QUANG THAI
CHECKED BY: M. OJI KALU
FUNCTIONAL SUPERVISOR: M. OJI KALU

STATE OF CALIFORNIA - DEPARTMENT OF TRANSPORTATION
Caltrans OFFICE OF DESIGN B

LAST REVISION 12-29-09 | DATE PLOTTED => 20-MAY-2010 | TIME PLOTTED => 11:22

Dist	COUNTY	ROUTE	KILOMETER POST TOTAL PROJECT	SHEET No.	TOTAL SHEETS
07	LA	138	87.2/88.9	90	156

Quang Thai 1-11-10
REGISTERED CIVIL ENGINEER DATE

5-17-10
PLANS APPROVAL DATE

REGISTERED PROFESSIONAL ENGINEER
QUANG THAI
No. C66223
Exp. 6-30-10
CIVIL
STATE OF CALIFORNIA

THE STATE OF CALIFORNIA OR ITS OFFICERS OR AGENTS SHALL NOT BE RESPONSIBLE FOR THE ACCURACY OR COMPLETENESS OF ELECTRONIC COPIES OF THIS PLAN SHEET.

Caltrans Metric

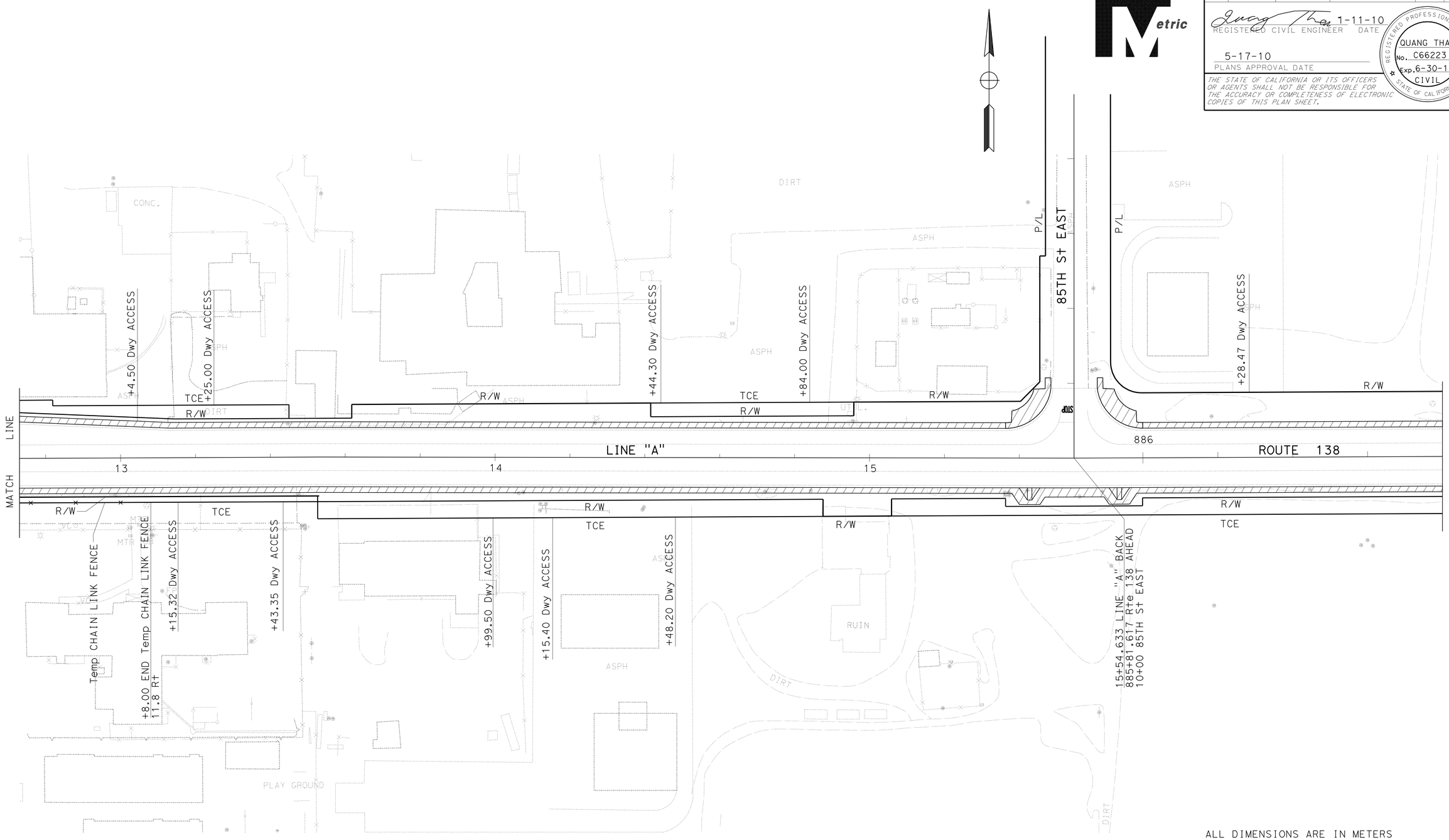

ALL DIMENSIONS ARE IN METERS
UNLESS OTHERWISE SHOWN

STAGE 5

STAGE CONSTRUCTION AND TRAFFIC HANDLING PLAN

SCALE 1:500

SC-26

THIS PLAN ACCURATE FOR STAGE CONSTRUCTION AND TRAFFIC HANDLING WORK ONLY

REVISED BY	DATE REVISED
QUANG THAI	M. OJI KALU
CALCULATED-DESIGNED BY	CHECKED BY
FUNCTIONAL SUPERVISOR	M. OJI KALU

STATE OF CALIFORNIA - DEPARTMENT OF TRANSPORTATION
Caltrans OFFICE OF DESIGN B

LAST REVISION 12-29-09
DATE PLOTTED => 20-MAY-2010
TIME PLOTTED => 11:22

Dist	COUNTY	ROUTE	KILOMETER POST TOTAL PROJECT	SHEET No.	TOTAL SHEETS
07	LA	138	87.2/88.9	91	156

Quang Thai 1-11-10
REGISTERED CIVIL ENGINEER DATE

5-17-10
PLANS APPROVAL DATE

REGISTERED PROFESSIONAL ENGINEER
QUANG THAI
No. C66223
Exp. 6-30-10
CIVIL
STATE OF CALIFORNIA

THE STATE OF CALIFORNIA OR ITS OFFICERS OR AGENTS SHALL NOT BE RESPONSIBLE FOR THE ACCURACY OR COMPLETENESS OF ELECTRONIC COPIES OF THIS PLAN SHEET.

Caltrans Metric

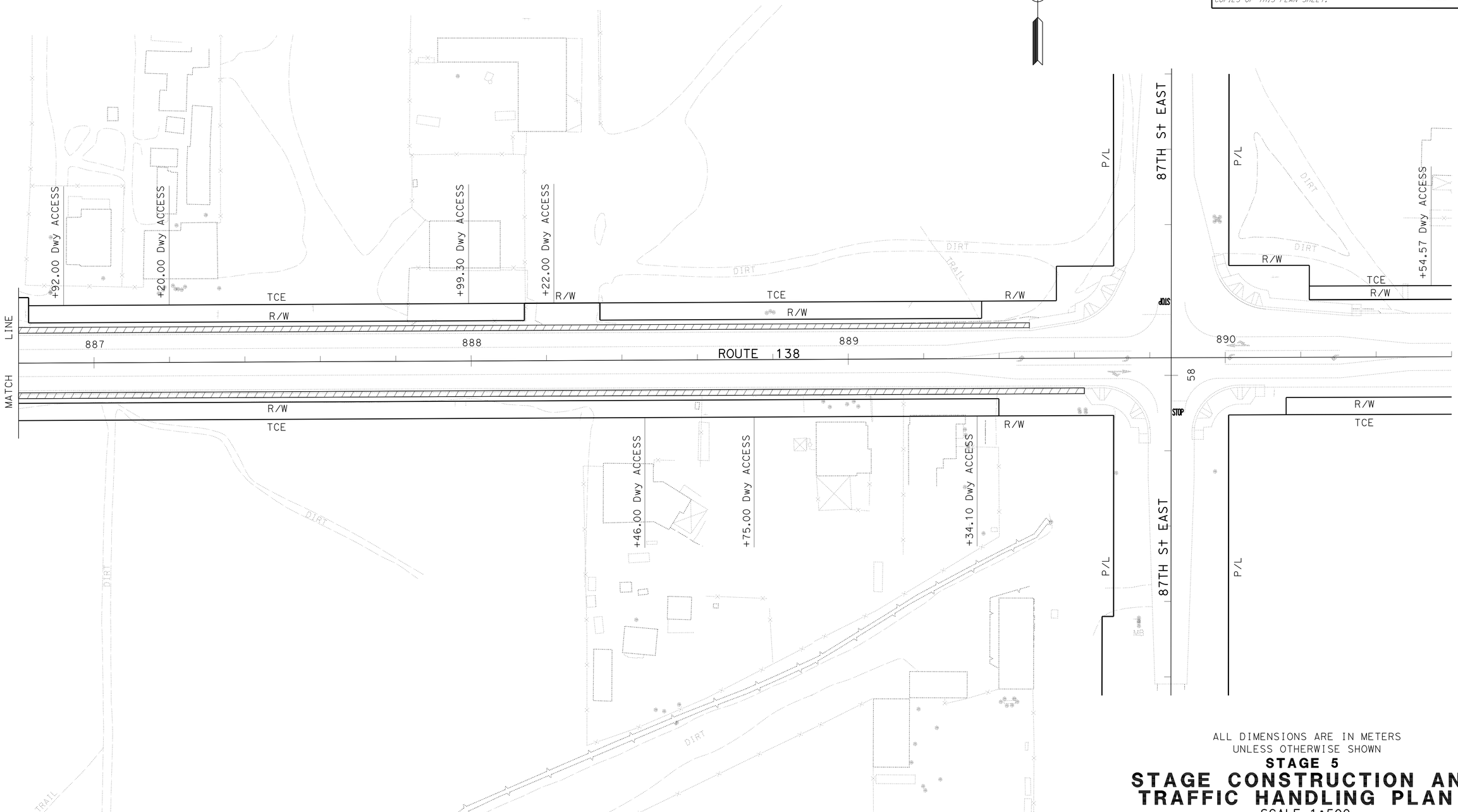

ALL DIMENSIONS ARE IN METERS
UNLESS OTHERWISE SHOWN

STAGE 5

STAGE CONSTRUCTION AND TRAFFIC HANDLING PLAN

SCALE 1:500

THIS PLAN ACCURATE FOR STAGE CONSTRUCTION AND TRAFFIC HANDLING WORK ONLY

SC-27

QUANG THAI	REVISED BY
M. OJI KALU	DATE REVISED
CALCULATED-DESIGNED BY	
CHECKED BY	
FUNCTIONAL SUPERVISOR	
M. OJI KALU	

STATE OF CALIFORNIA - DEPARTMENT OF TRANSPORTATION
Caltrans OFFICE OF DESIGN B

LAST REVISION 12-29-09 | DATE PLOTTED => 20-MAY-2010 | TIME PLOTTED => 12:56

Dist	COUNTY	ROUTE	KILOMETER POST TOTAL PROJECT	SHEET No.	TOTAL SHEETS
07	LA	138	87.2/88.9	92	156

Quang Thai 1-11-10
REGISTERED CIVIL ENGINEER DATE

5-17-10
PLANS APPROVAL DATE

REGISTERED PROFESSIONAL ENGINEER QUANG THAI No. C66223 Exp. 6-30-10 CIVIL STATE OF CALIFORNIA

THE STATE OF CALIFORNIA OR ITS OFFICERS OR AGENTS SHALL NOT BE RESPONSIBLE FOR THE ACCURACY OR COMPLETENESS OF ELECTRONIC COPIES OF THIS PLAN SHEET.

STAGE CONSTRUCTION QUANTITIES

SHEET NUMBER	TEMPORARY PAVEMENT DELINEATION										REMOVE	THERMOPLASTIC TRAFFIC STRIPE		THERMOPLASTIC PAVEMENT MARKING			
	TRAFFIC STRIPE (PAINT)				PAVEMENT MARKING (PAINT)												
	100 mm YELLOW (DETAIL 22)	100 mm WHITE (DETAIL 27B)	200 mm WHITE (DETAIL 38A)	100 mm YELLOW (DETAIL 2)	300 mm WHITE LINE	TYPE IV ARROW	TYPE VII ARROW	WORD (STOP)	WORD (SIGNAL)	PAVEMENT MARKER (RETROREFLECTIVE)	PAVEMENT MARKING (STOP)	100 mm YELLOW (DETAIL 22)	100 mm WHITE (DETAIL 27B)	300 mm WHITE LINE	WORD (STOP)	PAVEMENT MARKER (RETROREFLECTIVE)	TEMPORARY FENCE
	m	m	m	m	m^2	m^2	m^2	m^2	m^2	EA	m^2	m	m	m^2	m^2	EA	m
STAGE 1																	
SC-3	100	160								28							1 132
SC-4	384	766			2.5			4.1		112							1 900
SC-5	391	782	102		32	7.0	7.5			116							1 881
SC-6	369	763			1.3			2.0		106							1 861
SC-7	385	753	62		3.5	5.6	5.0	4.1		112							1 726
SC-8	140	280								40							
STAGE 2																	
SC-9	130									38							
SC-10	354									100							
SC-11	357					2.8				102							
SC-12	354									100							
SC-13	295					1.4				82							
STAGE 4																	
SC-17	205	376	35		3.2			4.1		64							
SC-18	384	766			2.5			4.1		114							
SC-19	401	782	102	100	32	7.0	7.5			131							
SC-20	369	763			1.3			2.0		106							
SC-21	385	768	62	173	3.5	5.6	5.0	4.1		126							
SC-22	80	160								24							
STAGE 5																	
SC-25					12	1.4	2.5										
DE-2					5.0				3	24	10	120	234	5	8	24	
SUBTOTAL	5 083	7 119	363	273	98.8	30.8	27.5	24.5	3	1 525	10	354		13		24	8 500
TOTAL	12 838				181.6					1 525	10	354		13		24	8 500

THIS PLAN ACCURATE FOR STAGE CONSTRUCTION AND TRAFFIC HANDLING QUANTITIES.

STAGE CONSTRUCTION AND TRAFFIC HANDLING QUANTITIES

SCQ-1

STATE OF CALIFORNIA - DEPARTMENT OF TRANSPORTATION
Caltrans OFFICE OF DESIGN B

FUNCTIONAL SUPERVISOR: M. OJI KALU
CALCULATED-DESIGNED BY: QUANG THAI
CHECKED BY: M. OJI KALU
REVISED BY
DATE REVISED

LAST REVISION 12-29-09
DATE PLOTTED => 24-MAY-2010
TIME PLOTTED => 10:39

Dist	COUNTY	ROUTE	KILOMETER POST TOTAL PROJECT	SHEET No.	TOTAL SHEETS
07	LA	138	87.2/88.9	93	156

REGISTERED CIVIL ENGINEER 1-11-10 DATE

5-17-10
PLANS APPROVAL DATE

REGISTERED PROFESSIONAL ENGINEER QUANG THAI No. C66223 Exp. 6-30-10 CIVIL STATE OF CALIFORNIA

THE STATE OF CALIFORNIA OR ITS OFFICERS OR AGENTS SHALL NOT BE RESPONSIBLE FOR THE ACCURACY OR COMPLETENESS OF ELECTRONIC COPIES OF THIS PLAN SHEET.

Caltrans Metric

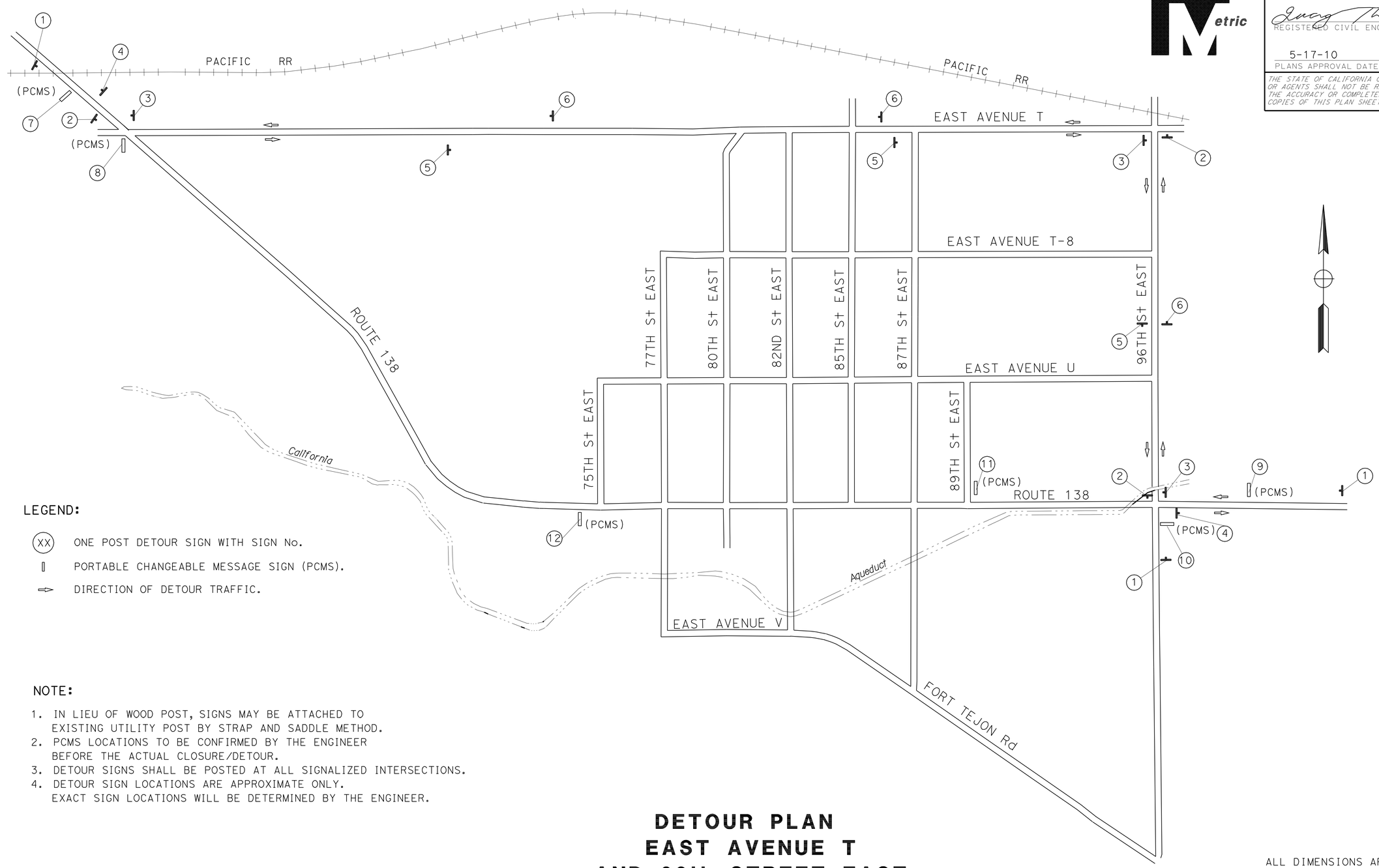

LEGEND:

(XX) ONE POST DETOUR SIGN WITH SIGN No.

▯ PORTABLE CHANGEABLE MESSAGE SIGN (PCMS).

⇨ DIRECTION OF DETOUR TRAFFIC.

NOTE:

1. IN LIEU OF WOOD POST, SIGNS MAY BE ATTACHED TO EXISTING UTILITY POST BY STRAP AND SADDLE METHOD.
2. PCMS LOCATIONS TO BE CONFIRMED BY THE ENGINEER BEFORE THE ACTUAL CLOSURE/DETOUR.
3. DETOUR SIGNS SHALL BE POSTED AT ALL SIGNALIZED INTERSECTIONS.
4. DETOUR SIGN LOCATIONS ARE APPROXIMATE ONLY. EXACT SIGN LOCATIONS WILL BE DETERMINED BY THE ENGINEER.

DETOUR PLAN
EAST AVENUE T
AND 96th STREET EAST

THIS PLAN ACCURATE FOR DETOUR CONSTRUCTION WORK ONLY

ALL DIMENSIONS ARE IN METERS UNLESS OTHERWISE SHOWN

STAGE 1, 2, 3

DETOUR PLAN

NO SCALE

DE-1

REVISED BY	DATE REVISED

CALCULATED-DESIGNED BY: QUANG THAI
CHECKED BY: M. OJI KALU
FUNCTIONAL SUPERVISOR: M. OJI KALU

STATE OF CALIFORNIA - DEPARTMENT OF TRANSPORTATION
Caltrans OFFICE OF DESIGN B

LAST REVISION 12-29-09
DATE PLOTTED => 20-MAY-2010
TIME PLOTTED => 12:57

Dist	COUNTY	ROUTE	KILOMETER POST TOTAL PROJECT	SHEET No.	TOTAL SHEETS
07	LA	138	87.2/88.9	94	156

Quang Thai 5-11-10
REGISTERED CIVIL ENGINEER DATE

5-17-10
PLANS APPROVAL DATE

REGISTERED PROFESSIONAL ENGINEER QUANG THAI No. C66223 Exp. 6-30-10 CIVIL STATE OF CALIFORNIA

THE STATE OF CALIFORNIA OR ITS OFFICERS OR AGENTS SHALL NOT BE RESPONSIBLE FOR THE ACCURACY OR COMPLETENESS OF ELECTRONIC COPIES OF THIS PLAN SHEET.

Caltrans Metric

NOTES:

1. REMOVE "STOP" PAVEMENT MARKING FOR DETOUR.
   INSTALL "STOP" PAVEMENT MARKING AFTER TEMPORARY SIGNAL IS REMOVED.
2. REMOVE "STOP" PAVEMENT MARKING AND INSTALL TEMPORARY "SIGNAL" PAVEMENT MARKING FOR DETOUR.
   INSTALL "STOP" PAVEMENT MARKING AFTER TEMPORARY SIGNAL IS REMOVED.

CURVE DATA

No.	R	Δ	T	L
1	12.2	90°9′13"	12.2	19.2
2	12.2	90°1′42"	12.2	19.2
3	10.7	91°5′57"	10.9	17.0
4	9.1	87°54′43"	8.8	14.0

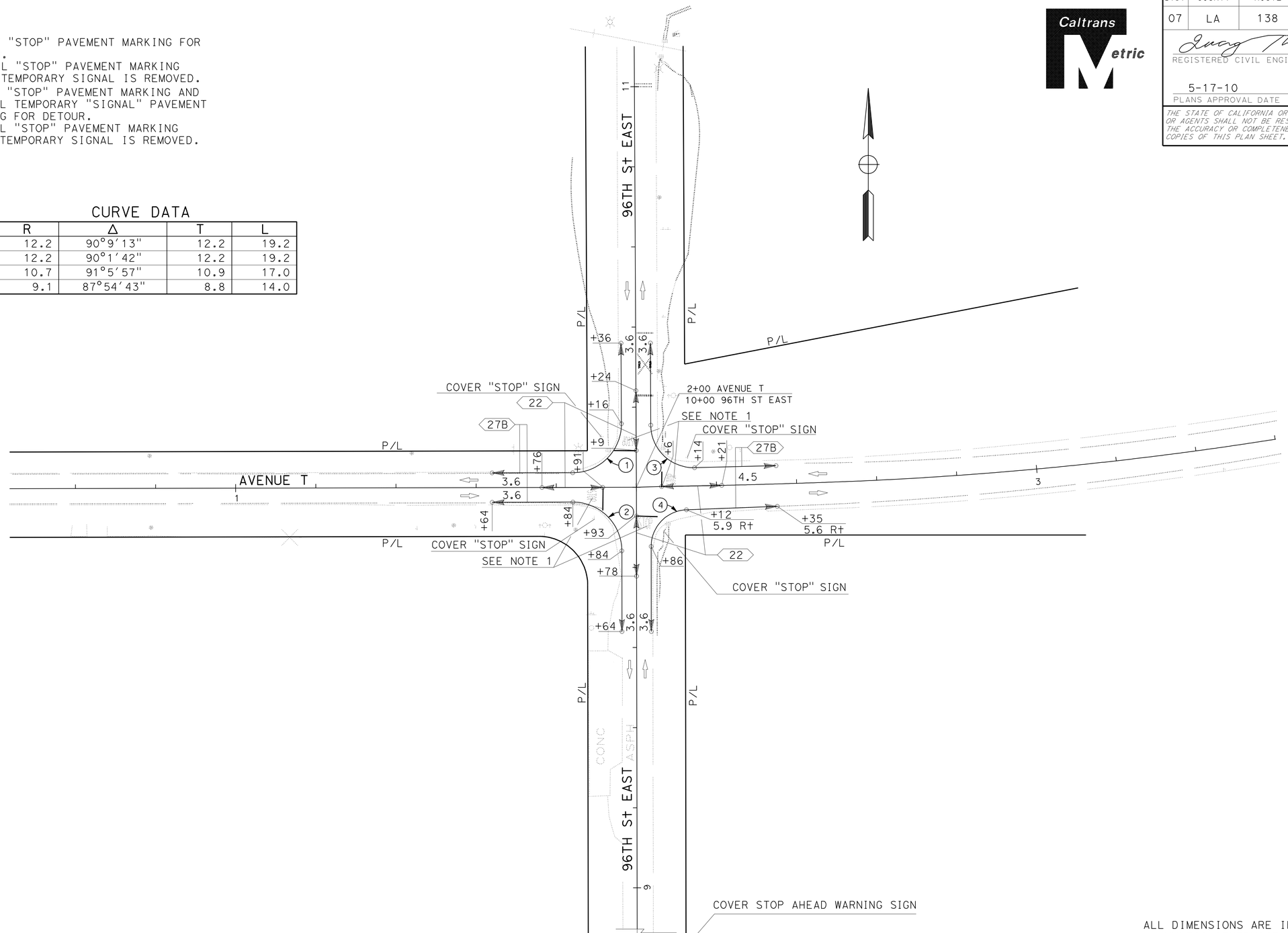

ALL DIMENSIONS ARE IN METERS UNLESS OTHERWISE SHOWN

STAGE 1, 2, 3

DETOUR PLAN

NO SCALE

THIS PLAN ACCURATE FOR DETOUR CONSTRUCTION WORK ONLY

DE-2

STATE OF CALIFORNIA - DEPARTMENT OF TRANSPORTATION
Caltrans **OFFICE OF DESIGN B**

FUNCTIONAL SUPERVISOR: M. OJI KALU
CALCULATED-DESIGNED BY: QUANG THAI
CHECKED BY: M. OJI KALU
REVISED BY / DATE REVISED

LAST REVISION 12-29-09 | DATE PLOTTED => 20-MAY-2010 | TIME PLOTTED => 12:57

Dist	COUNTY	ROUTE	KILOMETER POST TOTAL PROJECT	SHEET No.	TOTAL SHEETS
07	LA	138	87.2/88.9	95	156

REGISTERED CIVIL ENGINEER 1-11-10 DATE

5-17-10
PLANS APPROVAL DATE

REGISTERED PROFESSIONAL ENGINEER QUANG THAI No. C66223 Exp. 6-30-10 CIVIL STATE OF CALIFORNIA

THE STATE OF CALIFORNIA OR ITS OFFICERS OR AGENTS SHALL NOT BE RESPONSIBLE FOR THE ACCURACY OR COMPLETENESS OF ELECTRONIC COPIES OF THIS PLAN SHEET.

Caltrans Metric

NOTE:

SEE STAGE CONSTRUCTION QUANTITIES SCQ-1
FOR PAVEMENT DELINEATION QUANTITY.

DETOUR SIGN QUANTITIES

SIGN No.	SIGN CODE	SIGN MESSAGE	PANEL SIZE (mm)	"D" Dim	"H" Dim	"E" Dim	POST LENGTH	POST SIZE 89 X 140	POST SIZE 140 X 140	ROADSIDE SIGN ONE POST	ROADSIDE SIGN ON TEMPORARY SIGNAL POLE
				m	m	m	m	mm	mm	EA	
1	W20-2	DETOUR AHEAD	900 X 900	1.3	2.7	1.4	4.7	X		3	
2	M4-8	DETOUR	600 X 300	2.3	3.2	1.5	5.9		X	3	
	G28-2	ROUTE MARKER "138"	711 X 635								
	M6-1 (L†)	<== (L†)	525 X 375								
3	M4-8	DETOUR	600 X 300	2.3	3.2	1.5	5.9		X	3	
	G28-2	ROUTE MARKER "138"	711 X 635								
	M6-1 (R†)	==> (R†)	525 X 375								
4	M4-8A	END DETOUR	900 X 900	1.3	2.7	1.4	4.7	X		2	
5	M4-8	DETOUR	600 X 300								
	G28-2	ROUTE MARKER "138"	600 X 300								
	M3-2	EAST	711 X 635	2.3	3.2	1.5	5.9		X	3	
6	M4-8	DETOUR	600 X 300								
	G28-2	ROUTE MARKER "138"	711 X 635								
	M3-4	WEST	600 X 300	2.3	3.2	1.5	5.9		X	3	
7		ROUTE 138 EAST									
	PCMS	DETOUR ALL TRAFFIC									
		LEFT E AVE T									
8		ROUTE 138 EAST									
	PCMS	DETOUR ALL TRAFFIC									
		USE E AVE T (UP ARROW)									
9		ROUTE 138 WEST									
	PCMS	DETOUR ALL TRAFFIC									
		RIGHT 96TH ST E									
10		ROUTE 138 WEST									
	PCMS	DETOUR ALL TRAFFIC									
		USE 96TH ST E (UP ARROW)									
11		ROUTE 138 WEST									
	PCMS	ROAD WORK AHEAD									
		REDUCE SPEED									
12		ROUTE 138 EAST									
	PCMS	ROAD WORK AHEAD									
		REDUCE SPEED									
FROM SHEET E-7	R9-3a	NO PEDESTRIAN CROSSING SYMBOL									14
	R3-4	U-TURN PROHIBITED SYMBOL									4

THIS PLAN IS ACCURATE FOR DETOUR QUANTITIES.

DETOUR QUANTITIES

DEQ-1

STATE OF CALIFORNIA - DEPARTMENT OF TRANSPORTATION
Caltrans OFFICE OF DESIGN B

FUNCTIONAL SUPERVISOR: M. OJI KALU
CALCULATED-DESIGNED BY: QUANG THAI
CHECKED BY: M. OJI KALU
REVISED BY
DATE REVISED

LAST REVISION 12-29-09 DATE PLOTTED => 24-MAY-2010 TIME PLOTTED => 10:39

Dist	COUNTY	ROUTE	KILOMETER POST TOTAL PROJECT	SHEET No.	TOTAL SHEETS
07	LA	138	87.2/88.9	96	156

REGISTERED CIVIL ENGINEER 10/26/09 DATE

5-17-10
PLANS APPROVAL DATE

REGISTERED PROFESSIONAL ENGINEER EDGAR HERRERA No. C 67603 Exp. 6/30/11 CIVIL STATE OF CALIFORNIA

THE STATE OF CALIFORNIA OR ITS OFFICERS OR AGENTS SHALL NOT BE RESPONSIBLE FOR THE ACCURACY OR COMPLETENESS OF ELECTRONIC COPIES OF THIS PLAN SHEET.

Caltrans Metric

NOTES:

1. ALL SIGN CODES SHALL BE MUTCD SIGN CODE UNLESS NOTED ON PLANS.
2. ALL LIMIT LINES, CHEVRONS, DIAGONALS AND CROSSWALKS SHALL BE 300 mm WHITE UNLESS OTHERWISE SHOWN ON PLANS.
3. ALL EXISTING SIGNS TO REMAIN UNLESS OTHERWISE NOTED.
4. STRIPES AND PAVEMENT MARKINGS SHALL BE THERMOPLASTIC, UNLESS OTHERWISE NOTED.
5. CONFLICTING STRIPING SHALL BE REMOVED.
6. ALL STATIONING IS BASED ON LINE "A1", UNLESS OTHERWISE NOTED.

LEGEND:

- TYPE II ARROW
- TYPE IV(L) ARROW
- TYPE IV(R) ARROW
- TRAFFIC DIRECTION
- (No.) STRIPING DETAIL NUMBER PER STANDARD PLANS
- CHANGE IN PAVEMENT DELINEATION DETAILS
- (No) ROADSIDE SIGN IDENTIFICATION (WITH NUMBER)
- (N) NEW SIGN
- (R) REMOVE ROADSIDE SIGN

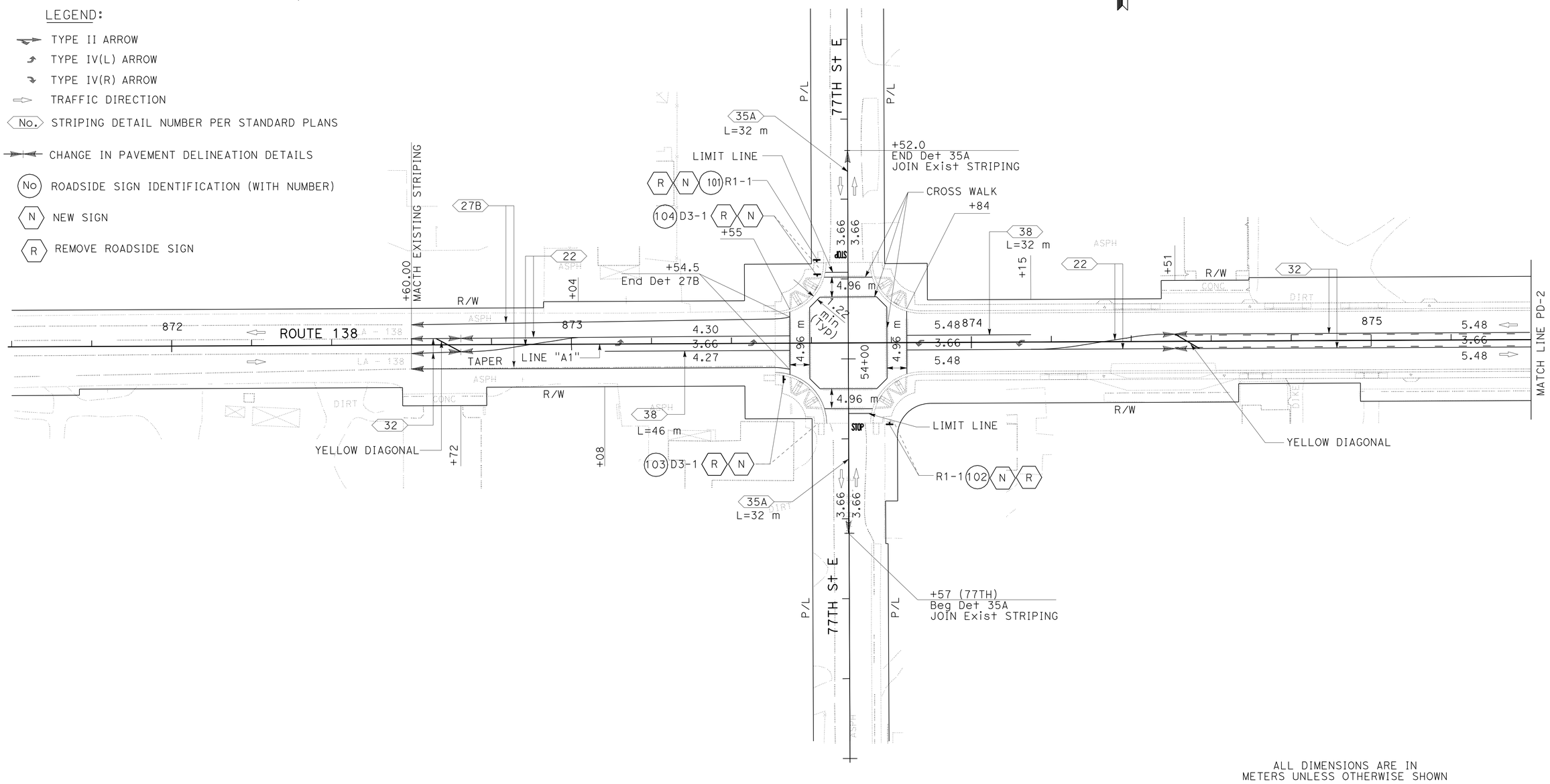

ALL DIMENSIONS ARE IN METERS UNLESS OTHERWISE SHOWN

PAVEMENT DELINEATION AND SIGN PLAN

SCALE 1:500

THIS PLAN ACCURATE FOR PAVEMENT DELINEATION AND SIGN WORK ONLY

PD-1

REVISED BY	DATE REVISED

CALCULATED-DESIGNED BY: MARISA MANDOCDOC
CHECKED BY: EDGAR HERRERA
FUNCTIONAL SUPERVISOR: GRISH BIGLARIAN

STATE OF CALIFORNIA - DEPARTMENT OF TRANSPORTATION
Caltrans TRAFFIC DESIGN

LAST REVISION 01-4-10
DATE PLOTTED => 20-MAY-2010
TIME PLOTTED => 12:57

Dist	COUNTY	ROUTE	KILOMETER POST TOTAL PROJECT	SHEET No.	TOTAL SHEETS
07	LA	138	87.2/88.9	97	156

REGISTERED CIVIL ENGINEER 10/26/09 DATE

5-17-10
PLANS APPROVAL DATE

REGISTERED PROFESSIONAL ENGINEER EDGAR HERRERA No. C 67603 Exp. 6/30/11 CIVIL STATE OF CALIFORNIA

THE STATE OF CALIFORNIA OR ITS OFFICERS OR AGENTS SHALL NOT BE RESPONSIBLE FOR THE ACCURACY OR COMPLETENESS OF ELECTRONIC COPIES OF THIS PLAN SHEET.

Caltrans Metric

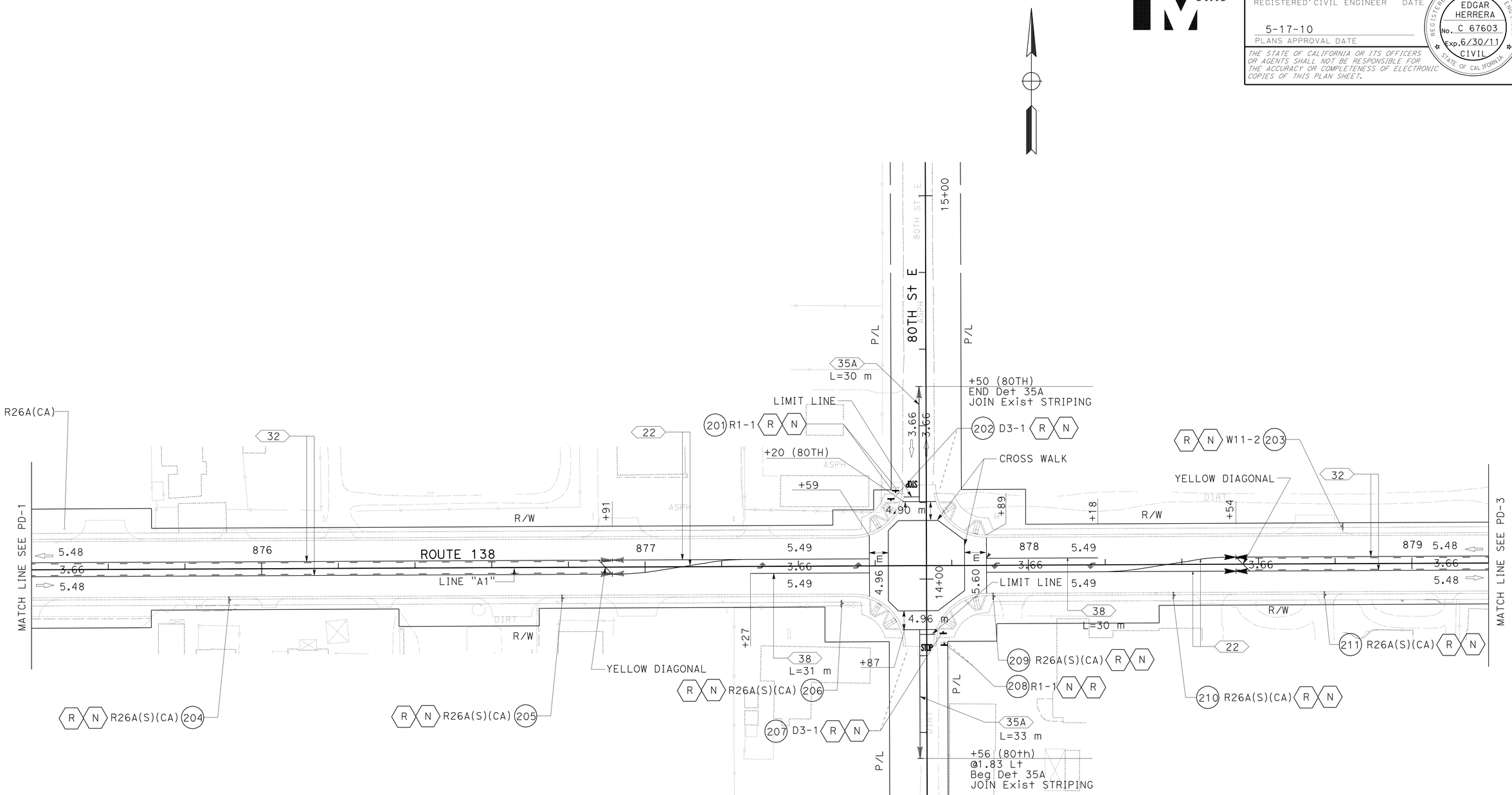

ALL DIMENSIONS ARE IN METERS UNLESS OTHERWISE SHOWN

PAVEMENT DELINEATION AND SIGN PLAN

SCALE 1:500

THIS PLAN ACCURATE FOR PAVEMENT DELINEATION AND SIGN WORK ONLY

PD-2

STATE OF CALIFORNIA - DEPARTMENT OF TRANSPORTATION
Caltrans **TRAFFIC DESIGN**

FUNCTIONAL SUPERVISOR: GRISH BIGLARIAN
CALCULATED-DESIGNED BY: MARISA MANDOCDOC
CHECKED BY: EDGAR HERRERA
REVISED BY / DATE REVISED

LAST REVISION 01-04-10 | DATE PLOTTED => 20-MAY-2010 | TIME PLOTTED => 13:06

Dist	COUNTY	ROUTE	KILOMETER POST TOTAL PROJECT	SHEET No.	TOTAL SHEETS
07	LA	138	87.2/88.9	98	156

REGISTERED CIVIL ENGINEER 10/26/09 DATE

5-17-10
PLANS APPROVAL DATE

REGISTERED PROFESSIONAL ENGINEER EDGAR HERRERA No. C 67603 Exp. 6/30/11 CIVIL STATE OF CALIFORNIA

THE STATE OF CALIFORNIA OR ITS OFFICERS OR AGENTS SHALL NOT BE RESPONSIBLE FOR THE ACCURACY OR COMPLETENESS OF ELECTRONIC COPIES OF THIS PLAN SHEET.

Caltrans Metric

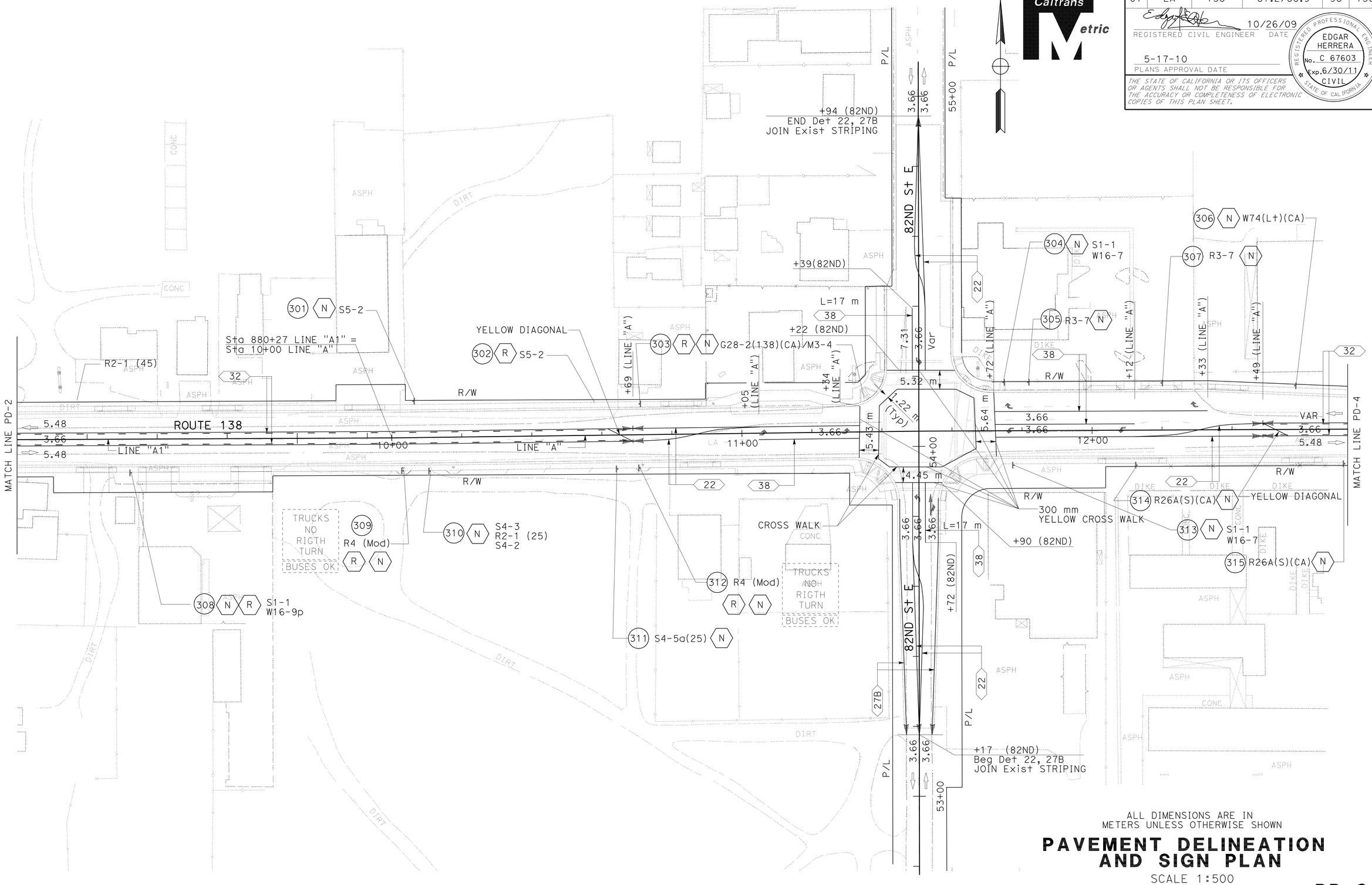

ALL DIMENSIONS ARE IN METERS UNLESS OTHERWISE SHOWN

PAVEMENT DELINEATION AND SIGN PLAN

SCALE 1:500

THIS PLAN ACCURATE FOR PAVEMENT DELINEATION AND SIGN WORK ONLY

PD-3

REVISED BY	DATE REVISED
MARISA MANDOCDOC	EDGAR HERRERA
CALCULATED-DESIGNED BY	CHECKED BY
FUNCTIONAL SUPERVISOR	GRISH BIGLARIAN

STATE OF CALIFORNIA - DEPARTMENT OF TRANSPORTATION
Caltrans **TRAFFIC DESIGN**

LAST REVISION 12-23-09 | DATE PLOTTED => 20-MAY-2010 | TIME PLOTTED => 13:06

Dist	COUNTY	ROUTE	KILOMETER POST TOTAL PROJECT	SHEET No.	TOTAL SHEETS
07	LA	138	87.2/88.9	99	156

REGISTERED CIVIL ENGINEER 10/26/09 DATE

5-17-10
PLANS APPROVAL DATE

REGISTERED PROFESSIONAL ENGINEER EDGAR HERRERA No. C 67603 Exp. 6/30/09 CIVIL STATE OF CALIFORNIA

THE STATE OF CALIFORNIA OR ITS OFFICERS OR AGENTS SHALL NOT BE RESPONSIBLE FOR THE ACCURACY OR COMPLETENESS OF ELECTRONIC COPIES OF THIS PLAN SHEET.

Caltrans Metric

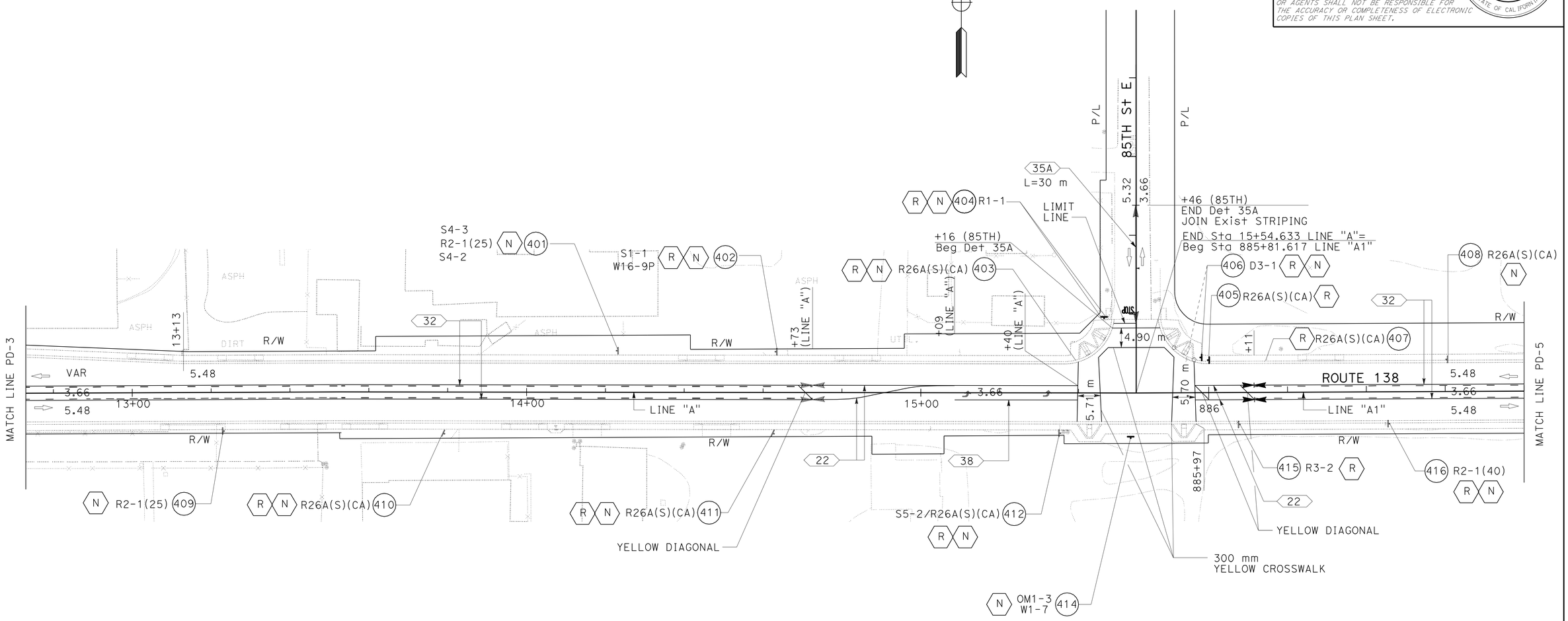

ALL DIMENSIONS ARE IN METERS UNLESS OTHERWISE SHOWN

PAVEMENT DELINEATION AND SIGN PLAN

SCALE 1:500

THIS PLAN ACCURATE FOR PAVEMENT DELINEATION AND SIGN WORK ONLY

PD-4

CALCULATED-DESIGNED BY	MARISA MANDOCDOC
CHECKED BY	EDGAR HERRERA
FUNCTIONAL SUPERVISOR	GRISH BIGLARIAN
REVISED BY	
DATE REVISED	

STATE OF CALIFORNIA - DEPARTMENT OF TRANSPORTATION
Caltrans TRAFFIC DESIGN

LAST REVISION 01-04-10 | DATE PLOTTED => 20-MAY-2010 | TIME PLOTTED => 13:06

Dist	COUNTY	ROUTE	KILOMETER POST TOTAL PROJECT	SHEET No.	TOTAL SHEETS
07	LA	138	87.2/88.9	100	156

REGISTERED CIVIL ENGINEER 10/26/09 DATE

5-17-10
PLANS APPROVAL DATE

REGISTERED PROFESSIONAL ENGINEER EDGAR HERRERA No. C 67603 Exp. 6/30/09 CIVIL STATE OF CALIFORNIA

THE STATE OF CALIFORNIA OR ITS OFFICERS OR AGENTS SHALL NOT BE RESPONSIBLE FOR THE ACCURACY OR COMPLETENESS OF ELECTRONIC COPIES OF THIS PLAN SHEET.

Caltrans Metric

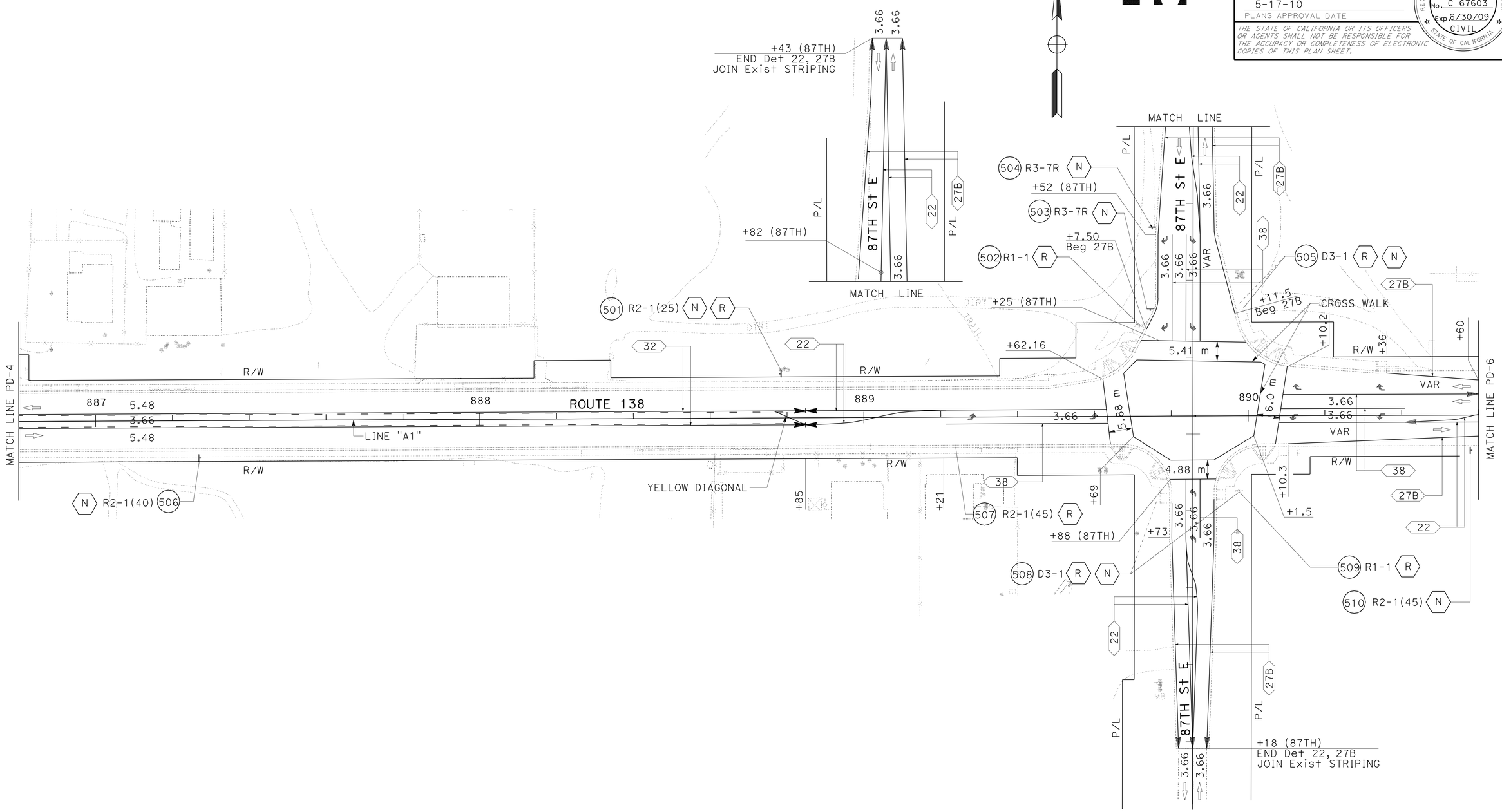

ALL DIMENSIONS ARE IN METERS UNLESS OTHERWISE SHOWN

PAVEMENT DELINEATION AND SIGN PLAN

SCALE 1:500

THIS PLAN ACCURATE FOR PAVEMENT DELINEATION AND SIGN WORK ONLY

PD-5

REVISED BY	MARISA MANDOCDOC
DATE REVISED	
CALCULATED-DESIGNED BY	EDGAR HERRERA
CHECKED BY	
FUNCTIONAL SUPERVISOR	GRISH BIGLARIAN

STATE OF CALIFORNIA - DEPARTMENT OF TRANSPORTATION
Caltrans TRAFFIC DESIGN

LAST REVISION 12-04-10 | DATE PLOTTED => 20-MAY-2010 | TIME PLOTTED => 13:06