Dist	COUNTY	ROUTE	POST MILES TOTAL PROJECT	SHEET No.	TOTAL SHEETS
7	LA	5	29.4/31.6	1871	1931

David McCord 05-21-12
REGISTERED CIVIL ENGINEER DATE

05-21-12
PLANS APPROVAL DATE

REGISTERED PROFESSIONAL ENGINEER DAVID WILLIAM McCORD No. E-15317 Exp. June 30, 2013 ELECTRICAL STATE OF CALIFORNIA

THE STATE OF CALIFORNIA OR ITS OFFICERS OR AGENTS SHALL NOT BE RESPONSIBLE FOR THE ACCURACY OR COMPLETENESS OF SCANNED COPIES OF THIS PLAN SHEET.

SCRRA
279 E. ARROW HIGHWAY
SAN DIMAS, CA 91773

XORAIL
201 NORTH INDIAN HILL BLVD
SUITE 201
CLAREMONT, CA 91711

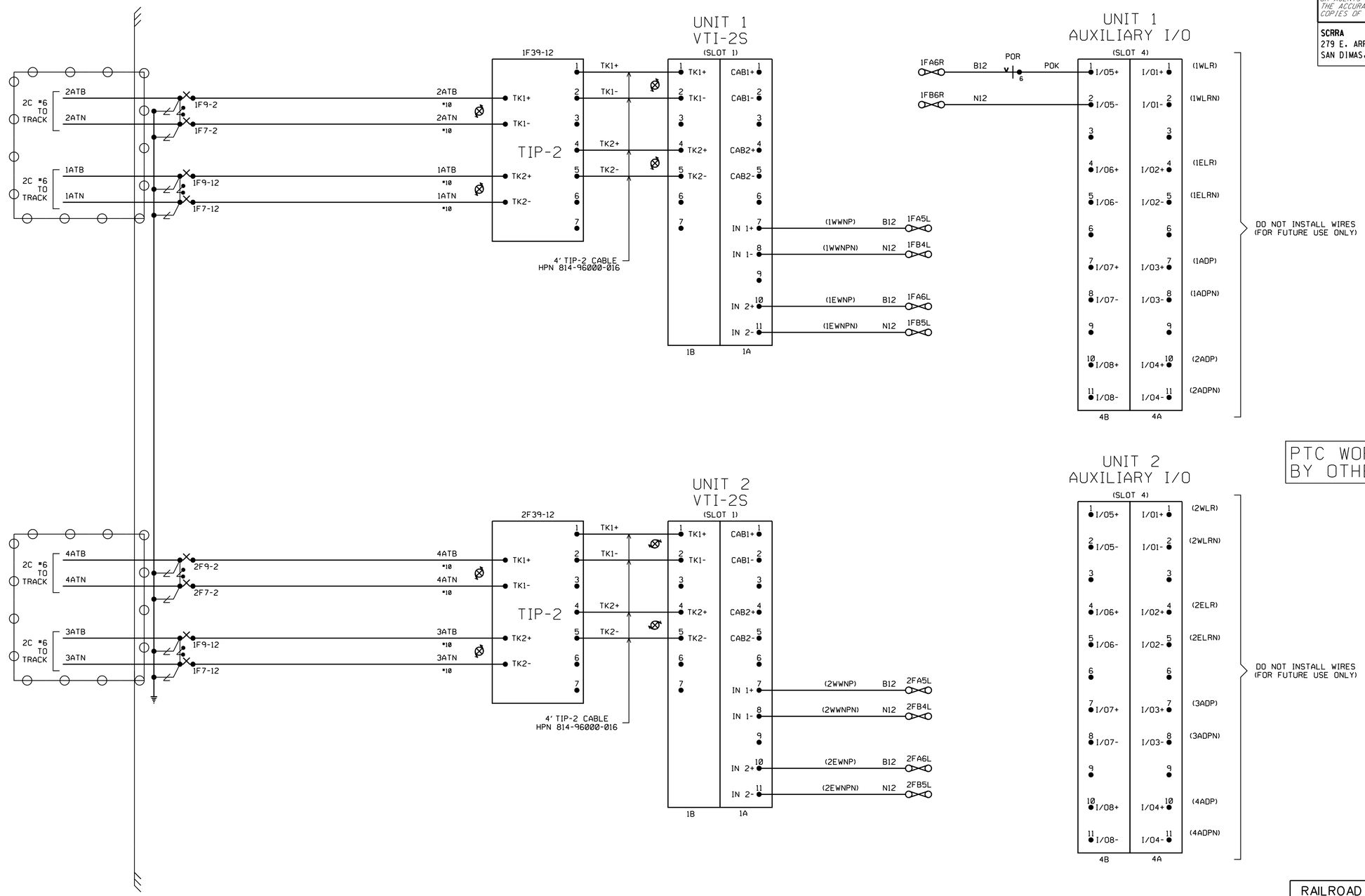

PTC WORK TO BE PERFORMED BY OTHERS.

DATE IN SERVICE _____
S. ENGINEER _____
INSPECTOR _____

THIS PLAN ACCURATE FOR RAILROAD WORK ONLY.

RR-SP-111
SIGNAL STAGE 3

ELECTROCODE 5 CIRCUITS
SIGNALS 125, 126, 127 & 128
VY 12.74
SH. 2 OF 6

RAILROAD SHEET NO.
111 OF 171

LAST REVISION 00-00-00
DATE PLOTTED = 7/18/2012
TIME PLOTTED = 2:48:57 PM

STATE OF CALIFORNIA - DEPARTMENT OF TRANSPORTATION
Caltrans® DESIGN
CONSULTANT FUNCTIONAL SUPERVISOR GLENN BREINDEL
CALCULATED-DESIGNED BY RAMON VALDEZ
CHECKED BY
REVISED BY
DATE REVISED

Dist	COUNTY	ROUTE	POST MILES TOTAL PROJECT	SHEET No.	TOTAL SHEETS
7	LA	5	29.4/31.6	1872	1931

David McCord 05-21-12
REGISTERED CIVIL ENGINEER DATE

05-21-12
PLANS APPROVAL DATE

REGISTERED PROFESSIONAL ENGINEER DAVID WILLIAM McCORD No. E-15317 Exp. June 30, 2013 ELECTRICAL STATE OF CALIFORNIA

THE STATE OF CALIFORNIA OR ITS OFFICERS OR AGENTS SHALL NOT BE RESPONSIBLE FOR THE ACCURACY OR COMPLETENESS OF SCANNED COPIES OF THIS PLAN SHEET.

SCRRA
279 E. ARROW HIGHWAY
SAN DIMAS, CA 91773

XORAIL
201 NORTH INDIAN HILL BLVD
SUITE 201
CLAREMONT, CA 91711

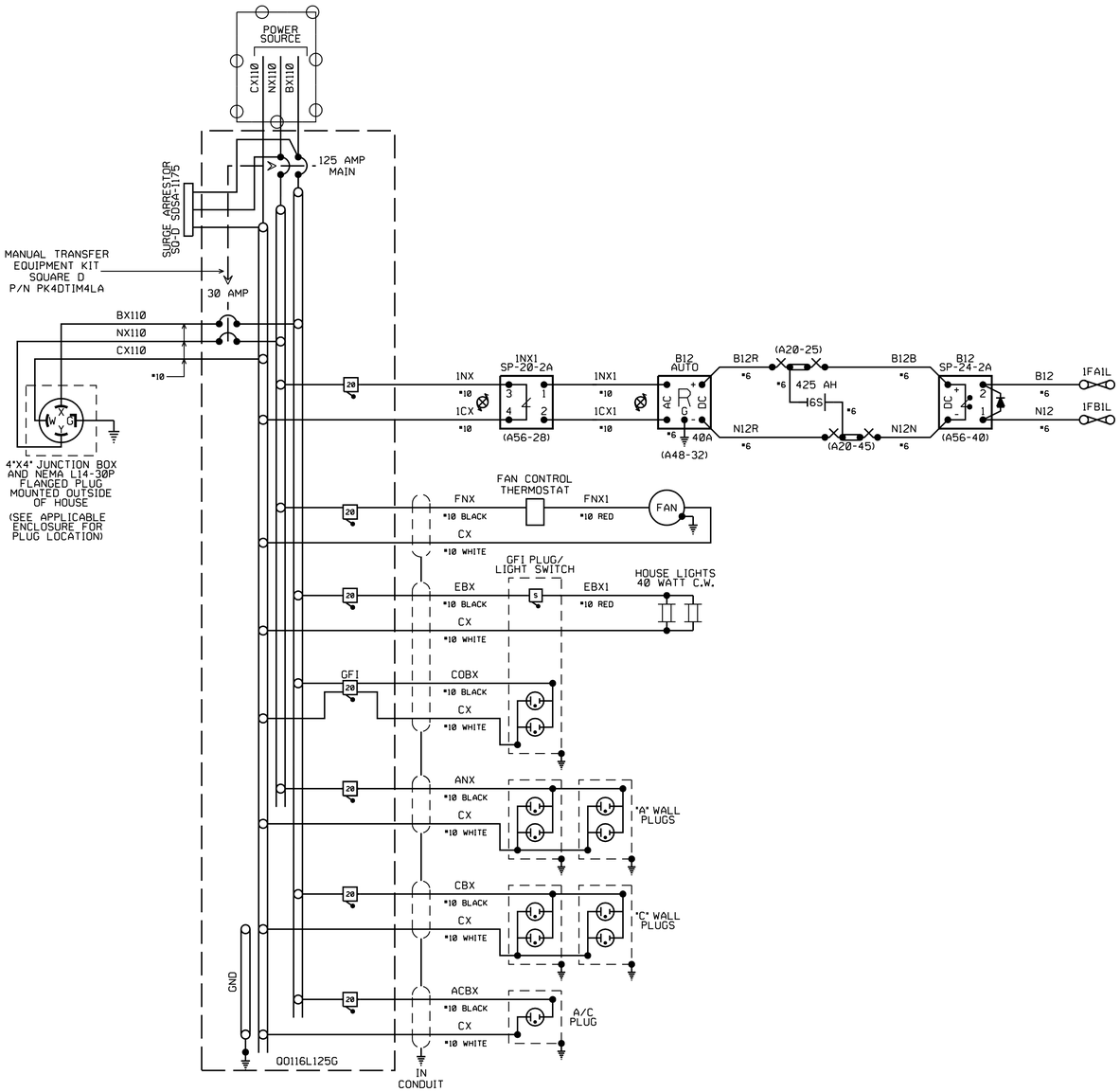

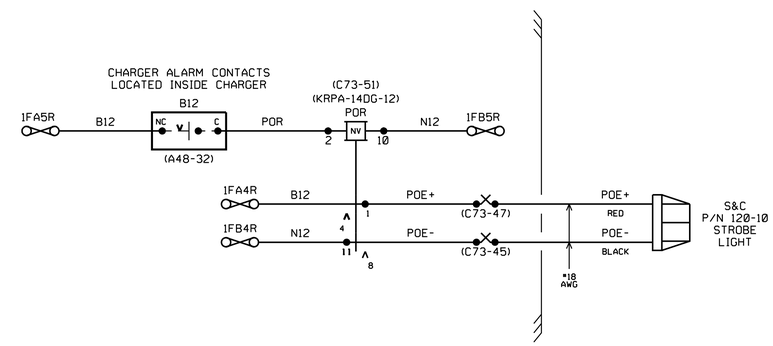

NOTE:

1. POE STROBE LIGHT AND ASSOCIATED MISCELLANEOUS MATERIALS TO BE FURNISHED BY CONTRACTOR.

ALL WIRES THIS SHEET TO BE *14 AWG FLEX UNLESS OTHERWISE NOTED.

= OUT

= IN

DATE IN SERVICE _____
S. ENGINEER _____
INSPECTOR _____

PTC WORK TO BE PERFORMED BY OTHERS.

RR-SP-112
SIGNAL STAGE 3

POWER BATTERY CIRCUITS
SIGNALS 125, 126, 127 & 128
VY 12.74
SH. 3 OF 6

RAILROAD SHEET NO.
112 OF 171

THIS PLAN ACCURATE FOR RAILROAD WORK ONLY.

STATE OF CALIFORNIA - DEPARTMENT OF TRANSPORTATION
DESIGN
CONSULTANT FUNCTIONAL SUPERVISOR: GLENN BREINDEL
CALCULATED-DESIGNED BY: RAMON VALDEZ
CHECKED BY
REVISED BY
DATE REVISED

LAST REVISION 00-00-00
DATE PLOTTED = 7/18/2012
TIME PLOTTED = 2:48:57 PM

Dist	COUNTY	ROUTE	POST MILES TOTAL PROJECT	SHEET No.	TOTAL SHEETS
7	LA	5	29.4/31.6	1873	1931

David McCord 05-21-12
REGISTERED CIVIL ENGINEER DATE

05-21-12
PLANS APPROVAL DATE

REGISTERED PROFESSIONAL ENGINEER DAVID WILLIAM McCORD No. E-15317 Exp. June 30, 2013 ELECTRICAL STATE OF CALIFORNIA

THE STATE OF CALIFORNIA OR ITS OFFICERS OR AGENTS SHALL NOT BE RESPONSIBLE FOR THE ACCURACY OR COMPLETENESS OF SCANNED COPIES OF THIS PLAN SHEET.

SCRRA
279 E. ARROW HIGHWAY
SAN DIMAS, CA 91773

XORAIL
201 NORTH INDIAN HILL BLVD
SUITE 201
CLAREMONT, CA 91711

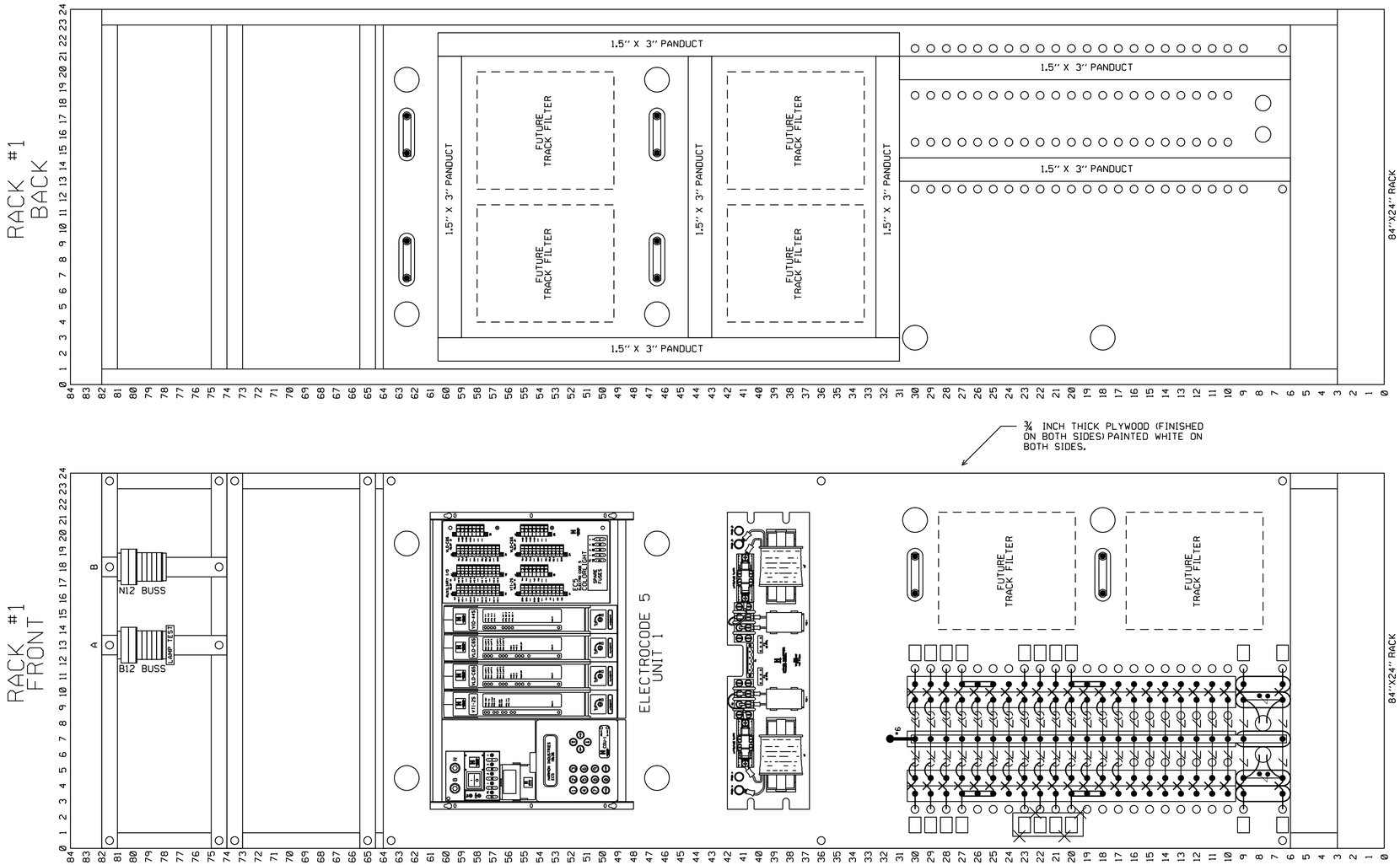

DATE IN SERVICE _____
S. ENGINEER _____
INSPECTOR _____

PTC WORK TO BE PERFORMED BY OTHERS.

THIS PLAN ACCURATE FOR RAILROAD WORK ONLY.

RR-SP-113
SIGNAL STAGE 3

RACK #1 LAYOUT
SIGNALS 125, 126, 127 & 128
VY 12.74
SH. 4 OF 6

RAILROAD SHEET NO.
113 OF 171

STATE OF CALIFORNIA - DEPARTMENT OF TRANSPORTATION
Caltrans® DESIGN
CONSULTANT FUNCTIONAL SUPERVISOR: GLENN BREINDEL
CALCULATED-DESIGNED BY: RAMON VALDEZ
CHECKED BY
REVISED BY
DATE REVISED

LAST REVISION 00-00-00
DATE PLOTTED = 7/18/2012
TIME PLOTTED = 21:48:58 PM

BORDER LAST REVISED 7/2/2010
USERNAME = gharibiana
DGN FILE = ...\moc\xorail\sheet\SP-113.sht
RELATIVE BORDER SCALE IS IN INCHES 0 1 2 3
UNIT 1812
PROJECT NUMBER & PHASE 07000211191

Dist	COUNTY	ROUTE	POST MILES TOTAL PROJECT	SHEET No.	TOTAL SHEETS
7	LA	5	29.4/31.6	1874	1931

David McCord 05-21-12
REGISTERED CIVIL ENGINEER DATE

05-21-12
PLANS APPROVAL DATE

REGISTERED PROFESSIONAL ENGINEER DAVID WILLIAM McCORD No. E-15317 Exp. June 30, 2013 ELECTRICAL STATE OF CALIFORNIA

THE STATE OF CALIFORNIA OR ITS OFFICERS OR AGENTS SHALL NOT BE RESPONSIBLE FOR THE ACCURACY OR COMPLETENESS OF SCANNED COPIES OF THIS PLAN SHEET.

SCRRA
279 E. ARROW HIGHWAY
SAN DIMAS, CA 91773

XORAIL
201 NORTH INDIAN HILL BLVD
SUITE 201
CLAREMONT, CA 91711

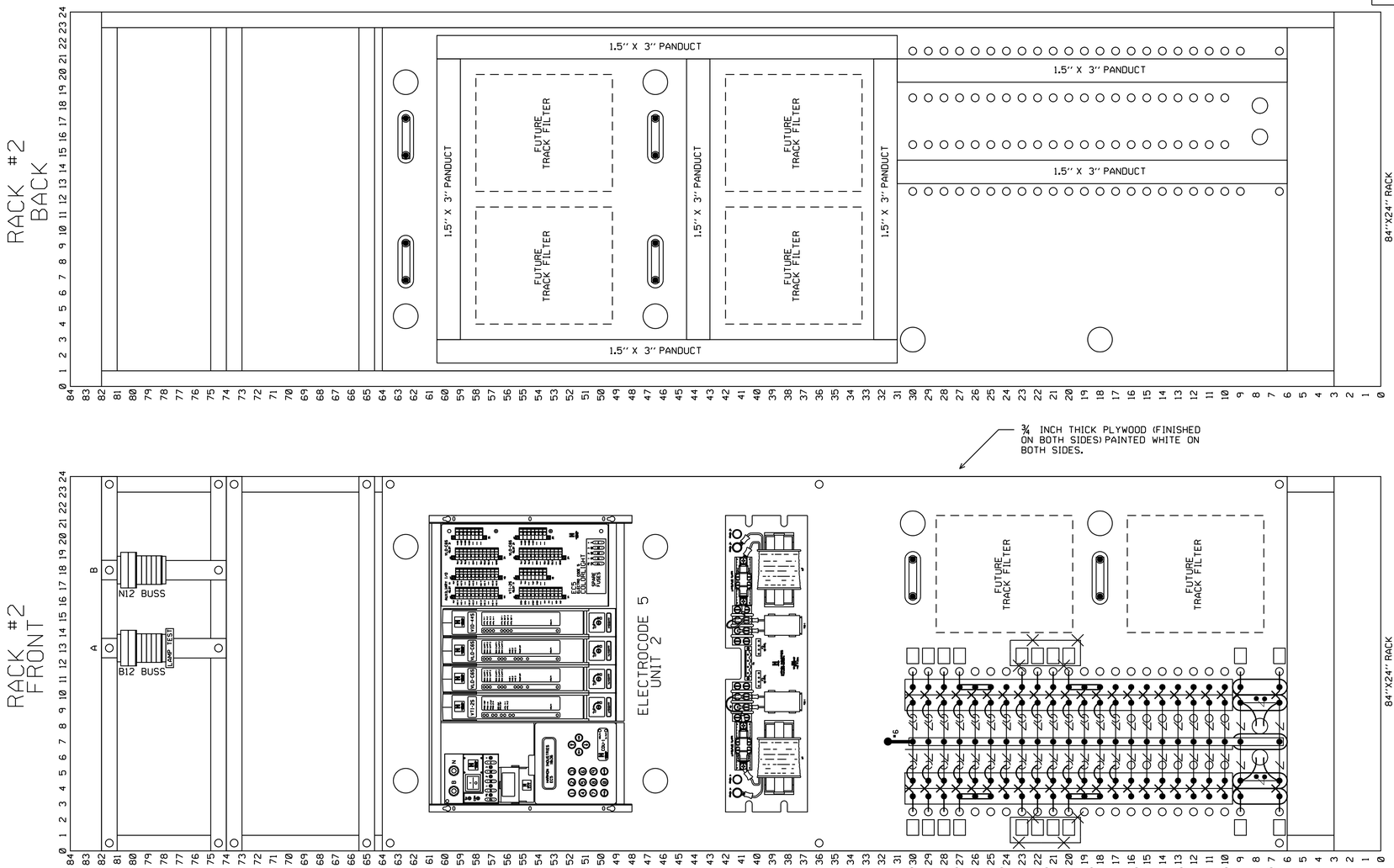

¾ INCH THICK PLYWOOD (FINISHED ON BOTH SIDES) PAINTED WHITE ON BOTH SIDES.

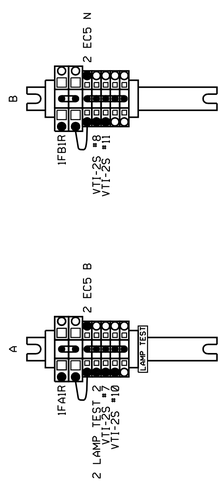

= OUT

= IN

DATE IN SERVICE _____
S. ENGINEER _____
INSPECTOR _____

PTC WORK TO BE PERFORMED BY OTHERS.

THIS PLAN ACCURATE FOR RAILROAD WORK ONLY.

RR-SP-114
SIGNAL STAGE 3

RAILROAD SHEET NO.
114 OF 171

RACK #2 LAYOUT
SIGNALS 125, 126, 127 & 128
VY 12.74
SH. 5 OF 6

LAST REVISION 00-00-00
DATE PLOTTED = 7/18/2012
TIME PLOTTED = 2:49:00 PM

STATE OF CALIFORNIA - DEPARTMENT OF TRANSPORTATION
Caltrans® DESIGN
CONSULTANT FUNCTIONAL SUPERVISOR GLENN BREINDEL
CALCULATED-DESIGNED BY RAMON VALDEZ
CHECKED BY
REVISED BY
DATE REVISED

BORDER LAST REVISED 7/2/2010
USERNAME = gharibiana
DGN FILE = ...\moc\xorail\sheet\SP-114.sht
RELATIVE BORDER SCALE IS IN INCHES 0 1 2 3
UNIT 1812
PROJECT NUMBER & PHASE 07000211191

Dist	COUNTY	ROUTE	POST MILES TOTAL PROJECT	SHEET No.	TOTAL SHEETS
7	LA	5	29.4/31.6	1875	1931

David McCord 05-21-12
REGISTERED CIVIL ENGINEER DATE

05-21-12
PLANS APPROVAL DATE

REGISTERED PROFESSIONAL ENGINEER DAVID WILLIAM McCORD No. E-15317 Exp. June 30, 2013 ELECTRICAL STATE OF CALIFORNIA

THE STATE OF CALIFORNIA OR ITS OFFICERS OR AGENTS SHALL NOT BE RESPONSIBLE FOR THE ACCURACY OR COMPLETENESS OF SCANNED COPIES OF THIS PLAN SHEET.

SCRRA
279 E. ARROW HIGHWAY
SAN DIMAS, CA 91773

XORAIL
201 NORTH INDIAN HILL BLVD
SUITE 201
CLAREMONT, CA 91711

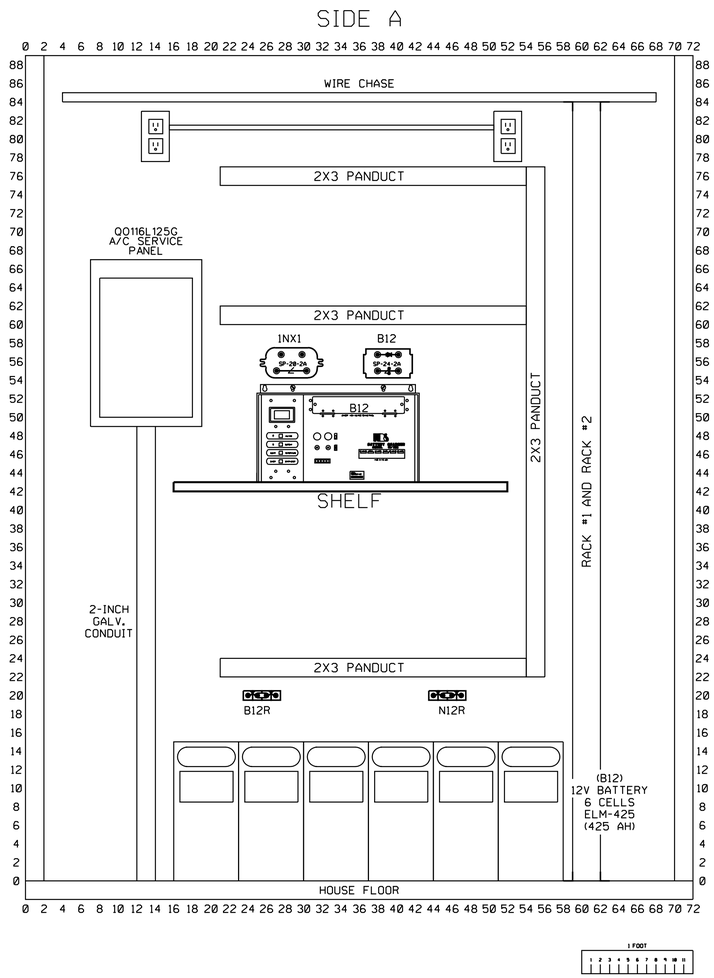

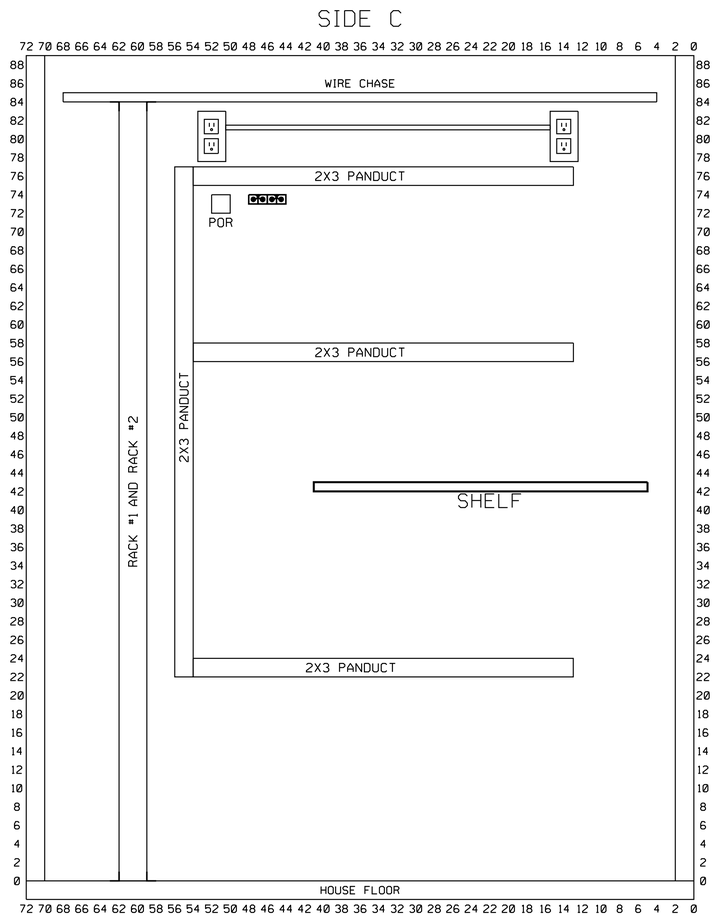

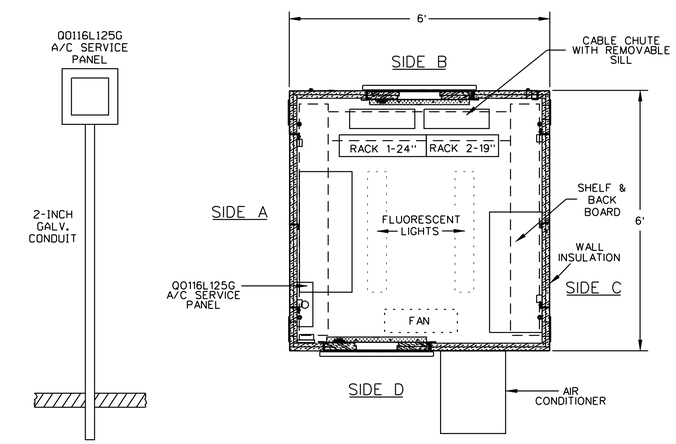

FLOOR PLAN
(NO SCALE)

6'X6' POWDER COATED STEEL SHELTER
OR
6'X6' ALUMINUM SHELTER WITH
STAINLESS STEEL HARDWARE.

PTC WORK TO BE PERFORMED BY OTHERS.

RR-SP-115
SIGNAL STAGE 3

SIDES A & C - HOUSE LAYOUT
SIGNALS 125, 126, 127 & 128
VY 12.74
SH. 6 OF 6

REFERENCE ONLY

RAILROAD SHEET NO.
115 OF 171

THIS PLAN ACCURATE FOR RAILROAD WORK ONLY.

STATE OF CALIFORNIA - DEPARTMENT OF TRANSPORTATION
Caltrans® DESIGN
CONSULTANT FUNCTIONAL SUPERVISOR GLENN BREINDEL
CALCULATED-DESIGNED BY RAMON VALDEZ
CHECKED BY
REVISED BY
DATE REVISED

LAST REVISION 00-00-00
DATE PLOTTED = 7/18/2012
TIME PLOTTED = 2:49:02 PM

Dist	COUNTY	ROUTE	POST MILES TOTAL PROJECT	SHEET No.	TOTAL SHEETS
7	LA	5	29.4/31.6	1876	1931

David McCord 05-21-12
REGISTERED CIVIL ENGINEER DATE

05-21-12
PLANS APPROVAL DATE

REGISTERED PROFESSIONAL ENGINEER DAVID WILLIAM McCORD No. E-15317 Exp. June 30, 2013 ELECTRICAL STATE OF CALIFORNIA

THE STATE OF CALIFORNIA OR ITS OFFICERS OR AGENTS SHALL NOT BE RESPONSIBLE FOR THE ACCURACY OR COMPLETENESS OF SCANNED COPIES OF THIS PLAN SHEET.

SCRRA
279 E. ARROW HIGHWAY
SAN DIMAS, CA 91773

XORAIL
201 NORTH INDIAN HILL BLVD
SUITE 201
CLAREMONT, CA 91711

CP HOLLYWOOD

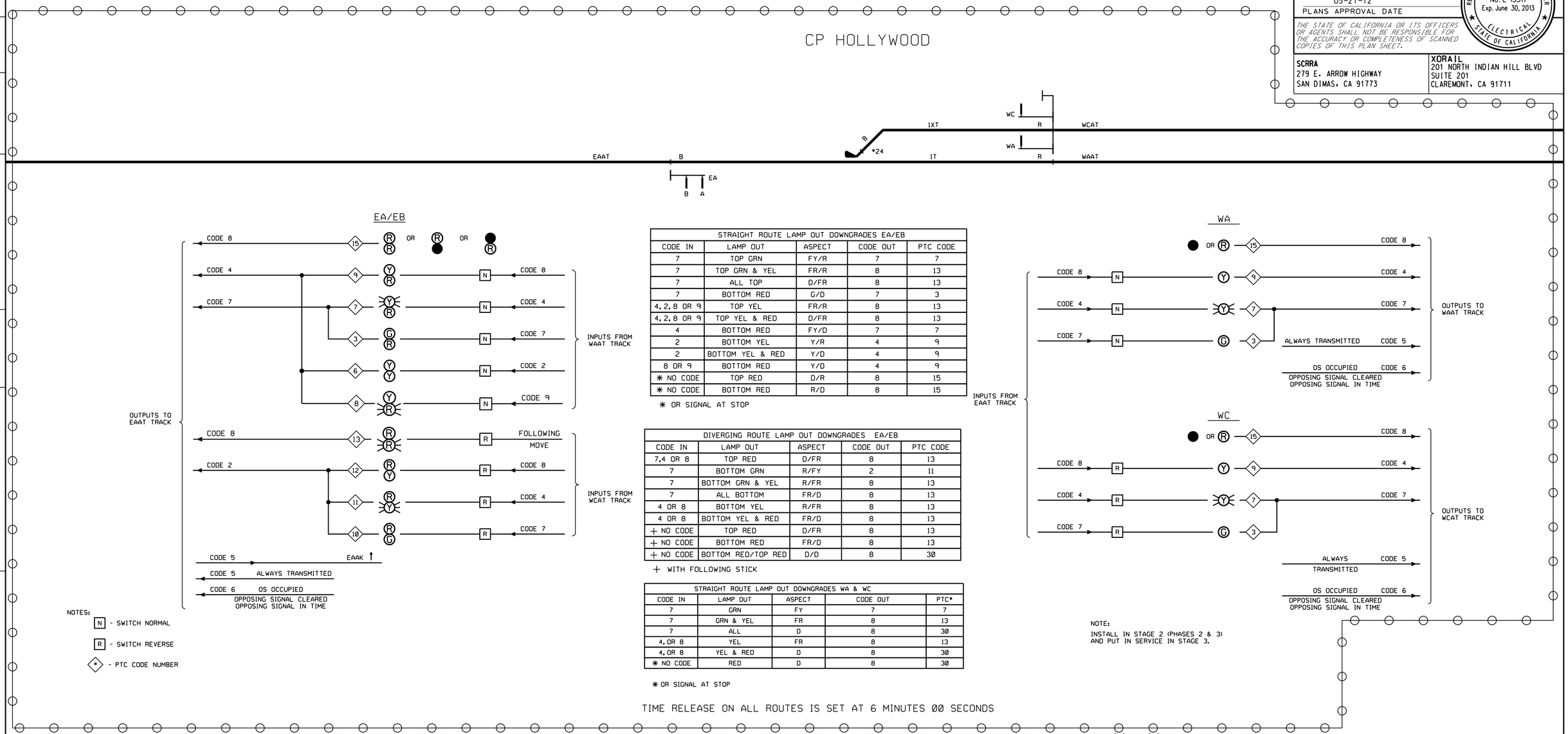

STRAIGHT ROUTE LAMP OUT DOWNGRADES EA/EB				
CODE IN	LAMP OUT	ASPECT	CODE OUT	PTC CODE
7	TOP GRN	FY/R	7	7
7	TOP GRN & YEL	FR/R	8	13
7	ALL TOP	D/FR	8	13
7	BOTTOM RED	G/D	7	3
4, 2, 8 OR 9	TOP YEL	FR/R	8	13
4, 2, 8 OR 9	TOP YEL & RED	D/FR	8	13
4	BOTTOM RED	FY/D	7	7
2	BOTTOM YEL	Y/R	4	9
2	BOTTOM YEL & RED	Y/D	4	9
8 OR 9	BOTTOM RED	Y/D	4	9
✳ NO CODE	TOP RED	D/R	8	15
✳ NO CODE	BOTTOM RED	R/D	8	15

✳ OR SIGNAL AT STOP

DIVERGING ROUTE LAMP OUT DOWNGRADES EA/EB				
CODE IN	LAMP OUT	ASPECT	CODE OUT	PTC CODE
7,4 OR 8	TOP RED	D/FR	8	13
7	BOTTOM GRN	R/FY	2	11
7	BOTTOM GRN & YEL	R/FR	8	13
7	ALL BOTTOM	FR/D	8	13
4 OR 8	BOTTOM YEL	R/FR	8	13
4 OR 8	BOTTOM YEL & RED	FR/D	8	13
+ NO CODE	TOP RED	D/FR	8	13
+ NO CODE	BOTTOM RED	FR/D	8	13
+ NO CODE	BOTTOM RED/TOP RED	D/D	8	30

+ WITH FOLLOWING STICK

STRAIGHT ROUTE LAMP OUT DOWNGRADES WA & WC				
CODE IN	LAMP OUT	ASPECT	CODE OUT	PTC*
7	GRN	FY	7	7
7	GRN & YEL	FR	8	13
7	ALL	D	8	30
4, OR 8	YEL	FR	8	13
4, OR 8	YEL & RED	D	8	30
✳ NO CODE	RED	D	8	30

✳ OR SIGNAL AT STOP

NOTES:
N - SWITCH NORMAL
R - SWITCH REVERSE
* - PTC CODE NUMBER

NOTE:
INSTALL IN STAGE 2 (PHASES 2 & 3) AND PUT IN SERVICE IN STAGE 3.

TIME RELEASE ON ALL ROUTES IS SET AT 6 MINUTES 00 SECONDS

PTC WORK TO BE PERFORMED BY OTHERS.

THIS PLAN ACCURATE FOR RAILROAD WORK ONLY.

DATE IN SERVICE _____
S. ENGINEER _____
INSPECTOR _____

RR-SP-116
SIGNAL STAGE 3

ASPECT SHEET
CP HOLLYWOOD
VY 13.30
SH. 1 OF 18

RAILROAD SHEET NO.
116 OF 171

STATE OF CALIFORNIA - DEPARTMENT OF TRANSPORTATION
Caltrans® DESIGN
CONSULTANT FUNCTIONAL SUPERVISOR GLENN BREINDEL
CALCULATED-DESIGNED BY RAMON VALDEZ
CHECKED BY
REVISED BY
DATE REVISED
LAST REVISION 00-00-00
DATE PLOTTED = 7/18/2012
TIME PLOTTED = 2:49:03 PM

Dist	COUNTY	ROUTE	POST MILES TOTAL PROJECT	SHEET No.	TOTAL SHEETS
7	LA	5	29.4/31.6	1877	1931

David McCord 05-21-12
REGISTERED CIVIL ENGINEER DATE

05-21-12
PLANS APPROVAL DATE

REGISTERED PROFESSIONAL ENGINEER DAVID WILLIAM McCORD No. E-15317 Exp. June 30, 2013 ELECTRICAL STATE OF CALIFORNIA

THE STATE OF CALIFORNIA OR ITS OFFICERS OR AGENTS SHALL NOT BE RESPONSIBLE FOR THE ACCURACY OR COMPLETENESS OF SCANNED COPIES OF THIS PLAN SHEET.

SCRRA
279 E. ARROW HIGHWAY
SAN DIMAS, CA 91773

XORAIL
201 NORTH INDIAN HILL BLVD
SUITE 201
CLAREMONT, CA 91711

LOCATION 30

	CONTROLS									INDICATIONS								
BIT	1	2	3	4	5	6	7	8	BIT	1	2	3	4	5	6	7	8
WORD1	NWS		RWS		EGHS		WGHS		WORD1	NWK	TK	RWK	EAK	EGK	WAAK	WGK	POK
WORD2									WORD2	LCK	TEK	DOK		LDK	WCAK		

CHASSIS ID 13330

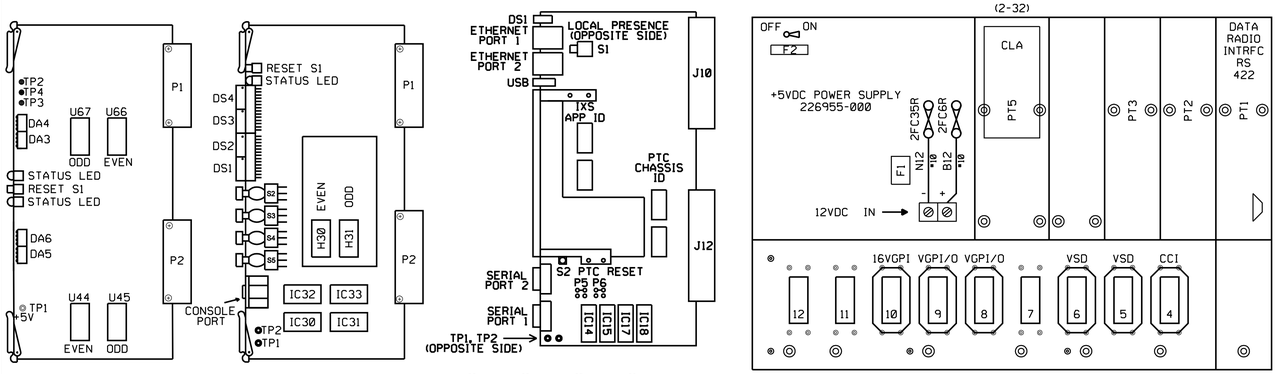

VITAL LOGIC PROCESSOR

ALT5 VER. 1.14 OR GREATER

U44 CKSUM	*	U66 CKSUM	*
U45 CKSUM	*	U67 CKSUM	*

AUXILIARY COMMUNICATIONS PROCESSOR

ATCS VER 1.7

IC32 CKSUM	*	IC33 CKSUM	*
IC30 CKSUM	*	IC31 CKSUM	*
H30 CKSUM	*	H31 CKSUM	*

SITE SPECIFIC / PTC PROCESSOR

SSM PROGRAM XXXXXX

IC14 CKSUM	*
IC15 CKSUM	*
IC17 CKSUM	*
IC18 CKSUM	*

* FURNISHED BY OTHERS

PTC EXECUTIVE
XXXX VER. X.X OR GREATER

PTC MAP XXXXXX
CRC _____

PTC CFG XXXXXX
CRC _____

TYPICAL INSTALLATION OF EPROM

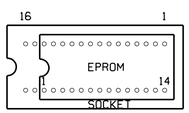

SITE SPECIFIC MODULE JUMPER LOCATIONS

EPROM	P3	P4	P5	P6
27C64	1-3	1-3	1-3	1-3
27C128	1-3	1-3	1-3	1-3
27C256	2-4	1-3	1-3	1-3
27C512	2-4	2-4	1-3	1-3
27C010	2-4	2-4	2-4	1-3

MODULE CABLES

MODULE	HPN
CCI	200123-001
VSD	200125-020
VGPI/O	200124-120
CLA	202037-005
16VGPI	200661-120

PTC NOTES

FOR PTC COMPATIBILITY VITAL LOGIC CONTROLLER VHLC WILL HAVE THE FOLLOWING INSTALLED.
-SITE SPECIFIC/PTC MODULE P/N 180684-000.
-PTC VLP EPROM'S.
-PTC RADIO W/ETHERNET CABLE.

PTC MESSAGE

TYPE	SWITCH	SIGNAL	SIGNAL	SIGNAL
NAME	SW	EA	WA	WC
OFFSET	0	2	7	12

NOTES:

1. CONTRACTOR SHALL FURNISH EXECUTIVE SOFTWARE.
2. ANTENNA SHALL BE FURNISHED BY OTHERS.
3. CLCP SHALL BE FURNISHED BY OTHERS.

LOCATION NAME: CP HOLLYWOOD

ATCS INFORMATION		SIGNAL EQUIPMENT: (VHLC)			
SIGNAL CODE		MCP CODE		CPC CODE	
TYPE	7	TYPE	7	TYPE	2
RR ID SCAX	340	RR ID SCAX	340	RR ID SCAX	340
CODE LINE	*	CODE LINE	*	NODE	03
SITE ID	*	SITE ID	*	CODE LINE	*
DEVICE ID	0202	DEVICE ID	0101		

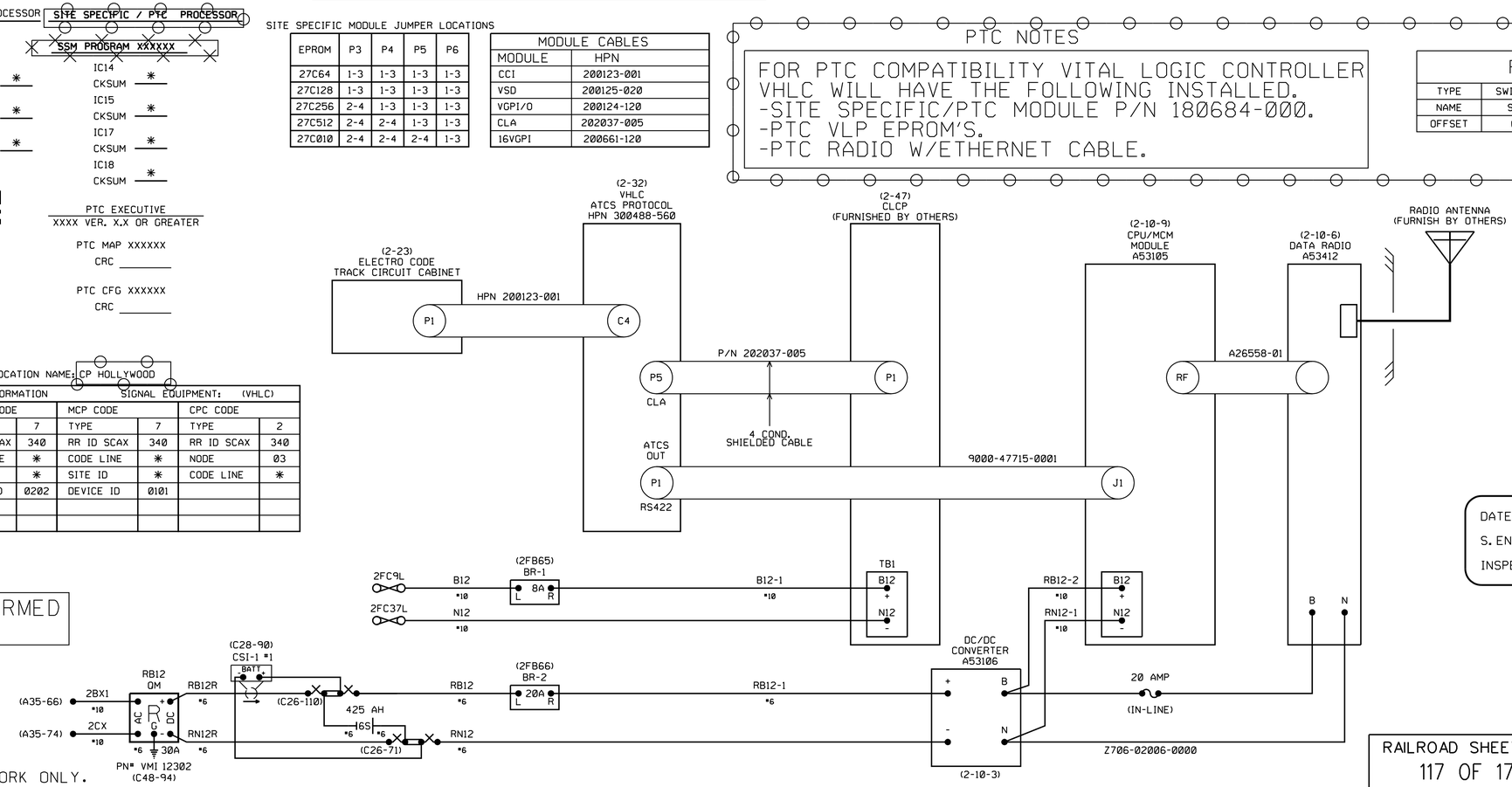

PTC WORK TO BE PERFORMED BY OTHERS.

DATE IN SERVICE _____
S. ENGINEER _____
INSPECTOR _____

RR-SP-117

SIGNAL STAGE 3

RADIO - BLOCK DIAGRAM
CP HOLLYWOOD
VY 13.30
SH. 2 OF 18

RAILROAD SHEET NO.
117 OF 171

THIS PLAN ACCURATE FOR RAILROAD WORK ONLY.

STATE OF CALIFORNIA - DEPARTMENT OF TRANSPORTATION
Caltrans DESIGN
CONSULTANT FUNCTIONAL SUPERVISOR GLENN BREINDEL
CALCULATED-DESIGNED BY RAMON VALDEZ
CHECKED BY
REVISED BY
DATE REVISED

LAST REVISION 00-00-00
DATE PLOTTED = 7/18/2012
TIME PLOTTED = 2:49:04 PM

Dist	COUNTY	ROUTE	POST MILES TOTAL PROJECT	SHEET No.	TOTAL SHEETS
7	LA	5	29.4/31.6	1878	1931

David McCord 05-21-12
REGISTERED CIVIL ENGINEER DATE

05-21-12
PLANS APPROVAL DATE

REGISTERED PROFESSIONAL ENGINEER DAVID WILLIAM McCORD No. E-15317 Exp. June 30, 2013 ELECTRICAL STATE OF CALIFORNIA

THE STATE OF CALIFORNIA OR ITS OFFICERS OR AGENTS SHALL NOT BE RESPONSIBLE FOR THE ACCURACY OR COMPLETENESS OF SCANNED COPIES OF THIS PLAN SHEET.

SCRRA
279 E. ARROW HIGHWAY
SAN DIMAS, CA 91773

XORAIL
201 NORTH INDIAN HILL BLVD
SUITE 201
CLAREMONT, CA 91711

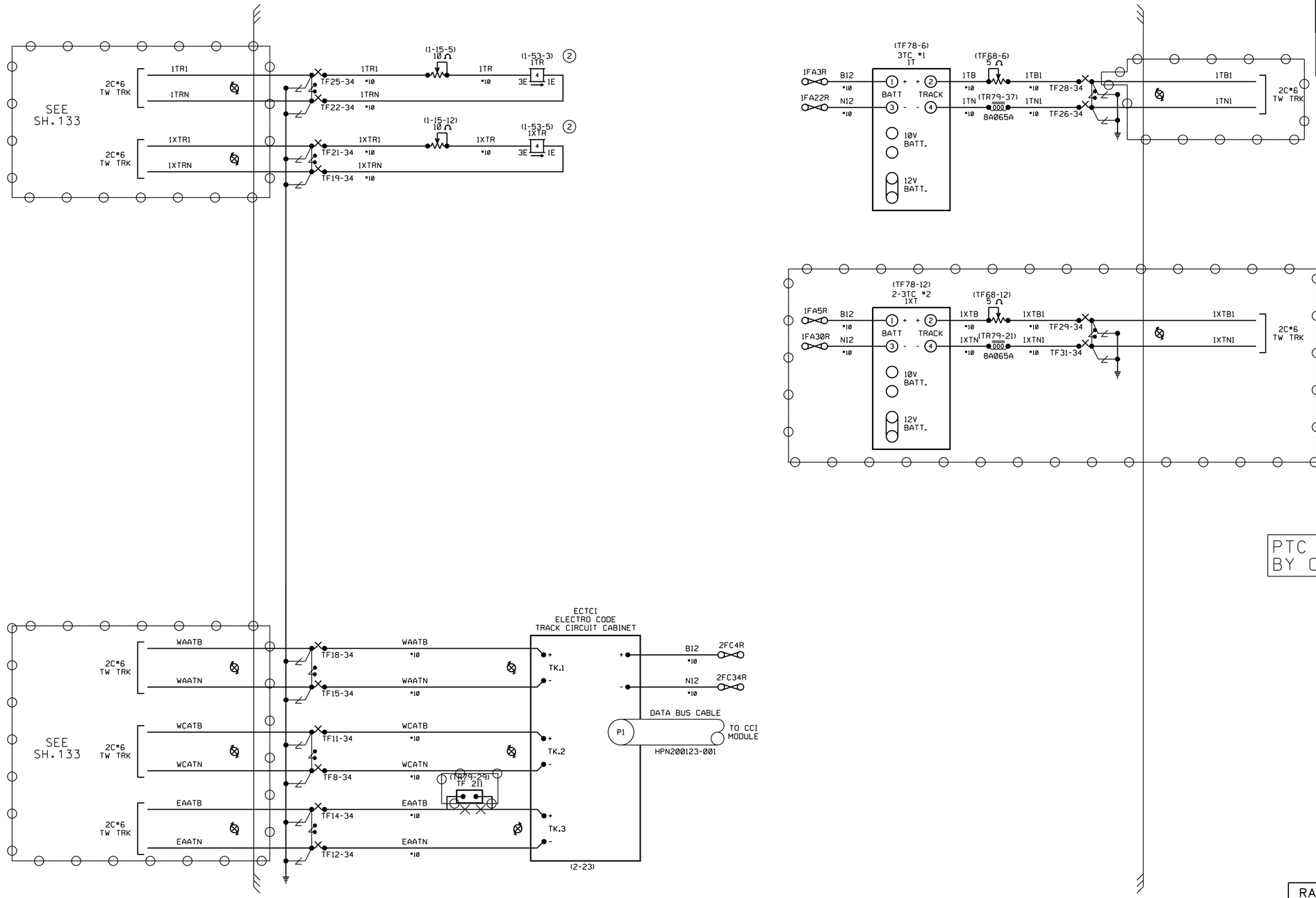

PTC WORK TO BE PERFORMED BY OTHERS.

= OUT

= IN

DATE IN SERVICE _____
S. ENGINEER _____
INSPECTOR _____

RR-SP-118
SIGNAL STAGE 3

TRACK CIRCUIT DETAILS
CP HOLLYWOOD
VY 13.30
SH. 3 OF 18

RAILROAD SHEET NO.
118 OF 171

THIS PLAN ACCURATE FOR RAILROAD WORK ONLY.

STATE OF CALIFORNIA - DEPARTMENT OF TRANSPORTATION
Caltrans DESIGN
CONSULTANT FUNCTIONAL SUPERVISOR GLENN BREINDEL
CALCULATED-DESIGNED BY RAMON VALDEZ
CHECKED BY
REVISED BY
DATE REVISED

LAST REVISION 00-00-00
DATE PLOTTED = 7/18/2012
TIME PLOTTED = 2:49:05 PM

Dist	COUNTY	ROUTE	POST MILES TOTAL PROJECT	SHEET No.	TOTAL SHEETS
7	LA	5	29.4/31.6	1879	1931

David McCord 05-21-12
REGISTERED CIVIL ENGINEER DATE

05-21-12
PLANS APPROVAL DATE

REGISTERED PROFESSIONAL ENGINEER DAVID WILLIAM McCORD No. E-15317 Exp. June 30, 2013 ELECTRICAL STATE OF CALIFORNIA

THE STATE OF CALIFORNIA OR ITS OFFICERS OR AGENTS SHALL NOT BE RESPONSIBLE FOR THE ACCURACY OR COMPLETENESS OF SCANNED COPIES OF THIS PLAN SHEET.

SCRRA
279 E. ARROW HIGHWAY
SAN DIMAS, CA 91773

XORAIL
201 NORTH INDIAN HILL BLVD
SUITE 201
CLAREMONT, CA 91711

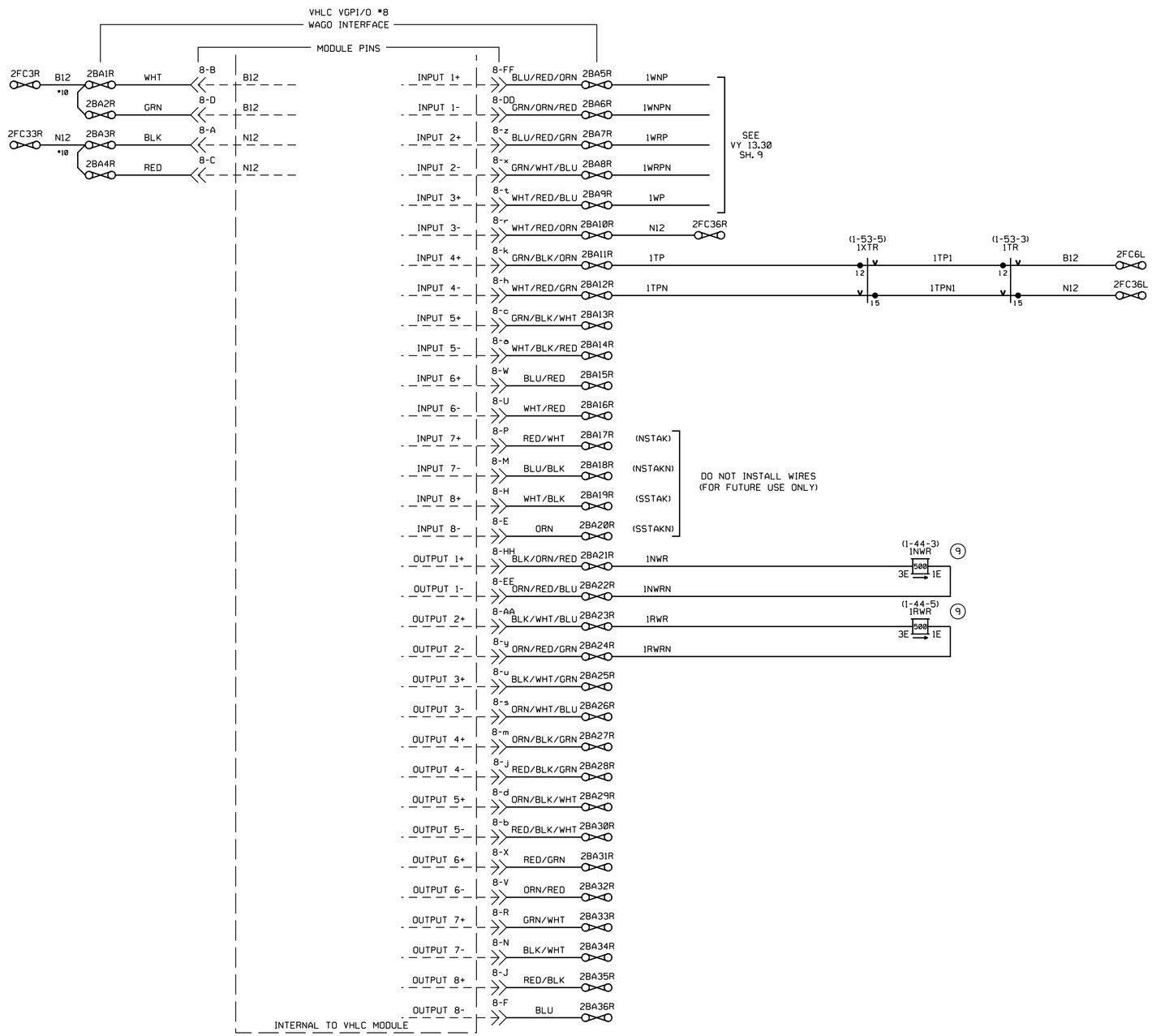

PTC WORK TO BE PERFORMED BY OTHERS.

RR-SP-119
SIGNAL STAGE 3

SLOT #8 VGP I/O CONNECTIONS
CP HOLLYWOOD
VY 13.30
SH. 4 OF 18

RAILROAD SHEET NO.
119 OF 171

THIS PLAN ACCURATE FOR RAILROAD WORK ONLY.

STATE OF CALIFORNIA - DEPARTMENT OF TRANSPORTATION
Caltrans® DESIGN
CONSULTANT FUNCTIONAL SUPERVISOR: GLENN BREINDEL
CALCULATED-DESIGNED BY: RAMON VALDEZ
CHECKED BY
REVISED BY
DATE REVISED

LAST REVISION 00-00-00
DATE PLOTTED = 7/18/2012
TIME PLOTTED = 2:49:06 PM

Dist	COUNTY	ROUTE	POST MILES TOTAL PROJECT	SHEET No.	TOTAL SHEETS
7	LA	5	29.4/31.6	1880	1931

David McCord 05-21-12
REGISTERED CIVIL ENGINEER DATE

05-21-12
PLANS APPROVAL DATE

REGISTERED PROFESSIONAL ENGINEER DAVID WILLIAM McCORD No. E-15317 Exp. June 30, 2013 ELECTRICAL STATE OF CALIFORNIA

THE STATE OF CALIFORNIA OR ITS OFFICERS OR AGENTS SHALL NOT BE RESPONSIBLE FOR THE ACCURACY OR COMPLETENESS OF SCANNED COPIES OF THIS PLAN SHEET.

SCRRA
279 E. ARROW HIGHWAY
SAN DIMAS, CA 91773

XORAIL
201 NORTH INDIAN HILL BLVD
SUITE 201
CLAREMONT, CA 91711

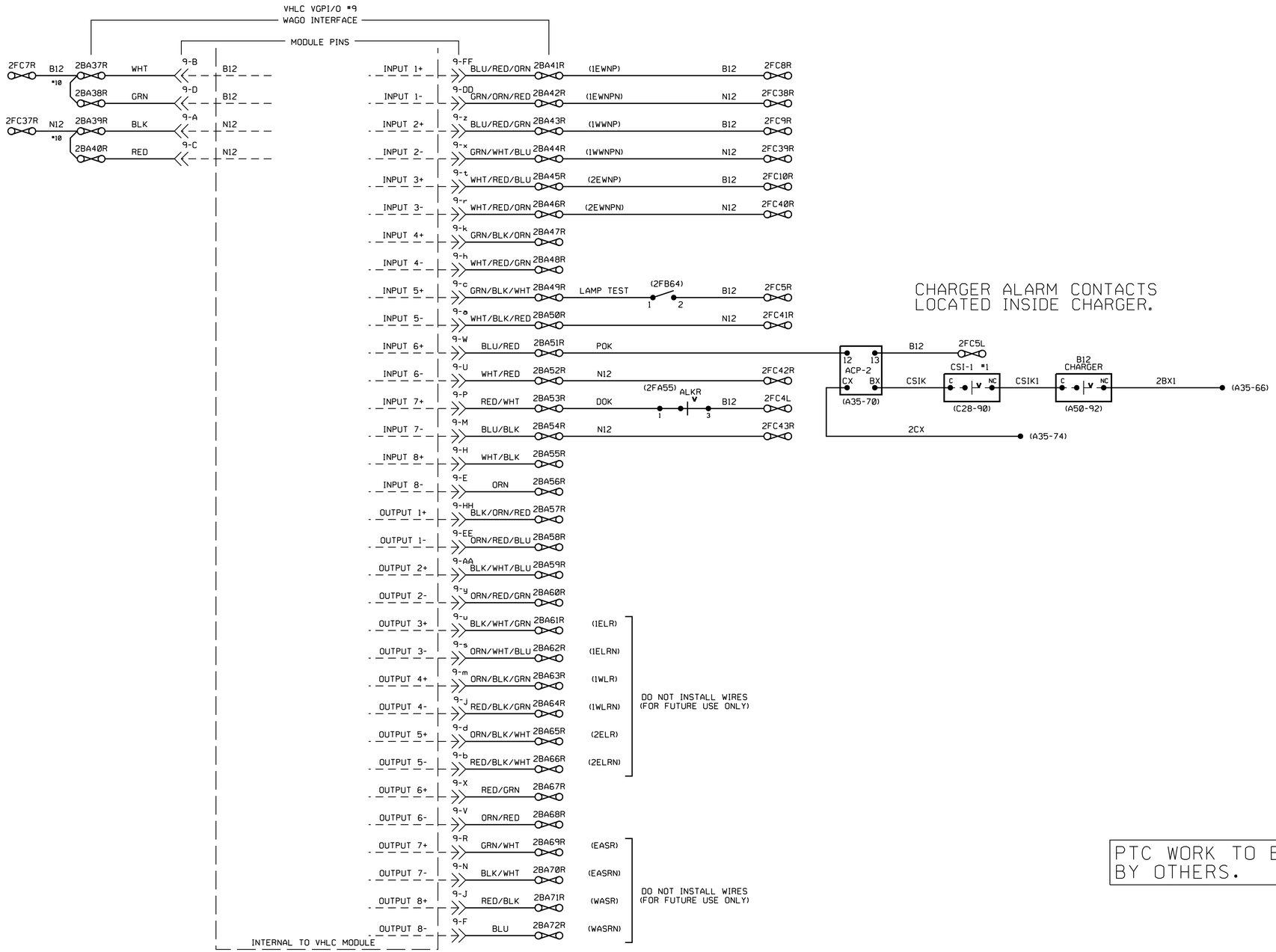

CHARGER ALARM CONTACTS
LOCATED INSIDE CHARGER.

PTC WORK TO BE PERFORMED
BY OTHERS.

RR-SP-120
SIGNAL STAGE 3

SLOT #9 VGP I/O CONNECTIONS
CP HOLLYWOOD
VY 13.30
SH. 5 OF 18

RAILROAD SHEET NO.
120 OF 171

THIS PLAN ACCURATE FOR RAILROAD WORK ONLY.

STATE OF CALIFORNIA - DEPARTMENT OF TRANSPORTATION
Caltrans® DESIGN
CONSULTANT FUNCTIONAL SUPERVISOR: GLENN BREINDEL
CALCULATED-DESIGNED BY: RAMON VALDEZ
CHECKED BY
REVISED BY
DATE REVISED

LAST REVISION 00-00-00
DATE PLOTTED = 7/18/2012
TIME PLOTTED = 2:49:07 PM

Dist	COUNTY	ROUTE	POST MILES TOTAL PROJECT	SHEET No.	TOTAL SHEETS
7	LA	5	29.4/31.6	1881	1931

David McCord 05-21-12
REGISTERED CIVIL ENGINEER DATE

05-21-12
PLANS APPROVAL DATE

REGISTERED PROFESSIONAL ENGINEER
DAVID WILLIAM McCORD
No. E-15317
Exp. June 30, 2013
ELECTRICAL
STATE OF CALIFORNIA

THE STATE OF CALIFORNIA OR ITS OFFICERS OR AGENTS SHALL NOT BE RESPONSIBLE FOR THE ACCURACY OR COMPLETENESS OF SCANNED COPIES OF THIS PLAN SHEET.

SCRRA
279 E. ARROW HIGHWAY
SAN DIMAS, CA 91773

XORAIL
201 NORTH INDIAN HILL BLVD
SUITE 201
CLAREMONT, CA 91711

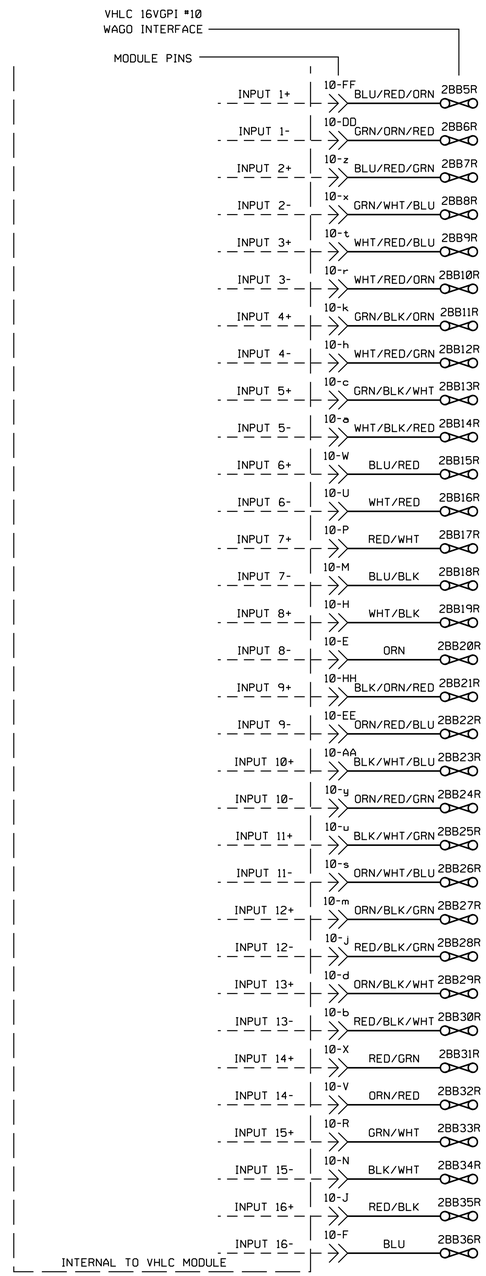

PTC WORK TO BE PERFORMED BY OTHERS.

RR-SP-121
SIGNAL STAGE 3

SLOT #10 VGP I/O CONNECTIONS
CP HOLLYWOOD
VY 13.30
SH. 6 OF 18

REFERENCE ONLY

RAILROAD SHEET NO.
121 OF 171

THIS PLAN ACCURATE FOR RAILROAD WORK ONLY.

STATE OF CALIFORNIA - DEPARTMENT OF TRANSPORTATION
Caltrans® DESIGN

CONSULTANT FUNCTIONAL SUPERVISOR: GLENN BREINDEL
CALCULATED-DESIGNED BY: RAMON VALDEZ
CHECKED BY
REVISED BY
DATE REVISED

LAST REVISION 00-00-00
DATE PLOTTED = 7/18/2012
TIME PLOTTED = 2:49:07 PM

Dist	COUNTY	ROUTE	POST MILES TOTAL PROJECT	SHEET No.	TOTAL SHEETS
7	LA	5	29.4/31.6	1882	1931

David McCord 05-21-12
REGISTERED CIVIL ENGINEER DATE

05-21-12
PLANS APPROVAL DATE

REGISTERED PROFESSIONAL ENGINEER DAVID WILLIAM McCORD No. E-15317 Exp. June 30, 2013 ELECTRICAL STATE OF CALIFORNIA

THE STATE OF CALIFORNIA OR ITS OFFICERS OR AGENTS SHALL NOT BE RESPONSIBLE FOR THE ACCURACY OR COMPLETENESS OF SCANNED COPIES OF THIS PLAN SHEET.

SCRRA
279 E. ARROW HIGHWAY
SAN DIMAS, CA 91773

XORAIL
201 NORTH INDIAN HILL BLVD
SUITE 201
CLAREMONT, CA 91711

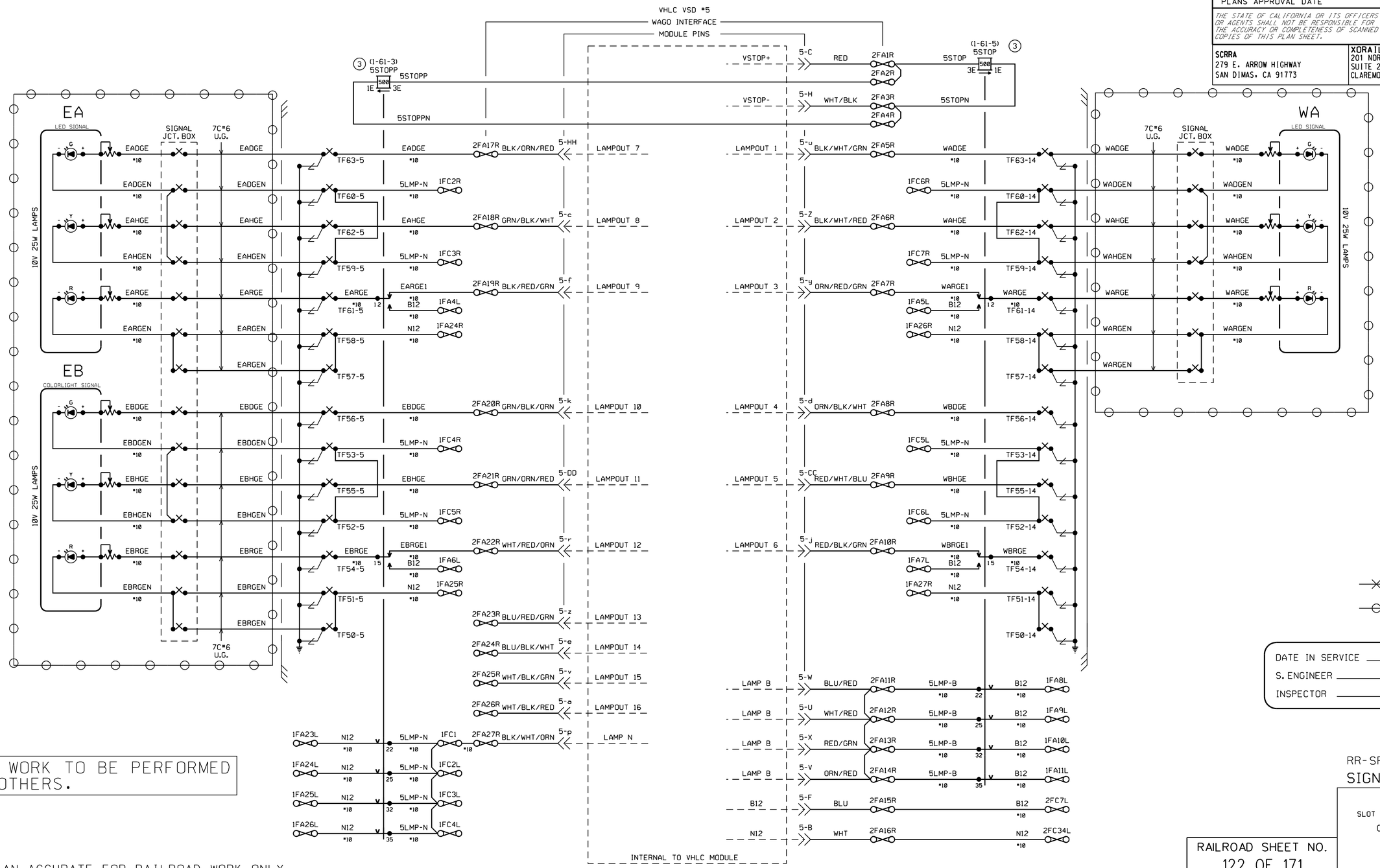

PTC WORK TO BE PERFORMED BY OTHERS.

THIS PLAN ACCURATE FOR RAILROAD WORK ONLY.

DATE IN SERVICE _____
S. ENGINEER _____
INSPECTOR _____

RR-SP-122
SIGNAL STAGE 3

SLOT #5 LIGHTING CIRCUITS
CP HOLLYWOOD
VY 13.30
SH. 7 OF 18

RAILROAD SHEET NO.
122 OF 171

LAST REVISION 00-00-00
DATE PLOTTED = 7/18/2012
TIME PLOTTED = 2:49:08 PM

STATE OF CALIFORNIA - DEPARTMENT OF TRANSPORTATION
Caltrans DESIGN
CONSULTANT FUNCTIONAL SUPERVISOR GLENN BREINDEL
CALCULATED-DESIGNED BY RAMON VALDEZ
CHECKED BY
REVISED BY
DATE REVISED

BORDER LAST REVISED 7/2/2010
USERNAME = gharibiana
DGN FILE = ...\moc\xorail\sheet\SP-122.sht
RELATIVE BORDER SCALE IS IN INCHES 0 1 2 3
UNIT 1812
PROJECT NUMBER & PHASE 07000211191

Dist	COUNTY	ROUTE	POST MILES TOTAL PROJECT	SHEET No.	TOTAL SHEETS
7	LA	5	29.4/31.6	1883	1931

David McCord 05-21-12
REGISTERED CIVIL ENGINEER DATE

05-21-12
PLANS APPROVAL DATE

REGISTERED PROFESSIONAL ENGINEER DAVID WILLIAM McCORD No. E-15317 Exp. June 30, 2013 ELECTRICAL STATE OF CALIFORNIA

THE STATE OF CALIFORNIA OR ITS OFFICERS OR AGENTS SHALL NOT BE RESPONSIBLE FOR THE ACCURACY OR COMPLETENESS OF SCANNED COPIES OF THIS PLAN SHEET.

SCRRA
279 E. ARROW HIGHWAY
SAN DIMAS, CA 91773

XORAIL
201 NORTH INDIAN HILL BLVD
SUITE 201
CLAREMONT, CA 91711

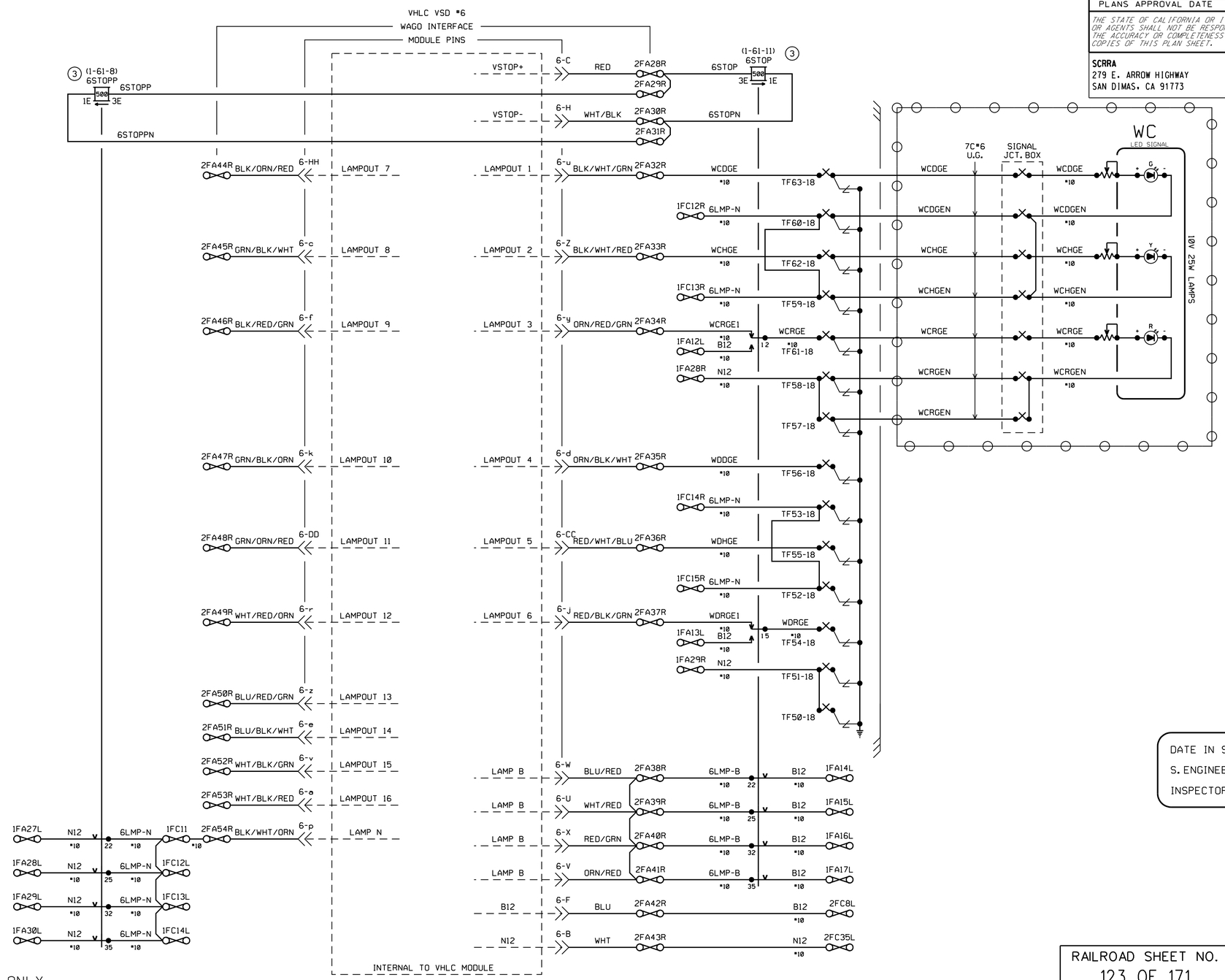

PTC WORK TO BE PERFORMED BY OTHERS.

THIS PLAN ACCURATE FOR RAILROAD WORK ONLY.

DATE IN SERVICE _____
S. ENGINEER _____
INSPECTOR _____

RR-SP-123
SIGNAL STAGE 3

SLOT #6 LIGHTING CIRCUITS
CP HOLLYWOOD
VY 13.30
SH. 8 OF 18

RAILROAD SHEET NO.
123 OF 171

STATE OF CALIFORNIA - DEPARTMENT OF TRANSPORTATION
Caltrans DESIGN
CONSULTANT FUNCTIONAL SUPERVISOR GLENN BREINDEL
CALCULATED-DESIGNED BY RAMON VALDEZ
CHECKED BY
REVISED BY
DATE REVISED

LAST REVISION 00-00-00
DATE PLOTTED = 7/18/2012
TIME PLOTTED = 2:49:09 PM

Dist	COUNTY	ROUTE	POST MILES TOTAL PROJECT	SHEET No.	TOTAL SHEETS
7	LA	5	29.4/31.6	1884	1931

David McCord 05-21-12
REGISTERED CIVIL ENGINEER DATE

05-21-12
PLANS APPROVAL DATE

REGISTERED PROFESSIONAL ENGINEER DAVID WILLIAM McCORD No. E-15317 Exp. June 30, 2013 ELECTRICAL STATE OF CALIFORNIA

THE STATE OF CALIFORNIA OR ITS OFFICERS OR AGENTS SHALL NOT BE RESPONSIBLE FOR THE ACCURACY OR COMPLETENESS OF SCANNED COPIES OF THIS PLAN SHEET.

SCRRA
279 E. ARROW HIGHWAY
SAN DIMAS, CA 91773

XORAIL
201 NORTH INDIAN HILL BLVD
SUITE 201
CLAREMONT, CA 91711

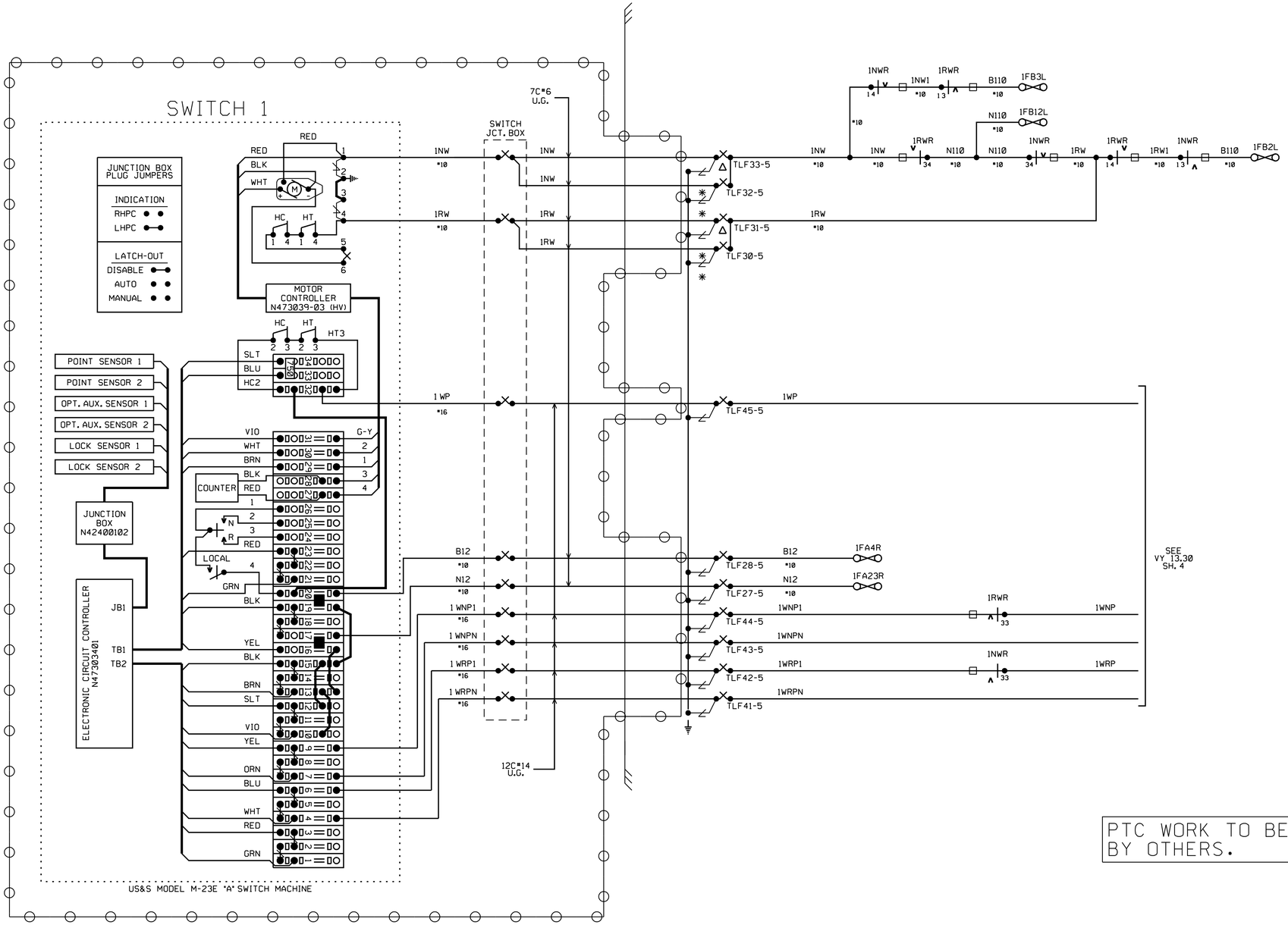

✕ ✕ = OUT
○ ○ = IN

DATE IN SERVICE _____
S. ENGINEER _____
INSPECTOR _____

PTC WORK TO BE PERFORMED BY OTHERS.

THIS PLAN ACCURATE FOR RAILROAD WORK ONLY.

RR-SP-124
SIGNAL STAGE 3

SWITCH 1 CIRCUITS
CP HOLLYWOOD
VY 13.30
SH. 9 OF 18

RAILROAD SHEET NO.
124 OF 171

LAST REVISION 00-00-00 DATE PLOTTED = 7/18/2012 TIME PLOTTED = 2:49:10 PM

STATE OF CALIFORNIA - DEPARTMENT OF TRANSPORTATION
Caltrans® DESIGN
CONSULTANT FUNCTIONAL SUPERVISOR GLENN BREINDEL
CALCULATED-DESIGNED BY RAMON VALDEZ
CHECKED BY
REVISED BY
DATE REVISED

BORDER LAST REVISED 7/2/2010
USERNAME = gharibiana
DGN FILE = ...\moc\xorail\sheet\SP-124.sht
RELATIVE BORDER SCALE IS IN INCHES 0 1 2 3
UNIT 1812
PROJECT NUMBER & PHASE 07000211191

Dist	COUNTY	ROUTE	POST MILES TOTAL PROJECT	SHEET No.	TOTAL SHEETS
7	LA	5	29.4/31.6	1885	1931

David McCord 05-21-12
REGISTERED CIVIL ENGINEER DATE

05-21-12
PLANS APPROVAL DATE

REGISTERED PROFESSIONAL ENGINEER DAVID WILLIAM McCORD No. E-15317 Exp. June 30, 2013 ELECTRICAL STATE OF CALIFORNIA

THE STATE OF CALIFORNIA OR ITS OFFICERS OR AGENTS SHALL NOT BE RESPONSIBLE FOR THE ACCURACY OR COMPLETENESS OF SCANNED COPIES OF THIS PLAN SHEET.

SCRRA
279 E. ARROW HIGHWAY
SAN DIMAS, CA 91773

XORAIL
201 NORTH INDIAN HILL BLVD
SUITE 201
CLAREMONT, CA 91711

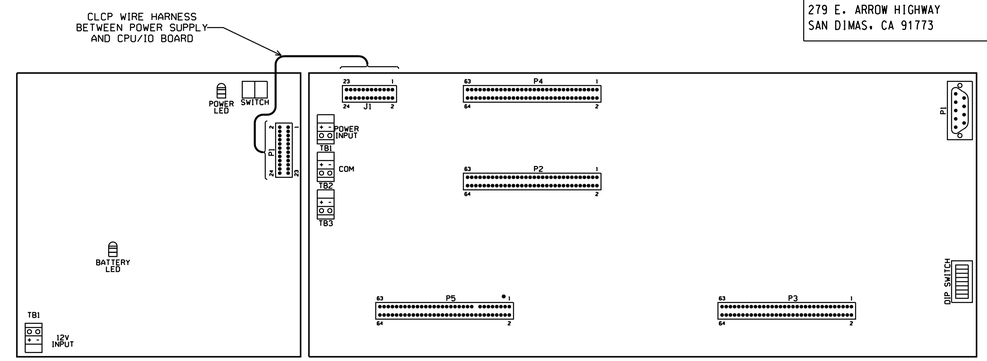

CUSTOM LCP POWER SUPPLY (FRONT)

CUSTOM LCP CPU/IO MODULE (FRONT)

PTC WORK TO BE PERFORMED BY OTHERS.

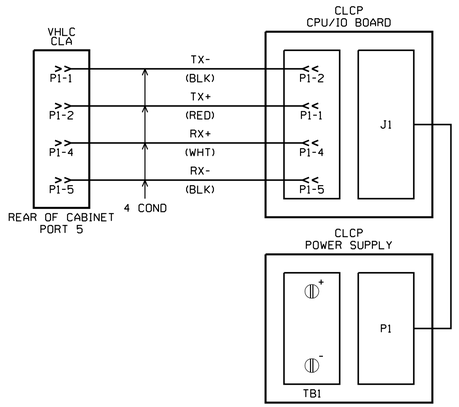

DIP SWITCH LOCATED ON CLCP CPU/IO BOARD

	OFF	ON		
NO START SWITCH			1	START SWITCH
NOT USED			2	
128			3	
256			4	
LOOP BACK			5	
COMMON ANODE			6	COMMON CATHODE
NORMALLY CLOSED			7	NORMALLY OPEN
NORMAL MODE			8	SELF TEST MODE

LCP EPROM

VER. 1.3

CHKSUM 8B3C

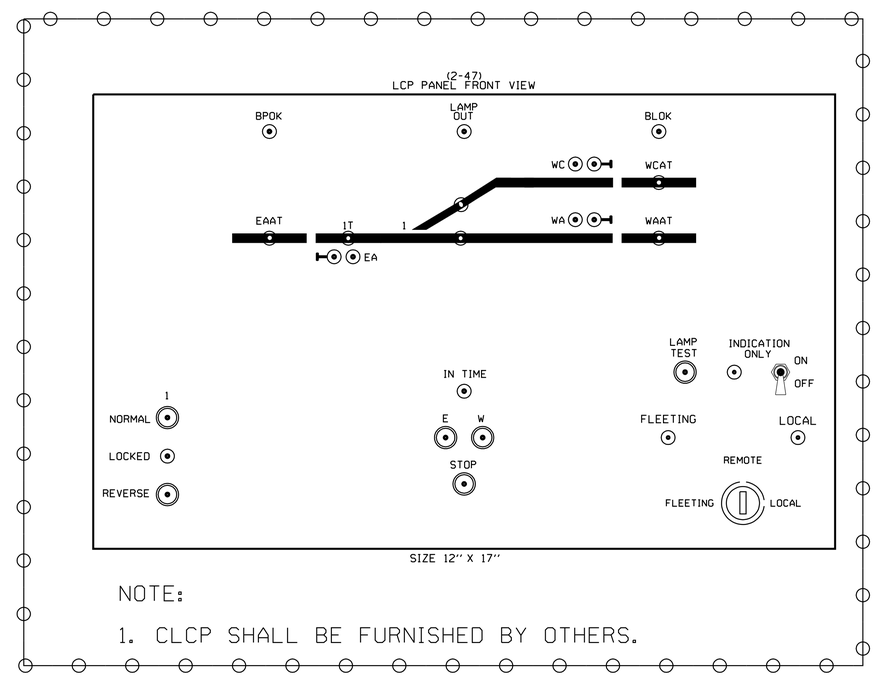

= OUT

= IN

DATE IN SERVICE _____
S. ENGINEER _____
INSPECTOR _____

NOTE:

1. CLCP SHALL BE FURNISHED BY OTHERS.

RR-SP-125
SIGNAL STAGE 3

LOCAL CONTROL PANEL
CP HOLLYWOOD
VY 13.30
SH.10 OF 18

RAILROAD SHEET NO.
125 OF 171

THIS PLAN ACCURATE FOR RAILROAD WORK ONLY.

STATE OF CALIFORNIA - DEPARTMENT OF TRANSPORTATION
Caltrans® DESIGN

CONSULTANT FUNCTIONAL SUPERVISOR: GLENN BREINDEL

CALCULATED-DESIGNED BY: RAMON VALDEZ
CHECKED BY

REVISED BY
DATE REVISED

LAST REVISION 00-00-00
DATE PLOTTED = 7/18/2012
TIME PLOTTED = 2:49:12 PM

Dist	COUNTY	ROUTE	POST MILES TOTAL PROJECT	SHEET No.	TOTAL SHEETS
7	LA	5	29.4/31.6	1886	1931

David McCord 05-21-12
REGISTERED CIVIL ENGINEER DATE

05-21-12
PLANS APPROVAL DATE

REGISTERED PROFESSIONAL ENGINEER DAVID WILLIAM McCORD No. E-15317 Exp. June 30, 2013 ELECTRICAL STATE OF CALIFORNIA

THE STATE OF CALIFORNIA OR ITS OFFICERS OR AGENTS SHALL NOT BE RESPONSIBLE FOR THE ACCURACY OR COMPLETENESS OF SCANNED COPIES OF THIS PLAN SHEET.

SCRRA
279 E. ARROW HIGHWAY
SAN DIMAS, CA 91773

XORAIL
201 NORTH INDIAN HILL BLVD
SUITE 201
CLAREMONT, CA 91711

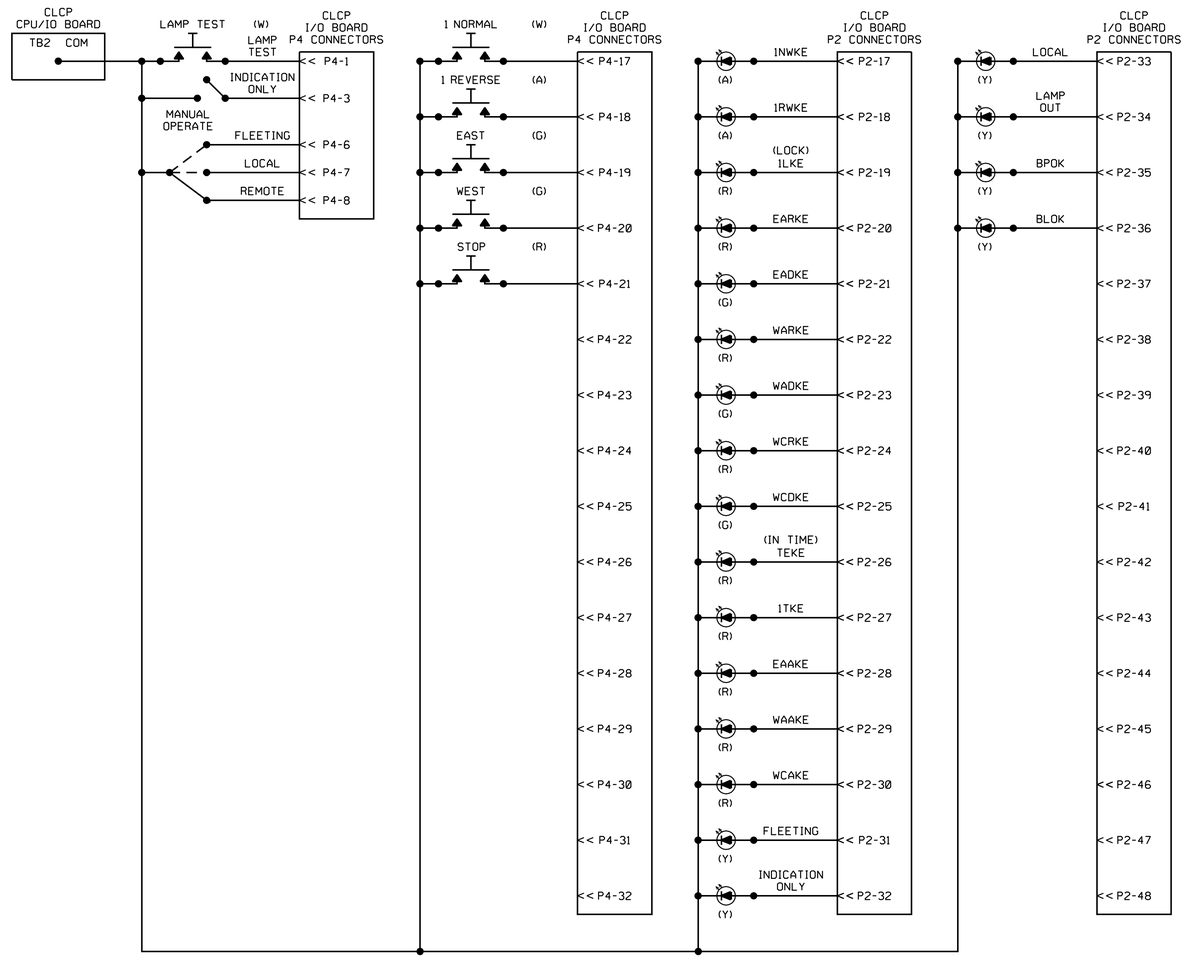

NOTES:

1. CLCP SHALL BE FURNISHED BY OTHERS.

DATE IN SERVICE _____
S. ENGINEER _____
INSPECTOR _____

PTC WORK TO BE PERFORMED BY OTHERS.

THIS PLAN ACCURATE FOR RAILROAD WORK ONLY.

RR-SP-126
SIGNAL STAGE 3

LOCAL CONTROL PANEL CIRCUITS
CP HOLLYWOOD
VY 13.30
SH. 11 OF 18

RAILROAD SHEET NO.
126 OF 171

LAST REVISION 00-00-00
DATE PLOTTED = 7/18/2012
TIME PLOTTED = 2:49:13 PM

STATE OF CALIFORNIA - DEPARTMENT OF TRANSPORTATION
Caltrans® DESIGN
CONSULTANT FUNCTIONAL SUPERVISOR GLENN BREINDEL
CALCULATED-DESIGNED BY RAMON VALDEZ
CHECKED BY
REVISED BY
DATE REVISED

Dist	COUNTY	ROUTE	POST MILES TOTAL PROJECT	SHEET No.	TOTAL SHEETS
7	LA	5	29.4/31.6	1887	1931

David McCord 05-21-12
REGISTERED CIVIL ENGINEER DATE

05-21-12
PLANS APPROVAL DATE

REGISTERED PROFESSIONAL ENGINEER DAVID WILLIAM McCORD No. E-15317 Exp. June 30, 2013 ELECTRICAL STATE OF CALIFORNIA

THE STATE OF CALIFORNIA OR ITS OFFICERS OR AGENTS SHALL NOT BE RESPONSIBLE FOR THE ACCURACY OR COMPLETENESS OF SCANNED COPIES OF THIS PLAN SHEET.

SCRRA
279 E. ARROW HIGHWAY
SAN DIMAS, CA 91773

XORAIL
201 NORTH INDIAN HILL BLVD
SUITE 201
CLAREMONT, CA 91711

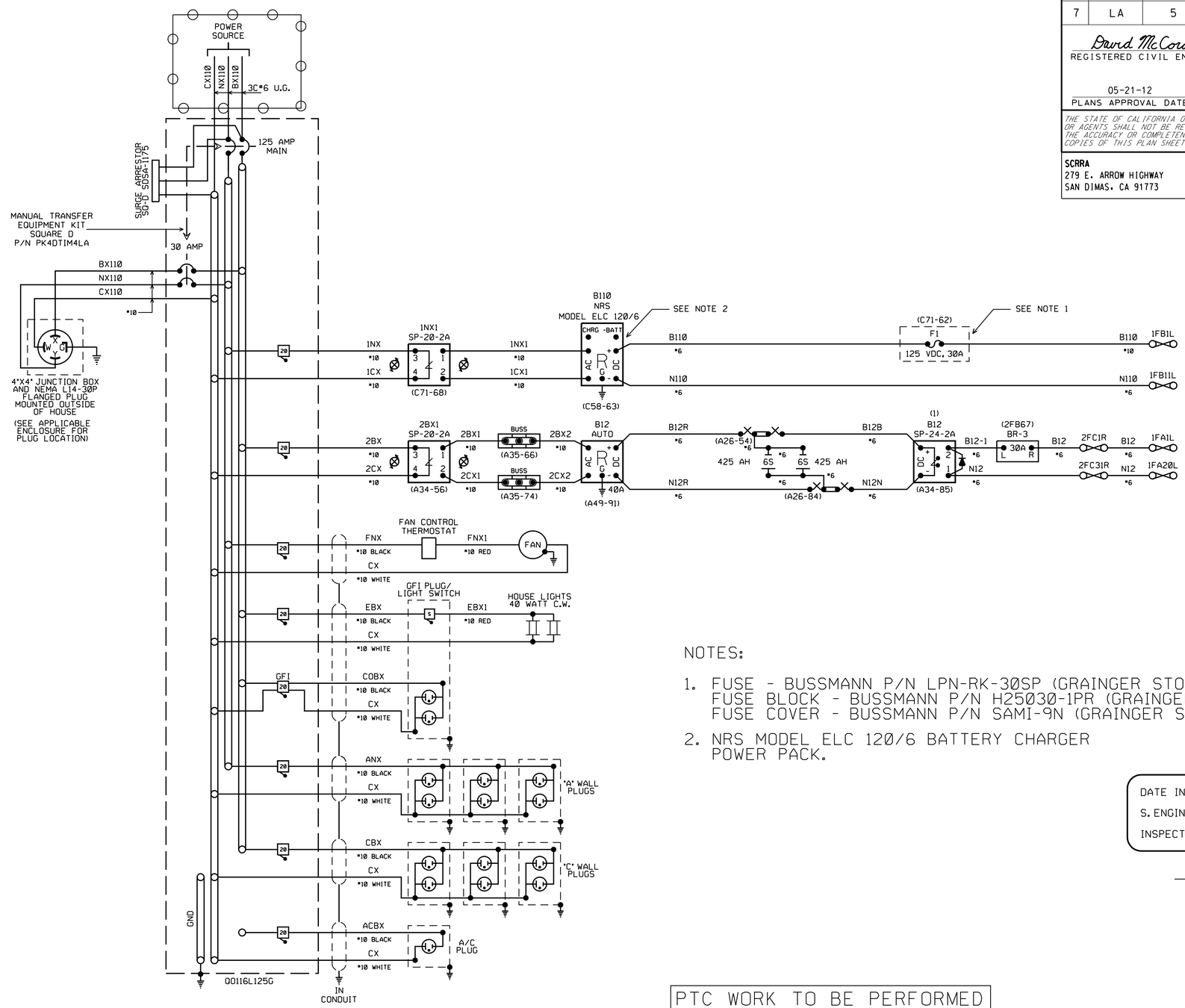

NOTES:

1. FUSE - BUSSMANN P/N LPN-RK-30SP (GRAINGER STOCK #4XF56)
   FUSE BLOCK - BUSSMANN P/N H25030-1PR (GRAINGER STOCK #2A586)
   FUSE COVER - BUSSMANN P/N SAMI-9N (GRAINGER STOCK #2G472)
2. NRS MODEL ELC 120/6 BATTERY CHARGER POWER PACK.

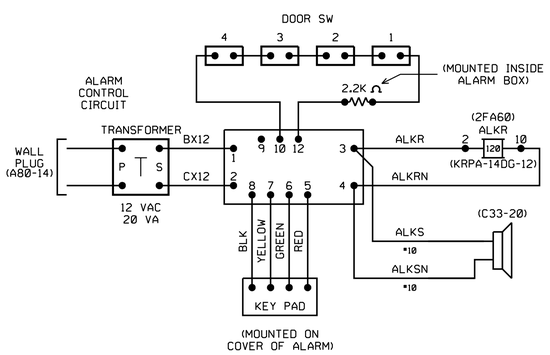

DATE IN SERVICE _____
S. ENGINEER _____
INSPECTOR _____

= IN

PTC WORK TO BE PERFORMED BY OTHERS.

RR-SP-127
SIGNAL STAGE 3

POWER BATTERY & ALARM CIRCUITS
CP HOLLYWOOD
VY 13.30
SH. 12 OF 18

RAILROAD SHEET NO.
127 OF 171

THIS PLAN ACCURATE FOR RAILROAD WORK ONLY.

STATE OF CALIFORNIA - DEPARTMENT OF TRANSPORTATION
Caltrans® DESIGN
CONSULTANT FUNCTIONAL SUPERVISOR: GLENN BREINDEL
CALCULATED-DESIGNED BY: RAMON VALDEZ
CHECKED BY
REVISED BY
DATE REVISED

LAST REVISION 00-00-00
DATE PLOTTED = 7/18/2012
TIME PLOTTED = 2:49:13 PM

Dist	COUNTY	ROUTE	POST MILES TOTAL PROJECT	SHEET No.	TOTAL SHEETS
7	LA	5	29.4/31.6	1888	1931

David McCord 05-21-12
REGISTERED CIVIL ENGINEER DATE

05-21-12
PLANS APPROVAL DATE

REGISTERED PROFESSIONAL ENGINEER DAVID WILLIAM McCORD No. E-15317 Exp. June 30, 2013 ELECTRICAL STATE OF CALIFORNIA

THE STATE OF CALIFORNIA OR ITS OFFICERS OR AGENTS SHALL NOT BE RESPONSIBLE FOR THE ACCURACY OR COMPLETENESS OF SCANNED COPIES OF THIS PLAN SHEET.

SCRRA
279 E. ARROW HIGHWAY
SAN DIMAS, CA 91773

XORAIL
201 NORTH INDIAN HILL BLVD
SUITE 201
CLAREMONT, CA 91711

DATE IN SERVICE _____
S. ENGINEER _____
INSPECTOR _____

= IN

RACK #1 FRONT VIEW

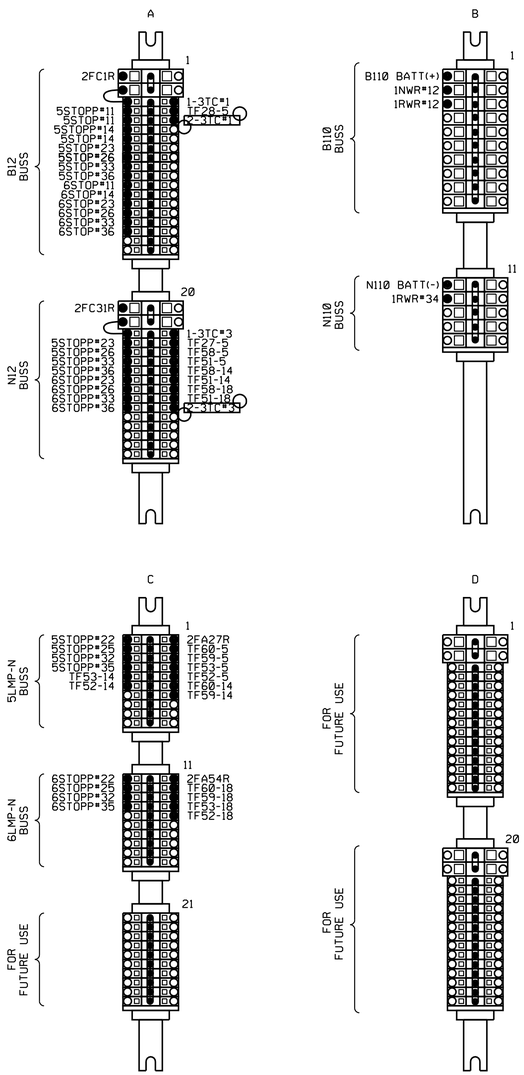

RACK #2 FRONT VIEW

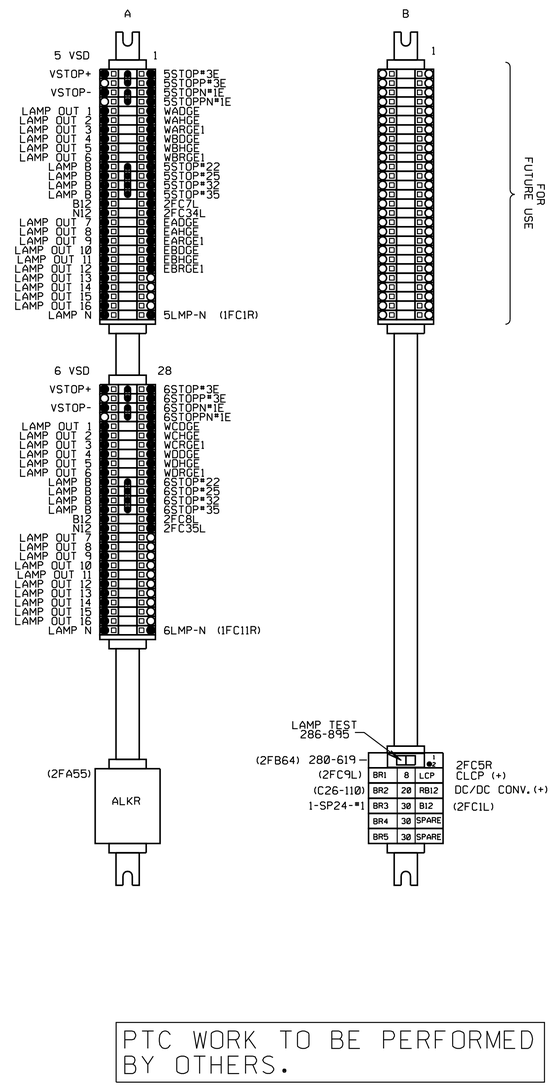

RACK #2 REAR VIEW

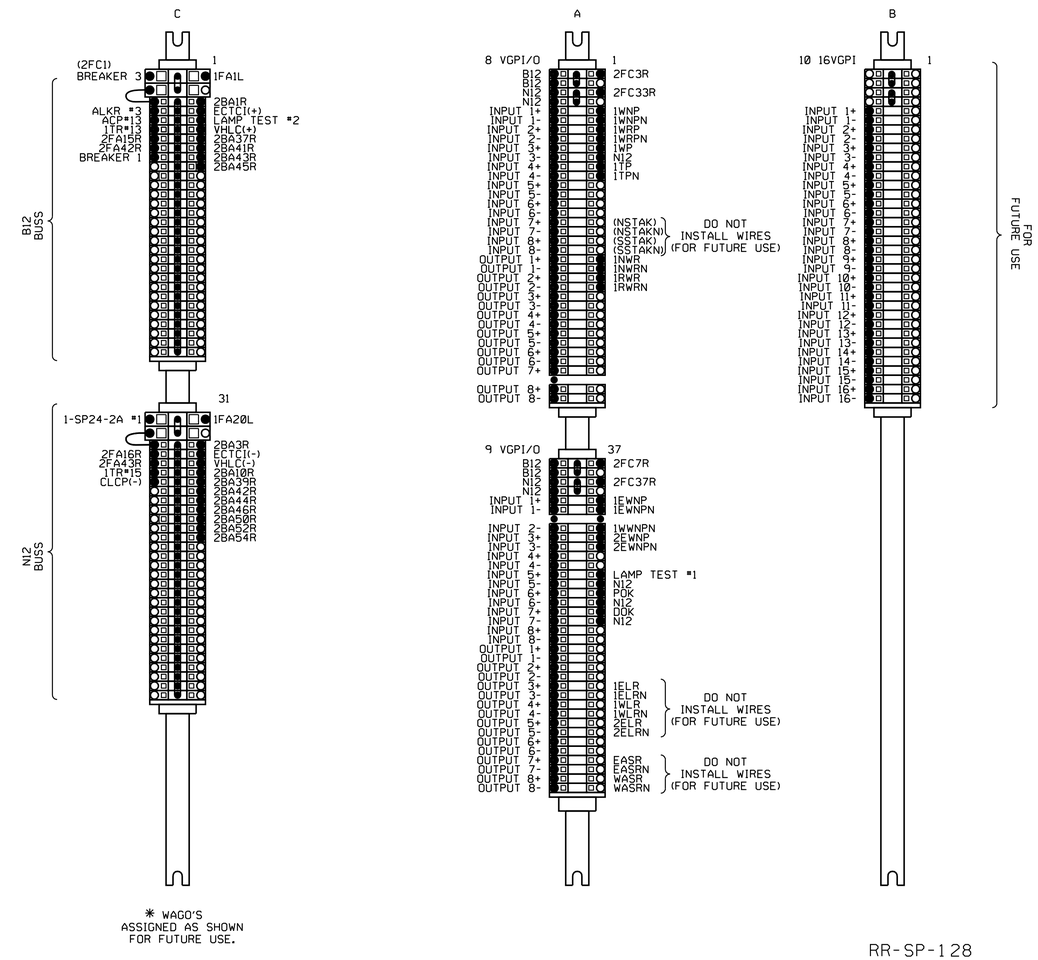

* WAGO'S ASSIGNED AS SHOWN FOR FUTURE USE.

PTC WORK TO BE PERFORMED BY OTHERS.

THIS PLAN ACCURATE FOR RAILROAD WORK ONLY.

RR-SP-128
SIGNAL STAGE 3

WAGO DETAIL
CP HOLLYWOOD
VY 13.30
SH. 13 OF 18

RAILROAD SHEET NO.
128 OF 171

STATE OF CALIFORNIA - DEPARTMENT OF TRANSPORTATION
Caltrans® DESIGN
CONSULTANT FUNCTIONAL SUPERVISOR: GLENN BREINDEL
CALCULATED-DESIGNED BY: RAMON VALDEZ
CHECKED BY
REVISED BY
DATE REVISED

DATE PLOTTED = 7/18/2012
TIME PLOTTED = 2:49:15 PM
LAST REVISION 00-00-00

Dist	COUNTY	ROUTE	POST MILES TOTAL PROJECT	SHEET No.	TOTAL SHEETS
7	LA	5	29.4/31.6	1889	1931

David McCord 05-21-12
REGISTERED CIVIL ENGINEER DATE

05-21-12
PLANS APPROVAL DATE

REGISTERED PROFESSIONAL ENGINEER DAVID WILLIAM McCORD No. E-15317 Exp. June 30, 2013 ELECTRICAL STATE OF CALIFORNIA

THE STATE OF CALIFORNIA OR ITS OFFICERS OR AGENTS SHALL NOT BE RESPONSIBLE FOR THE ACCURACY OR COMPLETENESS OF SCANNED COPIES OF THIS PLAN SHEET.

SCRRA
279 E. ARROW HIGHWAY
SAN DIMAS, CA 91773

XORAIL
201 NORTH INDIAN HILL BLVD
SUITE 201
CLAREMONT, CA 91711

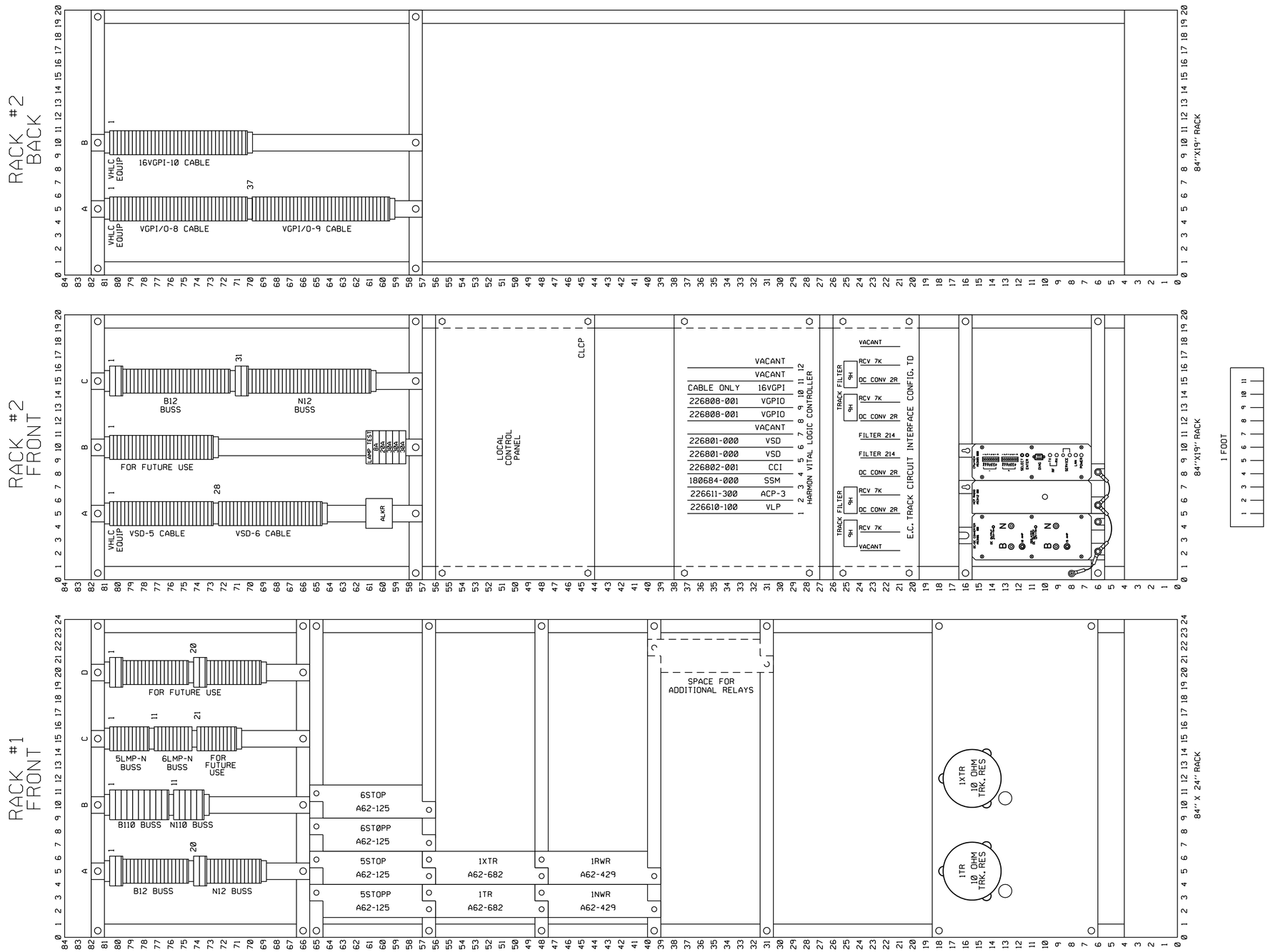

PTC WORK TO BE PERFORMED BY OTHERS.

THIS PLAN ACCURATE FOR RAILROAD WORK ONLY.

RR-SP-129
SIGNAL STAGE 3

RACKS #1 & #2 LAYOUT
CP HOLLYWOOD
VY 13.30
SH. 14 OF 18

RAILROAD SHEET NO.
129 OF 171

LAST REVISION 00-00-00
DATE PLOTTED = 7/18/2012
TIME PLOTTED = 2:49:17 PM

STATE OF CALIFORNIA - DEPARTMENT OF TRANSPORTATION
Caltrans® DESIGN
CONSULTANT FUNCTIONAL SUPERVISOR GLENN BREINDEL
CALCULATED-DESIGNED BY RAMON VALDEZ
CHECKED BY
REVISED BY
DATE REVISED

BORDER LAST REVISED 7/2/2010
USERNAME = gharibiana
DGN FILE = ...\moc\xorail\sheet\SP-129.sht
RELATIVE BORDER SCALE IS IN INCHES 0 1 2 3
UNIT 1812
PROJECT NUMBER & PHASE 07000211191

Dist	COUNTY	ROUTE	POST MILES TOTAL PROJECT	SHEET No.	TOTAL SHEETS
7	LA	5	29.4/31.6	1890	1931

David McCord 05-21-12
REGISTERED CIVIL ENGINEER DATE

05-21-12
PLANS APPROVAL DATE

REGISTERED PROFESSIONAL ENGINEER DAVID WILLIAM McCORD No. E-15317 Exp. June 30, 2013 ELECTRICAL STATE OF CALIFORNIA

THE STATE OF CALIFORNIA OR ITS OFFICERS OR AGENTS SHALL NOT BE RESPONSIBLE FOR THE ACCURACY OR COMPLETENESS OF SCANNED COPIES OF THIS PLAN SHEET.

SCRRA
279 E. ARROW HIGHWAY
SAN DIMAS, CA 91773

XORAIL
201 NORTH INDIAN HILL BLVD
SUITE 201
CLAREMONT, CA 91711

PTC WORK TO BE PERFORMED BY OTHERS.

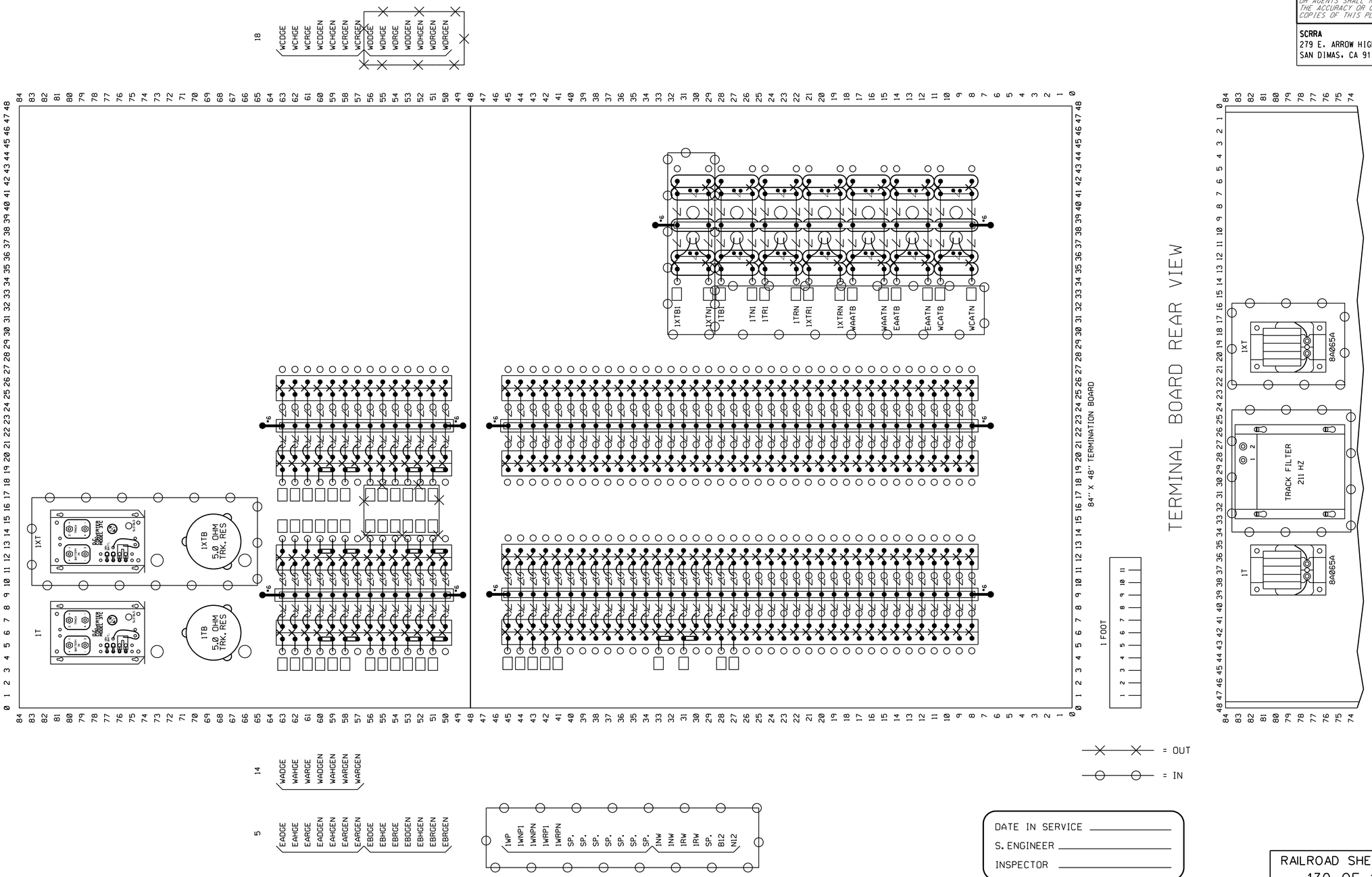

THIS PLAN ACCURATE FOR RAILROAD WORK ONLY.

DATE IN SERVICE _____
S. ENGINEER _____
INSPECTOR _____

RR-SP-130
SIGNAL STAGE 3

CABLE - TRACK TERMINATIONS
CP HOLLYWOOD
VY 13.30
SH. 15 OF 18

RAILROAD SHEET NO.
130 OF 171

LAST REVISION 00-00-00
DATE PLOTTED = ℄ 7/18/2012
TIME PLOTTED = ℄ 2:49:18 PM

STATE OF CALIFORNIA - DEPARTMENT OF TRANSPORTATION
Caltrans® DESIGN

CONSULTANT FUNCTIONAL SUPERVISOR: GLENN BREINDEL
CALCULATED-DESIGNED BY: RAMON VALDEZ
CHECKED BY
REVISED BY
DATE REVISED

BORDER LAST REVISED 7/2/2010
USERNAME = ℄ gharibiana
DGN FILE = ℄ ...\moc\xorail\sheet\SP-130.sht
RELATIVE BORDER SCALE IS IN INCHES 0 1 2 3
UNIT 1812
PROJECT NUMBER & PHASE 07000211191

Dist	COUNTY	ROUTE	POST MILES TOTAL PROJECT	SHEET No.	TOTAL SHEETS
7	LA	5	29.4/31.6	1891	1931

David McCord 05-21-12
REGISTERED CIVIL ENGINEER DATE

05-21-12
PLANS APPROVAL DATE

REGISTERED PROFESSIONAL ENGINEER DAVID WILLIAM McCORD No. E-15317 Exp. June 30, 2013 ELECTRICAL STATE OF CALIFORNIA

THE STATE OF CALIFORNIA OR ITS OFFICERS OR AGENTS SHALL NOT BE RESPONSIBLE FOR THE ACCURACY OR COMPLETENESS OF SCANNED COPIES OF THIS PLAN SHEET.

SCRRA
279 E. ARROW HIGHWAY
SAN DIMAS, CA 91773

XORAIL
201 NORTH INDIAN HILL BLVD
SUITE 201
CLAREMONT, CA 91711

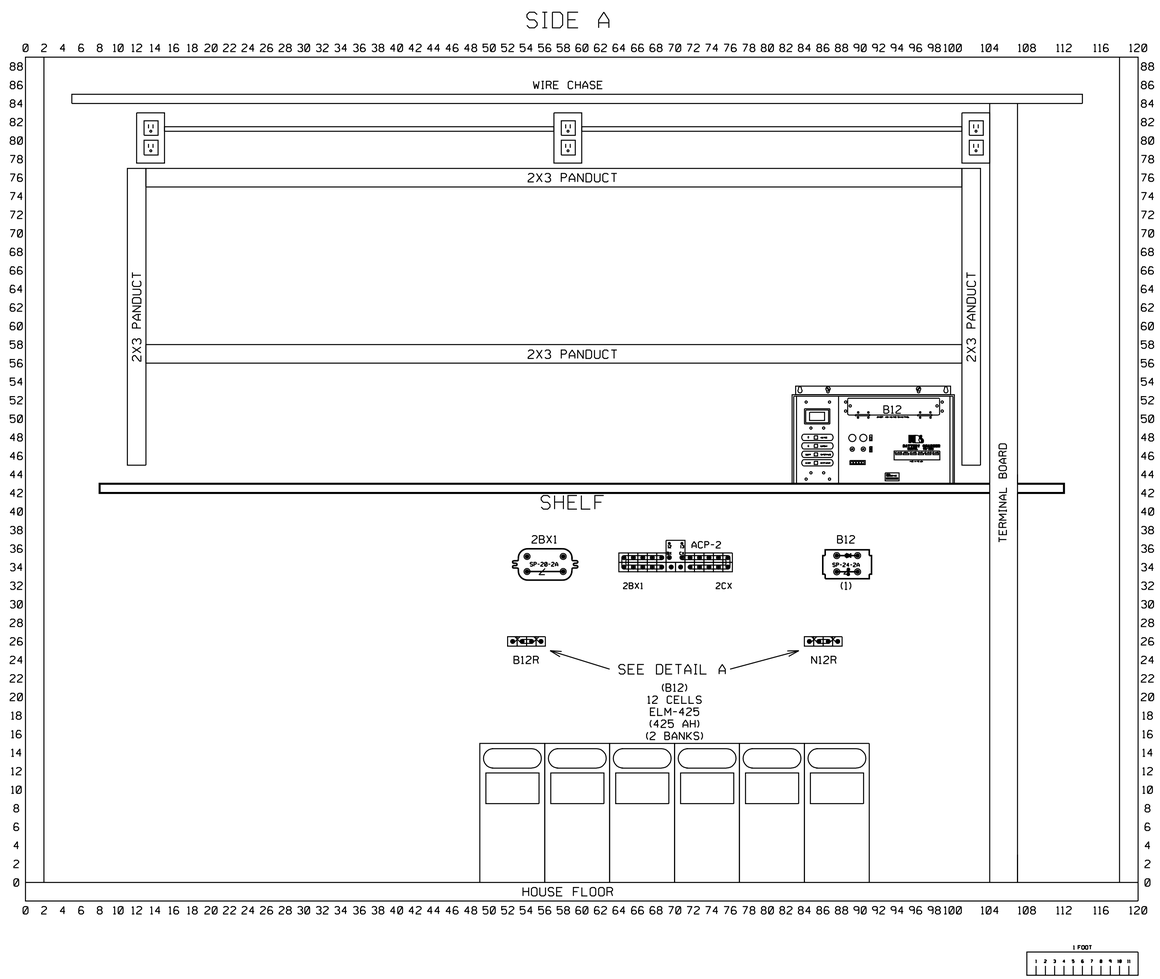

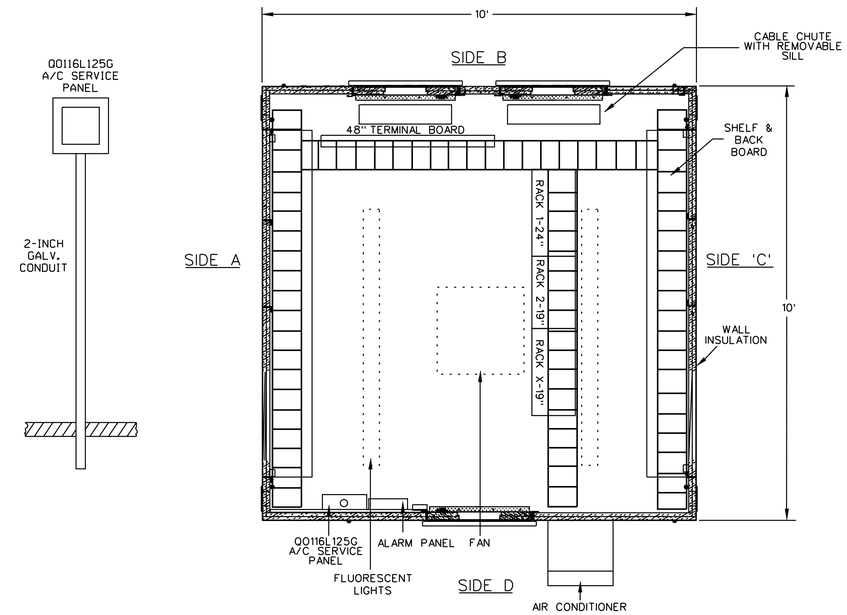

FLOOR PLAN
(NO SCALE)

10'X10' POWDER COATED STEEL SHELTER
OR
10'X10' ALUMINUM SHELTER WITH
STAINLESS STEEL HARDWARE.

PTC WORK TO BE PERFORMED BY OTHERS.

THIS PLAN ACCURATE FOR RAILROAD WORK ONLY.

RR-SP-131
SIGNAL STAGE 3

SIDE A - HOUSE LAYOUT
CP HOLLYWOOD
VY 13.30
SH. 16 OF 18

RAILROAD SHEET NO.
131 OF 171

STATE OF CALIFORNIA - DEPARTMENT OF TRANSPORTATION
Caltrans® DESIGN
CONSULTANT FUNCTIONAL SUPERVISOR GLENN BREINDEL
CALCULATED-DESIGNED BY RAMON VALDEZ
CHECKED BY
REVISED BY
DATE REVISED

LAST REVISION 00-00-00
DATE PLOTTED = ¢ 7/18/2012
TIME PLOTTED = ¢ 2:49:19 PM

BORDER LAST REVISED 7/2/2010
USERNAME = ¢ gharlblana
DGN FILE = ¢ ...\moc\xorail\sheet\SP-131.sht
RELATIVE BORDER SCALE IS IN INCHES 0 1 2 3
UNIT 1812
PROJECT NUMBER & PHASE 07000211191

Dist	COUNTY	ROUTE	POST MILES TOTAL PROJECT	SHEET No.	TOTAL SHEETS
7	LA	5	29.4/31.6	1892	1931

David McCord 05-21-12
REGISTERED CIVIL ENGINEER DATE

05-21-12
PLANS APPROVAL DATE

REGISTERED PROFESSIONAL ENGINEER DAVID WILLIAM McCORD No. E-15317 Exp. June 30, 2013 ELECTRICAL STATE OF CALIFORNIA

THE STATE OF CALIFORNIA OR ITS OFFICERS OR AGENTS SHALL NOT BE RESPONSIBLE FOR THE ACCURACY OR COMPLETENESS OF SCANNED COPIES OF THIS PLAN SHEET.

SCRRA
279 E. ARROW HIGHWAY
SAN DIMAS, CA 91773

XORAIL
201 NORTH INDIAN HILL BLVD
SUITE 201
CLAREMONT, CA 91711

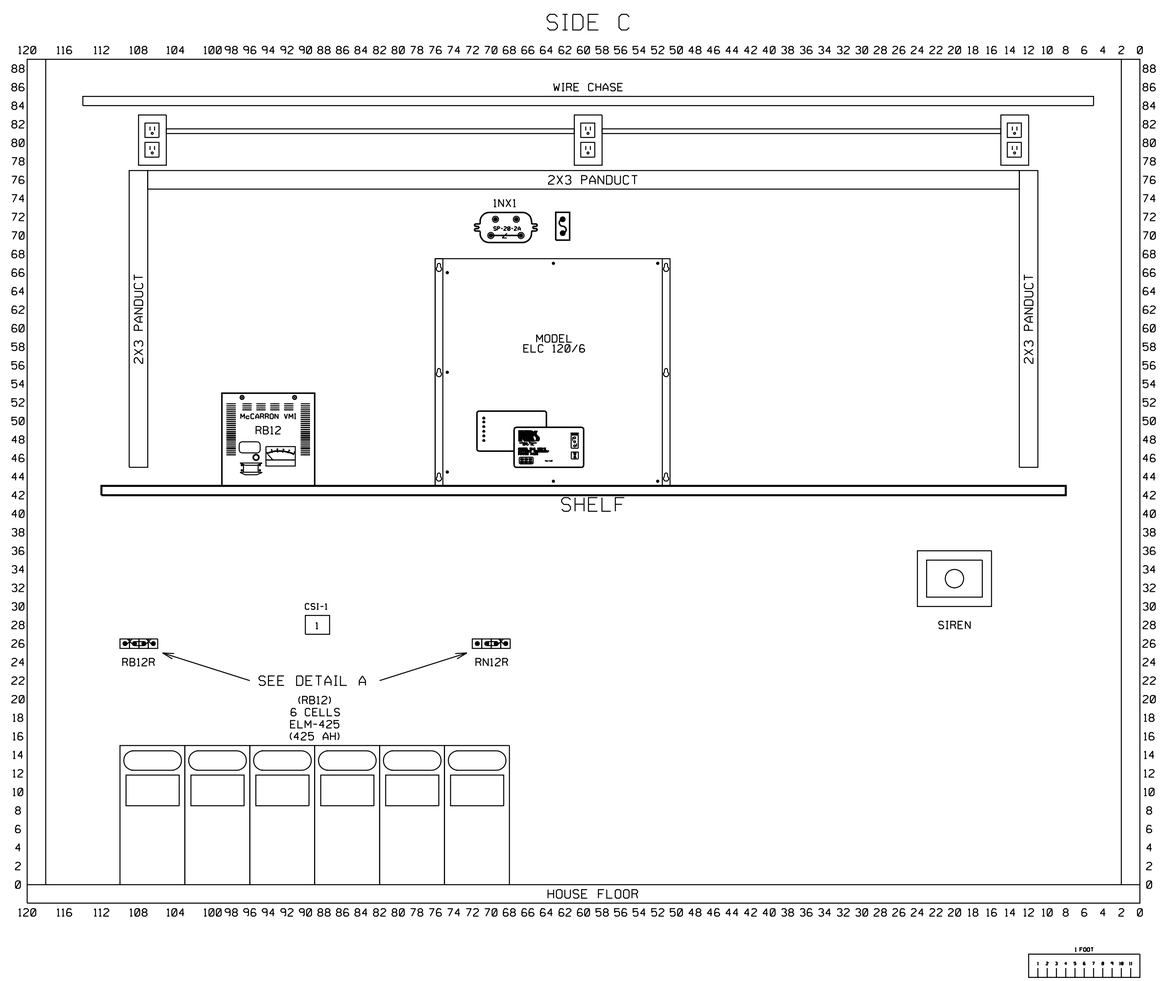

PTC WORK TO BE PERFORMED BY OTHERS.

THIS PLAN ACCURATE FOR RAILROAD WORK ONLY.

RR-SP-132
SIGNAL STAGE 3

SIDE C - HOUSE LAYOUT
CP HOLLYWOOD
VY 13.30
SH. 17 OF 18

RAILROAD SHEET NO.
132 OF 171

LAST REVISION 00-00-00
DATE PLOTTED = 7/18/2012
TIME PLOTTED = 2:49:21 PM

STATE OF CALIFORNIA - DEPARTMENT OF TRANSPORTATION
Caltrans® DESIGN

CONSULTANT FUNCTIONAL SUPERVISOR: GLENN BREINDEL
CALCULATED-DESIGNED BY: RAMON VALDEZ
CHECKED BY
REVISED BY
DATE REVISED

BORDER LAST REVISED 7/2/2010
USERNAME = gharibiana
DGN FILE = ...\moc\xorail\sheet\SP-132.sht
RELATIVE BORDER SCALE IS IN INCHES 0 1 2 3
UNIT 1812
PROJECT NUMBER & PHASE 07000211191

Dist	COUNTY	ROUTE	POST MILES TOTAL PROJECT	SHEET No.	TOTAL SHEETS
7	LA	5	29.4/31.6	1893	1931

David McCord 05-21-12
REGISTERED CIVIL ENGINEER DATE

05-21-12
PLANS APPROVAL DATE

REGISTERED PROFESSIONAL ENGINEER DAVID WILLIAM McCORD No. E-15317 Exp. June 30, 2013 ELECTRICAL STATE OF CALIFORNIA

THE STATE OF CALIFORNIA OR ITS OFFICERS OR AGENTS SHALL NOT BE RESPONSIBLE FOR THE ACCURACY OR COMPLETENESS OF SCANNED COPIES OF THIS PLAN SHEET.

SCRRA
279 E. ARROW HIGHWAY
SAN DIMAS, CA 91773

XORAIL
201 NORTH INDIAN HILL BLVD
SUITE 201
CLAREMONT, CA 91711

CP HOLLYWOOD

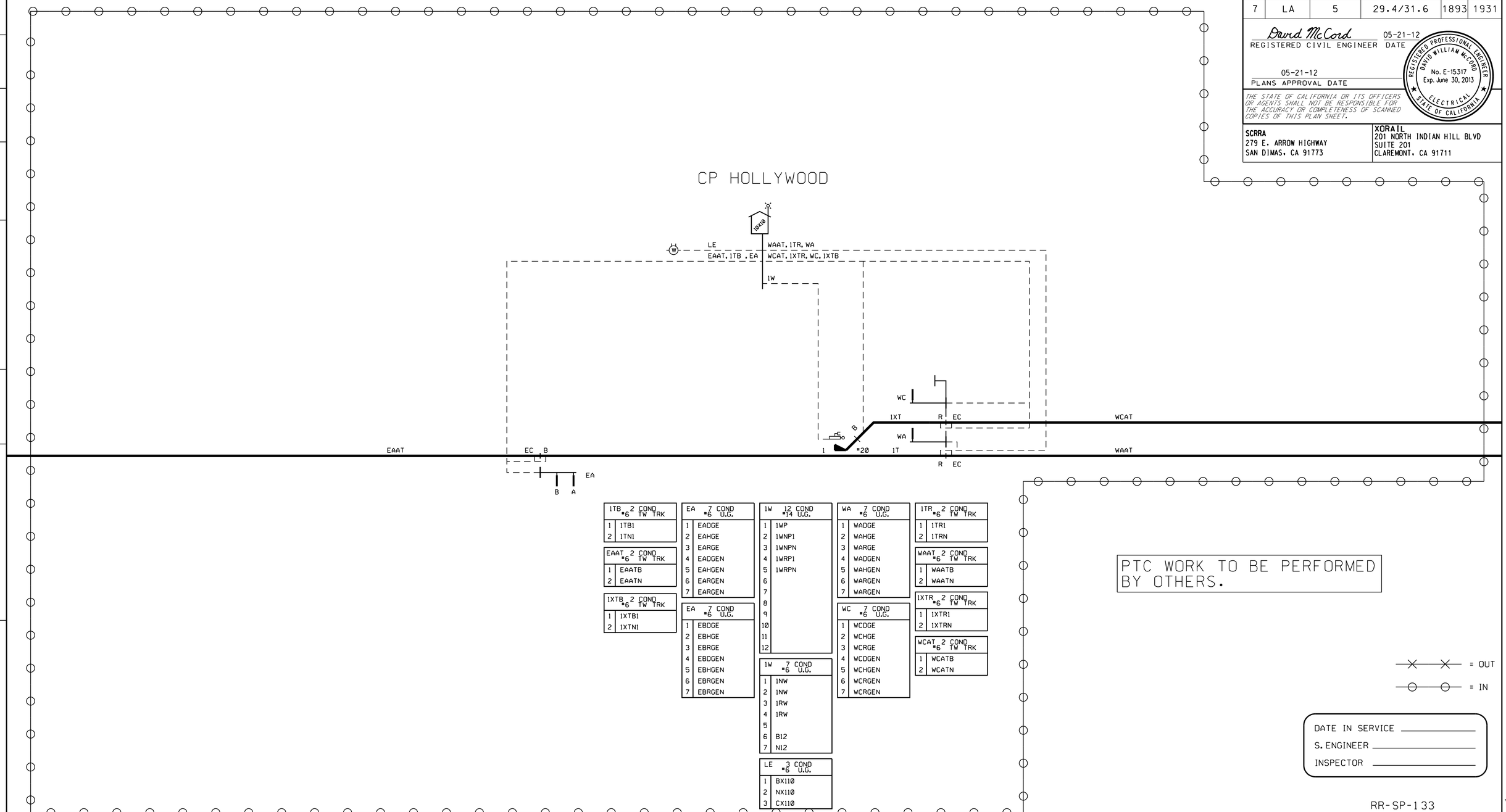

1TB #6 2 COND TW TRK	
1	1TB1
2	1TN1

EAAT #6 2 COND TW TRK	
1	EAATB
2	EAATN

1XTB #6 2 COND TW TRK	
1	1XTB1
2	1XTN1

EA #6 7 COND U.G.	
1	EADGE
2	EAHGE
3	EARGE
4	EADGEN
5	EAHGEN
6	EARGEN
7	EARGEN

EA #6 7 COND U.G.	
1	EBDGE
2	EBHGE
3	EBRGE
4	EBDGEN
5	EBHGEN
6	EBRGEN
7	EBRGEN

1W #14 12 COND U.G.	
1	1WP
2	1WNP1
3	1WNPN
4	1WRP1
5	1WRPN
6	
7	
8	
9	
10	
11	
12	

1W #6 7 COND U.G.	
1	1NW
2	1NW
3	1RW
4	1RW
5	
6	B12
7	N12

LE #6 3 COND U.G.	
1	BX110
2	NX110
3	CX110

WA #6 7 COND U.G.	
1	WADGE
2	WAHGE
3	WARGE
4	WADGEN
5	WAHGEN
6	WARGEN
7	WARGEN

WC #6 7 COND U.G.	
1	WCDGE
2	WCHGE
3	WCRGE
4	WCDGEN
5	WCHGEN
6	WCRGEN
7	WCRGEN

1TR #6 2 COND TW TRK	
1	1TR1
2	1TRN

WAAT #6 2 COND TW TRK	
1	WAATB
2	WAATN

1XTR #6 2 COND TW TRK	
1	1XTR1
2	1XTRN

WCAT #6 2 COND TW TRK	
1	WCATB
2	WCATN

PTC WORK TO BE PERFORMED BY OTHERS.

= OUT

= IN

DATE IN SERVICE _____
S. ENGINEER _____
INSPECTOR _____

RR-SP-133
SIGNAL STAGE 3

CABLE SHEET
CP HOLLYWOOD
VY 13.30
SH. 18 OF 18

RAILROAD SHEET NO.
133 OF 171

THIS PLAN ACCURATE FOR RAILROAD WORK ONLY.

STATE OF CALIFORNIA - DEPARTMENT OF TRANSPORTATION
Caltrans DESIGN

CONSULTANT FUNCTIONAL SUPERVISOR: GLENN BREINDEL
CALCULATED-DESIGNED BY: RAMON VALDEZ
CHECKED BY
REVISED BY
DATE REVISED

LAST REVISION 00-00-00
DATE PLOTTED = 7/18/2012
TIME PLOTTED = 2:49:22 PM

Dist	COUNTY	ROUTE	POST MILES TOTAL PROJECT	SHEET No.	TOTAL SHEETS
7	LA	5	29.4/31.6	1894	1931

David McCord 05-21-12
REGISTERED CIVIL ENGINEER DATE

05-21-12
PLANS APPROVAL DATE

REGISTERED PROFESSIONAL ENGINEER DAVID WILLIAM McCORD No. E-15317 Exp. June 30, 2013 ELECTRICAL STATE OF CALIFORNIA

THE STATE OF CALIFORNIA OR ITS OFFICERS OR AGENTS SHALL NOT BE RESPONSIBLE FOR THE ACCURACY OR COMPLETENESS OF SCANNED COPIES OF THIS PLAN SHEET.

SCRRA
279 E. ARROW HIGHWAY
SAN DIMAS, CA 91773

XORAIL
201 NORTH INDIAN HILL BLVD
SUITE 201
CLAREMONT, CA 91711

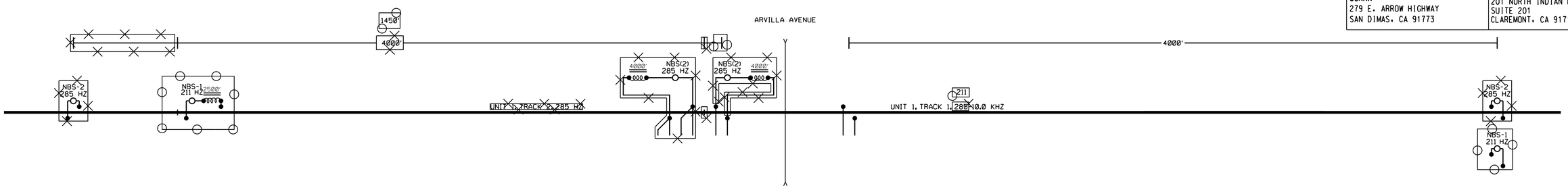

PROGRAM OPTIONS		
OPTION		UNIT 1
NUMBER OF TRACKS		2 / 1
FREQUENCY		285HZ / 211HZ
UNI/BI DIRECTIONAL	TRACK 1	BI
	TRACK 2	BI / NA
X-MIT LEVEL	TRACK 1	MED
	TRACK 2	MED / NA
PREDICTOR/MOTION SENSOR	TRACK 1	PRED
	TRACK 2	PRED / NA
WARNING TIME	TRACK 1	35 SEC
	TRACK 2	35 SEC / NA
APPROACH DISTANCE SELECTED	TRACK 1	4000
	TRACK 2	4000 / NA
APPROACH DISTANCE COMPUTED	TRACK 1	COMPUTED
	TRACK 2	COMPUTED / NA
UAX PICKUP DELAY		0 / 10SEC
UAX2/ENA		0
NUMBER OF DAXS		0
ISLAND DISTANCE		138'
DAX A TRACK ASSIGNMENT		NA
DAX A DISTANCE		NA
DAX A WARNING TIME		NA
DAX B TRACK ASSIGNMENT		NA
DAX B DISTANCE		NA
DAX B WARNING TIME		NA
DAX C TRACK ASSIGNMENT		NA
DAX C DISTANCE		NA
DAX C WARNING TIME		NA
DAX D TRACK ASSIGNMENT		NA
DAX D DISTANCE		NA
DAX D WARNING TIME		NA
MASTER/SLAVE		MASTER
PASSWORD		ENA
RECORDER		INSTALLED
RS-232C BAUD RATE		9600
RS-232C DATA BITS		8
RS-232C STOP BITS		1
RS-232C PARITY		NONE
PRIME PRED. OFFSET	TRK 1	0
	TRK 2	0 / NA
PICKUP DELAY PRIME		15 SEC
PICKUP DELAY DAX	DAX A	NA
	DAX B	NA
	DAX C	NA
	DAX D	NA
NUMBER OF TRACK WIRES		4

UNIT 1 NORMAL
MICRO GCP 3000D2
MODULE REQUIREMENTS

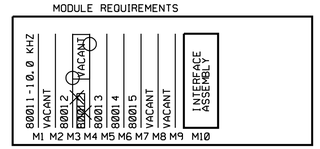

UNIT 1 STANDBY
MICRO GCP 3000D2
MODULE REQUIREMENTS

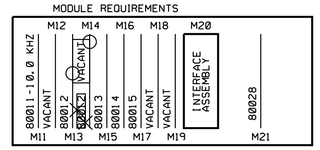

ON MODULE 80028
OFF S1 ON
A
B
C
D
DAX USED DAX NOT USED

ON MODULE 80028
MIN. ON S4 OFF
16
8
4
2
1

SET TRANSFER SWITCH TO AUTO
SET DIP SWITCH FOR 5 MIN
TRANSFER TIME

= OUT
= IN

DATE IN SERVICE _____
S. ENGINEER _____
INSPECTOR _____

PTC WORK TO BE PERFORMED BY OTHERS.

THIS PLAN ACCURATE FOR RAILROAD WORK ONLY.

RR-SP-134
SIGNAL STAGE 3

PROGRAM OPTIONS PLAN
ARVILLA AVENUE
VY 14.14
SH. 1 OF 3

RAILROAD SHEET NO.
134 OF 171

LAST REVISION 00-00-00
DATE PLOTTED = 7/18/2012
TIME PLOTTED = 2:49:22 PM

STATE OF CALIFORNIA - DEPARTMENT OF TRANSPORTATION
Caltrans® DESIGN
CONSULTANT FUNCTIONAL SUPERVISOR GLENN BREINDEL
CALCULATED-DESIGNED BY RAMON VALDEZ
CHECKED BY
REVISED BY
DATE REVISED

BORDER LAST REVISED 7/2/2010
USERNAME = gharibiana
DGN FILE = ...\moc\xorail\sheet\SP-134.sht
RELATIVE BORDER SCALE IS IN INCHES 0 1 2 3
UNIT 1812
PROJECT NUMBER & PHASE 07000211191

Dist	COUNTY	ROUTE	POST MILES TOTAL PROJECT	SHEET No.	TOTAL SHEETS
7	LA	5	29.4/31.6	1895	1931

David McCord 05-21-12
REGISTERED CIVIL ENGINEER DATE

05-21-12
PLANS APPROVAL DATE

REGISTERED PROFESSIONAL ENGINEER DAVID WILLIAM McCORD No. E-15317 Exp. June 30, 2013 ELECTRICAL STATE OF CALIFORNIA

THE STATE OF CALIFORNIA OR ITS OFFICERS OR AGENTS SHALL NOT BE RESPONSIBLE FOR THE ACCURACY OR COMPLETENESS OF SCANNED COPIES OF THIS PLAN SHEET.

SCRRA
279 E. ARROW HIGHWAY
SAN DIMAS, CA 91773

XORAIL
201 NORTH INDIAN HILL BLVD
SUITE 201
CLAREMONT, CA 91711

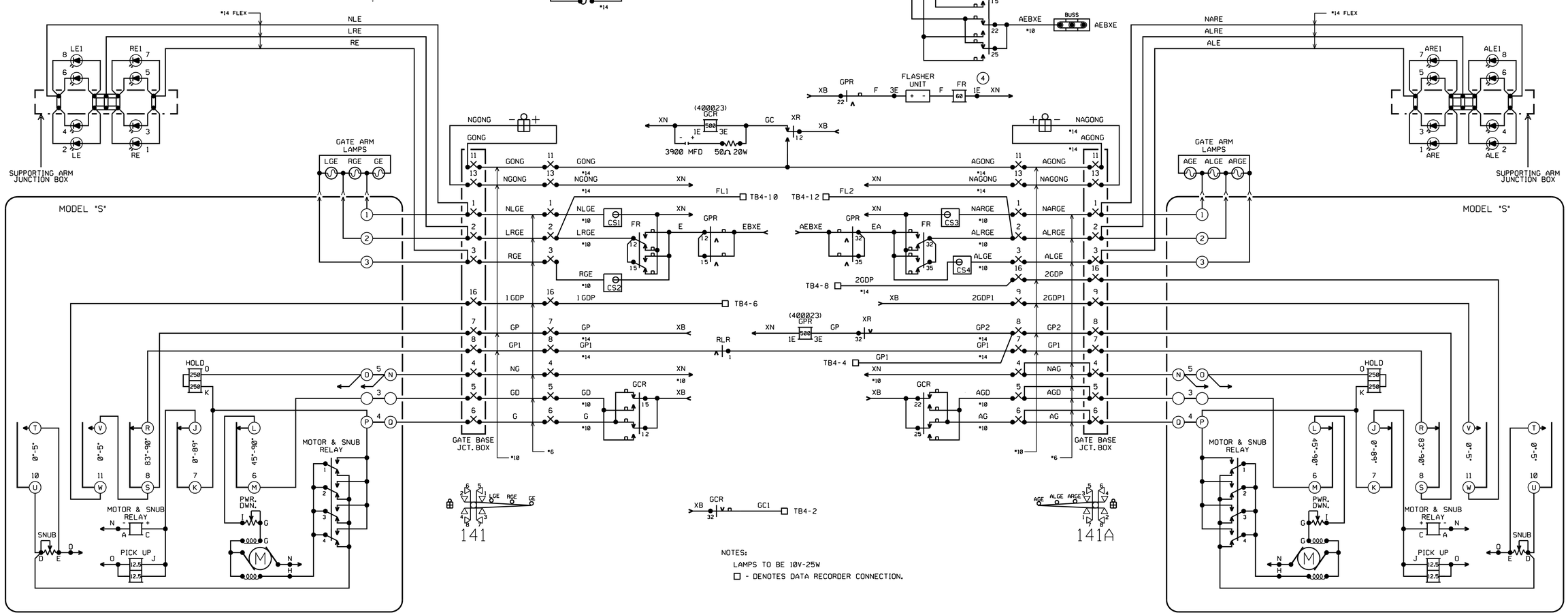

NOTES:
LAMPS TO BE 10V-25W
□ - DENOTES DATA RECORDER CONNECTION.

PTC WORK TO BE PERFORMED BY OTHERS.

RR-SP-135
SIGNAL STAGE 3

GATE CIRCUIT PLAN
ARVILLA AVENUE
VY 14.14
SH. 2 OF 3

REFERENCE ONLY

RAILROAD SHEET NO.
135 OF 171

THIS PLAN ACCURATE FOR RAILROAD WORK ONLY.

STATE OF CALIFORNIA - DEPARTMENT OF TRANSPORTATION
Caltrans® DESIGN
CONSULTANT FUNCTIONAL SUPERVISOR GLENN BREINDEL
CALCULATED-DESIGNED BY RAMON VALDEZ
CHECKED BY
REVISED BY
DATE REVISED

LAST REVISION 00-00-00
DATE PLOTTED = 7/18/2012
TIME PLOTTED = 2:49:23 PM

Dist	COUNTY	ROUTE	POST MILES TOTAL PROJECT	SHEET No.	TOTAL SHEETS
7	LA	5	29.4/31.6	1896	1931

David McCord 05-21-12
REGISTERED CIVIL ENGINEER DATE

05-21-12
PLANS APPROVAL DATE

REGISTERED PROFESSIONAL ENGINEER DAVID WILLIAM McCORD No. E-15317 Exp. June 30, 2013 ELECTRICAL STATE OF CALIFORNIA

THE STATE OF CALIFORNIA OR ITS OFFICERS OR AGENTS SHALL NOT BE RESPONSIBLE FOR THE ACCURACY OR COMPLETENESS OF SCANNED COPIES OF THIS PLAN SHEET.

SCRRA
279 E. ARROW HIGHWAY
SAN DIMAS, CA 91773

XORAIL
201 NORTH INDIAN HILL BLVD
SUITE 201
CLAREMONT, CA 91711

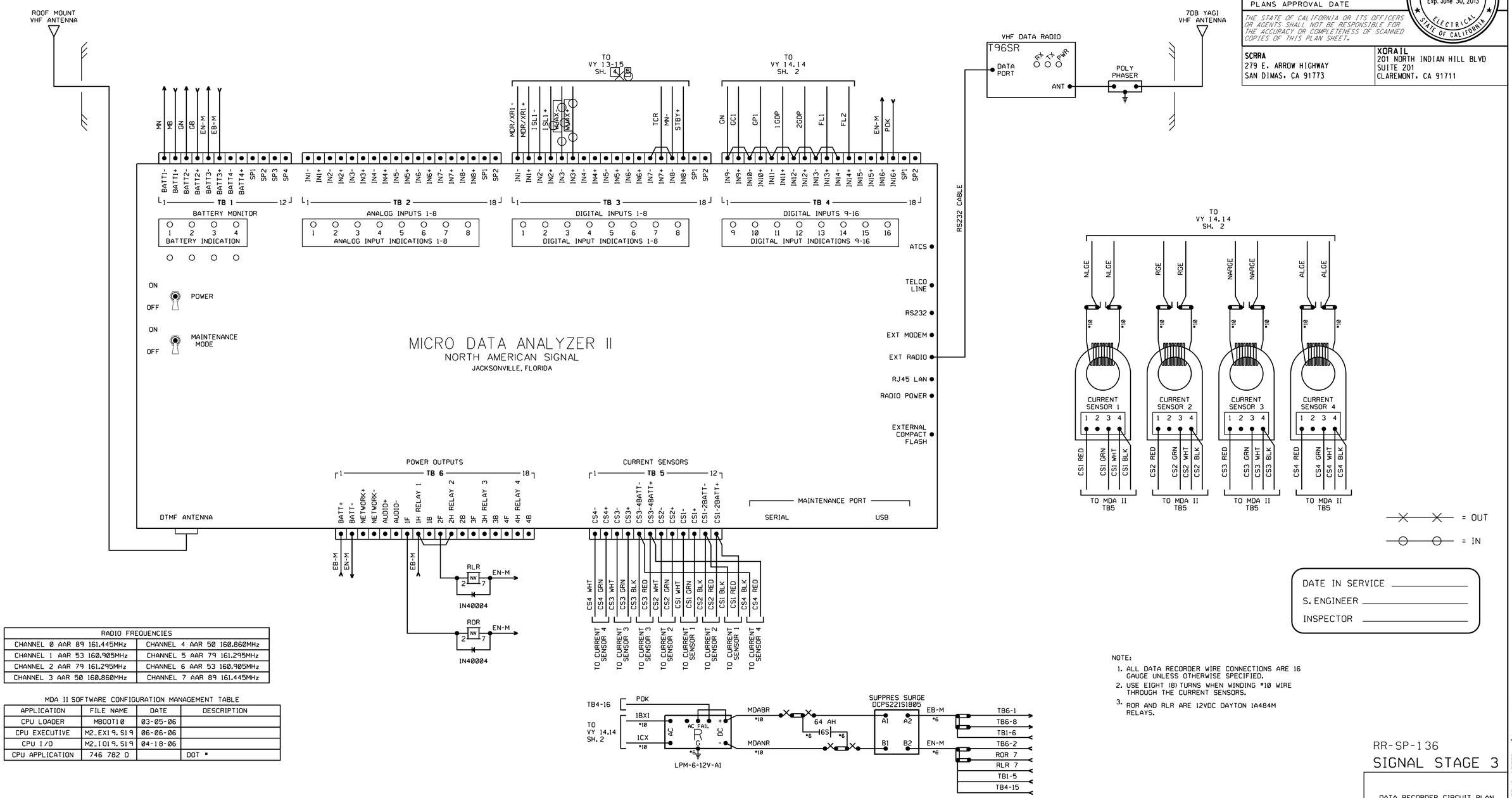

RADIO FREQUENCIES	
CHANNEL 0 AAR 89 161.445MHz	CHANNEL 4 AAR 50 160.860MHz
CHANNEL 1 AAR 53 160.905MHz	CHANNEL 5 AAR 79 161.295MHz
CHANNEL 2 AAR 79 161.295MHz	CHANNEL 6 AAR 53 160.905MHz
CHANNEL 3 AAR 50 160.860MHz	CHANNEL 7 AAR 89 161.445MHz

MDA II SOFTWARE CONFIGURATION MANAGEMENT TABLE

APPLICATION	FILE NAME	DATE	DESCRIPTION
CPU LOADER	MBOOT10	03-05-06	
CPU EXECUTIVE	M2_EX19.S19	06-06-06	
CPU I/O	M2_IO19.S19	04-18-06	
CPU APPLICATION	746 782 D		DOT #

DATE IN SERVICE _____
S. ENGINEER _____
INSPECTOR _____

NOTE:
1. ALL DATA RECORDER WIRE CONNECTIONS ARE 16 GAUGE UNLESS OTHERWISE SPECIFIED.
2. USE EIGHT (8) TURNS WHEN WINDING #10 WIRE THROUGH THE CURRENT SENSORS.
3. ROR AND RLR ARE 12VDC DAYTON 1A484M RELAYS.

PTC WORK TO BE PERFORMED BY OTHERS.

THIS PLAN ACCURATE FOR RAILROAD WORK ONLY.

RR-SP-136
SIGNAL STAGE 3

DATA RECORDER CIRCUIT PLAN
ARVILLA AVENUE
VY 14.14
SH. 3 OF 3

RAILROAD SHEET NO.
136 OF 171

DATE PLOTTED = 7/18/2012
TIME PLOTTED = 2:49:25 PM
LAST REVISION 00-00-00

REVISED BY | DATE REVISED
RAMON VALDEZ
CALCULATED-DESIGNED BY | CHECKED BY
CONSULTANT FUNCTIONAL SUPERVISOR
GLENN BREINDEL
STATE OF CALIFORNIA - DEPARTMENT OF TRANSPORTATION
Caltrans
DESIGN

BORDER LAST REVISED 7/2/2010
USERNAME = gharibiana
DGN FILE = ...\moc\xorail\sheet\SP-136.sht
RELATIVE BORDER SCALE IS IN INCHES 0 1 2 3
UNIT 1812
PROJECT NUMBER & PHASE 07000211191

Dist	COUNTY	ROUTE	POST MILES TOTAL PROJECT	SHEET No.	TOTAL SHEETS
7	LA	5	29.4/31.6	1897	1931

David McCord 05-21-12
REGISTERED CIVIL ENGINEER DATE

05-21-12
PLANS APPROVAL DATE

REGISTERED PROFESSIONAL ENGINEER DAVID WILLIAM McCORD No. E-15317 Exp. June 30, 2013 ELECTRICAL STATE OF CALIFORNIA

THE STATE OF CALIFORNIA OR ITS OFFICERS OR AGENTS SHALL NOT BE RESPONSIBLE FOR THE ACCURACY OR COMPLETENESS OF SCANNED COPIES OF THIS PLAN SHEET.

SCRRA
279 E. ARROW HIGHWAY
SAN DIMAS, CA 91773

XORAIL
201 NORTH INDIAN HILL BLVD
SUITE 201
CLAREMONT, CA 91711

= OUT
= IN

DATE IN SERVICE _____
S. ENGINEER _____
INSPECTOR _____

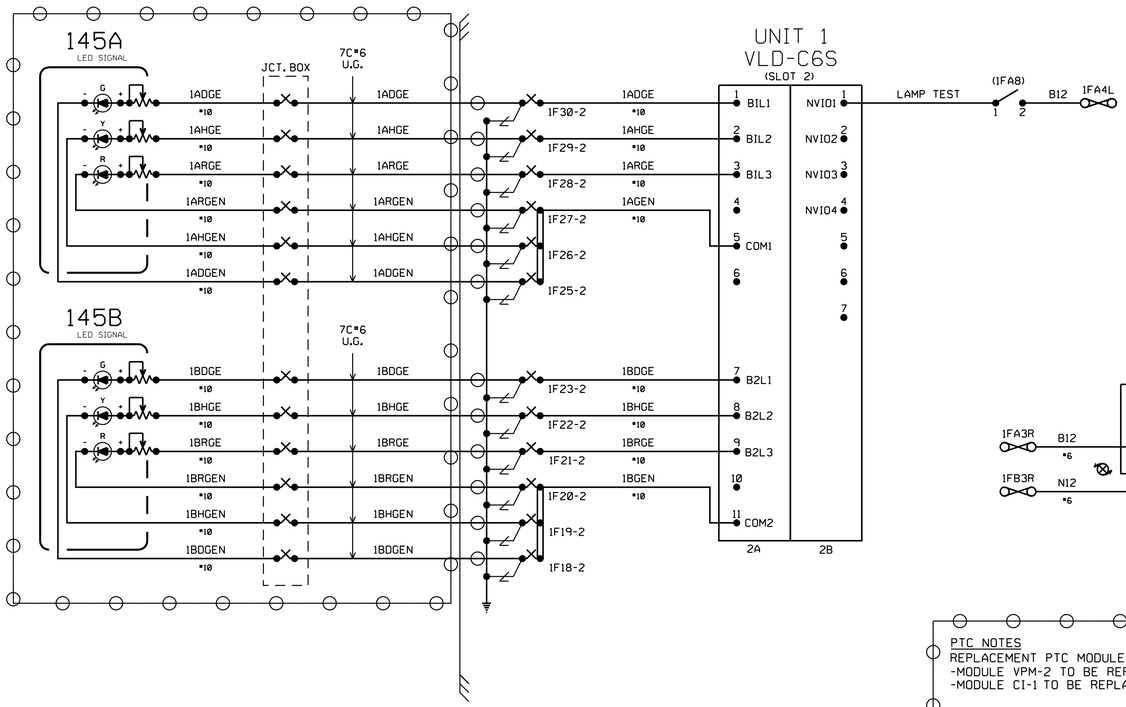

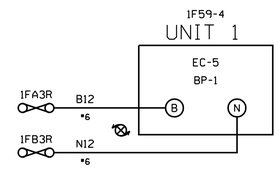

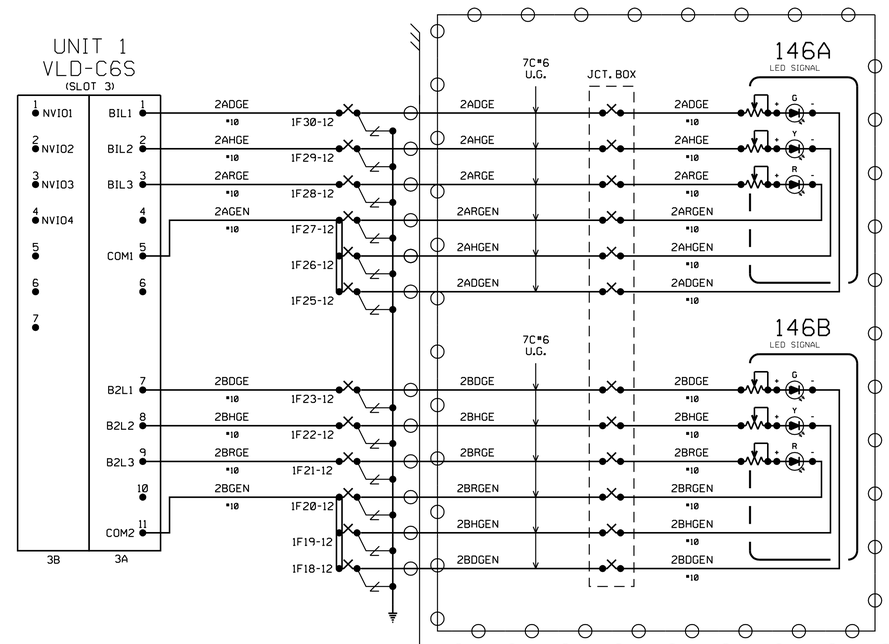

RECEIVING CODE	145 SIGNAL ASPECT	TRANSMITTING CODE	PTC *
CODE 7	GREEN/RED	CODE 7	3
CODE 4	FLASHING YELLOW/RED	CODE 7	7
CODE 2	YELLOW/YELLOW	CODE 4	6
CODE 8	YELLOW/RED	CODE 4	9
CODE 9	YELLOW/FLASHING RED	CODE 4	8
NO CODE	RED/RED	CODE 1	15
NO CODE (STICK)	RED/RED	CODE 8	15
CODE 1	RED/RED	CODE 1	15

PTC NOTES
REPLACEMENT PTC MODULES:
-MODULE VPM-2 TO BE REPLACED WITH MODULE VPM-3.
-MODULE CI-1 TO BE REPLACED WITH MODULE CI-2.

PTC MESSAGE		
TYPE	SIGNAL	SIGNAL
NAME	145	146
OFFSET	0	5

RECEIVING CODE	146 SIGNAL ASPECT	TRANSMITTING CODE	PTC *
CODE 7	GREEN/RED	CODE 7	3
CODE 4	FLASHING YELLOW/RED	CODE 7	7
CODE 2	YELLOW/YELLOW	CODE 4	6
CODE 8	YELLOW/RED	CODE 4	9
NO CODE	RED/RED	CODE 1	15
NO CODE (STICK)	RED/RED	CODE 8	15
CODE 1	RED/RED	CODE 1	15

ELECTROCODE 5
COLORLIGHT CONFIGURATION
GETS P/N 300671-004
UNITS 1
CHASSIS ID

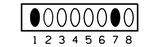

● NOT PUNCHED = ON
○ PUNCHED = OFF

TRACK 1 ALTERNATING CODE 5= ALT 5
TRACK 2 ALTERNATING CODE 5= ALT 5

PTC WORK TO BE PERFORMED BY OTHERS.

THIS PLAN ACCURATE FOR RAILROAD WORK ONLY.

RR-SP-137
SIGNAL STAGE 3

ELECTROCODE 5 CIRCUITS
INTERMEDIATE SIGNALS 145 & 146
VY 14.40
SH. 1 OF 6

RAILROAD SHEET NO.
137 OF 171

LAST REVISION 00-00-00
DATE PLOTTED = 7/18/2012
TIME PLOTTED = 2:49:26 PM

STATE OF CALIFORNIA - DEPARTMENT OF TRANSPORTATION
Caltrans® DESIGN
CONSULTANT FUNCTIONAL SUPERVISOR GLENN BREINDEL
CALCULATED-DESIGNED BY RAMON VALDEZ
CHECKED BY
REVISED BY
DATE REVISED

Dist	COUNTY	ROUTE	POST MILES TOTAL PROJECT	SHEET No.	TOTAL SHEETS
7	LA	5	29.4/31.6	1898	1931

David McCord 05-21-12
REGISTERED CIVIL ENGINEER DATE

05-21-12
PLANS APPROVAL DATE

REGISTERED PROFESSIONAL ENGINEER DAVID WILLIAM McCORD No. E-15317 Exp. June 30, 2013 ELECTRICAL STATE OF CALIFORNIA

THE STATE OF CALIFORNIA OR ITS OFFICERS OR AGENTS SHALL NOT BE RESPONSIBLE FOR THE ACCURACY OR COMPLETENESS OF SCANNED COPIES OF THIS PLAN SHEET.

SCRRA
279 E. ARROW HIGHWAY
SAN DIMAS, CA 91773

XORAIL
201 NORTH INDIAN HILL BLVD
SUITE 201
CLAREMONT, CA 91711

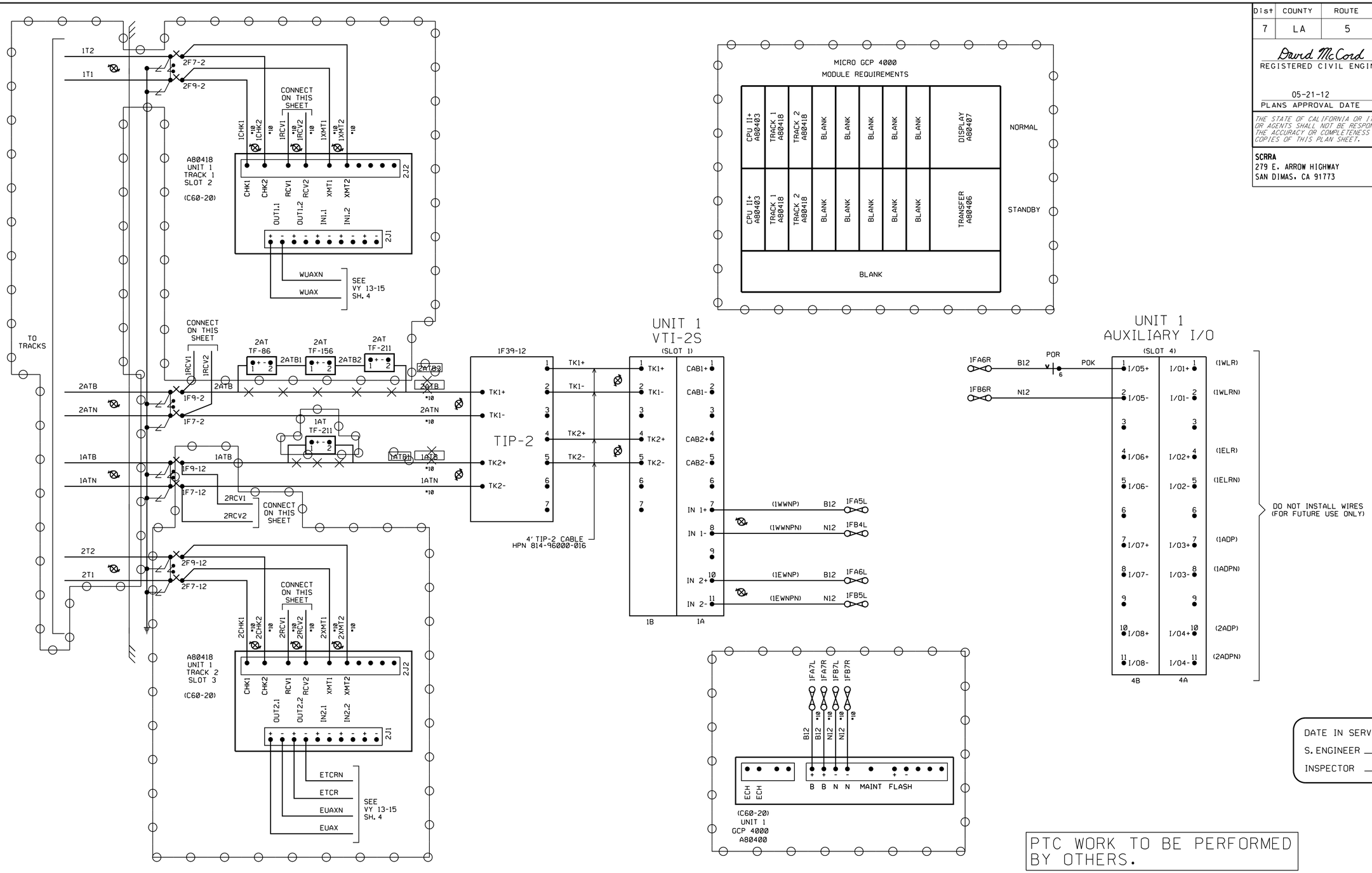

DATE IN SERVICE _____
S. ENGINEER _____
INSPECTOR _____

PTC WORK TO BE PERFORMED BY OTHERS.

RR-SP-138
SIGNAL STAGE 3

ELECTROCODE 5 & GCP4000 CIRCUITS
INTERMEDIATE SIGNALS 145 & 146
VY 14.40
SH. 2 OF 6

RAILROAD SHEET NO.
138 OF 171

THIS PLAN ACCURATE FOR RAILROAD WORK ONLY.

STATE OF CALIFORNIA - DEPARTMENT OF TRANSPORTATION
Caltrans® DESIGN
CONSULTANT FUNCTIONAL SUPERVISOR GLENN BREINDEL
CALCULATED-DESIGNED BY RAMON VALDEZ
CHECKED BY
REVISED BY
DATE REVISED

DATE PLOTTED = 7/18/2012
TIME PLOTTED = 2:49:27 PM
LAST REVISION 00-00-00

BORDER LAST REVISED 7/2/2010
USERNAME = gharibiana
DGN FILE = ...\moc\xorail\sheet\SP-138.sht
RELATIVE BORDER SCALE IS IN INCHES 0 1 2 3
UNIT 1812
PROJECT NUMBER & PHASE 07000211191

Dist	COUNTY	ROUTE	POST MILES TOTAL PROJECT	SHEET No.	TOTAL SHEETS
7	LA	5	29.4/31.6	1899	1931

David McCord 05-21-12
REGISTERED CIVIL ENGINEER DATE

05-21-12
PLANS APPROVAL DATE

REGISTERED PROFESSIONAL ENGINEER DAVID WILLIAM McCORD No. E-15317 Exp. June 30, 2013 ELECTRICAL STATE OF CALIFORNIA

THE STATE OF CALIFORNIA OR ITS OFFICERS OR AGENTS SHALL NOT BE RESPONSIBLE FOR THE ACCURACY OR COMPLETENESS OF SCANNED COPIES OF THIS PLAN SHEET.

SCRRA
279 E. ARROW HIGHWAY
SAN DIMAS, CA 91773

XORAIL
201 NORTH INDIAN HILL BLVD
SUITE 201
CLAREMONT, CA 91711

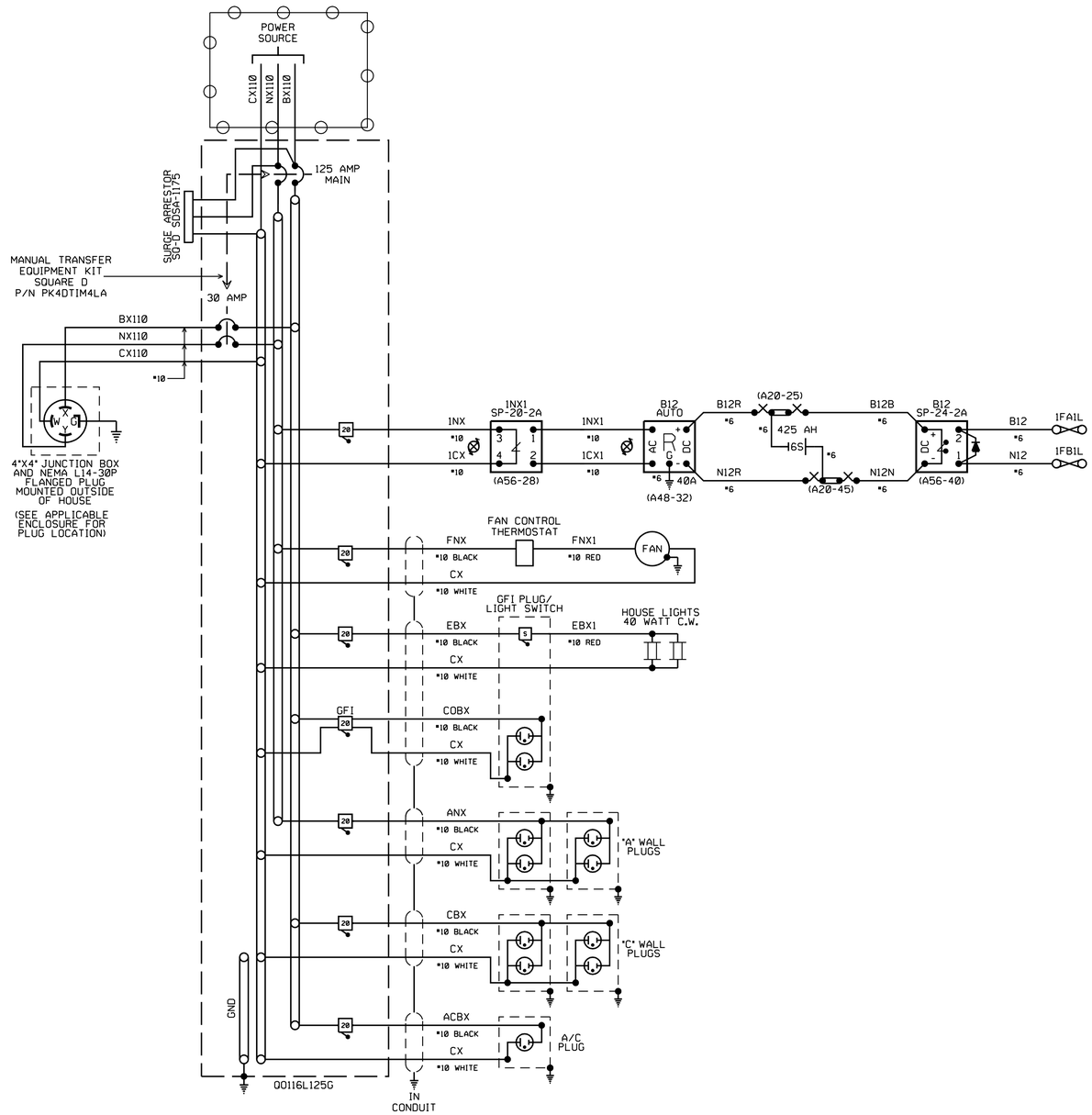

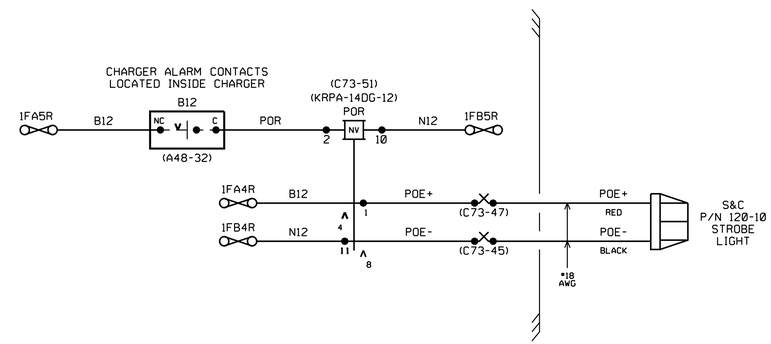

NOTE:

1. POE STROBE LIGHT AND ASSOCIATED MISCELLANEOUS MATERIALS TO BE FURNISHED BY CONTRACTOR.

= IN

PTC WORK TO BE PERFORMED BY OTHERS.

THIS PLAN ACCURATE FOR RAILROAD WORK ONLY.

DATE IN SERVICE _____
S. ENGINEER _____
INSPECTOR _____

RR-SP-139
SIGNAL STAGE 3

POWER & BATTERY CIRCUITS
INTERMEDIATE SIGNALS 145 & 146
VY 14.40
SH. 3 OF 6

RAILROAD SHEET NO.
139 OF 171

LAST REVISION 00-00-00
DATE PLOTTED = 7/18/2012
TIME PLOTTED = 3:41:38 PM

STATE OF CALIFORNIA - DEPARTMENT OF TRANSPORTATION
Caltrans® DESIGN
CONSULTANT FUNCTIONAL SUPERVISOR GLENN BREINDEL
CALCULATED-DESIGNED BY RAMON VALDEZ
CHECKED BY
REVISED BY
DATE REVISED

BORDER LAST REVISED 7/2/2010
USERNAME = gharibiana
DGN FILE = ...\MOC\XoRail\Sheet\SP-139.sht
RELATIVE BORDER SCALE IS IN INCHES 0 1 2 3
UNIT 1812
PROJECT NUMBER & PHASE 07000211191

Dist	COUNTY	ROUTE	POST MILES TOTAL PROJECT	SHEET No.	TOTAL SHEETS
7	LA	5	29.4/31.6	1900	1931

David McCord 05-21-12
REGISTERED CIVIL ENGINEER DATE

05-21-12
PLANS APPROVAL DATE

REGISTERED PROFESSIONAL ENGINEER DAVID WILLIAM McCORD No. E-15317 Exp. June 30, 2013 ELECTRICAL STATE OF CALIFORNIA

THE STATE OF CALIFORNIA OR ITS OFFICERS OR AGENTS SHALL NOT BE RESPONSIBLE FOR THE ACCURACY OR COMPLETENESS OF SCANNED COPIES OF THIS PLAN SHEET.

SCRRA
279 E. ARROW HIGHWAY
SAN DIMAS, CA 91773

XORAIL
201 NORTH INDIAN HILL BLVD
SUITE 201
CLAREMONT, CA 91711

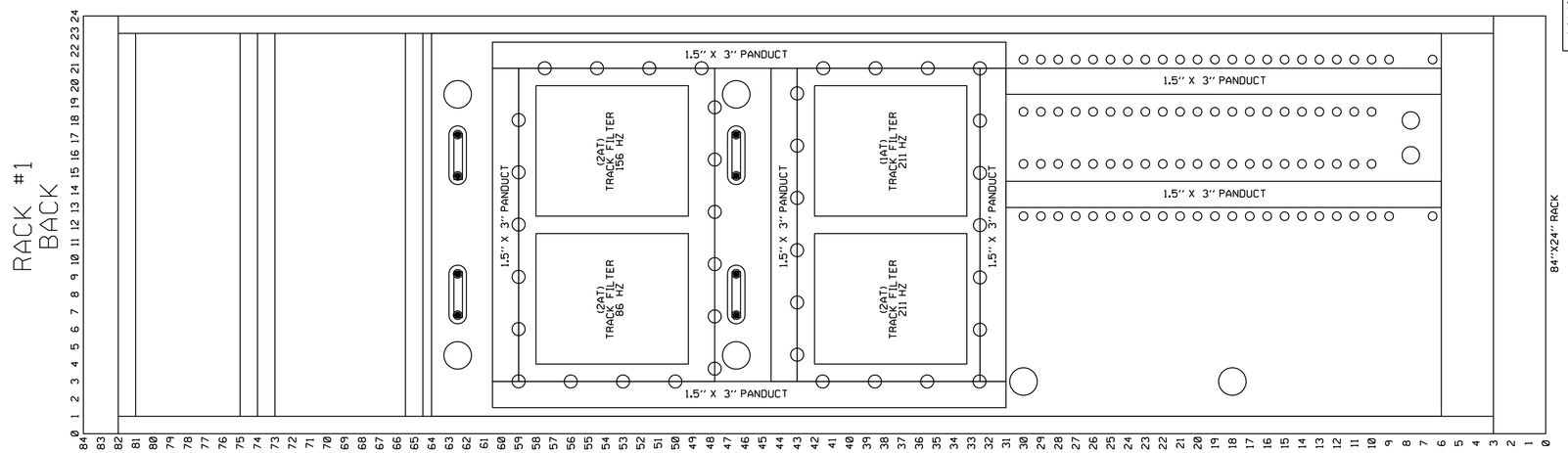

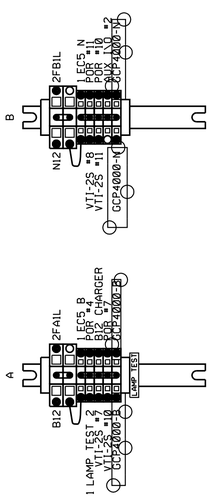

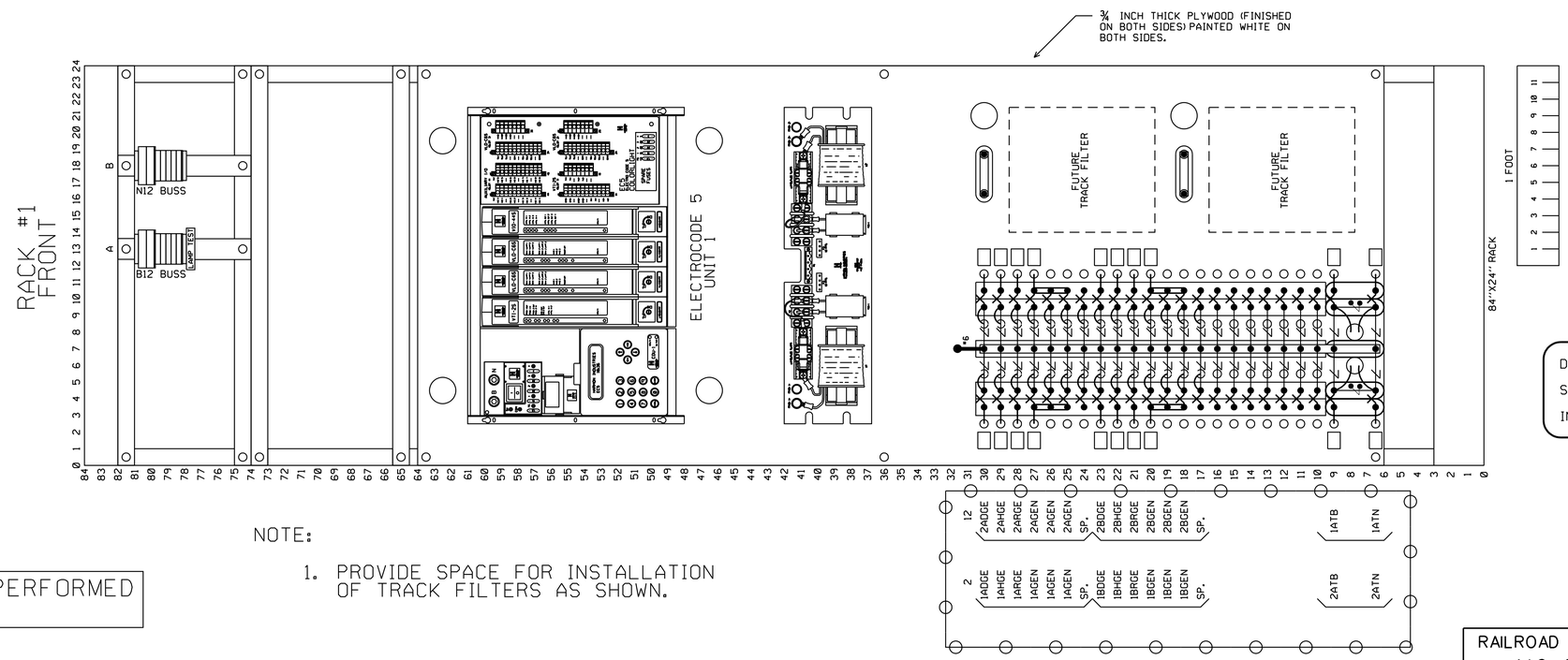

= IN

DATE IN SERVICE _____
S. ENGINEER _____
INSPECTOR _____

NOTE:

1. PROVIDE SPACE FOR INSTALLATION OF TRACK FILTERS AS SHOWN.

PTC WORK TO BE PERFORMED BY OTHERS.

THIS PLAN ACCURATE FOR RAILROAD WORK ONLY.

RR-SP-140
SIGNAL STAGE 3

RACK #1 LAYOUT
INTERMEDIATE SIGNALS 145 & 146
VY 14.40
SH. 4 OF 6

RAILROAD SHEET NO.
140 OF 171

STATE OF CALIFORNIA - DEPARTMENT OF TRANSPORTATION
Caltrans® DESIGN
CONSULTANT FUNCTIONAL SUPERVISOR: GLENN BREINDEL
CALCULATED-DESIGNED BY: RAMON VALDEZ
CHECKED BY
REVISED BY
DATE REVISED

LAST REVISION 00-00-00
DATE PLOTTED = 7/18/2012
TIME PLOTTED = 2:49:29 PM

BORDER LAST REVISED 7/2/2010
USERNAME = gharibiana
DGN FILE = ...\moc\xorail\sheet\SP-140.sht
RELATIVE BORDER SCALE IS IN INCHES 0 1 2 3
UNIT 1812
PROJECT NUMBER & PHASE 07000211191

Dist	COUNTY	ROUTE	POST MILES TOTAL PROJECT	SHEET No.	TOTAL SHEETS
7	LA	5	29.4/31.6	1901	1931

David McCord 05-21-12
REGISTERED CIVIL ENGINEER DATE

05-21-12
PLANS APPROVAL DATE

REGISTERED PROFESSIONAL ENGINEER
DAVID WILLIAM McCORD
No. E-15317
Exp. June 30, 2013
ELECTRICAL
STATE OF CALIFORNIA

THE STATE OF CALIFORNIA OR ITS OFFICERS OR AGENTS SHALL NOT BE RESPONSIBLE FOR THE ACCURACY OR COMPLETENESS OF SCANNED COPIES OF THIS PLAN SHEET.

SCRRA
279 E. ARROW HIGHWAY
SAN DIMAS, CA 91773

XORAIL
201 NORTH INDIAN HILL BLVD
SUITE 201
CLAREMONT, CA 91711

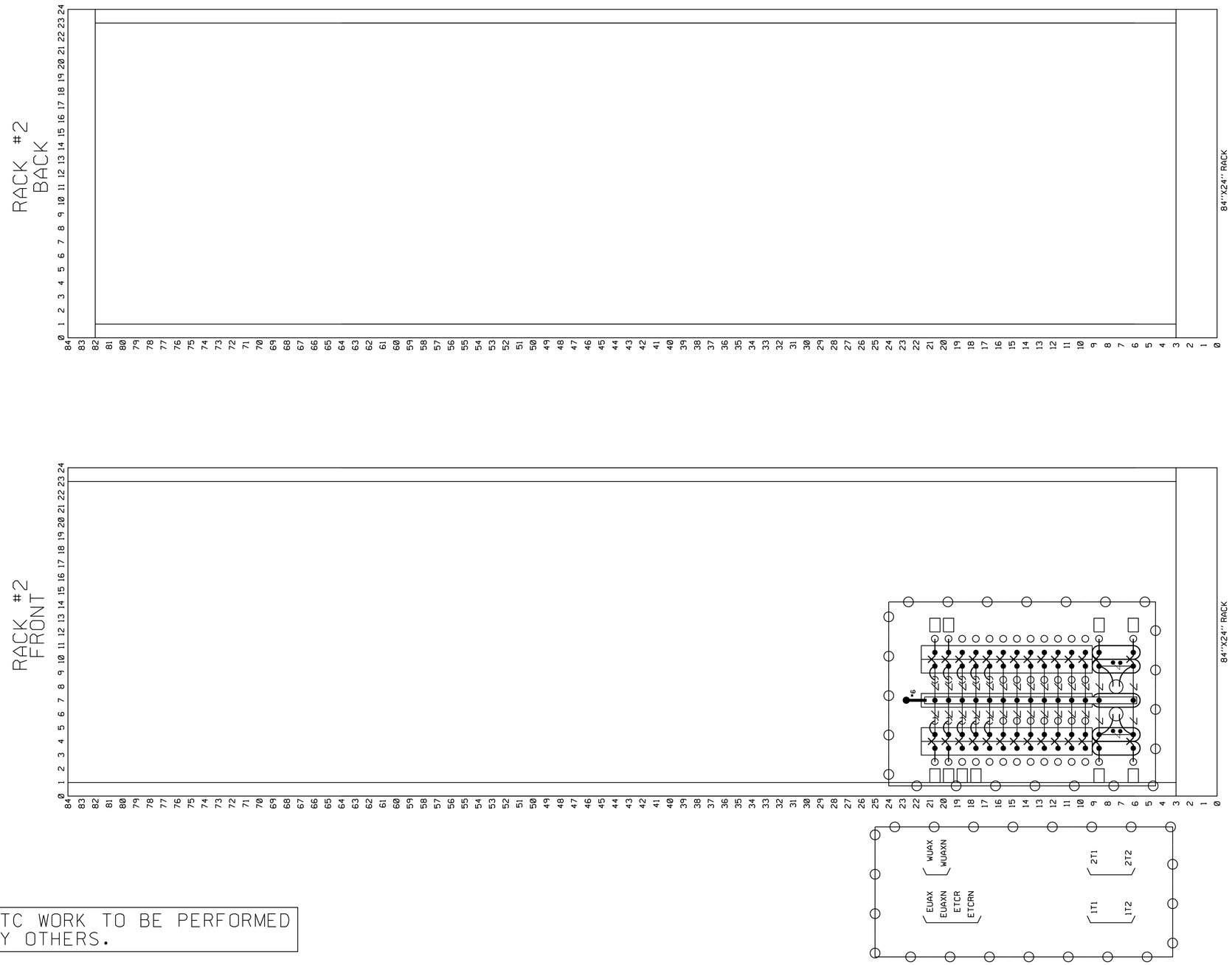

= OUT

= IN

DATE IN SERVICE _____
S. ENGINEER _____
INSPECTOR _____

PTC WORK TO BE PERFORMED BY OTHERS.

THIS PLAN ACCURATE FOR RAILROAD WORK ONLY.

RR-SP-141
SIGNAL STAGE 3

RACK #2 LAYOUT
INTERMEDIATE SIGNALS 145 & 146
VY 14.40
SH. 5 OF 6

RAILROAD SHEET NO.
141 OF 171

LAST REVISION 00-00-00
DATE PLOTTED = 7/18/2012
TIME PLOTTED = 2:49:31 PM

STATE OF CALIFORNIA - DEPARTMENT OF TRANSPORTATION
Caltrans® DESIGN
CONSULTANT FUNCTIONAL SUPERVISOR GLENN BREINDEL
CALCULATED-DESIGNED BY RAMON VALDEZ
CHECKED BY
REVISED BY
DATE REVISED

BORDER LAST REVISED 7/2/2010
USERNAME = gharibiana
DGN FILE = ...\moc\xorail\sheet\SP-141.sht
RELATIVE BORDER SCALE IS IN INCHES 0 1 2 3
UNIT 1812
PROJECT NUMBER & PHASE 07000211191

Dist	COUNTY	ROUTE	POST MILES TOTAL PROJECT	SHEET No.	TOTAL SHEETS
7	LA	5	29.4/31.6	1902	1931

David McCord 05-21-12
REGISTERED CIVIL ENGINEER DATE

05-21-12
PLANS APPROVAL DATE

REGISTERED PROFESSIONAL ENGINEER DAVID WILLIAM McCORD No. E-15317 Exp. June 30, 2013 ELECTRICAL STATE OF CALIFORNIA

THE STATE OF CALIFORNIA OR ITS OFFICERS OR AGENTS SHALL NOT BE RESPONSIBLE FOR THE ACCURACY OR COMPLETENESS OF SCANNED COPIES OF THIS PLAN SHEET.

SCRRA
279 E. ARROW HIGHWAY
SAN DIMAS, CA 91773

XORAIL
201 NORTH INDIAN HILL BLVD
SUITE 201
CLAREMONT, CA 91711

SIDE A

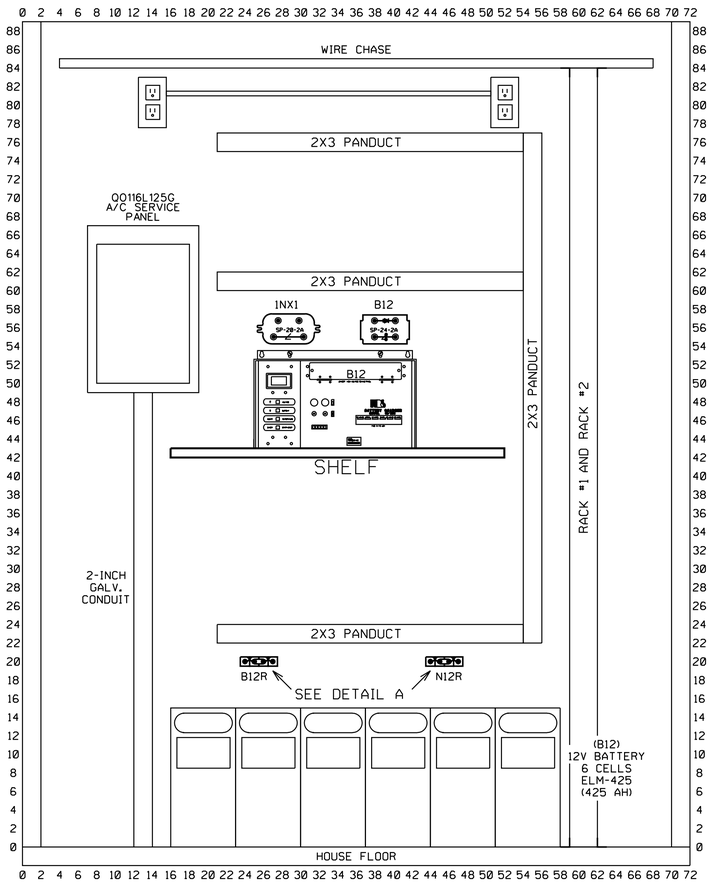

SIDE C

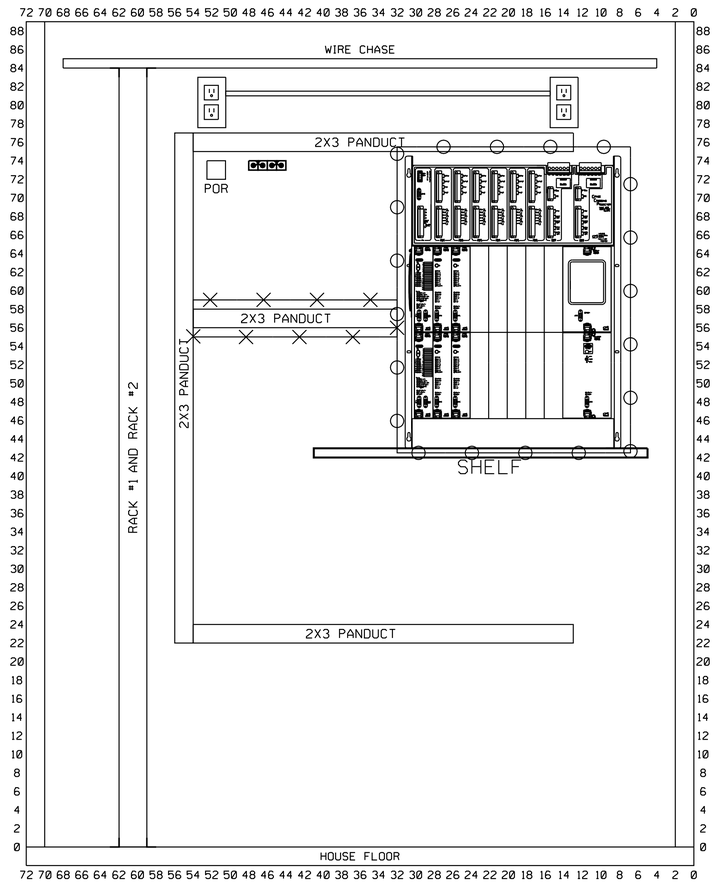

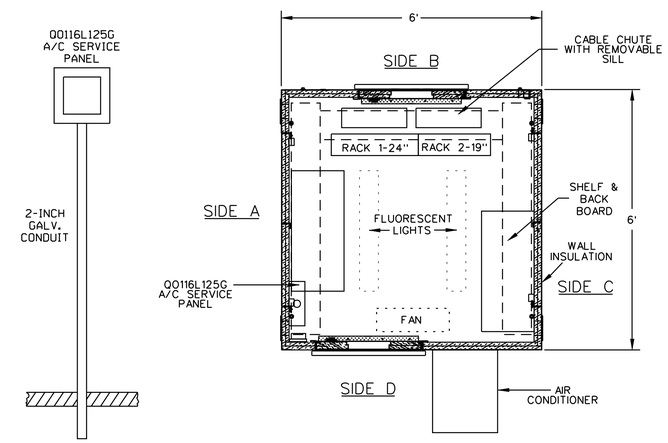

FLOOR PLAN
(NO SCALE)

6'X6' POWDER COATED STEEL SHELTER
OR
6'X6' ALUMINUM SHELTER WITH
STAINLESS STEEL HARDWARE.
(SEE NOTE 1)

= OUT

= IN

DATE IN SERVICE _____
S. ENGINEER _____
INSPECTOR _____

PTC WORK TO BE PERFORMED BY OTHERS.

NOTE:

1. HOUSE TYPE TO BE SPECIFIED UPON PURCHASE ORDER RELEASE.

RR-SP-142
SIGNAL STAGE 3

SIDES A & C - HOUSE LAYOUT
INTERMEDIATE SIGNALS 145 & 146
VY 14.40
SH. 6 OF 6

RAILROAD SHEET NO.
142 OF 171

THIS PLAN ACCURATE FOR RAILROAD WORK ONLY.

STATE OF CALIFORNIA - DEPARTMENT OF TRANSPORTATION
Caltrans® DESIGN
CONSULTANT FUNCTIONAL SUPERVISOR: GLENN BREINDEL
CALCULATED-DESIGNED BY: RAMON VALDEZ
CHECKED BY
REVISED BY
DATE REVISED

LAST REVISION 00-00-00
DATE PLOTTED = 7/18/2012
TIME PLOTTED = 2:49:32 PM

Dist	COUNTY	ROUTE	POST MILES TOTAL PROJECT	SHEET No.	TOTAL SHEETS
7	LA	5	29.4/31.6	1903	1931

David McCord 05-21-12
REGISTERED CIVIL ENGINEER DATE

05-21-12
PLANS APPROVAL DATE

REGISTERED PROFESSIONAL ENGINEER DAVID WILLIAM McCORD No. E-15317 Exp. June 30, 2013 ELECTRICAL STATE OF CALIFORNIA

THE STATE OF CALIFORNIA OR ITS OFFICERS OR AGENTS SHALL NOT BE RESPONSIBLE FOR THE ACCURACY OR COMPLETENESS OF SCANNED COPIES OF THIS PLAN SHEET.

SCRRA
279 E. ARROW HIGHWAY
SAN DIMAS, CA 91773

XORAIL
201 NORTH INDIAN HILL BLVD
SUITE 201
CLAREMONT, CA 91711

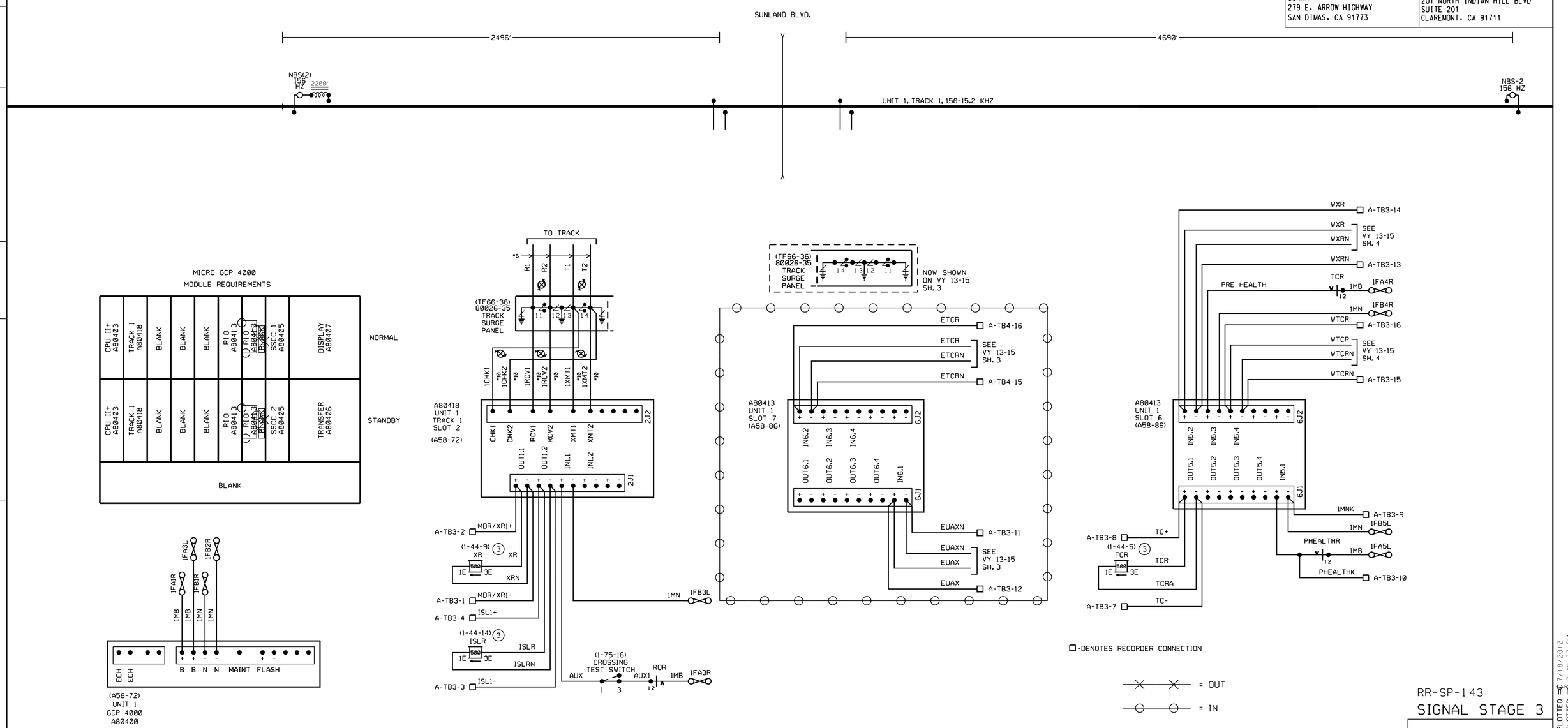

PTC WORK TO BE PERFORMED BY OTHERS.

THIS PLAN ACCURATE FOR RAILROAD WORK ONLY.

DATE IN SERVICE _____
S. ENGINEER _____
INSPECTOR _____

RR-SP-143
SIGNAL STAGE 3

GCP 4000 UNIT
SUNLAND BLVD.
VY 15.06
SH. 1 OF 10

RAILROAD SHEET NO.
143 OF 171

LAST REVISION 00-00-00
DATE PLOTTED = ℄ 7/18/2012
TIME PLOTTED = ℄ 2:49:33 PM

STATE OF CALIFORNIA - DEPARTMENT OF TRANSPORTATION
Caltrans® DESIGN
CONSULTANT FUNCTIONAL SUPERVISOR GLENN BREINDEL
CALCULATED-DESIGNED BY RAMON VALDEZ
CHECKED BY
REVISED BY
DATE REVISED

BORDER LAST REVISED 7/2/2010
USERNAME = ℄ gharibiana
DGN FILE = ℄ ...\moc\xorail\sheet\SP-143.sht
RELATIVE BORDER SCALE IS IN INCHES 0 1 2 3
UNIT 1812
PROJECT NUMBER & PHASE 07000211191

Dist	COUNTY	ROUTE	POST MILES TOTAL PROJECT	SHEET No.	TOTAL SHEETS
7	LA	5	29.4/31.6	1904	1931

David McCord 05-21-12
REGISTERED CIVIL ENGINEER DATE

05-21-12
PLANS APPROVAL DATE

REGISTERED PROFESSIONAL ENGINEER DAVID WILLIAM McCORD No. E-15317 Exp. June 30, 2013 ELECTRICAL STATE OF CALIFORNIA

THE STATE OF CALIFORNIA OR ITS OFFICERS OR AGENTS SHALL NOT BE RESPONSIBLE FOR THE ACCURACY OR COMPLETENESS OF SCANNED COPIES OF THIS PLAN SHEET.

SCRRA
279 E. ARROW HIGHWAY
SAN DIMAS, CA 91773

XORAIL
201 NORTH INDIAN HILL BLVD
SUITE 201
CLAREMONT, CA 91711

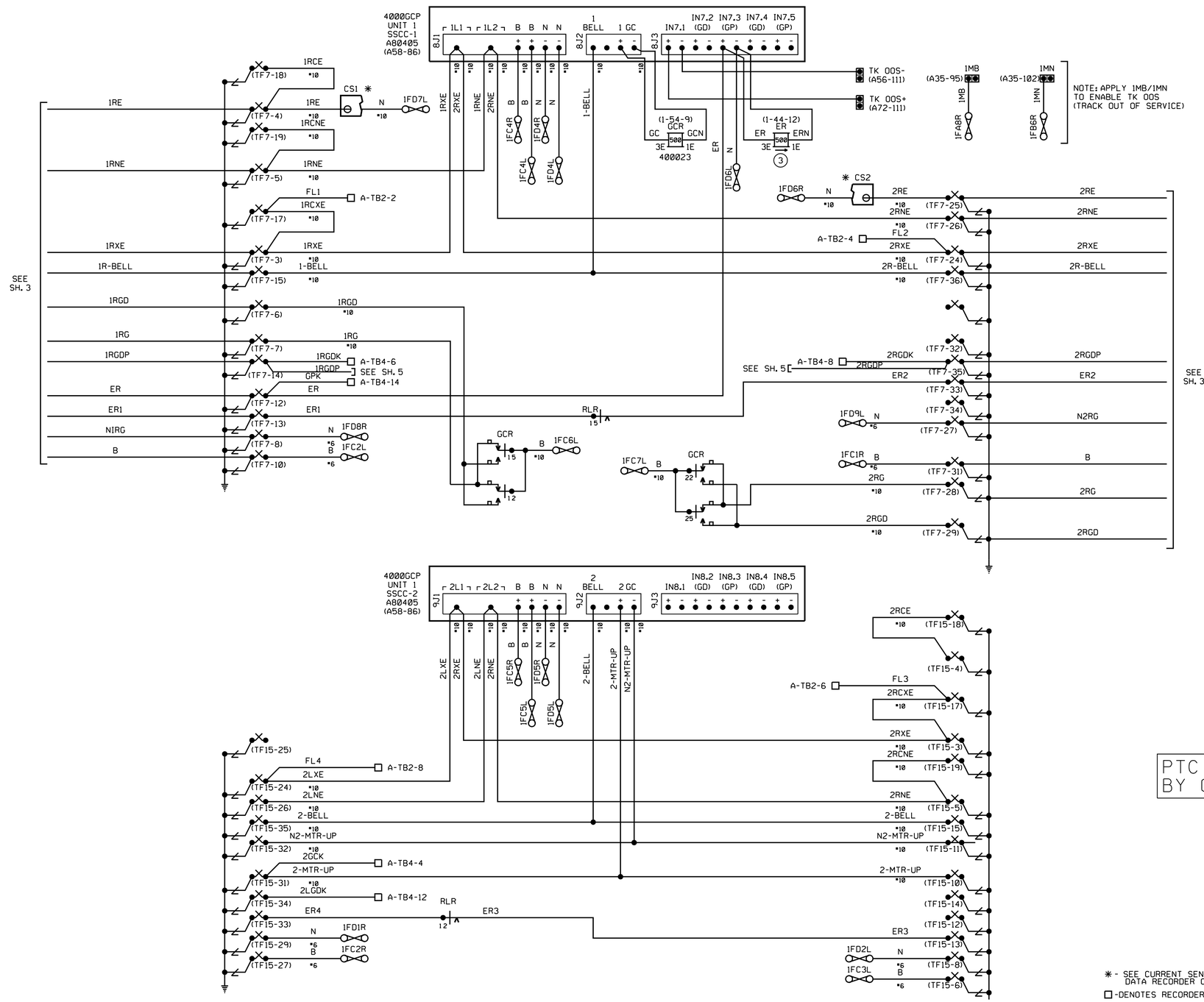

PTC WORK TO BE PERFORMED BY OTHERS.

✱ - SEE CURRENT SENSOR DETAIL ON DATA RECORDER CIRCUIT PLAN.
□ -DENOTES RECORDER CONNECTION.

RR-SP-144
SIGNAL STAGE 3

SSCC 1 & 2 CROSSING CONTROLLER
SUNLAND BLVD.
VY 15.06
SH. 2 OF 10

REFERENCE ONLY

RAILROAD SHEET NO.
144 OF 171

THIS PLAN ACCURATE FOR RAILROAD WORK ONLY.

STATE OF CALIFORNIA - DEPARTMENT OF TRANSPORTATION
Caltrans® DESIGN
CONSULTANT FUNCTIONAL SUPERVISOR GLENN BREINDEL
CALCULATED-DESIGNED BY RAMON VALDEZ
CHECKED BY
REVISED BY
DATE REVISED

LAST REVISION 00-00-00
DATE PLOTTED = 7/18/2012
TIME PLOTTED = 2:49:35 PM

Dist	COUNTY	ROUTE	POST MILES TOTAL PROJECT	SHEET No.	TOTAL SHEETS
7	LA	5	29.4/31.6	1905	1931

David McCord 05-21-12
REGISTERED CIVIL ENGINEER DATE

05-21-12
PLANS APPROVAL DATE

REGISTERED PROFESSIONAL ENGINEER DAVID WILLIAM McCORD No. E-15317 Exp. June 30, 2013 ELECTRICAL STATE OF CALIFORNIA

THE STATE OF CALIFORNIA OR ITS OFFICERS OR AGENTS SHALL NOT BE RESPONSIBLE FOR THE ACCURACY OR COMPLETENESS OF SCANNED COPIES OF THIS PLAN SHEET.

SCRRA
279 E. ARROW HIGHWAY
SAN DIMAS, CA 91773

XORAIL
201 NORTH INDIAN HILL BLVD
SUITE 201
CLAREMONT, CA 91711

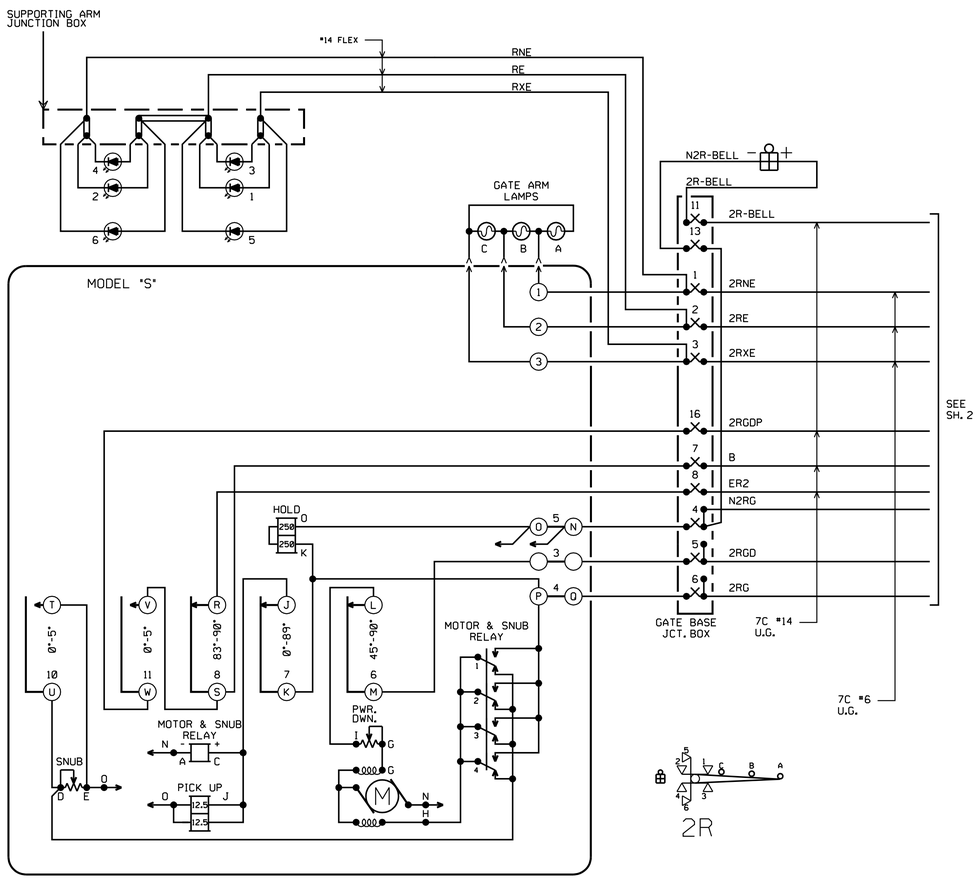

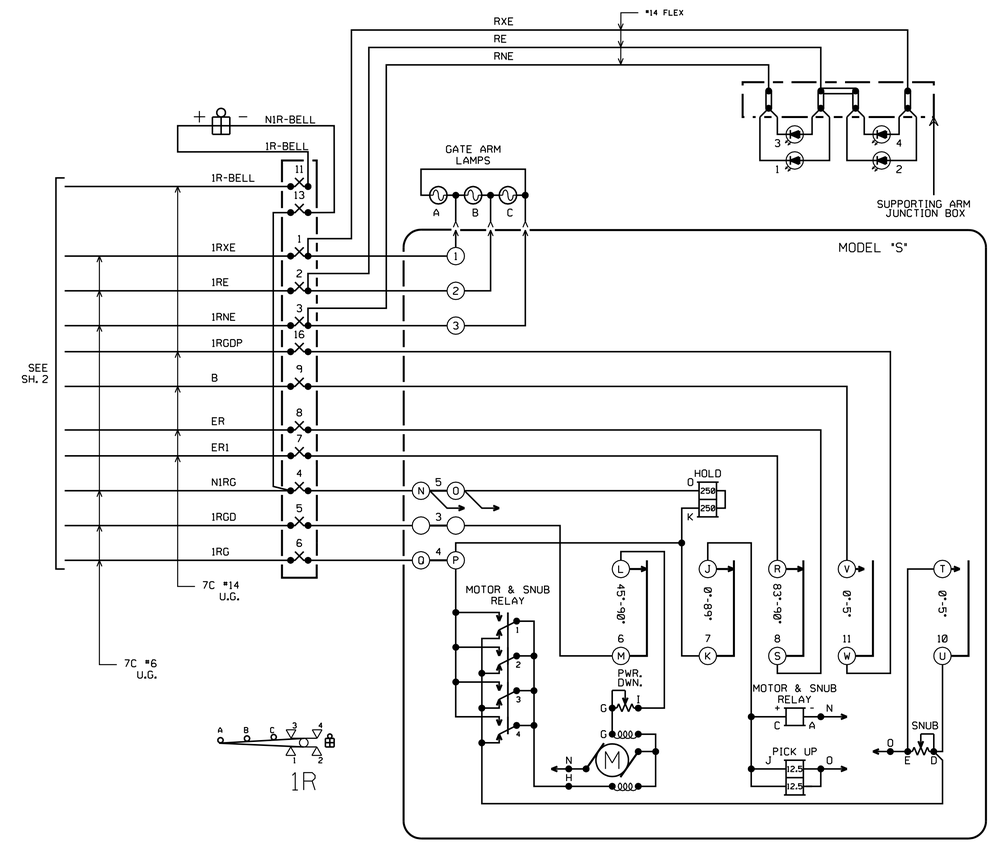

2R 7 COND #6 U.G.	
1	2RXE
2	2RE
3	2RNE
4	N2RG
5	2RG
6	2RGD
7	SP.

2R 7 COND #14 U.G.	
1	B
2	SP.
3	ER2
4	SP.
5	2RGDP
6	2R-BELL
7	SP.

1R 7 COND #6 U.G.	
1	1RXE
2	1RE
3	1RNE
4	1RGD
5	1RG
6	N1RG
7	SP.

1R 7 COND #14 U.G.	
1	B
2	SP.
3	ER
4	ER1
5	1RGDP
6	1R-BELL
7	SP.

PTC WORK TO BE PERFORMED BY OTHERS.

RR-SP-145
SIGNAL STAGE 3

GATE CIRCUIT PLAN
SUNLAND BLVD.
VY 15.06
SH. 3 OF 10

THIS PLAN ACCURATE FOR RAILROAD WORK ONLY.

REFERENCE ONLY

RAILROAD SHEET NO.
145 OF 171

LAST REVISION 00-00-00
DATE PLOTTED = 7/18/2012
TIME PLOTTED = 2:49:36 PM

STATE OF CALIFORNIA - DEPARTMENT OF TRANSPORTATION
Caltrans® DESIGN
CONSULTANT FUNCTIONAL SUPERVISOR GLENN BREINDEL
CALCULATED-DESIGNED BY RAMON VALDEZ
CHECKED BY
REVISED BY
DATE REVISED

BORDER LAST REVISED 7/2/2010
USERNAME = gharibiana
DGN FILE = ...\moc\xorail\sheet\SP-145.sht
RELATIVE BORDER SCALE IS IN INCHES 0 1 2 3
UNIT 1812
PROJECT NUMBER & PHASE 07000211191

Dist	COUNTY	ROUTE	POST MILES TOTAL PROJECT	SHEET No.	TOTAL SHEETS
7	LA	5	29.4/31.6	1906	1931

David McCord 05-21-12
REGISTERED CIVIL ENGINEER DATE

05-21-12
PLANS APPROVAL DATE

REGISTERED PROFESSIONAL ENGINEER DAVID WILLIAM McCORD No. E-15317 Exp. June 30, 2013 ELECTRICAL STATE OF CALIFORNIA

THE STATE OF CALIFORNIA OR ITS OFFICERS OR AGENTS SHALL NOT BE RESPONSIBLE FOR THE ACCURACY OR COMPLETENESS OF SCANNED COPIES OF THIS PLAN SHEET.

SCRRA
279 E. ARROW HIGHWAY
SAN DIMAS, CA 91773

XORAIL
201 NORTH INDIAN HILL BLVD
SUITE 201
CLAREMONT, CA 91711

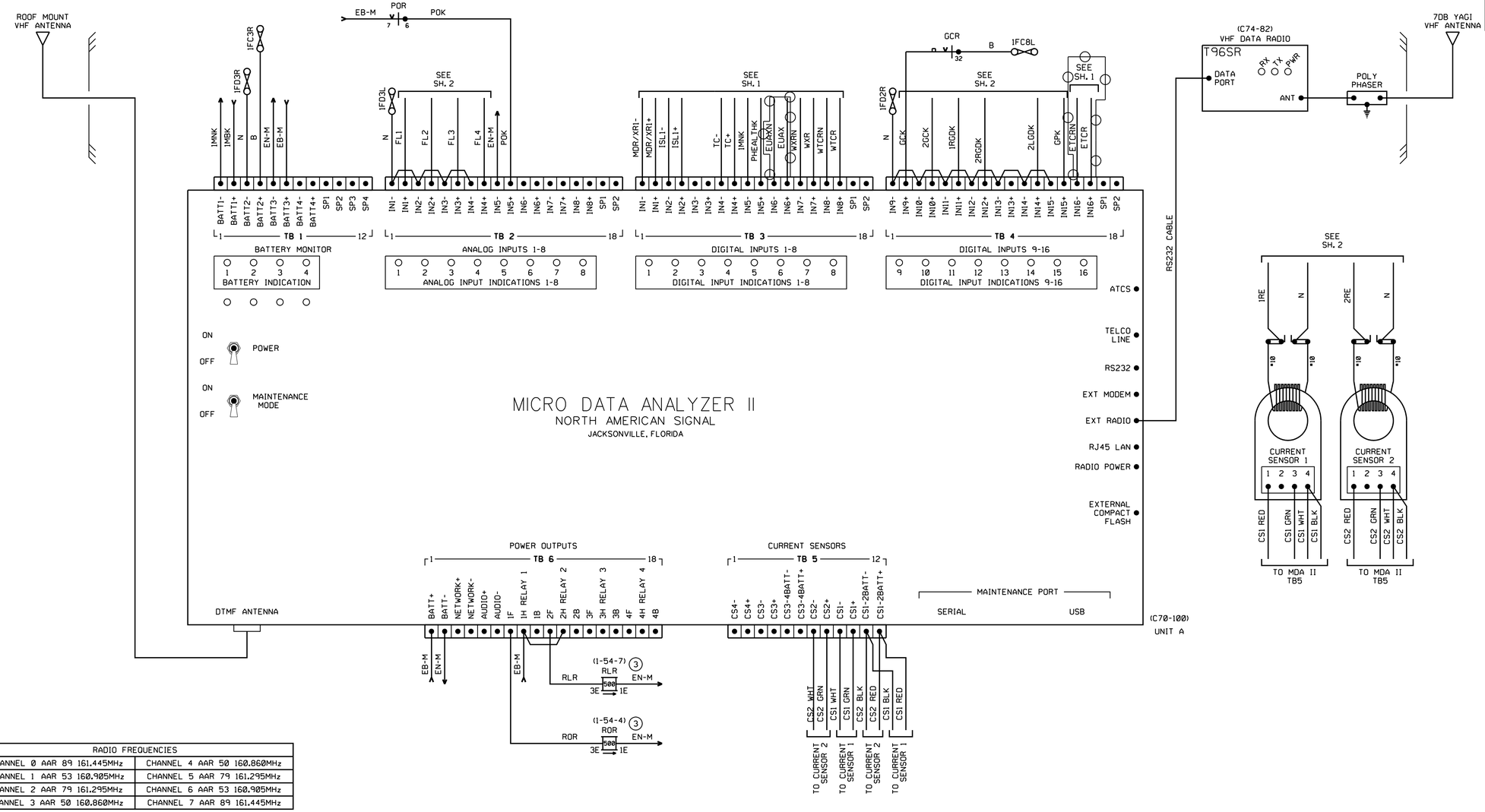

= OUT
= IN

RADIO FREQUENCIES	
CHANNEL 0 AAR 89 161.445MHz	CHANNEL 4 AAR 50 160.860MHz
CHANNEL 1 AAR 53 160.905MHz	CHANNEL 5 AAR 79 161.295MHz
CHANNEL 2 AAR 79 161.295MHz	CHANNEL 6 AAR 53 160.905MHz
CHANNEL 3 AAR 50 160.860MHz	CHANNEL 7 AAR 89 161.445MHz

MDA II SOFTWARE CONFIGURATION MANAGEMENT TABLE

APPLICATION	FILE NAME	DATE	DESCRIPTION
CPU LOADER	MBOOT10	03-05-06	
CPU EXECUTIVE	M2_EX19.S19	06-06-06	
CPU I/O	M2_IO19.S19	04-18-06	
CPU APPLICATION	747 280V		DOT *

DATE IN SERVICE _____
S. ENGINEER _____
INSPECTOR _____

PTC WORK TO BE PERFORMED BY OTHERS.

THIS PLAN ACCURATE FOR RAILROAD WORK ONLY.

RR-SP-146
SIGNAL STAGE 3

DATA RECORDER CIRCUIT PLAN
SUNLAND BLVD.
VY 15.06
SH. 4 OF 10

RAILROAD SHEET NO.
146 OF 171

LAST REVISION 00-00-00 DATE PLOTTED = 7/18/2012 TIME PLOTTED = 2:49:37 PM

STATE OF CALIFORNIA - DEPARTMENT OF TRANSPORTATION
Caltrans® DESIGN
CONSULTANT FUNCTIONAL SUPERVISOR GLENN BREINDEL
CALCULATED-DESIGNED BY RAMON VALDEZ
CHECKED BY
REVISED BY
DATE REVISED

BORDER LAST REVISED 7/2/2010
USERNAME = gharibiana
DGN FILE = ...\moc\xorail\sheet\SP-146.sht
RELATIVE BORDER SCALE IS IN INCHES 0 1 2 3
UNIT 1812
PROJECT NUMBER & PHASE 07000211191

Dist	COUNTY	ROUTE	POST MILES TOTAL PROJECT	SHEET No.	TOTAL SHEETS
7	LA	5	29.4/31.6	1907	1931

David McCord 05-21-12
REGISTERED CIVIL ENGINEER DATE

05-21-12
PLANS APPROVAL DATE

REGISTERED PROFESSIONAL ENGINEER DAVID WILLIAM McCORD No. E-15317 Exp. June 30, 2013 ELECTRICAL STATE OF CALIFORNIA

THE STATE OF CALIFORNIA OR ITS OFFICERS OR AGENTS SHALL NOT BE RESPONSIBLE FOR THE ACCURACY OR COMPLETENESS OF SCANNED COPIES OF THIS PLAN SHEET.

SCRRA
279 E. ARROW HIGHWAY
SAN DIMAS, CA 91773

XORAIL
201 NORTH INDIAN HILL BLVD
SUITE 201
CLAREMONT, CA 91711

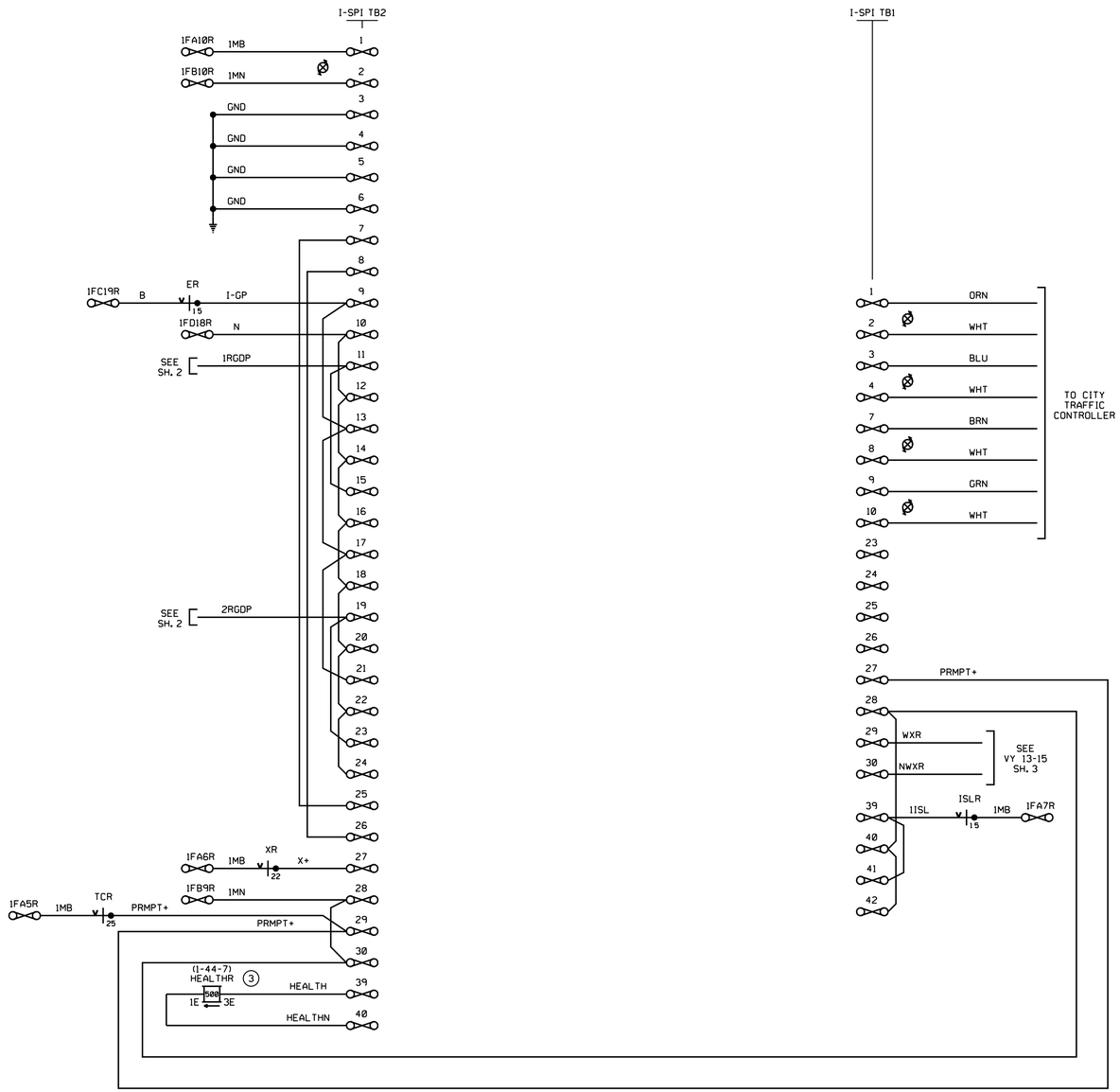

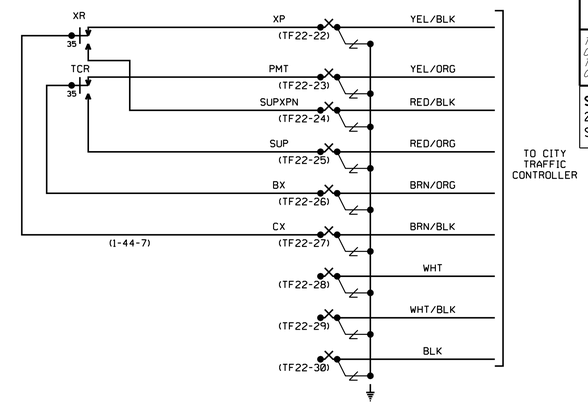

PTC WORK TO BE PERFORMED BY OTHERS.

NOTES:
1. ALL WIRE #16 AWG, UNLESS OTHERWISE NOTED.

RR-SP-147
SIGNAL STAGE 3

I-SPI CIRCUIT PLAN
SUNLAND BLVD.
VY 15.06
SH. 5 OF 10

THIS PLAN ACCURATE FOR RAILROAD WORK ONLY.

REFERENCE ONLY

RAILROAD SHEET NO.
147 OF 171

STATE OF CALIFORNIA - DEPARTMENT OF TRANSPORTATION
Caltrans® DESIGN
CONSULTANT FUNCTIONAL SUPERVISOR GLENN BREINDEL
CALCULATED-DESIGNED BY RAMON VALDEZ
CHECKED BY
REVISED BY
DATE REVISED

LAST REVISION 00-00-00
DATE PLOTTED = 7/18/2012
TIME PLOTTED = 2:49:38 PM

BORDER LAST REVISED 7/2/2010
USERNAME = gharibiana
DGN FILE = ...\moc\xorail\sheet\SP-147.sht
RELATIVE BORDER SCALE IS IN INCHES 0 1 2 3
UNIT 1812
PROJECT NUMBER & PHASE 07000211191

Dist	COUNTY	ROUTE	POST MILES TOTAL PROJECT	SHEET No.	TOTAL SHEETS
7	LA	5	29.4/31.6	1908	1931

David McCord 05-21-12
REGISTERED CIVIL ENGINEER DATE

05-21-12
PLANS APPROVAL DATE

REGISTERED PROFESSIONAL ENGINEER DAVID WILLIAM McCORD No. E-15317 Exp. June 30, 2013 ELECTRICAL STATE OF CALIFORNIA

THE STATE OF CALIFORNIA OR ITS OFFICERS OR AGENTS SHALL NOT BE RESPONSIBLE FOR THE ACCURACY OR COMPLETENESS OF SCANNED COPIES OF THIS PLAN SHEET.

SCRRA
279 E. ARROW HIGHWAY
SAN DIMAS, CA 91773

XORAIL
201 NORTH INDIAN HILL BLVD
SUITE 201
CLAREMONT, CA 91711

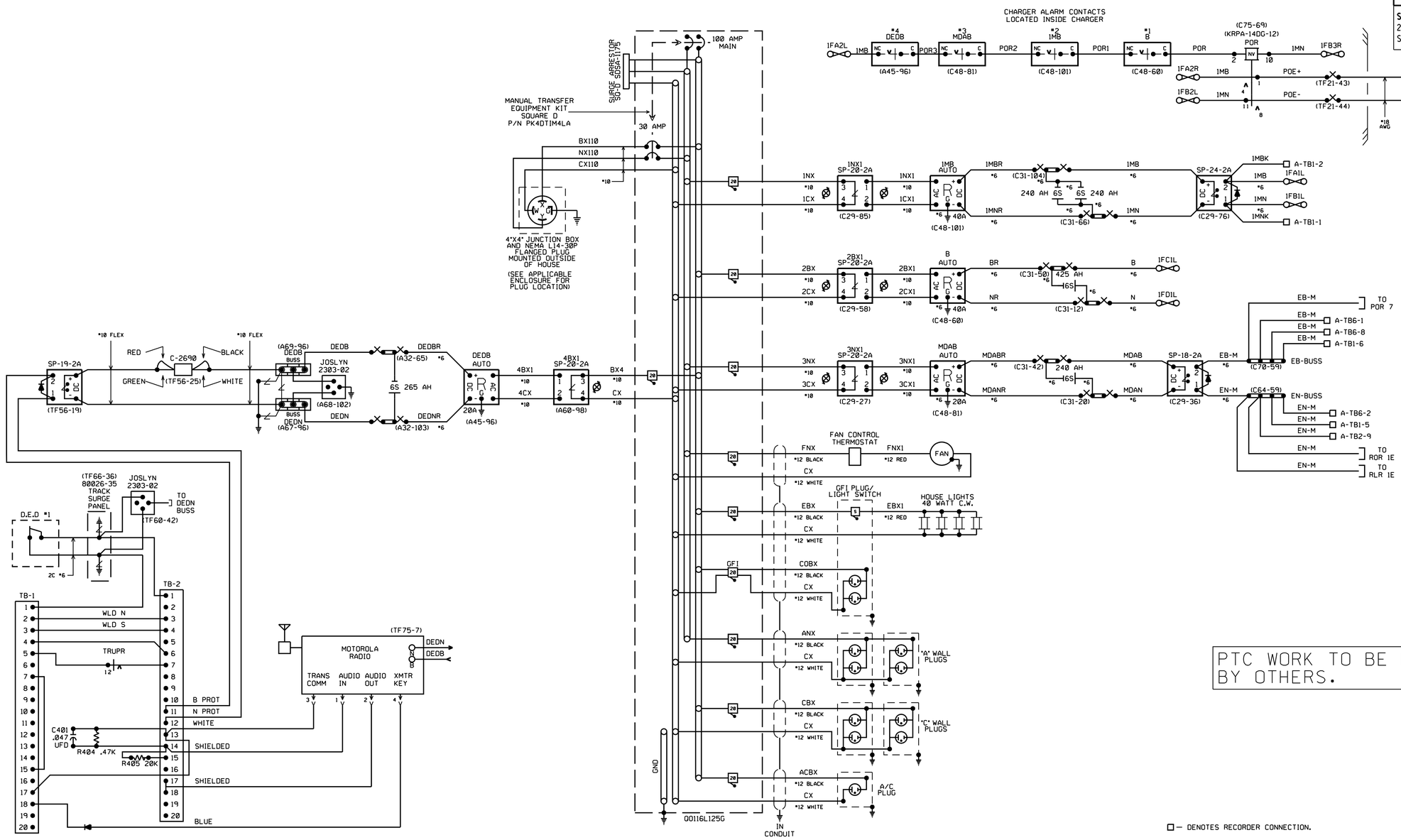

PTC WORK TO BE PERFORMED BY OTHERS.

□ — DENOTES RECORDER CONNECTION.

RR-SP-148
SIGNAL STAGE 3

POWER, BATTERY AND DRAGGING EQUIPMENT CIRCUITS
SUNLAND BLVD.
VY 15.06
SH. 6 OF 10

THIS PLAN ACCURATE FOR RAILROAD WORK ONLY.

REFERENCE ONLY

RAILROAD SHEET NO.
148 OF 171

STATE OF CALIFORNIA - DEPARTMENT OF TRANSPORTATION
Caltrans DESIGN
CONSULTANT FUNCTIONAL SUPERVISOR: GLENN BREINDEL
CALCULATED-DESIGNED BY: RAMON VALDEZ
CHECKED BY
REVISED BY
DATE REVISED

LAST REVISION 00-00-00
DATE PLOTTED = 7/18/2012
TIME PLOTTED = 2:49:39 PM

Dist	COUNTY	ROUTE	POST MILES TOTAL PROJECT	SHEET No.	TOTAL SHEETS
7	LA	5	29.4/31.6	1909	1931

David McCord 05-21-12
REGISTERED CIVIL ENGINEER DATE

05-21-12
PLANS APPROVAL DATE

REGISTERED PROFESSIONAL ENGINEER DAVID WILLIAM McCORD No. E-15317 Exp. June 30, 2013 ELECTRICAL STATE OF CALIFORNIA

THE STATE OF CALIFORNIA OR ITS OFFICERS OR AGENTS SHALL NOT BE RESPONSIBLE FOR THE ACCURACY OR COMPLETENESS OF SCANNED COPIES OF THIS PLAN SHEET.

SCRRA
279 E. ARROW HIGHWAY
SAN DIMAS, CA 91773

XORAIL
201 NORTH INDIAN HILL BLVD
SUITE 201
CLAREMONT, CA 91711

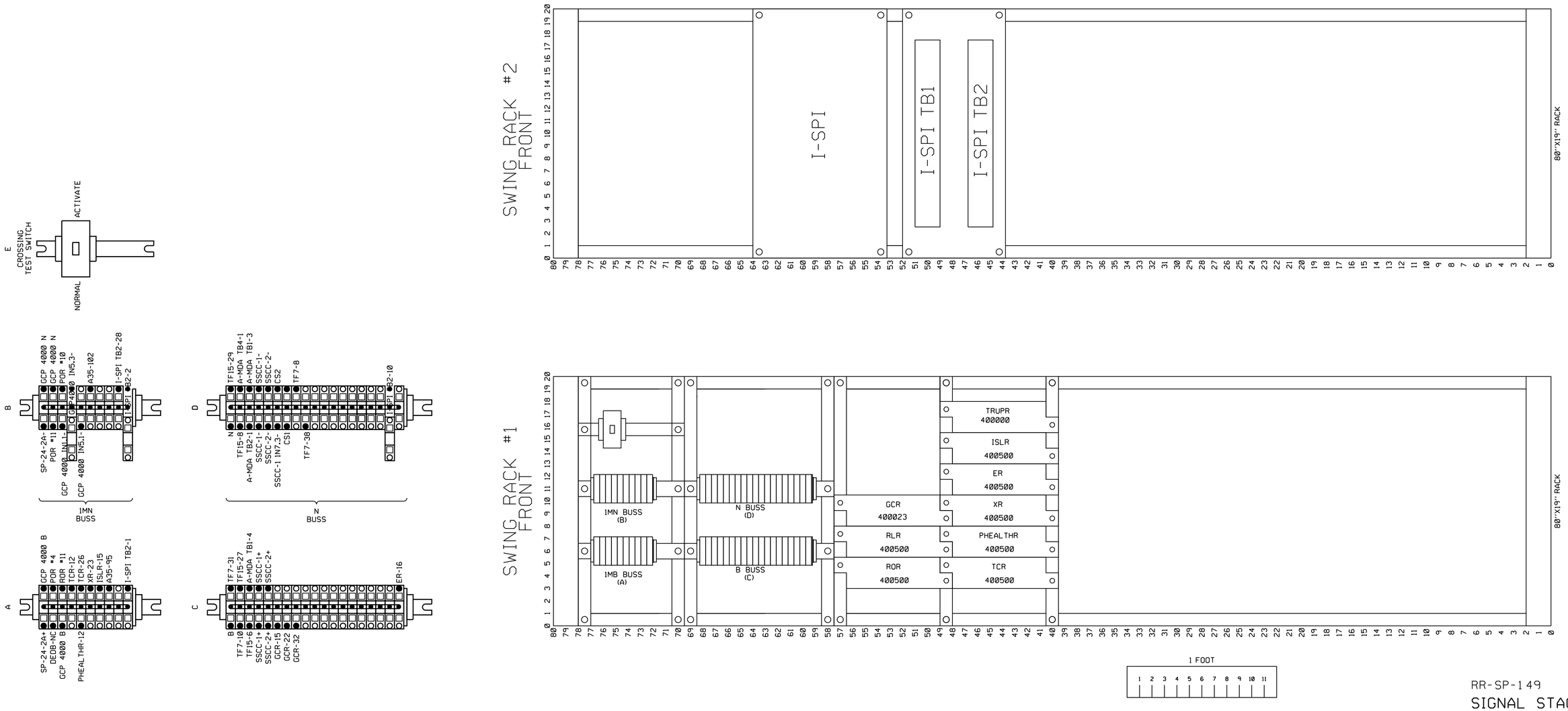

PTC WORK TO BE PERFORMED BY OTHERS.

THIS PLAN ACCURATE FOR RAILROAD WORK ONLY.

REFERENCE ONLY

RR-SP-149
SIGNAL STAGE 3

RACKS 1 & 2 LAYOUT
SUNLAND BLVD.
VY 15.06
SH. 7 OF 10

RAILROAD SHEET NO.
149 OF 171

STATE OF CALIFORNIA - DEPARTMENT OF TRANSPORTATION
Caltrans® DESIGN
CONSULTANT FUNCTIONAL SUPERVISOR: GLENN BREINDEL
CALCULATED-DESIGNED BY: RAMON VALDEZ
CHECKED BY
REVISED BY
DATE REVISED

LAST REVISION 00-00-00
DATE PLOTTED = $DATE
TIME PLOTTED = $TIME

BORDER LAST REVISED 7/2/2010
USERNAME = $USER
DGN FILE = $REQUEST
RELATIVE BORDER SCALE IS IN INCHES 0 1 2 3
UNIT 1812
PROJECT NUMBER & PHASE 07000211191

Dist	COUNTY	ROUTE	POST MILES TOTAL PROJECT	SHEET No.	TOTAL SHEETS
7	LA	5	29.4/31.6	1910	1931

David McCord 05-21-12
REGISTERED CIVIL ENGINEER DATE

05-21-12
PLANS APPROVAL DATE

REGISTERED PROFESSIONAL ENGINEER DAVID WILLIAM McCORD No. E-15317 Exp. June 30, 2013 ELECTRICAL STATE OF CALIFORNIA

THE STATE OF CALIFORNIA OR ITS OFFICERS OR AGENTS SHALL NOT BE RESPONSIBLE FOR THE ACCURACY OR COMPLETENESS OF SCANNED COPIES OF THIS PLAN SHEET.

SCRRA
279 E. ARROW HIGHWAY
SAN DIMAS, CA 91773

XORAIL
201 NORTH INDIAN HILL BLVD
SUITE 201
CLAREMONT, CA 91711

TERMINAL BOARD FRONT VIEW

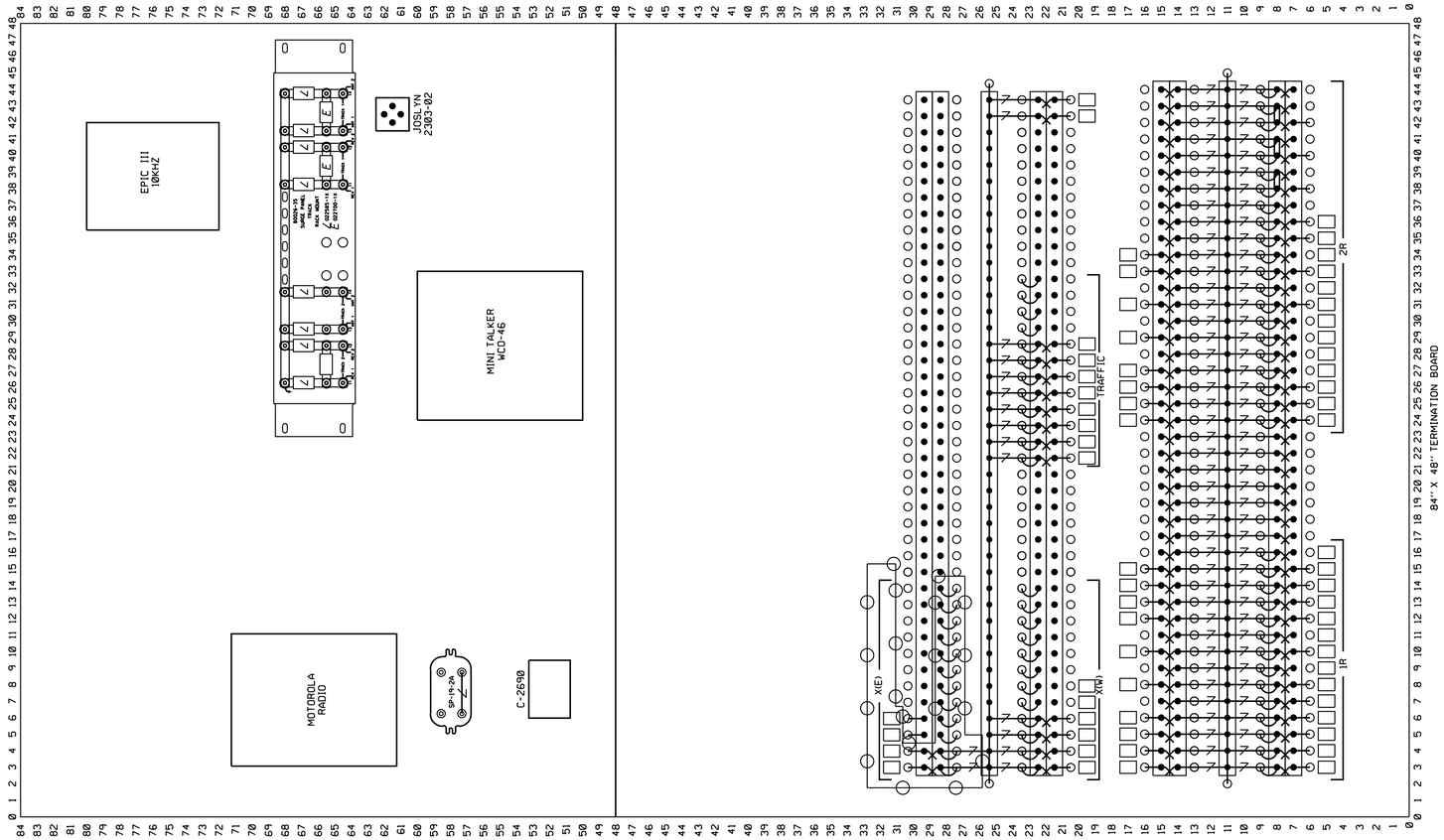

TERMINAL BOARD REAR VIEW

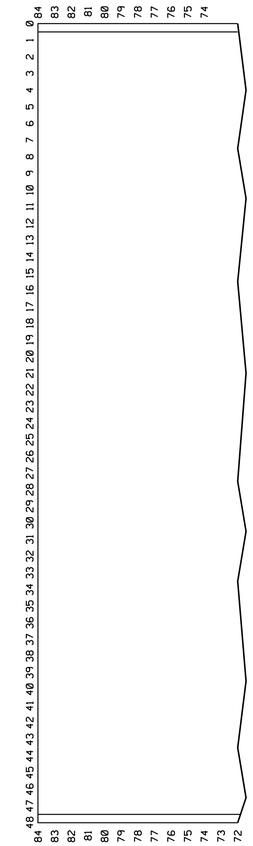

= OUT

= IN

PTC WORK TO BE PERFORMED BY OTHERS.

DATE IN SERVICE _____
S. ENGINEER _____
INSPECTOR _____

RR-SP-150
SIGNAL STAGE 3

TERMINAL BOARD LAYOUT
SUNLAND BLVD.
VY 15.06
SH. 8 OF 10

RAILROAD SHEET NO.
150 OF 171

THIS PLAN ACCURATE FOR RAILROAD WORK ONLY.

STATE OF CALIFORNIA - DEPARTMENT OF TRANSPORTATION
Caltrans® DESIGN

CONSULTANT FUNCTIONAL SUPERVISOR: GLENN BREINDEL
CALCULATED-DESIGNED BY: RAMON VALDEZ
CHECKED BY
REVISED BY
DATE REVISED

LAST REVISION 00-00-00
DATE PLOTTED = 7/18/2012
TIME PLOTTED = 2:49:40 PM

Dist	COUNTY	ROUTE	POST MILES TOTAL PROJECT	SHEET No.	TOTAL SHEETS
7	LA	5	29.4/31.6	1911	1931

David McCord 05-21-12
REGISTERED CIVIL ENGINEER DATE

05-21-12
PLANS APPROVAL DATE

REGISTERED PROFESSIONAL ENGINEER DAVID WILLIAM McCORD No. E-15317 Exp. June 30, 2013 ELECTRICAL STATE OF CALIFORNIA

THE STATE OF CALIFORNIA OR ITS OFFICERS OR AGENTS SHALL NOT BE RESPONSIBLE FOR THE ACCURACY OR COMPLETENESS OF SCANNED COPIES OF THIS PLAN SHEET.

SCRRA
279 E. ARROW HIGHWAY
SAN DIMAS, CA 91773

XORAIL
201 NORTH INDIAN HILL BLVD
SUITE 201
CLAREMONT, CA 91711

SIDE A

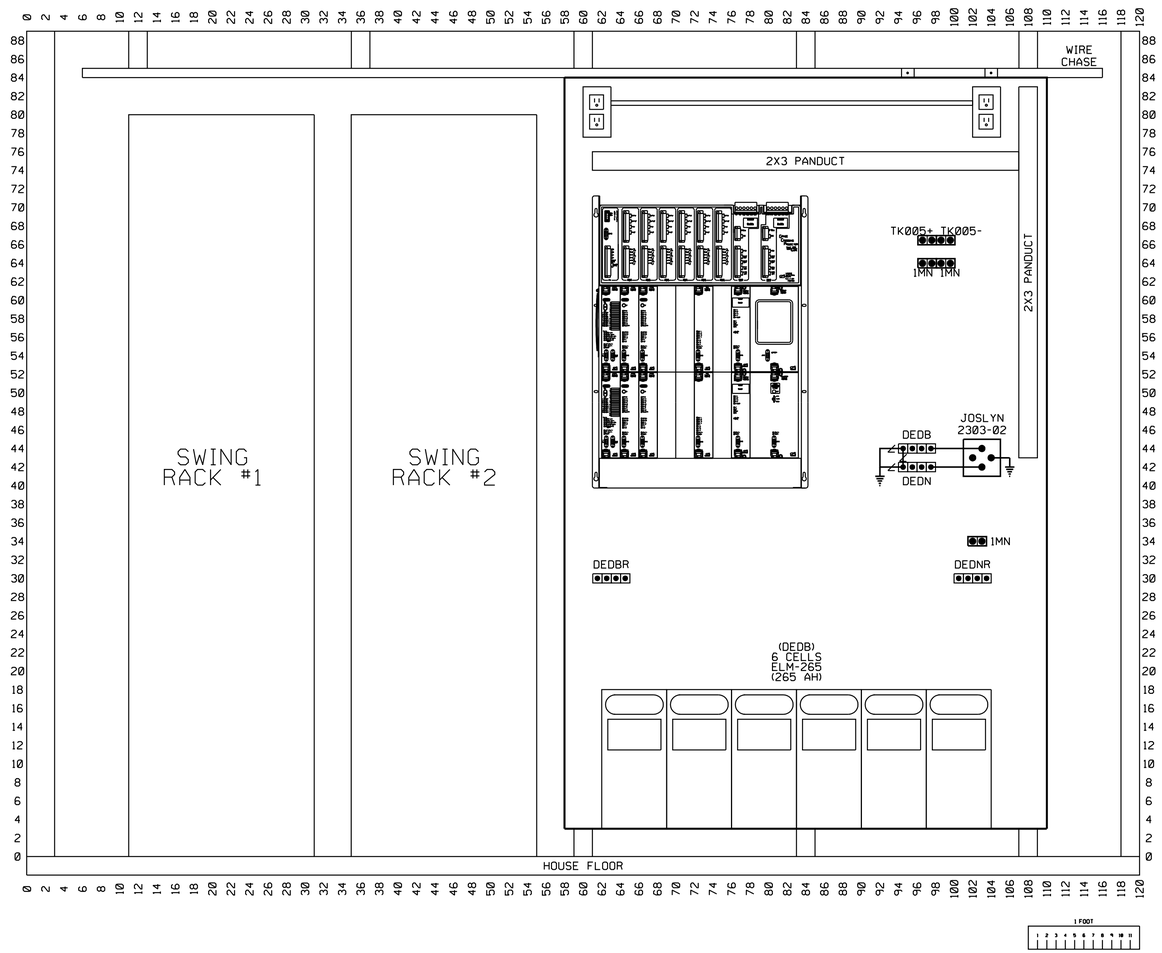

PTC WORK TO BE PERFORMED BY OTHERS.

THIS PLAN ACCURATE FOR RAILROAD WORK ONLY.

REFERENCE ONLY

RR-SP-151
SIGNAL STAGE 3

SIDE A - HOUSE LAYOUT
SUNLAND BLVD.
VY 15.06
SH. 9 OF 10

RAILROAD SHEET NO.
151 OF 175

STATE OF CALIFORNIA - DEPARTMENT OF TRANSPORTATION
Caltrans® DESIGN

CONSULTANT FUNCTIONAL SUPERVISOR: GLENN BREINDEL
CALCULATED-DESIGNED BY: RAMON VALDEZ
CHECKED BY
REVISED BY
DATE REVISED

LAST REVISION 00-00-00
DATE PLOTTED = 7/18/2012
TIME PLOTTED = 2:49:42 PM

BORDER LAST REVISED 7/2/2010
USERNAME = gharibiana
DGN FILE = ...\moc\xorail\sheet\SP-151.sht
RELATIVE BORDER SCALE IS IN INCHES 0 1 2 3
UNIT 1812
PROJECT NUMBER & PHASE 07000211191

Dist	COUNTY	ROUTE	POST MILES TOTAL PROJECT	SHEET No.	TOTAL SHEETS
7	LA	5	29.4/31.6	1912	1931

David McCord 05-21-12
REGISTERED CIVIL ENGINEER DATE

05-21-12
PLANS APPROVAL DATE

REGISTERED PROFESSIONAL ENGINEER DAVID WILLIAM McCORD No. E-15317 Exp. June 30, 2013 ELECTRICAL STATE OF CALIFORNIA

THE STATE OF CALIFORNIA OR ITS OFFICERS OR AGENTS SHALL NOT BE RESPONSIBLE FOR THE ACCURACY OR COMPLETENESS OF SCANNED COPIES OF THIS PLAN SHEET.

SCRRA
279 E. ARROW HIGHWAY
SAN DIMAS, CA 91773

XORAIL
201 NORTH INDIAN HILL BLVD
SUITE 201
CLAREMONT, CA 91711

SIDE C

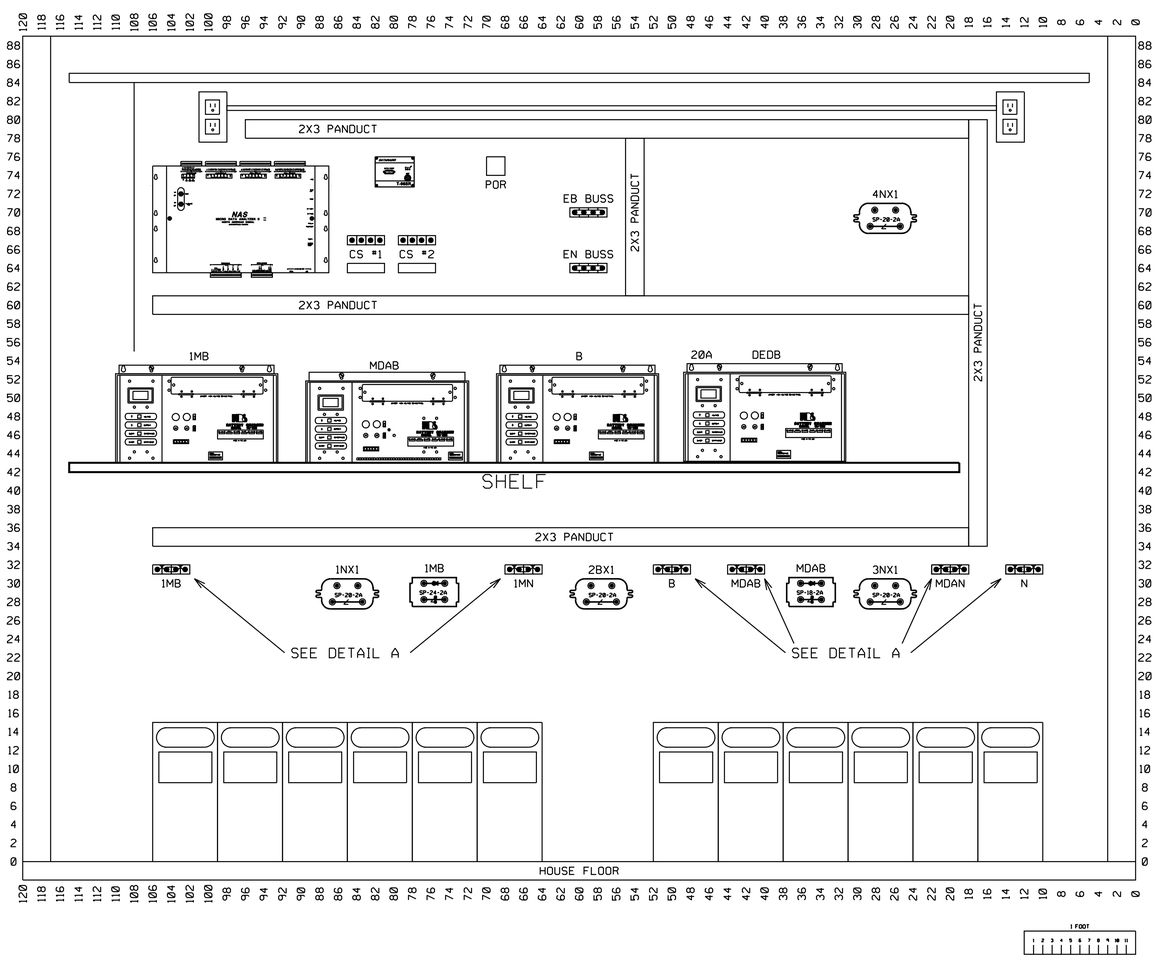

8'X10' HOUSE

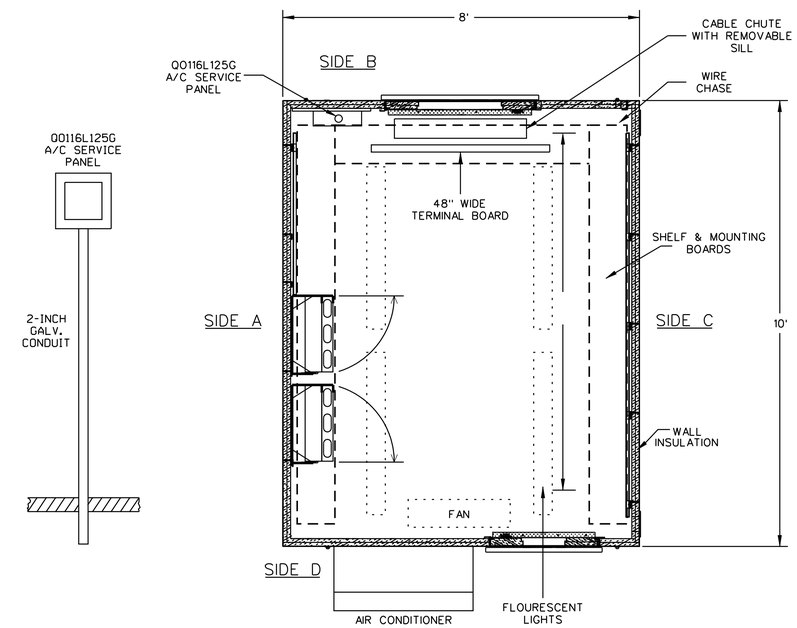

FLOOR PLAN
(NO SCALE)

8'X10' POWDER COATED STEEL SHELTER
OR
8'X10' ALUMINUM SHELTER WITH
STAINLESS STEEL HARDWARE.
(SEE NOTE 1)

PTC WORK TO BE PERFORMED BY OTHERS.

RR-SP-152
SIGNAL STAGE 3

SIDE C - HOUSE LAYOUT
SUNLAND BLVD.
VY 15.06
SH.10 OF 10

THIS PLAN ACCURATE FOR RAILROAD WORK ONLY.

REFERENCE ONLY

RAILROAD SHEET NO.
152 OF 171

STATE OF CALIFORNIA - DEPARTMENT OF TRANSPORTATION
Caltrans®
DESIGN
CONSULTANT FUNCTIONAL SUPERVISOR
GLENN BREINDEL
CALCULATED-DESIGNED BY
CHECKED BY
RAMON VALDEZ
REVISED BY
DATE REVISED

LAST REVISION 00-00-00
DATE PLOTTED = 7/18/2012
TIME PLOTTED = 2:49:43 PM

BORDER LAST REVISED 7/2/2010
USERNAME = gharibiana
DGN FILE = ...\moc\xorail\sheet\SP-152.sht
RELATIVE BORDER SCALE IS IN INCHES 0 1 2 3
UNIT 1812
PROJECT NUMBER & PHASE 07000211191

Dist	COUNTY	ROUTE	POST MILES TOTAL PROJECT	SHEET No.	TOTAL SHEETS
7	LA	5	29.4/31.6	1913	1931

David McCord 05-21-12
REGISTERED CIVIL ENGINEER DATE

05-21-12
PLANS APPROVAL DATE

REGISTERED PROFESSIONAL ENGINEER
DAVID WILLIAM McCORD
No. E-15317
Exp. June 30, 2013
ELECTRICAL
STATE OF CALIFORNIA

THE STATE OF CALIFORNIA OR ITS OFFICERS OR AGENTS SHALL NOT BE RESPONSIBLE FOR THE ACCURACY OR COMPLETENESS OF SCANNED COPIES OF THIS PLAN SHEET.

SCRRA
279 E. ARROW HIGHWAY
SAN DIMAS, CA 91773

XORAIL
201 NORTH INDIAN HILL BLVD
SUITE 201
CLAREMONT, CA 91711

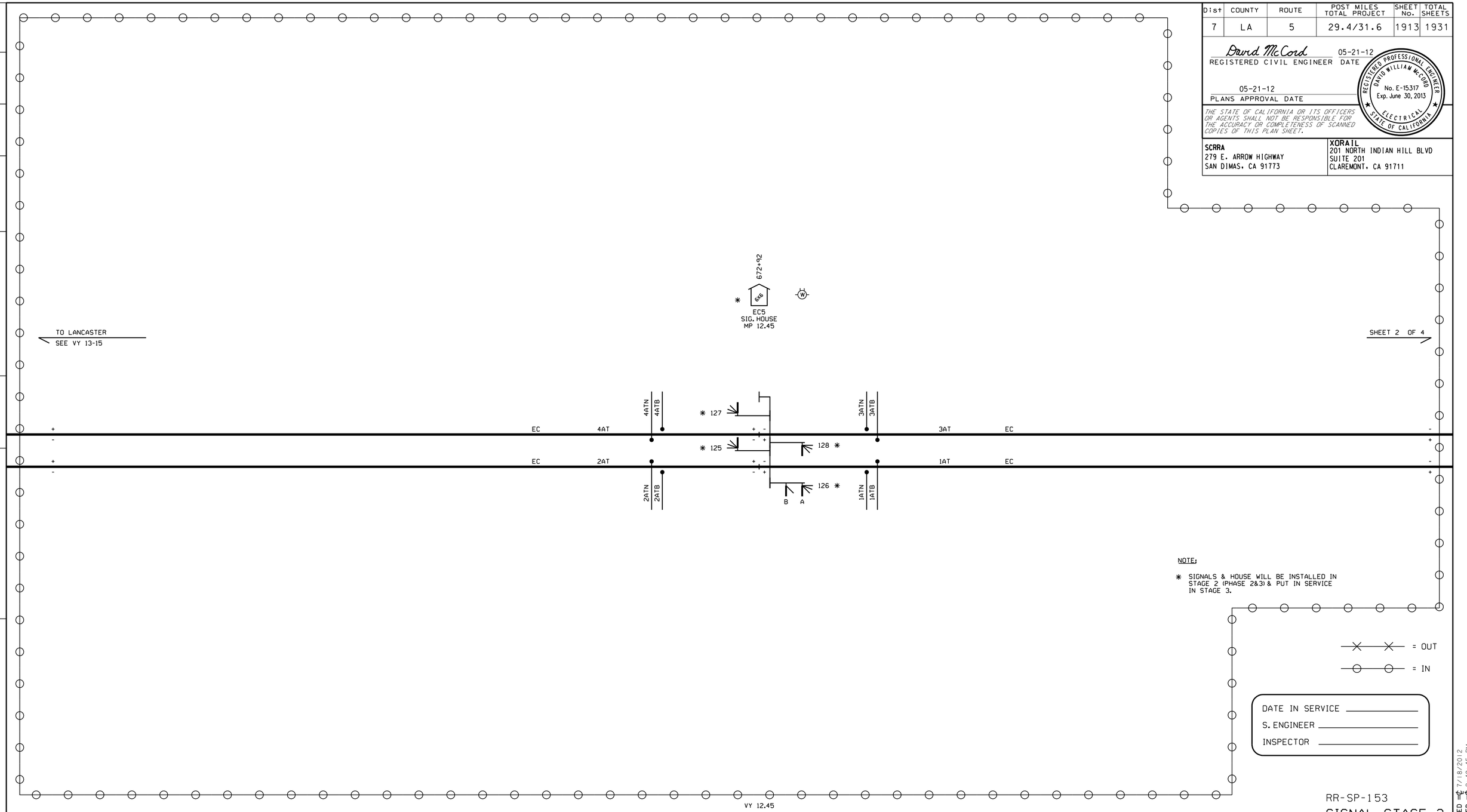

NOTE;

✱ SIGNALS & HOUSE WILL BE INSTALLED IN STAGE 2 (PHASE 2&3) & PUT IN SERVICE IN STAGE 3.

= OUT

= IN

DATE IN SERVICE _____
S. ENGINEER _____
INSPECTOR _____

PTC WORK TO BE PERFORMED BY OTHERS.

THIS PLAN ACCURATE FOR RAILROAD WORK ONLY.

RR-SP-153
SIGNAL STAGE 3

SIGNAL CIRCUIT PLAN
CP ALLEN - CP HOLLYWOOD
VY 10-13
SH. 1 OF 4

RAILROAD SHEET NO.
153 OF 171

STATE OF CALIFORNIA - DEPARTMENT OF TRANSPORTATION
Caltrans® DESIGN

CONSULTANT FUNCTIONAL SUPERVISOR: GLENN BREINDEL
CALCULATED-DESIGNED BY: RAMON VALDEZ
CHECKED BY
REVISED BY
DATE REVISED

LAST REVISION 00-00-00
DATE PLOTTED = 7/18/2012
TIME PLOTTED = 2:49:45 PM

BORDER LAST REVISED 7/2/2010
USERNAME = gharibiana
DGN FILE = ...\moc\xorail\sheet\SP-153.sht
RELATIVE BORDER SCALE IS IN INCHES 0 1 2 3
UNIT 1812
PROJECT NUMBER & PHASE 07000211191

Dist	COUNTY	ROUTE	POST MILES TOTAL PROJECT	SHEET No.	TOTAL SHEETS
7	LA	5	29.4/31.6	1914	1931

David McCord 05-21-12
REGISTERED CIVIL ENGINEER DATE

05-21-12
PLANS APPROVAL DATE

REGISTERED PROFESSIONAL ENGINEER DAVID WILLIAM McCORD No. E-15317 Exp. June 30, 2013 ELECTRICAL STATE OF CALIFORNIA

THE STATE OF CALIFORNIA OR ITS OFFICERS OR AGENTS SHALL NOT BE RESPONSIBLE FOR THE ACCURACY OR COMPLETENESS OF SCANNED COPIES OF THIS PLAN SHEET.

SCRRA
279 E. ARROW HIGHWAY
SAN DIMAS, CA 91773

XORAIL
201 NORTH INDIAN HILL BLVD
SUITE 201
CLAREMONT, CA 91711

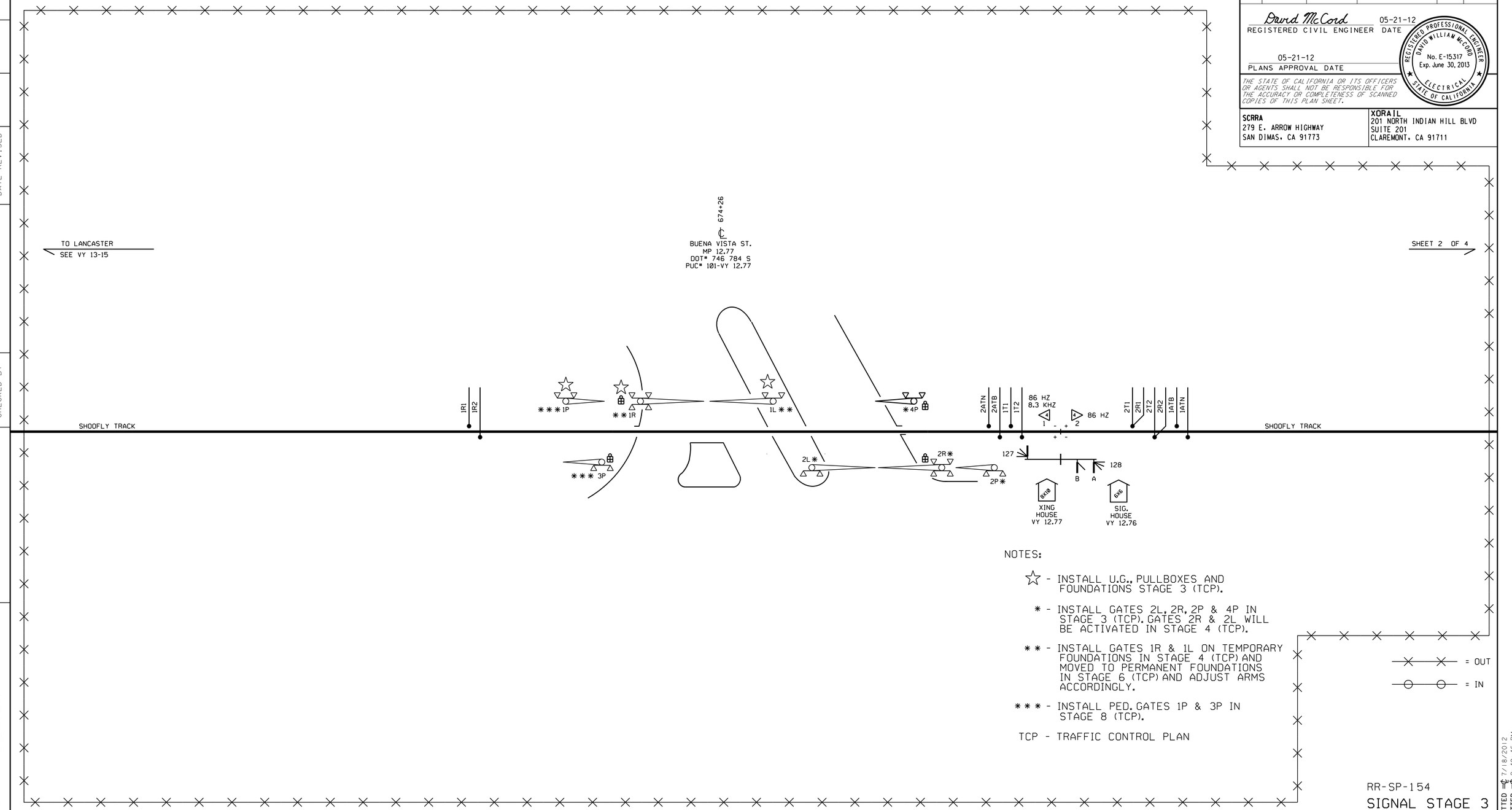

NOTES:

☆ - INSTALL U.G., PULLBOXES AND FOUNDATIONS STAGE 3 (TCP).

* - INSTALL GATES 2L, 2R, 2P & 4P IN STAGE 3 (TCP). GATES 2R & 2L WILL BE ACTIVATED IN STAGE 4 (TCP).

** - INSTALL GATES 1R & 1L ON TEMPORARY FOUNDATIONS IN STAGE 4 (TCP) AND MOVED TO PERMANENT FOUNDATIONS IN STAGE 6 (TCP) AND ADJUST ARMS ACCORDINGLY.

*** - INSTALL PED. GATES 1P & 3P IN STAGE 8 (TCP).

TCP - TRAFFIC CONTROL PLAN

PTC WORK TO BE PERFORMED BY OTHERS.

THIS PLAN ACCURATE FOR RAILROAD WORK ONLY.

RR-SP-154
SIGNAL STAGE 3

SIGNAL CIRCUIT PLAN
CP ALLEN - CP HOLLYWOOD
VY 10-13
SH. IX OF 4

RAILROAD SHEET NO.
154 OF 171

STATE OF CALIFORNIA - DEPARTMENT OF TRANSPORTATION
Caltrans® DESIGN
CONSULTANT FUNCTIONAL SUPERVISOR GLENN BREINDEL
CALCULATED-DESIGNED BY RAMON VALDEZ
CHECKED BY
REVISED BY
DATE REVISED

LAST REVISION 00-00-00
DATE PLOTTED = 7/18/2012
TIME PLOTTED = 2:49:46 PM

Dist	COUNTY	ROUTE	POST MILES TOTAL PROJECT	SHEET No.	TOTAL SHEETS
7	LA	5	29.4/31.6	1915	1931

David McCord 05-21-12
REGISTERED CIVIL ENGINEER DATE

05-21-12
PLANS APPROVAL DATE

REGISTERED PROFESSIONAL ENGINEER DAVID WILLIAM McCORD No. E-15317 Exp. June 30, 2013 ELECTRICAL STATE OF CALIFORNIA

THE STATE OF CALIFORNIA OR ITS OFFICERS OR AGENTS SHALL NOT BE RESPONSIBLE FOR THE ACCURACY OR COMPLETENESS OF SCANNED COPIES OF THIS PLAN SHEET.

SCRRA
279 E. ARROW HIGHWAY
SAN DIMAS, CA 91773

XORAIL
201 NORTH INDIAN HILL BLVD
SUITE 201
CLAREMONT, CA 91711

PTC WORK TO BE PERFORMED BY OTHERS.

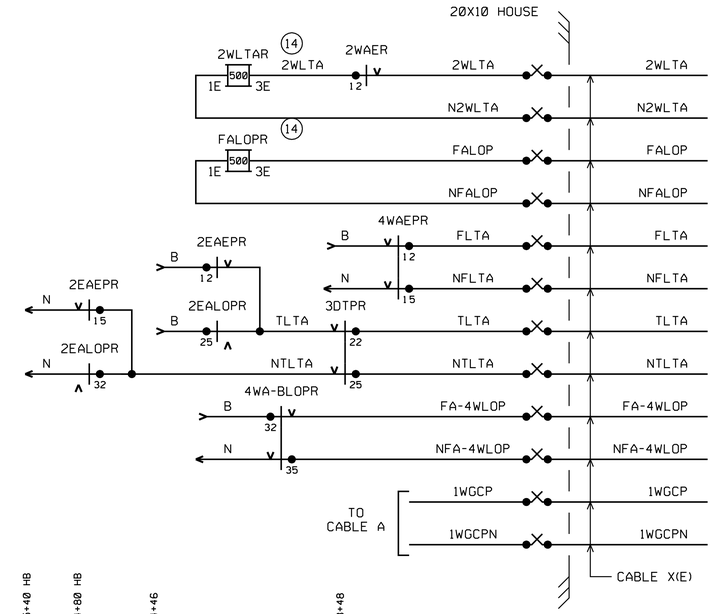

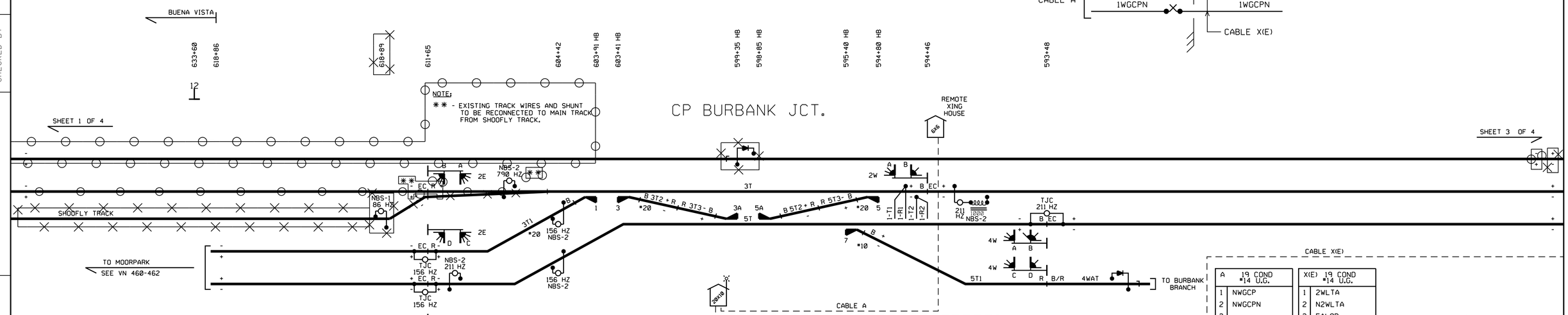

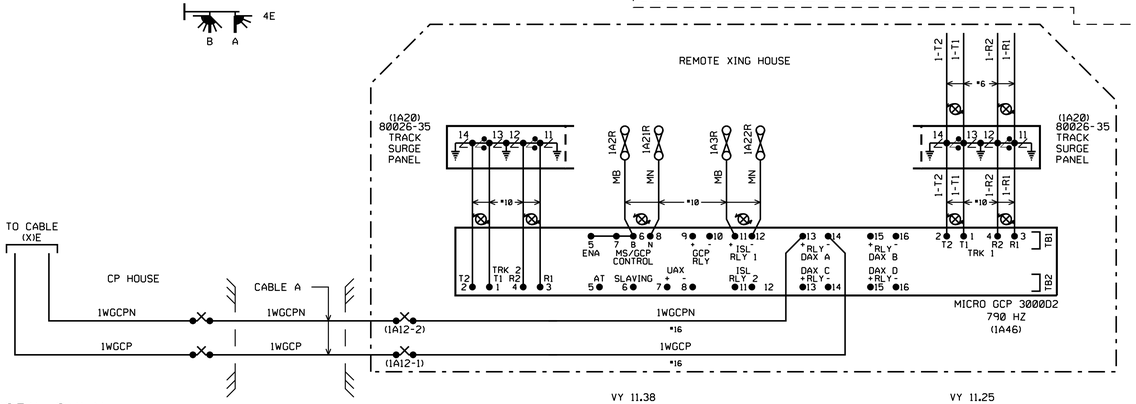

CABLE X(E)

A	19 COND #14 U.G.
1	NWGCP
2	NWGCPN
3	
4	
5	
6	
7	
8	
9	
10	
11	
12	
13	
14	
15	
16	
17	
18	
19	

X(E)	19 COND #14 U.G.
1	2WLTA
2	N2WLTA
3	FALOP
4	NFALOP
5	FLTA
6	NFLTA
7	TLTA
8	NTLTA
9	FA-4WLOP
10	NFA-4WLOP
11	
12	
13	1WGCP
14	1WGCPN
15	
16	
17	
18	
19	

A	3 COND #6 U.G.
1	BX110
2	CX110
3	NX110

= OUT
= IN

RR-SP-155
SIGNAL STAGE 3

SIGNAL CIRCUIT PLAN
CP ALLEN - CP HOLLYWOOD
VY 10-13
SH. 2 OF 4

DATE IN SERVICE _____
S. ENGINEER _____
INSPECTOR _____

RAILROAD SHEET NO.
155 OF 171

THIS PLAN ACCURATE FOR RAILROAD WORK ONLY.

STATE OF CALIFORNIA - DEPARTMENT OF TRANSPORTATION
Caltrans® DESIGN
CONSULTANT FUNCTIONAL SUPERVISOR: GLENN BREINDEL
CALCULATED-DESIGNED BY: RAMON VALDEZ
CHECKED BY
REVISED BY
DATE REVISED

LAST REVISION 00-00-00
DATE PLOTTED = 7/18/2012
TIME PLOTTED = 21:49:47 PM

Dist	COUNTY	ROUTE	POST MILES TOTAL PROJECT	SHEET No.	TOTAL SHEETS
7	LA	5	29.4/31.6	1916	1931

David McCord 05-21-12
REGISTERED CIVIL ENGINEER DATE

05-21-12
PLANS APPROVAL DATE

REGISTERED PROFESSIONAL ENGINEER DAVID WILLIAM McCORD No. E-15317 Exp. June 30, 2013 ELECTRICAL STATE OF CALIFORNIA

THE STATE OF CALIFORNIA OR ITS OFFICERS OR AGENTS SHALL NOT BE RESPONSIBLE FOR THE ACCURACY OR COMPLETENESS OF SCANNED COPIES OF THIS PLAN SHEET.

SCRRA
279 E. ARROW HIGHWAY
SAN DIMAS, CA 91773

XORAIL
201 NORTH INDIAN HILL BLVD
SUITE 201
CLAREMONT, CA 91711

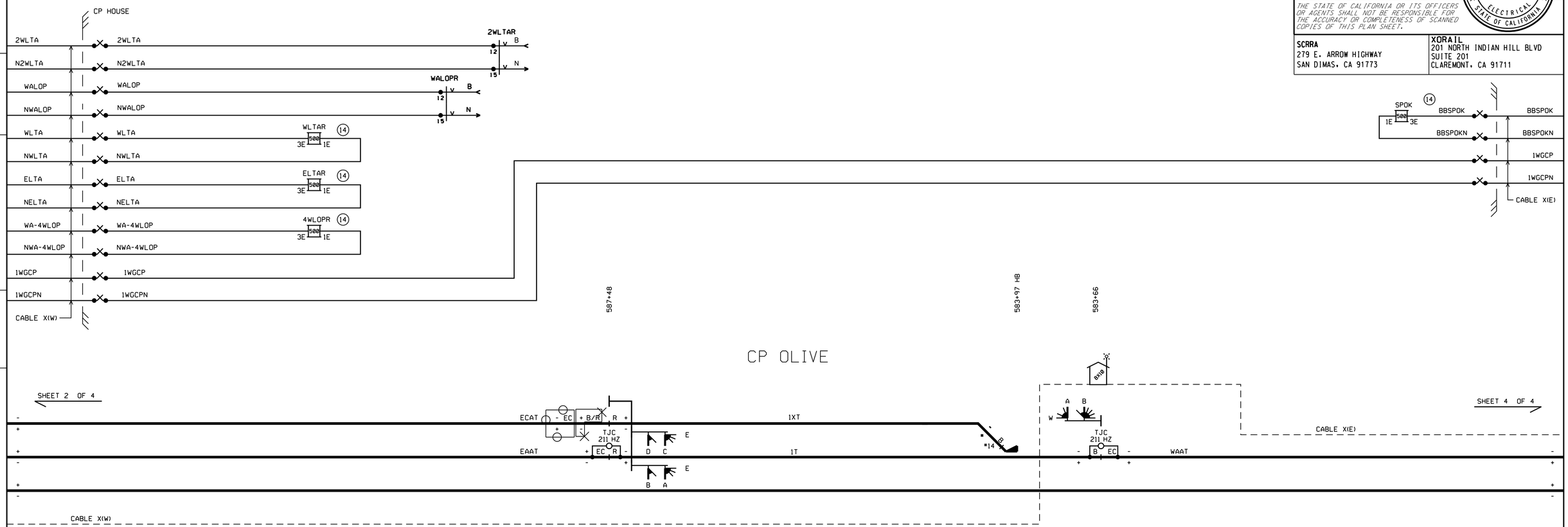

X(W)	19 COND #14 U.G.
1	2WLTA
2	N2WLTA
3	WALOP
4	NWALOP
5	WLTA
6	NWLTA
7	ELTA
8	NELTA
9	WA-4WLOP
10	NWA-4WLOP
11	
12	
13	1WGCP
14	1WGCPN
15	
16	
17	
18	
19	

PTC WORK TO BE PERFORMED BY OTHERS.

X(E)	19 COND #14 U.G.
1	1WGCP
2	1WGCPN
3	BBSPOK
4	BBSPOKN
5	
6	
7	
8	
9	
10	
11	
12	
13	
14	
15	
16	
17	
18	
19	

= OUT
= IN

DATE IN SERVICE _____
S. ENGINEER _____
INSPECTOR _____

RR-SP-156
SIGNAL STAGE 3

SIGNAL CIRCUIT PLAN
CP ALLEN - CP HOLLYWOOD
VY 10-13
SH. 3 OF 4

RAILROAD SHEET NO.
156 OF 171

VY 11.13

THIS PLAN ACCURATE FOR RAILROAD WORK ONLY.

REVISED BY | DATE REVISED
RAMON VALDEZ
CALCULATED-DESIGNED BY | CHECKED BY
GLENN BREINDEL
CONSULTANT FUNCTIONAL SUPERVISOR
STATE OF CALIFORNIA - DEPARTMENT OF TRANSPORTATION
Caltrans DESIGN

LAST REVISION 00-00-00 | DATE PLOTTED = 7/18/2012 | TIME PLOTTED = 2:49:48 PM

Dist	COUNTY	ROUTE	POST MILES TOTAL PROJECT	SHEET No.	TOTAL SHEETS
7	LA	5	29.4/31.6	1917	1931

David McCord 05-21-12
REGISTERED CIVIL ENGINEER DATE

05-21-12
PLANS APPROVAL DATE

REGISTERED PROFESSIONAL ENGINEER DAVID WILLIAM McCORD No. E-15317 Exp. June 30, 2013 ELECTRICAL STATE OF CALIFORNIA

THE STATE OF CALIFORNIA OR ITS OFFICERS OR AGENTS SHALL NOT BE RESPONSIBLE FOR THE ACCURACY OR COMPLETENESS OF SCANNED COPIES OF THIS PLAN SHEET.

SCRRA
279 E. ARROW HIGHWAY
SAN DIMAS, CA 91773

XORAIL
201 NORTH INDIAN HILL BLVD
SUITE 201
CLAREMONT, CA 91711

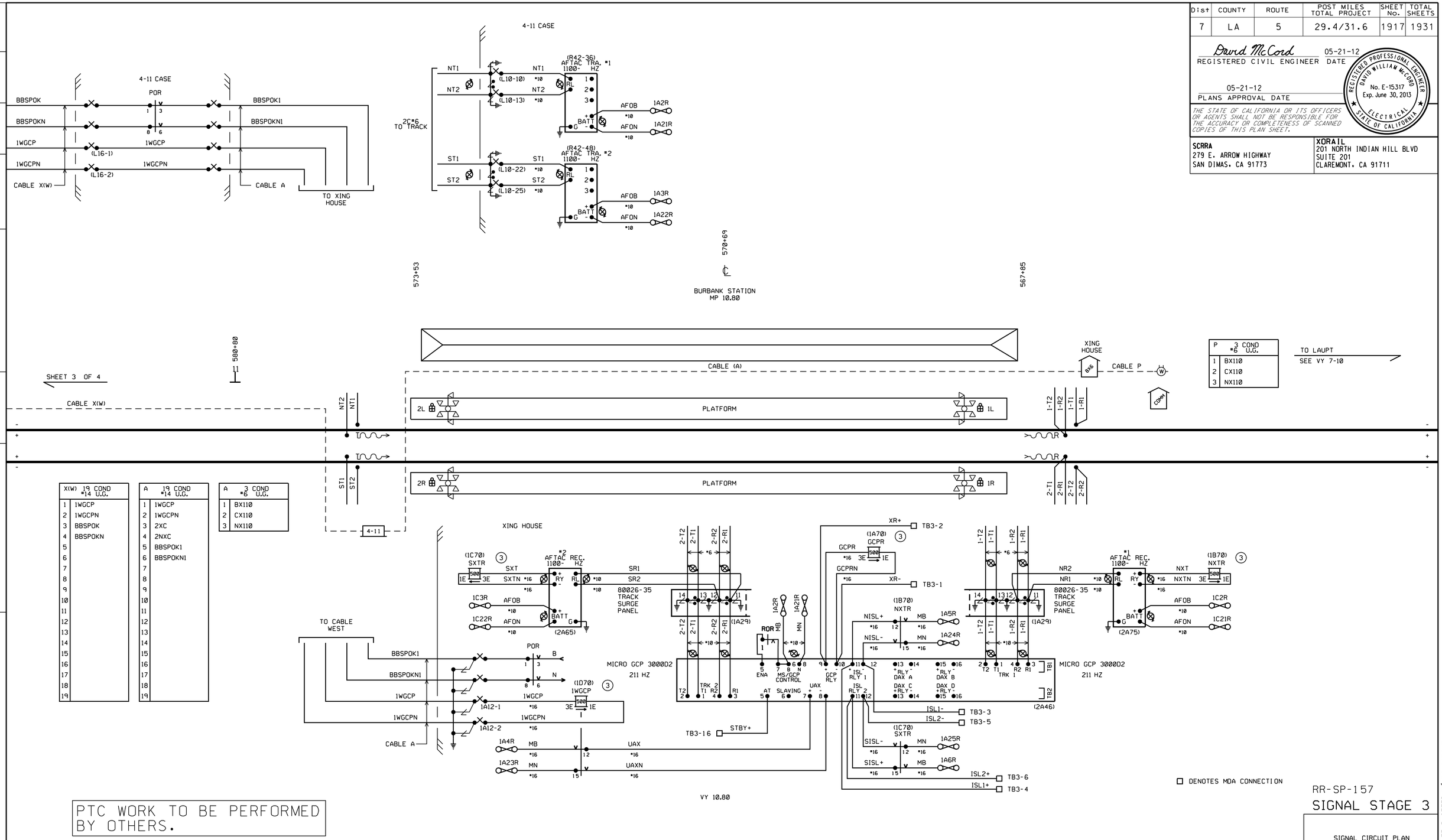

PTC WORK TO BE PERFORMED BY OTHERS.

THIS PLAN ACCURATE FOR RAILROAD WORK ONLY.

REFERENCE ONLY

RR-SP-157
SIGNAL STAGE 3

SIGNAL CIRCUIT PLAN
CP ALLEN - CP HOLLYWOOD
VY 10-13
SH. 4 OF 4

RAILROAD SHEET NO.
157 OF 171

LAST REVISION 00-00-00 DATE PLOTTED = 7/18/2012 TIME PLOTTED = 2:49:49 PM

STATE OF CALIFORNIA - DEPARTMENT OF TRANSPORTATION
Caltrans® DESIGN
CONSULTANT FUNCTIONAL SUPERVISOR GLENN BREINDEL
CALCULATED-DESIGNED BY RAMON VALDEZ
CHECKED BY
REVISED BY
DATE REVISED

BORDER LAST REVISED 7/2/2010
USERNAME = gharibiana
DGN FILE = ...\moc\xorail\sheet\SP-157.sht
RELATIVE BORDER SCALE IS IN INCHES 0 1 2 3
UNIT 1812
PROJECT NUMBER & PHASE 07000211191

Dist	COUNTY	ROUTE	POST MILES TOTAL PROJECT	SHEET No.	TOTAL SHEETS
7	LA	5	29.4/31.6	1918	1931

David McCord 05-21-12
REGISTERED CIVIL ENGINEER DATE

05-21-12
PLANS APPROVAL DATE

REGISTERED PROFESSIONAL ENGINEER DAVID WILLIAM McCORD No. E-15317 Exp. June 30, 2013 ELECTRICAL STATE OF CALIFORNIA

THE STATE OF CALIFORNIA OR ITS OFFICERS OR AGENTS SHALL NOT BE RESPONSIBLE FOR THE ACCURACY OR COMPLETENESS OF SCANNED COPIES OF THIS PLAN SHEET.

SCRRA
279 E. ARROW HIGHWAY
SAN DIMAS, CA 91773

XORAIL
201 NORTH INDIAN HILL BLVD
SUITE 201
CLAREMONT, CA 91711

PTC WORK TO BE PERFORMED BY OTHERS.

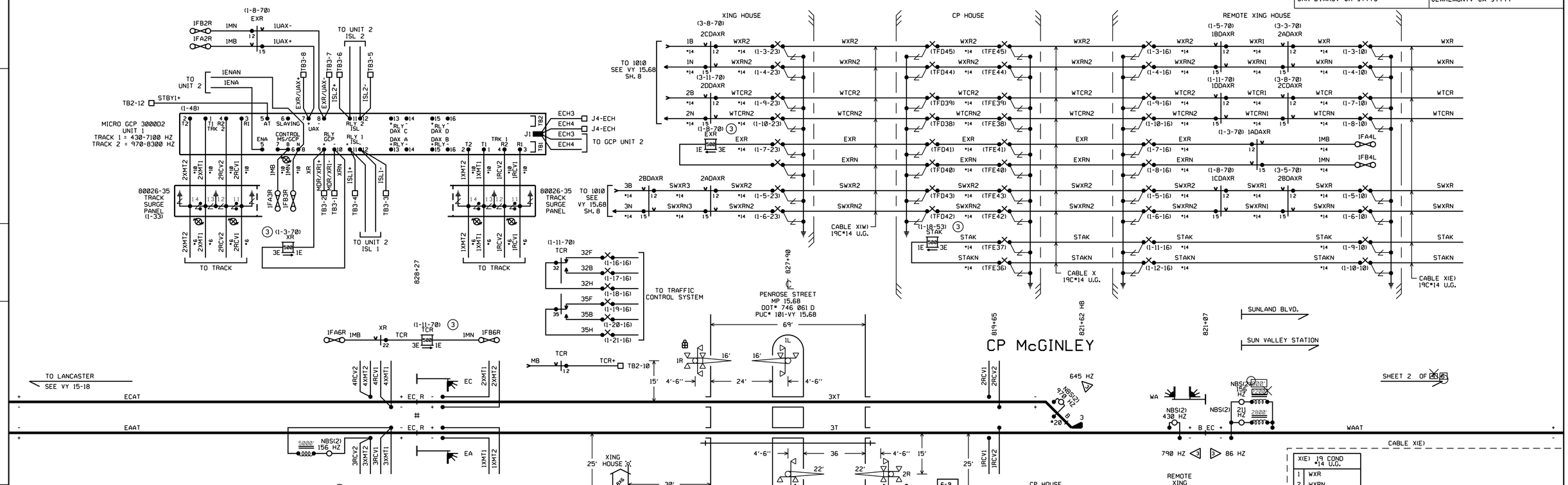

THIS PLAN ACCURATE FOR RAILROAD WORK ONLY.

STATE OF CALIFORNIA - DEPARTMENT OF TRANSPORTATION
Caltrans® DESIGN
CONSULTANT FUNCTIONAL SUPERVISOR GLENN BREINDEL
CALCULATED-DESIGNED BY RAMON VALDEZ
CHECKED BY
REVISED BY
DATE REVISED

Dist	COUNTY	ROUTE	POST MILES TOTAL PROJECT	SHEET No.	TOTAL SHEETS
7	LA	5	29.4/31.6	1919	1931

David McCord 05-21-12
REGISTERED CIVIL ENGINEER DATE

05-21-12
PLANS APPROVAL DATE

REGISTERED PROFESSIONAL ENGINEER DAVID WILLIAM McCORD No. E-15317 Exp. June 30, 2013 ELECTRICAL STATE OF CALIFORNIA

THE STATE OF CALIFORNIA OR ITS OFFICERS OR AGENTS SHALL NOT BE RESPONSIBLE FOR THE ACCURACY OR COMPLETENESS OF SCANNED COPIES OF THIS PLAN SHEET.

SCRRA
279 E. ARROW HIGHWAY
SAN DIMAS, CA 91773

XORAIL
201 NORTH INDIAN HILL BLVD
SUITE 201
CLAREMONT, CA 91711

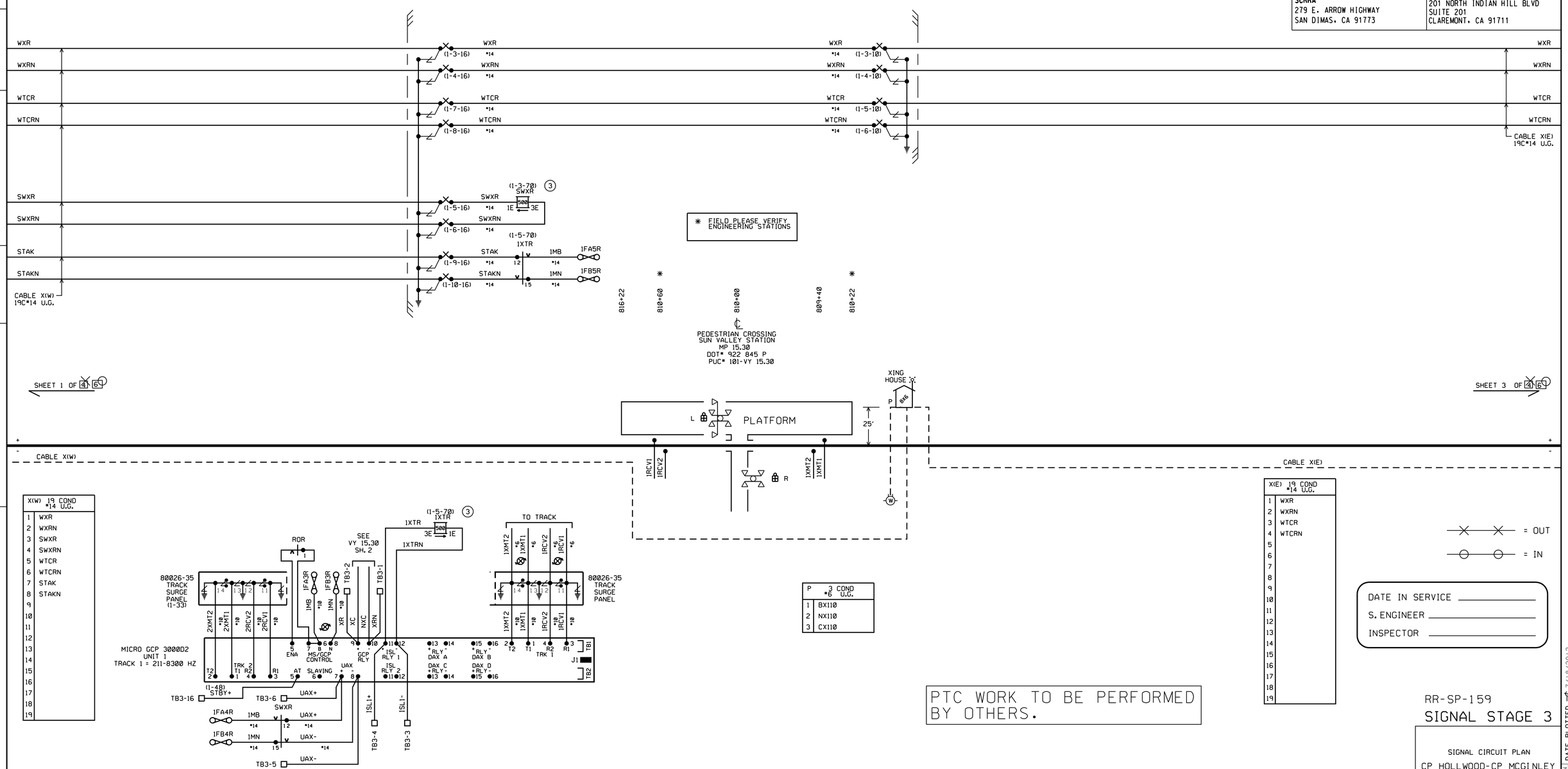

* FIELD PLEASE VERIFY ENGINEERING STATIONS

REVISED BY | DATE REVISED
RAMON VALDEZ
CALCULATED-DESIGNED BY | CHECKED BY
CONSULTANT FUNCTIONAL SUPERVISOR
GLENN BREINDEL
STATE OF CALIFORNIA - DEPARTMENT OF TRANSPORTATION
Caltrans® DESIGN

Dist	COUNTY	ROUTE	POST MILES TOTAL PROJECT	SHEET No.	TOTAL SHEETS
7	LA	5	29.4/31.6	1920	1931

David McCord 05-21-12
REGISTERED CIVIL ENGINEER DATE

05-21-12
PLANS APPROVAL DATE

REGISTERED PROFESSIONAL ENGINEER DAVID WILLIAM McCORD No. E-15317 Exp. June 30, 2013 ELECTRICAL STATE OF CALIFORNIA

THE STATE OF CALIFORNIA OR ITS OFFICERS OR AGENTS SHALL NOT BE RESPONSIBLE FOR THE ACCURACY OR COMPLETENESS OF SCANNED COPIES OF THIS PLAN SHEET.

SCRRA
279 E. ARROW HIGHWAY
SAN DIMAS, CA 91773

XORAIL
201 NORTH INDIAN HILL BLVD
SUITE 201
CLAREMONT, CA 91711

PTC WORK TO BE PERFORMED BY OTHERS.

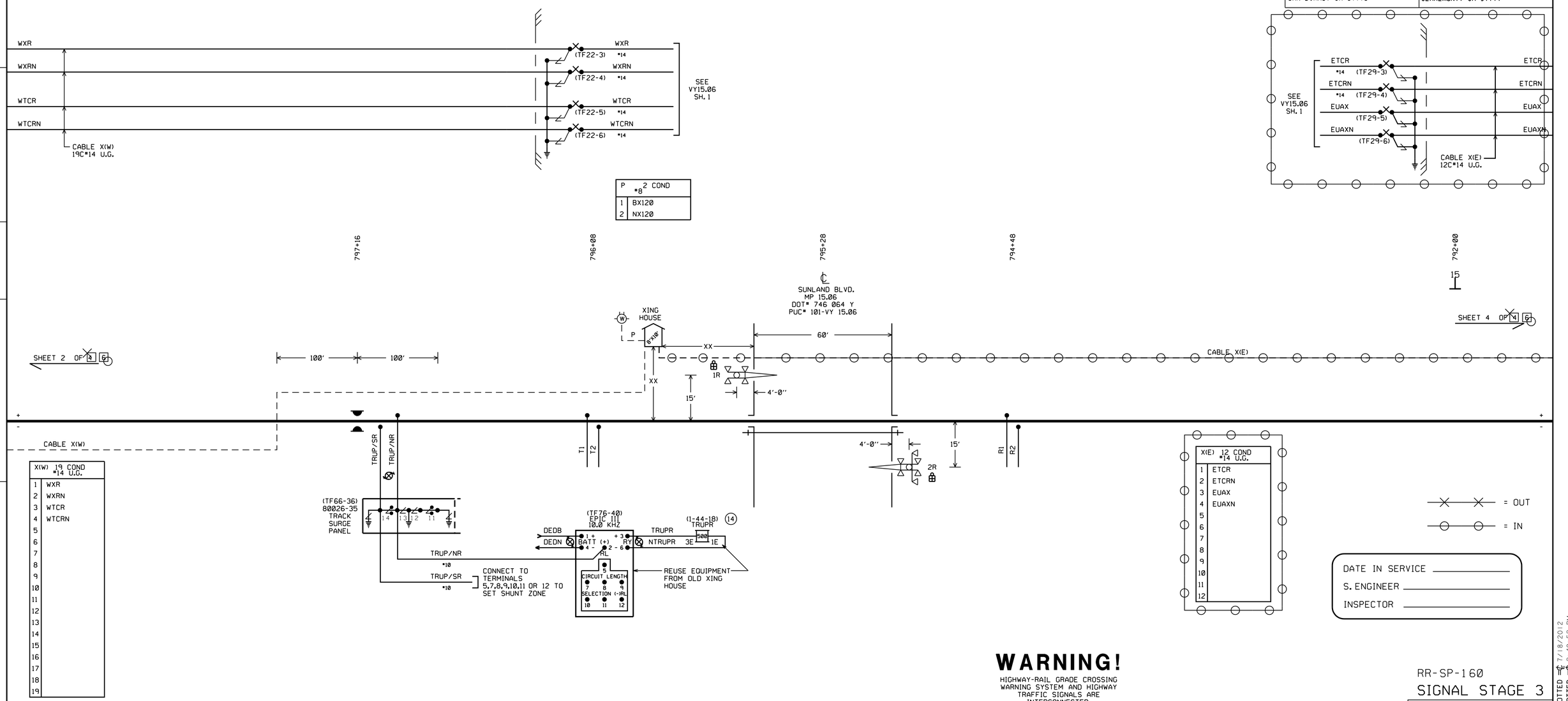

WARNING!

HIGHWAY-RAIL GRADE CROSSING WARNING SYSTEM AND HIGHWAY TRAFFIC SIGNALS ARE INTERCONNECTED.

BEFORE MODIFICATION is made to any operation which connects to or controls the timing of an active railroad warning system and/or timing and phasing of a traffic signal the appropriate party(ies) shall be notified and, if necessary, a joint inspection conducted.

THIS PLAN ACCURATE FOR RAILROAD WORK ONLY.

RR-SP-160
SIGNAL STAGE 3

SIGNAL CIRCUIT PLAN
CP HOLLYWOOD-CP MCGINLEY
VY 13-15
SH. 3 OF 6

RAILROAD SHEET NO.
160 OF 171

LAST REVISION 00-00-00
DATE PLOTTED 7/18/2012
TIME PLOTTED 2:49:52 PM

STATE OF CALIFORNIA - DEPARTMENT OF TRANSPORTATION
Caltrans® DESIGN
CONSULTANT FUNCTIONAL SUPERVISOR GLENN BREINDEL
CALCULATED-DESIGNED BY RAMON VALDEZ
CHECKED BY
REVISED BY
DATE REVISED

BORDER LAST REVISED 7/2/2010
USERNAME = gharibiana
DGN FILE = ...\moc\xorail\sheet\SP-160.sht
RELATIVE BORDER SCALE IS IN INCHES 0 1 2 3
UNIT 1812
PROJECT NUMBER & PHASE 07000211191

Dist	COUNTY	ROUTE	POST MILES TOTAL PROJECT	SHEET No.	TOTAL SHEETS
7	LA	5	29.4/31.6	1921	1931

David McCord 05-21-12
REGISTERED CIVIL ENGINEER DATE

05-21-12
PLANS APPROVAL DATE

REGISTERED PROFESSIONAL ENGINEER DAVID WILLIAM McCORD No. E-15317 Exp. June 30, 2013 ELECTRICAL STATE OF CALIFORNIA

THE STATE OF CALIFORNIA OR ITS OFFICERS OR AGENTS SHALL NOT BE RESPONSIBLE FOR THE ACCURACY OR COMPLETENESS OF SCANNED COPIES OF THIS PLAN SHEET.

SCRRA
279 E. ARROW HIGHWAY
SAN DIMAS, CA 91773

XORAIL
201 NORTH INDIAN HILL BLVD
SUITE 201
CLAREMONT, CA 91711

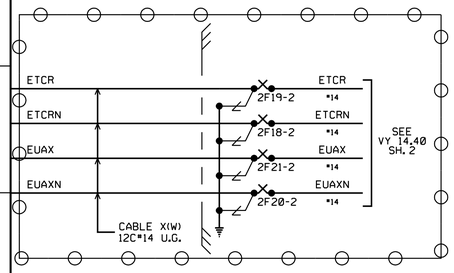

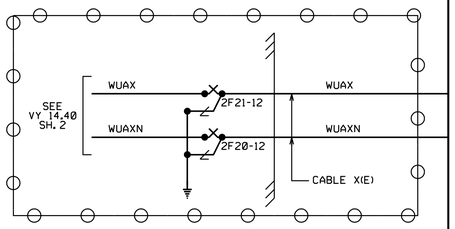

* FIELD PLEASE VERIFY ENGINEERING STATIONS

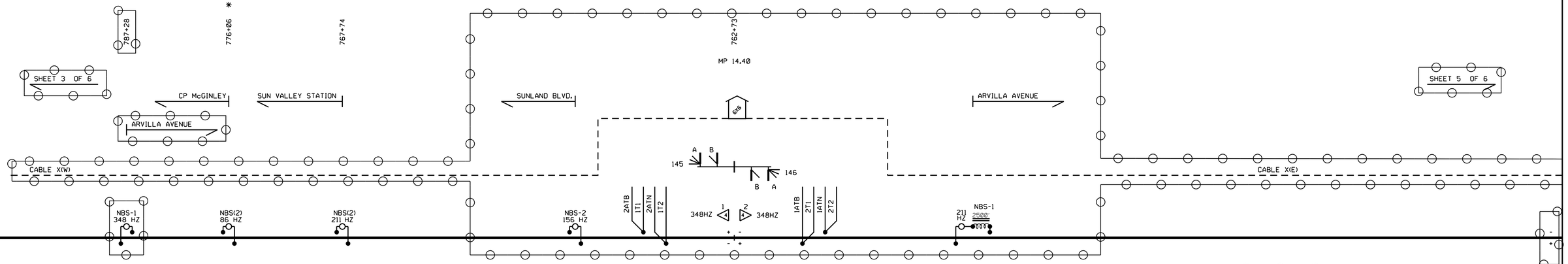

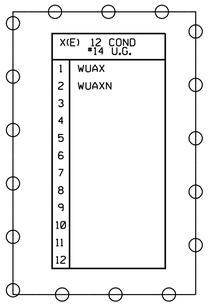

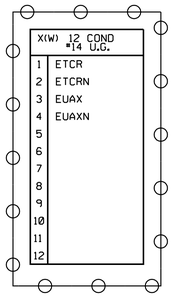

= OUT

= IN

PTC WORK TO BE PERFORMED BY OTHERS.

DATE IN SERVICE _____
S. ENGINEER _____
INSPECTOR _____

VY 14.13

THIS PLAN ACCURATE FOR RAILROAD WORK ONLY.

RR-SP-161
SIGNAL STAGE 3

SIGNAL CIRCUIT PLAN
CP HOLLYWOOD-CP MCGINLEY
VY 13-15
SH. 4 OF 6

RAILROAD SHEET NO.
161 OF 171

STATE OF CALIFORNIA - DEPARTMENT OF TRANSPORTATION
Caltrans® DESIGN
CONSULTANT FUNCTIONAL SUPERVISOR: GLENN BREINDEL
CALCULATED-DESIGNED BY: RAMON VALDEZ
CHECKED BY
REVISED BY
DATE REVISED

LAST REVISION 00-00-00
DATE PLOTTED = 7/18/2012
TIME PLOTTED = 2:49:53 PM

Dist	COUNTY	ROUTE	POST MILES TOTAL PROJECT	SHEET No.	TOTAL SHEETS
7	LA	5	29.4/31.6	1922	1931

David McCord 05-21-12
REGISTERED CIVIL ENGINEER DATE

05-21-12
PLANS APPROVAL DATE

REGISTERED PROFESSIONAL ENGINEER DAVID WILLIAM McCORD No. E-15317 Exp. June 30, 2013 ELECTRICAL STATE OF CALIFORNIA

THE STATE OF CALIFORNIA OR ITS OFFICERS OR AGENTS SHALL NOT BE RESPONSIBLE FOR THE ACCURACY OR COMPLETENESS OF SCANNED COPIES OF THIS PLAN SHEET.

SCRRA
279 E. ARROW HIGHWAY
SAN DIMAS, CA 91773

XORAIL
201 NORTH INDIAN HILL BLVD
SUITE 201
CLAREMONT, CA 91711

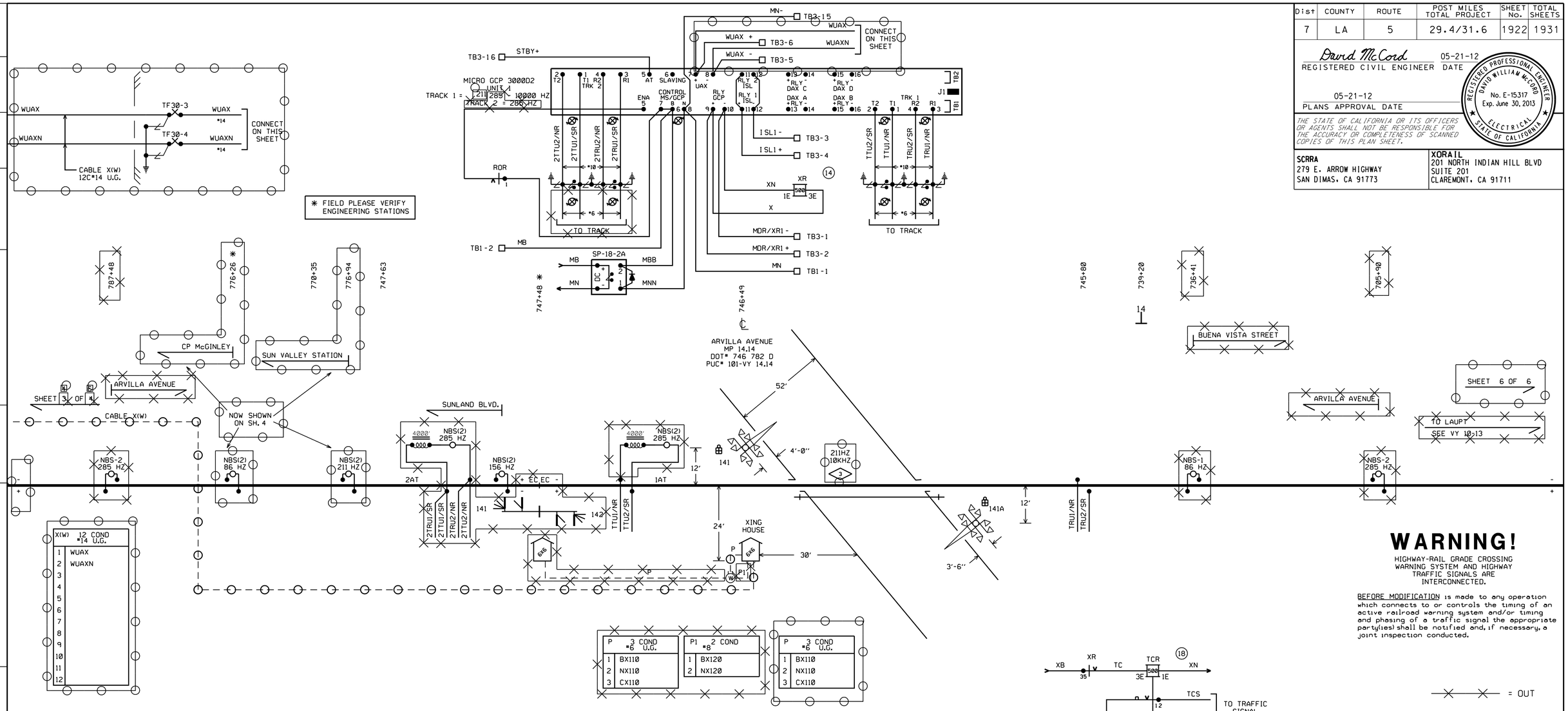

* FIELD PLEASE VERIFY ENGINEERING STATIONS

WARNING!

HIGHWAY-RAIL GRADE CROSSING WARNING SYSTEM AND HIGHWAY TRAFFIC SIGNALS ARE INTERCONNECTED.

BEFORE MODIFICATION is made to any operation which connects to or controls the timing of an active railroad warning system and/or timing and phasing of a traffic signal the appropriate party(ies) shall be notified and, if necessary, a joint inspection conducted.

DATE IN SERVICE _____
S. ENGINEER _____
INSPECTOR _____

PTC WORK TO BE PERFORMED BY OTHERS.

VY 14.12

□ - DENOTES DATA RECORDER CONNECTION.

VY 14.14

NOTICE:
THERE ARE FIELD VERIFY NOTES THAT HAVE NOT BEEN VERIFIED DATE 11-17-03

THIS PLAN ACCURATE FOR RAILROAD WORK ONLY.

RR-SP-162
SIGNAL STAGE 3

SIGNAL CIRCUIT PLAN
CP HOLLYWOOD-CP MCGINLEY
VY 13-15
SH. 5 OF 6

RAILROAD SHEET NO.
162 OF 171

LAST REVISION 00-00-00 DATE PLOTTED 7/18/2012 TIME PLOTTED 2:49:54 PM

STATE OF CALIFORNIA - DEPARTMENT OF TRANSPORTATION
Caltrans DESIGN
CONSULTANT FUNCTIONAL SUPERVISOR GLENN BREINDEL
CALCULATED-DESIGNED BY RAMON VALDEZ
CHECKED BY
REVISED BY
DATE REVISED

BORDER LAST REVISED 7/2/2010
USERNAME = gharibiana
DGN FILE = ...\moc\xorail\sheet\SP-162.sht
RELATIVE BORDER SCALE IS IN INCHES 0 1 2 3
UNIT 1812
PROJECT NUMBER & PHASE 07000211191

Dist	COUNTY	ROUTE	POST MILES TOTAL PROJECT	SHEET No.	TOTAL SHEETS
7	LA	5	29.4/31.6	1923	1931

David McCord 05-21-12
REGISTERED CIVIL ENGINEER DATE

05-21-12
PLANS APPROVAL DATE

REGISTERED PROFESSIONAL ENGINEER DAVID WILLIAM McCORD No. E-15317 Exp. June 30, 2013 ELECTRICAL STATE OF CALIFORNIA

THE STATE OF CALIFORNIA OR ITS OFFICERS OR AGENTS SHALL NOT BE RESPONSIBLE FOR THE ACCURACY OR COMPLETENESS OF SCANNED COPIES OF THIS PLAN SHEET.

SCRRA
279 E. ARROW HIGHWAY
SAN DIMAS, CA 91773

XORAIL
201 NORTH INDIAN HILL BLVD
SUITE 201
CLAREMONT, CA 91711

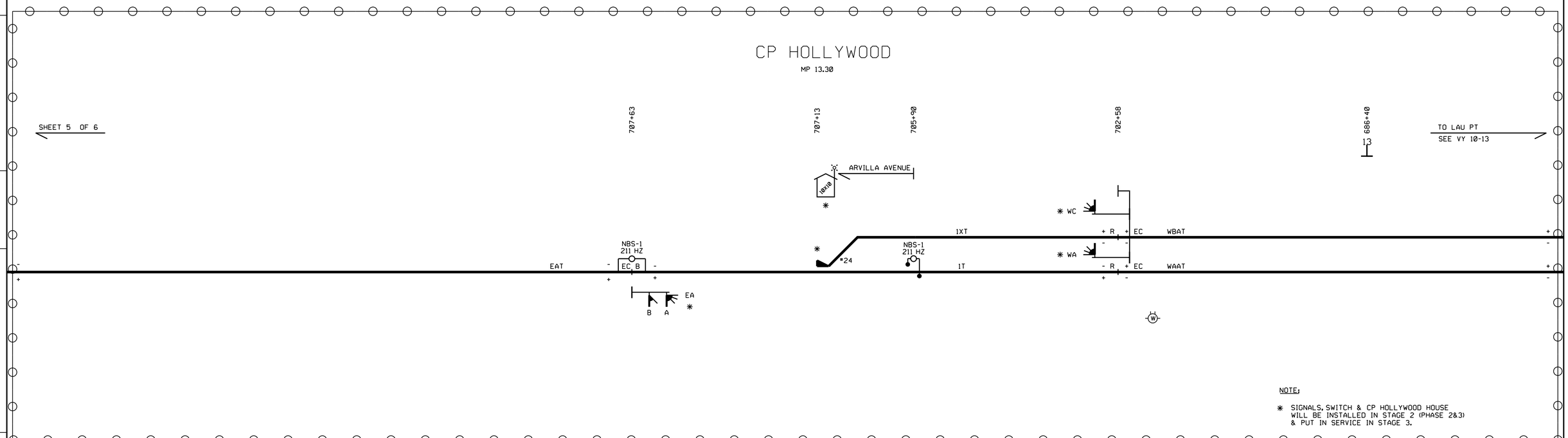

NOTE:

* SIGNALS, SWITCH & CP HOLLYWOOD HOUSE WILL BE INSTALLED IN STAGE 2 (PHASE 2&3) & PUT IN SERVICE IN STAGE 3.

PTC WORK TO BE PERFORMED BY OTHERS.

VY 13.30

= OUT
= IN

DATE IN SERVICE _____
S. ENGINEER _____
INSPECTOR _____

RR-SP-163
SIGNAL STAGE 3

SIGNAL CIRCUIT PLAN
CP HOLLYWOOD-CP MCGINLEY
VY 13-15
SH. 6 OF 6

RAILROAD SHEET NO.
163 OF 171

THIS PLAN ACCURATE FOR RAILROAD WORK ONLY.

STATE OF CALIFORNIA - DEPARTMENT OF TRANSPORTATION
Caltrans® DESIGN

CONSULTANT FUNCTIONAL SUPERVISOR: GLENN BREINDEL
CALCULATED-DESIGNED BY: RAMON VALDEZ
CHECKED BY
REVISED BY
DATE REVISED

LAST REVISION 00-00-00
DATE PLOTTED = 7/18/2012
TIME PLOTTED = 2:49:55 PM

Dist	COUNTY	ROUTE	POST MILES TOTAL PROJECT	SHEET No.	TOTAL SHEETS
7	LA	5	29.4/31.6	1924	1931

David McCord 05-21-12
REGISTERED CIVIL ENGINEER DATE

05-21-12
PLANS APPROVAL DATE

REGISTERED PROFESSIONAL ENGINEER DAVID WILLIAM McCORD No. E-15317 Exp. June 30, 2013 ELECTRICAL STATE OF CALIFORNIA

THE STATE OF CALIFORNIA OR ITS OFFICERS OR AGENTS SHALL NOT BE RESPONSIBLE FOR THE ACCURACY OR COMPLETENESS OF SCANNED COPIES OF THIS PLAN SHEET.

SCRRA
279 E. ARROW HIGHWAY
SAN DIMAS, CA 91773

XORAIL
201 NORTH INDIAN HILL BLVD
SUITE 201
CLAREMONT, CA 91711

* MAXIMUM FREIGHT SPEED
PER TONNAGE RESTRICTIONS:
90 TPOB OR LESS = NO RESTRICTION
90.1 TO 100 TPOB =50 MPH
100.1 TO 120 TPOB = 40 MPH
140.1 TO 158 TPOB =35 MPH

DESIGN SPEEDS:
•FREIGHT = 50 MPH
PASSENGER = 79 MPH

MAIN TIMETABLE SPEEDS
M.P. 11.23 TO M.P. 21.71
FREIGHT = 50 MPH, PASSENGER = 79 MPH

SIDING TIMETABLE SPEEDS
M.P. 11.1 TO M.P. 13.3
FREIGHT = 50 MPH, PASSENGER = 79 MPH

MAIN TIMETABLE SPEEDS
M.P. 5.0 TO M.P. 11.3
FREIGHT = 55 MPH, PASSENGER = 79 MPH

TIMETABLE FREIGHT SPEED
RESTRICTION ON DESCENDING GRADES
M.P. 11.3 - M.P. 15.6
BELOW 80 TPOB = NO RESTRICTION
80.1 TO 100 TPOB = 25 MPH
100.1 TO 130 TPOB = 20 MPH
130.1 TO 158 TPOB = 15 MPH

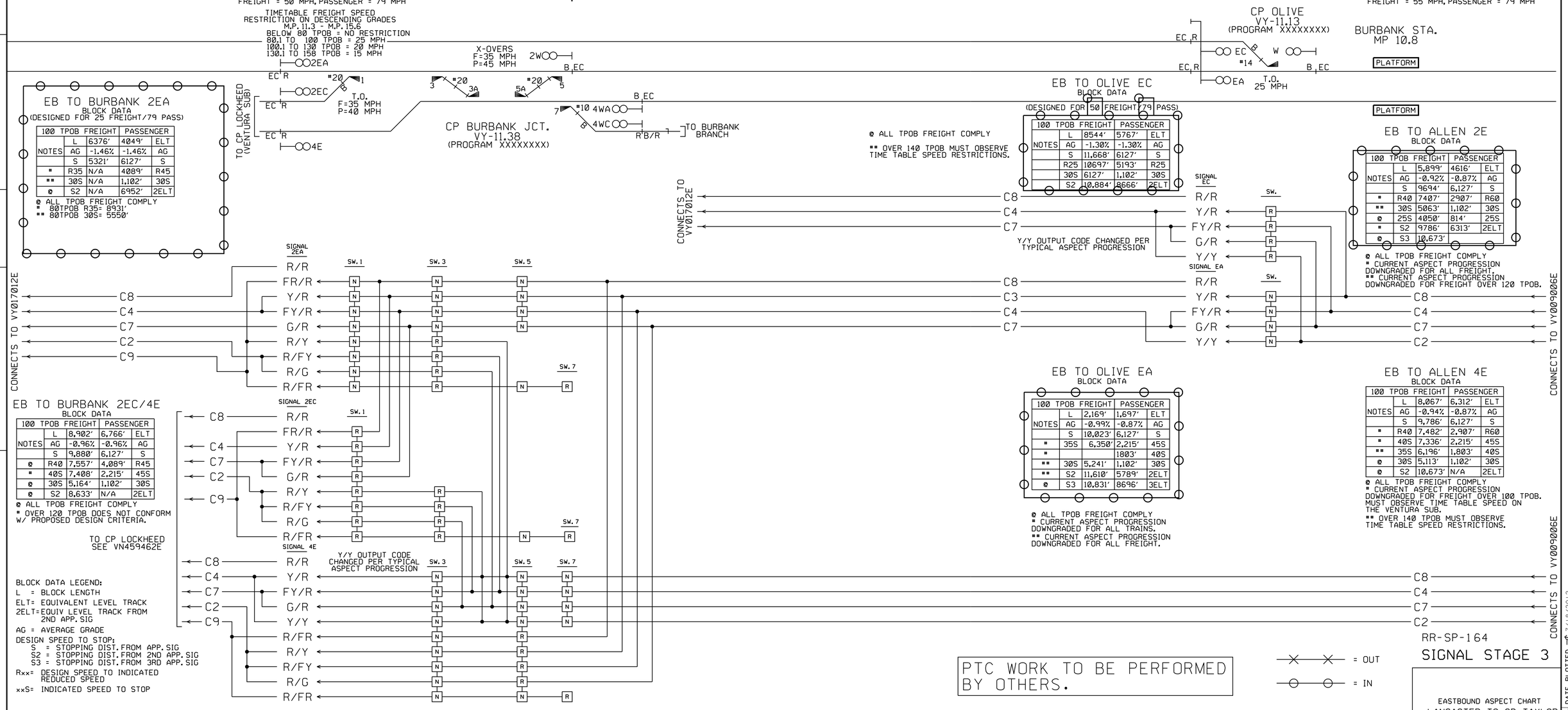

EB TO BURBANK 2EA
BLOCK DATA
(DESIGNED FOR 25 FREIGHT/79 PASS)

	100 TPOB	FREIGHT	PASSENGER	
	L	6376′	4049′	ELT
NOTES	AG	-1.46%	-1.46%	AG
	S	5321′	6127′	S
*	R35	N/A	4089′	R45
**	30S	N/A	1,102′	30S
@	S2	N/A	6952′	2ELT

@ ALL TPOB FREIGHT COMPLY
* 80TPOB R35= 8931′
** 80TPOB 30S= 5550′

EB TO BURBANK 2EC/4E
BLOCK DATA

	100 TPOB	FREIGHT	PASSENGER	
	L	8,902′	6,766′	ELT
NOTES	AG	-0.96%	-0.96%	AG
	S	9,880′	6,127′	S
@	R40	7,557′	4,089′	R45
*	40S	7,408′	2,215′	45S
@	30S	5,164′	1,102′	30S
@	S2	8,633′	N/A	2ELT

@ ALL TPOB FREIGHT COMPLY
* OVER 120 TPOB DOES NOT CONFORM W/ PROPOSED DESIGN CRITERIA.

TO CP LOCKHEED
SEE VN459462E

BLOCK DATA LEGEND:
L = BLOCK LENGTH
ELT= EQUIVALENT LEVEL TRACK
2ELT=EQUIV LEVEL TRACK FROM 2ND APP. SIG
AG = AVERAGE GRADE
DESIGN SPEED TO STOP:
S = STOPPING DIST. FROM APP. SIG
S2 = STOPPING DIST. FROM 2ND APP. SIG
S3 = STOPPING DIST. FROM 3RD APP. SIG
Rxx= DESIGN SPEED TO INDICATED REDUCED SPEED
xxS= INDICATED SPEED TO STOP

@ ALL TPOB FREIGHT COMPLY
** OVER 140 TPOB MUST OBSERVE TIME TABLE SPEED RESTRICTIONS.

EB TO OLIVE EC
BLOCK DATA
(DESIGNED FOR 50 FREIGHT/79 PASS)

	100 TPOB	FREIGHT	PASSENGER	
	L	8544′	5767′	ELT
NOTES	AG	-1.30%	-1.30%	AG
	S	11,668′	6127′	S
	R25	10697′	5193′	R25
	30S	6127′	1,102′	30S
	S2	10,884′	8666′	2ELT

EB TO ALLEN 2E
BLOCK DATA

	100 TPOB	FREIGHT	PASSENGER	
	L	5,899′	4616′	ELT
NOTES	AG	-0.92%	-0.87%	AG
	S	9694′	6,127′	S
*	R40	7407′	2907′	R60
**	30S	5063′	1,102′	30S
@	25S	4050′	814′	25S
*	S2	9786′	6313′	2ELT
@	S3	10,673′		

@ ALL TPOB FREIGHT COMPLY
* CURRENT ASPECT PROGRESSION DOWNGRADED FOR ALL FREIGHT.
** CURRENT ASPECT PROGRESSION DOWNGRADED FOR FREIGHT OVER 120 TPOB.

EB TO OLIVE EA
BLOCK DATA

	100 TPOB	FREIGHT	PASSENGER	
	L	2,169′	1,697′	ELT
NOTES	AG	-0.99%	-0.87%	AG
	S	10,023′	6,127′	S
*	35S	6,350′	2,215′	45S
*			1803′	40S
**	30S	5,241′	1,102′	30S
**	S2	11,610′	5789′	2ELT
@	S3	10,831′	8696′	3ELT

@ ALL TPOB FREIGHT COMPLY
* CURRENT ASPECT PROGRESSION DOWNGRADED FOR ALL TRAINS.
** CURRENT ASPECT PROGRESSION DOWNGRADED FOR ALL FREIGHT.

EB TO ALLEN 4E
BLOCK DATA

	100 TPOB	FREIGHT	PASSENGER	
	L	8,067′	6,312′	ELT
NOTES	AG	-0.94%	-0.87%	AG
	S	9,786′	6,127′	S
*	R40	7,482′	2,907′	R60
*	40S	7,336′	2,215′	45S
**	35S	6,196′	1,803′	40S
@	30S	5,113′	1,102′	30S
@	S2	10,673′	N/A	2ELT

@ ALL TPOB FREIGHT COMPLY
* CURRENT ASPECT PROGRESSION DOWNGRADED FOR FREIGHT OVER 100 TPOB. MUST OBSERVE TIME TABLE SPEED ON THE VENTURA SUB.
** OVER 140 TPOB MUST OBSERVE TIME TABLE SPEED RESTRICTIONS.

PTC WORK TO BE PERFORMED BY OTHERS.

= OUT
= IN

RR-SP-164
SIGNAL STAGE 3

EASTBOUND ASPECT CHART
LANCASTER TO CP TAYLOR
VY 11 E
SH. 1 OF 1

THIS PLAN ACCURATE FOR RAILROAD WORK ONLY.

EASTBOUND

RAILROAD SHEET NO.
164 OF 171

STATE OF CALIFORNIA - DEPARTMENT OF TRANSPORTATION
Caltrans® DESIGN
CONSULTANT FUNCTIONAL SUPERVISOR: GLENN BREINDEL
CALCULATED-DESIGNED BY: RAMON VALDEZ
CHECKED BY
REVISED BY
DATE REVISED
LAST REVISION 00-00-00
DATE PLOTTED = 7/18/2012
TIME PLOTTED = 3:42:54 PM

Dist	COUNTY	ROUTE	POST MILES TOTAL PROJECT	SHEET No.	TOTAL SHEETS
7	LA	5	29.4/31.6	1925	1931

David McCord 05-21-12
REGISTERED CIVIL ENGINEER DATE

05-21-12
PLANS APPROVAL DATE

REGISTERED PROFESSIONAL ENGINEER DAVID WILLIAM McCORD No. E-15317 Exp. June 30, 2013 ELECTRICAL STATE OF CALIFORNIA

THE STATE OF CALIFORNIA OR ITS OFFICERS OR AGENTS SHALL NOT BE RESPONSIBLE FOR THE ACCURACY OR COMPLETENESS OF SCANNED COPIES OF THIS PLAN SHEET.

SCRRA
279 E. ARROW HIGHWAY
SAN DIMAS, CA 91773

XORAIL
201 NORTH INDIAN HILL BLVD
SUITE 201
CLAREMONT, CA 91711

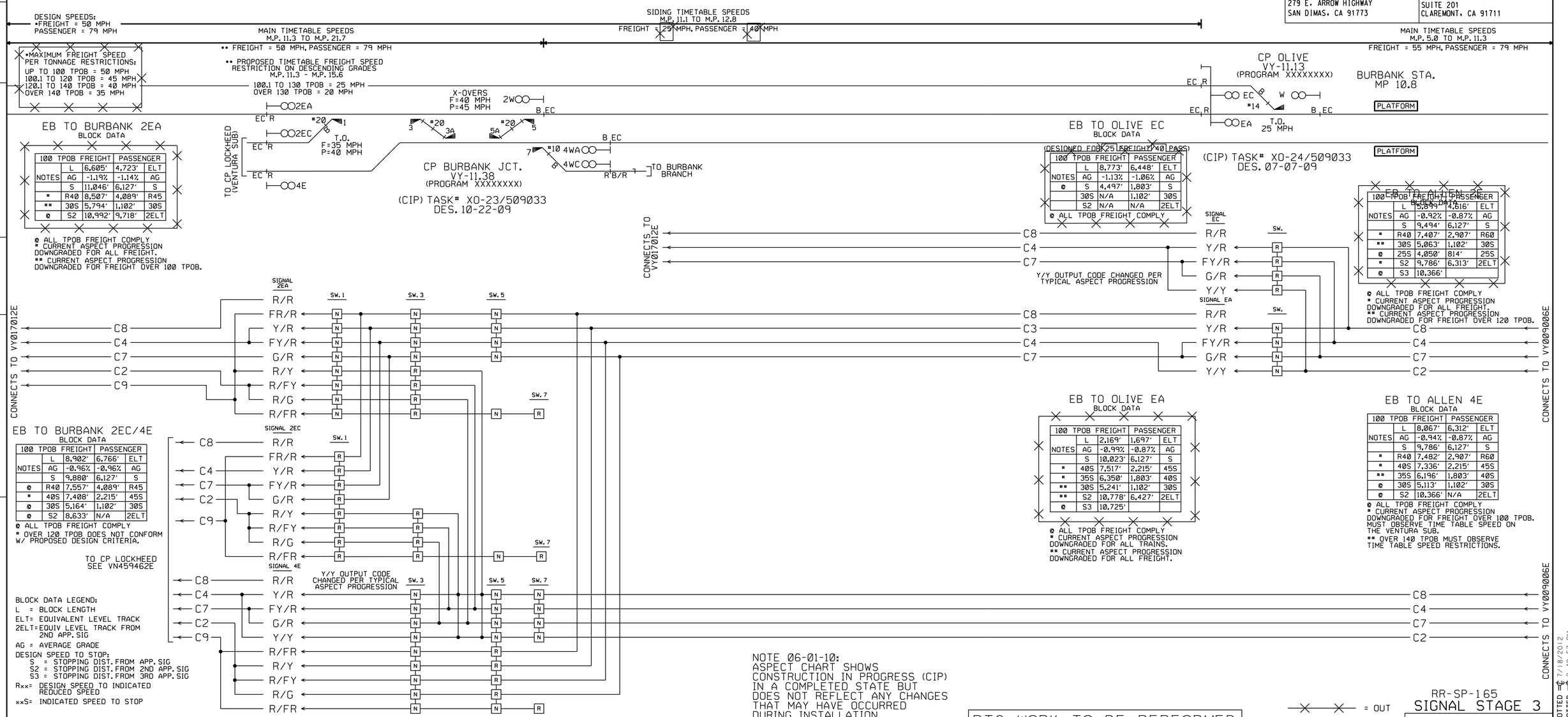

100 TPOB		FREIGHT	PASSENGER	
	L	6,605'	4,723'	ELT
NOTES	AG	-1.19%	-1.14%	AG
	S	11,046'	6,127'	S
*	R40	8,507'	4,089'	R45
**	30S	5,794'	1,102'	30S
@	S2	10,992'	9,718'	2ELT

@ ALL TPOB FREIGHT COMPLY
* CURRENT ASPECT PROGRESSION DOWNGRADED FOR ALL FREIGHT.
** CURRENT ASPECT PROGRESSION DOWNGRADED FOR FREIGHT OVER 100 TPOB.

100 TPOB		FREIGHT	PASSENGER	
	L	8,773'	6,448'	ELT
NOTES	AG	-1.13%	-1.06%	AG
@	S	4,497'	1,803'	S
	30S	N/A	1,102'	30S
	S2	N/A	N/A	2ELT

@ ALL TPOB FREIGHT COMPLY

100 TPOB		FREIGHT	PASSENGER	
	L	5,839'	4,616'	ELT
NOTES	AG	-0.92%	-0.87%	AG
	S	9,494'	6,127'	S
*	R40	7,407'	2,907'	R60
**	30S	5,063'	1,102'	30S
@	25S	4,050'	814'	25S
*	S2	9,786'	6,313'	2ELT
@	S3	10,366'		

@ ALL TPOB FREIGHT COMPLY
* CURRENT ASPECT PROGRESSION DOWNGRADED FOR ALL FREIGHT.
** CURRENT ASPECT PROGRESSION DOWNGRADED FOR FREIGHT OVER 120 TPOB.

100 TPOB		FREIGHT	PASSENGER	
	L	8,902'	6,766'	ELT
NOTES	AG	-0.96%	-0.96%	AG
	S	9,880'	6,127'	S
@	R40	7,557'	4,089'	R45
*	40S	7,408'	2,215'	45S
@	30S	5,164'	1,102'	30S
@	S2	8,633'	N/A	2ELT

@ ALL TPOB FREIGHT COMPLY
* OVER 120 TPOB DOES NOT CONFORM W/ PROPOSED DESIGN CRITERIA.

100 TPOB		FREIGHT	PASSENGER	
	L	2,169'	1,697'	ELT
NOTES	AG	-0.99%	-0.87%	AG
	S	10,023'	6,127'	S
*	40S	7,517'	2,215'	45S
*	35S	6,350'	1,803'	40S
**	30S	5,241'	1,102'	30S
**	S2	10,778'	6,427'	2ELT
@	S3	10,725'		

@ ALL TPOB FREIGHT COMPLY
* CURRENT ASPECT PROGRESSION DOWNGRADED FOR ALL TRAINS.
** CURRENT ASPECT PROGRESSION DOWNGRADED FOR ALL FREIGHT.

100 TPOB		FREIGHT	PASSENGER	
	L	8,067'	6,312'	ELT
NOTES	AG	-0.94%	-0.87%	AG
	S	9,786'	6,127'	S
*	R40	7,482'	2,907'	R60
*	40S	7,336'	2,215'	45S
**	35S	6,196'	1,803'	40S
@	30S	5,113'	1,102'	30S
@	S2	10,366'	N/A	2ELT

@ ALL TPOB FREIGHT COMPLY
* CURRENT ASPECT PROGRESSION DOWNGRADED FOR FREIGHT OVER 100 TPOB. MUST OBSERVE TIME TABLE SPEED ON THE VENTURA SUB.
** OVER 140 TPOB MUST OBSERVE TIME TABLE SPEED RESTRICTIONS.

BLOCK DATA LEGEND:
L = BLOCK LENGTH
ELT= EQUIVALENT LEVEL TRACK
2ELT= EQUIV LEVEL TRACK FROM 2ND APP. SIG
AG = AVERAGE GRADE
DESIGN SPEED TO STOP:
S = STOPPING DIST. FROM APP. SIG
S2 = STOPPING DIST. FROM 2ND APP. SIG
S3 = STOPPING DIST. FROM 3RD APP. SIG
Rxx= DESIGN SPEED TO INDICATED REDUCED SPEED
xxS= INDICATED SPEED TO STOP

NOTE 06-01-10:
ASPECT CHART SHOWS CONSTRUCTION IN PROGRESS (CIP) IN A COMPLETED STATE BUT DOES NOT REFLECT ANY CHANGES THAT MAY HAVE OCCURRED DURING INSTALLATION.

PTC WORK TO BE PERFORMED BY OTHERS.

THIS PLAN ACCURATE FOR RAILROAD WORK ONLY.

EASTBOUND

RR-SP-165
SIGNAL STAGE 3

EASTBOUND ASPECT CHART
LANCASTER TO CP TAYLOR
VY 11 E
SH. T1 OF 1

RAILROAD SHEET NO.
165 OF 171

REVISED BY | DATE REVISED
CALCULATED-DESIGNED BY: RAMON VALDEZ
CHECKED BY: GLENN BREINDEL
CONSULTANT FUNCTIONAL SUPERVISOR
STATE OF CALIFORNIA - DEPARTMENT OF TRANSPORTATION
Caltrans® DESIGN

LAST REVISION 00-00-00 | DATE PLOTTED = 7/18/2012 | TIME PLOTTED = 2:49:57 PM

BORDER LAST REVISED 7/2/2010
USERNAME = gharlblana
DGN FILE = ...\moc\xorail\sheet\SP-165.sht
RELATIVE BORDER SCALE IS IN INCHES 0 1 2 3
UNIT 1812
PROJECT NUMBER & PHASE 07000211191

Dist	COUNTY	ROUTE	POST MILES TOTAL PROJECT	SHEET No.	TOTAL SHEETS
7	LA	5	29.4/31.6	1926	1931

David McCord 05-21-12
REGISTERED CIVIL ENGINEER DATE

05-21-12
PLANS APPROVAL DATE

REGISTERED PROFESSIONAL ENGINEER DAVID WILLIAM McCORD No. E-15317 Exp. June 30, 2013 ELECTRICAL STATE OF CALIFORNIA

THE STATE OF CALIFORNIA OR ITS OFFICERS OR AGENTS SHALL NOT BE RESPONSIBLE FOR THE ACCURACY OR COMPLETENESS OF SCANNED COPIES OF THIS PLAN SHEET.

SCRRA
279 E. ARROW HIGHWAY
SAN DIMAS, CA 91773

XORAIL
201 NORTH INDIAN HILL BLVD
SUITE 201
CLAREMONT, CA 91711

DESIGN SPEEDS:
•FREIGHT = 50 MPH
PASSENGER = 79 MPH

SIDING TIMETABLE SPEEDS
M.P. 15.6 TO M.P. 17.0
FREIGHT = 45 MPH, PASSENGER = 60 MPH

MAIN TIMETABLE SPEEDS
M.P. 11.23 TO M.P. 21.71
FREIGHT = 50 MPH, PASSENGER = 79 MPH

SIDING TIMETABLE SPEEDS
M.P. 11.1 TO M.P. 13.3
FREIGHT = 50 MPH, PASSENGER = 79 MPH

•MAXIMUM FREIGHT SPEED
PER TONNAGE RESTRICTIONS:

90 TPOB OR LESS = NO RESTRICTION
90.1 TO 100 TPOB = 50 MPH
100.1 TO 120 TPOB = 45 MPH
120.1 TO 140 TPOB = 40 MPH
140.1 TO 158 TPOB = 35 MPH

TIMETABLE FREIGHT SPEED
RESTRICTION ON DESCENDING GRADES
M.P. 11.3 - M.P. 15.6

BELOW 80 TPOB = NO RESTRICTION
80.1 TO 100 TPOB = 25MPH
100.1 TO 130 TPOB = 20MPH
130.1 TO 158 TPOB = 15MPH

EB TO TUXFORD EA
BLOCK DATA
(DESIGNED FOR 45 FREIGHT/60 PASS)

100 TPOB	FREIGHT		PASSENGER	
	L	5,199'	4,354'	ELT
NOTES	AG	-0.63%	-0.65%	AG
	S	7,379'	3,704'	S
*	30S	4,400'	1,102'	30S
@	S2	9,207'	N/A	2ELT

@ ALL TPOB FREIGHT COMPLY
* CURRENT ASPECT PROGRESSION DOWNGRADED FOR FREIGHT OVER 120 TPOB.

EB TO McGINLEY EC
BLOCK DATA
(DESIGNED FOR 45 FREIGHT/60 PASS)

100 TPOB	FREIGHT		PASSENGER	
	L	2,166'	1,495'	ELT
NOTES	AG	-1.24%	-1.24%	AG
	S	9,887'	3,704'	S
*	30S	5,942'	1,102'	30S
*	S2	7,946'	5,892'	2ELT
@	S3	9,424'		

@ ALL TPOB FREIGHT COMPLY
* CURRENT ASPECT PROGRESSION DOWNGRADED FOR ALL FREIGHT.

EB TO OLIVE EC
BLOCK DATA
(DESIGNED FOR 50 FREIGHT/79 PASS)

100 TPOB	FREIGHT		PASSENGER	
	L	6,970'	4,792'	ELT
NOTES	AG	-1.22%	-1.25%	AG
@	S	11,212'	6,127'	S
	30S	N/A	1,102'	30S
	S2	11,046'	6,127'	2ELT

@ ALL TPOB FREIGHT COMPLY

VY- 12.45
(PROGRAM MC5UQ)

CP SHELDON
VY-17.00
(PROGRAM XXXXXXXX)

CP TUXFORD
VY-16.05
(PROGRAM XXXXXXXX)

SUN VALLEY STA.
MP 15.4

VY-14.40
(PROGRAM MC5UQ)

CP McGINLEY
VY-15.56
(PROGRAM XXXXXXXX)

CP HOLLYWOOD
VY-13.30
(PROGRAM MC5UQ)

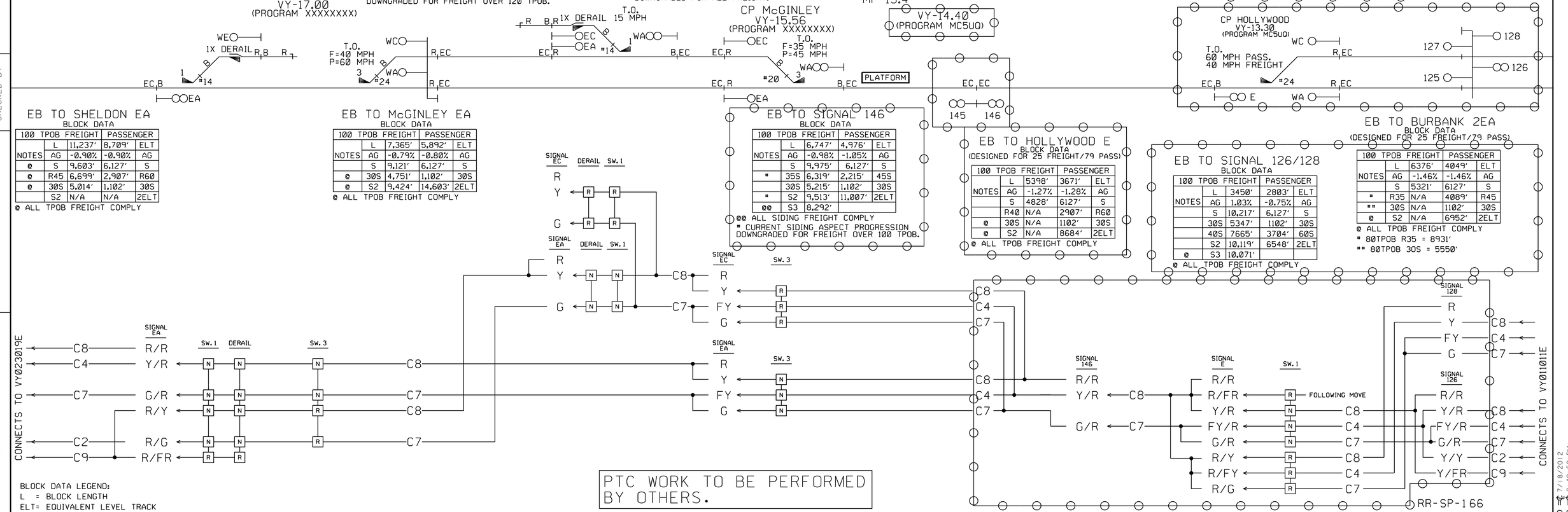

EB TO SHELDON EA
BLOCK DATA

100 TPOB	FREIGHT		PASSENGER	
	L	11,237'	8,709'	ELT
NOTES	AG	-0.90%	-0.90%	AG
@	S	9,603'	6,127'	S
@	R45	6,699'	2,907'	R60
@	30S	5,014'	1,102'	30S
	S2	N/A	N/A	2ELT

@ ALL TPOB FREIGHT COMPLY

EB TO McGINLEY EA
BLOCK DATA

100 TPOB	FREIGHT		PASSENGER	
	L	7,365'	5,892'	ELT
NOTES	AG	-0.79%	-0.80%	AG
	S	9,121'	6,127'	S
@	30S	4,751'	1,102'	30S
@	S2	9,424'	14,603'	2ELT

@ ALL TPOB FREIGHT COMPLY

EB TO SIGNAL 146
BLOCK DATA

100 TPOB	FREIGHT		PASSENGER	
	L	6,747'	4,976'	ELT
NOTES	AG	-0.98%	-1.05%	AG
	S	9,975'	6,127'	S
*	35S	6,319'	2,215'	45S
	30S	5,215'	1,102'	30S
*	S2	9,513'	11,007'	2ELT
@@	S3	8,292'		

@@ ALL SIDING FREIGHT COMPLY
* CURRENT SIDING ASPECT PROGRESSION DOWNGRADED FOR FREIGHT OVER 100 TPOB.

EB TO HOLLYWOOD E
BLOCK DATA
(DESIGNED FOR 25 FREIGHT/79 PASS)

100 TPOB	FREIGHT		PASSENGER	
	L	5398'	3671'	ELT
NOTES	AG	-1.27%	-1.28%	AG
	S	4828'	6127'	S
	R40	N/A	2907'	R60
@	30S	N/A	1102'	30S
@	S2	N/A	8684'	2ELT

@ ALL TPOB FREIGHT COMPLY

EB TO SIGNAL 126/128
BLOCK DATA

100 TPOB	FREIGHT		PASSENGER	
	L	3450'	2803'	ELT
NOTES	AG	1.03%	-0.75%	AG
	S	10,217'	6,127'	S
	30S	5347'	1102'	30S
	40S	7665'	3704'	60S
	S2	10,119'	6548'	2ELT
@	S3	10,071'		

@ ALL TPOB FREIGHT COMPLY

EB TO BURBANK 2EA
BLOCK DATA
(DESIGNED FOR 25 FREIGHT/79 PASS)

100 TPOB	FREIGHT		PASSENGER	
	L	6376'	4049'	ELT
NOTES	AG	-1.46%	-1.46%	AG
	S	5321'	6127'	S
*	R35	N/A	4089'	R45
**	30S	N/A	1102'	30S
@	S2	N/A	6952'	2ELT

@ ALL TPOB FREIGHT COMPLY
* 80TPOB R35 = 8931'
** 80TPOB 30S = 5550'

BLOCK DATA LEGEND:
L = BLOCK LENGTH
ELT= EQUIVALENT LEVEL TRACK
2ELT=EQUIV LEVEL TRACK FROM 2ND APP. SIG
AG = AVERAGE GRADE
DESIGN SPEED TO STOP:
S = STOPPING DIST. FROM APP. SIG
S2 = STOPPING DIST. FROM 2ND APP. SIG
S3 = STOPPING DIST. FROM 3RD APP. SIG
Rxx= DESIGN SPEED TO INDICATED REDUCED SPEED
xxS= INDICATED SPEED TO STOP

PTC WORK TO BE PERFORMED BY OTHERS.

THIS PLAN ACCURATE FOR RAILROAD WORK ONLY.

EASTBOUND

= OUT
= IN

SIGNAL STAGE 3

EASTBOUND ASPECT CHART
LANCASTER TO CP TAYLOR
VY 17-12E
SH. 1 OF 1

RAILROAD SHEET NO.
166 OF 171

STATE OF CALIFORNIA - DEPARTMENT OF TRANSPORTATION
Caltrans DESIGN
CONSULTANT FUNCTIONAL SUPERVISOR: GLENN BREINDEL
CALCULATED-DESIGNED BY: RAMON VALDEZ
CHECKED BY
REVISED BY
DATE REVISED

LAST REVISION 00-00-00
DATE PLOTTED = 7/18/2012
TIME PLOTTED = 2:49:58 PM

Dist	COUNTY	ROUTE	POST MILES TOTAL PROJECT	SHEET No.	TOTAL SHEETS
7	LA	5	29.4/31.6	1927	1931

David McCord 05-21-12
REGISTERED CIVIL ENGINEER DATE

05-21-12
PLANS APPROVAL DATE

REGISTERED PROFESSIONAL ENGINEER DAVID WILLIAM McCORD No. E-15317 Exp. June 30, 2013 ELECTRICAL STATE OF CALIFORNIA

THE STATE OF CALIFORNIA OR ITS OFFICERS OR AGENTS SHALL NOT BE RESPONSIBLE FOR THE ACCURACY OR COMPLETENESS OF SCANNED COPIES OF THIS PLAN SHEET.

SCRRA
279 E. ARROW HIGHWAY
SAN DIMAS, CA 91773

XORAIL
201 NORTH INDIAN HILL BLVD
SUITE 201
CLAREMONT, CA 91711

DESIGN SPEEDS:
•FREIGHT = 50 MPH
PASSENGER = 79 MPH

SIDING TIMETABLE SPEEDS
M.P. 15.5 TO M.P. 17.0
FREIGHT = 45 MPH, PASSENGER = 60 MPH

MAIN TIMETABLE SPEEDS
M.P. 11.3 TO M.P. 21.7
•• FREIGHT = 50 MPH, PASSENGER = 79 MPH

SIDING TIMETABLE SPEEDS
M.P. 11.1 TO M.P. 12.8
FREIGHT = 25 MPH, PASSENGER = 40 MPH

•MAXIMUM FREIGHT SPEED
PER TONNAGE RESTRICTIONS:
UP TO 100 TPOB = 50 MPH
100.1 TO 120 TPOB = 45 MPH
120.1 TO 140 TPOB = 40 MPH
OVER 140 TPOB = 35 MPH

•• PROPOSED TIMETABLE FREIGHT SPEED
RESTRICTION ON DESCENDING GRADES
M.P. 11.3 - M.P. 15.6
100.1 TO 130 TPOB = 25 MPH
OVER 130 TPOB = 20 MPH

EB TO TUXFORD EA
BLOCK DATA
(DESIGNED FOR 45 FREIGHT/60 PASS)

100 TPOB	FREIGHT		PASSENGER	
	L	5,199'	4,354'	ELT
NOTES	AG	-0.63%	-0.65%	AG
	S	7,379'	3,704'	S
*	30S	4,400'	1,102'	30S
ø	S2	9,207'	N/A	2ELT

ø ALL TPOB FREIGHT COMPLY
* CURRENT ASPECT PROGRESSION DOWNGRADED FOR FREIGHT OVER 120 TPOB.

EB TO McGINLEY EC
BLOCK DATA
(DESIGNED FOR 45 FREIGHT/60 PASS)

100 TPOB	FREIGHT		PASSENGER	
	L	2,166'	1,495'	ELT
NOTES	AG	-1.24%	-1.24%	AG
	S	9,887'	3,704'	S
*	30S	5,942'	1,102'	30S
*	S2	7,946'	5,892'	2ELT
ø	S3	9,424'		

ø ALL TPOB FREIGHT COMPLY
* CURRENT ASPECT PROGRESSION DOWNGRADED FOR ALL FREIGHT.

EB TO OLIVE EC
BLOCK DATA
(DESIGNED FOR 25 FREIGHT/40 PASS)

100 TPOB	FREIGHT		PASSENGER	
	L	8,773'	6,448'	ELT
NOTES	AG	-1.13%	-1.06%	AG
ø	S	4,497'	1,803'	S
	30S	N/A	1,102'	30S
	S2	N/A	N/A	2ELT

ø ALL TPOB FREIGHT COMPLY

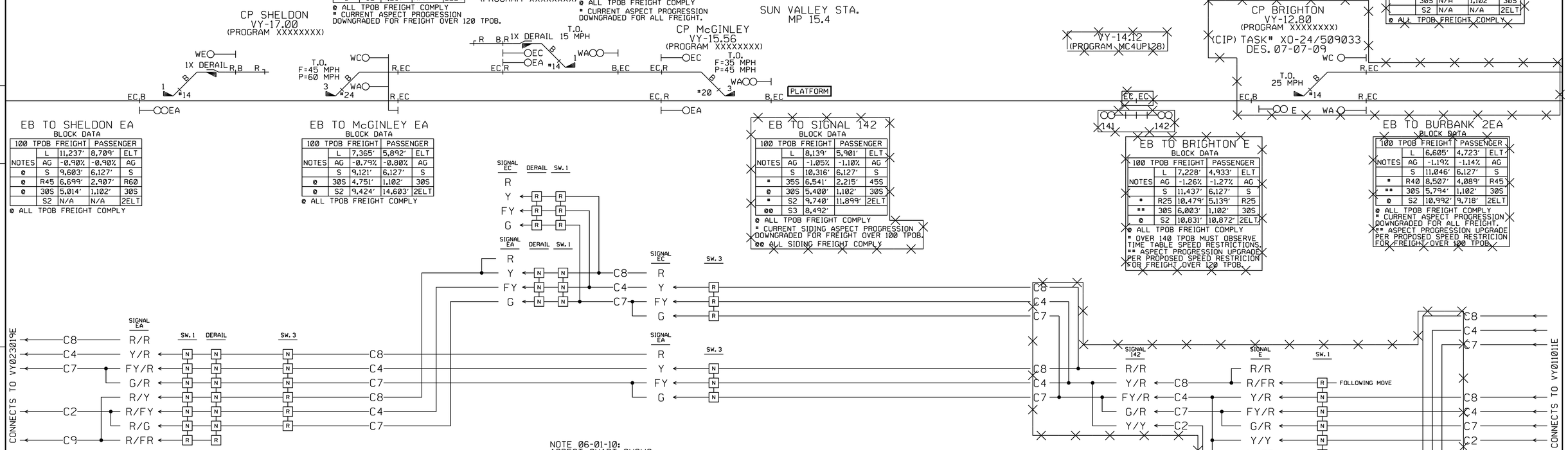

EB TO SHELDON EA
BLOCK DATA

100 TPOB	FREIGHT		PASSENGER	
	L	11,237'	8,709'	ELT
NOTES	AG	-0.90%	-0.90%	AG
ø	S	9,603'	6,127'	S
ø	R45	6,699'	2,907'	R60
ø	30S	5,014'	1,102'	30S
	S2	N/A	N/A	2ELT

ø ALL TPOB FREIGHT COMPLY

EB TO McGINLEY EA
BLOCK DATA

100 TPOB	FREIGHT		PASSENGER	
	L	7,365'	5,892'	ELT
NOTES	AG	-0.79%	-0.80%	AG
	S	9,121'	6,127'	S
ø	30S	4,751'	1,102'	30S
ø	S2	9,424'	14,603'	2ELT

ø ALL TPOB FREIGHT COMPLY

EB TO SIGNAL 142
BLOCK DATA

100 TPOB	FREIGHT		PASSENGER	
	L	8,139'	5,901'	ELT
NOTES	AG	-1.05%	-1.10%	AG
	S	10,316'	6,127'	S
*	35S	6,541'	2,215'	45S
ø	30S	5,400'	1,102'	30S
*	S2	9,740'	11,899'	2ELT
øø	S3	8,492'		

ø ALL TPOB FREIGHT COMPLY
* CURRENT SIDING ASPECT PROGRESSION DOWNGRADED FOR FREIGHT OVER 100 TPOB.
øø ALL SIDING FREIGHT COMPLY

EB TO BRIGHTON E
BLOCK DATA

100 TPOB	FREIGHT		PASSENGER	
	L	7,228'	4,933'	ELT
NOTES	AG	-1.26%	-1.27%	AG
	S	11,437'	6,127'	S
*	R25	10,479'	5,139'	R25
**	30S	6,003'	1,102'	30S
ø	S2	10,831'	10,872'	2ELT

ø ALL TPOB FREIGHT COMPLY
* OVER 140 TPOB MUST OBSERVE TIME TABLE SPEED RESTRICTIONS.
** ASPECT PROGRESSION UPGRADE PER PROPOSED SPEED RESTRICION FOR FREIGHT OVER 120 TPOB.

EB TO BURBANK 2EA
BLOCK DATA

100 TPOB	FREIGHT		PASSENGER	
	L	6,605'	4,723'	ELT
NOTES	AG	-1.19%	-1.14%	AG
	S	11,046'	6,127'	S
*	R40	8,507'	4,089'	R45
**	30S	5,794'	1,102'	30S
ø	S2	10,992'	9,718'	2ELT

ø ALL TPOB FREIGHT COMPLY
* CURRENT ASPECT PROGRESSION DOWNGRADED FOR ALL FREIGHT.
** ASPECT PROGRESSION UPGRADE PER PROPOSED SPEED RESTRICION FOR FREIGHT OVER 100 TPOB.

BLOCK DATA LEGEND:
L = BLOCK LENGTH
ELT= EQUIVALENT LEVEL TRACK
2ELT= EQUIV LEVEL TRACK FROM 2ND APP. SIG
AG = AVERAGE GRADE
DESIGN SPEED TO STOP:
S = STOPPING DIST. FROM APP. SIG
S2 = STOPPING DIST. FROM 2ND APP. SIG
S3 = STOPPING DIST. FROM 3RD APP. SIG
Rxx= DESIGN SPEED TO INDICATED REDUCED SPEED
xxS= INDICATED SPEED TO STOP

NOTE 06-01-10:
ASPECT CHART SHOWS CONSTRUCTION IN PROGRESS (CIP) IN A COMPLETED STATE BUT DOES NOT REFLECT ANY CHANGES THAT MAY HAVE OCCURRED DURING INSTALLATION.

PTC WORK TO BE PERFORMED BY OTHERS.

= OUT
= IN

EASTBOUND

THIS PLAN ACCURATE FOR RAILROAD WORK ONLY.

RR-SP-167
SIGNAL STAGE 3

EASTBOUND ASPECT CHART
LANCASTER TO CP TAYLOR
VY 17-12 E
SH. T1 OF 1

RAILROAD SHEET NO.
167 OF 171

STATE OF CALIFORNIA - DEPARTMENT OF TRANSPORTATION
Caltrans® DESIGN
CONSULTANT FUNCTIONAL SUPERVISOR GLENN BREINDEL
CALCULATED-DESIGNED BY RAMON VALDEZ
CHECKED BY
REVISED BY
DATE REVISED

LAST REVISION 00-00-00
DATE PLOTTED = 7/18/2012
TIME PLOTTED = 2:50:00 PM

Dist	COUNTY	ROUTE	POST MILES TOTAL PROJECT	SHEET No.	TOTAL SHEETS
7	LA	5	29.4/31.6	1928	1931

David McCord 05-21-12
REGISTERED CIVIL ENGINEER DATE

05-21-12
PLANS APPROVAL DATE

REGISTERED PROFESSIONAL ENGINEER DAVID WILLIAM McCORD No. E-15317 Exp. June 30, 2013 ELECTRICAL STATE OF CALIFORNIA

THE STATE OF CALIFORNIA OR ITS OFFICERS OR AGENTS SHALL NOT BE RESPONSIBLE FOR THE ACCURACY OR COMPLETENESS OF SCANNED COPIES OF THIS PLAN SHEET.

SCRRA
279 E. ARROW HIGHWAY
SAN DIMAS, CA 91773

XORAIL
201 NORTH INDIAN HILL BLVD
SUITE 201
CLAREMONT, CA 91711

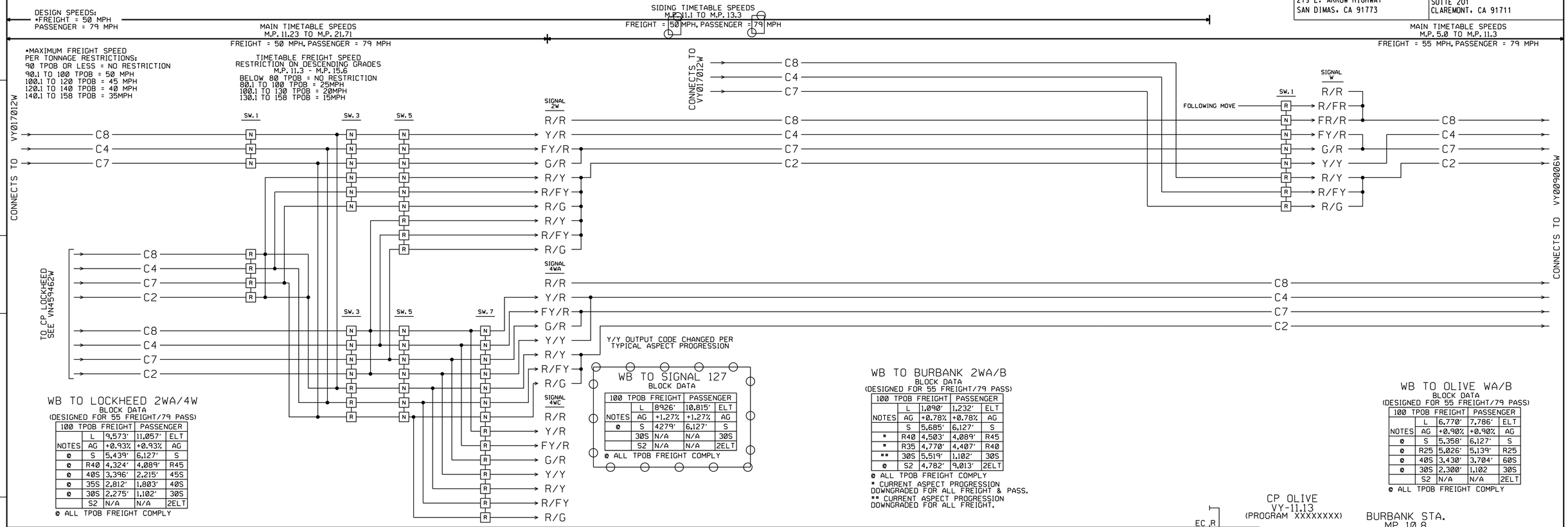

WB TO LOCKHEED 2WA/4W
BLOCK DATA
(DESIGNED FOR 55 FREIGHT/79 PASS)

100 TPOB	FREIGHT		PASSENGER	
	L	9,573'	11,057'	ELT
NOTES	AG	+0.93%	+0.93%	AG
@	S	5,439'	6,127'	S
@	R40	4,324'	4,089'	R45
@	40S	3,396'	2,215'	45S
@	35S	2,812'	1,803'	40S
@	30S	2,275'	1,102'	30S
	S2	N/A	N/A	2ELT

@ ALL TPOB FREIGHT COMPLY

WB TO SIGNAL 127
BLOCK DATA

100 TPOB	FREIGHT		PASSENGER	
	L	8926'	10,815'	ELT
NOTES	AG	+1.27%	+1.27%	AG
@	S	4279'	6,127'	S
	30S	N/A	N/A	30S
	S2	N/A	N/A	2ELT

@ ALL TPOB FREIGHT COMPLY

WB TO BURBANK 2WA/B
BLOCK DATA
(DESIGNED FOR 55 FREIGHT/79 PASS)

100 TPOB	FREIGHT		PASSENGER	
	L	1,090'	1,232'	ELT
NOTES	AG	+0.78%	+0.78%	AG
	S	5,685'	6,127'	S
*	R40	4,503'	4,089'	R45
*	R35	4,770'	4,407'	R40
**	30S	5,519'	1,102'	30S
@	S2	4,782'	9,013'	2ELT

@ ALL TPOB FREIGHT COMPLY
* CURRENT ASPECT PROGRESSION DOWNGRADED FOR ALL FREIGHT & PASS.
** CURRENT ASPECT PROGRESSION DOWNGRADED FOR ALL FREIGHT.

WB TO OLIVE WA/B
BLOCK DATA
(DESIGNED FOR 55 FREIGHT/79 PASS)

100 TPOB	FREIGHT		PASSENGER	
	L	6,770'	7,786'	ELT
NOTES	AG	+0.90%	+0.90%	AG
@	S	5,358'	6,127'	S
@	R25	5,026'	5,139'	R25
@	40S	3,430'	3,704'	60S
@	30S	2,300'	1,102	30S
	S2	N/A	N/A	2ELT

@ ALL TPOB FREIGHT COMPLY

WB TO BURBANK 4WA/B
BLOCK DATA
(DESIGNED FOR 55 FREIGHT/79 PASS)

100 TPOB	FREIGHT		PASSENGER	
	L	7,748'	8,884'	ELT
NOTES	AG	+0.88%	+0.88%	AG
@	S	5,519'	6,127'	S
@	R40	4,382'	4,089'	R45
@	R35	4,637'	4,407'	R40
@	40S	3,453'	3,704'	60S
@	30S	2,317'	1,102	30S
	S2	N/A	N/A	2ELT

@ ALL TPOB FREIGHT COMPLY

BLOCK DATA LEGEND:
L = BLOCK LENGTH
ELT= EQUIVALENT LEVEL TRACK
2ELT= EQUIV LEVEL TRACK FROM 2ND APP. SIG
AG = AVERAGE GRADE
DESIGN SPEED TO STOP:
S = STOPPING DIST. FROM APP. SIG
S2 = STOPPING DIST. FROM 2ND APP. SIG
S3 = STOPPING DIST. FROM 3RD APP. SIG
Rxx= DESIGN SPEED TO INDICATED REDUCED SPEED
xxS= INDICATED SPEED TO STOP

WB TO SIGNAL 125
BLOCK DATA
(DESIGNED FOR 55 FREIGHT/79PASS)

100 TPOB	FREIGHT		PASSENGER	
	L	7,836'	9,586'	ELT
NOTES	AG	+1.34%	+1.34%	AG
@	S	4,878'	6,127'	S
@	35S	4,136'	2,215'	45S
@	30S	1,976'	1,102'	30S
	S2	N/A	N/A	2ELT

@ ALL TPOB FREIGHT COMPLY

PTC WORK TO BE PERFORMED BY OTHERS.

WESTBOUND

THIS PLAN ACCURATE FOR RAILROAD WORK ONLY.

RR-SP-168
SIGNAL STAGE 3

WESTBOUND ASPECT CHART
LANCASTER TO CP TAYLOR
VY 11 W
SH. 1 OF 1

RAILROAD SHEET NO.
168 OF 171

STATE OF CALIFORNIA - DEPARTMENT OF TRANSPORTATION
DESIGN
Caltrans®
CONSULTANT FUNCTIONAL SUPERVISOR: GLENN BREINDEL
CALCULATED-DESIGNED BY: RAMON VALDEZ
CHECKED BY
REVISED BY
DATE REVISED

LAST REVISION 00-00-00
DATE PLOTTED = 7/18/2012
TIME PLOTTED = 2:50:01 PM

BORDER LAST REVISED 7/2/2010
USERNAME = gharibiana
DGN FILE = ...\moc\xorail\sheet\SP-168.sht
RELATIVE BORDER SCALE IS IN INCHES 0 1 2 3
UNIT 1812
PROJECT NUMBER & PHASE 07000211191

Dist	COUNTY	ROUTE	POST MILES TOTAL PROJECT	SHEET No.	TOTAL SHEETS
7	LA	5	29.4/31.6	1929	1931

David McCord 05-21-12
REGISTERED CIVIL ENGINEER DATE

05-21-12
PLANS APPROVAL DATE

REGISTERED PROFESSIONAL ENGINEER DAVID WILLIAM McCORD No. E-15317 Exp. June 30, 2013 ELECTRICAL STATE OF CALIFORNIA

THE STATE OF CALIFORNIA OR ITS OFFICERS OR AGENTS SHALL NOT BE RESPONSIBLE FOR THE ACCURACY OR COMPLETENESS OF SCANNED COPIES OF THIS PLAN SHEET.

SCRRA
279 E. ARROW HIGHWAY
SAN DIMAS, CA 91773

XORAIL
201 NORTH INDIAN HILL BLVD
SUITE 201
CLAREMONT, CA 91711

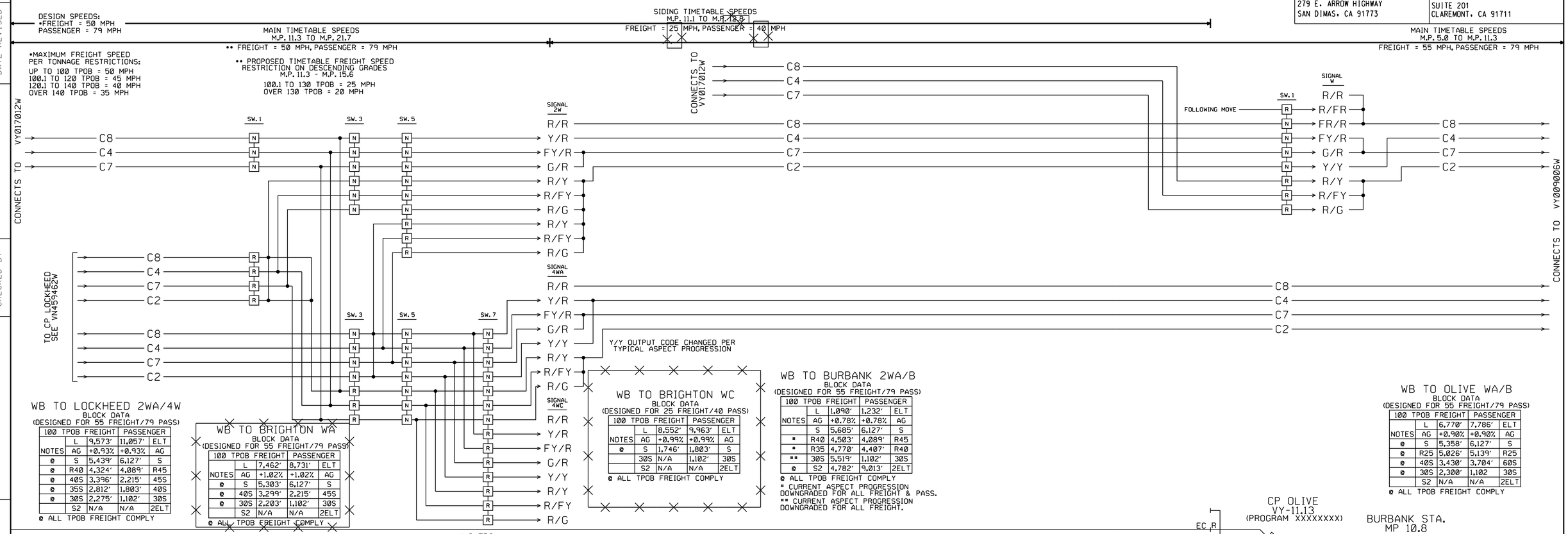

WB TO LOCKHEED 2WA/4W
BLOCK DATA
(DESIGNED FOR 55 FREIGHT/79 PASS)

100 TPOB	FREIGHT		PASSENGER	
	L	9,573'	11,057'	ELT
NOTES	AG	+0.93%	+0.93%	AG
ø	S	5,439'	6,127'	S
ø	R40	4,324'	4,089'	R45
ø	40S	3,396'	2,215'	45S
ø	35S	2,812'	1,803'	40S
ø	30S	2,275'	1,102'	30S
	S2	N/A	N/A	2ELT

ø ALL TPOB FREIGHT COMPLY

WB TO BRIGHTON WA
BLOCK DATA
(DESIGNED FOR 55 FREIGHT/79 PASS)

100 TPOB	FREIGHT		PASSENGER	
	L	7,462'	8,731'	ELT
NOTES	AG	+1.02%	+1.02%	AG
ø	S	5,303'	6,127'	S
ø	40S	3,299'	2,215'	45S
ø	30S	2,203'	1,102'	30S
	S2	N/A	N/A	2ELT

ø ALL TPOB FREIGHT COMPLY

WB TO BRIGHTON WC
BLOCK DATA
(DESIGNED FOR 25 FREIGHT/40 PASS)

100 TPOB	FREIGHT		PASSENGER	
	L	8,552'	9,963'	ELT
NOTES	AG	+0.99%	+0.99%	AG
ø	S	1,746'	1,803'	S
	30S	N/A	1,102'	30S
	S2	N/A	N/A	2ELT

ø ALL TPOB FREIGHT COMPLY

WB TO BURBANK 2WA/B
BLOCK DATA
(DESIGNED FOR 55 FREIGHT/79 PASS)

100 TPOB	FREIGHT		PASSENGER	
	L	1,090'	1,232'	ELT
NOTES	AG	+0.78%	+0.78%	AG
	S	5,685'	6,127'	S
•	R40	4,503'	4,089'	R45
•	R35	4,770'	4,407'	R40
••	30S	5,519'	1,102'	30S
ø	S2	4,782'	9,013'	2ELT

ø ALL TPOB FREIGHT COMPLY
• CURRENT ASPECT PROGRESSION DOWNGRADED FOR ALL FREIGHT & PASS.
•• CURRENT ASPECT PROGRESSION DOWNGRADED FOR ALL FREIGHT.

WB TO OLIVE WA/B
BLOCK DATA
(DESIGNED FOR 55 FREIGHT/79 PASS)

100 TPOB	FREIGHT		PASSENGER	
	L	6,770'	7,786'	ELT
NOTES	AG	+0.90%	+0.90%	AG
ø	S	5,358'	6,127'	S
ø	R25	5,026'	5,139'	R25
ø	40S	3,430'	3,704'	60S
ø	30S	2,300'	1,102	30S
	S2	N/A	N/A	2ELT

ø ALL TPOB FREIGHT COMPLY

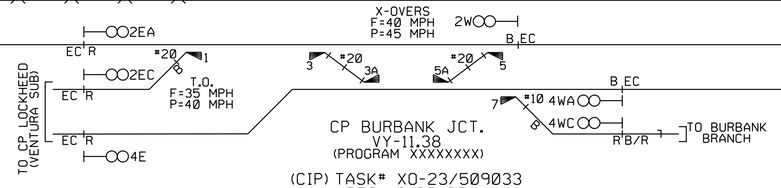

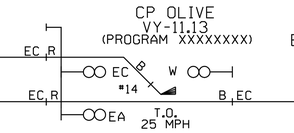

WB TO BURBANK 4WA/B
BLOCK DATA
(DESIGNED FOR 55 FREIGHT/79 PASS)

100 TPOB	FREIGHT		PASSENGER	
	L	7,748'	8,884'	ELT
NOTES	AG	+0.88%	+0.88%	AG
ø	S	5,519'	6,127'	S
ø	R40	4,382'	4,089'	R45
ø	R35	4,637'	4,407'	R40
ø	40S	3,453'	3,704'	60S
ø	30S	2,317'	1,102	30S
	S2	N/A	N/A	2ELT

ø ALL TPOB FREIGHT COMPLY

BLOCK DATA LEGEND:
L = BLOCK LENGTH
ELT= EQUIVALENT LEVEL TRACK
2ELT= EQUIV LEVEL TRACK FROM 2ND APP. SIG
AG = AVERAGE GRADE
DESIGN SPEED TO STOP:
S = STOPPING DIST. FROM APP. SIG
S2 = STOPPING DIST. FROM 2ND APP. SIG
S3 = STOPPING DIST. FROM 3RD APP. SIG
Rxx= DESIGN SPEED TO INDICATED REDUCED SPEED
xxS= INDICATED SPEED TO STOP

NOTE 06-01-10:
ASPECT CHART SHOWS CONSTRUCTION IN PROGRESS (CIP) IN A COMPLETED STATE BUT DOES NOT REFLECT ANY CHANGES THAT MAY HAVE OCCURRED DURING INSTALLATION.

= OUT
= IN

PTC WORK TO BE PERFORMED BY OTHERS.

WESTBOUND

THIS PLAN ACCURATE FOR RAILROAD WORK ONLY.

RR-SP-169
SIGNAL STAGE 3

WESTBOUND ASPECT CHART
LANCASTER TO CP TAYLOR
VY 11 W
SH. T1 OF 1

RAILROAD SHEET NO.
169 OF 171

LAST REVISION 00-00-00
DATE PLOTTED = 7/18/2012
TIME PLOTTED = 2:50:02 PM

STATE OF CALIFORNIA - DEPARTMENT OF TRANSPORTATION
DESIGN
Caltrans®
CONSULTANT FUNCTIONAL SUPERVISOR GLENN BREINDEL
CALCULATED-DESIGNED BY RAMON VALDEZ
CHECKED BY
REVISED BY
DATE REVISED

BORDER LAST REVISED 7/2/2010
USERNAME = gharriblana
DGN FILE = ...\moc\xorail\sheet\SP-169.sht
RELATIVE BORDER SCALE IS IN INCHES 0 1 2 3
UNIT 1812
PROJECT NUMBER & PHASE 07000211191

Dist	COUNTY	ROUTE	POST MILES TOTAL PROJECT	SHEET No.	TOTAL SHEETS
7	LA	5	29.4/31.6	1930	1931

David McCord 05-21-12
REGISTERED CIVIL ENGINEER DATE

05-21-12
PLANS APPROVAL DATE

REGISTERED PROFESSIONAL ENGINEER DAVID WILLIAM McCORD No. E-15317 Exp. June 30, 2013 ELECTRICAL STATE OF CALIFORNIA

THE STATE OF CALIFORNIA OR ITS OFFICERS OR AGENTS SHALL NOT BE RESPONSIBLE FOR THE ACCURACY OR COMPLETENESS OF SCANNED COPIES OF THIS PLAN SHEET.

SCRRA
279 E. ARROW HIGHWAY
SAN DIMAS, CA 91773

XORAIL
201 NORTH INDIAN HILL BLVD
SUITE 201
CLAREMONT, CA 91711

PTC WORK TO BE PERFORMED BY OTHERS.

DESIGN SPEEDS:
•FREIGHT = 50 MPH
PASSENGER = 79 MPH

SIDING TIMETABLE SPEEDS
M.P. 15.6 TO M.P. 17.0
FREIGHT = 45 MPH, PASSENGER = 60 MPH

MAIN TIMETABLE SPEEDS
M.P. 11.23 TO M.P. 21.71
FREIGHT = 50 MPH, PASSENGER = 79 MPH

SIDING TIMETABLE SPEEDS
M.P. 11.1 TO M.P. 13.3
FREIGHT = 50 MPH, PASSENGER = 79 MPH

•MAXIMUM FREIGHT SPEED
PER TONNAGE RESTRICTIONS:
90 TPOB OR LESS = NO RESTRICTION
90.1 TO 100 TPOB = 50 MPH
100.1 TO 120 TPOB = 45 MPH
120.1 TO 140 TPOB = 40 MPH
140.1 TO 158 TPOB = 35 MPH

TIMETABLE FREIGHT SPEED
RESTRICTION ON DESCENDING GRADES
M.P. 11.3 - M.P. 15.6
BELOW 80 TPOB = NO RESTRICTION
80.1 TO 100 TPOB = 25MPH
100.1 TO 130 TPOB = 20MPH
130.1 TO 158 TPOB = 15MPH

BRAKING DISTANCE SUFFICIENT AT DESIGN SPEED TO ALLOW CODE UPGRADE

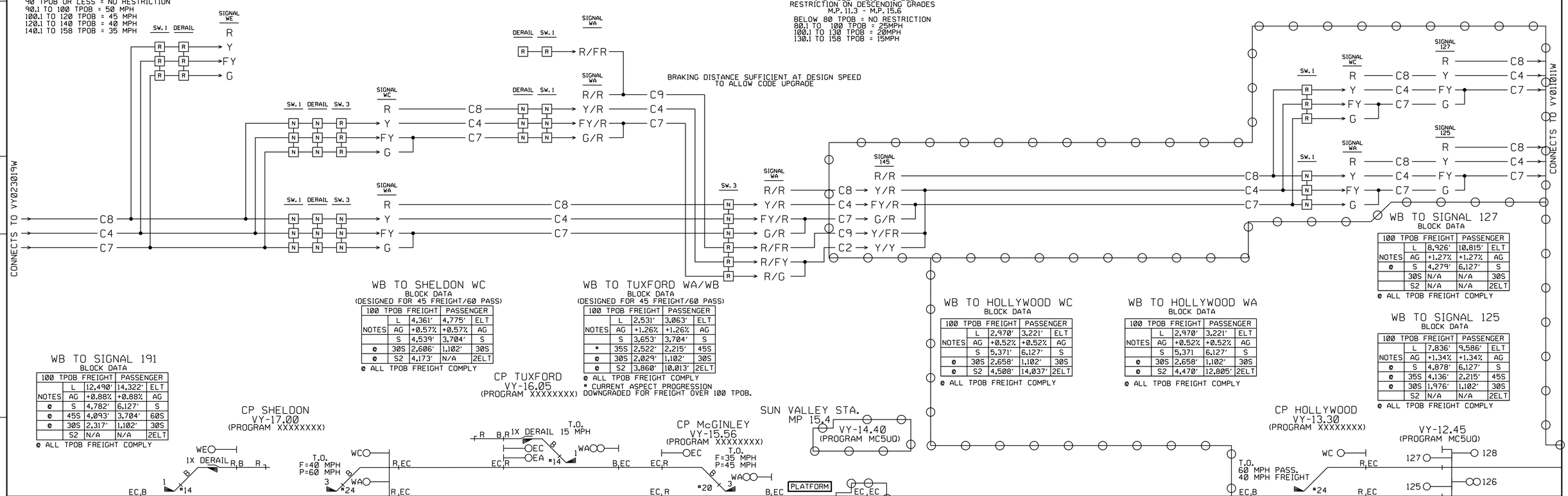

WB TO SIGNAL 191
BLOCK DATA

100 TPOB		FREIGHT	PASSENGER	
	L	12,490'	14,322'	ELT
NOTES	AG	+0.88%	+0.88%	AG
ø	S	4,782'	6,127'	S
ø	45S	4,093'	3,704'	60S
ø	30S	2,317'	1,102'	30S
	S2	N/A	N/A	2ELT

ø ALL TPOB FREIGHT COMPLY

WB TO SHELDON WC
BLOCK DATA
(DESIGNED FOR 45 FREIGHT/60 PASS)

100 TPOB		FREIGHT	PASSENGER	
	L	4,361'	4,775'	ELT
NOTES	AG	+0.57%	+0.57%	AG
	S	4,539'	3,704'	S
ø	30S	2,606'	1,102'	30S
ø	S2	4,173'	N/A	2ELT

ø ALL TPOB FREIGHT COMPLY

WB TO TUXFORD WA/WB
BLOCK DATA
(DESIGNED FOR 45 FREIGHT/60 PASS)

100 TPOB		FREIGHT	PASSENGER	
	L	2,531'	3,063'	ELT
NOTES	AG	+1.26%	+1.26%	AG
	S	3,653'	3,704'	S
▪	35S	2,522'	2,215'	45S
ø	30S	2,029'	1,102'	30S
ø	S2	3,860'	10,013'	2ELT

ø ALL TPOB FREIGHT COMPLY
▪ CURRENT ASPECT PROGRESSION DOWNGRADED FOR FREIGHT OVER 100 TPOB.

WB TO HOLLYWOOD WC
BLOCK DATA

100 TPOB		FREIGHT	PASSENGER	
	L	2,970'	3,221'	ELT
NOTES	AG	+0.52%	+0.52%	AG
	S	5,371'	6,127'	S
ø	30S	2,658'	1,102'	30S
ø	S2	4,508'	14,037'	2ELT

ø ALL TPOB FREIGHT COMPLY

WB TO HOLLYWOOD WA
BLOCK DATA

100 TPOB		FREIGHT	PASSENGER	
	L	2,970'	3,221'	ELT
NOTES	AG	+0.52%	+0.52%	AG
	S	5,371	6,127'	S
ø	30S	2,658'	1,102'	30S
ø	S2	4,470'	12,805'	2ELT

ø ALL TPOB FREIGHT COMPLY

WB TO SIGNAL 127
BLOCK DATA

100 TPOB		FREIGHT	PASSENGER	
	L	8,926'	10,815'	ELT
NOTES	AG	+1.27%	+1.27%	AG
ø	S	4,279'	6,127'	S
	30S	N/A	N/A	30S
	S2	N/A	N/A	2ELT

ø ALL TPOB FREIGHT COMPLY

WB TO SIGNAL 125
BLOCK DATA

100 TPOB		FREIGHT	PASSENGER	
	L	7,836'	9,586'	ELT
NOTES	AG	+1.34%	+1.34%	AG
ø	S	4,878'	6,127'	S
ø	35S	4,136'	2,215'	45S
ø	30S	1,976'	1,102'	30S
	S2	N/A	N/A	2ELT

ø ALL TPOB FREIGHT COMPLY

WB TO SHELDON WA
BLOCK DATA

100 TPOB		FREIGHT	PASSENGER	
	L	6,892'	7,845'	ELT
NOTES	AG	+0.83%	+0.83%	AG
ø	S	4,855'	6,127'	S
ø	30S	2,360'	1,102'	30S
	S2	N/A	N/A	2ELT

ø ALL TPOB FREIGHT COMPLY

WB TO McGINLEY WA/WB
BLOCK DATA

100 TPOB		FREIGHT	PASSENGER	
	L	5,967'	6,952'	ELT
NOTES	AG	+0.99%	+0.99%	AG
ø	S	4,627'	6,127'	S
ø	R35	3,781'	4,089'	R45
ø	30S	2,227'	1,102'	30S
	S2	N/A	N/A	2ELT

ø ALL TPOB FREIGHT COMPLY

WB TO SIGNAL 145
BLOCK DATA

100 TPOB		FREIGHT	PASSENGER	
	L	5,878'	7,112'	ELT
NOTES	AG	+1.26%	+1.26%	AG
ø	S	4,290'	6,127'	S
ø	30S	2,029'	1,102'	30S
ø	40S	3,064'	3,704'	60S
	S2	N/A	N/A	2ELT

ø ALL TPOB FREIGHT COMPLY

BLOCK DATA LEGEND:
L = BLOCK LENGTH
ELT= EQUIVALENT LEVEL TRACK
2ELT= EQUIV LEVEL TRACK FROM 2ND APP. SIG
AG = AVERAGE GRADE
DESIGN SPEED TO STOP:
S = STOPPING DIST. FROM APP. SIG
S2 = STOPPING DIST. FROM 2ND APP. SIG
S3 = STOPPING DIST. FROM 3RD APP. SIG
Rxx= DESIGN SPEED TO INDICATED REDUCED SPEED
xxS= INDICATED SPEED TO STOP

WESTBOUND

THIS PLAN ACCURATE FOR RAILROAD WORK ONLY.

RR-SP-170
SIGNAL STAGE 3

WESTBOUND ASPECT CHART
LANCASTER TO CP TAYLOR
VY 17-12 W
SH. 1 OF 1

RAILROAD SHEET NO.
170 OF 171

LAST REVISION 00-00-00
DATE PLOTTED = ℄ 7/18/2012
TIME PLOTTED = ℄ 2:50:03 PM

REVISED BY | DATE REVISED
RAMON VALDEZ
CALCULATED-DESIGNED BY | CHECKED BY
CONSULTANT FUNCTIONAL SUPERVISOR
GLENN BREINDEL
STATE OF CALIFORNIA - DEPARTMENT OF TRANSPORTATION
Caltrans®
DESIGN

Dist	COUNTY	ROUTE	POST MILES TOTAL PROJECT	SHEET No.	TOTAL SHEETS
7	LA	5	29.4/31.6	1931	1931

David McCord 05-21-12
REGISTERED CIVIL ENGINEER DATE

05-21-12
PLANS APPROVAL DATE

REGISTERED PROFESSIONAL ENGINEER DAVID WILLIAM McCORD No. E-15317 Exp. June 30, 2013 ELECTRICAL STATE OF CALIFORNIA

THE STATE OF CALIFORNIA OR ITS OFFICERS OR AGENTS SHALL NOT BE RESPONSIBLE FOR THE ACCURACY OR COMPLETENESS OF SCANNED COPIES OF THIS PLAN SHEET.

SCRRA
279 E. ARROW HIGHWAY
SAN DIMAS, CA 91773

XORAIL
201 NORTH INDIAN HILL BLVD
SUITE 201
CLAREMONT, CA 91711

PTC WORK TO BE PERFORMED BY OTHERS.

DESIGN SPEEDS:
•FREIGHT = 50 MPH
PASSENGER = 79 MPH

SIDING TIMETABLE SPEEDS
M.P. 15.6 TO M.P. 17.0
FREIGHT = 45 MPH, PASSENGER = 60 MPH

MAIN TIMETABLE SPEEDS
M.P. 11.3 TO M.P. 21.7
•• FREIGHT = 50 MPH, PASSENGER = 79 MPH

•• PROPOSED TIMETABLE FREIGHT SPEED RESTRICTION ON DESCENDING GRADES
M.P. 11.3 - M.P. 15.6
100.1 TO 130 TPOB = 25 MPH
OVER 130 TPOB = 20 MPH

SIDING TIMETABLE SPEEDS
M.P. 11.1 TO M.P. 12.8
FREIGHT = 25 MPH, PASSENGER = 40 MPH

•MAXIMUM FREIGHT SPEED PER TONNAGE RESTRICTIONS:
UP TO 100 TPOB = 50 MPH
100.1 TO 120 TPOB = 45 MPH
120.1 TO 140 TPOB = 40 MPH
OVER 140 TPOB = 35 MPH

BRAKING DISTANCE SUFFICIENT AT DESIGN SPEED TO ALLOW CODE UPGRADE

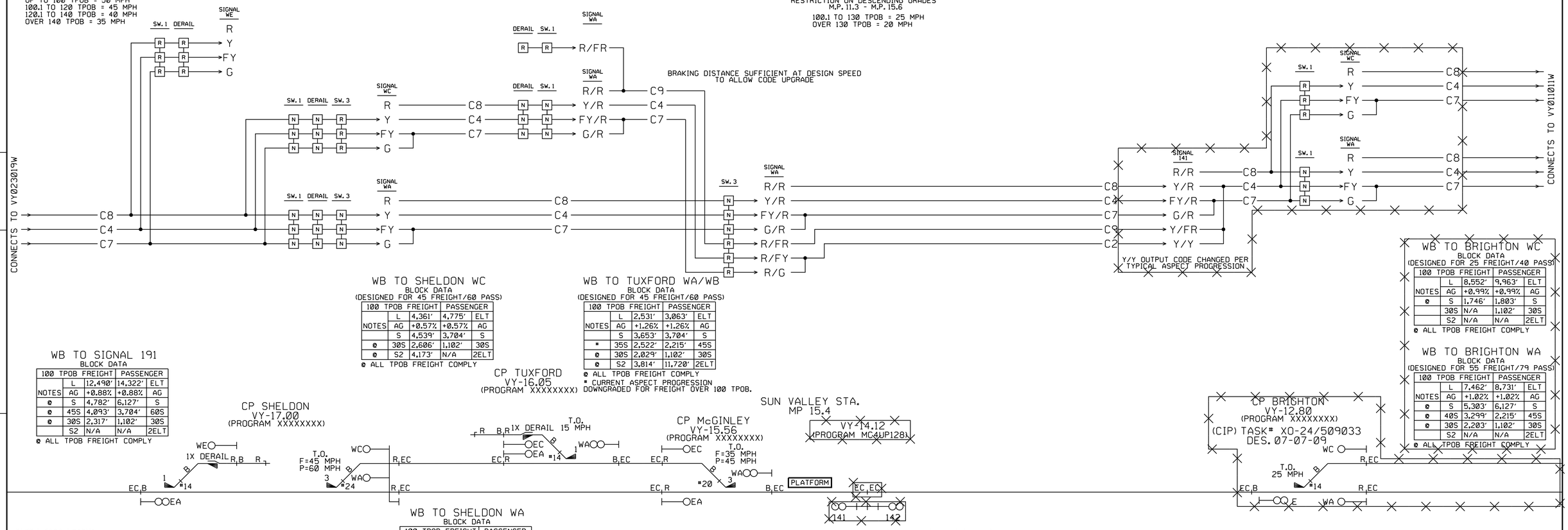

WB TO SHELDON WC
BLOCK DATA
(DESIGNED FOR 45 FREIGHT/60 PASS)

100 TPOB	FREIGHT		PASSENGER	
	L	4,361'	4,775'	ELT
NOTES	AG	+0.57%	+0.57%	AG
	S	4,539'	3,704'	S
ø	30S	2,606'	1,102'	30S
ø	S2	4,173'	N/A	2ELT

ø ALL TPOB FREIGHT COMPLY

WB TO TUXFORD WA/WB
BLOCK DATA
(DESIGNED FOR 45 FREIGHT/60 PASS)

100 TPOB	FREIGHT		PASSENGER	
	L	2,531'	3,063'	ELT
NOTES	AG	+1.26%	+1.26%	AG
	S	3,653'	3,704'	S
▪	35S	2,522'	2,215'	45S
ø	30S	2,029'	1,102'	30S
ø	S2	3,814'	11,720'	2ELT

ø ALL TPOB FREIGHT COMPLY
▪ CURRENT ASPECT PROGRESSION DOWNGRADED FOR FREIGHT OVER 100 TPOB.

WB TO BRIGHTON WC
BLOCK DATA
(DESIGNED FOR 25 FREIGHT/40 PASS)

100 TPOB	FREIGHT		PASSENGER	
	L	8,552'	9,963'	ELT
NOTES	AG	+0.99%	+0.99%	AG
ø	S	1,746'	1,803'	S
	30S	N/A	1,102'	30S
	S2	N/A	N/A	2ELT

ø ALL TPOB FREIGHT COMPLY

WB TO BRIGHTON WA
BLOCK DATA
(DESIGNED FOR 55 FREIGHT/79 PASS)

100 TPOB	FREIGHT		PASSENGER	
	L	7,462'	8,731'	ELT
NOTES	AG	+1.02%	+1.02%	AG
ø	S	5,303'	6,127'	S
ø	40S	3,299'	2,215'	45S
ø	30S	2,203'	1,102'	30S
	S2	N/A	N/A	2ELT

ø ALL TPOB FREIGHT COMPLY

WB TO SIGNAL 191
BLOCK DATA

100 TPOB	FREIGHT		PASSENGER	
	L	12,490'	14,322'	ELT
NOTES	AG	+0.88%	+0.88%	AG
ø	S	4,782'	6,127'	S
ø	45S	4,093'	3,704'	60S
ø	30S	2,317'	1,102'	30S
	S2	N/A	N/A	2ELT

ø ALL TPOB FREIGHT COMPLY

WB TO SHELDON WA
BLOCK DATA

100 TPOB	FREIGHT		PASSENGER	
	L	6,892'	7,845'	ELT
NOTES	AG	+0.83%	+0.83%	AG
ø	S	4,855'	6,127'	S
ø	30S	2,360'	1,102'	30S
	S2	N/A	N/A	2ELT

ø ALL TPOB FREIGHT COMPLY

WB TO McGINLEY WA/WB
BLOCK DATA

100 TPOB	FREIGHT		PASSENGER	
	L	7,359'	8,659'	ELT
NOTES	AG	+1.06%	+1.06%	AG
ø	S	4,534'	6,127'	S
ø	R35	3,710'	4,089'	R45
ø	30S	2,172'	1,102'	30S
	S2	N/A	N/A	2ELT

ø ALL TPOB FREIGHT COMPLY

WB TO SIGNAL 141
BLOCK DATA

100 TPOB	FREIGHT		PASSENGER	
	L	7,830'	9,487'	ELT
NOTES	AG	+1.27%	+1.27%	AG
ø	S	4,279'	6,127'	S
ø	30S	2,022'	1,102'	30S
ø	25S	1,577'	814'	25S
	S2	N/A	N/A	2ELT

ø ALL TPOB FREIGHT COMPLY

BLOCK DATA LEGEND:
L = BLOCK LENGTH
ELT= EQUIVALENT LEVEL TRACK
2ELT=EQUIV LEVEL TRACK FROM 2ND APP. SIG
AG = AVERAGE GRADE
DESIGN SPEED TO STOP:
S = STOPPING DIST. FROM APP. SIG
S2 = STOPPING DIST. FROM 2ND APP. SIG
S3 = STOPPING DIST. FROM 3RD APP. SIG
Rxx= DESIGN SPEED TO INDICATED REDUCED SPEED
xxS= INDICATED SPEED TO STOP

NOTE 06-01-10:
ASPECT CHART SHOWS CONSTRUCTION IN PROGRESS (CIP) IN A COMPLETED STATE BUT DOES NOT REFLECT ANY CHANGES THAT MAY HAVE OCCURRED DURING INSTALLATION.

= OUT
= IN

THIS PLAN ACCURATE FOR RAILROAD WORK ONLY.

WESTBOUND

RR-SP-171
SIGNAL STAGE 3

WESTBOUND ASPECT CHART
LANCASTER TO CP TAYLOR
VY 17-12 W
SH. T1 OF 1

RAILROAD SHEET NO.
171 OF 171

LAST REVISION 00-00-00
DATE PLOTTED = 7/18/2012
TIME PLOTTED = 2:50:04 PM

STATE OF CALIFORNIA - DEPARTMENT OF TRANSPORTATION
Caltrans® DESIGN
CONSULTANT FUNCTIONAL SUPERVISOR GLENN BREINDEL
CALCULATED-DESIGNED BY RAMON VALDEZ
CHECKED BY
REVISED BY
DATE REVISED

BORDER LAST REVISED 7/2/2010
USERNAME = gharlblana
DGN FILE = ...\moc\xorail\sheet\SP-171.sht
RELATIVE BORDER SCALE IS IN INCHES 0 1 2 3
UNIT 1812
PROJECT NUMBER & PHASE 07000211191