DIST	COUNTY	ROUTE	POST MILES TOTAL PROJECT	SHEET No.	TOTAL SHEETS
07	LA	5	29.4/31.6	1201	1931

REGISTERED CIVIL ENGINEER — DATE 01/31/12

5-21-12
PLANS APPROVAL DATE

REGISTERED PROFESSIONAL ENGINEER — JORGE I. ESTRADA — No. C51473 — Exp. 06-30-12 — CIVIL — STATE OF CALIFORNIA

The State of California or its officers or agents shall not be responsible for the accuracy or completeness of electronic copies of this plan sheet.

CURVE DATA

No.	R	Δ	T	L
Ⓐ	6561.70	12°58′21"	746.01	1485.64
Ⓑ	6645.59	5°37′43"	326.69	652.85
Ⓒ	6647.08	2°32′29"	147.44	294.82

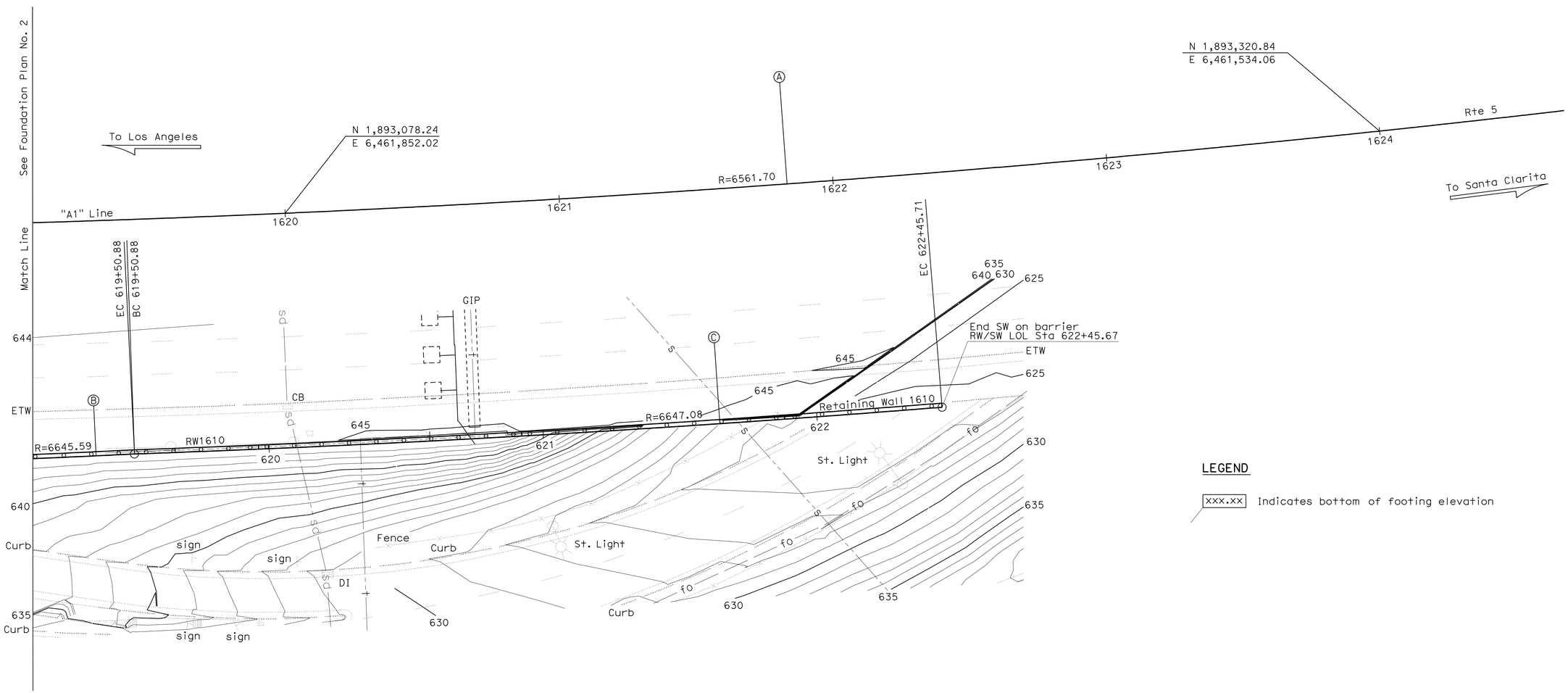

LEGEND

xxx.xx — Indicates bottom of footing elevation

Note:
Caltrans Fiber Optic Line, Sewer Line, Storm Drain Line, Per Dist. Utility Map

PRELIMINARY INVESTIGATION SECTION									
SCALE 1"=20′	VERT.DATUM NGVD 88	PHOTOGRAMMETRY AS OF: X							
	HORZ.DATUM NAD83 (1991.35)	SURVEYED	BY District	CHECKED	BY John Borden 10/2011				
ALIGNMENT TIES Dist. Traverse Sheet		DRAFTED	BY Sharon Zheng 10/2011	CHECKED	BY Lawrence Lew 10/2011				

DESIGN	BY DAVID MURRAY	CHECKED ZIHAN YAN	
DETAILS	BY JINLI GUO	CHECKED DAVID MURRAY	
QUANTITIES	BY DAVID MURRAY	CHECKED ZIHAN YAN	

STATE OF CALIFORNIA
DEPARTMENT OF TRANSPORTATION

DIVISION OF ENGINEERING SERVICES
STRUCTURE DESIGN
DESIGN BRANCH 18

BRIDGE NO. RW 1610
POST MILE 30.50

RETAINING WALL 1610
FOUNDATION PLAN NO. 3

STRUCTURES FOUNDATION PLAN SHEET (ENGLISH) (REV. 09-01-10)

ORIGINAL SCALE IN INCHES FOR REDUCED PLANS 0 1 2 3

UNIT: 3603
PROJECT NUMBER & PHASE: 07000211191
CONTRACT NO.: 07-1218W1

DISREGARD PRINTS BEARING EARLIER REVISION DATES

REVISION DATES 10/31/201

SHEET 4 OF 19

FILE => 53-rw1610r1-b-fp103.dgn

DIST	COUNTY	ROUTE	POST MILES TOTAL PROJECT	SHEET No.	TOTAL SHEETS
07	LA	5	29.4/31.6	1202	1931

JEstrada. 01/31/12
REGISTERED CIVIL ENGINEER DATE

5-21-12
PLANS APPROVAL DATE

REGISTERED PROFESSIONAL ENGINEER
JORGE I. ESTRADA
No. C51473
Exp. 06-30-12
CIVIL
STATE OF CALIFORNIA

The State of California or its officers or agents shall not be responsible for the accuracy or completeness of electronic copies of this plan sheet.

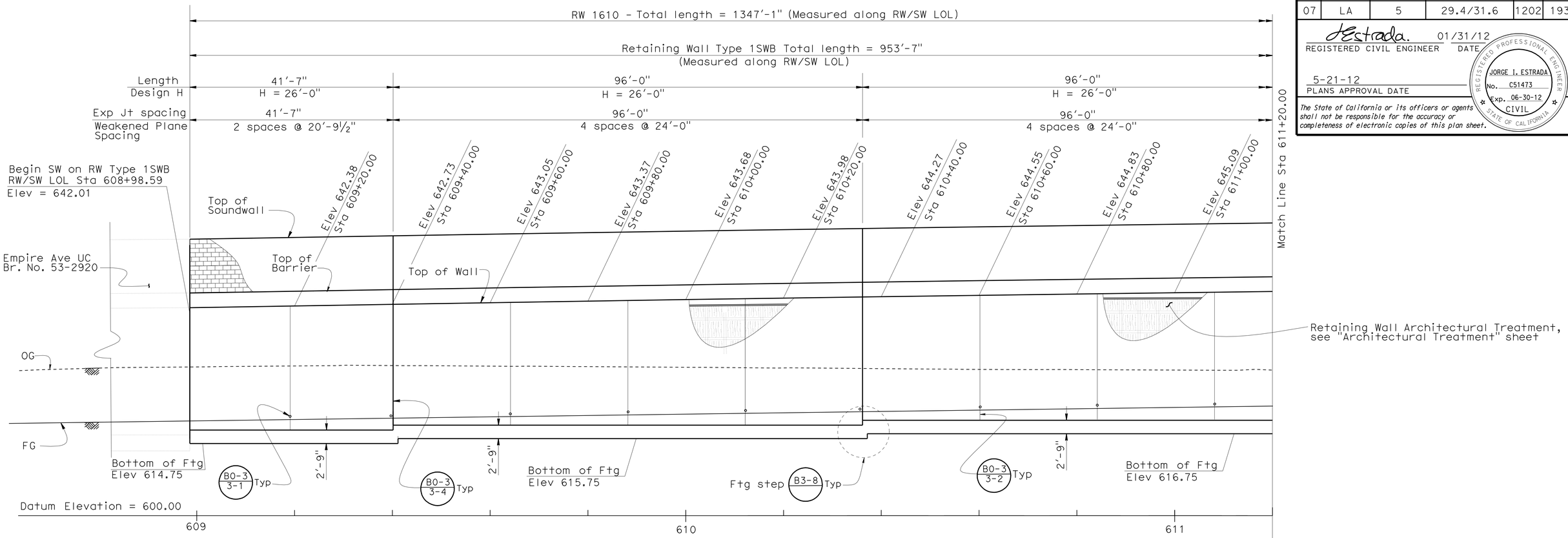

DEVELOPED MIRROR ELEVATION

1"=10'-0"

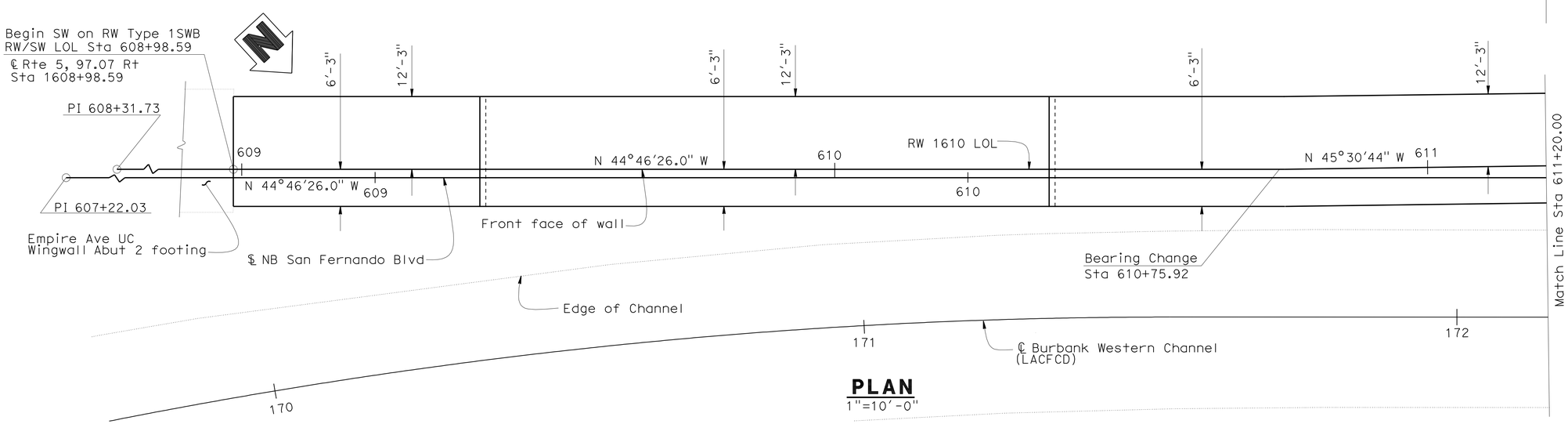

PLAN

1"=10'-0"

DESIGN	BY DAVID MURRAY	CHECKED ZIHAN YAN	
DETAILS	BY JINLI GUO	CHECKED DAVID MURRAY	
QUANTITIES	BY DAVID MURRAY	CHECKED ZIHAN YAN	

STATE OF CALIFORNIA
DEPARTMENT OF TRANSPORTATION

DIVISION OF ENGINEERING SERVICES
STRUCTURE DESIGN
DESIGN BRANCH 18

BRIDGE NO. RW 1610
POST MILE 30.50

RETAINING WALL 1610
STRUCTURE PLAN NO. 1

STRUCTURES DESIGN DETAIL SHEET (ENGLISH) (REV. 09-01-10)

ORIGINAL SCALE IN INCHES FOR REDUCED PLANS 0 1 2 3

UNIT: 3603
PROJECT NUMBER & PHASE: 07000211191
CONTRACT NO.: 07-1218W1

DISREGARD PRINTS BEARING EARLIER REVISION DATES
REVISION DATES 11-7-11 11-18-11

SHEET 5 OF 19

FILE => 53-rw1610rl-c-sp01.dgn

USERNAME => s124496 DATE PLOTTED => 25-MAY-2012 TIME PLOTTED => 11:20

DIST	COUNTY	ROUTE	POST MILES TOTAL PROJECT	SHEET No.	TOTAL SHEETS
07	LA	5	29.4/31.6	1203	1931

JEstrada. 01/31/12
REGISTERED CIVIL ENGINEER DATE

5-21-12
PLANS APPROVAL DATE

REGISTERED PROFESSIONAL ENGINEER
JORGE I. ESTRADA
No. C51473
Exp. 06-30-12
CIVIL
STATE OF CALIFORNIA

The State of California or its officers or agents shall not be responsible for the accuracy or completeness of electronic copies of this plan sheet.

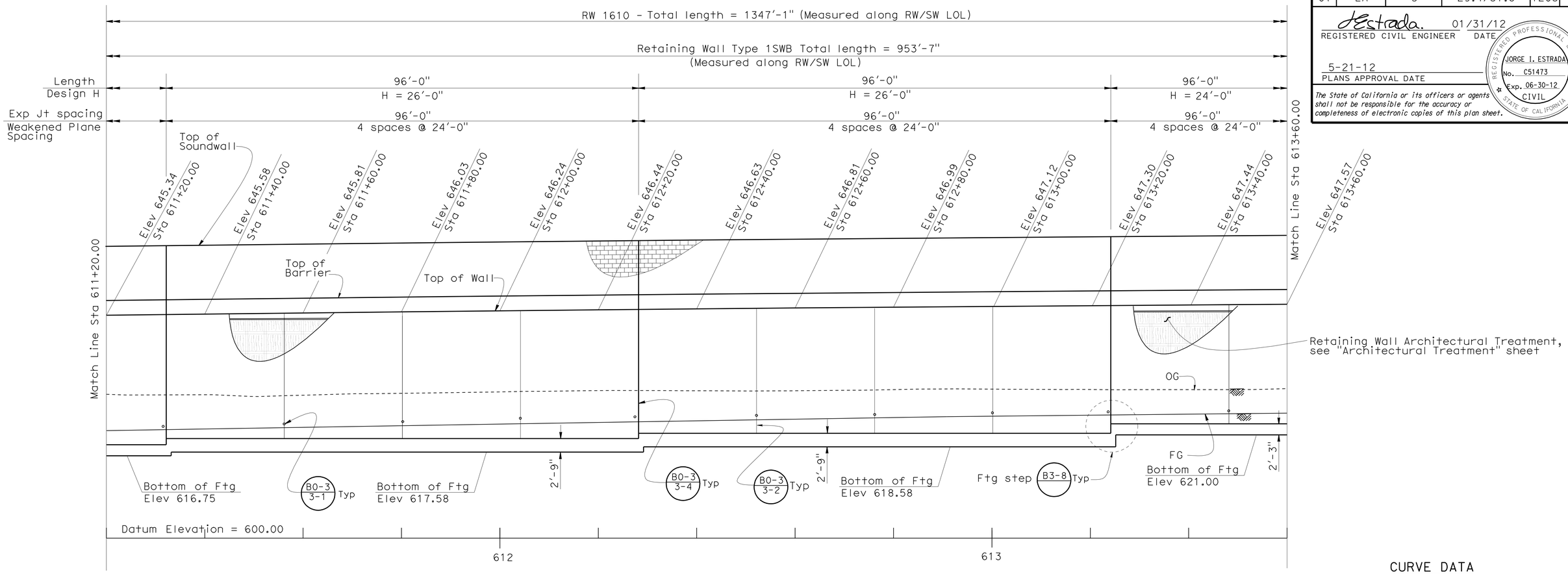

DEVELOPED MIRROR ELEVATION

1"=10'-0"

CURVE DATA

No.	R	Δ	T	L
1	6645.594	5°37'43.1"	326.688	652.851

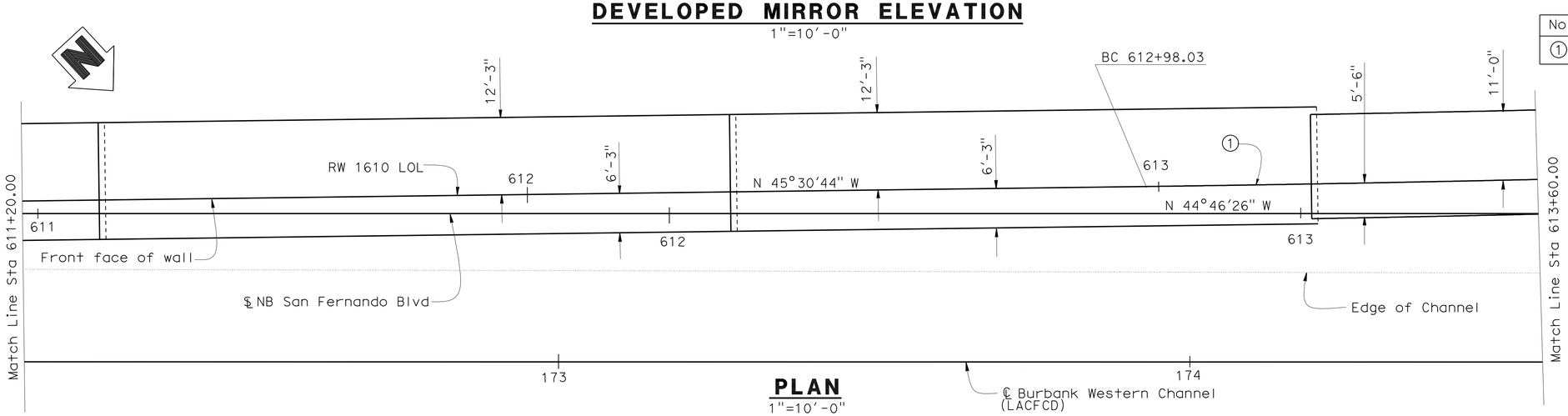

PLAN

1"=10'-0"

DESIGN	BY DAVID MURRAY	CHECKED ZIHAN YAN	
DETAILS	BY JINLI GUO	CHECKED DAVID MURRAY	
QUANTITIES	BY DAVID MURRAY	CHECKED ZIHAN YAN	

STATE OF CALIFORNIA
DEPARTMENT OF TRANSPORTATION

DIVISION OF ENGINEERING SERVICES
STRUCTURE DESIGN
DESIGN BRANCH 18

BRIDGE NO. RW 1610
POST MILE 30.50

RETAINING WALL 1610
STRUCTURE PLAN NO. 2

STRUCTURES DESIGN DETAIL SHEET (ENGLISH) (REV. 09-01-10)

ORIGINAL SCALE IN INCHES FOR REDUCED PLANS 0 1 2 3

UNIT: 3603
PROJECT NUMBER & PHASE: 07000211191
CONTRACT NO.: 07-1218W1

DISREGARD PRINTS BEARING EARLIER REVISION DATES

REVISION DATES 11-7-11

SHEET 6 OF 19

FILE => 53-rw1610rl-c-sp02.dgn

USERNAME => s124496 DATE PLOTTED => 21-MAY-2012 TIME PLOTTED => 15:35

DIST	COUNTY	ROUTE	POST MILES TOTAL PROJECT	SHEET No.	TOTAL SHEETS
07	LA	5	29.4/31.6	1204	1931

dEstrada. 01/31/12
REGISTERED CIVIL ENGINEER DATE

5-21-12
PLANS APPROVAL DATE

REGISTERED PROFESSIONAL ENGINEER
JORGE I. ESTRADA
No. C51473
Exp. 06-30-12
CIVIL
STATE OF CALIFORNIA

The State of California or its officers or agents shall not be responsible for the accuracy or completeness of electronic copies of this plan sheet.

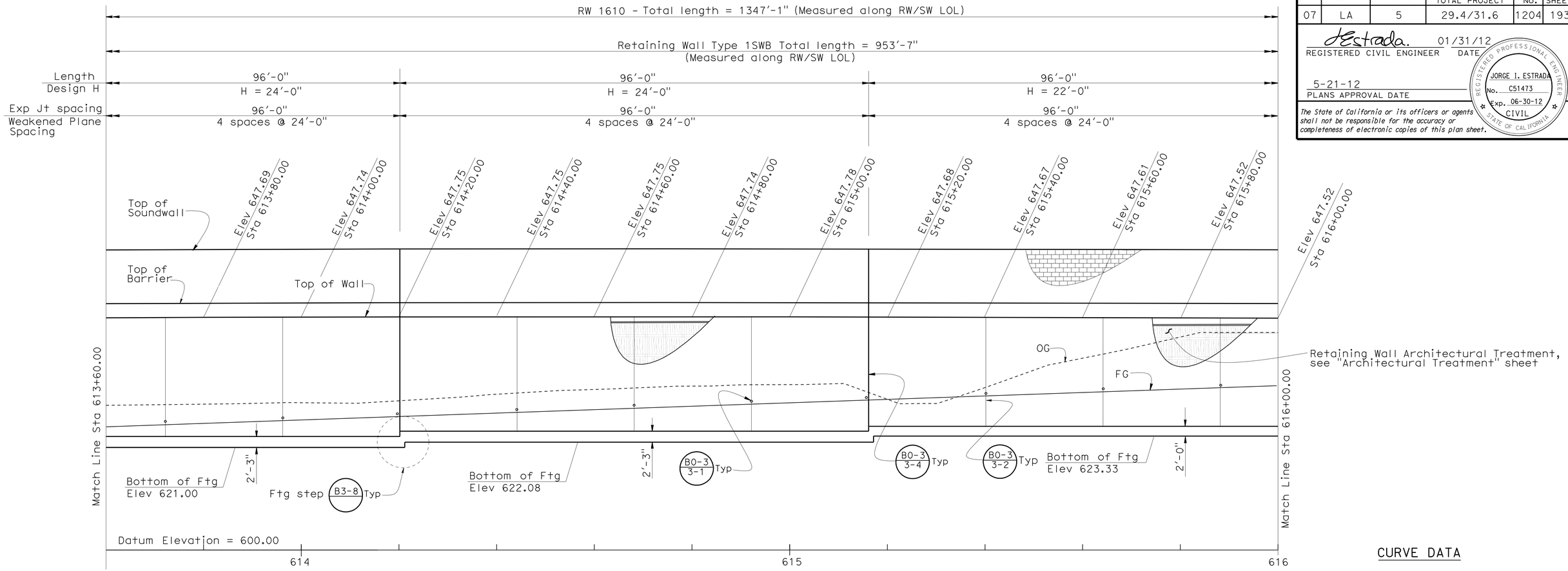

DEVELOPED MIRROR ELEVATION

1"=10'-0"

CURVE DATA

No.	R	Δ	T	L
1	6645.594	5°37'43.1"	326.688	652.851

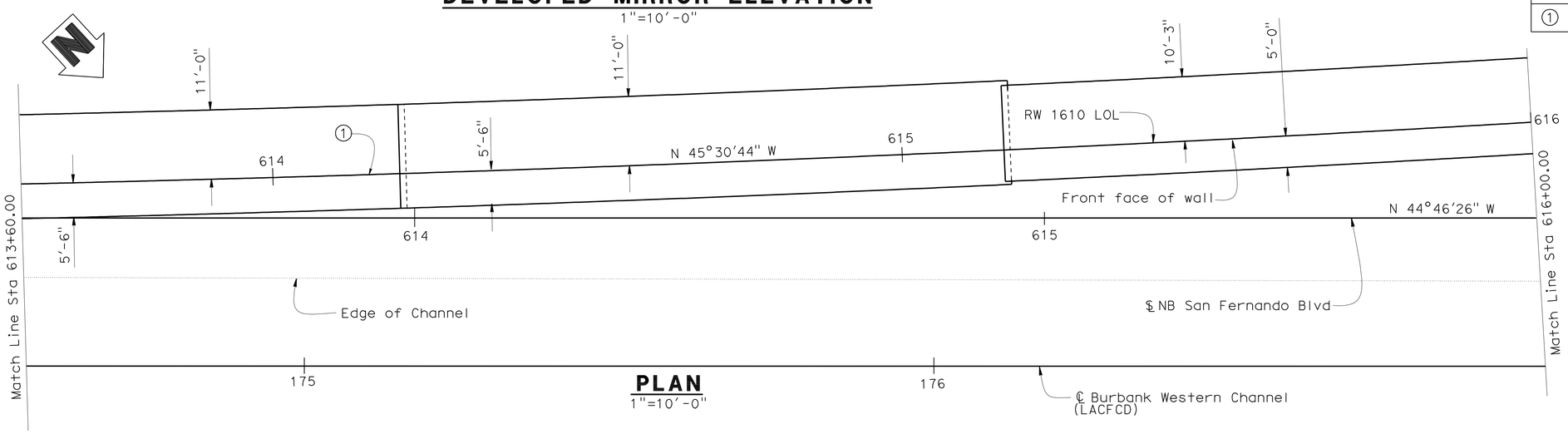

PLAN

1"=10'-0"

DESIGN	BY DAVID MURRAY	CHECKED ZIHAN YAN	
DETAILS	BY JINLI GUO	CHECKED DAVID MURRAY	
QUANTITIES	BY DAVID MURRAY	CHECKED ZIHAN YAN	

STATE OF CALIFORNIA
DEPARTMENT OF TRANSPORTATION

DIVISION OF ENGINEERING SERVICES
STRUCTURE DESIGN
DESIGN BRANCH 18

BRIDGE NO. RW 1610
POST MILE 30.50

RETAINING WALL 1610
STRUCTURE PLAN NO. 3

STRUCTURES DESIGN DETAIL SHEET (ENGLISH) (REV. 09-01-10)

ORIGINAL SCALE IN INCHES FOR REDUCED PLANS 0 1 2 3

UNIT: 3603
PROJECT NUMBER & PHASE: 07000211191
CONTRACT NO.: 07-1218W1

DISREGARD PRINTS BEARING EARLIER REVISION DATES

REVISION DATES 11-7-11

SHEET 7 OF 19

FILE => 53-rw1610rl-c-sp03.dgn

USERNAME => s124496 DATE PLOTTED => 21-MAY-2012 TIME PLOTTED => 15:35

DIST	COUNTY	ROUTE	POST MILES TOTAL PROJECT	SHEET No.	TOTAL SHEETS
07	LA	5	29.4/31.6	1205	1931

JEstrada. 01/31/12
REGISTERED CIVIL ENGINEER DATE

5-21-12
PLANS APPROVAL DATE

REGISTERED PROFESSIONAL ENGINEER
JORGE I. ESTRADA
No. C51473
Exp. 06-30-12
CIVIL
STATE OF CALIFORNIA

The State of California or its officers or agents shall not be responsible for the accuracy or completeness of electronic copies of this plan sheet.

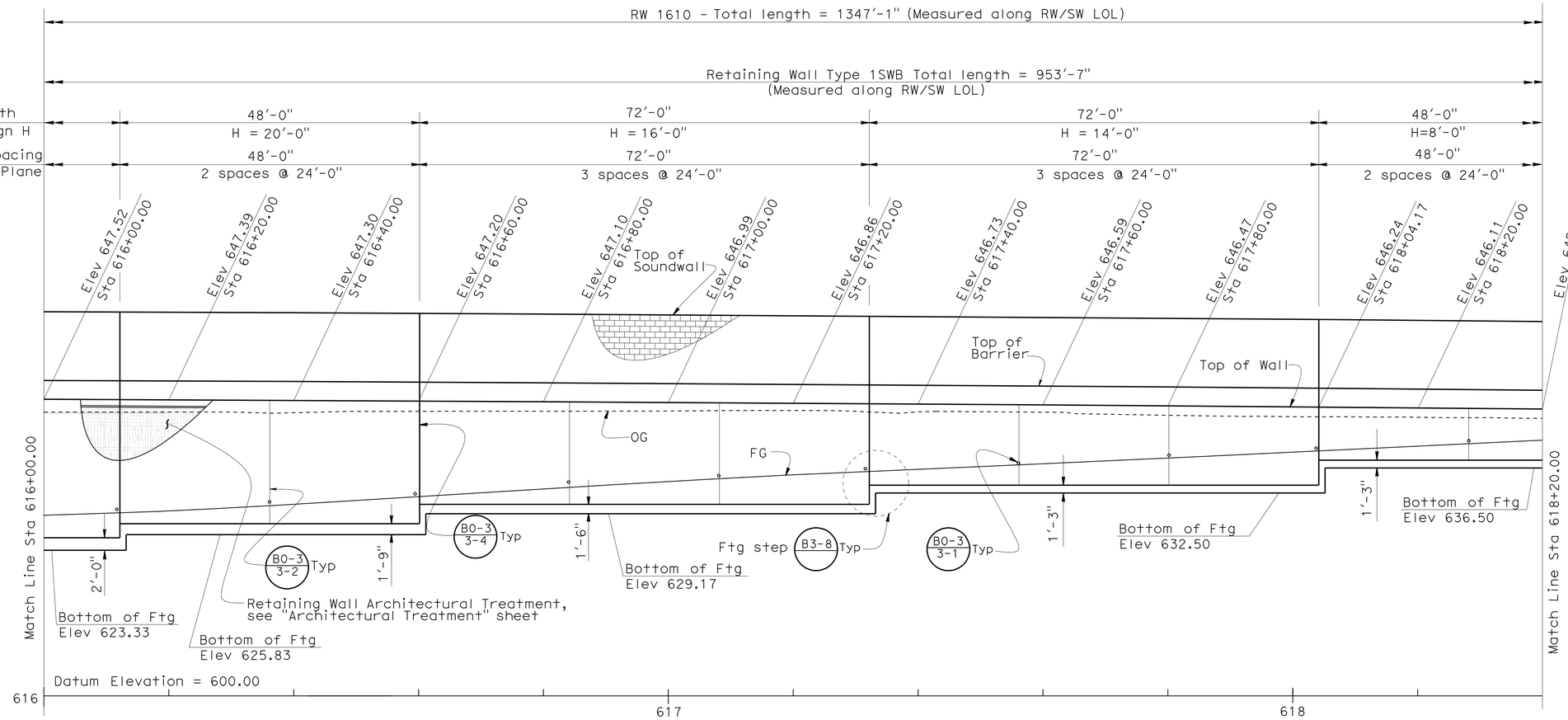

DEVELOPED MIRROR ELEVATION

1"=10'-0"

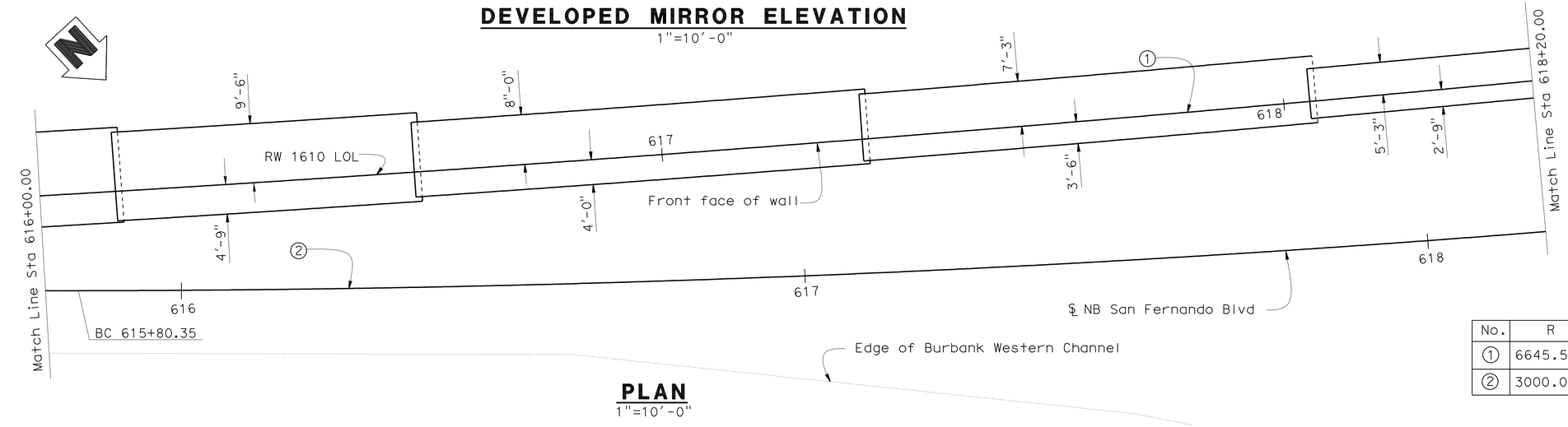

PLAN

1"=10'-0"

SPREAD FOOTING DATA TABLE

RW LOL Stationing (ft)	BOTTOM OF OVER EXCAVATION ELEVATION (ft)	Ultimate Bearing Capacity Stem With Haunch (ksf)
608+98.59 609+40.17	611.75	12.5
609+40.17 610+36.17	612.75	12.5
610+36.17 611+32.17	613.75	12.5
611+32.17 612+28.17	614.58	12.5
612+28.17 613+24.17	615.58	12.5
613+24.17 614+20.17	618.00	12.2
614+20.17 615+16.17	619.08	12.2
615+16.17 616+12.17	620.33	11.3
616+12.17 616+60.17	622.83	9.9
616+60.17 617+32.17	626.17	8.1
617+32.17 618+04.17	629.50	7.3
618+04.17 618+52.17	633.50	5.5

CURVE DATA

No.	R	Δ	T	L
1	6645.594	5°37'43.1"	326.688	652.851
2	3000.00	12°58'20.6"	341.074	679.232

DESIGN	BY DAVID MURRAY	CHECKED ZIHAN YAN	
DETAILS	BY JINLI GUO	CHECKED DAVID MURRAY	
QUANTITIES	BY DAVID MURRAY	CHECKED ZIHAN YAN	

STATE OF CALIFORNIA
DEPARTMENT OF TRANSPORTATION

DIVISION OF ENGINEERING SERVICES
STRUCTURE DESIGN
DESIGN BRANCH 18

BRIDGE NO. RW 1610
POST MILE 30.50

RETAINING WALL 1610
STRUCTURE PLAN NO. 4

STRUCTURES DESIGN DETAIL SHEET (ENGLISH) (REV. 09-01-10)

ORIGINAL SCALE IN INCHES FOR REDUCED PLANS 0 1 2 3

UNIT: 3603
PROJECT NUMBER & PHASE: 07000211191
CONTRACT NO.: 07-1218W1

DISREGARD PRINTS BEARING EARLIER REVISION DATES

REVISION DATES 11-7-11

SHEET 8 OF 19

FILE => 53-rw1610rl-c-sp04.dgn

USERNAME => s124496 DATE PLOTTED => 21-MAY-2012 TIME PLOTTED => 15:35

DIST	COUNTY	ROUTE	POST MILES TOTAL PROJECT	SHEET No.	TOTAL SHEETS
07	LA	5	29.4/31.6	1206	1931

JEstrada 01/31/12
REGISTERED CIVIL ENGINEER DATE

5-21-12
PLANS APPROVAL DATE

REGISTERED PROFESSIONAL ENGINEER JORGE I. ESTRADA No. C51473 Exp. 06-30-12 CIVIL STATE OF CALIFORNIA

The State of California or its officers or agents shall not be responsible for the accuracy or completeness of electronic copies of this plan sheet.

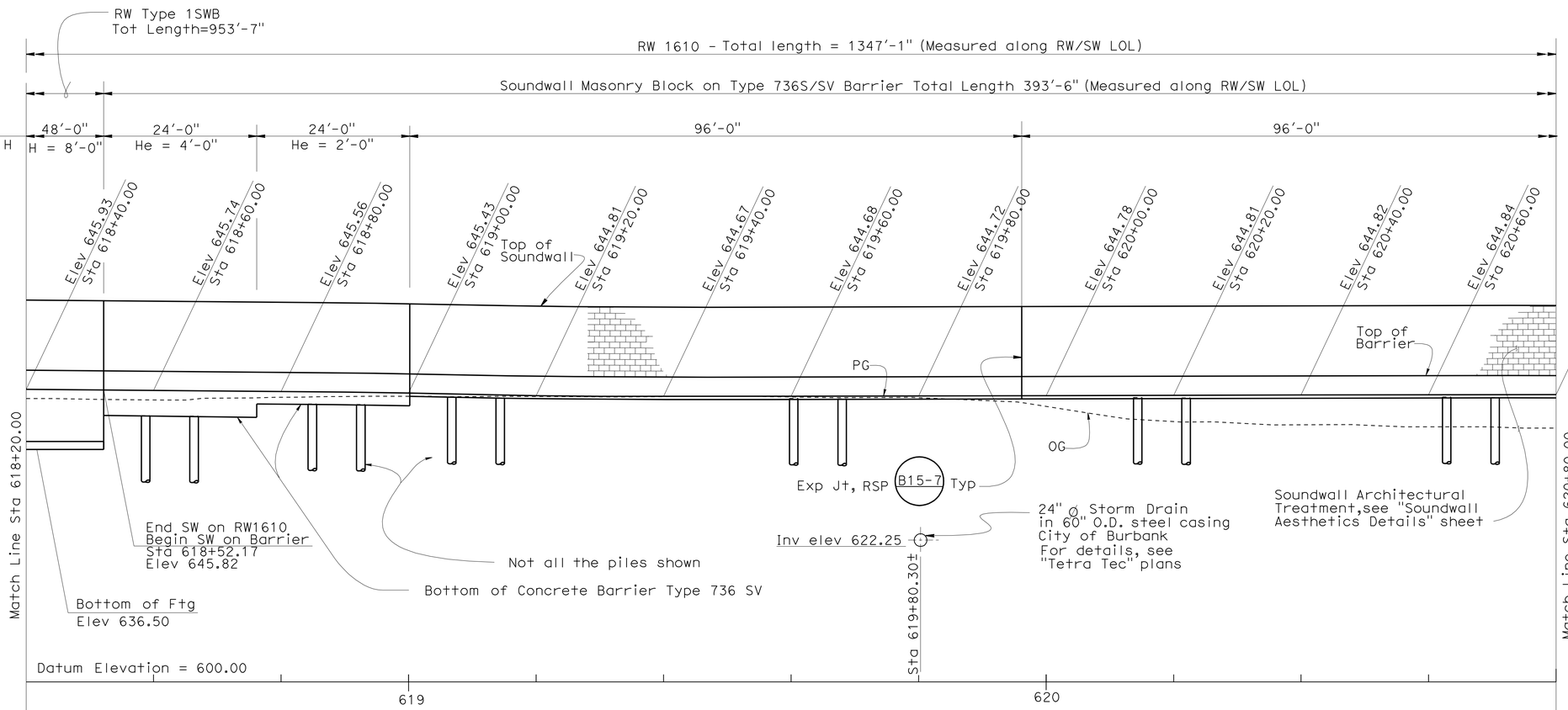

DEVELOPED MIRROR ELEVATION

1"=10'-0"

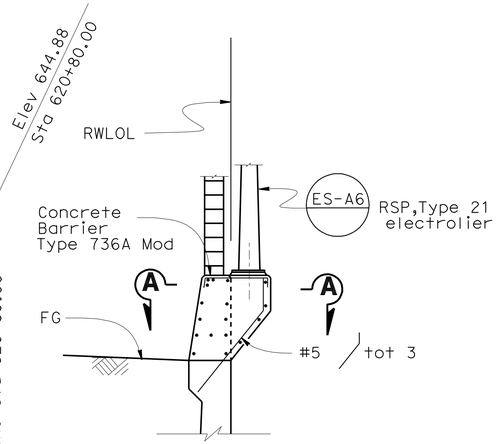

PEDESTAL ELEVATION

3/8" = 1'-0"

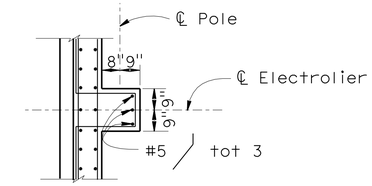

SECTION A-A

3/8" = 1'-0"

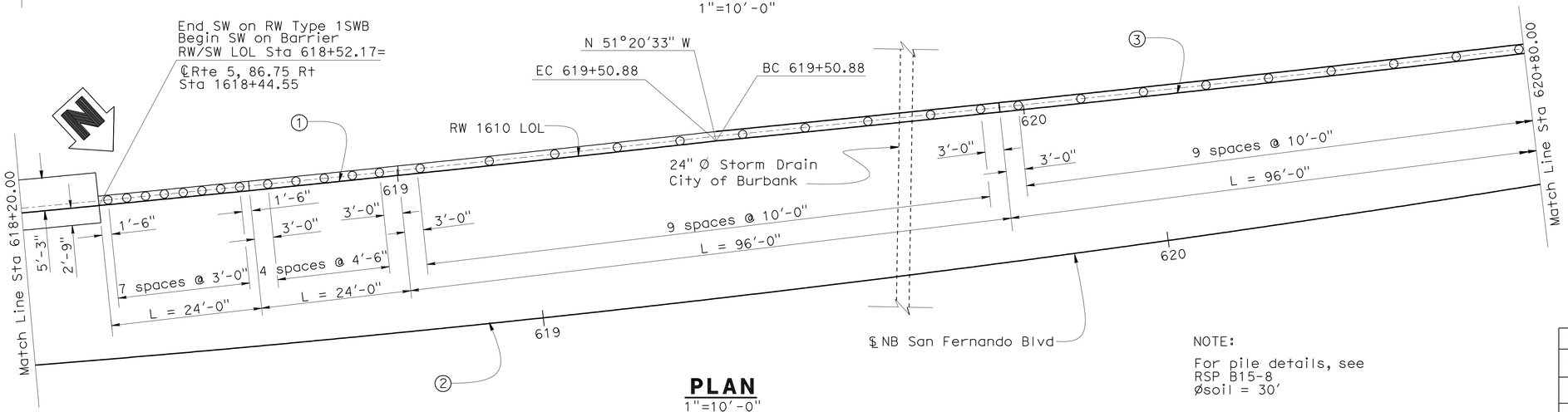

PLAN

1"=10'-0"

NOTES:

1. For pedestal details not shown, see B11-56
2. Electrolier locations (stations along ℄ Rte): 1609+05, 1610+80

NOTE:

For pile details, see RSP B15-8
Øsoil = 30'

CURVE DATA

No.	R	Δ	T	L
1	6645.594	5°37'43.1"	326.688	652.851
2	3000.00	12°58'20.6"	341.074	679.232
3	6647.085	2°32'28.7"	147.436	294.825

DESIGN	BY DAVID MURRAY	CHECKED ZIHAN YAN	
DETAILS	BY JINLI GUO	CHECKED DAVID MURRAY	
QUANTITIES	BY DAVID MURRAY	CHECKED ZIHAN YAN	

STATE OF CALIFORNIA
DEPARTMENT OF TRANSPORTATION

DIVISION OF ENGINEERING SERVICES
STRUCTURE DESIGN
DESIGN BRANCH 18

BRIDGE NO. RW 1610
POST MILE 30.50

RETAINING WALL 1610
STRUCTURE PLAN NO. 5

STRUCTURES DESIGN DETAIL SHEET (ENGLISH) (REV. 09-01-10)

ORIGINAL SCALE IN INCHES FOR REDUCED PLANS 0 1 2 3

UNIT: 3603
PROJECT NUMBER & PHASE: 07000211191
CONTRACT NO.: 07-1218W1

DISREGARD PRINTS BEARING EARLIER REVISION DATES

REVISION DATES 11-1-11 04-12-12 5-14-12

SHEET 9 OF 19

FILE => 53-rw1610ri-c-sp05.dgn

USERNAME => s103858 DATE PLOTTED => 19-JUN-2012 TIME PLOTTED => 08:51

DIST	COUNTY	ROUTE	POST MILES TOTAL PROJECT	SHEET No.	TOTAL SHEETS
07	LA	5	29.4/31.6	1207	1931

dEstrada. 01/31/12
REGISTERED CIVIL ENGINEER DATE

5-21-12
PLANS APPROVAL DATE

REGISTERED PROFESSIONAL ENGINEER JORGE I. ESTRADA No. C51473 Exp. 06-30-12 CIVIL STATE OF CALIFORNIA

The State of California or its officers or agents shall not be responsible for the accuracy or completeness of electronic copies of this plan sheet.

CURVE DATA

No.	R	Δ	T	L
②	3000.00	12°58′20.6″	341.074	679.232
③	6647.085	2°32′28.7″	147.436	294.825

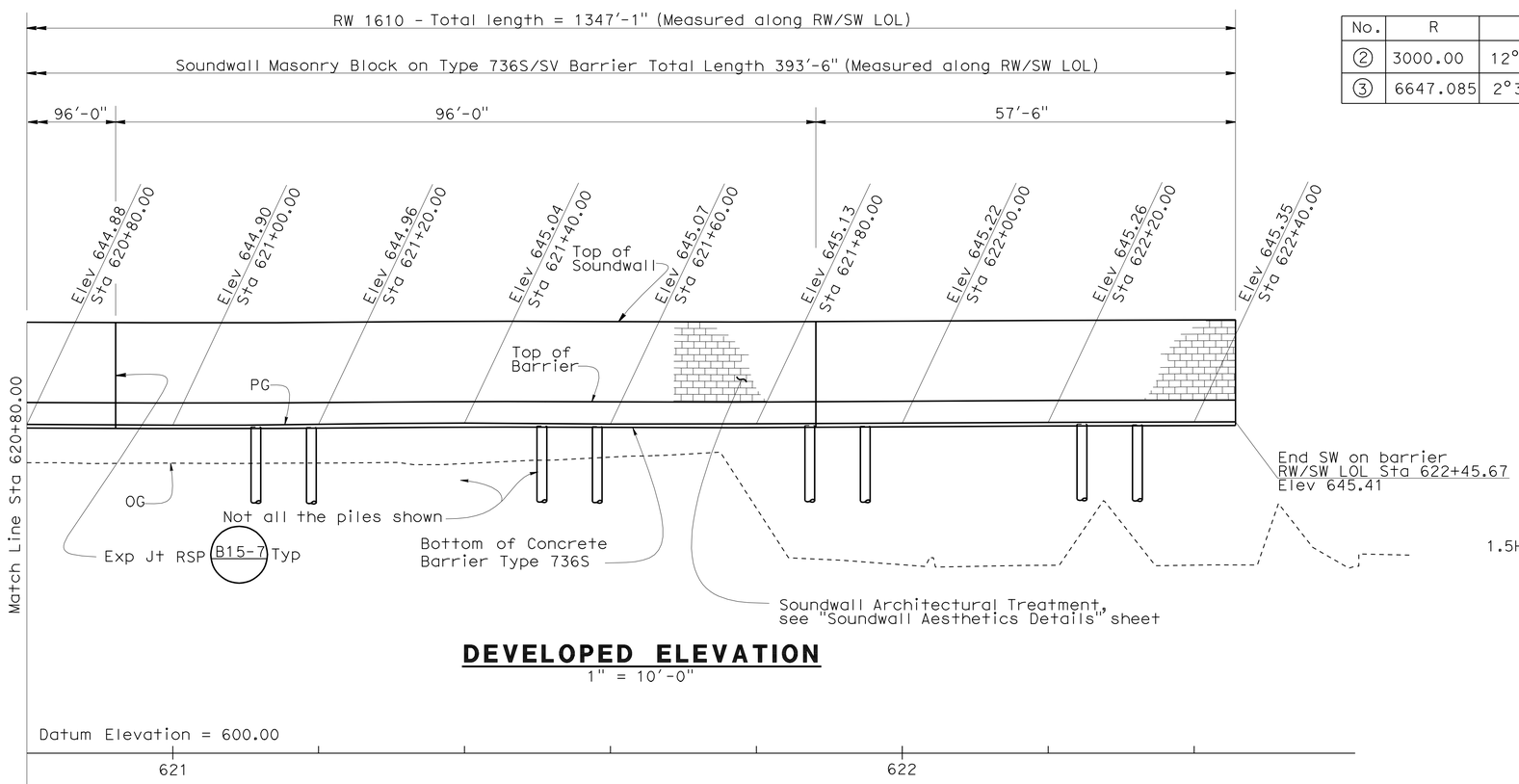

DEVELOPED ELEVATION

1″ = 10′-0″

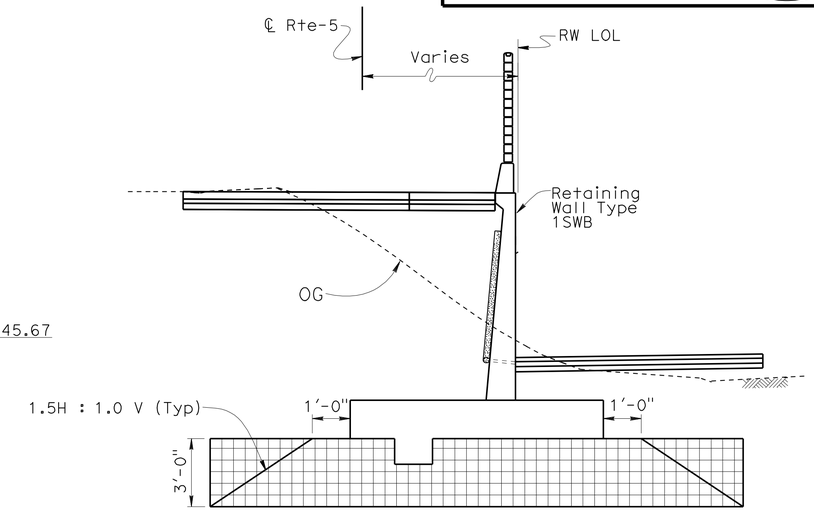

Structure Excavation and Structure Backfill
From Sta 608+98.59 to Sta 618+52.17

OVER EXCAVATION LIMITS

Not Scale

Structure Excavation

Structure Backfill

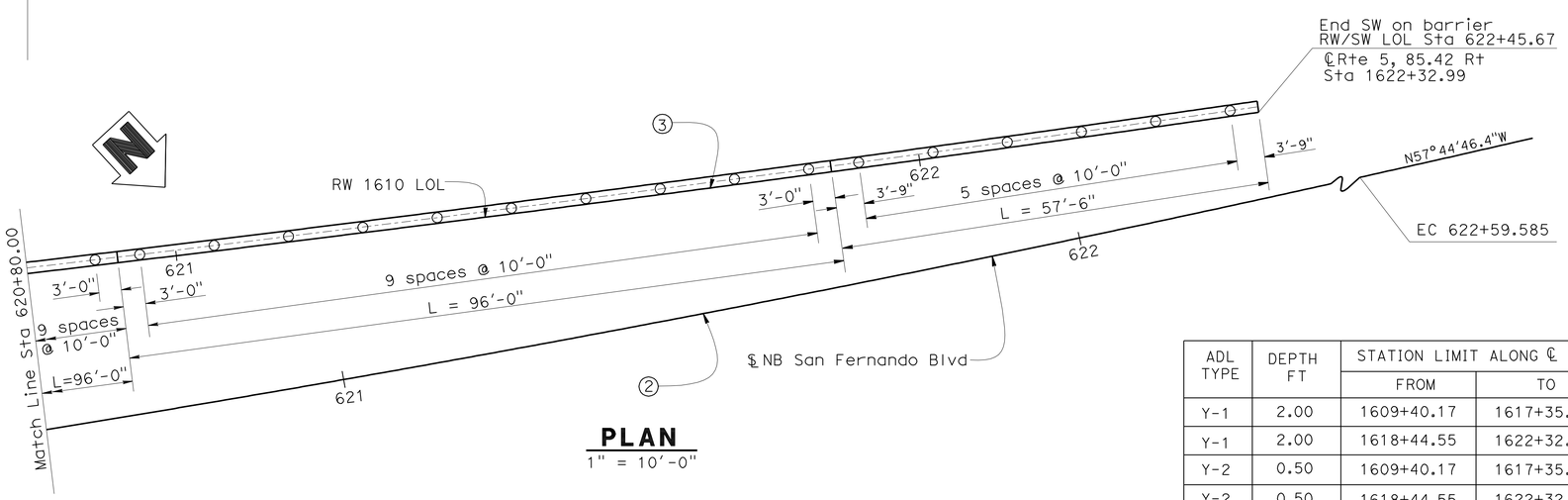

PLAN

1″ = 10′-0″

ADL TYPE	DEPTH FT	STATION LIMIT ALONG ℄ I-5	
		FROM	TO
Y-1	2.00	1609+40.17	1617+35.99
Y-1	2.00	1618+44.55	1622+32.99
Y-2	0.50	1609+40.17	1617+35.99
Y-2	0.50	1618+44.55	1622+32.99

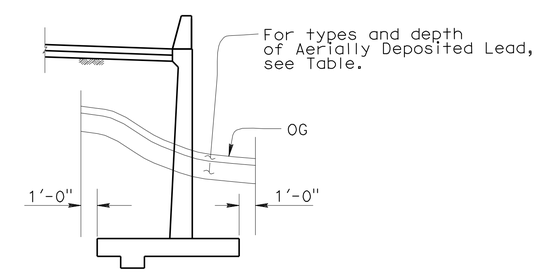

LIMITS OF STRUCTURE EXCAVATION, AERIALLY DEPOSITED LEAD (ADL)

No Scale

DESIGN	BY DAVID MURRAY	CHECKED ZIHAN YAN	
DETAILS	BY JINLI GUO	CHECKED DAVID MURRAY	
QUANTITIES	BY DAVID MURRAY	CHECKED ZIHAN YAN	

STATE OF CALIFORNIA
DEPARTMENT OF TRANSPORTATION

DIVISION OF ENGINEERING SERVICES
STRUCTURE DESIGN
DESIGN BRANCH 18

BRIDGE NO. RW 1610
POST MILE 30.50

RETAINING WALL 1610
STRUCTURE PLAN NO. 6

STRUCTURES DESIGN DETAIL SHEET (ENGLISH) (REV. 09-01-10)

ORIGINAL SCALE IN INCHES FOR REDUCED PLANS 0 1 2 3

UNIT: 3603
PROJECT NUMBER & PHASE: 07000211191
CONTRACT NO.: 07-1218W1

DISREGARD PRINTS BEARING EARLIER REVISION DATES

REVISION DATES 11-7-11 04-18-12

SHEET 10 OF 19

FILE => 53-rw1610ri-c-sp06.dgn

USERNAME => s124496 DATE PLOTTED => 21-MAY-2012 TIME PLOTTED => 15:35

DIST	COUNTY	ROUTE	POST MILES TOTAL PROJECT	SHEET No.	TOTAL SHEETS
07	LA	5	29.4/31.6	1208	1931

REGISTERED CIVIL ENGINEER — DATE 01/31/12

5-21-12
PLANS APPROVAL DATE

The State of California or its officers or agents shall not be responsible for the accuracy or completeness of electronic copies of this plan sheet.

REGISTERED PROFESSIONAL ENGINEER — JORGE I. ESTRADA — No. C51473 — Exp. 06-30-12 — CIVIL — STATE OF CALIFORNIA

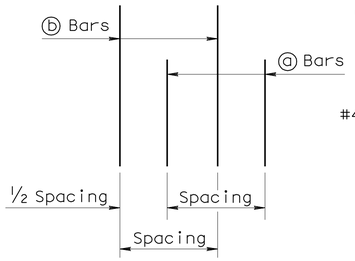

DETAIL B

No Scale

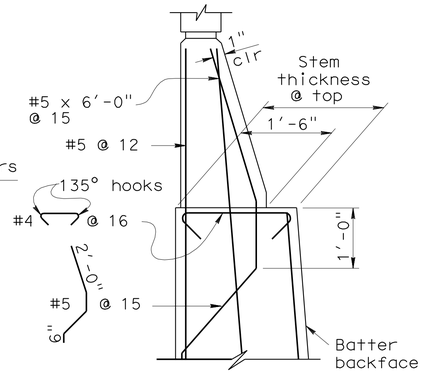

DETAIL A WITHOUT HAUNCH

No Scale

GENERAL NOTES

1. For soundwall and retaining wall architectural finish or texture, see details elsewhere in project plans.
2. For details not shown and drainage notes, see B3-8
3. Footing cover, 1'-6" minimum.
4. Limit of no splicing rebars = 3 times the bottom thickness of the stem.
5. Placement of reinforcements :
   - ⓑ & ⓒ bars are spliced together.
   - * ⓐ & ⓑ bars are bundled together.
   - ** Alternate ⓐ & ⓑ bars are shown in "Detail B".
   - Cont = Continuous.
6. For Soundwall & Barrier reinforcement, see "Soundwall Masonry Block on Barriers" sheets in Standard Plans.

TABLE 1: TABLE OF REINFORCING STEEL DIMENSIONS AND DATA

	Stem With Haunch													
Design H	6'	8'	10'	12'	14'	16'	18'	20'	22'	24'	26'	28'	30'	32'
W	7'-9"	8'-0"	8'-9"	9'-9"	10'-9"	12'-0"	13'-0"	14'-3"	15'-3"	16'-6"	18'-6"	19'-9"	21'-3"	22'-6"
C	2'-9"	2'-9"	3'-0"	3'-3"	3'-6"	4'-0"	4'-3"	4'-9"	5'-0"	5'-6"	6'-3"	6'-9"	7'-3"	7'-9"
B	5'-0"	5'-3"	5'-9"	6'-6"	7'-3"	8'-0"	8'-9"	9'-6"	10'-3"	11'-0"	12'-3"	13'-0"	14'-0"	14'-9"
F Spread footing	1'-3"	1'-3"	1'-3"	1'-3"	1'-3"	1'-6"	1'-6"	1'-9"	2'-0"	2'-3"	2'-9"	3'-0"	3'-3"	3'-9"
Batter	0	½:12	½:12	½:12	½:12	½:12	½:12	½:12	½:12	⅝:12	¾:12	⅞:12	1:12	1:12
Stem thickn. @ Haunch	1'-0"	1'-0"	1'-0"	1'-0"	1'-0"	1'-0"	1'-0"	1'-0"	1'-0"	1'-0"	1'-0"	1'-0"	1'-0"	1'-0"
ⓐ Bars				#6 @18**	#7 @18**	#8 @18**	#9 @18**	#10 @18**	#8 @ 9*	#8 @ 9*	#7 @ 6*	#10 @12**	#9 @ 9*	#11@12**
X				Cont	Cont	Cont	Cont	Cont	Cont	Cont	Cont	Cont	Cont	Cont
Y				8'-0"	6'-6"	7'-6"	8'-6"	9'-6"	9'-6"	11'-0"	11'-6"	13'-0"	14'-0"	15'-6"
ⓑ Bars	#5 @12	#5 @12	#5 @ 9	#6 @18**	#7 @18**	#8 @18**	#9 @18**	#10 @18**	#8 @ 9*	#8 @ 9*	#7 @ 6*	#10 @12**	#9 @ 9*	#11@12**
X	Cont	Cont	Cont	Cont	Cont	Cont	Cont	Cont	Cont	5'-6"	6'-6"	7'-0"	8'-0"	8'-6"
Y	Cont	Cont	Cont	Cont	10'-6"	13'-0"	15'-0"	17'-6"	19'-6"	21'-0"	18'-6"	19'-0"	25'-6"	23'-6"
ⓒ Bars					#6 @18	#6 @18	#6 @18	#6 @18	#6 @18	#6 @18	#6 @12	#7 @12	#7 @18	#7 @12
ⓓ Bars	#5 @12	#5 @12	#5 @12	#5 @ 9	#6 @ 9	#6 @ 9	#6 @ 6	#8 @ 9	#8 @ 9	#8 @ 9	#7 @ 6	#7 @ 6	#9 @ 9	#9 @ 9
Ultimate Bearing Capacity Req'd k/sf	4.6	5.5	6.1	6.6	7.3	8.1	9.0	9.9	11.3	12.2	12.5	13.4	14.1	15.4

TABLE 2: TABLE OF REINFORCING STEEL DIMENSIONS AND DATA

	Stem With Haunch						Stem Without Haunch						
Design H	8'	10'	12'	14'	16'	18'	20'	22'	24'	26'	28'	30'	32'
W	8'-0"	8'-6"	9'-3"	10'-3"	11'-3"	13'-0"	13'-9"	16'-0"	16'-6"	18'-6"	20'-0"	20'-6"	21'-9"
C	2'-9"	2'-9"	3'-0"	3'-6"	3'-9"	4'-3"	4'-6"	5'-3"	5'-6"	6'-3"	6'-9"	6'-9"	7'-6"
B	5'-3"	5'-9"	6'-3"	6'-9"	7'-6"	8'-9"	9'-3"	10'-9"	11'-0"	12'-3"	13'-3"	13'-9"	14'-3"
F Spread footing	1'-3"	1'-3"	1'-3"	1'-3"	1'-6"	1'-6"	1'-9"	2'-0"	2'-3"	2'-9"	3'-0"	3'-3"	3'-6"
Batter	0	0	0	0	0	0	0	0	0	¼:12	½:12	½:12	½:12
Stem thickn. @ Haunch	1'-0"	1'-0"	1'-0"	1'-0"	1'-3"	1'-3"							
Stem thickn. @ top							1'-6"	2'-0"	2'-0"	2'-0"	2'-0"	2'-0"	2'-0"
ⓐ Bars			#6 @12**	#5 @ 6*	#9 @18**	#9 @12**	#9 @12**	#9 @12**	#7 @ 6*	#7 @ 6*	#7 @ 6*	#9 @ 9*	#11@12**
X			Cont	Cont	Cont	Cont	Cont	Cont	Cont	Cont	Cont	Cont	Cont
Y			5'-6"	5'-6"	8'-6"	8'-6"	8'-6"	8'-6"	9'-6"	11'-0"	12'-6"	13'-6"	14'-6"
ⓑ Bars	#5 @ 9	#6 @ 9	#6 @12**	#5 @ 6*	#9 @18**	#9 @12**	#9 @12**	#9 @12**	#7 @ 6*	#7 @ 6*	#7 @ 6*	#9 @ 9*	#11@12**
X	Cont	Cont	Cont	Cont	Cont	Cont	Cont	Cont	5'-6"	6'-0"	7'-6"	7'-6"	8'-0"
Y	Cont	Cont	Cont	Cont	11'-6"	11'-6"	12'-0"	12'-0"	17'-6"	20'-0"	21'-6"	24'-0"	24'-0"
ⓒ Bars					#7 @18	#7 @12	#7 @12	#7 @12	#6 @ 12	#6 @ 12	#6 @12	#7 @18	#7 @12
ⓓ Bars	#5 @12	#5 @ 9	#5 @9	#6 @9	#6 @ 9	#9 @12	#9 @12	#7 @#7	6 @ 6	#7 @ 6	#7 @ 6	#9 @ 9	#9 @ 9
Ultimate Bearing Capacity Req'd k/sf	5.5	6.5	7.3	7.6	9.0	9.0	10.6	10.5	12.2	12.6	13.3	15.4	16.0

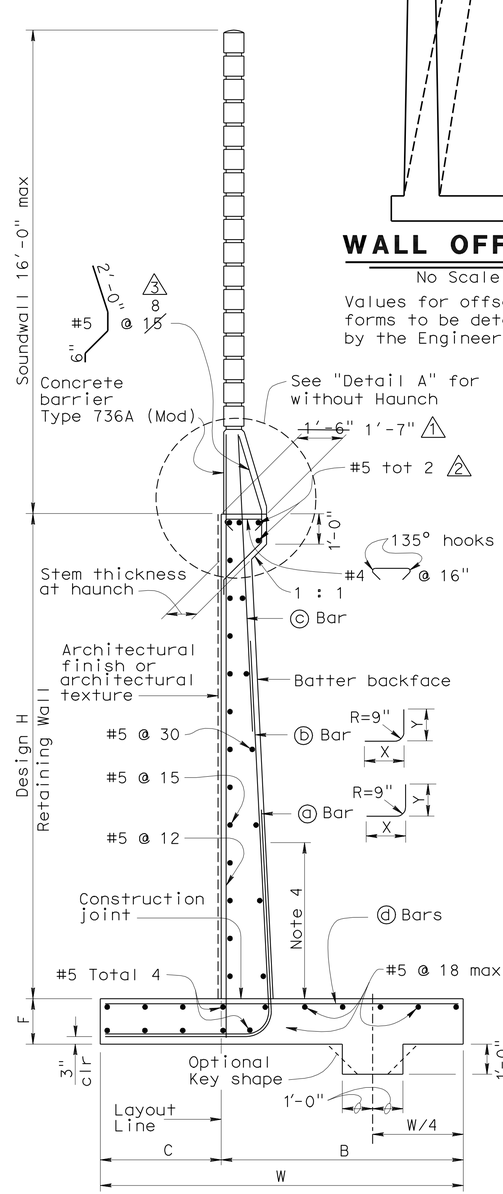

SPREAD FOOTING SECTION

No Scale

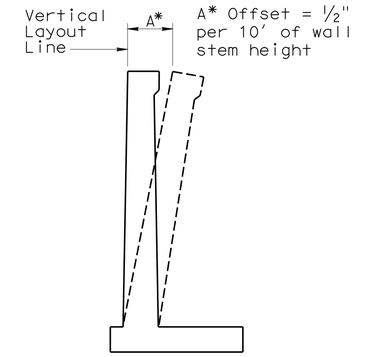

WALL OFFSET

No Scale

Values for offsetting forms to be determined by the Engineer.

DESIGN DATA

DESIGN: Load Factor Design (LFD)

CONCRETE: Reinforced Concrete, f'c = 3600 psi
fy = 60,000 psi

LOADING CASE:
Level ground with 240 psf surcharge and 16' Soundwall

Seismic Load	= 0.3 Dead Load
Wind Load	= 30 psf
Dead Load of Soundwall	= 1414 lb/ft
Dead Load of Barrier	= 372 lb/ft

SEISMIC LOAD: SOIL
Kh = 0.3g
Kv = 0.0
Kae : Mononobe-Okabe Method

SOIL: Ø = 34° γ = 120 pcf
Equivalent fluid pressure:
= 36 pcf for determination of toe pressure
= 27 pcf for determination of heel pressure

EXTERNAL STABILITY:
Group 1 : D + E + SC
Group 2 : D + E + SC + W
Group 3 : D + PYM

INTERNAL STABILITY (LFD):
Group A : βD + 1.7E + 1.7SC
Group B : βD + 1.7E + 1.3W
Group C (stem) : 1.0D + 1.0E + 1.0EQD + 1.0EQE
Group C (footing) : D + PYM

Where : β = 1.0 or 1.3 whichever controls design
D = Dead Load
E = Lateral Earth Pressure
SC = Surcharge
W = Wind load
EQD = Seismic Dead Load
EQE = Seismic Lateral Earth Pressure
PYM = Probable Yield Moment (1.3 x Nominal Yield Moment of Stem)

STANDARD DRAWING

FILE NO. xs14-220x

APPROVAL DATE July 2011

1 Revised dimension
2 Added rebar information
3 Revised rebar spacing

STATE OF CALIFORNIA
DEPARTMENT OF TRANSPORTATION

DIVISION OF ENGINEERING SERVICES

BRIDGE NO. RW 1610
POST MILE 30.50

RETANING WALL 1610

RETAINING WALL TYPE 1SWB

DS OSD 2147A (ENGLISH STANDARD DRAWING "XS" BORDER REV. (02-02-11)

ORIGINAL SCALE IN INCHES FOR REDUCED PLANS 0 1 2 3

UNIT: 3603
PROJECT NUMBER & PHASE: 07000211191
CONTRACT NO.: 07-1218W1

DISREGARD PRINTS BEARING EARLIER REVISION DATES 11/28/11

SHEET 11 OF 19

FILE => 53-rw1610rl-s-xs14-220x.dgn

USERNAME => s124496 DATE PLOTTED => 21-MAY-2012 TIME PLOTTED => 15:35

DIST	COUNTY	ROUTE	POST MILES TOTAL PROJECT	SHEET No.	TOTAL SHEETS
07	LA	5	29.4/31.6	1209	1931

REGISTERED CIVIL ENGINEER — DATE 01/31/12

5-21-12
PLANS APPROVAL DATE

REGISTERED PROFESSIONAL ENGINEER — JORGE I. ESTRADA — No. C51473 — Exp. 06-30-12 — CIVIL — STATE OF CALIFORNIA

The State of California or its officers or agents shall not be responsible for the accuracy or completeness of electronic copies of this plan sheet.

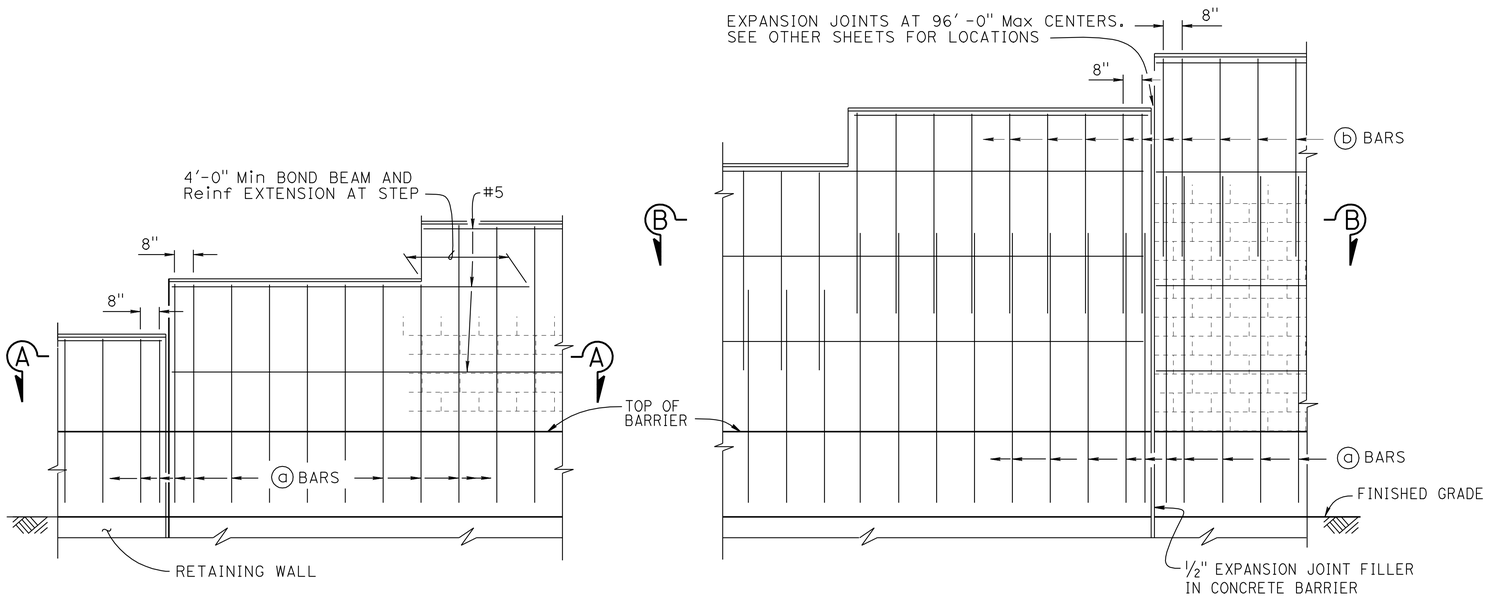

H=6'-4" THRU H=10'-4"

H=12'-4" THRU H=16'-4"

PART ELEVATION

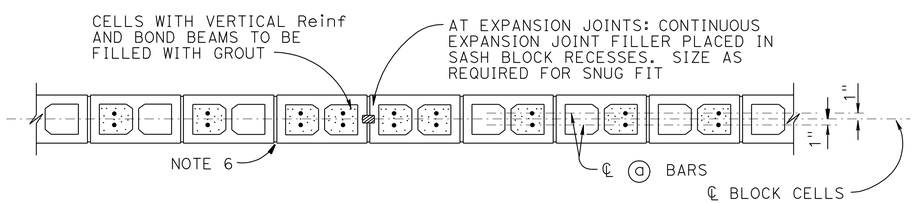

SECTION A-A

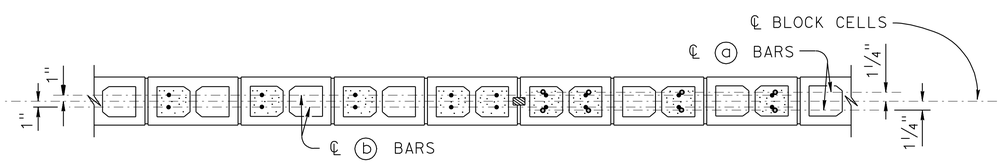

SECTION B-B

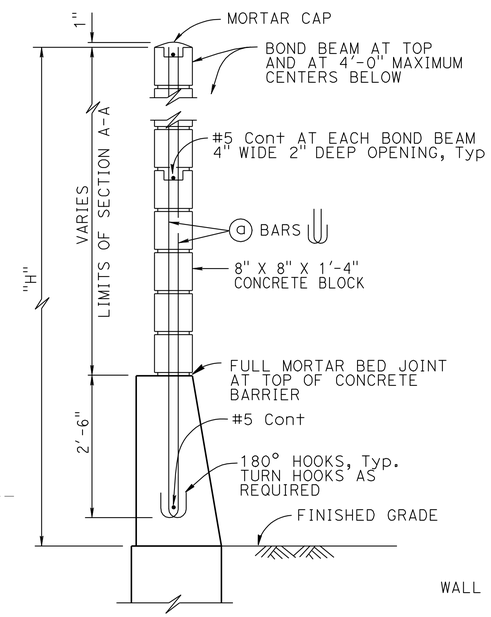

H=6'-4" THRU H=10'-4"

For details not shown, see H=12'-4" thru H=16'-4"

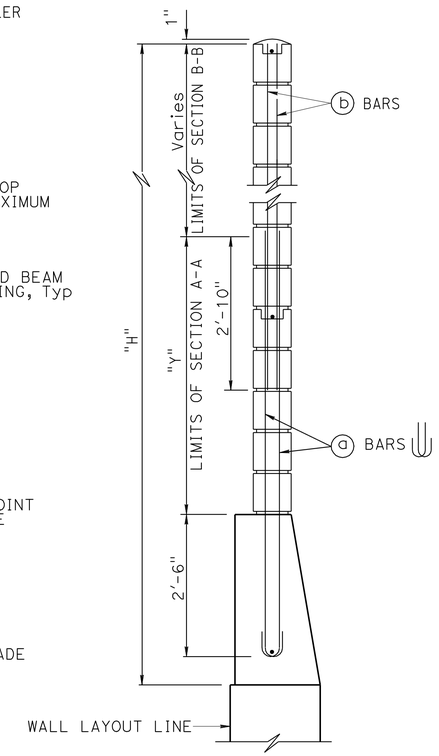

H=12'-4" THRU H=16'-4"

For details not shown, see H=6'-4" thru H=10'-4"

TYPICAL SECTION

SOUND WALL REINFORCEMENT TABLE

MAXIMUM "H"	ⓐ BARS @ 1'-4" Max	ⓑ BARS @ 1'-4" Max	"Y"	f'm (psi)	COMPRESSIVE STRENGTH OF CMU (psi)	MAXIMUM "H"
6'-4"	#4	———	———	1500	1900	6'-4"
8'-4"	#4	———	———	1500	1900	8'-4"
10'-4"	#4	———	———	1500	1900	10'-4"
12'-4"	#5	#4	5'-0"	1500	1900	12'-4"
14'-4"	#6	#4	7'-0"	1500	1900	14'-4"
16'-4"	#6	#4	9'-0"	2500	3700	16'-4"

NOTES:

1. For details not shown, see "SOUND WALL - MASONRY BLOCK WITH BARRIER ON RETAINING WALL - DETAILS NO. 2" sheet
2. Slope ground at traffic side of barrier to drain. Maximum slope ±10%
3. See STANDARD PLANS B15-9 for other details
4. For type of block and joint finish, see other sheets
5. When blocks are laid in stacked bond, ladder type, galvanized joint reinforcement shall be provided. A minimum of 2-9 gauge wire continuous at 4'-0" maximum to be used. Locate reinforcement in joints that are at the approximate midpoint between bond beams
6. Horizontal joints shall be tooled concave or may be weathered. Vertical joints shall be tooled concave or may be raked
7. For intermediate wall heights that are between the "H's" given, use the tabular information for the next higher "H"
8. Masonry strengths are listed in "SOUND WALL REINFORCEMENT TABLE"
9. Concrete to be used for the barrier shall contain not less than 590 pounds of cementitious material per cubic yard

NO SCALE

RETAINING WALL 1610

MASONRY BLOCK SOUND WALL WITH BARRIER ON RETAINING WALL

DETAILS NO. 1

STANDARD DRAWING

FILE NO. xs15-130-1

APPROVAL DATE July 2011

STATE OF CALIFORNIA
DEPARTMENT OF TRANSPORTATION

DIVISION OF ENGINEERING SERVICES

BRIDGE NO. RW 1610

POST MILE 30.50

DS OSD 2147A (ENGLISH STANDARD DRAWING "XS" BORDER REV. (02-02-11)

ORIGINAL SCALE IN INCHES FOR REDUCED PLANS 0 1 2 3

UNIT: 3603
PROJECT NUMBER & PHASE: 07000211191
CONTRACT NO.: 07-1218W1

DISREGARD PRINTS BEARING EARLIER REVISION DATES

REVISION DATES

SHEET 12 OF 19

FILE => 53-rw1610rl-s-xs15-130-1.dgn

USERNAME => s124496 DATE PLOTTED => 21-MAY-2012 TIME PLOTTED => 15:36

DIST	COUNTY	ROUTE	POST MILES TOTAL PROJECT	SHEET No.	TOTAL SHEETS
07	LA	5	29.4/31.6	1210	1931

dEstrada. 01/31/12
REGISTERED CIVIL ENGINEER DATE

5-21-12
PLANS APPROVAL DATE

REGISTERED PROFESSIONAL ENGINEER JORGE I. ESTRADA No. C51473 Exp. 06-30-12 CIVIL STATE OF CALIFORNIA

The State of California or its officers or agents shall not be responsible for the accuracy or completeness of electronic copies of this plan sheet.

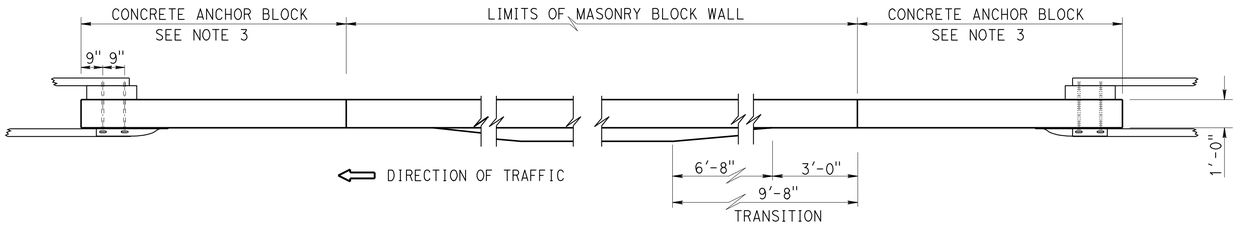

PLAN

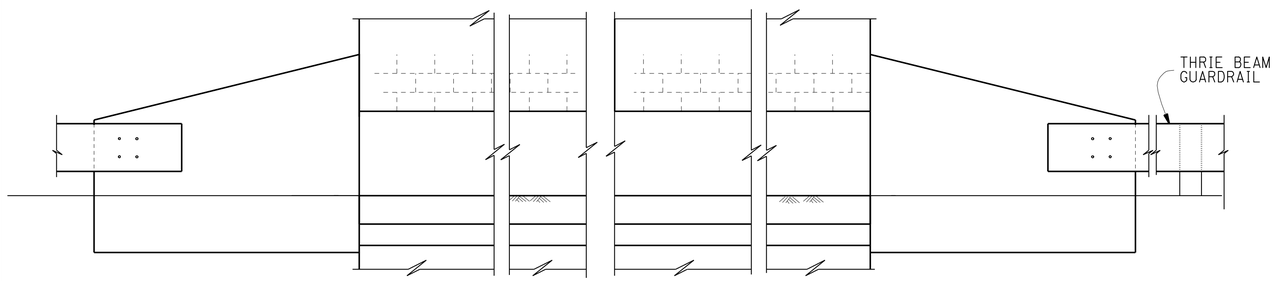

ELEVATION

METAL BEAM GUARDRAIL ANCHORAGE

For details not shown, see STANDARD PLAN B11-56

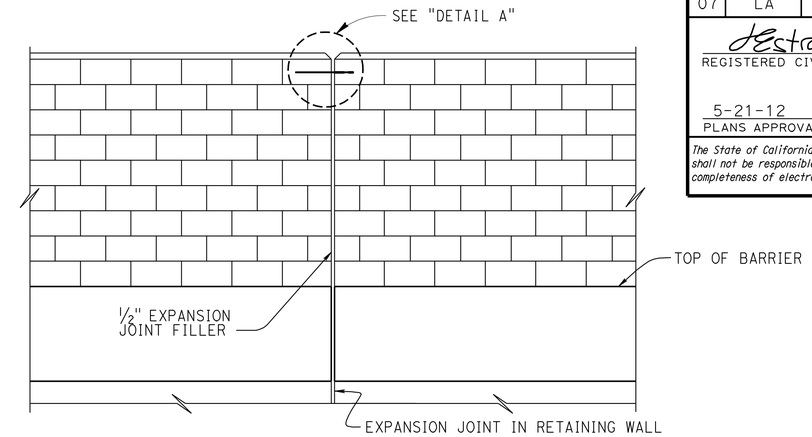

ALIGNMENT KEY DETAIL

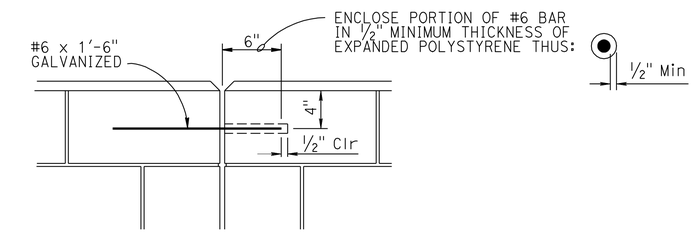

DETAIL A

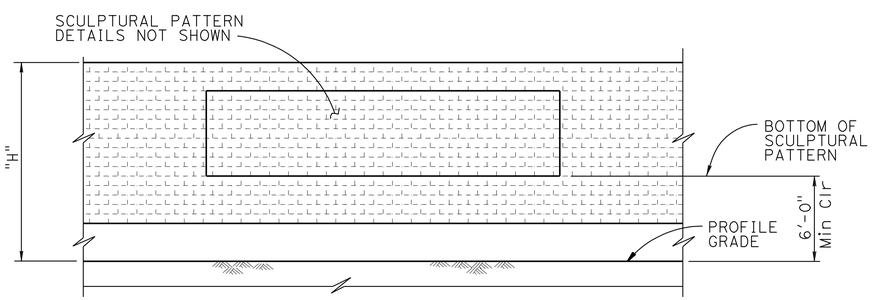

CLEARANCE DETAIL

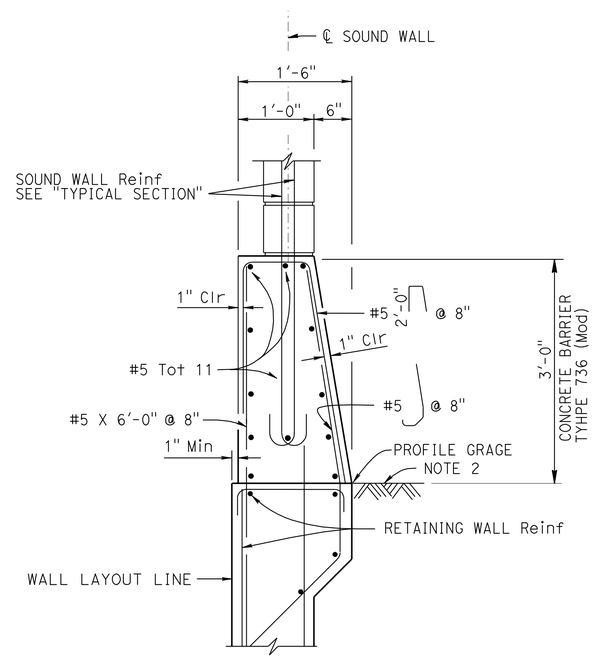

BARRIER SECTION

DESIGN NOTES

DESIGN
Uniform Building Code, 1997 Edition and the Bridge Design Specifications

DESIGN WIND LOAD
33 psf

DESIGN SEISMIC LOAD
0.57 Dead load

REINFORCED CONCRETE
f'c = 3600 psi
fy = 60 ksi

CONCRETE MASONRY

REGULAR STRENGTH	HIGH STRENGTH	
f'm = 1500 psi	f'm = 2000 psi	f'm = 2500 psi
fb = 495 psi	fb = 660 psi	fb = 830 psi
fs = 24,000 psi	fs = 24,000 psi	fs = 24,000 psi
n = 25.8	n = 19.3	n = 15.5

NOTES:
1. For details not shown, see RSP B15-6
2. Slope ground at traffic side of barrier to drain.
   Maximum slope ±10%
   See STANDARD PLAN B11-56, Note D
3. For Concrete Anchor Block and connection details,
   see "CONNNECTION DETAIL DD" on RSP A77J3

NO SCALE

STANDARD DRAWING
FILE NO. xs15-130-2
APPROVAL DATE July 2011

STATE OF CALIFORNIA
DEPARTMENT OF TRANSPORTATION

DIVISION OF ENGINEERING SERVICES

BRIDGE NO. RW 1610
POST MILE 30.50

RETAINING WALL 1610

MASONRY BLOCK SOUND WALL W/BARRIER ON RETAINING WALL

DETAILS NO. 2

DS OSD 2147A (ENGLISH STANDARD DRAWING "XS" BORDER REV. (02-02-11)

ORIGINAL SCALE IN INCHES FOR REDUCED PLANS 0 1 2 3

UNIT: 3603
PROJECT NUMBER & PHASE: 07000211191
CONTRACT NO.: 07-1218W1

DISREGARD PRINTS BEARING EARLIER REVISION DATES

REVISION DATES

SHEET 13 OF 19

FILE => 53-rw1610rl-s-xs15-130-2.dgn

USERNAME => s124496 DATE PLOTTED => 21-MAY-2012 TIME PLOTTED => 16:22

DIST	COUNTY	ROUTE	POST MILES TOTAL PROJECT	SHEET No.	TOTAL SHEETS
07	LA	5	29.4/31.6	1211	1931

JEstrada. 01/31/12
REGISTERED CIVIL ENGINEER DATE

5-21-12
PLANS APPROVAL DATE

REGISTERED PROFESSIONAL ENGINEER
JORGE I. ESTRADA
No. C51473
Exp. 06-30-12
CIVIL
STATE OF CALIFORNIA

The State of California or its officers or agents shall not be responsible for the accuracy or completeness of electronic copies of this plan sheet.

NOTE:

FRACTURED GRANITE TEXTURE SHALL RUN PERPENDICULAR TO PLUMB.

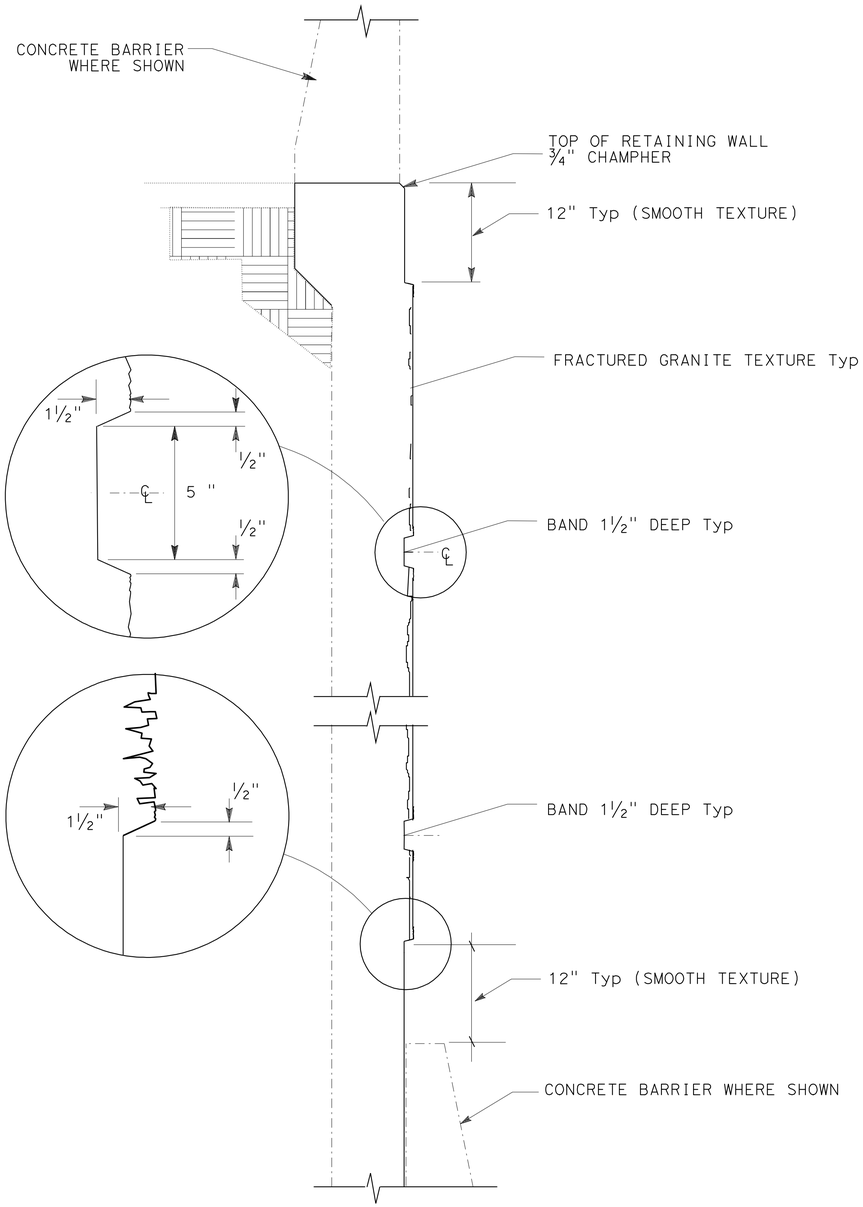

RETAINING WALL
TYPICAL SECTION

ARCHITECTURAL TREATMENT SECTION FOR RETAINING WALL

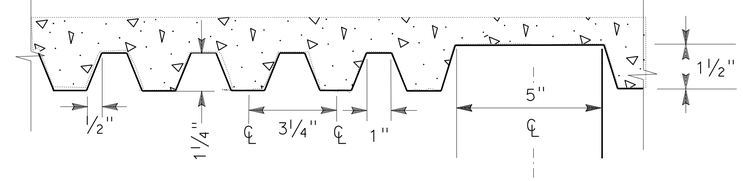

FRACTURED GRANITE TEXTURE & BAND

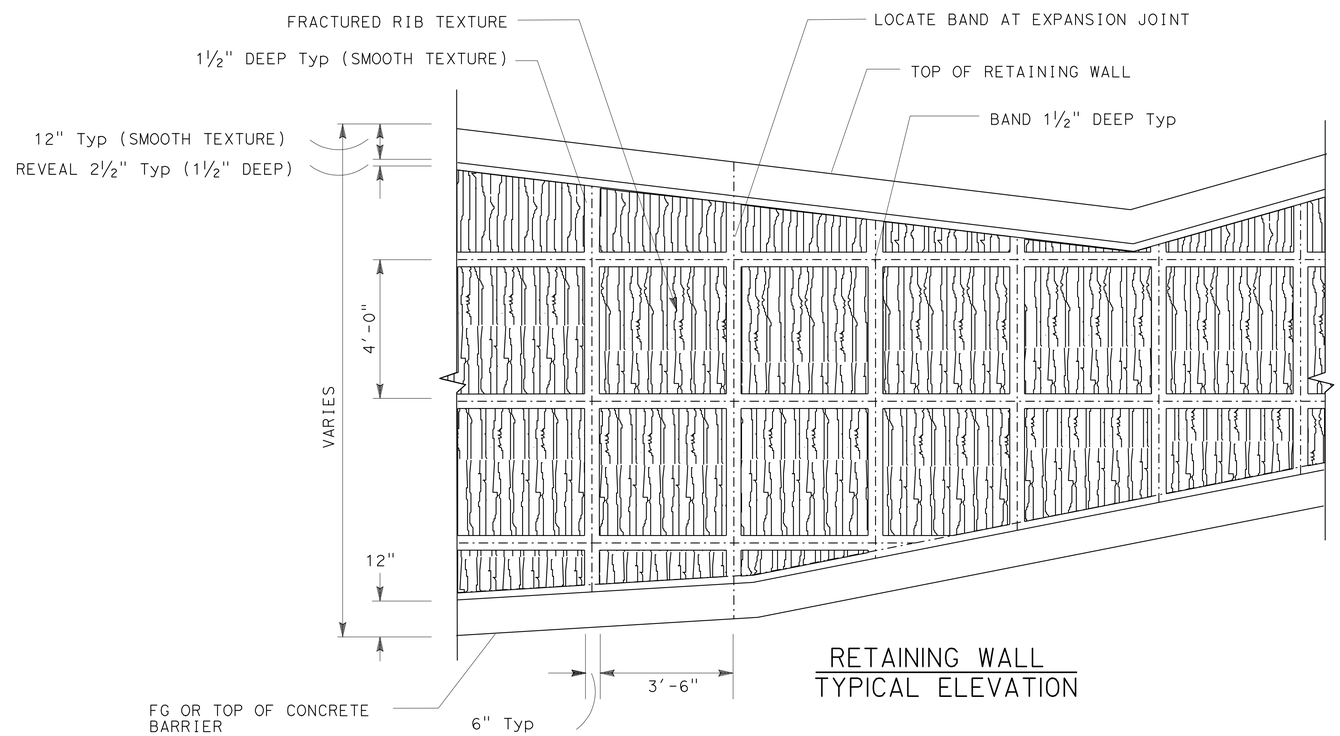

RETAINING WALL
TYPICAL ELEVATION

RETAINING WALL ARCHITECTURAL TREATMENT

NO SCALE

DESIGN	BY DAVID MURRAY	CHECKED ZIHAN YAN	
DETAILS	BY JINLI GUO	CHECKED DAVID MURRAY	
QUANTITIES	BY DAVID MURRAY	CHECKED ZIHAN YAN	

STATE OF CALIFORNIA
DEPARTMENT OF TRANSPORTATION

DIVISION OF ENGINEERING SERVICES
STRUCTURE DESIGN
DESIGN BRANCH 18

BRIDGE NO. RW 1655
POST MILE 31.35

RETAINING WALL 1610
ARCHITECTURAL TREATMENT

STRUCTURES DESIGN DETAIL SHEET (ENGLISH) (REV. 09-01-10)

ORIGINAL SCALE IN INCHES FOR REDUCED PLANS 0 1 2 3

UNIT: 3603
PROJECT NUMBER & PHASE: 07000211191
CONTRACT NO.: 07-1218W1

DISREGARD PRINTS BEARING EARLIER REVISION DATES

REVISION DATES 10-20-11

SHEET 14 OF 19

FILE => 53-rw1610rl-u-arch.dgn

USERNAME => s124436 DATE PLOTTED => 25-MAY-2012 TIME PLOTTED => 11:20

DIST	COUNTY	ROUTE	POST MILES TOTAL PROJECT	SHEET No.	TOTAL SHEETS
07	LA	5	29.4/31.6	1212	1931

dEstrada. 01/31/12
REGISTERED CIVIL ENGINEER DATE

5-21-12
PLANS APPROVAL DATE

REGISTERED PROFESSIONAL ENGINEER
JORGE I. ESTRADA
No. C51473
Exp. 06-30-12
CIVIL
STATE OF CALIFORNIA

The State of California or its officers or agents shall not be responsible for the accuracy or completeness of electronic copies of this plan sheet.

LEGEND

	SYMBOL	NOMINAL SIZE	TEXTURE
(A)		8" x 8" x 16"	4-SCORE SPLIT FACE REVERSE SIDE PRECISION BLOCK
(B)		8" x 8" x 16"	PRECISION FACE REVERSE SIDE 4-SCORE SPLIT FACE

NOTES:
1. BOND (TYPE 1) STAKED BOND.
2. MORTAR COLOR TO MATCH BLOCK.
3. TOOLED JOINTS.
4. BLOCKS ON BRIDGE SHALL BE PRECISION BLOCK BOTH SIDES (MEDIUM WEIGHT).
5. PILASTER EFFECT (PRECISION SIDE TO FREEWAY) IS NOT TO BE USED ON END ADJACENT TO BRIDGE.
6. PLACE ELEVATION CHANGE AT EXPANSION JOINTS WHERE POSSIBLE

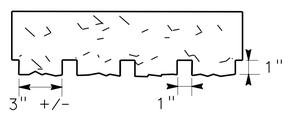

4 SCORE SPLIT FACE

NO SCALE

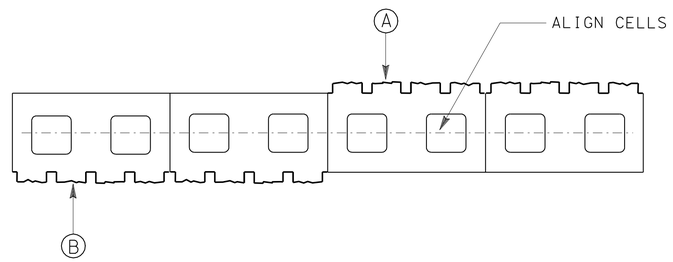

BLOCK ALIGNMENT

NO SCALE

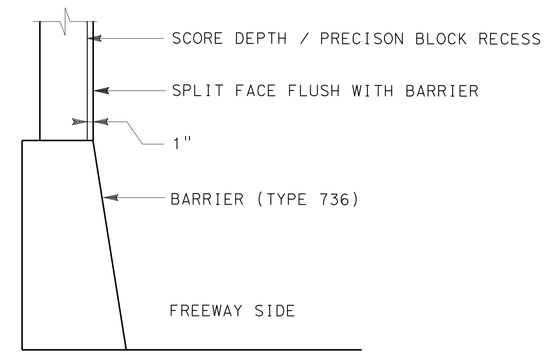

BARRIER SECTION

NO SCALE

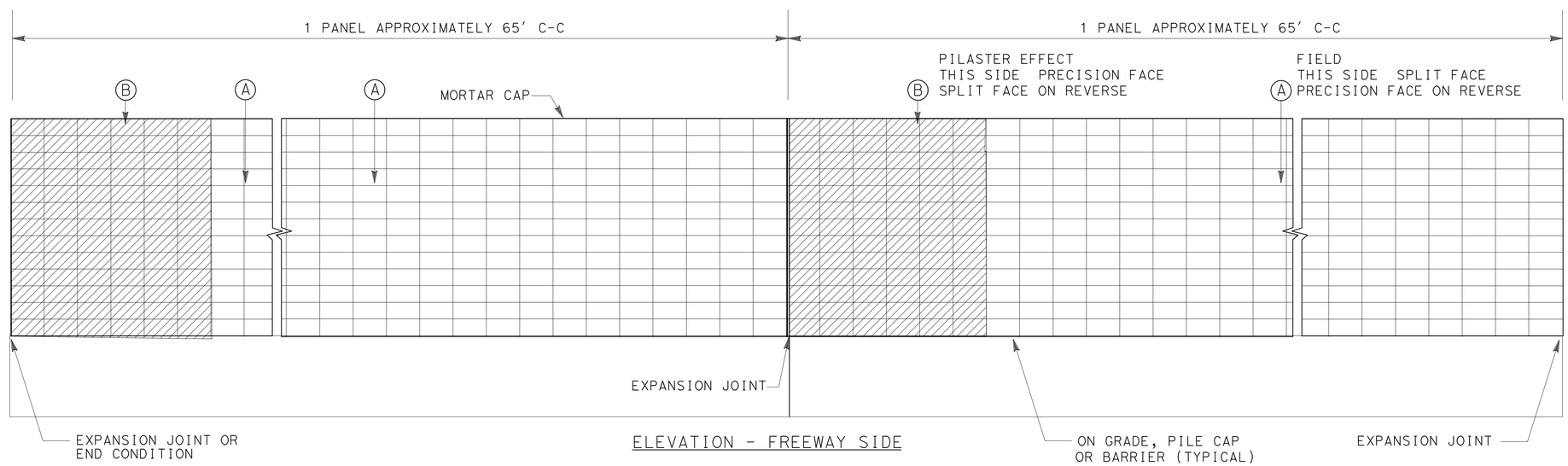

WALL PATTERN

NO SCALE

APPROVED FOR AESTHETIC WORK ONLY

DESIGN	BY DAVID MURRAY	CHECKED ZIHAN YAN	
DETAILS	BY JINLI GUO	CHECKED DAVID MURRAY	
QUANTITIES	BY DAVID MURRAY	CHECKED ZIHAN YAN	

STATE OF CALIFORNIA
DEPARTMENT OF TRANSPORTATION

DIVISION OF ENGINEERING SERVICES
STRUCTURE DESIGN
DESIGN BRANCH 18

BRIDGE NO. RW 1610
POST MILE 30.50

RETAINING WALL 1610
SOUNDWALL AESTHETICS DETAILS

STRUCTURES DESIGN DETAIL SHEET (ENGLISH) (REV. 09-01-10)

ORIGINAL SCALE IN INCHES FOR REDUCED PLANS 0 1 2 3

UNIT: 3603
PROJECT NUMBER & PHASE: 07000211191
CONTRACT NO.: 07-1218W1

DISREGARD PRINTS BEARING EARLIER REVISION DATES

REVISION DATES 11-15-11

SHEET 15 OF 19

FILE => 53-rw1610ri-v-sdwallaesthetic.dgn

USERNAME => s124496 DATE PLOTTED => 21-MAY-2012 TIME PLOTTED => 15:36

DIST	COUNTY	ROUTE	POST MILE TOTAL PROJECT	SHEET No	TOTAL SHEETS
07	LA	5	29.4/31.6	1213	1931

R Shiva Karimi 1-27-12
REGISTERED GEOTECHNICAL ENGINEER

5-21-12
PLANS APPROVAL DATE

REGISTERED PROFESSIONAL ENGINEER Shiva Karimi No. GE2651 Exp. 6-30-12 GEOTECHNICAL STATE OF CALIFORNIA

The State of California or its officers or agents shall not be responsible for the accuracy or completeness of electronic copies of this plan sheet.

BENCH MARKS

BM PRHV902 Elev 635.442 ft
Fd PK Nail in gore area at Scott Rd NBND Off-ramp; 68.429 ft Rt Sta 1605+67.67 C/L Rte 5 (Prop).
N 1892137.571
E 6462934.971

BM PRHV903 Elev 641.701 ft
Fd PK Nail SBND LA-5 shoulder; ±9.2 ft north of concrete barrier SBND San Fernando Rd. Bridge; ±9.5 ft in from EP; 69.054 ft Lt Sta 1610+60.79 C/L Rte 5 (Prop).
N 1892390.293
E 6462490.218

BM PRHV905 Elev 647.715 ft
Fd PK Nail in AC NBND LA-5 shoulder (gore area); at Lincoln St NBND LA-5 Off-ramp; 77.548 ft Rt Sta 1624+75.66 C/L Rte 5 (Prop).
N 1893428.109
E 6461516.696

NAD83, NAVD88

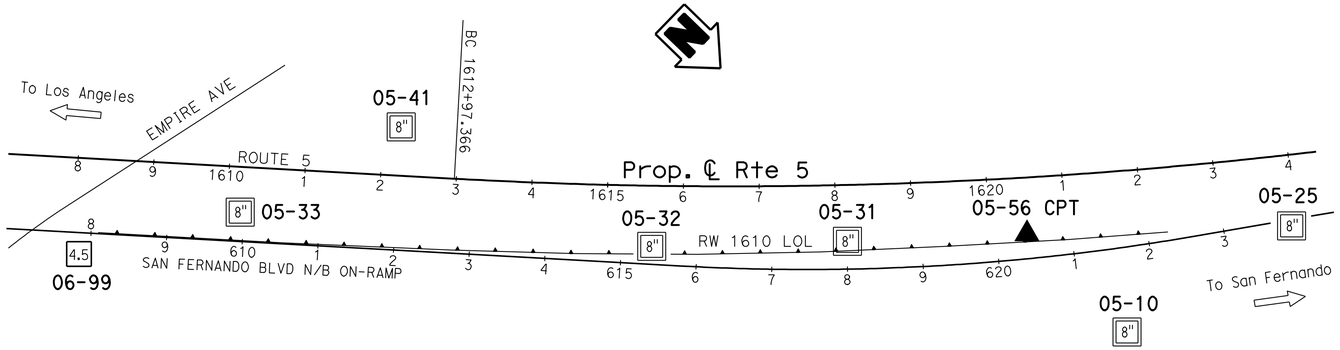

PLAN

1" = 100'

LEGEND:

- (M) Moisture Content
- (PA) Particle Size Analysis
- (PI) Plasticity, Index, Liquid Limit
- (CR) Corrosivity Testing
- (CP) Compaction

126.9' Rt Sta 1608+07.8
Prop. ℄ Rte 5

06-99

Note: No ground water encountered during field investigation.

621.0'

4.5 Asphaltic Concrete Pavement (7" thick).

SANDY SILT (ML) with fine GRAVEL to minor SILTY fine SAND (ML), estimated medium dense, brown, moist, nonplastic, (Road Base material).

SANDY SILT (ML) to SILTY fine SAND (SM), contains scattered fine GRAVEL and 5 to 10% CLAY, estimated loose to medium dense, brown, moist, nonplastic, (FILL).

SILTY fine SAND (SM) with coarse and fine GRAVEL (15 to 25%) and minor sporadic COBBLES (≤6"), estimated loose to medium dense, light brown, dry, nonplastic, contains subrounded hard, slightly weathered SCHIST and GRANITOID rock fragments, [FILL near culvert (Burbank Western Channel)].

Well-graded SAND (SW), contains scattered fine GRAVEL (5 to 10%), medium dense, yellowish brown, moist, nonplastic, (probable FILL near culvert).

SILTY fine SAND (SM) with sporadic coarse and fine GRAVEL (0 to 30%), medium dense, brown, moist, nonplastic, (ALLUVIUM).

SANDY lean CLAY (CL), estimated stiff, brown, moist, medium plasticity.

SILTY fine SAND (SM) with GRAVEL (15%), estimated medium dense to dense, yellowish brown, moist, nonplastic.

Well-graded SAND (SW) with scattered fine to coarse GRAVEL (0 to 20%), dense to very dense, yellowish brown, moist, nonplastic, clean, contains subrounded hard GRANITOID rock fragments.

Well-graded SAND (SW) with coarse and fine GRAVEL (25 to 40%) interlensed with coarse GRAVEL with SAND matrix and scattered COBBLES (≤6" length), medium dense to estimated dense, yellowish brown to varicolored, moist, nonplastic.

SILTY fine SAND (SM) gradationally interbedded with minor CLAYEY fine SAND (SC), medium dense, brown, moist, dominantly nonplastic.

Poorly-graded fine SAND (SP), estimated medium dense to dense, yellowish brown, moist, nonplastic.

Poorly-graded fine SAND (SP) with coarse GRAVEL (15%), dense, yellowish brown, moist, nonplastic.

SILTY fine SAND (SM) with minor SANDY SILT (ML) interbeds, dense, brown, moist, nonplastic.

Well-graded SAND (SW), estimated medium dense, yellowish brown, moist, nonplastic.

SILTY fine SAND (SM), medium dense, brown, moist, nonplastic.

SANDY lean CLAY (CL), estimated stiff to very stiff, brown, moist, low plasticity.

SILTY fine SAND (SM), dense, brown, moist, nonplastic, micaceous, crosslaminated (contains 20 to 40% SILT).

SILTY fine SAND (SM), moderately interbedded (6" thick) with minor SANDY SILT (ML), medium dense, brown, moist, nonplastic, micaceous.

SANDY lean CLAY (CL), estimated very stiff to stiff, brown, moist, medium plasticity.

SILTY fine SAND (SM) gradationally interbedded with minor SAND SILT (ML), dense, brown, moist, nonplastic.

SILTY SAND (SM) interbedded with minor well-graded SAND (SW), dense, brown, moist, nonplastic.

SANDY lean CLAY (CL) thinly interbedded (1" to 4" thick) with minor SILTY fine SAND (SM), estimated stiff to very stiff, olive gray to strong brown mottled, moist, medium plasticity to minor nonplastic.

SILTY fine SAND (SM), dense, strong brown to olive gray mottled, moist, nonplastic.

Well-graded fine to coarse GRAVEL (GW) with fine SAND matrix (35%), estimated dense to very dense, varicolored to brown, moist, nonplastic.

Well-graded fine to coarse SAND (SW) with fine to coarse GRAVEL (20 to 40%) interbedded with coarse GRAVEL lenses (12" to 3') with scattered COBBLES (≤6" length) and well-graded fine to coarse SAND with SILT (SW-SM) and coarse to fine GRAVEL (20 to 30%), very dense, yellowish brown, brown, and varicolored, moist, nonplastic, clean, contains subrounded to subangular hard to minor soft (slightly weathered to minor intensely weathered) GRANITOID and SCHIST rock fragments, variable hard drilling.

Coarse and fine GRAVEL with scattered COBBLES (≤6" length) and SAND matrix, estimated very dense, hard rock drilling.

SAND with minor GRAVEL.

Well-graded coarse to fine GRAVEL (GW) with fine SAND matrix (30 to 45%) and scattered COBBLES (≤6" length) thickly interlensed (1 to 3 ft) with well-graded SAND (SW) with GRAVEL (30 to 45%) and well-graded coarse to fine GRAVEL with SILTY fine SAND matrix (GW-GM), very dense, varicolored to yellowish brown, moist, nonplastic, contains subrounded hard (slightly weathered) GRANITOID and GNEISSIC rock fragments, variable hard rock drilling.

Elev.	N-Value	Moisture
620		
610	28	1.4
	18	1.4
600	36	1.4
	75	1.4
590	23	1.4
	50	1.4
580	21	1.4
	45	1.4
570	29	1.4
	32	1.4
560	42	1.4
	E>100	1.4
550	E100	1.4
	76	1.4
540	E100	1.4
	E>100	1.4
530	E125	1.4
	E>100	1.4
520	E133	1.4

2-8-06

1608+00 1609+00 1610+00

PROFILE

Horiz: 1" = 10'
Vert: 1" = 10'

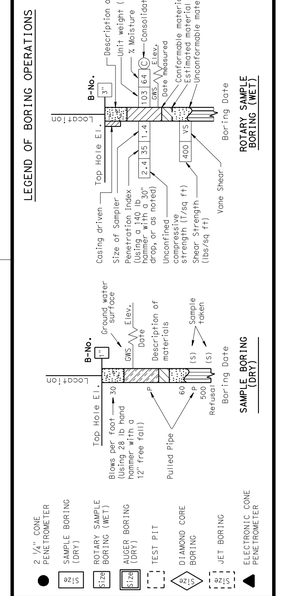

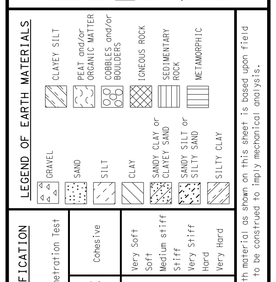

CONSISTENCY CLASSIFICATION FOR SOILS
According to the Standard Penetration Test

SPT N-Value (Blows/Foot)	Granular	SPT N-Value (Blows/Foot)	Cohesive
0-4	Very Loose	<2	Very Soft
5-10	Loose	2-4	Soft
11-30	Medium Dense	5-8	Medium stiff
31-50	Dense	9-15	Stiff
>50	Very Dense	16-30	Very Stiff
		31-60	Hard
		>60	Very Hard

NOTE: Classification of earth material as shown on this sheet is based upon field inspection and is not to be construed to imply mechanical analysis.

ENGINEERING SERVICES	GEOTECHNICAL SERVICES
DRAWN BY	I.G-Remmen
CHECKED BY	J. Pratt

FIELD INVESTIGATION BY: J. Pratt

STATE OF CALIFORNIA DEPARTMENT OF TRANSPORTATION

DIVISION OF ENGINEERING SERVICES STRUCTURE DESIGN DESIGN BRANCH 18

BRIDGE NO. RW 1610
POST MILE 30.50

RETAINING WALL NO. 1610
LOG OF TEST BORINGS 1 OF 4

OGS LOG OF TEST BORINGS SHEET (ENGLISH) (REV. 5/25/07)

ORIGINAL SCALE IN INCHES FOR REDUCED PLANS 0 1 2 3

UNIT: 3603
PROJECT NUMBER & PHASE: 07000211191 CONTRACT NO.: 07-1218W1

DISREGARD PRINTS BEARING EARLIER REVISION DATES → 01-27-12

REVISION DATES				SHEET	OF
01-27-12				16	19

FILE => 53-rw1610rl-z-ltb-01.dgn

USERNAME => s124496 DATE PLOTTED => 21-MAY-2012 TIME PLOTTED => 15:36

DIST	COUNTY	ROUTE	POST MILE TOTAL PROJECT	SHEET No	TOTAL SHEETS
07	LA	5	29.4/31.6	1214	1931

R Shiva Karimi 1-27-12
REGISTERED GEOTECHNICAL ENGINEER

5-21-12
PLANS APPROVAL DATE

REGISTERED PROFESSIONAL ENGINEER Shiva Karimi No. GE2651 Exp. 6-30-12 GEOTECHNICAL STATE OF CALIFORNIA

The State of California or its officers or agents shall not be responsible for the accuracy or completeness of electronic copies of this plan sheet.

LEGEND:

- (M) Moisture Content
- (PA) Particle Size Analysis
- (PI) Plasticity, Index, Liquid Limit
- (CR) Corrosivity Testing
- (CP) Compaction

FOR PLAN VIEW, SEE
"LOG OF TEST BORINGS 1 OF 4"

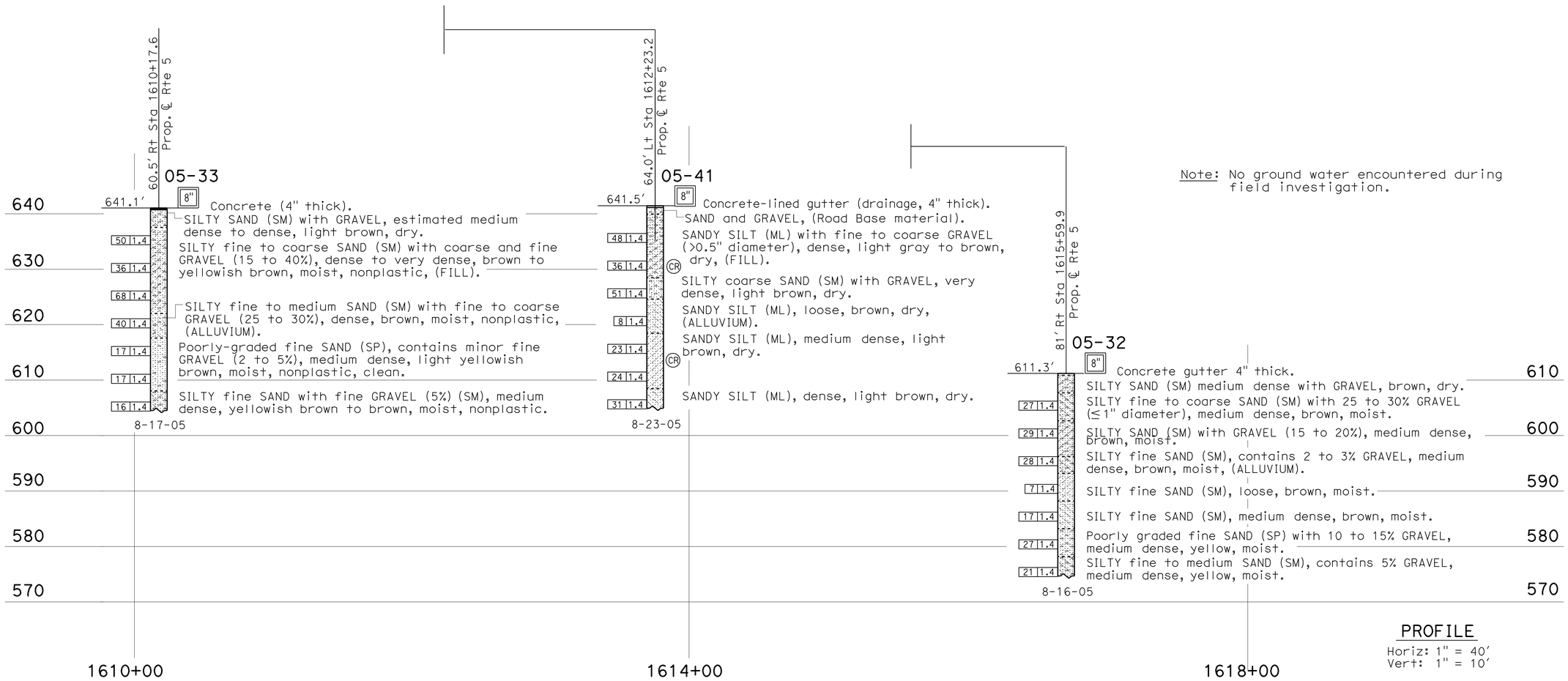

Note: No ground water encountered during field investigation.

PROFILE
Horiz: 1" = 40'
Vert: 1" = 10'

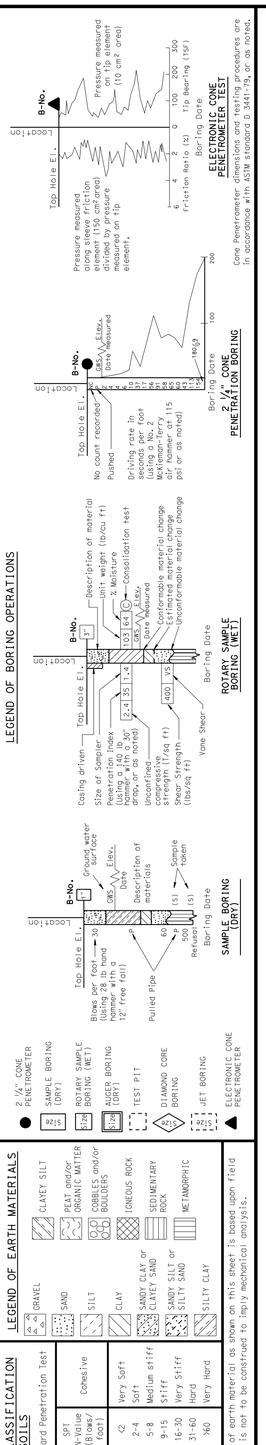

ENGINEERING SERVICES	GEOTECHNICAL SERVICES
DRAWN BY	I.G-Remmen
CHECKED BY	J. Pratt

FIELD INVESTIGATION BY: J. Pratt, K. Lai

STATE OF CALIFORNIA DEPARTMENT OF TRANSPORTATION

DIVISION OF ENGINEERING SERVICES STRUCTURE DESIGN DESIGN BRANCH

BRIDGE NO. RW 1610
POST MILE 30.50

RETAINING WALL NO. 1610
LOG OF TEST BORINGS 2 OF 4

OGS LOG OF TEST BORINGS SHEET (ENGLISH) (REV. 5/25/07)

ORIGINAL SCALE IN INCHES FOR REDUCED PLANS 0 1 2 3

UNIT: 3603
PROJECT NUMBER & PHASE: 07000211191 CONTRACT NO.: 07-1218W1

DISREGARD PRINTS BEARING EARLIER REVISION DATES

REVISION DATES 01-27-12

SHEET 17 OF 19

FILE => 53-rw1610rl-z-ltb-02.dgn

USERNAME => s124496 DATE PLOTTED => 21-MAY-2012 TIME PLOTTED => 15:36

DIST	COUNTY	ROUTE	POST MILE TOTAL PROJECT	SHEET No	TOTAL SHEETS
07	LA	5	29.4/31.6	1215	1931

R Shiva Karimi 1-27-12
REGISTERED GEOTECHNICAL ENGINEER

5-21-12
PLANS APPROVAL DATE

REGISTERED PROFESSIONAL ENGINEER Shiva Karimi No. GE2651 Exp. 6-30-12 GEOTECHNICAL STATE OF CALIFORNIA

The State of California or its officers or agents shall not be responsible for the accuracy or completeness of electronic copies of this plan sheet.

LEGEND:

- (M) Moisture Content
- (PA) Particle Size Analysis
- (PI) Plasticity, Index, Liquid Limit
- (CR) Corrosivity Testing
- (CP) Compaction

FOR PLAN VIEW, SEE
"LOG OF TEST BORINGS 1 OF 4"

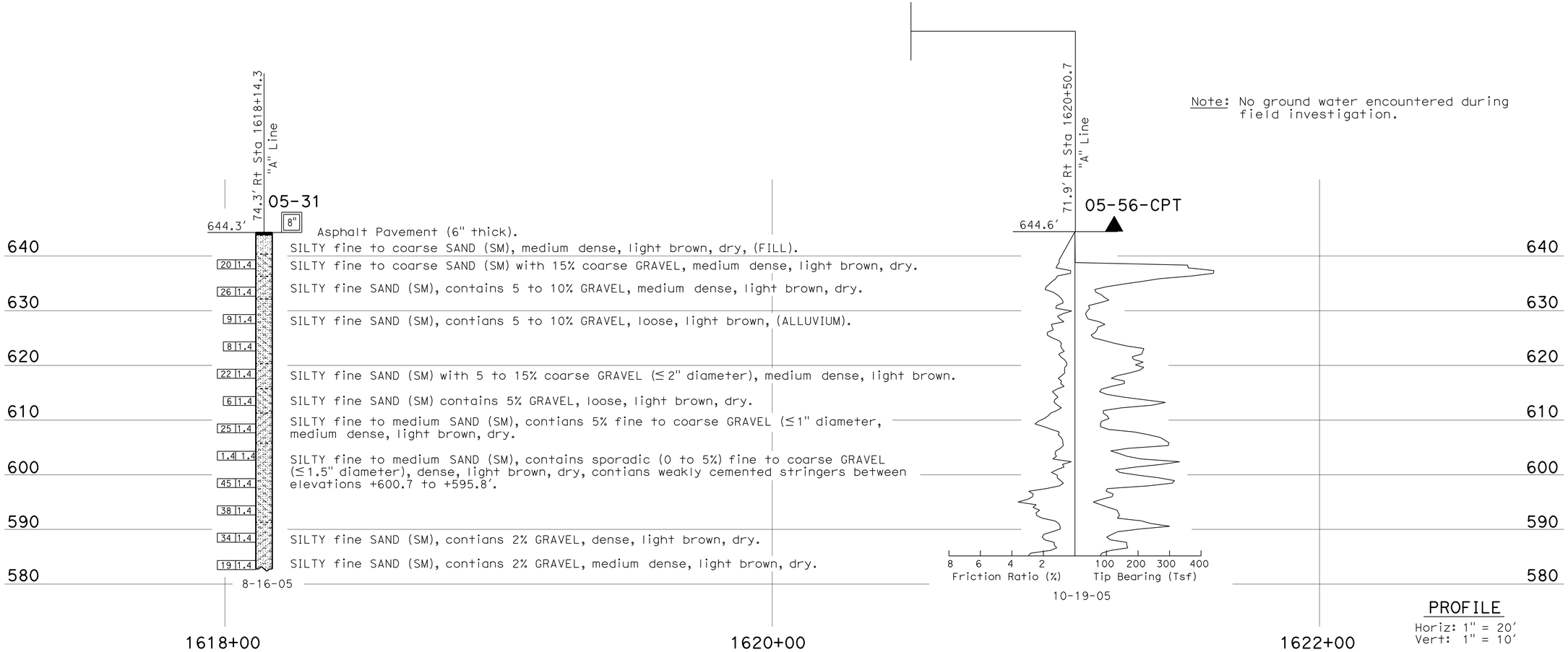

Note: No ground water encountered during field investigation.

PROFILE
Horiz: 1" = 20'
Vert: 1" = 10'

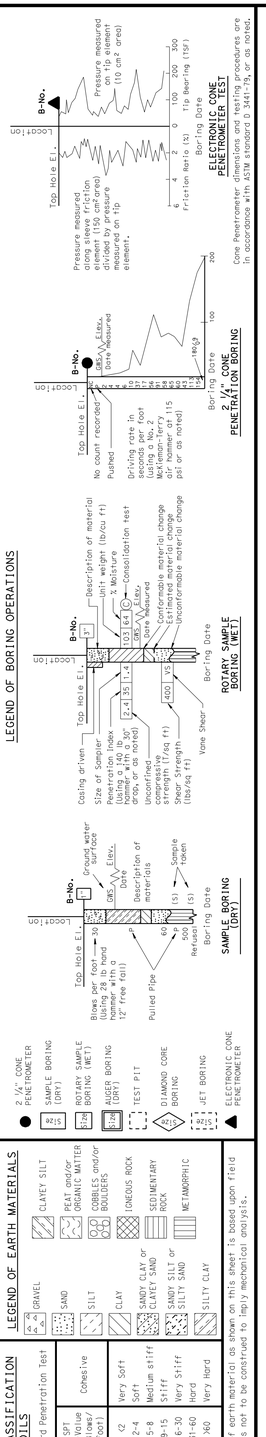

ENGINEERING SERVICES	GEOTECHNICAL SERVICES
DRAWN BY	I.G-Remmen
CHECKED BY	A. Mehrazar

FIELD INVESTIGATION BY: E. Schramm, J. Pyska

STATE OF CALIFORNIA DEPARTMENT OF TRANSPORTATION

DIVISION OF ENGINEERING SERVICES STRUCTURE DESIGN
DESIGN BRANCH

BRIDGE NO. RW 1610
POST MILE 30.50

RETAINING WALL NO. 1610
LOG OF TEST BORINGS 3 OF 4

OGS LOG OF TEST BORINGS SHEET (ENGLISH) (REV. 5/25/07)

ORIGINAL SCALE IN INCHES FOR REDUCED PLANS 0 1 2 3

UNIT: 3603
PROJECT NUMBER & PHASE: 07000211191
CONTRACT NO.: 07-1218W1

DISREGARD PRINTS BEARING EARLIER REVISION DATES

REVISION DATES 01-27-12 | SHEET 18 | OF 19

FILE => 53-rw1610rl-z-ltb-03.dgn

USERNAME => s124196 DATE PLOTTED => 21-MAY-2012 TIME PLOTTED => 15:36

DIST	COUNTY	ROUTE	POST MILE TOTAL PROJECT	SHEET No	TOTAL SHEETS
07	LA	5	29.4/31.6	1216	1931

R Shiva Karimi 1-27-12
REGISTERED GEOTECHNICAL ENGINEER

5-21-12
PLANS APPROVAL DATE

REGISTERED PROFESSIONAL ENGINEER Shiva Karimi No. GE2651 Exp. 6-30-12 GEOTECHNICAL STATE OF CALIFORNIA

The State of California or its officers or agents shall not be responsible for the accuracy or completeness of electronic copies of this plan sheet.

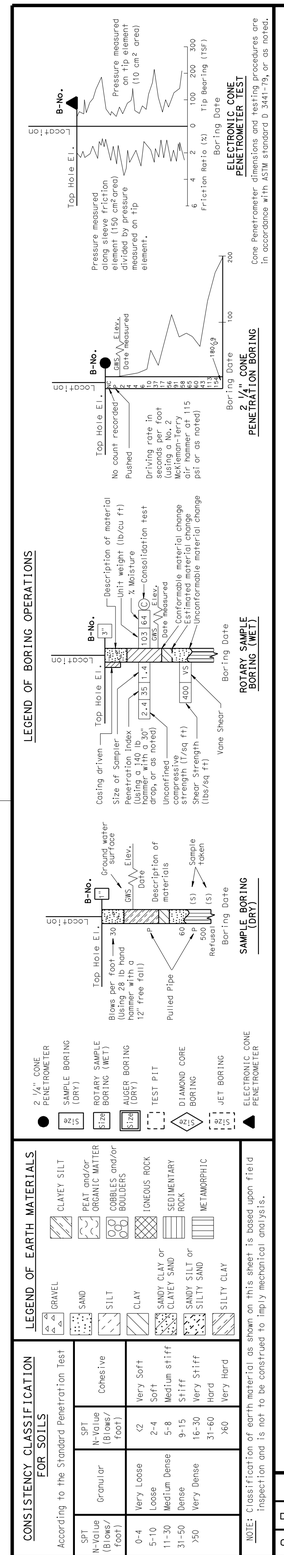

FOR PLAN VIEW, SEE
"LOG OF TEST BORINGS 1 OF 4"

Note: No ground water encountered during field investigation.

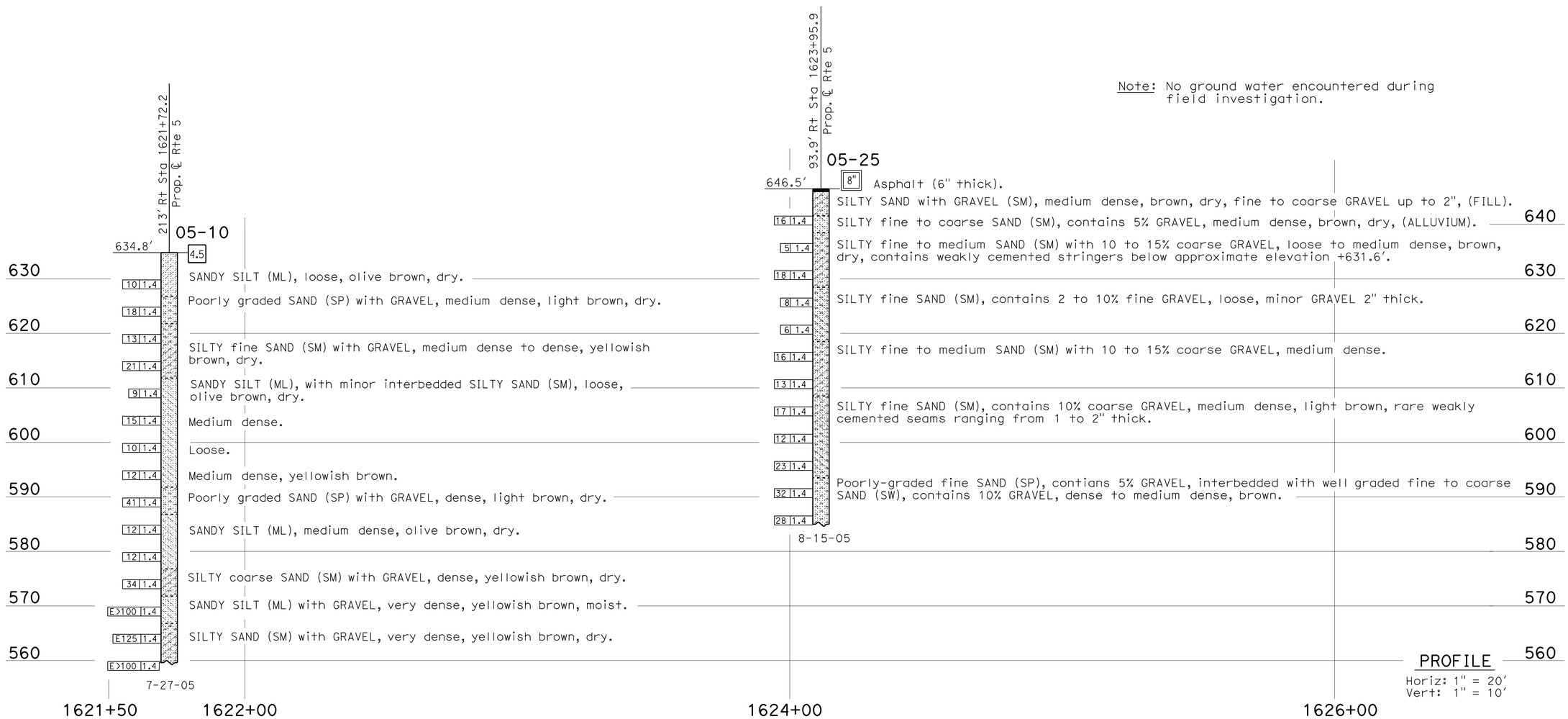

PROFILE
Horiz: 1" = 20'
Vert: 1" = 10'

ENGINEERING SERVICES	GEOTECHNICAL SERVICES
DRAWN BY	I.G-Remmen
CHECKED BY	K. Barker

FIELD INVESTIGATION BY: E. Schramm

STATE OF CALIFORNIA DEPARTMENT OF TRANSPORTATION

DIVISION OF ENGINEERING SERVICES STRUCTURE DESIGN
DESIGN BRANCH

BRIDGE NO. RW 1610
POST MILE 30.50

RETAINING WALL NO. 1610
LOG OF TEST BORINGS 4 OF 4

OGS LOG OF TEST BORINGS SHEET (ENGLISH) (REV. 5/25/07)

ORIGINAL SCALE IN INCHES FOR REDUCED PLANS 0 1 2 3

UNIT: 3603
PROJECT NUMBER & PHASE: 07000211191 CONTRACT NO.: 07-1218W1

DISREGARD PRINTS BEARING EARLIER REVISION DATES → 01-27-12

REVISION DATES				SHEET	OF
01-27-12				19	19

FILE => 53-rw1610rl-z-ltb-04.dgn

USERNAME => s124496 DATE PLOTTED => 21-MAY-2012 TIME PLOTTED => 15:36

DIST	COUNTY	ROUTE	POST MILES TOTAL PROJECT	SHEET No.	TOTAL SHEETS
07	LA	5	29.4/31.6	1217	1931

REGISTERED CIVIL ENGINEER — DATE 01-30-12

5-21-12
PLANS APPROVAL DATE

REGISTERED PROFESSIONAL ENGINEER — JORGE I. ESTRADA — No. C51473 — Exp. 06-30-12 — CIVIL — STATE OF CALIFORNIA

The State of California or its officers or agents shall not be responsible for the accuracy or completeness of electronic copies of this plan sheet.

INDEX TO PLANS

1 GENERAL PLAN
2 FOUNDATION PLAN NO.1
3 FOUNDATION PLAN NO.2
4 STRUCTURE PLAN NO. 1
5 STRUCTURE PLAN NO. 2
6 STRUCTURE PLAN NO. 3
7 STRUCTURE PLAN NO. 4
8 RETAINING WALL TYPE 1RR CASE II - DETAILS NO.1
9 RETAINING WALL TYPE 1RR CASE II - DETAILS NO.2
10 MISCELLANEOUS DETAILS
11 ARCHITECTURAL TREATMENT
12 LOG OF TEST BORINGS 1 OF 5
13 LOG OF TEST BORINGS 2 OF 5
14 LOG OF TEST BORINGS 3 OF 5
15 LOG OF TEST BORINGS 4 OF 5
16 LOG OF TEST BORINGS 5 OF 5

LEGEND

STANDARD PLAN SHEET NO.

DETAIL NO.

QUANTITIES

STRUCTURE EXCAVATION (RETAINING WALL)	19,687 CY
STRUCTURE EXCAVATION (TYPE Y-1) (AERIALLY DEPOSITED LEAD)	513 CY
STRUCTURE BACKFILL (RETAINING WALL)	22,600 CY
PERVIOUS BACKFILL MATERIAL	475 CY
STRUCTURAL CONCRETE, RETAINING WALL	4,712 CY
ARCHITECTURAL TREATMENT	14,924 SQFT
BAR REINFORCING STEEL (RETAINING WALL)	567,395 LB
MINOR CONCRETE (GUTTER)	25 CY
CABLE RAILING	730 LF

Notes:
1. For spread footing data table see "MISCELLANEOUS DETAILS" sheet.
2. For limits of excavation for Aerially Deposited Lead (ADL), see "MISCELLANEOUS DETAILS" sheet.
3. Relocation of existing utilities prior to this Contract by Others.

STANDARD PLANS DATED MAY 2006

SHEET NO.	TITLE
A10A - A10B	ACRONYMS AND ABBREVIATIONS
A10C - A10D	SYMBOLS
A62B	LIMITS OF PAYMENT FOR EXCAVATION AND BACKFILL BRIDGE SURCHARGE AND WALL
RSP A76A	CONCRETE BARRIER TYPE 60
B3-1	RETAINING WALL TYPE 1
B0-3	BRIDGE DETAILS
B3-8	RETAINING WALL DETAILS NO.1
B3-9	RETAINING WALL DETAILS NO.2
RSP B11-47	CABLE RAILING

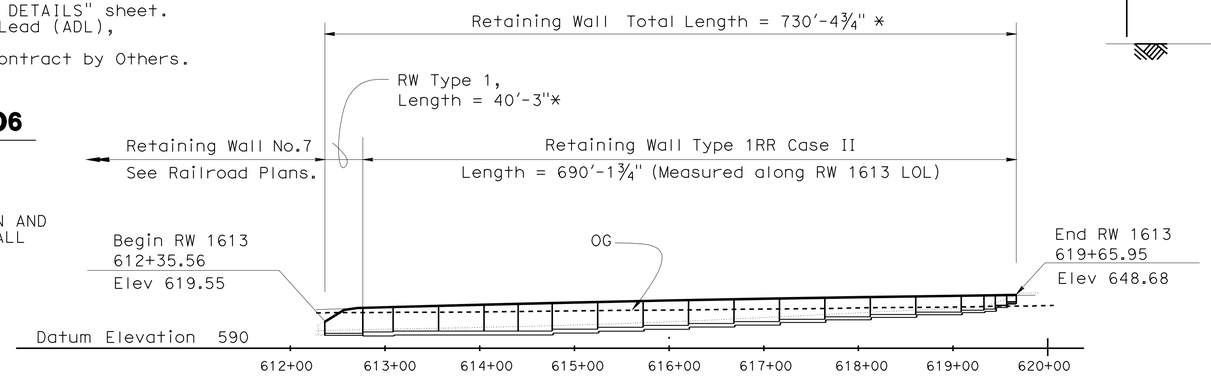

ELEVATION
1" = 80'

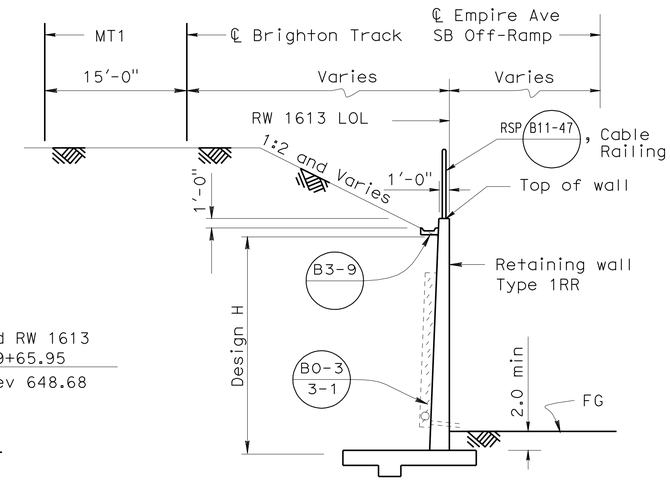

TYPICAL SECTION
1/8 " = 1'

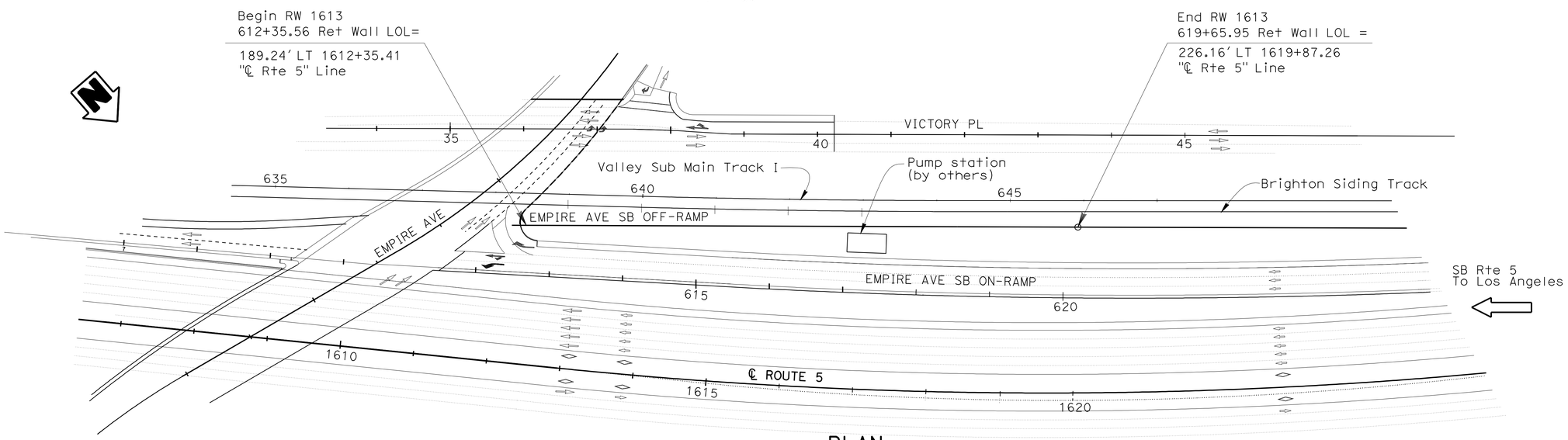

PLAN
1" = 80'

MICHAEL POPE — DESIGN ENGINEER	DESIGN	BY J. Duffin/Zihan Yan	CHECKED Jorge Estrada	LOAD FACTOR DESIGN	LIVE LOADING: HS20-44 AND ALTERNATIVE AND PERMIT DESIGN LOAD	
	DETAILS	BY SD/ FR/ Minh Tran	CHECKED Jorge Estrada	LAYOUT	BY Suraj Dutta/ Minh Tran	CHECKED Jorge Estrada
	QUANTITIES	BY Sannow Mam	CHECKED Ruperd Wilson	SPECIFICATIONS	BY Jamse Choi	PLANS AND SPECS COMPARED James Choi

ORIGINAL SCALE IN INCHES FOR REDUCED PLANS 0 1 2 3

STATE OF CALIFORNIA
DEPARTMENT OF TRANSPORTATION

DIVISION OF ENGINEERING SERVICES
STRUCTURE DESIGN
DESIGN BRANCH 18

BRIDGE NO. RW1613
POST MILE 30.54

RETAINING WALL 1613
GENERAL PLAN

UNIT: 3603
PROJECT NUMBER & PHASE: 0700021119-1
CONTRACT NO.: 07-1218w1

DISREGARD PRINTS BEARING EARLIER REVISION DATES 01/14/11 02/08/11 04/30/12

SHEET 1 OF 16

USERNAME => s123631 DATE PLOTTED => 12-JUL-2012 TIME PLOTTED => 15:07

DIST	COUNTY	ROUTE	POST MILES TOTAL PROJECT	SHEET No.	TOTAL SHEETS
07	LA	5	29.4/31.6	1218	1931

dEstrada. 01-30-12
REGISTERED CIVIL ENGINEER DATE

5-21-12
PLANS APPROVAL DATE

REGISTERED PROFESSIONAL ENGINEER JORGE I. ESTRADA No. C51473 Exp. 06-30-12 CIVIL STATE OF CALIFORNIA

The State of California or its officers or agents shall not be responsible for the accuracy or completeness of electronic copies of this plan sheet.

CURVE DATA

No.	R	Δ	T	L
Ⓐ	6561.70	12°58'21"	746.01	1485.64

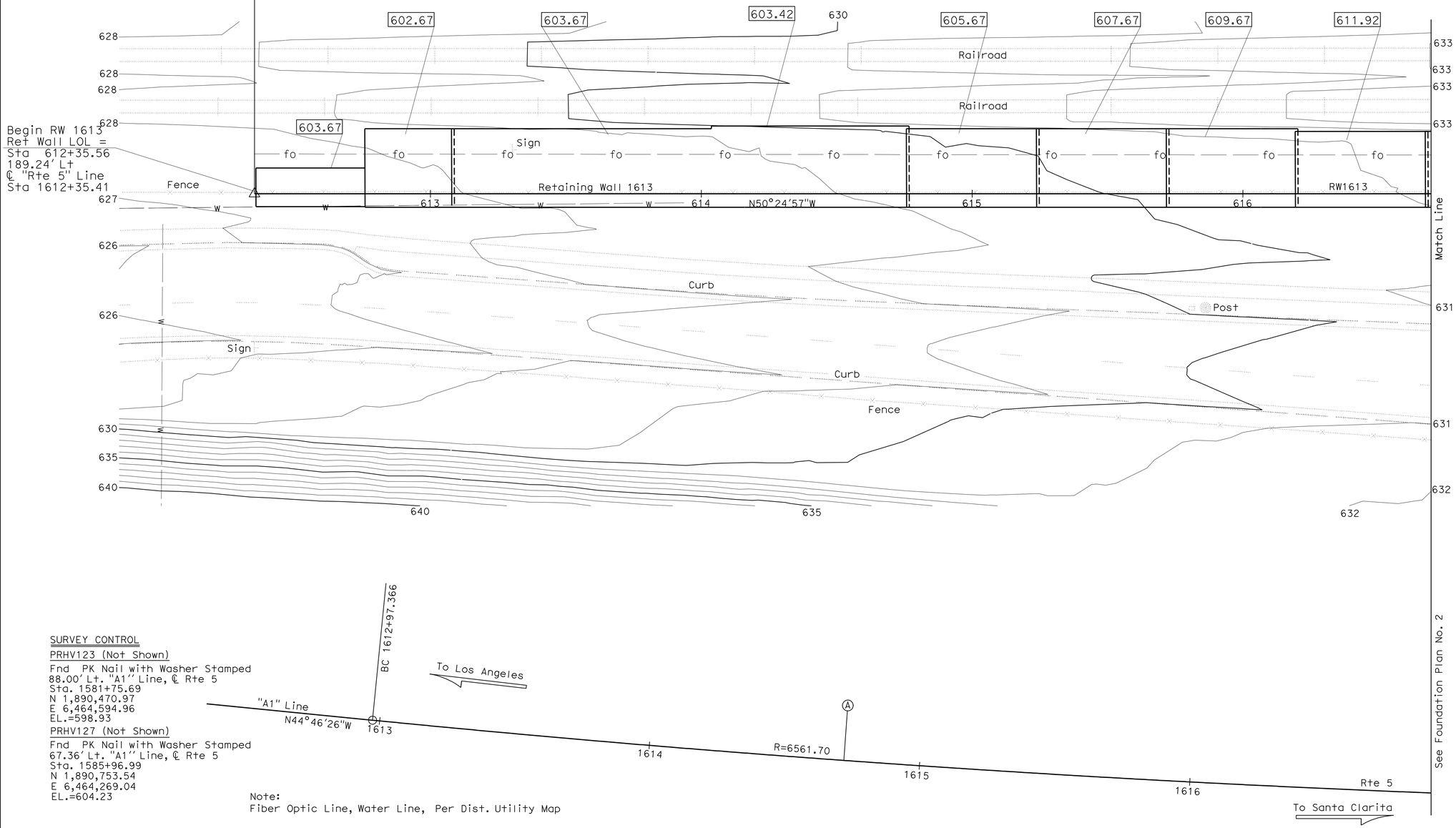

LEGEND

XXXXX Denotes bottom of footing elevation

SURVEY CONTROL

PRHV123 (Not Shown)

Fnd PK Nail with Washer Stamped
88.00' Lt. "A1" Line, ℄ Rte 5
Sta. 1581+75.69
N 1,890,470.97
E 6,464,594.96
EL.=598.93

PRHV127 (Not Shown)

Fnd PK Nail with Washer Stamped
67.36' Lt. "A1" Line, ℄ Rte 5
Sta. 1585+96.99
N 1,890,753.54
E 6,464,269.04
EL.=604.23

Note:
Fiber Optic Line, Water Line, Per Dist. Utility Map

PRELIMINARY INVESTIGATION SECTION

SCALE	VERT.DATUM NGVD 88	PHOTOGRAMMETRY AS OF: X		
1"=20'	HORZ.DATUM NAD83 (1991.35)	SURVEYED BY District	CHECKED	BY John Borden 10/2011
ALIGNMENT TIES Dist. Traverse Sheet		DRAFTED BY Sharon Zheng 10/2011	CHECKED	BY Lawrence Lew 10/2011

DESIGN	BY Zihan Yan	CHECKED Jorge Estrada
DETAILS	BY FR/ Minh Tran	CHECKED Jorge Estrada
QUANTITIES	BY Sannow Man	CHECKED Ruperd Wilson

STATE OF CALIFORNIA
DEPARTMENT OF TRANSPORTATION

DIVISION OF ENGINEERING SERVICES
STRUCTURE DESIGN
DESIGN BRANCH 18

BRIDGE NO. RW 1613
POST MILE 30.43

RETAINING WALL 1613
FOUNDATION PLAN NO. 01

STRUCTURES FOUNDATION PLAN SHEET (ENGLISH) (REV. 09-01-10)

ORIGINAL SCALE IN INCHES FOR REDUCED PLANS 0 1 2 3

UNIT: 3603
PROJECT NUMBER & PHASE: 0700021119-1 CONTRACT NO.: 07-1218W1

DISREGARD PRINTS BEARING EARLIER REVISION DATES

REVISION DATES 10/31/2011

SHEET 2 OF 16

FILE => 53-rw1613-e-fpl01.dgn

DIST	COUNTY	ROUTE	POST MILES TOTAL PROJECT	SHEET No.	TOTAL SHEETS
07	LA	5	29.4/31.6	1219	1931

dEstrada. 01-30-12
REGISTERED CIVIL ENGINEER DATE

5-21-12
PLANS APPROVAL DATE

REGISTERED PROFESSIONAL ENGINEER
JORGE I. ESTRADA
No. C51473
Exp. 06-30-12
CIVIL
STATE OF CALIFORNIA

The State of California or its officers or agents shall not be responsible for the accuracy or completeness of electronic copies of this plan sheet.

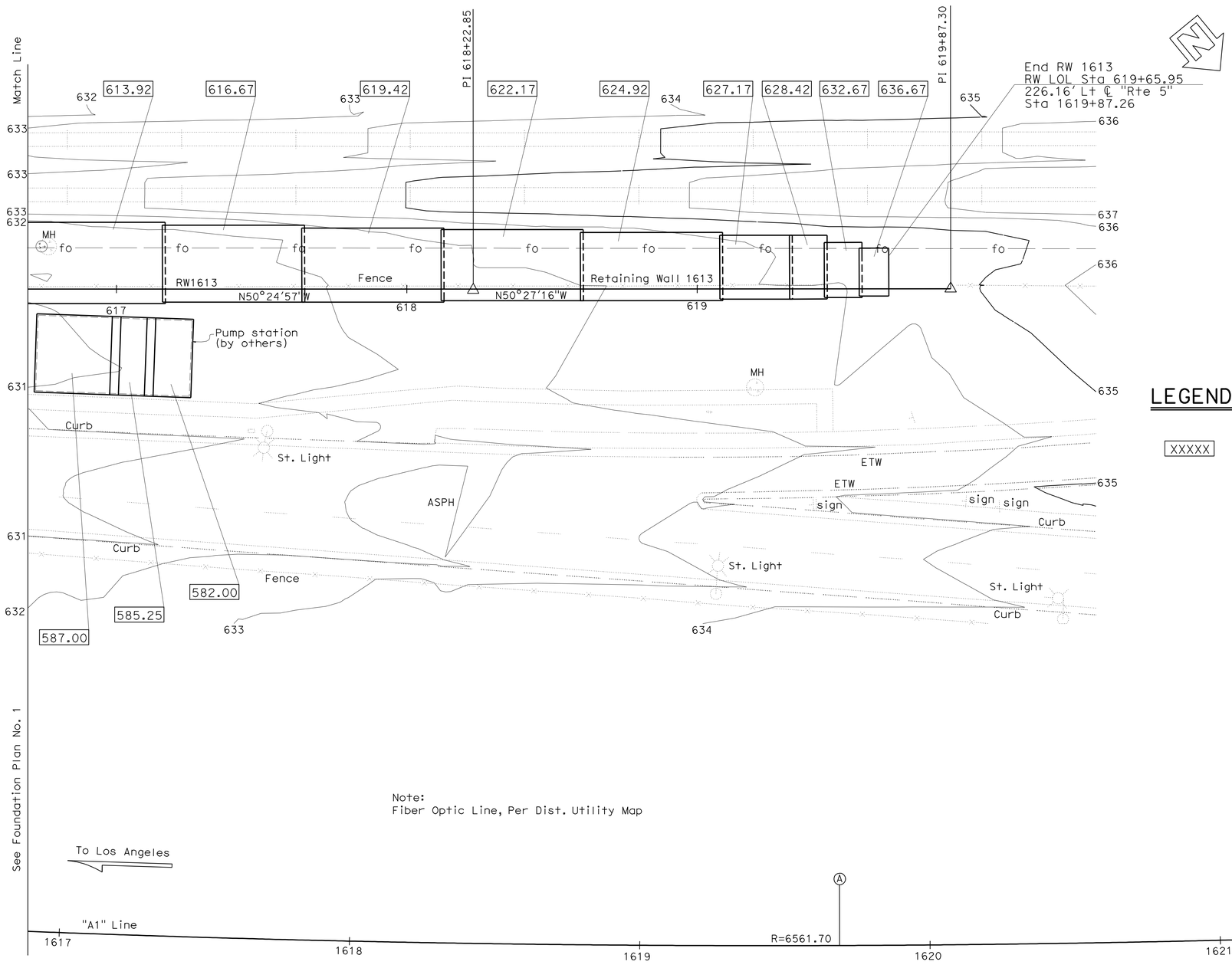

LEGEND

XXXXX Denotes bottom of footing elevation

PRELIMINARY INVESTIGATION SECTION									
SCALE 1"=20'	VERT.DATUM NGVD 88	PHOTOGRAMMETRY AS OF: X							
	HORZ.DATUM NAD83 (1991.35)	SURVEYED	BY District	CHECKED	BY John Borden 10/2011				
ALIGNMENT TIES Dist. Traverse Sheet		DRAFTED	BY Sharon Zheng 10/2011	CHECKED	BY Lawrence Lew 10/2011				

DESIGN	BY Zihan Yan	CHECKED Jorge Estrada
DETAILS	BY FR/ Minh Tran	CHECKED Jorge Estrada
QUANTITIES	BY Sannow Man	CHECKED Ruperd Wilson

STATE OF CALIFORNIA
DEPARTMENT OF TRANSPORTATION

DIVISION OF ENGINEERING SERVICES
STRUCTURE DESIGN
DESIGN BRANCH 18

BRIDGE NO. RW 1613
POST MILE 30.43

RETAINING WALL 1613
FOUNDATION PLAN NO. 02

STRUCTURES FOUNDATION PLAN SHEET (ENGLISH) (REV. 09-01-10)

ORIGINAL SCALE IN INCHES FOR REDUCED PLANS 0 1 2 3

UNIT: 3603
PROJECT NUMBER & PHASE: 0700021119-1
CONTRACT NO.: 07-1218W1

DISREGARD PRINTS BEARING EARLIER REVISION DATES

REVISION DATES 10/27/11 02/22/12

SHEET 3 OF 16

FILE => 53-rw1613-e-fpl02.dgn

DIST	COUNTY	ROUTE	POST MILES TOTAL PROJECT	SHEET No.	TOTAL SHEETS
07	LA	5	29.4/31.6	1220	1931

JEstrada. 01-30-12
REGISTERED CIVIL ENGINEER DATE

5-21-12
PLANS APPROVAL DATE

REGISTERED PROFESSIONAL ENGINEER
JORGE I. ESTRADA
No. C51473
Exp. 06-30-12
CIVIL
STATE OF CALIFORNIA

The State of California or its officers or agents shall not be responsible for the accuracy or completeness of electronic copies of this plan sheet.

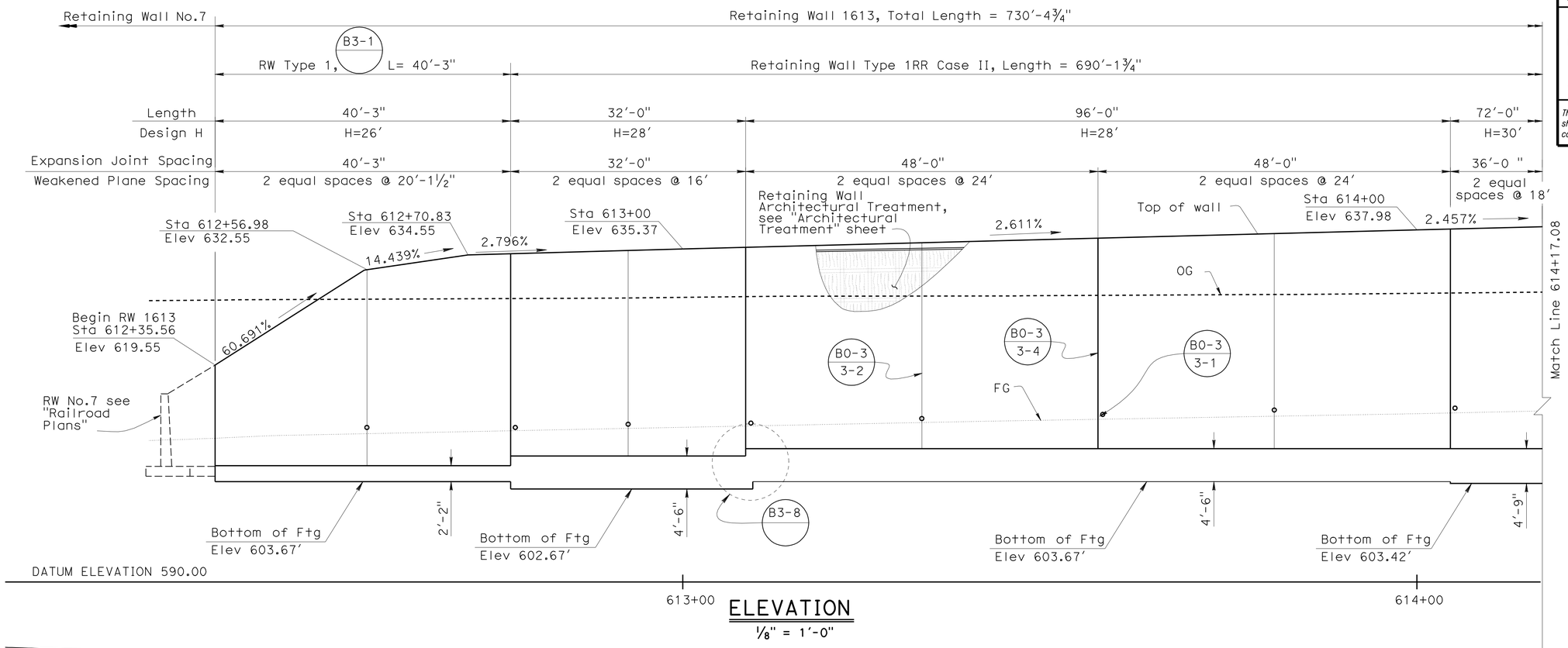

ELEVATION

1/8" = 1'-0"

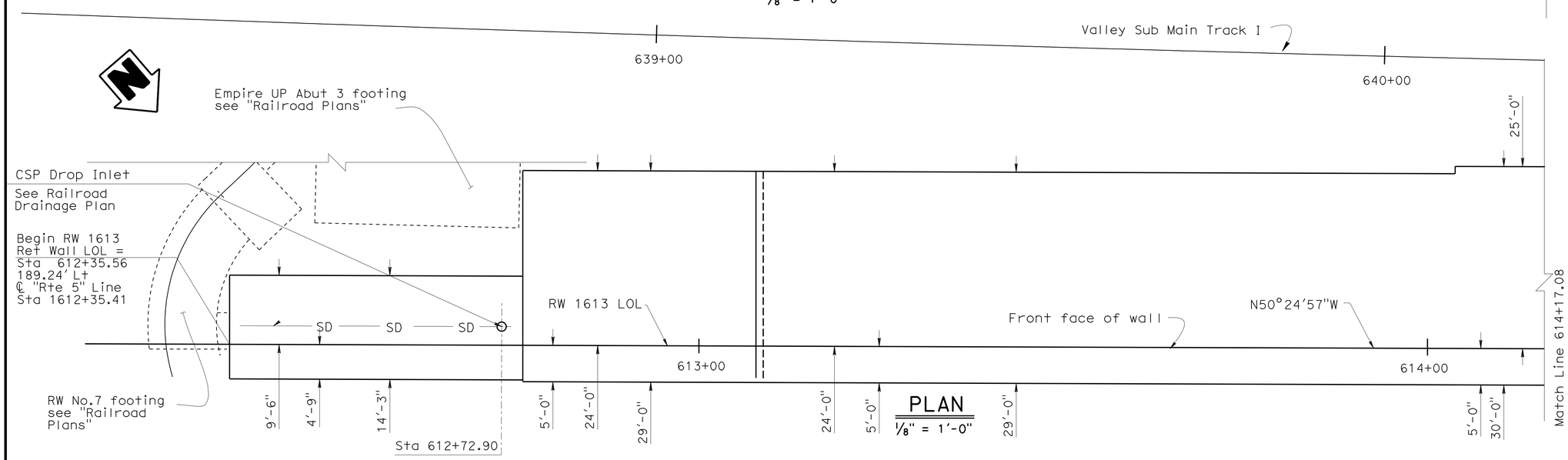

PLAN

1/8" = 1'-0"

DESIGN	BY J. Duffin/Zihan Yan	CHECKED Jorge Estrada	
DETAILS	BY SD/FR/ Minh Tran	CHECKED Jorge Estrada	
QUANTITIES	BY Sannow Mam	CHECKED Ruperd Wilson	

STATE OF CALIFORNIA
DEPARTMENT OF TRANSPORTATION

DIVISION OF ENGINEERING SERVICES
STRUCTURE DESIGN
DESIGN BRANCH 18

BRIDGE NO. RW1613
POST MILE 30.54

RETAINING WALL 1613
STRUCTURE PLAN NO. 1

STRUCTURES DESIGN DETAIL SHEET (ENGLISH) (REV. 09-01-10)

ORIGINAL SCALE IN INCHES FOR REDUCED PLANS 0 1 2 3

UNIT: 3603
PROJECT NUMBER & PHASE: 0700021119-1
CONTRACT NO.: 07-1218w1

DISREGARD PRINTS BEARING EARLIER REVISION DATES

REVISION DATES: 01/14/11 02/13/12

SHEET 4 OF 16

FILE => 53-rw1613-g-rw_stp01.dgn

USERNAME => s123631 DATE PLOTTED => 12-JUL-2012 TIME PLOTTED => 15:07

DIST	COUNTY	ROUTE	POST MILES TOTAL PROJECT	SHEET No.	TOTAL SHEETS
07	LA	5	29.4/31.6	1221	1931

JEstrada. 01-30-12
REGISTERED CIVIL ENGINEER DATE

5-21-12
PLANS APPROVAL DATE

REGISTERED PROFESSIONAL ENGINEER JORGE I. ESTRADA No. C51473 Exp. 06-30-12 CIVIL STATE OF CALIFORNIA

The State of California or its officers or agents shall not be responsible for the accuracy or completeness of electronic copies of this plan sheet.

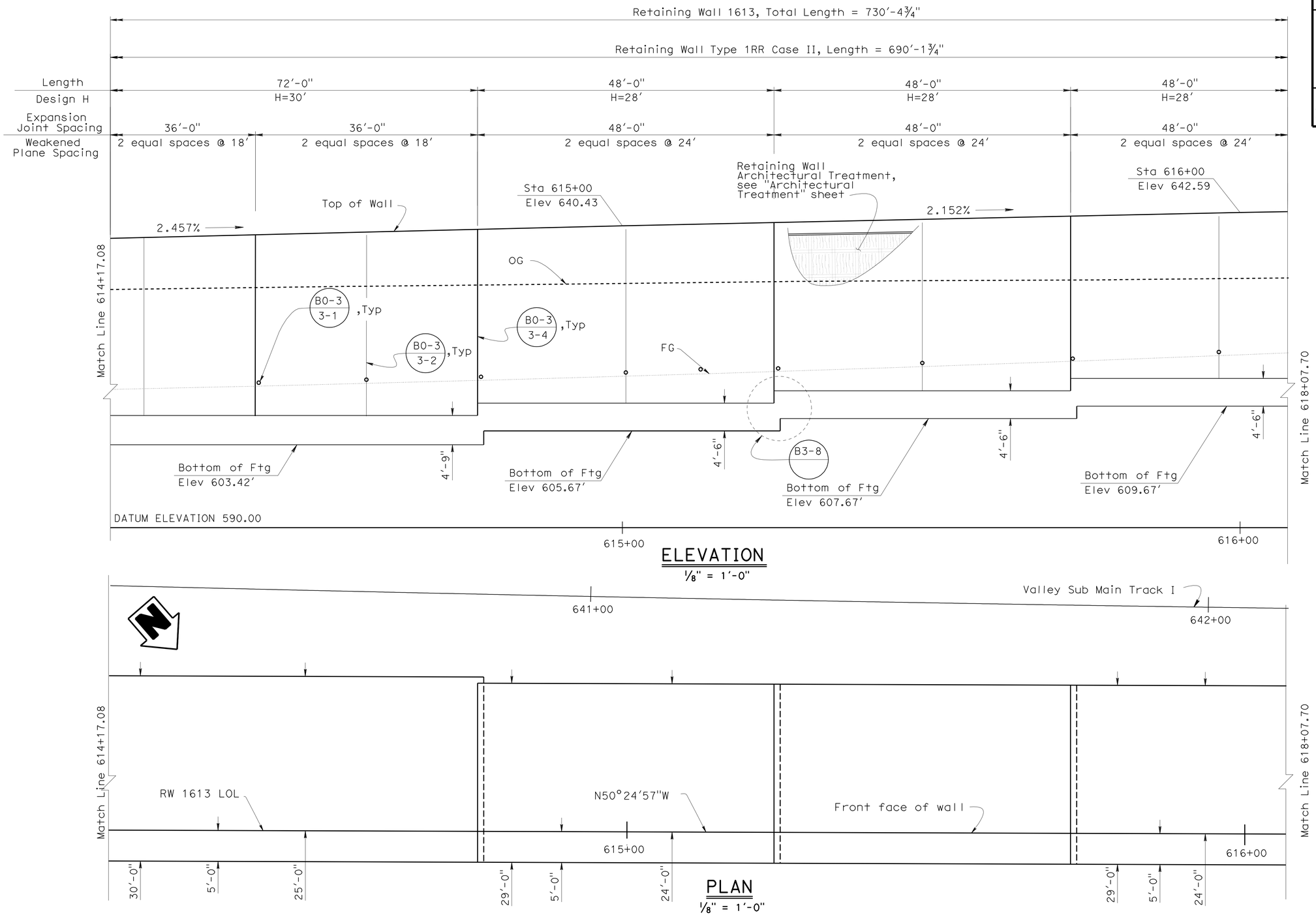

DESIGN	BY J. Duffin/Zihan Yan	CHECKED Jorge Estrada	
DETAILS	BY SD/ FR/ Minh Tran	CHECKED Jorge Estrada	
QUANTITIES	BY Sannow Mam	CHECKED Ruperd Wilson	

STATE OF CALIFORNIA
DEPARTMENT OF TRANSPORTATION

DIVISION OF ENGINEERING SERVICES
STRUCTURE DESIGN
DESIGN BRANCH 18

BRIDGE NO. RW1613
POST MILE 30.54

RETAINING WALL 1613
STRUCTURE PLAN NO. 2

STRUCTURES DESIGN DETAIL SHEET (ENGLISH) (REV. 09-01-10)

ORIGINAL SCALE IN INCHES FOR REDUCED PLANS 0 1 2 3

UNIT: 3603
PROJECT NUMBER & PHASE: 0700021119-1
CONTRACT NO.: 07-1218W1

DISREGARD PRINTS BEARING EARLIER REVISION DATES
REVISION DATES 01/14/11 02/13/12

SHEET 5 OF 16

FILE => 53-rw1613-g-rw_stp02.dgn

USERNAME => s124496 DATE PLOTTED => 21-MAY-2012 TIME PLOTTED => 16:22

DIST	COUNTY	ROUTE	POST MILES TOTAL PROJECT	SHEET No.	TOTAL SHEETS
07	LA	5	29.4/31.6	1222	1931

JEstrada. 01-30-12
REGISTERED CIVIL ENGINEER DATE

5-21-12
PLANS APPROVAL DATE

REGISTERED PROFESSIONAL ENGINEER
JORGE I. ESTRADA
No. C51473
Exp. 06-30-12
CIVIL
STATE OF CALIFORNIA

The State of California or its officers or agents shall not be responsible for the accuracy or completeness of electronic copies of this plan sheet.

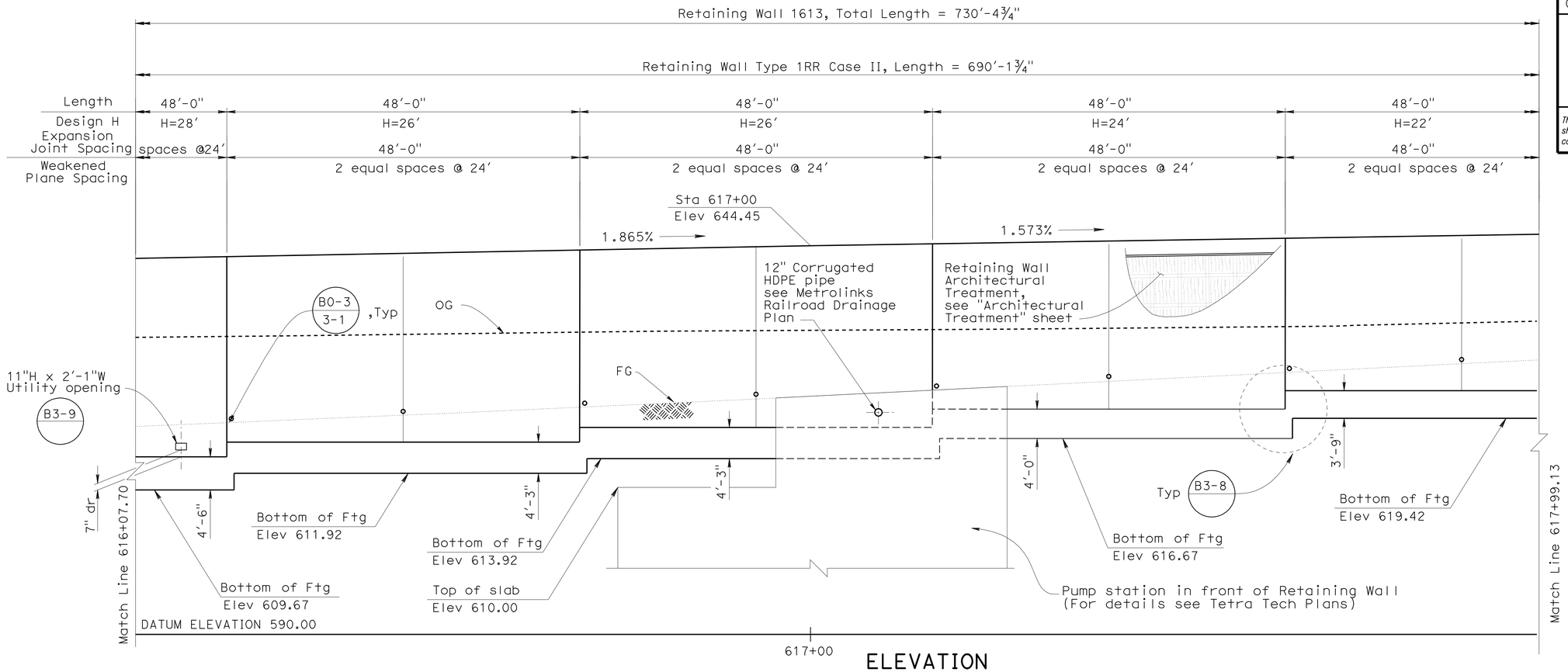

ELEVATION
1/8" = 1'-0"

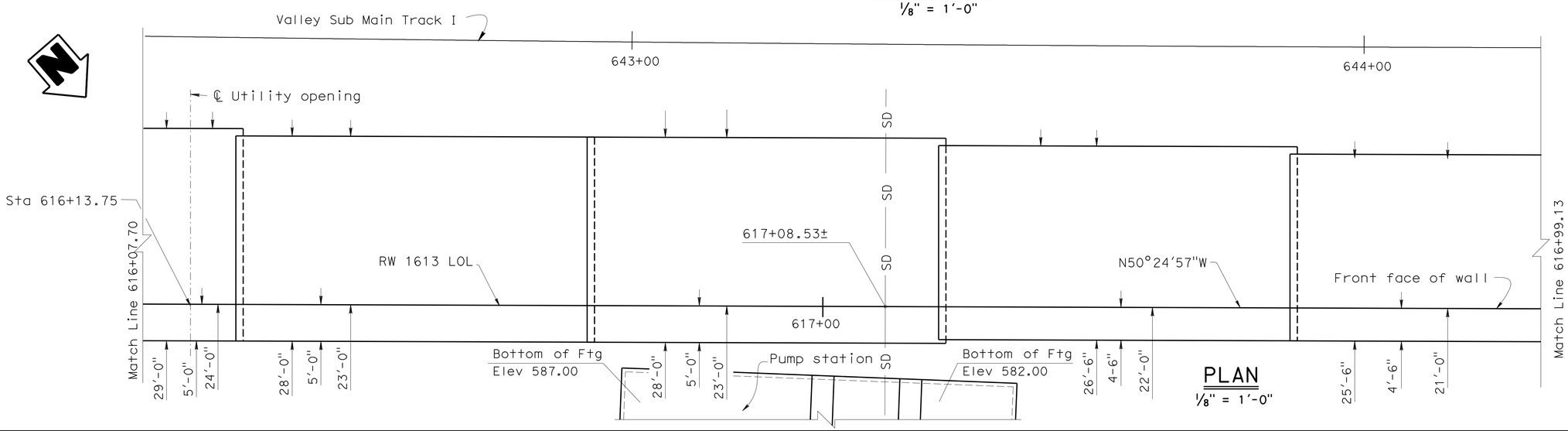

PLAN
1/8" = 1'-0"

	BY	CHECKED
DESIGN	J. Duffin/Zihan Yan	Jorge Estrada
DETAILS	SD/FR/ Minh Tran	Jorge Estrada
QUANTITIES	Sannow Mam	Ruperd Wilson

STATE OF CALIFORNIA
DEPARTMENT OF TRANSPORTATION

DIVISION OF ENGINEERING SERVICES
STRUCTURE DESIGN
DESIGN BRANCH 18

BRIDGE NO. RW1613
POST MILE 30.54

RETAINING WALL 1613
STRUCTURE PLAN NO. 3

STRUCTURES DESIGN DETAIL SHEET (ENGLISH) (REV. 09-01-10)

ORIGINAL SCALE IN INCHES FOR REDUCED PLANS 0 1 2 3

UNIT: 3603
PROJECT NUMBER & PHASE: 0700021119-1
CONTRACT NO.: 07-1218w1

DISREGARD PRINTS BEARING EARLIER REVISION DATES
REVISION DATES 01/14/11 02/28/12 04/27/12

SHEET 6 OF 16

FILE => 53-rw1613-g-rw_stp03.dgn

USERNAME => s123631 DATE PLOTTED => 13-JUL-2012 TIME PLOTTED => 10:55

DIST	COUNTY	ROUTE	POST MILES TOTAL PROJECT	SHEET No.	TOTAL SHEETS
07	LA	5	29.4/31.6	1223	1931

REGISTERED CIVIL ENGINEER — DATE 01-30-12

5-21-12
PLANS APPROVAL DATE

REGISTERED PROFESSIONAL ENGINEER — JORGE I. ESTRADA — No. C51473 — Exp. 06-30-12 — CIVIL — STATE OF CALIFORNIA

The State of California or its officers or agents shall not be responsible for the accuracy or completeness of electronic copies of this plan sheet.

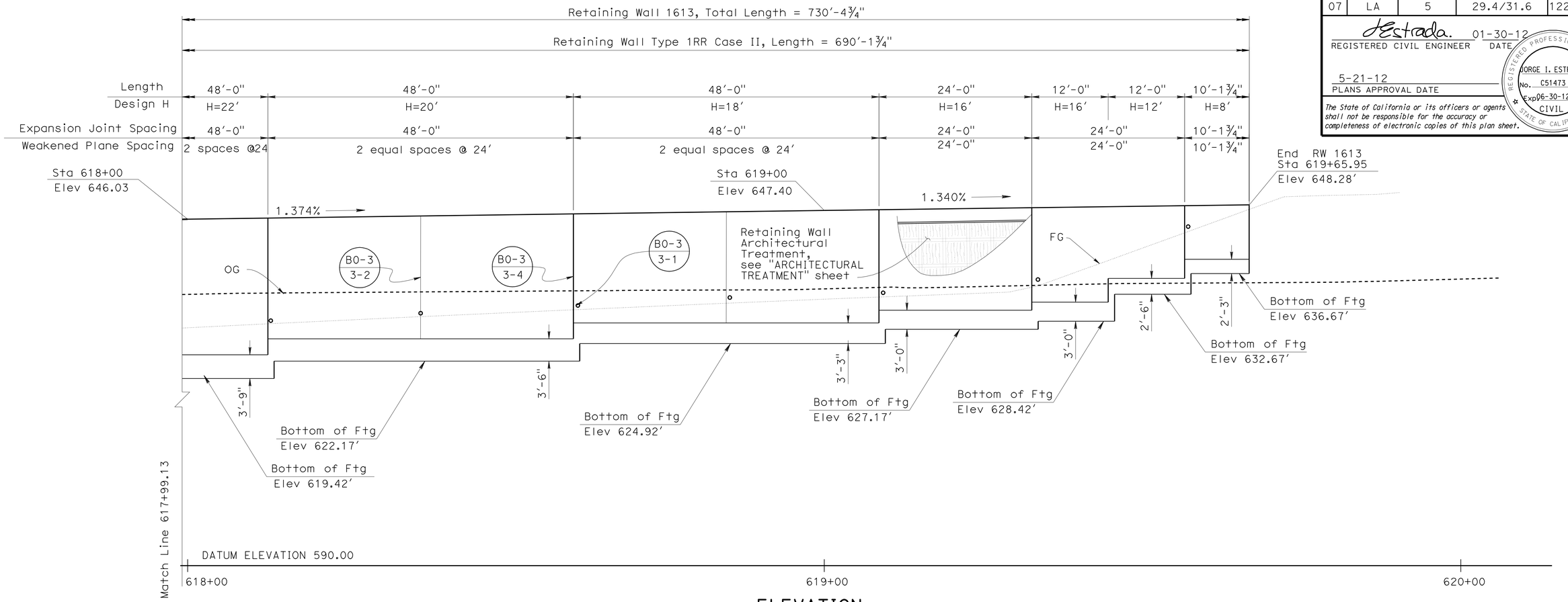

ELEVATION

1/8" = 1'-0"

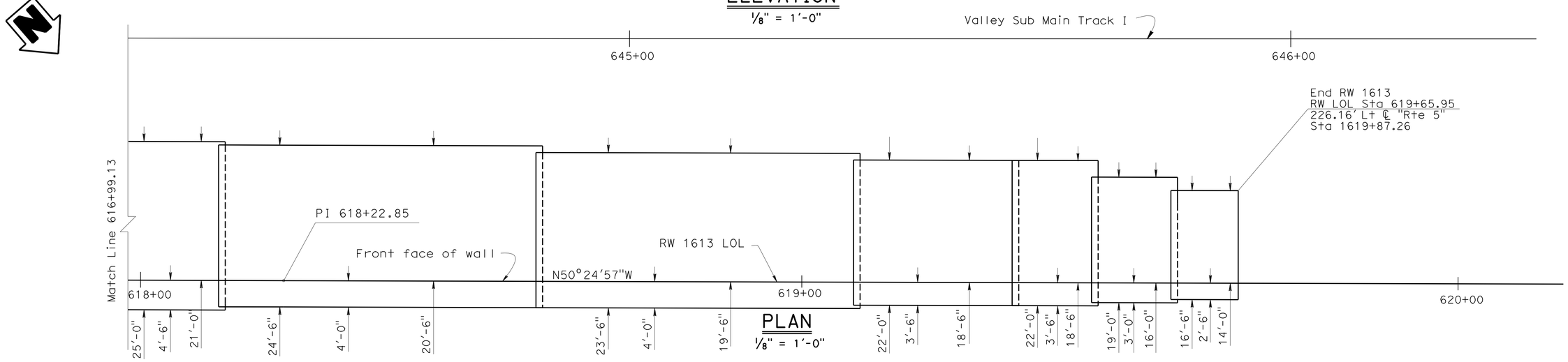

PLAN

1/8" = 1'-0"

DESIGN	BY J.Duffin/Zihan Yan	CHECKED Jorge Estrada	
DETAILS	BY SD/ FR/ Minh Tran	CHECKED Jorge Estrada	
QUANTITIES	BY Sannow Mam	CHECKED Ruperd Wilson	

STATE OF CALIFORNIA
DEPARTMENT OF TRANSPORTATION

DIVISION OF ENGINEERING SERVICES
STRUCTURE DESIGN
DESIGN BRANCH 18

BRIDGE NO. RW1613
POST MILE 30.54

RETAINING WALL 1613
STRUCTURE PLAN NO. 4

STRUCTURES DESIGN DETAIL SHEET (ENGLISH) (REV. 09-01-10)

ORIGINAL SCALE IN INCHES FOR REDUCED PLANS 0 1 2 3

UNIT: 3603
PROJECT NUMBER & PHASE: 0700021119-1
CONTRACT NO.: 07-1218w1

DISREGARD PRINTS BEARING EARLIER REVISION DATES
REVISION DATES 01/24/11 02/13/12

SHEET 7 OF 16

FILE => 53-rw1613-g-rw_stp04.dgn

USERNAME => s124496 DATE PLOTTED => 21-MAY-2012 TIME PLOTTED => 16:22

DIST	COUNTY	ROUTE	POST MILES TOTAL PROJECT	SHEET No.	TOTAL SHEETS
07	LA	5	29.4/31.6	1224	1931

REGISTERED CIVIL ENGINEER — DATE 01-30-12

5-21-12
PLANS APPROVAL DATE

REGISTERED PROFESSIONAL ENGINEER — JORGE I. ESTRADA — No. C51473 — Exp. 06-30-12 — CIVIL — STATE OF CALIFORNIA

The State of California or its officers or agents shall not be responsible for the accuracy or completeness of electronic copies of this plan sheet.

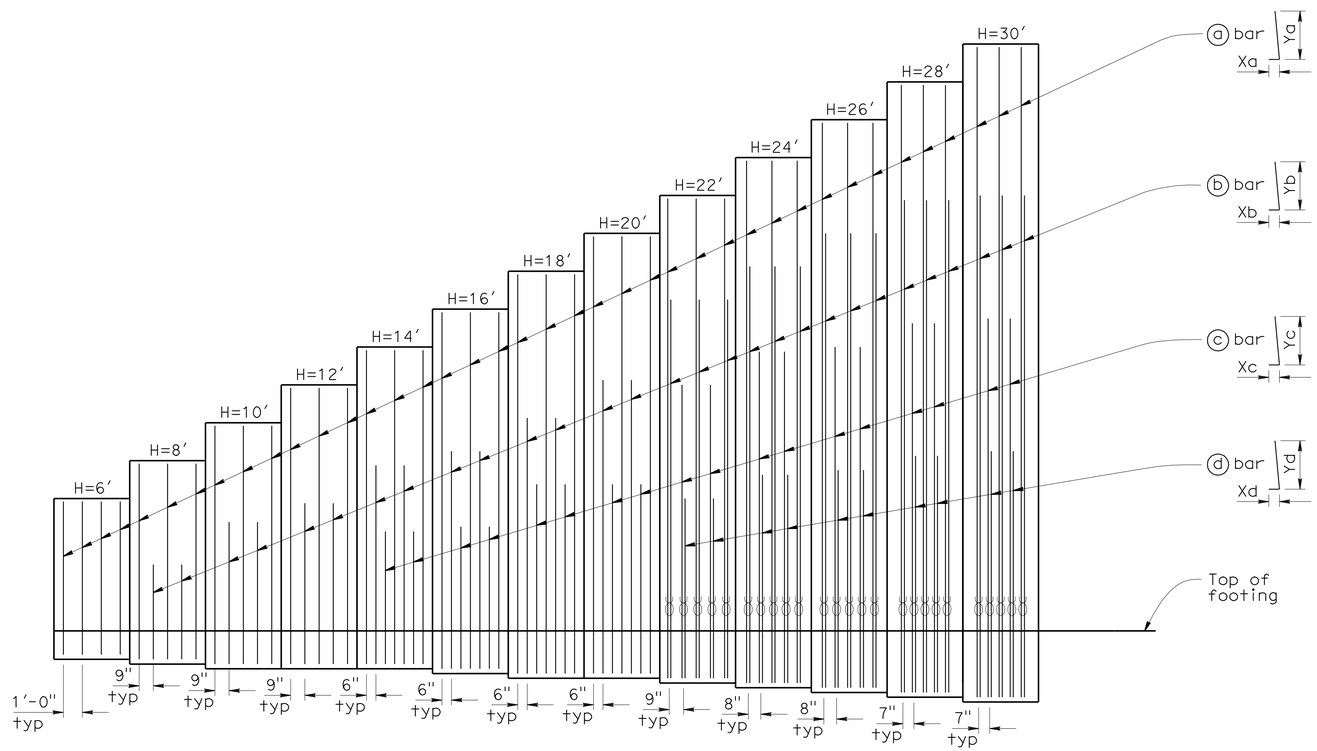

ELEVATION

1/4″ = 1′-0″

Denotes bundled bars

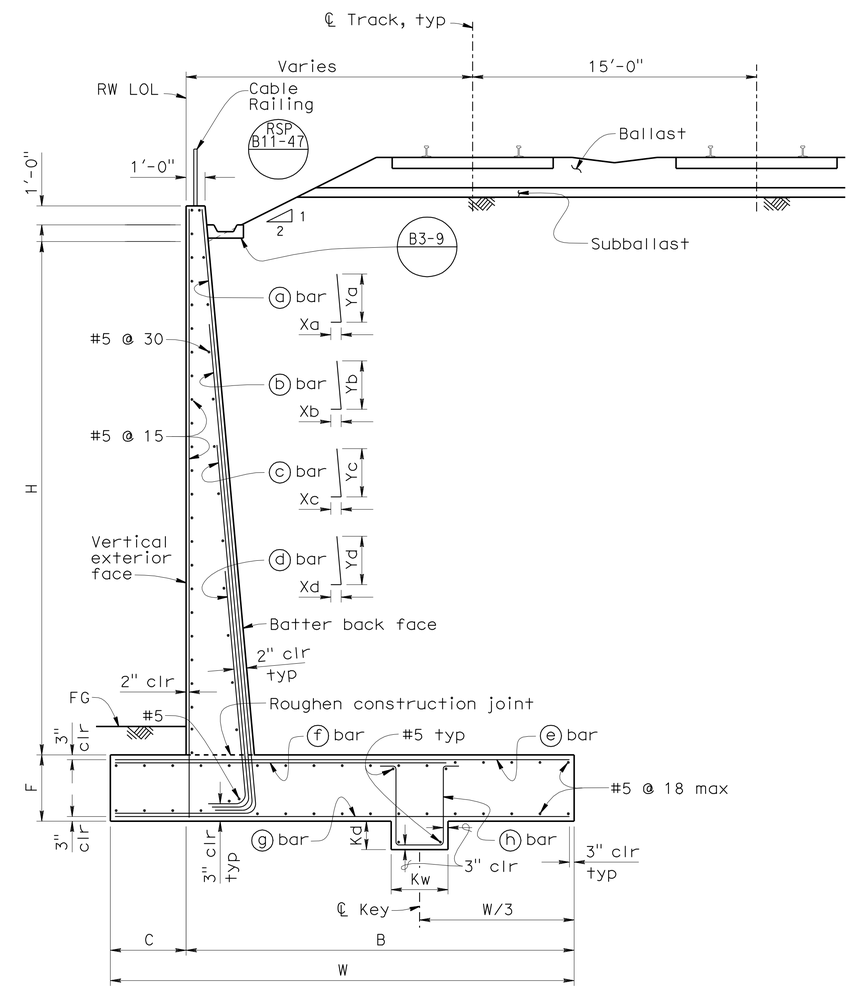

SECTION

1/4″ = 1′-0″

NOTES

1. For "Table of Dimensions, Reinforcement, and Foundation Pressures", see "RETAINING WALL TYPE 1RR CASE II - DETAILS NO. 2" sheet.
2. For drainage details, wall construction offset values, and footing step details, see Standard Plan B3-8.
3. The back of the retaining wall shall be damp-proofed.
4. Vertical wall expansion joints shall be spaced at 60′-0″ max.

	BY	CHECKED
DESIGN	Zihan Yan	Richard Schendel
DETAILS	Suraj Dutta	Richard Schendel
QUANTITIES	Zihan Yan	Ruperd Wilson

STATE OF CALIFORNIA
DEPARTMENT OF TRANSPORTATION

DIVISION OF ENGINEERING SERVICES
STRUCTURE DESIGN
DESIGN BRANCH 18

BRIDGE NO. RW1613
POST MILE 30.54

RETAINING WALL 1613
RETAINING WALL TYPE 1RR
CASE II - DETAILS NO. 1

STRUCTURES DESIGN DETAIL SHEET (ENGLISH) (REV. 09-01-10)

ORIGINAL SCALE IN INCHES FOR REDUCED PLANS 0 1 2 3

UNIT: 3603
PROJECT NUMBER & PHASE: 0700021119-1
CONTRACT NO.: 07-1218W1

DISREGARD PRINTS BEARING EARLIER REVISION DATES

REVISION DATES: 01/02/11 02/08/12

SHEET 8 OF 16

FILE => 53-rw1613-g-rwdt01.dgn

USERNAME => s124496 DATE PLOTTED => 21-MAY-2012 TIME PLOTTED => 16:22

DIST	COUNTY	ROUTE	POST MILES TOTAL PROJECT	SHEET No.	TOTAL SHEETS
07	LA	5	29.4/31.6	1225	1931

dEstrada. 01-30-12
REGISTERED CIVIL ENGINEER DATE

5-21-12
PLANS APPROVAL DATE

REGISTERED PROFESSIONAL ENGINEER
JORGE I. ESTRADA
No. C51473
Exp. 06-30-12
CIVIL
STATE OF CALIFORNIA

The State of California or its officers or agents shall not be responsible for the accuracy or completeness of electronic copies of this plan sheet.

DESIGN NOTES

1. DESIGN:
   -AREMA, 2005
   -Bridge Design Specifications (1996 AASHTO with Revisions by Caltrans)

2. CONCRETE AND STEEL:
   fc = 1,440 psi fs = 24,000 psi
   f'c = 3,600 psi fy = 60,000 psi

3. SOIL PROPERTIES:
   Density = 120 lb/ft^3
   Internal friction angle = 33°
   Cohesion = 0 psf

4. LIVE LOADING:
   Cooper E-80 railroad loading represented by 9'-6" thick soil surcharge. The vertical reaction of the surcharge was both included and omitted for design.

5. Active earth pressures were determined using trial wedge method.

6. Design accounts for both 100% and 75% of active earth pressure determined from trial wedge method.

7. The passive earth pressure used to resist sliding is 50% of Rankine's passive earth pressure assuming a level finished grade, 1'-6" of footing cover, and neglecting the portion of the pressure exerted on the face of the wall.

8. Friction coefficient for sliding = 0.45.

TABLE OF DIMENSIONS, REINFORCEMENT, AND FOUNDATION PRESSURES

Design H	6'	8'	10'	12'	14'	16'	18'	20'	22'	24'	26'	28'	30'
W	15'-0"	16'-6"	18'-0"	19'-0"	20'-6"	22'-0"	23'-6"	24'-6"	25'-6"	26'-6"	28'-0"	29'-0"	30'-0"
C	2'-6"	2'-6"	3'-0"	3'-0"	3'-6"	3'-6"	4'-0"	4'-0"	4'-6"	4'-6"	5'-0"	5'-0"	5'-0"
B	12'-6"	14'-0"	15'-0"	16'-0"	17'-0"	18'-6"	19'-6"	20'-6"	21'-0"	22'-0"	23'-0"	24'-0"	25'-0"
F	2'-0"	2'-3"	2'-6"	2'-6"	2'-9"	3'-0"	3'-3"	3'-6"	3'-9"	4'-0"	4'-3"	4'-6"	4'-9"
Batter	8:100	8:100	8:100	8:100	8:100	8:100	8:100	8:100	8:100	8:100	10:100	10:100	11:100
Kd	1'-0"	1'-0"	1'-6"	1'-6"	1'-6"	1'-6"	1'-6"	1'-6"	1'-6"	1'-6"	2'-0"	2'-0"	2'-0"
Kw	2'-0"	2'-0"	3'-0"	3'-0"	3'-0"	3'-0"	3'-0"	3'-0"	3'-0"	3'-0"	4'-0"	4'-0"	4'-0"
(a) bar	#5 @ 12	#6 @ 18	#6 @ 18	#7 @ 18	#7 @ 18	#8 @ 18	#8 @ 18	#8 @ 18	#6 @ 18	#7 @ 16	#7 @ 16	#7 @ 14	#7 @ 14
Xa	std hook	std hook	std hook	std hook	cont	cont	cont	cont	cont	std hook	std hook	cont	std hook
Ya	cont	cont	cont	cont	cont	cont	cont	cont	cont	cont	cont	cont	cont
(b) bar	-	#5 @ 18	#7 @ 18	#8 @ 18	#7 @ 18	#8 @ 18	#8 @ 18	#10 @ 18	#8 @ 18	#8 @ 16	#9 @ 16	#9 @ 14	#9 @ 14
Xb	-	std hook	std hook	std hook	std hook	std hook	std hook	std hook	std hook	cont	cont	std hook	cont
Yb	-	5'-0"	7'-6"	8'-6"	10'-6"	11'-6"	13'-6"	15'-6"	20'-0"	22'-0"	24'-0"	26'-0"	26'-6"
(c) bar	-	-	-	-	#8 @ 18	#8 @ 18	#10 @ 18	#11 @ 18	#11 @ 18	#11 @ 16	#11 @ 16	#11 @ 14	#11 @ 14
Xc	-	-	-	-	std hook	std hook	std hook	std hook	std hook	std hook	std hook	std hook	std hook
Yc	-	-	-	-	7'-0"	7'-6"	10'-0"	10'-0"	15'-6"	17'-6"	18'-0"	19'-6"	20'-0"
(d) bar	-	-	-	-	-	-	-	-	#11 @ 18	#11 @ 16	#11 @ 16	#11 @ 14	#11 @ 14
Xd	-	-	-	-	-	-	-	-	std hook	std hook	std hook	std hook	std hook
Yd	-	-	-	-	-	-	-	-	9'-6"	11'-0"	11'-6"	12'-6"	13'-0"
(e) bar	#8 @ 12	#8 @ 12	#9 @ 12	#9 @ 9 *	#9 @ 9 *	#9 @ 9 *	#10 @ 9 *	#10 @ 9 *	#11 @ 9 *	#11 @ 8 *	#11 @ 8 *	#11 @ 7 *	#11 @ 7 *
(f) bar	#8 @ 12	#9 @ 12	#9 @ 12	#9 @ 9 *	#9 @ 9 *	#10 @ 9 *	#10 @ 9 *	#11 @ 9 *	#11 @ 9 *	#11 @ 8 *	#11 @ 8 *	#11 @ 7 *	#11 @ 7 *
(f) bar length	10'-6"	12'-0"	12'-6"	13'-6"	14'-6"	15'-6"	16'-0"	16'-6"	17'-6"	18'-6"	20'-0"	21'-6"	23'-0"
(g) bar	#4 @ 12	#5 @ 18	#5 @ 18	#5 @ 18	#5 @ 18	#5 @ 18	#5 @ 18	#5 @ 18	#5 @ 18	#5 @ 16	#5 @ 16	#5 @ 14	#5 @ 14
(h) bar	#4 @ 12	#5 @ 18	#5 @ 18	#5 @ 18	#5 @ 18	#5 @ 18	#5 @ 18	#5 @ 18	#5 @ 18	#5 @ 16	#5 @ 16	#5 @ 14	#5 @ 14
Max Toe Pressure (ksf)	1.88	2.45	2.71	3.05	3.23	3.92	4.47	4.43	4.60	5.63	5.67	6.65	6.81
Max Heel Pressure (ksf)	1.85	1.98	2.26	2.68	2.83	3.00	3.30	3.90	3.76	4.38	4.14	4.47	4.38

Notes: 1. No splices allowed in reinforcement except as approved by the Engineer.
2. * (e) and (f) bars bundled together.

	BY	CHECKED
DESIGN	Zihan Yan	Richard Schendel
DETAILS	Suraj Dutta	Richard Schendel
QUANTITIES	Zihan Yan	Ruperd Wilson

STATE OF CALIFORNIA
DEPARTMENT OF TRANSPORTATION

DIVISION OF ENGINEERING SERVICES
STRUCTURE DESIGN
DESIGN BRANCH 18

BRIDGE NO. RW1613
POST MILE 30.54

RETAINING WALL 1613
RETAINING WALL TYPE 1RR
CASE II - DETAILS NO. 2

STRUCTURES DESIGN DETAIL SHEET (ENGLISH) (REV. 09-01-10)

ORIGINAL SCALE IN INCHES FOR REDUCED PLANS 0 1 2 3

UNIT: 3603
PROJECT NUMBER & PHASE: 0700021119-1
CONTRACT NO.: 07-1218W1

DISREGARD PRINTS BEARING EARLIER REVISION DATES
REVISION DATES 01/02/11 02/08/12
SHEET 9 OF 16

FILE => 53-rw1613-g-rwdt02.dgn

USERNAME => s124496 DATE PLOTTED => 21-MAY-2012 TIME PLOTTED => 16:22

DIST	COUNTY	ROUTE	POST MILES TOTAL PROJECT	SHEET No.	TOTAL SHEETS
07	LA	5	29.4/31.6	1226	1931

dEstrada. 01-30-12
REGISTERED CIVIL ENGINEER DATE

5-21-12
PLANS APPROVAL DATE

REGISTERED PROFESSIONAL ENGINEER
JORGE I. ESTRADA
No. C51473
Exp. 06-30-12
CIVIL
STATE OF CALIFORNIA

The State of California or its officers or agents shall not be responsible for the accuracy or completeness of electronic copies of this plan sheet.

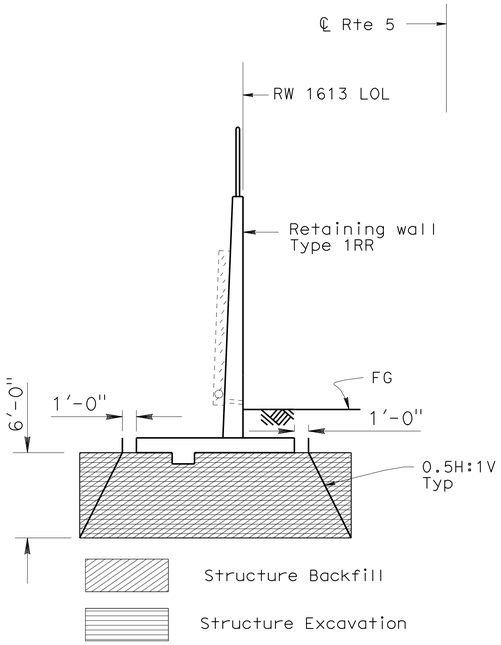

From Sta. 612+35.56 to Sta. 619+65.95

OVER EXCAVATION LIMITS - RW 1613

3/16" = 1'-0"

Spread Footing Data for Retaining Wall 1613

RW LOL STATION (ft)		Gross Allowable Soil Bearing Pressure ASD (q_{all}) (ksf)
FROM	TO	
612+35.56	612+75.81	6.5
512+75.81	613+07.81	6.65
613+07.81	614+03.81	6.65
614+03.81	614+75.81	6.81
614+75.81	615+23.81	6.65
615+23.81	615+71.81	6.65
615+71.81	616+19.81	6.65
616+19.81	161+67.81	5.67
616+67.81	616+15.81	5.67
616+15.81	617+63.81	5.63
617+63.81	618+11.81	4.60
618+11.81	618+59.81	4.43
618+59.81	619+07.81	4.47
619+07.81	619+31.81	3.92
619+31.81	619+43.81	3.92
619+43.81	619+55.81	3.05
619+55.81	619+65.95	2.45

Notes: Allowable Stress Design,(ASD). The Maximum Contact Pressure, (q_{max}), is not to exceed the recommended Gross Allowable Soil Bearing Pressure, (q_{all}). The Ultimate Soil bearing Capacity, (q_{ult}). will equal or exceed 3 times recommended Gross Allowable Soil Bearing pressure, (q_{all}).

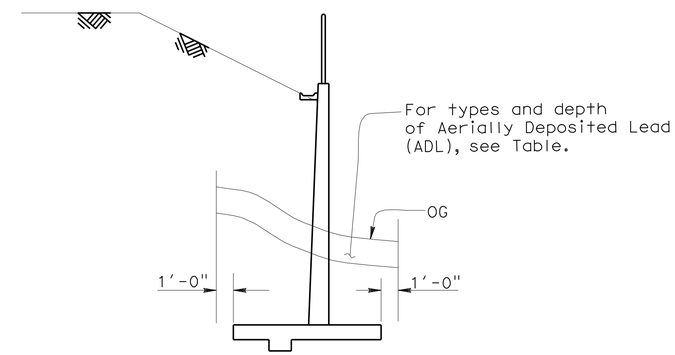

LIMITS OF STRUCTURE EXCAVATION, AERIALLY DEPOSITED LEAD(ADL)

No Scale

AERIALLY DEPOSITED LEAD

ADL TYPE	DEPTH (FT)	Station Limit (Along ℄ Rte 5)	
		From	To
Y-1	2	1612+35.41	1615+00.00

	BY	CHECKED
DESIGN	Zihan Yan	Jorge Estrada
DETAILS	Minh Tran	Jorge Estrada
QUANTITIES	Sannow Mam	Ruperd Wilson

STATE OF CALIFORNIA
DEPARTMENT OF TRANSPORTATION

DIVISION OF ENGINEERING SERVICES
STRUCTURE DESIGN
DESIGN BRANCH 18

BRIDGE NO. RW1613
POST MILE 30.54

RETAINING WALL 1613
MISCELLANEOUS DETAILS

STRUCTURES DESIGN DETAIL SHEET (ENGLISH) (REV. 09-01-10)

ORIGINAL SCALE IN INCHES FOR REDUCED PLANS 0 1 2 3

UNIT: 3603
PROJECT NUMBER & PHASE: 0700021119-1 CONTRACT NO.: 07-1218W1

DISREGARD PRINTS BEARING EARLIER REVISION DATES

REVISION DATES 02/27/12 04/24/12

SHEET 10 OF 16

FILE => 53-rw1613-t-misc.dgn

USERNAME => s124496 DATE PLOTTED => 21-MAY-2012 TIME PLOTTED => 16:22

DIST	COUNTY	ROUTE	POST MILES TOTAL PROJECT	SHEET No.	TOTAL SHEETS
07	LA	5	29.4/31.6	1227	1931

REGISTERED CIVIL ENGINEER — DATE 1/31/12

5-21-12
PLANS APPROVAL DATE

REGISTERED PROFESSIONAL ENGINEER — JORGE I. ESTRADA — No. C51473 — Exp. 06-30-12 — CIVIL — STATE OF CALIFORNIA

The State of California or its officers or agents shall not be responsible for the accuracy or completeness of electronic copies of this plan sheet.

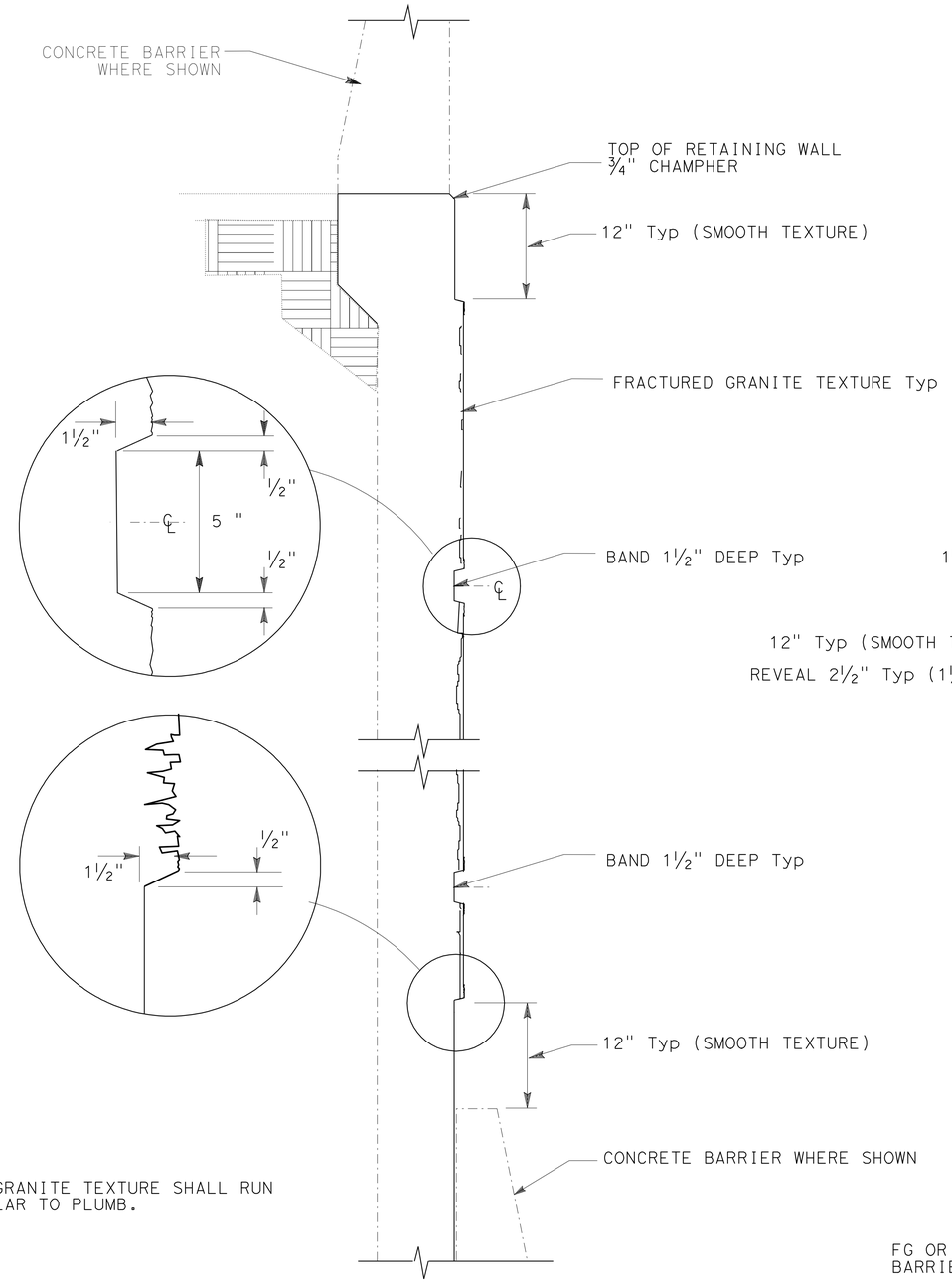

RETAINING WALL
TYPICAL SECTION

ARCHITECTURAL TREATMENT SECTION FOR RETAINING WALL

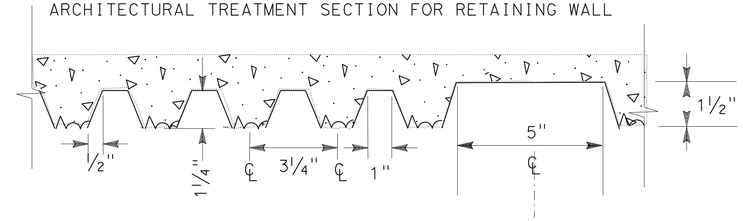

FRACTURED GRANITE TEXTURE & BAND

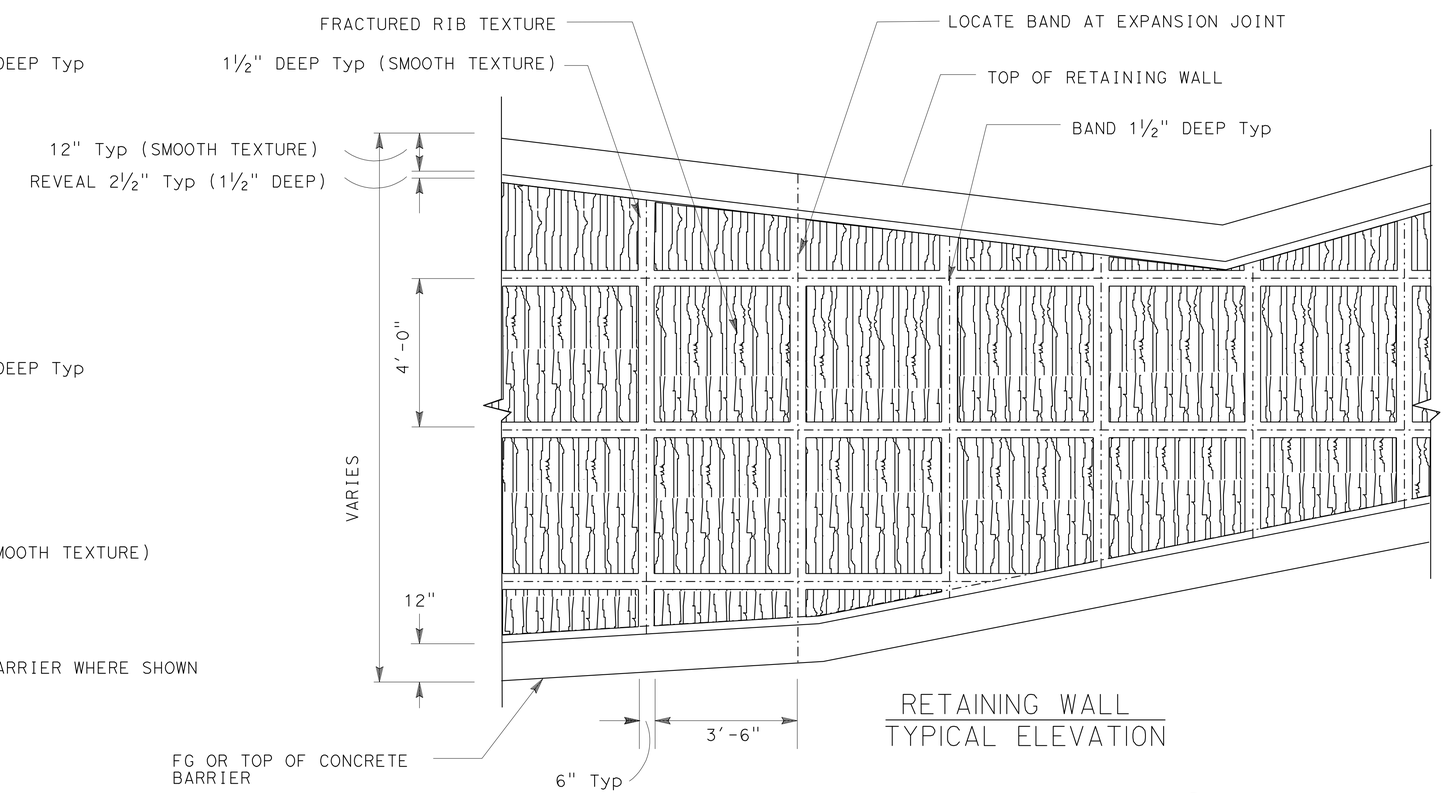

RETAINING WALL
TYPICAL ELEVATION

NOTE:

FRACTURED GRANITE TEXTURE SHALL RUN PERPENDICULAR TO PLUMB.

RETAINING WALL ARCHITECTURAL TREATMENT

NO SCALE

APPROVED FOR SOUNDWALL AESTHETIC FEATURES ONLY

	BY	CHECKED
DESIGN	Zihan Yan	Jorge Estrada
DETAILS	SD/ Minh Tran	Jorge Estrada
QUANTITIES	Zihan Yan	Ruperd Wilson

STATE OF CALIFORNIA
DEPARTMENT OF TRANSPORTATION

DIVISION OF ENGINEERING SERVICES
STRUCTURE DESIGN
DESIGN BRANCH 18

BRIDGE NO. RW1613
POST MILE 30.54

RETAINING WALL 1613
ARCHITECTURAL TREATMENT

STRUCTURES DESIGN DETAIL SHEET (ENGLISH) (REV. 09-01-10)

ORIGINAL SCALE IN INCHES FOR REDUCED PLANS 0 1 2 3

UNIT: 3603
PROJECT NUMBER & PHASE: 0700021119-1
CONTRACT NO.: 07-1218w1

DISREGARD PRINTS BEARING EARLIER REVISION DATES

REVISION DATES: 11/02/11 02/23/12

SHEET 11 OF 16

FILE => 53-rw1613-u-archdt01.dgn

USERNAME => s124496 DATE PLOTTED => 21-MAY-2012 TIME PLOTTED => 16:22

DIST	COUNTY	ROUTE	POST MILES TOTAL PROJECT	SHEET No	TOTAL SHEETS
07	LA	5	29.4/31.6	1228	1931

Joseph S. Pratt 2-8-12
CERTIFIED ENGINEERING GEOLOGIST

5-21-12
PLANS APPROVAL DATE

PROFESSIONAL GEOLOGIST — Joseph S. Pratt No. 2141 Exp. 5-31-13 — CERTIFIED ENGINEERING GEOLOGIST — STATE OF CALIFORNIA

The State of California or its officers or agents shall not be responsible for the accuracy or completeness of electronic copies of this plan sheet.

BENCH MARKS

BM PRHV302 Elev 627.869 ft
Fd Chiseled "X" on island-median, N/E of LA-5/San Fernando Rd. S/bnd. UC (tunnel); ±10 ft from electrolier; ±1.6 ft from top curb, 176.527 ft Lt Sta 1613+01.41 C/L Rte 5 (Prop).
N 1892485.336
E 6462244.53

BM PRHV202 Elev 644.29 ft
Fd Chiseled "X" on Pullbox at the south end of SBND San Fernando Rd UC; 67.698 ft Lt Sta 1623+80.06 C/L Rte 5 (Prop).
N 1893254.294
E 6461510.679

NAD83, NAVD88

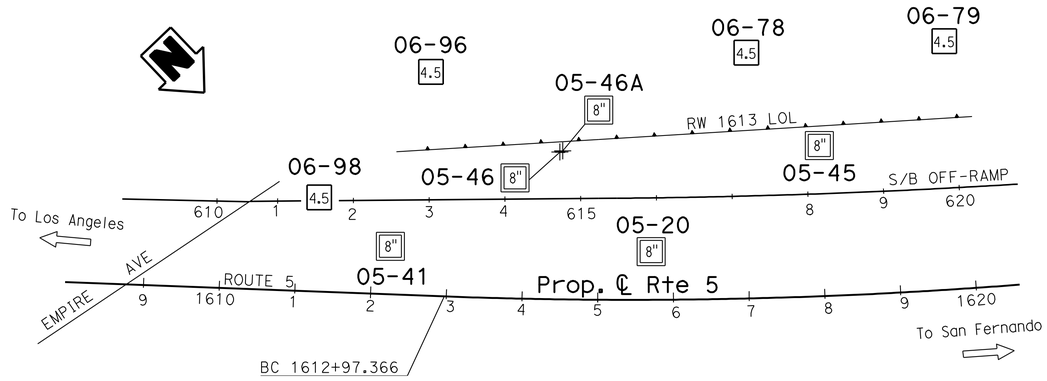

PLAN

1" = 100'

LEGEND:

- (M) Moisture Content
- (PA) Particle Size Analysis
- (PI) Plasticity, Index, Liquid Limit
- (CR) Corrosivity Testing
- (CP) Compaction

Note: No ground water encountered during field investigation.

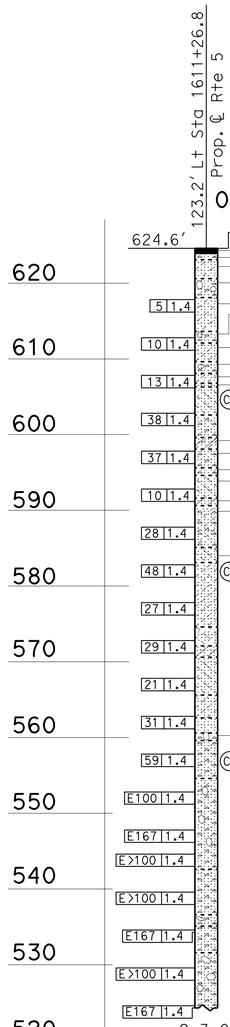

Asphaltic concrete pavement (8" thick).
SAND and GRAVEL, brown, (Road Base material).
SILTY fine SAND (SM) interbedded with SAND, estimated loose, yellowish brown, (probable ALLUVIUM).
Coarse GRAVEL (GW) with SAND matrix (30 to 40%) and scattered COBBLES (3 to 6" length) interbedded with SAND, estimated medium dense to loose, varicolored to brown, moist, contains subrounded hard (slightly weathered) DIORITE and GRANITOID rock fragments, (probable ALLUVIUM).
SILTY fine SAND (SM) with scattered GRAVEL (0 to 30%), loose, brown, moist, nonplastic, micaceous, (ALLUVIUM).
Coarse GRAVEL and COBBLES moderately interbedded with SAND, estimated medium dense.
SILTY fine SAND (SM) interbedded with minor fine SAND with SILT (SP-SM), loose, brown to yellowish brown, moist, nonplastic.
Coarse GRAVEL, SAND, and minor scattered COBBLES (≤ 6" diameter), estimated medium dense.
SILTY fine SAND (SM), medium dense, brown, moist, nonplastic.
Poorly-graded fine SAND (SP), medium dense, yellowish brown to grayish brown, moist, nonplastic, clean.
SANDY SILT (ML) to SILTY fine SAND (SM) interbedded with fine SAND with SILT (SP-SM), estimated medium dense, brown to yellowish brown, moist, nonplastic, micaceous.
Well-graded SAND (SW) with scattered GRAVEL (5 to 20%), contains a moderately thick (12" thick) coarse GRAVEL lense below elevation +601', dense, yellowish brown, moist, nonplastic.
SANDY lean CLAY (CL) gradationally interbedded with minor SANDY SILT (ML), hard/minor dense, light brown to strong brown mottled, dry to slightly moist, medium plasticity to minor nonplastic, (PALEOSOL hardpan).
Well-graded SAND (SW) with scattered fine GRAVEL (5 to 15%), dense, yellowish brown, moist, nonplastic.
Coarse GRAVEL with SAND matrix, estimated dense.
SANDY SILT (ML) interbedded with minor SILTY fine SAND (SM), loose, brown, moist, nonplastic.
SANDY lean CLAY (CL), estimated firm to stiff, brown, moist, medium plasticity.
Poorly-graded fine to medium SAND with coarse and fine GRAVEL (10 to 15%) interbedded with minor SILTY fine SAND (SM), medium dense, yellowish brown, moist, nonplastic, clean.
SILTY fine SAND (SM) gradationally interbedded with SANDY SILT (ML), estimated medium dense, brown, moist, nonplastic.
Poorly-graded fine SAND with SILT (SP-SM), SILTY fine SAND (SM), and poorly graded fine SAND (SP), contains intermittent scattered GRAVEL (0 to 10%), dense to medium dense, yellowish brown to brown, moist, nonplastic, clean, crosslaminated.
SANDY SILT (ML), medium dense, brown, moist, nonplastic, micaceous.
SANDY lean CLAY (CL), very stiff, brown, moist, medium plasticity.
SILTY fine SAND (SM) gradationally interbedded with SANDY SILT (ML), medium dense, brown to strong brown, moist, nonplastic, micaceous.
SILTY fine SAND (SM) interbedded with rare SANDY SILT (ML), dense, strong brown to brown, moist, nonplastic.
Well-graded SAND (SW), dense, yellowish brown, moist, nonplastic.
Coarse GRAVEL with scattered COBBLES.
Well-graded SAND (SW) with GRAVEL (40%), very dense, yellowish brown, moist, nonplastic.
Well-graded fine to coarse GRAVEL (GW) with fine SAND matrix (30 to 35%) and scattered COBBLES (≤ 6" length) interlensed with SAND with intermittent scattered GRAVEL, very dense, varicolored to yellowish brown, moist, nonplastic, variable hard rock drilling.
Well-graded coarse to fine GRAVEL (GW) with SAND matrix (30 to 35%) thickly interbedded (12" to 24" thick) with SAND with GRAVEL, very dense, varicolored to yellowish brown, moist, nonplastic, variable hard rock drilling.
GRAVEL with scattered COBBLES thickly interbedded (12" to 18" thick) with SAND with GRAVEL, estimated very dense.
SILTY fine to medium SAND (SM) with GRAVEL (20 to 45%) interbedded with GRAVEL, very dense, yellowish brown to varicolored, moist, nonplastic.
Well-graded coarse to fine GRAVEL (GW) with SAND matrix and intermittent scattered COBBLES thickly interbedded (12" to 24" thick) with well-graded SAND (SW) with GRAVEL (30 to 40%), very dense, varicolored, yellowish brown, and strong brown, moist, nonplastic.

PROFILE

Horiz: 1" = 20'
Vert: 1" = 10'

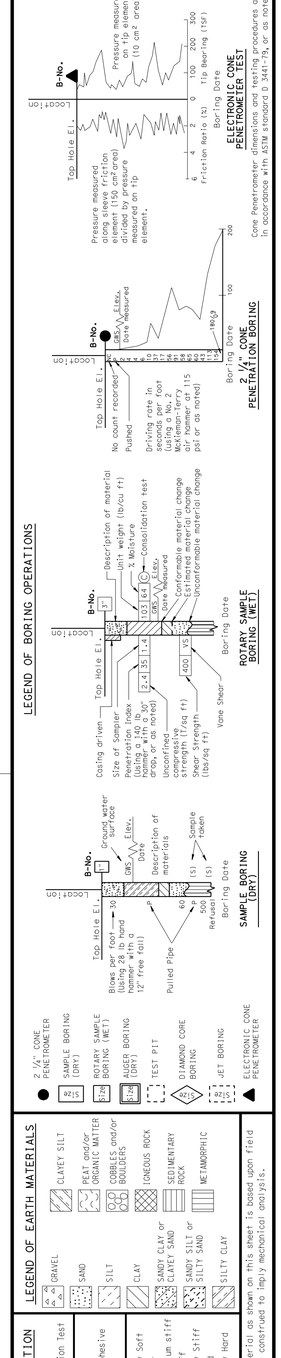

SPT N-Value (Blows/ Foot)	Granular	SPT N-Value (Blows/ Foot)	Cohesive
0-4	Very Loose	<2	Very Soft
5-10	Loose	2-4	Soft
11-30	Medium Dense	5-8	Medium stiff
31-50	Dense	9-15	Stiff
>50	Very Dense	16-30	Very Stiff
		31-60	Hard
		>60	Very Hard

ENGINEERING SERVICES	GEOTECHNICAL SERVICES
DRAWN BY	I.G-Remmen
CHECKED BY	J. Pratt

FIELD INVESTIGATION BY: J. Pratt

STATE OF CALIFORNIA DEPARTMENT OF TRANSPORTATION

DIVISION OF ENGINEERING SERVICES STRUCTURE DESIGN — DESIGN BRANCH 18

BRIDGE NO. RW 1613
POST MILE 30.54/30.68

RETAINING WALL NO. 1613
LOG OF TEST BORINGS 1 OF 5

OGS LOG OF TEST BORINGS SHEET (ENGLISH) (REV. 5/25/07)

ORIGINAL SCALE IN INCHES FOR REDUCED PLANS 0 1 2 3

UNIT: 3603
PROJECT NUMBER & PHASE: 0700021119-1
CONTRACT NO.: 07-1218W1

DISREGARD PRINTS BEARING EARLIER REVISION DATES

REVISION DATES: 01-24-12 02-08-12

SHEET 12 OF 16

FILE => 53-rw1613-z-ltb1.dgn

USERNAME => s1244396 DATE PLOTTED => 21-MAY-2012 TIME PLOTTED => 16:22

DIST	COUNTY	ROUTE	POST MILES TOTAL PROJECT	SHEET No	TOTAL SHEETS
07	LA	5	29.4/31.6	1229	1931

Joseph S. Pratt 2-8-12
CERTIFIED ENGINEERING GEOLOGIST

5-21-12
PLANS APPROVAL DATE

PROFESSIONAL GEOLOGIST Joseph S. Pratt No. 2141 Exp. 5-31-13 CERTIFIED ENGINEERING GEOLOGIST STATE OF CALIFORNIA

The State of California or its officers or agents shall not be responsible for the accuracy or completeness of electronic copies of this plan sheet.

LEGEND:

- (M) Moisture Content
- (PA) Particle Size Analysis
- (PI) Plasticity, Index, Liquid Limit
- (CR) Corrosivity Testing
- (CP) Compaction

FOR PLAN VIEW, SEE
"LOG OF TEST BORINGS" 1 OF 5

Note: No ground water encountered during field investigation.

295.6' Lt Sta 1612+69.4
Prop. ℄ Rte 5

06-96

628.0'

Elev.	Blows	Moisture	Tests
628.0'		4.5	
620	21	1.4	CR
610	13	1.4	M PA PI
	65	1.4	
600	37	1.4	
	50	1.4	CR
590	20	1.4	
	27	1.4	
580	28	1.4	
	67	1.4	CR
570			
	29	1.4	
560	48	1.4	
	E125	1.4	CR
550	E111	1.4	
	E>100	1.4	
540	E>100	1.4	
530	E>100	1.4	CR
	E>100	1.4	
520	E125	1.4	
	E100	1.4	
510	E>100	1.4	

2-2-06

Asphaltic Concrete Pavement (5" thick).
Poorly-graded SAND with SILT (SP-SM), estimated loose to medium dense, brown, moist, nonplastic, (undifferentiated Fill/ALLUVIUM).
Well-graded SAND (SW) with scattered GRAVEL, medium dense, grayish brown, moist, nonplastic, (ALLUVIUM).
Poorly-graded fine GRAVEL (GP), estimated medium dense, grayish brown to white, moist, nonplastic.
Well-graded SAND (SW) with scattered coarse GRAVEL, estimated medium dense, brown, moist, nonplastic.
SILTY fine to medium SAND (SM), medium dense, brown, moist, nonplastic.
Well-graded GRAVEL with SILT and SAND (GW-GM), estimated medium dense, gray to brown to white, moist, nonplastic.
SILTY fine SAND (SM), contains 5% fine GRAVEL, estimated medium dense, brown, moist, nonplastic.
SANDY lean CLAY (CL), estimated stiff, brown to dark brown, moist, medium plasticity.
Well-graded fine to coarse SAND (SW), very dense, brown moist, nonplastic.
Well-graded fine to coarse SAND (SW) with 10 to 20% GRAVEL & scattered COBBLES (≤4" diameter), contains probable BOULDER (approximately 12" diameter) below Elev +606', dense, brown to varicolored, moist, contains subrounded to subangular hard (slightly weathered) GRANITOID rock fragments.
Well-graded SAND (SW) with SILT and GRAVEL (15 to 20%), estimated dense, brown to varicolored, moist, nonplastic, contains subangular to subrounded hard (slightly to moderately weathered) GRANITOID rock fragments.
SILTY fine SAND (SM) with scattered GRAVEL, estimated dense, brown, moist, nonplastic.
Well-graded fine to coarse GRAVEL (GW), contains 10% COBBLES (≤4"diameter), thinly interbedded (3 TO 4" thick) with well-graded clean SAND (SW) and SILTY fine SAND (SM), dense to medium dense, brown, yellowish brown, and dark brown, moist, nonplastic.
SILTY fine SAND (SM) to CLAYEY fine SAND (SC), contains 5 to 10% CLAY and 5% scattered coarse GRAVEL (≤2" diameter) and 10% COBBLES (≤5" diameter), thinly interbedded (≤4" thick) with poorly-graded SAND (SP) and well-graded SAND with SILT (SW-SM), medium dense to very dense, brown, moist, nonplastic to minor low plasticity.
SANDY lean CLAY (CL), hard, brown, moist, medium plasticity.
SILTY fine SAND (SM) with 15% scattered coarse GRAVEL (≤2" diameter) and COBBLES (≤5" diameter), dense, brown to strong brown mottled, moist, nonplastic, contains 5 to 10% decomposed GRANITOID rock fragments.
BOULDER (18" diameter), gray, intensely weathered, moderately hard, GRANITOID.
Well-graded GRAVEL (GW) with sporadic abundant COBBLES (≤12" diameter) and SAND matrix interlensed with minor SAND with GRAVEL, very dense, varicolored to brown, moist, nonplastic, contains rounded to subangular (slightly weathered) to soft (intensely weathered to decomposed) GRANITOID and SCHIST rock fragments, variable hard rock drilling.

1612+50 1613+00 1614+00

PROFILE
Horiz: 1" = 10'
Vert: 1" = 10'

LEGEND OF BORING OPERATIONS

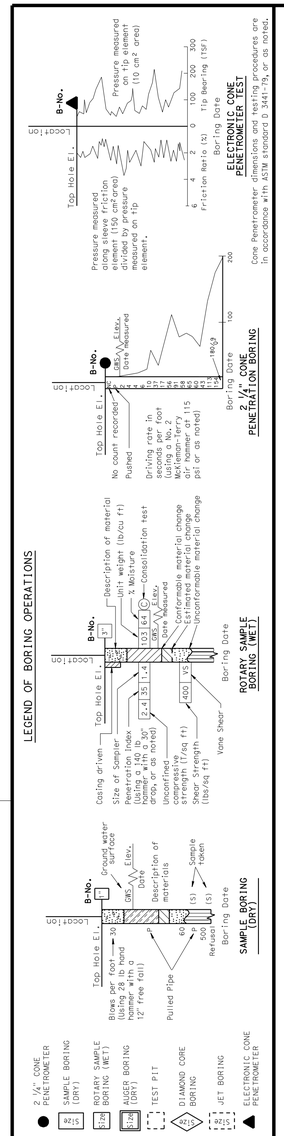

LEGEND OF EARTH MATERIALS

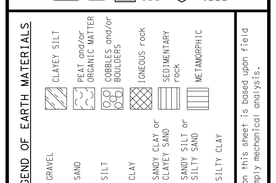

CONSISTENCY CLASSIFICATION FOR SOILS
According to the Standard Penetration Test

SPT N-Value (Blows/ Foot)	Granular	SPT N-Value (Blows/ Foot)	Cohesive
0-4	Very Loose	<2	Very Soft
5-10	Loose	2-4	Soft
11-30	Medium Dense	5-8	Medium stiff
31-50	Dense	9-15	Stiff
>50	Very Dense	16-30	Very Stiff
		31-60	Hard
		>60	Very Hard

NOTE: Classification of earth material as shown on this sheet is based upon field inspection and is not to be construed to imply mechanical analysis.

ENGINEERING SERVICES	GEOTECHNICAL SERVICES
DRAWN BY	I.G-Remmen
CHECKED BY	J. Pratt

FIELD INVESTIGATION BY: B. Hettick

STATE OF CALIFORNIA DEPARTMENT OF TRANSPORTATION

DIVISION OF ENGINEERING SERVICES STRUCTURE DESIGN
DESIGN BRANCH 18

BRIDGE NO.
POST MILE 30.54/30.68

RETAINING WALL NO. 1613
LOG OF TEST BORINGS 2 OF 5

OGS LOG OF TEST BORINGS SHEET (ENGLISH) (REV. 5/25/07)

ORIGINAL SCALE IN INCHES FOR REDUCED PLANS 0 1 2 3

UNIT: 3603
PROJECT NUMBER & PHASE: 0700021119-1
CONTRACT NO.: 07-1218W1

DISREGARD PRINTS BEARING EARLIER REVISION DATES
REVISION DATES 01-24-12 02-08-12

SHEET 13 OF 16

FILE => 53-rw1613-z-ltb2.dgn

USERNAME => s1244996 DATE PLOTTED => 21-MAY-2012 TIME PLOTTED => 16:22

DIST	COUNTY	ROUTE	POST MILES TOTAL PROJECT	SHEET No	TOTAL SHEETS
07	LA	5	29.4/31.6	1230	1931

Joseph S. Pratt 2-8-12
CERTIFIED ENGINEERING GEOLOGIST

5-21-12
PLANS APPROVAL DATE

PROFESSIONAL GEOLOGIST Joseph S. Pratt No. 2141 Exp. 5-31-13 CERTIFIED ENGINEERING GEOLOGIST STATE OF CALIFORNIA

The State of California or its officers or agents shall not be responsible for the accuracy or completeness of electronic copies of this plan sheet.

LEGEND:

- (M) Moisture Content
- (PA) Particle Size Analysis
- (PI) Plasticity, Index, Liquid Limit
- (CR) Corrosivity Testing
- (CP) Compaction

FOR PLAN VIEW, SEE
"LOG OF TEST BORINGS 1 OF 5"

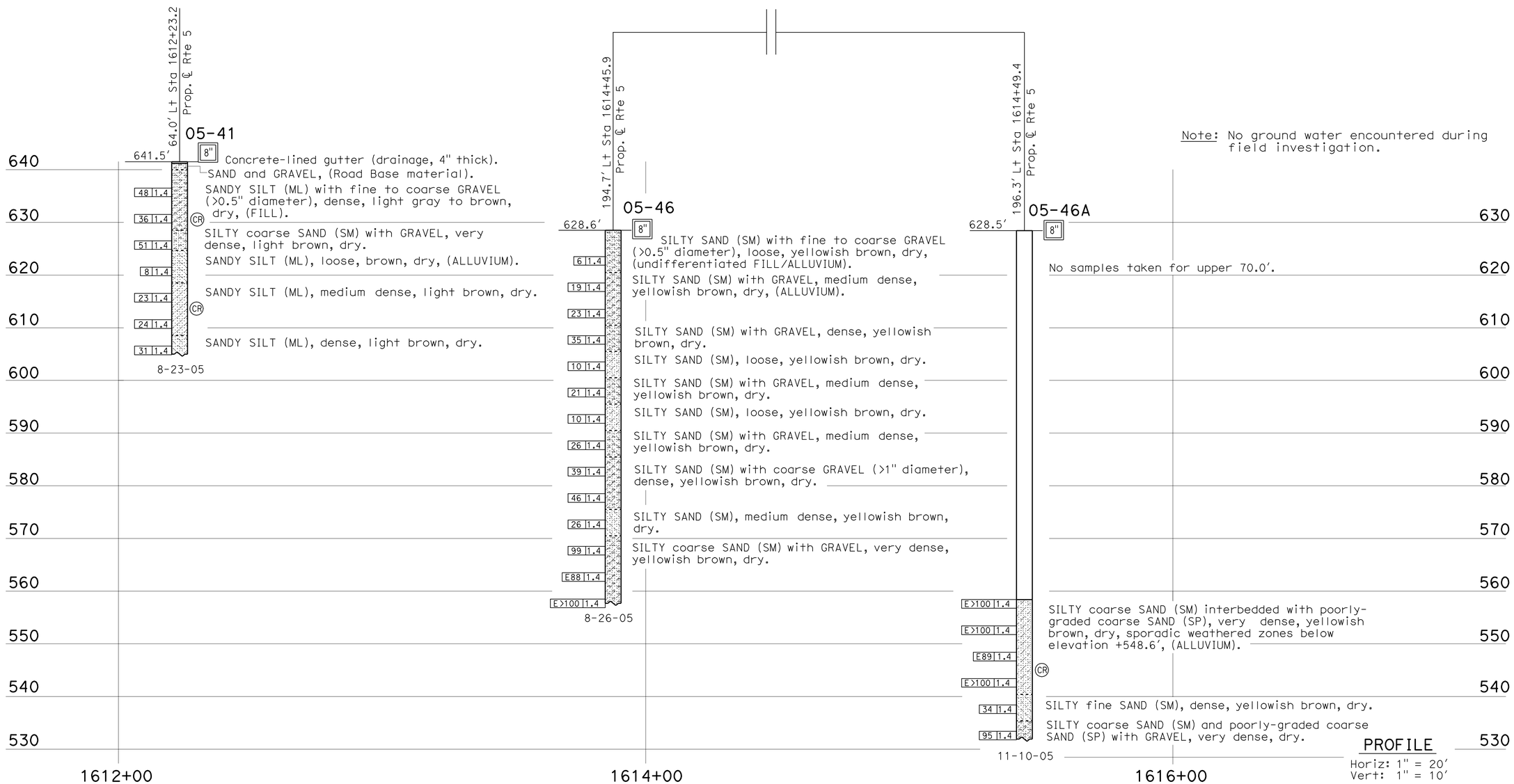

Note: No ground water encountered during field investigation.

PROFILE
Horiz: 1" = 20'
Vert: 1" = 10'

LEGEND OF BORING OPERATIONS

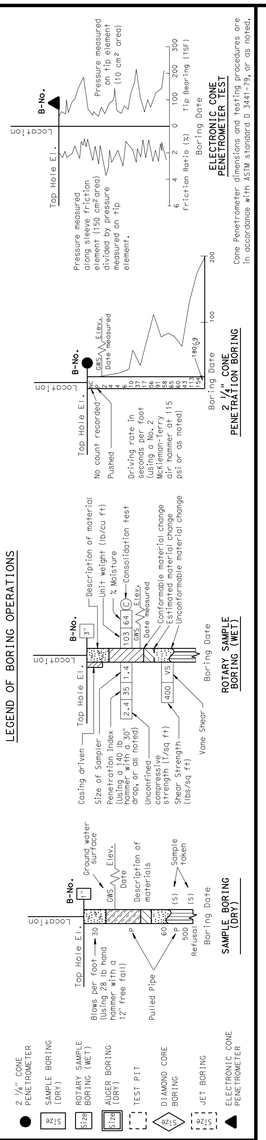

LEGEND OF EARTH MATERIALS

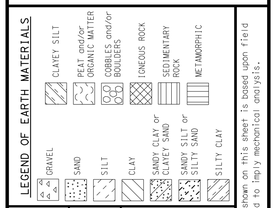

CONSISTENCY CLASSIFICATION FOR SOILS
According to the Standard Penetration Test

SPT N-Value (Blows/ Foot)	Granular	SPT N-Value (Blows/ Foot)	Cohesive
0-4	Very Loose	<2	Very Soft
5-10	Loose	2-4	Soft
11-30	Medium Dense	5-8	Medium stiff
31-50	Dense	9-15	Stiff
>50	Very Dense	16-30	Very Stiff
		31-60	Hard
		>60	Very Hard

NOTE: Classification of earth material as shown on this sheet is based upon field inspection and is not to be construed to imply mechanical analysis.

ENGINEERING SERVICES	GEOTECHNICAL SERVICES
DRAWN BY	I.G-Remmen
CHECKED BY	J. Pratt

FIELD INVESTIGATION BY: K. Lai

STATE OF CALIFORNIA
DEPARTMENT OF TRANSPORTATION

DIVISION OF ENGINEERING SERVICES
STRUCTURE DESIGN
DESIGN BRANCH 18

BRIDGE NO. RW 1613
POST MILE 30.54/30.68

RETAINING WALL NO. 1613
LOG OF TEST BORINGS 3 OF 5

OGS LOG OF TEST BORINGS SHEET (ENGLISH) (REV. 5/25/07)

ORIGINAL SCALE IN INCHES FOR REDUCED PLANS 0 1 2 3

UNIT: 3603
PROJECT NUMBER & PHASE: 0700021119-1
CONTRACT NO.: 07-1218W1

DISREGARD PRINTS BEARING EARLIER REVISION DATES

REVISION DATES: 01-24-12 02-08-12

SHEET 14 OF 16

FILE => 53-rw1613-z-1tb3.dgn

USERNAME => s124496 DATE PLOTTED => 21-MAY-2012 TIME PLOTTED => 16:23

DIST	COUNTY	ROUTE	POST MILES TOTAL PROJECT	SHEET No	TOTAL SHEETS
07	LA	5	29.4/31.6	1231	1931

Joseph S. Pratt 2-8-12
CERTIFIED ENGINEERING GEOLOGIST

5-21-12
PLANS APPROVAL DATE

PROFESSIONAL GEOLOGIST Joseph S. Pratt No. 2141 Exp. 5-31-13 CERTIFIED ENGINEERING GEOLOGIST STATE OF CALIFORNIA

The State of California or its officers or agents shall not be responsible for the accuracy or completeness of electronic copies of this plan sheet.

LEGEND:

- (M) Moisture Content
- (PA) Particle Size Analysis
- (PI) Plasticity, Index, Liquid Limit
- (CR) Corrosivity Testing
- (CP) Compaction

FOR PLAN VIEW, SEE
"LOG OF TEST BORINGS 1 OF 5"

Note: No ground water encountered during field investigation.

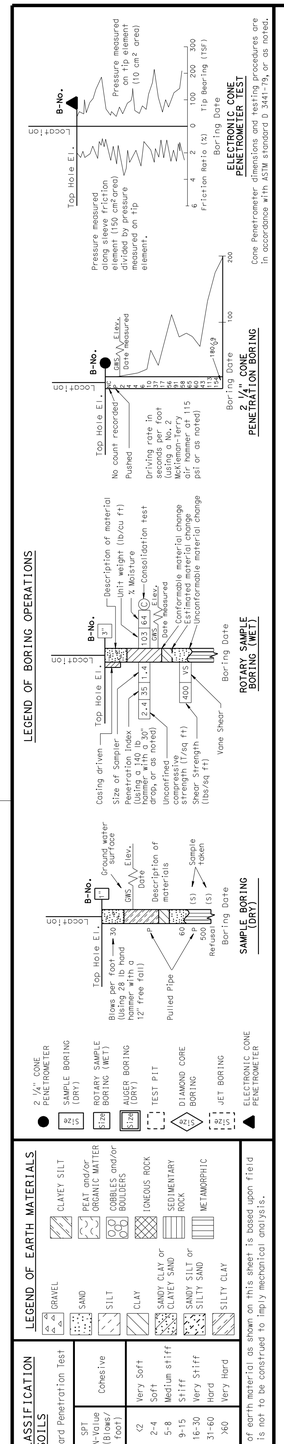

SPT N-Value (Blows/ Foot)	Granular	SPT N-Value (Blows/ Foot)	Cohesive
0-4	Very Loose	<2	Very Soft
5-10	Loose	2-4	Soft
11-30	Medium Dense	5-8	Medium stiff
31-50	Dense	9-15	Stiff
>50	Very Dense	16-30	Very Stiff
		31-60	Hard
		>60	Very Hard

ENGINEERING SERVICES	GEOTECHNICAL SERVICES
DRAWN BY	I.G-Remmen
CHECKED BY	J. Pratt

FIELD INVESTIGATION BY: J. Pratt

STATE OF CALIFORNIA
DEPARTMENT OF TRANSPORTATION

DIVISION OF ENGINEERING SERVICES
STRUCTURE DESIGN
DESIGN BRANCH 18

BRIDGE NO. RW 1613
POST MILE 30.54/30.68

RETAINING WALL NO. 1613
LOG OF TEST BORINGS 4 OF 5

OGS LOG OF TEST BORINGS SHEET (ENGLISH) (REV. 5/25/07)

ORIGINAL SCALE IN INCHES FOR REDUCED PLANS 0 1 2 3

UNIT: 3603
PROJECT NUMBER & PHASE: 0700021119-1
CONTRACT NO.: 07-1218W1

DISREGARD PRINTS BEARING EARLIER REVISION DATES

REVISION DATES: 01-24-12 02-08-12

SHEET 15 OF 16

FILE => 53-rw1613-z-ltb4.dgn

USERNAME => s124196 DATE PLOTTED => 21-MAY-2012 TIME PLOTTED => 16:23

DIST	COUNTY	ROUTE	POST MILES TOTAL PROJECT	SHEET No	TOTAL SHEETS
07	LA	5	29.4/31.6	1232	1931

Joseph S. Pratt 2-8-12
CERTIFIED ENGINEERING GEOLOGIST

5-21-12
PLANS APPROVAL DATE

PROFESSIONAL GEOLOGIST Joseph S. Pratt No. 2141 Exp. 5-31-13 CERTIFIED ENGINEERING GEOLOGIST STATE OF CALIFORNIA

The State of California or its officers or agents shall not be responsible for the accuracy or completeness of electronic copies of this plan sheet.

LEGEND:

- (M) Moisture Content
- (PA) Particle Size Analysis
- (PI) Plasticity, Index, Liquid Limit
- (CR) Corrosivity Testing
- (CP) Compaction

FOR PLAN VIEW, SEE
"LOG OF TEST BORINGS 1 OF 5"

Note: No ground water encountered during field investigation.

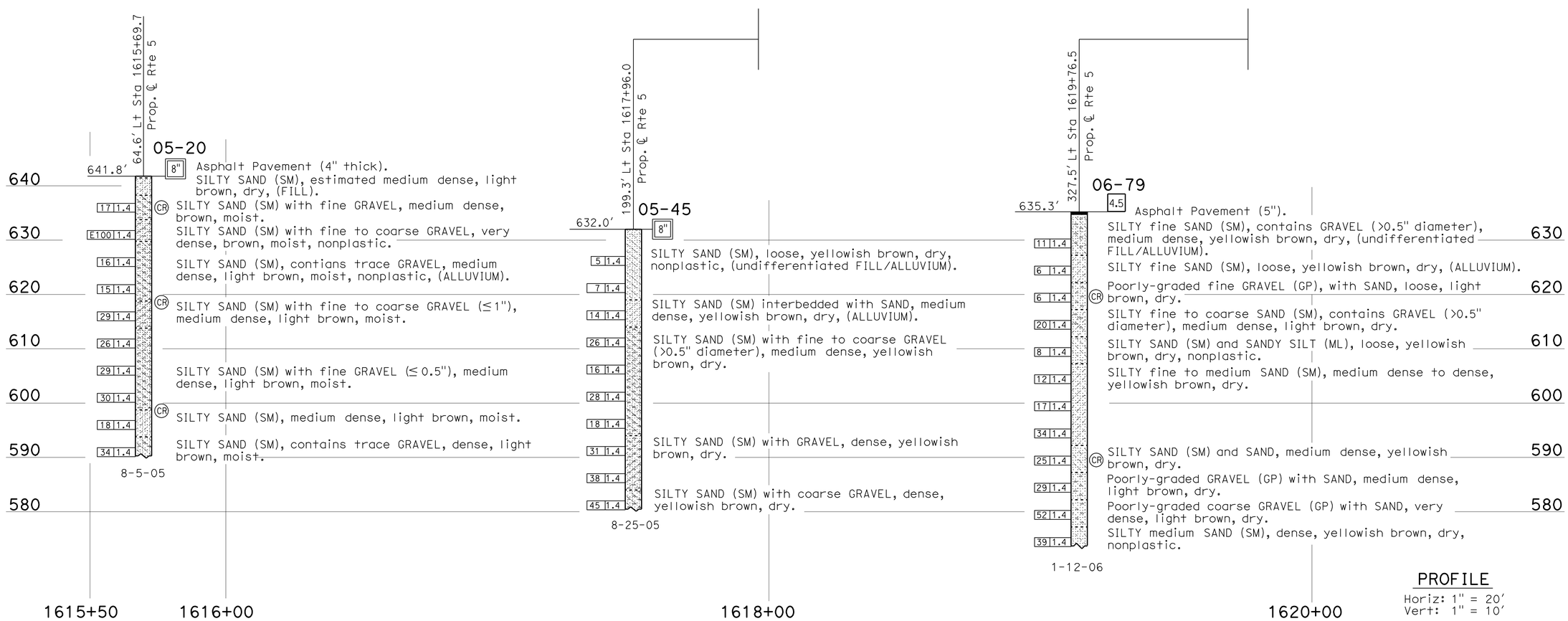

PROFILE
Horiz: 1" = 20'
Vert: 1" = 10'

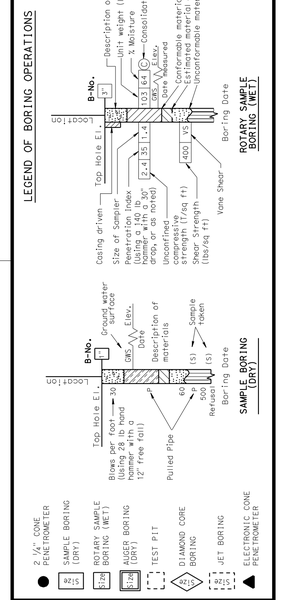

CONSISTENCY CLASSIFICATION FOR SOILS
According to the Standard Penetration Test

SPT N-Value (Blows/ Foot)	Granular	SPT N-Value (Blows/ Foot)	Cohesive
0-4	Very Loose	<2	Very Soft
5-10	Loose	2-4	Soft
11-30	Medium Dense	5-8	Medium stiff
31-50	Dense	9-15	Stiff
>50	Very Dense	16-30	Very Stiff
		31-60	Hard
		>60	Very Hard

NOTE: Classification of earth material as shown on this sheet is based upon field inspection and is not to be construed to imply mechanical analysis.

ENGINEERING SERVICES	GEOTECHNICAL SERVICES
DRAWN BY	I.G-Remmen
CHECKED BY	J. Pratt

FIELD INVESTIGATION BY: M. Abouzalan, K. Lai

STATE OF CALIFORNIA
DEPARTMENT OF TRANSPORTATION

DIVISION OF ENGINEERING SERVICES
STRUCTURE DESIGN
DESIGN BRANCH 18

BRIDGE NO. RW 1613
POST MILE 30.54/30.68

RETAINING WALL NO. 1613
LOG OF TEST BORINGS 5 OF 5

OGS LOG OF TEST BORINGS SHEET (ENGLISH) (REV. 5/25/07)

ORIGINAL SCALE IN INCHES FOR REDUCED PLANS 0 1 2 3

UNIT: 3603
PROJECT NUMBER & PHASE: 0700021119-1
CONTRACT NO.: 07-1218W1

DISREGARD PRINTS BEARING EARLIER REVISION DATES

REVISION DATES			SHEET	OF
01-24-12	02-08-12		16	16

FILE => 53-rw1613-z-ltb5.dgn

USERNAME => s124496 DATE PLOTTED => 21-MAY-2012 TIME PLOTTED => 16:23

DIST	COUNTY	ROUTE	POST MILES TOTAL PROJECT	SHEET No.	TOTAL SHEETS
07	LA	5	29.4/31.6	1233	1931

REGISTERED CIVIL ENGINEER — DATE 01-30-12

PLANS APPROVAL DATE 5-21-12

REGISTERED PROFESSIONAL ENGINEER — Jorge I. Estrada — No. C51473 — Exp. 06-30-12 — CIVIL — STATE OF CALIFORNIA

The State of California or its officers or agents shall not be responsible for the accuracy or completeness of electronic copies of this plan sheet.

INDEX TO PLANS

Sheet No.	Title
1	GENERAL PLAN
2	FOUNDATION PLAN No.1
3	FOUNDATION PLAN No.2
4	STRUCTURE PLAN No. 1
5	STRUCTURE PLAN No. 2
6	STRUCTURE PLAN No. 3
7	RETAINING WALL DETAILS
8	ARCHITECTURAL TREATMENT
9	LOG OF TEST BORINGS No.1
10	LOG OF TEST BORINGS No.2
11	LOG OF TEST BORINGS No.3

STANDARD PLANS DATED MAY 2006

A10A - A10B	ACRONYMS AND ABBREVIATIONS
A10C - A10D	SYMBOLS
A62B	LIMITS OF PAYMENT FOR EXCAVATION AND BACKFILL BRIDGE SURCHARGE AND WALL
RSP A76A	CONCRETE BARRIER TYPE 60
B0-3	BRIDGE DETAILS
B3-1	RETAINING WALL TYPE 1 H=4′ THROUGH 30′
B3-8	RETAINING WALL DETAILS NO. 1
B3-9	RETAINING WALL DETAILS NO. 2

STANDARD PLAN SHEET NO.

DETAIL NO.

QUANTITIES

STRUCTURE EXCAVATION (RETAINING WALL)	4,428	CY
STRUCTURE EXCAVATION (TYPE Y-1) (AERIALLY DEPOSITED LEAD)	651	CY
STRUCTURE EXCAVATION (TYPE Y-2) (AERIALLY DEPOSITED LEAD)	109	CY
STRUCTURE BACKFILL (RETAINING WALL)	4,254	CY
PERVIOUS BACKFILL MATERIAL	295	CY
STRUCTURAL CONCRETE, RETAINING WALL	1,201	CY
ARCHITECTURAL TREATMENT	6,941	SQFT
BAR REINFORCING STEEL (RETAINING WALL)	156,695	LB
MINOR CONCRETE (GUTTER)	23	CY

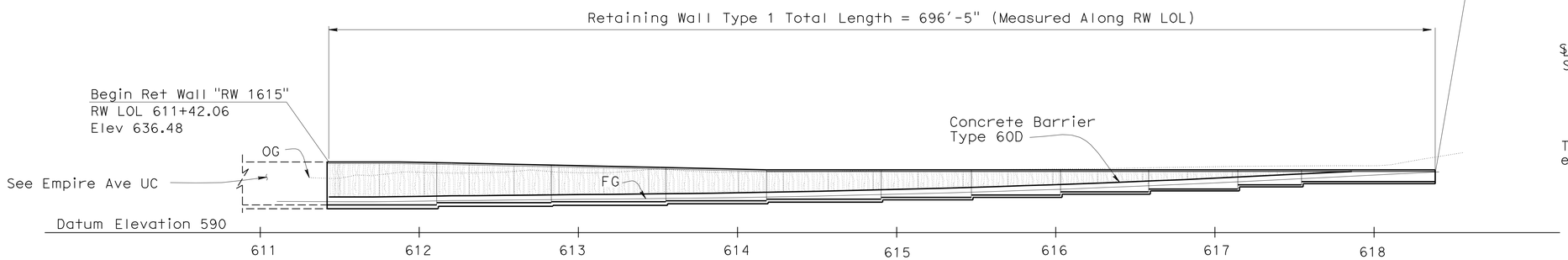

NOTES:
1. For Curve Data see " STRUCTURE PLANS " sheets
2. For limits of Aerially Deposited Lead, see "RETAINING WALL DETAILS"
3. For spread footing data table see "RETAINING WALL DETAILS" sheet
4. Relocation of existing utilities prior to this Contract by Others.

DEVELOPED MIRROR ELEVATION

1" = 40′

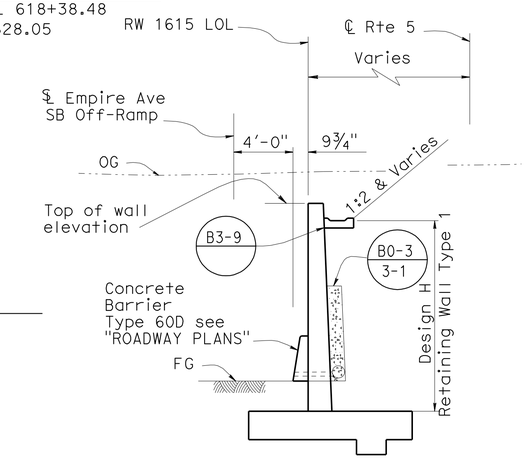

TYPICAL SECTION B3-1

1" = 5′

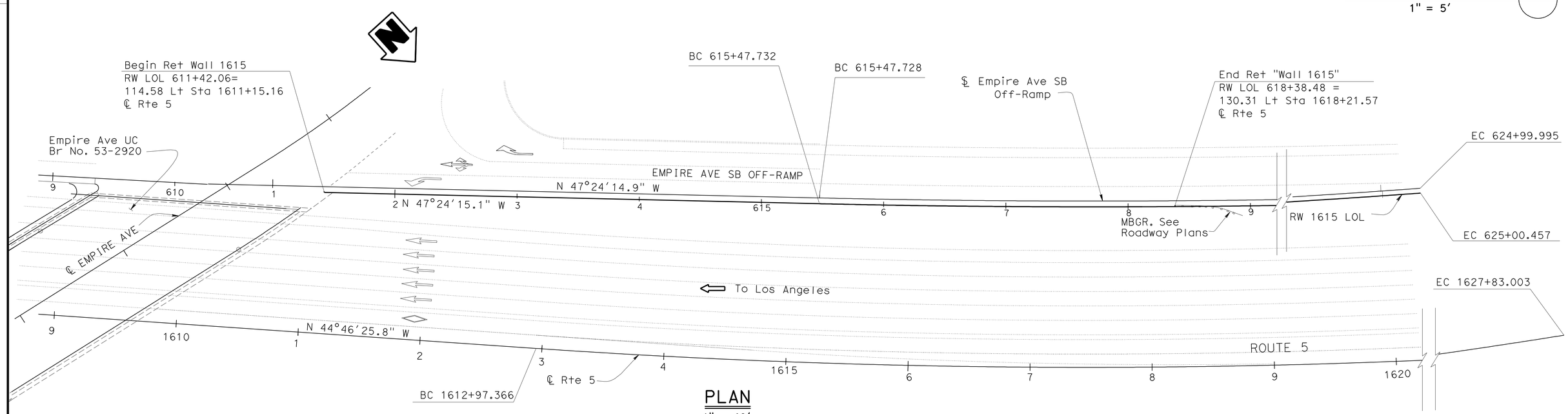

PLAN

1" = 40′

MICHAEL POPE — DESIGN ENGINEER	DESIGN	BY DAVID P. MURRAY	CHECKED IMAD KARAM	LOAD FACTOR DESIGN	LIVE LOADING: HS20-44 AND ALTERNATIVE AND PERMIT DESIGN LOAD	
	DETAILS	BY FARIDEH RASHEDI	CHECKED DAVID P. MURRAY	LAYOUT	BY FARIDEH RASHEDI	CHECKED JORGE ESTRADA
	QUANTITIES	BY JOSH RUNNION	CHECKED MATT SCHOTT	SPECIFICATIONS	BY JAMES CHOI	PLANS AND SPECS COMPARED X

STATE OF CALIFORNIA — DEPARTMENT OF TRANSPORTATION

DIVISION OF ENGINEERING SERVICES — STRUCTURE DESIGN — DESIGN BRANCH 18

BRIDGE NO. RW 1615 — POST MILE 30.53

RETAINING WALL 1615
GENERAL PLAN

ALL DIMENSIONS ARE IN FEET UNLESS OTHERWISE SHOWN

ORIGINAL SCALE IN INCHES FOR REDUCED PLANS 0 1 2 3

UNIT: 3603
PROJECT NUMBER & PHASE: 0700021119-1
CONTRACT NO.: 07-1218W1

DISREGARD PRINTS BEARING EARLIER REVISION DATES

REVISION DATES: 6-16-08 4-19-12 4-30-12

SHEET 1 OF 11

STRUCTURES DESIGN GENERAL PLAN SHEET (ENGLISH) (REV.09-01-10)

FILE => 53-rw1615-a-gp.dgn

USERNAME => s124496 DATE PLOTTED => 21-MAY-2012 TIME PLOTTED => 16:23

DIST	COUNTY	ROUTE	POST MILES TOTAL PROJECT	SHEET No.	TOTAL SHEETS
07	LA	5	29.4/31.6	1234	1931

REGISTERED CIVIL ENGINEER — DATE 01-30-12

5-21-12
PLANS APPROVAL DATE

REGISTERED PROFESSIONAL ENGINEER — Jorge I. Estrada — No. C51473 — Exp. 06-30-12 — CIVIL — STATE OF CALIFORNIA

The State of California or its officers or agents shall not be responsible for the accuracy or completeness of electronic copies of this plan sheet.

CURVE DATA

No.	R	Δ	T	L
Ⓐ	9848.00	5°32′35″	476.73	952.72
Ⓑ	6561.70	12°58′20″	746.01	1485.64

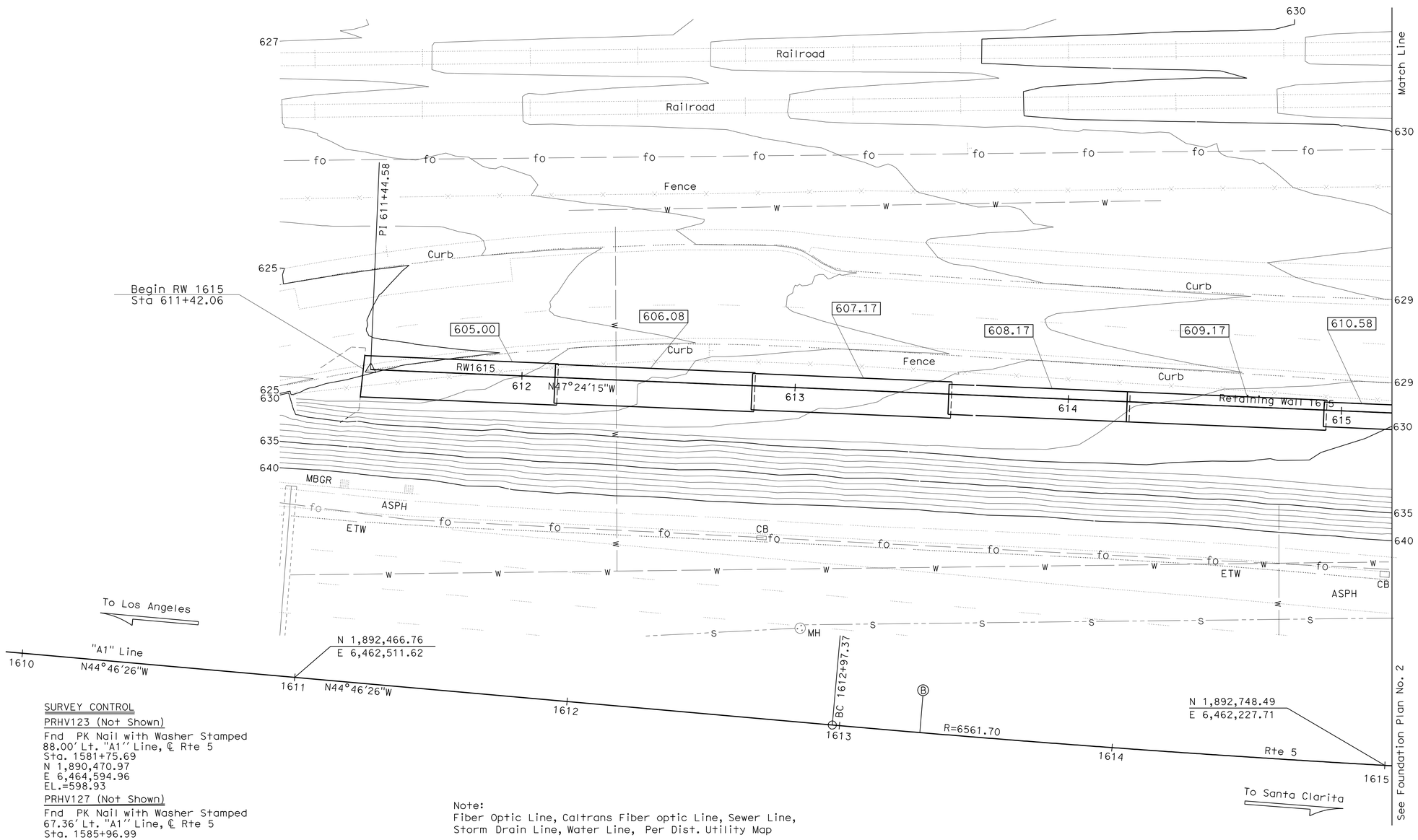

LEGEND

XXXXX — Indicates bottom of footing elevation

SURVEY CONTROL

PRHV123 (Not Shown)

Fnd PK Nail with Washer Stamped
88.00′ Lt. "A1″ Line, ℄ Rte 5
Sta. 1581+75.69
N 1,890,470.97
E 6,464,594.96
EL.=598.93

PRHV127 (Not Shown)

Fnd PK Nail with Washer Stamped
67.36′ Lt. "A1″ Line, ℄ Rte 5
Sta. 1585+96.99
N 1,890,753.54
E 6,464,269.04
EL.=604.23

Note:
Fiber Optic Line, Caltrans Fiber optic Line, Sewer Line, Storm Drain Line, Water Line, Per Dist. Utility Map

PRELIMINARY INVESTIGATION SECTION

SCALE 1"=20′	VERT.DATUM NGVD 88	PHOTOGRAMMETRY AS OF: X			
	HORZ.DATUM NAD83 (1991.35)	SURVEYED	BY District	CHECKED	BY John Borden 10/2011
ALIGNMENT TIES Dist. Traverse Sheet		DRAFTED	BY Sharon Zheng 10/2011	CHECKED	BY Lawrence Lew 10/2011

DESIGN	BY DAVID P. MURRAY	CHECKED IMAD KARAM
DETAILS	BY FARIDEH RASHEDI	CHECKED DAVID P. MURRAY
QUANTITIES	BY JEFF DUFFIN	CHECKED ZIHAN YAN

STATE OF CALIFORNIA
DEPARTMENT OF TRANSPORTATION

DIVISION OF ENGINEERING SERVICES
STRUCTURE DESIGN
DESIGN BRANCH 18

BRIDGE NO. 53-RW-1615
POST MILE 30.43

RETAINING WALL NO. 1615
FOUNDATION PLAN NO. 01

STRUCTURES FOUNDATION PLAN SHEET (ENGLISH) (REV. 09-01-10)

ORIGINAL SCALE IN INCHES FOR REDUCED PLANS 0 1 2 3

UNIT: 3603
PROJECT NUMBER & PHASE: 0700021119
CONTRACT NO.: 07-1218W1

DISREGARD PRINTS BEARING EARLIER REVISION DATES

REVISION DATES 10/31/201

SHEET 2 OF 11

FILE => 53-rw1615-e-fpl01.dgn

DIST	COUNTY	ROUTE	POST MILES TOTAL PROJECT	SHEET No.	TOTAL SHEETS
07	LA	5	29.4/31.6	1235	1931

dEstrada. 01-30-12
REGISTERED CIVIL ENGINEER DATE

5-21-12
PLANS APPROVAL DATE

REGISTERED PROFESSIONAL ENGINEER
Jorge I. Estrada
No. C51473
Exp. 06-30-12
CIVIL
STATE OF CALIFORNIA

The State of California or its officers or agents shall not be responsible for the accuracy or completeness of electronic copies of this plan sheet.

CURVE DATA

No.	R	Δ	T	L
Ⓑ	6561.70	12°58'21"	746.01	1485.64

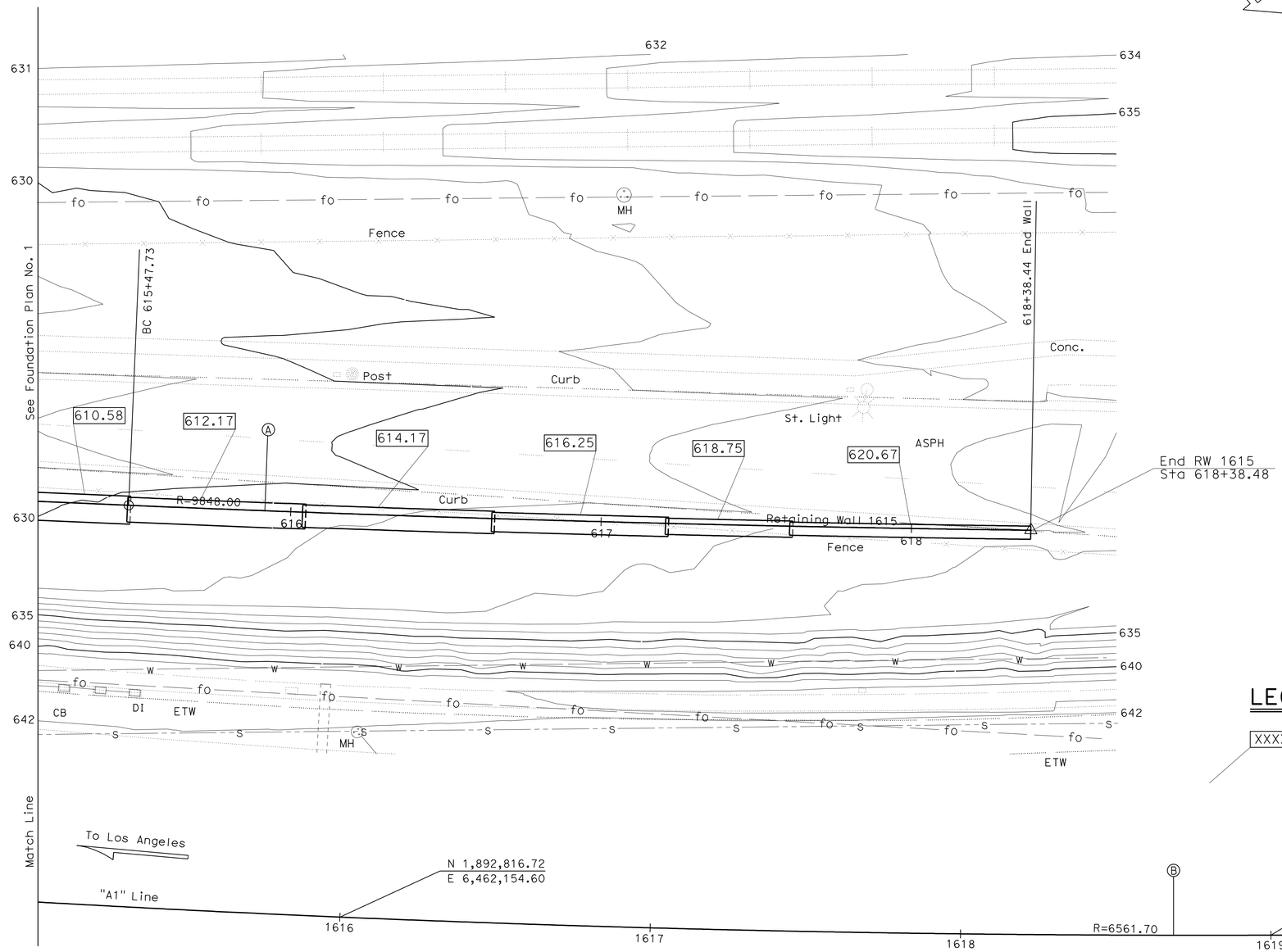

LEGEND

XXXXX Indicates bottom of footing elevation

Note:
Fiber Optic Line, Caltrans Fiber Optia Line, Storm Drain Line,
Water Line, Per Dist. Utility Map

PRELIMINARY INVESTIGATION SECTION

SCALE 1"=20'	VERT.DATUM NGVD 88	PHOTOGRAMMETRY AS OF: X			
	HORZ.DATUM NAD83 (1991.35)	SURVEYED	BY District	CHECKED	BY John Borden 10/2011
ALIGNMENT TIES Dist. Traverse Sheet		DRAFTED	BY Sharon Zheng 10/2011	CHECKED	BY Lawrence Lew 10/2011

DESIGN	BY DAVID P. MURRAY	CHECKED IMAD KARAM
DETAILS	BY FARIDEH RASHEDI	CHECKED DAVID P. MURRAY
QUANTITIES	BY JEFF DUFFIN	CHECKED ZIHAN YAN

STATE OF CALIFORNIA
DEPARTMENT OF TRANSPORTATION

DIVISION OF ENGINEERING SERVICES
STRUCTURE DESIGN
DESIGN BRANCH 18

BRIDGE NO. 53-RW-1615
POST MILE 30.43

RETAINING WALL NO. 1615
FOUNDATION PLAN NO. 02

STRUCTURES FOUNDATION PLAN SHEET (ENGLISH) (REV. 09-01-10)

ORIGINAL SCALE IN INCHES FOR REDUCED PLANS 0 1 2 3

UNIT: 3603
PROJECT NUMBER & PHASE: 0700021119
CONTRACT NO.: 07-1218W1

DISREGARD PRINTS BEARING EARLIER REVISION DATES

REVISION DATES 10/31/201

SHEET 3 OF 11

FILE => 53-rw1615-e-fpl02.dgn

DIST	COUNTY	ROUTE	POST MILES TOTAL PROJECT	SHEET No.	TOTAL SHEETS
07	LA	5	29.4/31.6	1236	1931

J Estrada. 01-30-12
REGISTERED CIVIL ENGINEER DATE

5-21-12
PLANS APPROVAL DATE

REGISTERED PROFESSIONAL ENGINEER
Jorge I. Estrada
No. C51473
Exp. 06-30-12
CIVIL
STATE OF CALIFORNIA

The State of California or its officers or agents shall not be responsible for the accuracy or completeness of electronic copies of this plan sheet.

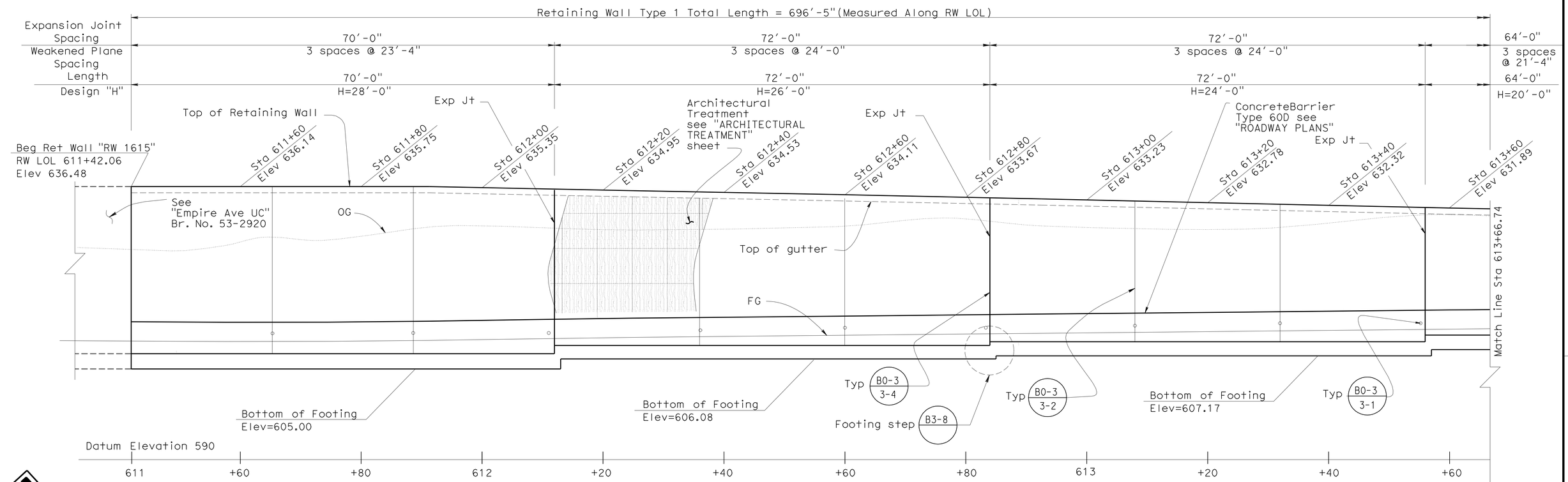

DEVELOPED MIRROR ELEVATION B3-1

1/8" = 1'

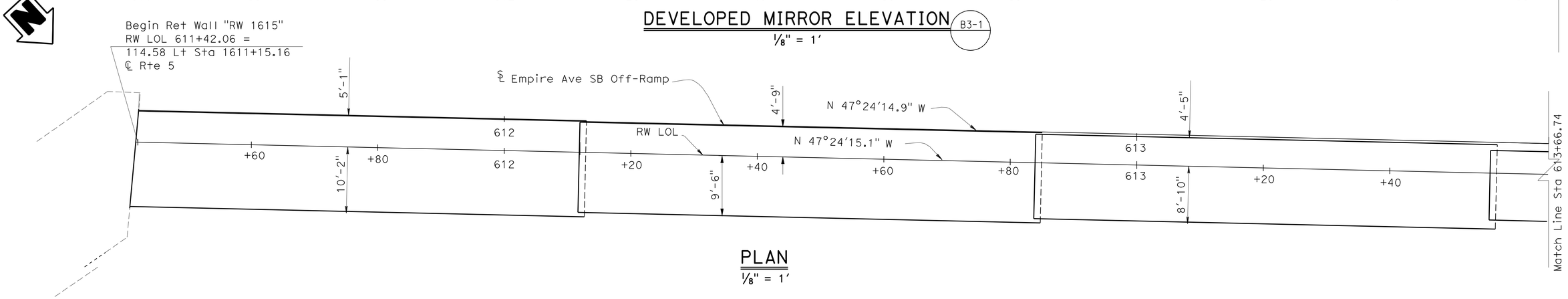

PLAN

1/8" = 1'

DESIGN	BY DAVID P. MURRAY	CHECKED IMAD KARAM	
DETAILS	BY FARIDEH RASHEDI	CHECKED DAVID P. MURRAY	
QUANTITIES	BY J. DUFFIN/JOSH RUNNION	CHECKED ZIHAN YAN/M. SCHOTT	

STATE OF CALIFORNIA
DEPARTMENT OF TRANSPORTATION

DIVISION OF ENGINEERING SERVICES
STRUCTURE DESIGN
DESIGN BRANCH 18

BRIDGE NO. RW 1615
POST MILE 30.53

RETAINING WALL 1615
STRUCTURE PLAN NO. 1

STRUCTURES DESIGN DETAIL SHEET (ENGLISH) (REV. 09-01-10)

ALL DIMENSIONS ARE IN FEET UNLESS OTHERWISE SHOWN

ORIGINAL SCALE IN INCHES FOR REDUCED PLANS 0 1 2 3

UNIT: 3603
PROJECT NUMBER & PHASE: 070021119-1
CONTRACT NO.: 07-1218W1

DISREGARD PRINTS BEARING EARLIER REVISION DATES

REVISION DATES 7-1-05 7-01-08 6-05-11

SHEET 4 OF 11

FILE => 53-rw1615-g-rw_01.dgn

USERNAME => s124496 DATE PLOTTED => 21-MAY-2012 TIME PLOTTED => 16:23

DIST	COUNTY	ROUTE	POST MILES TOTAL PROJECT	SHEET No.	TOTAL SHEETS
07	LA	5	29.4/31.6	1237	1931

REGISTERED CIVIL ENGINEER — DATE 01-30-12

5-21-12
PLANS APPROVAL DATE

REGISTERED PROFESSIONAL ENGINEER — Jorge I. Estrada — No. C 51473 — Exp. 06-30-12 — CIVIL — STATE OF CALIFORNIA

The State of California or its officers or agents shall not be responsible for the accuracy or completeness of electronic copies of this plan sheet.

CURVE DATA

No.	R	Δ	T	L
1	9848.003	5°32′34.7″	476.734	952.724
2	9843.193	5°32′34.8″	476.506	952.268

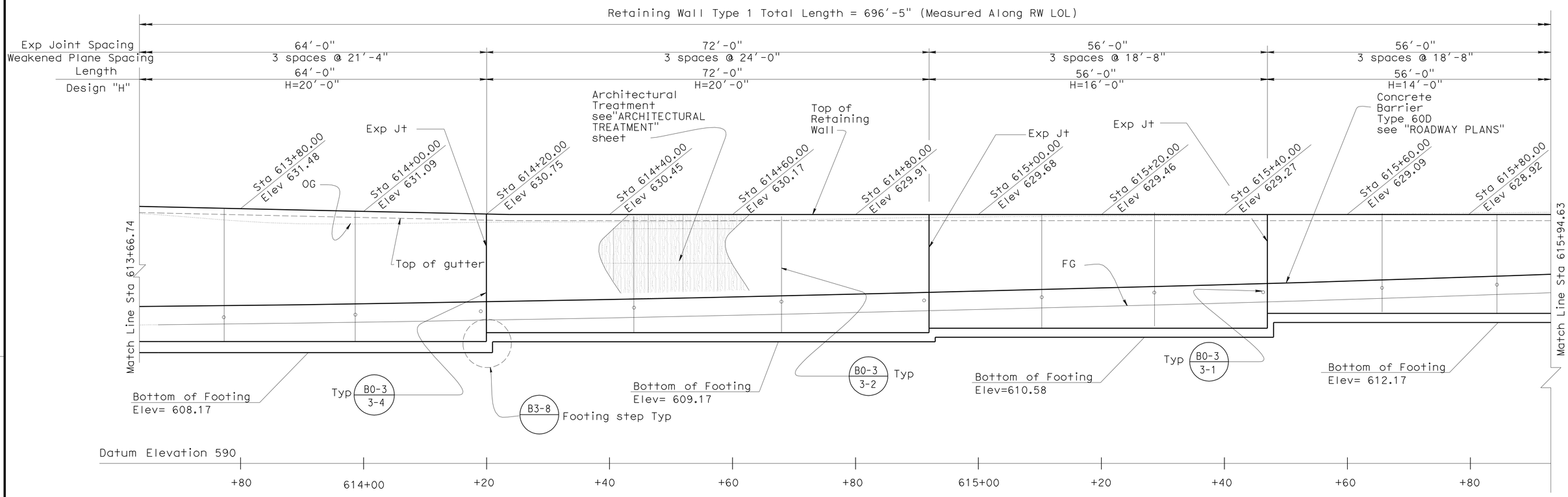

DEVELOPED MIRROR ELEVATION

1/8″ = 1′

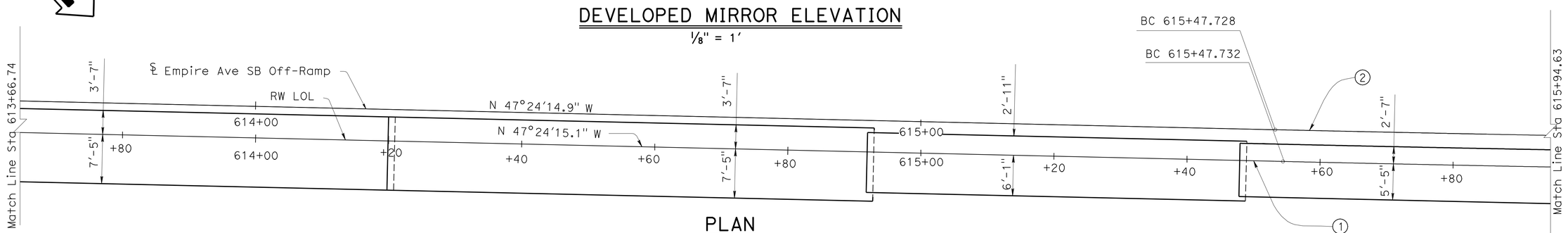

PLAN

1/8″ = 1′

DESIGN	BY DAVID P. MURRAY	CHECKED IMAD KARAM	
DETAILS	BY FARIDEH RASHEDI	CHECKED DAVID P.MURRAY	
QUANTITIES	BY J. DUFFIN/JOSH RUNNION	CHECKED ZIHAN YAN/M. SCHOTT	

STATE OF CALIFORNIA
DEPARTMENT OF TRANSPORTATION

DIVISION OF ENGINEERING SERVICES
STRUCTURE DESIGN
DESIGN BRANCH 18

BRIDGE NO. RW 1615
POST MILE 30.53

RETAINING WALL 1615
STRUCTURE PLAN NO.2

STRUCTURES DESIGN DETAIL SHEET (ENGLISH) (REV. 09-01-10)

ALL DIMENSIONS ARE IN FEET UNLESS OTHERWISE SHOWN

ORIGINAL SCALE IN INCHES FOR REDUCED PLANS 0 1 2 3

UNIT: 3603
PROJECT NUMBER & PHASE: 0700021119-1
CONTRACT NO.: 07-1218W1

DISREGARD PRINTS BEARING EARLIER REVISION DATES

REVISION DATES: 7-7-05 3-28-07 6-06-11

SHEET 5 OF 11

FILE => 53-rw1615-g-rw_02.dgn

USERNAME => s124496 DATE PLOTTED => 21-MAY-2012 TIME PLOTTED => 16:23

DIST	COUNTY	ROUTE	POST MILES TOTAL PROJECT	SHEET No.	TOTAL SHEETS
07	LA	5	29.4/31.6	1238	1931

REGISTERED CIVIL ENGINEER — DATE 01-30-12

5-21-12
PLANS APPROVAL DATE

REGISTERED PROFESSIONAL ENGINEER — Jorge I. Estrada — No. C51473 — Exp. 06-30-12 — CIVIL — STATE OF CALIFORNIA

The State of California or its officers or agents shall not be responsible for the accuracy or completeness of electronic copies of this plan sheet.

CURVE DATA

No.	R	Δ	T	L
1	9848.003	5°32'34.7"	476.734	952.724
2	9843.193	5°32'34.8"	476.506	952.268

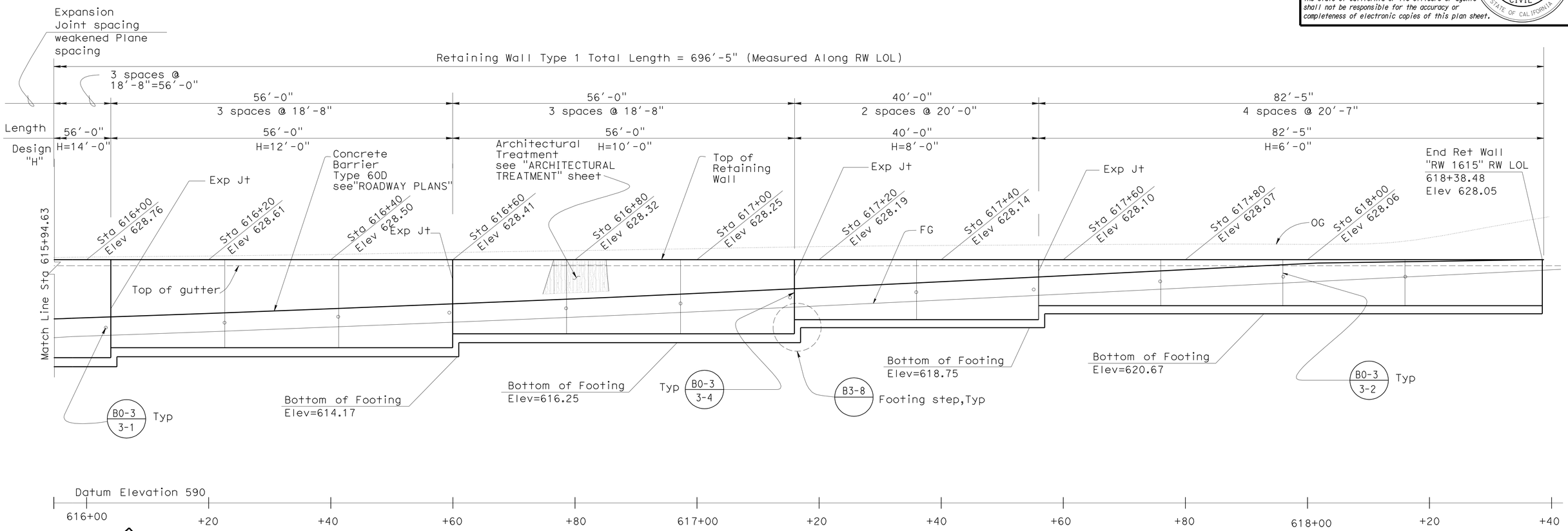

DEVELOPED MIRROR ELEVATION

1/8" = 1'

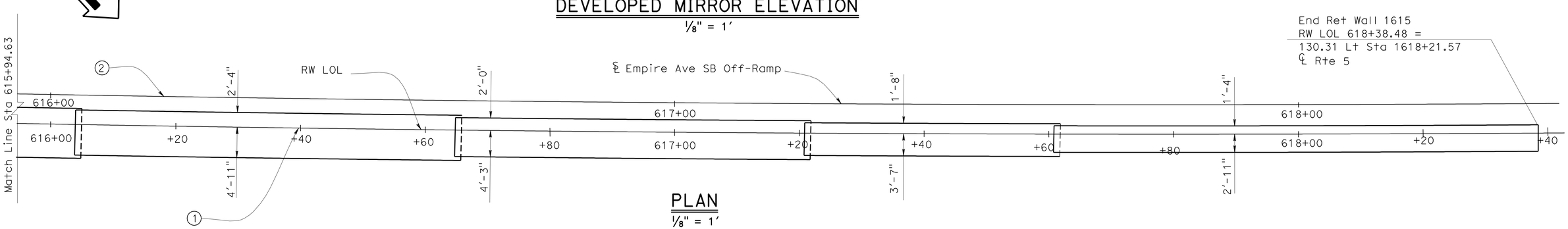

PLAN

1/8" = 1'

DESIGN	BY DAVID P. MURRAY	CHECKED IMAD KARAM	
DETAILS	BY FARIDEH RASHEDI	CHECKED DAVID P. MURRAY	
QUANTITIES	BY J. DUFFIN/JOSH RUNNION	CHECKED ZIHAN YAN/M. SCHOTT	

STATE OF CALIFORNIA
DEPARTMENT OF TRANSPORTATION

DIVISION OF ENGINEERING SERVICES
STRUCTURE DESIGN
DESIGN BRANCH 18

BRIDGE NO. RW 1615
POST MILE 30.53

RETAINING WALL 1615
STRUCTURE PLAN NO.3

STRUCTURES DESIGN DETAIL SHEET (ENGLISH) (REV. 09-01-10)

ALL DIMENSIONS ARE IN FEET UNLESS OTHERWISE SHOWN

ORIGINAL SCALE IN INCHES FOR REDUCED PLANS 0 1 2 3

UNIT: 3603
PROJECT NUMBER & PHASE: 0700021119-1
CONTRACT NO.: 07-1218W1

DISREGARD PRINTS BEARING EARLIER REVISION DATES

REVISION DATES: 7-1-05 10-16-07 6-06-11

SHEET 6 OF 11

FILE => 53-rw1615-g-rw_03.dgn

USERNAME => s124496 DATE PLOTTED => 21-MAY-2012 TIME PLOTTED => 16:24

DIST	COUNTY	ROUTE	POST MILES TOTAL PROJECT	SHEET No.	TOTAL SHEETS
07	LA	5	29.4/31.6	1239	1931

REGISTERED CIVIL ENGINEER — DATE 01-30-12

5-21-12
PLANS APPROVAL DATE

REGISTERED PROFESSIONAL ENGINEER — Jorge I. Estrada — No. C51473 — Exp. 06-30-12 — CIVIL — STATE OF CALIFORNIA

The State of California or its officers or agents shall not be responsible for the accuracy or completeness of electronic copies of this plan sheet.

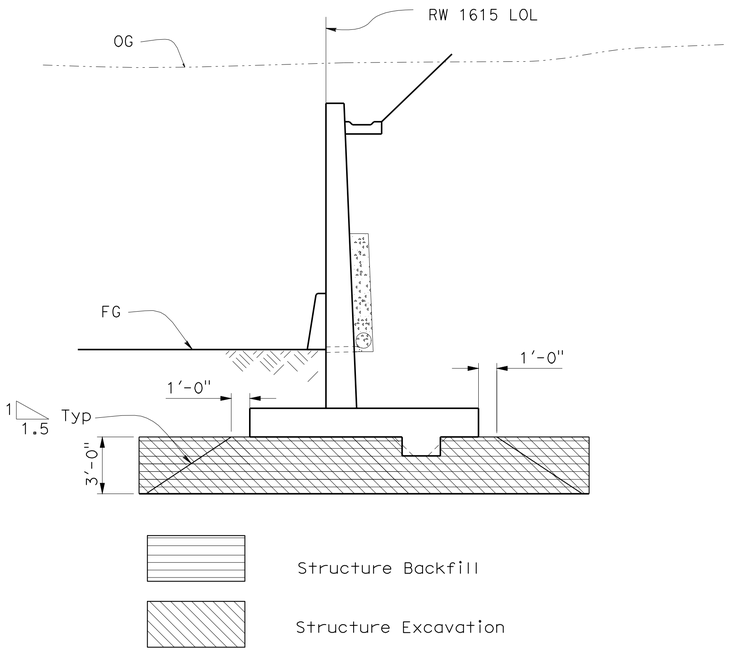

From Sta 612+84.06 to 618+38.48

OVER EXCAVATION LIMITS

1/4'= 1'

SPREAD FOOTING DATA TABLE

RW LOL Stationing (ft) From	RW LOL Stationing (ft) To	Gross Allowable Soil Bearing Pressure ASD[1] (q_{all}) (ksf)
STA 611+42.06	STA 612+12.06	7.1
STA 612+12.06	STA 612+84.06	6.5
STA 612+84.06	STA 613+56.06	6.0
STA 613+56.06	STA 614+20.06	4.7
STA 614+20.06	STA 614+92.06	4.7
STA 614+92.06	STA 615+48.06	3.7
STA 615+48.06	STA 616+04.06	3.3
STA 616+04.06	STA 616+60.06	2.7
STA 616+60.06	STA 617+16.06	2.3
STA 617+16.06	STA 617+56.06	2.0
STA 617+56.06	STA 618+38.48	1.5

Notes: Allowable Stress Design, (ASD). the Maximum Contact Pressure, (q_{max}), is not to exceed the recommended Gross Allowable Soil Bearing Pressure, (q_{all}). The Ultimate Soil bearing capacity, (q_{ult}), will equal or exceed 3 times the recommended gross Allowable Soil Bearing Pressure,(q_{all}).

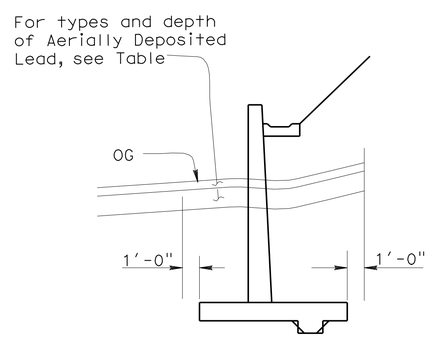

AERIALLY DEPOSITED LEAD

ADL TYPE	DEPTH FT	STATION LIMIT ALONG ℄ I-5 FROM	TO
Y-1	2.50	1611+15.16	1612+53.03
Y-1	2.00	1612+53.03	1618+21.57
Y-2	0.50	1612+53.03	1618+21.57

LIMITS OF STRUCTURE EXCAVATION, AERIALLY DEPOSITED LEAD (ADL)

No Scale

DESIGN	BY DAVID P. MURRAY	CHECKED IMAD KARAM	
DETAILS	BY FARIDEH RASHEDI	CHECKED DAVID P. MURRAY	
QUANTITIES	BY J. DUFFIN/JOSH RUNNION	CHECKED ZIHAN YAN/M. SCHOTT	

STATE OF CALIFORNIA
DEPARTMENT OF TRANSPORTATION

DIVISION OF ENGINEERING SERVICES
STRUCTURE DESIGN
DESIGN BRANCH 18

BRIDGE NO. RW 1615
POST MILE 30.53

RETAINING WALL 1615
RETAINING WALL DETAILS

STRUCTURES DESIGN DETAIL SHEET (ENGLISH) (REV. 09-01-10)

ORIGINAL SCALE IN INCHES FOR REDUCED PLANS 0 1 2 3

UNIT: 3603
PROJECT NUMBER & PHASE: 0700021119-1
CONTRACT NO.: 07-1218W1

DISREGARD PRINTS BEARING EARLIER REVISION DATES

REVISION DATES: 8-1-07 4-18-12 11-15-11

SHEET 7 OF 11

FILE => 53-rw1615-q-rwdt01.dgn

USERNAME => s124496 DATE PLOTTED => 21-MAY-2012 TIME PLOTTED => 16:24

DIST	COUNTY	ROUTE	POST MILES TOTAL PROJECT	SHEET No.	TOTAL SHEETS
07	LA	5	29.4/31.6	1240	1931

REGISTERED CIVIL ENGINEER — DATE 01-30-12

PLANS APPROVAL DATE 5-21-12

REGISTERED PROFESSIONAL ENGINEER — Jorge I. Estrada — No. C51473 — Exp. 06-30-12 — CIVIL — STATE OF CALIFORNIA

The State of California or its officers or agents shall not be responsible for the accuracy or completeness of electronic copies of this plan sheet.

NOTE :

FRACTURED GRANITE TEXTURE SHALL RUN PERPENDICULAR TO PLUMB.

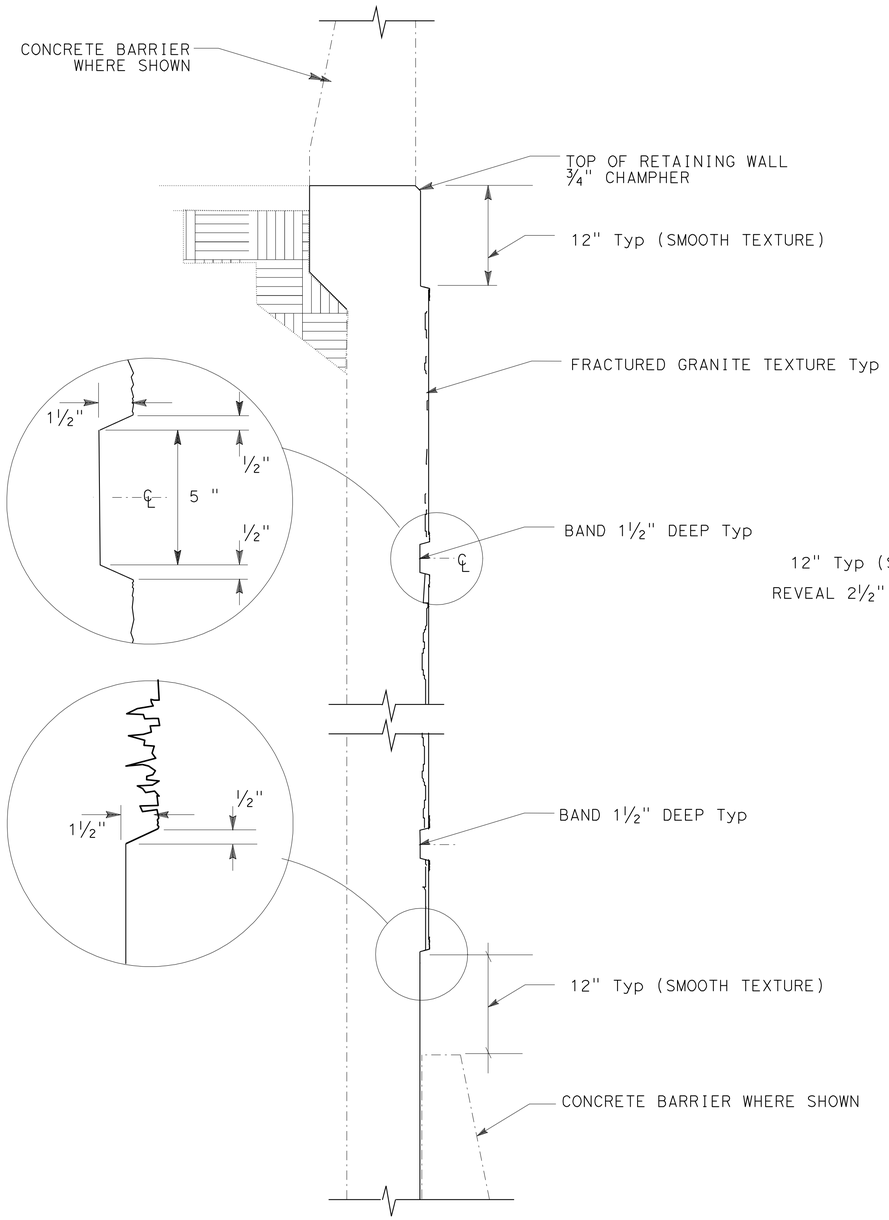

RETAINING WALL
TYPICAL SECTION

ARCHITECTURAL TREATMENT SECTION FOR RETAINING WALL

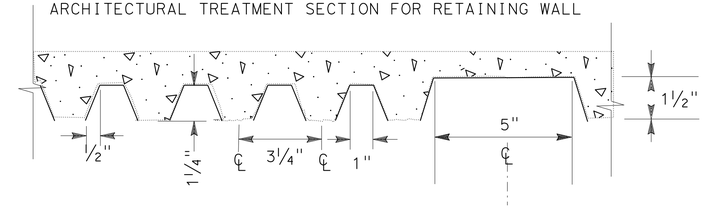

FRACTURED GRANITE TEXTURE & BAND

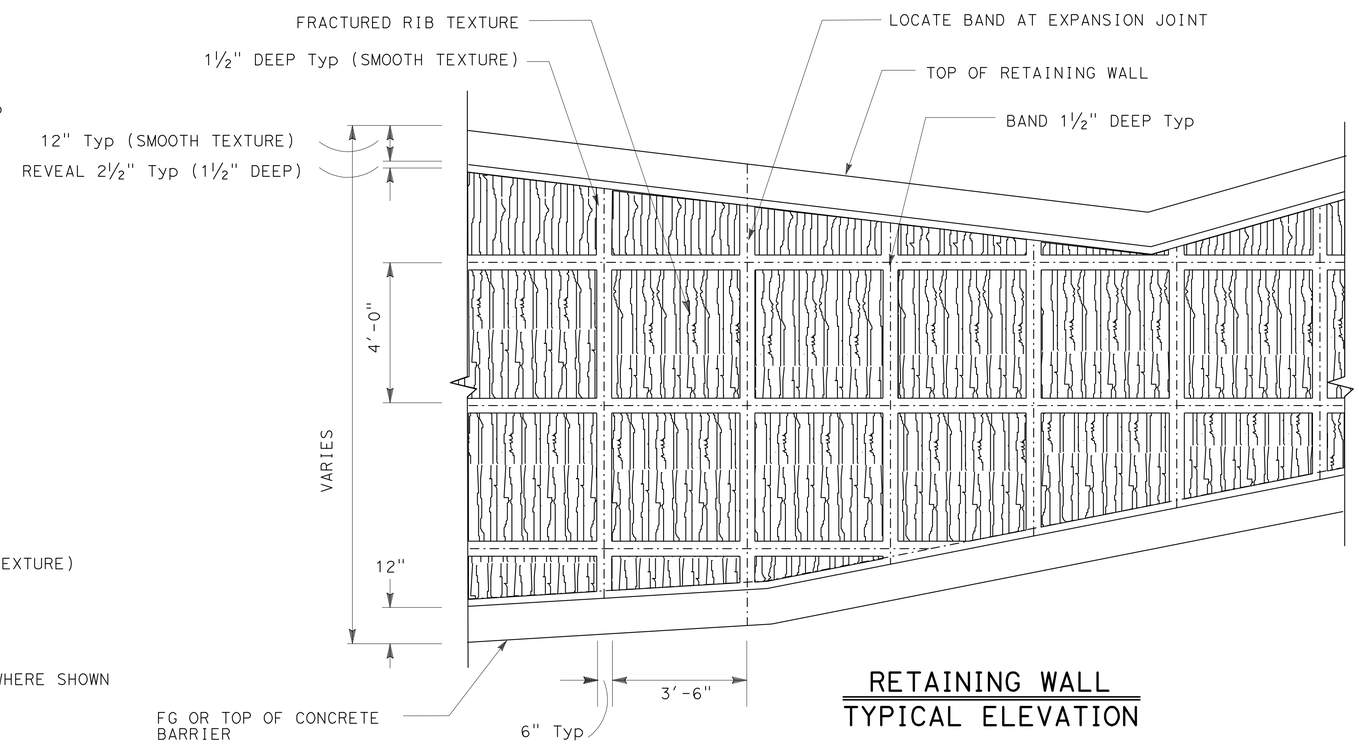

RETAINING WALL
TYPICAL ELEVATION

NO SCALE

DESIGN	BY DAVID P. MURRAY	CHECKED IMAD KARAM	
DETAILS	BY FARIDEH RASHEDI	CHECKED DAVID P. MURRAY	
QUANTITIES	BY J. DUFFIN/JOSH RUNNION	CHECKED ZIHAN YAN/M. SCHOTT	

STATE OF CALIFORNIA
DEPARTMENT OF TRANSPORTATION

DIVISION OF ENGINEERING SERVICES
STRUCTURE DESIGN
DESIGN BRANCH 18

BRIDGE NO. RW 1615
POST MILE 30.53

RETAINING WALL 1615
ARCHITECTURAL TREATMENT

STRUCTURES DESIGN DETAIL SHEET (ENGLISH) (REV. 09-01-10)

ORIGINAL SCALE IN INCHES FOR REDUCED PLANS 0 1 2 3

UNIT: 3603
PROJECT NUMBER & PHASE: 0700021119-1
CONTRACT NO.: 07-1218W1

DISREGARD PRINTS BEARING EARLIER REVISION DATES

REVISION DATES 10-05-11 1-05-12

SHEET 8 OF 11

FILE => 53-rw1615-u-arch.dgn

USERNAME => s124496 DATE PLOTTED => 21-MAY-2012 TIME PLOTTED => 16:24

DIST	COUNTY	ROUTE	POST MILE TOTAL PROJECT	SHEET No	TOTAL SHEETS
07	LA	5	29.4/31.6	1241	1931

R Shiva Karimi 1-25-12
REGISTERED GEOTECHNICAL ENGINEER

5-21-12
PLANS APPROVAL DATE

REGISTERED PROFESSIONAL ENGINEER — Shiva Karimi No. GE2651 Exp. 6-30-12 — GEOTECHNICAL — STATE OF CALIFORNIA

The State of California or its officers or agents shall not be responsible for the accuracy or completeness of electronic copies of this plan sheet.

BENCH MARKS

BM PRHV903 Elev 641.701 ft
Fd PK Nail SBND LA-5 shoulder; ±9.2 ft north of concrete barrier SBND San Fernando Rd. Bridge; ±9.5 ft in from EP; 69.054 ft Lt Sta 1610+60.79 C/L Rte 5 (Prop).
N 1892390.293
E 6462490.218

BM PRHV302 Elev 627.869 ft
Fd Chiseled "X" on island-median, N/E of LA-5/ San Fernando Rd. S/bnd. UC (tunnel); +10 ft. From electrolier; +1.6 ft. From top curb, 176.527 ft Lt Sta 1613+01.41 C/L Rte 5 (Prop).
N 1892485.336
E 6462244.53

BM PRHV202 Elev 644.29 ft
Fd Chiseled "X" on Pullbox at the south end of SBND San Fernando Rd UC; 67.698 ft Lt Sta 1623+80.06 C/L Rte 5 (Prop).
N 1893254.294
E 6461510.679

NAD83, NAVD88

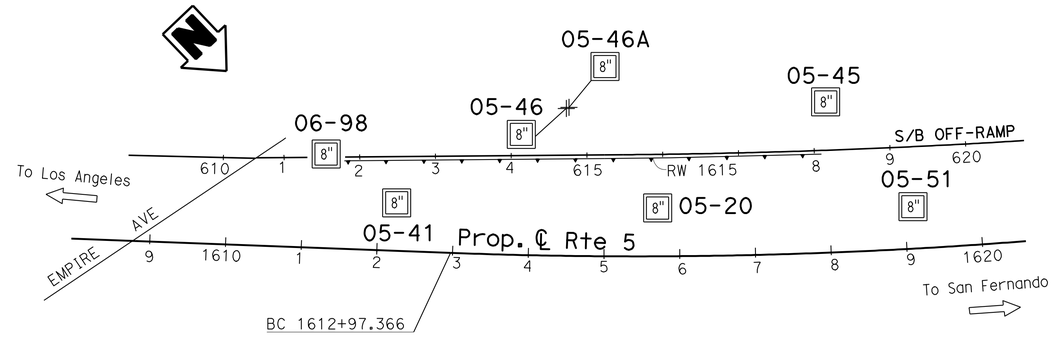

PLAN
1" = 100'

LEGEND:

- (M) Moisture Content
- (PA) Particle Size Analysis
- (PI) Plasticity, Index, Liquid Limit
- (CR) Corrosivity Testing
- (CP) Compaction

Note: No ground water encountered during field investigation.

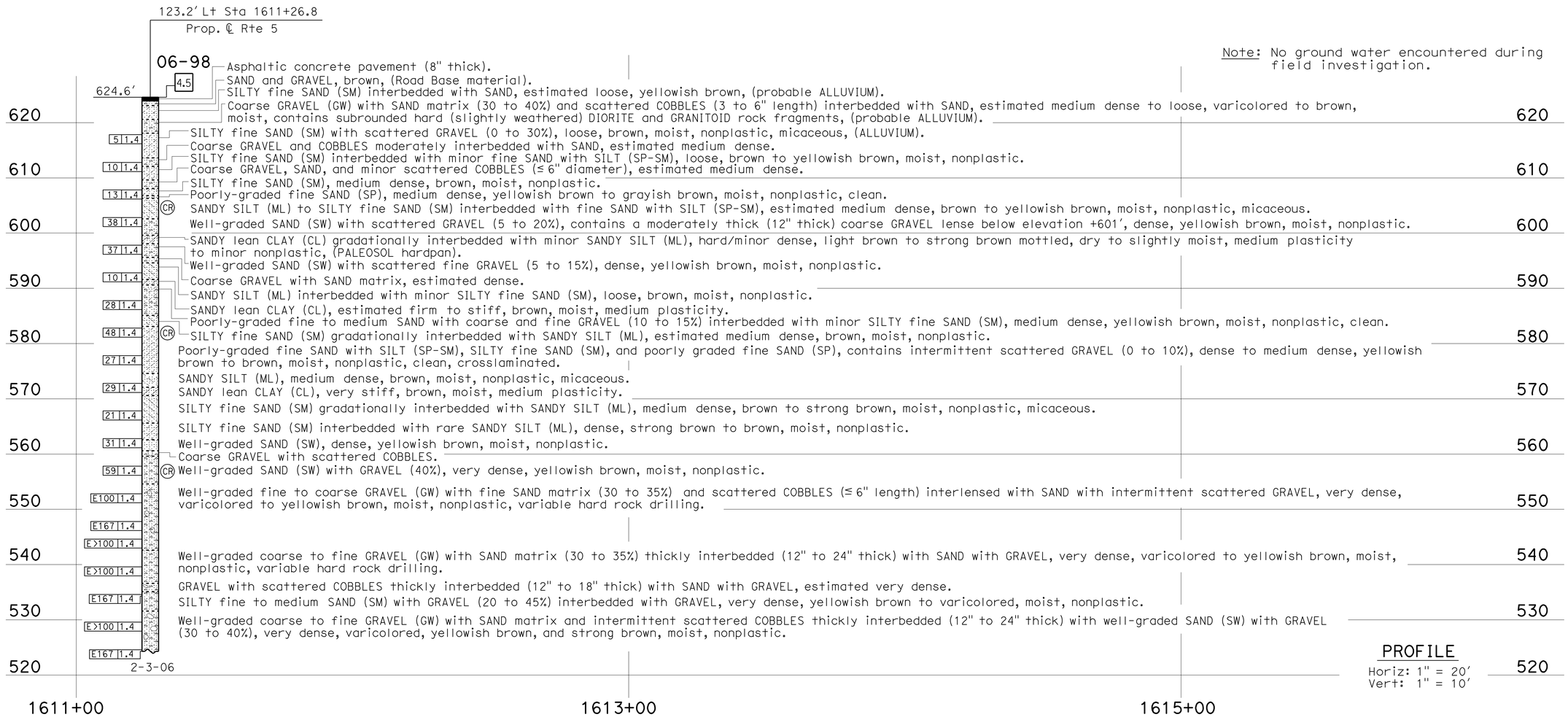

PROFILE
Horiz: 1" = 20'
Vert: 1" = 10'

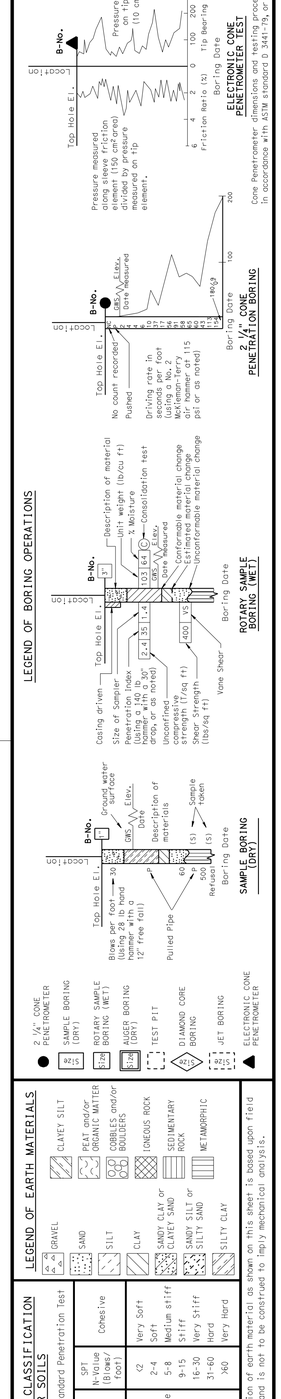

ENGINEERING SERVICES	GEOTECHNICAL SERVICES
DRAWN BY	I.G-Remmen
CHECKED BY	J. Pratt

FIELD INVESTIGATION BY: J. Pratt

STATE OF CALIFORNIA DEPARTMENT OF TRANSPORTATION

DIVISION OF ENGINEERING SERVICES STRUCTURE DESIGN
DESIGN BRANCH 18

BRIDGE NO. RW 1615
POST MILE 30.52/30.65

RETAINING WALL NO. 1615
LOG OF TEST BORINGS 1 OF 3

OGS LOG OF TEST BORINGS SHEET (ENGLISH) (REV. 5/25/07)

ORIGINAL SCALE IN INCHES FOR REDUCED PLANS 0 1 2 3

UNIT: 3643
PROJECT NUMBER & PHASE: 07000211191
CONTRACT NO.: 07-1218W1

DISREGARD PRINTS BEARING EARLIER REVISION DATES

REVISION DATES 01-25-12 | SHEET 9 OF 11

FILE => 53-rw1615-z-lotb01.dgn

USERNAME => s1244496 DATE PLOTTED => 21-MAY-2012 TIME PLOTTED => 17:32

DIST	COUNTY	ROUTE	POST MILE TOTAL PROJECT	SHEET No	TOTAL SHEETS
07	LA	5	29.4/31.6	1242	1931

R Shiva Karimi 1-25-12
REGISTERED GEOTECHNICAL ENGINEER

5-21-12
PLANS APPROVAL DATE

REGISTERED PROFESSIONAL ENGINEER Shiva Karimi No. GE2651 Exp. 6-30-12 GEOTECHNICAL STATE OF CALIFORNIA

The State of California or its officers or agents shall not be responsible for the accuracy or completeness of electronic copies of this plan sheet.

LEGEND:

- (M) Moisture Content
- (PA) Particle Size Analysis
- (PI) Plasticity, Index, Liquid Limit
- (CR) Corrosivity Testing
- (CP) Compaction

FOR PLAN VIEW, SEE
"LOG OF TEST BORINGS 1 OF 3"

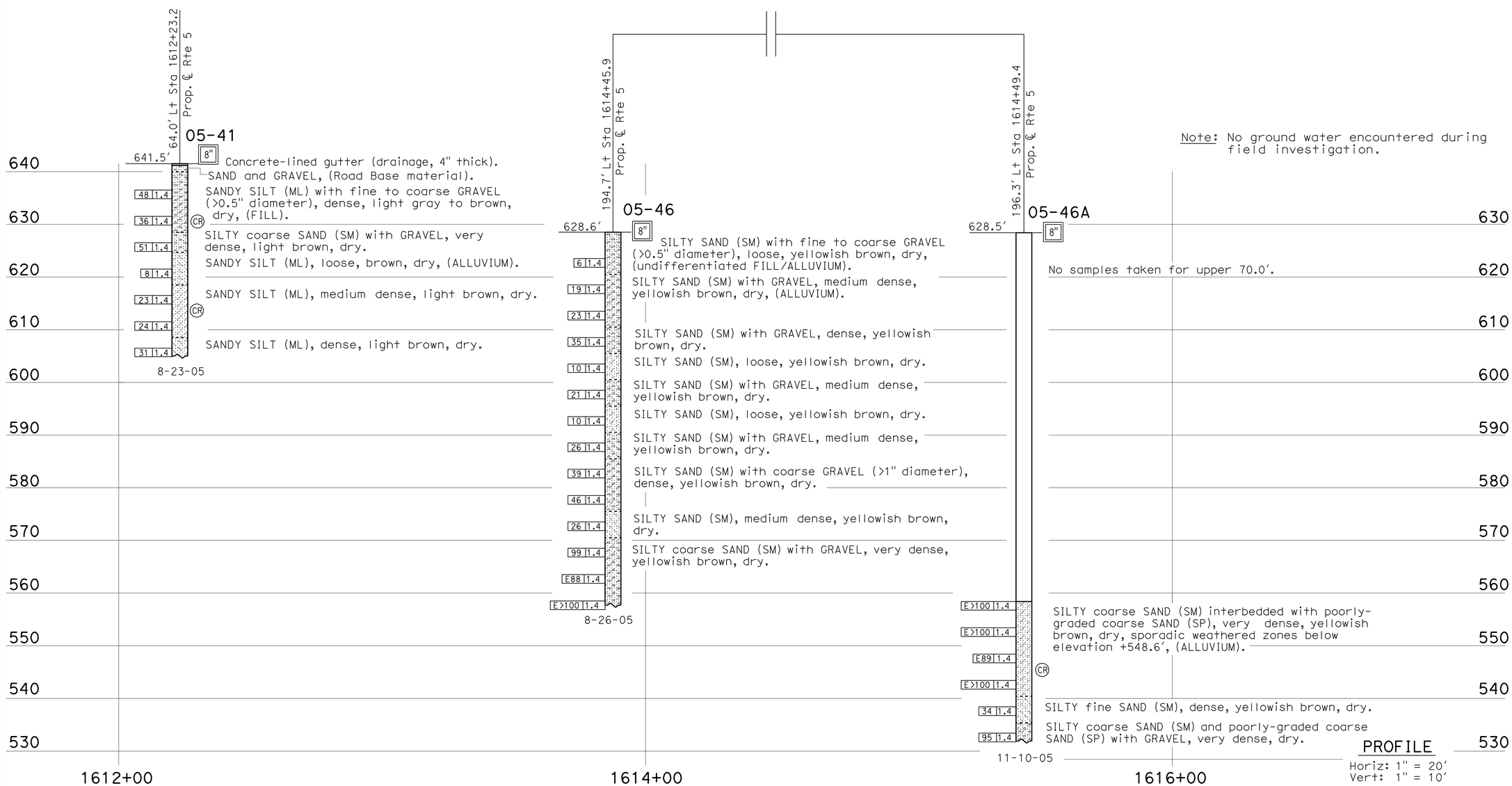

Note: No ground water encountered during field investigation.

PROFILE
Horiz: 1" = 20'
Vert: 1" = 10'

LEGEND OF BORING OPERATIONS

LEGEND OF EARTH MATERIALS

CONSISTENCY CLASSIFICATION FOR SOILS
According to the Standard Penetration Test

SPT N-Value (Blows/ foot)	Granular	SPT N-Value (Blows/ foot)	Cohesive
0-4	Very Loose	<2	Very Soft
5-10	Loose	2-4	Soft
11-30	Medium Dense	5-8	Medium stiff
31-50	Dense	9-15	Stiff
>50	Very Dense	16-30	Very Stiff
		31-60	Hard
		>60	Very Hard

NOTE: Classification of earth material as shown on this sheet is based upon field inspection and is not to be construed to imply mechanical analysis.

ENGINEERING SERVICES	GEOTECHNICAL SERVICES
DRAWN BY	I.G-Remmen
CHECKED BY	J. Pratt

FIELD INVESTIGATION BY: K. Lai

STATE OF CALIFORNIA
DEPARTMENT OF TRANSPORTATION

DIVISION OF ENGINEERING SERVICES
STRUCTURE DESIGN
DESIGN BRANCH 18

BRIDGE NO. RW 1615
POST MILE 30.52/30.65

RETAINING WALL NO. 1615
LOG OF TEST BORINGS 2 OF 3

OGS LOG OF TEST BORINGS SHEET (ENGLISH) (REV. 5/25/07)

ORIGINAL SCALE IN INCHES FOR REDUCED PLANS 0 1 2 3

UNIT: 3643
PROJECT NUMBER & PHASE: 07000211191
CONTRACT NO.: 07-1218W1

DISREGARD PRINTS BEARING EARLIER REVISION DATES

REVISION DATES				SHEET	OF
01-25-12				10	11

FILE => 53-rw1615-z-ltb02.dgn

USERNAME => s1241496 DATE PLOTTED => 21-MAY-2012 TIME PLOTTED => 17:32

DIST	COUNTY	ROUTE	POST MILE TOTAL PROJECT	SHEET No	TOTAL SHEETS
07	LA	5	29.4/31.6	1243	1931

R Shiva Karimi 1-25-12
REGISTERED GEOTECHNICAL ENGINEER

5-21-12
PLANS APPROVAL DATE

REGISTERED PROFESSIONAL ENGINEER
Shiva Karimi
No. GE2651
Exp. 6-30-12
GEOTECHNICAL
STATE OF CALIFORNIA

The State of California or its officers or agents shall not be responsible for the accuracy or completeness of electronic copies of this plan sheet.

LEGEND:

- (M) Moisture Content
- (PA) Particle Size Analysis
- (PI) Plasticity, Index, Liquid Limit
- (CR) Corrosivity Testing
- (CP) Compaction

FOR PLAN VIEW, SEE
"LOG OF TEST BORINGS 1 OF 3"

Note: No ground water encountered during field investigation.

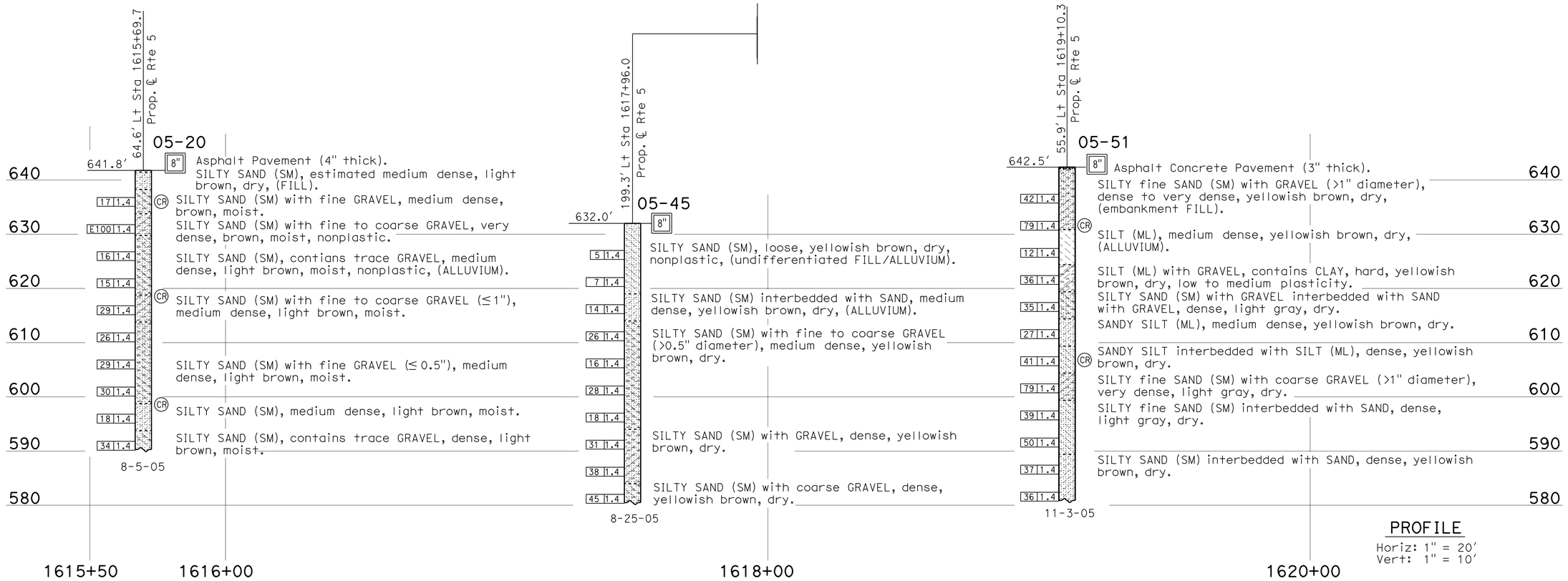

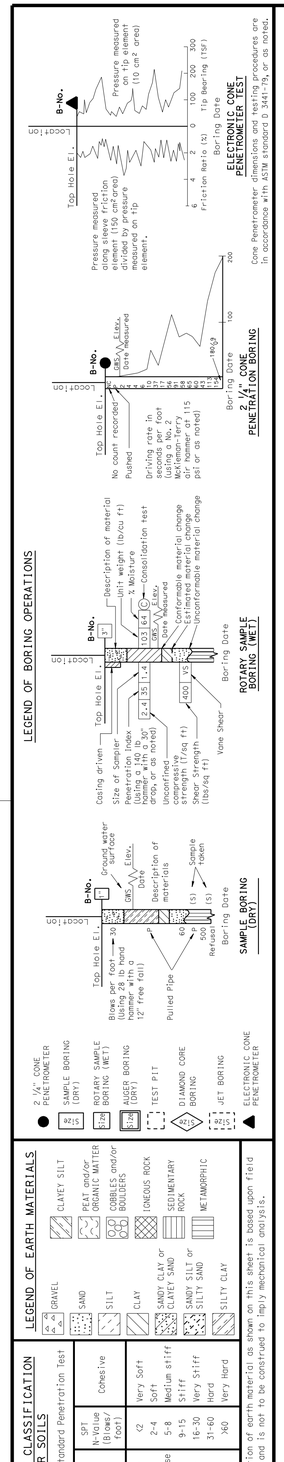

ENGINEERING SERVICES	GEOTECHNICAL SERVICES
DRAWN BY	I.G-Remmen
CHECKED BY	J. Pratt, A. Mehrazar

FIELD INVESTIGATION BY:
M. Abouzalan, K. Lai

STATE OF CALIFORNIA
DEPARTMENT OF TRANSPORTATION

DIVISION OF ENGINEERING SERVICES
STRUCTURE DESIGN
DESIGN BRANCH 18

BRIDGE NO. RW 1615
POST MILE 30.52/30.65

RETAINING WALL NO. 1615
LOG OF TEST BORINGS 3 OF 3

OGS LOG OF TEST BORINGS SHEET (ENGLISH) (REV. 5/25/07)

ORIGINAL SCALE IN INCHES FOR REDUCED PLANS 0 1 2 3

UNIT: 3643
PROJECT NUMBER & PHASE: 07000211191
CONTRACT NO.: 07-1218W1

DISREGARD PRINTS BEARING EARLIER REVISION DATES

REVISION DATES				SHEET	OF
01-25-12				11	11

FILE => 53-rw1615-z-ltb03.dgn

USERNAME => s124196 DATE PLOTTED => 21-MAY-2012 TIME PLOTTED => 17:32

DIST	COUNTY	ROUTE	POST MILES TOTAL PROJECT	SHEET No.	TOTAL SHEETS
07	LA	5	29.4/31.6	1244	1931

REGISTERED CIVIL ENGINEER — DATE 1/31/12

5-21-12
PLANS APPROVAL DATE

REGISTERED PROFESSIONAL ENGINEER — JORGE I. ESTRADA — No. C51473 — Exp. 06-30-12 — CIVIL — STATE OF CALIFORNIA

The State of California or its officers or agents shall not be responsible for the accuracy or completeness of electronic copies of this plan sheet.

STANDARD PLANS DATED MAY 2006

A10A - A10B	Acronyms And Abbreviations
A10C - A10D	Symbols
A62B	Limits of Payment for Excavation and Backfill Bridge Surcharge and Wall
RSP A77J3	Metal Beam Guard Railing connection To Abutments And Walls
B0-3	Bridge Details
B3-8	Retaining Wall Details No.1
B3-9	Retaining Wall Details No.2
B11-56	Concrete Barrier Type 736
RSP B15-6	Soundwall Masonry Block on Type 736S/SV Barrier Details (1)
B15-12	Soundwall Masonry Block on Barrier 5'-0" Access Gate Details (1)
B15-13	Soundwall Masonry Block on Barrier 5'-0" Access Gate Details (2)
B15-14	Soundwall Masonry Block Access Gate Locking Details
RSP B15-7	Soundwall Masonry Block on Type 736S/SV Barrier Details (2)
RSP B15-8	Soundwall Masonry Block on Type 736S/SV Barrier Details (3)
S3	Overhead Signs-Truss Single Post Structure Frame Members Details No.1
S7	Overhead Signs-Truss Single Post Square Pedestal Pile Foundation
RSP ES-6A	Electrical System (Lighting Standard Types 15 and 21)

Standard Plan Sheet. No.

Detail No.

Note:
1. For Spread Footing Data Table, see "STRUCTURE PLAN NO. 10" sheet.
2. For limits of excavation for Aerially Deposited Lead (ADL), see "STRUCTURE PLAN NO.11"sheet
3. Relocation of existing utilities prior to this Contract by Others.
4. For electrolier locations and pedestal details, see "Structure Plan No. 4" sheet

INDEX TO PLANS

SHEET NO.	TITLE
1	GENERAL PLAN
2	FOUNDATION PLAN NO. 1
3	FOUNDATION PLAN NO. 2
4	FOUNDATION PLAN NO. 3
5	FOUNDATION PLAN NO. 4
6	FOUNDATION PLAN NO. 5
7	STRUCTURE PLAN NO. 1
8	STRUCTURE PLAN NO. 2
9	STRUCTURE PLAN NO. 3
10	STRUCTURE PLAN NO. 4
11	STRUCTURE PLAN NO. 5
12	STRUCTURE PLAN NO. 6
13	STRUCTURE PLAN NO. 7
14	STRUCTURE PLAN NO. 8
15	STRUCTURE PLAN NO. 9
16	STRUCTURE PLAN NO. 10
17	STRUCTURE PLAN NO. 11
18	RETAINING WALL TYPE 1SWB
19	SOUNDWALL-MASONRY BLOCK WITH BARRIER ON RETAINING WALL-DETAILS NO. 1
20	SOUNDWALL-MASONRY BLOCK WITH BARRIER ON RETAINING WALL-DETAILS NO. 2
21	SIGN DETAILS
22	ARCHITECTURAL TREATMENT
23	LOG OF TEST BORINGS 1 OF 6
24	LOG OF TEST BORINGS 2 OF 6
25	LOG OF TEST BORINGS 3 OF 6
26	LOG OF TEST BORINGS 4 OF 6
27	LOG OF TEST BORINGS 5 OF 6
28	LOG OF TEST BORINGS 6 OF 6

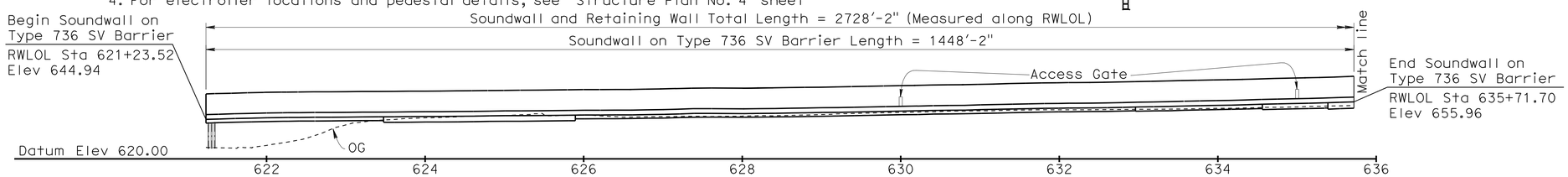

Note: All piles not shown

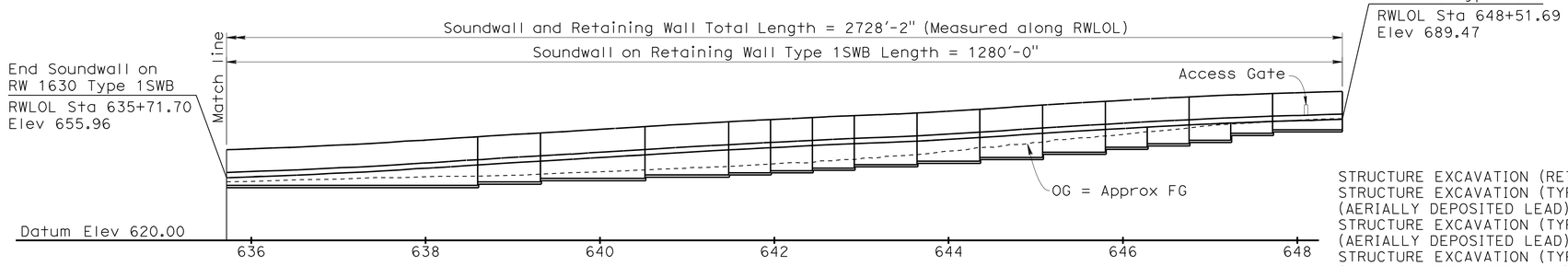

DEVELOPED ELEVATION

Horiz 1" = 80'
Vert 1" = 40'

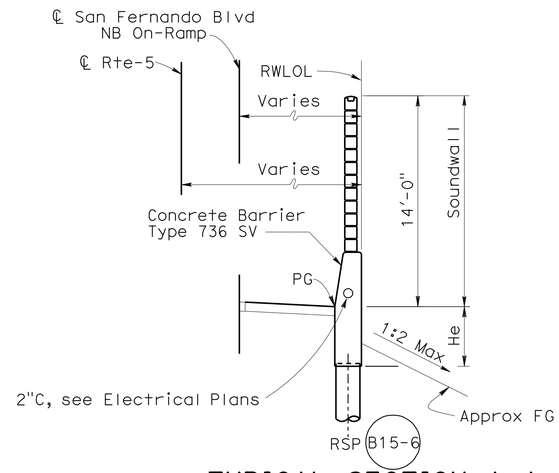

TYPICAL SECTION A-A

NO SCALE

QUANTITIES

STRUCTURE EXCAVATION (RETAINING WALL)	5,094	CY
STRUCTURE EXCAVATION (TYPE Z-3) (AERIALLY DEPOSITED LEAD)	15	CY
STRUCTURE EXCAVATION (TYPE Y-1) (AERIALLY DEPOSITED LEAD)	1,367	CY
STRUCTURE EXCAVATION (TYPE Y-2) (AERIALLY DEPOSITED LEAD)	327	CY
STRUCTURE BACKFILL (RETAINING WALL)	6,223	CY
PERVIOUS BACKFILL MATERIAL	122	CY
16" CAST-IN-DRILLED-HOLE CONCRETE PILING	7,038	LF
60" CAST-IN-DRILLED-HOLE CONCRETE PILING	15	LF
STRUCTURAL CONCRETE, RETAINING WALL	1,298	CY
ARCHITECTURAL TREATMENT	4,711	SQFT
SOUND WALL (MASONRY BLOCK)	29,947	SQFT
BAR REINFORCING STEEL (RETAINING WALL)	117,882	LB
MISCELLANEOUS METAL (BRIDGE)	465	LB
CONCRETE BARRIER (TYPE 736A MODIFIED)	1,280	LF
CONCRETE BARRIER (TYPE 736SV)	1,442	LF

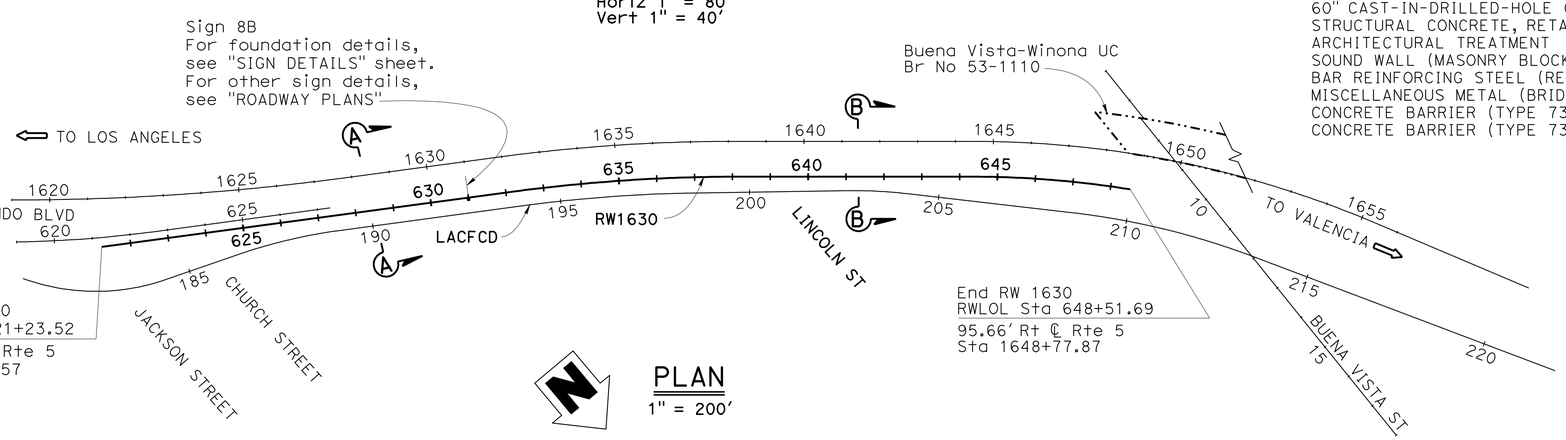

PLAN

1" = 200'

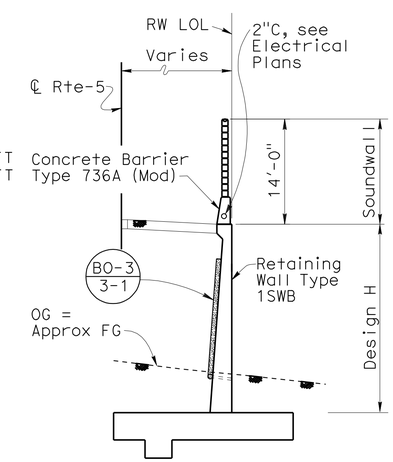

TYPICAL SECTION B-B

NO SCALE

MICHAEL POPE — DESIGN ENGINEER	DESIGN	BY KA/ Zihan Yan	CHECKED IK/ Jorge Estrada	LOAD FACTOR DESIGN	LIVE LOADING: HS20-44 AND ALTERNATIVE AND PERMIT DESIGN LOAD	
	DETAILS	BY JR/ Minh Tran	CHECKED IK/ Zihan Yan	LAYOUT	BY Minh Tran	CHECKED Jorge Estrada
	QUANTITIES	BY IK/ Zihan Yan	CHECKED JP/ David P. Murray	SPECIFICATIONS	BY James Choi	PLANS AND SPECS COMPARED James Choi

ORIGINAL SCALE IN INCHES FOR REDUCED PLANS 0 1 2 3

STATE OF CALIFORNIA
DEPARTMENT OF TRANSPORTATION

DIVISION OF ENGINEERING SERVICES
STRUCTURE DESIGN
DESIGN BRANCH 18

BRIDGE NO. RW1630
POST MILE 30.72

RETAINING WALL 1630
GENERAL PLAN

UNIT: 3603
PROJECT NUMBER & PHASE: 0700021119-1
CONTRACT NO.: 07-1218W1

DISREGARD PRINTS BEARING EARLIER REVISION DATES

REVISION DATES: 11/18/11 — 4-19-12 — 4-30-12

SHEET 1 OF 28

USERNAME => s109838 DATE PLOTTED => 19-JUN-2012 TIME PLOTTED => 08:52

STRUCTURES DESIGN GENERAL PLAN SHEET (ENGLISH) (REV.09-01-10)

FILE => 53-rw1630-a-gp.dgn

DIST	COUNTY	ROUTE	POST MILES TOTAL PROJECT	SHEET No.	TOTAL SHEETS
07	LA	5	29.4/31.6	1245	1931

JEstrada. 1/31/12
REGISTERED CIVIL ENGINEER DATE

5-21-12
PLANS APPROVAL DATE

REGISTERED PROFESSIONAL ENGINEER
JORGE I. ESTRADA
No. C51473
Exp. 06-30-12
CIVIL
STATE OF CALIFORNIA

The State of California or its officers or agents shall not be responsible for the accuracy or completeness of electronic copies of this plan sheet.

CURVE DATA

No.	R	Δ	T	L
Ⓔ	6561.70	12°58'20"	746.01	1485.64

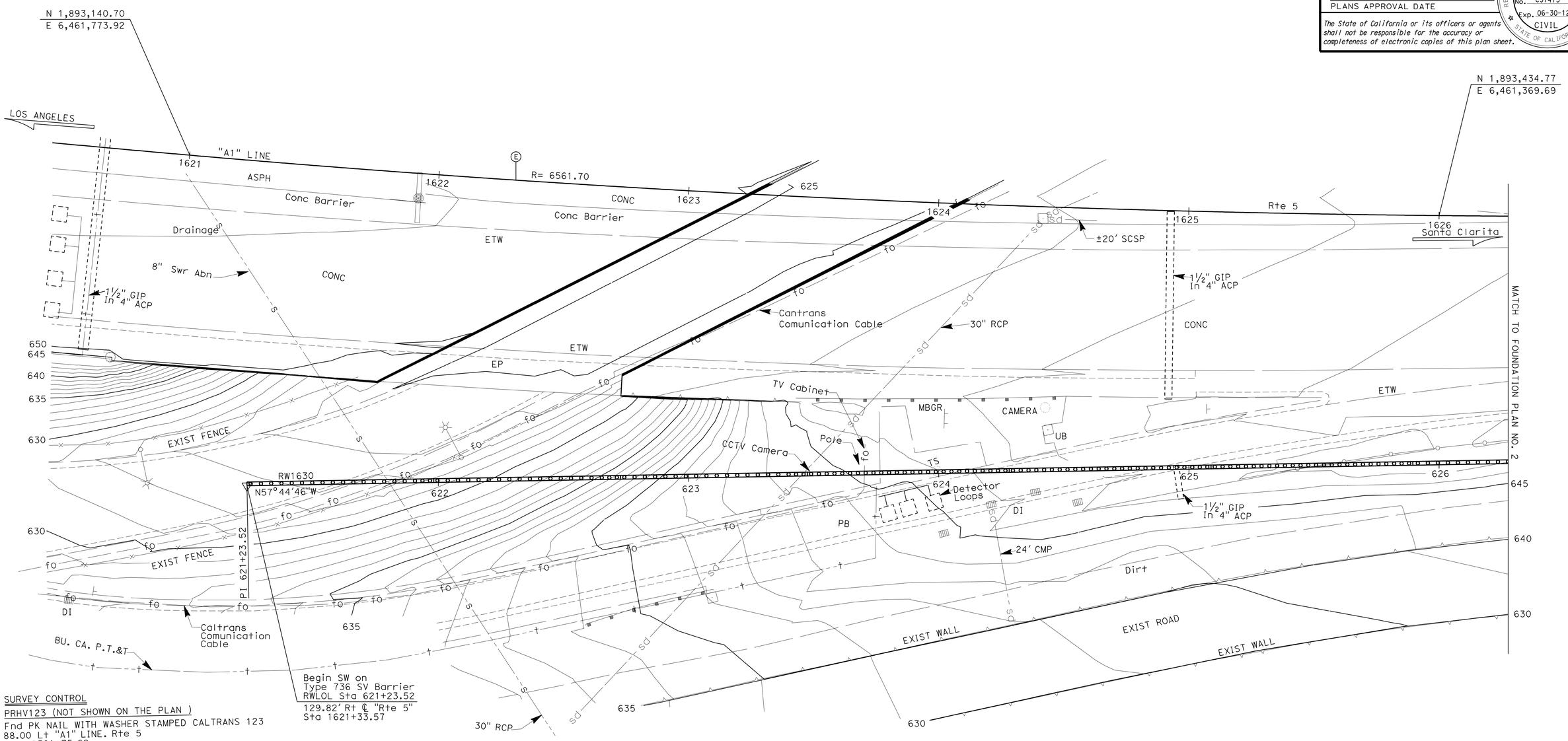

SURVEY CONTROL

PRHV123 (NOT SHOWN ON THE PLAN)

Fnd PK NAIL WITH WASHER STAMPED CALTRANS 123
88.00 Lt "A1" LINE. Rte 5
Sta. 1581+75.69
N 1,890,470.97
E 6,464,594.96
EL.=598.93

PRHV127 (NOT SHOWN ON THE PLAN)

Fnd PK NAIL WITH WASHER STAMPED CALTRANS 127
67.36 Lt "A1" LINE. Rte 5
Sta. 1585+96.99
N 1,890,753.54
E 6,464,269.04
EL.=604.23

o Indicates Pile

PRELIMINARY INVESTIGATION SECTION

SCALE	VERT.DATUM NAVD88	PHOTOGRAMMETRY AS OF: X			
1"=20'	HORZ.DATUM NAD83(1991.35)	SURVEYED	BY District	CHECKED	BY Don Ivy 10/24/11
ALIGNMENT TIES	Dist. Traverse Sheet	DRAFTED	BY J. Zhou 10/24/11	CHECKED	BY L. LEW 10/24/11

DESIGN	BY KA/ Zihan Yan	CHECKED IK/ Jorge Estrada
DETAILS	BY JR/ Minh Tran	CHECKED IK/ Zihan Yan
QUANTITIES	BY IK/ Zihan Yan	CHECKED JP/ David P. Murray

STATE OF CALIFORNIA
DEPARTMENT OF TRANSPORTATION

DIVISION OF ENGINEERING SERVICES
STRUCTURE DESIGN
DESIGN BRANCH 18

BRIDGE NO. RW1630
POST MILE 30.72

RETAINING WALL 1630
FOUNDATION PLAN NO. 1

STRUCTURES FOUNDATION PLAN SHEET (ENGLISH) (REV. 09-01-10)

ORIGINAL SCALE IN INCHES FOR REDUCED PLANS 0 1 2 3

UNIT: 3603
PROJECT NUMBER & PHASE: 0700021119-1
CONTRACT NO.: 07-1218w1

DISREGARD PRINTS BEARING EARLIER REVISION DATES

REVISION DATES: ~~12/26/11~~ 1/26/12

SHEET 2 OF 28

FILE => e-rw1630-b-fp101.dgn

DIST	COUNTY	ROUTE	POST MILES TOTAL PROJECT	SHEET No.	TOTAL SHEETS
07	LA	5	29.4/31.6	1246	1931

JEstrada. 1/31/12
REGISTERED CIVIL ENGINEER DATE

5-21-12
PLANS APPROVAL DATE

REGISTERED PROFESSIONAL ENGINEER
JORGE I. ESTRADA
No. C51473
Exp. 06-30-12
CIVIL
STATE OF CALIFORNIA

The State of California or its officers or agents shall not be responsible for the accuracy or completeness of electronic copies of this plan sheet.

CURVE DATA

No.	R	Δ	T	L
E	6561.72	12°58'21"	746.01	1485.64

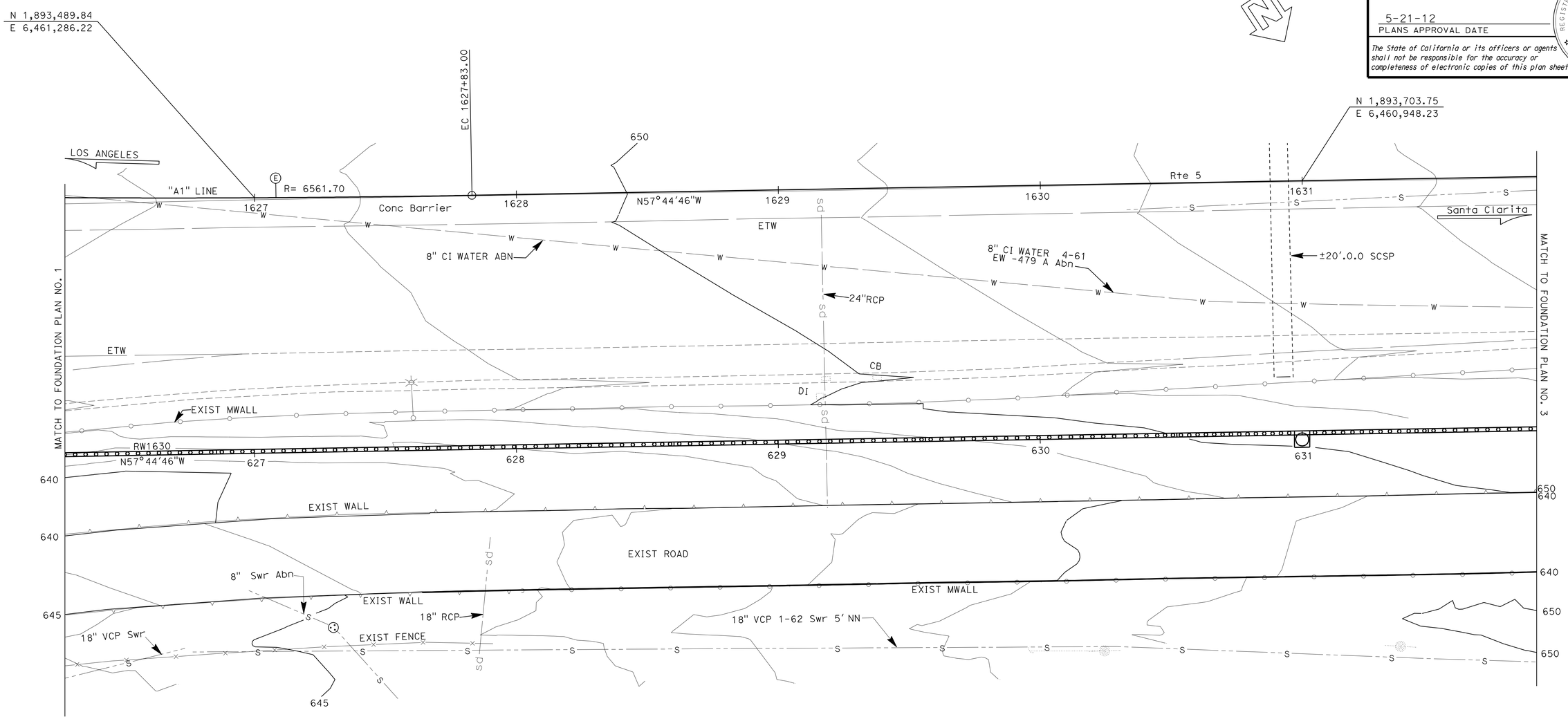

o Indicates Pile

PRELIMINARY INVESTIGATION SECTION									
SCALE 1"=20'	VERT.DATUM NAVD88	PHOTOGRAMMETRY AS OF: X							
	HORZ.DATUM NAD83(1991.35)	SURVEYED	BY District	CHECKED	BY Don Ivy 10/24/11				
ALIGNMENT TIES Dist. Traverse Sheet		DRAFTED	BY J. Zhou 10/24/11	CHECKED	BY L. LEW 10/24/11				

	BY	CHECKED
DESIGN	KA/ Zihan Yan	IK/ Jorge Estrada
DETAILS	JR/ Minh Tran	IK/ Zihan Yan
QUANTITIES	IK/ Zihan Yan	JP/ David P. Murray

STATE OF CALIFORNIA
DEPARTMENT OF TRANSPORTATION

DIVISION OF ENGINEERING SERVICES
STRUCTURE DESIGN
DESIGN BRANCH 18

BRIDGE NO. RW1630
POST MILE 30.72

RETAINING WALL 1630
FOUNDATION PLAN NO. 2

STRUCTURES FOUNDATION PLAN SHEET (ENGLISH) (REV. 09-01-10)

ORIGINAL SCALE IN INCHES FOR REDUCED PLANS 0 1 2 3

UNIT: 3603
PROJECT NUMBER & PHASE: 0700021119-1
CONTRACT NO.: 07-1218W1

DISREGARD PRINTS BEARING EARLIER REVISION DATES

REVISION DATES: 12/28/11 1/26/12 3-26-12

SHEET 3 OF 28

FILE => 53-rw1630-b-fpl02.dgn

DIST	COUNTY	ROUTE	POST MILES TOTAL PROJECT	SHEET No.	TOTAL SHEETS
07	LA	5	29.4/31.6	1247	1931

REGISTERED CIVIL ENGINEER — DATE 1/31/12

5-21-12
PLANS APPROVAL DATE

REGISTERED PROFESSIONAL ENGINEER — JORGE I. ESTRADA — No. C51473 — Exp. 06-30-12 — CIVIL — STATE OF CALIFORNIA

The State of California or its officers or agents shall not be responsible for the accuracy or completeness of electronic copies of this plan sheet.

CURVE DATA

No.	R	Δ	T	L
(F)	4600.20	07°40′16″	308.41	615.90
(H)	4502.93	07°40′16″	301.89	602.88

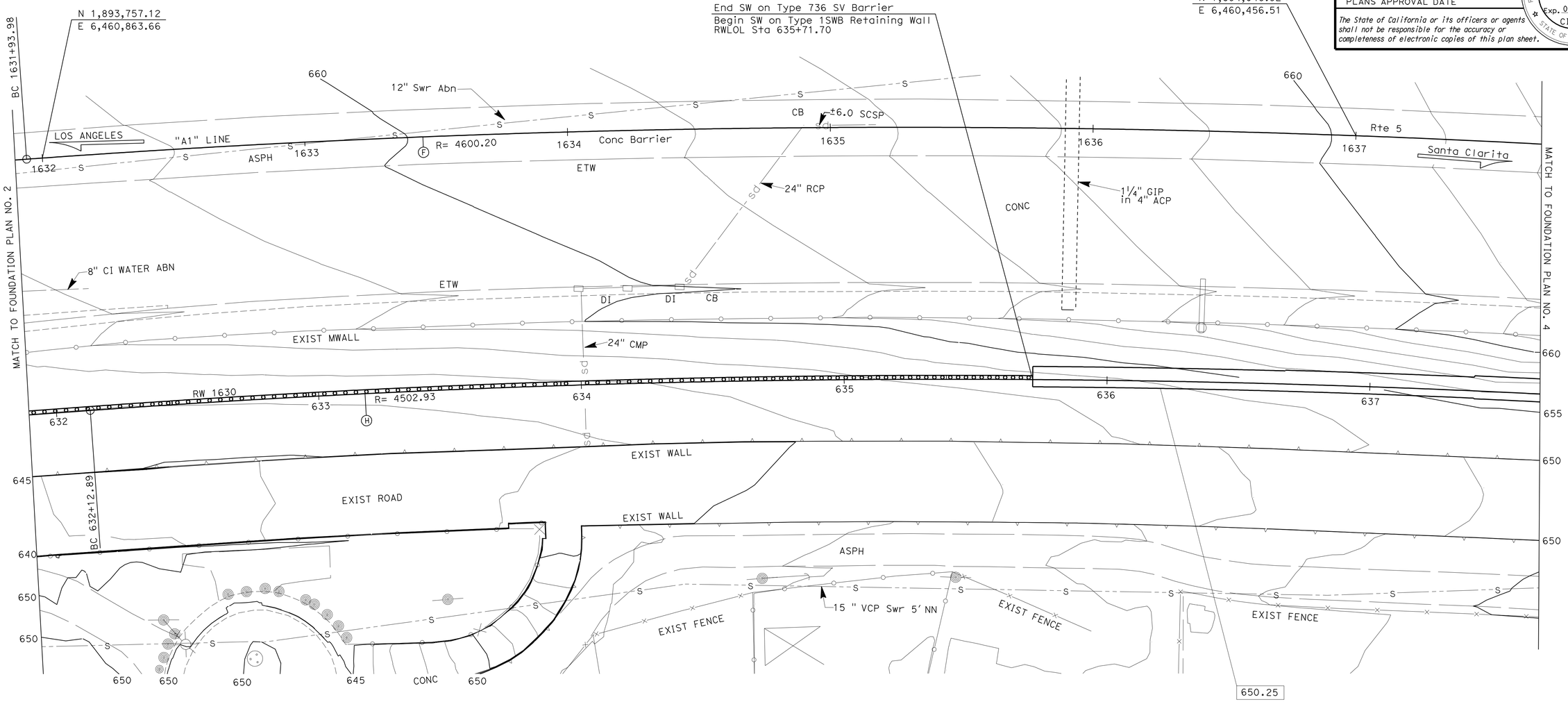

o Indicates Pile

650.25 Indicates Bottom of Footing elevation

PRELIMINARY INVESTIGATION SECTION											
SCALE 1"=20′	VERT.DATUM NAVD88	PHOTOGRAMMETRY AS OF: X						DESIGN	BY KA/ Zihan Yan	CHECKED IK/ Jorge Estrada
	HORZ.DATUM NAD83(1991.35)	SURVEYED	BY District	CHECKED	BY Don Ivy 10/24/11			DETAILS	BY JR/ Minh Tran	CHECKED IK/ Zihan Yan
ALIGNMENT TIES Dist. Traverse Sheet		DRAFTED	BY J. Zhou 10/24/11	CHECKED	BY L. LEW 10/24/11			QUANTITIES	BY IK/ Zihan Yan	CHECKED JP/ David P. Murray

STATE OF CALIFORNIA
DEPARTMENT OF TRANSPORTATION

DIVISION OF ENGINEERING SERVICES
STRUCTURE DESIGN
DESIGN BRANCH 18

BRIDGE NO. RW1630
POST MILE 30.72

RETAINING WALL 1630
FOUNDATION PLAN NO. 3

STRUCTURES FOUNDATION PLAN SHEET (ENGLISH) (REV. 09-01-10)

ORIGINAL SCALE IN INCHES FOR REDUCED PLANS 0 1 2 3

UNIT: 3603
PROJECT NUMBER & PHASE: 0700021119-1
CONTRACT NO.: 07-1218w1

DISREGARD PRINTS BEARING EARLIER REVISION DATES → 12/21/11 1/26/12

SHEET 4 OF 28

FILE => e-rw1630-b-fp103.dgn

DIST	COUNTY	ROUTE	POST MILES TOTAL PROJECT	SHEET No.	TOTAL SHEETS
07	LA	5	29.4/31.6	1248	1931

REGISTERED CIVIL ENGINEER — DATE 1/31/12

5-21-12
PLANS APPROVAL DATE

REGISTERED PROFESSIONAL ENGINEER — JORGE I. ESTRADA — No. C51473 — Exp. 06-30-12 — CIVIL — STATE OF CALIFORNIA

The State of California or its officers or agents shall not be responsible for the accuracy or completeness of electronic copies of this plan sheet.

CURVE DATA

No.	R	Δ	T	L
(F)	4600.20	07°40'16"	308.41	615.90
(H)	4502.93	07°40'16"	301.89	602.88

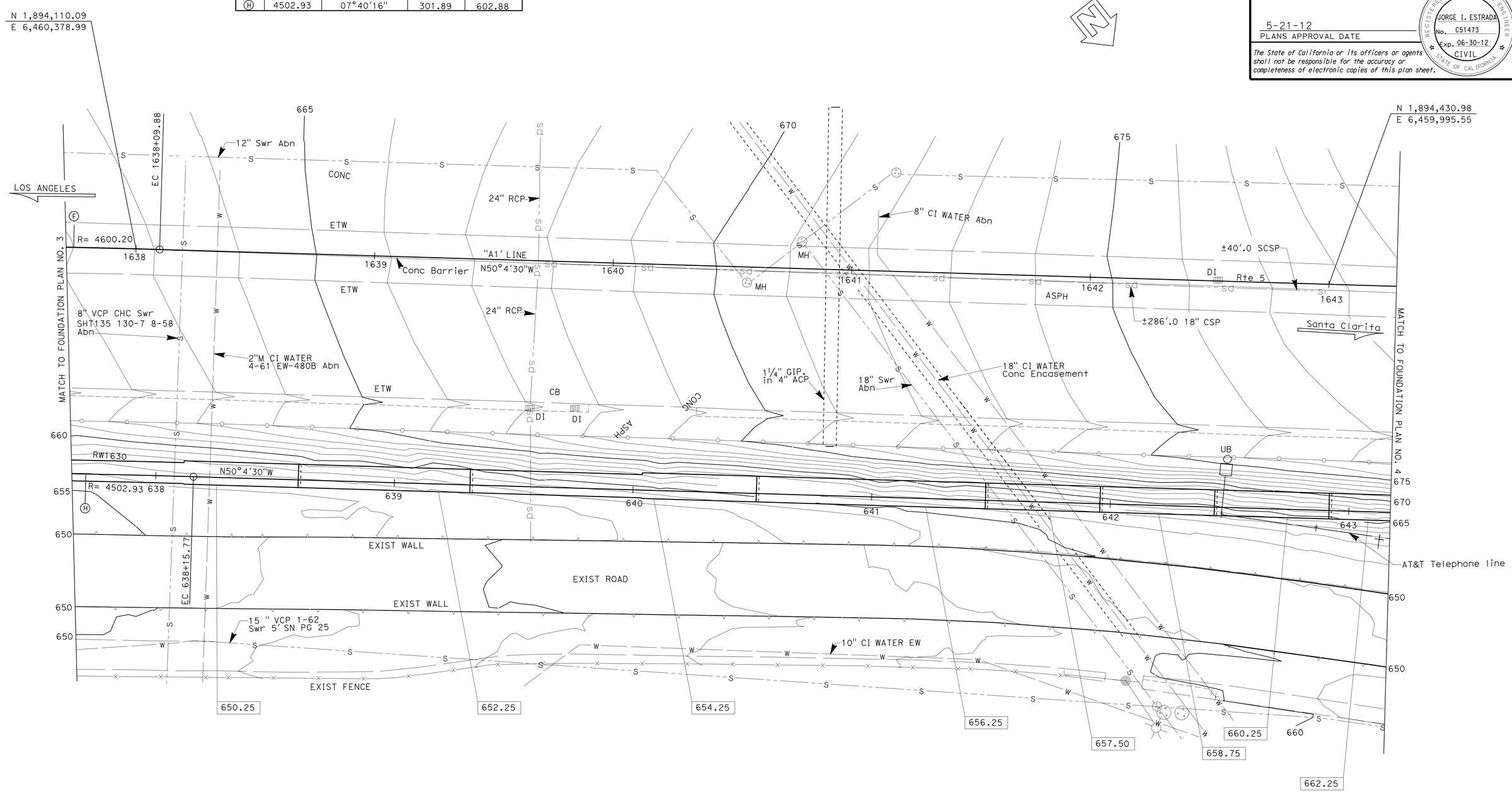

650.25 Indicates Bottom of Footing elevation

PRELIMINARY INVESTIGATION SECTION							
SCALE 1"=20'	VERT.DATUM NAVD88	PHOTOGRAMMETRY AS OF: X					
	HORZ.DATUM NAD83(1991.35)	SURVEYED	BY District	CHECKED	BY Don Ivy 10/24/11		
ALIGNMENT TIES Dist. Traverse Sheet		DRAFTED	BY J. Zhou 10/24/11	CHECKED	BY L. LEW 10/24/11		

DESIGN	BY KA/ Zihan Yan	CHECKED IK/ Jorge Estrada
DETAILS	BY JR/ Minh Tran	CHECKED IK/ Zihan Yan
QUANTITIES	BY IK/ Zihan Yan	CHECKED JP/ David P. Murray

STATE OF CALIFORNIA
DEPARTMENT OF TRANSPORTATION

DIVISION OF ENGINEERING SERVICES
STRUCTURE DESIGN
DESIGN BRANCH 18

BRIDGE NO. RW1630
POST MILE 30.72

RETAINING WALL 1630
FOUNDATION PLAN NO. 4

STRUCTURES FOUNDATION PLAN SHEET (ENGLISH) (REV. 09-01-10)

ORIGINAL SCALE IN INCHES FOR REDUCED PLANS 0 1 2 3

UNIT: 3603
PROJECT NUMBER & PHASE: 0700021119-1
CONTRACT NO.: 07-1218w1

DISREGARD PRINTS BEARING EARLIER REVISION DATES

REVISION DATES: 12/29/11 1/26/12

SHEET 5 OF 28

FILE => e-rw1630-b-fp104.dgn

DIST	COUNTY	ROUTE	POST MILES TOTAL PROJECT	SHEET No.	TOTAL SHEETS
07	LA	5	29.4/31.6	1249	1931

JEstrada. 1/31/12
REGISTERED CIVIL ENGINEER DATE

5-21-12
PLANS APPROVAL DATE

REGISTERED PROFESSIONAL ENGINEER
JORGE I. ESTRADA
No. C51473
Exp. 06-30-12
CIVIL
STATE OF CALIFORNIA

The State of California or its officers or agents shall not be responsible for the accuracy or completeness of electronic copies of this plan sheet.

CURVE DATA

No.	R	Δ	T	L
G	2710.00	22°57'04"	550.15	1085.55
K	2612.90	09°10'10"	209.53	418.16

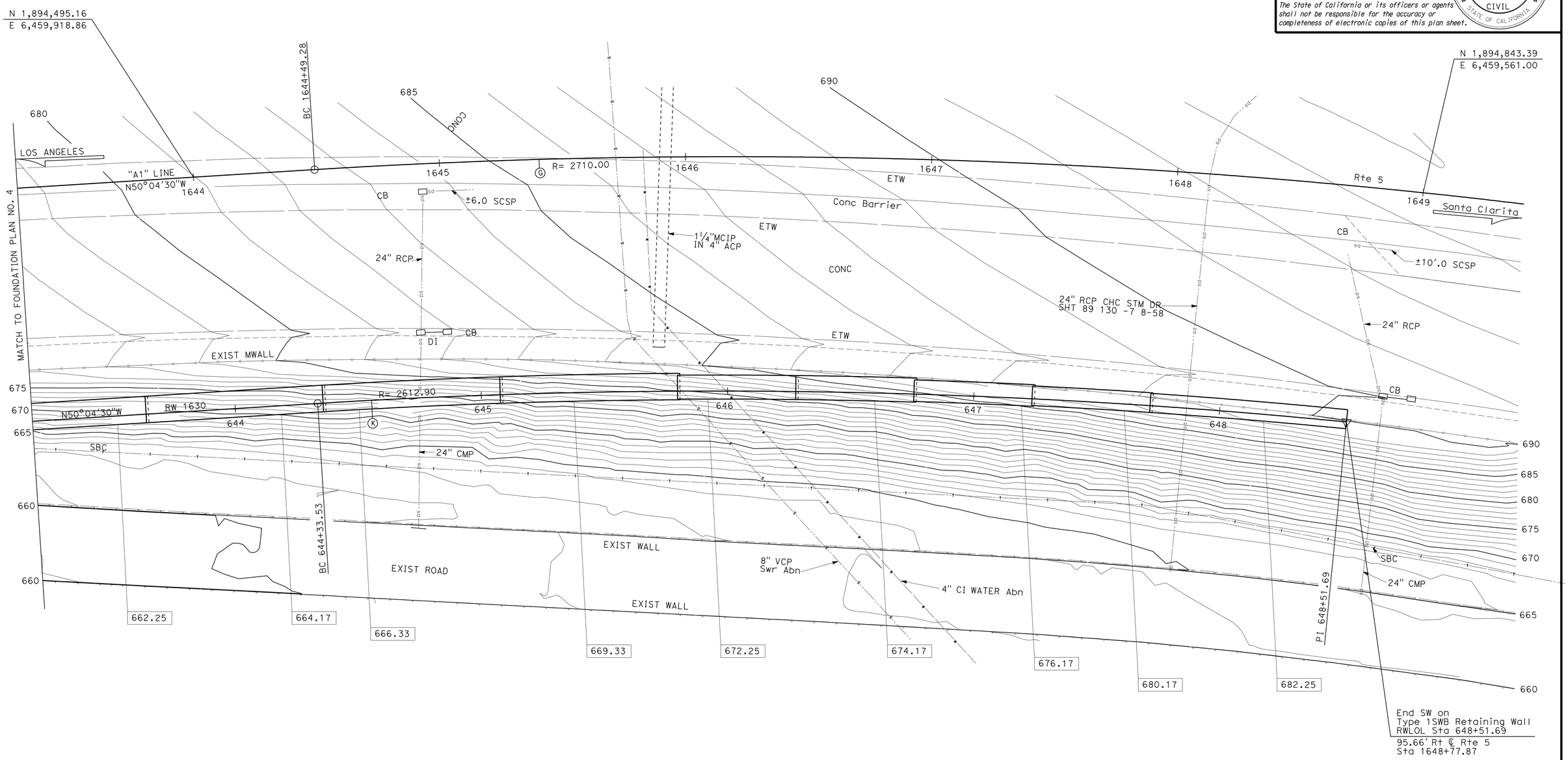

650.25 Indicates Bottom of Footing elevation

PRELIMINARY INVESTIGATION SECTION									
SCALE 1"=20'	VERT.DATUM NAVD88	PHOTOGRAMMETRY AS OF: X							
	HORZ.DATUM NAD83(1991.35)	SURVEYED	BY District	CHECKED	BY Don Ivy 10/24/11				
ALIGNMENT TIES Dist. Traverse Sheet		DRAFTED	BY J. Zhou 10/24/11	CHECKED	BY L. LEW 10/24/11				

DESIGN	BY KA/ Zihan Yan	CHECKED IK/ Jorge Estrada
DETAILS	BY JR/ Minh Tran	CHECKED IK/ Zihan Yan
QUANTITIES	BY IK/ Zihan Yan	CHECKED JP/ David P. Murray

STATE OF CALIFORNIA
DEPARTMENT OF TRANSPORTATION

DIVISION OF ENGINEERING SERVICES
STRUCTURE DESIGN
DESIGN BRANCH 18

BRIDGE NO. RW1630
POST MILE 30.72

RETAINING WALL 1630
FOUNDATION PLAN NO. 5

STRUCTURES FOUNDATION PLAN SHEET (ENGLISH) (REV. 09-01-10)

ORIGINAL SCALE IN INCHES FOR REDUCED PLANS 0 1 2 3

UNIT: 3603
PROJECT NUMBER & PHASE: 0700021119-1 CONTRACT NO.: 07-1218w1

DISREGARD PRINTS BEARING EARLIER REVISION DATES

REVISION DATES: 12/29/11 1/26/12

SHEET 6 OF 28

FILE => e-rw1630-b-fp105.dgn

DIST	COUNTY	ROUTE	POST MILES TOTAL PROJECT	SHEET No.	TOTAL SHEETS
07	LA	5	29.4/31.6	1250	1931

JEstrada. 1/31/12
REGISTERED CIVIL ENGINEER DATE

5-21-12
PLANS APPROVAL DATE

REGISTERED PROFESSIONAL ENGINEER
JORGE I. ESTRADA
No. C51473
Exp. 06-30-12
CIVIL
STATE OF CALIFORNIA

The State of California or its officers or agents shall not be responsible for the accuracy or completeness of electronic copies of this plan sheet.

NOTE:

For pile details, see RSP B15-8
Øsoil = 30′

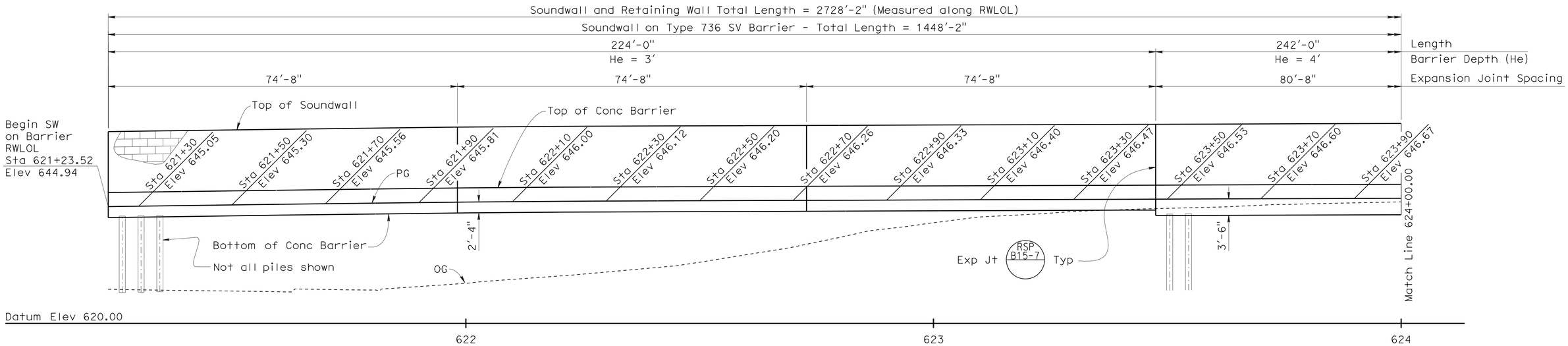

DEVELOPED ELEVATION

3/32" = 1′

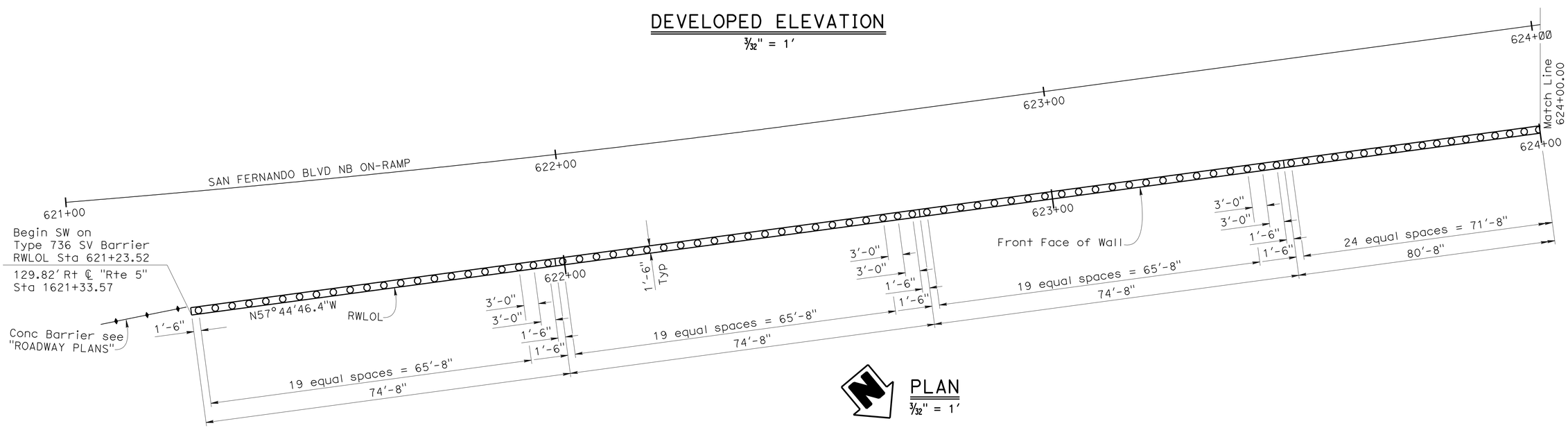

PLAN

3/32" = 1′

DESIGN	BY KA/ Zihan Yan	CHECKED IK/ Jorge Estrada	
DETAILS	BY JR/ Minh Tran	CHECKED IK/ Zihan Yan	
QUANTITIES	BY IK/ Zihan Yan	CHECKED JP/ David P. Murray	

STATE OF CALIFORNIA
DEPARTMENT OF TRANSPORTATION

DIVISION OF ENGINEERING SERVICES
STRUCTURE DESIGN
DESIGN BRANCH 18

BRIDGE NO. RW 1630
POST MILE 30.72

RETAINING WALL 1630
STRUCTURE PLAN NO. 1

STRUCTURES DESIGN DETAIL SHEET (ENGLISH) (REV. 09-01-10)

ORIGINAL SCALE IN INCHES FOR REDUCED PLANS 0 1 2 3

UNIT: 3603
PROJECT NUMBER & PHASE: 0700021119-1
CONTRACT NO.: 07-1218W1

DISREGARD PRINTS BEARING EARLIER REVISION DATES

REVISION DATES: 12/15/11 1/26/12

SHEET 7 OF 28

FILE => e-rw1630-c-sp01.dgn

USERNAME => s109858 DATE PLOTTED => 19-JUN-2012 TIME PLOTTED => 08:52

DIST	COUNTY	ROUTE	POST MILES TOTAL PROJECT	SHEET No.	TOTAL SHEETS
07	LA	5	29.4/31.6	1251	1931

REGISTERED CIVIL ENGINEER — DATE 1/31/12

5-21-12
PLANS APPROVAL DATE

REGISTERED PROFESSIONAL ENGINEER — JORGE I. ESTRADA — No. C51473 — Exp. 06-30-12 — CIVIL — STATE OF CALIFORNIA

The State of California or its officers or agents shall not be responsible for the accuracy or completeness of electronic copies of this plan sheet.

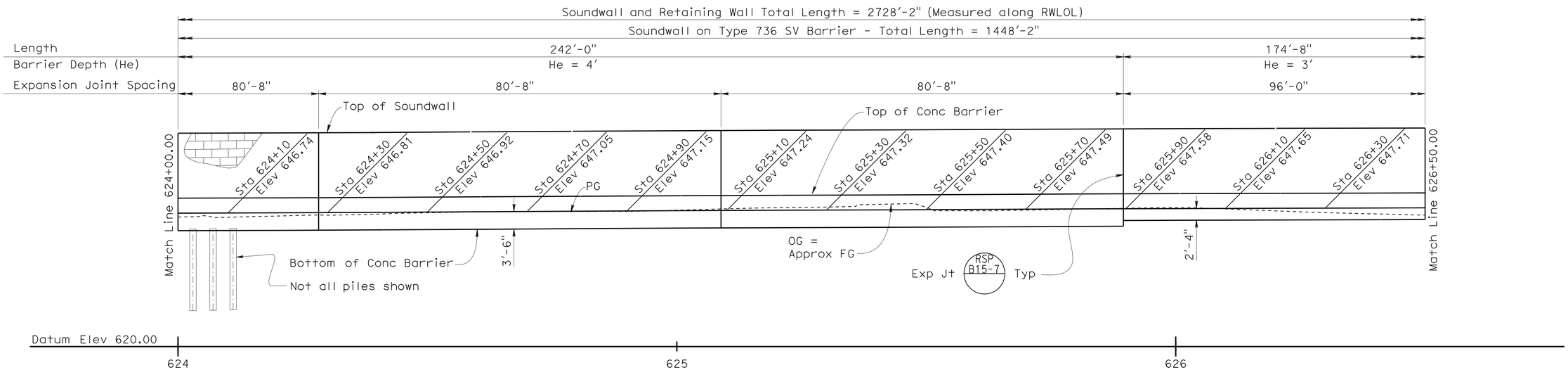

DEVELOPED ELEVATION

3/32" = 1'

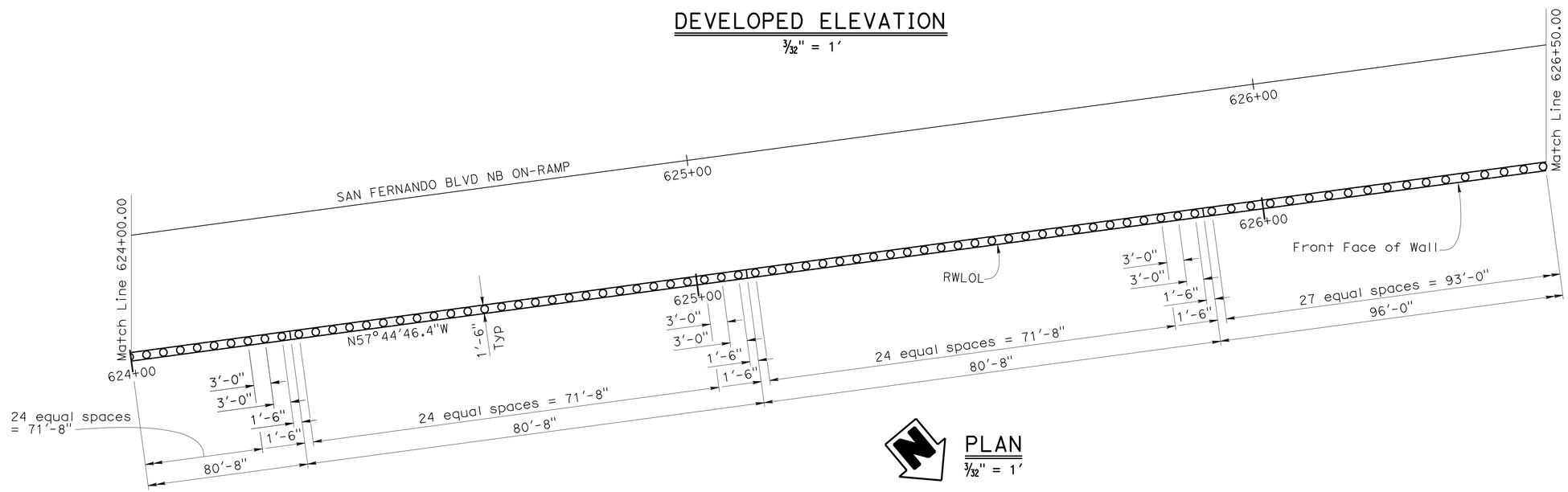

PLAN

3/32" = 1'

DESIGN	BY KA/ Zihan Yan	CHECKED IK/ Jorge Estrada	
DETAILS	BY JR/ Minh Tran	CHECKED IK/ Zihan Yan	
QUANTITIES	BY IK/ Zihan Yan	CHECKED JP/ David P. Murray	

STATE OF CALIFORNIA
DEPARTMENT OF TRANSPORTATION

DIVISION OF ENGINEERING SERVICES
STRUCTURE DESIGN
DESIGN BRANCH 18

BRIDGE NO. RW 1630
POST MILE 30.72

RETAINING WALL 1630
STRUCTURE PLAN NO. 2

STRUCTURES DESIGN DETAIL SHEET (ENGLISH) (REV. 09-01-10)

ORIGINAL SCALE IN INCHES FOR REDUCED PLANS 0 1 2 3

UNIT: 3603
PROJECT NUMBER & PHASE: 0700021119-1
CONTRACT NO.: 07-1218w1

DISREGARD PRINTS BEARING EARLIER REVISION DATES

REVISION DATES: 12/15/11 1/26/12

SHEET 8 OF 28

FILE => e-rw1630-c-sp02.dgn

USERNAME => s103858 DATE PLOTTED => 19-JUN-2012 TIME PLOTTED => 08:52

DIST	COUNTY	ROUTE	POST MILES TOTAL PROJECT	SHEET No.	TOTAL SHEETS
07	LA	5	29.4/31.6	1252	1931

REGISTERED CIVIL ENGINEER — DATE 1/31/12

5-21-12
PLANS APPROVAL DATE

REGISTERED PROFESSIONAL ENGINEER — JORGE I. ESTRADA — No. C51473 — Exp. 06-30-12 — CIVIL — STATE OF CALIFORNIA

The State of California or its officers or agents shall not be responsible for the accuracy or completeness of electronic copies of this plan sheet.

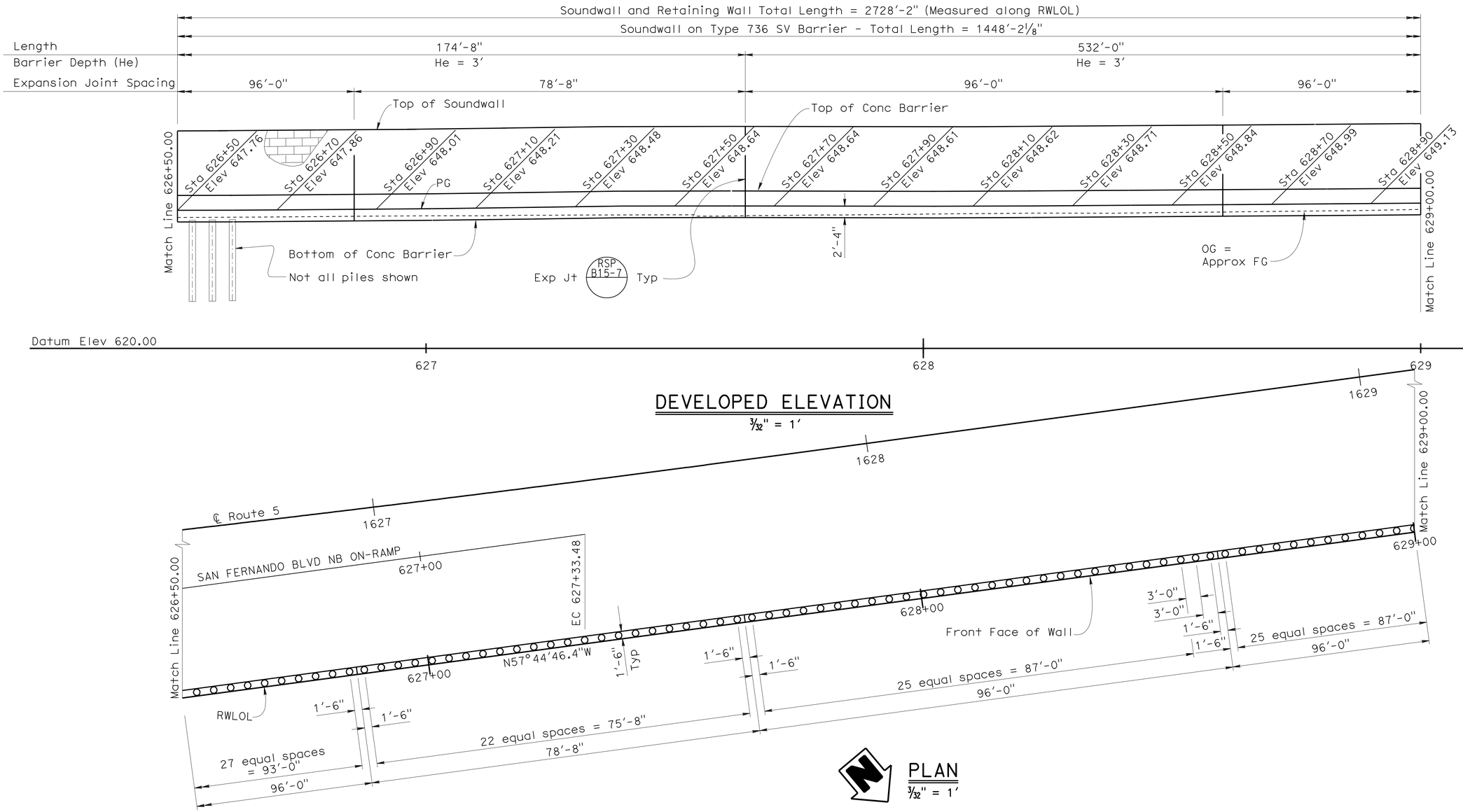

DESIGN	BY KA/ Zihan Yan	CHECKED IK/ Jorge Estrada	
DETAILS	BY JR/ Minh Tran	CHECKED IK/ Zihan Yan	
QUANTITIES	BY IK/ Zihan Yan	CHECKED JP/ David P. Murray	

STATE OF CALIFORNIA
DEPARTMENT OF TRANSPORTATION

DIVISION OF ENGINEERING SERVICES
STRUCTURE DESIGN
DESIGN BRANCH 18

BRIDGE NO. RW 1630
POST MILE 30.72

RETAINING WALL 1630
STRUCTURE PLAN NO. 3

STRUCTURES DESIGN DETAIL SHEET (ENGLISH) (REV. 09-01-10)

ORIGINAL SCALE IN INCHES FOR REDUCED PLANS 0 1 2 3

UNIT: 3603
PROJECT NUMBER & PHASE: 0700021119-1
CONTRACT NO.: 07-1218w1

DISREGARD PRINTS BEARING EARLIER REVISION DATES

REVISION DATES: 12/13/11 1/31/12

SHEET 9 OF 28

FILE => e-rw1630-c-sp03.dgn

USERNAME => s103858 DATE PLOTTED => 19-JUN-2012 TIME PLOTTED => 08:52

DIST	COUNTY	ROUTE	POST MILES TOTAL PROJECT	SHEET No.	TOTAL SHEETS
07	LA	5	29.4/31.6	1253	1931

REGISTERED CIVIL ENGINEER — DATE 1/31/12

5-21-12
PLANS APPROVAL DATE

REGISTERED PROFESSIONAL ENGINEER — JORGE I. ESTRADA — No. C51473 — Exp. 06-30-12 — CIVIL — CALIFORNIA

The State of California or its officers or agents shall not be responsible for the accuracy or completeness of electronic copies of this plan sheet.

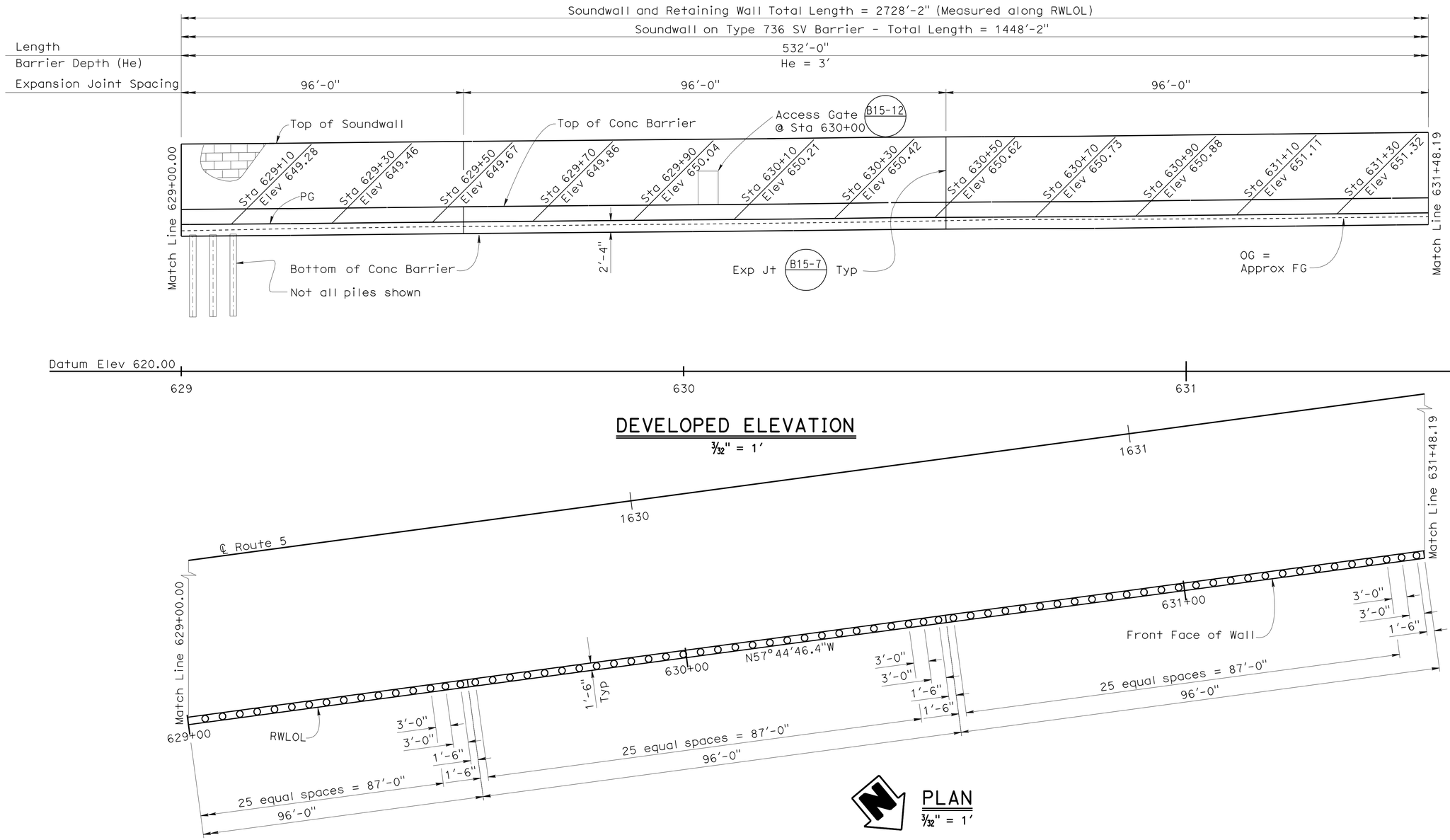

DESIGN	BY KA/ Zihan Yan	CHECKED IK/ Jorge Estrada	
DETAILS	BY JR/ Minh Tran	CHECKED IK/ Zihan Yan	
QUANTITIES	BY IK/ Zihan Yan	CHECKED JP/ David P. Murray	

STATE OF CALIFORNIA
DEPARTMENT OF TRANSPORTATION

DIVISION OF ENGINEERING SERVICES
STRUCTURE DESIGN
DESIGN BRANCH 18

BRIDGE NO. RW 1630
POST MILE 30.72

RETAINING WALL 1630
STRUCTURE PLAN NO. 4

STRUCTURES DESIGN DETAIL SHEET (ENGLISH) (REV. 09-01-10)

ORIGINAL SCALE IN INCHES FOR REDUCED PLANS 0 1 2 3

UNIT: 3603
PROJECT NUMBER & PHASE: 0700021119-1
CONTRACT NO.: 07-1218w1

DISREGARD PRINTS BEARING EARLIER REVISION DATES

REVISION DATES: ~~12/15/11~~ 1/26/12

SHEET 10 OF 28

FILE => e-rw1630-c-sp04.dgn

USERNAME => s121614 DATE PLOTTED => 19-JUN-2012 TIME PLOTTED => 11:09

DIST	COUNTY	ROUTE	POST MILES TOTAL PROJECT	SHEET No.	TOTAL SHEETS
07	LA	5	29.4/31.6	1254	1931

JEstrada. 1/31/12
REGISTERED CIVIL ENGINEER DATE

5-21-12
PLANS APPROVAL DATE

REGISTERED PROFESSIONAL ENGINEER JORGE I. ESTRADA No. C51473 Exp. 06-30-12 CIVIL STATE OF CALIFORNIA

The State of California or its officers or agents shall not be responsible for the accuracy or completeness of electronic copies of this plan sheet.

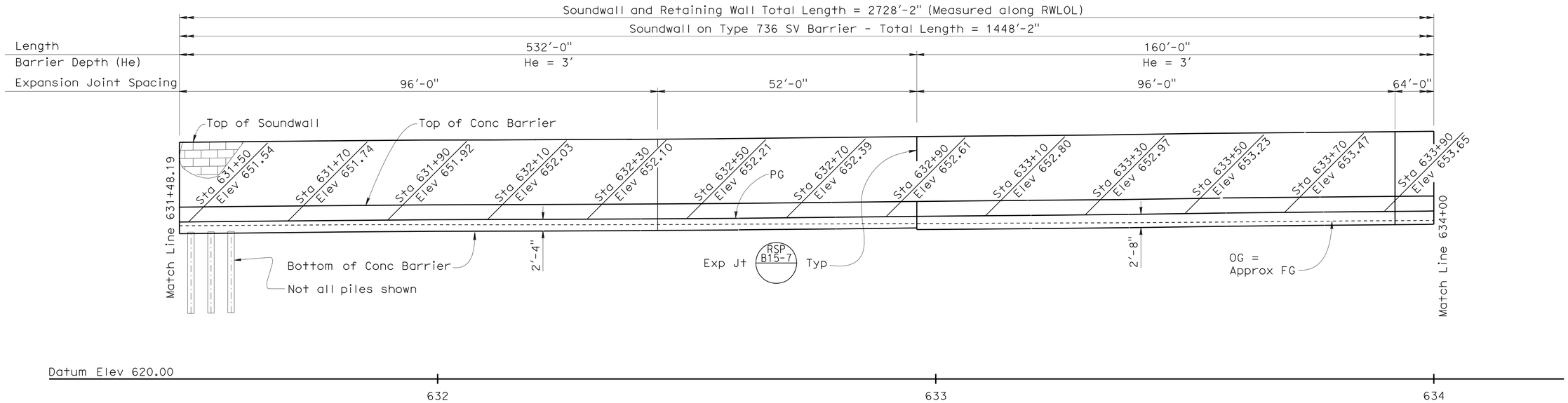

DEVELOPED ELEVATION

3/32" = 1'

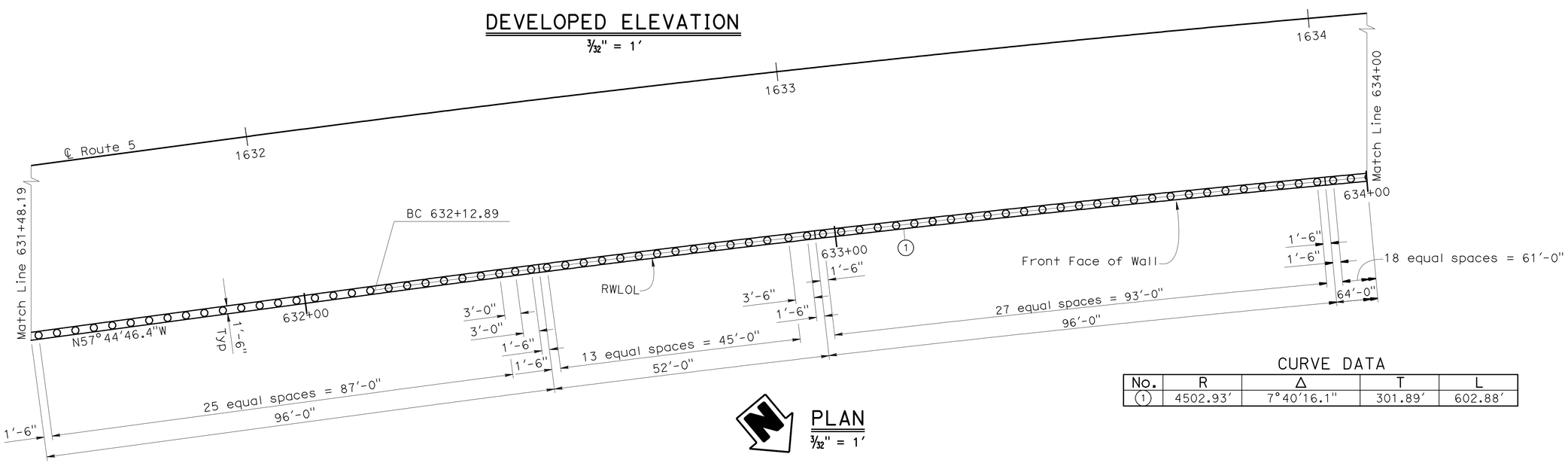

PLAN

3/32" = 1'

CURVE DATA

No.	R	Δ	T	L
1	4502.93'	7°40'16.1"	301.89'	602.88'

	BY	CHECKED
DESIGN	KA/ Zihan Yan	IK/ Jorge Estrada
DETAILS	JR/ Minh Tran	IK/ Zihan Yan
QUANTITIES	IK/ Zihan Yan	JP/ David P. Murray

STATE OF CALIFORNIA
DEPARTMENT OF TRANSPORTATION

DIVISION OF ENGINEERING SERVICES
STRUCTURE DESIGN
DESIGN BRANCH 18

BRIDGE NO. RW 1630
POST MILE 30.72

RETAINING WALL 1630
STRUCTURE PLAN NO. 5

STRUCTURES DESIGN DETAIL SHEET (ENGLISH) (REV. 09-01-10)

ORIGINAL SCALE IN INCHES FOR REDUCED PLANS 0 1 2 3

UNIT: 3603
PROJECT NUMBER & PHASE: 0700021119-1
CONTRACT NO.: 07-1218W1

DISREGARD PRINTS BEARING EARLIER REVISION DATES

REVISION DATES: 12/15/11 1/31/12

SHEET 11 OF 28

FILE => e-rw1630-c-sp05.dgn

USERNAME => s119571 DATE PLOTTED => 19-JUN-2012 TIME PLOTTED => 08:11

DIST	COUNTY	ROUTE	POST MILES TOTAL PROJECT	SHEET No.	TOTAL SHEETS
07	LA	5	29.4/31.6	1255	1931

REGISTERED CIVIL ENGINEER — DATE 1/31/12

5-21-12
PLANS APPROVAL DATE

REGISTERED PROFESSIONAL ENGINEER — JORGE I. ESTRADA — No. C51473 — Exp. 06-30-12 — CIVIL — CALIFORNIA

The State of California or its officers or agents shall not be responsible for the accuracy or completeness of electronic copies of this plan sheet.

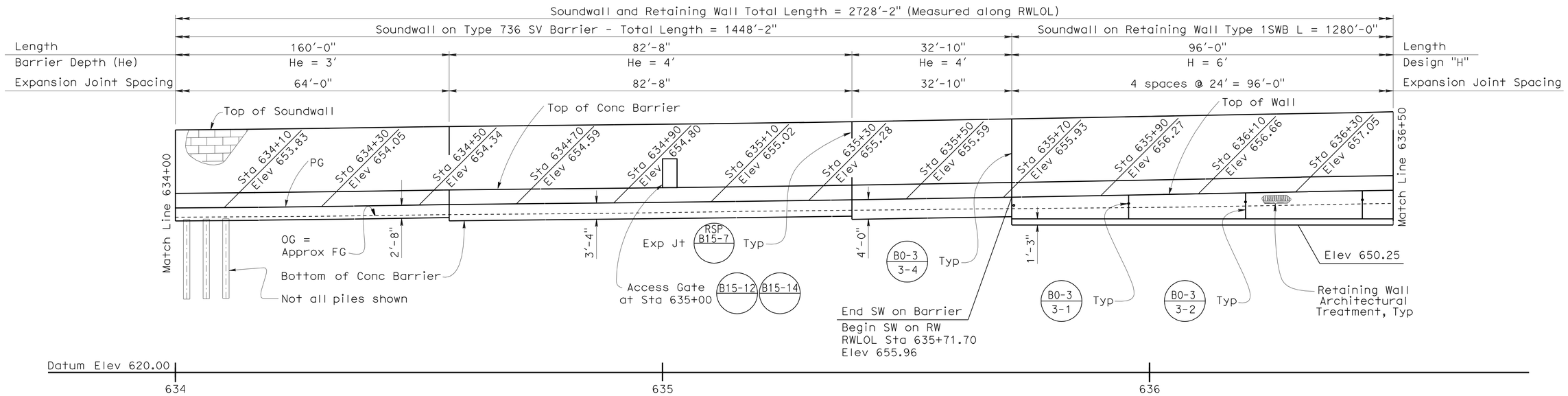

DEVELOPED ELEVATION

3/32" = 1'

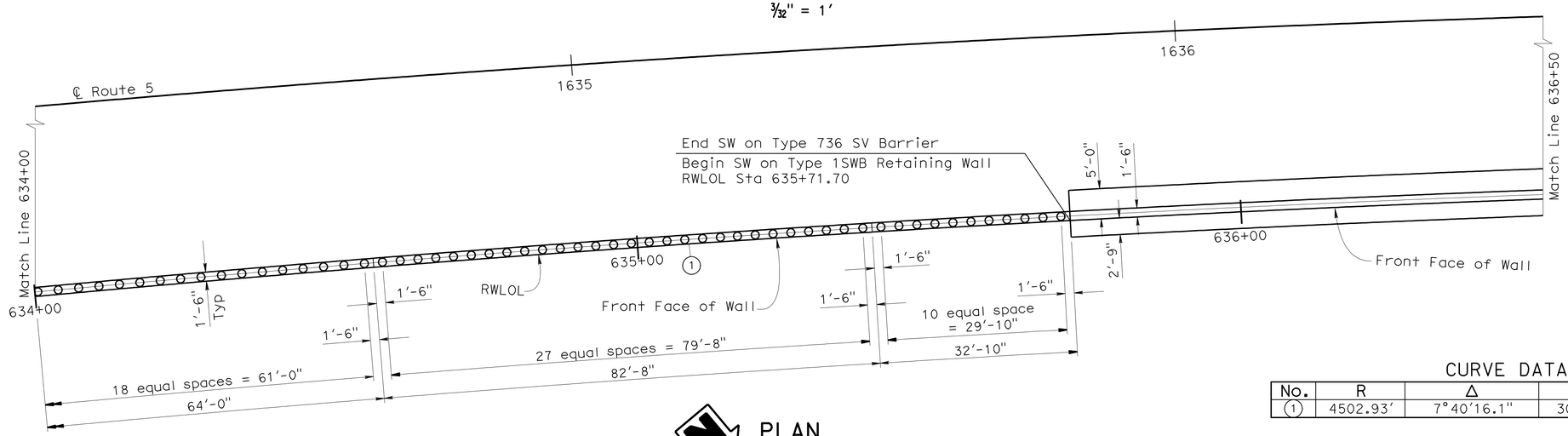

PLAN

3/32" = 1'

CURVE DATA

No.	R	Δ	T	L
1	4502.93'	7°40'16.1"	301.89'	602.88'

DESIGN	BY KA/ Zihan Yan	CHECKED IK/ Jorge Estrada	
DETAILS	BY JR/ Minh Tran	CHECKED IK/ Zihan Yan	
QUANTITIES	BY IK/ Zihan Yan	CHECKED JP/ David P. Murray	

STATE OF CALIFORNIA
DEPARTMENT OF TRANSPORTATION

DIVISION OF ENGINEERING SERVICES
STRUCTURE DESIGN
DESIGN BRANCH 18

BRIDGE NO. RW 1630
POST MILE 30.72

RETAINING WALL 1630
STRUCTURE PLAN NO. 6

STRUCTURES DESIGN DETAIL SHEET (ENGLISH) (REV. 09-01-10)

ORIGINAL SCALE IN INCHES FOR REDUCED PLANS 0 1 2 3

UNIT: 3603
PROJECT NUMBER & PHASE: 0700021119-1
CONTRACT NO.: 07-1218w1

DISREGARD PRINTS BEARING EARLIER REVISION DATES

REVISION DATES: 12/13/11 1/31/12

SHEET 12 OF 28

FILE => e-rw1630-c-sp06.dgn

USERNAME => s121614 DATE PLOTTED => 19-JUN-2012 TIME PLOTTED => 11:13

DIST	COUNTY	ROUTE	POST MILES TOTAL PROJECT	SHEET No.	TOTAL SHEETS
07	LA	5	29.4/31.6	1256	1931

JEstrada. 1/31/12
REGISTERED CIVIL ENGINEER DATE

5-21-12
PLANS APPROVAL DATE

REGISTERED PROFESSIONAL ENGINEER
JORGE I. ESTRADA
No. C51473
Exp. 06-30-12
CIVIL
STATE OF CALIFORNIA

The State of California or its officers or agents shall not be responsible for the accuracy or completeness of electronic copies of this plan sheet.

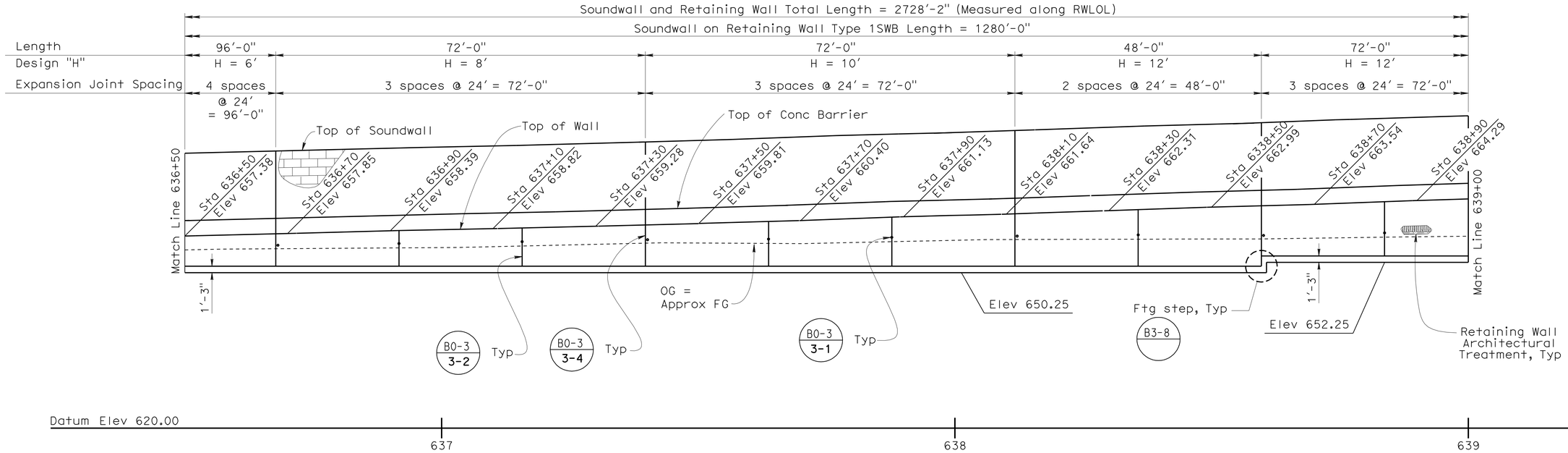

DEVELOPED ELEVATION

3/32" = 1'

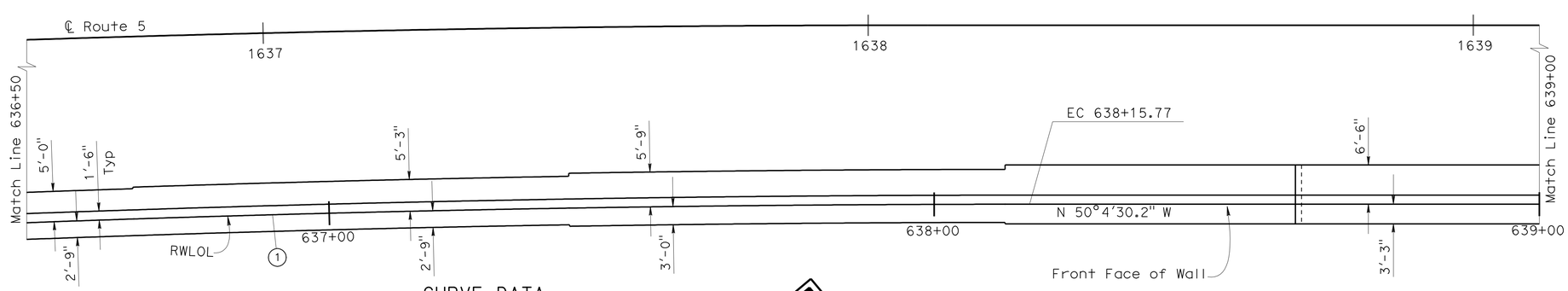

CURVE DATA

No.	R	Δ	T	L
1	4502.93'	7°40'16.1"	301.89'	602.88'

PLAN

3/32" = 1'

	BY	CHECKED
DESIGN	KA/ Zihan Yan	IK/ Jorge Estrada
DETAILS	JR/ Minh Tran	IK/ Zihan Yan
QUANTITIES	IK/ Zihan Yan	JP/ David P. Murray

STATE OF CALIFORNIA
DEPARTMENT OF TRANSPORTATION

DIVISION OF ENGINEERING SERVICES
STRUCTURE DESIGN
DESIGN BRANCH 18

BRIDGE NO. RW 1630
POST MILE 30.72

RETAINING WALL 1630
STRUCTURE PLAN NO. 7

STRUCTURES DESIGN DETAIL SHEET (ENGLISH) (REV. 09-01-10)

ORIGINAL SCALE IN INCHES FOR REDUCED PLANS 0 1 2 3

UNIT: 3603
PROJECT NUMBER & PHASE: 0700021119-1
CONTRACT NO.: 07-1218w1

DISREGARD PRINTS BEARING EARLIER REVISION DATES

REVISION DATES 12/15/11 1/26/12

SHEET 13 OF 28

FILE => e-rw1630-c-sp07.dgn

USERNAME => s121614 DATE PLOTTED => 19-JUN-2012 TIME PLOTTED => 11:15

DIST	COUNTY	ROUTE	POST MILES TOTAL PROJECT	SHEET No.	TOTAL SHEETS
07	LA	5	29.4/31.6	1257	1931

JEstrada. 1/31/12
REGISTERED CIVIL ENGINEER DATE

5-21-12
PLANS APPROVAL DATE

REGISTERED PROFESSIONAL ENGINEER JORGE I. ESTRADA No. C51473 Exp. 06-30-12 CIVIL STATE OF CALIFORNIA

The State of California or its officers or agents shall not be responsible for the accuracy or completeness of electronic copies of this plan sheet.

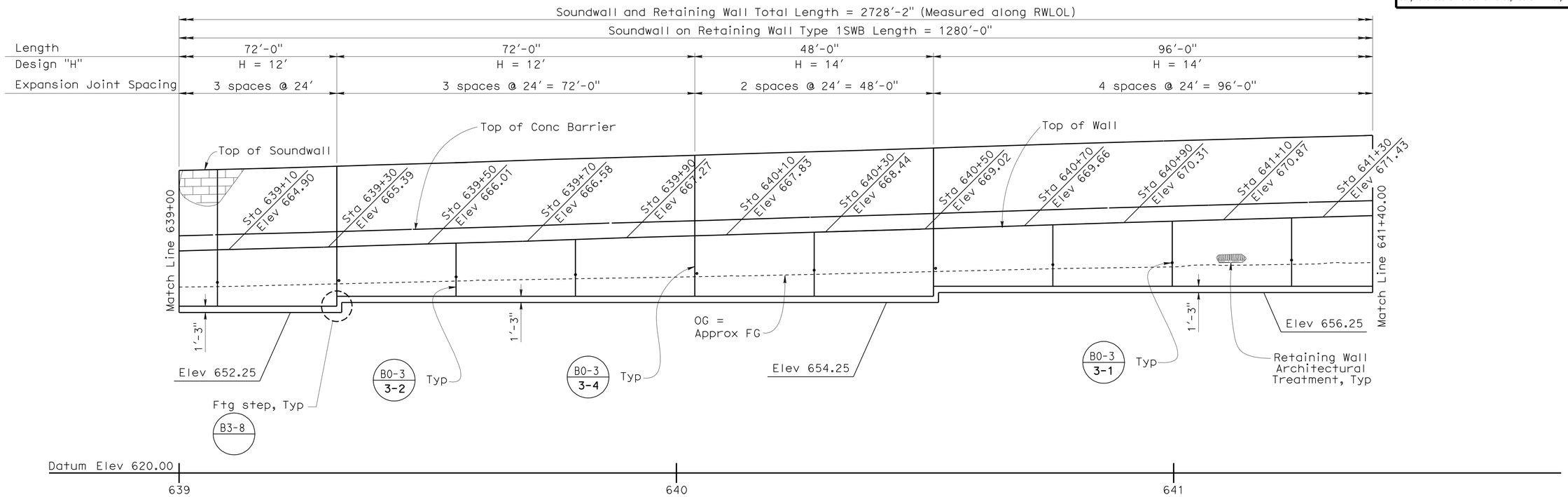

DEVELOPED ELEVATION

3/32" = 1'

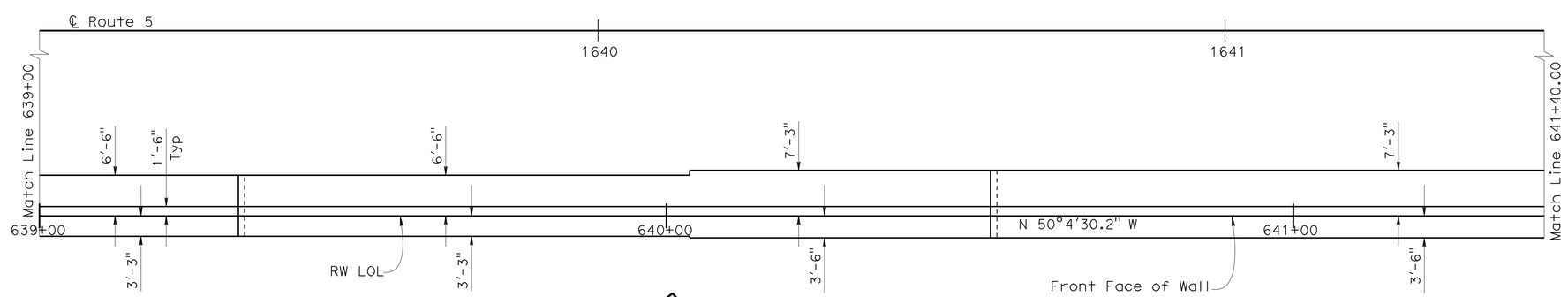

PLAN

3/32" = 1'

DESIGN	BY KA/ Zihan Yan	CHECKED IK/ Jorge Estrada	
DETAILS	BY JR/ Minh Tran	CHECKED IK/ Zihan Yan	
QUANTITIES	BY IK/ Zihan Yan	CHECKED JP/ David P. Murray	

STATE OF CALIFORNIA
DEPARTMENT OF TRANSPORTATION

DIVISION OF ENGINEERING SERVICES
STRUCTURE DESIGN
DESIGN BRANCH 18

BRIDGE NO. RW 1630
POST MILE 30.72

RETAINING WALL 1630
STRUCTURE PLAN NO. 8

STRUCTURES DESIGN DETAIL SHEET (ENGLISH) (REV. 09-01-10)

ORIGINAL SCALE IN INCHES FOR REDUCED PLANS 0 1 2 3

UNIT: 3603
PROJECT NUMBER & PHASE: 0700021119-1
CONTRACT NO.: 07-1218w1

DISREGARD PRINTS BEARING EARLIER REVISION DATES

REVISION DATES: 12/15/11 1/26/12

SHEET 14 OF 28

FILE => e-rw1630-c-sp08.dgn

USERNAME => s119571 DATE PLOTTED => 19-JUN-2012 TIME PLOTTED => 09:11

DIST	COUNTY	ROUTE	POST MILES TOTAL PROJECT	SHEET No.	TOTAL SHEETS
07	LA	5	29.4/31.6	1258	1931

REGISTERED CIVIL ENGINEER — DATE 1/31/12

5-21-12
PLANS APPROVAL DATE

REGISTERED PROFESSIONAL ENGINEER — JORGE I. ESTRADA — No. C51473 — Exp. 06-30-12 — CIVIL — CALIFORNIA

The State of California or its officers or agents shall not be responsible for the accuracy or completeness of electronic copies of this plan sheet.

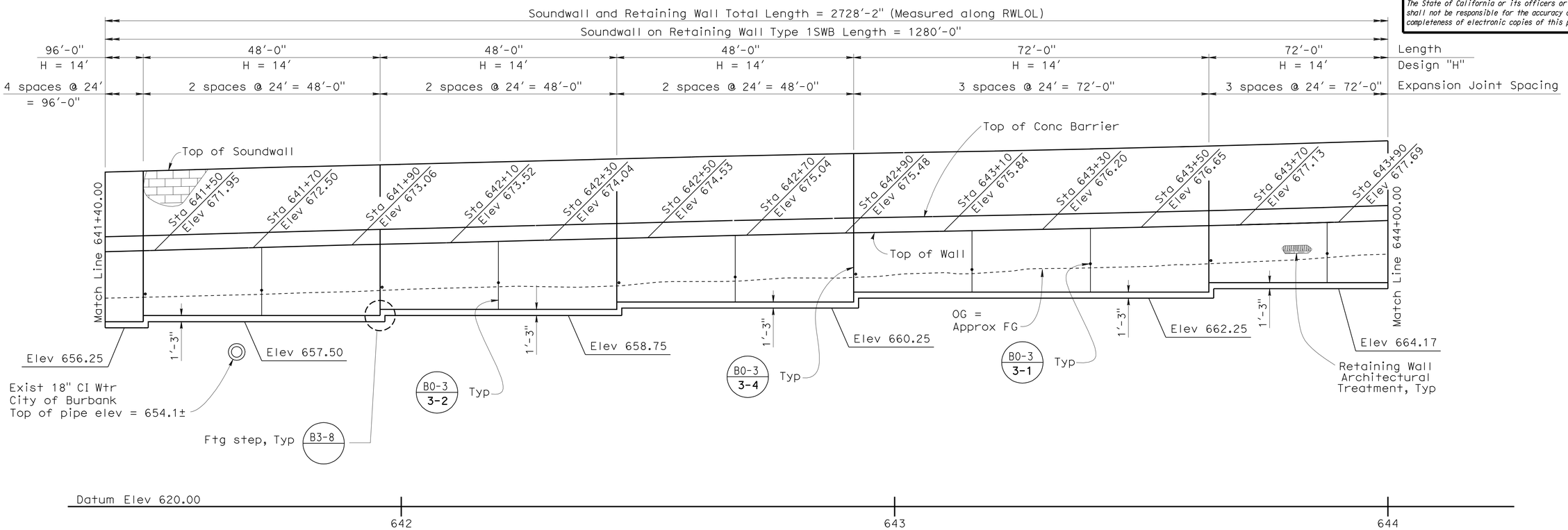

DEVELOPED ELEVATION

3/32" = 1'

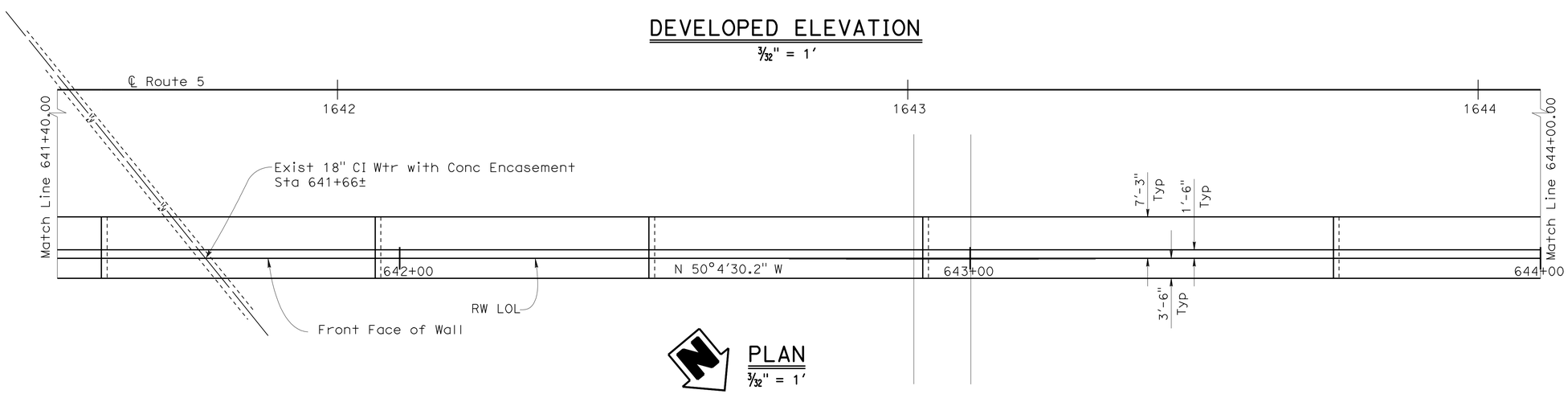

PLAN

3/32" = 1'

	BY	CHECKED
DESIGN	KA/ Zihan Yan	IK/ Jorge Estrada
DETAILS	JR/ Minh Tran	IK/ Zihan Yan
QUANTITIES	IK/ Zihan Yan	JP/ David P. Murray

STATE OF CALIFORNIA
DEPARTMENT OF TRANSPORTATION

DIVISION OF ENGINEERING SERVICES
STRUCTURE DESIGN
DESIGN BRANCH 18

BRIDGE NO. RW 1630
POST MILE 30.72

RETAINING WALL 1630
STRUCTURE PLAN NO. 9

STRUCTURES DESIGN DETAIL SHEET (ENGLISH) (REV. 09-01-10)

ORIGINAL SCALE IN INCHES FOR REDUCED PLANS 0 1 2 3

UNIT: 3603
PROJECT NUMBER & PHASE: 0700021119-1
CONTRACT NO.: 07-1218w1

DISREGARD PRINTS BEARING EARLIER REVISION DATES → 12/15/11 1/26/12

SHEET 15 OF 28

FILE => e-rw1630-c-sp09.dgn

USERNAME => s123631 DATE PLOTTED => 13-JUL-2012 TIME PLOTTED => 10:55

DIST	COUNTY	ROUTE	POST MILES TOTAL PROJECT	SHEET No.	TOTAL SHEETS
07	LA	5	29.4/31.6	1259	1931

JEstrada. 1/31/12
REGISTERED CIVIL ENGINEER DATE

5-21-12
PLANS APPROVAL DATE

REGISTERED PROFESSIONAL ENGINEER JORGE I. ESTRADA No. C51473 Exp. 06-30-12 CIVIL STATE OF CALIFORNIA

The State of California or its officers or agents shall not be responsible for the accuracy or completeness of electronic copies of this plan sheet.

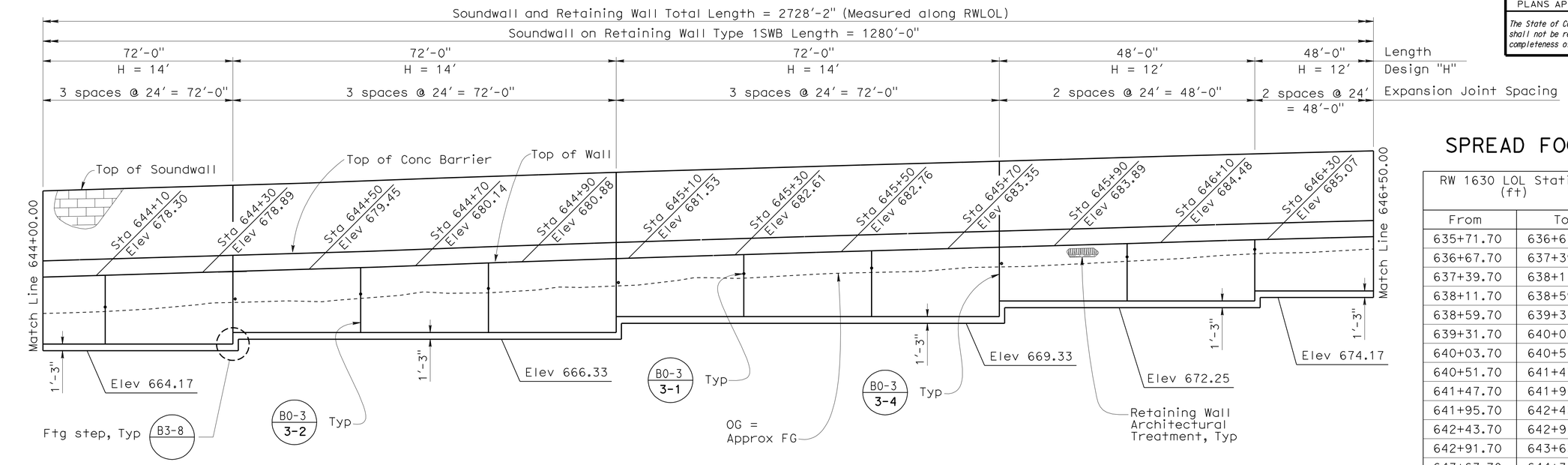

SPREAD FOOTING DATA TABLE

RW 1630 LOL Station (ft)		Wall Design Height (ft)	Ultimate Soil Bearing Capacity (q ult) (KsF)
From	To		
635+71.70	636+67.70	6	4.6
636+67.70	637+39.70	8	5.5
637+39.70	638+11.70	10	6.1
638+11.70	638+59.70	12	6.6
638+59.70	639+31.70	12	6.6
639+31.70	640+03.70	12	6.6
640+03.70	640+51.70	14	7.3
640+51.70	641+47.70	14	7.3
641+47.70	641+95.70	14	7.3
641+95.70	642+43.70	14	7.3
642+43.70	642+91.70	14	7.3
642+91.70	643+63.70	14	7.3
643+63.70	644+35.70	14	7.3
644+35.70	645+07.70	14	7.3
645+07.70	645+79.70	14	7.3
645+79.70	646+27.70	12	6.6
646+27.70	646+75.70	12	6.6
646+75.70	647+23.70	10	6.1
647+23.70	647+71.70	8	5.5
647+71.70	648+51.69	6	4.6

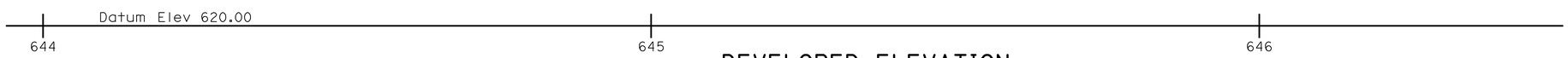

DEVELOPED ELEVATION

3/32" = 1'

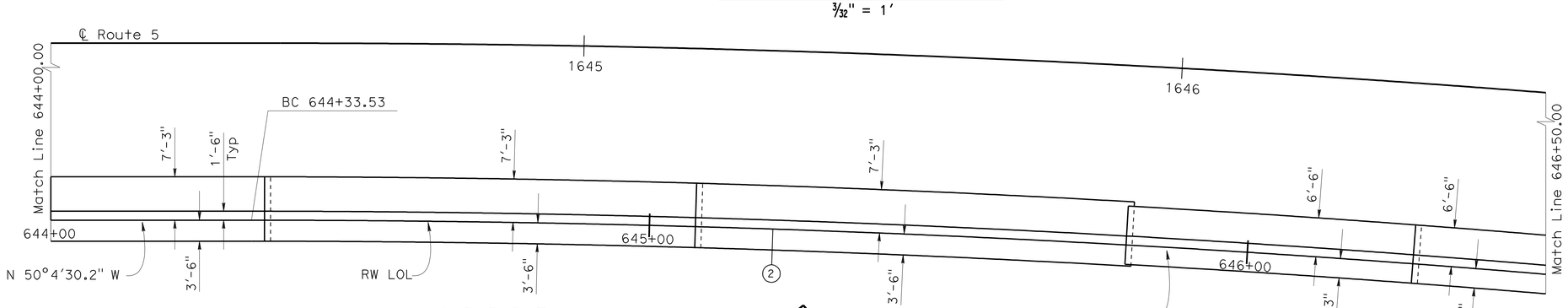

CURVE DATA

No.	R	Δ	T	L
2	2612.90'	09°10'10"	209.53'	418.16'

PLAN

3/32" = 1'

	BY	CHECKED
DESIGN	KA/ Zihan Yan	IK/ Jorge Estrada
DETAILS	JR/ Minh Tran	IK/ Zihan Yan
QUANTITIES	IK/ Zihan Yan	JP/ David P. Murray

STATE OF CALIFORNIA
DEPARTMENT OF TRANSPORTATION

DIVISION OF ENGINEERING SERVICES
STRUCTURE DESIGN
DESIGN BRANCH 18

BRIDGE NO. RW 1630
POST MILE 30.72

RETAINING WALL 1630
STRUCTURE PLAN NO. 10

STRUCTURES DESIGN DETAIL SHEET (ENGLISH) (REV. 09-01-10)

ORIGINAL SCALE IN INCHES FOR REDUCED PLANS 0 1 2 3

UNIT: 3603
PROJECT NUMBER & PHASE: 0700021119-1
CONTRACT NO.: 07-1218w1

DISREGARD PRINTS BEARING EARLIER REVISION DATES

REVISION DATES 12/15/11 02/09/12

SHEET 16 OF 28

FILE => e-rw1630-c-sp10.dgn

USERNAME => s121614 DATE PLOTTED => 19-JUN-2012 TIME PLOTTED => 11:19

DIST	COUNTY	ROUTE	POST MILES TOTAL PROJECT	SHEET No.	TOTAL SHEETS
07	LA	5	29.4/31.6	1260	1931

JEstrada. 1/31/12
REGISTERED CIVIL ENGINEER DATE

5-21-12
PLANS APPROVAL DATE

REGISTERED PROFESSIONAL ENGINEER JORGE I. ESTRADA No. C51473 Exp. 06-30-12 CIVIL STATE OF CALIFORNIA

The State of California or its officers or agents shall not be responsible for the accuracy or completeness of electronic copies of this plan sheet.

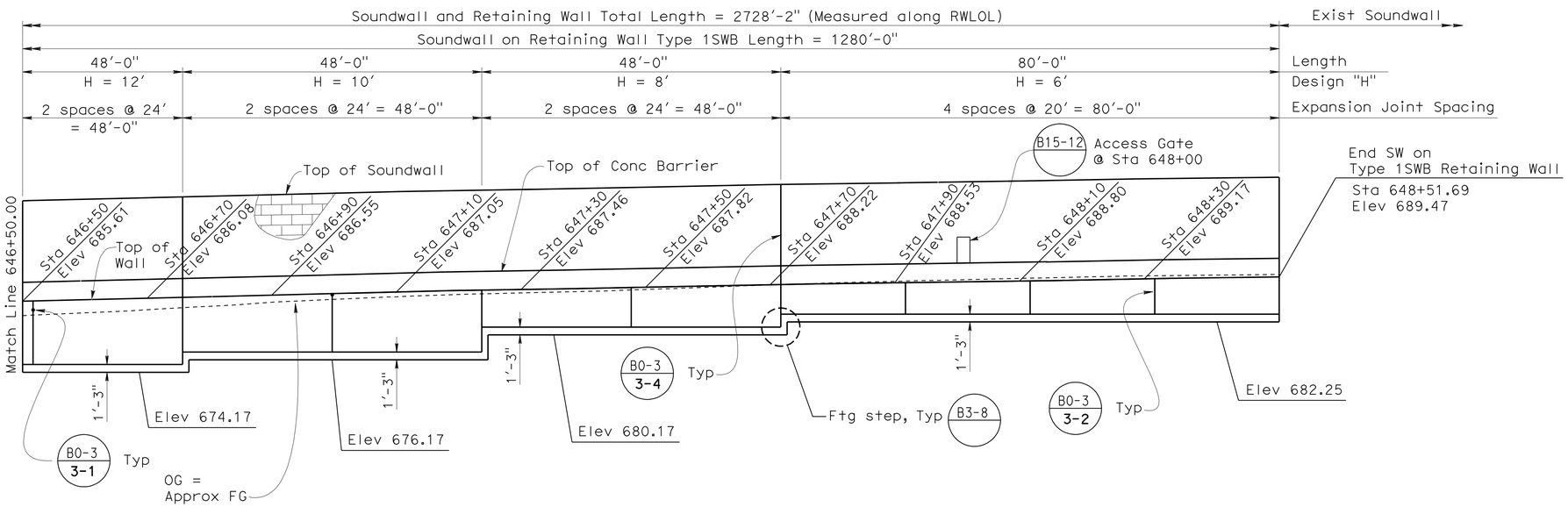

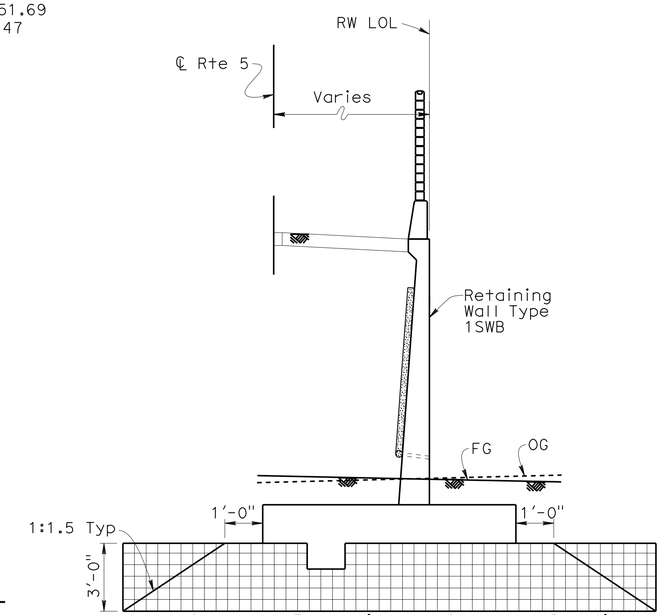

Structure Excavation and Structure Backfill
From Sta 635+71.70 to 648+51.59

OVER EXCAVATION LIMITS

Not to Scale

Structure Excavation

Structure Backfill

Datum Elev 620.00

647 648

DEVELOPED ELEVATION

3/32" = 1'

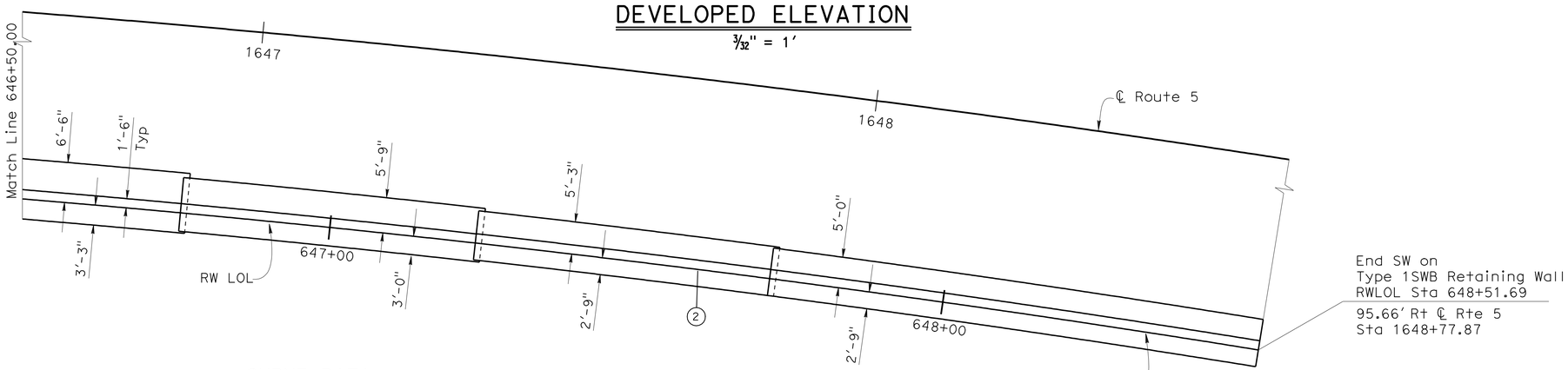

CURVE DATA

No.	R	Δ	T	L
2	2612.90'	09°10'10"	209.53'	418.16'

PLAN

3/32" = 1'

	BY	CHECKED
DESIGN	KA/ Zihan Yan	IK/ Jorge Estrada
DETAILS	JR/ Minh Tran	IK/ Zihan Yan
QUANTITIES	IK/ Zihan Yan	JP/ David P. Murray

STATE OF CALIFORNIA
DEPARTMENT OF TRANSPORTATION

DIVISION OF ENGINEERING SERVICES
STRUCTURE DESIGN
DESIGN BRANCH 18

BRIDGE NO. RW 1630
POST MILE 30.72

RETAINING WALL 1630
STRUCTURE PLAN NO. 11

STRUCTURES DESIGN DETAIL SHEET (ENGLISH) (REV. 09-01-10)

ORIGINAL SCALE IN INCHES FOR REDUCED PLANS 0 1 2 3

UNIT: 3603
PROJECT NUMBER & PHASE: 0700021119-1
CONTRACT NO.: 07-1218W1

DISREGARD PRINTS BEARING EARLIER REVISION DATES

REVISION DATES: 12/15/11 1/26/12

SHEET 17 OF 28

FILE => e-rw1630-c-sp11.dgn

USERNAME => s121614 DATE PLOTTED => 19-JUN-2012 TIME PLOTTED => 11:19

DIST	COUNTY	ROUTE	POST MILES TOTAL PROJECT	SHEET No.	TOTAL SHEETS
07	LA	5	29.4/31.6	1261	1931

REGISTERED CIVIL ENGINEER — DATE 1/31/12

5-21-12
PLANS APPROVAL DATE

The State of California or its officers or agents shall not be responsible for the accuracy or completeness of electronic copies of this plan sheet.

REGISTERED PROFESSIONAL ENGINEER — JORGE I. ESTRADA — No. C51473 — Exp. 06-30-12 — CIVIL — STATE OF CALIFORNIA

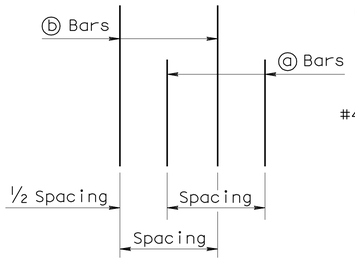

DETAIL B

No Scale

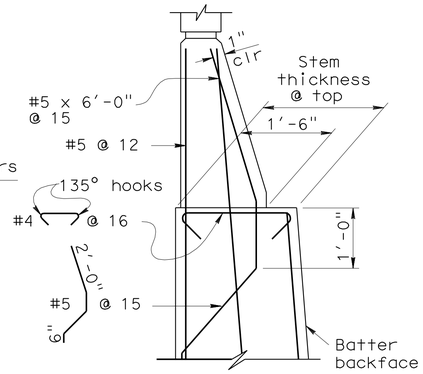

DETAIL A WITHOUT HAUNCH

No Scale

GENERAL NOTES

1. For soundwall and retaining wall architectural finish or texture, see details elsewhere in project plans.
2. For details not shown and drainage notes, see (B3-8)
3. Footing cover, 1'-6" minimum.
4. Limit of no splicing rebars = 3 times the bottom thickness of the stem.
5. Placement of reinforcements :
   - ⓑ & ⓒ bars are spliced together.
   - * ⓐ & ⓑ bars are bundled together.
   - ** Alternate ⓐ & ⓑ bars are shown in "Detail B".
   - Cont = Continuous.
6. For Soundwall & Barrier reinforcement, see "Soundwall Masonry Block on Barriers" sheets in Standard Plans.

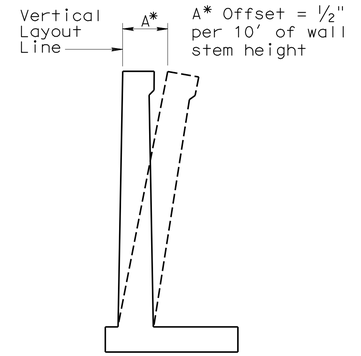

WALL OFFSET

No Scale

Values for offsetting forms to be determined by the Engineer.

TABLE 1: TABLE OF REINFORCING STEEL DIMENSIONS AND DATA

	Stem With Haunch													
Design H	6'	8'	10'	12'	14'	16'	18'	20'	22'	24'	26'	28'	30'	32'
W	7'-9"	8'-0"	8'-9"	9'-9"	10'-9"	12'-0"	13'-0"	14'-3"	15'-3"	16'-6"	18'-6"	19'-9"	21'-3"	22'-6"
C	2'-9"	2'-9"	3'-0"	3'-3"	3'-6"	4'-0"	4'-3"	4'-9"	5'-0"	5'-6"	6'-3"	6'-9"	7'-3"	7'-9"
B	5'-0"	5'-3"	5'-9"	6'-6"	7'-3"	8'-0"	8'-9"	9'-6"	10'-3"	11'-0"	12'-3"	13'-0"	14'-0"	14'-9"
F Spread footing	1'-3"	1'-3"	1'-3"	1'-3"	1'-3"	1'-6"	1'-6"	1'-9"	2'-0"	2'-3"	2'-9"	3'-0"	3'-3"	3'-9"
Batter	0	½:12	½:12	½:12	½:12	½:12	½:12	½:12	½:12	⅝:12	¾:12	⅞:12	1:12	1:12
Stem thickn. @ Haunch	1'-0"	1'-0"	1'-0"	1'-0"	1'-0"	1'-0"	1'-0"	1'-0"	1'-0"	1'-0"	1'-0"	1'-0"	1'-0"	1'-0"
ⓐ Bars				#6 @18**	#7 @18**	#8 @18**	#9 @18**	#10 @18**	#8 @ 9*	#8 @ 9*	#7 @ 6*	#10 @12**	#9 @ 9*	#11@12**
X				Cont	Cont	Cont	Cont	Cont	Cont	Cont	Cont	Cont	Cont	Cont
Y				8'-0"	6'-6"	7'-6"	8'-6"	9'-6"	9'-6"	11'-0"	11'-6"	13'-0"	14'-0"	15'-6"
ⓑ Bars	#5 @12	#5 @12	#5 @ 9	#6 @18**	#7 @18**	#8 @18**	#9 @18**	#10 @18**	#8 @ 9*	#8 @ 9*	#7 @ 6*	#10 @12**	#9 @ 9*	#11@12**
X	Cont	Cont	Cont	Cont	Cont	Cont	Cont	Cont	Cont	5'-6"	6'-6"	7'-0"	8'-0"	8'-6"
Y	Cont	Cont	Cont	Cont	10'-6"	13'-0"	15'-0"	17'-6"	19'-6"	21'-0"	18'-6"	19'-0"	25'-6"	23'-6"
ⓒ Bars					#6 @18	#6 @18	#6 @18	#6 @18	#6 @18	#6 @18	#6 @12	#7 @12	#7 @18	#7 @12
ⓓ Bars	#5 @12	#5 @12	#5 @12	#5 @ 9	#6 @ 9	#6 @ 9	#6 @ 6	#8 @ 9	#8 @ 9	#8 @ 9	#7 @ 6	#7 @ 6	#9 @ 9	#9 @ 9
Ultimate Bearing Capacity Req'd k/sf	4.6	5.5	6.1	6.6	7.3	8.1	9.0	9.9	11.3	12.2	12.5	13.4	14.1	15.4

TABLE 2: TABLE OF REINFORCING STEEL DIMENSIONS AND DATA

	Stem With Haunch						Stem Without Haunch						
Design H	8'	10'	12'	14'	16'	18'	20'	22'	24'	26'	28'	30'	32'
W	8'-0"	8'-6"	9'-3"	10'-3"	11'-3"	13'-0"	13'-9"	16'-0"	16'-6"	18'-6"	20'-0"	20'-6"	21'-9"
C	2'-9"	2'-9"	3'-0"	3'-6"	3'-9"	4'-3"	4'-6"	5'-3"	5'-6"	6'-3"	6'-9"	6'-9"	7'-6"
B	5'-3"	5'-9"	6'-3"	6'-9"	7'-6"	8'-9"	9'-3"	10'-9"	11'-0"	12'-3"	13'-3"	13'-9"	14'-3"
F Spread footing	1'-3"	1'-3"	1'-3"	1'-3"	1'-6"	1'-6"	1'-9"	2'-0"	2'-3"	2'-9"	3'-0"	3'-3"	3'-6"
Batter	0	0	0	0	0	0	0	0	0	¼:12	½:12	½:12	½:12
Stem thickn. @ Haunch	1'-0"	1'-0"	1'-0"	1'-0"	1'-3"	1'-3"							
Stem thickn. @ top							1'-6"	2'-0"	2'-0"	2'-0"	2'-0"	2'-0"	2'-0"
ⓐ Bars			#6 @12**	#5 @ 6*	#9 @18**	#9 @12**	#9 @12**	#9 @12**	#7 @ 6*	#7 @ 6*	#7 @ 6*	#9 @ 9*	#11@12**
X			Cont	Cont	Cont	Cont	Cont	Cont	Cont	Cont	Cont	Cont	Cont
Y			5'-6"	5'-6"	8'-6"	8'-6"	8'-6"	8'-6"	9'-6"	11'-0"	12'-6"	13'-6"	14'-6"
ⓑ Bars	#5 @ 9	#6 @ 9	#6 @12**	#5 @ 6*	#9 @18**	#9 @12**	#9 @12**	#9 @12**	#7 @ 6*	#7 @ 6*	#7 @ 6*	#9 @ 9*	#11@12**
X	Cont	Cont	Cont	Cont	Cont	Cont	Cont	Cont	5'-6"	6'-0"	7'-6"	7'-6"	8'-0"
Y	Cont	Cont	Cont	Cont	11'-6"	11'-6"	12'-0"	12'-0"	17'-6"	20'-0"	21'-6"	24'-0"	24'-0"
ⓒ Bars					#7 @18	#7 @12	#7 @12	#7 @12	#6 @ 12	#6 @ 12	#6 @12	#7 @18	#7 @12
ⓓ Bars	#5 @12	#5 @ 9	#5 @9	#6 @9	#6 @ 9	#9 @12	#9 @12	#7 @#7	6 @ 6	#7 @ 6	#7 @ 6	#9 @ 9	#9 @ 9
Ultimate Bearing Capacity Req'd k/sf	5.5	6.5	7.3	7.6	9.0	9.0	10.6	10.5	12.2	12.6	13.3	15.4	16.0

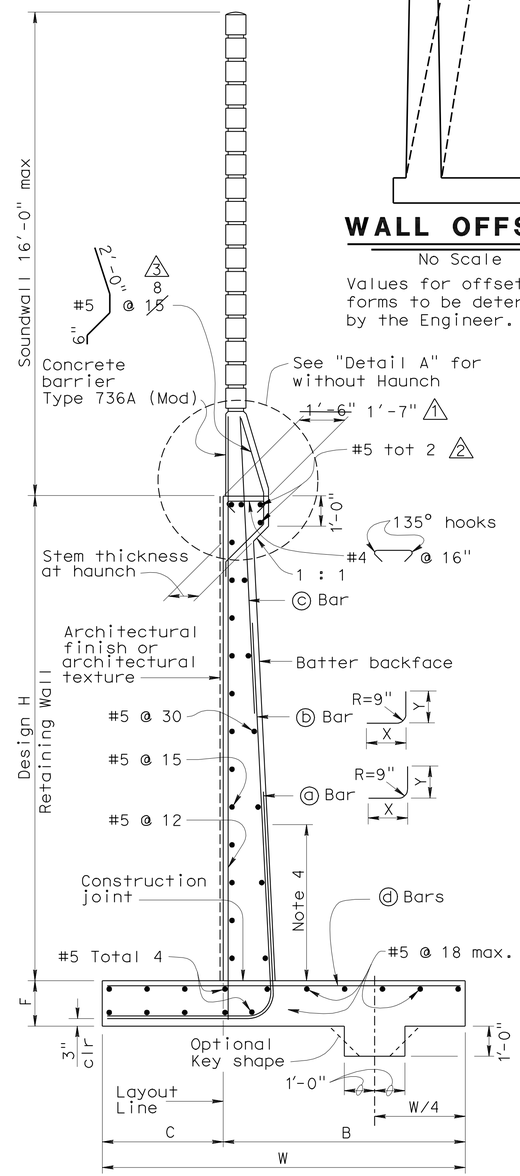

SPREAD FOOTING SECTION

No Scale

DESIGN DATA

DESIGN: Load Factor Design (LFD)

CONCRETE: Reinforced Concrete, f'c = 3600 psi
fy = 60,000 psi

LOADING CASE:
Level ground with 240 psf surcharge and 16' Soundwall

Seismic Load = 0.3 Dead Load
Wind Load = 30 psf
Dead Load of Soundwall = 1414 lb/ft
Dead Load of Barrier = 372 lb/ft

SEISMIC LOAD: SOIL
Kh = 0.3g
Kv = 0.0
Kae : Mononobe-Okabe Method

SOIL: Ø = 34° γ = 120 pcf
Equivalent fluid pressure:
= 36 pcf for determination of toe pressure
= 27 pcf for determination of heel pressure

EXTERNAL STABILITY:
Group 1 : D + E + SC
Group 2 : D + E + SC + W
Group 3 : D + PYM

INTERNAL STABILITY (LFD):
Group A : βD + 1.7E + 1.7SC
Group B : βD + 1.7E + 1.3W
Group C (stem) : 1.0D + 1.0E + 1.0EQD + 1.0EQE
Group C (footing) : D + PYM

Where : β = 1.0 or 1.3 whichever controls design
D = Dead Load
E = Lateral Earth Pressure
SC = Surcharge
W = Wind load
EQD = Seismic Dead Load
EQE = Seismic Lateral Earth Pressure
PYM = Probable Yield Moment (1.3 x Nominal Yield Moment of Stem)

STANDARD DRAWING

FILE NO. xs14-220x

APPROVAL DATE July 2011

1 Revised dimension
2 Added rebar information
3 Revised rebar spacing

STATE OF CALIFORNIA
DEPARTMENT OF TRANSPORTATION

DIVISION OF ENGINEERING SERVICES

BRIDGE NO. RW1630
POST MILE 30.72

RETANING WALL 1630

RETAINING WALL TYPE 1SWB

DS OSD 2147A (ENGLISH STANDARD DRAWING "XS" BORDER REV. (02-02-11)

ORIGINAL SCALE IN INCHES FOR REDUCED PLANS 0 1 2 3

UNIT: 3603
PROJECT NUMBER & PHASE: 0700021119-1
CONTRACT NO.: 07-1218w1

DISREGARD PRINTS BEARING EARLIER REVISION DATES

REVISION DATES 11/28/11 1/26/12

SHEET 18 OF 28

FILE => e-rw1630-d-sx14-220.dgn

USERNAME => s124496 DATE PLOTTED => 21-MAY-2012 TIME PLOTTED => 18:04

DIST	COUNTY	ROUTE	POST MILES TOTAL PROJECT	SHEET No.	TOTAL SHEETS
07	LA	5	29.4/31.6	1262	1931

REGISTERED CIVIL ENGINEER — DATE 1/31/12

5-21-12
PLANS APPROVAL DATE

REGISTERED PROFESSIONAL ENGINEER — JORGE I. ESTRADA — No. C51473 — Exp. 06-30-12 — CIVIL — STATE OF CALIFORNIA

The State of California or its officers or agents shall not be responsible for the accuracy or completeness of electronic copies of this plan sheet.

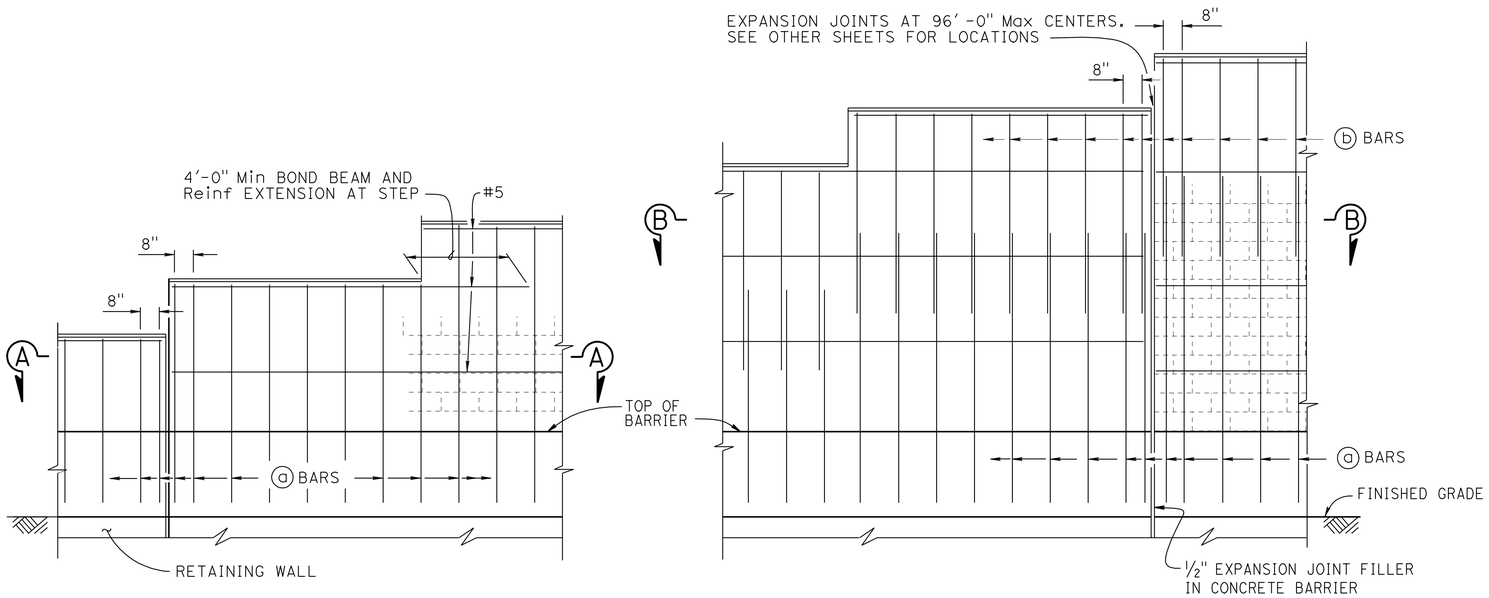

H=6'-4" THRU H=10'-4"

H=12'-4" THRU H=16'-4"

PART ELEVATION

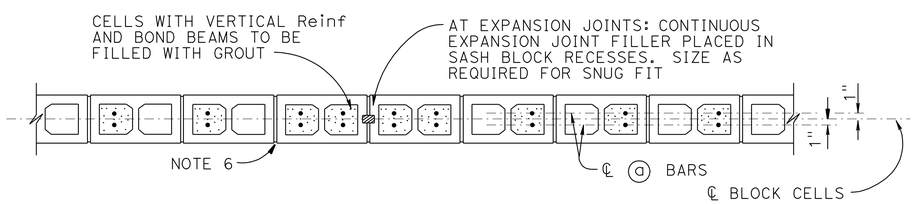

SECTION A-A

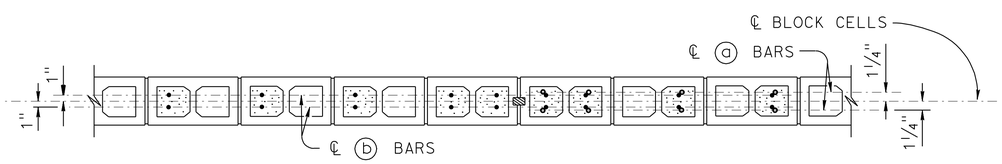

SECTION B-B

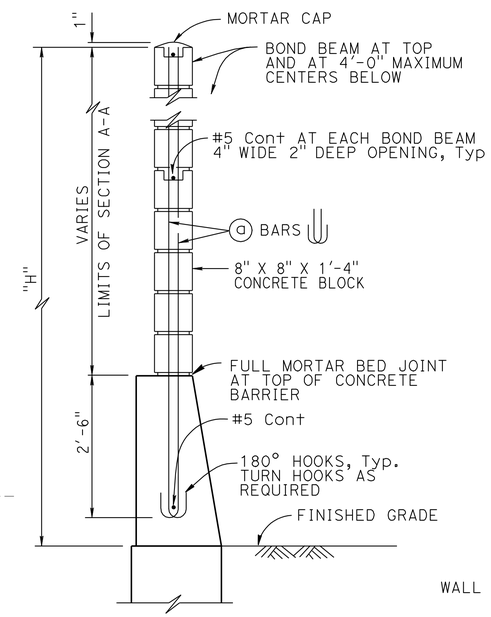

H=6'-4" THRU H=10'-4"

For details not shown, see H=12'-4" thru H=16'-4"

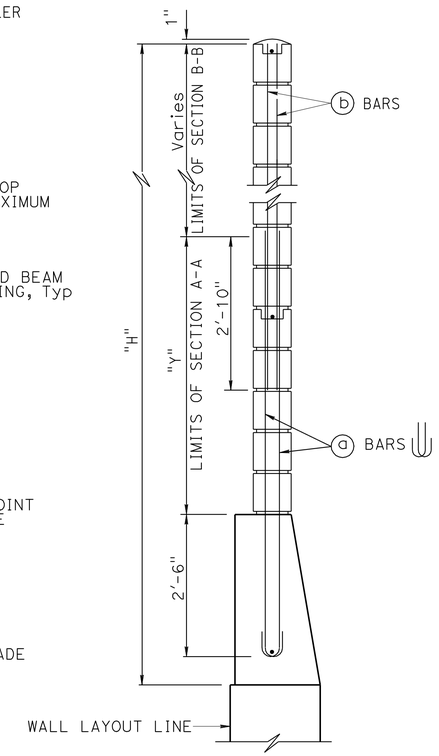

H=12'-4" THRU H=16'-4"

For details not shown, see H=6'-4" thru H=10'-4"

TYPICAL SECTION

SOUND WALL REINFORCEMENT TABLE

MAXIMUM "H"	ⓐ BARS @ 1'-4" Max	ⓑ BARS @ 1'-4" Max	"Y"	f'm (psi)	COMPRESSIVE STRENGTH OF CMU (psi)	MAXIMUM "H"
6'-4"	#4	———	———	1500	1900	6'-4"
8'-4"	#4	———	———	1500	1900	8'-4"
10'-4"	#4	———	———	1500	1900	10'-4"
12'-4"	#5	#4	5'-0"	1500	1900	12'-4"
14'-4"	#6	#4	7'-0"	1500	1900	14'-4"
16'-4"	#6	#4	9'-0"	2500	3700	16'-4"

NOTES:

1. For details not shown, see "SOUND WALL - MASONRY BLOCK WITH BARRIER ON RETAINING WALL - DETAILS NO. 2" sheet
2. Slope ground at traffic side of barrier to drain. Maximum slope ±10%
3. See STANDARD PLANS B15-9 for other details
4. For type of block and joint finish, see other sheets
5. When blocks are laid in stacked bond, ladder type, galvanized joint reinforcement shall be provided. A minimum of 2-9 gauge wire continuous at 4'-0" maximum to be used. Locate reinforcement in joints that are at the approximate midpoint between bond beams
6. Horizontal joints shall be tooled concave or may be weathered. Vertical joints shall be tooled concave or may be raked
7. For intermediate wall heights that are between the "H's" given, use the tabular information for the next higher "H"
8. Masonry strengths are listed in "SOUND WALL REINFORCEMENT TABLE"
9. Concrete to be used for the barrier shall contain not less than 590 pounds of cementitious material per cubic yard

NO SCALE

STANDARD DRAWING

FILE NO. xs15-130-1

APPROVAL DATE July 2011

STATE OF CALIFORNIA
DEPARTMENT OF TRANSPORTATION

DIVISION OF ENGINEERING SERVICES

BRIDGE NO. RW1630
POST MILE 30.72

RETAINING WALL 1630

MASONRY BLOCK SOUND WALL WITH BARRIER ON RETAINING WALL

DETAILS NO. 1

DS OSD 2147A (ENGLISH STANDARD DRAWING "XS" BORDER REV. (02-02-11)

ORIGINAL SCALE IN INCHES FOR REDUCED PLANS 0 1 2 3

UNIT: 3603
PROJECT NUMBER & PHASE: 0700021119-1
CONTRACT NO.: 07-1218w1

DISREGARD PRINTS BEARING EARLIER REVISION DATES

REVISION DATES 11/26/11 1/26/12

SHEET 19 OF 28

FILE => e-rw1630-d-sx15-130-1.dgn

USERNAME => s124496 DATE PLOTTED => 21-MAY-2012 TIME PLOTTED => 18:04

DIST	COUNTY	ROUTE	POST MILES TOTAL PROJECT	SHEET No.	TOTAL SHEETS
07	LA	5	29.4/31.6	1263	1931

JEstrada. 1/31/12
REGISTERED CIVIL ENGINEER DATE

5-21-12
PLANS APPROVAL DATE

REGISTERED PROFESSIONAL ENGINEER JORGE I. ESTRADA No. C51473 Exp. 06-30-12 CIVIL STATE OF CALIFORNIA

The State of California or its officers or agents shall not be responsible for the accuracy or completeness of electronic copies of this plan sheet.

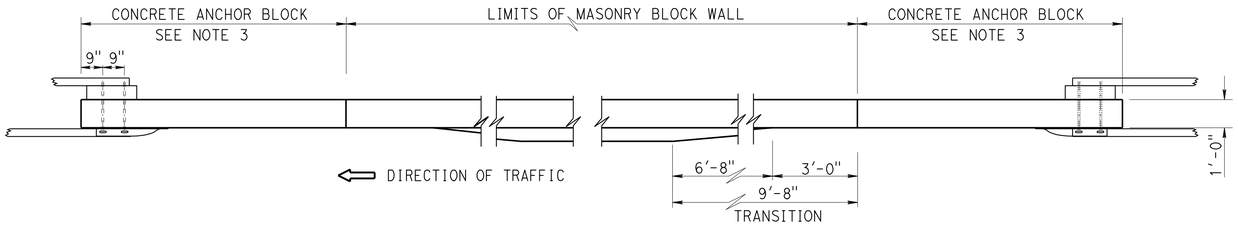

PLAN

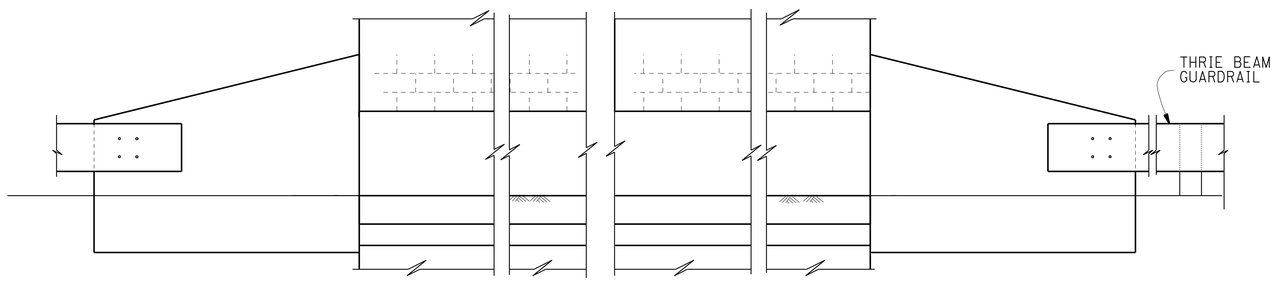

ELEVATION

METAL BEAM GUARDRAIL ANCHORAGE

For details not shown, see STANDARD PLAN B11-56

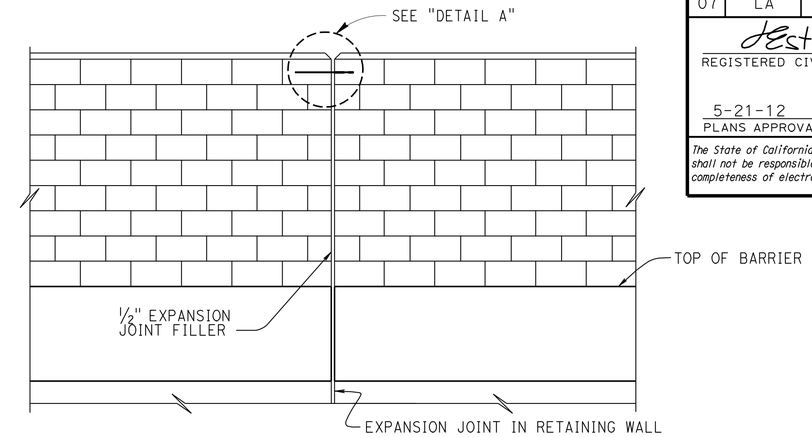

ALIGNMENT KEY DETAIL

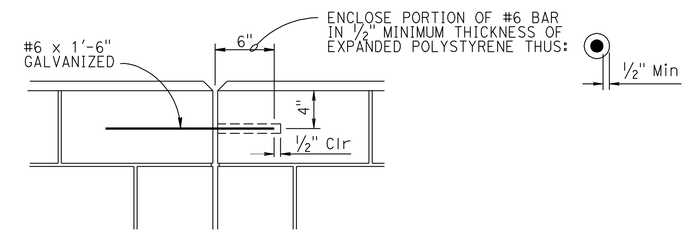

DETAIL A

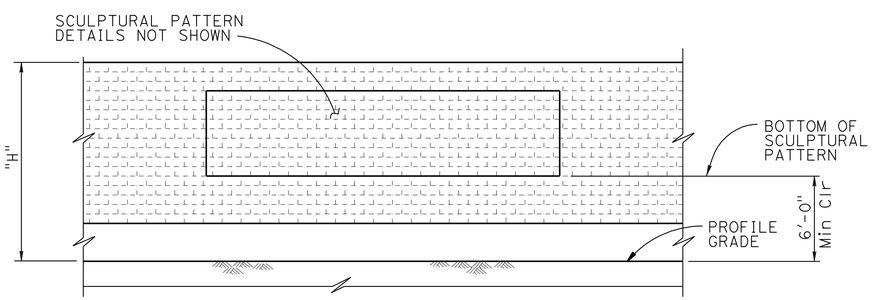

CLEARANCE DETAIL

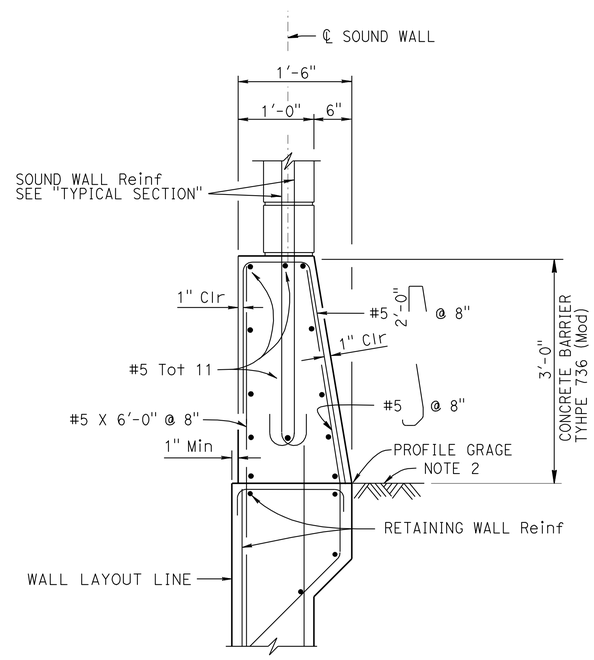

BARRIER SECTION

DESIGN NOTES

DESIGN
Uniform Building Code, 1997 Edition and the Bridge Design Specifications

DESIGN WIND LOAD
33 psf

DESIGN SEISMIC LOAD
0.57 Dead load

REINFORCED CONCRETE
f'c = 3600 psi
fy = 60 ksi

CONCRETE MASONRY

REGULAR STRENGTH	HIGH STRENGTH	
f'm = 1500 psi	f'm = 2000 psi	f'm = 2500 psi
fb = 495 psi	fb = 660 psi	fb = 830 psi
fs = 24,000 psi	fs = 24,000 psi	fs = 24,000 psi
n = 25.8	n = 19.3	n = 15.5

NOTES:

1. For details not shown, see RSP B15-6
2. Slope ground at traffic side of barrier to drain.
   Maximum slope ±10%
   See STANDARD PLAN B11-56, Note D
3. For Concrete Anchor Block and connection details, see "CONNNECTION DETAIL DD" on RSP A77J3

NO SCALE

RETAINING WALL 1630

MASONRY BLOCK SOUND WALL W/BARRIER ON RETAINING WALL

DETAILS NO. 2

STANDARD DRAWING
FILE NO. xs15-130-2
APPROVAL DATE July 2011

STATE OF CALIFORNIA
DEPARTMENT OF TRANSPORTATION

DIVISION OF ENGINEERING SERVICES

BRIDGE NO. RW1630
POST MILE 30.72

DS OSD 2147A (ENGLISH STANDARD DRAWING "XS" BORDER REV. (02-02-11)

ORIGINAL SCALE IN INCHES FOR REDUCED PLANS 0 1 2 3

UNIT: 3603
PROJECT NUMBER & PHASE: 0700021119-1
CONTRACT NO.: 07-1218w1

DISREGARD PRINTS BEARING EARLIER REVISION DATES
REVISION DATES 11/28/11 1/26/12

SHEET 20 OF 28

FILE => e-rw1630-d-sx15-130-2.dgn

USERNAME => s124496 DATE PLOTTED => 21-MAY-2012 TIME PLOTTED => 18:04

DIST	COUNTY	ROUTE	POST MILES TOTAL PROJECT	SHEET No.	TOTAL SHEETS
07	LA	5	29.4/31.6	1264	1931

dEstrada. 1/31/12
REGISTERED CIVIL ENGINEER DATE

5-21-12
PLANS APPROVAL DATE

REGISTERED PROFESSIONAL ENGINEER Jorge I. Estrada No. C51473 Exp. 06-30-12 CIVIL STATE OF CALIFORNIA

The State of California or its officers or agents shall not be responsible for the accuracy or completeness of electronic copies of this plan sheet.

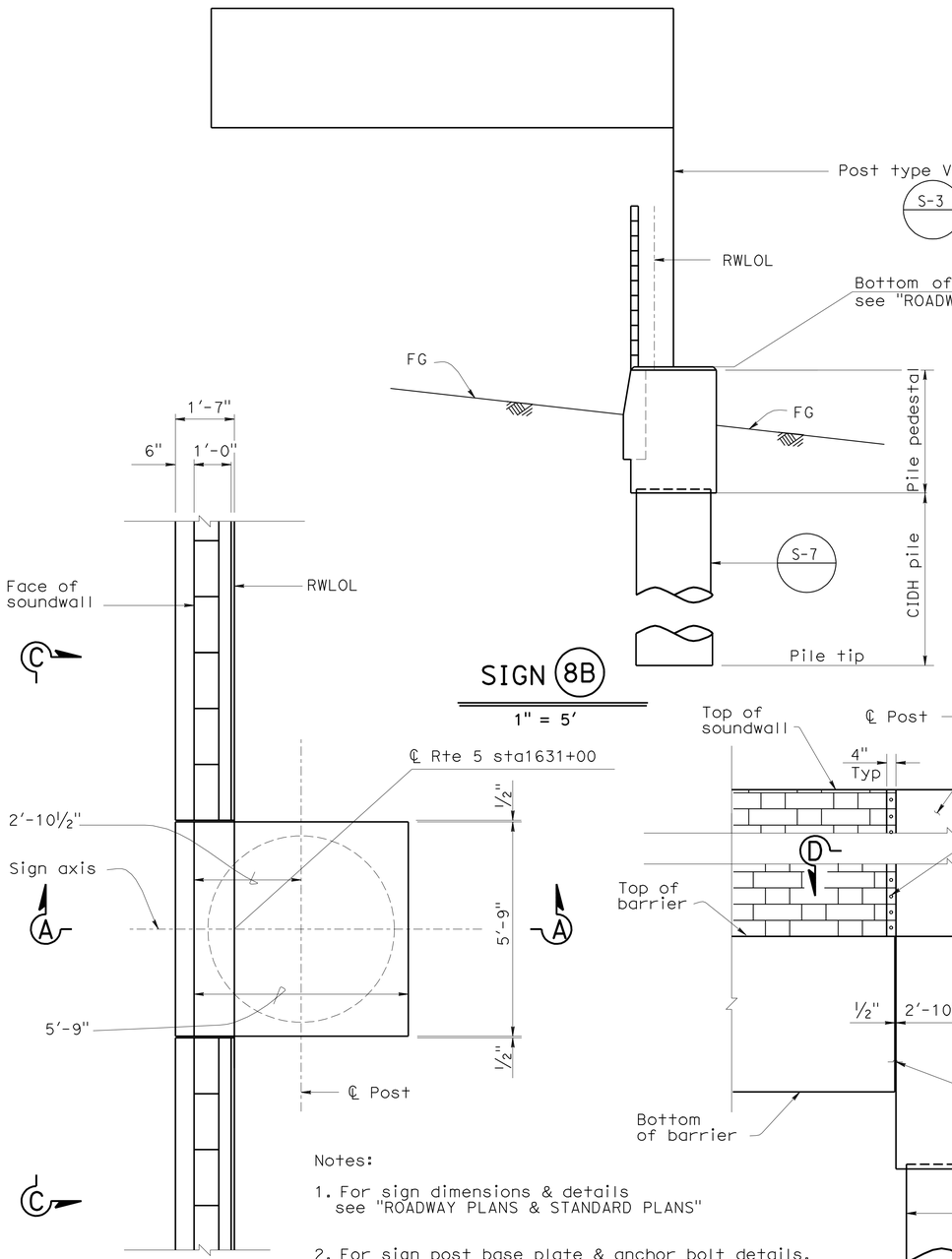

SIGN 8B
1" = 5'

PLAN
1' = ½"

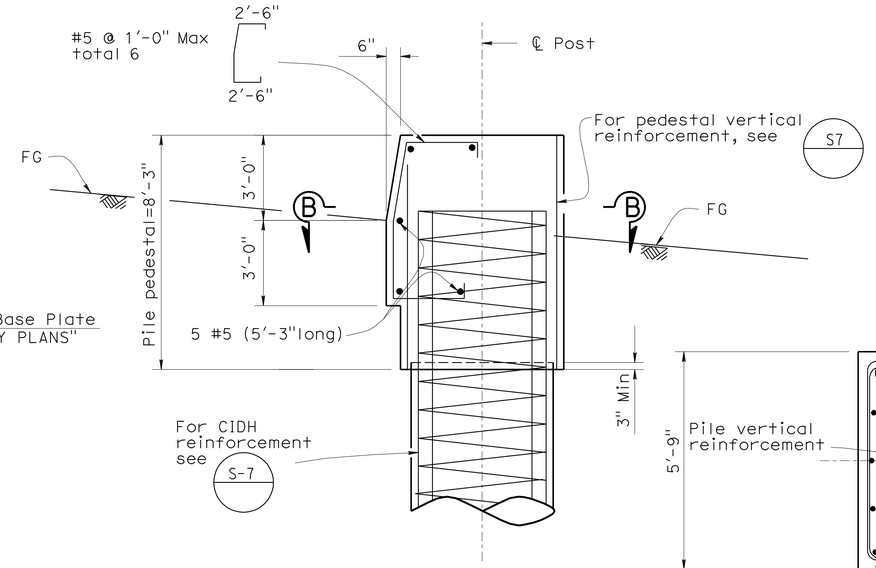

SECTION A-A
1" = ⅜"

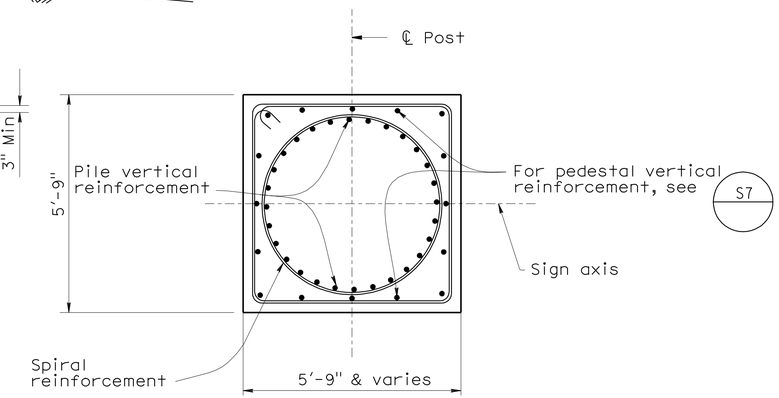

SECTION B-B
1" = ½"

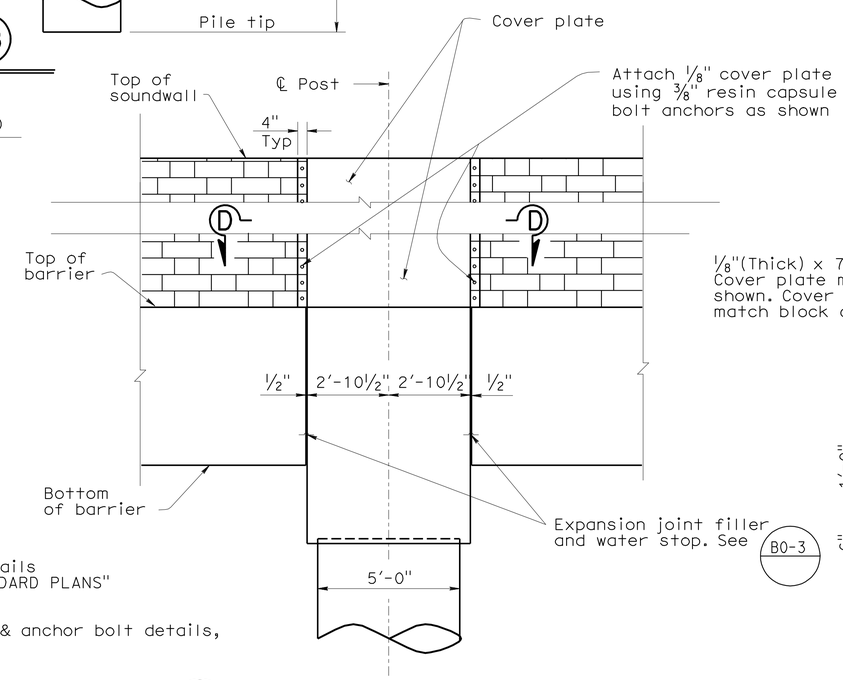

ELEVATION C-C
1" = ⅜"

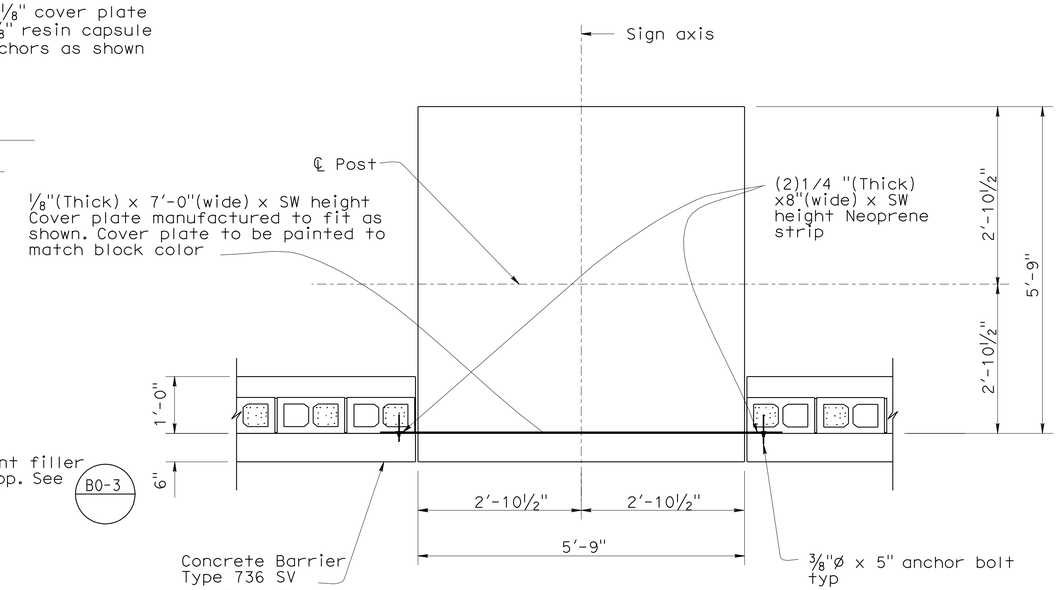

SECTION D-D
1" = ¾"

Notes:

1. For sign dimensions & details see "ROADWAY PLANS & STANDARD PLANS"
2. For sign post base plate & anchor bolt details, see S-3
3. For pedestal & pile details not shown see S-7

	BY	CHECKED
DESIGN	Zihan Yan	Ruperd Wilson
DETAILS	Farideh Rashedi	Zihan Yan
QUANTITIES	IK/ Zihan Yan	JP/ David P. Murray

STATE OF CALIFORNIA
DEPARTMENT OF TRANSPORTATION

DIVISION OF ENGINEERING SERVICES
STRUCTURE DESIGN
DESIGN BRANCH 18

BRIDGE NO. RW 1630
POSTMILE 30.72

RETAINING WALL 1630
SIGN DETAILS

STRUCTURES DESIGN DETAIL SHEET (ENGLISH) (REV. 09-01-10)

ORIGINAL SCALE IN INCHES FOR REDUCED PLANS 0 1 2 3

UNIT: 3603
PROJECT NUMBER & PHASE: 0700021119-1
CONTRACT NO.: 07-1218w1

DISREGARD PRINTS BEARING EARLIER REVISION DATES

REVISION DATES: ~~3-13-12~~ 4-19-12

SHEET 21 OF 28

FILE => 53-rw1630-u-sign.dgn

USERNAME => s124496 DATE PLOTTED => 21-MAY-2012 TIME PLOTTED => 18:04

NOTE:
FRACTURED GRANITE TEXTURE SHALL RUN PERPENDICULAR TO PLUMB.

DIST	COUNTY	ROUTE	POST MILES TOTAL PROJECT	SHEET No.	TOTAL SHEETS
07	LA	5	29.4/31.6	1265	1931

JEstrada. 1/31/12
REGISTERED CIVIL ENGINEER DATE

5-21-12
PLANS APPROVAL DATE

REGISTERED PROFESSIONAL ENGINEER
JORGE I. ESTRADA
No. C51473
Exp. 06-30-12
CIVIL
STATE OF CALIFORNIA

The State of California or its officers or agents shall not be responsible for the accuracy or completeness of electronic copies of this plan sheet.

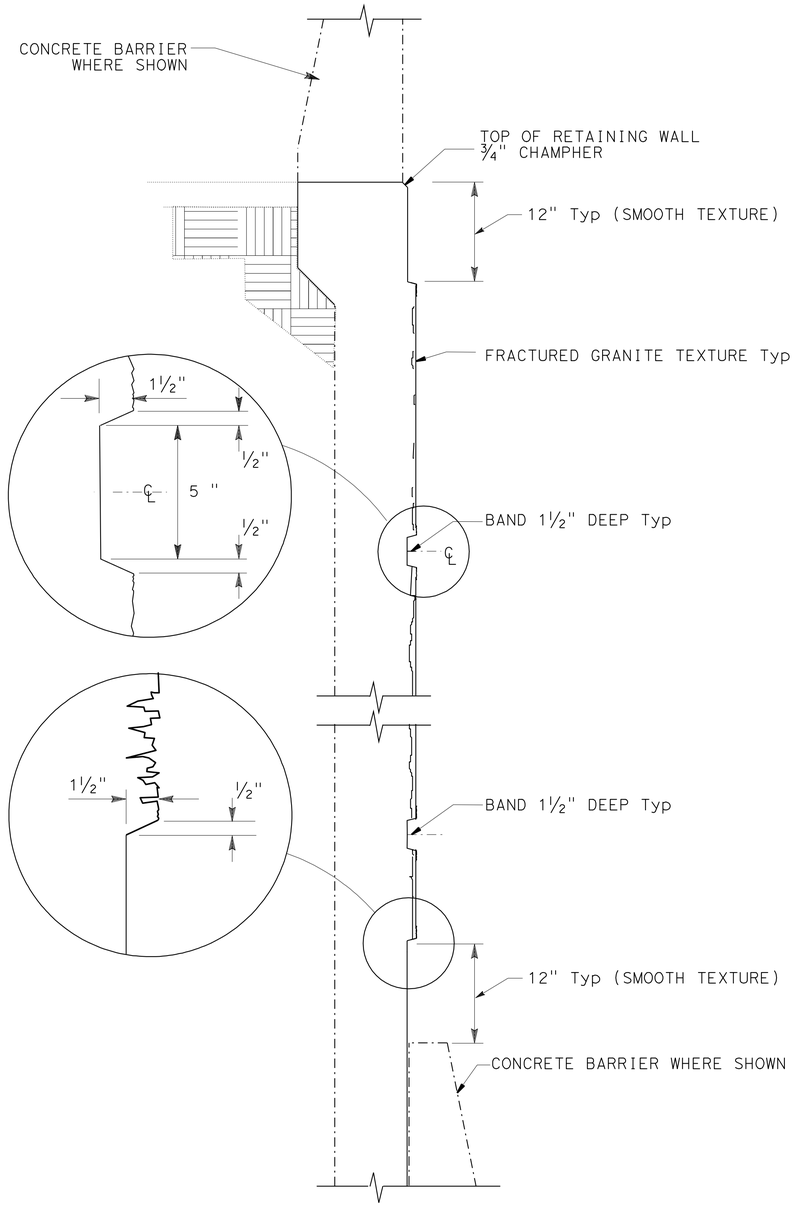

RETAINING WALL
TYPICAL SECTION

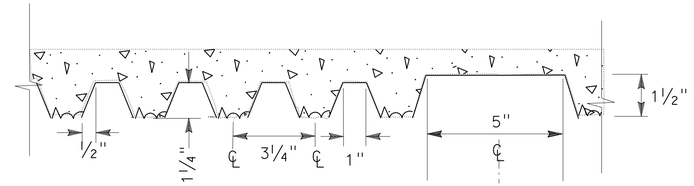

FRACTURED GRANITE TEXTURE & BAND

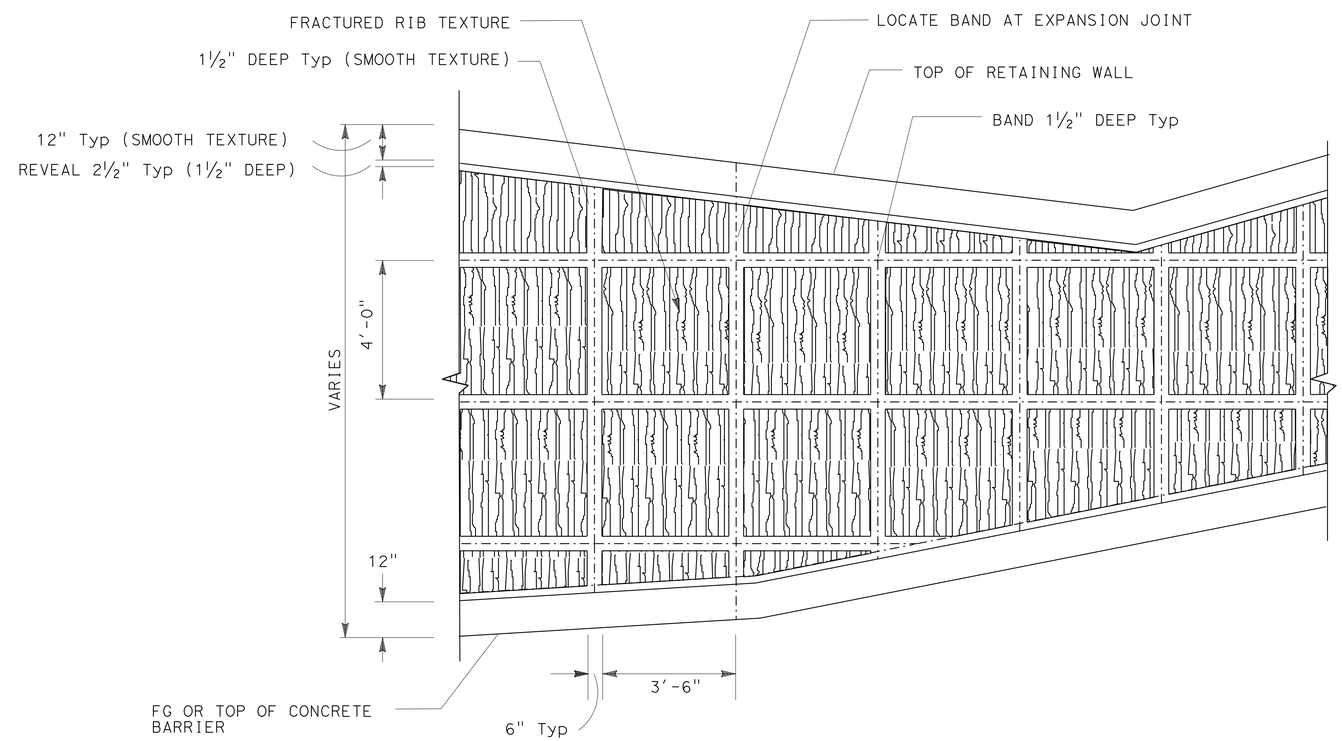

RETAINING WALL
TYPICAL ELEVATION

RETAINING WALL ARCHITECTURAL TREATMENT

NO SCALE

	BY	CHECKED
DESIGN	KA/ Zihan Yan	IK/ Jorge Estrada
DETAILS	JR/ Minh Tran	IK/ Zihan Yan
QUANTITIES	IK/ Zihan Yan	JP/ David P. Murray

STATE OF CALIFORNIA
DEPARTMENT OF TRANSPORTATION

DIVISION OF ENGINEERING SERVICES
STRUCTURE DESIGN
DESIGN BRANCH 18

BRIDGE NO. RW1630
POST MILE 30.72

RETAINING WALL 1630
ARCHITECTURAL TREATMENT

STRUCTURES DESIGN DETAIL SHEET (ENGLISH) (REV. 09-01-10)

ORIGINAL SCALE IN INCHES FOR REDUCED PLANS 0 1 2 3

UNIT: 3603
PROJECT NUMBER & PHASE: 0700021119-1 CONTRACT NO.: 07-1218w1

DISREGARD PRINTS BEARING EARLIER REVISION DATES

REVISION DATES: 10/20/11 1/26/12

SHEET 22 OF 28

FILE => e-rw1630-y-arch1.dgn

USERNAME => s124496 DATE PLOTTED => 21-MAY-2012 TIME PLOTTED => 18:04

DIST	COUNTY	ROUTE	POST MILES TOTAL PROJECT	SHEET No	TOTAL SHEETS
07	LA	5	29.4/31.6	1266	1931

Kristopher Barker 1-23-12
CERTIFIED ENGINEERING GEOLOGIST

5-21-12
PLANS APPROVAL DATE

PROFESSIONAL GEOLOGIST Kristopher Barker No. 2383 Exp. 8-31-13 CERTIFIED ENGINEERING GEOLOGIST STATE OF CALIFORNIA

The State of California or its officers or agents shall not be responsible for the accuracy or completeness of electronic copies of this plan sheet.

BENCH MARKS

BM PRHV905 Elev 647.715 ft
Fd PK Nail in AC NBND LA-5 shoulder (gore area); at Lincoln St. NBND LA-5 Off-ramp; 77.548′ ft Rt Sta 1624+75.66 ℄ Rte 5 (Prop).
N 1893428.109
E 6461516.696

BM PRHV906 Elev 655.983 ft
Fd PK Nail in gore area at Scott Rd SBND LA-5 Off-ramp; 74.324 ft Lt Sta 1632+80.34 ℄ Rte 5 (Prop).
N 1893738.581
E 6460755.304

BM PRHV907 Elev 680.927 ft
Fd PK Nail Approx 210 ft north of Call Box #5-312 on the NBND LA-5 shoulder; ±6.2′ from EP; 70.884′ Rt Sta 1644+62.10 ℄ Rte 5 (Prop).
N 1894589.183
E 6459916.995

NAD83, NAVD88

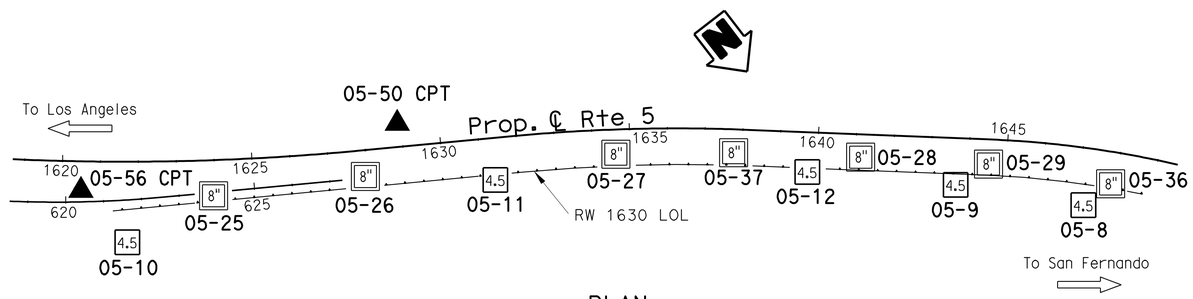

PLAN
1" = 200′

Note: No ground water encountered during field investigation.

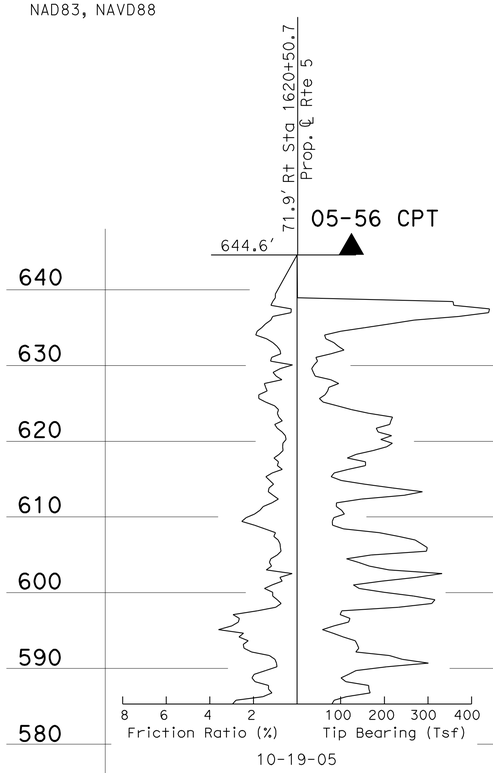

10-19-05

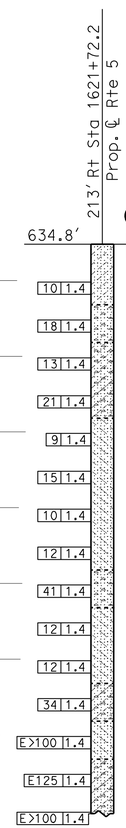

7-27-05

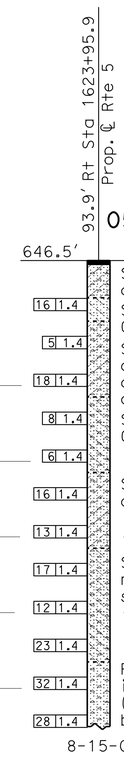

8-15-05

Asphalt (6" thick).
SILTY SAND with GRAVEL (SM), medium dense, brown, dry, fine to coarse GRAVEL up to 2", (FILL).
SILTY fine to coarse SAND (SM), contains 5% GRAVEL, medium dense, brown, dry, (ALLUVIUM).
SILTY fine to medium SAND (SM) with 10 to 15% coarse GRAVEL, loose to medium dense, brown, dry, contains weakly cemented stringers below approximate elevation +631.6′.
SILTY fine SAND (SM), contains 2 to 10% fine GRAVEL, loose, minor GRAVEL 2" thick.
SILTY fine to medium SAND (SM) with 10 to 15% coarse GRAVEL, medium dense.
SILTY fine SAND (SM), contains 10% coarse GRAVEL, medium dense, light brown, rare weakly cemented seams ranging from 1 to 2" thick.
Poorly graded fine SAND (SP), contians 5% GRAVEL, interbedded with well graded fine to coarse SAND (SW), contains 10% GRAVEL, dense to medium dense, brown.

640 630 620 610 600 590 580 570 560

SANDY SILT (ML), loose, olive brown, dry.
Poorly graded SAND (SP) with GRAVEL, medium dense, light brown, dry.
SILTY fine SAND (SM) with GRAVEL, medium dense to dense, yellowish brown, dry.
SANDY SILT (ML), with minor interbedded SILTY SAND (SM), loose, olive brown, dry.
Medium dense.
Loose.
Medium dense, yellowish brown.
Poorly graded SAND (SP) with GRAVEL, dense, light brown, dry.
SANDY SILT (ML), medium dense, olive brown, dry.
SILTY coarse SAND (SM) with GRAVEL, dense, yellowish brown, dry.
SANDY SILT (ML) with GRAVEL, very dense, yellowish brown, moist.
SILTY SAND (SM) with GRAVEL, very dense, yellowish brown, dry.

PROFILE
Horiz: 1" = 20′
Vert: 1" = 10′

1620+00 1622+00 1624+00

LEGEND OF BORING OPERATIONS

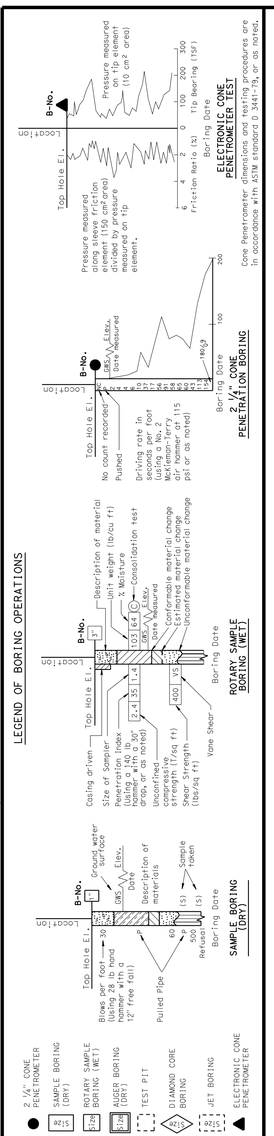

LEGEND OF EARTH MATERIALS

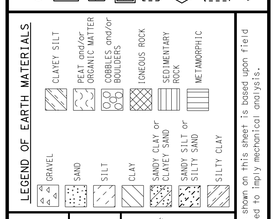

CONSISTENCY CLASSIFICATION FOR SOILS
According to the Standard Penetration Test

SPT N-Value (Blows/ Foot)	Granular	SPT N-Value (Blows/ Foot)	Cohesive
0-4	Very Loose	<2	Very Soft
5-10	Loose	2-4	Soft
11-30	Medium Dense	5-8	Medium stiff
31-50	Dense	9-15	Stiff
>50	Very Dense	16-30	Very Stiff
		31-60	Hard
		>60	Very Hard

NOTE: Classification of earth material as shown on this sheet is based upon field inspection and is not to be construed to imply mechanical analysis.

ENGINEERING SERVICES	GEOTECHNICAL SERVICES
DRAWN BY	I.G-Remmen
CHECKED BY	K. Barker

FIELD INVESTIGATION BY: E. Schramm, J. Pyska, K. Lai

STATE OF CALIFORNIA DEPARTMENT OF TRANSPORTATION

DIVISION OF ENGINEERING SERVICES STRUCTURE DESIGN DESIGN BRANCH 18

BRIDGE NO. RW 1630
POST MILE 30.72

RETAINING WALL NO. 1630
LOG OF TEST BORINGS 1 OF 6

OGS LOG OF TEST BORINGS SHEET (ENGLISH) (REV. 5/25/07)

ORIGINAL SCALE IN INCHES FOR REDUCED PLANS 0 1 2 3

UNIT: 3603
PROJECT NUMBER & PHASE: 0700021119-1 CONTRACT NO.: 07-1218W1

DISREGARD PRINTS BEARING EARLIER REVISION DATES

REVISION DATES 01-20-12

SHEET 23 OF 28

FILE => e-rw1630-z-ltb1.dgn

USERNAME => s124496 DATE PLOTTED => 21-MAY-2012 TIME PLOTTED => 18:04

DIST	COUNTY	ROUTE	POST MILES TOTAL PROJECT	SHEET No	TOTAL SHEETS
07	LA	5	29.4/31.6	1267	1931

Kristopher Barker 1-23-12
CERTIFIED ENGINEERING GEOLOGIST

5-21-12
PLANS APPROVAL DATE

PROFESSIONAL GEOLOGIST Kristopher Barker No. 2383 Exp. 8-31-13 CERTIFIED ENGINEERING GEOLOGIST STATE OF CALIFORNIA

The State of California or its officers or agents shall not be responsible for the accuracy or completeness of electronic copies of this plan sheet.

LEGEND:

- (M) Moisture Content
- (PA) Particle Size Analysis
- (PI) Plasticity, Index, Liquid Limit
- (CR) Corrosivity Testing

FOR PLAN VIEW, SEE
"LOG OF TEST BORINGS 1 OF 6"

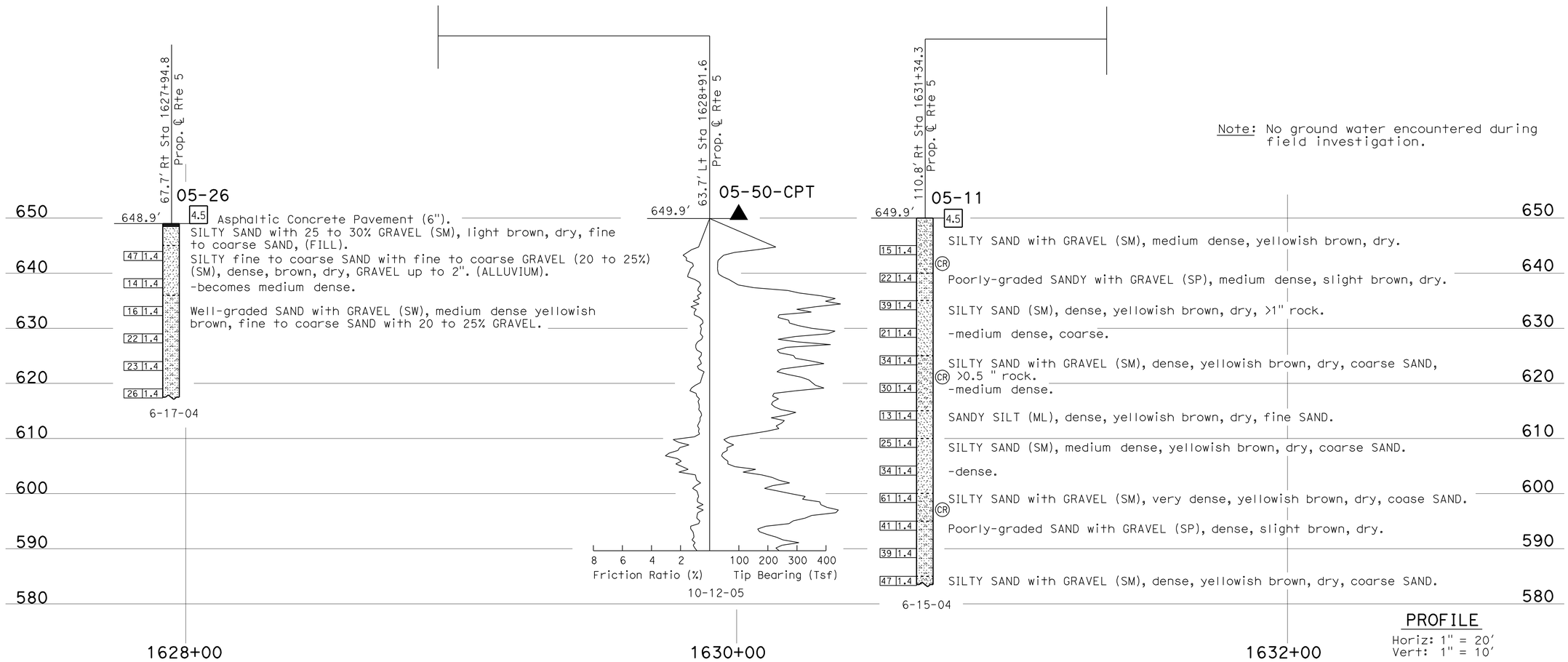

Note: No ground water encountered during field investigation.

PROFILE
Horiz: 1" = 20'
Vert: 1" = 10'

LEGEND OF BORING OPERATIONS

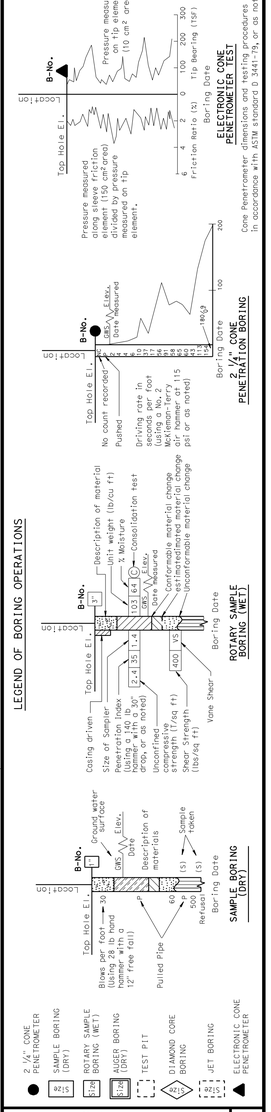

LEGEND OF EARTH MATERIALS

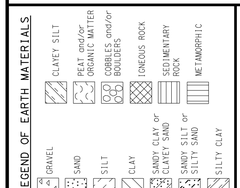

NOTE: Classification of earth material as shown on this sheet is based upon field inspection and is not to be construed to imply mechanical analysis.

CONSISTENCY CLASSIFICATION FOR SOILS
According to the Standard Penetration Test

SPT N-Value (Blows/ foot)	Granular	SPT N-Value (Blows/ foot)	Cohesive
0-4	Very Loose	<2	Very Soft
5-10	Loose	2-4	Soft
11-30	Medium Dense	5-8	Medium stiff
31-50	Dense	9-15	Stiff
>50	Very Dense	16-30	Very Stiff
		31-60	Hard
		>60	Very Hard

ENGINEERING SERVICES	GEOTECHNICAL SERVICES
DRAWN BY	F. Nguyen, I-G-Remmen
CHECKED BY	K. Barker

FIELD INVESTIGATION BY:
E. Schramm, K. Lai, J. Pyska

STATE OF CALIFORNIA
DEPARTMENT OF TRANSPORTATION

DIVISION OF ENGINEERING SERVICES
STRUCTURE DESIGN
DESIGN BRANCH 18

BRIDGE NO. RW 1630
POST MILE 30.72

RETAINING WALL NO. 1630
LOG OF TEST BORINGS 2 OF 6

OGS LOG OF TEST BORINGS SHEET (ENGLISH) (REV. 5/25/07)

ORIGINAL SCALE IN INCHES FOR REDUCED PLANS 0 1 2 3

UNIT: 3603
PROJECT NUMBER & PHASE: 0700021119-1
CONTRACT NO.: 07-1218W1

DISREGARD PRINTS BEARING EARLIER REVISION DATES

REVISION DATES				SHEET	OF
01-20-12				24	28

FILE => e-rw1630-z-ltb2.dgn

USERNAME => s124496 DATE PLOTTED => 21-MAY-2012 TIME PLOTTED => 18:05

DIST	COUNTY	ROUTE	POST MILES TOTAL PROJECT	SHEET No	TOTAL SHEETS
07	LA	5	29.4/31.6	1268	1931

Kristopher Barker 1-23-12
CERTIFIED ENGINEERING GEOLOGIST

5-21-12
PLANS APPROVAL DATE

PROFESSIONAL GEOLOGIST — Kristopher Barker — No. 2383 — Exp. 8-31-13 — CERTIFIED ENGINEERING GEOLOGIST — STATE OF CALIFORNIA

The State of California or its officers or agents shall not be responsible for the accuracy or completeness of electronic copies of this plan sheet.

LEGEND:

- (M) Moisture Content
- (PA) Particle Size Analysis
- (PI) Plasticity, Index, Liquid Limit
- (CR) Corrosivity Testing

FOR PLAN VIEW, SEE
"LOG OF TEST BORINGS 1 OF 6"

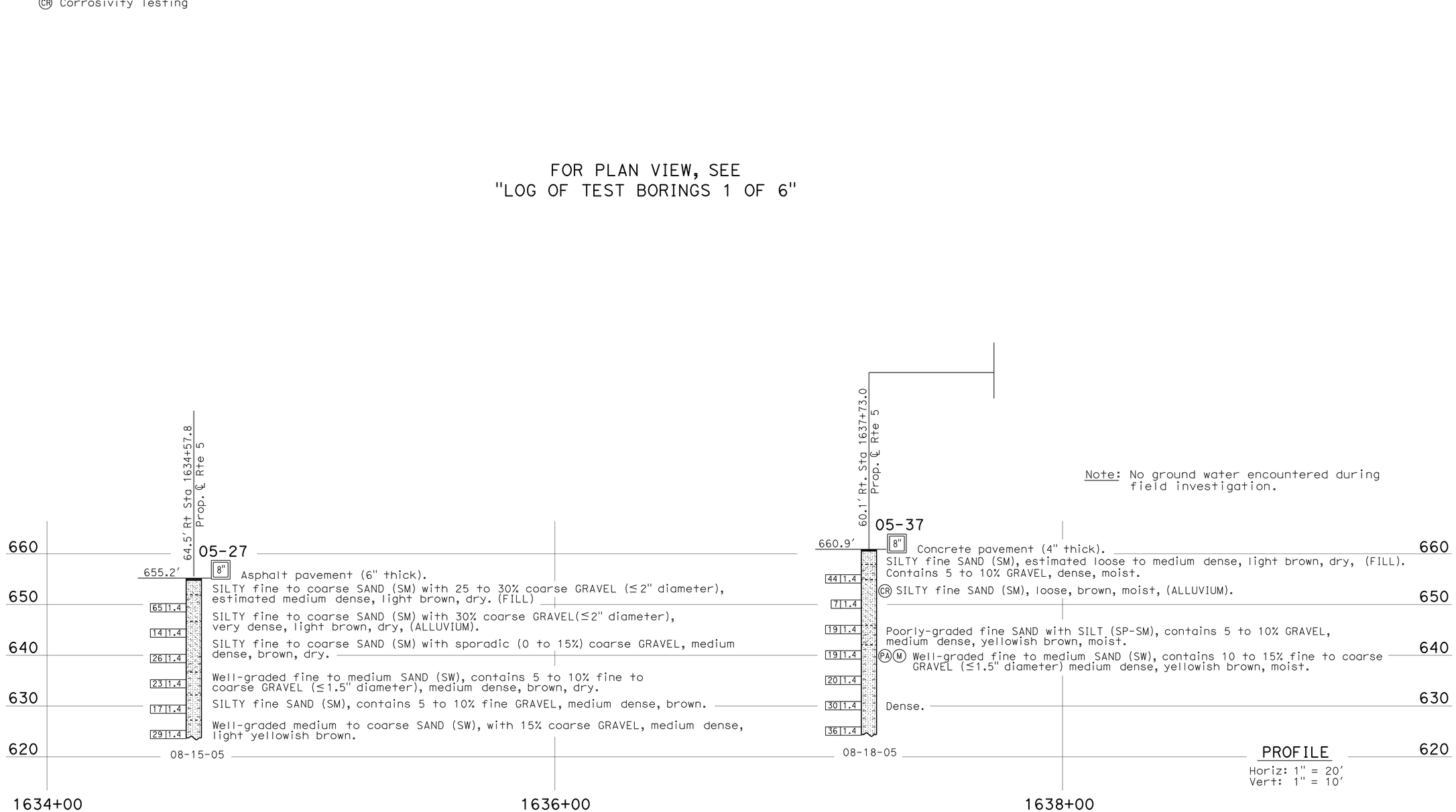

Note: No ground water encountered during field investigation.

PROFILE
Horiz: 1" = 20'
Vert: 1" = 10'

LEGEND OF BORING OPERATIONS

LEGEND OF EARTH MATERIALS

CONSISTENCY CLASSIFICATION FOR SOILS
According to the Standard Penetration Test

SPT N-Value (Blows/ Foot)	Granular	SPT N-Value (Blows/ Foot)	Cohesive
0-4	Very Loose	<2	Very Soft
5-10	Loose	2-4	Soft
11-30	Medium Dense	5-8	Medium stiff
31-50	Dense	9-15	Stiff
>50	Very Dense	16-30	Very Stiff
		31-60	Hard
		>60	Very Hard

NOTE: Classification of earth material as shown on this sheet is based upon field inspection and is not to be construed to imply mechanical analysis.

ENGINEERING SERVICES	GEOTECHNICAL SERVICES
DRAWN BY	I.G-Remmen
CHECKED BY	K. Barker

FIELD INVESTIGATION BY: E. Schramm, M. Abouzalan

STATE OF CALIFORNIA
DEPARTMENT OF TRANSPORTATION

DIVISION OF ENGINEERING SERVICES
STRUCTURE DESIGN
DESIGN BRANCH 18

BRIDGE NO. RW 1630
POST MILE 30.72

RETAINING WALL NO. 1630
LOG OF TEST BORINGS 3 OF 6

OGS LOG OF TEST BORINGS SHEET (ENGLISH) (REV. 5/25/07)

ORIGINAL SCALE IN INCHES FOR REDUCED PLANS 0 1 2 3

UNIT: 3603
PROJECT NUMBER & PHASE: 0700021119-1
CONTRACT NO.: 07-1218W1

DISREGARD PRINTS BEARING EARLIER REVISION DATES 01-20-12

SHEET 25 OF 28

FILE => e-rw1630-z-ltb3.dgn

USERNAME => s124496 DATE PLOTTED => 21-MAY-2012 TIME PLOTTED => 18:05

DIST	COUNTY	ROUTE	POST MILES TOTAL PROJECT	SHEET No	TOTAL SHEETS
07	LA	5	29.4/31.6	1269	1931

Kristopher Barker 1-23-12
CERTIFIED ENGINEERING GEOLOGIST

5-21-12
PLANS APPROVAL DATE

PROFESSIONAL GEOLOGIST Kristopher Barker No. 2383 Exp. 8-31-13 CERTIFIED ENGINEERING GEOLOGIST STATE OF CALIFORNIA

The State of California or its officers or agents shall not be responsible for the accuracy or completeness of electronic copies of this plan sheet.

LEGEND:

- (M) Moisture Content
- (PA) Particle Size Analysis
- (PI) Plasticity, Index, Liquid Limit
- (CR) Corrosivity Testing

FOR PLAN VIEW, SEE
"LOG OF TEST BORINGS 1 OF 6"

Note: No ground water encountered during field investigation.

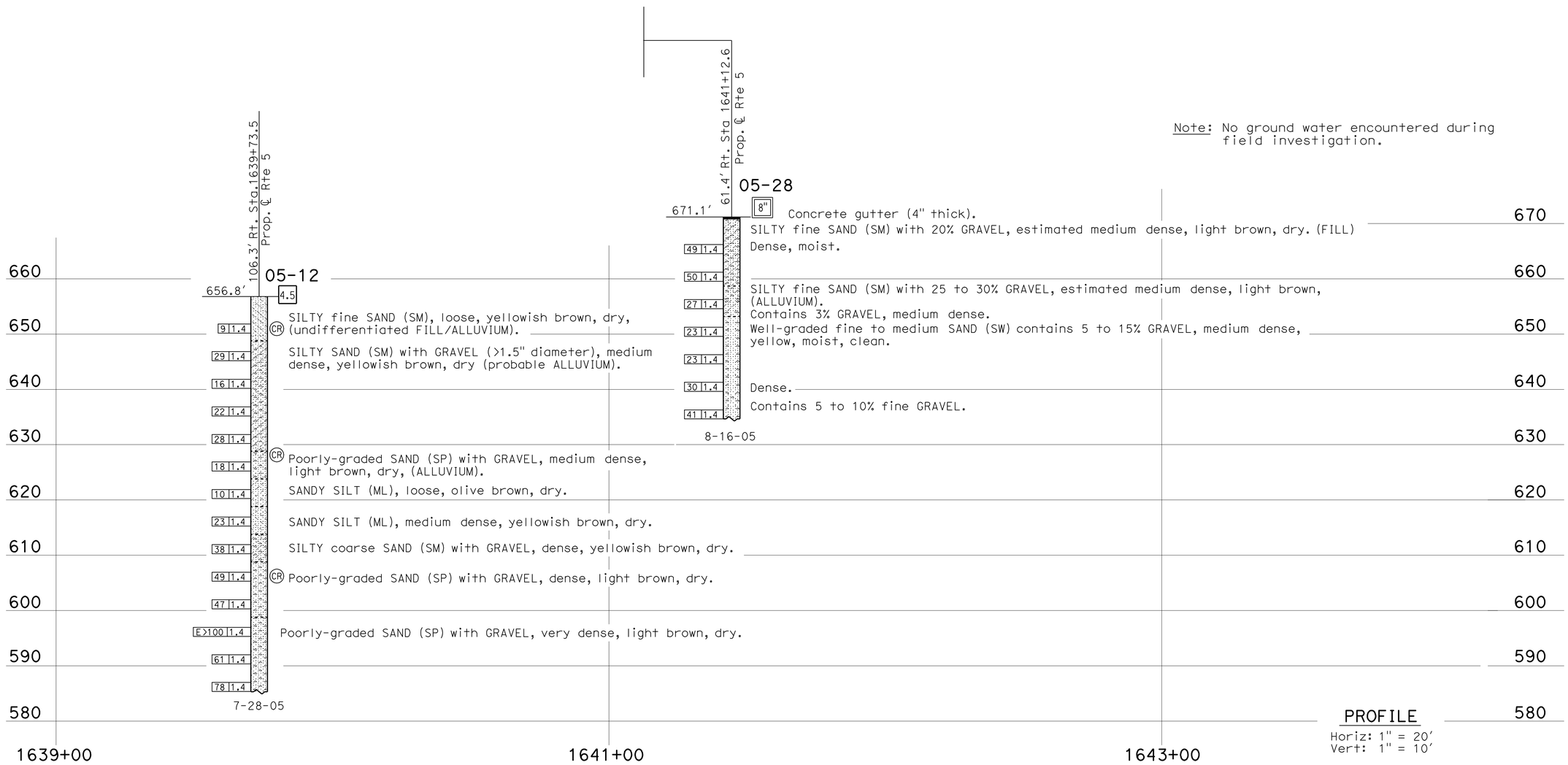

PROFILE
Horiz: 1" = 20'
Vert: 1" = 10'

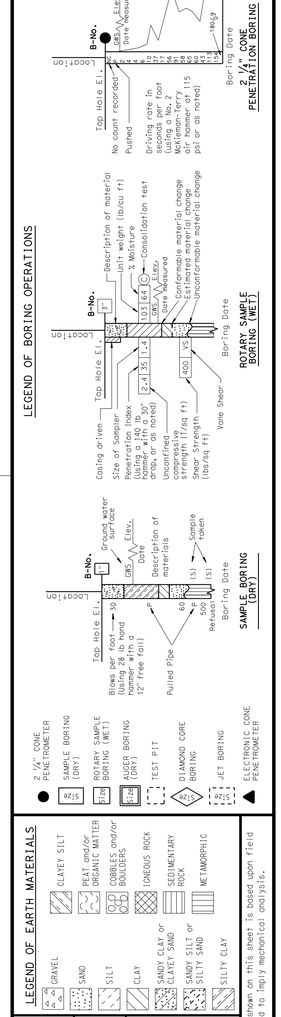

CONSISTENCY CLASSIFICATION FOR SOILS
According to the Standard Penetration Test

SPT N-Value (Blows/foot)	Granular	SPT N-Value (Blows/foot)	Cohesive
0-4	Very Loose	<2	Very Soft
5-10	Loose	2-4	Soft
11-30	Medium Dense	5-8	Medium stiff
31-50	Dense	9-15	Stiff
>50	Very Dense	16-30	Very Stiff
		31-60	Hard
		>60	Very Hard

NOTE: Classification of earth material as shown on this sheet is based upon field inspection and is not to be construed to imply mechanical analysis.

ENGINEERING SERVICES	GEOTECHNICAL SERVICES
DRAWN BY	I.G-Remmen
CHECKED BY	K. Barker

FIELD INVESTIGATION BY: K. Lai, M. Abouzalan

STATE OF CALIFORNIA
DEPARTMENT OF TRANSPORTATION

DIVISION OF ENGINEERING SERVICES
STRUCTURE DESIGN
DESIGN BRANCH 18

BRIDGE NO. RW 1630
POST MILE 30.72

RETAINING WALL NO. 1630
LOG OF TEST BORINGS 4 OF 6

OGS LOG OF TEST BORINGS SHEET (ENGLISH) (REV. 5/25/07)

ORIGINAL SCALE IN INCHES FOR REDUCED PLANS 0 1 2 3

UNIT: 3603
PROJECT NUMBER & PHASE: 0700021119-1
CONTRACT NO.: 07-1218W1

DISREGARD PRINTS BEARING EARLIER REVISION DATES

REVISION DATES 01-20-12

SHEET 26 OF 28

FILE => e-rw1630-z-ltb4.dgn

USERNAME => s124436 DATE PLOTTED => 21-MAY-2012 TIME PLOTTED => 18:05

DIST	COUNTY	ROUTE	POST MILES TOTAL PROJECT	SHEET No	TOTAL SHEETS
07	LA	5	29.4/31.6	1270	1931

Kristopher Barker 1-23-12
CERTIFIED ENGINEERING GEOLOGIST

5-21-12
PLANS APPROVAL DATE

PROFESSIONAL GEOLOGIST — Kristopher Barker — No. 2383 — Exp. 8-31-13 — CERTIFIED ENGINEERING GEOLOGIST — STATE OF CALIFORNIA

The State of California or its officers or agents shall not be responsible for the accuracy or completeness of electronic copies of this plan sheet.

LEGEND:

- (M) Moisture Content
- (PA) Particle Size Analysis
- (PI) Plasticity, Index, Liquid Limit
- (CR) Corrosivity Testing

FOR PLAN VIEW, SEE
"LOG OF TEST BORINGS 1 OF 6"

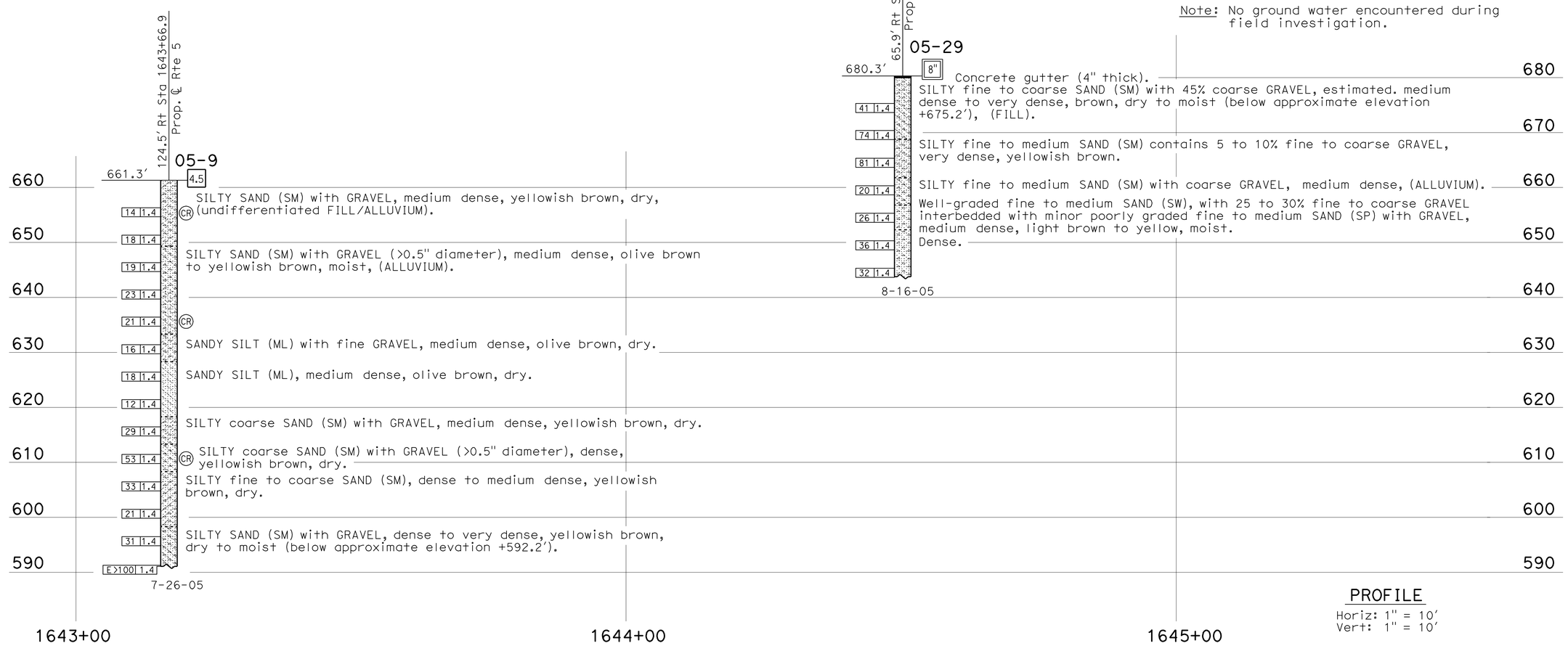

Note: No ground water encountered during field investigation.

PROFILE
Horiz: 1" = 10'
Vert: 1" = 10'

LEGEND OF BORING OPERATIONS

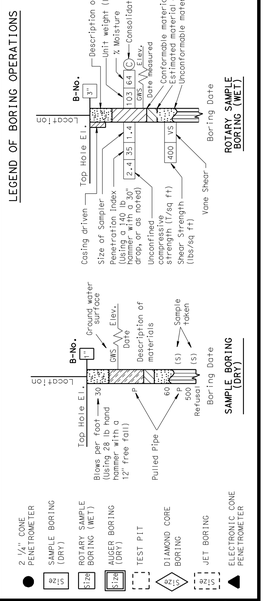

LEGEND OF EARTH MATERIALS

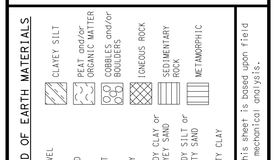

CONSISTENCY CLASSIFICATION FOR SOILS

According to the Standard Penetration Test

SPT N-Value (Blows/ 1foot)	Granular	SPT N-Value (Blows/ 1foot)	Cohesive
0-4	Very Loose	<2	Very Soft
5-10	Loose	2-4	Soft
11-30	Medium Dense	5-8	Medium stiff
31-50	Dense	9-15	Stiff
>50	Very Dense	16-30	Very Stiff
		31-60	Hard
		>60	Very Hard

NOTE: Classification of earth material as shown on this sheet is based upon field inspection and is not to be construed to imply mechanical analysis.

ENGINEERING SERVICES	GEOTECHNICAL SERVICES
DRAWN BY	I.G-Remmen
CHECKED BY	K. Barker

FIELD INVESTIGATION BY: K. Lai, M. Abouzalan

STATE OF CALIFORNIA DEPARTMENT OF TRANSPORTATION

DIVISION OF ENGINEERING SERVICES STRUCTURE DESIGN DESIGN BRANCH 18

BRIDGE NO. RW 1630
POST MILE 30.72

RETAINING WALL NO. 1630
LOG OF TEST BORINGS 5 OF 6

OGS LOG OF TEST BORINGS SHEET (ENGLISH) (REV. 5/25/07)

ORIGINAL SCALE IN INCHES FOR REDUCED PLANS 0 1 2 3

UNIT: 3603
PROJECT NUMBER & PHASE: 0700021119-1 CONTRACT NO.: 07-1218W1

DISREGARD PRINTS BEARING EARLIER REVISION DATES

REVISION DATES 01-20-12

SHEET 27 OF 28

FILE => e-rw1630-z-ltb5.dgn

USERNAME => s124496 DATE PLOTTED => 21-MAY-2012 TIME PLOTTED => 18:05

DIST	COUNTY	ROUTE	POST MILES TOTAL PROJECT	SHEET No	TOTAL SHEETS
07	LA	5	29.4/31.6	1271	1931

Kristopher Barker 1-23-12
CERTIFIED ENGINEERING GEOLOGIST

5-21-12
PLANS APPROVAL DATE

PROFESSIONAL GEOLOGIST Kristopher Barker No. 2383 Exp. 8-31-13 CERTIFIED ENGINEERING GEOLOGIST STATE OF CALIFORNIA

The State of California or its officers or agents shall not be responsible for the accuracy or completeness of electronic copies of this plan sheet.

LEGEND:

- (M) Moisture Content
- (PA) Particle Size Analysis
- (PI) Plasticity, Index, Liquid Limit
- (CR) Corrosivity Testing

FOR PLAN VIEW, SEE
"LOG OF TEST BORINGS 1 OF 6"

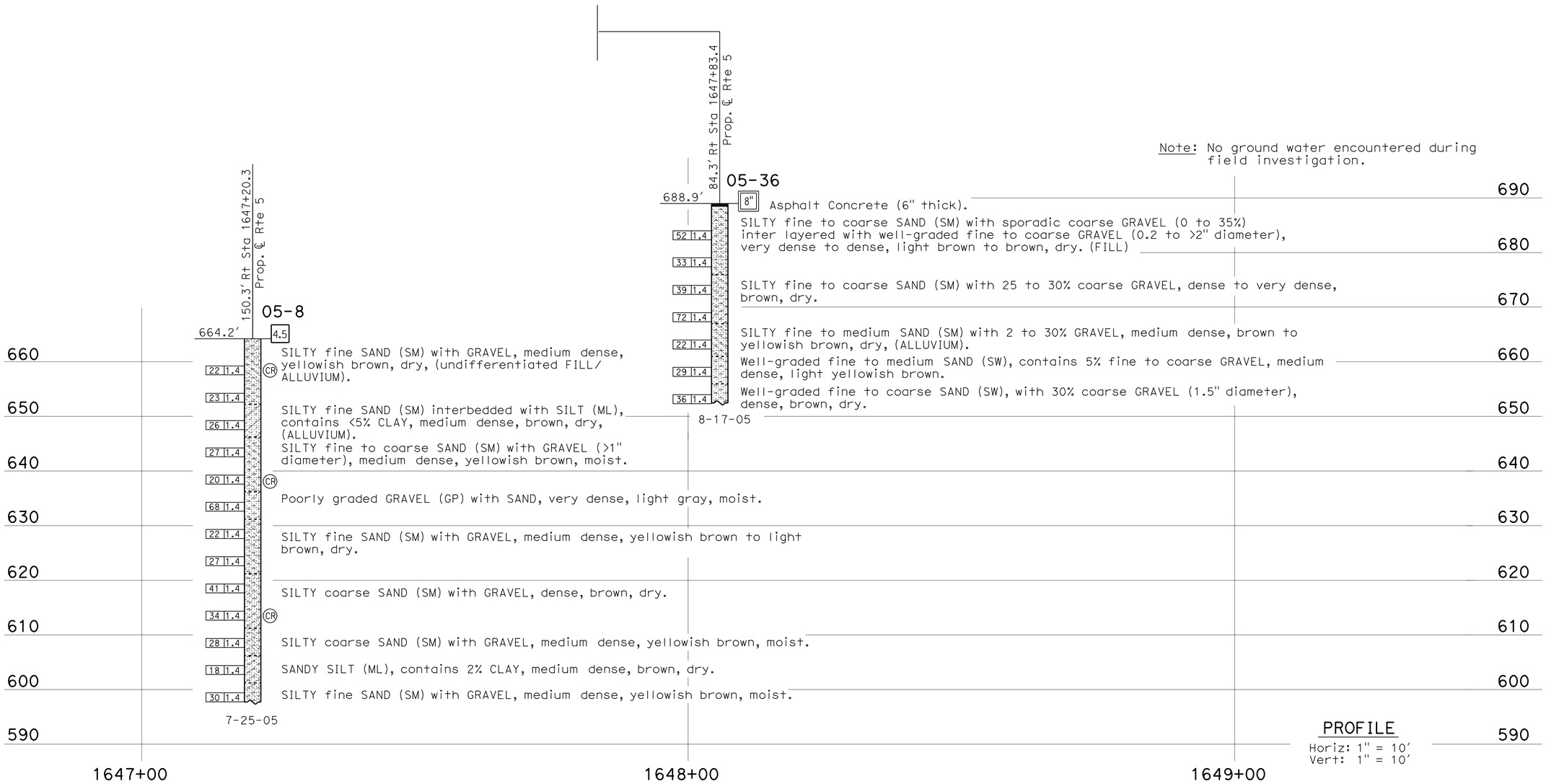

LEGEND OF BORING OPERATIONS

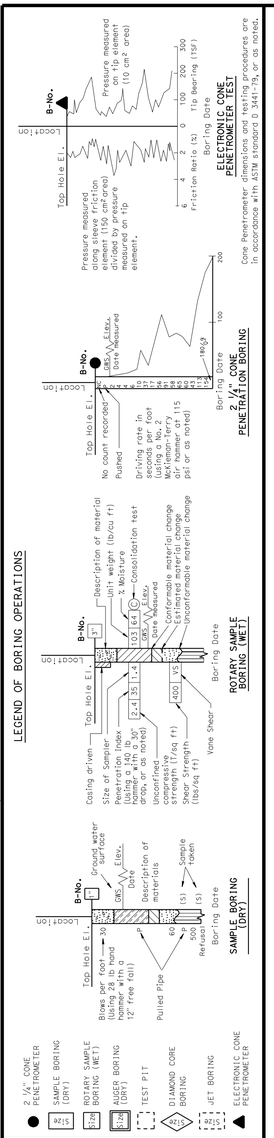

LEGEND OF EARTH MATERIALS

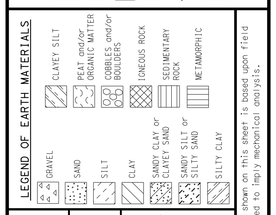

CONSISTENCY CLASSIFICATION FOR SOILS

According to the Standard Penetration Test

SPT N-Value (Blows/ Foot)	Granular	SPT N-Value (Blows/ Foot)	Cohesive
0-4	Very Loose	<2	Very Soft
5-10	Loose	2-4	Soft
11-30	Medium Dense	5-8	Medium stiff
31-50	Dense	9-15	Stiff
>50	Very Dense	16-30	Very Stiff
		31-60	Hard
		>60	Very Hard

NOTE: Classification of earth material as shown on this sheet is based upon field inspection and is not to be construed to imply mechanical analysis.

ENGINEERING SERVICES	GEOTECHNICAL SERVICES
DRAWN BY	I.G-Remmen
CHECKED BY	K. Barker

FIELD INVESTIGATION BY: K. Lai, E. Schramm

STATE OF CALIFORNIA DEPARTMENT OF TRANSPORTATION

DIVISION OF ENGINEERING SERVICES STRUCTURE DESIGN DESIGN BRANCH 18

BRIDGE NO. RW 1630
POST MILE 30.72

RETAINING WALL NO. 1630
LOG OF TEST BORINGS 6 OF 6

OGS LOG OF TEST BORINGS SHEET (ENGLISH) (REV. 5/25/07)

ORIGINAL SCALE IN INCHES FOR REDUCED PLANS 0 1 2 3

UNIT: 3603
PROJECT NUMBER & PHASE: 0700021119-1 CONTRACT NO.: 07-1218W1

DISREGARD PRINTS BEARING EARLIER REVISION DATES

REVISION DATES 01-20-12

SHEET 28 OF 28

FILE => e-rw1630-z-ltb6.dgn

USERNAME => s124496 DATE PLOTTED => 21-MAY-2012 TIME PLOTTED => 18:05

DIST	COUNTY	ROUTE	POST MILES TOTAL PROJECT	SHEET No.	TOTAL SHEETS
07	LA	5	29.4/31.6	1272	1931

REGISTERED CIVIL ENGINEER — DATE 1/31/12

5-21-12
PLANS APPROVAL DATE

REGISTERED PROFESSIONAL ENGINEER — JORGE I. ESTRADA — No. C51473 — Exp. 06-30-12 — CIVIL — STATE OF CALIFORNIA

The State of California or its officers or agents shall not be responsible for the accuracy or completeness of electronic copies of this plan sheet.

INDEX TO PLANS

1. GENERAL PLAN
2. FOUNDATION PLAN NO. 1
3. FOUNDATION PLAN NO. 2
4. FOUNDATION PLAN NO. 3
5. STRUCTURE PLAN NO. 1
6. STRUCTURE PLAN NO. 2
7. STRUCTURE PLAN NO. 3
8. STRUCTURE PLAN NO. 4
9. STRUCTURE PLAN NO. 5
10. STRUCTURE PLAN NO. 6
11. STRUCTURE PLAN NO. 7
12. RETAINING WALL TYPE 1RR CASE I - DETAILS NO.1
13. RETAINING WALL TYPE 1RR CASE I - DETAILS NO.2
14. RETAINING WALL TYPE 1RR CASE II - DETAILS NO.1
15. RETAINING WALL TYPE 1RR CASE II - DETAILS NO.2
16. MISCELLANEOUS DETAILS
17. ARCHITECTURAL TREATMENT
18. LOG OF TEST BORINGS 1 OF 6
19. LOG OF TEST BORINGS 2 OF 6
20. LOG OF TEST BORINGS 3 OF 6
21. LOG OF TEST BORINGS 4 OF 6
22. LOG OF TEST BORINGS 5 OF 6
23. LOG OF TEST BORINGS 6 OF 6

STANDARD PLANS DATED MAY 2006

SHEET NO.	TITLE
A10A - A10B	ACRONYMS AND ABBREVIATIONS
A10C - A10D	SYMBOLS
A62B	LIMITS OF PAYMENT FOR EXCAVATION AND BACKFILL BRIDGE SURCHARGE AND WALL
RSP A76A	CONCRETE BARRIER TYPE 60
B3-1	RETAINING WALL TYPE 1
BO-3	BRIDGE DETAILS
B3-8	RETAINING WALL DETAILS NO.1
B3-9	RETAINING WALL DETAILS NO.2
RSP B11-47	CABLE RAILING
ES-6A	ELECTRICAL SYSTEMS (LIGHTING STANDARD, TYPE 15 AND TYPE 21)

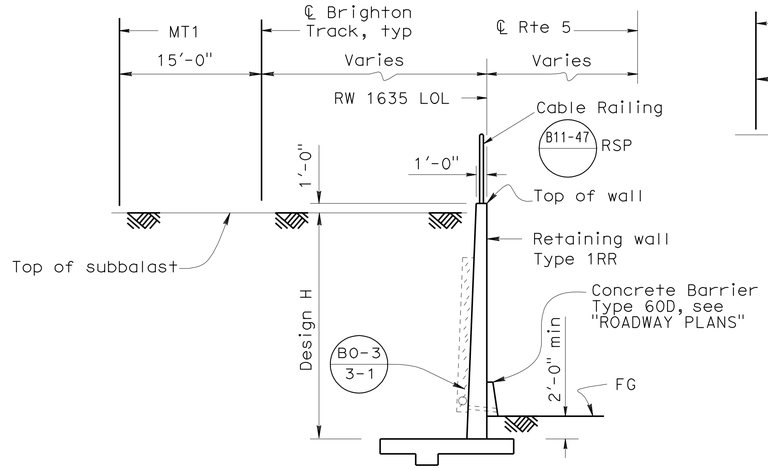

CASE I

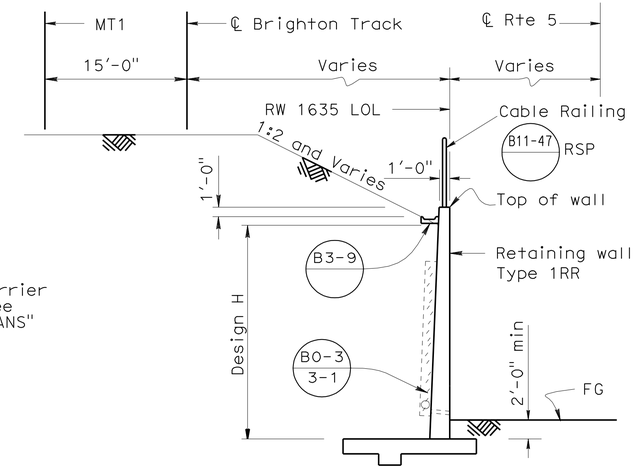

CASE II

TYPICAL SECTION - RW 1635

1/8" = 1'-0"

Notes:

1. For spread footing data table see "MISCELLANEOUS DETAILS" sheet.
2. For Electrolier locations, see "STRUCTURE PLANS" sheets. For Electrolier details, see "MISCELLANEOUS DETAILS" sheet.
3. Relocation of existing utilities prior to this Contract by Others.

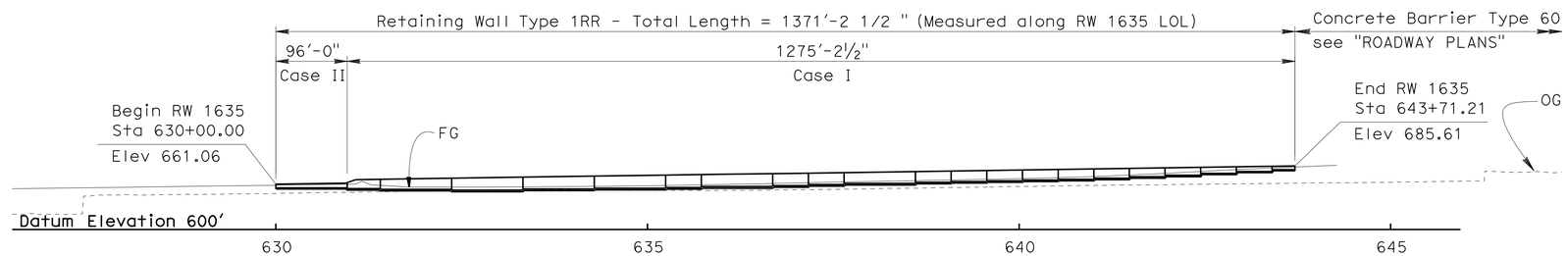

ELEVATION

1" = 100'

LEGEND

STANDARD PLAN SHEET NO.

DETAIL NO.

QUANTITIES

STRUCTURE EXCAVATION (RETAINING WALL)	8,545 CY
STRUCTURE BACKFILL (RETAINING WALL)	12,228 CY
PERVIOUS BACKFILL MATERIAL	349 CY
STRUCTURAL CONCRETE, RETAINING WALL	2,882 CY
ARCHITECTURAL TREATMENT	8,853 SQFT
BAR REINFORCING STEEL (RETAINING WALL)	257,082 LB
MINOR CONCRETE (GUTTER)	3 CY
CABLE RAILING	1,371 LF

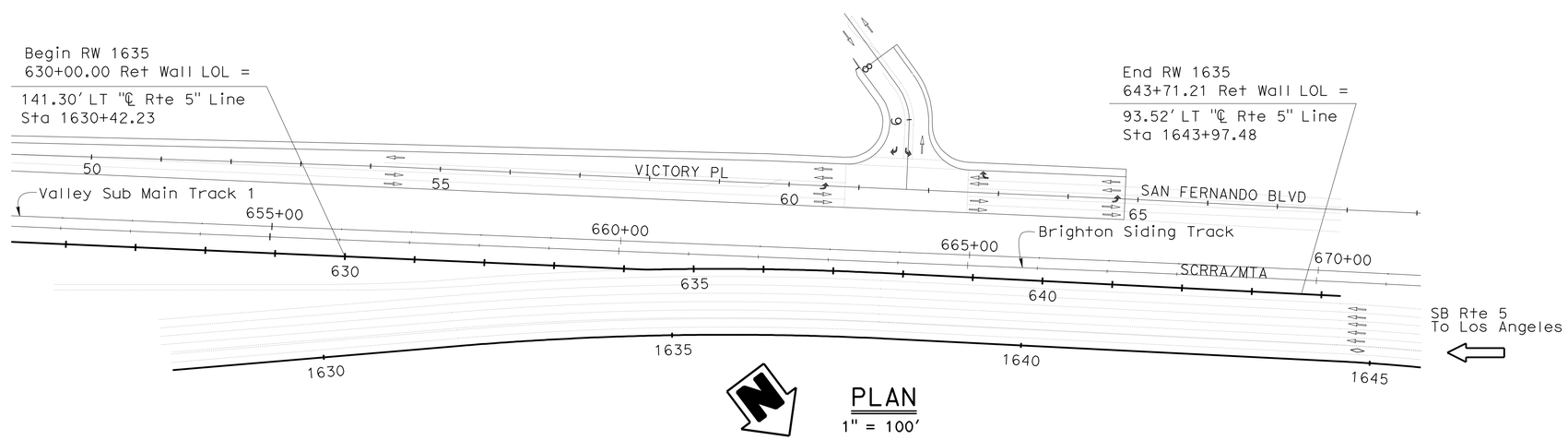

PLAN

1" = 100'

MICHAEL POPE — DESIGN ENGINEER	DESIGN	BY JD/ Zihan Yan	CHECKED Jorge Estrada	LOAD FACTOR DESIGN	LIVE LOADING: HS20-44 AND ALTERNATIVE AND PERMIT DESIGN LOAD		
	DETAILS	BY SD/ Minh Tran	CHECKED JD/ Jorge Estrada	LAYOUT	BY SD/ Minh Tran	CHECKED Jorge Estrada	
	QUANTITIES	BY JD/ Zihan Yan	CHECKED RW/ Zihan Yan	SPECIFICATIONS	BY James Choi	PLANS AND SPECS COMPARED James Choi	

ORIGINAL SCALE IN INCHES FOR REDUCED PLANS 0 1 2 3

STATE OF CALIFORNIA
DEPARTMENT OF TRANSPORTATION

DIVISION OF ENGINEERING SERVICES
STRUCTURE DESIGN
DESIGN BRANCH 18

BRIDGE NO. RW1635
POST MILE 30.91

RETAINING WALL 1635
GENERAL PLAN

UNIT: 3603
PROJECT NUMBER & PHASE: 0700021119-1
CONTRACT NO.: 07-1218w1

DISREGARD PRINTS BEARING EARLIER REVISION DATES 01/24/11 02/24/12 04/30/12

SHEET 1 OF 23

USERNAME => s124496 DATE PLOTTED => 21-MAY-2012 TIME PLOTTED => 18:05

STRUCTURES DESIGN GENERAL PLAN SHEET (ENGLISH) (REV.09-01-10)

FILE => e-rw1635-a-gp.dgn

DIST	COUNTY	ROUTE	POST MILES TOTAL PROJECT	SHEET No.	TOTAL SHEETS
07	LA	5	29.4/31.6	1273	1931

dEstrada. 1/31/12
REGISTERED CIVIL ENGINEER DATE

5-21-12
PLANS APPROVAL DATE

REGISTERED PROFESSIONAL ENGINEER
JORGE I. ESTRADA
No. C51473
Exp. 06-30-12
CIVIL
STATE OF CALIFORNIA

The State of California or its officers or agents shall not be responsible for the accuracy or completeness of electronic copies of this plan sheet.

CURVE DATA

No.	R	Δ	T	L
Ⓐ	4600.20	7°40'16"	308.41	615.90
Ⓑ	4695.48	4°07'45"	169.27	338.40

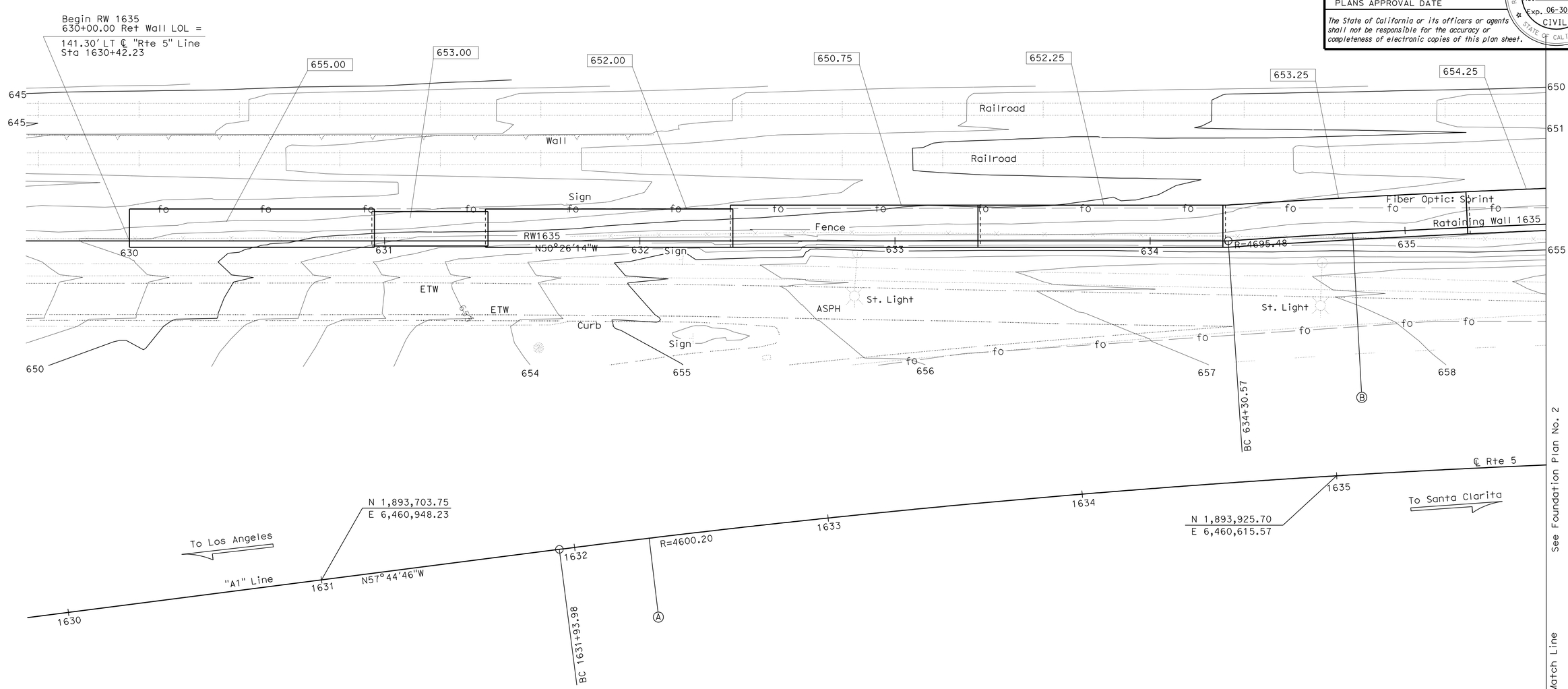

SURVEY CONTROL

PRHV123 (Not Shown)

Fnd PK Nail with Washer Stamped
88.00' Lt. "A1" Line, ℄ Rte 5
Sta. 1581+75.69
N 1,890,470.97
E 6,464,594.96
EL.=598.93

PRHV127 (Not Shown)

Fnd PK Nail with Washer Stamped
67.36' Lt. "A1" Line, ℄ Rte 5
Sta. 1585+96.99
N 1,890,753.54
E 6,464,269.04
EL.=604.23

654.50 Indicates Bottom of Footing elevation

Note:
Fiber Optic Line, Caltrans Fiber Optic Line, Per Dist. Utility Map

PRELIMINARY INVESTIGATION SECTION

SCALE 1"=20'	VERT.DATUM NGVD 88	PHOTOGRAMMETRY AS OF: X			
	HORZ.DATUM NAD83 (1991.35)	SURVEYED	BY District	CHECKED	BY John Borden 10/2011
ALIGNMENT TIES Dist. Traverse Sheet		DRAFTED	BY Sharon Zheng 10/2011	CHECKED	BY Lawrence Lew 10/2011

DESIGN	BY Zihan Yan	CHECKED Jorge Estrada
DETAILS	BY Minh Tran	CHECKED Zihan Yan
QUANTITIES	BY Zihan Yan	CHECKED Ruperd Wilson

STATE OF CALIFORNIA
DEPARTMENT OF TRANSPORTATION

DIVISION OF ENGINEERING SERVICES
STRUCTURE DESIGN
DESIGN BRANCH 18

BRIDGE NO. RW1635
POST MILE 30.91

RETAINING WALL NO. 1635
FOUNDATION PLAN NO. 1

STRUCTURES FOUNDATION PLAN SHEET (ENGLISH) (REV. 09-01-10)

ORIGINAL SCALE IN INCHES FOR REDUCED PLANS 0 1 2 3

UNIT: 3603
PROJECT NUMBER & PHASE: 0700021119-1
CONTRACT NO.: 07-1218W1

DISREGARD PRINTS BEARING EARLIER REVISION DATES

REVISION DATES: ~~10/28/2011~~ 1/30/12

SHEET 2 OF 23

FILE => e-rw1635-b-fp101.dgn

USERNAME => s124496 DATE PLOTTED => 21-MAY-2012 TIME PLOTTED => 18:05

DIST	COUNTY	ROUTE	POST MILES TOTAL PROJECT	SHEET No.	TOTAL SHEETS
07	LA	5	29.4/31.6	1274	1931

REGISTERED CIVIL ENGINEER — DATE 1/31/12

5-21-12
PLANS APPROVAL DATE

REGISTERED PROFESSIONAL ENGINEER — JORGE I. ESTRADA — No. C51473 — Exp. 06-30-12 — CIVIL — STATE OF CALIFORNIA

The State of California or its officers or agents shall not be responsible for the accuracy or completeness of electronic copies of this plan sheet.

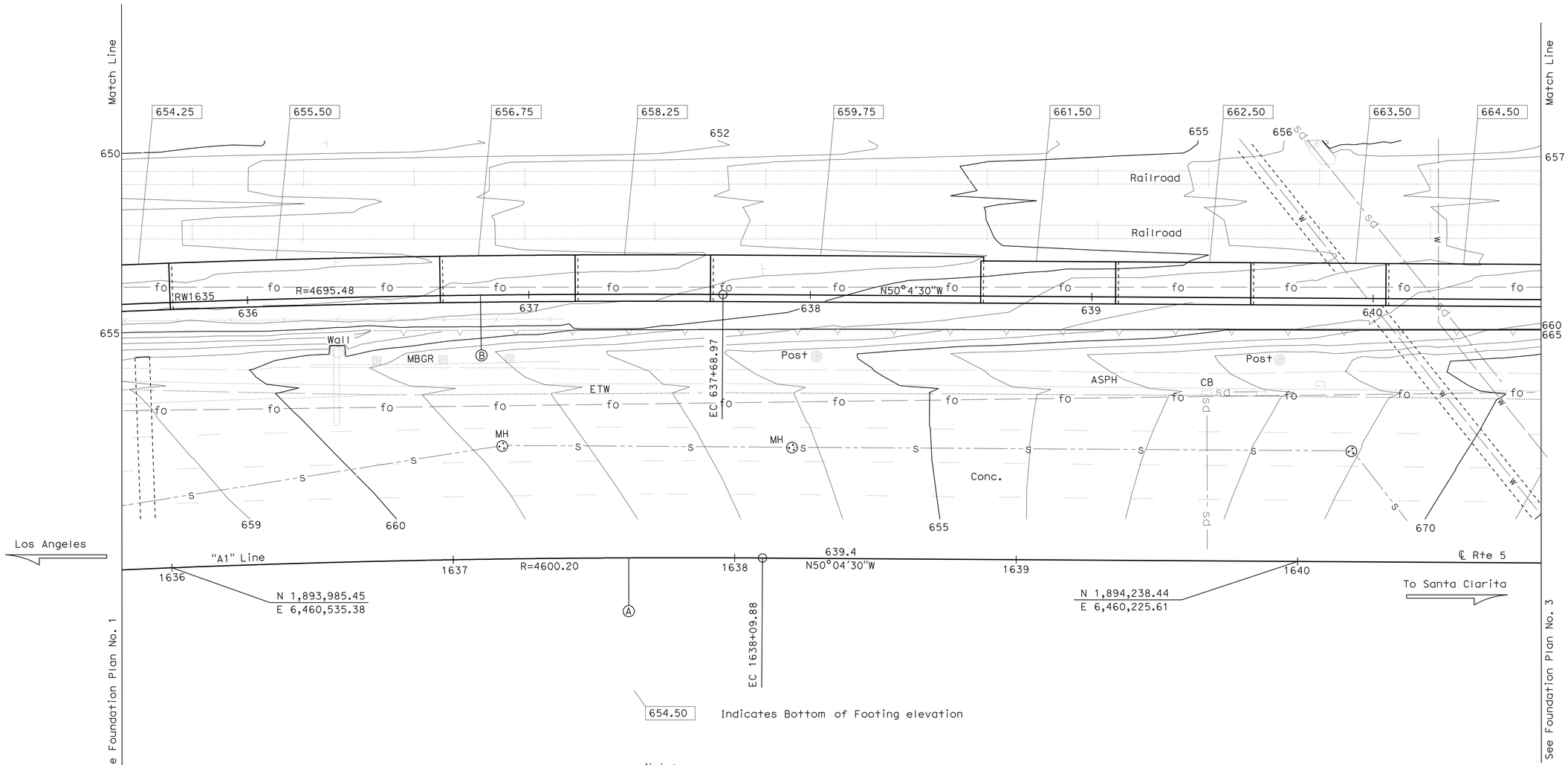

654.50 Indicates Bottom of Footing elevation

Note:
Fiber Optic Line, Caltrans Fiber Optic Line, Sewer Line,
Storm Drain Line, Water Line, Per Dist. Utility Map

PRELIMINARY INVESTIGATION SECTION							
SCALE 1"=20'	VERT.DATUM NGVD 88	PHOTOGRAMMETRY AS OF: X					
	HORZ.DATUM NAD83 (1991.35)	SURVEYED	BY District	CHECKED	BY John Borden 10/2011		
ALIGNMENT TIES Dist. Traverse Sheet		DRAFTED	BY Sharon Zheng 10/2011	CHECKED	BY Lawrence Lew 10/2011		

DESIGN	BY Zihan Yan	CHECKED Jorge Estrada
DETAILS	BY Minh Tran	CHECKED Zihan Yan
QUANTITIES	BY Zihan Yan	CHECKED Ruperd Wilson

STATE OF CALIFORNIA
DEPARTMENT OF TRANSPORTATION

DIVISION OF ENGINEERING SERVICES
STRUCTURE DESIGN
DESIGN BRANCH 18

BRIDGE NO. RW1635
POST MILE 30.91

RETAINING WALL NO. 1635
FOUNDATION PLAN NO. 2

STRUCTURES FOUNDATION PLAN SHEET (ENGLISH) (REV. 09-01-10)

ORIGINAL SCALE IN INCHES FOR REDUCED PLANS 0 1 2 3

UNIT: 3603
PROJECT NUMBER & PHASE: 0700021119-1 CONTRACT NO.: 07-1218W1

DISREGARD PRINTS BEARING EARLIER REVISION DATES

REVISION DATES 10/28/2011 12/28/11

SHEET 3 OF 23

FILE => e-rw1635-b-fp102.dgn

USERNAME => s124496 DATE PLOTTED => 21-MAY-2012 TIME PLOTTED => 18:05

DIST	COUNTY	ROUTE	POST MILES TOTAL PROJECT	SHEET No.	TOTAL SHEETS
07	LA	5	29.4/31.6	1275	1931

JEstrada. 1/31/12
REGISTERED CIVIL ENGINEER DATE

5-21-12
PLANS APPROVAL DATE

REGISTERED PROFESSIONAL ENGINEER
JORGE I. ESTRADA
No. C51473
Exp. 06-30-12
CIVIL
STATE OF CALIFORNIA

The State of California or its officers or agents shall not be responsible for the accuracy or completeness of electronic copies of this plan sheet.

CURVE DATA

No.	R	Δ	T	L
©	2710.00	22°57'03"	550.15	1085.54

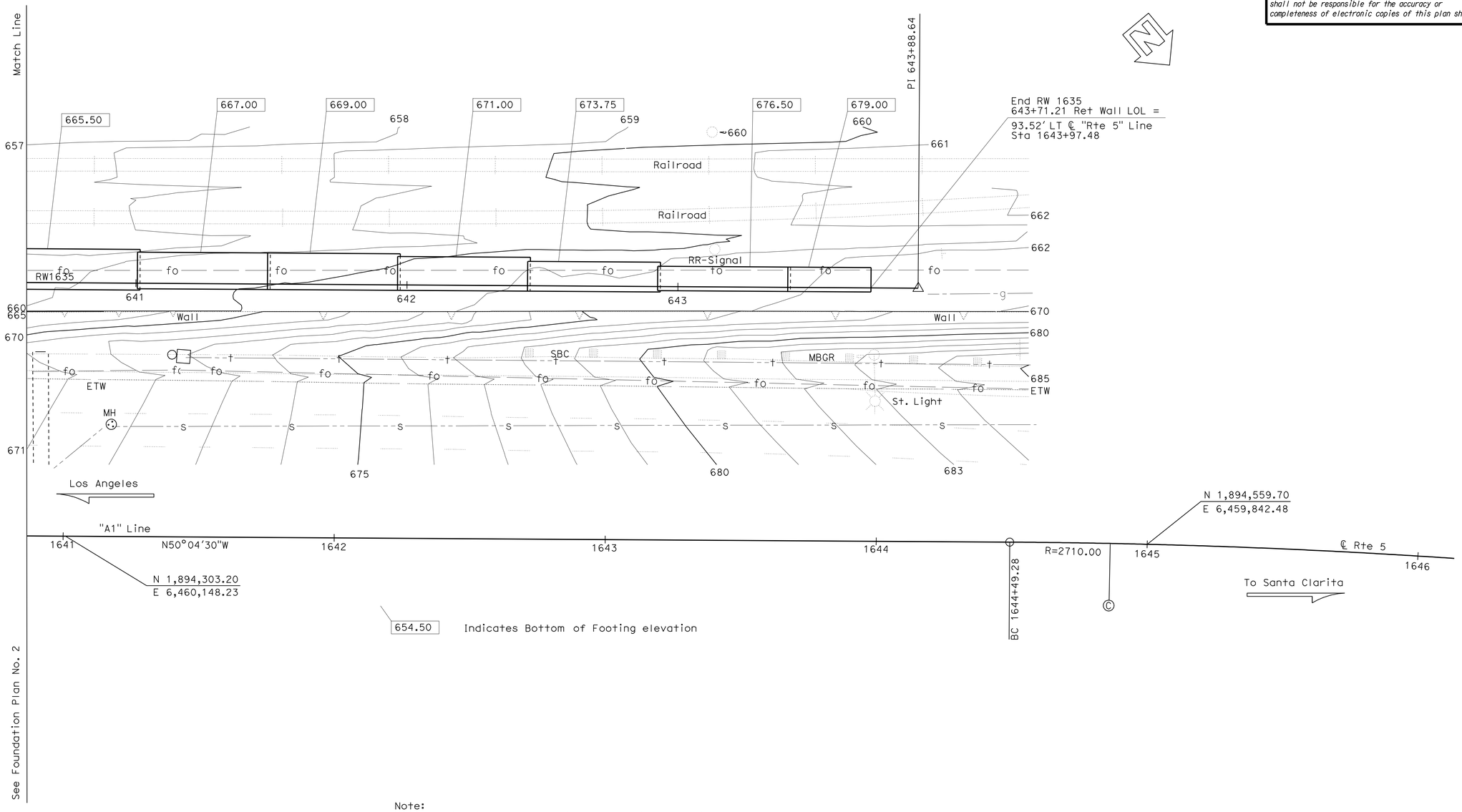

Note:
Fiber Optic Line, Caltrans Fiber Optic Line, Gas Line,
Tele Line, Sewer Line, Per District Utility Map

PRELIMINARY INVESTIGATION SECTION					
SCALE 1"=20'	VERT.DATUM NGVD 88	PHOTOGRAMMETRY AS OF: X			
	HORZ.DATUM NAD83 (1991.35)	SURVEYED	BY District	CHECKED	BY John Borden 10/2011
ALIGNMENT TIES Dist. Traverse Sheet		DRAFTED	BY Sharon Zheng 10/2011	CHECKED	BY Lawrence Lew 10/2011

DESIGN	BY Zihan Yan	CHECKED Jorge Estrada
DETAILS	BY Minh Tran	CHECKED Zihan Yan
QUANTITIES	BY Zihan Yan	CHECKED Ruperd Wilson

STATE OF CALIFORNIA
DEPARTMENT OF TRANSPORTATION

DIVISION OF ENGINEERING SERVICES
STRUCTURE DESIGN
DESIGN BRANCH 18

BRIDGE NO. RW1635
POST MILE 30.91

RETAINING WALL NO. 1635
FOUNDATION PLAN NO. 3

STRUCTURES FOUNDATION PLAN SHEET (ENGLISH) (REV. 09-01-10)

ORIGINAL SCALE IN INCHES FOR REDUCED PLANS 0 1 2 3

UNIT: 3603
PROJECT NUMBER & PHASE: 0700021119-1
CONTRACT NO.: 07-1218W1

DISREGARD PRINTS BEARING EARLIER REVISION DATES

REVISION DATES: 10/28/2011 12/28/11

SHEET 4 OF 23

FILE => e-rw1635-b-fpl03.dgn

USERNAME => s124496 DATE PLOTTED => 21-MAY-2012 TIME PLOTTED => 18:05

DIST	COUNTY	ROUTE	POST MILES TOTAL PROJECT	SHEET No.	TOTAL SHEETS
07	LA	5	29.4/31.6	1276	1931

JEstrada. 1/31/12
REGISTERED CIVIL ENGINEER DATE

5-21-12
PLANS APPROVAL DATE

REGISTERED PROFESSIONAL ENGINEER
JORGE I. ESTRADA
No. C51473
Exp. 06-30-12
CIVIL
STATE OF CALIFORNIA

The State of California or its officers or agents shall not be responsible for the accuracy or completeness of electronic copies of this plan sheet.

Retaining Wall Type 1RR - Total Length = 1371′-2½" masured along RW 1635 LOL

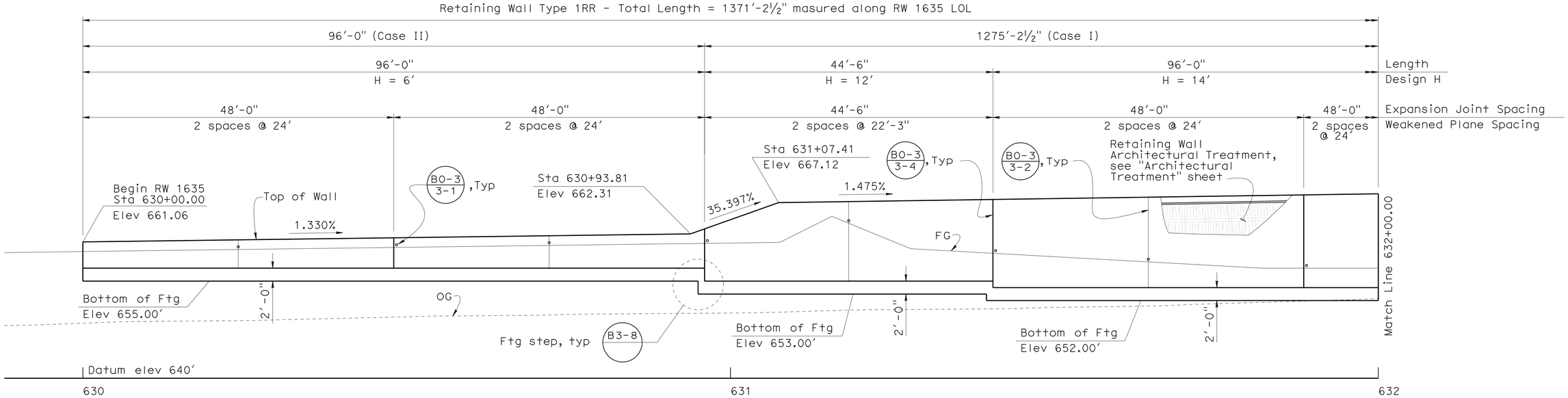

ELEVATION

⅛" = 1′-0"

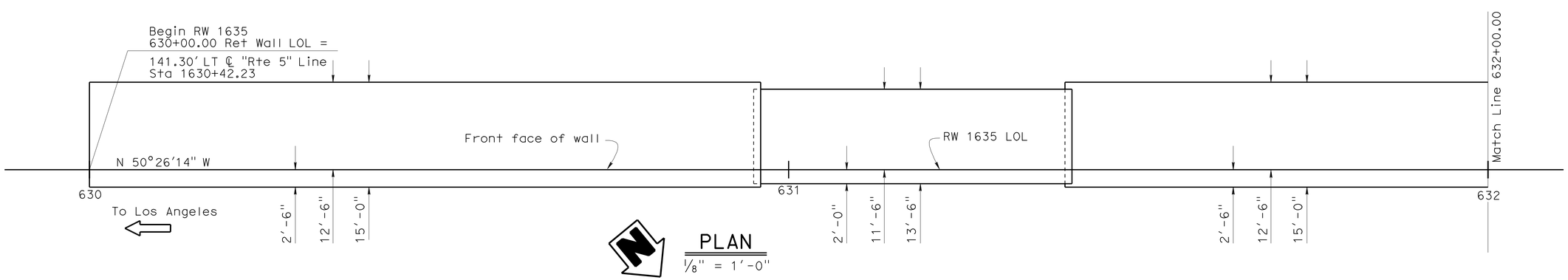

PLAN

⅛" = 1′-0"

DESIGN	BY JD/ Zihan Yan	CHECKED Jorge Estrada	STATE OF CALIFORNIA DEPARTMENT OF TRANSPORTATION	DIVISION OF ENGINEERING SERVICES STRUCTURE DESIGN DESIGN BRANCH 18	BRIDGE NO. RW1635
DETAILS	BY SD/ Minh Tran	CHECKED J. Estrada/J. Duffin			POST MILE 30.91
QUANTITIES	BY JD/ Zihan Yan	CHECKED Ruperd Wilson			

RETAINING WALL 1635
STRUCTURE PLAN NO. 1

STRUCTURES DESIGN DETAIL SHEET (ENGLISH) (REV. 09-01-10)

ORIGINAL SCALE IN INCHES FOR REDUCED PLANS 0 1 2 3

UNIT: 3603
PROJECT NUMBER & PHASE: 0700021119-1
CONTRACT NO.: 07-1218W1

DISREGARD PRINTS BEARING EARLIER REVISION DATES

REVISION DATES 01/14/11 12/28/11

SHEET 5 OF 23

FILE => e-rw1635-c-sp01.dgn

USERNAME => s124496 DATE PLOTTED => 21-MAY-2012 TIME PLOTTED => 18:06

DIST	COUNTY	ROUTE	POST MILES TOTAL PROJECT	SHEET No.	TOTAL SHEETS
07	LA	5	29.4/31.6	1277	1931

JEstrada. 1/31/12
REGISTERED CIVIL ENGINEER DATE

5-21-12
PLANS APPROVAL DATE

REGISTERED PROFESSIONAL ENGINEER
JORGE I. ESTRADA
No. C51473
Exp. 06-30-12
CIVIL
STATE OF CALIFORNIA

The State of California or its officers or agents shall not be responsible for the accuracy or completeness of electronic copies of this plan sheet.

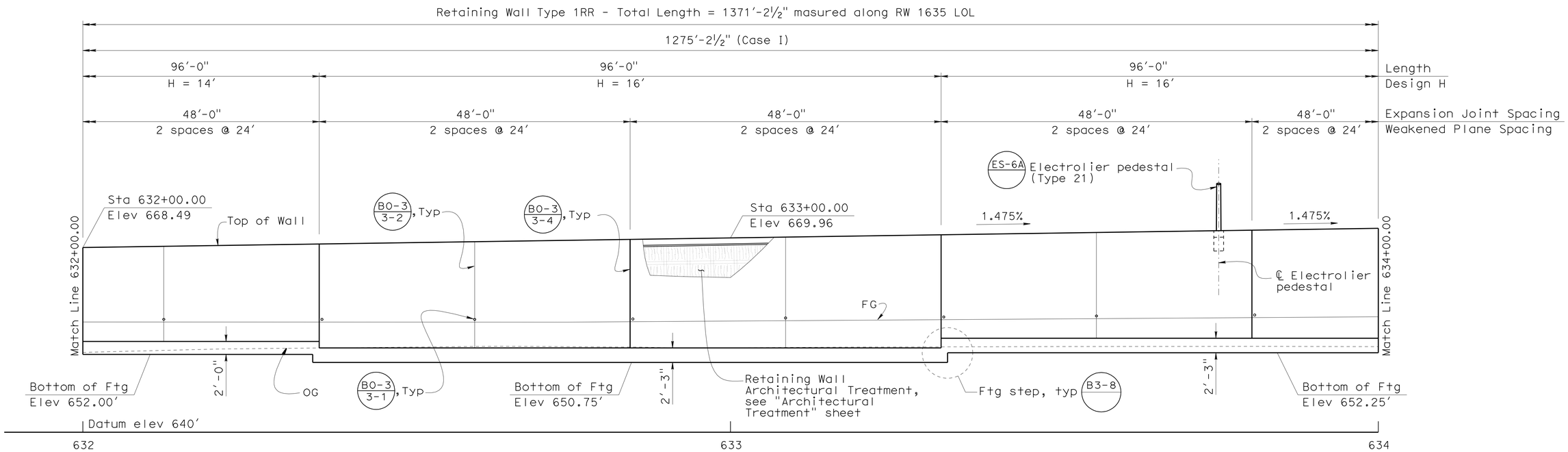

ELEVATION

1/8" = 1'-0"

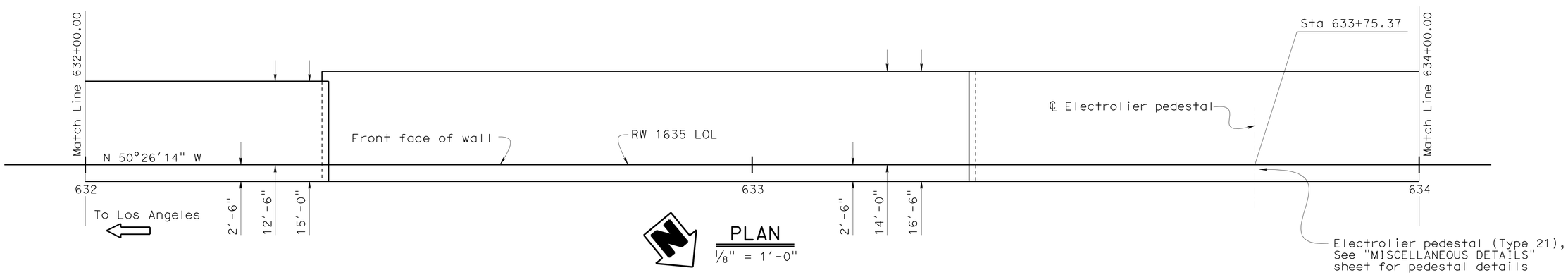

PLAN

1/8" = 1'-0"

DESIGN	BY JD/ Zihan Yan	CHECKED Jorge Estrada	
DETAILS	BY SD/ Minh Tran	CHECKED J. Estrada/J. Duffin	
QUANTITIES	BY JD/ Zihan Yan	CHECKED Ruperd Wilson	

STATE OF CALIFORNIA
DEPARTMENT OF TRANSPORTATION

DIVISION OF ENGINEERING SERVICES
STRUCTURE DESIGN
DESIGN BRANCH 18

BRIDGE NO. RW1635
POST MILE 30.91

RETAINING WALL 1635
STRUCTURE PLAN NO. 2

STRUCTURES DESIGN DETAIL SHEET (ENGLISH) (REV. 09-01-10)

ORIGINAL SCALE IN INCHES FOR REDUCED PLANS 0 1 2 3

UNIT: 3603
PROJECT NUMBER & PHASE: 0700021119-1
CONTRACT NO.: 07-1218w1

DISREGARD PRINTS BEARING EARLIER REVISION DATES

REVISION DATES 01/14/11 12/26/11 03/23/12

SHEET 6 OF 23

FILE => e-rw1635-c-sp02.dgn

USERNAME => s124496 DATE PLOTTED => 21-MAY-2012 TIME PLOTTED => 18:06

DIST	COUNTY	ROUTE	POST MILES TOTAL PROJECT	SHEET No.	TOTAL SHEETS
07	LA	5	29.4/31.6	1278	1931

JEstrada. 1/31/12
REGISTERED CIVIL ENGINEER DATE

5-21-12
PLANS APPROVAL DATE

REGISTERED PROFESSIONAL ENGINEER
JORGE I. ESTRADA
No. C51473
Exp. 06-30-12
CIVIL
STATE OF CALIFORNIA

The State of California or its officers or agents shall not be responsible for the accuracy or completeness of electronic copies of this plan sheet.

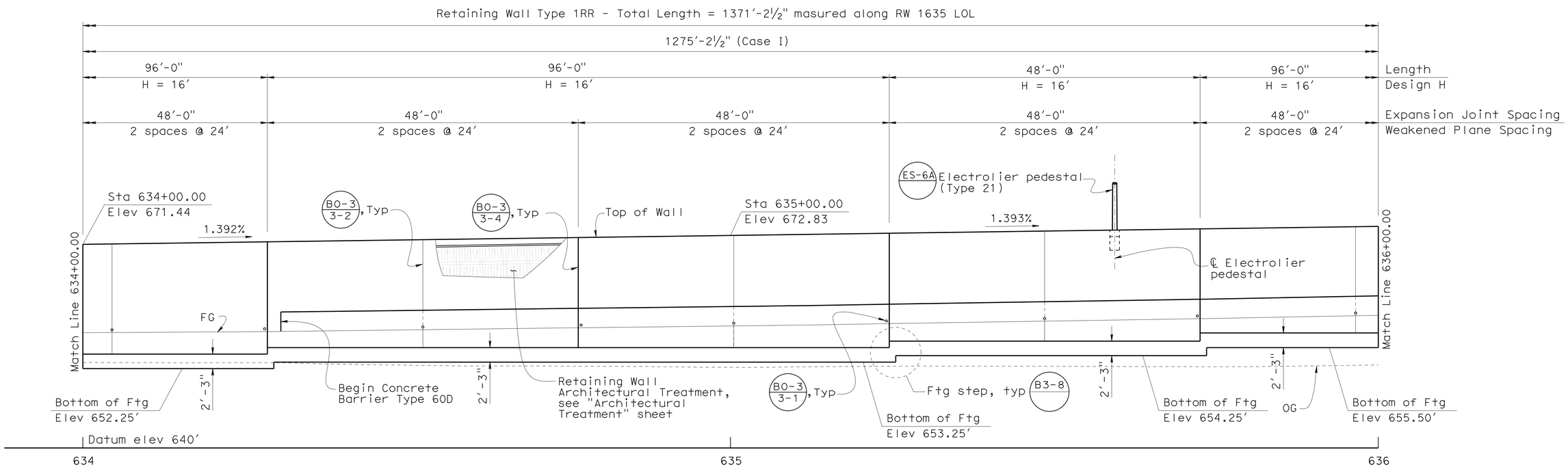

ELEVATION

1/8" - 1'-0"

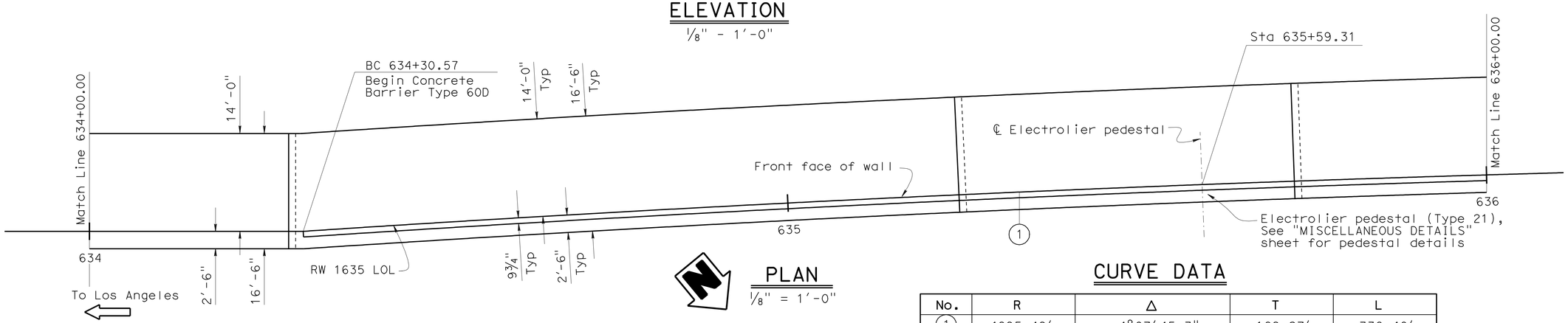

PLAN

1/8" = 1'-0"

CURVE DATA

No.	R	Δ	T	L
1	4695.49'	4°07'45.3"	169.27'	338.40'

DESIGN	BY JD/ Zihan Yan	CHECKED Jorge Estrada	
DETAILS	BY SD/ Minh Tran	CHECKED J. Estrada/J. Duffin	
QUANTITIES	BY JD/ Zihan Yan	CHECKED Ruperd Wilson	

STATE OF CALIFORNIA
DEPARTMENT OF TRANSPORTATION

DIVISION OF ENGINEERING SERVICES
STRUCTURE DESIGN
DESIGN BRANCH 18

BRIDGE NO. RW1635
POST MILE 30.91

RETAINING WALL 1635
STRUCTURE PLAN NO. 3

STRUCTURES DESIGN DETAIL SHEET (ENGLISH) (REV. 09-01-10)

ORIGINAL SCALE IN INCHES FOR REDUCED PLANS 0 1 2 3

UNIT: 3603
PROJECT NUMBER & PHASE: 0700021119-1
CONTRACT NO.: 07-1218w1

DISREGARD PRINTS BEARING EARLIER REVISION DATES

REVISION DATES 01/14/11 12/28/11 03/20/12

SHEET 7 OF 23

FILE => e-rw1635-c-sp03.dgn

USERNAME => s124496 DATE PLOTTED => 21-MAY-2012 TIME PLOTTED => 18:06

DIST	COUNTY	ROUTE	POST MILES TOTAL PROJECT	SHEET No.	TOTAL SHEETS
07	LA	5	29.4/31.6	1279	1931

JEstrada. 1/31/12
REGISTERED CIVIL ENGINEER DATE

5-21-12
PLANS APPROVAL DATE

REGISTERED PROFESSIONAL ENGINEER
JORGE I. ESTRADA
No. C51473
Exp. 06-30-12
CIVIL
STATE OF CALIFORNIA

The State of California or its officers or agents shall not be responsible for the accuracy or completeness of electronic copies of this plan sheet.

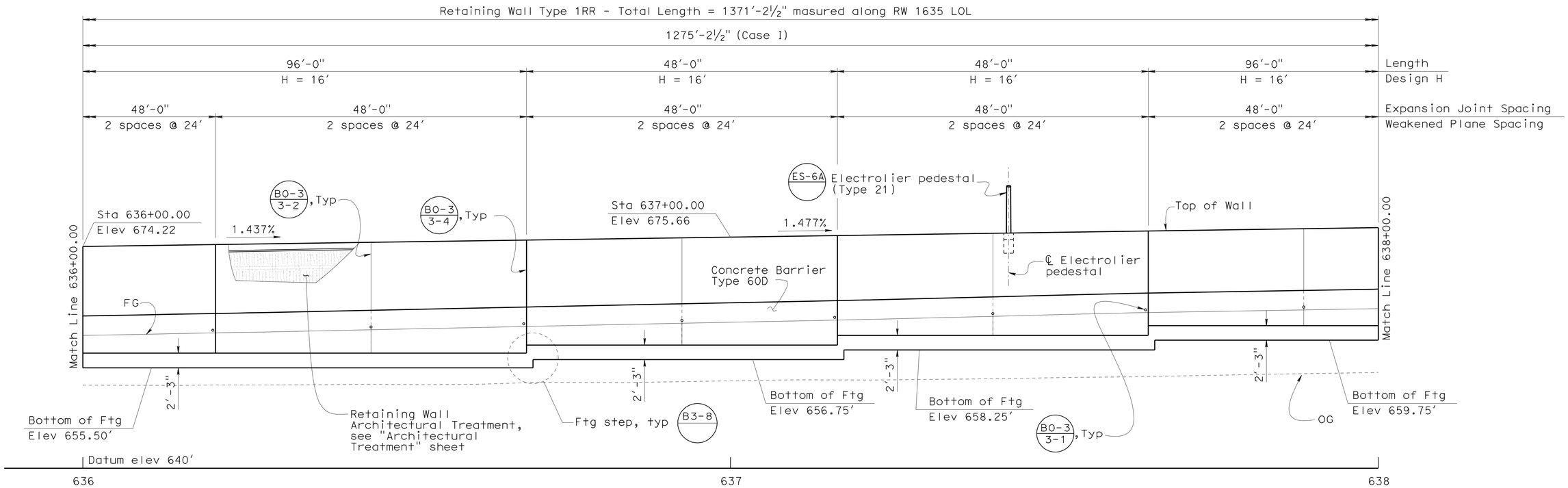

ELEVATION

⅛" = 1'-0"

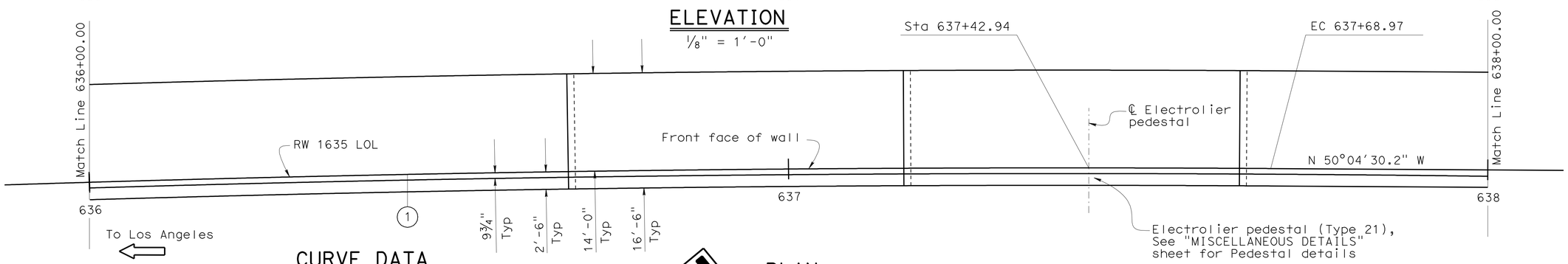

CURVE DATA

No.	R	Δ	T	L
1	4695.49'	4°07'45.3"	169.27'	338.40'

PLAN

⅛" = 1'-0"

DESIGN	BY JD/ Zihan Yan	CHECKED Jorge Estrada	
DETAILS	BY SD/ Minh Tran	CHECKED J. Estrada/J. Duffin	
QUANTITIES	BY JD/ Zihan Yan	CHECKED Ruperd Wilson	

STATE OF CALIFORNIA
DEPARTMENT OF TRANSPORTATION

DIVISION OF ENGINEERING SERVICES
STRUCTURE DESIGN
DESIGN BRANCH 18

BRIDGE NO. RW1635
POST MILE 30.91

RETAINING WALL 1635
STRUCTURE PLAN NO. 4

STRUCTURES DESIGN DETAIL SHEET (ENGLISH) (REV. 09-01-10)

ORIGINAL SCALE IN INCHES FOR REDUCED PLANS 0 1 2 3

UNIT: 3603
PROJECT NUMBER & PHASE: 0700021119-1
CONTRACT NO.: 07-1218W1

DISREGARD PRINTS BEARING EARLIER REVISION DATES

REVISION DATES 01/14/11 12/28/11 03/20/12

SHEET 8 OF 23

FILE => e-rw1635-c-sp04.dgn

USERNAME => s124496 DATE PLOTTED => 21-MAY-2012 TIME PLOTTED => 18:06

DIST	COUNTY	ROUTE	POST MILES TOTAL PROJECT	SHEET No.	TOTAL SHEETS
07	LA	5	29.4/31.6	1280	1931

JEstrada. 1/31/12
REGISTERED CIVIL ENGINEER DATE

5-21-12
PLANS APPROVAL DATE

REGISTERED PROFESSIONAL ENGINEER
JORGE I. ESTRADA
No. C51473
Exp. 06-30-12
CIVIL
STATE OF CALIFORNIA

The State of California or its officers or agents shall not be responsible for the accuracy or completeness of electronic copies of this plan sheet.

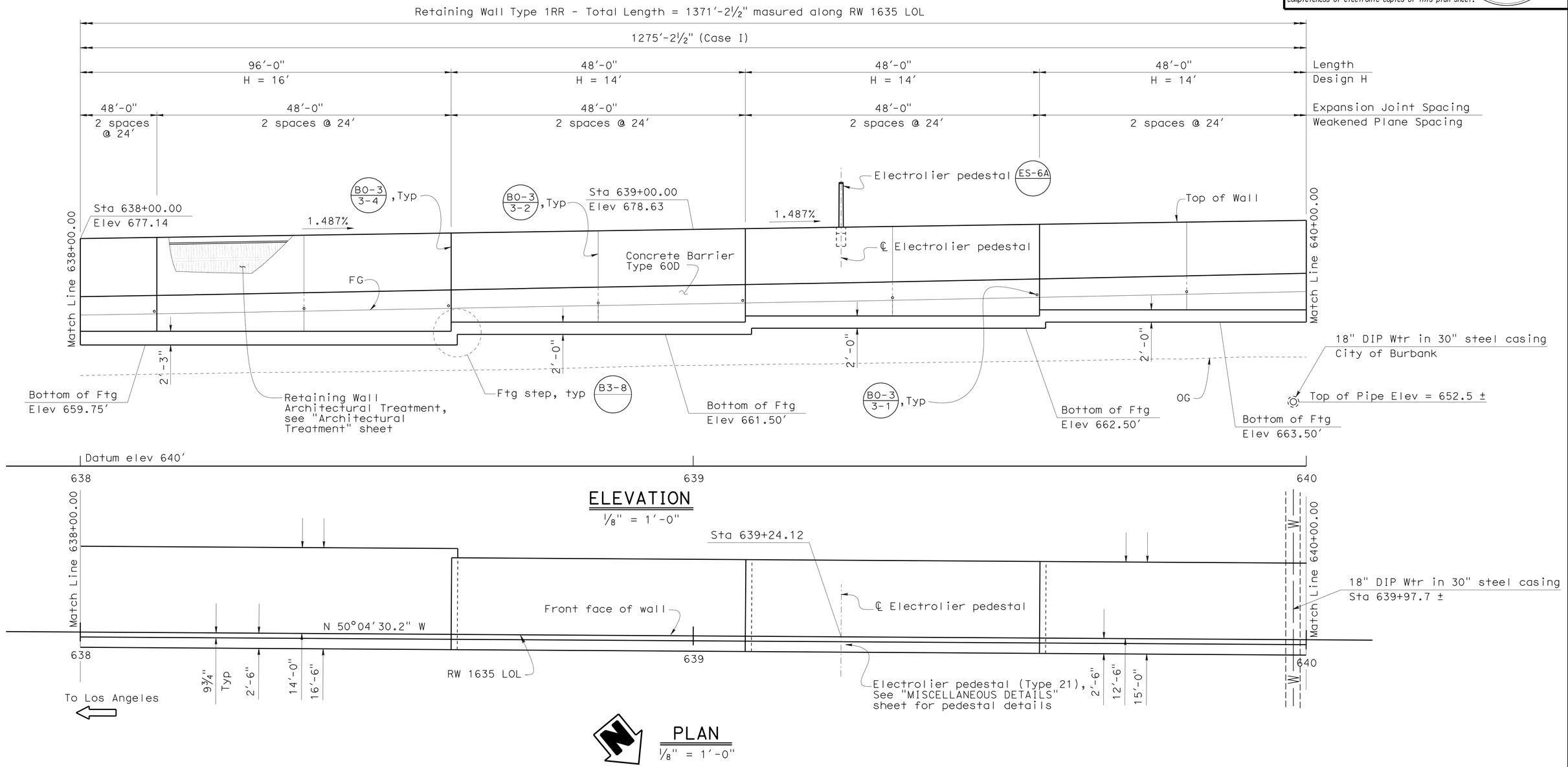

DESIGN	BY JD/ Zihan Yan	CHECKED Jorge Estrada	
DETAILS	BY SD/ Minh Tran	CHECKED J. Estrada/J. Duffin	
QUANTITIES	BY JD/ Zihan Yan	CHECKED Ruperd Wilson	

STATE OF CALIFORNIA
DEPARTMENT OF TRANSPORTATION

DIVISION OF ENGINEERING SERVICES
STRUCTURE DESIGN
DESIGN BRANCH 18

BRIDGE NO. RW1635
POST MILE 30.91

RETAINING WALL 1635
STRUCTURE PLAN NO. 5

STRUCTURES DESIGN DETAIL SHEET (ENGLISH) (REV. 09-01-10)

ORIGINAL SCALE IN INCHES FOR REDUCED PLANS 0 1 2 3

UNIT: 3603
PROJECT NUMBER & PHASE: 0700021119-1
CONTRACT NO.: 07-1218w1

DISREGARD PRINTS BEARING EARLIER REVISION DATES

REVISION DATES 01/14/11 01/06/12 03/26/12

SHEET 9 OF 23

FILE => e-rw1635-c-sp05.dgn

USERNAME => s114937 DATE PLOTTED => 11-JUL-2012 TIME PLOTTED => 10:55

DIST	COUNTY	ROUTE	POST MILES TOTAL PROJECT	SHEET No.	TOTAL SHEETS
07	LA	5	29.4/31.6	1281	1931

REGISTERED CIVIL ENGINEER — DATE 1/31/12

5-21-12
PLANS APPROVAL DATE

REGISTERED PROFESSIONAL ENGINEER — JORGE I. ESTRADA — No. C51473 — Exp. 06-30-12 — CIVIL — STATE OF CALIFORNIA

The State of California or its officers or agents shall not be responsible for the accuracy or completeness of electronic copies of this plan sheet.

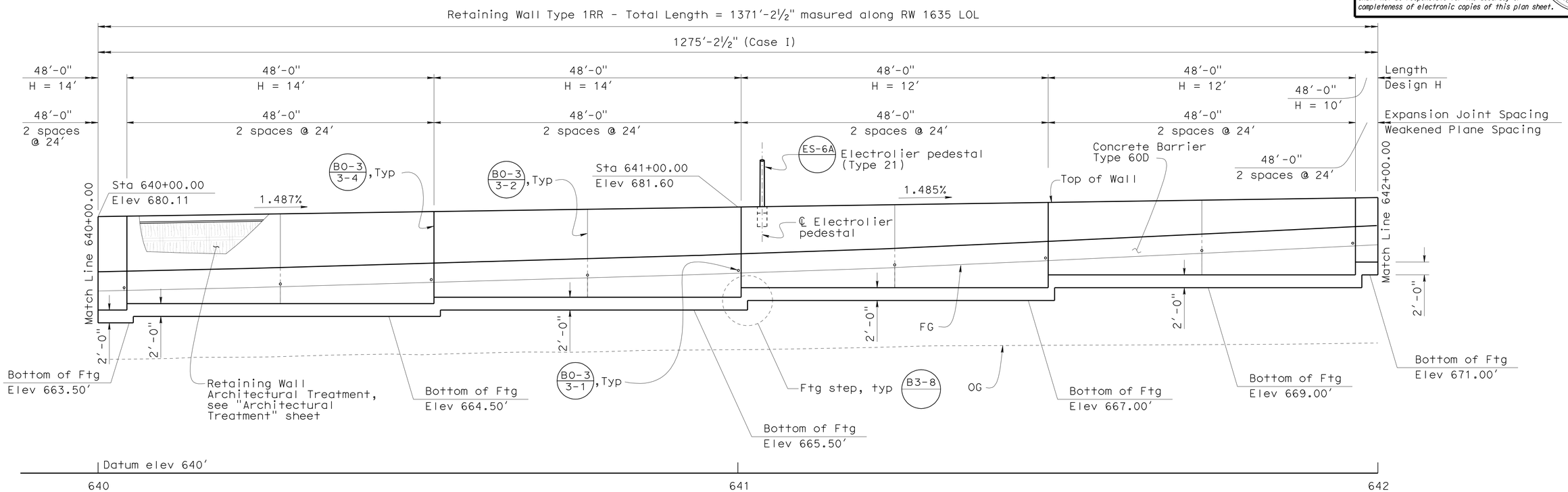

ELEVATION

1/8" - 1'-0"

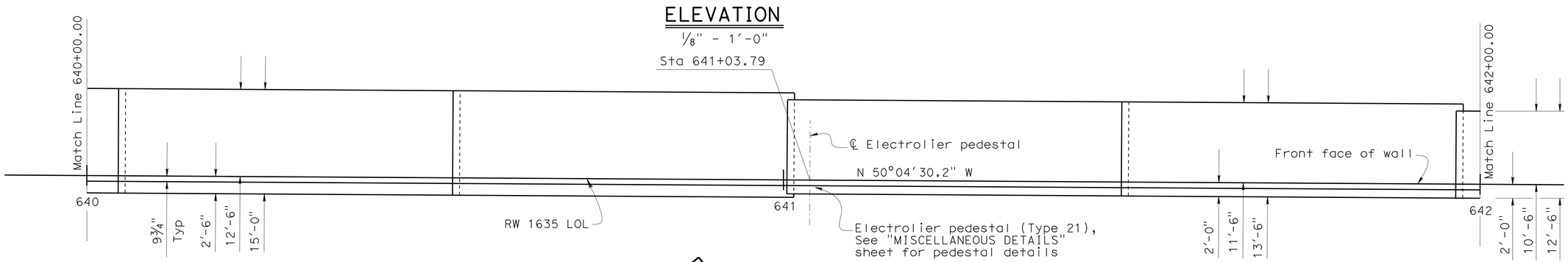

PLAN

1/8" = 1'-0"

DESIGN	BY JD/ Zihan Yan	CHECKED Jorge Estrada	
DETAILS	BY SD/ Minh Tran	CHECKED J. Estrada/J. Duffin	
QUANTITIES	BY JD/ Zihan Yan	CHECKED Ruperd Wilson	

STATE OF CALIFORNIA
DEPARTMENT OF TRANSPORTATION

DIVISION OF ENGINEERING SERVICES
STRUCTURE DESIGN
DESIGN BRANCH 18

BRIDGE NO. RW1635
POST MILE 30.91

RETAINING WALL 1635
STRUCTURE PLAN NO. 6

STRUCTURES DESIGN DETAIL SHEET (ENGLISH) (REV. 09-01-10)

ORIGINAL SCALE IN INCHES FOR REDUCED PLANS 0 1 2 3

UNIT: 3603
PROJECT NUMBER & PHASE: 0700021119-1
CONTRACT NO.: 07-1218w1

DISREGARD PRINTS BEARING EARLIER REVISION DATES
REVISION DATES 01/14/11 01/31/12 03/26/12

SHEET 10 OF 23

FILE => e-rw1635-c-sp06.dgn

USERNAME => s124436 DATE PLOTTED => 21-MAY-2012 TIME PLOTTED => 18:36

DIST	COUNTY	ROUTE	POST MILES TOTAL PROJECT	SHEET No.	TOTAL SHEETS
07	LA	5	29.4/31.6	1282	1931

JEstrada. 1/31/12
REGISTERED CIVIL ENGINEER DATE

5-21-12
PLANS APPROVAL DATE

REGISTERED PROFESSIONAL ENGINEER
JORGE I. ESTRADA
No. C51473
Exp. 06-30-12
CIVIL
STATE OF CALIFORNIA

The State of California or its officers or agents shall not be responsible for the accuracy or completeness of electronic copies of this plan sheet.

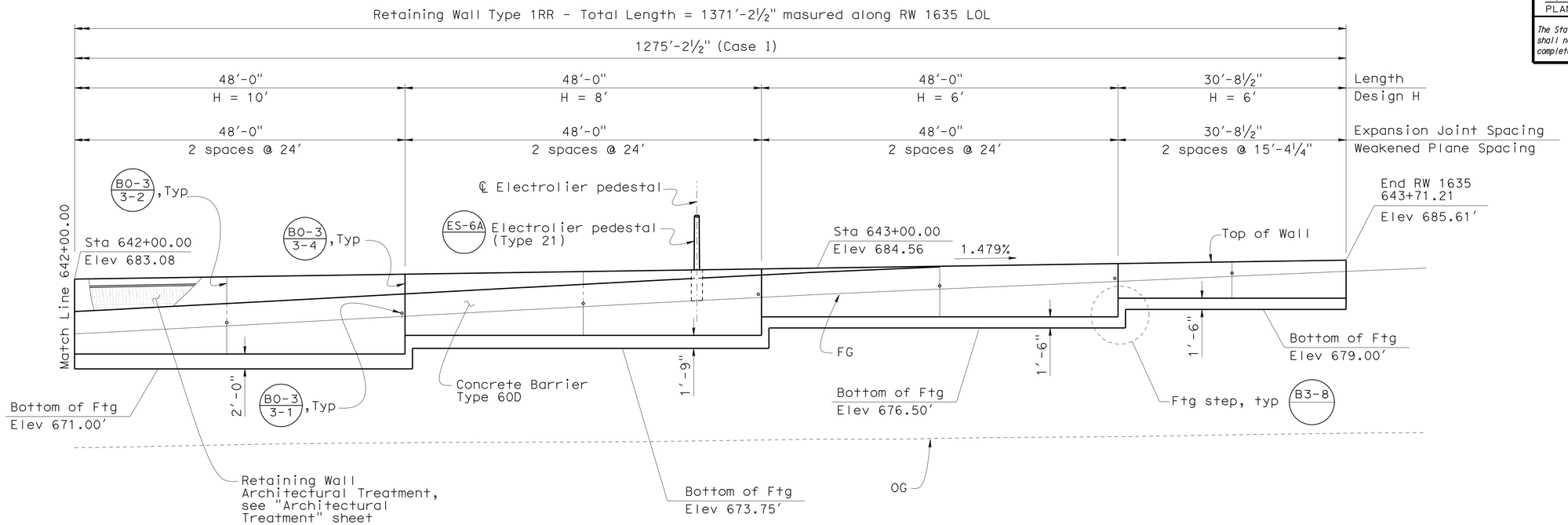

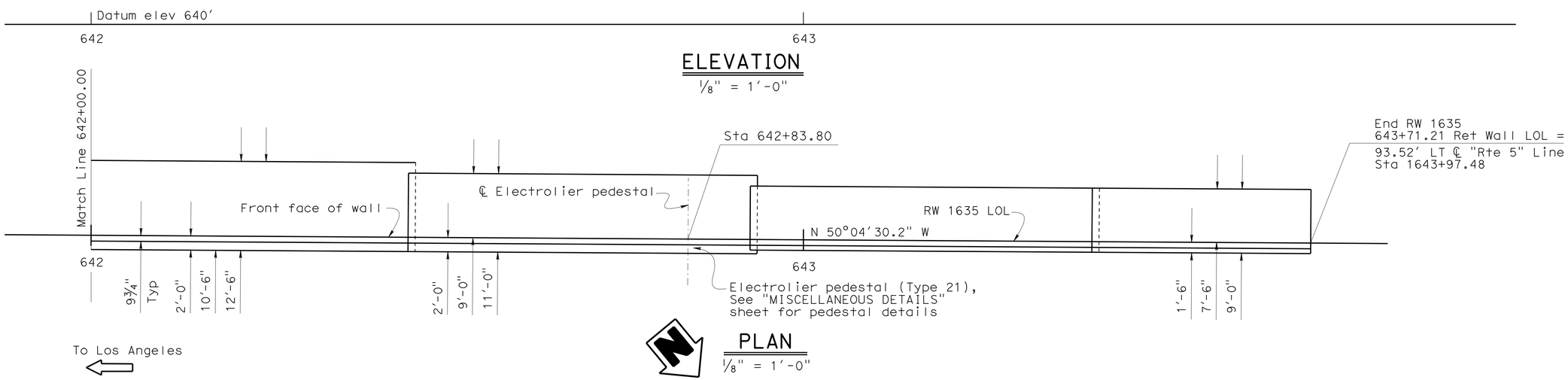

ELEVATION
⅛" = 1'-0"

PLAN
⅛" = 1'-0"

DESIGN	BY JD/ Zihan Yan	CHECKED Jorge Estrada	
DETAILS	BY SD/ Minh Tran	CHECKED J. Estrada/J. Duffin	
QUANTITIES	BY JD/ Zihan Yan	CHECKED Ruperd Wilson	

STATE OF CALIFORNIA
DEPARTMENT OF TRANSPORTATION

DIVISION OF ENGINEERING SERVICES
STRUCTURE DESIGN
DESIGN BRANCH 18

BRIDGE NO. RW1635
POST MILE 30.91

RETAINING WALL 1635
STRUCTURE PLAN NO. 7

STRUCTURES DESIGN DETAIL SHEET (ENGLISH) (REV. 09-01-10)

ORIGINAL SCALE IN INCHES FOR REDUCED PLANS 0 1 2 3

UNIT: 3603
PROJECT NUMBER & PHASE: 0700021119-1
CONTRACT NO.: 07-1218w1

DISREGARD PRINTS BEARING EARLIER REVISION DATES

REVISION DATES 01/14/11 01/31/12 03/26/12

SHEET 11 OF 23

FILE => e-rw1635-c-sp07.dgn

USERNAME => s124496 DATE PLOTTED => 21-MAY-2012 TIME PLOTTED => 18:36

DIST	COUNTY	ROUTE	POST MILES TOTAL PROJECT	SHEET No.	TOTAL SHEETS
07	LA	5	29.4/31.6	1283	1931

REGISTERED CIVIL ENGINEER — DATE 1/31/12

5-21-12
PLANS APPROVAL DATE

REGISTERED PROFESSIONAL ENGINEER — JORGE I. ESTRADA — No. C51473 — Exp. 06-30-12 — CIVIL — STATE OF CALIFORNIA

The State of California or its officers or agents shall not be responsible for the accuracy or completeness of electronic copies of this plan sheet.

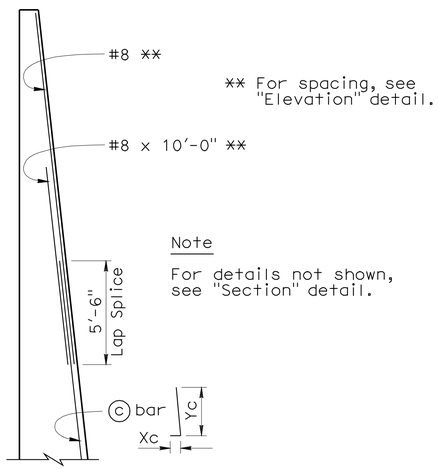

TOP OF WALL SECTION (H=32' THROUGH H=36')

1/4" = 1'-0"

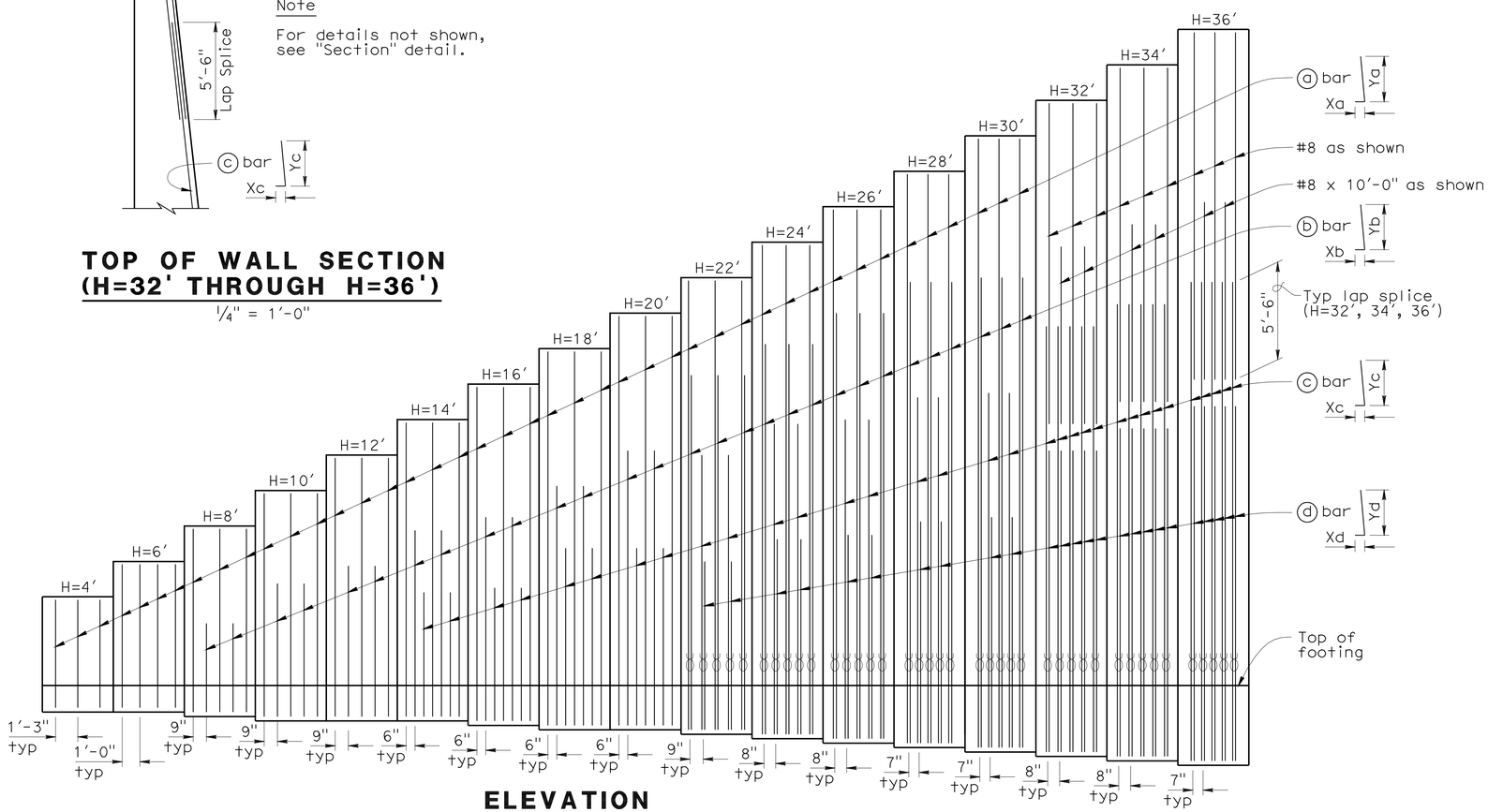

ELEVATION

1/4" = 1'-0"

Denotes bundled bars

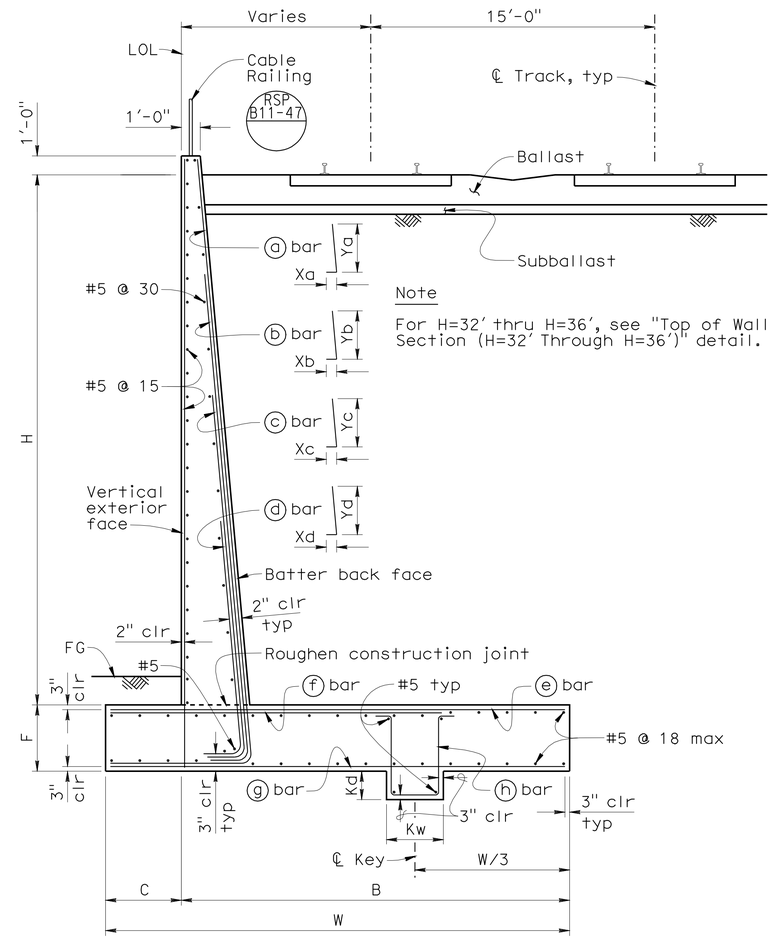

Note

For H=32' thru H=36', see "Top of Wall Section (H=32' Through H=36')" detail.

SECTION

1/4" = 1'-0"

NOTES

1. For "Table of Dimensions, Reinforcement, and Foundation Pressures", see "RETAINING WALL TYPE 1RR CASE I - DETAILS NO. 2" sheet.
2. For drainage details, wall construction offset values, and footing step details, see Standard Plan B3-8.
3. The back of the retaining wall shall be damp-proofed.
4. Vertical wall expansion joints shall be spaced at 60'-0" max.
5. For wall stem joint details see B0-3 / 3-3 and B0-3 / 3-4

DESIGN	BY Richard Schendel	CHECKED Zihan Yan
DETAILS	BY SD/ Minh Tran	CHECKED Zihan Yan
QUANTITIES	BY Zihan Yan	CHECKED Ruperd Wilson

STATE OF CALIFORNIA
DEPARTMENT OF TRANSPORTATION

DIVISION OF ENGINEERING SERVICES
STRUCTURE DESIGN
DESIGN BRANCH 18

BRIDGE NO. RW1635
POST MILE 30.91

RETAINING WALL 1635
RETAINING WALL TYPE 1RR
CASE I - DETAILS NO. 1

STRUCTURES DESIGN DETAIL SHEET (ENGLISH) (REV. 09-01-10)

ORIGINAL SCALE IN INCHES FOR REDUCED PLANS 0 1 2 3

UNIT: 3603
PROJECT NUMBER & PHASE: 0700021119-1
CONTRACT NO.: 07-1218W1

DISREGARD PRINTS BEARING EARLIER REVISION DATES

REVISION DATES 01/02/11 11/02/11

SHEET 12 OF 23

FILE => e-rw1635-f-rwd102_1rr_case1.dgn

USERNAME => s114937 DATE PLOTTED => 11-JUL-2012 TIME PLOTTED => 10:55

DIST	COUNTY	ROUTE	POST MILES TOTAL PROJECT	SHEET No.	TOTAL SHEETS
07	LA	5	29.4/31.6	1284	1931

JEstrada. 1/31/12
REGISTERED CIVIL ENGINEER DATE

5-21-12
PLANS APPROVAL DATE

REGISTERED PROFESSIONAL ENGINEER
JORGE I. ESTRADA
No. C51473
Exp. 06-30-12
CIVIL
STATE OF CALIFORNIA

The State of California or its officers or agents shall not be responsible for the accuracy or completeness of electronic copies of this plan sheet.

DESIGN NOTES

1. DESIGN:
   -AREMA, 2005
   -Bridge Design Specifications (1996 AASHTO with Revisions by Caltrans)

2. CONCRETE AND STEEL:
   fc = 1,440 psi fs = 24,000 psi
   f'c = 3,600 psi fy = 60,000 psi

3. SOIL PROPERTIES:
   Density = 120 lb/ft^3
   Internal friction angle = 33°
   Cohesion = 0 psf

4. LIVE LOADING:
   Cooper E-80 railroad loading represented by 9'-6" thick soil surcharge. The vertical reaction of the surcharge was both included and omitted for design.

5. Earth pressures were determined using Rankine's formulas.

6. EQUIVALENT ACTIVE FLUID PRESSURE:
   36 psf/ft for determination of toe pressure
   27 psf/ft for determination of heel pressure

7. The passive earth pressure used to resist sliding is 50% of Rankine's passive earth pressure assuming a level finished grade, 1'-6" of footing cover, and neglecting the portion of the pressure exerted on the face of the wall.

8. Friction coefficient for sliding = 0.45.

TABLE OF DIMENSIONS, REINFORCEMENT, AND FOUNDATION PRESSURES

Design H	4'	6'	8'	10'	12'	14'	16'	18'	20'	22'	24'	26'	28'	30'	32'	34'	36'
W	7'-0"	9'-0"	11'-0"	12'-6"	13'-6"	15'-0"	16'-6"	18'-0"	19'-0"	20'-6"	22'-0"	23'-6"	24'-6"	25'-6"	26'-6"	28'-0"	29'-0"
C	1'-6"	1'-6"	2'-0"	2'-0"	2'-0"	2'-6"	2'-6"	3'-0"	3'-0"	3'-6"	3'-6"	4'-0"	4'-0"	4'-6"	4'-6"	5'-0"	5'-0"
B	5'-6"	7'-6"	9'-0"	10'-6"	11'-6"	12'-6"	14'-0"	15'-0"	16'-0"	17'-0"	18'-6"	19'-6"	20'-6"	21'-0"	22'-0"	23'-0"	24'-0"
F	1'-6"	1'-6"	1'-9"	2'-0"	2'-0"	2'-0"	2'-3"	2'-6"	2'-6"	2'-9"	3'-0"	3'-3"	3'-6"	3'-9"	4'-0"	4'-3"	4'-6"
Batter	8:100	8:100	8:100	8:100	8:100	8:100	8:100	8:100	8:100	8:100	8:100	9:100	9:100	10:100	10:100	11:100	11:100
Kd	1'-0"	1'-0"	1'-0"	1'-0"	1'-6"	1'-6"	1'-6"	1'-6"	1'-6"	1'-6"	1'-6"	1'-6"	1'-6"	2'-0"	2'-0"	2'-0"	2'-0"
Kw	2'-0"	2'-0"	2'-0"	2'-0"	3'-0"	3'-0"	3'-0"	3'-0"	3'-0"	3'-0"	3'-0"	3'-0"	3'-0"	4'-0"	4'-0"	4'-0"	4'-0"
(a) bar	#5 @ 15	#5 @ 12	#6 @ 18	#6 @ 18	#7 @ 18	#7 @ 18	#8 @ 18	#8 @ 18	#8 @ 18	#6 @ 18	#6 @ 16	#6 @ 16	#6 @ 14	#7 @ 14	-	-	-
Xa	std hook	std hook	std hook	std hook	std hook	cont	cont	cont	cont	cont	cont	std hook	cont	cont	-	-	-
Ya	cont	cont	cont	cont	cont	cont	cont	cont	cont	cont	cont	cont	cont	cont	-	-	-
(b) bar	-	-	#5 @ 18	#7 @ 18	#8 @ 18	#7 @ 18	#8 @ 18	#8 @ 18	#10 @ 18	#8 @ 18	#8 @ 16	#9 @ 16	#9 @ 14	#9 @ 14	-	-	-
Xb	-	-	std hook	std hook	std hook	std hook	std hook	std hook	std hook	std hook	std hook	cont	std hook	std hook	-	-	-
Yb	-	-	5'-0"	7'-6"	8'-6"	10'-6"	11'-6"	13'-6"	15'-6"	20'-0"	22'-0"	24'-0"	26'-0"	26'-6"	-	-	-
(c) bar	-	-	-	-	-	#8 @ 18	#8 @ 18	#10 @ 18	#11 @ 18	#11 @ 18	#11 @ 16	#11 @ 16	#11 @ 14	#11 @ 14	#11 @ 8	#11 @ 8	#11 @ 7
Xc	-	-	-	-	-	std hook	std hook	std hook	std hook	std hook	std hook	std hook	std hook	std hook	std hook	std hook	std hook
Yc	-	-	-	-	-	7'-0"	7'-6"	10'-0"	10'-0"	15'-6"	17'-6"	18'-0"	19'-6"	20'-0"	24'-0"	25'-6"	27'-0"
(d) bar	-	-	-	-	-	-	-	-	-	#11 @ 18	#11 @ 16	#11 @ 16	#11 @ 14	#11 @ 14	#11 @ 8	#11 @ 8	#11 @ 7
Xd	-	-	-	-	-	-	-	-	-	std hook	std hook	std hook	std hook	std hook	cont	cont	cont
Yd	-	-	-	-	-	-	-	-	-	9'-6"	11'-0"	11'-6"	12'-6"	13'-0"	17'-0"	18'-6"	20'-0"
(e) bar	#5 @ 15	#5 @ 12	#6 @ 18	#6 @ 18	#7 @ 18	#7 @ 12	#8 @ 12	#8 @ 12	#10 @ 12	#9 @ 9 *	#9 @ 8 *	#9 @ 8 *	#9 @ 7 *	#9 @ 7 *	#10 @ 8 *	#11 @ 8 *	#10 @ 7 *
(f) bar	-	-	#5 @ 18	#7 @ 18	#8 @ 18	#8 @ 12	#8 @ 12	#9 @ 12	#10 @ 12	#9 @ 9 *	#9 @ 8 *	#10 @ 8 *	#10 @ 7 *	#10 @ 7 *	#11 @ 8 *	#11 @ 8 *	#11 @ 7 *
(f) bar length	-	-	7'-0"	9'-0"	10'-0"	10'-6"	11'-0"	13'-0"	12'-6"	13'-6"	15'-0"	16'-6"	17'-6"	18'-6"	19'-0"	19'-6"	22'-0"
(g) bar	#4 @ 15	#4 @ 12	#5 @ 18	#5 @ 18	#5 @ 18	#5 @ 18	#5 @ 18	#5 @ 18	#5 @ 18	#5 @ 18	#5 @ 16	#5 @ 16	#5 @ 14	#5 @ 14	#5 @ 16	#5 @ 16	#5 @ 14
(h) bar	#4 @ 15	#4 @ 12	#5 @ 18	#5 @ 18	#5 @ 18	#5 @ 18	#5 @ 18	#5 @ 18	#5 @ 18	#5 @ 18	#5 @ 16	#5 @ 16	#5 @ 14	#5 @ 14	#5 @ 16	#5 @ 16	#5 @ 14
Max Toe Pressure (ksf)	1.29	1.73	2.04	2.60	3.13	3.31	3.84	4.10	4.60	4.85	5.35	5.60	6.20	6.54	7.15	7.38	7.99
Max Heel Pressure (ksf)	1.84	1.97	2.18	2.27	2.34	2.53	2.64	2.84	2.88	3.09	3.22	3.43	3.47	3.63	3.66	3.89	3.96

* (e) and (f) bars bundled together

Note: No splices allowed in reinforcement except as approved by the Engineer.

DESIGN	BY Richard Schendel	CHECKED Zihan Yan	
DETAILS	BY SD/ Minh Tran	CHECKED Zihan Yan	
QUANTITIES	BY Zihan Yan	CHECKED Ruperd Wilson	

STATE OF CALIFORNIA
DEPARTMENT OF TRANSPORTATION

DIVISION OF ENGINEERING SERVICES
STRUCTURE DESIGN
DESIGN BRANCH 18

BRIDGE NO. RW1635
POST MILE 30.91

RETAINING WALL 1635
RETAINING WALL TYPE 1RR
CASE I - DETAILS NO. 2

STRUCTURES DESIGN DETAIL SHEET (ENGLISH) (REV. 09-01-10)

ORIGINAL SCALE IN INCHES FOR REDUCED PLANS 0 1 2 3

UNIT: 3603
PROJECT NUMBER & PHASE: 0700021119-1
CONTRACT NO.: 07-1218W1

DISREGARD PRINTS BEARING EARLIER REVISION DATES

REVISION DATES 01/02/11 11/02/11

SHEET 13 OF 23

FILE => e-rw1635-f-rwdt03_1rr_case1.dgn

USERNAME => s124496 DATE PLOTTED => 21-MAY-2012 TIME PLOTTED => 18:36

DIST	COUNTY	ROUTE	POST MILES TOTAL PROJECT	SHEET No.	TOTAL SHEETS
07	LA	5	29.4/31.6	1285	1931

REGISTERED CIVIL ENGINEER — DATE 1/31/12

5-21-12
PLANS APPROVAL DATE

REGISTERED PROFESSIONAL ENGINEER — JORGE I. ESTRADA — No. C51473 — Exp. 06-30-12 — CIVIL — STATE OF CALIFORNIA

The State of California or its officers or agents shall not be responsible for the accuracy or completeness of electronic copies of this plan sheet.

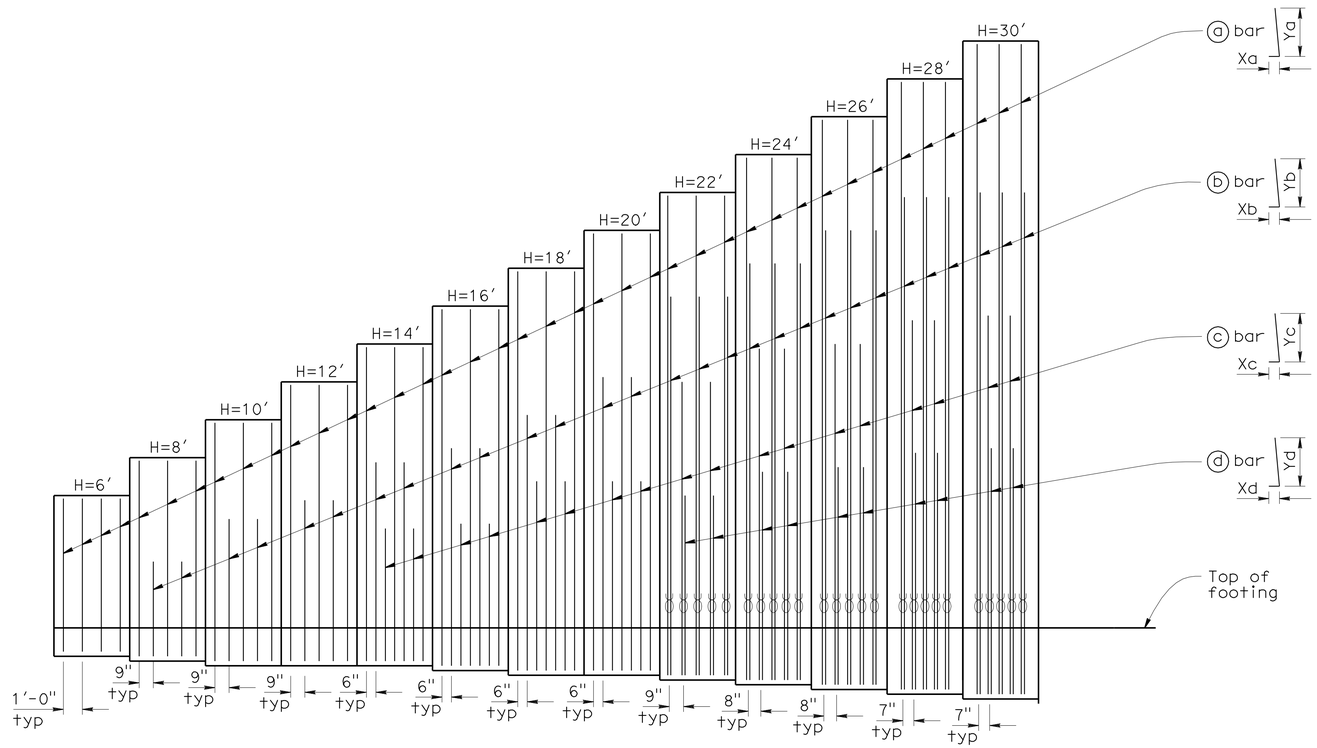

ELEVATION

1/4" = 1′-0"

Denotes bundled bars

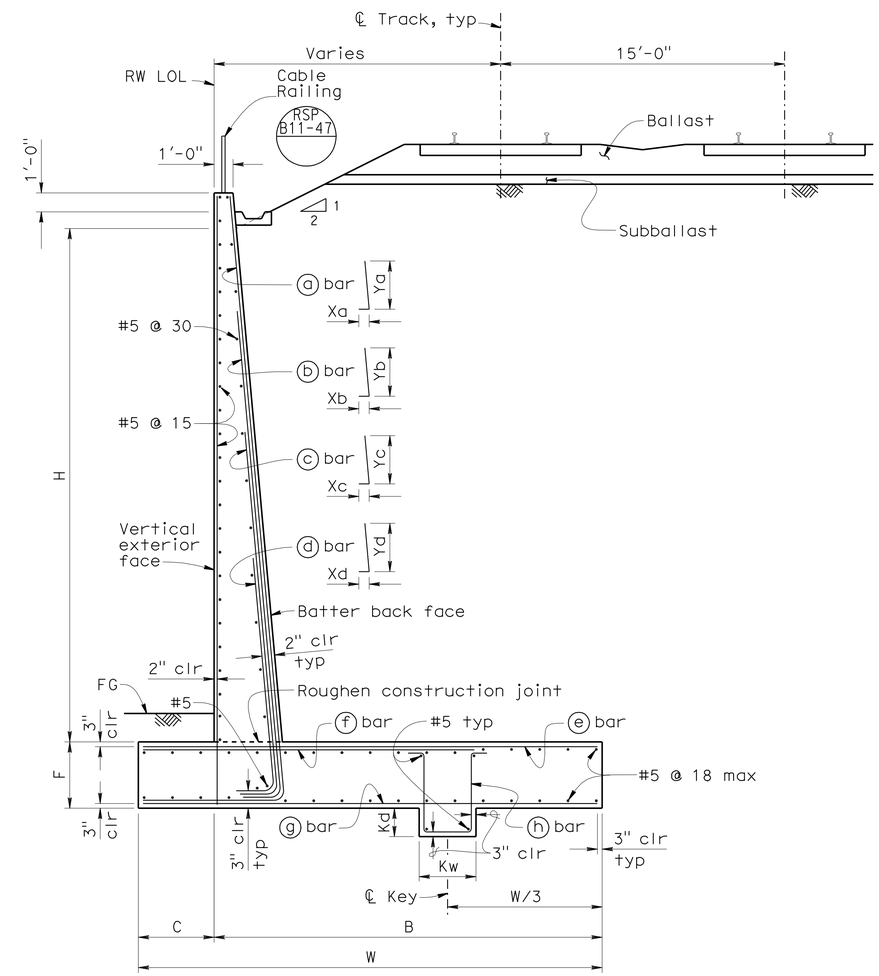

SECTION

1/4" = 1′-0"

NOTES

1. For "Table of Dimensions, Reinforcement, and Foundation Pressures", see "RETAINING WALL TYPE 1RR CASE II - DETAILS NO. 2" sheet.
2. For drainage details, wall construction offset values, and footing step details, see Standard Plan B3-8.
3. The back of the retaining wall shall be damp-proofed.
4. Vertical wall expansion joints shall be spaced at 60′-0" max.

	BY	CHECKED
DESIGN	Richard Schendel	Zihan Yan
DETAILS	SD/ Minh Tran	Zihan Yan
QUANTITIES	Zihan Yan	Ruperd Wilson

STATE OF CALIFORNIA
DEPARTMENT OF TRANSPORTATION

DIVISION OF ENGINEERING SERVICES
STRUCTURE DESIGN
DESIGN BRANCH 18

BRIDGE NO. RW1635
POST MILE 30.91

RETAINING WALL 1635
RETAINING WALL TYPE 1RR
CASE II - DETAILS NO. 1

STRUCTURES DESIGN DETAIL SHEET (ENGLISH) (REV. 09-01-10)

ORIGINAL SCALE IN INCHES FOR REDUCED PLANS 0 1 2 3

UNIT: 3603
PROJECT NUMBER & PHASE: 0700021119-1
CONTRACT NO.: 07-1218W1

DISREGARD PRINTS BEARING EARLIER REVISION DATES

REVISION DATES: 01/02/11 02/14/12

SHEET 14 OF 23

FILE => e-rw1635-g-rwd101_case2.dgn

USERNAME => s124496 DATE PLOTTED => 21-MAY-2012 TIME PLOTTED => 18:36

DIST	COUNTY	ROUTE	POST MILES TOTAL PROJECT	SHEET No.	TOTAL SHEETS
07	LA	5	29.4/31.6	1286	1931

JEstrada. 1/31/12
REGISTERED CIVIL ENGINEER DATE

5-21-12
PLANS APPROVAL DATE

REGISTERED PROFESSIONAL ENGINEER
JORGE I. ESTRADA
No. C51473
Exp. 06-30-12
CIVIL
STATE OF CALIFORNIA

The State of California or its officers or agents shall not be responsible for the accuracy or completeness of electronic copies of this plan sheet.

DESIGN NOTES

1. DESIGN:
   -AREMA, 2005
   -Bridge Design Specifications (1996 AASHTO with Revisions by Caltrans)

2. CONCRETE AND STEEL:
   fc = 1,440 psi fs = 24,000 psi
   f'c = 3,600 psi fy = 60,000 psi

3. SOIL PROPERTIES:
   Density = 120 lb/ft^3
   Internal friction angle = 33°
   Cohesion = 0 psf

4. LIVE LOADING:
   Cooper E-80 railroad loading represented by 9'-6" thick soil surcharge. The vertical reaction of the surcharge was both included and omitted for design.

5. Earth pressures were determined using trial wedge method.

6. EQUIVALENT ACTIVE FLUID PRESSURE:
   36 psf/ft for determination of toe pressure
   27 psf/ft for determination of heel pressure

7. The passive earth pressure used to resist sliding is 50% of Rankine's passive earth pressure assuming a level finished grade, 1'-6" of footing cover, and neglecting the portion of the pressure exerted on the face of the wall.

8. Friction coefficient for sliding = 0.45.

TABLE OF DIMENSIONS, REINFORCEMENT, AND FOUNDATION PRESSURES

Design H	6'	8'	10'	12'	14'	16'	18'	20'	22'	24'	26'	28'	30'
W	15'-0"	16'-6"	18'-0"	19'-0"	20'-6"	22'-0"	23'-6"	24'-6"	25'-6"	26'-6"	28'-0"	29'-0"	30'-0"
C	2'-6"	2'-6"	3'-0"	3'-0"	3'-6"	3'-6"	4'-0"	4'-0"	4'-6"	4'-6"	5'-0"	5'-0"	5'-0"
B	12'-6"	14'-0"	15'-0"	16'-0"	17'-0"	18'-6"	19'-6"	20'-6"	21'-0"	22'-0"	23'-0"	24'-0"	25'-0"
F	2'-0"	2'-3"	2'-6"	2'-6"	2'-9"	3'-0"	3'-3"	3'-6"	3'-9"	4'-0"	4'-3"	4'-6"	4'-9"
Batter	8:100	8:100	8:100	8:100	8:100	8:100	8:100	8:100	8:100	8:100	10:100	10:100	11:100
Kd	1'-0"	1'-0"	1'-6"	1'-6"	1'-6"	1'-6"	1'-6"	1'-6"	1'-6"	1'-6"	2'-0"	2'-0"	2'-0"
Kw	2'-0"	2'-0"	3'-0"	3'-0"	3'-0"	3'-0"	3'-0"	3'-0"	3'-0"	3'-0"	4'-0"	4'-0"	4'-0"
(a) bar	#5 @ 12	#6 @ 18	#6 @ 18	#7 @ 18	#7 @ 18	#8 @ 18	#8 @ 18	#8 @ 18	#6 @ 18	#7 @ 16	#7 @ 16	#7 @ 14	#7 @ 14
Xa	std hook	std hook	std hook	std hook	cont	cont	cont	cont	cont	std hook	std hook	cont	std hook
Ya	cont	cont	cont	cont	cont	cont	cont	cont	cont	cont	cont	cont	cont
(b) bar	-	#5 @ 18	#7 @ 18	#8 @ 18	#7 @ 18	#8 @ 18	#8 @ 18	#10 @ 18	#8 @ 18	#8 @ 16	#9 @ 16	#9 @ 14	#9 @ 14
Xb	-	std hook	std hook	std hook	std hook	std hook	std hook	std hook	std hook	cont	cont	std hook	cont
Yb	-	5'-0"	7'-6"	8'-6"	10'-6"	11'-6"	13'-6"	15'-6"	20'-0"	22'-0"	24'-0"	26'-0"	26'-6"
(c) bar	-	-	-	-	#8 @ 18	#8 @ 18	#10 @ 18	#11 @ 18	#11 @ 18	#11 @ 16	#11 @ 16	#11 @ 14	#11 @ 14
Xc	-	-	-	-	std hook	std hook	std hook	std hook	std hook	std hook	std hook	std hook	std hook
Yc	-	-	-	-	7'-0"	7'-6"	10'-0"	10'-0"	15'-6"	17'-6"	18'-0"	19'-6"	20'-0"
(d) bar	-	-	-	-	-	-	-	-	#11 @ 18	#11 @ 16	#11 @ 16	#11 @ 14	#11 @ 14
Xd	-	-	-	-	-	-	-	-	std hook	std hook	std hook	std hook	std hook
Yd	-	-	-	-	-	-	-	-	9'-6"	11'-0"	11'-6"	12'-6"	13'-0"
(e) bar	#8 @ 12	#8 @ 12	#9 @ 12	#9 @ 9 *	#9 @ 9 *	#9 @ 9 *	#10 @ 9 *	#10 @ 9 *	#11 @ 9 *	#11 @ 8 *	#11 @ 8 *	#11 @ 7 *	#11 @ 7 *
(f) bar	#8 @ 12	#9 @ 12	#9 @ 12	#9 @ 9 *	#9 @ 9 *	#10 @ 9 *	#10 @ 9 *	#11 @ 9 *	#11 @ 9 *	#11 @ 8 *	#11 @ 8 *	#11 @ 7 *	#11 @ 7 *
(f) bar length	10'-6"	12'-0"	12'-6"	13'-6"	14'-6"	15'-6"	16'-0"	16'-6"	17'-6"	18'-6"	20'-0"	21'-6"	23'-0"
(g) bar	#4 @ 12	#5 @ 18	#5 @ 18	#5 @ 18	#5 @ 18	#5 @ 18	#5 @ 18	#5 @ 18	#5 @ 18	#5 @ 16	#5 @ 16	#5 @ 14	#5 @ 14
(h) bar	#4 @ 12	#5 @ 18	#5 @ 18	#5 @ 18	#5 @ 18	#5 @ 18	#5 @ 18	#5 @ 18	#5 @ 18	#5 @ 16	#5 @ 16	#5 @ 14	#5 @ 14
Max Toe Pressure (ksf)	1.88	2.45	2.71	3.05	3.23	3.92	4.47	4.43	4.60	5.63	5.67	6.65	6.81
Max Heel Pressure (ksf)	1.85	1.98	2.26	2.68	2.83	3.00	3.30	3.90	3.76	4.38	4.14	4.47	4.38

Notes: 1. No splices allowed in reinforcement except as approved by the Engineer.
2. * (e) and (f) bars bundled together.

RETAINING WALL 1635

RETAINING WALL TYPE 1RR

CASE II - DETAILS NO. 2

	BY	CHECKED
DESIGN	Richard Schendel	Zihan Yan
DETAILS	SD/ Minh Tran	Zihan Yan
QUANTITIES	Zihan Yan	Ruperd Wilson

STATE OF CALIFORNIA
DEPARTMENT OF TRANSPORTATION

DIVISION OF ENGINEERING SERVICES
STRUCTURE DESIGN
DESIGN BRANCH 18

BRIDGE NO. RW1635
POST MILE 30.91

STRUCTURES DESIGN DETAIL SHEET (ENGLISH) (REV. 09-01-10)

ORIGINAL SCALE IN INCHES FOR REDUCED PLANS 0 1 2 3

UNIT: 3603
PROJECT NUMBER & PHASE: 0700021119-1
CONTRACT NO.: 07-1218w1

DISREGARD PRINTS BEARING EARLIER REVISION DATES

REVISION DATES 01/02/11 02/14/12

SHEET 15 OF 23

FILE => e-rw1635-g-rwdt02_case2.dgn

USERNAME => s124496 DATE PLOTTED => 21-MAY-2012 TIME PLOTTED => 18:37

DIST	COUNTY	ROUTE	POST MILES TOTAL PROJECT	SHEET No.	TOTAL SHEETS
07	LA	5	29.4/31.6	1287	1931

REGISTERED CIVIL ENGINEER — DATE 01-30-12

5-21-12
PLANS APPROVAL DATE

REGISTERED PROFESSIONAL ENGINEER — J. I. Estrada — No. C 51473 — Exp. 6-30-2012 — CIVIL — STATE OF CALIFORNIA

The State of California or its officers or agents shall not be responsible for the accuracy or completeness of electronic copies of this plan sheet.

Spread Footing Data for Retaining Wall 1635

RW LOL STATION (ft) FROM	RW LOL STATION (ft) TO	Gross Allowable Soil Bearing Pressure ASD (q_{all}) (ksf)
630+00.00	630+96.00	1.88
630+96.00	631+40.50	3.13
631+40.50	632+36.50	3.31
632+36.50	633+32.50	3.84
633+32.50	634+28.50	3.84
634+28.50	635+24.50	3.84
635+24.50	635+72.50	3.84
635+72.50	636+68.50	3.84
636+68.50	637+16.50	3.84
637+16.50	637+64.50	3.84
637+64.50	638+60.50	3.84
638+60.50	639+08.50	3.31
639+08.50	639+56.50	3.31
639+56.50	640+04.50	3.31
640+04.50	640+52.50	3.31
640+52.50	641+00.50	3.31
641+00.50	641+48.50	3.13
641+48.50	641+96.50	3.13
641+96.50	642+44.50	2.60
642+44.50	642+92.50	2.18
642+92.50	643+40.50	1.97
643+40.50	643+71.21	1.97

Notes: Allowable Stress Design,(ASD). The Maximum Contact Pressure, (q_{max}), is not to exceed the recommended Gross Allowable Soil Bearing Pressure, (q_{all}). The Ultimate Soil bearing Capacity, (q_{ult}). will equal or exceed 3 times recommended Gross Allowable Soil Bearing pressure, (q_{all}).

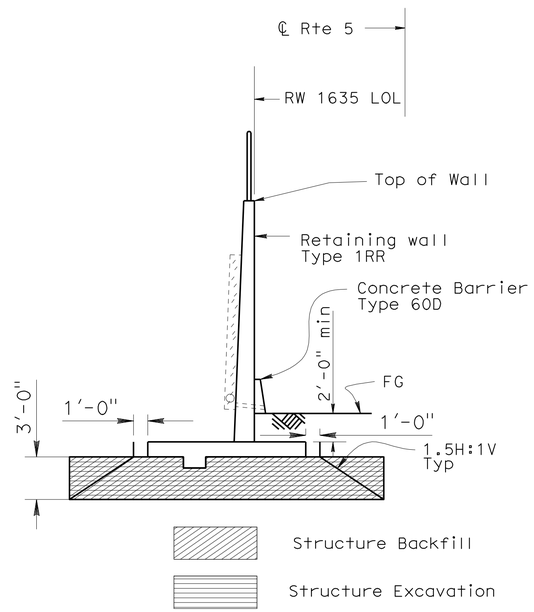

From Sta. 630+00.00 to 643+71.21

OVER EXCAVATION - RW 1635

3/16" = 1'-0"

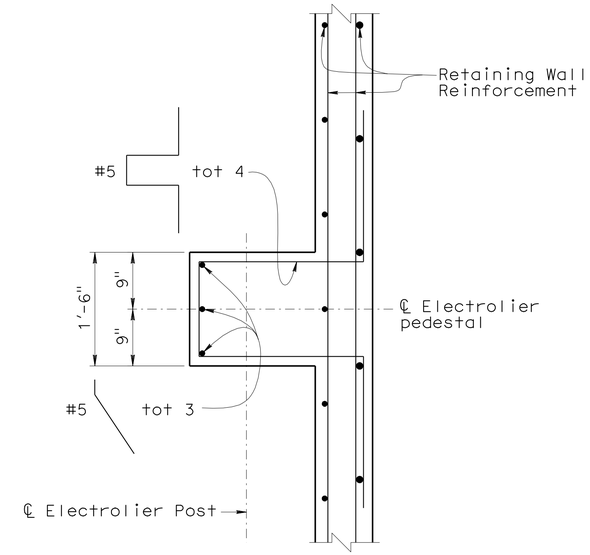

SECTION A-A

1" = 1'-0"

Note:
For Retaining Wall details not shown, see "REATINING WALL TYPE 1RR CASE I - DETAILS NO. 1 & NO. 2" sheets.

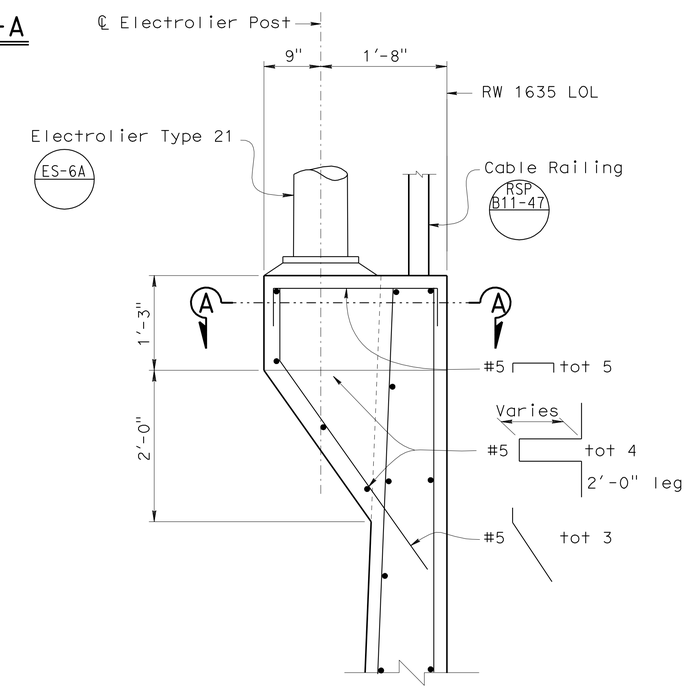

ELECTROLIER PEDESTAL

1" = 1'-0"

NOTE:
THE CONTRACTOR SHALL VERIFY ALL CONTROLLING FIELD DIMENSIONS BEFORE ORDERING OR FABRICATING ANY MATERIAL

	BY	CHECKED
DESIGN	Zihan Yan	Jorge Estrada
DETAILS	Minh Tran	Jorge Estrada
QUANTITIES	Zihan Yan	Ruperd Wilson

STATE OF CALIFORNIA
DEPARTMENT OF TRANSPORTATION

DIVISION OF ENGINEERING SERVICES
STRUCTURE DESIGN
DESIGN BRANCH 18

BRIDGE NO. RW1635
POST MILE 30.91

RETAINING WALL 1635
MISCELLANEOUS DETAILS

STRUCTURES DESIGN DETAIL SHEET (ENGLISH) (REV. 09-01-10)

ORIGINAL SCALE IN INCHES FOR REDUCED PLANS 0 1 2 3

UNIT: 3603
PROJECT NUMBER & PHASE: 0700021119-1
CONTRACT NO.: 07-1218W1

DISREGARD PRINTS BEARING EARLIER REVISION DATES
REVISION DATES 02/27/12 03/20/12

SHEET 16 OF 23

FILE => e-rw1635-m-misc .dgn

USERNAME => s124396 DATE PLOTTED => 21-MAY-2012 TIME PLOTTED => 18:37

DIST	COUNTY	ROUTE	POST MILES TOTAL PROJECT	SHEET No.	TOTAL SHEETS
07	LA	5	29.4/31.6	1288	1931

REGISTERED CIVIL ENGINEER — DATE 1/31/12

5-21-12
PLANS APPROVAL DATE

REGISTERED PROFESSIONAL ENGINEER — JORGE I. ESTRADA — No. C51473 — Exp. 06-30-12 — CIVIL — STATE OF CALIFORNIA

The State of California or its officers or agents shall not be responsible for the accuracy or completeness of electronic copies of this plan sheet.

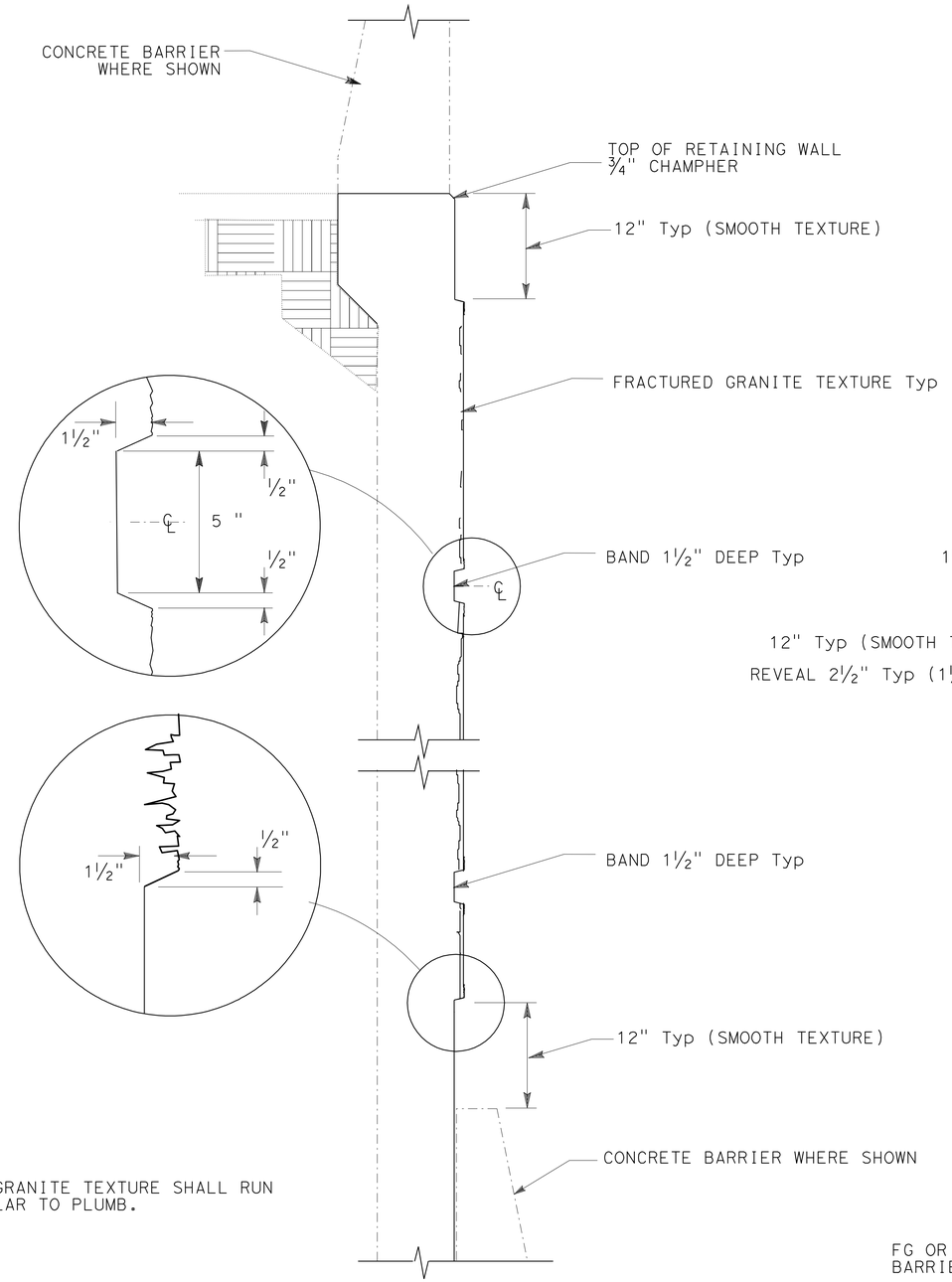

RETAINING WALL
TYPICAL SECTION

NOTE:

FRACTURED GRANITE TEXTURE SHALL RUN PERPENDICULAR TO PLUMB.

ARCHITECTURAL TREATMENT SECTION FOR RETAINING WALL

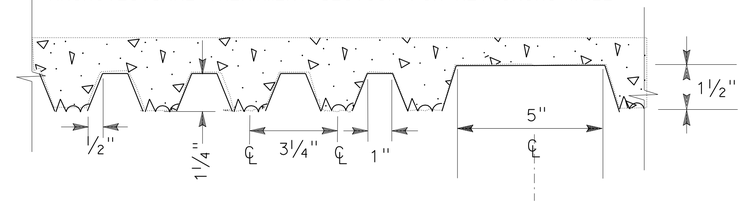

FRACTURED GRANITE TEXTURE & BAND

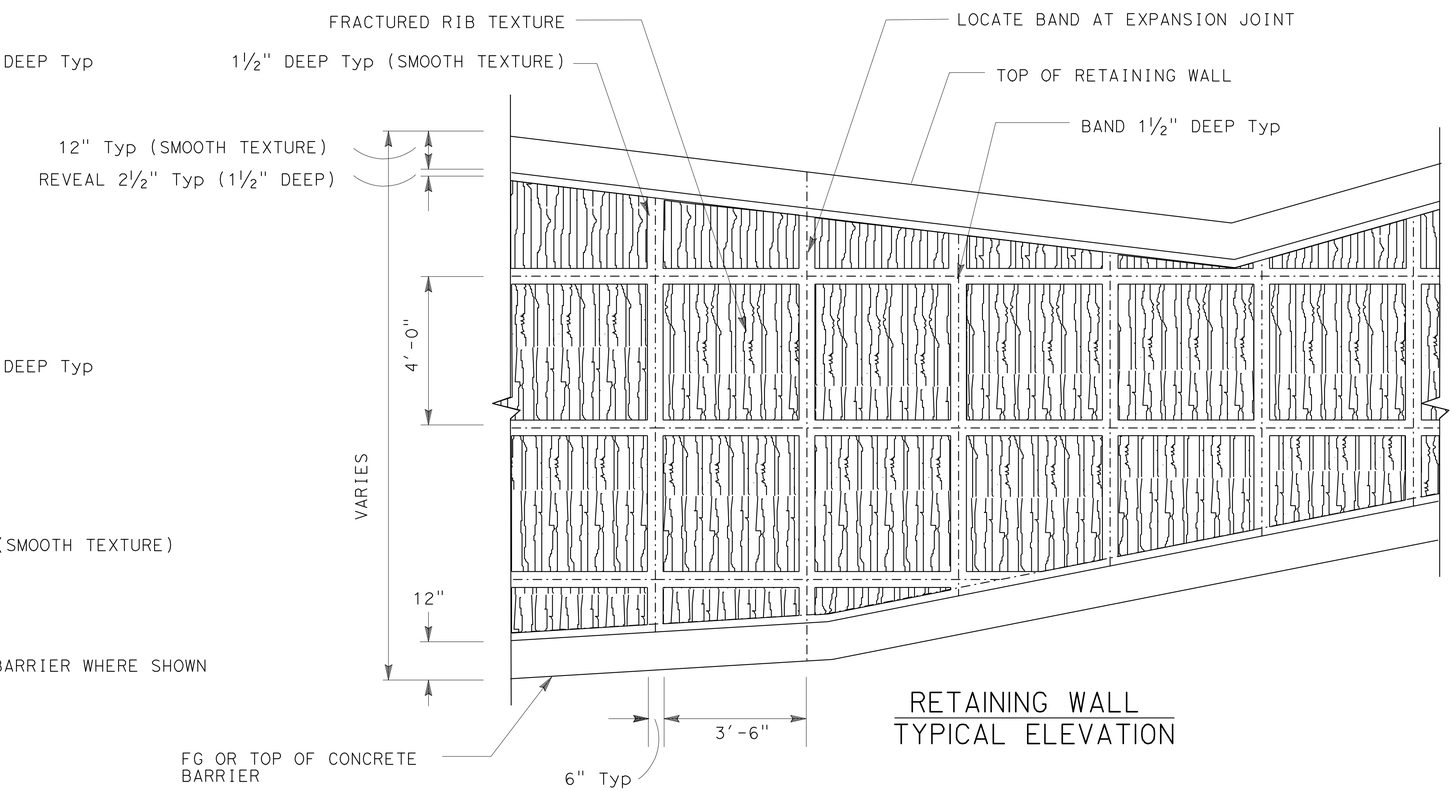

RETAINING WALL
TYPICAL ELEVATION

RETAINING WALL ARCHITECTURAL TREATMENT

NO SCALE

APPROVED FOR SOUNDWALL AESTHETIC FEATURES ONLY

DESIGN	BY Zihan Yan	CHECKED Jorge Estrada	
DETAILS	BY SD/ Minh Tran	CHECKED Jorge Estrada	
QUANTITIES	BY Zihan Yan	CHECKED Ruperd Wilson	

STATE OF CALIFORNIA
DEPARTMENT OF TRANSPORTATION

DIVISION OF ENGINEERING SERVICES
STRUCTURE DESIGN
DESIGN BRANCH 18

BRIDGE NO. RW1635
POST MILE 30.91

RETAINING WALL 1635
ARCHITECTURE TREATMENT

STRUCTURES DESIGN DETAIL SHEET (ENGLISH) (REV. 09-01-10)

ORIGINAL SCALE IN INCHES FOR REDUCED PLANS 0 1 2 3

UNIT: 3603
PROJECT NUMBER & PHASE: 0700021119-1
CONTRACT NO.: 07-1218W1

DISREGARD PRINTS BEARING EARLIER REVISION DATES

REVISION DATES 11/02/11

SHEET 17 OF 23

FILE => e-rw1635-r-arch .dgn

USERNAME => s124496 DATE PLOTTED => 21-MAY-2012 TIME PLOTTED => 18:37

DIST	COUNTY	ROUTE	KILOMETER POST TOTAL PROJECT	SHEET No	TOTAL SHEETS
07	LA	5	29.4/31.6	1289	1931

R Shiva Karimi 2-7-12
REGISTERED CIVIL ENGINEER

5-21-12
PLANS APPROVAL DATE

REGISTERED PROFESSIONAL ENGINEER Shiva Karimi No. 2651 Exp. 6-30-12 GEOTECHNICAL STATE OF CALIFORNIA

The State of California or its officers or agents shall not be responsible for the accuracy or completeness of electronic copies of this plan sheet.

BENCH MARKS

BM PRHV906 Elev 655.983 ft
Fd PK Nail in gore area at Scott Rd SBND LA-5 Off-ramp; 74.324 ft Lt Sta 1632+80.34 C/L Rte 5 (Prop).
N 1893738.581
E 6460755.304

BM PRHV333 Elev 693.627 ft
Fd Brass Disk on shldr. SBND LA-5; ±42.6 ft from south end Buena Vista/ Winona UC (Br. No. 53-1110); ±11.8 ft from white stripe ETW; 64.289 ft Lt Sta 1647+61.51 C/L Rte 5 (Prop).
N 1894696.28
E 6459607.018

NAD83, NAVD88

LEGEND:

- (M) Moisture Content
- (PA) Particle Size Analysis
- (PI) Plasticity, Index, Liquid Limit
- (CR) Corrosivity Testing
- (CP) Compaction

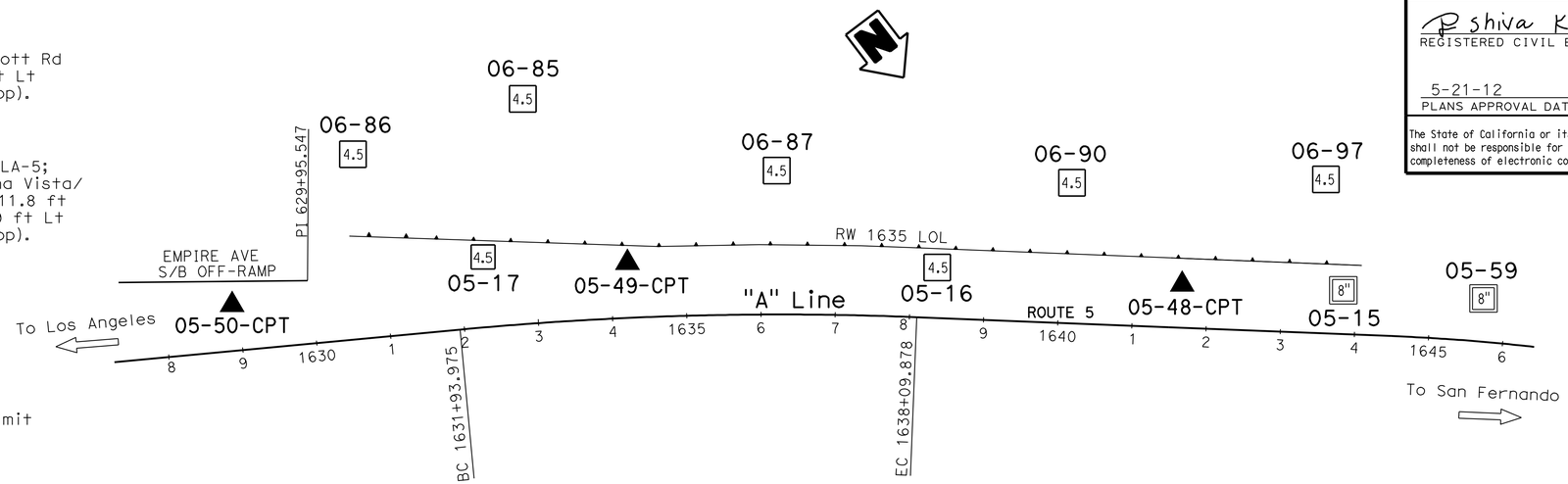

PLAN

1" = 100'

Note: No ground water encountered during field investigation.

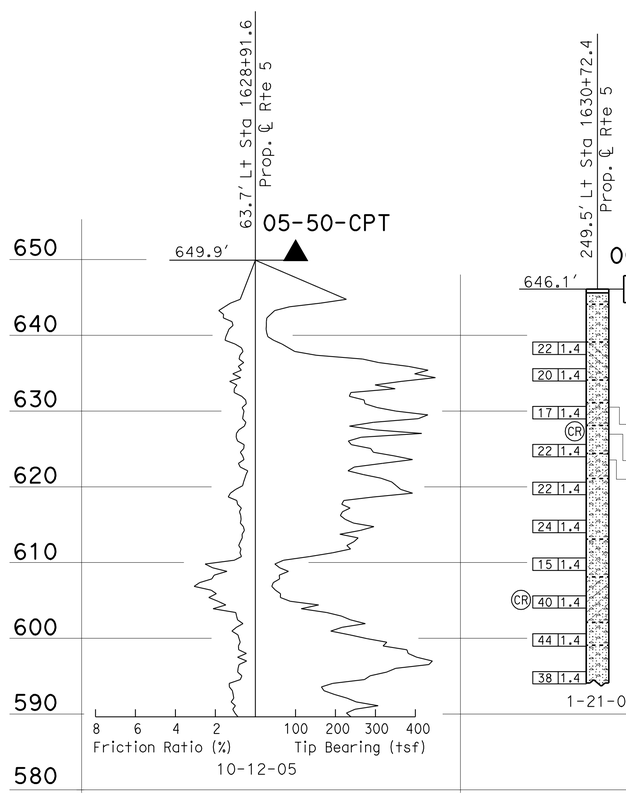

4.5 Asphaltic Concrete Pavement (8").
SILTY fine SAND (SM) with coarse GRAVEL (15 to 30%), estimated loose, brown, dry, nonplastic, (road base material).
Poorly-graded fine SAND (SP) with scattered coarse GRAVEL (15%) interlayered with minor SILTY fine SAND (SM) with scattered coarse GRAVEL (15%), estimated loose, brown to yellowish brown, dry, nonplastic, contains subrounded hard (slightly weathered) GRANITOID and SCHIST rock fragments, (FILL). 640
Well-graded SAND (SW) with fine to coarse GRAVEL (10 to 20%) interbedded with minor well-graded SAND with SILT (SW-SM) and fine GRAVEL (5 to 15%) and SILTY fine SAND (SM), medium dense, yellowish brown, moist, nonplastic, (ALLUVIUM).
Well-graded GRAVEL (GW) with fine SAND matrix, estimated medium dense, varicolored to yellowish brown, moist, nonplastic, contains subrounded hard (slightly weathered) GRANITOID and SCHIST rock fragments. 630
Well-graded SAND with SILT (SW-SM) with scattered fine to coarse GRAVEL (15%), medium dense, yellowish brown, moist, nonplastic, contains subrounded to subangular hard (slightly weathered) GRANITOID rock fragments.
Well-graded SAND (SW) with fine to coarse GRAVEL (10 to 15%), medium dense, yellowish brown, moist, nonplastic.
SILTY fine SAND (SM) with intermittent fine GRAVEL (0 to 35%) interbedded with well-graded SAND (SW) with fine GRAVEL (10 to 35%), medium dense, brown to yellowish brown, moist, nonplastic, micaceous. 620
Well-graded SAND (SW) with intermittent scattered GRAVEL (0 to 15%), medium dense, yellowish brown, moist, nonplastic, clean.
SILTY fine SAND (SM), contains intermittent scattered coarse GRAVEL (0 to 5%), medium dense, brown, moist, nonplastic. 610
Well-graded fine to coarse SAND (SW) with fine to coarse GRAVEL (15 to 30%) interbedded with minor well-graded SAND with SILT (SW-SM), dense, yellowish brown, moist, nonplastic, clean.
Poorly-graded fine to medium SAND (SP), contains intermittent scattered fine GRAVEL (0 to 5%), dense, yellowish brown, moist, nonplastic, clean. 600
Well-graded fine to coarse SAND (SW) with fine to coarse GRAVEL (15 to 30%), dense, yellowish brown, moist, nonplastic, contains subrounded hard (slightly weathered) GRANITOID and SCHIST rock fragments.
590

1628+00 1630+00 1635+00

PROFILE

Horiz: 1" = 40'
Vert: 1" = 10'

580

LEGEND OF BORING OPERATIONS

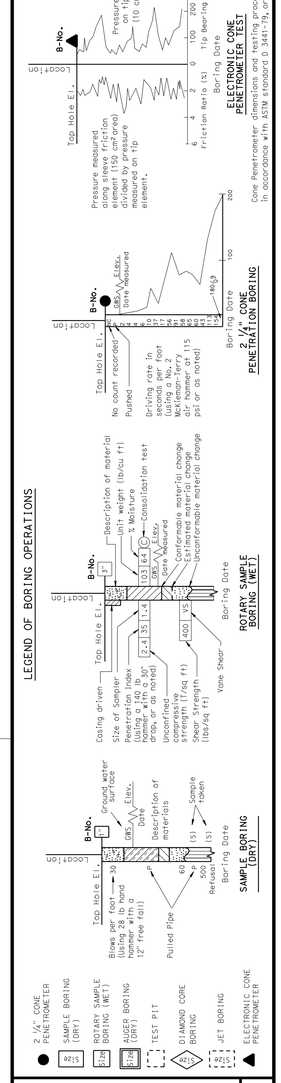

LEGEND OF EARTH MATERIALS

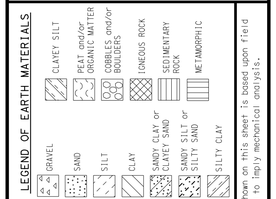

CONSISTENCY CLASSIFICATION FOR SOILS
According to the Standard Penetration Test

SPT N-Value (Blows/ Foot)	Granular	SPT N-Value (Blows/ Foot)	Cohesive
0-4	Very Loose	<2	Very Soft
5-10	Loose	2-4	Soft
11-30	Medium Dense	5-8	Medium stiff
31-50	Dense	9-15	Stiff
>50	Very Dense	16-30	Very Stiff
		31-60	Hard
		>60	Very Hard

NOTE: Classification of earth material as shown on this sheet is based upon field Inspection and is not to be construed to imply mechanical analysis.

ENGINEERING SERVICES	GEOTECHNICAL SERVICES
DRAWN BY	I.G-Remmen
CHECKED BY	J. Pratt

FIELD INVESTIGATION BY: J. Pratt, J. Pyska

STATE OF CALIFORNIA DEPARTMENT OF TRANSPORTATION

DIVISION OF ENGINEERING SERVICES STRUCTURE DESIGN DESIGN BRANCH 18

BRIDGE NO. RW 1635
POST MILE 30.89/31.14

RETAINING WALL NO. 1635
LOG OF TEST BORINGS 1 OF 6

OGS LOG OF TEST BORINGS SHEET (ENGLISH) (REV. 5/25/07)

ORIGINAL SCALE IN INCHES FOR REDUCED PLANS 0 1 2 3

UNIT: 3603
PROJECT NUMBER & PHASE: 0700000115-1 CONTRACT NO.: 07-1218W1

DISREGARD PRINTS BEARING EARLIER REVISION DATES

REVISION DATES 02-07-12

SHEET 18 OF 23

FILE => e-rw1635-z-ltb1.dgn

USERNAME => s124496 DATE PLOTTED => 21-MAY-2012 TIME PLOTTED => 18:37

DIST	COUNTY	ROUTE	KILOMETER POST TOTAL PROJECT	SHEET No	TOTAL SHEETS
07	LA	5	29.4/31.6	1290	1931

Shiva Karimi 2-7-12
REGISTERED CIVIL ENGINEER

5-21-12
PLANS APPROVAL DATE

REGISTERED PROFESSIONAL ENGINEER Shiva Karimi No. 2651 Exp. 6-30-12 GEOTECHNICAL STATE OF CALIFORNIA

The State of California or its officers or agents shall not be responsible for the accuracy or completeness of electronic copies of this plan sheet.

LEGEND:

- (M) Moisture Content
- (PA) Particle Size Analysis
- (PI) Plasticity, Index, Liquid Limit
- (CR) Corrosivity Testing
- (CP) Compaction

FOR PLAN VIEW, SEE
"LOG OF TEST BORINGS 1 OF 6"

Note: No ground water encountered during field investigation.

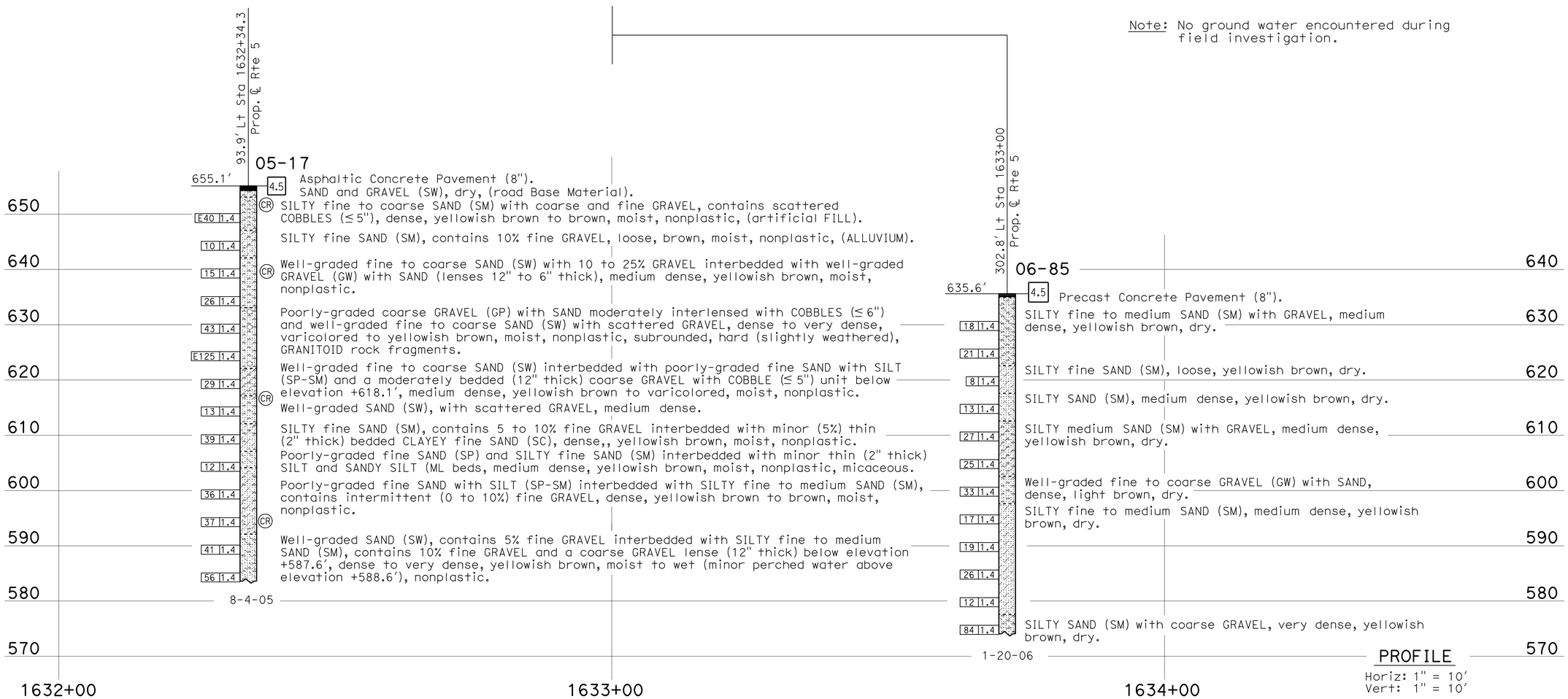

PROFILE
Horiz: 1" = 10'
Vert: 1" = 10'

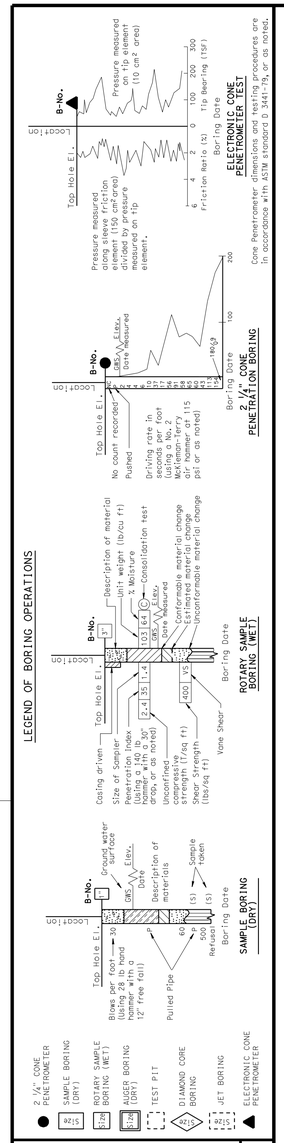

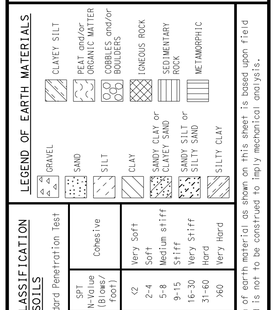

CONSISTENCY CLASSIFICATION FOR SOILS
According to the Standard Penetration Test

SPT N-Value (Blows/ Foot)	Granular	SPT N-Value (Blows/ Foot)	Cohesive
0-4	Very Loose	<2	Very Soft
5-10	Loose	2-4	Soft
11-30	Medium Dense	5-8	Medium stiff
31-50	Dense	9-15	Stiff
>50	Very Dense	16-30	Very Stiff
		31-60	Hard
		>60	Very Hard

NOTE: Classification of earth material as shown on this sheet is based upon field inspection and is not to be construed to imply mechanical analysis.

ENGINEERING SERVICES	GEOTECHNICAL SERVICES
DRAWN BY	I.G-Remmen
CHECKED BY	J. Pratt

FIELD INVESTIGATION BY: J. Pratt, K. Lai

STATE OF CALIFORNIA DEPARTMENT OF TRANSPORTATION

DIVISION OF ENGINEERING SERVICES STRUCTURE DESIGN DESIGN BRANCH 18

BRIDGE NO. RW 1635
POST MILE 30.89/31.14

RETAINING WALL NO. 1635
LOG OF TEST BORINGS 2 OF 6

OGS LOG OF TEST BORINGS SHEET (ENGLISH) (REV. 5/25/07)

ORIGINAL SCALE IN INCHES FOR REDUCED PLANS 0 1 2 3

UNIT: 3643
PROJECT NUMBER & PHASE: 07000211191
CONTRACT NO.: 07-1218W1

DISREGARD PRINTS BEARING EARLIER REVISION DATES

REVISION DATES 02-07-12

SHEET 19 OF 23

FILE => e-rw1635-z-ltb2.dgn

USERNAME => s124196 DATE PLOTTED => 21-MAY-2012 TIME PLOTTED => 18:37

DIST	COUNTY	ROUTE	KILOMETER POST TOTAL PROJECT	SHEET No	TOTAL SHEETS
07	LA	5	29.4/31.6	1291	1931

R Shiva Karimi 2-7-12
REGISTERED CIVIL ENGINEER

5-21-12
PLANS APPROVAL DATE

REGISTERED PROFESSIONAL ENGINEER — Shiva Karimi No. 2651 Exp. 6-30-12 GEOTECHNICAL STATE OF CALIFORNIA

The State of California or its officers or agents shall not be responsible for the accuracy or completeness of electronic copies of this plan sheet.

LEGEND:

- (M) Moisture Content
- (PA) Particle Size Analysis
- (PI) Plasticity, Index, Liquid Limit
- (CR) Corrosivity Testing
- (CP) Compaction

FOR PLAN VIEW, SEE
"LOG OF TEST BORINGS 1 OF 6"

Note: No ground water encountered during field investigation.

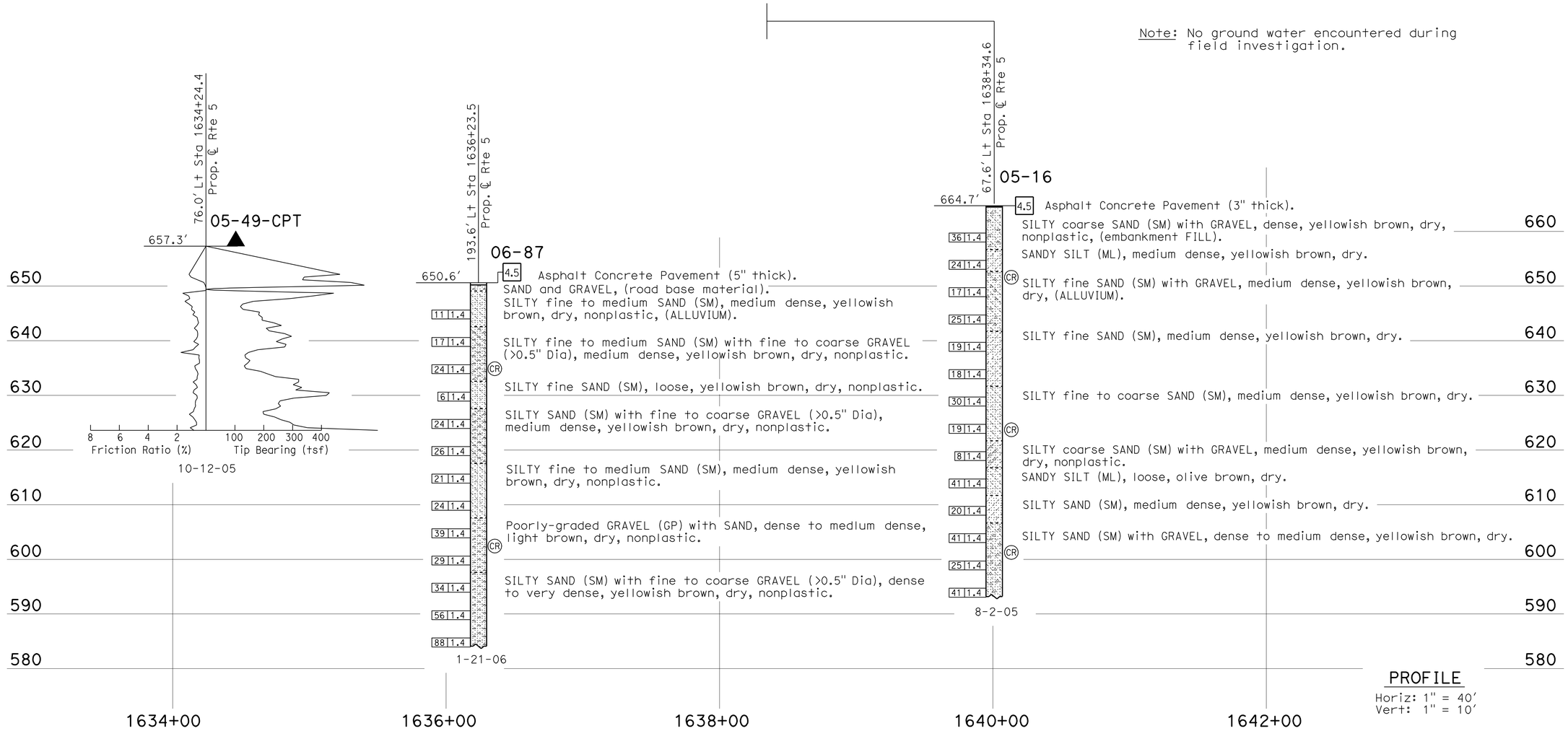

PROFILE
Horiz: 1" = 40'
Vert: 1" = 10'

LEGEND OF BORING OPERATIONS

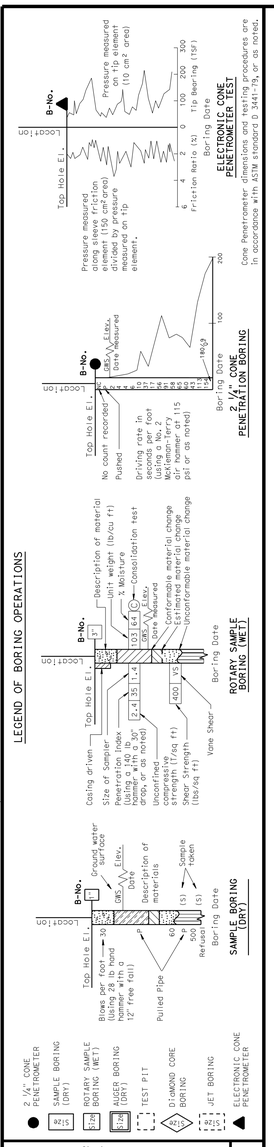

LEGEND OF EARTH MATERIALS

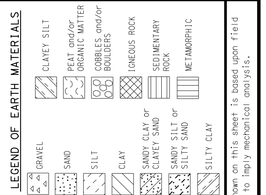

CONSISTENCY CLASSIFICATION FOR SOILS
According to the Standard Penetration Test

SPT N-Value (Blows/ Foot)	Granular	SPT N-Value (Blows/ Foot)	Cohesive
0-4	Very Loose	<2	Very Soft
5-10	Loose	2-4	Soft
11-30	Medium Dense	5-8	Medium stiff
31-50	Dense	9-15	Stiff
>50	Very Dense	16-30	Very Stiff
		31-60	Hard
		>60	Very Hard

NOTE: Classification of earth material as shown on this sheet is based upon field inspection and is not to be construed to imply mechanical analysis.

ENGINEERING SERVICES	GEOTECHNICAL SERVICES
DRAWN BY	I.G-Remmen
CHECKED BY	J. Pratt

FIELD INVESTIGATION BY: J. Pyska, K. Lai

STATE OF CALIFORNIA
DEPARTMENT OF TRANSPORTATION

DIVISION OF ENGINEERING SERVICES
STRUCTURE DESIGN
DESIGN BRANCH 18

BRIDGE NO. RW 1635
POST MILE 30.89/31.14

RETAINING WALL NO. 1635
LOG OF TEST BORINGS 3 OF 6

OGS LOG OF TEST BORINGS SHEET (ENGLISH) (REV. 5/25/07)

ORIGINAL SCALE IN INCHES FOR REDUCED PLANS 0 1 2 3

UNIT: 3603
PROJECT NUMBER & PHASE: 0700021119-1 CONTRACT NO.: 07-1218W1

DISREGARD PRINTS BEARING EARLIER REVISION DATES → 02-07-12

REVISION DATES				SHEET	OF
02-07-12				20	23

FILE => e-rw1635-z-ltb3.dgn

USERNAME => s124496 DATE PLOTTED => 21-MAY-2012 TIME PLOTTED => 18:37

DIST	COUNTY	ROUTE	KILOMETER POST TOTAL PROJECT	SHEET No	TOTAL SHEETS
07	LA	5	29.4/31.6	1292	1931

R Shiva Karimi 2-7-12
REGISTERED CIVIL ENGINEER

5-21-12
PLANS APPROVAL DATE

REGISTERED PROFESSIONAL ENGINEER
Shiva Karimi
No. 2651
Exp. 6-30-12
GEOTECHNICAL
STATE OF CALIFORNIA

The State of California or its officers or agents shall not be responsible for the accuracy or completeness of electronic copies of this plan sheet.

LEGEND:

- (M) Moisture Content
- (PA) Particle Size Analysis
- (PI) Plasticity, Index, Liquid Limit
- (CR) Corrosivity Testing
- (CP) Compaction

FOR PLAN VIEW, SEE
"LOG OF TEST BORINGS 1 OF 6"

Note: No ground water encountered during field investigation.

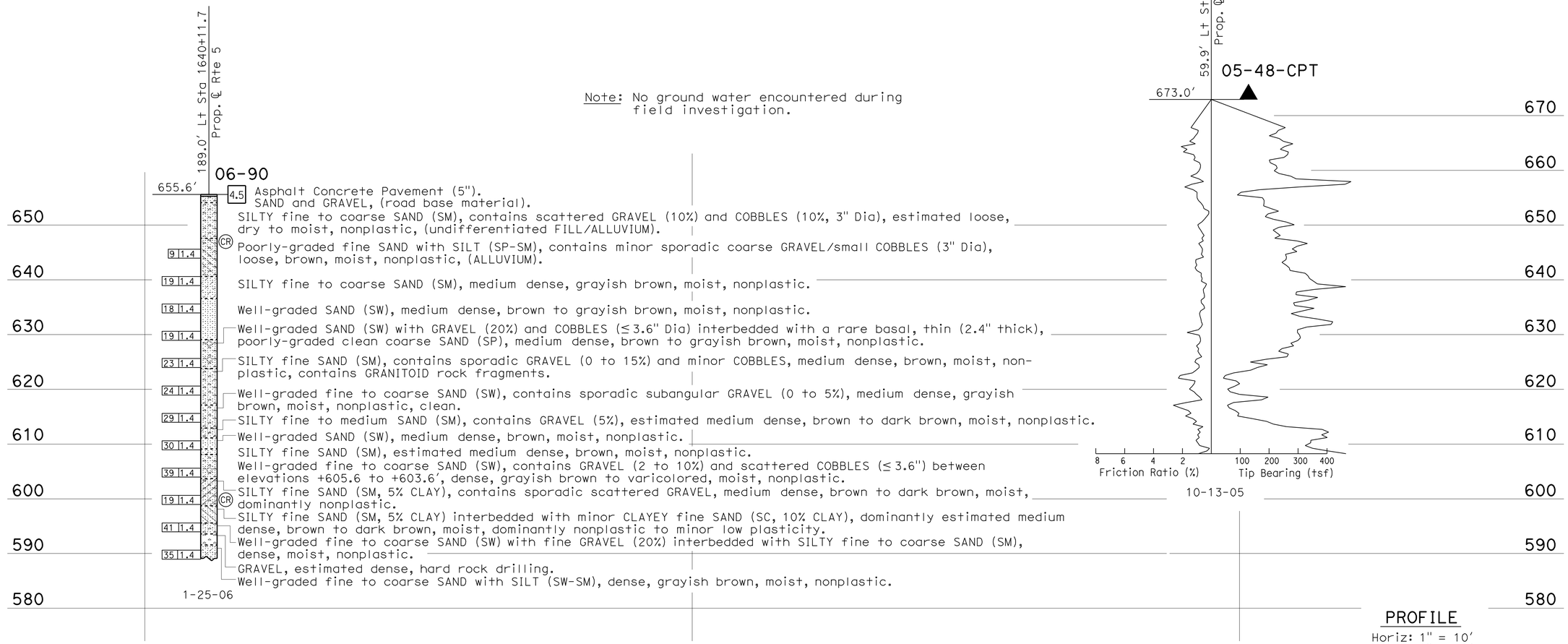

PROFILE
Horiz: 1" = 10'
Vert: 1" = 10'

LEGEND OF BORING OPERATIONS

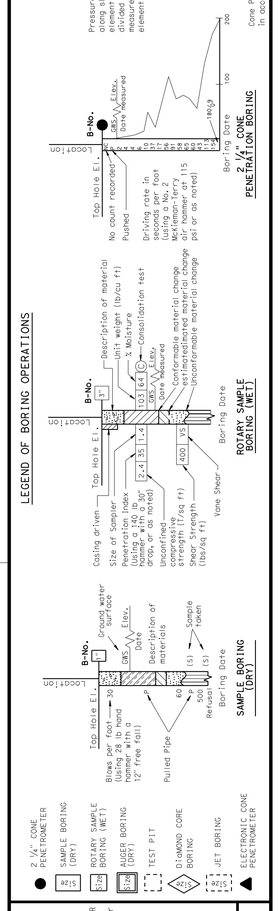

LEGEND OF EARTH MATERIALS

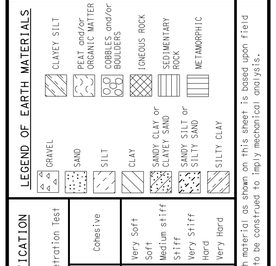

CONSISTENCY CLASSIFICATION FOR SOILS
According to the Standard Penetration Test

SPT N-Value (Blows/Foot)	Granular	SPT N-Value (Blows/Foot)	Cohesive
0-4	Very Loose	<2	Very Soft
5-10	Loose	2-4	Soft
11-30	Medium Dense	5-8	Medium stiff
31-50	Dense	9-15	Stiff
>50	Very Dense	16-30	Very Stiff
		31-60	Hard
		>60	Very Hard

NOTE: Classification of earth material as shown on this sheet is based upon field inspection and is not to be construed to imply mechanical analysis.

ENGINEERING SERVICES	GEOTECHNICAL SERVICES
DRAWN BY	I.G-Remmen
CHECKED BY	J. Pratt

FIELD INVESTIGATION BY: J. Pyska, B. Hettick

STATE OF CALIFORNIA
DEPARTMENT OF TRANSPORTATION

DIVISION OF ENGINEERING SERVICES
STRUCTURE DESIGN
DESIGN BRANCH 18

BRIDGE NO. RW 1635
POST MILE 30.89/31.14

RETAINING WALL NO. 1635
LOG OF TEST BORINGS 4 OF 6

OGS LOG OF TEST BORINGS SHEET (ENGLISH) (REV. 5/25/07)

ORIGINAL SCALE IN INCHES FOR REDUCED PLANS 0 1 2 3

UNIT: 3603
PROJECT NUMBER & PHASE: 0700021119-1
CONTRACT NO.: 07-1218W1

DISREGARD PRINTS BEARING EARLIER REVISION DATES 02-07-12

SHEET 21 OF 23

FILE => e-rw1635-z-ltb4.dgn

USERNAME => s124496 DATE PLOTTED => 21-MAY-2012 TIME PLOTTED => 18:37

DIST	COUNTY	ROUTE	KILOMETER POST TOTAL PROJECT	SHEET No	TOTAL SHEETS
07	LA	5	29.4/31.6	1293	1931

Shiva Karimi 2-7-12
REGISTERED CIVIL ENGINEER

5-21-12
PLANS APPROVAL DATE

REGISTERED PROFESSIONAL ENGINEER Shiva Karimi No. 2651 Exp. 6-30-12 GEOTECHNICAL STATE OF CALIFORNIA

The State of California or its officers or agents shall not be responsible for the accuracy or completeness of electronic copies of this plan sheet.

FOR PLAN VIEW, SEE
"LOG OF TEST BORINGS 1 OF 6"

Note: No ground water encountered during field investigation.

208.4' Lt Sta 1643+53.1
Prop. ℄ Rte 5

06-97

660.6'

660 — 650 — 640 — 630 — 620 — 610 — 600 — 590

4.5 Asphaltic Concrete Pavement (10").
SAND and GRAVEL, (road base material).
SILTY fine SAND (SM, SILT 25 to 30%), contains intermittent scattered GRAVEL (2 to 10%), estimated loose, brown, dry, nonplastic, (undifferentiated FILL/ALLUVIUM).

23 | 1.4 Well-graded SAND (SW) with intermittent scattered GRAVEL (10 to 20%), medium dense, yellowish brown, moist, nonplastic, clean, (ALLUVIUM).

9 | 1.4 SILTY fine SAND (SM), loose, brown to grayish brown, moist, nonplastic, micaceous.

24 | 1.4 SILTY fine SAND (SM) with intermittent fine to coarse GRAVEL (0 to 15%) interbedded with poorly-graded fine SAND (SP) with scattered coarse GRAVEL (10 to 15%) and minor thick lenses (12 to 24" thick) of GRAVEL, medium dense, grayish brown to yellowish brown, moist, nonplastic, contains rounded hard (slightly weathered) GRANITOID and SCHIST rock fragments.

26 | 1.4

33 | 1.4 Well-graded SAND (SW) with fine to coarse GRAVEL (15 to 20%), dense, yellowish brown, moist, nonplastic, clean, contains subrounded to subangular hard (slightly weathered) GRANITOID and SCHIST rock fragments.

31 | 1.4 Well-graded SAND with SILT (SW-SM) and GRAVEL (15 to 25%), medium dense, yellowish brown, moist, nonplastic.

11 | 1.4 SILTY fine SAND (SM, 30% SILT), estimated medium dense, brown, moist, nonplastic.
Well-graded fine to coarse GRAVEL (GW) with SAND matrix (30 to 35%), estimated medium dense to dense, varicolored to yellowish brown, moist, nonplastic.

64 | 1.4 Well-graded SAND (SW) with fine to coarse GRAVEL (30%), very dense, yellowish brown, moist, nonplastic, clean, contains subrounded hard (slightly weathered) GRANITOID rock fragments.

35 | 1.4 Well-graded coarse GRAVEL (GW) with scattered COBBLES (≤ 6"), estimated very dense, hard rock drilling.

48 | 1.4 Well-graded SAND with SILT (SW-SM) with scattered coarse to fine GRAVEL (15 to 20%) thickly interbedded (12 to 24" thick) with minor coarse to fine GRAVEL lenses, dense, yellowish brown, moist, nonplastic.
Coarse GRAVEL lense, estimated very dense, hard rock drilling.

E>100 | 1.4 Well-graded SAND (SW) with coarse and fine GRAVEL (15 to 35%) interbedded with minor SILTY fine SAND (SM) and thick GRAVEL lenses (12 to 24" thick), very dense, yellowish brown to grayish brown, moist, nonplastic.

E100 | 1.4 Coarse GRAVEL with scattered COBBLES (≤ 6" length), estimated very dense, hard rock drilling.
Well-graded SAND with SILT (SW-SM) and GRAVEL (15%), dense, yellowish brown, moist, nonplastic.

34 | 1.4 SANDY lean CLAY (CL), hard, brown, moist, medium plasticity.

2-1-06

1643+50 — 1644+00 — 1645+00

LEGEND OF BORING OPERATIONS

SAMPLE BORING (DRY): B-No. 1; Location; Ground water surface; Elev.; Date; Description of materials; Sample number (S); Refusal; Boring Date
Casing driven; Top Hole El.; Size of Sampler; Penetration Index (using a 140 lb hammer with 30" drop, or as noted); Unconfined compressive strength (tsf/sq ft); Shear Strength (lbs/sq ft); Vane Shear
Blows per foot (using 28 lb hammer with 30" or 12" free fall); Pulled Pipe; Refusal
ROTARY SAMPLE BORING (WET): B-No. 5; Location; Top Hole El.; Description of material; Unit weight (lb/cu ft); % Water; % Consolidation test; Elev.; Date Measured; Conformable material change; Distinct material change; Uncomfortable material change; Vane Shear; Boring Date
2 1/4" CONE PENETRATION BORING: B-No. 2; Location; Top Hole El.; No count recorded; Pushed; Driving rate in seconds per foot (using a No. 2 McKiman-Terry disk hammer or 115 psi or as noted); Elev.; Date Measured; Boring Date
ELECTRONIC CONE PENETROMETER TEST: B-No. 3; Location; Top Hole El.; Pressure measured along friction element (150 cm²/area) divided by pressure measured on tip element.; Pressure measured on tip element (10 cm² area); Friction Ratio (%); Tip Bearing (TSF); Boring Date
Cone Penetrometer dimensions and testing procedures are in accordance with ASTM standard D 3441-79, or as noted.

LEGEND OF EARTH MATERIALS

GRAVEL; SAND; SILT; CLAY; SANDY CLAY or CLAYEY SAND; SANDY SILT or SILTY SAND; SILTY CLAY; CLAYEY SILT; PEAT and/or ORGANIC MATTER; COBBLES and/or BOULDERS; CONCRETE; ROCK; SEDIMENTARY ROCK; METAMORPHIC

CONSISTENCY CLASSIFICATION FOR SOILS

According to the Standard Penetration Test

SPT N-Value (Blows/Foot)	Granular	SPT N-Value (Blows/Foot)	Cohesive
0-4	Very Loose	<2	Very Soft
5-10	Loose	2-4	Soft
11-30	Medium Dense	5-8	Medium stiff
31-50	Dense	9-15	Stiff
>50	Very Dense	16-30	Very Stiff
		31-60	Hard
		>60	Very Hard

NOTE: Classification of earth material as shown on this sheet is based upon field inspection and is not to be construed to imply mechanical analysis.

ENGINEERING SERVICES	GEOTECHNICAL SERVICES
DRAWN BY	I.G-Remmen
CHECKED BY	J. Pratt

FIELD INVESTIGATION BY: J. Pratt

STATE OF CALIFORNIA DEPARTMENT OF TRANSPORTATION

DIVISION OF ENGINEERING SERVICES STRUCTURE DESIGN
DESIGN BRANCH 18

BRIDGE NO. RW 1635
POST MILE 30.89/31.14

RETAINING WALL NO. 1635
LOG OF TEST BORINGS 5 OF 6

OGS LOG OF TEST BORINGS SHEET (ENGLISH) (REV. 5/25/07)

ORIGINAL SCALE IN INCHES FOR REDUCED PLANS 0 1 2 3

UNIT: 3603
PROJECT NUMBER & PHASE: 0700021119-1 CONTRACT NO.: 07-1218W1

DISREGARD PRINTS BEARING EARLIER REVISION DATES → 02-07-12

REVISION DATES | SHEET 22 OF 23

FILE => e-rw1635-z-ltb5.dgn

USERNAME => s124496 DATE PLOTTED => 21-MAY-2012 TIME PLOTTED => 18:37

DIST	COUNTY	ROUTE	KILOMETER POST TOTAL PROJECT	SHEET No	TOTAL SHEETS
07	LA	5	29.4/31.6	1294	1931

Shiva Karimi 2-7-12
REGISTERED CIVIL ENGINEER

5-21-12
PLANS APPROVAL DATE

REGISTERED PROFESSIONAL ENGINEER Shiva Karimi No. 2651 Exp. 6-30-12 GEOTECHNICAL STATE OF CALIFORNIA

The State of California or its officers or agents shall not be responsible for the accuracy or completeness of electronic copies of this plan sheet.

LEGEND:

- (M) Moisture Content
- (PA) Particle Size Analysis
- (PI) Plasticity, Index, Liquid Limit
- (CR) Corrosivity Testing
- (CP) Compaction

FOR PLAN VIEW, SEE
"LOG OF TEST BORINGS 1 OF 6"

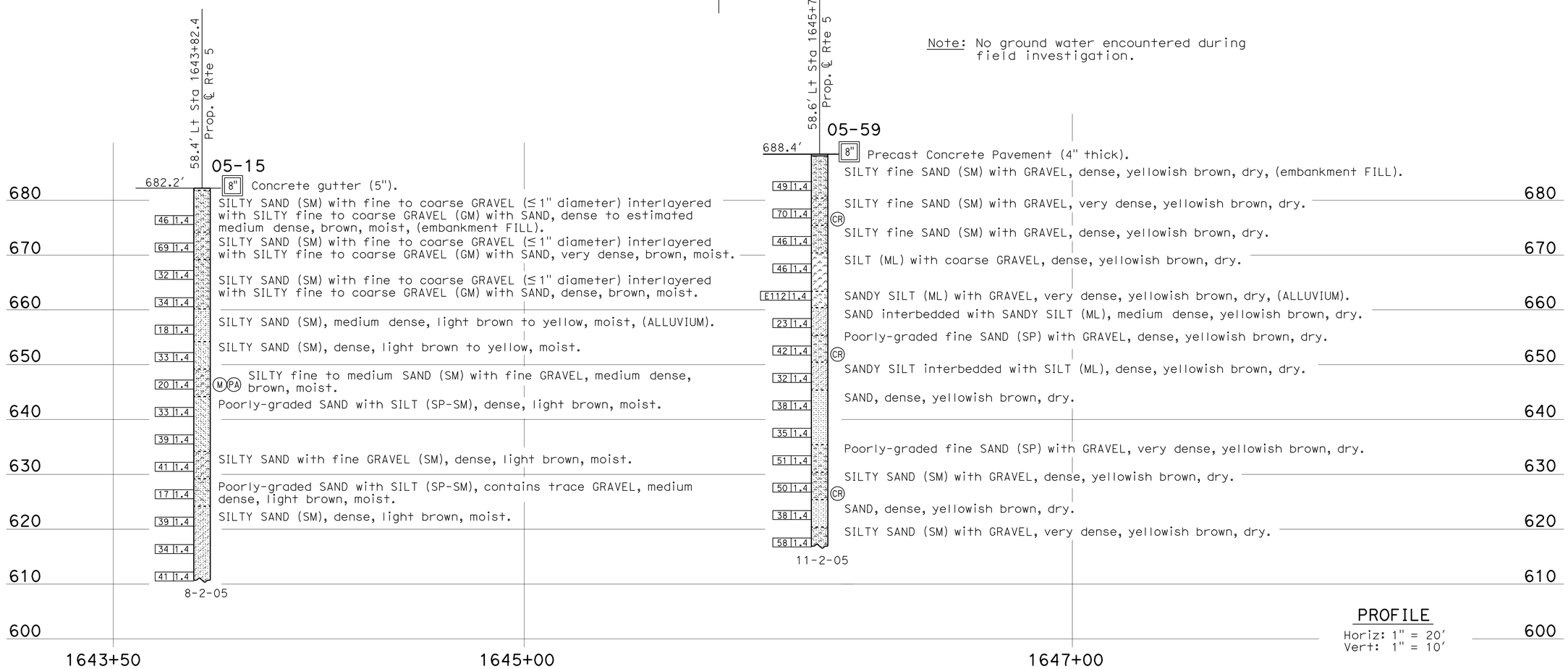

Note: No ground water encountered during field investigation.

PROFILE
Horiz: 1" = 20'
Vert: 1" = 10'

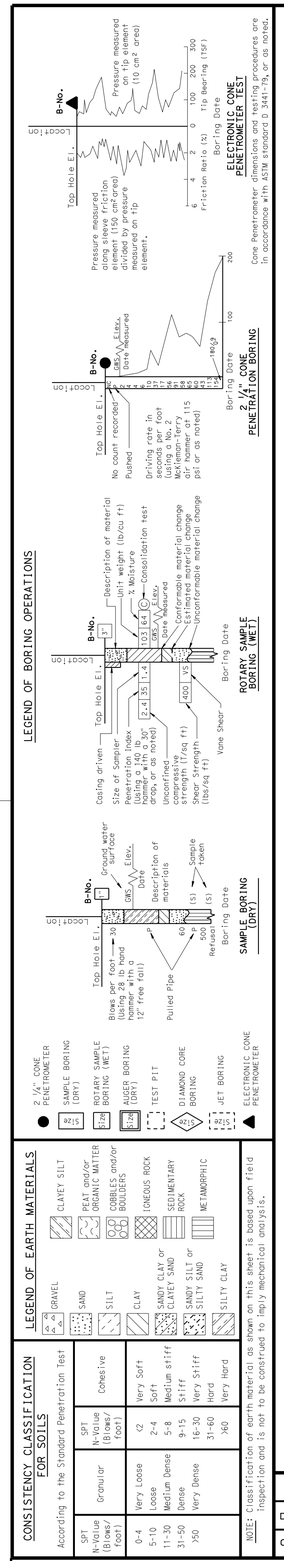

ENGINEERING SERVICES	GEOTECHNICAL SERVICES
DRAWN BY	I.G-Remmen
CHECKED BY	J. Pratt

FIELD INVESTIGATION BY: M. Abouzalan

STATE OF CALIFORNIA DEPARTMENT OF TRANSPORTATION

DIVISION OF ENGINEERING SERVICES STRUCTURE DESIGN DESIGN BRANCH 18

BRIDGE NO. RW 1635
POST MILE 30.89/31.14

RETAINING WALL NO. 1635
LOG OF TEST BORINGS 6 OF 6

OGS LOG OF TEST BORINGS SHEET (ENGLISH) (REV. 5/25/07)

ORIGINAL SCALE IN INCHES FOR REDUCED PLANS 0 1 2 3

UNIT: 3603
PROJECT NUMBER & PHASE: 0700021119-1
CONTRACT NO.: 07-1218W1

DISREGARD PRINTS BEARING EARLIER REVISION DATES

REVISION DATES 02-07-12

SHEET 23 OF 23

FILE => e-rw1635-z-ltb6.dgn

USERNAME => s124496 DATE PLOTTED => 21-MAY-2012 TIME PLOTTED => 18:38

DIST	COUNTY	ROUTE	POST MILES TOTAL PROJECT	SHEET No.	TOTAL SHEETS
07	LA	5	29.4/31.6	1295	1931

dEstrada. 01/31/12
REGISTERED CIVIL ENGINEER DATE

5-21-12
PLANS APPROVAL DATE

REGISTERED PROFESSIONAL ENGINEER JORGE I. ESTRADA No. C51473 Exp. 06-30-12 CIVIL STATE OF CALIFORNIA

The State of California or its officers or agents shall not be responsible for the accuracy or completeness of electronic copies of this plan sheet.

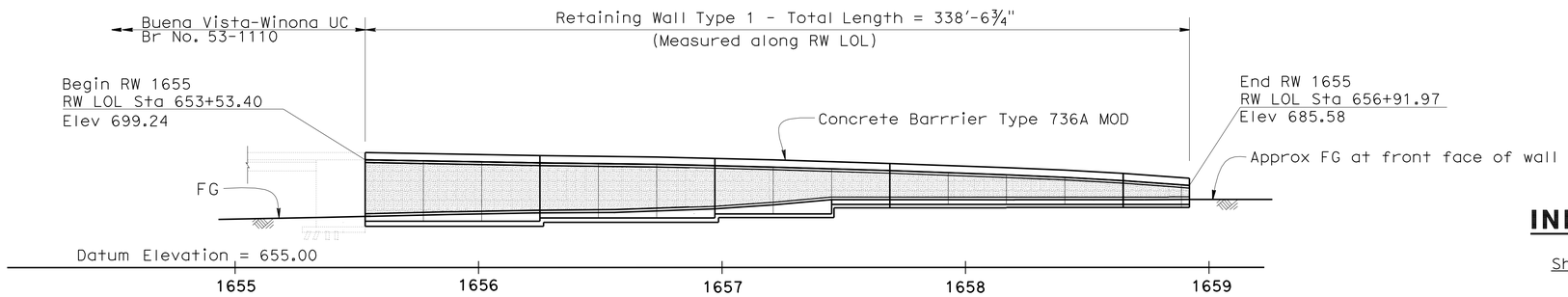

DEVELOPED MIRROR ELEVATION

1"=30'-0"

QUANTITIES

STRUCTURE EXCAVATION (RETAINING WALL)	846	CY
STRUCTURE BACKFILL (RETAINING WALL)	1,785	CY
PERVIOUS BACKFILL MATERIAL	158	CY
STRUCTURAL CONCRETE, RETAINING WALL	630	CY
ARCHITECTURAL TREATMENT	6,103	SQFT
BAR REINFORCING STEEL (RETAINING WALL)	92,118	LB
CONCRETE BARRIER (TYPE 736A MODIFIED)	410	LF

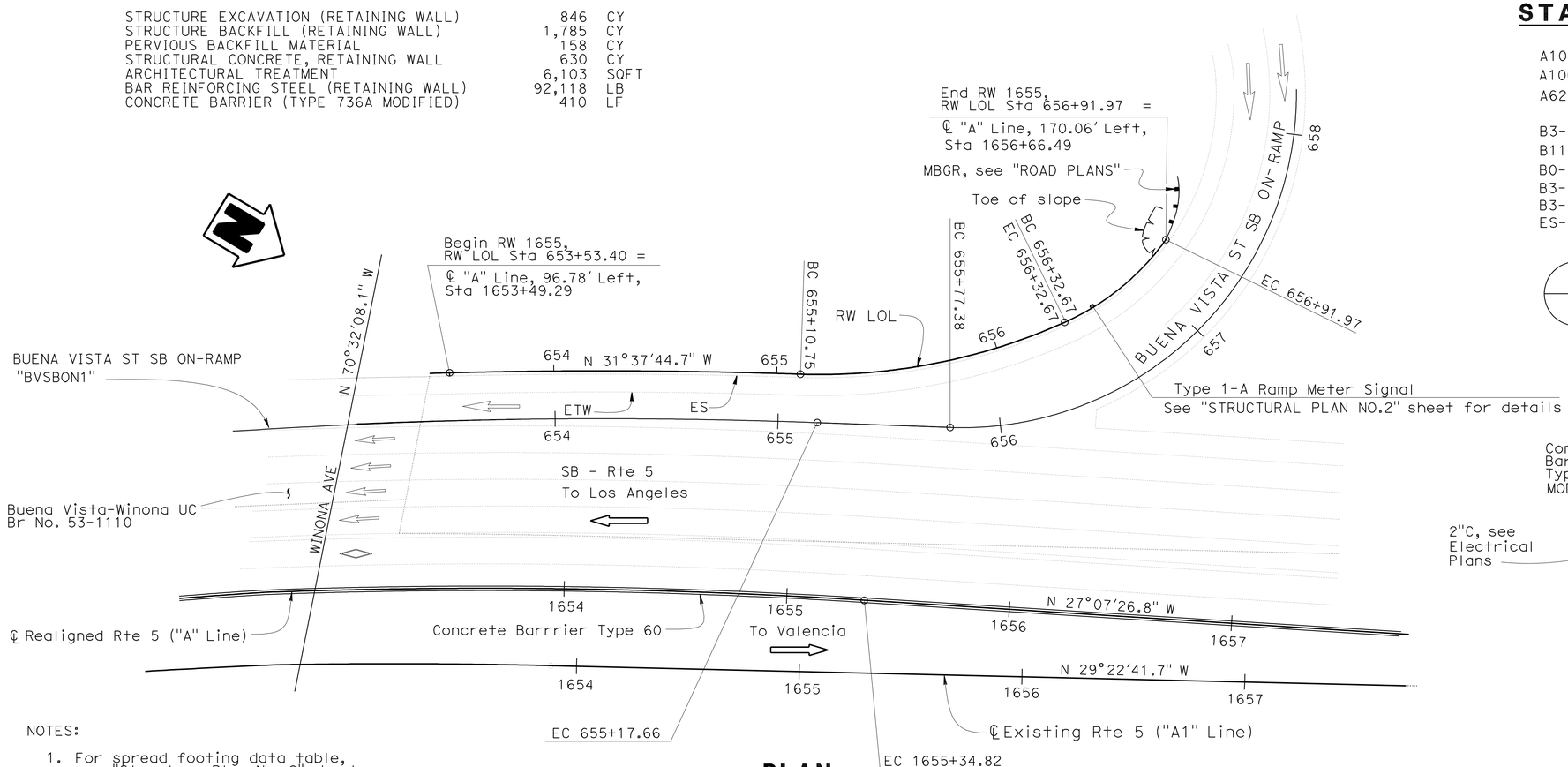

PLAN

1"=30'-0"

NOTES:

1. For spread footing data table, see "Structure Plan No. 2" sheet
2. Relocation of existing utilities prior to this Contract by Others

INDEX TO PLANS

Sheet No.	Title
1	GENERAL PLAN
2	FOUNDATION PLAN
3	STRUCTURE PLAN NO. 1
4	STRUCTURE PLAN NO. 2
5	ARCHITECTURAL TREATMENT
6	LOG OF TEST BORINGS 1 OF 2
7	LOG OF TEST BORINGS 2 OF 2

STANDARD PLANS DATED MAY 2006

A10A-A10B	ACRONYMS AND ABBREVIATIONS
A10C-A10D	SYMBOLS
A62B	LIMITS OF PAYMENT FOR EXCAVATION AND BACKFILL BRIDGE SURCHARGE AND WALL
B3-1	RETAINING WALL TYPE 1 H = 4' THROUGH 30'
B11-56	CONCRETE BARRIER TYPE 736
B0-3	BRIDGE DETAILS
B3-8	RETAINING WALL DETAILS NO. 1
B3-9	RETAINING WALL DETAILS NO. 2
ES-7B	ELECTRICAL SYSTEMS (SIGNAL AND LIGHTING STANDARD TYPE 1 STANDARD AND EQUIPMENT NUMBERING)

STANDARD PLAN SHEET NO.

DETAIL NO.

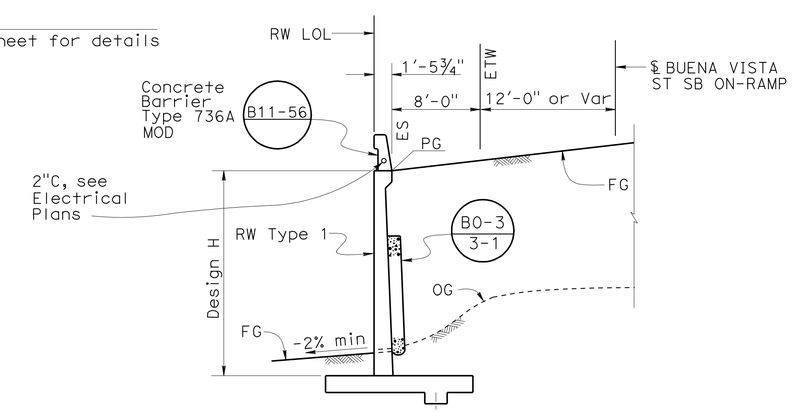

TYPICAL SECTION

No Scale

B3-1 B3-8

MIKE POPE	DESIGN	BY L. ZHANG / Z. YAN	CHECKED N. PEREIRA	LOAD FACTOR DESIGN	LIVE LOADING: HS20-44 AND ALTERNATIVE AND PERMIT DESIGN LOAD	
DESIGN ENGINEER	DETAILS	BY JINLI GUO	CHECKED L. ZHANG / Z. YAN	LAYOUT BY JINLI GUO	CHECKED ZIHAN YAN	
	QUANTITIES	BY LIPING ZHANG	CHECKED XIAHONG LI	SPECIFICATIONS BY JAMES CHOI	PLANS AND SPECS COMPARED	

ORIGINAL SCALE IN INCHES FOR REDUCED PLANS 0 1 2 3

STATE OF CALIFORNIA
DEPARTMENT OF TRANSPORTATION

DIVISION OF ENGINEERING SERVICES
STRUCTURE DESIGN
DESIGN BRANCH 18

BRIDGE NO. RW 1655
POST MILE 31.35

RETAINING WALL 1655
GENERAL PLAN

UNIT: 3603
PROJECT NUMBER & PHASE: 07000211191
CONTRACT NO.: 07-1218W1

DISREGARD PRINTS BEARING EARLIER REVISION DATES

REVISION DATES: 05-09-05 10-14-11 4-18-12 4-30-12

SHEET 1 OF 7

USERNAME => s124496 DATE PLOTTED => 21-MAY-2012 TIME PLOTTED => 18:38

FILE => 53-rw1655rl-a-gp.dgn

DIST	COUNTY	ROUTE	POST MILES TOTAL PROJECT	SHEET No.	TOTAL SHEETS
07	LA	5	29.4/31.6	1296	1931

REGISTERED CIVIL ENGINEER — DATE 01/31/12

5-21-12
PLANS APPROVAL DATE

REGISTERED PROFESSIONAL ENGINEER — JORGE I. ESTRADA — No. C51473 — Exp. 06-30-12 — CIVIL — STATE OF CALIFORNIA

The State of California or its officers or agents shall not be responsible for the accuracy or completeness of electronic copies of this plan sheet.

CURVE DATA

No.	R	Δ	T	L
Ⓐ	2683.92	3°33′15"	83.27	166.49
Ⓑ	268.52	26°00′51"	62.03	121.92
Ⓒ	112.52	30°11′54"	30.36	59.30
Ⓓ	2662.44	6°27′22"	150.16	300.00
Ⓔ	150.00	111°51′02"	221.76	292.82
Ⓕ	2710.00	22°57′04"	550.15	1085.55

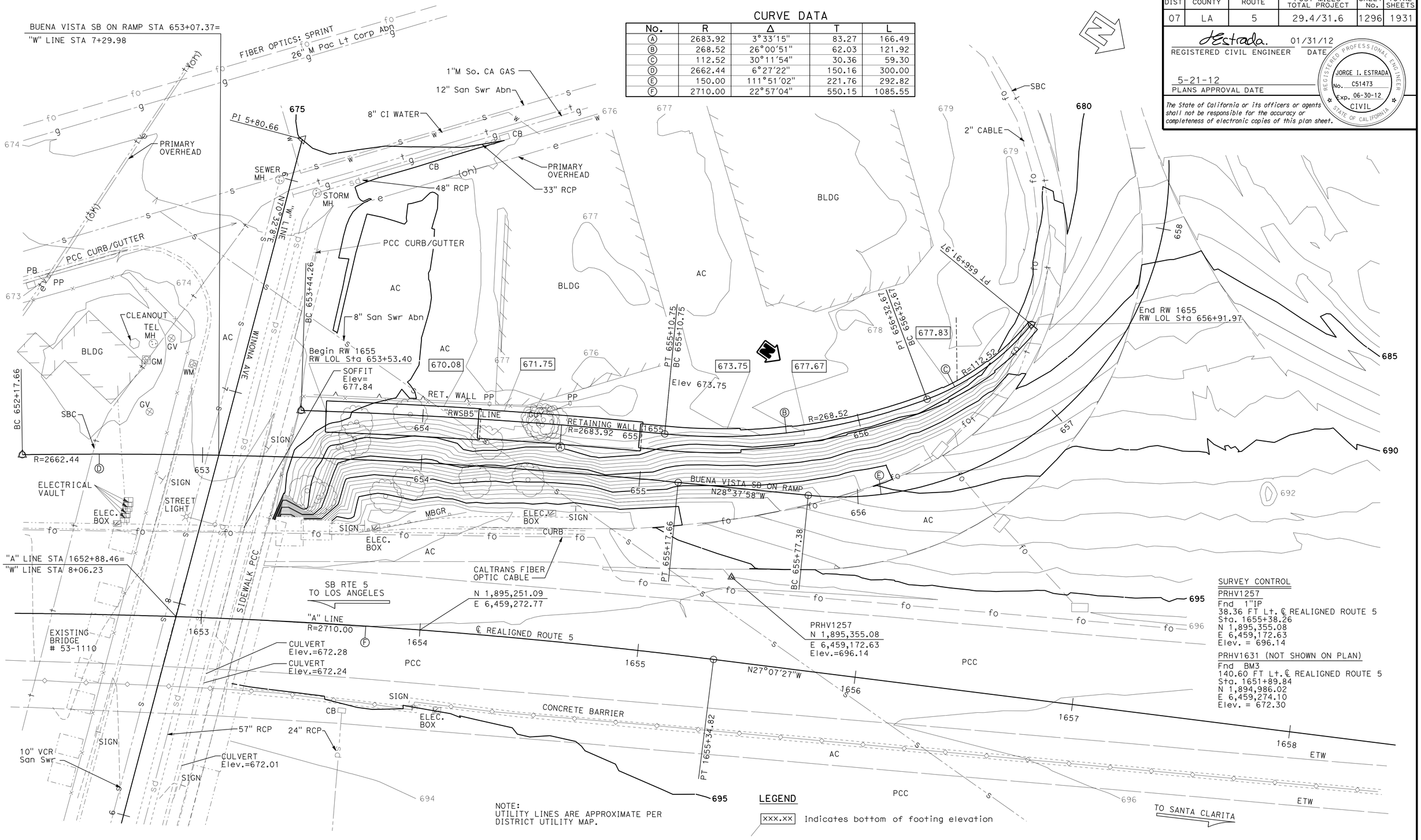

SURVEY CONTROL

PRHV1257
Fnd 1"IP
38.36 FT Lt. ℄ REALIGNED ROUTE 5
Sta. 1655+38.26
N 1,895,355.08
E 6,459,172.63
Elev. = 696.14

PRHV1631 (NOT SHOWN ON PLAN)
Fnd BM3
140.60 FT Lt. ℄ REALIGNED ROUTE 5
Sta. 1651+89.84
N 1,894,986.02
E 6,459,274.10
Elev. = 672.30

PRELIMINARY INVESTIGATION SECTION

SCALE 1"=20′	VERT.DATUM NAVD88	PHOTOGRAMMETRY AS OF: X			
	HORZ.DATUM NAD83 (1991.35)	SURVEYED	BY DISTRICT	CHECKED	BY J.PALLARES 10/2011
ALIGNMENT TIES Dist. Traverse Sheet		DRAFTED	BY T.ZOLNIKOV 10/2011	CHECKED	BY L.LEW 10/2011

DESIGN	BY L. ZHANG / Z. YAN	CHECKED	N. PEREIRA
DETAILS	BY JINLI GUO	CHECKED	L. ZHANG / Z. YAN
QUANTITIES	BY LIPING ZHANG	CHECKED	XIAHONG LI

STATE OF CALIFORNIA
DEPARTMENT OF TRANSPORTATION

DIVISION OF ENGINEERING SERVICES
STRUCTURE DESIGN
DESIGN BRANCH 18

BRIDGE NO. RW 1655
POST MILE 31.35

RETAINING WALL 1655
FOUNDATION PLAN

STRUCTURES FOUNDATION PLAN SHEET (ENGLISH) (REV. 09-01-10)

ORIGINAL SCALE IN INCHES FOR REDUCED PLANS 0 1 2 3

UNIT: 3603
PROJECT NUMBER & PHASE: 07000211191
CONTRACT NO.: 07-1218W1

DISREGARD PRINTS BEARING EARLIER REVISION DATES → 10/31/11 12/01/11

SHEET 2 OF 7

FILE => 53-rw1655rl-b-fpl01.dgn

DIST	COUNTY	ROUTE	POST MILES TOTAL PROJECT	SHEET No.	TOTAL SHEETS
07	LA	5	29.4/31.6	1297	1931

REGISTERED CIVIL ENGINEER — DATE 01/31/12

5-21-12
PLANS APPROVAL DATE

REGISTERED PROFESSIONAL ENGINEER — JORGE I. ESTRADA — No. C51473 — Exp. 06-30-12 — CIVIL — STATE OF CALIFORNIA

The State of California or its officers or agents shall not be responsible for the accuracy or completeness of electronic copies of this plan sheet.

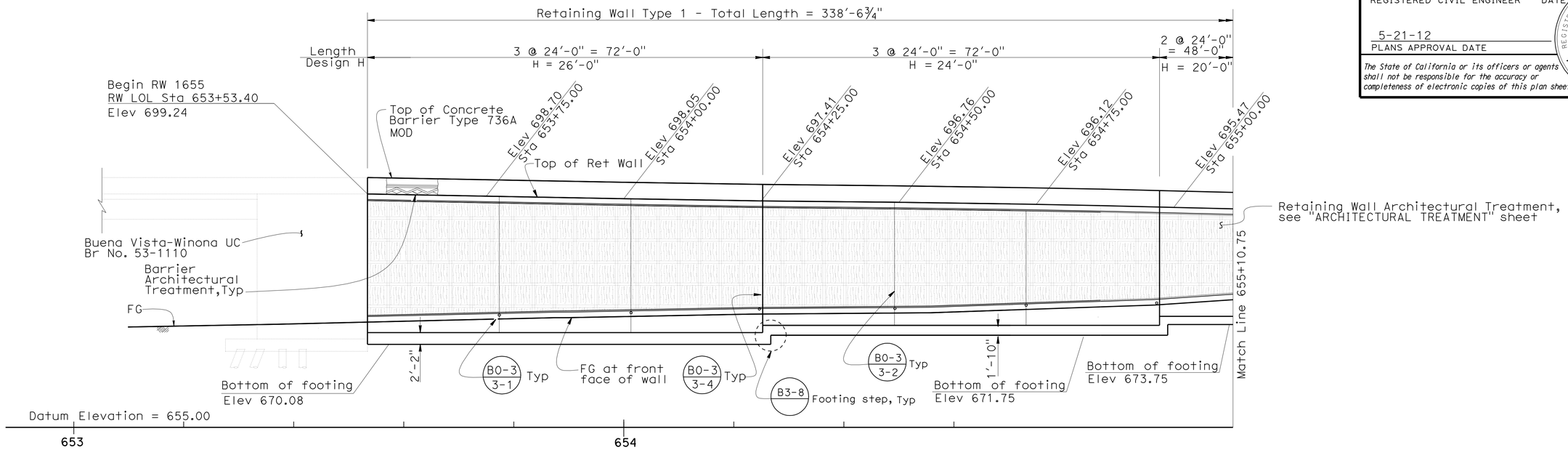

DEVELOPED MIRROR ELEVATION

1"=10'-0"

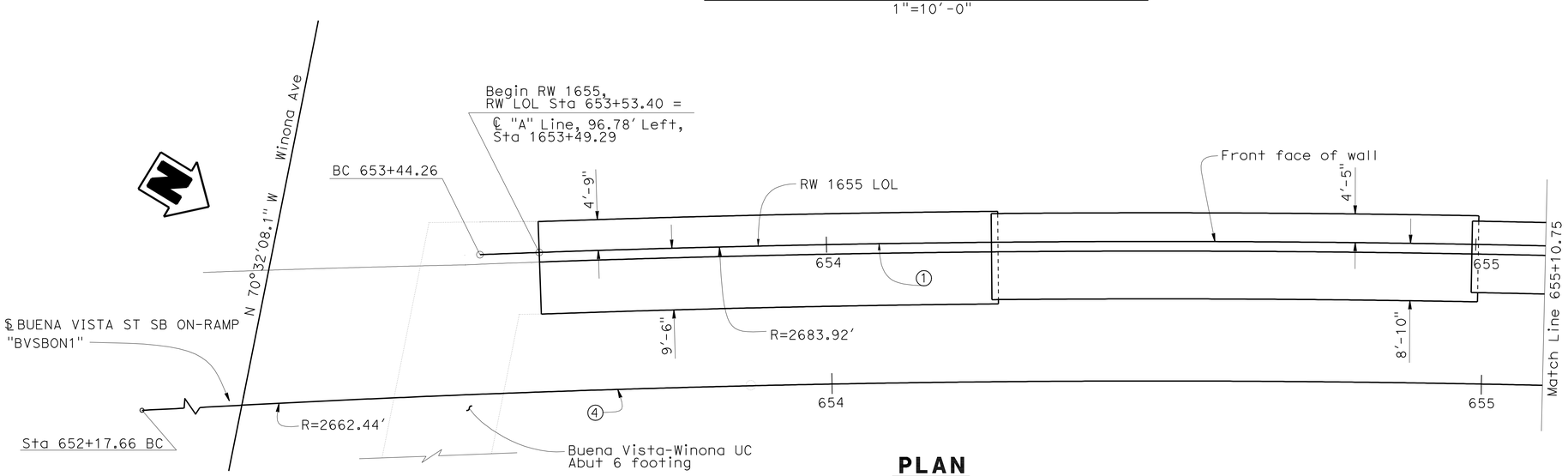

PLAN

1"=10'-0"

NOTE:

For curve data, see "STRUCTURE PLAN NO. 2" sheet

DESIGN	BY L. ZHANG / Z, YAN	CHECKED N. PEREIRA	
DETAILS	BY JINLI GUO	CHECKED L. ZHANG / Z, YAN	
QUANTITIES	BY LIPING ZHANG	CHECKED XIAHONG LI	

STATE OF CALIFORNIA
DEPARTMENT OF TRANSPORTATION

DIVISION OF ENGINEERING SERVICES
STRUCTURE DESIGN
DESIGN BRANCH 18

BRIDGE NO. RW 1655
POST MILE 31.35

RETAINING WALL 1655
STRUCTURE PLAN NO. 1

STRUCTURES DESIGN DETAIL SHEET (ENGLISH) (REV. 09-01-10)

ORIGINAL SCALE IN INCHES FOR REDUCED PLANS 0 1 2 3

UNIT: 3603
PROJECT NUMBER & PHASE: 07000211191
CONTRACT NO.: 07-1218W1

DISREGARD PRINTS BEARING EARLIER REVISION DATES

REVISION DATES: 05-04-05 10-16-11

SHEET 3 OF 7

FILE => 53-rw1655rl-c-sp01.dgn

USERNAME => s124496 DATE PLOTTED => 21-MAY-2012 TIME PLOTTED => 18:38

DIST	COUNTY	ROUTE	POST MILES TOTAL PROJECT	SHEET No.	TOTAL SHEETS
07	LA	5	29.4/31.6	1298	1931

REGISTERED CIVIL ENGINEER — DATE 01/31/12

5-21-12
PLANS APPROVAL DATE

REGISTERED PROFESSIONAL ENGINEER — JORGE I. ESTRADA — No. C51473 — Exp. 06-30-12 — CIVIL — STATE OF CALIFORNIA

The State of California or its officers or agents shall not be responsible for the accuracy or completeness of electronic copies of this plan sheet.

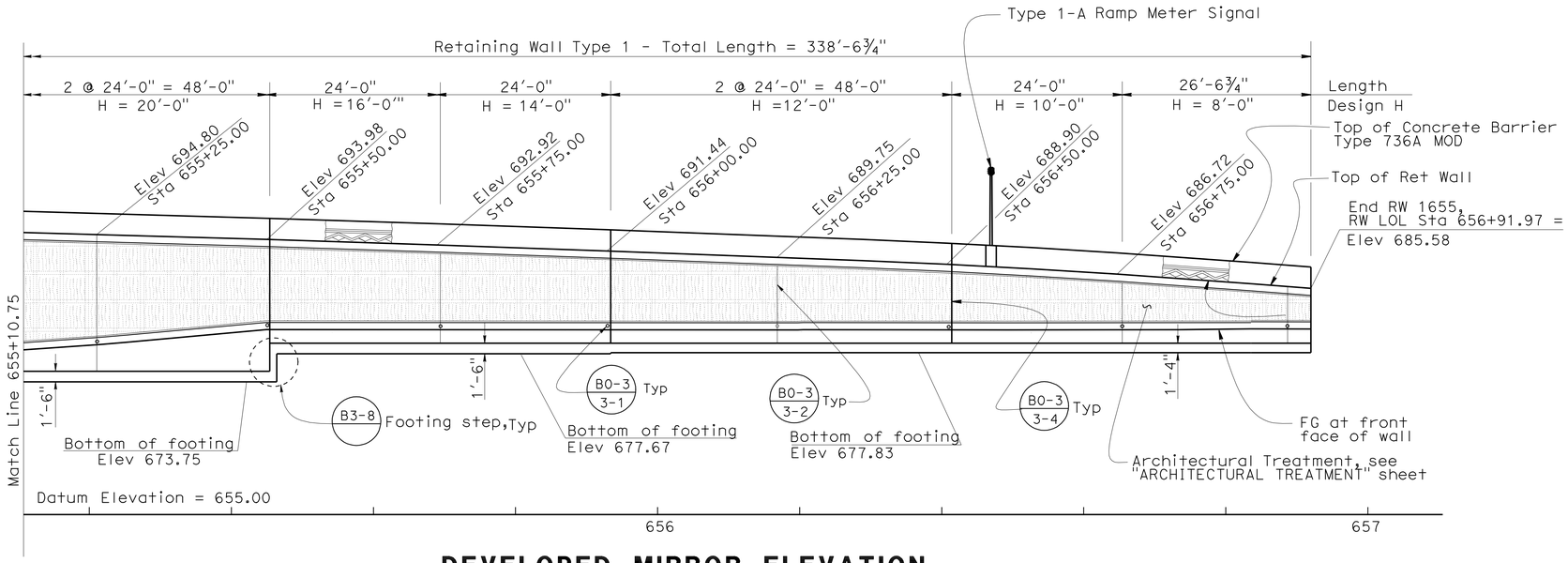

DEVELOPED MIRROR ELEVATION

1"=10'-0"

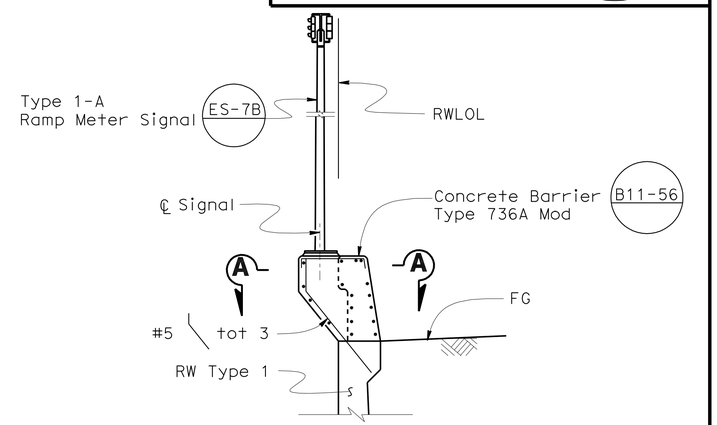

PEDESTAL ELEVATION

⅜" = 1'-0"

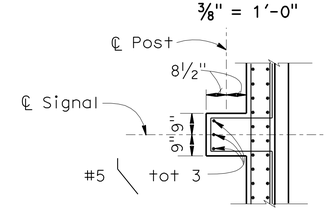

SECTION A-A

⅜" = 1'-0"

NOTES:

1. For details not shown on Retaining Wall, see B3-1
2. For details not shown, see B11-56

CURVE DATA				
No.	R	Δ	T	L
①	R = 2683.92'	Δ = 3°33'15"	T = 83.27'	L = 166.49'
②	R = 268.52'	Δ = -26°00'51"	T = 62.03'	L = 121.92'
③	R = 112.52'	Δ = -30°11'54"	T = 30.36'	L = 59.31'
④	R = 2662.44'	Δ = -6°27'21.6"	T = 150.16'	L = 300.00'
⑤	R = 150.00'	Δ = -111°51'02.1"	T = 221.76'	L = 292.82'

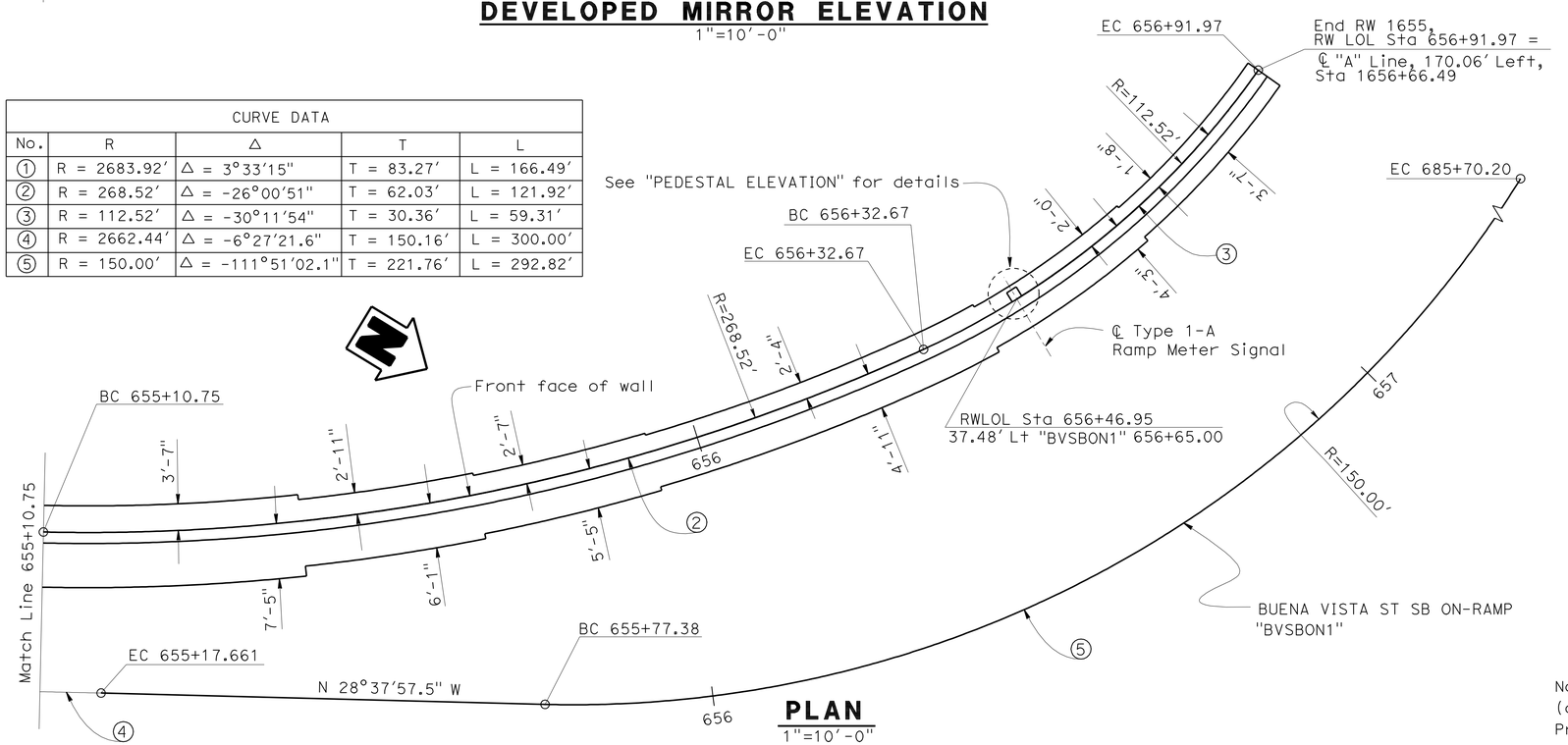

PLAN

1"=10'-0"

SPREAD FOOTING DATA TABLE	
RW LOL Station	Gross Allowable Soil Bearing Pressure q_{all} (Ksf)
653+53.40 to 654+25.00	5.3
654+25.00 to 655+00.00	4.9
655+00.00 to 655+50.00	4.3
655+50.00 to 655+75.00	3.5
655+75.00 to 656+00.00	3.3
656+00.00 to 656+50.00	2.8
656+50.00 to 656+75.00	2.5
656+75.00 to 656+91.97	2.2

Notes: 1) Allowable Stress Design, (ASD). The Maximum Contact Pressure, (q max), is not to exceed the recommended Gross Allowable Soil Bearing Pressure, (q all). The Ultimate Soil Bearing Capacity, (q ult), will equal or exceed 3 times the recommended Gross Allowable Soil Bearing Pressure, (q all).

	BY	CHECKED
DESIGN	L. ZHANG / Z. YAN	N. PEREIRA
DETAILS	JINLI GUO	L. ZHANG / Z. YAN
QUANTITIES	LIPING ZHANG	XIAHONG LI

STATE OF CALIFORNIA
DEPARTMENT OF TRANSPORTATION

DIVISION OF ENGINEERING SERVICES
STRUCTURE DESIGN
DESIGN BRANCH 18

BRIDGE NO. RW 1655
POST MILE 31.35

RETAINING WALL 1655
STRUCTURE PLAN NO. 2

STRUCTURES DESIGN DETAIL SHEET (ENGLISH) (REV. 09-01-10)

ORIGINAL SCALE IN INCHES FOR REDUCED PLANS 0 1 2 3

UNIT: 3603
PROJECT NUMBER & PHASE: 07000211191
CONTRACT NO.: 07-1218W1

DISREGARD PRINTS BEARING EARLIER REVISION DATES

REVISION DATES: 05-04-05 10-28-11 04-19-12

SHEET 4 OF 7

FILE => 53-rw1655ri-c-sp02.dgn

USERNAME => s124496 DATE PLOTTED => 21-MAY-2012 TIME PLOTTED => 18:38

DIST	COUNTY	ROUTE	POST MILES TOTAL PROJECT	SHEET No.	TOTAL SHEETS
07	LA	5	29.4/31.6	1299	1931

REGISTERED CIVIL ENGINEER 01/31/12 DATE

5-21-12
PLANS APPROVAL DATE

REGISTERED PROFESSIONAL ENGINEER JORGE I. ESTRADA No. C51473 Exp. 06-30-12 CIVIL STATE OF CALIFORNIA

The State of California or its officers or agents shall not be responsible for the accuracy or completeness of electronic copies of this plan sheet.

NOTE:

FRACTURED GRANITE TEXTURE SHALL RUN PERPENDICULAR TO PLUMB.

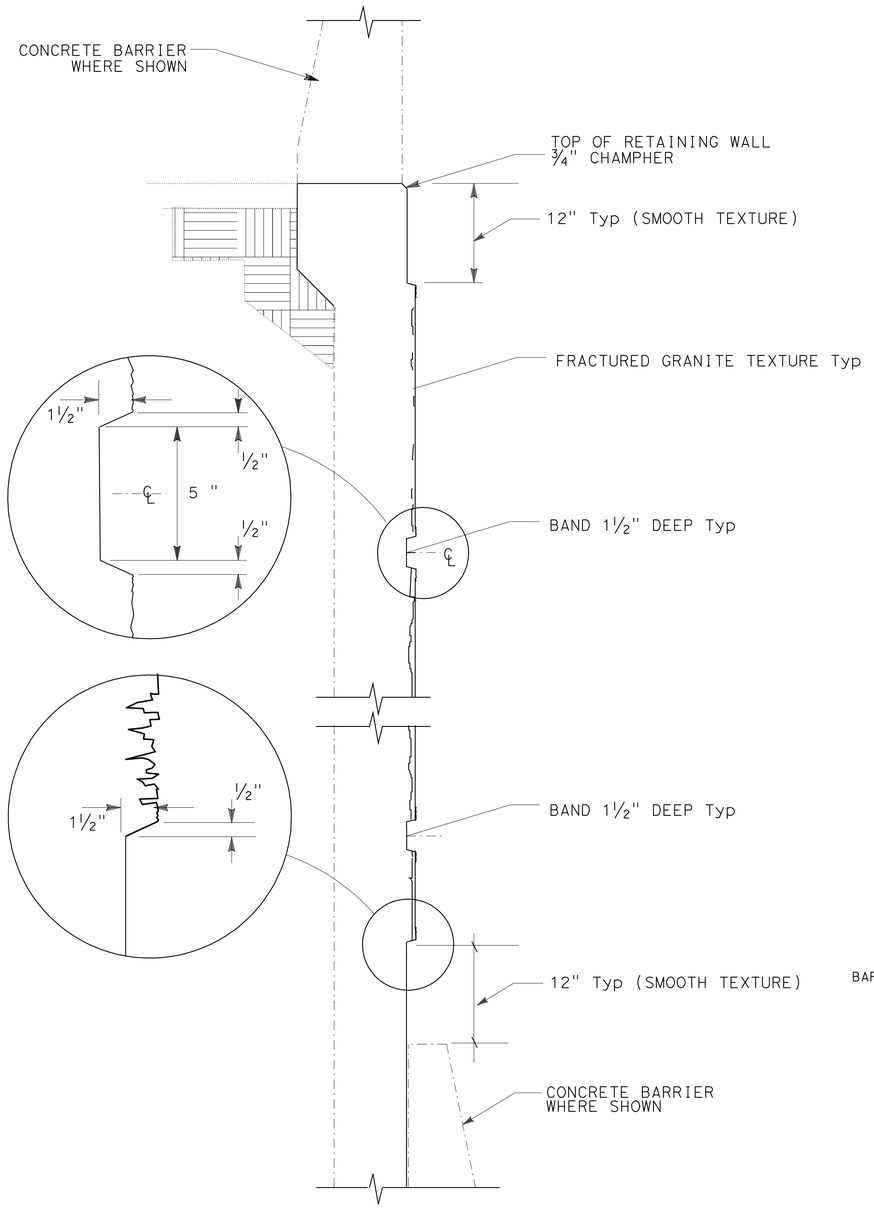

RETAINING WALL TYPICAL SECTION

NO SCALE

ARCHITECTURAL TREATMENT SECTION FOR RETAINING WALL

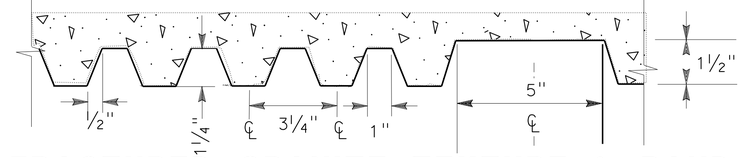

FRACTURED GRANITE TEXTURE & BAND

NO SCALE

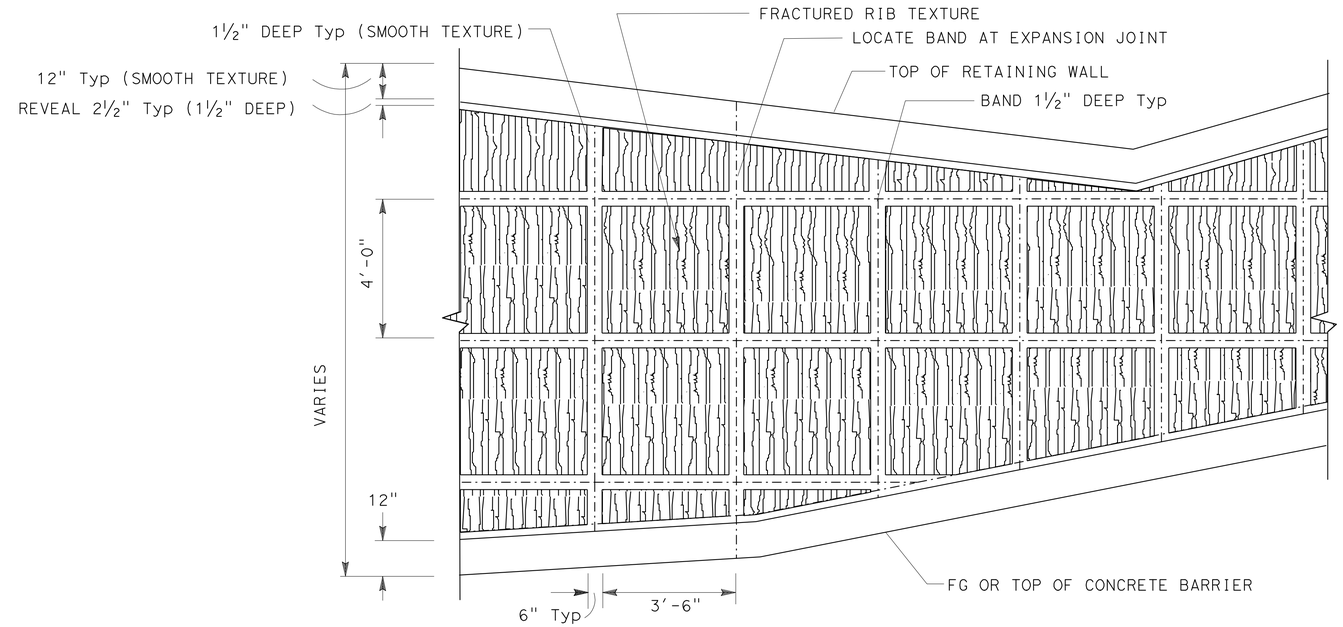

RETAINING WALL TYPICAL ELEVATION

NO SCALE

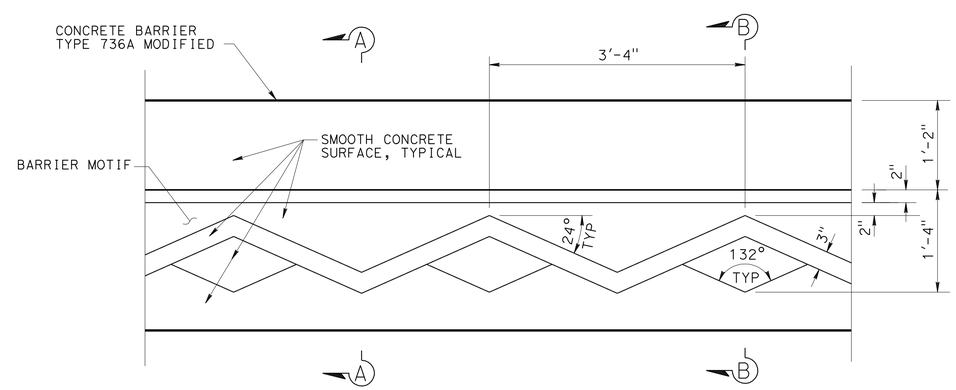

BARRIER AESTHETIC TREATMENT

NO SCALE

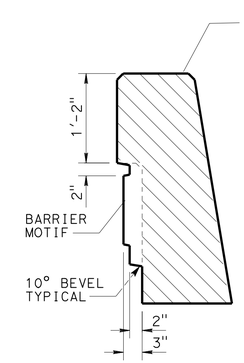

SECTION A-A

NO SCALE

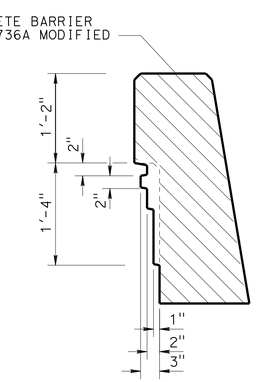

SECTION B-B

NO SCALE

	BY			
DESIGN	L. ZHANG / Z. YAN	CHECKED	N. PEREIRA	
DETAILS	BY JINLI GUO	CHECKED	L. ZHANG / Z. YAN	
QUANTITIES	BY LIPING ZHANG	CHECKED	XIAHONG LI	

STATE OF CALIFORNIA
DEPARTMENT OF TRANSPORTATION

DIVISION OF ENGINEERING SERVICES
STRUCTURE DESIGN
DESIGN BRANCH 18

BRIDGE NO. RW 1655
POST MILE 31.35

RETAINING WALL 1655
ARCHITECTURAL TREATMENT

STRUCTURES DESIGN DETAIL SHEET (ENGLISH) (REV. 09-01-10)

ORIGINAL SCALE IN INCHES FOR REDUCED PLANS 0 1 2 3

UNIT: 3603
PROJECT NUMBER & PHASE: 07000211191
CONTRACT NO.: 07-1218W1

DISREGARD PRINTS BEARING EARLIER REVISION DATES

REVISION DATES: 10-28-11 01/26/12

SHEET 5 OF 7

FILE => 53-rw1655rl-u-arch.dgn

USERNAME => s124496 DATE PLOTTED => 21-MAY-2012 TIME PLOTTED => 18:38

DIST	COUNTY	ROUTE	POST MILES TOTAL PROJECT	SHEET No	TOTAL SHEETS
07	LA	5	29.4/31.6	1300	1931

Joseph S. Pratt 1-13-12
CERTIFIED ENGINEERING GEOLOGIST

5-21-12
PLANS APPROVAL DATE

PROFESSIONAL GEOLOGIST Joseph S. Pratt No. 2141 Exp. 5-31-13 CERTIFIED ENGINEERING GEOLOGIST STATE OF CALIFORNIA

The State of California or its officers or agents shall not be responsible for the accuracy or completeness of electronic copies of this plan sheet.

BENCH MARK

BM PRHV909 Elev 696.094 ft
Fd PK Nail in AC Fwy shoulder between SBND LA-5 Buena Vista St. Off-ramp and On-ramp; 43.894 ft Lt Sta 1657+24.72 C/L Rte 5 (Prop).
N 1895518.509
E 6459082.695

NAD83, NAVD88

LEGEND:

- (M) Moisture Content
- (PA) Particle Size Analysis
- (PI) Plasticity, Index, Liquid Limit
- (CR) Corrosivity Testing
- (CP) Compaction

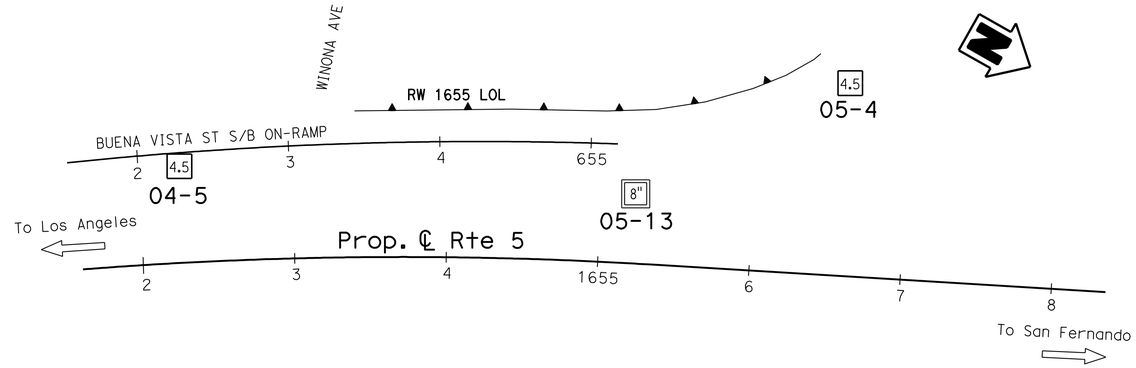

PLAN
1" = 50'

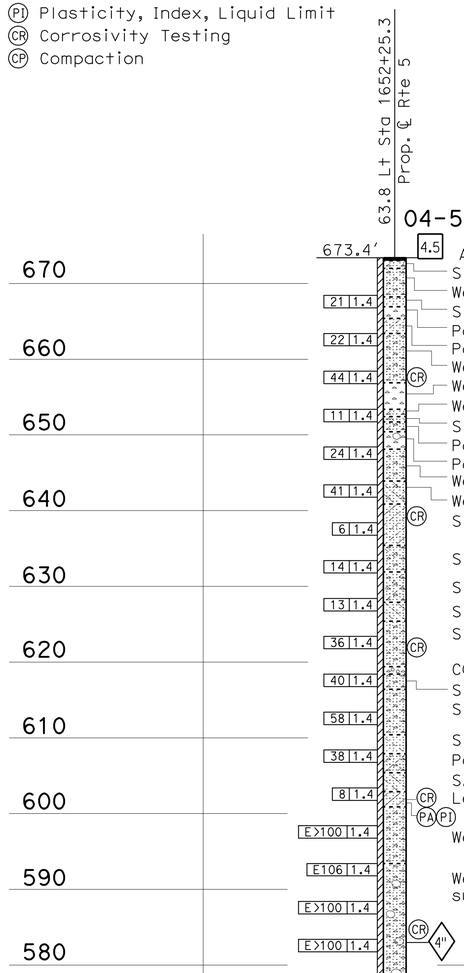

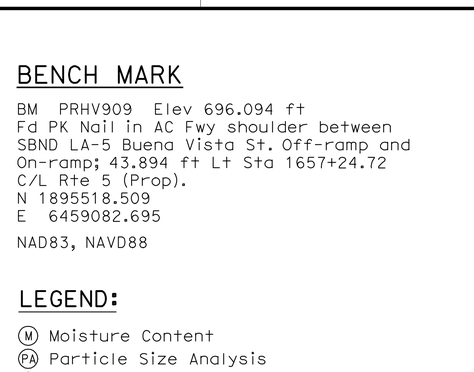

Note: No ground water encountered during field investigation.

670
660
650
640
630
620
610
600
590
580
570

Asphalt Concrete Pavement (5").
SILTY fine SAND (SM) contains 25% fine GRAVEL, estimated medium dense, brown, dry, nonplastic, (Base Material).
Well-graded SAND (SW) with fine and coarse GRAVEL, medium dense, light brown, moist, nonplastic, (ALLUVIUM).
SILTY fine to medium SAND (SM), medium dense, brown, moist, nonplastic.
Poorly-graded coarse GRAVEL (GP), contains COBBLES (up to 6"), estimated medium dense, varicolored, nonplastic.
Poorly-graded SAND with SILT & 25% coarse GRAVEL (SP-SM), medium dense, yellowish brown, moist, nonplastic.
Well-graded SAND with fine GRAVEL (SW), medium dense to dense, light brown and yellow, moist, nonplastic.
Well-graded fine to coarse GRAVEL (GW), estimated medium dense, light brown, moist, nonplastic, subrounded to subangular (slightly weathered) rock fragments.
Well-graded SAND with fine GRAVEL (SW), medium dense, light brown, moist, nonplastic.
SILTY fine SAND (SM), contains 2-5% CLAY and 2-5% fine GRAVEL, medium dense, brown, moist, nonplastic.
Poorly-graded coarse GRAVEL (GP) with fine to coarse SAND and 6" COBBLES (subangular), estimated medium dense, light brown and gray, moist.
Poorly-graded coarse GRAVEL (GP), medium dense, light brown, moist, decomposed & intensely weathered rock fragments.
Well-graded SAND with 10 to 20% fine GRAVEL (SW), medium dense, light brown, moist.
Well-graded SAND with SILT and 20% GRAVEL (SW-SM), dense, brown, moist, nonplastic.
SILTY fine SAND (SM), contains 5% CLAY, loose, brown, moist, nonplastic.
SILTY fine SAND (SM), contains 5% fine GRAVEL, medium dense, brown, moist, nonplastic.
SILTY fine SAND (SM), contains 5% coarse GRAVEL, estimated medium dense, light brown, moist, nonplastic.
SILTY fine SAND (SM), contains 5% CLAY, medium dense, brown, moist, nonplastic.
SILTY fine to medium SAND (SM), contains 5% fine GRAVEL, dense, light brown, moist, nonplastic
COBBLES and GRAVEL, contains <5% fine GRAVEL, light brown, decomposed soft rock fragments.
SILTY fine to medium SAND (SM), contains 5% fine GRAVEL, dense, light brown, moist, nonplastic.
SILTY medium to coarse SAND (SM), contains 10-15% fine to coarse GRAVEL, dense, brown, moist, nonplastic.
SILTY fine SAND (SM), dense, brown, moist, nonplastic.
Poorly-graded fine to medium SAND (SP), contains 5% fine GRAVEL and 5% SILT, dense, light brown, moist, nonplastic.
SANDY SILT (ML), loose, brown, moist, nonplastic.
Lean CLAY with SAND (CL), firm, yellowish brown, moist, medium plasticity.
Well-graded GRAVEL (GW) with SAND, contains COBBLES (5"), very dense, gray and light brown, subangular and subrounded rock fragments.
Well-graded GRAVEL (GW) with SAND and COBBLES (4 to 8" diameter) and interbedded SAND, very dense, varicolored to yellowish brown, contains subrounded to subangular hard (slightly weathered) to very soft (decomposed to intensely weathered) GRANITOID, SCHIST, and GNESSIC rock fragments.

PROFILE
Horiz: 1" = 10'
Vert: 1" = 10'

1652+00
1653+00
1654+00

ENGINEERING SERVICES	GEOTECHNICAL SERVICES
DRAWN BY	I.G-Remmen
CHECKED BY	J. Pratt

FIELD INVESTIGATION BY:
J. Pratt
B. Hettick, B. McGahey

STATE OF CALIFORNIA
DEPARTMENT OF TRANSPORTATION

DIVISION OF ENGINEERING SERVICES
STRUCTURE DESIGN
DESIGN BRANCH 18

BRIDGE NO. RW 1655
POST MILE 31.35

RETAINING WALL NO. 1655
LOG OF TEST BORINGS 1 OF 2

OGS LOG OF TEST BORINGS SHEET (ENGLISH) (REV. 5/25/07)

ORIGINAL SCALE IN INCHES FOR REDUCED PLANS 0 1 2 3

UNIT: 3603
PROJECT NUMBER & PHASE: 07000211191
CONTRACT NO.: 07-1218W1

DISREGARD PRINTS BEARING EARLIER REVISION DATES

REVISION DATES				SHEET	OF
01-13-12				6	7

FILE => 53-rw1655rl-z-ltb01.dgn

USERNAME => s124496 DATE PLOTTED => 21-MAY-2012 TIME PLOTTED => 18:38