DIST	COUNTY	ROUTE	POST MILES TOTAL PROJECT	SHEET No.	TOTAL SHEETS
07	LA	5	29.4/31.6	1001	1931

JEstrada. 01/31/12
REGISTERED CIVIL ENGINEER DATE

5-21-12
PLANS APPROVAL DATE

REGISTERED PROFESSIONAL ENGINEER
JORGE I. ESTRADA
No. C51473
Exp. 06/30/12
CIVIL
STATE OF CALIFORNIA

The State of California or its officers or agents shall not be responsible for the accuracy or completeness of electronic copies of this plan sheet.

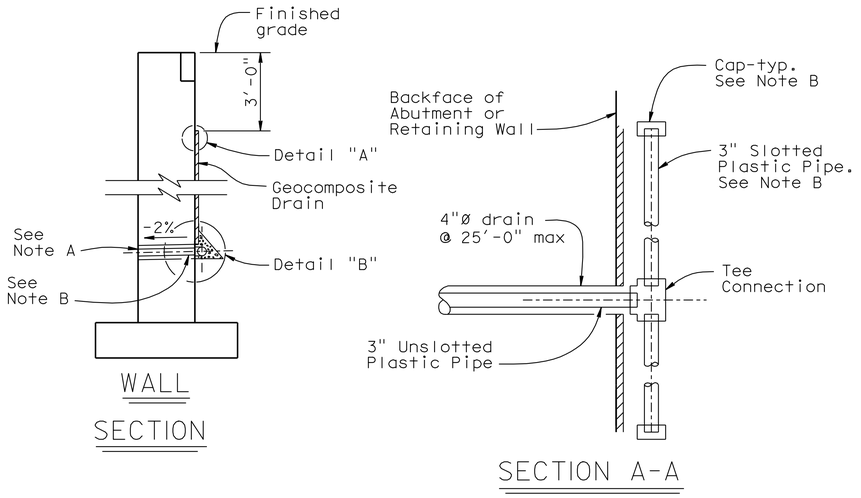

WALL SECTION

SECTION A-A

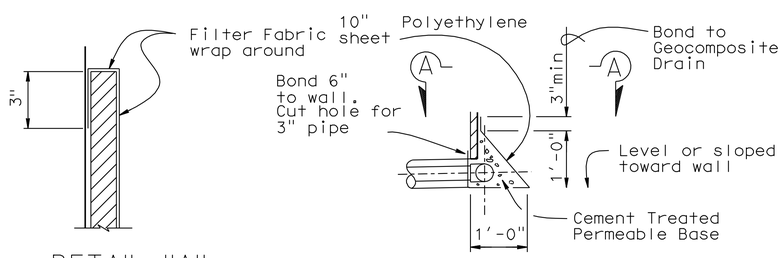

DETAIL "A"

DETAIL "B"

WEEP HOLE AND GEOCOMPOSITE DRAIN

NO SCALE

ALTERNATIVE TO BRIDGE DETAIL BO-3 / 3-1

Notes:

A. Geocomposite drain, cement treated permeable base, and 3" ø slotted plastic pipe continuous behind retaining wall or abutment. Cap ends of pipe. Provide "Tee" connection at each 4"ø drain.

B. Connect the low end of plastic pipe to the main outlet pipe as applicable.

	BY	CHECKED
DESIGN	J. ESTRADA	M. OKIMURA
DETAILS	SURAJ DUTTA	J.ESTRADA
QUANTITIES	DAVID R MURRAY	PREM RIMAL

STATE OF CALIFORNIA
DEPARTMENT OF TRANSPORTATION

DIVISION OF ENGINEERING SERVICES
STRUCTURE DESIGN
DESIGN BRANCH 18

BRIDGE NO. 53-3078
POST MILE 30.07

BURBANK WESTERN CHANNEL
CHANNEL COVER
DRAINAGE DETAILS

STRUCTURES DESIGN DETAIL SHEET (ENGLISH) (REV. 09-01-10)

ORIGINAL SCALE IN INCHES FOR REDUCED PLANS 0 1 2 3

UNIT: 3603
PROJECT NUMBER & PHASE: 0700021119-1
CONTRACT NO.: 07-1218w1

DISREGARD PRINTS BEARING EARLIER REVISION DATES

REVISION DATES 03/18/11 12/19/11 06/11/12 07/12/08

SHEET 25 OF 40

FILE => 53-3078-j-structapp drain_set.dgn

USERNAME => s121614

DIST	COUNTY	ROUTE	POST MILES TOTAL PROJECT	SHEET No.	TOTAL SHEETS
07	LA	5	29.4/31.6	1002	1931

dEstrada. 01/31/12
REGISTERED CIVIL ENGINEER DATE

5-21-12
PLANS APPROVAL DATE

REGISTERED PROFESSIONAL ENGINEER
JORGE I. ESTRADA
No. C51473
Exp. 06/30/12
CIVIL
STATE OF CALIFORNIA

The State of California or its officers or agents shall not be responsible for the accuracy or completeness of electronic copies of this plan sheet.

LEGEND

Existing Structure
New Construction
Concrete Removal (Portion) (See Note 1)

NOTE

1. Remove exist reinf 1" below concrete and patch

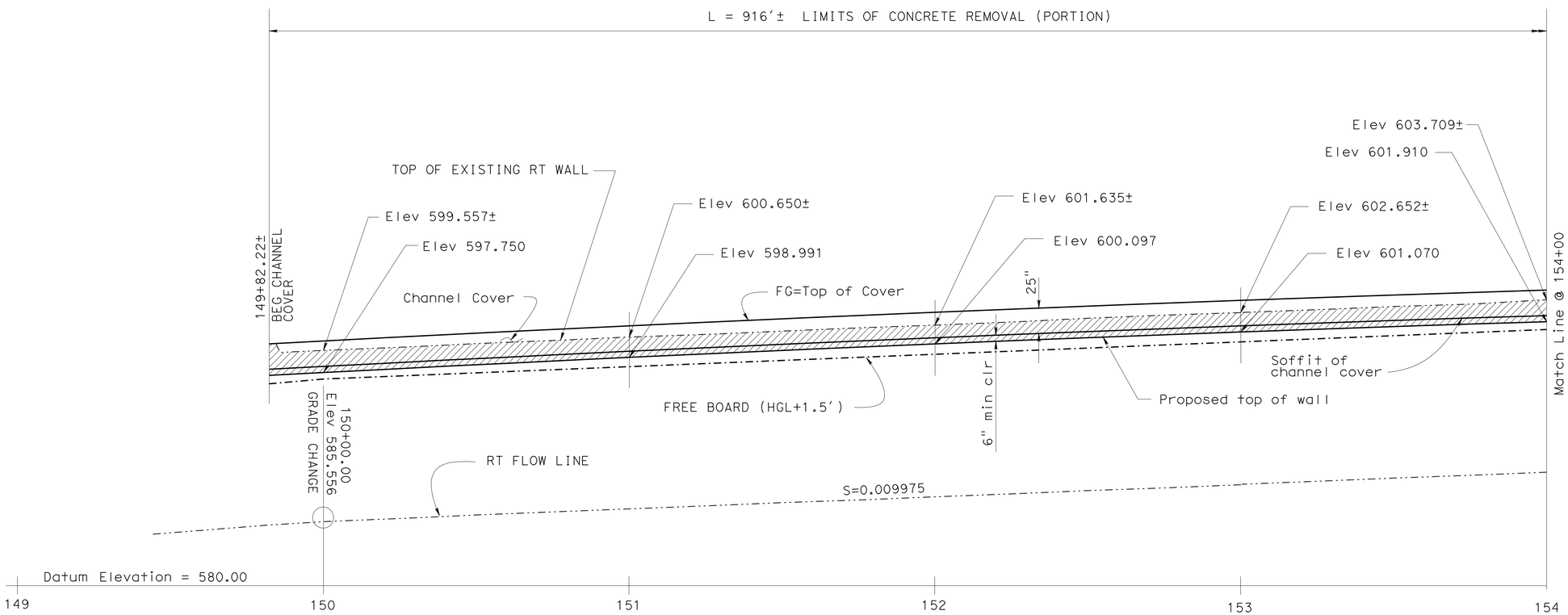

PROFILE* ALONG RIGHT WALL

HORZ = 1" = 20'
VERT = 1" = 5'

* Profiles shown are along inside face of existing open channel wall

DESIGN	BY J. ESTRADA	CHECKED M. OKIMURA/D.R. MURRAY	
DETAILS	BY SURAJ DUTTA	CHECKED J.ESTRADA	
QUANTITIES	BY DAVID R MURRAY	CHECKED PREM RIMAL	

STATE OF CALIFORNIA
DEPARTMENT OF TRANSPORTATION

DIVISION OF ENGINEERING SERVICES
STRUCTURE DESIGN
DESIGN BRANCH 18

BRIDGE NO. 53-3078
POST MILE 30.07

BURBANK WESTERN CHANNEL
CHANNEL COVER
PROFILE NO. 1

STRUCTURES DESIGN DETAIL SHEET (ENGLISH) (REV. 09-01-10)

ORIGINAL SCALE IN INCHES FOR REDUCED PLANS 0 1 2 3

UNIT: 3603
PROJECT NUMBER & PHASE: 0700021119-1
CONTRACT NO.: 07-1218W1

DISREGARD PRINTS BEARING EARLIER REVISION DATES

REVISION DATES: 03/18/11 12/10/11 07/12/09

SHEET 26 OF 40

FILE => 53-3078-k-profile01.dgn

USERNAME => s117606 DATE PLOTTED => 22-MAY-2012 TIME PLOTTED => 07:56

DIST	COUNTY	ROUTE	POST MILES TOTAL PROJECT	SHEET No.	TOTAL SHEETS
07	LA	5	29.4/31.6	1003	1931

REGISTERED CIVIL ENGINEER — DATE 01/31/12

5-21-12
PLANS APPROVAL DATE

REGISTERED PROFESSIONAL ENGINEER — JORGE I. ESTRADA — No. C51473 — Exp. 06/30/12 — CIVIL — STATE OF CALIFORNIA

The State of California or its officers or agents shall not be responsible for the accuracy or completeness of electronic copies of this plan sheet.

LEGEND

Existing Structure
New Construction
Concrete Removal (Portion) (See Note 1)

NOTE

1. Remove exist reinf 1" below concrete and patch

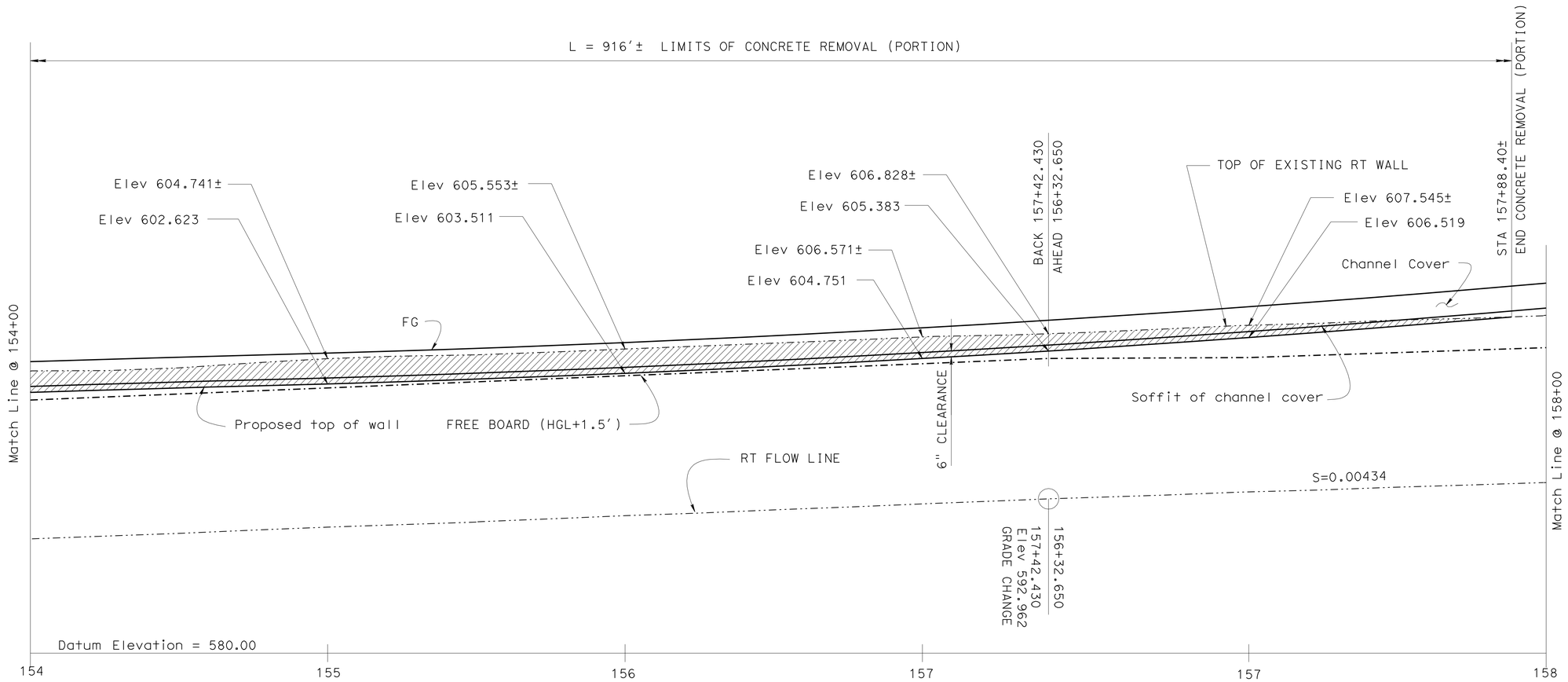

PROFILE* ALONG RIGHT WALL

HORZ = 1" = 20'
VERT = 1" = 5'

* Profiles shown are along inside face of existing open channel wall

DESIGN	BY J. ESTRADA	CHECKED M. OKIMURA/D.R. MURRAY	
DETAILS	BY SURAJ DUTTA	CHECKED J.ESTRADA	
QUANTITIES	BY DAVID R MURRAY	CHECKED PREM RIMAL	

STATE OF CALIFORNIA
DEPARTMENT OF TRANSPORTATION

DIVISION OF ENGINEERING SERVICES
STRUCTURE DESIGN
DESIGN BRANCH 18

BRIDGE NO. 53-3078
POST MILE 30.07

BURBANK WESTERN CHANNEL
CHANNEL COVER
PROFILE NO. 2

STRUCTURES DESIGN DETAIL SHEET (ENGLISH) (REV. 09-01-10)

ORIGINAL SCALE IN INCHES FOR REDUCED PLANS 0 1 2 3

UNIT: 3603
PROJECT NUMBER & PHASE: 0700021119-1
CONTRACT NO.: 07-1218w1

DISREGARD PRINTS BEARING EARLIER REVISION DATES

REVISION DATES: 03/18/11 12/10/11 07/12/09

SHEET 27 OF 40

FILE => 53-3078-k-profile02.dgn

USERNAME => s117606 DATE PLOTTED => 22-MAY-2012 TIME PLOTTED => 07:57

DIST	COUNTY	ROUTE	POST MILES TOTAL PROJECT	SHEET No.	TOTAL SHEETS
07	LA	5	29.4/31.6	1004	1931

REGISTERED CIVIL ENGINEER — DATE 01/31/12

5-21-12
PLANS APPROVAL DATE

REGISTERED PROFESSIONAL ENGINEER — JORGE I. ESTRADA — No. C51473 — Exp. 06/30/12 — CIVIL — STATE OF CALIFORNIA

The State of California or its officers or agents shall not be responsible for the accuracy or completeness of electronic copies of this plan sheet.

LEGEND

Existing Structure
New Construction

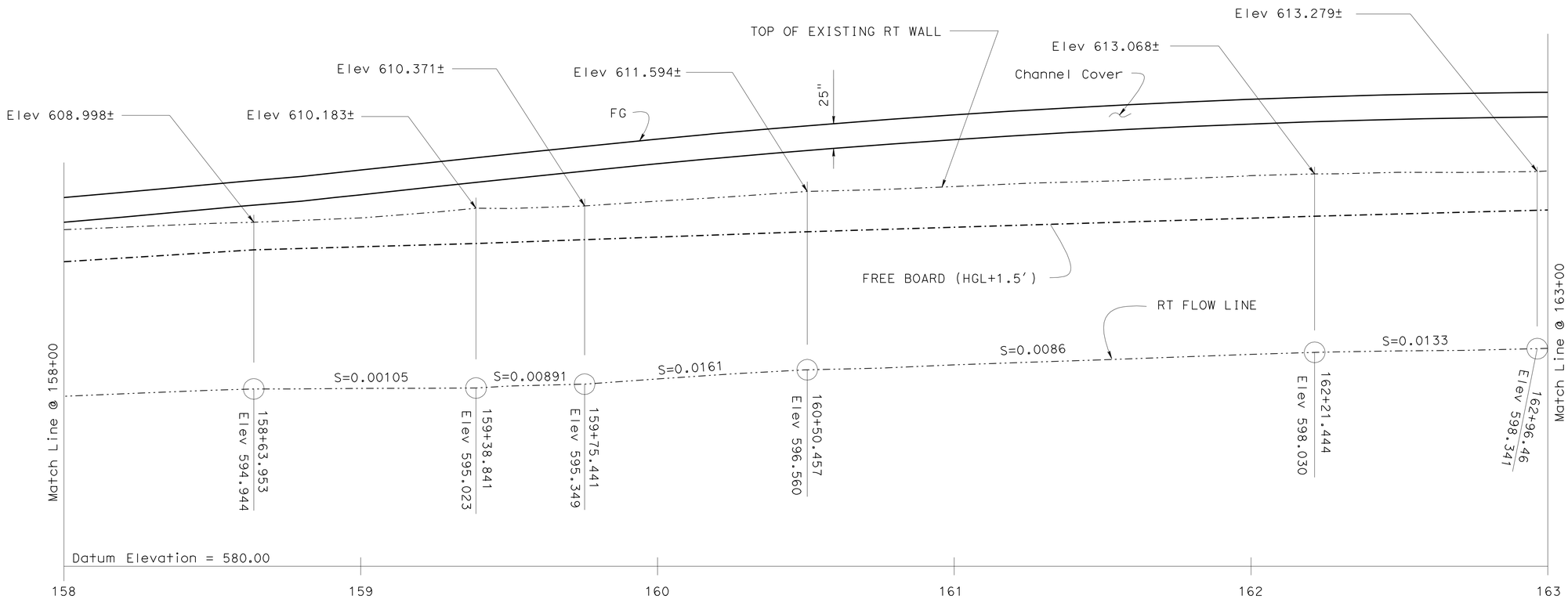

PROFILE* ALONG RIGHT WALL

HORZ = 1" = 20'
VERT = 1" = 5'

* Profiles shown are along inside face of existing open channel wall

DESIGN	BY J. ESTRADA	CHECKED M. OKIMURA/D.R. MURRAY	
DETAILS	BY SURAJ DUTTA	CHECKED J.ESTRADA	
QUANTITIES	BY DAVID R MURRAY	CHECKED PREM RIMAL	

STATE OF CALIFORNIA
DEPARTMENT OF TRANSPORTATION

DIVISION OF ENGINEERING SERVICES
STRUCTURE DESIGN
DESIGN BRANCH 18

BRIDGE NO. 53-3078
POST MILE 30.07

BURBANK WESTERN CHANNEL
CHANNEL COVER
PROFILE NO. 3

STRUCTURES DESIGN DETAIL SHEET (ENGLISH) (REV. 09-01-10)

ORIGINAL SCALE IN INCHES FOR REDUCED PLANS 0 1 2 3

UNIT: 3603
PROJECT NUMBER & PHASE: 0700021119-1
CONTRACT NO.: 07-1218W1

DISREGARD PRINTS BEARING EARLIER REVISION DATES

REVISION DATES: 03/18/11 12/10/11 07/12/05

SHEET 28 OF 40

FILE => 53-3078-k-profile03.dgn

USERNAME => s117606 DATE PLOTTED => 22-MAY-2012 TIME PLOTTED => 07:57

DIST	COUNTY	ROUTE	POST MILES TOTAL PROJECT	SHEET No.	TOTAL SHEETS
07	LA	5	29.4/31.6	1005	1931

REGISTERED CIVIL ENGINEER — DATE 01/31/12

5-21-12
PLANS APPROVAL DATE

REGISTERED PROFESSIONAL ENGINEER — JORGE I. ESTRADA — No. C51473 — Exp. 06/30/12 — CIVIL — STATE OF CALIFORNIA

The State of California or its officers or agents shall not be responsible for the accuracy or completeness of electronic copies of this plan sheet.

LEGEND

Existing Structure
New Construction

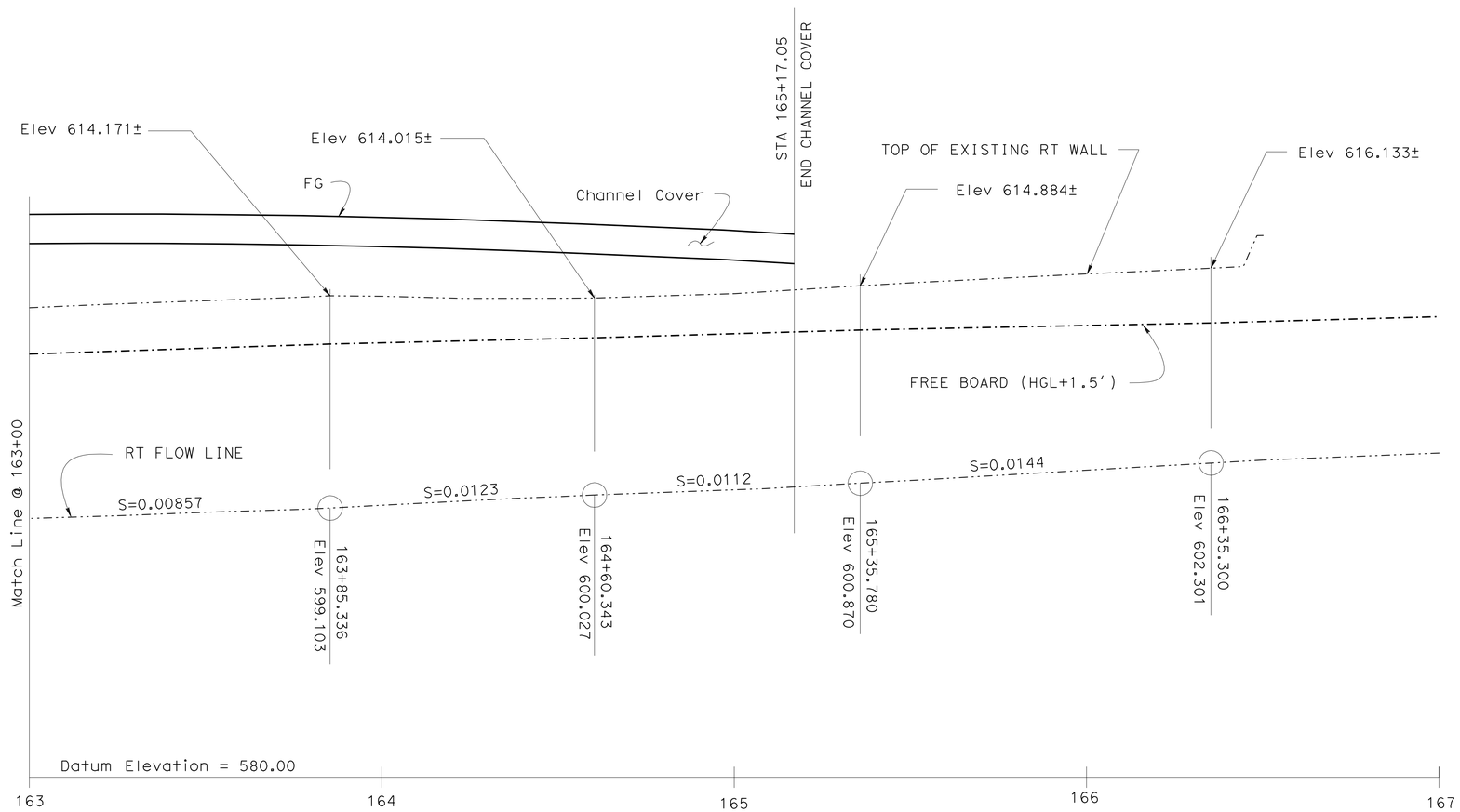

PROFILE* ALONG RIGHT WALL

HORZ = 1" = 20′
VERT = 1" = 5′

* Profiles shown are along inside face of existing open channel wall

DESIGN	BY J. ESTRADA	CHECKED M. OKIMURA/D.R. MURRAY	
DETAILS	BY SURAJ DUTTA	CHECKED J.ESTRADA	
QUANTITIES	BY DAVID R MURRAY	CHECKED PREM RIMAL	

STATE OF CALIFORNIA
DEPARTMENT OF TRANSPORTATION

DIVISION OF ENGINEERING SERVICES
STRUCTURE DESIGN
DESIGN BRANCH 18

BRIDGE NO. 53-3078
POST MILE 30.07

BURBANK WESTERN CHANNEL
CHANNEL COVER
PROFILE NO. 4

STRUCTURES DESIGN DETAIL SHEET (ENGLISH) (REV. 09-01-10)

ORIGINAL SCALE IN INCHES FOR REDUCED PLANS 0 1 2 3

UNIT: 3603
PROJECT NUMBER & PHASE: 0700021119-1
CONTRACT NO.: 07-1218w1

DISREGARD PRINTS BEARING EARLIER REVISION DATES → REVISION DATES 03/18/11 12/10/11 07/12/05

SHEET 29 OF 40

FILE => 53-3078-k-profile04.dgn

USERNAME => s117606 DATE PLOTTED => 22-MAY-2012 TIME PLOTTED => 07:57

DIST	COUNTY	ROUTE	POST MILES TOTAL PROJECT	SHEET No.	TOTAL SHEETS
07	LA	5	29.4/31.6	1006	1931

REGISTERED CIVIL ENGINEER — DATE 01/31/12

5-21-12
PLANS APPROVAL DATE

REGISTERED PROFESSIONAL ENGINEER — JORGE I. ESTRADA — No. C51473 — Exp. 06/30/12 — CIVIL — STATE OF CALIFORNIA

The State of California or its officers or agents shall not be responsible for the accuracy or completeness of electronic copies of this plan sheet.

LEGEND

Existing Structure

New Construction

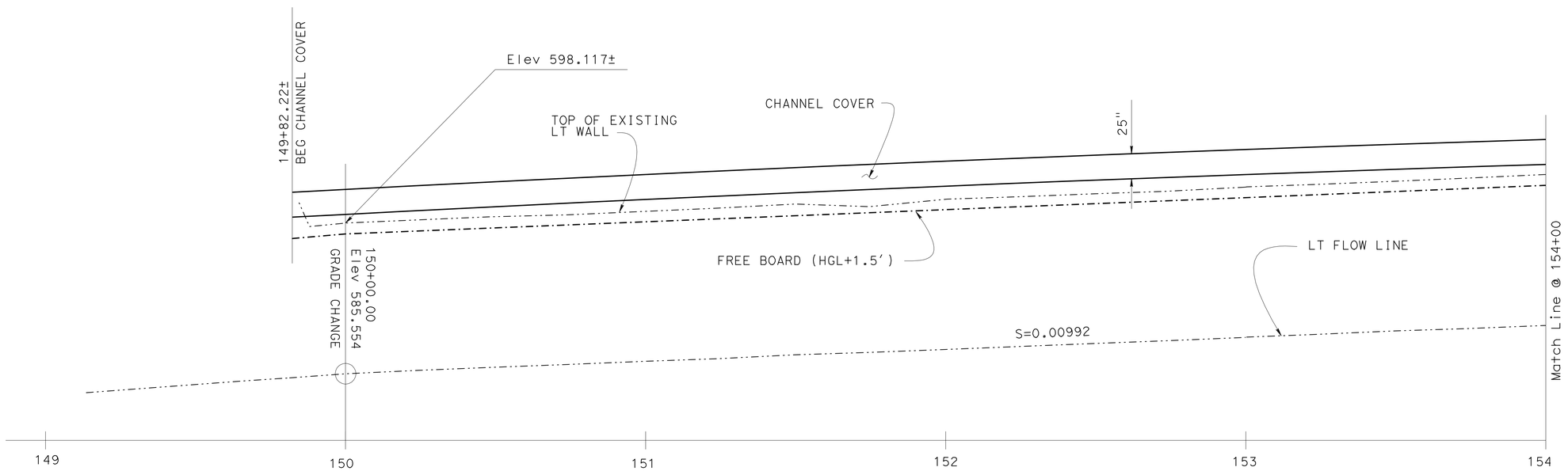

PROFILE* ALONG LEFT WALL

HORZ = 1" = 20'
VERT = 1" = 5'

* Profiles shown are along inside face of existing open channel wall

DESIGN	BY J. ESTRADA	CHECKED M. OKIMURA/D.R. MURRAY	
DETAILS	BY SURAJ DUTTA	CHECKED J.ESTRADA	
QUANTITIES	BY DAVID R MURRAY	CHECKED PREM RIMAL	

STATE OF CALIFORNIA
DEPARTMENT OF TRANSPORTATION

DIVISION OF ENGINEERING SERVICES
STRUCTURE DESIGN
DESIGN BRANCH 18

BRIDGE NO. 53-3078
POST MILE 30.07

BURBANK WESTERN CHANNEL
CHANNEL COVER
PROFILE NO. 5

STRUCTURES DESIGN DETAIL SHEET (ENGLISH) (REV. 09-01-10)

ORIGINAL SCALE IN INCHES FOR REDUCED PLANS 0 1 2 3

UNIT: 3603
PROJECT NUMBER & PHASE: 0700021119-1
CONTRACT NO.: 07-1218W1

DISREGARD PRINTS BEARING EARLIER REVISION DATES

REVISION DATES: 03/18/11 12/10/11 07/12/05

SHEET 30 OF 40

FILE => 53-3078-k-profile05.dgn

USERNAME => s117606 DGN FILE => 22-MAY-2012 TIME PLOTTED => 07:25:57

DIST	COUNTY	ROUTE	POST MILES TOTAL PROJECT	SHEET No.	TOTAL SHEETS
07	LA	5	29.4/31.6	1007	1931

REGISTERED CIVIL ENGINEER 01/31/12 DATE

5-21-12
PLANS APPROVAL DATE

REGISTERED PROFESSIONAL ENGINEER JORGE I. ESTRADA No. C51473 Exp. 06/30/12 CIVIL STATE OF CALIFORNIA

The State of California or its officers or agents shall not be responsible for the accuracy or completeness of electronic copies of this plan sheet.

LEGEND

Existing Structure

New Construction

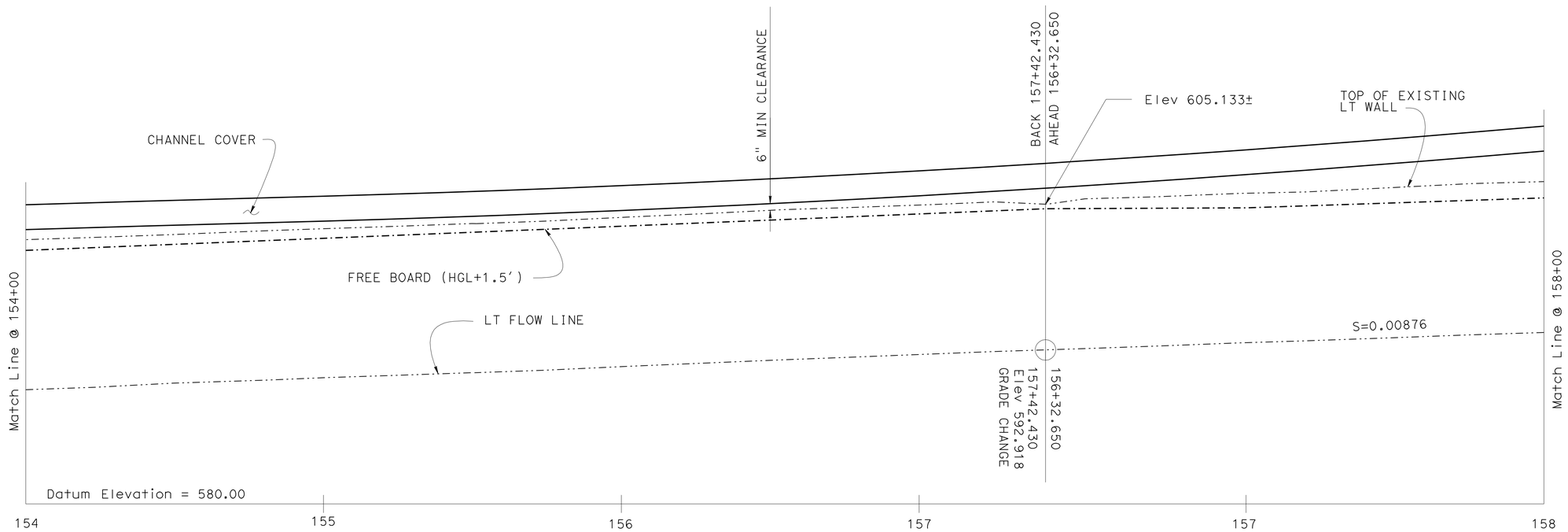

PROFILE* ALONG LEFT WALL

HORZ = 1" = 20'
VERT = 1" = 5'

* Profiles shown are along inside face of existing open channel wall

DESIGN	BY J. ESTRADA	CHECKED M. OKIMURA/D.R. MURRAY	
DETAILS	BY SURAJ DUTTA	CHECKED J.ESTRADA	
QUANTITIES	BY DAVID R MURRAY	CHECKED PREM RIMAL	

STATE OF CALIFORNIA
DEPARTMENT OF TRANSPORTATION

DIVISION OF ENGINEERING SERVICES
STRUCTURE DESIGN
DESIGN BRANCH 18

BRIDGE NO. 53-3078
POST MILE 30.07

BURBANK WESTERN CHANNEL
CHANNEL COVER
PROFILE NO. 6

STRUCTURES DESIGN DETAIL SHEET (ENGLISH) (REV. 09-01-10)

ORIGINAL SCALE IN INCHES FOR REDUCED PLANS 0 1 2 3

UNIT: 3603
PROJECT NUMBER & PHASE: 0700021119-1 CONTRACT NO.: 07-1218W1

DISREGARD PRINTS BEARING EARLIER REVISION DATES

REVISION DATES 03/18/11 12/10/11 07/12/05

SHEET 31 OF 40

FILE => 53-3078-k-profile06.dgn

USERNAME => s117606 DGNNE PRECORTEE(9)=> 22-MAY-2012 TIME PRECORTEE(9)=> 07:25:57

DIST	COUNTY	ROUTE	POST MILES TOTAL PROJECT	SHEET No.	TOTAL SHEETS
07	LA	5	29.4/31.6	1008	1931

REGISTERED CIVIL ENGINEER — DATE 01/31/12

5-21-12
PLANS APPROVAL DATE

REGISTERED PROFESSIONAL ENGINEER — JORGE I. ESTRADA — No. C51473 — Exp. 06/30/12 — CIVIL — STATE OF CALIFORNIA

The State of California or its officers or agents shall not be responsible for the accuracy or completeness of electronic copies of this plan sheet.

LEGEND

Existing Structure
New Construction

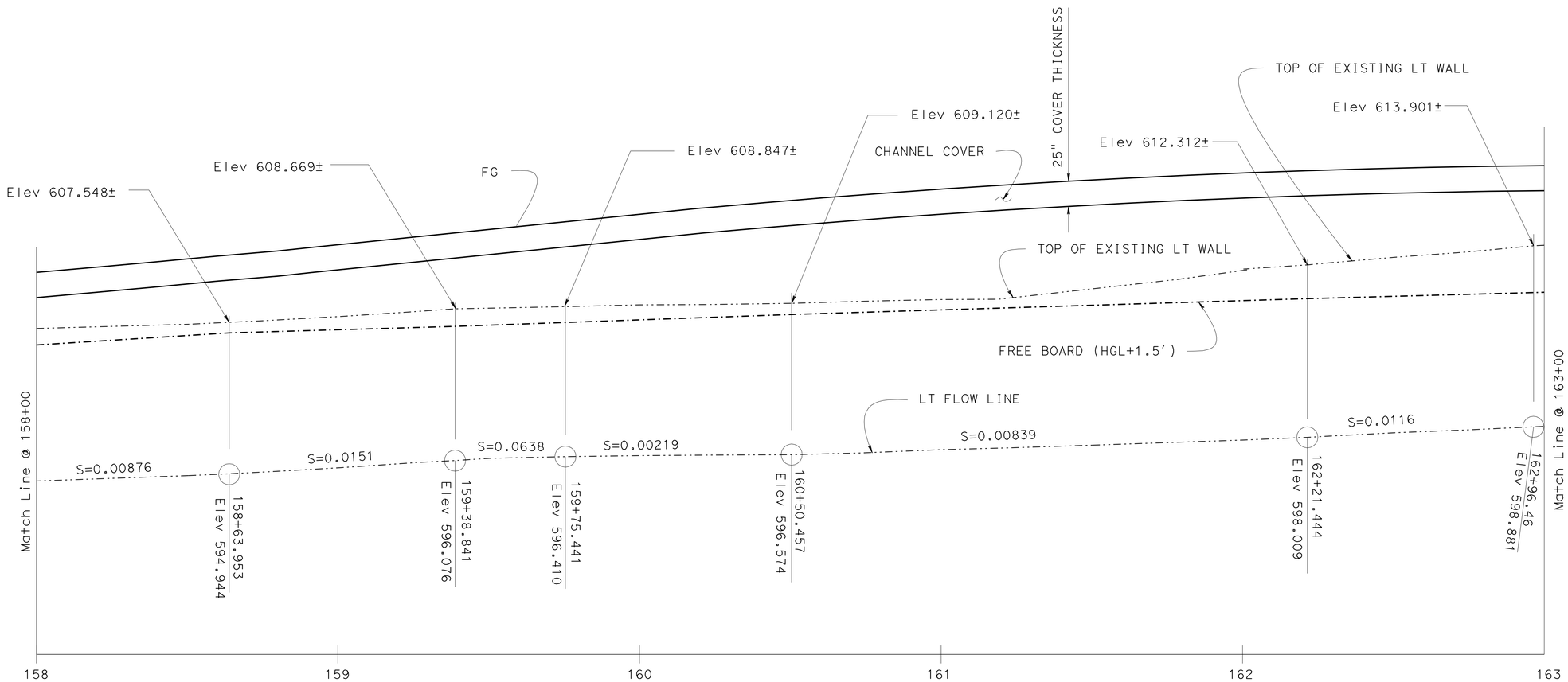

PROFILE* ALONG LEFT WALL

HORZ = 1" = 20'
VERT = 1" = 5'

* Profiles shown are along inside face of existing open channel wall

DESIGN	BY J. ESTRADA	CHECKED M. OKIMURA/D.R. MURRAY	
DETAILS	BY SURAJ DUTTA	CHECKED J.ESTRADA	
QUANTITIES	BY DAVID R MURRAY	CHECKED PREM RIMAL	

STATE OF CALIFORNIA
DEPARTMENT OF TRANSPORTATION

DIVISION OF ENGINEERING SERVICES
STRUCTURE DESIGN
DESIGN BRANCH 18

BRIDGE NO. 53-3078
POST MILE 30.07

BURBANK WESTERN CHANNEL
CHANNEL COVER
PROFILE NO. 7

STRUCTURES DESIGN DETAIL SHEET (ENGLISH) (REV. 09-01-10)

ORIGINAL SCALE IN INCHES FOR REDUCED PLANS 0 1 2 3

UNIT: 3603
PROJECT NUMBER & PHASE: 0700021119-1
CONTRACT NO.: 07-1218W1

DISREGARD PRINTS BEARING EARLIER REVISION DATES → 03/18/11 12/10/11 07/12/06

SHEET 32 OF 40

FILE => 53-3078-k-profile07.dgn

USERNAME => s117606 DGNNE =PLOTDRIVER => 22-MAY-2012 TIME =PLOTDRIVER => 07:29:57

DIST	COUNTY	ROUTE	POST MILES TOTAL PROJECT	SHEET No.	TOTAL SHEETS
07	LA	5	29.4/31.6	1009	1931

REGISTERED CIVIL ENGINEER — DATE 01/31/12

5-21-12
PLANS APPROVAL DATE

REGISTERED PROFESSIONAL ENGINEER — JORGE I. ESTRADA — No. C51473 — Exp. 06/30/12 — CIVIL — STATE OF CALIFORNIA

The State of California or its officers or agents shall not be responsible for the accuracy or completeness of electronic copies of this plan sheet.

LEGEND

Existing Structure
New Construction

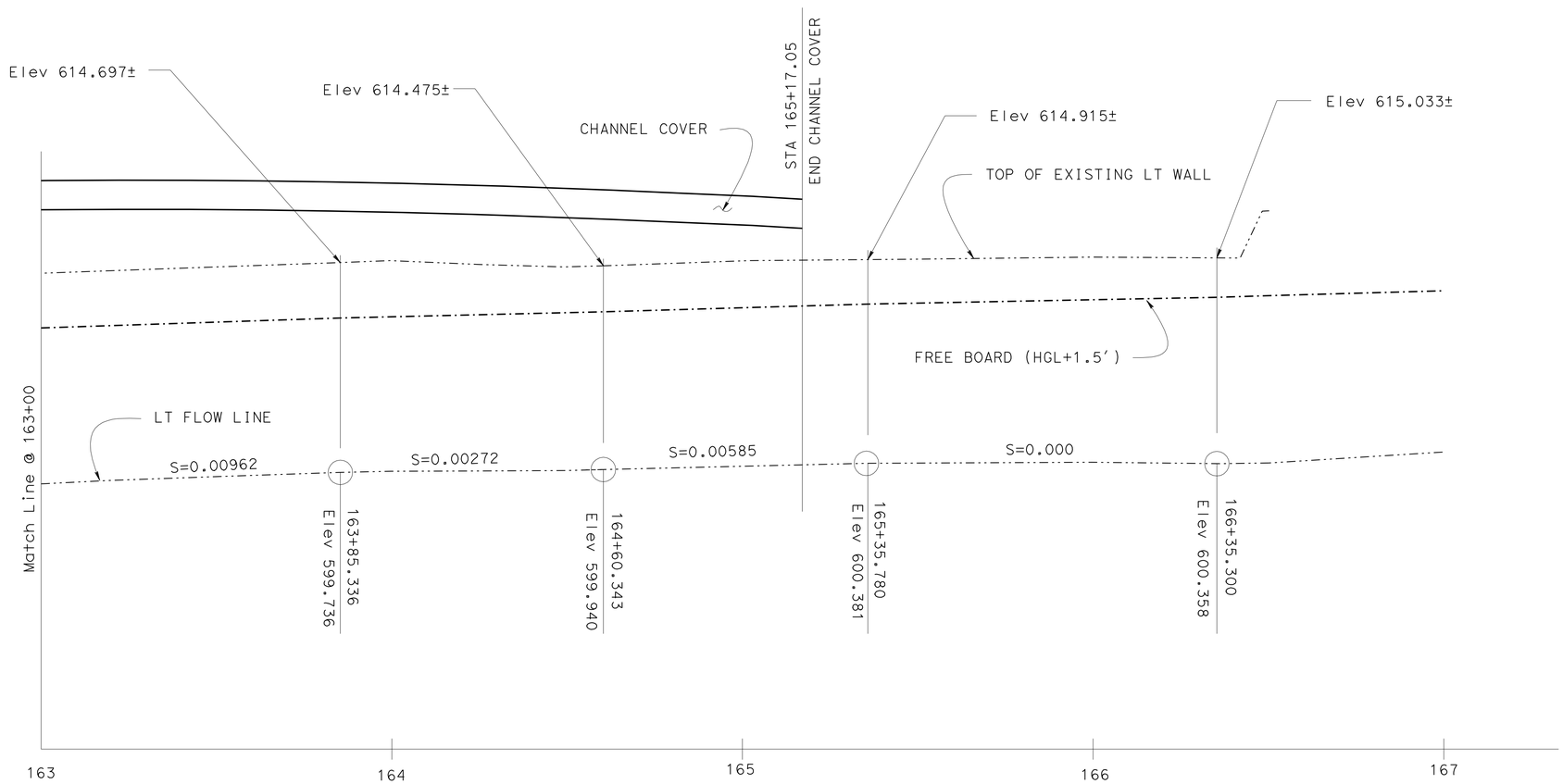

PROFILE* ALONG LEFT WALL

HORZ = 1" = 20′
VERT = 1" = 5′

* Profiles shown are along inside face of existing open channel wall

DESIGN	BY J. ESTRADA	CHECKED M. OKIMURA/D.R. MURRAY	
DETAILS	BY SURAJ DUTTA	CHECKED J.ESTRADA	
QUANTITIES	BY DAVID R MURRAY	CHECKED PREM RIMAL	

STATE OF CALIFORNIA
DEPARTMENT OF TRANSPORTATION

DIVISION OF ENGINEERING SERVICES
STRUCTURE DESIGN
DESIGN BRANCH 18

BRIDGE NO. 53-3078
POST MILE 30.07

BURBANK WESTERN CHANNEL
CHANNEL COVER
PROFILE NO. 8

STRUCTURES DESIGN DETAIL SHEET (ENGLISH) (REV. 09-01-10)

ORIGINAL SCALE IN INCHES FOR REDUCED PLANS 0 1 2 3

UNIT: 3603
PROJECT NUMBER & PHASE: 0700021119-1
CONTRACT NO.: 07-1218W1

DISREGARD PRINTS BEARING EARLIER REVISION DATES → 03/18/11 12/10/11 07/12/06

SHEET 33 OF 40

FILE => 53-3078-k-profile08.dgn

USERNAME => s117606 DGNNE=PLOTTED => 22-MAY-2012 TIME=PLOTTED => 07:29

DIST	COUNTY	ROUTE	KILOMETER POST TOTAL PROJECT	SHEET No	TOTAL SHEETS
07	LA	5	29.4/31.6	1010	1931

Shiva Karimi 2-6-12
REGISTERED CIVIL ENGINEER

5-21-12
PLANS APPROVAL DATE

REGISTERED PROFESSIONAL ENGINEER Shiva Karimi No. 2651 Exp. 6-30-12 GEOTECHNICAL STATE OF CALIFORNIA

The State of California or its officers or agents shall not be responsible for the accuracy or completeness of electronic copies of this plan sheet.

BENCH MARKS

BM PRHV607 Elev 594.221 ft
Fd Chiseled "X" on E'ly sidewalk of Walnut Ave +/- 2.0 ft south of guywire, 211.005 ft Rt Sta 1579+54.77 ℄ Rte 5 (Prop).
N 1890596.885
E 6464945.207

BM PRHV807 Elev 600.707 ft
Fd PK Nail Approx 1.9 ft from west top of curb Leland Way; in front of House #1206; +/- 30.2 ft north of an electrolier, 117.984 ft Rt Sta 1589+17.20 ℄ Rte 5 (Prop).
N 1891071.175
E 6464189.178

BM PRHV805 Elev 606.816 ft
Fd Lead & Tack on top of west curb Leland Way at University Ave.; 119.687 ft Rt Sta 1595+37.44 ℄ Rte 5 (Prop).
N 1891482.795
E 6463725.216

NAD83, NAVD88

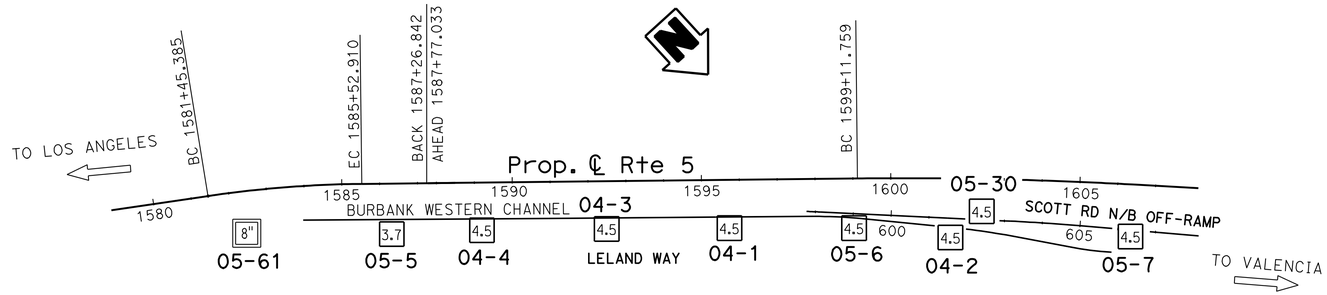

PLAN

1" = 200'

LEGEND:

- (M) Moisture Content
- (PA) Particle Size Analysis
- (PI) Plasticity, Index, Liquid Limit
- (CR) Corrosivity Testing
- (CP) Compaction

Note: No ground water encountered during field investigation.

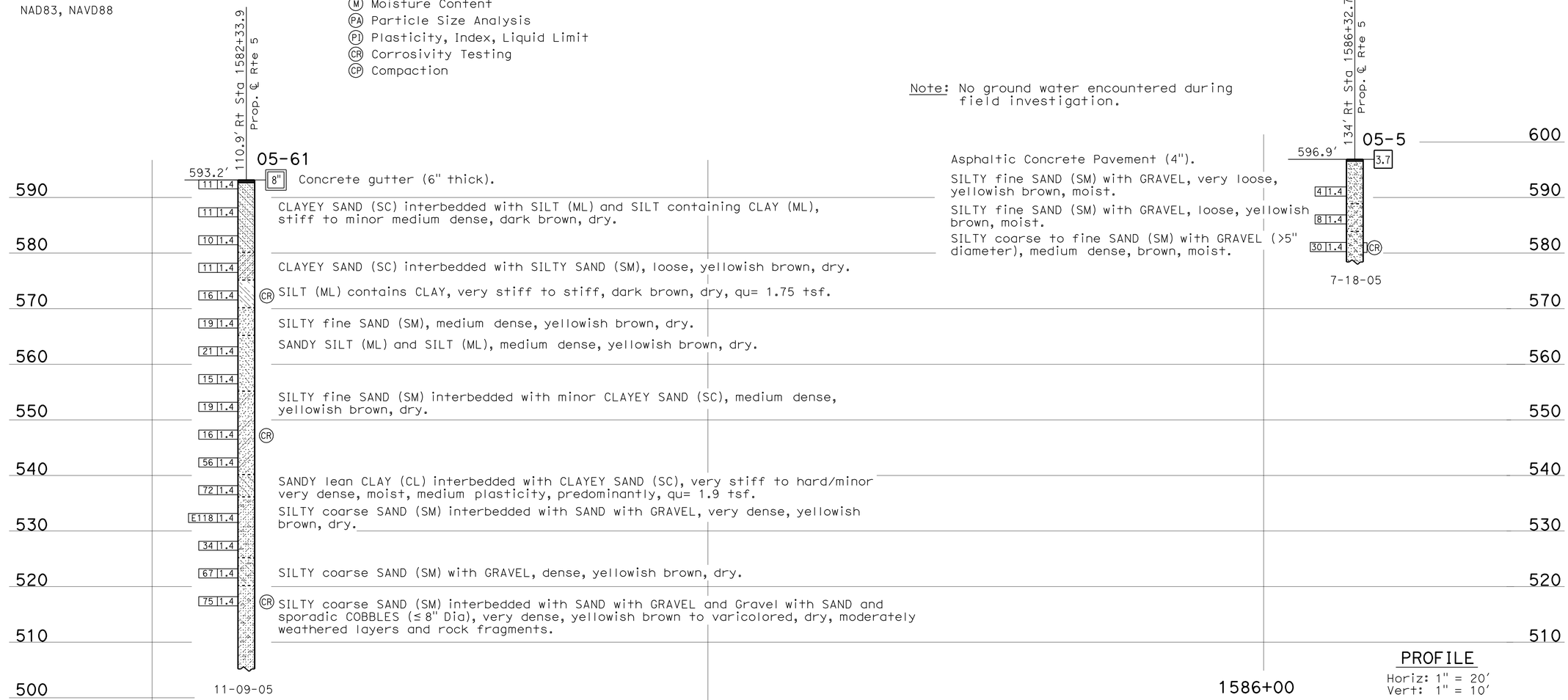

PROFILE

Horiz: 1" = 20'
Vert: 1" = 10'

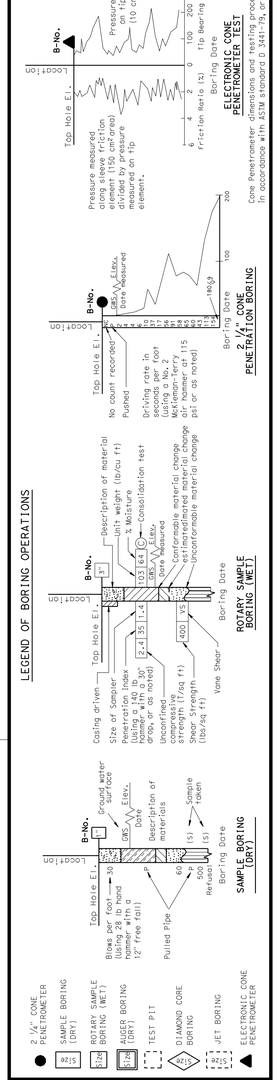

ENGINEERING SERVICES	GEOTECHNICAL SERVICES
DRAWN BY	I.G-Remmen
CHECKED BY	A. Mehrazar

FIELD INVESTIGATION BY: K. Lai

STATE OF CALIFORNIA DEPARTMENT OF TRANSPORTATION

DIVISION OF ENGINEERING SERVICES STRUCTURE DESIGN
DESIGN BRANCH 18

BRIDGE NO. 53-3078
POST MILE 30.07/30.38

BURBANK WESTERN CHANNEL
CHANNEL COVER
LOG OF TEST BORINGS 1 OF 7

OGS LOG OF TEST BORINGS SHEET (ENGLISH) (REV. 5/25/07)

ORIGINAL SCALE IN INCHES FOR REDUCED PLANS 0 1 2 3

UNIT: 3643
PROJECT NUMBER & PHASE: 07000211191
CONTRACT NO.: 07-1218W1

DISREGARD PRINTS BEARING EARLIER REVISION DATES
REVISION DATES 02-02-12 02-06-12 02-06-12
SHEET 34 OF 40

FILE => 53-3078-z-log1of7.dgn

USERNAME => s117606 DATE PLOTTED => 22-MAY-2012 TIME PLOTTED => 07:57

DIST	COUNTY	ROUTE	KILOMETER POST TOTAL PROJECT	SHEET No	TOTAL SHEETS
07	LA	5	29.4/31.6	1011	1931

Shiva Karimi 2-6-12
REGISTERED CIVIL ENGINEER

5-21-12
PLANS APPROVAL DATE

REGISTERED PROFESSIONAL ENGINEER Shiva Karimi No. 2651 Exp. 6-30-12 GEOTECHNICAL STATE OF CALIFORNIA

The State of California or its officers or agents shall not be responsible for the accuracy or completeness of electronic copies of this plan sheet.

LEGEND OF BORING OPERATIONS

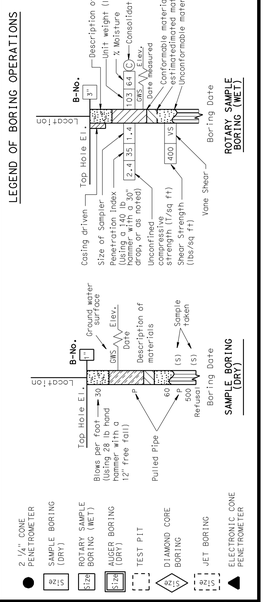

LEGEND OF EARTH MATERIALS

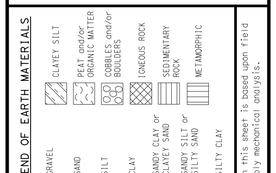

CONSISTENCY CLASSIFICATION FOR SOILS

According to the Standard Penetration Test

SPT N-Value (Blows/ Foot)	Granular	SPT N-Value (Blows/ Foot)	Cohesive
0-4	Very Loose	<2	Very Soft
5-10	Loose	2-4	Soft
11-30	Medium Dense	5-8	Medium stiff
31-50	Dense	9-15	Stiff
>50	Very Dense	16-30	Very Stiff
		31-60	Hard
		>60	Very Hard

NOTE: Classification of earth material as shown on this sheet is based upon field inspection and is not to be construed to imply mechanical analysis.

FOR PLAN VIEW, SEE
"LOG OF TEST BORINGS 1 OF 7"

Note: No ground water encountered during field investigation.

125.9' Rt Sta 1589+19.2
Prop. ℄ Rte 5

04-4

600.4'

4.5 Asphaltic Concrete Pavement (5" thick).

8 1.4 SILTY fine SAND (SM) with fine GRAVEL (20%), estimated medium dense, medium brown, dry to dry, nonplastic, roadbase material.

4 1.4 SILTY fine SAND (SM) contains fine GRAVEL (2%), gradationally interbedded with CLAYEY fine SAND (SC), loose, medium brown, moist, nonplastic to low plasticity, (undifferentiated FILL/ALLUVIUM).

5 1.4 Lean CLAY (CL) with SAND, contains scattered coarse SAND grains, gradationally interbedded with CLAYEY SAND (SC), firm/loose, medium to yellowish brown, moist, low plasticity, Su (TV)= 0.5 tsf, (ALLUVIUM).

5 1.4 SILTY fine to medium SAND (SM) contains scattered fine GRAVEL (3%), medium dense, grayish brown, moist, nonplastic.

14 1.4

19 1.4 Poorly-graded fine SAND (SP) with SILT, contains fine GRAVEL (2%), loose, grayish brown, moist, nonplastic.

9 1.4 SILTY fine SAND (SM) gradationally interbedded with SANDY lean CLAY (CL), loose, grayish brown, moist, nonplastic to low plasticity.

21 1.4 SILTY fine SAND (SM) with scattered fine GRAVEL (2%), medium dense, grayish brown, moist, nonplastic.

32 1.4 SILTY SAND (SM) with 3" interbed of SANDY lean CLAY (CL) at Elev 562.9', medium dense, grayish brown, moist, nonplastic to low plasticity.

17 1.4 SILTY fine to medium SAND (SM) contains scattered fine GRAVEL (2%), dense, grayish brown, moist, nonplastic.
SANDY lean CLAY (CL), medium brown, moist, low to medium plasticity.

9 1.4 SILTY fine SAND (SM), medium dense, medium brown, moist, nonplastic.
SANDY lean CLAY (CL), stiff, moist, medium plasticity.

6-17-04

600 590 580 570 560 550 540

1589+00 1590+00 1591+00

PROFILE
Horiz: 1" = 10'
Vert: 1" = 10'

BURBANK WESTERN CHANNEL
CHANNEL COVER
LOG OF TEST BORINGS 2 OF 7

ENGINEERING SERVICES | GEOTECHNICAL SERVICES

DRAWN BY F. Nguyen 10/11
CHECKED BY A. Mehrazar

FIELD INVESTIGATION BY: J. Pratt, B. McGahey, B. Hettick

STATE OF CALIFORNIA DEPARTMENT OF TRANSPORTATION

DIVISION OF ENGINEERING SERVICES STRUCTURE DESIGN DESIGN BRANCH 18

BRIDGE NO. 53-3078
POST MILE 30.07/30.38

OGS LOG OF TEST BORINGS SHEET (ENGLISH) (REV. 5/25/07)

ORIGINAL SCALE IN INCHES FOR REDUCED PLANS 0 1 2 3

UNIT: 3643
PROJECT NUMBER & PHASE: 07000211191
CONTRACT NO.: 07-1218W1

DISREGARD PRINTS BEARING EARLIER REVISION DATES
REVISION DATES 02-02-12 02-05-12 02-06-12
SHEET 35 OF 40

FILE => 53-3078-z-log2of7.dgn

USERNAME => s117606 DATE PLOTTED => 22-MAY-2012 TIME PLOTTED => 07:58

DIST	COUNTY	ROUTE	KILOMETER POST TOTAL PROJECT	SHEET No	TOTAL SHEETS
07	LA	5	29.4/31.6	1012	1931

Shiva Karimi 2-6-12
REGISTERED CIVIL ENGINEER

5-21-12
PLANS APPROVAL DATE

REGISTERED PROFESSIONAL ENGINEER Shiva Karimi No. 2651 Exp. 6-30-12 GEOTECHNICAL STATE OF CALIFORNIA

The State of California or its officers or agents shall not be responsible for the accuracy or completeness of electronic copies of this plan sheet.

LEGEND:

- (M) Moisture Content
- (PA) Particle Size Analysis
- (PI) Plasticity, Index, Liquid Limit
- (CR) Corrosivity Testing
- (CP) Compaction

FOR PLAN VIEW, SEE
"LOG OF TEST BORINGS 1 OF 7"

Note: No ground water encountered during field investigation.

Asphaltic Concrete Pavement (5" thick).
SILTY SAND (SM) with 20% GRAVEL interlayered with CLAYEY SAND, estimated medium dense, medium brown, dry, nonplastic, (roadbase material).
SILTY fine SAND (SM), contains 0 to 15% GRAVEL (≤ 3" Dia), interlayered with CLAYEY fine SAND (SC) with GRAVEL, loose, brown, moist, nonplastic, contains subrounded hard (slightly weathered) SCHIST rock fragments, (undifferentiated FILL/recent ALLUVIUM).
SANDY lean CLAY (CL) interbedded with minor SILT (ML), firm, brown, moist, low plasticity, (ALLUVIUM).

SILTY fine SAND (SM) gradationally interbedded with CLAYEY fine SAND (SC), estimated loose, brown, moist, nonplastic to minor low plasticity.
SANDY lean CLAY (CL) gradationally interbedded with CLAYEY fine SAND (SC), firm/loose, brown, moist, predominantly low plasticity, minor nonplastic.
SILTY fine SAND (SM) interbedded with minor (20%) CLAYEY fine SAND (SC), estimated medium dense, brown, moist, nonplastic.
Well-graded SAND (SW), contains 1 to 2% GRAVEL, medium dense, light grayish brown, moist, nonplastic.
Poorly-graded fine SAND (SP), contains 5% fine GRAVEL (≤1" diameter), interbedded with rare CLAYEY fine SAND (SC), medium dense, light grayish brown to brown, moist, nonplastic.
Well-graded SAND (SW), contains 10% fine GRAVEL, estimated medium dense, light grayish brown, moist, nonplastic.
SILTY fine SAND (SM) interbedded with fine SAND with SILT (SP-SM) contains 5% fine GRAVEL, and well-graded fine to medium SAND (SW), contains 2% fine GRAVEL and 15% COBBLES (≤ 6" Dia), medium dense, light grayish brown to yellowish brown, moist, nonplastic, subrounded soft (decomposed) GNEISSIC COBBLES, hard (slightly weathered) SCHISTOSE GRAVEL rock fragments.
SILTY fine to coarse SAND (SM) with 2 to 30% fine to coarse GRAVEL, contains rare thin interbeds (2" thick) of CLAYEY fine SAND (SC), medium dense to dense, brown, moist, nonplastic, contains subrounded to subangular hard (slight weathered) to soft (intensely weathered) SCHIST rock fragments.
SANDY lean CLAY (CL) interbedded with minor SILT (ML), estimated stiff/minor medium dense, brown, moist, low plasticity.
SILTY fine to medium SAND (SM), estimated medium dense, brown, moist, nonplastic.
Lean CLAY (CL), stiff, brown, moist, medium plasticity.

PROFILE
Horiz: 1" = 10'
Vert: 1" = 10'

LEGEND OF BORING OPERATIONS

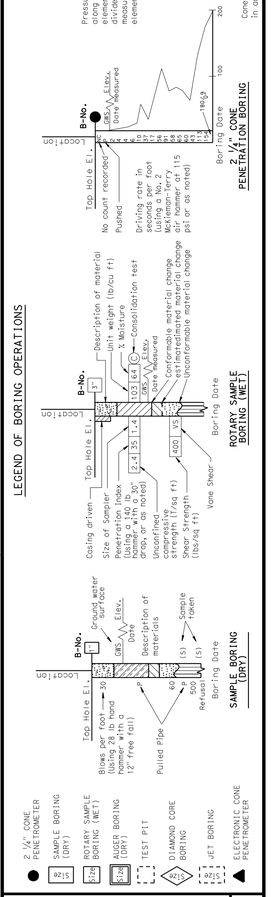

LEGEND OF EARTH MATERIALS

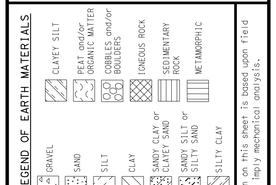

CONSISTENCY CLASSIFICATION FOR SOILS
According to the Standard Penetration Test

SPT N-Value (Blows/ Foot)	Granular	SPT N-Value (Blows/ Foot)	Cohesive
0-4	Very Loose	<2	Very Soft
5-10	Loose	2-4	Soft
11-30	Medium Dense	5-8	Medium stiff
31-50	Dense	9-15	Stiff
>50	Very Dense	16-30	Very Stiff
		31-60	Hard
		>60	Very Hard

NOTE: Classification of earth material as shown on this sheet is based upon field inspection and is not to be construed to imply mechanical analysis.

ENGINEERING SERVICES	GEOTECHNICAL SERVICES
DRAWN BY	F. Nguyen 10/11
CHECKED BY	A. Mehrazar

FIELD INVESTIGATION BY:
J. Pratt,
B. McGahey, B. Hettick

STATE OF CALIFORNIA
DEPARTMENT OF TRANSPORTATION

DIVISION OF ENGINEERING SERVICES
STRUCTURE DESIGN
DESIGN BRANCH 18

BRIDGE NO. 53-3078
POST MILE 30.07/30.38

BURBANK WESTERN CHANNEL
CHANNEL COVER
LOG OF TEST BORINGS 3 OF 7

OGS LOG OF TEST BORINGS SHEET (ENGLISH) (REV. 5/25/07)

ORIGINAL SCALE IN INCHES FOR REDUCED PLANS 0 1 2 3

UNIT: 3643
PROJECT NUMBER & PHASE: 07000211191
CONTRACT NO.: 07-1218W1

DISREGARD PRINTS BEARING EARLIER REVISION DATES
REVISION DATES 02-06-12 02-06-12 02-06-12

SHEET 36 OF 40

FILE => 53-3078-z-log3of7.dgn

USERNAME => s114937 DATE PLOTTED => 22-MAY-2012 TIME PLOTTED => 08:14

DIST	COUNTY	ROUTE	KILOMETER POST TOTAL PROJECT	SHEET No	TOTAL SHEETS
07	LA	5	29.4/31.6	1013	1931

Shiva Karimi 2-6-12
REGISTERED CIVIL ENGINEER

5-21-12
PLANS APPROVAL DATE

REGISTERED PROFESSIONAL ENGINEER Shiva Karimi No. 2651 Exp. 6-30-12 GEOTECHNICAL STATE OF CALIFORNIA

The State of California or its officers or agents shall not be responsible for the accuracy or completeness of electronic copies of this plan sheet.

LEGEND:

- (M) Moisture Content
- (PA) Particle Size Analysis
- (PI) Plasticity, Index, Liquid Limit
- (CR) Corrosivity Testing
- (CP) Compaction

FOR PLAN VIEW, SEE
"LOG OF TEST BORINGS 1 OF 7"

Note: No ground water encountered during field investigation.

PROFILE
Horiz: 1" = 10'
Vert: 1" = 10'

LEGEND OF BORING OPERATIONS

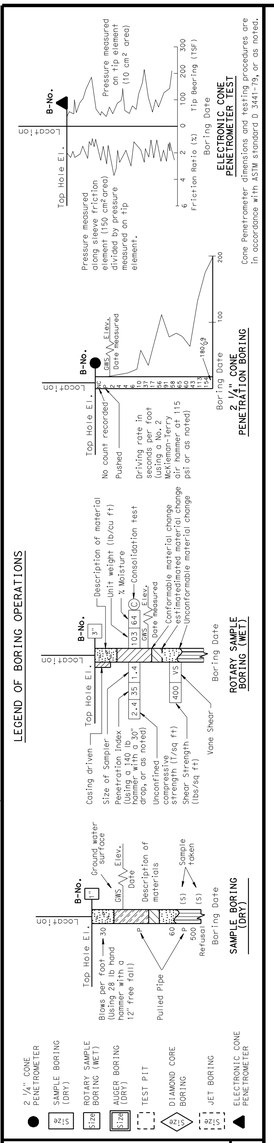

LEGEND OF EARTH MATERIALS

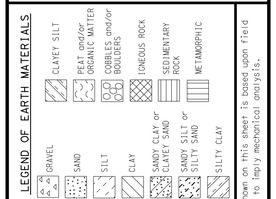

CONSISTENCY CLASSIFICATION FOR SOILS
According to the Standard Penetration Test

SPT N-Value (Blows/ Foot)	Granular	SPT N-Value (Blows/ Foot)	Cohesive
0-4	Very Loose	<2	Very Soft
5-10	Loose	2-4	Soft
11-30	Medium Dense	5-8	Medium stiff
31-50	Dense	9-15	Stiff
>50	Very Dense	16-30	Very Stiff
		31-60	Hard
		>60	Very Hard

NOTE: Classification of earth material as shown on this sheet is based upon field inspection and is not to be construed to imply mechanical analysis.

ENGINEERING SERVICES	GEOTECHNICAL SERVICES
DRAWN BY	F. Nguyen 10/11
CHECKED BY	A. Mehrazar

FIELD INVESTIGATION BY:
J. Pratt,
B. McGahey, B. Hettick

STATE OF CALIFORNIA
DEPARTMENT OF TRANSPORTATION

DIVISION OF ENGINEERING SERVICES
STRUCTURE DESIGN
DESIGN BRANCH 18

BRIDGE NO. 53-3078
POST MILE 30.07/30.38

BURBANK WESTERN CHANNEL
CHANNEL COVER
LOG OF TEST BORINGS 4 OF 7

OGS LOG OF TEST BORINGS SHEET (ENGLISH) (REV. 5/25/07)

ORIGINAL SCALE IN INCHES FOR REDUCED PLANS 0 1 2 3

UNIT: 3643
PROJECT NUMBER & PHASE: 07000211191
CONTRACT NO.: 07-1218W1

DISREGARD PRINTS BEARING EARLIER REVISION DATES
REVISION DATES 02-06-12 02-06-13 02-06-12

SHEET 37 OF 40

FILE => 53-3078-z-log4of7.dgn

USERNAME => s114937 DATE PLOTTED => 22-MAY-2012 TIME PLOTTED => 08:14

DIST	COUNTY	ROUTE	KILOMETER POST TOTAL PROJECT	SHEET No	TOTAL SHEETS
07	LA	5	29.4/31.6	1014	1931

Shiva Karimi 2-6-12
REGISTERED CIVIL ENGINEER

5-21-12
PLANS APPROVAL DATE

REGISTERED PROFESSIONAL ENGINEER Shiva Karimi No. 2651 Exp. 6-30-12 GEOTECHNICAL STATE OF CALIFORNIA

The State of California or its officers or agents shall not be responsible for the accuracy or completeness of electronic copies of this plan sheet.

LEGEND:

- (M) Moisture Content
- (PA) Particle Size Analysis
- (PI) Plasticity, Index, Liquid Limit
- (CR) Corrosivity Testing
- (CP) Compaction

FOR PLAN VIEW, SEE
"LOG OF TEST BORINGS 1 OF 7"

Note: No ground water encountered during field investigation.

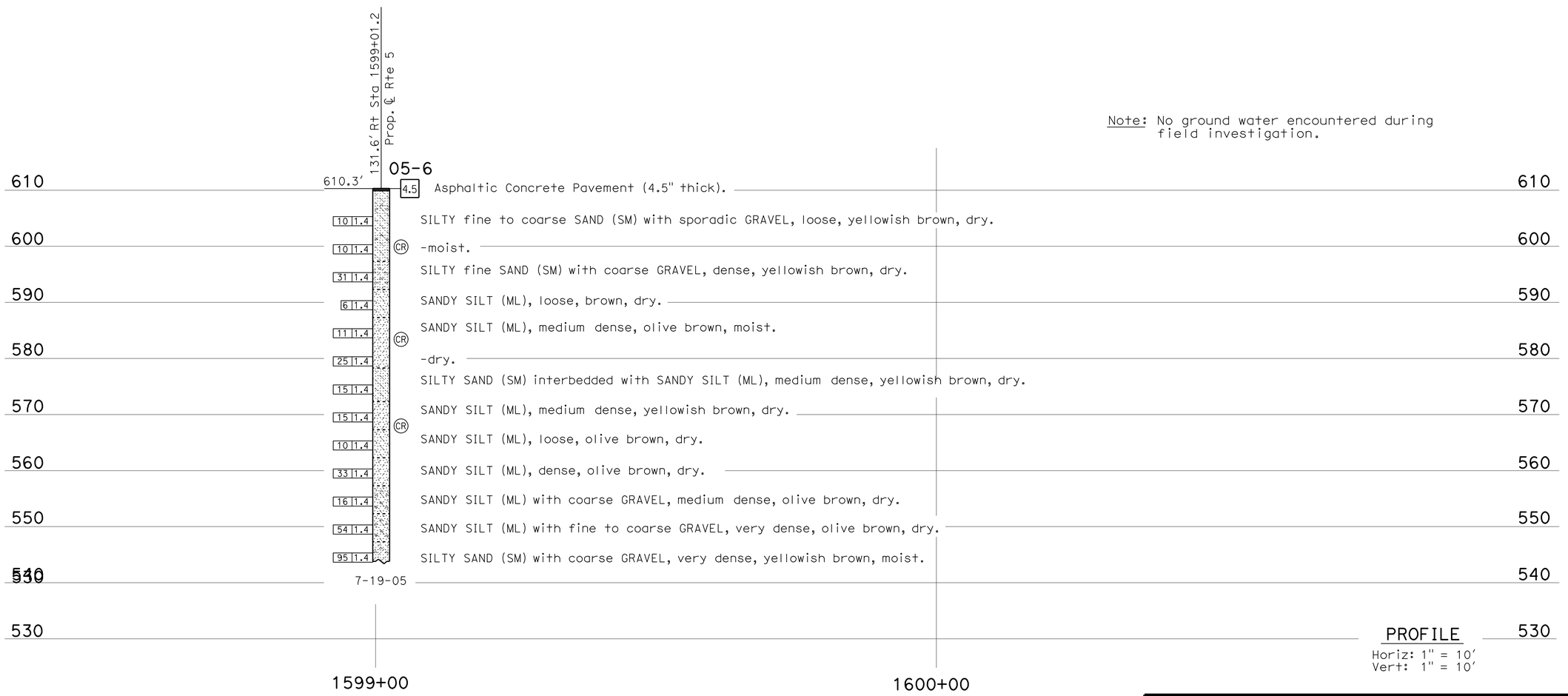

PROFILE
Horiz: 1" = 10'
Vert: 1" = 10'

LEGEND OF BORING OPERATIONS

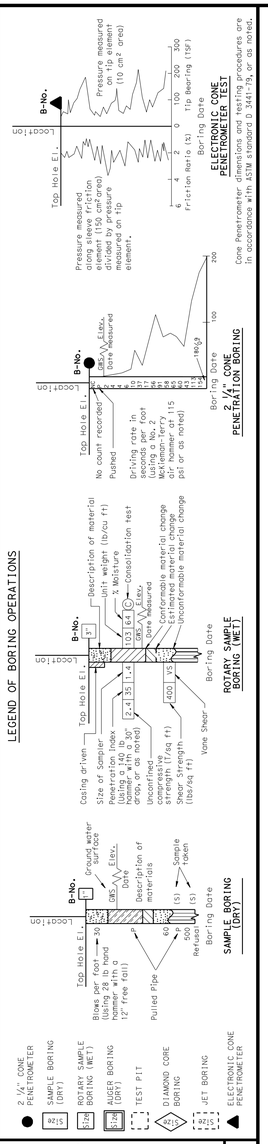

LEGEND OF EARTH MATERIALS

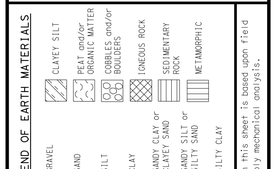

CONSISTENCY CLASSIFICATION FOR SOILS

According to the Standard Penetration Test

SPT N-Value (Blows/ Foot)	Granular	SPT N-Value (Blows/ Foot)	Cohesive
0-4	Very Loose	<2	Very Soft
5-10	Loose	2-4	Soft
11-30	Medium Dense	5-8	Medium stiff
31-50	Dense	9-15	Stiff
>50	Very Dense	16-30	Very Stiff
		31-60	Hard
		>60	Very Hard

NOTE: Classification of earth material as shown on this sheet is based upon field inspection and is not to be construed to imply mechanical analysis.

ENGINEERING SERVICES	GEOTECHNICAL SERVICES
DRAWN BY	F. Nguyen
CHECKED BY	A. Mehrazar

FIELD INVESTIGATION BY: K. Lai

STATE OF CALIFORNIA DEPARTMENT OF TRANSPORTATION

DIVISION OF ENGINEERING SERVICES STRUCTURE DESIGN DESIGN BRANCH 18

BRIDGE NO. 53-3078
POST MILE 30.07/30.38

BURBANK WESTERN CHANNEL
CHANNEL COVER
LOG OF TEST BORINGS 5 OF 7

OGS LOG OF TEST BORINGS SHEET (ENGLISH) (REV. 5/25/07)

ORIGINAL SCALE IN INCHES FOR REDUCED PLANS 0 1 2 3

UNIT: 3643
PROJECT NUMBER & PHASE: 07000211191
CONTRACT NO.: 07-1218W1

DISREGARD PRINTS BEARING EARLIER REVISION DATES → 02-06-12 02-06-12 02-06-12

SHEET 38 OF 40

FILE => 53-3078-z-log5of7.dgn

USERNAME => s114937 DATE PLOTTED => 22-MAY-2012 TIME PLOTTED => 08:15

DIST	COUNTY	ROUTE	KILOMETER POST TOTAL PROJECT	SHEET No	TOTAL SHEETS
07	LA	5	29.4/31.6	1015	1931

Shiva Karimi 2-6-12
REGISTERED CIVIL ENGINEER

5-21-12
PLANS APPROVAL DATE

REGISTERED PROFESSIONAL ENGINEER
Shiva Karimi
No. 2651
Exp. 6-30-12
GEOTECHNICAL
STATE OF CALIFORNIA

The State of California or its officers or agents shall not be responsible for the accuracy or completeness of electronic copies of this plan sheet.

FOR PLAN VIEW, SEE
"LOG OF TEST BORINGS 1 OF 7"

Note: No ground water encountered during field investigation.

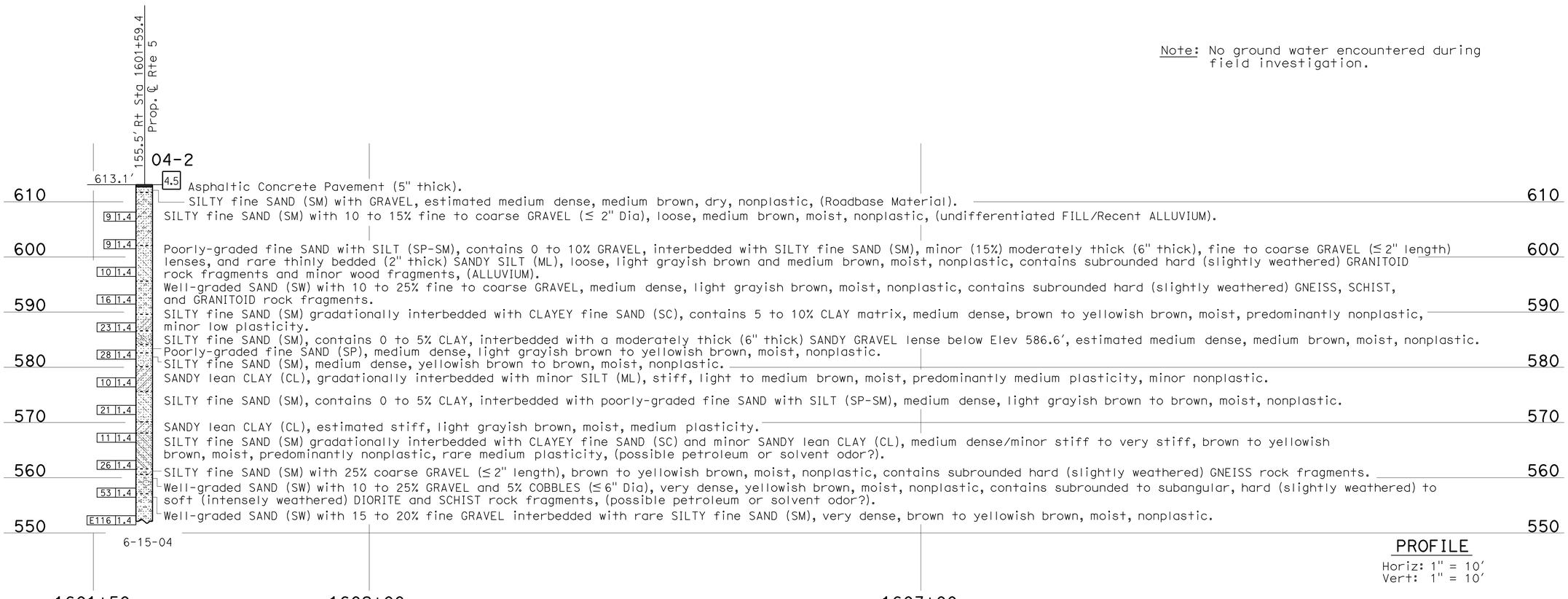

PROFILE
Horiz: 1" = 10'
Vert: 1" = 10'

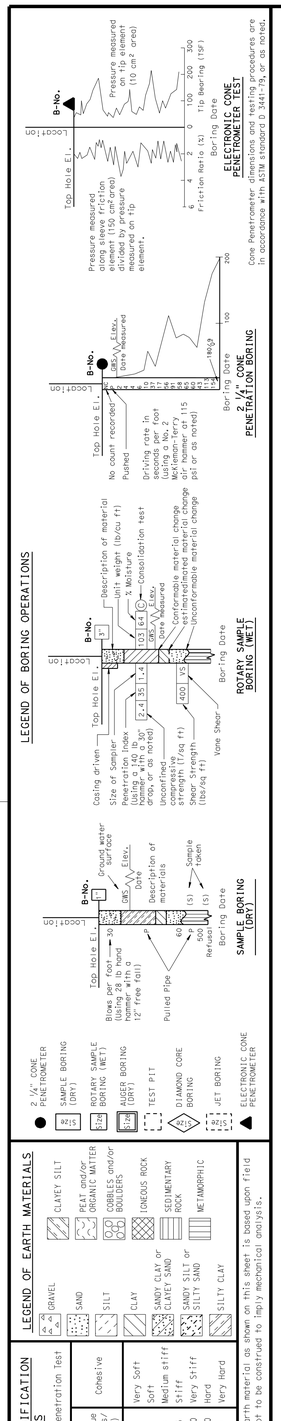

ENGINEERING SERVICES	GEOTECHNICAL SERVICES
DRAWN BY	F. Nguyen 10/11
CHECKED BY	A. Mehrazar

FIELD INVESTIGATION BY:
J. Pratt,
B. McGahey, B. Hettick

STATE OF CALIFORNIA
DEPARTMENT OF TRANSPORTATION

DIVISION OF ENGINEERING SERVICES
STRUCTURE DESIGN
DESIGN BRANCH 18

BRIDGE NO. 53-3078
POST MILE 30.07/30.38

BURBANK WESTERN CHANNEL
CHANNEL COVER
LOG OF TEST BORINGS 6 OF 7

OGS LOG OF TEST BORINGS SHEET (ENGLISH) (REV. 5/25/07)

ORIGINAL SCALE IN INCHES FOR REDUCED PLANS 0 1 2 3

UNIT: 3643
PROJECT NUMBER & PHASE: 07000211191
CONTRACT NO.: 07-1218W1

DISREGARD PRINTS BEARING EARLIER REVISION DATES
REVISION DATES 02-06-12 02-06-12 02-06-12
SHEET 39 OF 40

FILE => 53-3078-z-log6of7.dgn

USERNAME => s114937 DATE PLOTTED => 22-MAY-2012 TIME PLOTTED => 08:15

DIST	COUNTY	ROUTE	KILOMETER POST TOTAL PROJECT	SHEET No	TOTAL SHEETS
07	LA	5	29.4/31.6	1016	1931

Shiva Karimi 2-6-12
REGISTERED CIVIL ENGINEER

5-21-12
PLANS APPROVAL DATE

REGISTERED PROFESSIONAL ENGINEER Shiva Karimi No. 2651 Exp. 6-30-12 GEOTECHNICAL STATE OF CALIFORNIA

The State of California or its officers or agents shall not be responsible for the accuracy or completeness of electronic copies of this plan sheet.

LEGEND:

- (M) Moisture Content
- (PA) Particle Size Analysis
- (PI) Plasticity, Index, Liquid Limit
- (CR) Corrosivity Testing
- (CP) Compaction

FOR PLAN VIEW, SEE
"LOG OF TEST BORINGS 1 OF 7"

Note: No ground water encountered during field investigation.

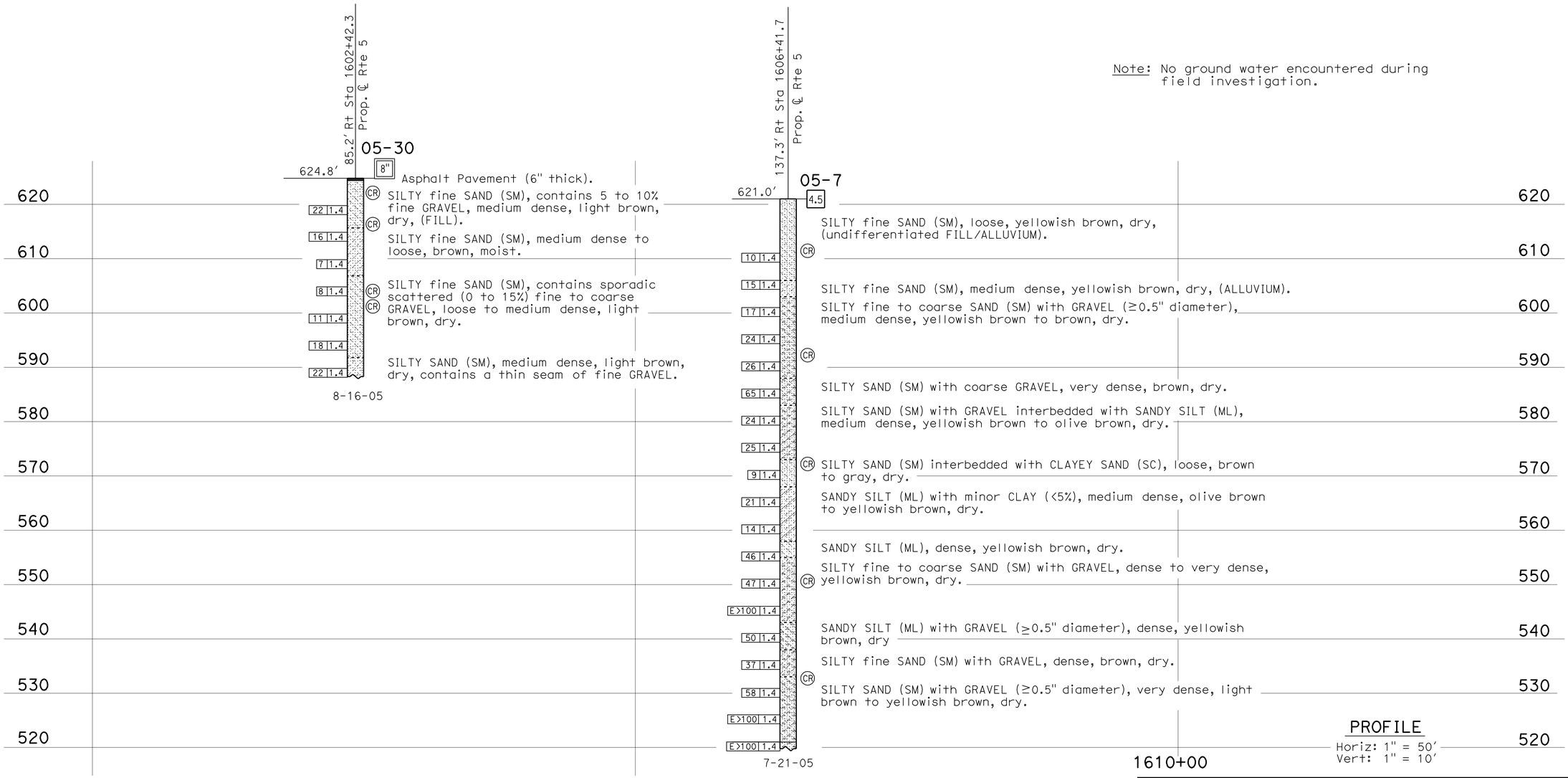

PROFILE
Horiz: 1" = 50'
Vert: 1" = 10'

LEGEND OF BORING OPERATIONS

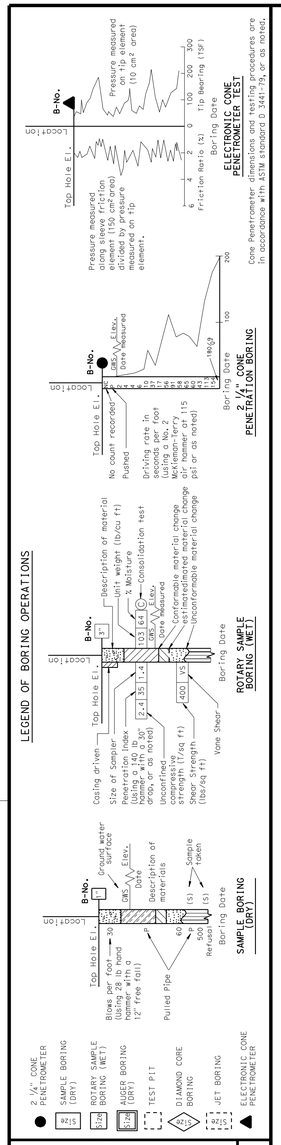

LEGEND OF EARTH MATERIALS

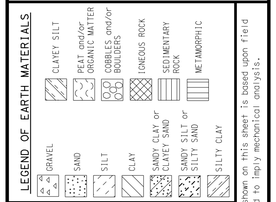

CONSISTENCY CLASSIFICATION FOR SOILS
According to the Standard Penetration Test

SPT N-Value (Blows/ Foot)	Granular	SPT N-Value (Blows/ Foot)	Cohesive
0-4	Very Loose	<2	Very Soft
5-10	Loose	2-4	Soft
11-30	Medium Dense	5-8	Medium stiff
31-50	Dense	9-15	Stiff
>50	Very Dense	16-30	Very Stiff
		31-60	Hard
		>60	Very Hard

NOTE: Classification of earth material as shown on this sheet is based upon field inspection and is not to be construed to imply mechanical analysis.

ENGINEERING SERVICES	GEOTECHNICAL SERVICES
DRAWN BY	I.G-Remmen
CHECKED BY	A. Mehrazar

FIELD INVESTIGATION BY: J. Pratt

STATE OF CALIFORNIA
DEPARTMENT OF TRANSPORTATION

DIVISION OF ENGINEERING SERVICES
STRUCTURE DESIGN
DESIGN BRANCH 18

BRIDGE NO. 53-3078
POST MILE 30.07/30.38

BURBANK WESTERN CHANNEL
CHANNEL COVER
LOG OF TEST BORINGS 7 OF 7

OGS LOG OF TEST BORINGS SHEET (ENGLISH) (REV. 5/25/07)

ORIGINAL SCALE IN INCHES FOR REDUCED PLANS 0 1 2 3

UNIT: 3643
PROJECT NUMBER & PHASE: 07000211191
CONTRACT NO.: 07-1218W1

DISREGARD PRINTS BEARING EARLIER REVISION DATES

REVISION DATES: 02-06-12 02-06-12 02-06-12

SHEET 40 OF 40

FILE => 53-3078-z-log7of7.dgn

USERNAME => s114937 DATE PLOTTED => 22-MAY-2012 TIME PLOTTED => 08:15

DIST	COUNTY	ROUTE	POST MILES TOTAL PROJECT	SHEET No.	TOTAL SHEETS
07	LA	5	29.4/31.6	1017	1931

dEstrada. 01/31/12
REGISTERED CIVIL ENGINEER DATE

5-21-12
PLANS APPROVAL DATE

REGISTERED PROFESSIONAL ENGINEER JORGE I. ESTRADA No. C51473 Exp. 06/30/12 CIVIL STATE OF CALIFORNIA

The State of California or its officers or agents shall not be responsible for the accuracy or completeness of electronic copies of this plan sheet.

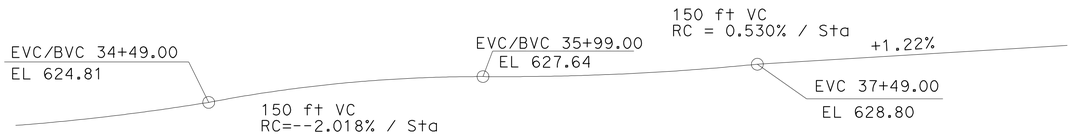

PROFILE GRADE

NO SCALE

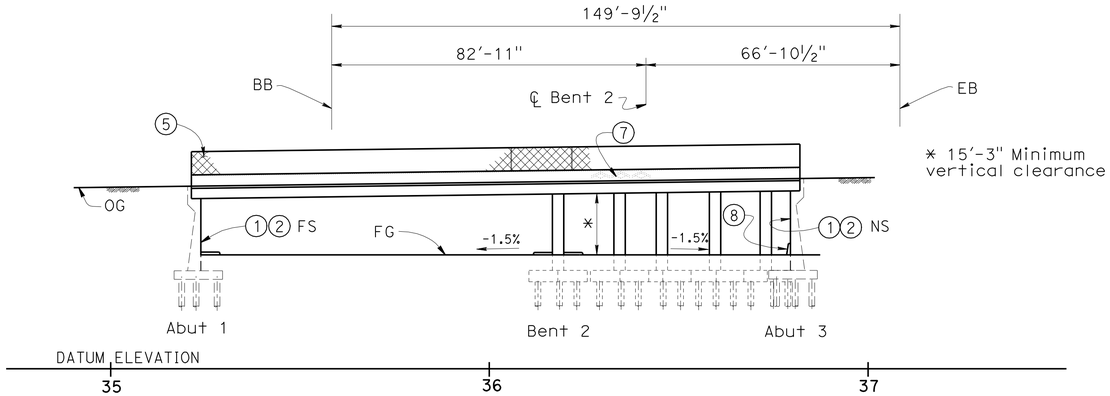

ELEVATION

1" - 20'-0"

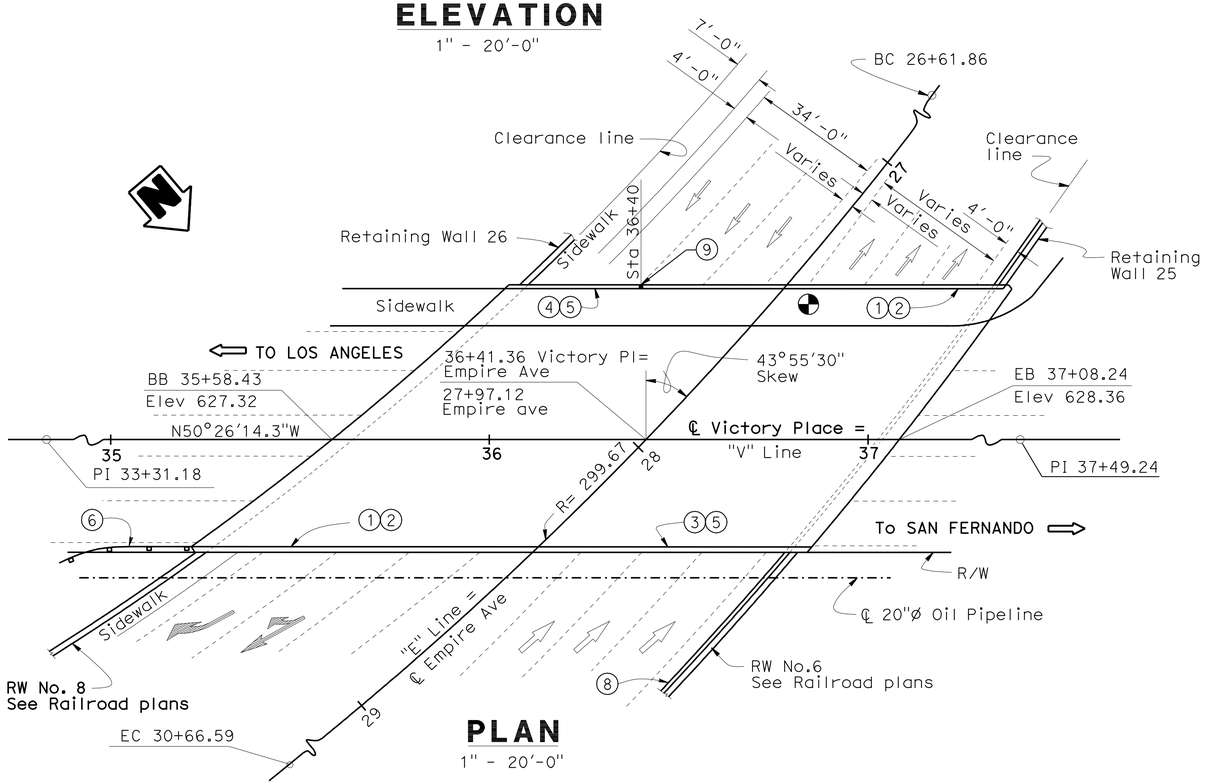

PLAN

1" - 20'-0"

LEGEND

Indicates new structure

Indicates point of minimum vertical clearance

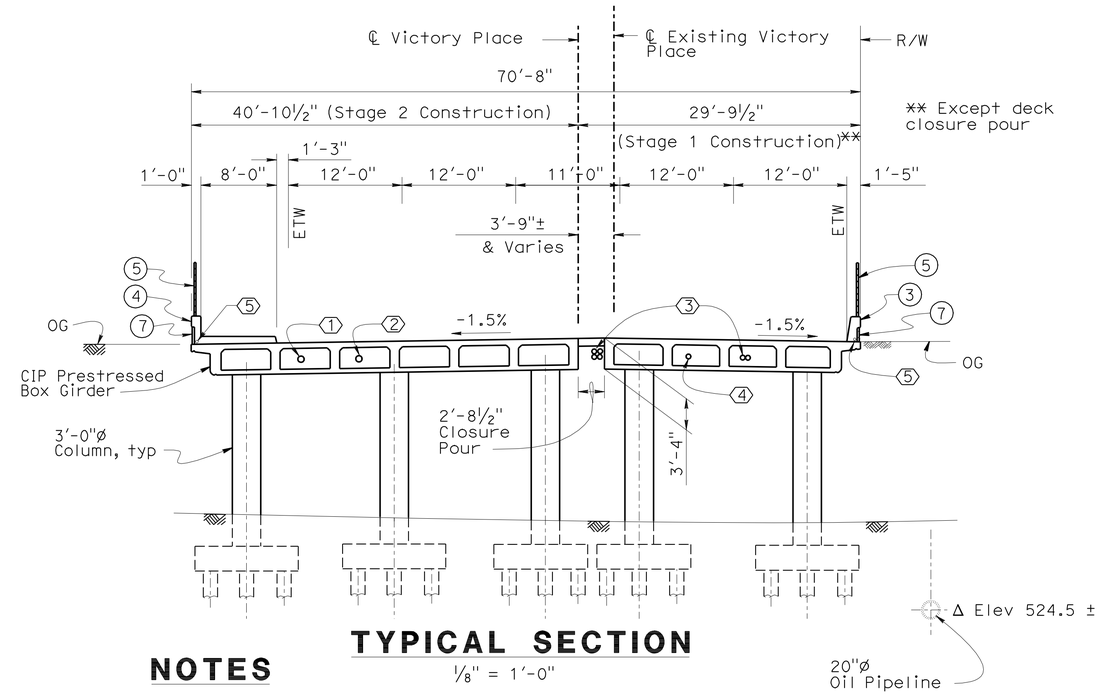

TYPICAL SECTION

⅛" = 1'-0"

NOTES

1. Paint "VICTORY PLACE SEPARATION"
2. Paint "BRIDGE NO. 53C2171"
3. Concrete Barrier Type 732 MOD
4. Concrete Barrier Type 26 MOD
5. Chain Link Railing Type 7
6. MBGR, see "Roadway Plans"
7. Aesthetic Treatment
8. Concrete Barrier Type 60D, see "Roadway Plans"
9. Luminaire, see B11-54 and "Signal Plans"

— For "GENERAL NOTES" and "PILE DATA TABLE", see "INDEX TO PLANS" sheet

— For Stagging see "DECK CONTOURS" sheet

— Relocation of existing utilities prior to this Contract by Others

— Utilities on bridge to be installed by corresponding services utility company

UTILITIES

1. 8" ø Domestic waterline, City of Burbank
2. 8" ø Recycled waterline, City of Burbank
3. 6" ø Electrical conduit total 6, City of Burbank
4. 6" ø Communication conduit, City of Burbank
5. 2" ø Lighting Conduit

QUANTITIES

STRUCTURE EXCAVATION (BRIDGE)	2,070	CY
STRUCTURE BACKFILL (BRIDGE)	1,337	CY
PERVIOUS BACKFILL MATERIAL	135	CY
24" CAST-IN-DRILLED-HOLE CONCRETE PILING	4,509	LF
PRESTRESSING CAST-IN-PLACE CONCRETE	LUMP SUM	
STRUCTURAL CONCRETE, BRIDGE FOOTING	350	CY
STRUCTURAL CONCRETE, BRIDGE	976	CY
ARCHITECTURAL TREATMENT	538	SQFT
JOINT SEAL (MR 2")	203	LF
BAR REINFORCING STEEL (BRIDGE)	417,689	LB
CHAIN LINK RAILING (TYPE 7)	295	LF
CONCRETE BARRIER (TYPE 26 MODIFIED)	131	LF
CONCRETE BARRIER (TYPE 732 MODIFIED)	164	LF

MIKE POPE
DESIGN ENGINEER

	BY	CHECKED
DESIGN	J.RUIZ/J.ESTRADA	DAVID P. MURRAY
DETAILS	SURAJ DUTTA	J.RUIZ/J.ESTRADA
QUANTITIES	MIKE POPE	DAVID P. MURRAY

LOAD FACTOR DESIGN — LIVE LOADING: HS20-44 AND ALTERNATIVE AND PERMIT DESIGN LOAD

	BY	CHECKED
LAYOUT	SURAJ DUTTA	J. ESTRADA
SPECIFICATIONS	JAMES CHOI	PLANS AND SPECS COMPARED X

ORIGINAL SCALE IN INCHES FOR REDUCED PLANS 0 1 2 3

STATE OF CALIFORNIA
DEPARTMENT OF TRANSPORTATION

DIVISION OF ENGINEERING SERVICES
STRUCTURE DESIGN
DESIGN BRANCH 18

BRIDGE NO. 53C2171
POST MILE 30.53

VICTORY PLACE SEPARATION
GENERAL PLAN

UNIT: 3603
PROJECT NUMBER & PHASE: 0700021119-1
CONTRACT NO.: 07-121w1

DISREGARD PRINTS BEARING EARLIER REVISION DATES

REVISION DATES: 11-15-10 1/30/12 4/30/12 4/30/12

SHEET 1 OF 19

USERNAME => s119571 DATE PLOTTED => 11-JUL-2012 TIME PLOTTED => 11:03

STRUCTURES DESIGN GENERAL PLAN SHEET (ENGLISH) (REV.09-01-10)

FILE => 53c-2171-a-gp.dgn

DIST	COUNTY	ROUTE	POST MILES TOTAL PROJECT	SHEET No.	TOTAL SHEETS
07	LA	5	29.4/31.6	1018	1931

JEstrada. 01/31/12
REGISTERED CIVIL ENGINEER DATE

5-21-12
PLANS APPROVAL DATE

REGISTERED PROFESSIONAL ENGINEER JORGE I. ESTRADA No. C51473 Exp. 06/30/12 CIVIL STATE OF CALIFORNIA

The State of California or its officers or agents shall not be responsible for the accuracy or completeness of electronic copies of this plan sheet.

Acceleration Response Spectrum 5% Damping

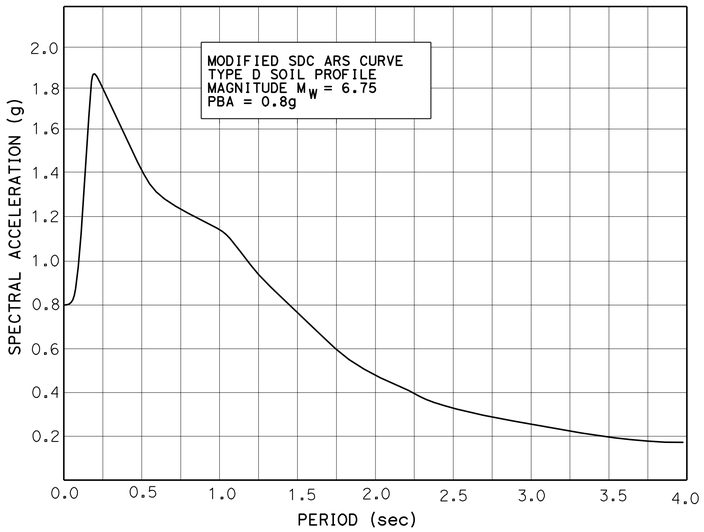

ARS CURVE

GENERAL NOTES
LOAD FACTOR DESIGN

DESIGN: CALTRANS BRIDGE DESIGN SPECIFICATION-April 2000 (LFD) (1996 16th Edition AASHTO with Interims and Revisions by CALTRANS)

SEISMIC DESIGN: Caltrans Seismic Design Criteria (SDC), Version 1.3 February 2004

DEAD LOAD: Includes 35psf for future wearing surface.

LIVE LOAD: HS20-44 and alternative and permit design load.

SEISMIC LOADING: Site Specific Acceleration Response Spectra Curve

REINFORCED CONCRETE:
f_y = 60,000 psi
f'_c = See "CONCRETE STRENGTH AND TYPE LIMITS"
n = 8
Transverse Deck Slabs (Working Stress Design)
f_s = 20,000 psi
f_c = 1,200 psi
n = 10

PRESTRESSED CONCRETE: For "Prestressing Notes" See "GIRDER LAYOUT" sheet

PILE DATA TABLE

Location	Pile Type	Design Loading	Nominal Resistance		Bottom of Footing Elev (ft)	Design Tip Elevations (ft)	Specified Tip Elevation (ft)
			Compression	Tension			
Abutment 1	CIDH 24"	70 Tons	140 Tons	0	+603.0	+567.0 (1) +567.0 (2)	+567.0
Bent 2	CIDH 24"	70 Tons	140 Tons	0	+603.0	+570.0 (1) +570.0 (2)	+570.0
Abutment 3	CIDH 24"	70 Tons	140 Tons	0	+603.0	+570.0 (1) +570.0 (2)	+570.0

Notes: Design tip elevation is controlled by the following demands:
(1) Nominal Resistance in Compression.
(2) Pile tip elevation for lateral loads. Free head condition ($\leq$ 0.25 inch lateral deflection at top of pile).

STANDARD PLANS DATED MAY 2006

A10A-A10B	ACRONYMS AND ABBREVIATIONS
A10C-A10D	SYMBOLS
A62C	LIMITS OF PAYMENT FOR EXCAVATION AND BACKFILL
RSP- A76A	CONCRETE BARRIER TYPE 60
B0-1	BRIDGE DETAILS
B0-5	BRIDGE DETAILS
B0-13	BRIDGE DETAILS
B2-3	16" AND 24" CAST-IN-DRILLED-HOLE CONCRETE PILE
RSP- B6-21	JOINT SEALS (MAXIMUM MOVEMENT RATING = 2")
B7-1	BOX GIRDER DETAILS
B7-10	UTILITY OPENING BOX GIRDER
B8-5	CAST-IN-PLACE PRESTRESSED GIRDER DETAILS
B11-52	CHAIN LINK RAILING TYPE 7
B11-54	CONCRETE BARRIER TYPE 26
B11-55	CONCRETE BARRIER TYPE 732
B14-4	WATER SUPPLY LINE (BRIDGE) (PIPE SIZES LESS THAN 4")
B14 -3	COMMUNICATION AND SPRINKLER CONTROL CONDUITS (CONDUIT LESS THAN SIZE 4")
B14-5	WATER SUPPLY LINE (DETAILS) (PIPE SIZES LESS THAN NPS 4")
T3	TEMPORARY RAILING (TYPE K)
NSP- T3A	TEMPORARY RAILING (TYPE K)

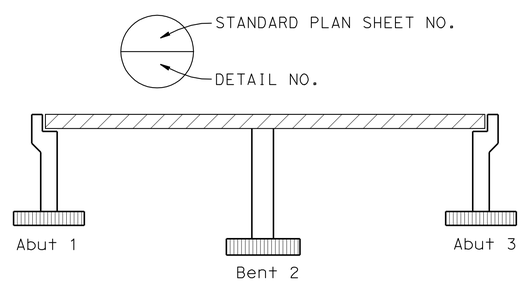

CONCRETE STRENGTH AND TYPE LIMITS

No Scale

Structural Concrete, Bridge (3600 psi @ 28 days)
Structural Concrete, Bridge (4000 psi @ 28 days)
Structural Concrete, Bridge Footing (3600 psi @ 28 days)

INDEX TO PLANS

Sheet No.	Title
1.	GENERAL PLAN
2.	INDEX TO PLANS
3.	DECK COUNTOURS
4.	FOUNDATION PLAN
5.	ABUTMENT 1 LAYOUT
6.	ABUTMENT 3 LAYOUT
7.	ABUTMENT DETAILS
8.	BENT LAYOUT
9.	BENT DETAILS NO. 1
10.	BENT DETAILS NO. 2
11.	TYPICAL SECTION
12.	GIRDER LAYOUT
13.	TOP GIRDER REINFORCEMENT
14.	BOTTOM GIRDER REINFORCEMENT
15.	ARCHITECTURAL TREATMENT NO. 1
16.	ARCHITECTURAL TREATMENT NO. 2
17.	MISCELLANEOUS DETAILS
18.	LOG OF TEST BORINGS NO. 1
19.	LOG OF TEST BORINGS NO. 2

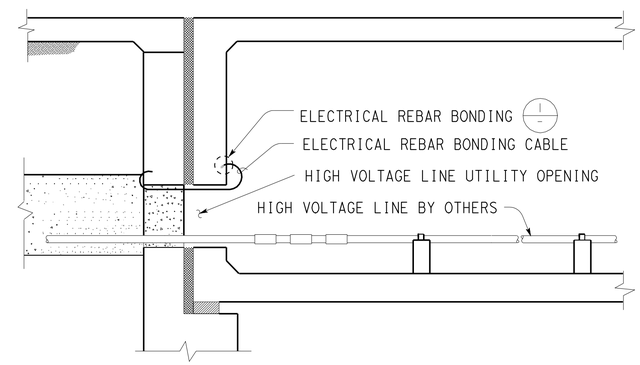

ELECTRICAL REBAR BONDING

NO SCALE

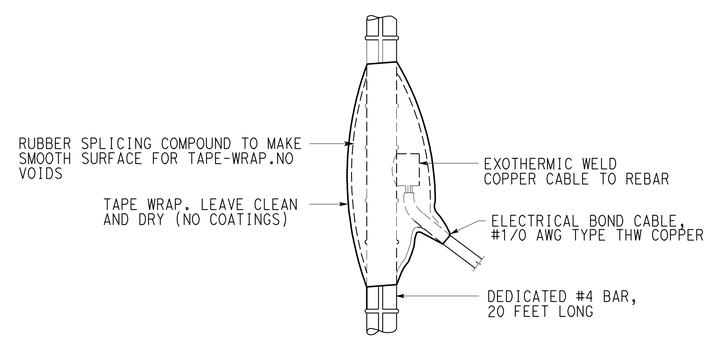

1 ELECTRICAL REBAR BONDING DETAIL

NO SCALE

DESIGN	BY JOEL RUIZ	CHECKED DAVID P. MURRAY	
DETAILS	BY SURAJ DUTTA	CHECKED J. RUIZ	
QUANTITIES	BY MIKE POPE	CHECKED DAVID P. MURRAY	

STATE OF CALIFORNIA
DEPARTMENT OF TRANSPORTATION

DIVISION OF ENGINEERING SERVICES
STRUCTURE DESIGN
DESIGN BRANCH 18

BRIDGE NO. 53C2171
POST MILE 30.53

VICTORY PLACE SEPARATION
INDEX TO PLANS

STRUCTURES DESIGN DETAIL SHEET (ENGLISH) (REV. 09-01-10)

ORIGINAL SCALE IN INCHES FOR REDUCED PLANS 0 1 2 3

UNIT: 3603
PROJECT NUMBER & PHASE: 0700021119-1
CONTRACT NO.: 07-121w1

DISREGARD PRINTS BEARING EARLIER REVISION DATES
REVISION DATES 10-24-06 04-16-12 04-30-12 02/02/13

SHEET 2 OF 19

FILE => 53c-2171-b-itp-eng.dgn

USERNAME => s114937 DATE PLOTTED => 22-MAY-2012 TIME PLOTTED => 08:15

DIST	COUNTY	ROUTE	POST MILES TOTAL PROJECT	SHEET No.	TOTAL SHEETS
07	LA	5	29.4/31.6	1019	1931

REGISTERED CIVIL ENGINEER 01/31/12 DATE

5-21-12
PLANS APPROVAL DATE

REGISTERED PROFESSIONAL ENGINEER JORGE I. ESTRADA No. C51473 Exp. 06/30/12 CIVIL STATE OF CALIFORNIA

The State of California or its officers or agents shall not be responsible for the accuracy or completeness of electronic copies of this plan sheet.

NOTE:

1. Contours are at 0.2′ intervals
2. × Indicates 10.0′ intervals along station Line
3. Contours do not include camber

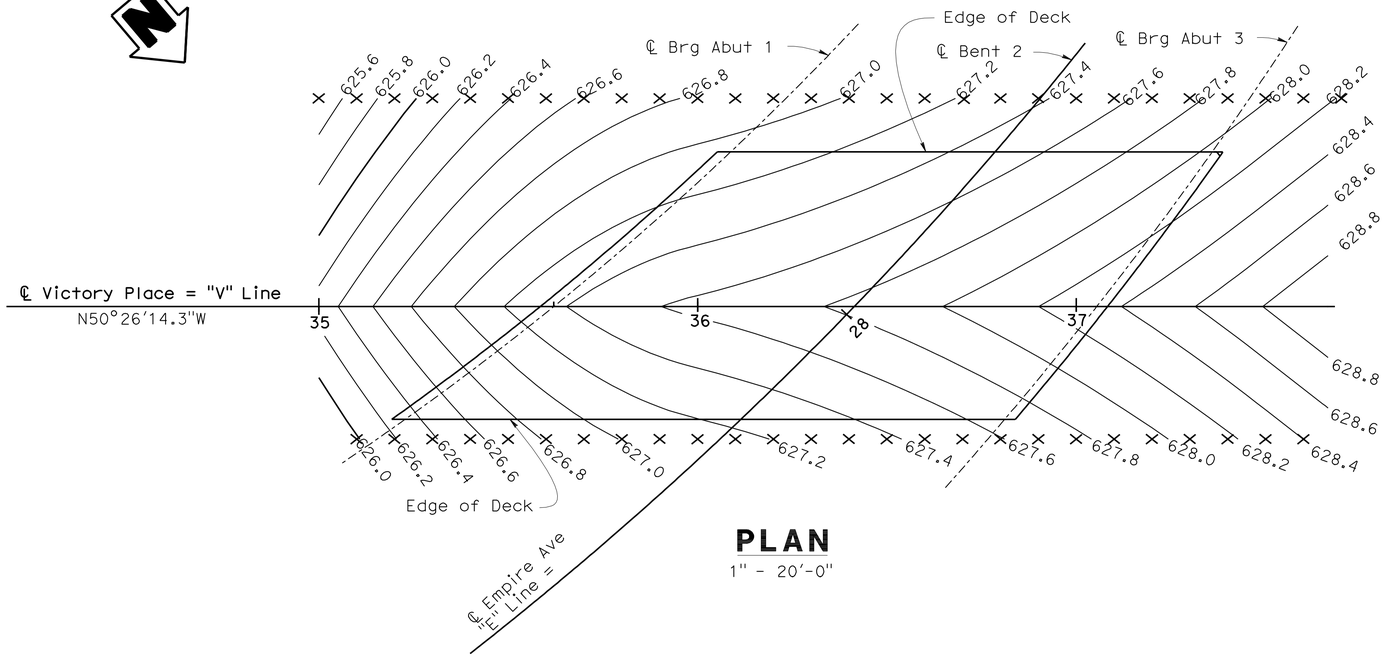

PLAN

1" - 20′-0"

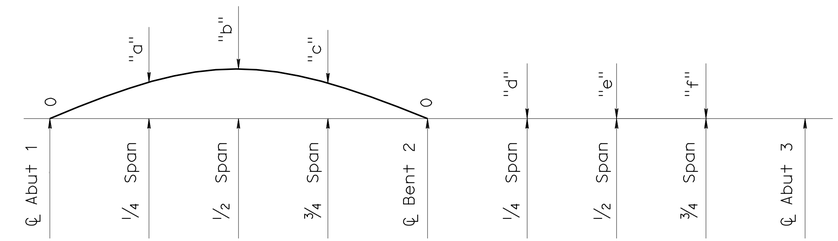

	"a"	"b"	"c"	"d"	"e"	"f"
STAGE 1	0.08′	0.11′	0.07′			
STAGE 2	0.06′	0.08′	0.04′			

CAMBER DIAGRAM

NO SCALE
Does not include allowance for falsework settlement

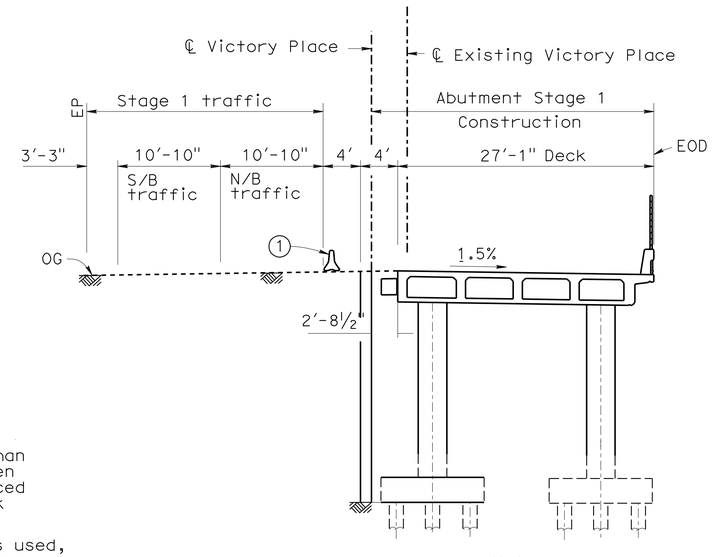

STAGE 1

1/8"= 1′-0"

Note
1 Temporary Railing (Type) K

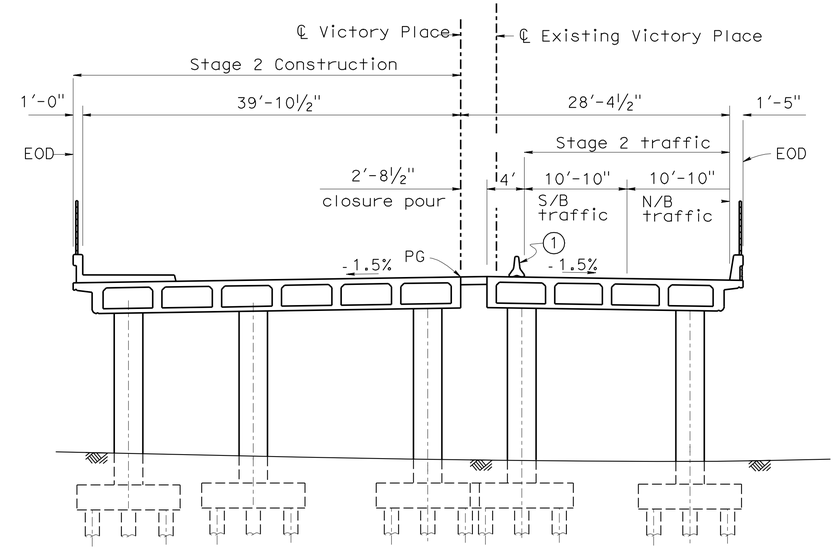

STAGE 2

1/8"= 1′-0"

FALSEWORK RELEASE

Alternative 1:

Falsework shall be released as soon as permitted by the specifications. Closure pour shall not be placed sooner than 60 days after the falsework had been released.

Alternative 2:

Falsework shall not be released less than 28 days after the last concrete has been placed. Closure pour shall not be placed sooner than 14 days after the falsework has been released.

When Falsework Release Alternative 2 is used, camber values are 0.75 times those shown.

DESIGN	BY JOEL RUIZ	CHECKED DAVID P. MURRAY	
DETAILS	BY SURAJ DUTTA	CHECKED J. RUIZ	
QUANTITIES	BY MIKE POPE	CHECKED DAVID P. MURRAY	

STATE OF CALIFORNIA
DEPARTMENT OF TRANSPORTATION

DIVISION OF ENGINEERING SERVICES
STRUCTURE DESIGN
DESIGN BRANCH 18

BRIDGE NO. 53C2171
POST MILE 30.53

VICTORY PLACE SEPARATION
DECK CONTOURS

STRUCTURES DESIGN DETAIL SHEET (ENGLISH) (REV. 09-01-10)

ORIGINAL SCALE IN INCHES FOR REDUCED PLANS 0 1 2 3

UNIT: 3603
PROJECT NUMBER & PHASE: 0700021119-1
CONTRACT NO.: 07-121w1

DISREGARD PRINTS BEARING EARLIER REVISION DATES

REVISION DATES 02-16-08 01-27-12

SHEET 3 OF 19

FILE => 53c-2171-d-dc-eng.dgn

USERNAME => s119571 DATE PLOTTED => 11-JUL-2012 TIME PLOTTED => 11:03

DIST	COUNTY	ROUTE	POST MILES TOTAL PROJECT	SHEET No.	TOTAL SHEETS
07	LA	5	29.4/31.6	1020	1931

JEstrada. 01/31/12
REGISTERED CIVIL ENGINEER DATE

5-21-12
PLANS APPROVAL DATE

REGISTERED PROFESSIONAL ENGINEER
Jorge I. Estrada
No. C51473
Exp. 06-30-12
CIVIL
STATE OF CALIFORNIA

The State of California or its officers or agents shall not be responsible for the accuracy or completeness of electronic copies of this plan sheet.

CURVE DATA

	R	Δ	T	L
Ⓐ	986.01	1°42′38"	14.72	29.44
Ⓑ	1313.97	24°42′31"	287.80	566.65
Ⓒ	983.17	23°35′11"	205.27	404.73
Ⓓ	1267.71	3°47′44"	42.01	83.98
Ⓔ	552.00	6°14′20"	30.08	60.11
Ⓕ	809.71	16°33′11"	117.79	233.93
Ⓗ	1036.24	11°07′39"	100.94	201.25

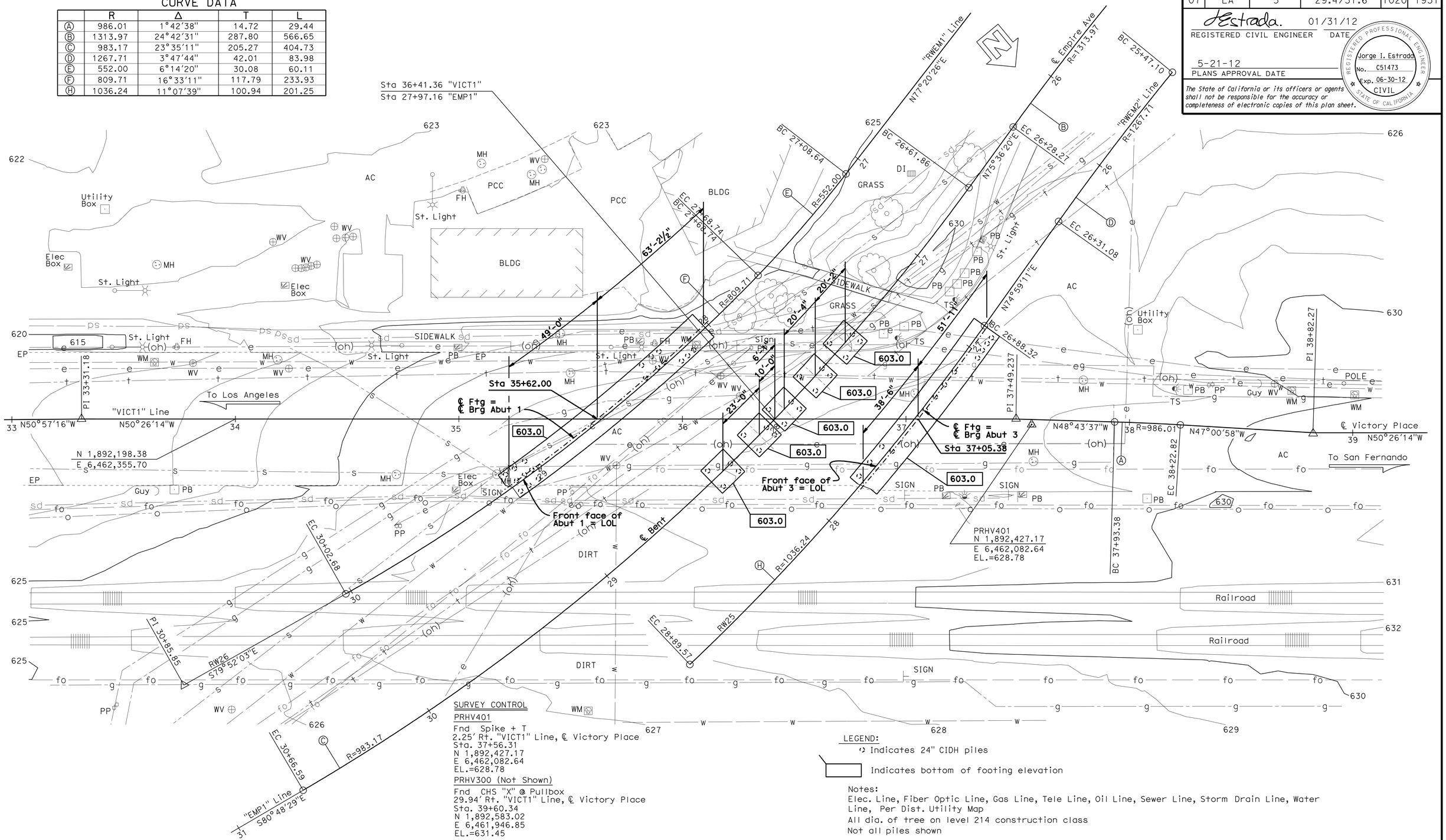

SURVEY CONTROL

PRHV401

Fnd Spike + T
2.25′ Rt. "VICT1" Line, ℄ Victory Place
Sta. 37+56.31
N 1,892,427.17
E 6,462,082.64
EL.=628.78

PRHV300 (Not Shown)

Fnd CHS "X" @ Pullbox
29.94′ Rt. "VICT1" Line, ℄ Victory Place
Sta. 39+60.34
N 1,892,583.02
E 6,461,946.85
EL.=631.45

LEGEND:

Indicates 24" CIDH piles

Indicates bottom of footing elevation

Notes:
Elec. Line, Fiber Optic Line, Gas Line, Tele Line, Oil Line, Sewer Line, Storm Drain Line, Water Line, Per Dist. Utility Map
All dia. of tree on level 214 construction class
Not all piles shown

PRELIMINARY INVESTIGATION SECTION

SCALE 1"=20′	VERT.DATUM NGVD 88	PHOTOGRAMMETRY AS OF: X			
	HORZ.DATUM NAD83 (1991.35)	SURVEYED	BY District	CHECKED	BY Don Ivy 10/2011
ALIGNMENT TIES Dist. Traverse Sheet		DRAFTED	BY Sharon Zheng 10/2011	CHECKED	BY Lawrence Lew 10/2011

DESIGN	BY X	CHECKED X	
DETAILS	BY X	CHECKED X	
QUANTITIES	BY X	CHECKED X	

STATE OF CALIFORNIA
DEPARTMENT OF TRANSPORTATION

DIVISION OF ENGINEERING SERVICES
STRUCTURE DESIGN
DESIGN BRANCH 18

BRIDGE NO. 53C2171
POST MILE 30.76

VICTORY PLACE OC
FOUNDATION PLAN

STRUCTURES FOUNDATION PLAN SHEET (ENGLISH) (REV. 09-01-10)

ORIGINAL SCALE IN INCHES FOR REDUCED PLANS 0 1 2 3

UNIT: 3646
PROJECT NUMBER & PHASE: 0700021119 CONTRACT NO.: X

DISREGARD PRINTS BEARING EARLIER REVISION DATES

REVISION DATES 10/31/2011 4/18/2012

SHEET 4 OF 19

FILE => 53c-2171-e-fpl01.dgn

DIST	COUNTY	ROUTE	POST MILES TOTAL PROJECT	SHEET No.	TOTAL SHEETS
07	LA	5	29.431.6	1021	1931

REGISTERED CIVIL ENGINEER — DATE 01/31/12

PLANS APPROVAL DATE 5-21-12

REGISTERED PROFESSIONAL ENGINEER — JORGE I. ESTRADA No. C51473 Exp. 06/30/12 CIVIL — STATE OF CALIFORNIA

The State of California or its officers or agents shall not be responsible for the accuracy or completeness of electronic copies of this plan sheet.

NOTES:

1. Concrete Barrier not shown
2. Abutment footing reinforcement from stage 1 construction to be spliced with stage 2 construction. Only "Service" butt splices are allowed.
3. Pile Layout is radial to ℄ Brg Abutment
4. For "Section B-B" see "Abutment Details" sheet

* Measured along ℄ Brg Abut 1

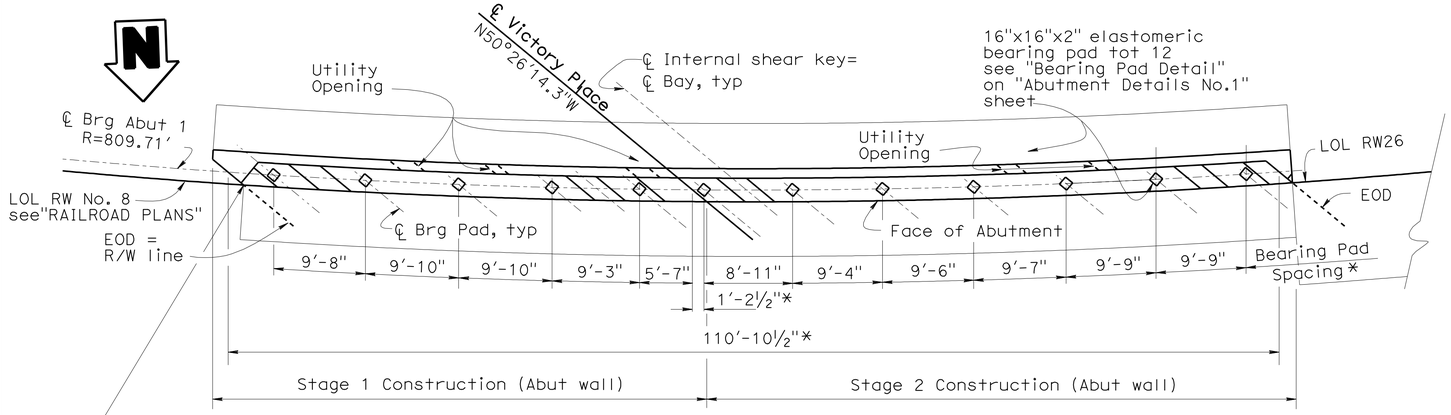

PLAN

⅛" = 1'-0"

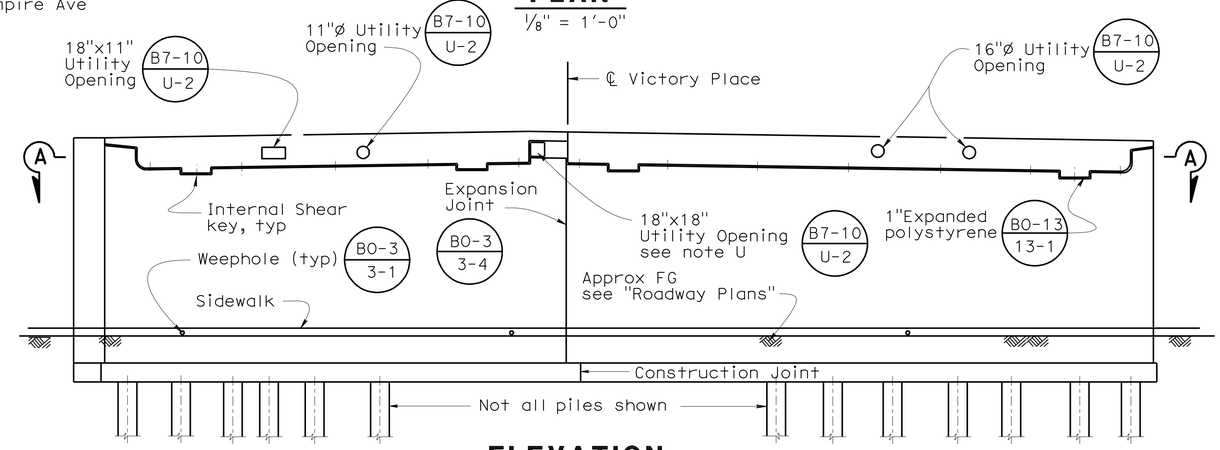

ELEVATION

⅛" = 1'-0"

Note U: For "OPENING DETAIL", see "MISCELLANEOUS DETAILS" sheet.

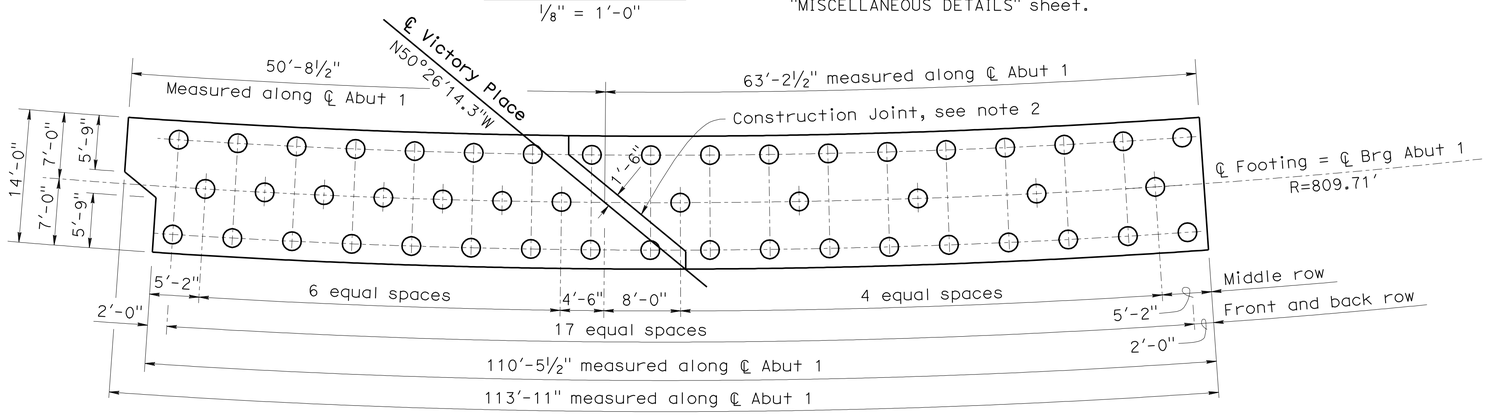

FOOTING AND PILE LAYOUT

⅛" = 1'-0"

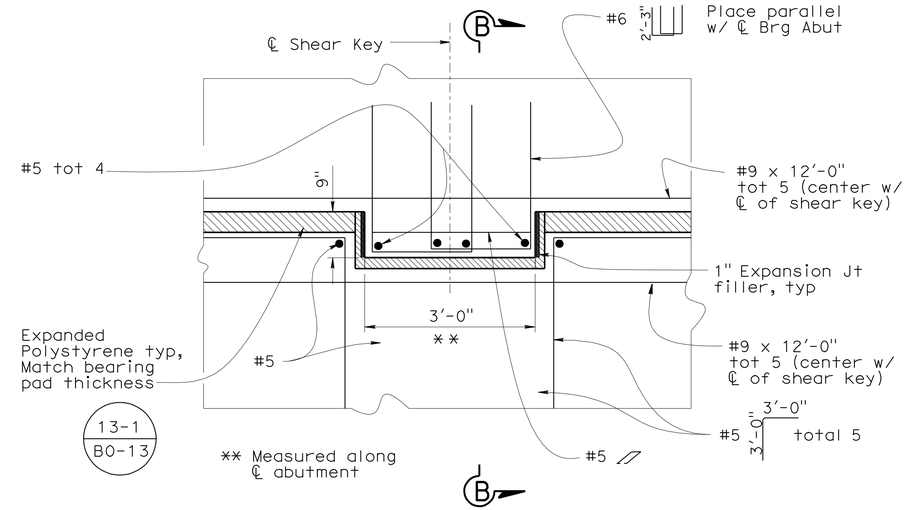

INTERNAL SHEAR KEY DETAIL

¾" = 1'-0"

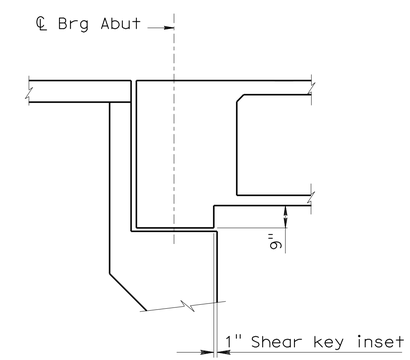

SECTION B-B

NO SCALE

DESIGN	BY JOEL RUIZ	CHECKED DAVID P. MURRAY	
DETAILS	BY SURAJ DUTTA	CHECKED J. RUIZ	
QUANTITIES	BY MIKE POPE	CHECKED DAVID P. MURRAY	

STATE OF CALIFORNIA DEPARTMENT OF TRANSPORTATION

DIVISION OF ENGINEERING SERVICES STRUCTURE DESIGN DESIGN BRANCH 18

BRIDGE NO. 53c2171 POST MILE 30.53

VICTORY PLACE SEPARATION ABUTMENT 1 LAYOUT

STRUCTURES DESIGN DETAIL SHEET (ENGLISH) (REV. 09-01-10)

ORIGINAL SCALE IN INCHES FOR REDUCED PLANS 0 1 2 3

UNIT: 3603 PROJECT NUMBER & PHASE: 0700021119-1 CONTRACT NO.: 07-1218w1

DISREGARD PRINTS BEARING EARLIER REVISION DATES → REVISION DATES 01-05-11 02-09-11 1-10-12

SHEET 5 OF 19

FILE => 53c-2171-f-abtlay01-eng.dgn

USERNAME => s124496 DATE PLOTTED => 11-JUL-2012 TIME PLOTTED => 08:14

DIST	COUNTY	ROUTE	POST MILES TOTAL PROJECT	SHEET No.	TOTAL SHEETS
07	LA	5	29.4/31.6	1022	1931

J. Estrada. 01/31/12
REGISTERED CIVIL ENGINEER DATE

5-21-12
PLANS APPROVAL DATE

REGISTERED PROFESSIONAL ENGINEER JORGE I. ESTRADA No. C51473 Exp. 06/30/12 CIVIL STATE OF CALIFORNIA

The State of California or its officers or agents shall not be responsible for the accuracy or completeness of electronic copies of this plan sheet.

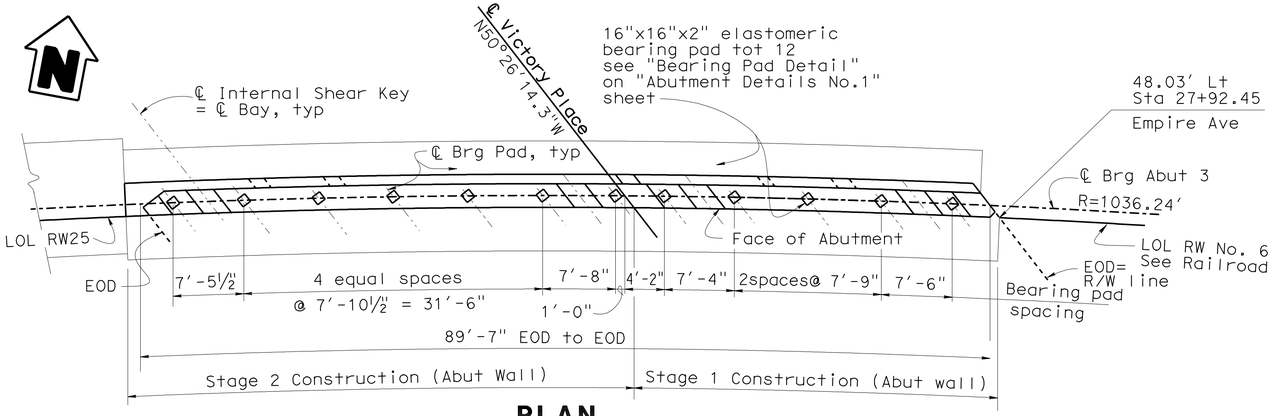

PLAN

⅛" - 1'-0"

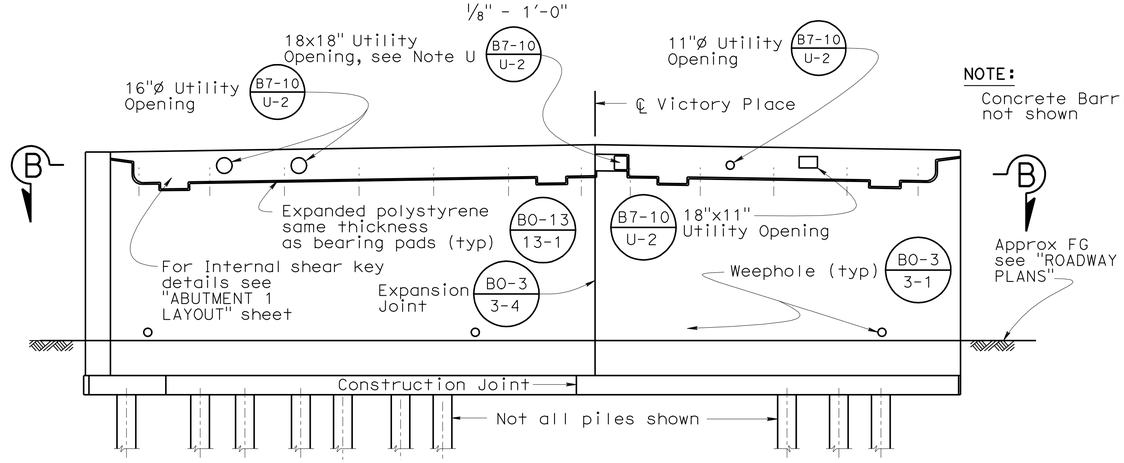

NOTE:
Concrete Barrier not shown

ELEVATION

⅛" - 1'-0"

Note U: For "OPENING DETAIL", see "MISCELLANEOUS DETAILS" sheet.

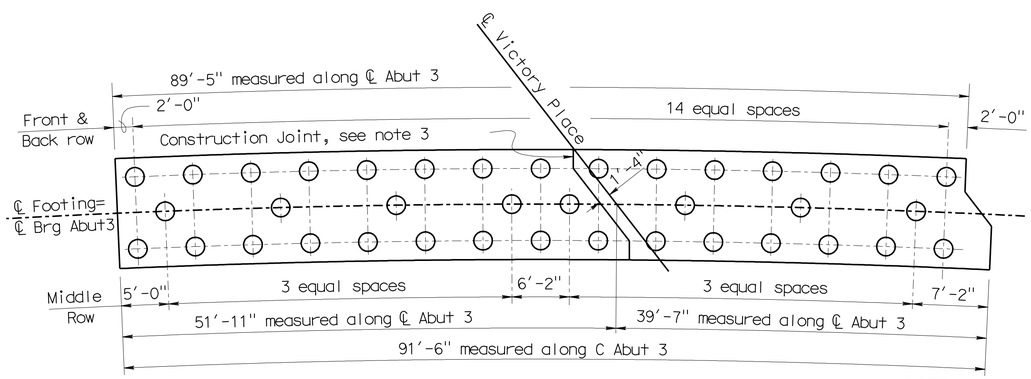

FOOTING AND PILE LAYOUT

⅛" - 1'-0"

NOTE:
Pile layout is radial to ℄ Brg Abutment

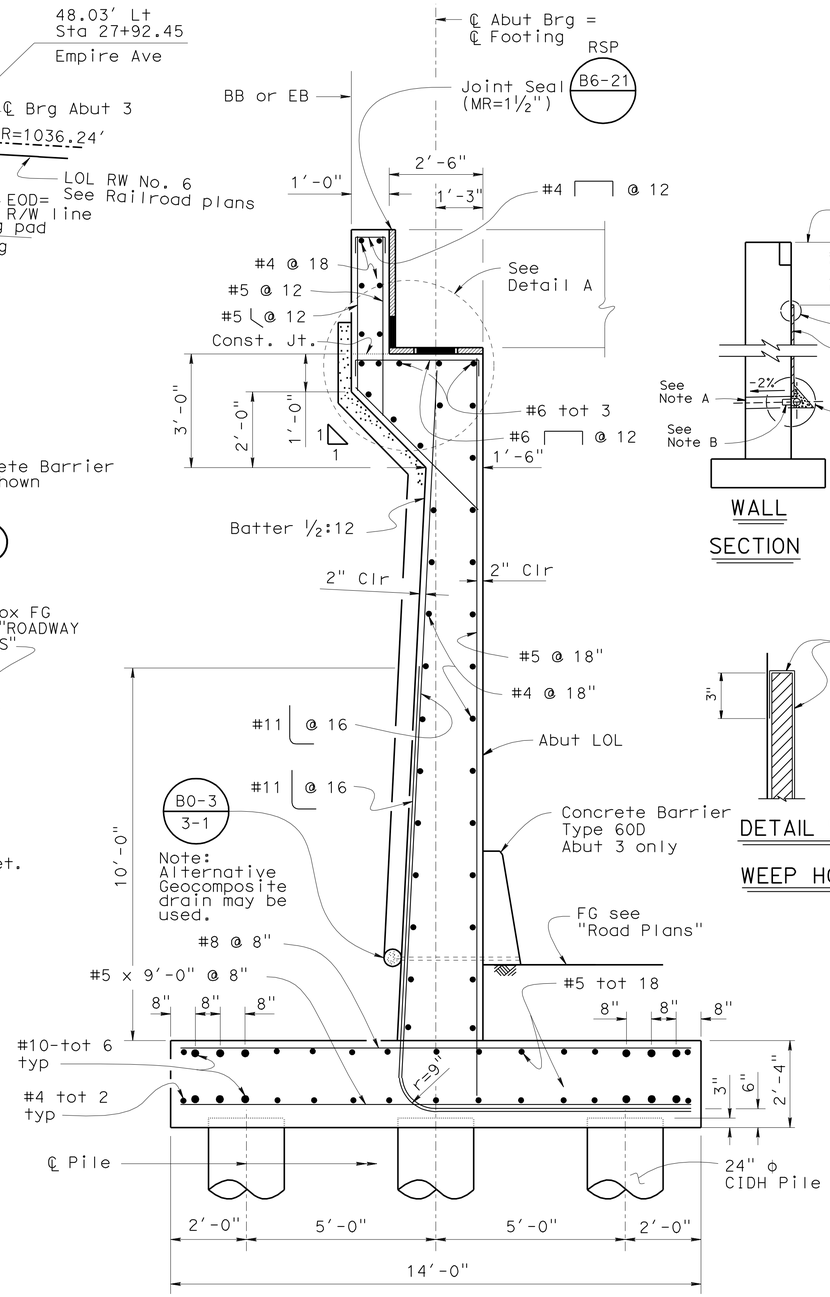

TYPICAL ABUTMENT SECTION

½" - 1'

WALL SECTION

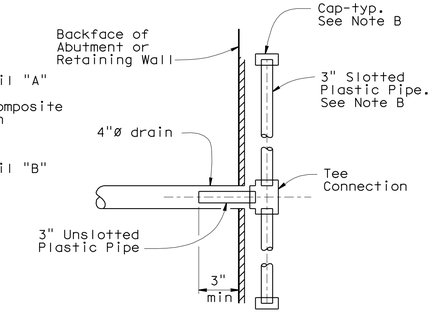

SECTION A-A

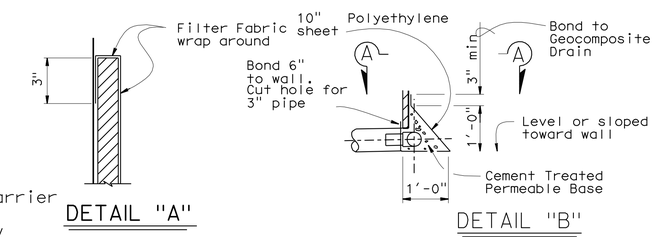

DETAIL "A"

DETAIL "B"

WEEP HOLE AND GEOCOMPOSITE DRAIN

NO SCALE

ALTERNATIVE TO BRIDGE DETAIL BO-3 / 3-1

NOTES:

1. Abut 3 shown, Abut 1 similar
2. For Detail A and Section B-B see "Abutment Details" sheet
3. Abutment footing reinforcement from stage 1 construction to be spliced with stage 2 construction. Only "Service Butt Splices" allowed
4. Abutment Backwall to be placed after prestressing is completed
5. For "INTERNAL SHEAR KEY DETAIL" see "ABUTMENT 1 LAYOUT" sheet.

DESIGN	BY JOEL RUIZ	CHECKED DAVID P. MURRAY	
DETAILS	BY SURAJ DUTTA	CHECKED J. RUIZ	
QUANTITIES	BY MIKE POPE	CHECKED DAVID P. MURRAY	

STATE OF CALIFORNIA
DEPARTMENT OF TRANSPORTATION

DIVISION OF ENGINEERING SERVICES
STRUCTURE DESIGN
DESIGN BRANCH 18

BRIDGE NO. 53C2171
POST MILE 30.53

VICTORY PLACE SEPARATION
ABUTMENT 3 LAYOUT

STRUCTURES DESIGN DETAIL SHEET (ENGLISH) (REV. 09-01-10)

ORIGINAL SCALE IN INCHES FOR REDUCED PLANS 0 1 2 3

UNIT: 3603
PROJECT NUMBER & PHASE: 0700021119-1
CONTRACT NO.: 07-1218w1

DISREGARD PRINTS BEARING EARLIER REVISION DATES

REVISION DATES 1/7/11 3/15/12 4/18/12 01/18/10

SHEET 6 OF 19

FILE => 53c-2171-f-abtlay03-eng.dgn

USERNAME => s119571 DATE PLOTTED => 11-JUL-2012 TIME PLOTTED => 11:03

DIST	COUNTY	ROUTE	POST MILES TOTAL PROJECT	SHEET No.	TOTAL SHEETS
07	LA	5	29.4/31.6	1023	1931

REGISTERED CIVIL ENGINEER 01/31/12 DATE

5-21-12
PLANS APPROVAL DATE

REGISTERED PROFESSIONAL ENGINEER JORGE I. ESTRADA No. C51473 Exp. 06/30/12 CIVIL STATE OF CALIFORNIA

The State of California or its officers or agents shall not be responsible for the accuracy or completeness of electronic copies of this plan sheet.

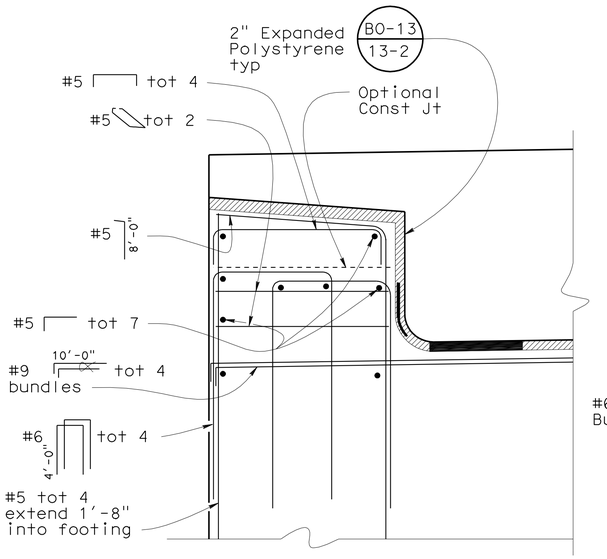

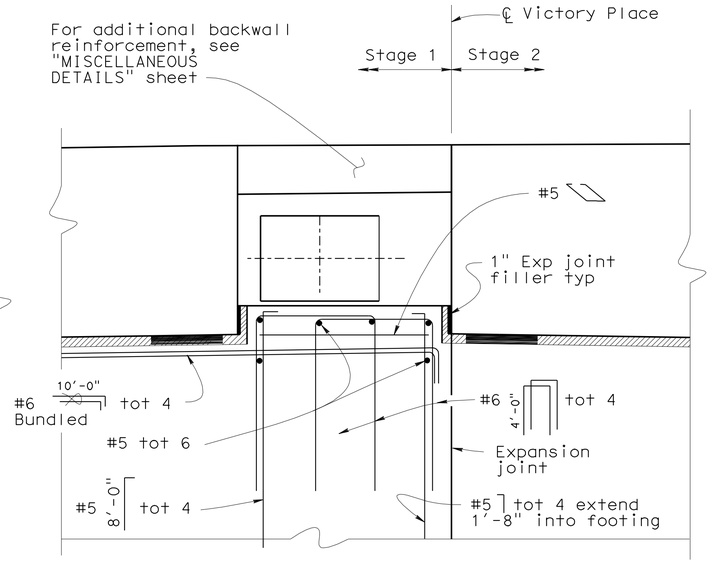

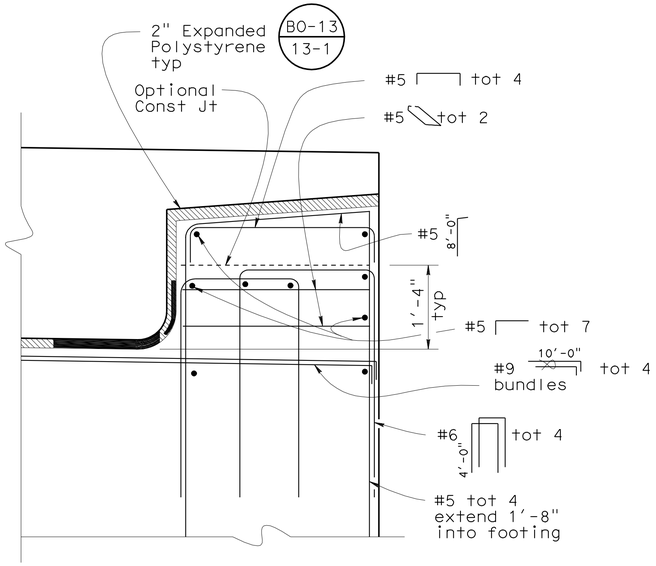

TYPICAL SHEAR KEY

3/4" = 1'-0"

Note:
Abutment 1 shown, Abutment 3 similar.

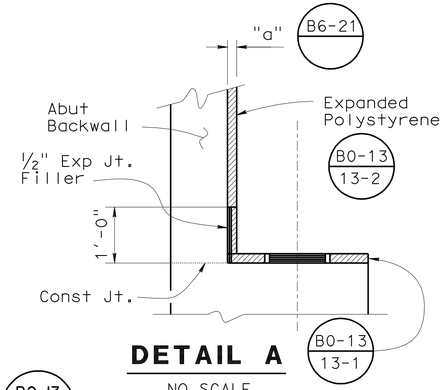

DETAIL A

NO SCALE

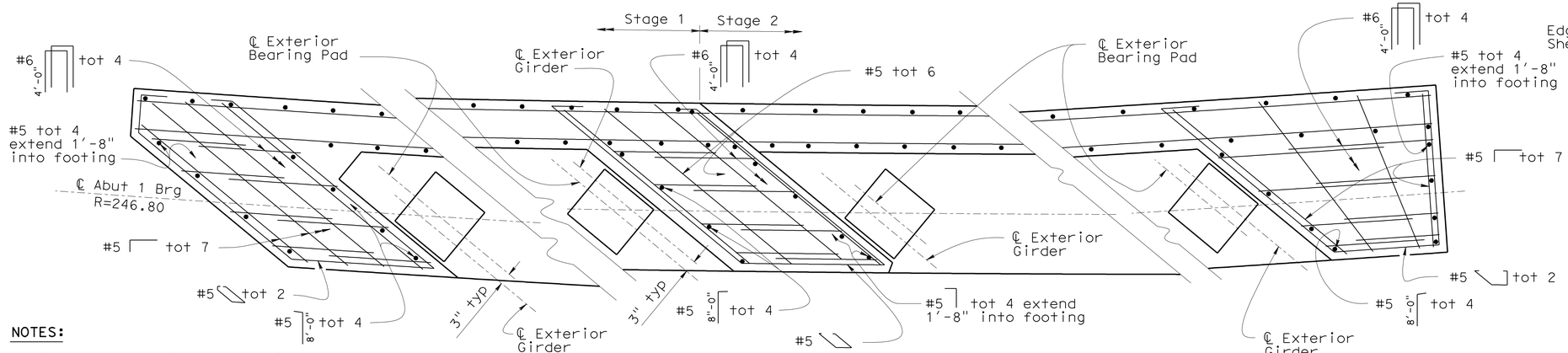

SECTION A-A

3/4" = 1'-0"

NOTES:

1. For origin of "Section A-A" see "ABUTMENT 1 LAYOUT" sheet
2. For origin of "Section B-B", see "ABUTMENT 3 LAYOUT" sheet

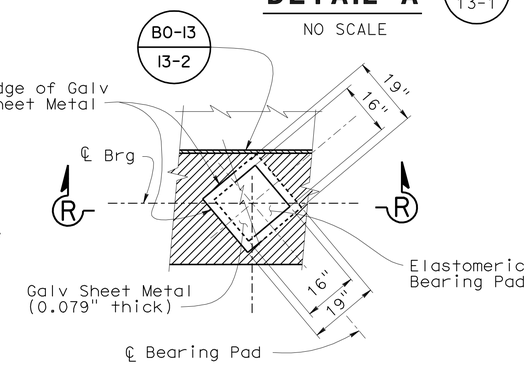

PLAN

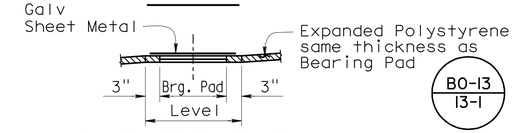

SECTION R-R

BEARING PAD DETAIL

No Scale
Details typical at all bearing pads

NOTES:

1. Coat top of Bearing Pad with silicone grease prior to placing sheet metal.
2. All expanded polystyrene to be removed a minimum of 4" from all exposed surfaces.

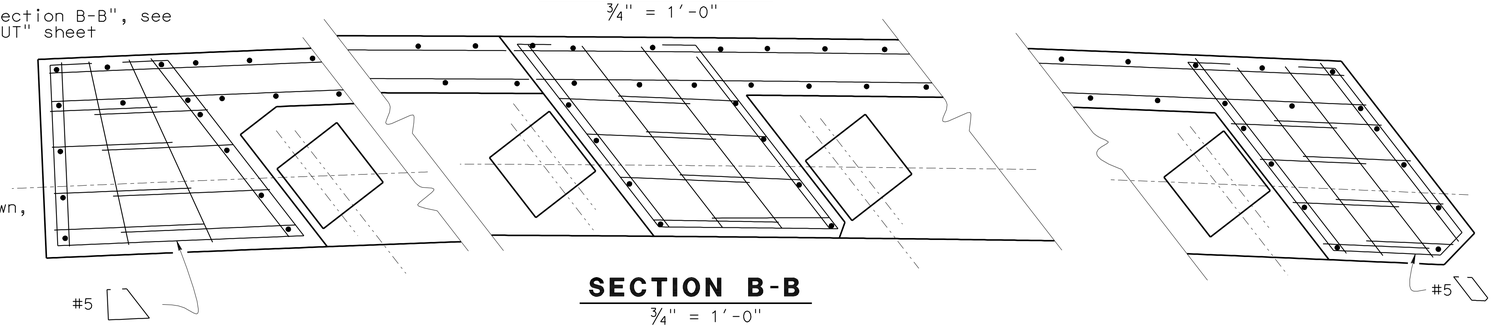

Note:
For details not shown, see "Section A-A"

SECTION B-B

3/4" = 1'-0"

ELASTOMERIC BEARING PADS		
LOCATION	STEEL * REINFORCED	FIBER REINFORCED
ABUT 1	16"x16"x2"	16"x16"x2"
ABUT 3	16"x16"x2"	16"x16"x2"

* Elastomer thickness only

	BY	CHECKED
DESIGN	JOEL RUIZ	DAVID P. MURRAY
DETAILS	SURAJ DUTTA	J. RUIZ
QUANTITIES	MIKE POPE	DAVID P. MURRAY

STATE OF CALIFORNIA
DEPARTMENT OF TRANSPORTATION

DIVISION OF ENGINEERING SERVICES
STRUCTURE DESIGN
DESIGN BRANCH 18

BRIDGE NO. 53C2171
POST MILE 49.027

VICTORY PLACE SEPARATION
ABUTMENT DETAILS

STRUCTURES DESIGN DETAIL SHEET (ENGLISH) (REV. 09-01-10)

ORIGINAL SCALE IN INCHES FOR REDUCED PLANS 0 1 2 3

UNIT: 3603
PROJECT NUMBER & PHASE: 0700021119-1
CONTRACT NO.: 07-121w1

DISREGARD PRINTS BEARING EARLIER REVISION DATES

REVISION DATES 10-24-06 11-19-12 07/10/12

SHEET 7 OF 19

FILE => 53c-2171-g-abtdet-eng.dgn

USERNAME => s124496 DATE PLOTTED => 11-JUL-2012 TIME PLOTTED => 08:14

DIST	COUNTY	ROUTE	POST MILES TOTAL PROJECT	SHEET No.	TOTAL SHEETS
07	LA	5	29.4/31.6	1024	1931

REGISTERED CIVIL ENGINEER 01/31/12 DATE

5-21-12
PLANS APPROVAL DATE

REGISTERED PROFESSIONAL ENGINEER JORGE I. ESTRADA No. C51473 Exp. 06/30/12 CIVIL STATE OF CALIFORNIA

The State of California or its officers or agents shall not be responsible for the accuracy or completeness of electronic copies of this plan sheet.

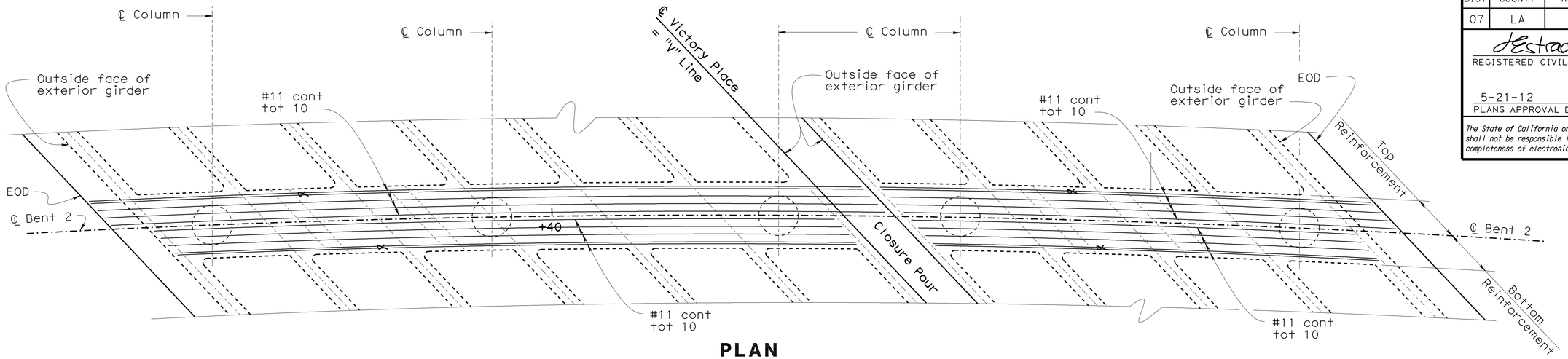

PLAN

1/4" - 1'-0"

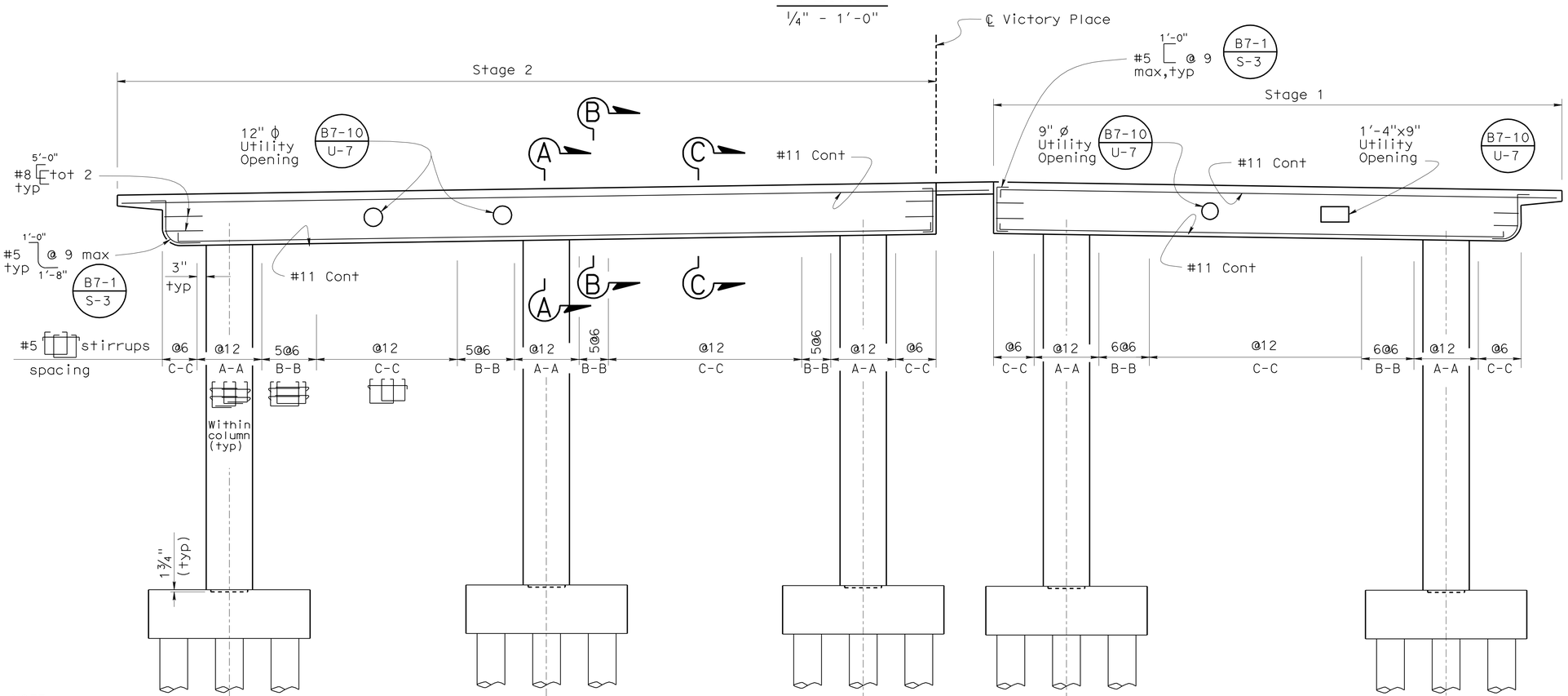

ELEVATION

1/4" - 1'-0"

NOTES:

1. Bundled bars indicated thus: ⋈
2. For Sections A-A, B-B and C-C, see "Bent Details No. 1" sheet.
3. Closure pour reinforcement not shown. For details see "Typical Section" sheet.

NOTE:

1. Place bent cap stirrups normal to ℄ bent and space along ℄ bent.

DESIGN	BY JOEL RUIZ	CHECKED DAVID P. MURRAY	
DETAILS	BY SURAJ DUTTA	CHECKED J. RUIZ	
QUANTITIES	BY MIKE POPE	CHECKED DAVID P. MURRAY	

STATE OF CALIFORNIA
DEPARTMENT OF TRANSPORTATION

DIVISION OF ENGINEERING SERVICES
STRUCTURE DESIGN
DESIGN BRANCH 18

BRIDGE NO. 53C2171
POST MILE 30.53

VICTORY PLACE SEPARATION
BENT LAYOUT

STRUCTURES DESIGN DETAIL SHEET (ENGLISH) (REV. 09-01-10)

ORIGINAL SCALE IN INCHES FOR REDUCED PLANS 0 1 2 3

UNIT: 3603
PROJECT NUMBER & PHASE: 0700021119-1
CONTRACT NO.: 07-1218w1

DISREGARD PRINTS BEARING EARLIER REVISION DATES → REVISION DATES 10-24-08 03-10-11

SHEET 8 OF 19

FILE => 53c-2171-h-betlay-eng.dgn

USERNAME => s119571 DATE PLOTTED => 11-JUL-2012 TIME PLOTTED => 11:03

DIST	COUNTY	ROUTE	POST MILES TOTAL PROJECT	SHEET No.	TOTAL SHEETS
07	LA	5	29.4/31.6	1025	1931

REGISTERED CIVIL ENGINEER 01/31/12 DATE

5-21-12
PLANS APPROVAL DATE

REGISTERED PROFESSIONAL ENGINEER JORGE I. ESTRADA No. C51473 Exp. 06/30/12 CIVIL STATE OF CALIFORNIA

The State of California or its officers or agents shall not be responsible for the accuracy or completeness of electronic copies of this plan sheet.

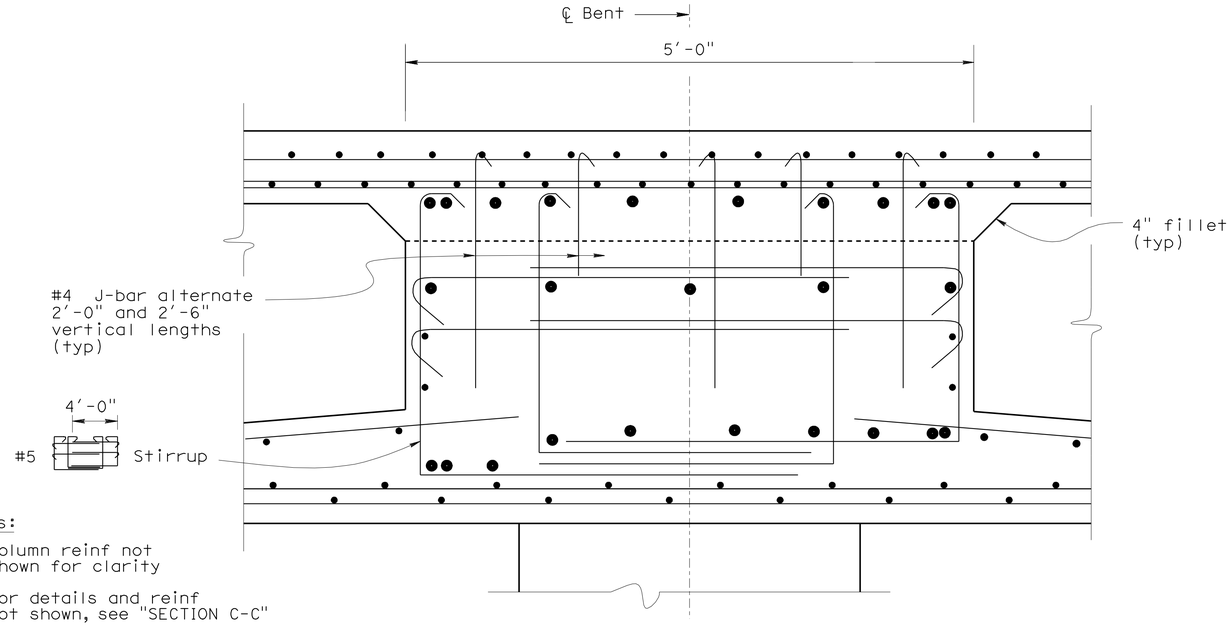

Notes:

1. Column reinf not shown for clarity
2. For details and reinf not shown, see "SECTION C-C"

SECTION A-A

1½" - 1'-0"

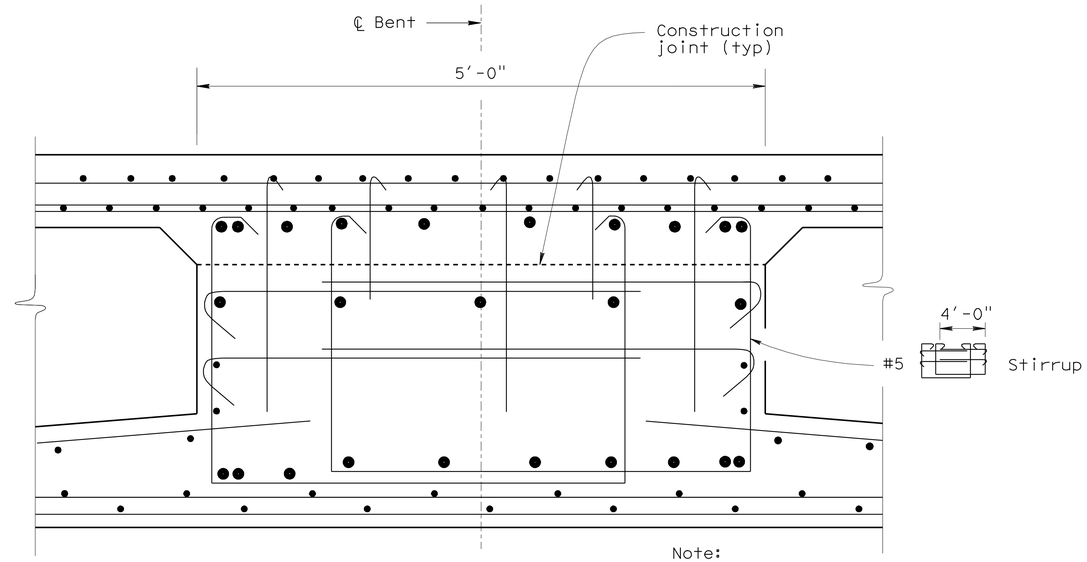

SECTION B-B

1½" - 1'-0"

Note:

For details and reinf not shown, see "SECTION C-C"

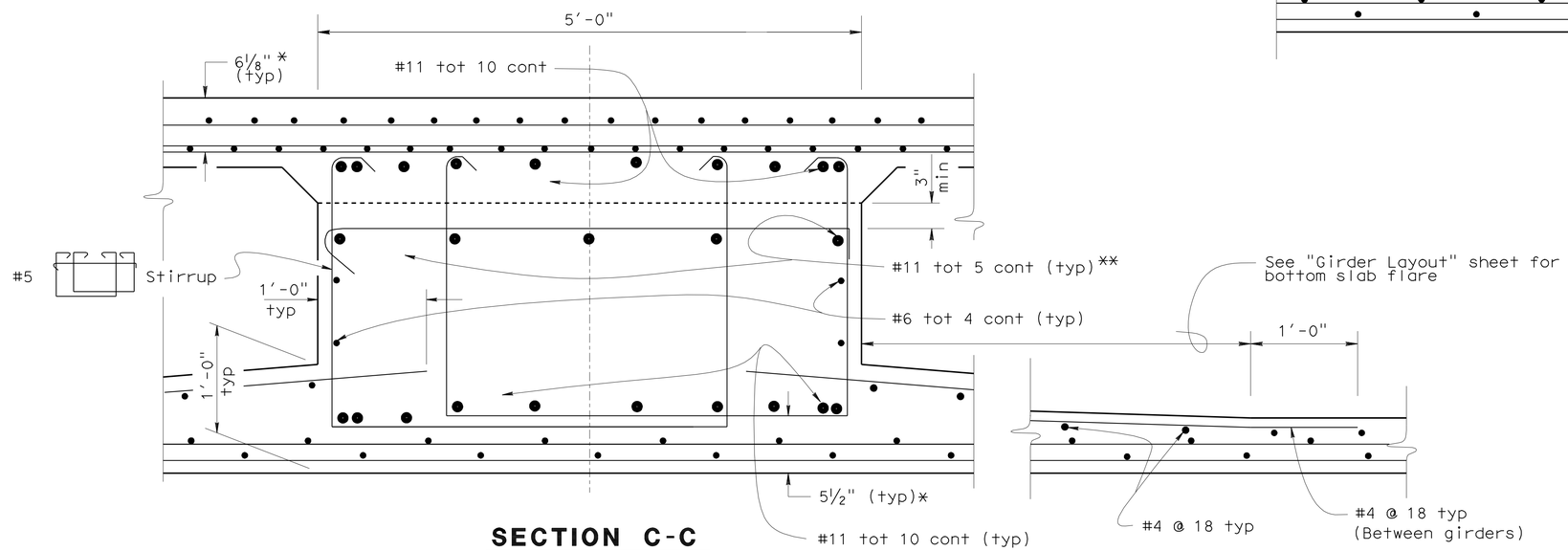

SECTION C-C

1½" - 1'-0"

NOTES:

1. Place #4 J-bar within 2'-6" on either side of column face at same spacing as stirrups. Tie around top longitudinal deck slab reinforcement.
2. For bent cap stirrup spacing, see "Bent layout" sheet.
3. Place bent cap stirrups parallel to ℄ giders and space along C Bent.
4. Alternate 135° hook ends.
5. No splices allowed in main cap reinforcement.

* Clearance to main cap reinforcement

** Reinforcement may be adjusted to clear P/S ducts.

DESIGN	BY JOEL RUIZ	CHECKED DAVID P. MURRAY	
DETAILS	BY SURAJ DUTTA	CHECKED J. RUIZ	
QUANTITIES	BY MIKE POPE	CHECKED DAVID P. MURRAY	

STATE OF CALIFORNIA
DEPARTMENT OF TRANSPORTATION

DIVISION OF ENGINEERING SERVICES
STRUCTURE DESIGN
DESIGN BRANCH 18

BRIDGE NO. 53C2171
POST MILE 30.53

VICTORY PLACE SEPARATION
BENT DETAILS NO. 1

STRUCTURES DESIGN DETAIL SHEET (ENGLISH) (REV. 09-01-10)

ORIGINAL SCALE IN INCHES FOR REDUCED PLANS 0 1 2 3

UNIT: 3603
PROJECT NUMBER & PHASE: 0700021119-1
CONTRACT NO.: 07-1218w1

DISREGARD PRINTS BEARING EARLIER REVISION DATES

REVISION DATES: 03-30-11 01-18-12

SHEET 9 OF 19

FILE => 53c-2171-1-betdet1-eng.dgn

USERNAME => s119571 DATE PLOTTED => 11-JUL-2012 TIME PLOTTED => 11:04

DIST	COUNTY	ROUTE	POST MILES TOTAL PROJECT	SHEET No.	TOTAL SHEETS
07	LA	5	29.4/31.6	1026	1931

REGISTERED CIVIL ENGINEER — DATE 01/31/12

5-21-12
PLANS APPROVAL DATE

REGISTERED PROFESSIONAL ENGINEER — JORGE I. ESTRADA — No. C51473 — Exp. 06/30/12 — CIVIL — STATE OF CALIFORNIA

The State of California or its officers or agents shall not be responsible for the accuracy or completeness of electronic copies of this plan sheet.

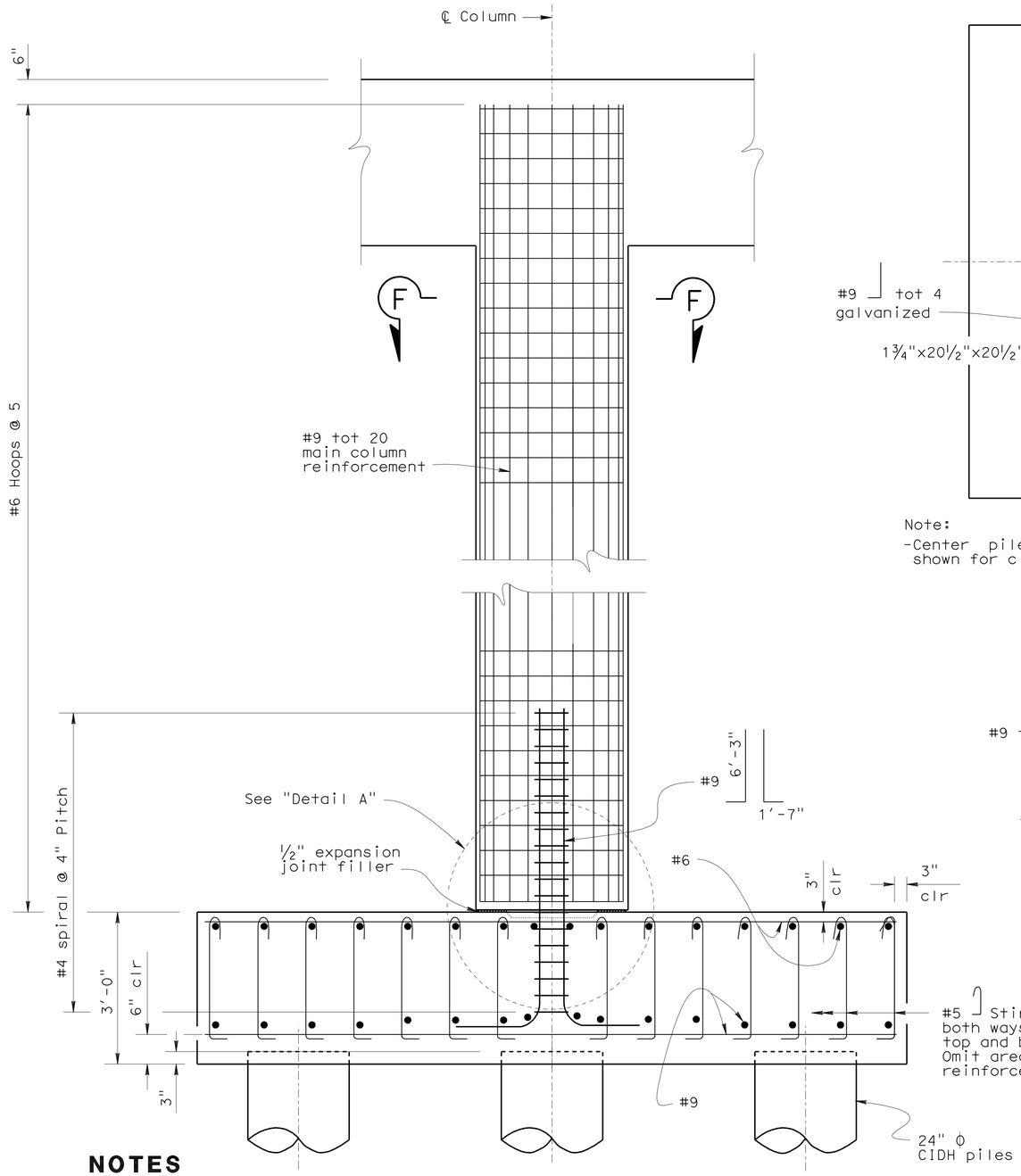

ELEVATION

¾" = 1'-0"

NOTES

1. All hoops are "ULTIMATE" butt spliced continuous
2. No splices allowed in main column reinforcement

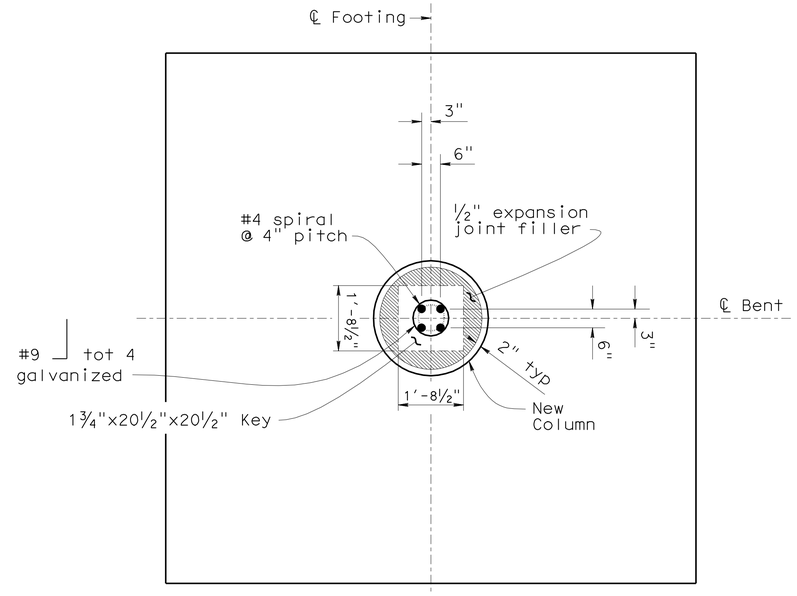

FOOTING PLAN

½" = 1'0"

Note:
-Center pile not shown for clarity

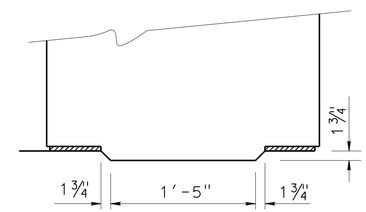

DETAIL A

NO SCALE

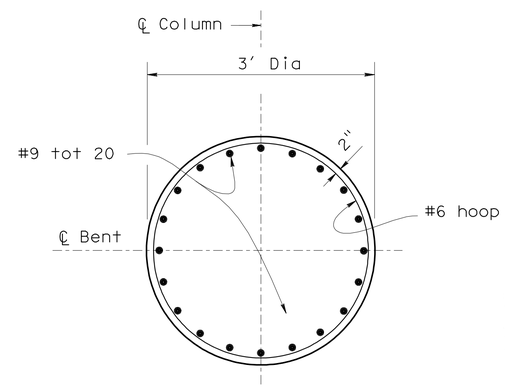

SECTION F-F

1"- 1'

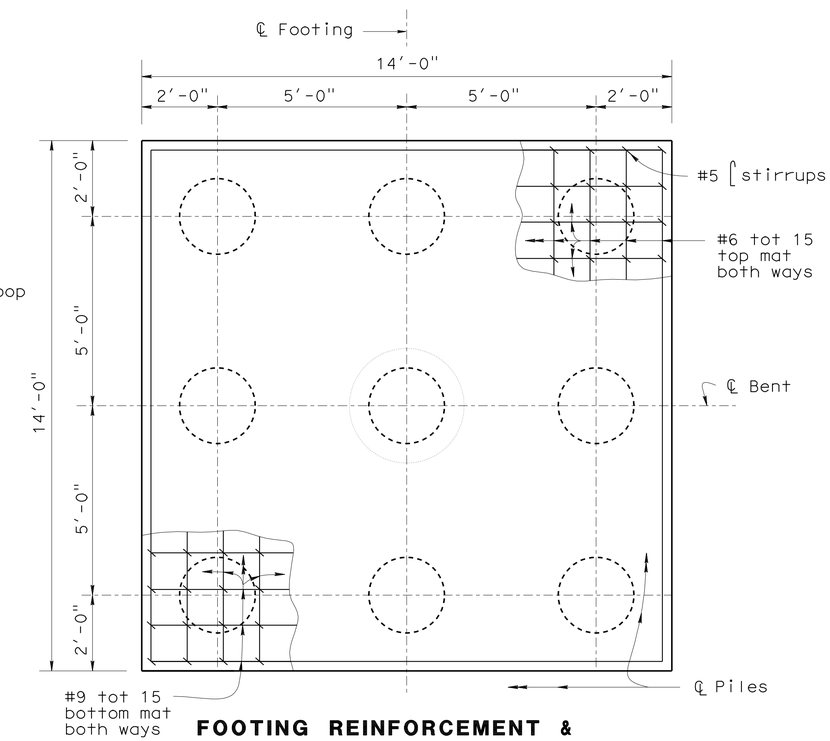

FOOTING REINFORCEMENT & PILE LAYOUT

½" = 1'0"

DESIGN	BY JOEL RUIZ	CHECKED DAVID P. MURRAY	
DETAILS	BY SURAJ DUTTA	CHECKED J. RUIZ	
QUANTITIES	BY MIKE POPE	CHECKED DAVID P. MURRAY	

STATE OF CALIFORNIA
DEPARTMENT OF TRANSPORTATION

DIVISION OF ENGINEERING SERVICES
STRUCTURE DESIGN
DESIGN BRANCH 18

BRIDGE NO. 53c2171
POST MILE 30.53

VICTORY PLACE SEPARATION
BENT DETAILS NO.2

STRUCTURES DESIGN DETAIL SHEET (ENGLISH) (REV. 09-01-10)

ORIGINAL SCALE IN INCHES FOR REDUCED PLANS 0 1 2 3

UNIT: 3603
PROJECT NUMBER & PHASE: 0700021119-1
CONTRACT NO.: 07-1218w1

DISREGARD PRINTS BEARING EARLIER REVISION DATES

REVISION DATES: 03-12-11 04-01-12 04-18-12

SHEET 10 OF 19

USERNAME => s114926 DATE PLOTTED => 22-MAY-2012 TIME PLOTTED => 08:49

FILE => 53c-2171-1betdet2-eng.dgn

DIST	COUNTY	ROUTE	POST MILES TOTAL PROJECT	SHEET No.	TOTAL SHEETS
07	LA	5	29.4/31.6	1027	1931

REGISTERED CIVIL ENGINEER — DATE 01/31/12

5-21-12
PLANS APPROVAL DATE

REGISTERED PROFESSIONAL ENGINEER — JORGE I. ESTRADA — No. C51473 — Exp. 06/30/12 — CIVIL — STATE OF CALIFORNIA

The State of California or its officers or agents shall not be responsible for the accuracy or completeness of electronic copies of this plan sheet.

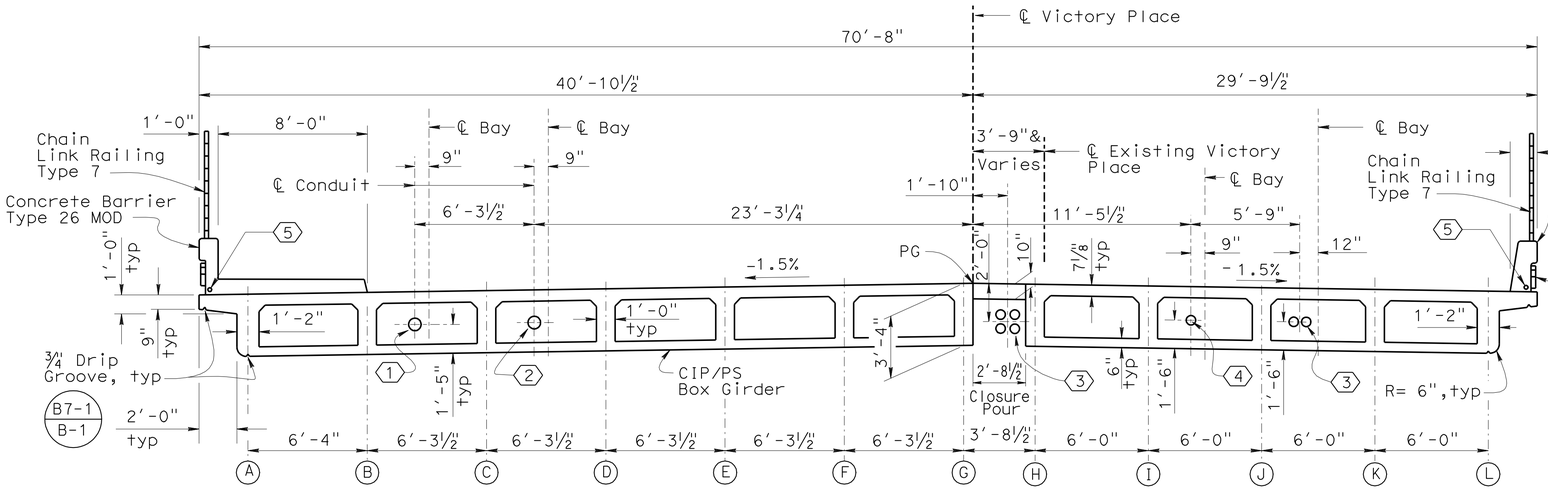

TYPICAL SECTION

¼" - 1'-0"

UTILITIES:

1. -8"Ø Domestic waterline
2. -8"Ø Recycled waterline
3. -6"Ø Electrical conduit
4. -6"Ø Communication conduit
5. -2"Ø Lighting Conduit

For details see "ROADWAY PLANS"

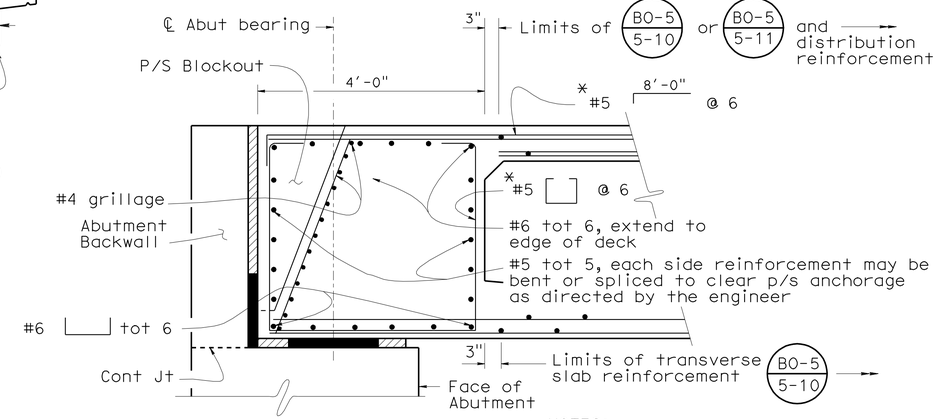

END DIAPHRAGM

B8-5

¾" = 1'-0"

NOTES:

-For reinforcement not shown see "SECTION A-A" of B8-5

* Place parallel to girder and space along ℄ abutment Bearing

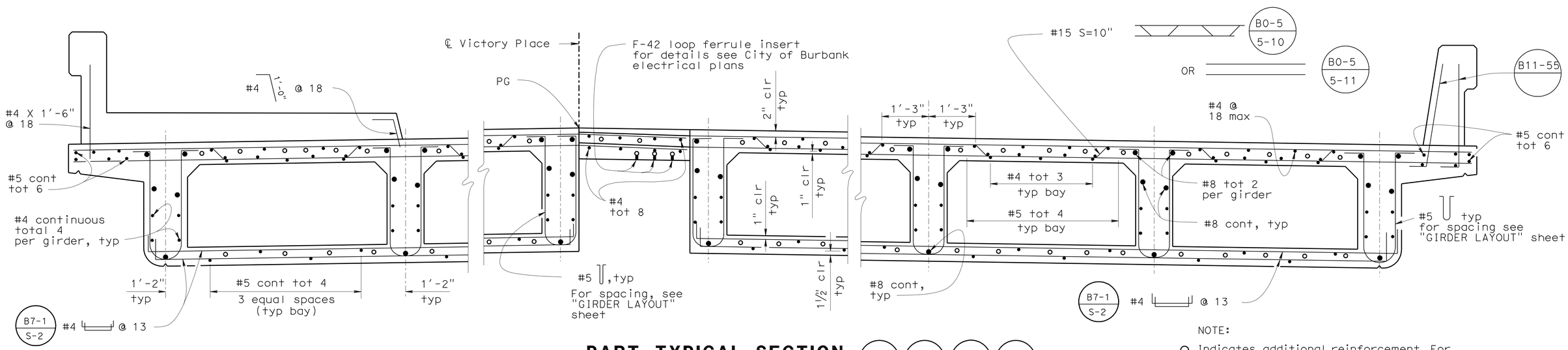

PART TYPICAL SECTION

¾" - 1'-0"

B0-5 B7-1 B11-54 B11-55

NOTE:

○ Indicates additional reinforcement. For details see "TOP GIRDER REINFORCEMENT" and "BOTTOM GIRDER REINFORCEMENT" sheets

DESIGN	BY JOEL RUIZ	CHECKED DAVID P. MURRAY	
DETAILS	BY SURAJ DUTTA	CHECKED J. RUIZ	
QUANTITIES	BY MIKE POPE	CHECKED DAVID P. MURRAY	

STATE OF CALIFORNIA
DEPARTMENT OF TRANSPORTATION

DIVISION OF ENGINEERING SERVICES
STRUCTURE DESIGN
DESIGN BRANCH 18

BRIDGE NO. 53c2171
POST MILE 30.53

VICTORY PLACE SEPARATION
TYPICAL SECTION

STRUCTURES DESIGN DETAIL SHEET (ENGLISH) (REV. 09-01-10)

ORIGINAL SCALE IN INCHES FOR REDUCED PLANS 0 1 2 3

UNIT: 3603
PROJECT NUMBER & PHASE: 0700021119-1
CONTRACT NO.: 07-1218w1

DISREGARD PRINTS BEARING EARLIER REVISION DATES

REVISION DATES: ~~03-10-11~~ 1/12/11

SHEET 11 OF 19

FILE => 53c-2171-k-typsec-eng.dgn

USERNAME => s114926 DATE PLOTTED => 11-JUL-2012 TIME PLOTTED => 11:21

DIST	COUNTY	ROUTE	POST MILES TOTAL PROJECT	SHEET No.	TOTAL SHEETS
07	LA	5	29.4/31.6	1028	1931

REGISTERED CIVIL ENGINEER — DATE 01/31/12

PLANS APPROVAL DATE 5-21-12

REGISTERED PROFESSIONAL ENGINEER — JORGE I. ESTRADA No. C51473 Exp. 06/30/12 CIVIL — STATE OF CALIFORNIA

The State of California or its officers or agents shall not be responsible for the accuracy or completeness of electronic copies of this plan sheet.

LEGEND:

Denotes girder stem width in inches

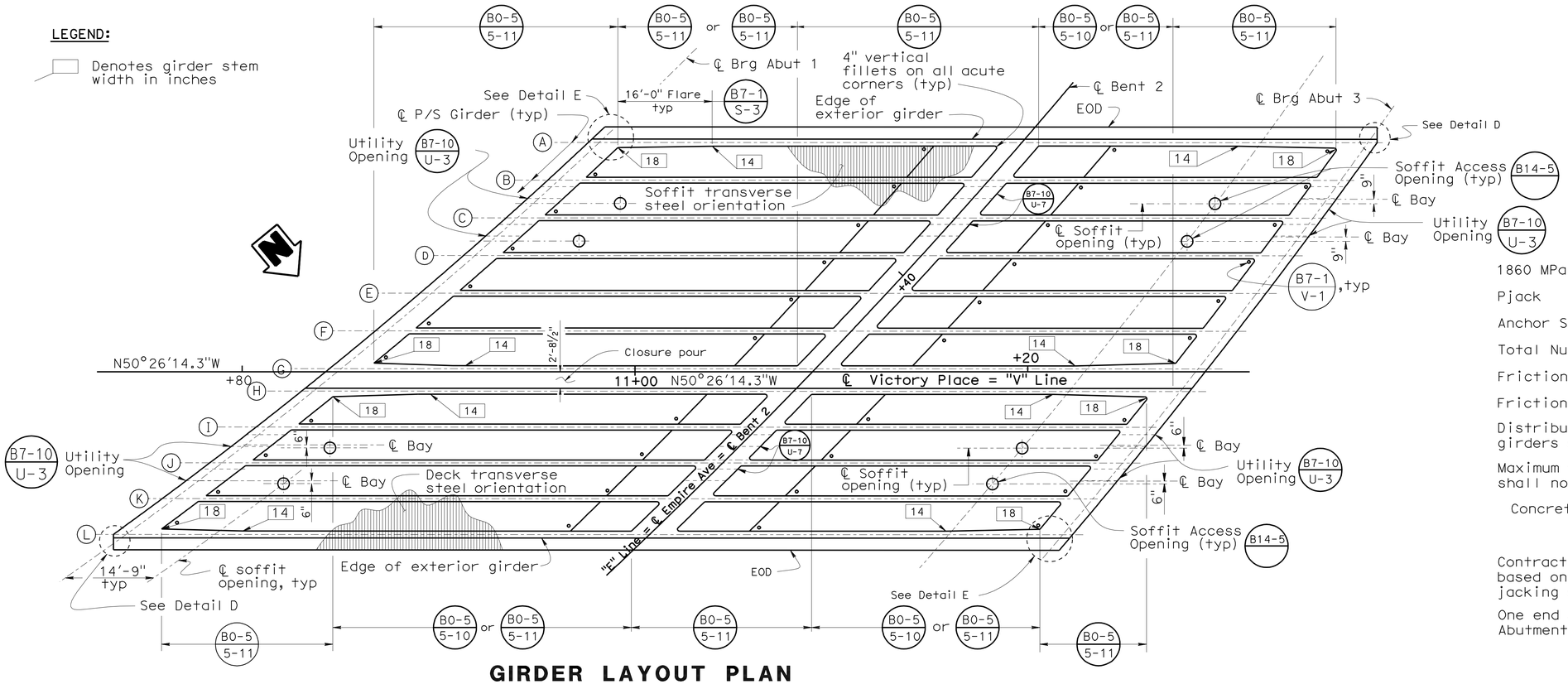

GIRDER LAYOUT PLAN

PRESTRESSING NOTES

		STAGE 1	STAGE 2
1860 MPa Low Relaxation Strands:			
Pjack	=	3350 Kips	4050 Kips
Anchor Set	=	3/8 in	3/8 in
Total Number of Girders	=	5	7
Friction curvature coefficient	μ =	15 $\times 10^{-2}$ (1/rad)	
Friction wobble coefficient	K =	20×10^{-5} (1/pt)	

Distribution of prestress force (Pjack) between girders shall not exceed the ratio of 3:2.

Maximum final force variation between girders shall not exceed 725 kips.

Concrete: f'c = 4000 psi @ 28 days

f'ci = 3600 psi @ time of stressing

Contractor shall submit elongation calculations based on initial stress at ☒ = 0.916 times jacking stress

One end stressing shall be performed from the Abutment 1 only

NOTES:

- For Details D and E see "Top Girder Reinforcement" sheet

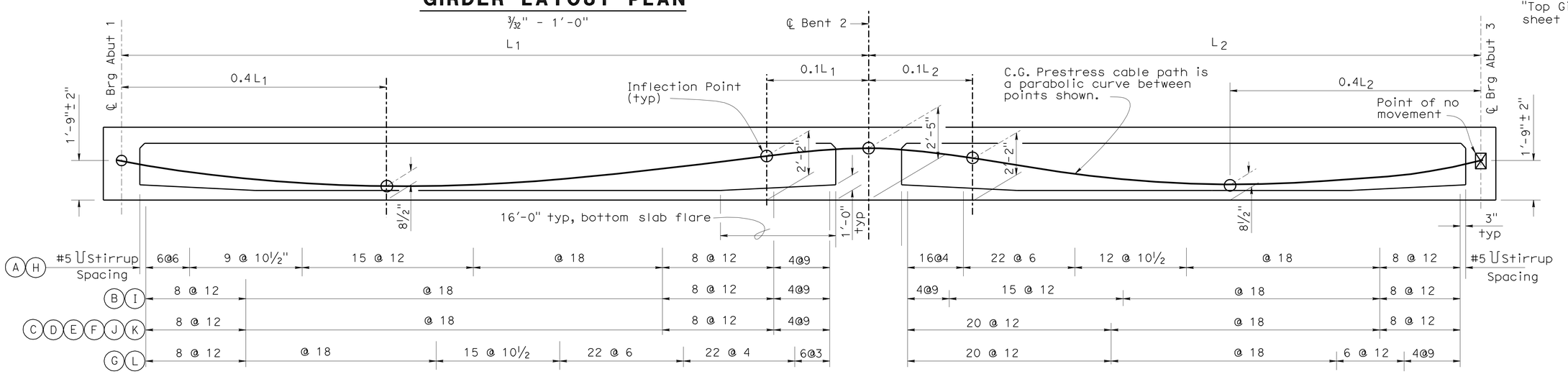

LONGITUDINAL SECTION

NO SCALE

B7-1 B8-5

DESIGN	BY JOEL RUIZ	CHECKED DAVID P. MURRAY	
DETAILS	BY SURAJ DUTTA	CHECKED J. RUIZ	
QUANTITIES	BY MIKE POPE	CHECKED DAVID P. MURRAY	

STATE OF CALIFORNIA DEPARTMENT OF TRANSPORTATION

DIVISION OF ENGINEERING SERVICES STRUCTURE DESIGN DESIGN BRANCH 18

BRIDGE NO. 53c2171 POST MILE 30.53

VICTORY PLACE SEPARATION
GIRDER LAYOUT

STRUCTURES DESIGN DETAIL SHEET (ENGLISH) (REV. 09-01-10)

ORIGINAL SCALE IN INCHES FOR REDUCED PLANS 0 1 2 3

UNIT: 3603
PROJECT NUMBER & PHASE: 0700021119-1 CONTRACT NO.: 07-1218w1

DISREGARD PRINTS BEARING EARLIER REVISION DATES → 03-12-11 01-12-12 01-15-09

SHEET 12 OF 19

FILE => 53c-2171-1-girlay.dgn

USERNAME => s114936 DATE PLOTTED => 11-JUL-2012 TIME PLOTTED => 11:30

DIST	COUNTY	ROUTE	POST MILES TOTAL PROJECT	SHEET No.	TOTAL SHEETS
07	LA	5	29.4/31.6	1029	1931

dEstrada. 01/31/12
REGISTERED CIVIL ENGINEER DATE

5-21-12
PLANS APPROVAL DATE

REGISTERED PROFESSIONAL ENGINEER
JORGE I. ESTRADA
No. C51473
Exp. 06/30/12
CIVIL
STATE OF CALIFORNIA

The State of California or its officers or agents shall not be responsible for the accuracy or completeness of electronic copies of this plan sheet.

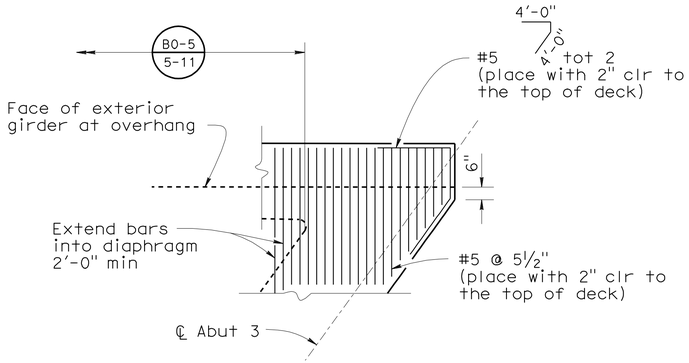

DETAIL D

NO SCALE

DETAIL E

NO SCALE

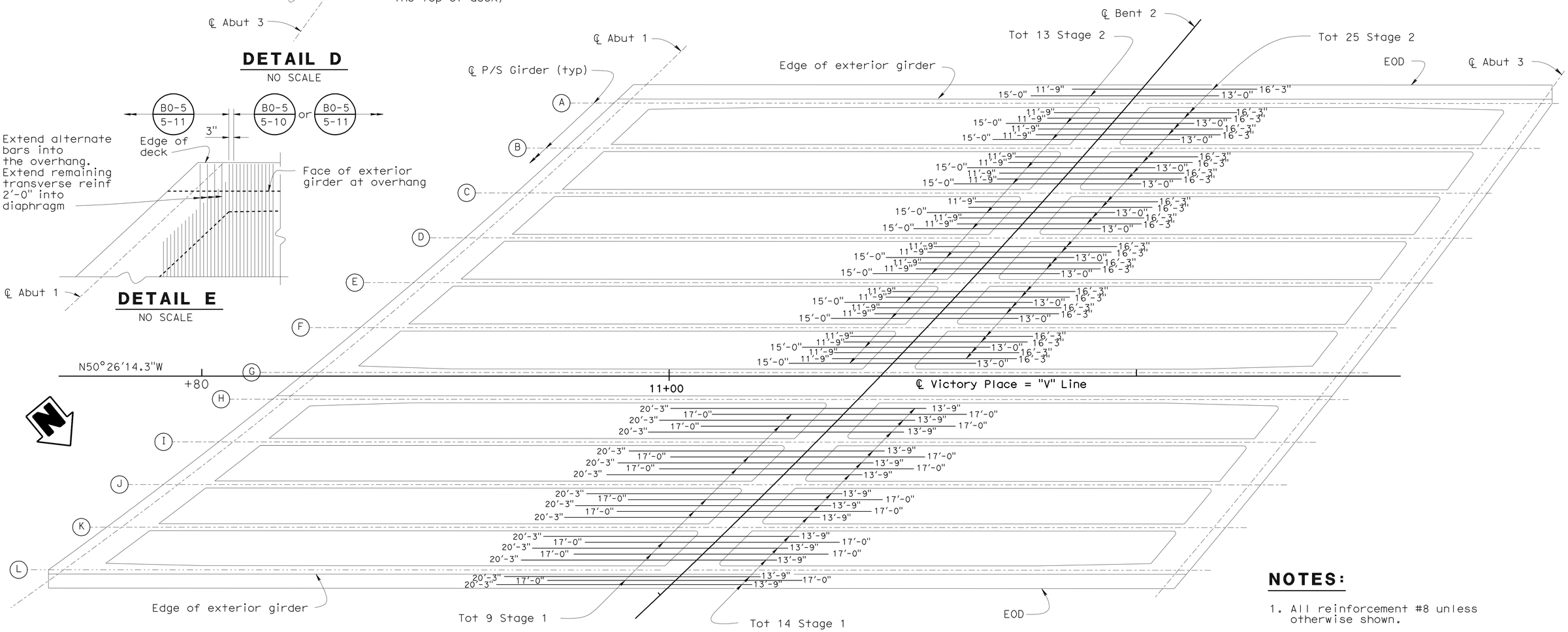

TOP REINFORCEMENT - STAGE 1 AND 2

NO SCALE

NOTES:

1. All reinforcement #8 unless otherwise shown.
2. Numbers at ends of bars indicate distance from ℄ bent cap.

DESIGN	BY JOEL RUIZ	CHECKED DAVID P. MURRAY	
DETAILS	BY SURAJ DUTTA	CHECKED JOEL RUIZ	
QUANTITIES	BY MIKE POPE	CHECKED DAVID R. MURRAY	

STATE OF CALIFORNIA
DEPARTMENT OF TRANSPORTATION

DIVISION OF ENGINEERING SERVICES
STRUCTURE DESIGN
DESIGN BRANCH 18

BRIDGE NO. 53C2171
POST MILE 30.53

VICTORY PLACE SEPARATION
TOP GIRDER REINFORCEMENT

STRUCTURES DESIGN DETAIL SHEET (ENGLISH) (REV. 09-01-10)

ORIGINAL SCALE IN INCHES FOR REDUCED PLANS 0 1 2 3

UNIT: 3603
PROJECT NUMBER & PHASE: 0700021119-1
CONTRACT NO.: 07-1218W1

DISREGARD PRINTS BEARING EARLIER REVISION DATES

REVISION DATES

SHEET 13 OF 19

FILE => 53c-2171-m-girref1-eng.dgn

USERNAME => s114926 DATE PLOTTED => 22-MAY-2012 TIME PLOTTED => 08:50

DIST	COUNTY	ROUTE	POST MILES TOTAL PROJECT	SHEET No.	TOTAL SHEETS
07	LA	5	29.4/31.6	1030	1931

JEstrada. 01/31/12
REGISTERED CIVIL ENGINEER DATE

5-21-12
PLANS APPROVAL DATE

REGISTERED PROFESSIONAL ENGINEER
JORGE I. ESTRADA
No. C51473
Exp. 06/30/12
CIVIL
STATE OF CALIFORNIA

The State of California or its officers or agents shall not be responsible for the accuracy or completeness of electronic copies of this plan sheet.

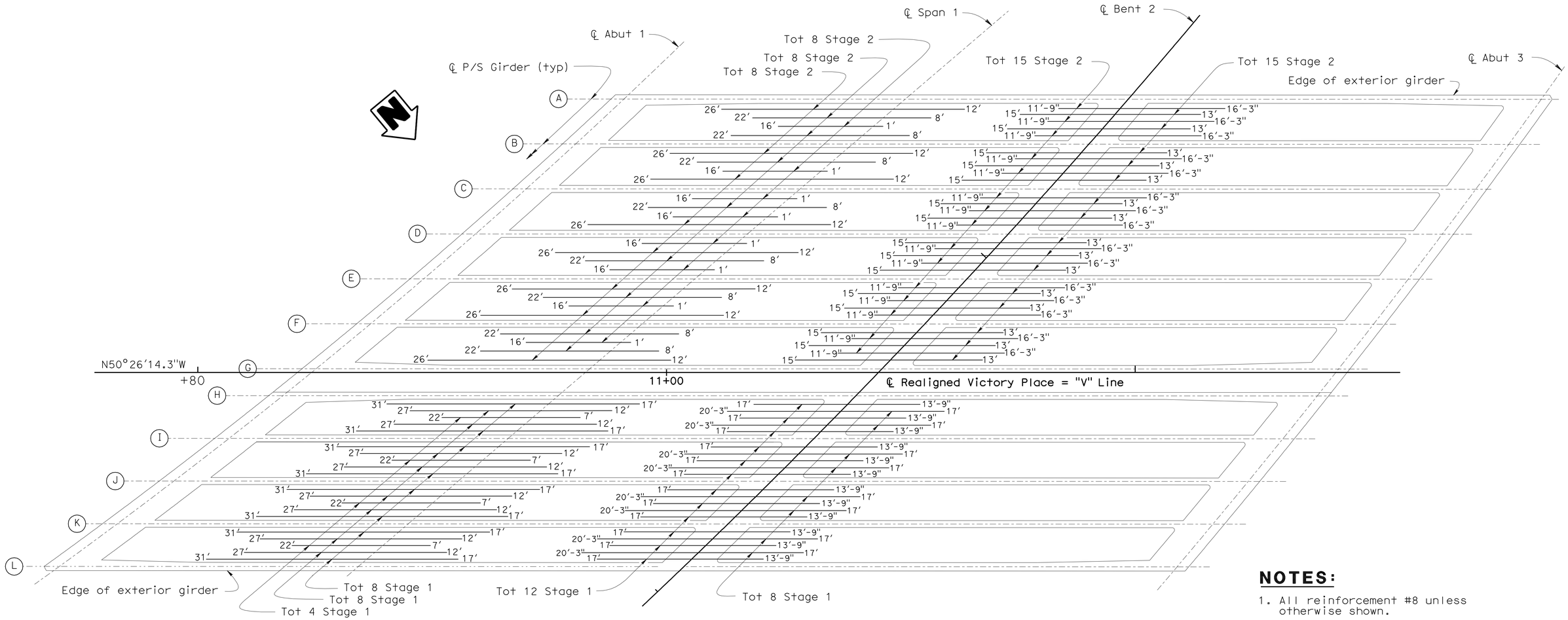

BOTTOM REINFORCEMENT - STAGE 1 AND 2

NO SCALE

NOTES:

1. All reinforcement #8 unless otherwise shown.
2. Numbers at ends of bars indicate distance from ℄ Span 1 and ℄ bent cap.

DESIGN	BY JOEL RUIZ	CHECKED DAVID P. MURRAY	
DETAILS	BY SURAJ DUTTA	CHECKED J. RUIZ	
QUANTITIES	BY MIKE POPE	CHECKED DAVID P. MURRAY	

STATE OF CALIFORNIA
DEPARTMENT OF TRANSPORTATION

DIVISION OF ENGINEERING SERVICES
STRUCTURE DESIGN
DESIGN BRANCH 18

BRIDGE NO. 53C2171
POST MILE 30.53

VICTORY PLACE SEPARATION
BOTTOM GIRDER REINFORCEMENT

STRUCTURES DESIGN DETAIL SHEET (ENGLISH) (REV. 09-01-10)

ORIGINAL SCALE IN INCHES FOR REDUCED PLANS 0 1 2 3

UNIT: 3603
PROJECT NUMBER & PHASE: 0700021119-1
CONTRACT NO.: 07-1218W1

DISREGARD PRINTS BEARING EARLIER REVISION DATES

REVISION DATES: 03-20-12

SHEET 14 OF 19

FILE => 53c-2171-m-girref2-eng.dgn

USERNAME => s114926 DATE PLOTTED => 22-MAY-2012 TIME PLOTTED => 08:50

DIST	COUNTY	ROUTE	POST MILES TOTAL PROJECT	SHEET No.	TOTAL SHEETS
07	LA	5	29.4/31.6	1031	1931

dEstrada. 01/31/12
REGISTERED CIVIL ENGINEER DATE

5-21-12
PLANS APPROVAL DATE

REGISTERED PROFESSIONAL ENGINEER
JORGE I. ESTRADA
No. C51473
Exp. 06/30/12
CIVIL
STATE OF CALIFORNIA

The State of California or its officers or agents shall not be responsible for the accuracy or completeness of electronic copies of this plan sheet.

NOTE:
For Section "A-A & C-C" see "ARCHITECTURAL TREATMENT NO.2" sheet.

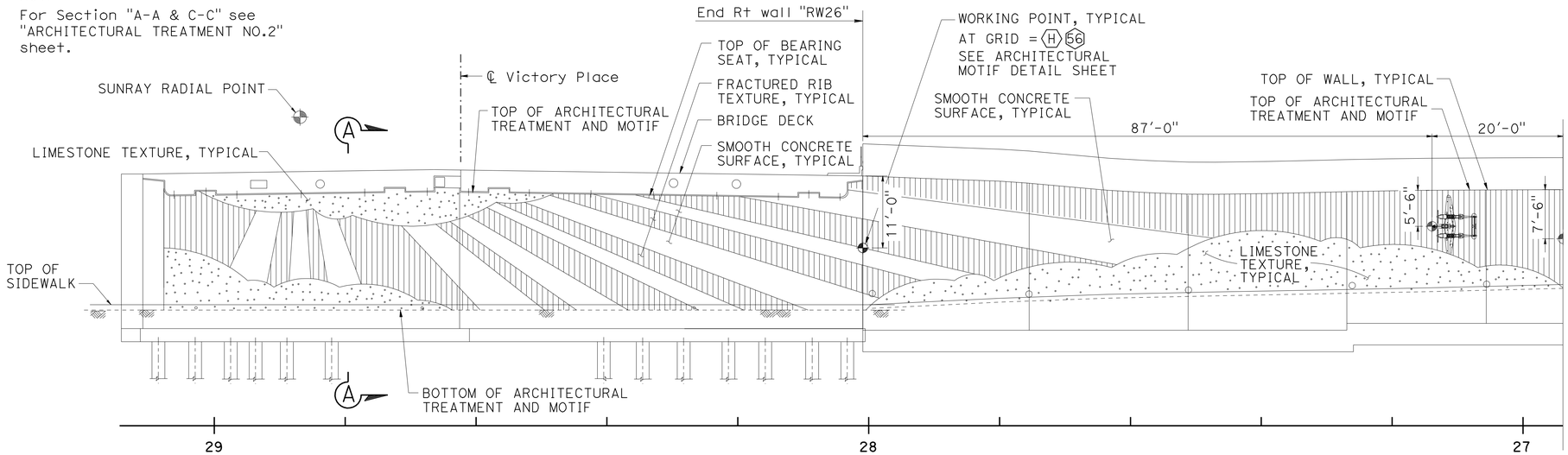

DEVELOPED ELEVATION - ABUT 1

NO SCALE

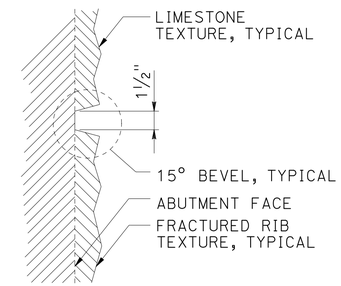

1 DETAIL

NO SCALE

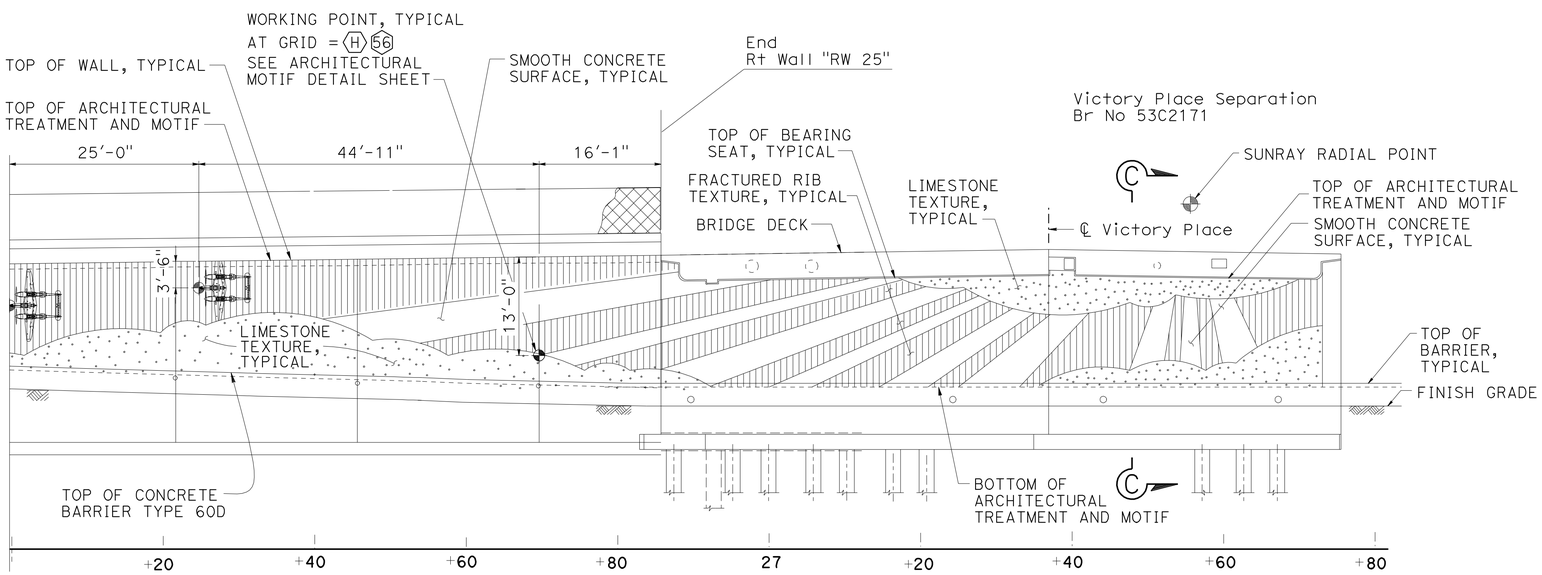

DEVELOPED ELEVATION - ABUT 3

NO SCALE

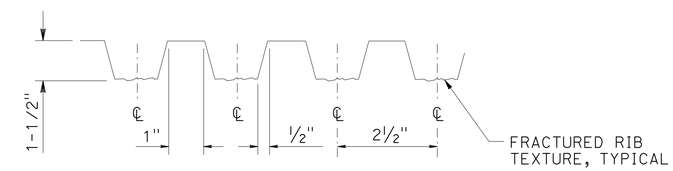

FRACTURED RIB TEXTURE

NO SCALE

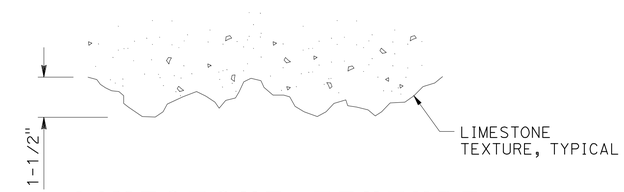

LIMESTONE TEXTURE

NO SCALE

DESIGN	BY ISAAC TASABIA	CHECKED DAVID P. MURRAY	
DETAILS	BY SURAJ DUTTA	CHECKED DAVID P. MURRAY	
QUANTITIES	BY MIKE POPE	CHECKED DAVID P. MURRAY	

STATE OF CALIFORNIA
DEPARTMENT OF TRANSPORTATION

DIVISION OF ENGINEERING SERVICES
STRUCTURE DESIGN
DESIGN BRANCH 18

BRIDGE NO. 53C2171
POST MILE 30.53

VICTORY PLACE SEPARATION
ARCHITECTURAL TREATMENT NO.1

STRUCTURES DESIGN DETAIL SHEET (ENGLISH) (REV. 09-01-10)

ORIGINAL SCALE IN INCHES FOR REDUCED PLANS 0 1 2 3

UNIT: 3603
PROJECT NUMBER & PHASE: 0700021119-1
CONTRACT NO.: 07-1218w1

DISREGARD PRINTS BEARING EARLIER REVISION DATES 03-20-11

REVISION DATES | SHEET 15 OF 19

FILE => 53c-2171-a-arch-tret01.dgn

USERNAME => s117606 DATE PLOTTED => 22-MAY-2012 TIME PLOTTED => 10:32

DIST	COUNTY	ROUTE	POST MILES TOTAL PROJECT	SHEET No.	TOTAL SHEETS
07	LA	5	29.4/31.6	1032	1931

JEstrada. 01/31/12
REGISTERED CIVIL ENGINEER DATE

5-21-12
PLANS APPROVAL DATE

REGISTERED PROFESSIONAL ENGINEER
JORGE I. ESTRADA
No. C51473
Exp. 06/30/12
CIVIL
STATE OF CALIFORNIA

The State of California or its officers or agents shall not be responsible for the accuracy or completeness of electronic copies of this plan sheet.

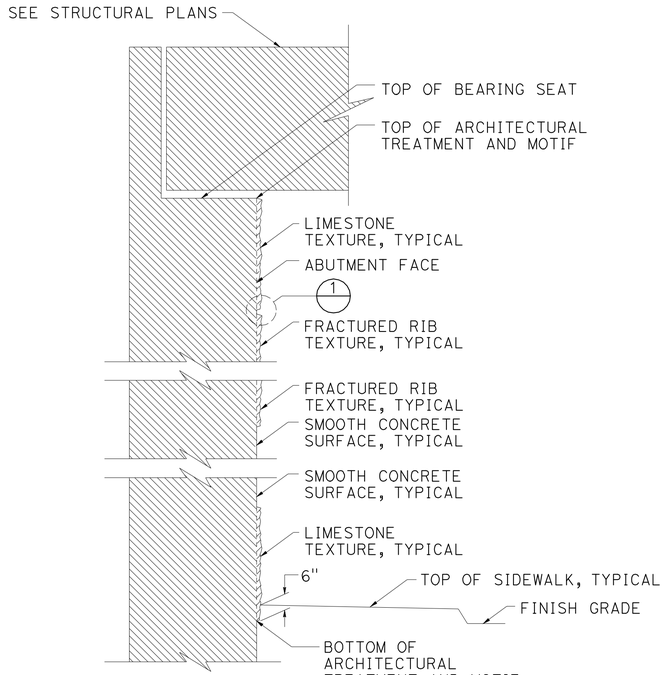

SECTION A-A
NO SCALE

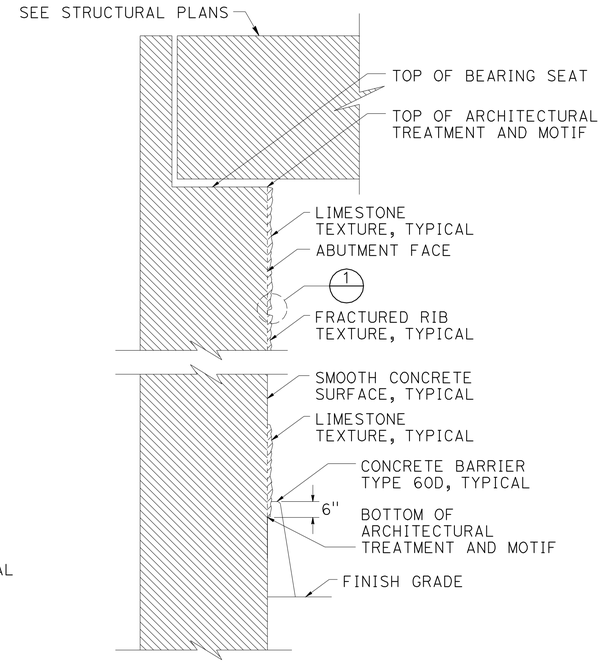

SECTION C-C
NO SCALE

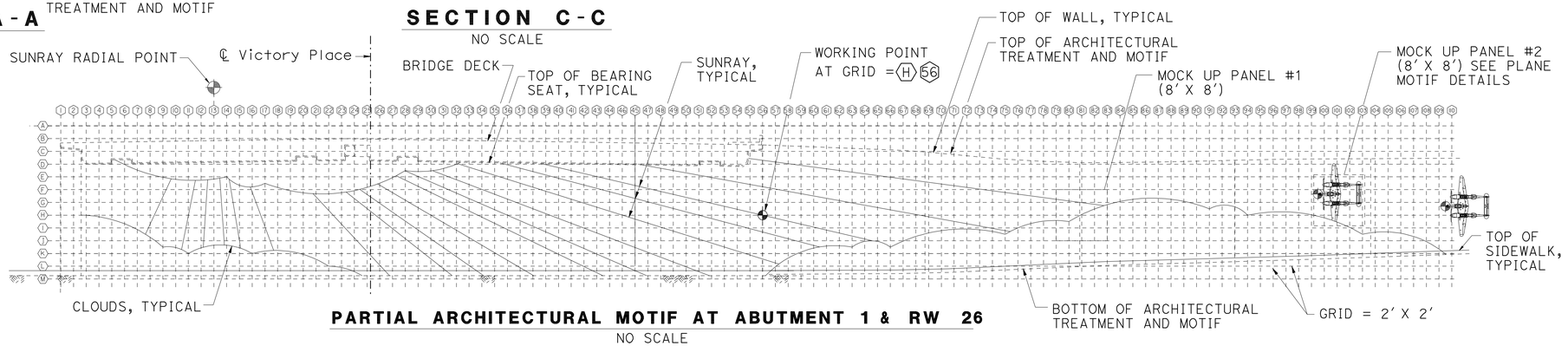

PARTIAL ARCHITECTURAL MOTIF AT ABUTMENT 1 & RW 26
NO SCALE

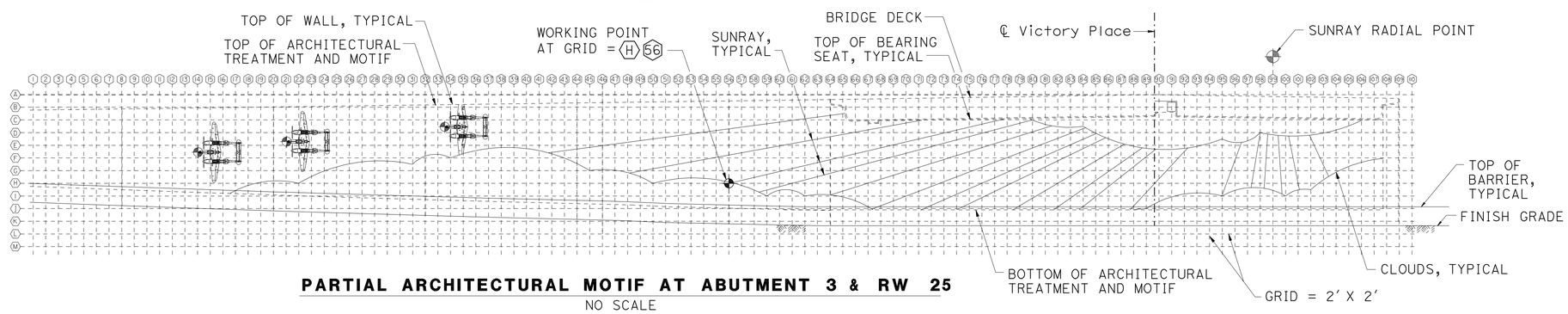

PARTIAL ARCHITECTURAL MOTIF AT ABUTMENT 3 & RW 25
NO SCALE

	BY	CHECKED
DESIGN	ISAAC TASABIA	DAVID P. MURRAY
DETAILS	SURAJ DUTTA	DAVID P. MURRAY
QUANTITIES	MIKE POPE	DAVID R. MURRAY

STATE OF CALIFORNIA
DEPARTMENT OF TRANSPORTATION

DIVISION OF ENGINEERING SERVICES
STRUCTURE DESIGN
DESIGN BRANCH 18

BRIDGE NO. 53C2171
POST MILE 30.53

VICTORY PLACE SEPARATION
ARCHITECTURAL TREATMENT NO.2

STRUCTURES DESIGN DETAIL SHEET (ENGLISH) (REV. 09-01-10)

ORIGINAL SCALE IN INCHES FOR REDUCED PLANS 0 1 2 3

UNIT: 3603
PROJECT NUMBER & PHASE: 0700021119-1
CONTRACT NO.: 07-1218W1

DISREGARD PRINTS BEARING EARLIER REVISION DATES

REVISION DATES

SHEET 16 OF 19

FILE => 53c-2171-o-arch-tret02.dgn

USERNAME => s117606 DATE PLOTTED => 22-MAY-2012 TIME PLOTTED => 1032

DIST	COUNTY	ROUTE	POST MILES TOTAL PROJECT	SHEET No.	TOTAL SHEETS
07	LA	5	29.4/31.6	1033	1931

JEstrada. 01/31/12
REGISTERED CIVIL ENGINEER DATE

5-21-12
PLANS APPROVAL DATE

REGISTERED PROFESSIONAL ENGINEER
JORGE I. ESTRADA
No. C51473
Exp. 06/30/12
CIVIL
STATE OF CALIFORNIA

The State of California or its officers or agents shall not be responsible for the accuracy or completeness of electronic copies of this plan sheet.

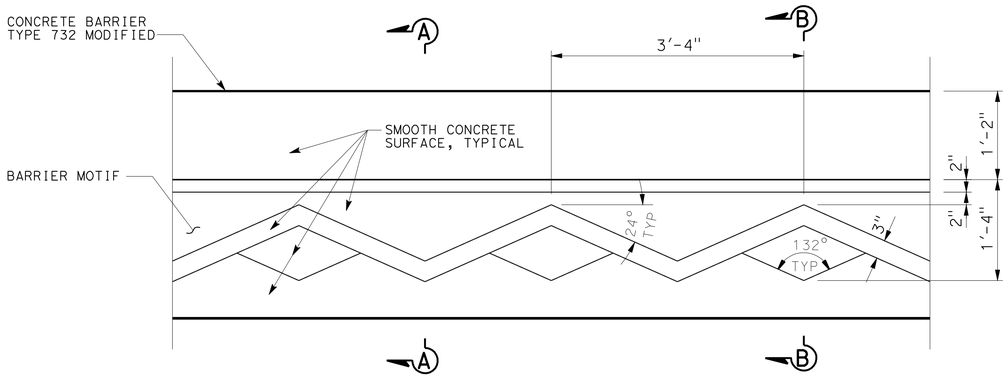

PLAN

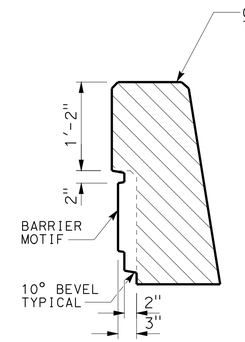

SECTION A-A

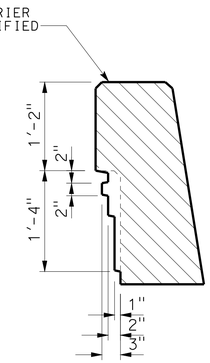

SECTION B-B

BARRIER AESTHETIC TREATMENT

No Scale

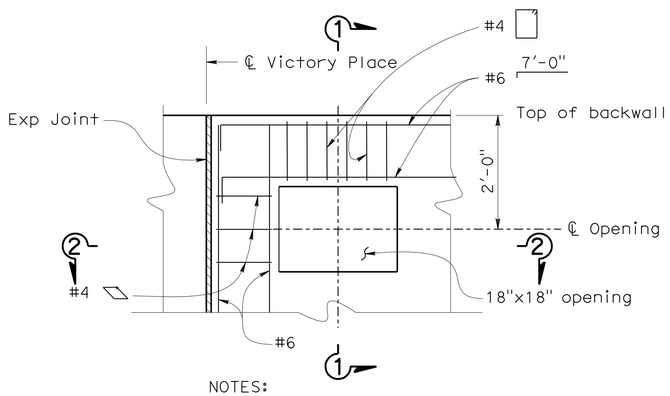

NOTES:

1. Reinf shown is in addition to the abutment backwall reinf.
2. Abut 3 shown, Abut 1 similar

SECTION @ BACKWALL

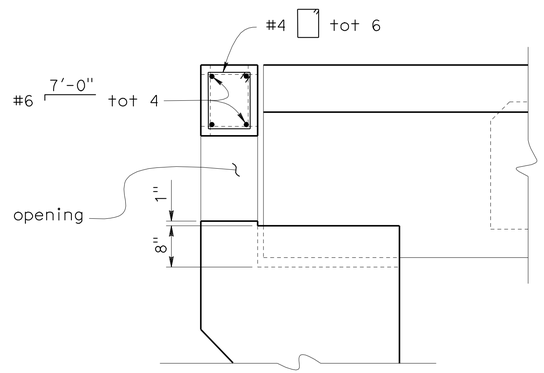

SECTION 1-1

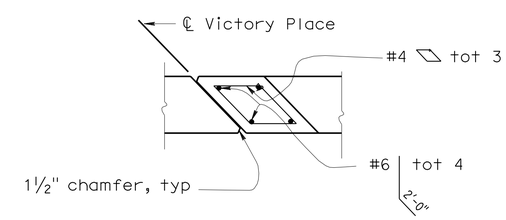

SECTION 2-2

OPENING DETAIL

No Scale

DESIGN	BY J. RUIZ/P. RIMAL	CHECKED DAVID P. MURRAY	
DETAILS	BY SURAJ DUTTA	CHECKED J. RUIZ/P. RIMAL	
QUANTITIES	BY MIKE POPE	CHECKED DAVID P. MURRAY	

STATE OF CALIFORNIA
DEPARTMENT OF TRANSPORTATION

DIVISION OF ENGINEERING SERVICES
STRUCTURE DESIGN
DESIGN BRANCH 18

BRIDGE NO. 53C2171
POST MILE 30.53

VICTORY PLACE SEPARATION
MISCELLANEOUS DETAILS

STRUCTURES DESIGN DETAIL SHEET (ENGLISH) (REV. 09-01-10)

ORIGINAL SCALE IN INCHES FOR REDUCED PLANS 0 1 2 3

UNIT: 3603
PROJECT NUMBER & PHASE: 0700021119-1
CONTRACT NO.: 07-1218W1

DISREGARD PRINTS BEARING EARLIER REVISION DATES

REVISION DATES 03-20-11 01-23-12

SHEET 17 OF 19

FILE => 53c-2171-u-misdet.dgn

USERNAME => s114926 DATE PLOTTED => 11-JUL-2012 TIME PLOTTED => 11:21

DIST	COUNTY	ROUTE	POST MILES TOTAL PROJECT	SHEET No	TOTAL SHEETS
07	LA	5	29.4/31.6	1034	1931

Joseph S. Pratt 1-27-12
CERTIFIED ENGINEERING GEOLOGIST

5-21-12
PLANS APPROVAL DATE

PROFESSIONAL GEOLOGIST Joseph S. Pratt No. 2141 Exp. 5-31-13 CERTIFIED ENGINEERING GEOLOGIST STATE OF CALIFORNIA

The State of California or its officers or agents shall not be responsible for the accuracy or completeness of electronic copies of this plan sheet.

BENCH MARK

BM PRHV903 Elev 641.701 ft
Fd PK Nail SBND LA-5 shoulder; ±9.2 ft north of concrete barrier SBND San Fernando Rd. Bridge; ±9.5 ft in from EP; 69.054 ft Lt Sta 1610+60.79 C/L Rte 5 (Prop).
N 1892390.293
E 6462490.218

BM PRHV302 Elev 627.869 ft
Fd Chiseled "X" on island-median, N/E of LA-5/San Fernando Rd. S/bnd. UC (tunnel); ±10 ft from electrolier; ±1.6 ft from top curb, 176.527 ft Lt Sta 1613+01.41 C/L Rte 5 (Prop).
N 1892485.336
E 6462244.53

NAD83, NAVD88

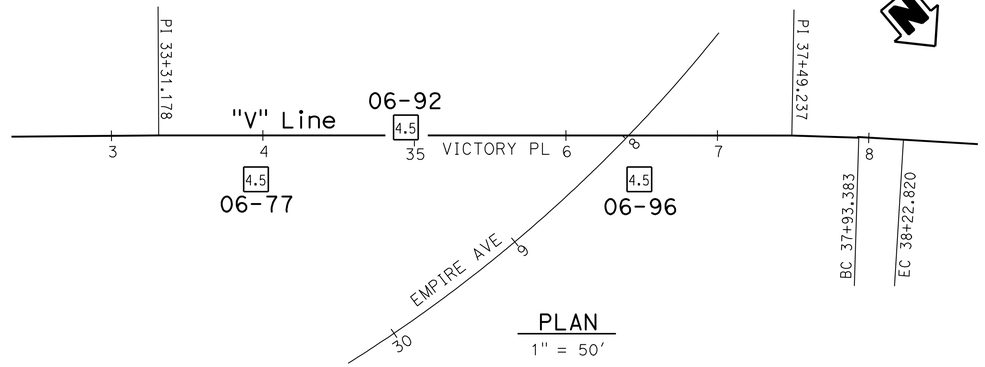

PLAN

1" = 50'

LEGEND:

- (M) Moisture Content
- (PA) Particle Size Analysis
- (PI) Plasticity, Index, Liquid Limit
- (CR) Corrosivity Testing
- (CP) Compaction

Note: No ground water encountered during field investigation.

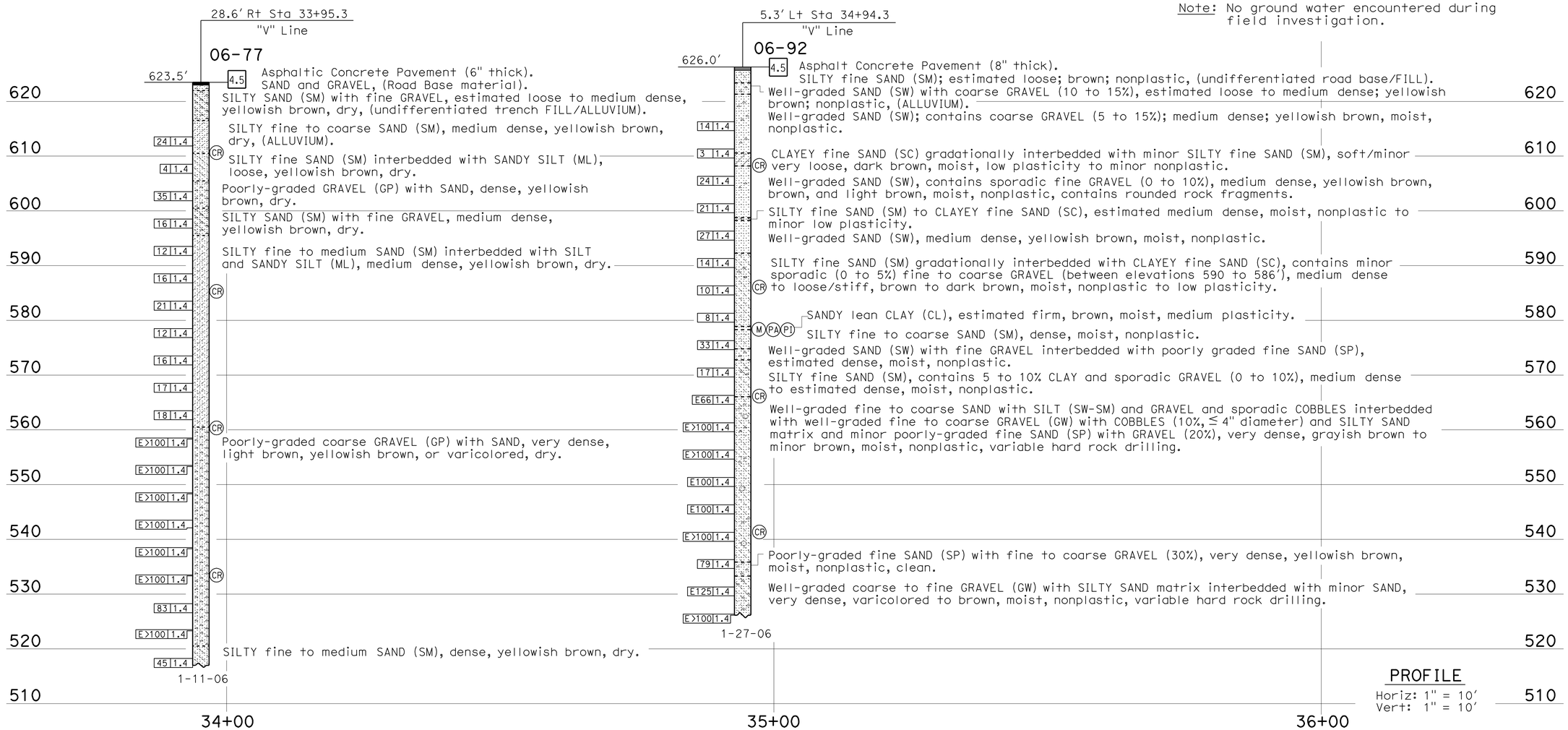

PROFILE

Horiz: 1" = 10'
Vert: 1" = 10'

LEGEND OF BORING OPERATIONS

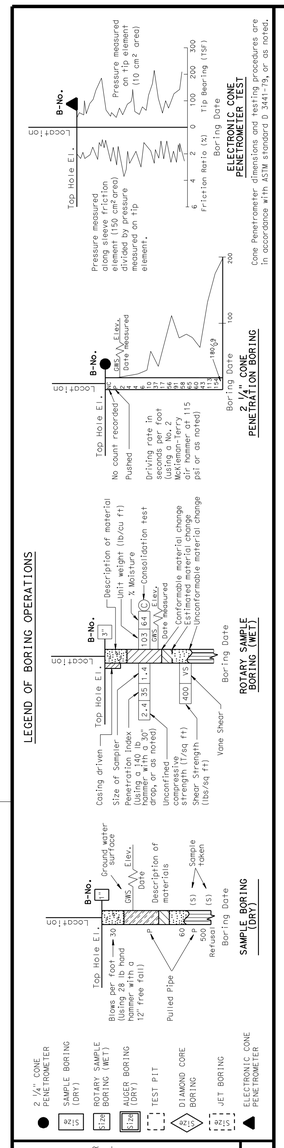

LEGEND OF EARTH MATERIALS

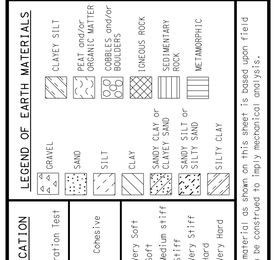

CONSISTENCY CLASSIFICATION FOR SOILS
According to the Standard Penetration Test

SPT N-Value (Blows/Foot)	Granular	SPT N-Value (Blows/Foot)	Cohesive
0-4	Very Loose	<2	Very Soft
5-10	Loose	2-4	Soft
11-30	Medium Dense	5-8	Medium stiff
31-50	Dense	9-15	Stiff
>50	Very Dense	16-30	Very Stiff
		31-60	Hard
		>60	Very Hard

NOTE: Classification of earth material as shown on this sheet is based upon field inspection and is not to be construed to imply mechanical analysis.

ENGINEERING SERVICES	GEOTECHNICAL SERVICES
DRAWN BY	I.G-Remmen
CHECKED BY	J. Pratt

FIELD INVESTIGATION BY: K. Lai, B. Hettick

STATE OF CALIFORNIA DEPARTMENT OF TRANSPORTATION

DIVISION OF ENGINEERING SERVICES STRUCTURE DESIGN DESIGN BRANCH 18

BRIDGE NO. 53C-2171
POST MILE 30.53

VICTORY PLACE SEPARATION (NEW)
LOG OF TEST BORINGS 1 OF 2

OGS LOG OF TEST BORINGS SHEET (ENGLISH) (REV. 5/25/07)

ORIGINAL SCALE IN INCHES FOR REDUCED PLANS 0 1 2 3

UNIT: 3643
PROJECT NUMBER & PHASE: 0700021119-1 CONTRACT NO.: 07-1218W1

DISREGARD PRINTS BEARING EARLIER REVISION DATES

REVISION DATES 01-23-12 01-27-12

SHEET 18 OF 19

FILE => 53c-2171-z-1os2.dgn

USERNAME => s135318 DATE PLOTTED => 22-MAY-2012 TIME PLOTTED => 09:09

DIST	COUNTY	ROUTE	POST MILES TOTAL PROJECT	SHEET No	TOTAL SHEETS
07	LA	5	29.4/31.6	1035	1931

Joseph S. Pratt 1-27-12
CERTIFIED ENGINEERING GEOLOGIST

5-21-12
PLANS APPROVAL DATE

PROFESSIONAL GEOLOGIST — Joseph S. Pratt No. 2141 Exp. 5-31-13 — CERTIFIED ENGINEERING GEOLOGIST — STATE OF CALIFORNIA

The State of California or its officers or agents shall not be responsible for the accuracy or completeness of electronic copies of this plan sheet.

LEGEND:

- (M) Moisture Content
- (PA) Particle Size Analysis
- (PI) Plasticity, Index, Liquid Limit
- (CR) Corrosivity Testing
- (CP) Compaction

FOR PLAN VIEW, SEE
"LOG OF TEST BORINGS" 1 OF 2

Note: No ground water encountered during field investigation.

PROFILE
Horiz: 1" = 10'
Vert: 1" = 10'

LEGEND OF BORING OPERATIONS

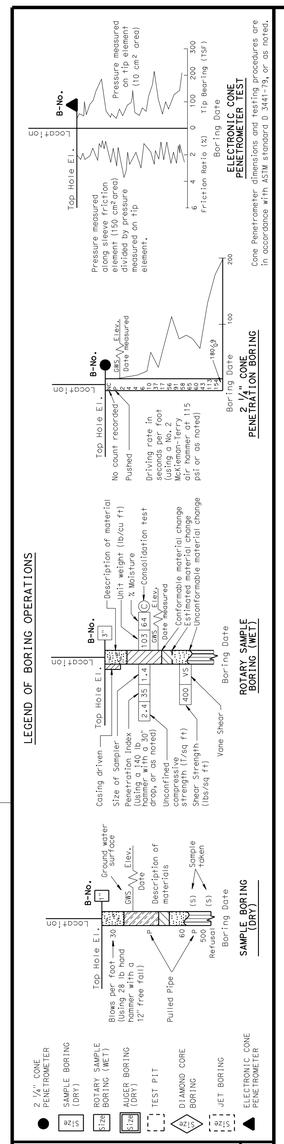

LEGEND OF EARTH MATERIALS

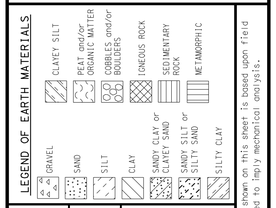

CONSISTENCY CLASSIFICATION FOR SOILS
According to the Standard Penetration Test

SPT N-Value (Blows/ foot)	Granular	SPT N-Value (Blows/ foot)	Cohesive
0-4	Very Loose	<2	Very Soft
5-10	Loose	2-4	Soft
11-30	Medium Dense	5-8	Medium stiff
31-50	Dense	9-15	Stiff
>50	Very Dense	16-30	Very Stiff
		31-60	Hard
		>60	Very Hard

NOTE: Classification of earth material as shown on this sheet is based upon field inspection and is not to be construed to imply mechanical analysis.

ENGINEERING SERVICES	GEOTECHNICAL SERVICES
DRAWN BY	I.G-Remmen
CHECKED BY	J. Pratt

FIELD INVESTIGATION BY: B. Hettick

STATE OF CALIFORNIA
DEPARTMENT OF TRANSPORTATION

DIVISION OF ENGINEERING SERVICES
STRUCTURE DESIGN
DESIGN BRANCH 18

BRIDGE NO. 53C-2171
POST MILE 30.53

VICTORY PLACE SEPARATION (NEW)
LOG OF TEST BORINGS 2 OF 2

OGS LOG OF TEST BORINGS SHEET (ENGLISH) (REV. 5/25/07)

ORIGINAL SCALE IN INCHES FOR REDUCED PLANS 0 1 2 3

UNIT: 3643
PROJECT NUMBER & PHASE: 0700021119-1
CONTRACT NO.: 07-1218W1

DISREGARD PRINTS BEARING EARLIER REVISION DATES

REVISION DATES: 01-23-12 01-27-12

SHEET 19 OF 19

FILE => 53c-2171-z-2os2.dgn

USERNAME => s135318 DATE PLOTTED => 22-MAY-2012 TIME PLOTTED => 09:10

DIST	COUNTY	ROUTE	POST MILES TOTAL PROJECT	SHEET No.	TOTAL SHEETS
07	LA	5	29.4/31.6	1036	1931

REGISTERED CIVIL ENGINEER — DATE 1/31/12

5-21-12
PLANS APPROVAL DATE

The State of California or its officers or agents shall not be responsible for the accuracy or completeness of electronic copies of this plan sheet.

REGISTERED PROFESSIONAL ENGINEER — JORGE I. ESTRADA — No. C51473 — Exp. 06-30-12 — CIVIL — STATE OF CALIFORNIA

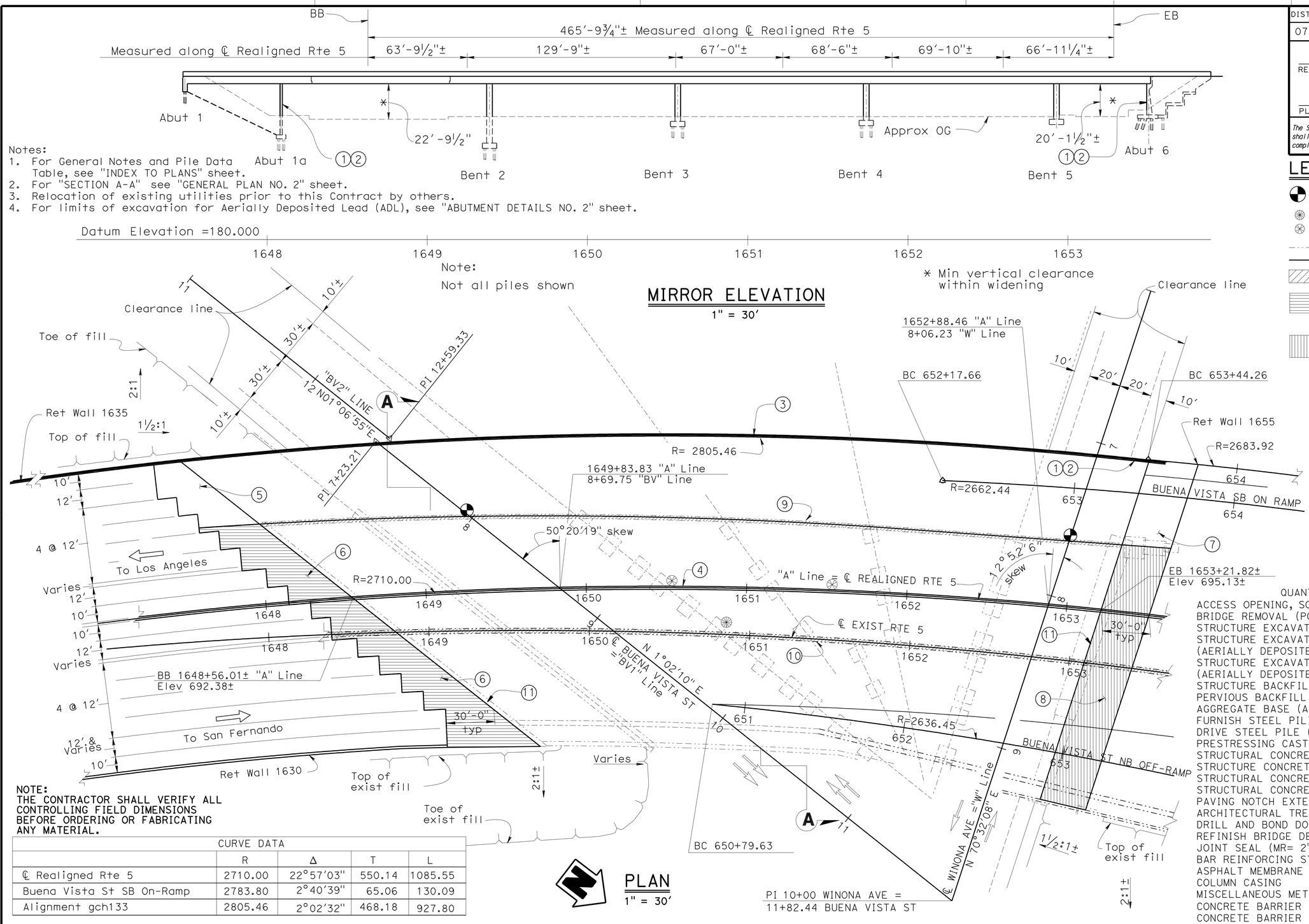

Notes:
1. For General Notes and Pile Data Table, see "INDEX TO PLANS" sheet.
2. For "SECTION A-A" see "GENERAL PLAN NO. 2" sheet.
3. Relocation of existing utilities prior to this Contract by others.
4. For limits of excavation for Aerially Deposited Lead (ADL), see "ABUTMENT DETAILS NO. 2" sheet.

NOTE:
THE CONTRACTOR SHALL VERIFY ALL CONTROLLING FIELD DIMENSIONS BEFORE ORDERING OR FABRICATING ANY MATERIAL.

CURVE DATA	R	Δ	T	L
℄ Realigned Rte 5	2710.00	22°57'03"	550.14	1085.55
Buena Vista St SB On-Ramp	2783.80	2°40'39"	65.06	130.09
Alignment gch133	2805.46	2°02'32"	468.18	927.80

LEGEND

- Denotes point of minimun vertical clearance
- Exist deck drain to be abandoned
- Deck Drain Type A
- Indicates Existing Structure
- Indicates New Construction
- Indicates Bridge Removal (Portion)
- Indicates location and limits of new structure approach Type R(30D) (Paving Notch Extensions required at this location)
- Indicates location and limits of new structure approach Type R(30S) (Paving Notch Extensions not required at this location)

NOTES:

1. Paint "BUENA VISTA-WINONA UC"
2. Paint "BRIDGE NO. 53-1110"
3. Concrete Barrier Type 736 (MOD)
4. Concrete Barrier Type 60A (MOD)
5. Structure Approach Type N(30D)
6. Structure Approach Type R(30D)
7. Structure Approach Type N(30S)
8. Structure Approach Type R(30S)
9. Remove Exist Concrete Barrier, Railing and Overhang
10. Remove Exist Type 50 Barrier
11. New Joint Seal

QUANTITIES

ACCESS OPENING, SOFFIT	2 EA
BRIDGE REMOVAL (PORTION), LOCATION E	LUMP SUM
STRUCTURE EXCAVATION (BRIDGE)	1,036 CY
STRUCTURE EXCAVATION (TYPE Y-1) (AERIALLY DEPOSITED LEAD)	72 CY
STRUCTURE EXCAVATION (TYPE Y-2) (AERIALLY DEPOSITED LEAD)	18 CY
STRUCTURE BACKFILL (BRIDGE)	1,252 CY
PERVIOUS BACKFILL MATERIAL	65 CY
AGGREGATE BASE (APPROACH SLAB)	31 CY
FURNISH STEEL PILING (PP 16x0.500)	8,130 LF
DRIVE STEEL PILE (PP 16x0.500)	187 EA
PRESTRESSING CAST-IN-PLACE CONCRETE	LUMP SUM
STRUCTURAL CONCRETE, BRIDGE FOOTING	254 CY
STRUCTURE CONCRETE, BRIDGE	2,833 CY
STRUCTURAL CONCRETE, APPROACH SLAB TYPE N	86 CY
STRUCTURAL CONCRETE, APPROACH SLAB TYPE R	303 CY
PAVING NOTCH EXTENSION	225 CF
ARCHITECTURAL TREATMENT	1,189 SQFT
DRILL AND BOND DOWEL	699 LF
REFINISH BRIDGE DECK	1,279 SQFT
JOINT SEAL (MR= 2")	259 LF
BAR REINFORCING STEEL (BRIDGE)	788,536 LB
ASPHALT MEMBRANE WATERPROOFING	926 SQFT
COLUMN CASING	76,134 LB
MISCELLANEOUS METAL (RESTRAINER-CABLE TYPE))	1,450 LB
CONCRETE BARRIER (TYPE 60A MODIFIED)	523 LF
CONCRETE BARRIER (TYPE 736A MODIFIED)	647 LF

MICHAEL POPE
DESIGN ENGINEER

	BY	CHECKED
DESIGN	Jorge Estrada	XL/ Jenny Zhang
DETAILS	FR/ Minh Tran	XL/ Jenny Zhang
QUANTITIES	Tanya Wyckoff	Prem Rimal

LOAD FACTOR DESIGN — LIVE LOADING: HS20-44 AND ALTERNATIVE AND PERMIT DESIGN LOAD
LAYOUT — BY FR/ Minh Tran — CHECKED Jorge Estrada
SPECIFICATIONS — BY James Choi — PLANS AND SPECS COMPARED James Choi

STATE OF CALIFORNIA
DEPARTMENT OF TRANSPORTATION

DIVISION OF ENGINEERING SERVICES
STRUCTURE DESIGN
DESIGN BRANCH 18

BRIDGE NO. 53-1110
POST MILE 31.23

BUENA VISTA - WINONA UC (WIDEN)
GENERAL PLAN NO. 1

STRUCTURES MAINTENANCE GENERAL PLAN SHEET (ENGLISH) (REV. 09-01-10)

ORIGINAL SCALE IN INCHES FOR REDUCED PLANS 0 1 2 3

UNIT: 3603
PROJECT NUMBER & PHASE: 07000221119-1
CONTRACT NO.: 07-1218W1

DISREGARD PRINTS BEARING EARLIER REVISION DATES
REVISION DATES 7/30/08 10/27/11 2/3/12

SHEET 1 OF 52

FILE => e53-1110-a-gp1.dgn

USERNAME => s114926 DATE PLOTTED => 19-JUN-2012 TIME PLOTTED => 10:00

DIST	COUNTY	ROUTE	POST MILES TOTAL PROJECT	SHEET No.	TOTAL SHEETS
07	LA	5	29.4/31.6	1037	1931

REGISTERED CIVIL ENGINEER — DATE 1/31/12

PLANS APPROVAL DATE 5-21-12

REGISTERED PROFESSIONAL ENGINEER — JORGE I. ESTRADA — No. C51473 — Exp. 06-30-12 — CIVIL — STATE OF CALIFORNIA

The State of California or its officers or agents shall not be responsible for the accuracy or completeness of electronic copies of this plan sheet.

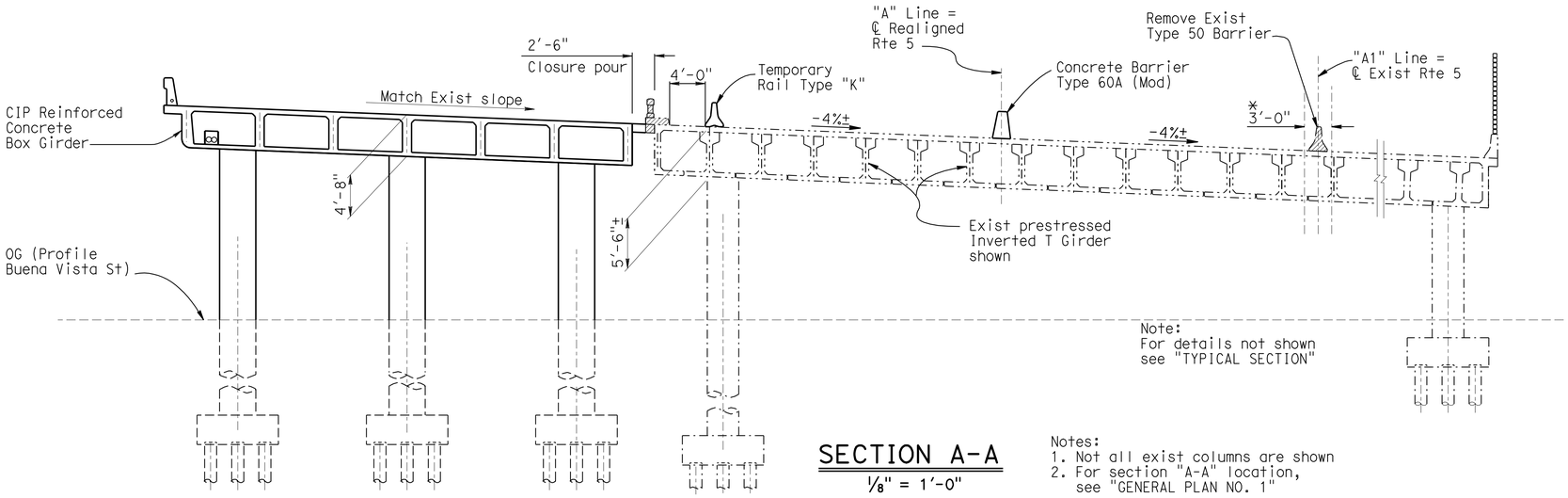

SECTION A-A

1/8" = 1'-0"

Notes:
1. Not all exist columns are shown
2. For section "A-A" location, see "GENERAL PLAN NO. 1"
3. Electrolier locations (stations along ℄ Rte 5): 1648+50, 1650+30, 1652+80

UTILITIES

Ⓐ 2-4" Communication conduits
Ⓑ 1-2"C, See Electrical Plans.

LEGEND

-·-·-·- Indicates Existing Structure

——— Indicates New Construction

Indicates Bridge Removal (Portion)

* Limits of refinishing deck

** Indicates the dimension at BB

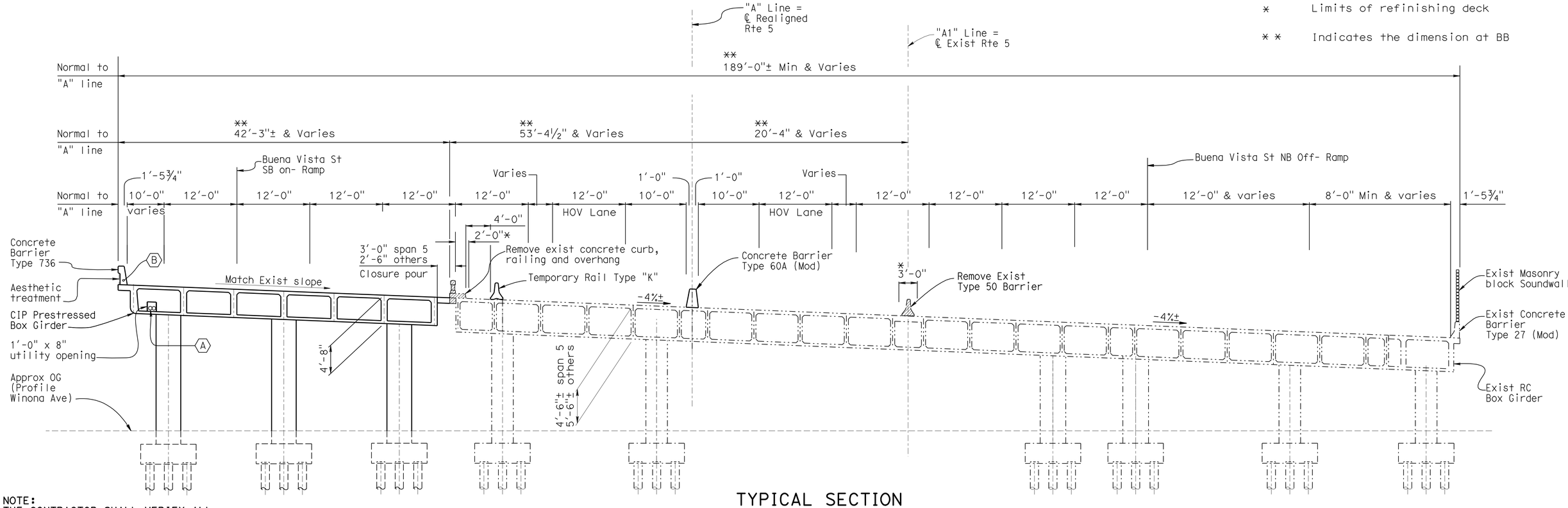

TYPICAL SECTION

1/8" = 1'-0"

Note: Not all exist columns are shown

NOTE:
THE CONTRACTOR SHALL VERIFY ALL CONTROLLING FIELD DIMENSIONS BEFORE ORDERING OR FABRICATING ANY MATERIAL.

X DESIGN ENGINEER	DESIGN	BY Jorge Estrada	CHECKED Prem Rimal	LOAD FACTOR DESIGN	LIVE LOADING: HS20-44 AND ALTERNATIVE AND PERMIT DESIGN LOAD
	DETAILS	BY FR/ Minh Tran	CHECKED Prem Remal	LAYOUT	BY FR/ Minh Tran — CHECKED Jorge Estrada
	QUANTITIES	BY Tanya Wyckoff	CHECKED Prem Rimal	SPECIFICATIONS	BY James Choi — PLANS AND SPECS COMPARED James Choi

STATE OF CALIFORNIA DEPARTMENT OF TRANSPORTATION

DIVISION OF ENGINEERING SERVICES STRUCTURE DESIGN — DESIGN BRANCH 18

BRIDGE NO. 53-1110 — POST MILE 31.23

BUENA VISTA - WINONA UC (WIDEN)
GENERAL PLAN NO. 2

STRUCTURES MAINTENANCE GENERAL PLAN SHEET (ENGLISH) (REV. 09-01-10)

ORIGINAL SCALE IN INCHES FOR REDUCED PLANS 0 1 2 3

UNIT: 3603
PROJECT NUMBER & PHASE: 07000221119-1 CONTRACT NO.: 07-1218w1

DISREGARD PRINTS BEARING EARLIER REVISION DATES — REVISION DATES 8/10/05 10/31/11 1/31/12

SHEET 2 OF 52

FILE => e53-1110-a-gp2.dgn

USERNAME => s135318 DATE PLOTTED => 22-MAY-2012 TIME PLOTTED => 03:10

DIST	COUNTY	ROUTE	POST MILES TOTAL PROJECT	SHEET No.	TOTAL SHEETS
07	LA	5	29.4/31.6	1038	1931

J Estrada. 1/31/12
REGISTERED CIVIL ENGINEER DATE

5-21-12
PLANS APPROVAL DATE

REGISTERED PROFESSIONAL ENGINEER JORGE I. ESTRADA No. C51473 Exp. 06-30-12 CIVIL STATE OF CALIFORNIA

The State of California or its officers or agents shall not be responsible for the accuracy or completeness of electronic copies of this plan sheet.

GENERAL NOTES
LOAD FACTOR DESIGN

DESIGN: CALTRANS BRIDGE DESIGN SPECIFICATION-April 2000 (LFD) (1996 16th Edition AASHTO with Interims and Revisions by CALTRANS)

SEISMIC DESIGN: Caltrans Seismic Design Criteria (SDC), Version 1.3 February 2004

DEAD LOAD: Includes 35 psf for future wearing surface.

LIVE LOAD: HS20-44 and alternative and permit design load.

RAIL LOAD: 54 kips traffic impact loading evenly distributed over 10 ft at the top of barrier, 45 degree distribution down and outward.

SEISMIC LOADING: Site Specific Acceleration Response Spectrum curve

REINFORCED CONCRETE: f_y = 60 ksi
f'_c = See Concrete Strength and Type Limits on "CONSTRUCTION STAGING" sheet
n = 8
Transverse Deck Slabs (Working Stress Design)
f_s = 20 ksi
f_c = 1600 psi
n = 10

PRESTRESSED CONCRETE: See "Prestressed Notes" on "GIRDER LAYOUT NO. 1 & 4" sheets

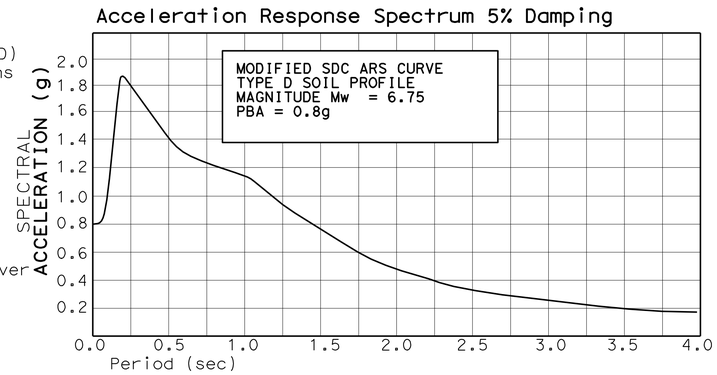

SITE SPECIFIC ARS CURVE

PILE DATA TABLE

Location	Pile Type	Design Loading (kip)	Nominal Resistance		Design Tip Elevation (m)	Specified Tip Elevation (m)
			Comp-ression (kip)	Tension (kip)		
Abutment 1	PP16x 0.500	140	280	0	+638.0(1) +655.0(2)	+638.0
Abutment 1a	PP16x 0.500	140	280	0	+623.0(1) +628.0(2)	+623.0
Bent 2	PP16x 0.500	140	280	0	+623.0(1) +633.0(2)	+623.0
Bent 3	PP16x 0.500	140	280	0	+623.0(1) +636.0(2)	+623.0
Bent 4	PP16x 0.500	140	280	0	+623.0(1) +637.0(2)	+623.0
Bent 5	PP16x 0.500	140	280	0	+622.0(1) +638.0(2)	+622.0
Abutment 6	PP16x 0.500	140	280	0	+622.0(1) +639.0(2)	+622.0

NOTES: Design tip elevation is controlled by the following demands:

(1) Nominal Resistance in Compression (≤½inch vertical deflection at top of pile)

(2) Nominal Lateral Resistance - Free Head Condition (specified 1 inch lateral deflection at top of pile)

NOTE:
THE CONTRACTOR SHALL VERIFY ALL CONTROLLING FIELD DIMENSIONS BEFORE ORDERING OR FABRICATING ANY MATERIAL.

INDEX TO PLANS

Sheet No.	Title
1	GENERAL PLAN No.1
2	GENERAL PLAN No.2
3	INDEX TO PLANS
4	CONSTRUCTION STAGING
5	FOUNDATION PLAN No.1
6	FOUNDATION PLAN No.2
7	ABUTMENT 1 LAYOUT
8	ABUTMENT 1A LAYOUT
9	ABUTMENT 6 LAYOUT
10	ABUTMENT DETAILS No.1
11	ABUTMENT DETAILS No.2
12	ABUTMENT DETAILS No. 3
13	BENT 2 LAYOUT
14	BENT 3 LAYOUT
15	BENT 4 LAYOUT
16	BENT 5 LAYOUT
17	BENT DETAILS NO.1
18	BENT DETAILS NO.2
19	BENT DETAILS NO.3
20	TYPICAL SECTION No.1
21	TYPICAL SECTION No.2
22	TYPICAL SECTION No.3
23	GIRDER LAYOUT No.1
24	GIRDER LAYOUT No.2
25	GIRDER LAYOUT No.3
26	GIRDER LAYOUT No.4
27	GIRDER REINFORCEMENT No.1
28	GIRDER REINFORCEMENT No.2
29	GIRDER REINFORCEMENT No.3
30	GIRDER REINFORCEMENT No.4
31	GIRDER REINFORCEMENT No.5
32	HINGE 1 LAYOUT
33	HINGE 2 LAYOUT
34	HINGE DETAILS
35	CABLE RESTRAINER UNIT - TYPE 2
36	CABLE RESTRAINER UNIT - TYPE 2 DETAILS
37	SEISMIC RETROFIT DETAILS No.1
38	SEISMIC RETROFIT DETAILS No. 2
39	SEISMIC RETROFIT DETAILS No. 3
40	MISCELLANEOUS DETAILS
41	DECK AND SOFFIT OPENINGS
42	STRUCTURE APPROACH TYPE N(30S)
43	STRUCTURE APPROACH TYPE R(30S)
44	STRUCTURE APPROACH TYPE N(30D)
45	STRUCTURE APPROACH TYPE R(30D)
46	STRUCTURE APPROACH DRAINAGE DETAILS
47	LOG OF TEST BORING 1 OF 6
48	LOG OF TEST BORING 2 OF 6
49	LOG OF TEST BORING 3 OF 6
50	LOG OF TEST BORING 4 OF 6
51	LOG OF TEST BORING 5 OF 6
52	LOG OF TEST BORING 6 OF 6

STANDARD PLANS
Dated May 2006

A10A	ACRONYMS AND ABBREVIATIONS
A62C	LIMITS OF PAYMENT FOR EXCAVATION AND BACKFILL - BRIDGE
RSP A76A	CONCRETE BARRIER TYPE 60
BO-1	BRIDGE DETAILS
BO-3	BRIDGE DETAILS
BO-5	BRIDGE DETAILS
BO-13	BRIDGE DETAILS
B2-5	PILE DETAILS CLASS 90 AND CLASS 140
RSP B2-8	PILE DETAILS CLASS 200
RSP B6-21	JOINT SEALS (MAXIMUM MOVEMENT RATING= 2")
B7-1	BOX GIRDER DETAILS
B7-10	UTILITY OPENING BOX GIRDER
B8-5	CAST -IN PLACE PRESTRESSED GIRDER DETAILS
B14-3	COMMUNICATION AND SPRINKLER CONTROL CONDUITS (CONDUIT LESS THAN 4")
B14-4	WATER SUPPLY LINE (BRIDGE) (PIPE SIZES LESS THAN 4")
B14-5	WATER SUPPLY LINE (DETAILS) (PIPE SIZES LESS THAN 4")
B11-56	CONCRETE BARRIER TYPE 736
T3	TEMPORARY RAILING (TYPE K)
NSP T3A	TEMPORARY RAILING (TYPE K)

STANDARD PLAN SHEET NO.

DETAIL NO.

	BY	CHECKED
DESIGN	Prem Rimal	Jorge Estrada
DETAILS	FR/ Minh Tran	Prem Rimal
QUANTITIES	Tanya Wyckoff	Prem Rimal

STATE OF CALIFORNIA
DEPARTMENT OF TRANSPORTATION

DIVISION OF ENGINEERING SERVICES
STRUCTURE DESIGN
DESIGN BRANCH 18

BRIDGE NO. 53-1110
POST MILE 31.23

BUENA VISTA - WINONA UC (WIDEN)
INDEX TO PLANS

STRUCTURES DESIGN DETAIL SHEET (ENGLISH) (REV. 09-01-10)

ORIGINAL SCALE IN INCHES FOR REDUCED PLANS 0 1 2 3

UNIT: 3603
PROJECT NUMBER & PHASE: 0700021119-1 CONTRACT NO.: 07-1218w1

DISREGARD PRINTS BEARING EARLIER REVISION DATES → 11/2/07 10/31/11 1/31/12

SHEET 3 OF 52

FILE => e53-1110-b-itp.dgn

USERNAME => s135318 DATE PLOTTED => 22-MAY-2012 TIME PLOTTED => 08:08

DIST	COUNTY	ROUTE	POST MILES TOTAL PROJECT	SHEET No.	TOTAL SHEETS
07	LA	5	29.4/31.6	1039	1931

JEstrada. 1/31/12
REGISTERED CIVIL ENGINEER DATE

5-21-12
PLANS APPROVAL DATE

REGISTERED PROFESSIONAL ENGINEER JORGE I. ESTRADA No. C51473 Exp. 06-30-12 CIVIL STATE OF CALIFORNIA

The State of California or its officers or agents shall not be responsible for the accuracy or completeness of electronic copies of this plan sheet.

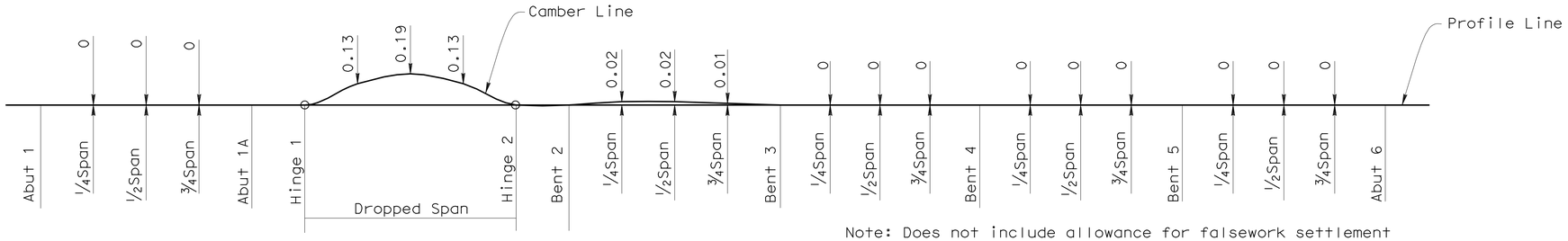

Note: Does not include allowance for falsework settlement

CAMBER DIAGRAM

No Scale

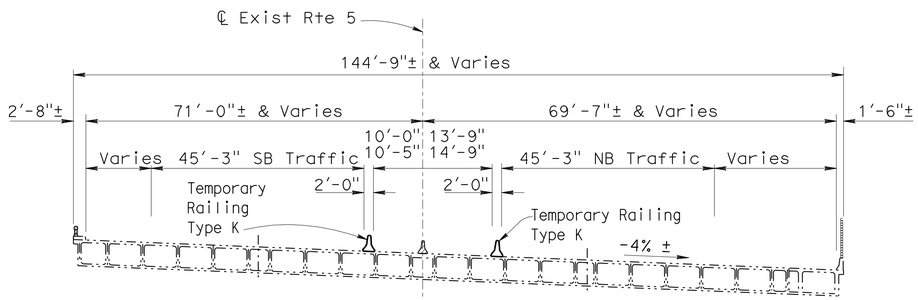

STAGE 1

1/16" = 1'

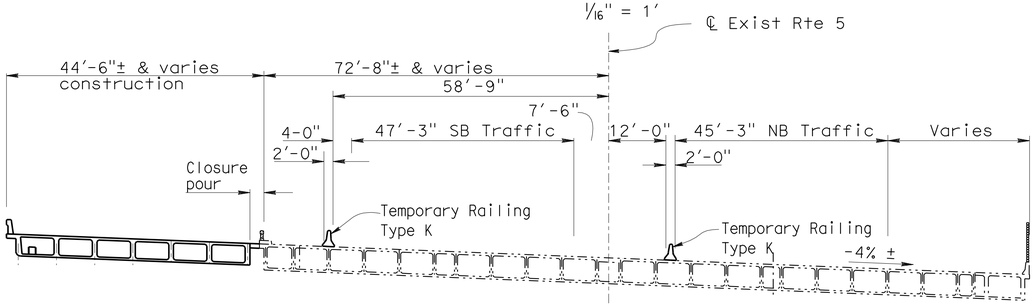

STAGE 2

1/16" = 1'

FALSEWORK RELEASE

Alternative 1:

Falsework shall be released as soon as permitted by the specifications. Closure pour shall not be placed sooner than 60 days after the falsework had been released.

Alternative 2:

Falsework shall not be released less than 28 days after the last concrete has been placed. Closure pour shall not be placed sooner than 14 days after the falsework has been released.

When Falsework Release Alternative 2 is used, camber values are 0.75 times those shown.

TIME DEPENDENT CAMBER VALUE (Except at "Dropped Span")	
Elapsed time measured from prestressing box girder to placement of closure pour	% of the values as shown in camber diagram
30 days	140
45 days	160
60 days	180
75 days	200
90 days	220
120 days	240
150 days	245
180 days	250

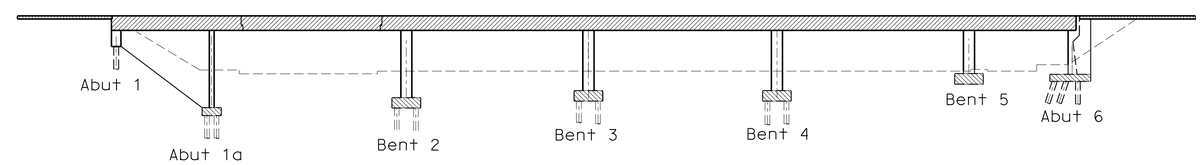

CONCRETE STRENGTH AND TYPE LIMITS

No Scale

LEGEND

Structural Concrete, Bridge (f'c = 3600 psi @ 28 days)

Structural Concrete, Bridge (f'c = 4500 psi @ 28 days)

Structural Concrete, Bridge Footing (f'c = 3600 psi @ 28 days)

Structural Concrete, Approach Slab

LEGEND

Indicates Existing Structure

Indicates New Construction

NOTE:
THE CONTRACTOR SHALL VERIFY ALL CONTROLLING FIELD DIMENSIONS BEFORE ORDERING OR FABRICATING ANY MATERIAL.

	BY	CHECKED
DESIGN	Jorge Estrada	Prem Rimal
DETAILS	FR/ Minh Tran	Prem Rimal/ JE
QUANTITIES	Tanya Wyckoff	Prem Rimal

STATE OF CALIFORNIA
DEPARTMENT OF TRANSPORTATION

DIVISION OF ENGINEERING SERVICES
STRUCTURE DESIGN
DESIGN BRANCH 18

BRIDGE NO. 53-1110
POST MILE 31.23

BUENA VISTA - WINONA UC (WIDEN)
CONSTRUCTION STAGING

STRUCTURES MAINTENANCE DETAIL SHEET (ENGLISH) (REV. 09-01-10)

ORIGINAL SCALE IN INCHES FOR REDUCED PLANS 0 1 2 3

UNIT: 3603
PROJECT NUMBER & PHASE: 0700021119-1
CONTRACT NO.: 07-1218w1

DISREGARD PRINTS BEARING EARLIER REVISION DATES

REVISION DATES: 10/31/11 1/31/12

SHEET 4 OF 52

FILE => e53-1110-c-cs.dgn

USERNAME => s135318 DATE PLOTTED => 22-MAY-2012 TIME PLOTTED => 09:10

DIST	COUNTY	ROUTE	POST MILES TOTAL PROJECT	SHEET No.	TOTAL SHEETS
07	LA	5	29.4/31.6	1040	1931

REGISTERED CIVIL ENGINEER — DATE 1/31/12

PLANS APPROVAL DATE 5-21-12

REGISTERED PROFESSIONAL ENGINEER — JORGE I. ESTRADA — No. C51473 — Exp. 06-30-12 — CIVIL — STATE OF CALIFORNIA

The State of California or its officers or agents shall not be responsible for the accuracy or completeness of electronic copies of this plan sheet.

CURVE DATA

No.	R	Δ	T	L
Ⓐ	2710.00	22°57'04"	550.15	1085.55
Ⓑ	3000.00	20°27'43"	541.46	1071.39

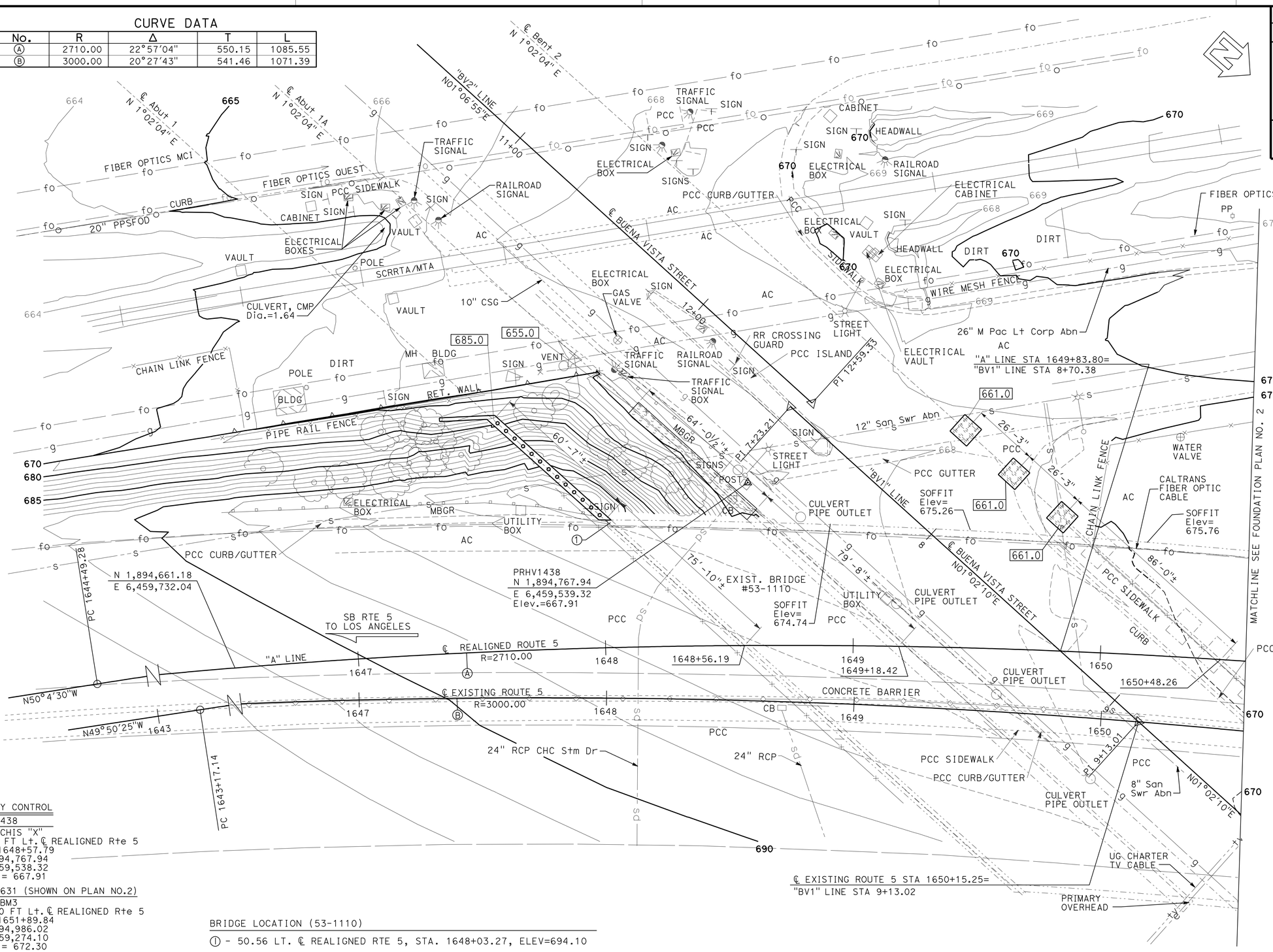

LEGEND

XXXX — Indicates bottom of footing elevation

Indicates pile

NOTES:

1. UTILITY LINES ARE APPROXIMATE PER DISTRICT UTILITY MAP.
2. NOT ALL PILES SHOWN

SURVEY CONTROL

PRHV1438
Fnd CHIS "X"
65.86 FT Lt. ℄ REALIGNED Rte 5
Sta. 1648+57.79
N 1,894,767.94
E 6,459,538.32
Elev. = 667.91

PRHV1631 (SHOWN ON PLAN NO.2)
Fnd BM3
140.60 FT Lt. ℄ REALIGNED Rte 5
Sta. 1651+89.84
N 1,894,986.02
E 6,459,274.10
Elev. = 672.30

BRIDGE LOCATION (53-1110)

① - 50.56 LT. ℄ REALIGNED RTE 5, STA. 1648+03.27, ELEV=694.10

PRELIMINARY INVESTIGATION SECTION

SCALE	VERT.DATUM NAVD88	PHOTOGRAMMETRY AS OF: X					
1"=20'	HORZ.DATUM NAD83 (1991.35)	SURVEYED	BY DISTRICT	CHECKED	BY D.IVY	10/2011	
ALIGNMENT TIES Dist. Traverse Sheet		DRAFTED	BY T.ZOLNIKOV	10/2011	CHECKED	BY L.LEW	10/2011

DESIGN	BY Jorge Estrada	CHECKED Prem Rimal
DETAILS	BY FR/ Minh Tran	CHECKED Jorge Estrada
QUANTITIES	BY Tanya Wyckoff	CHECKED Prem Rimal

STATE OF CALIFORNIA DEPARTMENT OF TRANSPORTATION

DIVISION OF ENGINEERING SERVICES STRUCTURE DESIGN — DESIGN BRANCH 18

BRIDGE NO. 53-1110 — POST MILE 31.23

BUENA VISTA - WINONA UC (WIDEN)
FOUNDATION PLAN NO.1

STRUCTURES FOUNDATION PLAN SHEET (ENGLISH) (REV. 09-01-10)

ORIGINAL SCALE IN INCHES FOR REDUCED PLANS 0 1 2 3

UNIT: 3603
PROJECT NUMBER & PHASE: 0700021119-1 — CONTRACT NO.: 07-1218W1

DISREGARD PRINTS BEARING EARLIER REVISION DATES — REVISION DATES ~~10/31/11~~ 02/09/12 — SHEET 5 OF 52

FILE => e53-1110-e-fdp01.dgn

DIST	COUNTY	ROUTE	POST MILES TOTAL PROJECT	SHEET No.	TOTAL SHEETS
07	LA	5	29.4/31.6	1041	1931

J.Estrada. 1-31-12
REGISTERED CIVIL ENGINEER DATE

5-21-12
PLANS APPROVAL DATE

REGISTERED PROFESSIONAL ENGINEER
JORGE I. ESTRADA
No. C51473
Exp. 06-30-12
CIVIL
STATE OF CALIFORNIA

The State of California or its officers or agents shall not be responsible for the accuracy or completeness of electronic copies of this plan sheet.

CURVE DATA

No.	R	Δ	T	L
Ⓒ	2683.92	3°33′15"	83.27	166.49
Ⓓ	268.52	26°00′51"	62.03	121.92
Ⓔ	2662.44	6°27′22"	150.16	300.00
Ⓕ	2636.45	10°59′07"	253.52	505.48

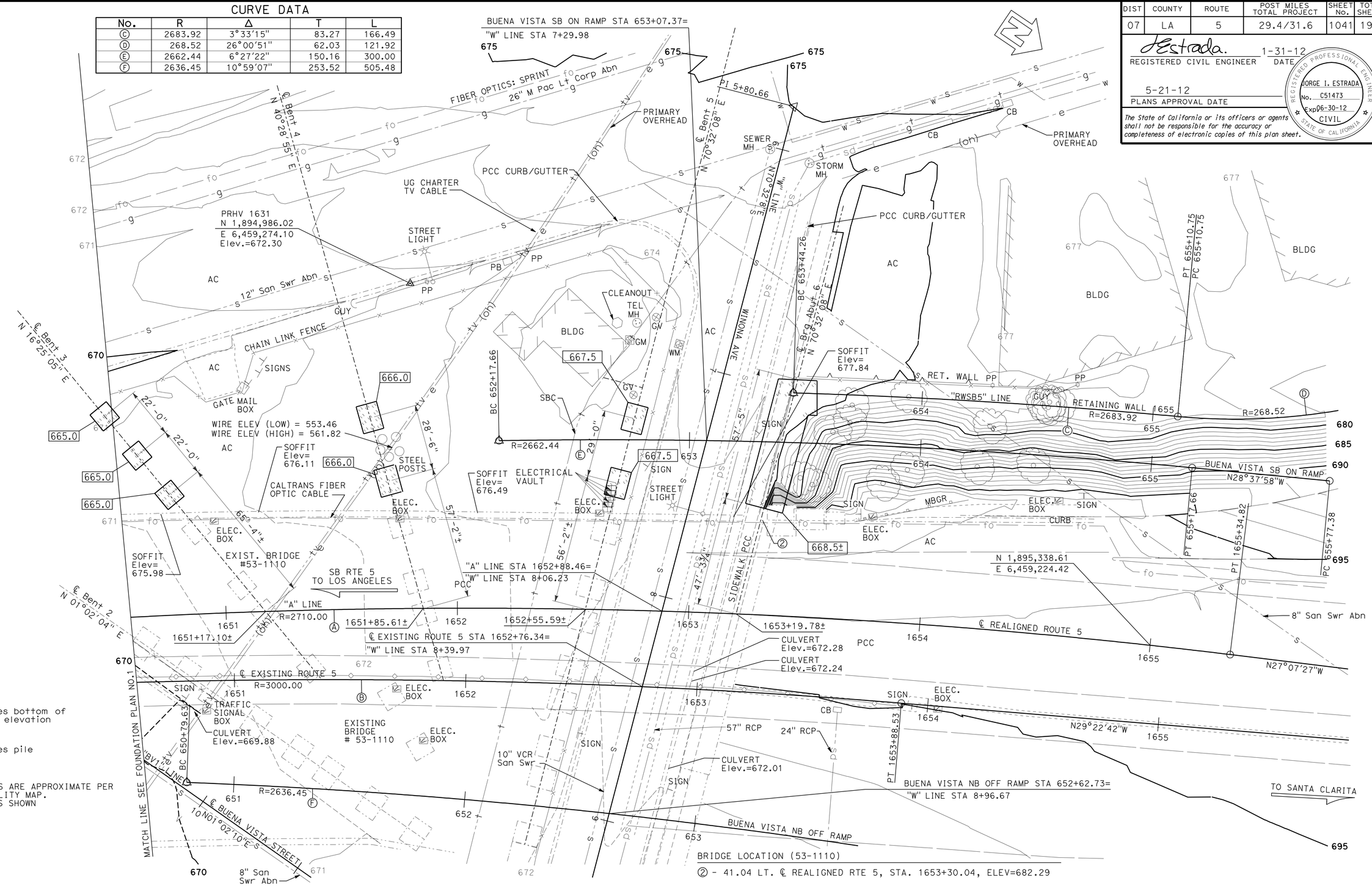

LEGEND

XXXX — Indicates bottom of footing elevation

Indicates pile

NOTES:

1. UTILITY LINES ARE APPROXIMATE PER DISTRICT UTILITY MAP.
2. NOT ALL PILES SHOWN

PRELIMINARY INVESTIGATION SECTION

SCALE 1"=20′	VERT.DATUM NAVD88	PHOTOGRAMMETRY AS OF: X			
	HORZ.DATUM NAD83 (1991.35)	SURVEYED	BY DISTRICT	CHECKED	BY D.IVY 10/2011
	ALIGNMENT TIES Dist. Traverse Sheet	DRAFTED	BY T.ZOLNIKOV 10/2011	CHECKED	BY L.LEW 10/2011

	BY	CHECKED
DESIGN	Jorge Estrada	Prem Rimal
DETAILS	FR/ Minh Tran	Jorge Estrada
QUANTITIES	Tanya Wycokff	Prem Rimal

STATE OF CALIFORNIA
DEPARTMENT OF TRANSPORTATION

DIVISION OF ENGINEERING SERVICES
STRUCTURE DESIGN
DESIGN BRANCH 18

BRIDGE NO. 53-1110
POST MILE 31.23

BUENA VISTA - WINONA UC (WIDEN)
FOUNDATION PLAN NO.2

STRUCTURES FOUNDATION PLAN SHEET (ENGLISH) (REV. 09-01-10)

ORIGINAL SCALE IN INCHES FOR REDUCED PLANS 0 1 2 3

UNIT: 3603
PROJECT NUMBER & PHASE: 0700021119-1
CONTRACT NO.: 07-1218w1

DISREGARD PRINTS BEARING EARLIER REVISION DATES

REVISION DATES 10/31/11

SHEET 6 OF 52

FILE => e53-1110-e-fdp02.dgn

DIST	COUNTY	ROUTE	POST MILES TOTAL PROJECT	SHEET No.	TOTAL SHEETS
07	LA	5	29.4/31.6	1042	1931

JEstrada. 1/31/12
REGISTERED CIVIL ENGINEER DATE

5-21-12
PLANS APPROVAL DATE

REGISTERED PROFESSIONAL ENGINEER JORGE I. ESTRADA No. C51473 Exp. 06-30-12 CIVIL STATE OF CALIFORNIA

The State of California or its officers or agents shall not be responsible for the accuracy or completeness of electronic copies of this plan sheet.

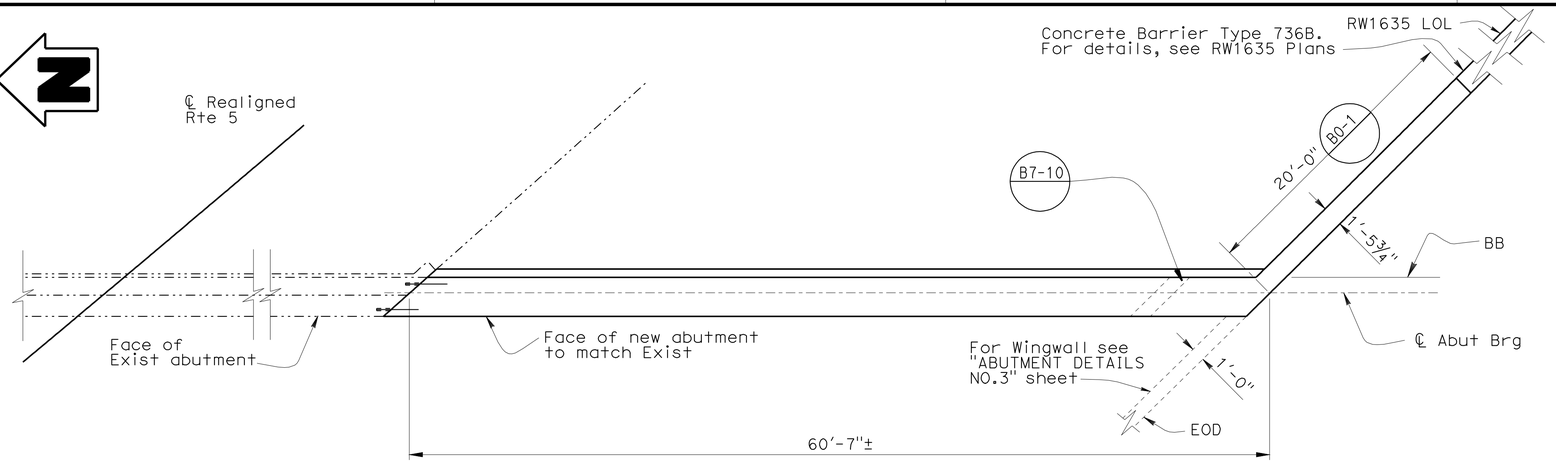

PLAN
3/16" = 1'

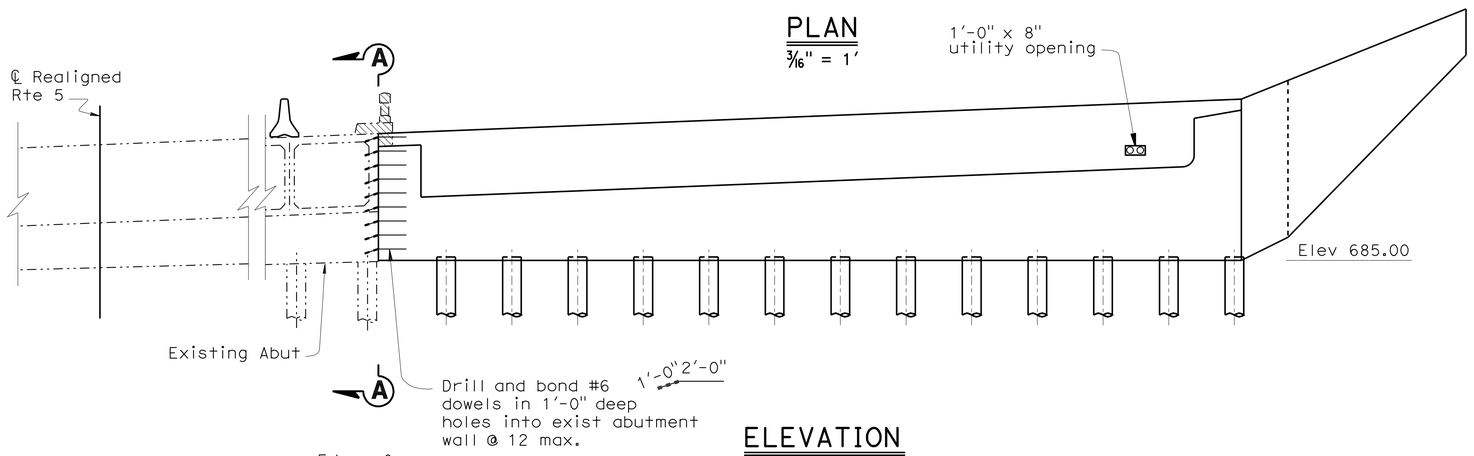

ELEVATION
3/16" = 1'

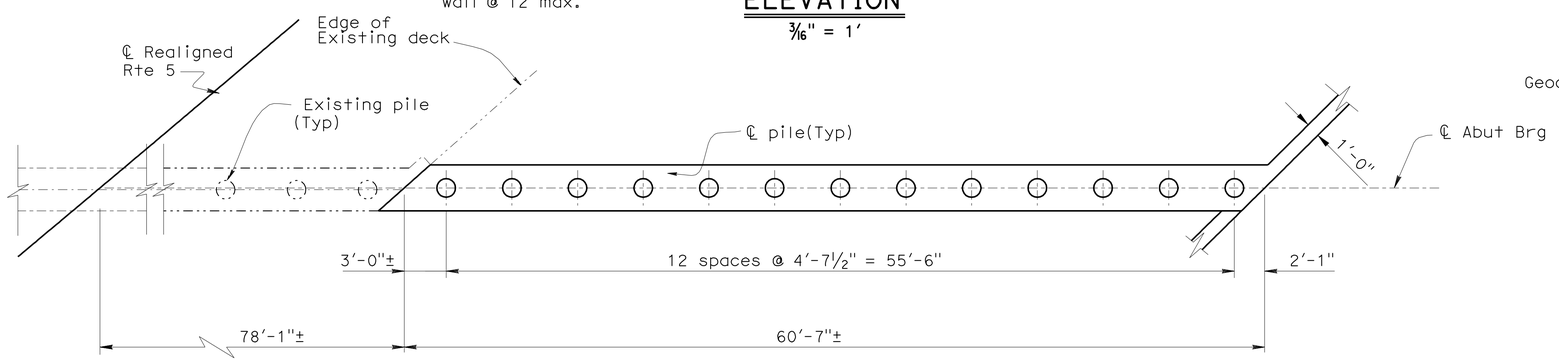

PILE LAYOUT
3/16" = 1'

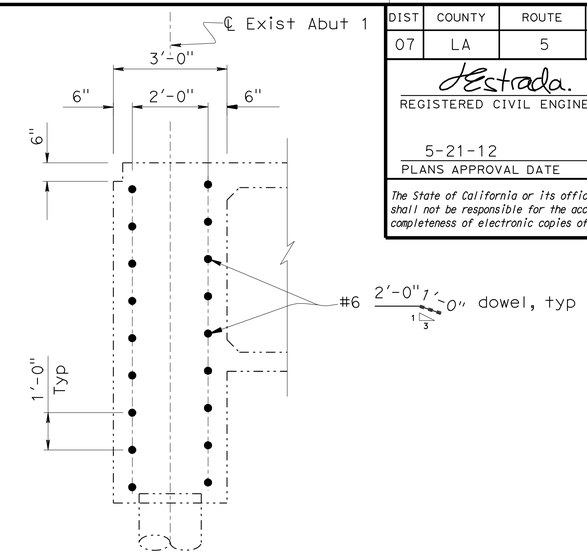

SECTION A-A
½" = 1'

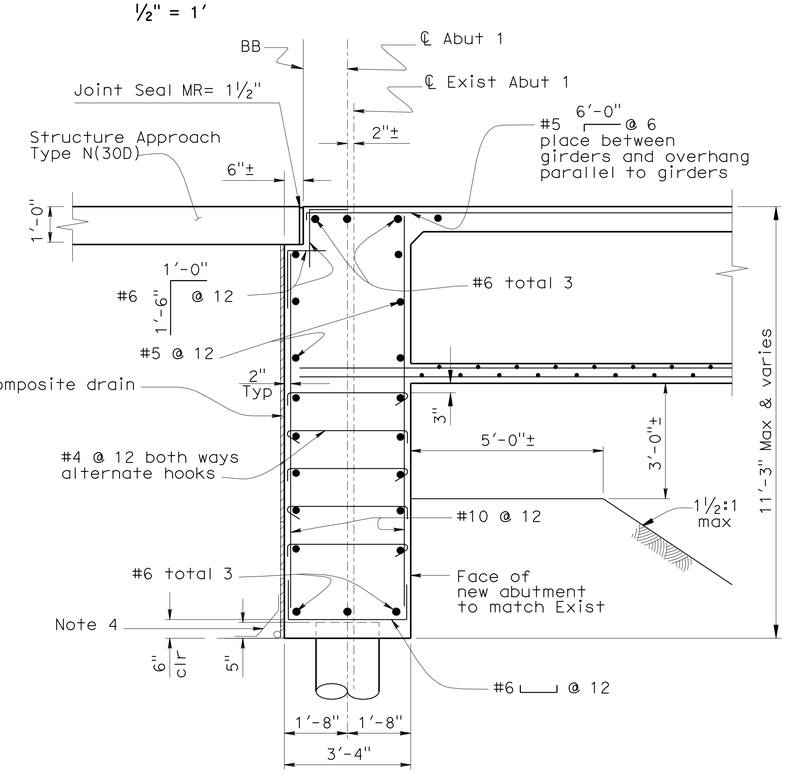

ABUTMENT 1 - TYPICAL SECTION
½" = 1'

B0-1

LEGEND

Indicates Existing Structure

Indicates New Construction

Indicates Bridge Removal (Portion)

NOTE:
THE CONTRACTOR SHALL VERIFY ALL CONTROLLING FIELD DIMENSIONS BEFORE ORDERING OR FABRICATING ANY MATERIAL.

Notes:
1. Not all existing piles shown
2. Concrete barrier not shown
3. For drainage details see "STRUCTURE APPROACH DRAINAGE DETAILS " sheet

	BY	CHECKED
DESIGN	Jenny Zhang/ JE	X. Li
DETAILS	Minh Tran	X. Li/ JE
QUANTITIES	Tanya Wyckoff	Prem Rimal

STATE OF CALIFORNIA
DEPARTMENT OF TRANSPORTATION

DIVISION OF ENGINEERING SERVICES
STRUCTURE DESIGN
DESIGN BRANCH 18

BRIDGE NO. 53-1110
POST MILE 31.23

BUENA VISTA - WINONA UC (WIDEN)
ABUTMENT 1 LAYOUT

STRUCTURES MAINTENANCE DETAIL SHEET (ENGLISH) (REV. 09-01-10)

ORIGINAL SCALE IN INCHES FOR REDUCED PLANS 0 1 2 3

UNIT: 3603
PROJECT NUMBER & PHASE: 07000221119-1 CONTRACT NO.: 07-1218w1

DISREGARD PRINTS BEARING EARLIER REVISION DATES

REVISION DATES 7/14/06 6/28/10 1/31/12

SHEET 7 OF 52

USERNAME => s114640 DATE PLOTTED => 22-MAY-2012 TIME PLOTTED => 08:54

FILE => e53-1110-f-a01_lo1.dgn

DIST	COUNTY	ROUTE	POST MILES TOTAL PROJECT	SHEET No.	TOTAL SHEETS
07	LA	5	29.4/31.6	1043	1931

REGISTERED CIVIL ENGINEER 1/31/12 DATE

5-21-12
PLANS APPROVAL DATE

REGISTERED PROFESSIONAL ENGINEER JORGE I. ESTRADA No. C51473 Exp. 06-30-12 CIVIL STATE OF CALIFORNIA

The State of California or its officers or agents shall not be responsible for the accuracy or completeness of electronic copies of this plan sheet.

NOTE:
Barrier removal not shown for clarity

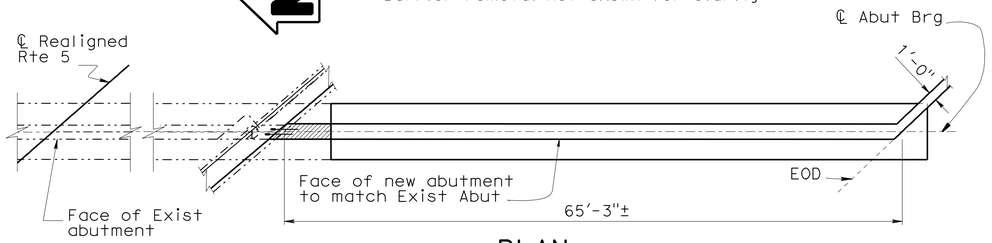

PLAN
1/8" = 1'

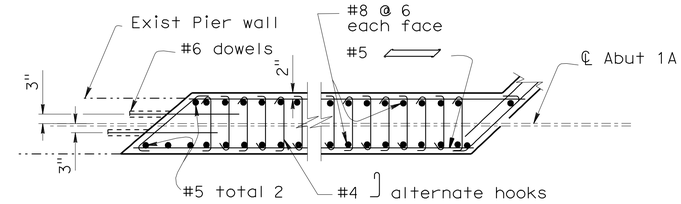

PIER WALL DETAILS
1/2" = 1'

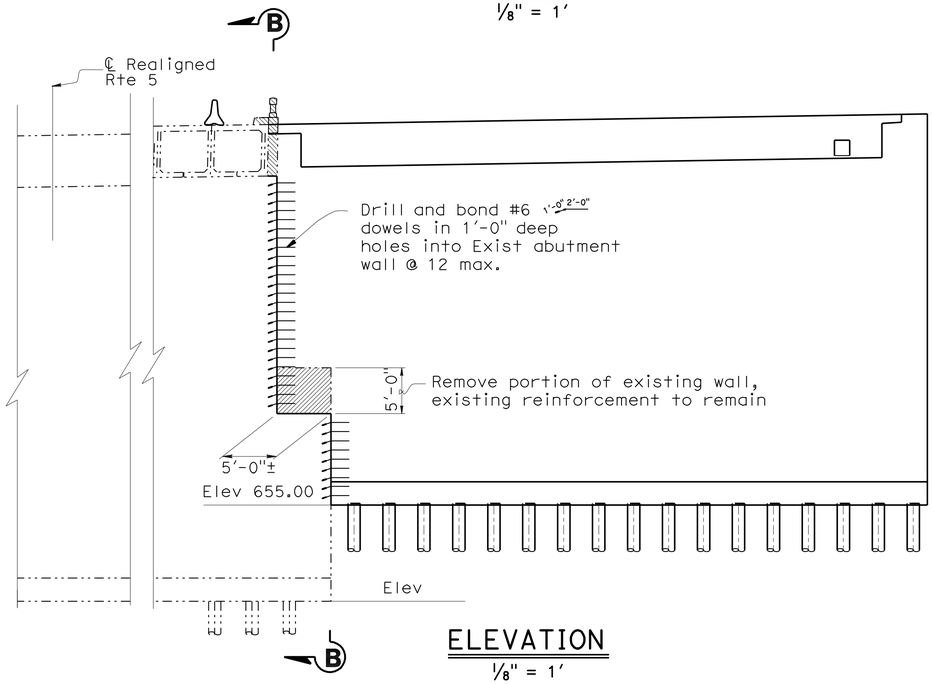

ELEVATION
1/8" = 1'

NOTES:

1. No splices allowed in vertical reinforcement
2. Hook stirrups around both vertical and horizontal wall reinforcement.
3. Hook around top and bottom mats. Alternate hooks as shown.

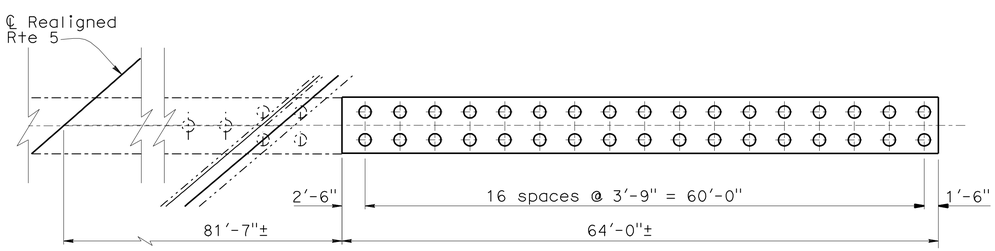

PILE LAYOUT
1/8" = 1'

LEGEND:

- Pile
- Existing Pile
- Bridge removal (portion)
- Indicates Existing Structure
- Indicates New Construction

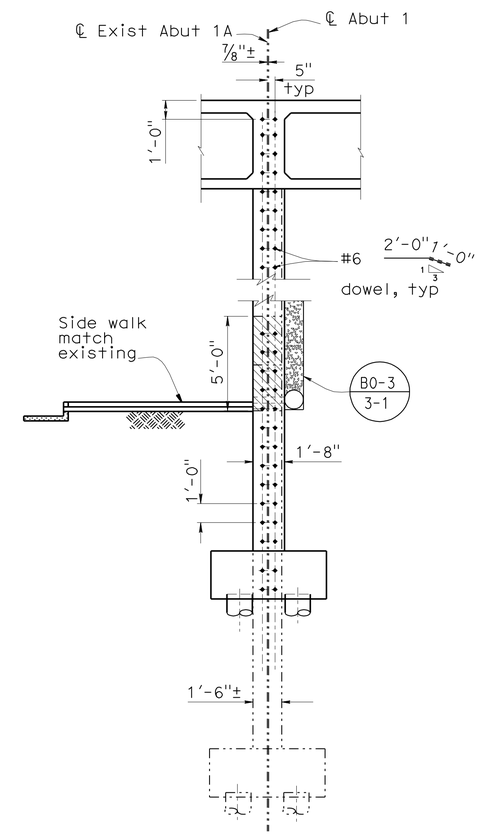

SECTION B-B
1/4" = 1'

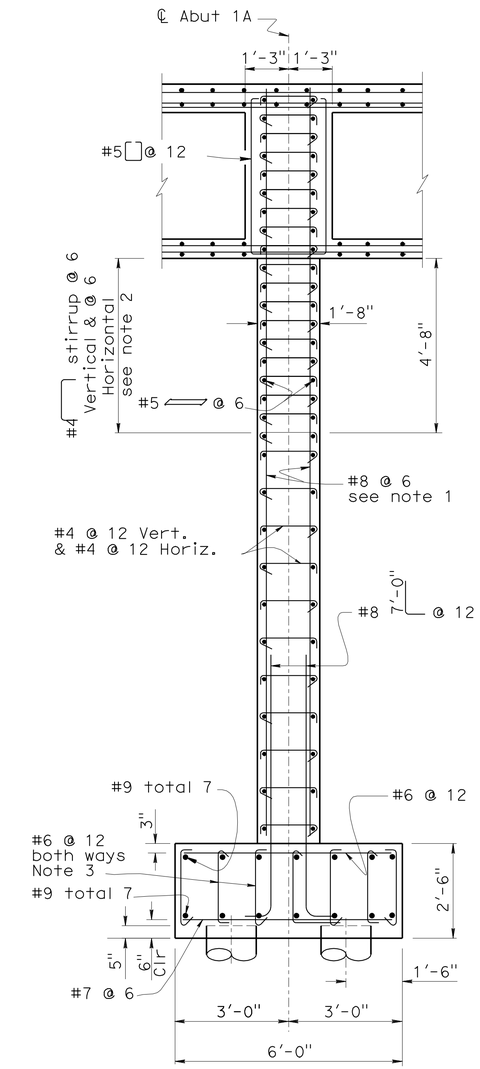

TYPICAL SECTION
1/2" = 1'

NOTE:
THE CONTRACTOR SHALL VERIFY ALL CONTROLLING FIELD DIMENSIONS BEFORE ORDERING OR FABRICATING ANY MATERIAL.

	BY	CHECKED
DESIGN	Jenny Zhang	Prem Rimal
DETAILS	Farideh Rashedi/ MT	Prem Rimal
QUANTITIES	Tanya Wyckoff	Prem Rimal

STATE OF CALIFORNIA
DEPARTMENT OF TRANSPORTATION

DIVISION OF ENGINEERING SERVICES
STRUCTURE DESIGN
DESIGN BRANCH 18

BRIDGE NO. 53-1110
POST MILE 31.23

BUENA VISTA-WINONA UC (WIDEN)
ABUTMENT 1A LAYOUT

STRUCTURES MAINTENANCE DETAIL SHEET (ENGLISH) (REV. 09-01-10)

ORIGINAL SCALE IN INCHES FOR REDUCED PLANS 0 1 2 3

UNIT: 3603
PROJECT NUMBER & PHASE: 0700021119-1
CONTRACT NO.: 07-1218W1

DISREGARD PRINTS BEARING EARLIER REVISION DATES

REVISION DATES: 12/18/09 1/31/12

SHEET 8 OF 52

FILE => e53-1110-f-a01_lo2.dgn

USERNAME => s114640 DATE PLOTTED => 22-MAY-2012 TIME PLOTTED => 08:54

DIST	COUNTY	ROUTE	POST MILES TOTAL PROJECT	SHEET No.	TOTAL SHEETS
07	LA	5	29.4/31.6	1044	1931

REGISTERED CIVIL ENGINEER — DATE 1/31/12

5-21-12
PLANS APPROVAL DATE

REGISTERED PROFESSIONAL ENGINEER — JORGE I. ESTRADA — No. C51473 — Exp. 06-30-12 — CIVIL — STATE OF CALIFORNIA

The State of California or its officers or agents shall not be responsible for the accuracy or completeness of electronic copies of this plan sheet.

NOTES:

1. For "SECTIONS C-C & D-D" see "ABUTMENT DETAILS NO.2" sheet
2. For "DETAILS B & C" see "ABUTMENT DETAILS NO. 3" sheet.
3. For "Joint Protection Detail" see "ABUTMENT DETAILS NO.3" sheet
4. Drill & bond #6 dowels into 1'-0" deep hole(Tot 4)
5. Pile can be moved up to 1'-0" measured parallel to ℄ Brg to clear existing pile, with the approval of the Engineer.
6. For "SECTIONS E-E" see "ABUTMENT DETAILS NO.1" sheet

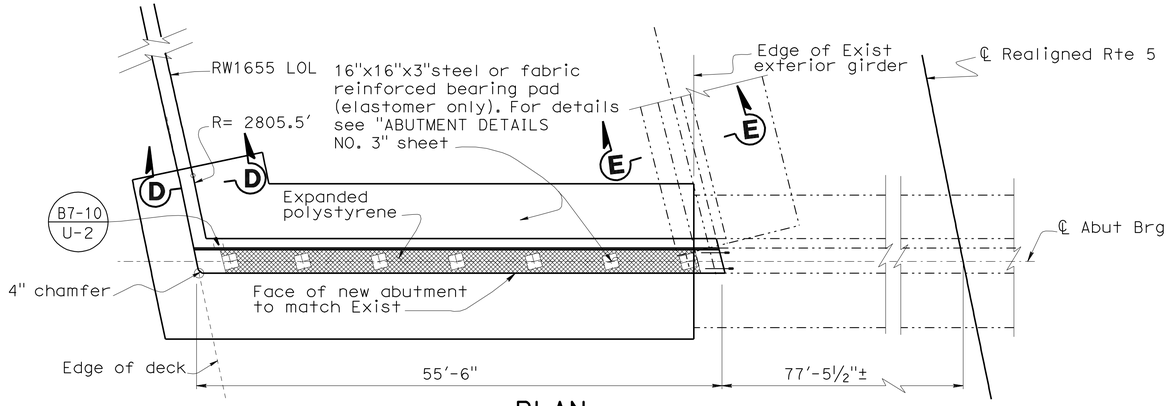

PLAN
1/8" = 1'

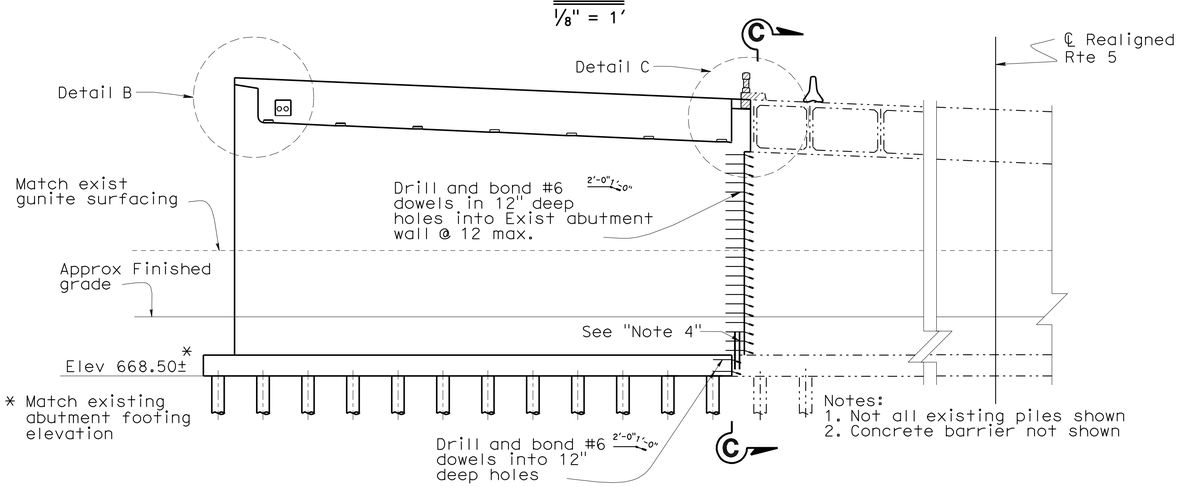

ELEVATION
1/8" = 1'

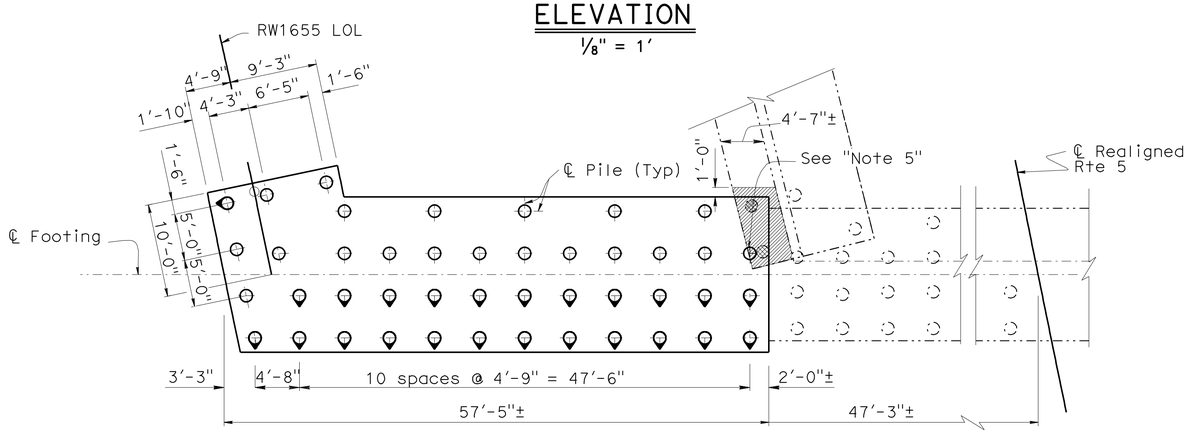

PILE LAYOUT
1/8" = 1'

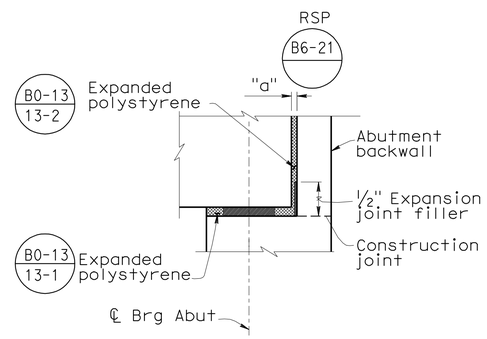

DETAIL A
No Scale

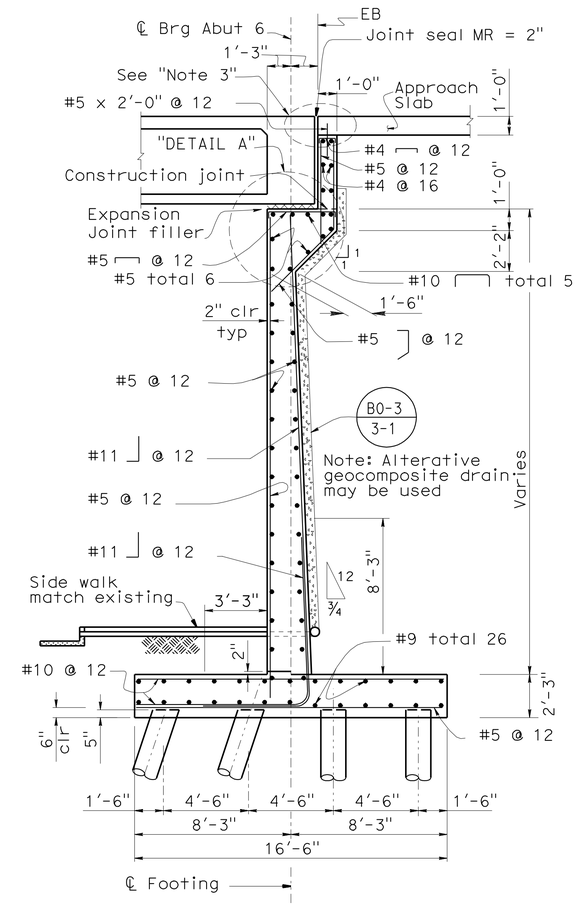

ABUTMENT 6 TYPICAL SECTION
1/4" = 1'

LEGEND:

- Pile
- Battered Pile (3:1)
- Existing Pile
- Bridge Removal (Portion)
- Indicates Existing Structure
- Indicates New Construction

NOTE:
THE CONTRACTOR SHALL VERIFY ALL CONTROLLING FIELD DIMENSIONS BEFORE ORDERING OR FABRICATING ANY MATERIAL.

	BY	CHECKED
DESIGN	Jeny Zhang	X. Li
DETAILS	Farideh Rashedi/ MT	X. Li
QUANTITIES	Tanya Wyckoff	Prem Rimal

STATE OF CALIFORNIA
DEPARTMENT OF TRANSPORTATION

DIVISION OF ENGINEERING SERVICES
STRUCTURE DESIGN
DESIGN BRANCH 18

BRIDGE NO. 53-1110
POST MILE 31.23

BUENA VISTA - WINONA UC (WIDEN)
ABUTMENT 6 LAYOUT

STRUCTURES DESIGN DETAIL SHEET (ENGLISH) (REV. 09-01-10)

ORIGINAL SCALE IN INCHES FOR REDUCED PLANS 0 1 2 3

UNIT: 3603
PROJECT NUMBER & PHASE: 0700021119-1
CONTRACT NO.: 07-1218W1

DISREGARD PRINTS BEARING EARLIER REVISION DATES

REVISION DATES: 7/26/06 1/31/12

SHEET 9 OF 52

FILE => e53-1110-f-a01_lo3.dgn

USERNAME => s174640 DATE PLOTTED => 22-MAY-2012 TIME PLOTTED => 08:54

DIST	COUNTY	ROUTE	POST MILES TOTAL PROJECT	SHEET No.	TOTAL SHEETS
07	LA	5	29.4/31.6	1045	1931

REGISTERED CIVIL ENGINEER — DATE 1/31/12

PLANS APPROVAL DATE 5-21-12

REGISTERED PROFESSIONAL ENGINEER — JORGE I. ESTRADA — No. C51473 — Exp. 06-30-12 — CIVIL — STATE OF CALIFORNIA

The State of California or its officers or agents shall not be responsible for the accuracy or completeness of electronic copies of this plan sheet.

LEGEND:

- Bridge Removal (Portion)
- Indicates Existing Structure
- Indicates New Construction

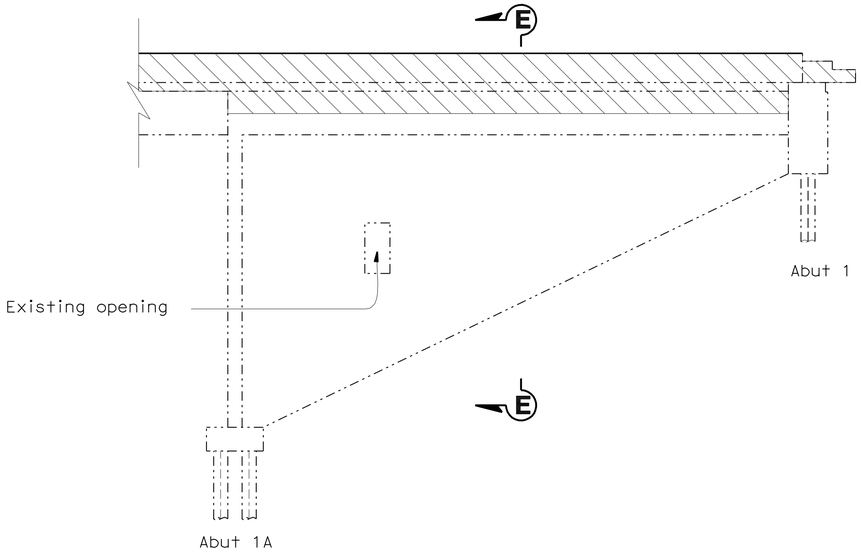

EXISTING ABUTMENT 1-1A SIDE ELEVATION

No Scale

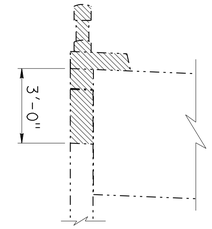

SECTION E-E

No Scale

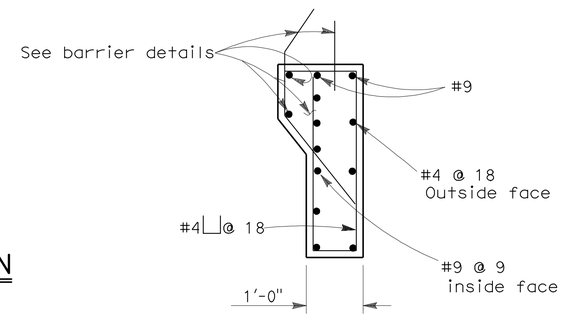

SECTION G-G

3/4" = 1'

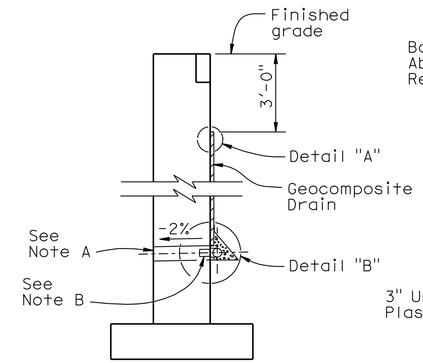

WALL SECTION

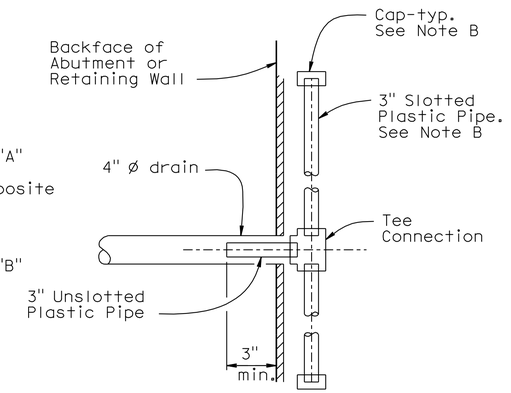

SECTION A-A

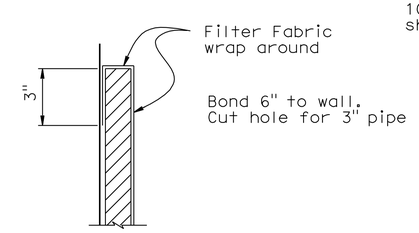

DETAIL "A"

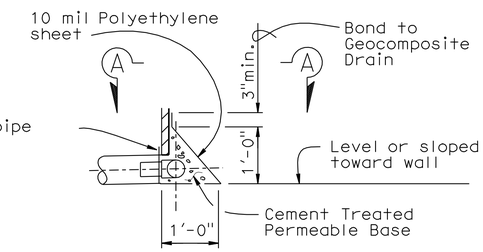

DETAIL "B"

WEEP HOLE AND GEOCOMPOSITE DRAIN

ALTERNATIVE TO BRIDGE DETAIL BO-3 / 3-1

Notes:

A. 4" Ø drains at intermediate sag points and at 25' max center to center (9' c-c for Type 3 and 9'-3" c-c for Type 4 retaining walls).
For walls adjacent to sidewalks or curbs, provide 4" cast iron or asbestos cement pipe under the sidewalk to discharge through curb face.
Exposed wall drains shall be located 3"± above finished grade.

B. Geocomposite drain, cement treated permeable base, and 3"Ø slotted plastic pipe continuous behind retaining wall or abutment. Cap ends of pipe. Provide "Tee" connection at each 4" Ø drain.

C. Connect the low end of plastic pipe to the main outlet pipe as apprlicable.

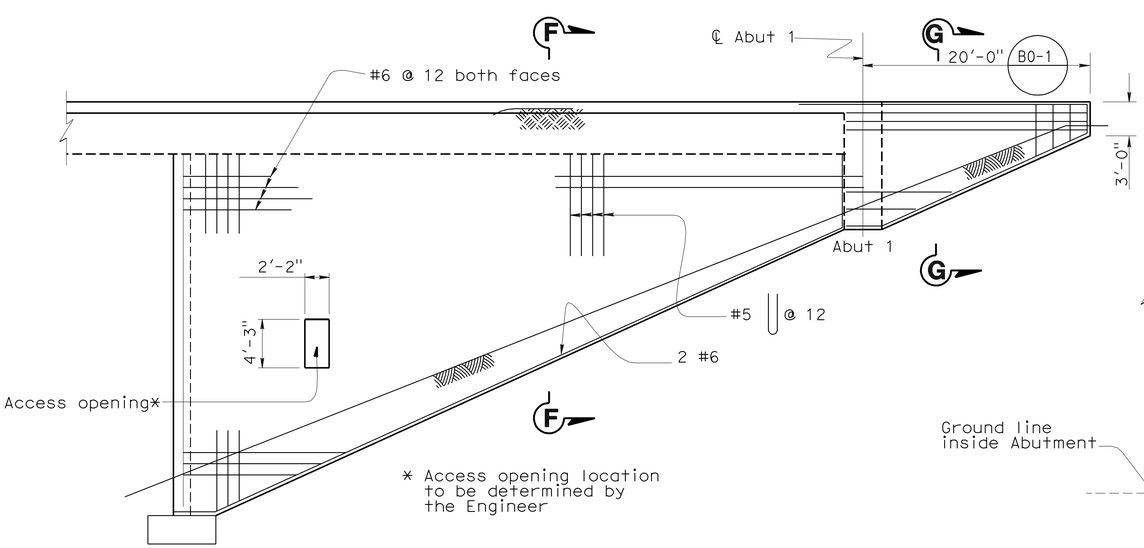

* Access opening location to be determined by the Engineer

ABUTMENT 1-1A SIDE ELEVATION

3/16" = 1'

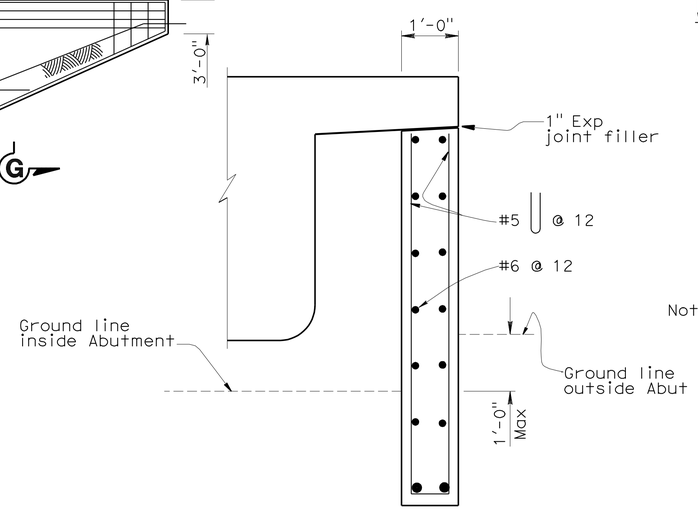

SECTION F-F

3/4" = 1'

NOTE:
THE CONTRACTOR SHALL VERIFY ALL CONTROLLING FIELD DIMENSIONS BEFORE ORDERING OR FABRICATING ANY MATERIAL.

	BY	CHECKED
DESIGN	X. Li	Prem Rimal
DETAILS	Farideh Rashedi/ MT	Jorge Estrada
QUANTITIES	Tanya Wyckoff	Prem Rimal

STATE OF CALIFORNIA
DEPARTMENT OF TRANSPORTATION

DIVISION OF ENGINEERING SERVICES
STRUCTURE DESIGN
DESIGN BRANCH 18

BRIDGE NO. 53-1110
POST MILE 31.23

BUENA VISTA - WINONA UC (WIDEN)

ABUTMENT DETAILS NO. 1

STRUCTURES DESIGN DETAIL SHEET (ENGLISH) (REV. 09-01-10)

ORIGINAL SCALE IN INCHES FOR REDUCED PLANS 0 1 2 3

UNIT: 3603
PROJECT NUMBER & PHASE: 0700021119-1
CONTRACT NO.: 07-1218W1

DISREGARD PRINTS BEARING EARLIER REVISION DATES

REVISION DATES: 1/26/06 1/31/12 04-19-12

SHEET 10 OF 52

FILE => e53-1110-f-a01dt01.dgn

USERNAME => s114640 DATE PLOTTED => 22-MAY-2012 TIME PLOTTED => 08:54

DIST	COUNTY	ROUTE	POST MILES TOTAL PROJECT	SHEET No.	TOTAL SHEETS
07	LA	5	29.4/31.6	1046	1931

JEstrada. 1/31/12
REGISTERED CIVIL ENGINEER DATE

5-21-12
PLANS APPROVAL DATE

REGISTERED PROFESSIONAL ENGINEER JORGE I. ESTRADA No. C51473 Exp. 06-30-12 CIVIL STATE OF CALIFORNIA

The State of California or its officers or agents shall not be responsible for the accuracy or completeness of electronic copies of this plan sheet.

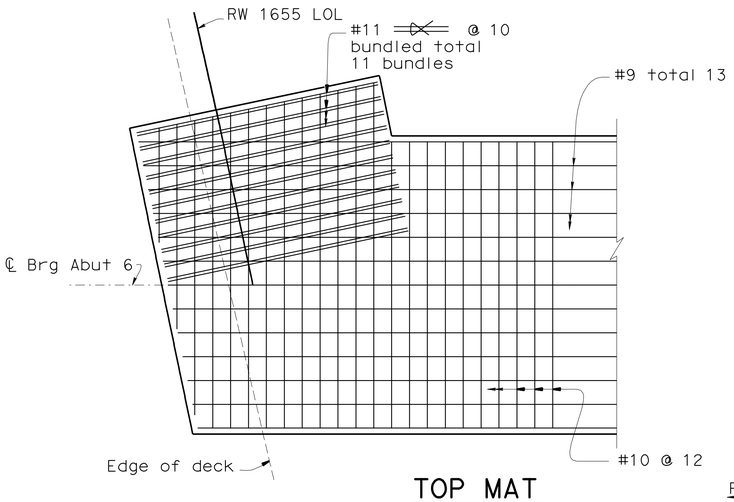

TOP MAT

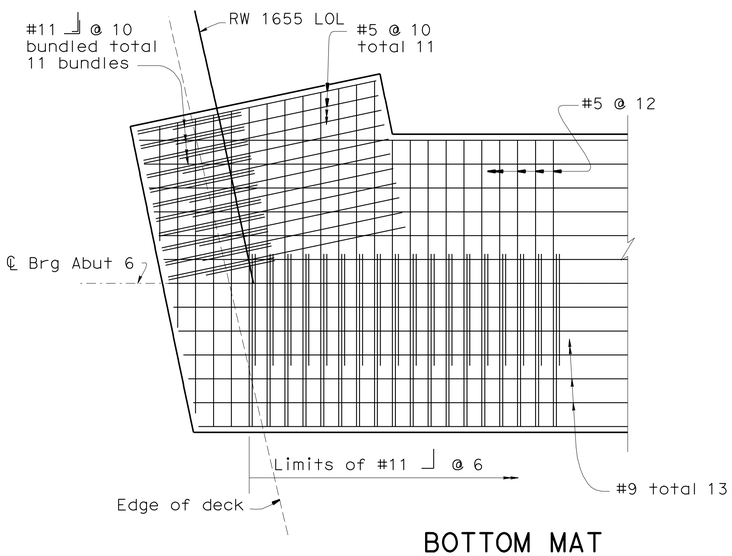

BOTTOM MAT

ABUTMENT CORNER PLAN

No Scale

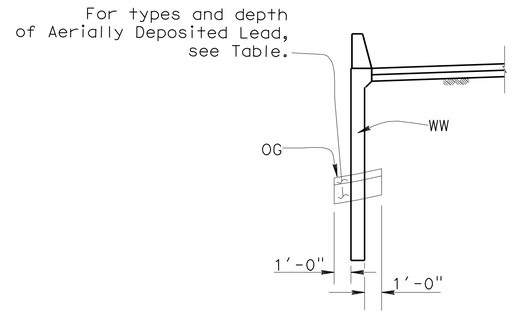

AERIALLY DEPOSITED LEAD

ADL TYPE	DEPTH H, FT	STATION LIMIT ALONG ℄ ROUTE 5	
		FROM	TO
Y-1	2.00	STA 1646+65.00	STA 1648+75.00
Y-2	0.50	STA 1646+65.00	STA 1648+75.00
Y-1	2.00	STA 1653+18.00	STA 1655+38.00
Y-2	0.50	STA 1653+18.00	STA 1655+38.00

LIMITS OF STRUCTURE EXCAVATION, AERIALLY DEPOSITED LEAD(ADL)

No Scale

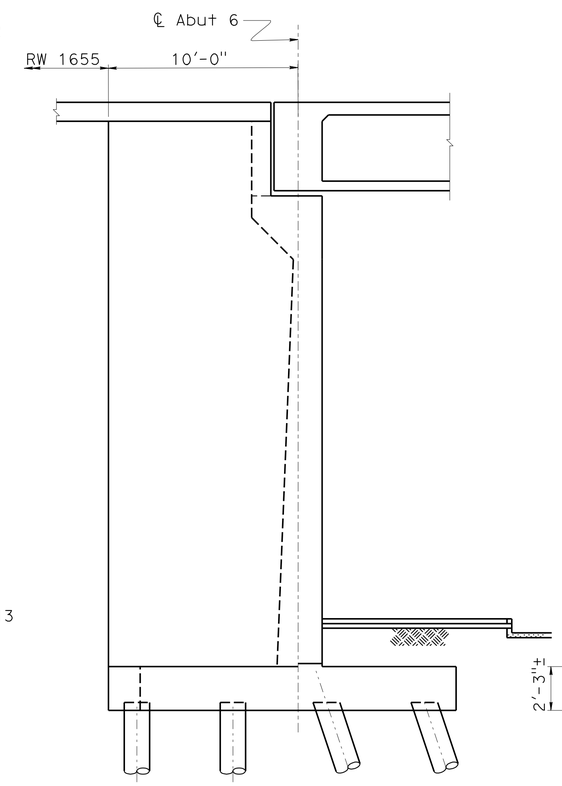

ELEVATION

1/4" = 1'

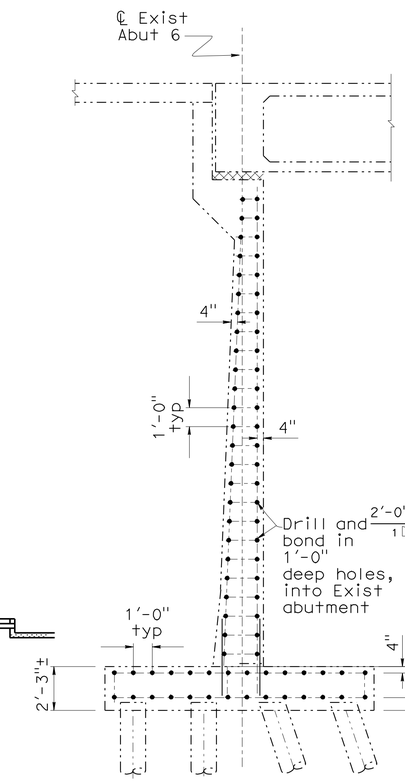

SECTION C-C

1/4" = 1'

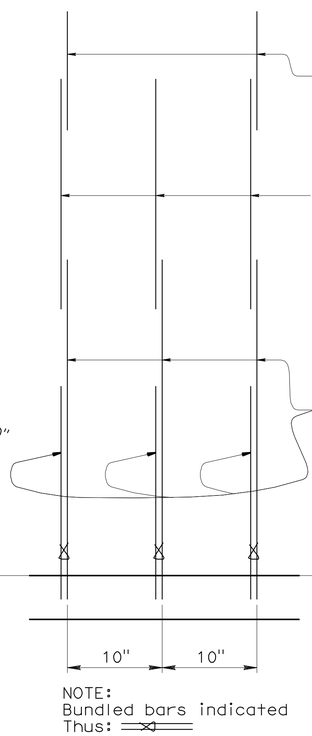

ELEVATION BAR LAYOUT

No Scale

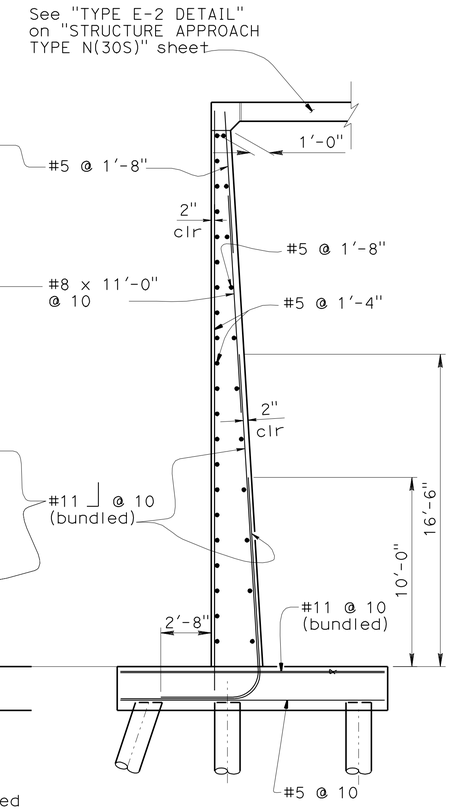

SECTION D-D

1/4" = 1'

NOTE:
THE CONTRACTOR SHALL VERIFY ALL CONTROLLING FIELD DIMENSIONS BEFORE ORDERING OR FABRICATING ANY MATERIAL.

	BY	CHECKED
DESIGN	X. Li	Prem Rimal
DETAILS	Farideh Rashedi/ MT	X. Li/ JE
QUANTITIES	Tanya Wyckoff	Prem Rimal

STATE OF CALIFORNIA
DEPARTMENT OF TRANSPORTATION

DIVISION OF ENGINEERING SERVICES
STRUCTURE DESIGN
DESIGN BRANCH 18

BRIDGE NO. 53-1110
POST MILE 31.23

BUENA VISTA - WINONA UC (WIDEN)

ABUTMENT DETAILS NO. 2

STRUCTURES DESIGN DETAIL SHEET (ENGLISH) (REV. 09-01-10)

ORIGINAL SCALE IN INCHES FOR REDUCED PLANS 0 1 2 3

UNIT: 3603
PROJECT NUMBER & PHASE: 0700021119-1 CONTRACT NO.: 07-1218W1

DISREGARD PRINTS BEARING EARLIER REVISION DATES

REVISION DATES 1/28/08 1/31/12 04-19-12

SHEET 11 OF 52

FILE => e53-1110-f-a01dt02.dgn

USERNAME => s114640 DATE PLOTTED => 22-MAY-2012 TIME PLOTTED => 08:54

DIST	COUNTY	ROUTE	POST MILES TOTAL PROJECT	SHEET No.	TOTAL SHEETS
07	LA	5	29.4/31.6	1047	1931

JEstrada. 1/31/12
REGISTERED CIVIL ENGINEER DATE

5-21-12
PLANS APPROVAL DATE

REGISTERED PROFESSIONAL ENGINEER JORGE I. ESTRADA No. C51473 Exp. 06-30-12 CIVIL STATE OF CALIFORNIA

The State of California or its officers or agents shall not be responsible for the accuracy or completeness of electronic copies of this plan sheet.

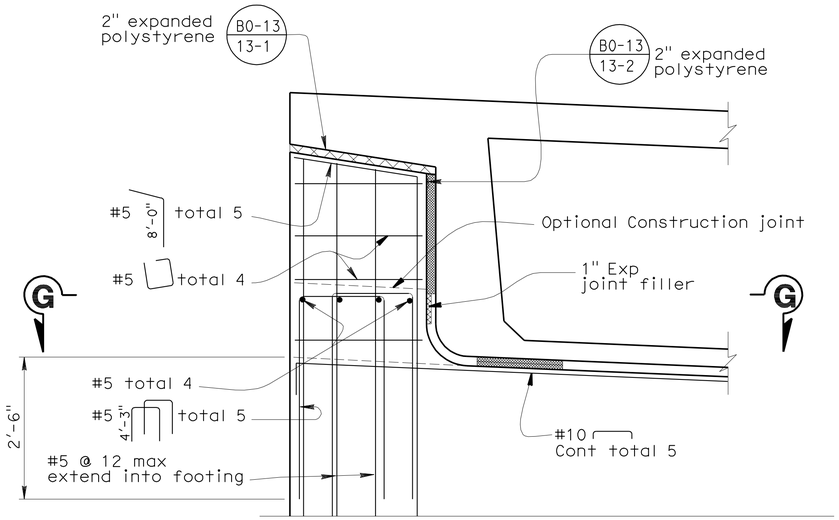

DETAIL B
3/4" = 1'-0"

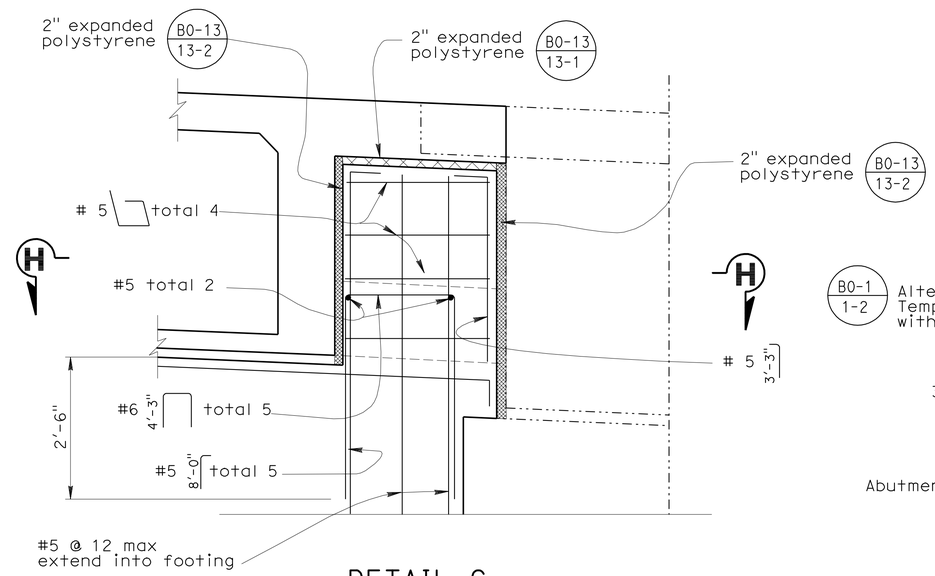

DETAIL C
3/4" = 1'-0"

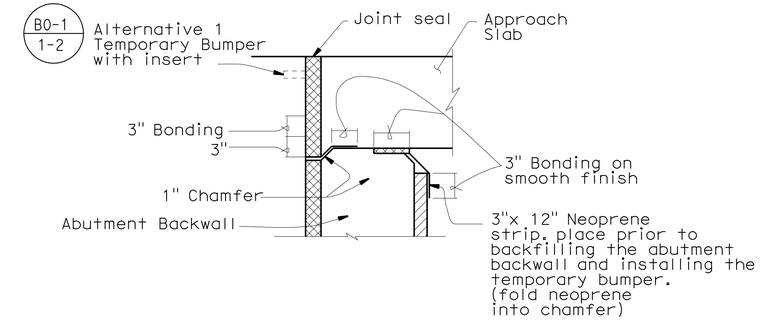

JOINT PROTECTION DETAIL
No Scale

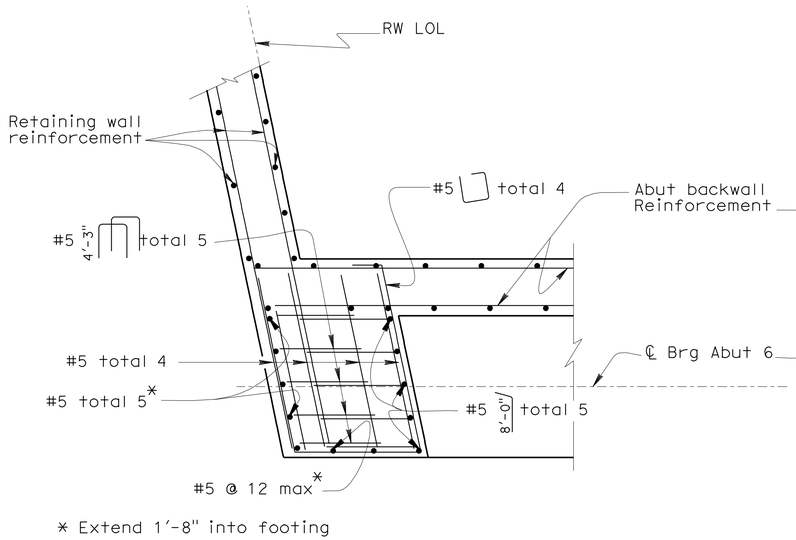

SECTION G-G
3/4" = 1'-0"

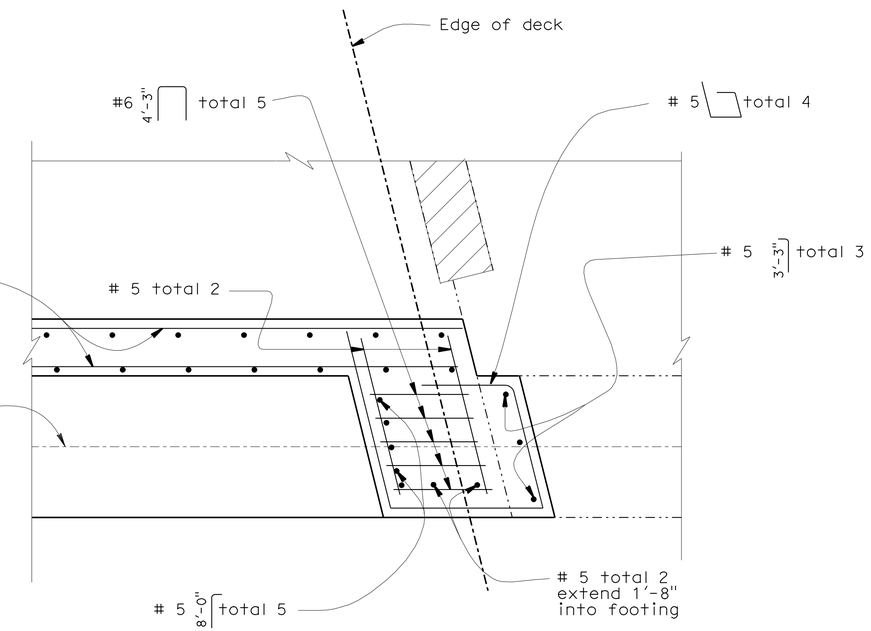

SECTION H-H
3/4" = 1'-0"

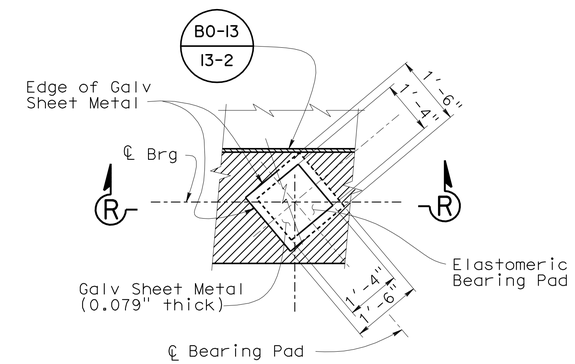

PLAN

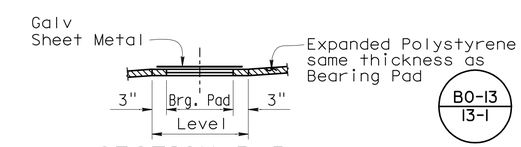

SECTION R-R

BEARING PAD DETAIL (ABUTMENT 6)
No Scale
Details typical at all bearing pads

NOTE:
THE CONTRACTOR SHALL VERIFY ALL CONTROLLING FIELD DIMENSIONS BEFORE ORDERING OR FABRICATING ANY MATERIAL.

	BY	CHECKED
DESIGN	X. Li	Prem Rimal
DETAILS	FR/ Minh Tran	X. Li/ JE
QUANTITIES	Tanya Wyckoff	Prem Rimal

STATE OF CALIFORNIA
DEPARTMENT OF TRANSPORTATION

DIVISION OF ENGINEERING SERVICES
STRUCTURE DESIGN
DESIGN BRANCH 18

BRIDGE NO. 53-1110
POST MILE 31.23

BUENA VISTA - WINONA UC (WIDEN)
ABUTMENT DETAILS NO. 3

STRUCTURES DESIGN DETAIL SHEET (ENGLISH) (REV. 09-01-10)

ORIGINAL SCALE IN INCHES FOR REDUCED PLANS 0 1 2 3

UNIT: 3603
PROJECT NUMBER & PHASE: 0700021119-1
CONTRACT NO.: 07-1218W1

DISREGARD PRINTS BEARING EARLIER REVISION DATES

REVISION DATES: 1/26/08 1/31/12

SHEET 12 OF 52

FILE => e53-1110-f-a01dt03.dgn

USERNAME => s114640 DATE PLOTTED => 22-MAY-2012 TIME PLOTTED => 08:54

DIST	COUNTY	ROUTE	POST MILES TOTAL PROJECT	SHEET No.	TOTAL SHEETS
07	LA	5	29.4/31.6	1048	1931

JEstrada. 1/31/12
REGISTERED CIVIL ENGINEER DATE

5-21-12
PLANS APPROVAL DATE

REGISTERED PROFESSIONAL ENGINEER
JORGE I. ESTRADA
No. C51473
Exp. 06-30-12
CIVIL
STATE OF CALIFORNIA

The State of California or its officers or agents shall not be responsible for the accuracy or completeness of electronic copies of this plan sheet.

LEGEND:

- Indicates Existing Structure
- Indicates New Construction
- Indicates bundled bars
- Concrete Removal

Note:
Concrete removal
not shown for clarity

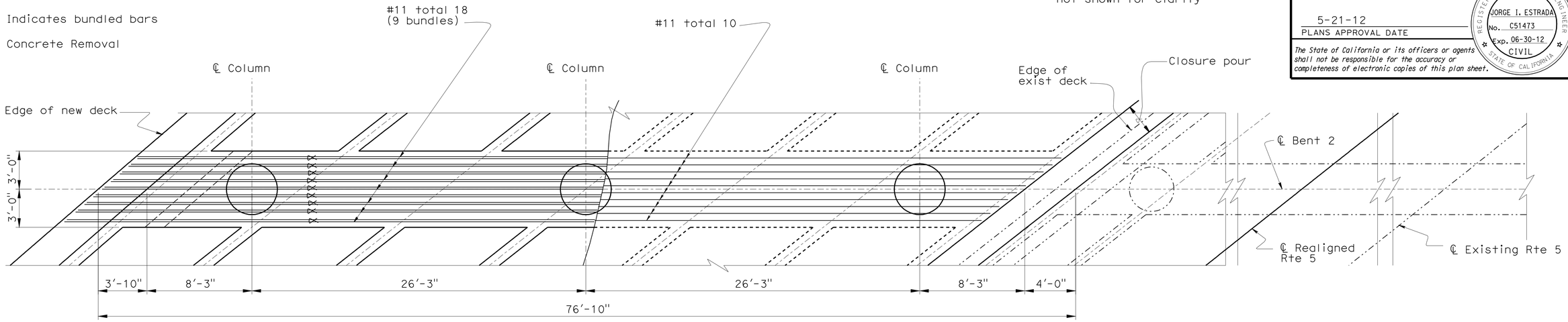

TOP REINFORCEMENT

PLAN
1/4" = 1'

BOTTOM REINFORCEMENT

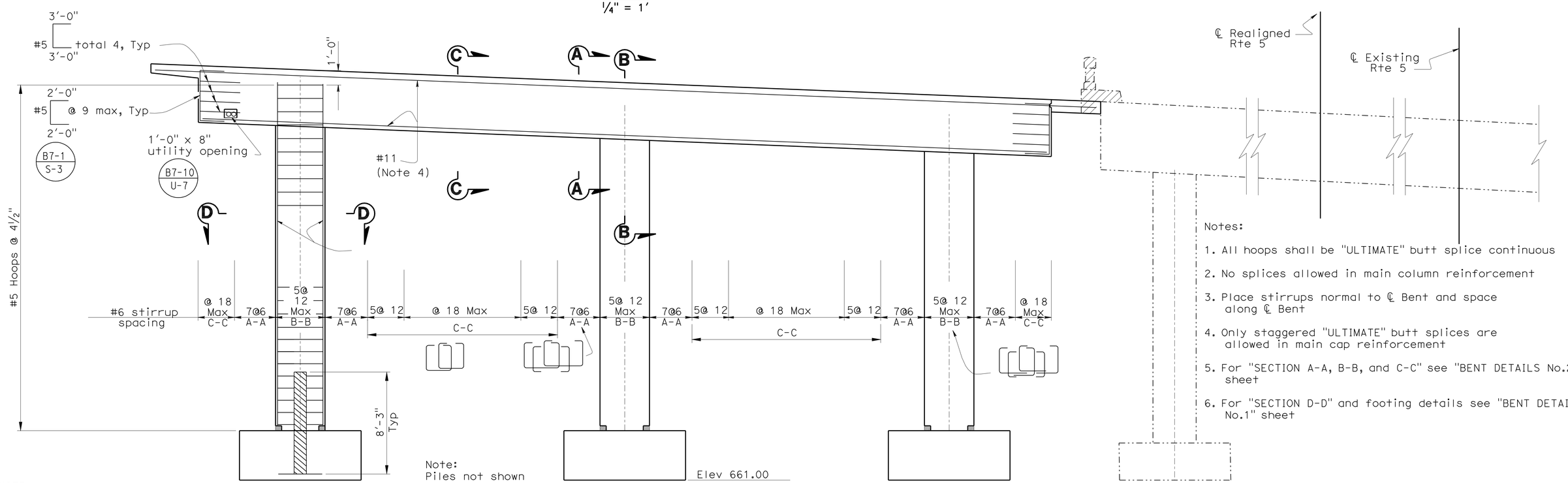

Note:
Piles not shown

Elev 661.00

ELEVATION
1/4" = 1'

Notes:

1. All hoops shall be "ULTIMATE" butt splice continuous
2. No splices allowed in main column reinforcement
3. Place stirrups normal to ℄ Bent and space along ℄ Bent
4. Only staggered "ULTIMATE" butt splices are allowed in main cap reinforcement
5. For "SECTION A-A, B-B, and C-C" see "BENT DETAILS No.2" sheet
6. For "SECTION D-D" and footing details see "BENT DETAILS No.1" sheet

NOTE:
THE CONTRACTOR SHALL VERIFY ALL CONTROLLING FIELD DIMENSIONS BEFORE ORDERING OR FABRICATING ANY MATERIAL.

	BY	CHECKED
DESIGN	Jenny Zhang	Prem Rimal
DETAILS	Farideh Rashedi/ MT	Prem Rimal
QUANTITIES	Tanya Wyckoff	Prem Rimal

STATE OF CALIFORNIA
DEPARTMENT OF TRANSPORTATION

DIVISION OF ENGINEERING SERVICES
STRUCTURE DESIGN
DESIGN BRANCH 18

BRIDGE NO. 53-1110
POST MILE 31.23

BUENA VISTA - WINONA UC (WIDEN)

BENT 2 LAYOUT

STRUCTURES DESIGN DETAIL SHEET (ENGLISH) (REV. 09-01-10)

ORIGINAL SCALE IN INCHES FOR REDUCED PLANS 0 1 2 3

UNIT: 3603
PROJECT NUMBER & PHASE: 0700021119-1
CONTRACT NO.: 07-1218w1

DISREGARD PRINTS BEARING EARLIER REVISION DATES

REVISION DATES: 8/30/06 1/31/12

SHEET 13 OF 52

FILE => e53-1110-h-b01_lo01.dgn

USERNAME => s174640 DATE PLOTTED => 22-MAY-2012 TIME PLOTTED => 08:54

DIST	COUNTY	ROUTE	POST MILES TOTAL PROJECT	SHEET No.	TOTAL SHEETS
07	LA	5	29.4/31.6	1049	1931

REGISTERED CIVIL ENGINEER — DATE 1/31/12

PLANS APPROVAL DATE 5-21-12

REGISTERED PROFESSIONAL ENGINEER — JORGE I. ESTRADA — No. C51473 — Exp. 06-30-12 — CIVIL — STATE OF CALIFORNIA

The State of California or its officers or agents shall not be responsible for the accuracy or completeness of electronic copies of this plan sheet.

Note:
Concrete removal not shown for clarity

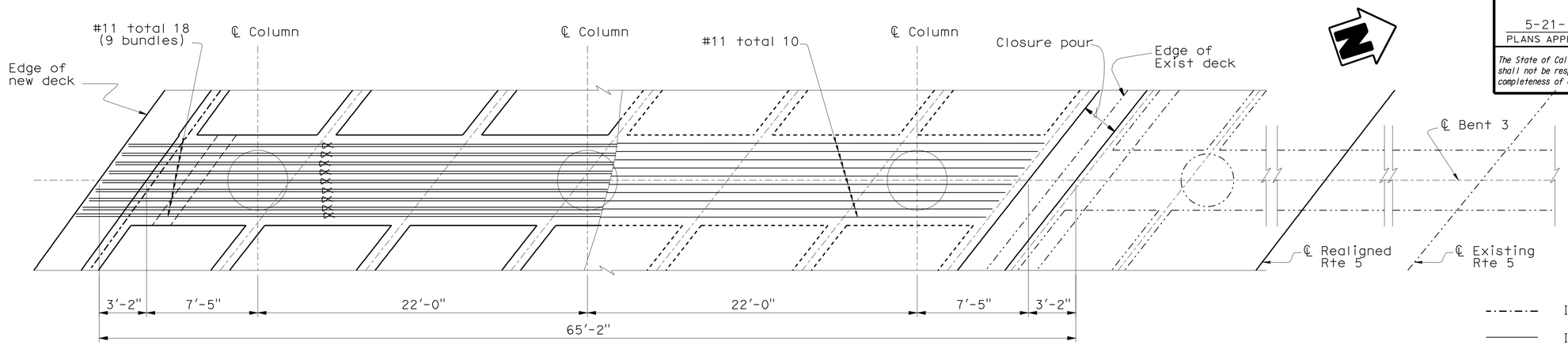

TOP REINFORCEMENT — PLAN — BOTTOM REINFORCEMENT

1/4" = 1'

LEGEND:

- Indicates Existing Structure
- Indicates New Construction
- Indicates bundled bars
- Concrete Removal

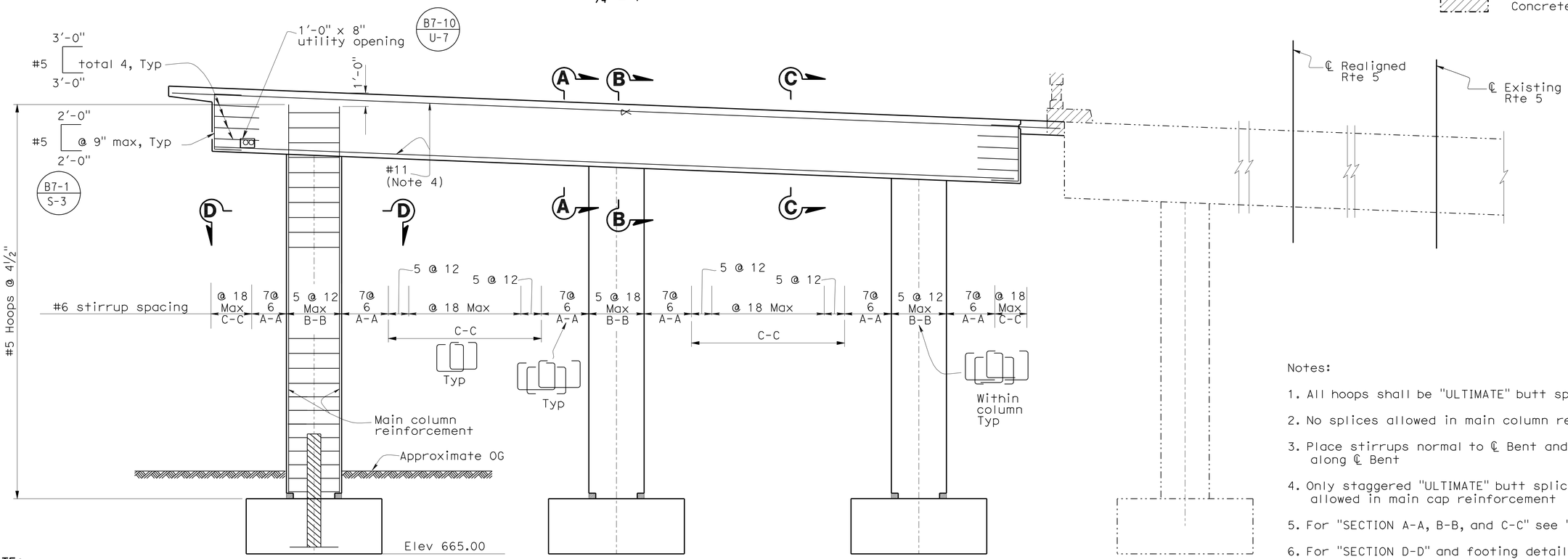

ELEVATION

1/4" = 1'

Notes:

1. All hoops shall be "ULTIMATE" butt splice continuous
2. No splices allowed in main column reinforcement
3. Place stirrups normal to ℄ Bent and space along ℄ Bent
4. Only staggered "ULTIMATE" butt splices are allowed in main cap reinforcement
5. For "SECTION A-A, B-B, and C-C" see "BENT DETAILS No.2" sheet
6. For "SECTION D-D" and footing details see "BENT DETAILS No.1" sheet

NOTE:
THE CONTRACTOR SHALL VERIFY ALL CONTROLLING FIELD DIMENSIONS BEFORE ORDERING OR FABRICATING ANY MATERIAL.

	BY	CHECKED
DESIGN	Jenny Zhang	Prem Rimal
DETAILS	Farideh Rashedi/ MT	Prem Rimal
QUANTITIES	Tanya Wyckoff	Prem Rimal

STATE OF CALIFORNIA
DEPARTMENT OF TRANSPORTATION

DIVISION OF ENGINEERING SERVICES
STRUCTURE DESIGN
DESIGN BRANCH 18

BRIDGE NO. 53-111
POST MILE 31.23

BUENA VISTA - WINONA UC (WIDEN)
BENT 3 LAYOUT

STRUCTURES DESIGN DETAIL SHEET (ENGLISH) (REV. 09-01-10)

ORIGINAL SCALE IN INCHES FOR REDUCED PLANS 0 1 2 3

UNIT: 3603
PROJECT NUMBER & PHASE: 0700021119-1
CONTRACT NO.: 07-1218wq

DISREGARD PRINTS BEARING EARLIER REVISION DATES

REVISION DATES: 8/24/06 1/31/12

SHEET 14 OF 52

FILE => e53-1110-h-b03_lo02.dgn

USERNAME => s114640 DATE PLOTTED => 22-MAY-2012 TIME PLOTTED => 08:54

DIST	COUNTY	ROUTE	POST MILES TOTAL PROJECT	SHEET No.	TOTAL SHEETS
07	LA	5	29.4/31.6	1050	1931

REGISTERED CIVIL ENGINEER — DATE 1/31/12

PLANS APPROVAL DATE 5-21-12

REGISTERED PROFESSIONAL ENGINEER — JORGE I. ESTRADA — No. C51473 — Exp. 06-30-12 — CIVIL — STATE OF CALIFORNIA

The State of California or its officers or agents shall not be responsible for the accuracy or completeness of electronic copies of this plan sheet.

Note:
Concrete removal
not shown for clarity

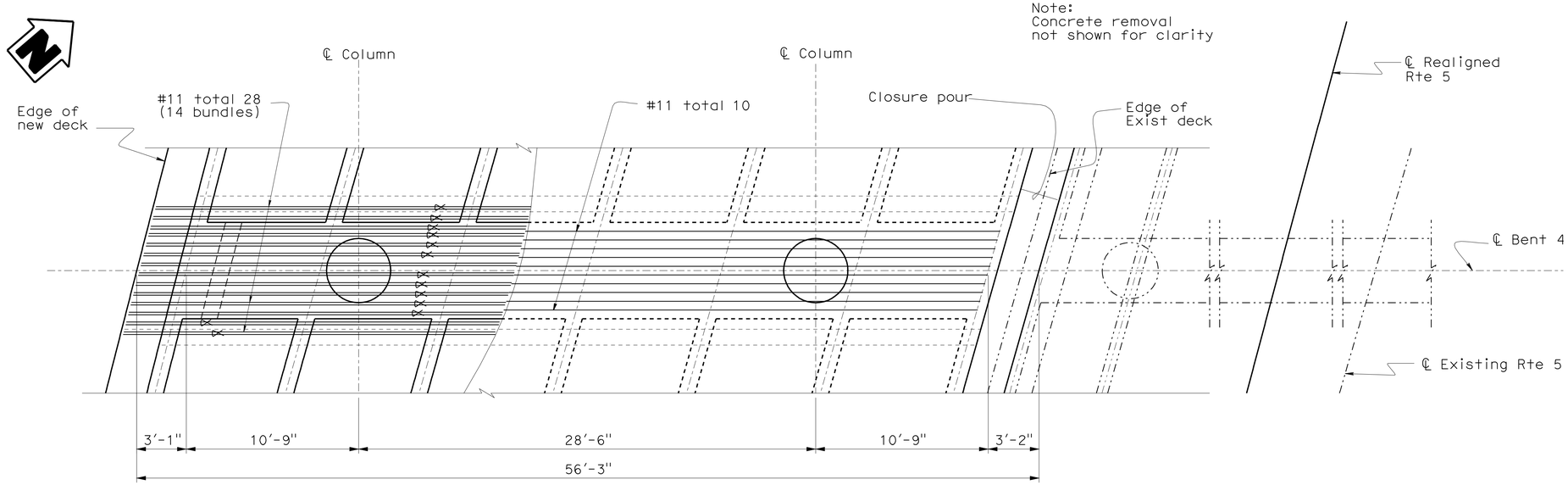

TOP REINFORCEMENT — PLAN — BOTTOM REINFORCEMENT

1/4" = 1'

LEGEND:

- Indicates Existing Structure
- Indicates New Construction
- Indicates bundled bars
- Concrete Removal

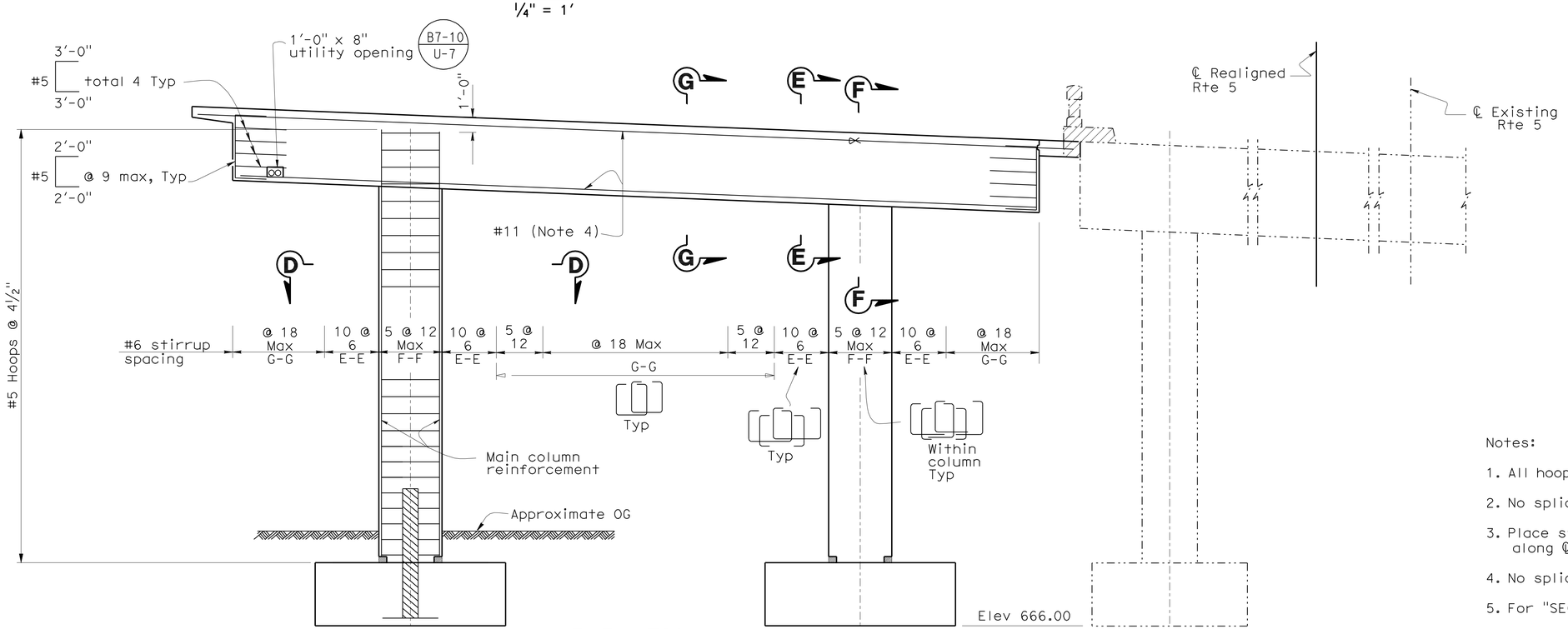

ELEVATION

1/4" = 1'

Notes:

1. All hoops shall be "ULTIMATE" butt splice continuous
2. No splices allowed in main column reinforcement
3. Place stirrups normal to ℄ Bent and space along ℄ Bent
4. No splices are allowed in main cap reinforcement
5. For "SECTION E-E, F-F and G-G" see "BENT DETAILS No.3" sheet
6. For "SECTION D-D" and footing details see "BENT DETAILS No.1"sheet

	BY	CHECKED
DESIGN	Jenny Zhang	Prem Rimal
DETAILS	Farideh Rashedi/ MT	Prem Rimal
QUANTITIES	Tanya Wyckoff	Prem Rimal

STATE OF CALIFORNIA
DEPARTMENT OF TRANSPORTATION

DIVISION OF ENGINEERING SERVICES
STRUCTURE DESIGN
DESIGN BRANCH 18

BRIDGE NO. 53-1110
POST MILE 31.23

BUENA VISTA - WINONA UC (WIDEN)

BENT 4 LAYOUT

STRUCTURES DESIGN DETAIL SHEET (ENGLISH) (REV. 09-01-10)

ORIGINAL SCALE IN INCHES FOR REDUCED PLANS 0 1 2 3

UNIT: 3603
PROJECT NUMBER & PHASE: 0700021119-1
CONTRACT NO.: 07-1218w1

DISREGARD PRINTS BEARING EARLIER REVISION DATES → 9/15/06 1/31/12

SHEET 15 OF 52

FILE => e53-1110-h-b04_lo03.dgn

USERNAME => s114640 DATE PLOTTED => 22-MAY-2012 TIME PLOTTED => 08:54

DIST	COUNTY	ROUTE	POST MILES TOTAL PROJECT	SHEET No.	TOTAL SHEETS
07	LA	5	29.4/31.6	1051	1931

REGISTERED CIVIL ENGINEER — DATE 1/31/12

5-21-12
PLANS APPROVAL DATE

REGISTERED PROFESSIONAL ENGINEER — JORGE I. ESTRADA — No. C51473 — Exp. 06-30-12 — CIVIL — STATE OF CALIFORNIA

The State of California or its officers or agents shall not be responsible for the accuracy or completeness of electronic copies of this plan sheet.

Note:
Concrete removal not shown for clarity

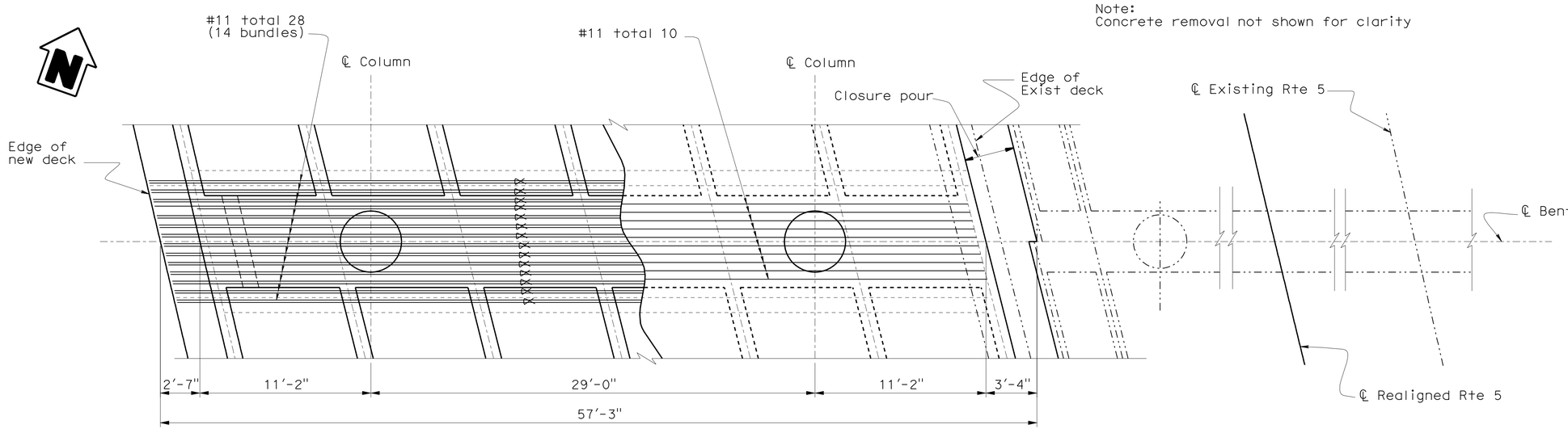

TOP REINFORCEMENT — PLAN — BOTTOM REINFORCEMENT

1/4" = 1'

LEGEND:

- Indicates Existing Structure
- Indicates New Construction
- Indicates bundled bars
- Concrete Removal

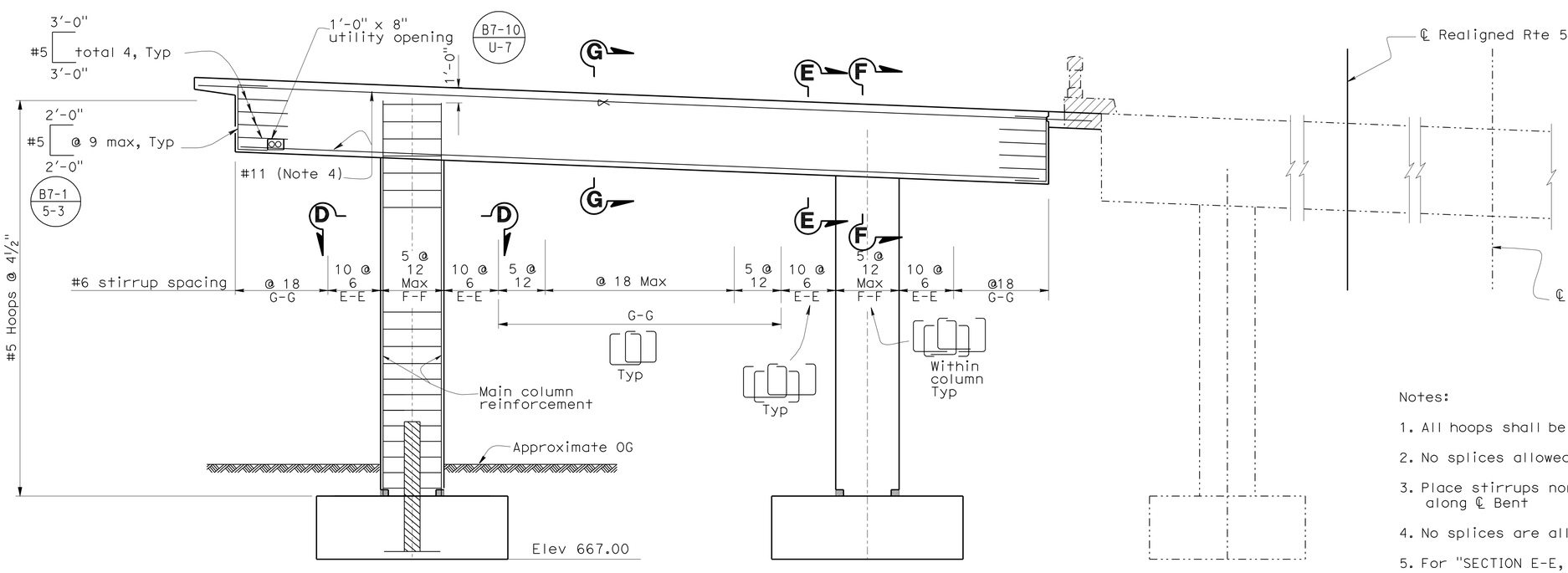

Note:
Piles not shown

ELEVATION

1/4" = 1'

Notes:

1. All hoops shall be "ULTIMATE" butt splice continuous
2. No splices allowed in main column reinforcement
3. Place stirrups normal to ℄ Bent and space along ℄ Bent
4. No splices are allowed in main cap reinforcement
5. For "SECTION E-E, F-F and G-G" see "BENT DETAILS No.3" sheet
6. For "SECTION D-D" and footing details, see "BENT DETAILS No.1"sheet

NOTE:
THE CONTRACTOR SHALL VERIFY ALL CONTROLLING FIELD DIMENSIONS BEFORE ORDERING OR FABRICATING ANY MATERIAL.

	BY	CHECKED
DESIGN	Jenny Zhang	Prem Rimal
DETAILS	Farideh Rashedi/ MT	Prem Rimal
QUANTITIES	Tanya Wyckoff	Prem Rimal

STATE OF CALIFORNIA
DEPARTMENT OF TRANSPORTATION

DIVISION OF ENGINEERING SERVICES
STRUCTURE DESIGN
DESIGN BRANCH 18

BRIDGE NO. 53-1110
POST MILE 31.23

BUENA VISTA - WINONA UC (WIDEN)

BENT 5 LAYOUT

STRUCTURES DESIGN DETAIL SHEET (ENGLISH) (REV. 09-01-10)

ORIGINAL SCALE IN INCHES FOR REDUCED PLANS 0 1 2 3

UNIT: 3603
PROJECT NUMBER & PHASE: 0700021119-1
CONTRACT NO.: 07-1218w1

DISREGARD PRINTS BEARING EARLIER REVISION DATES

REVISION DATES: ~~9/26/06~~ 1/31/12

SHEET 16 OF 52

FILE => e53-1110-h-b05_lo04.dgn

USERNAME => s114937 DATE PLOTTED => 22-MAY-2012 TIME PLOTTED => 09:13

DIST	COUNTY	ROUTE	POST MILES TOTAL PROJECT	SHEET No.	TOTAL SHEETS
07	LA	5	29.4/31.6	1052	1931

REGISTERED CIVIL ENGINEER — DATE 1/31/12

5-21-12
PLANS APPROVAL DATE

REGISTERED PROFESSIONAL ENGINEER — JORGE I. ESTRADA — No. C51473 — Exp. 06-30-12 — CIVIL — STATE OF CALIFORNIA

The State of California or its officers or agents shall not be responsible for the accuracy or completeness of electronic copies of this plan sheet.

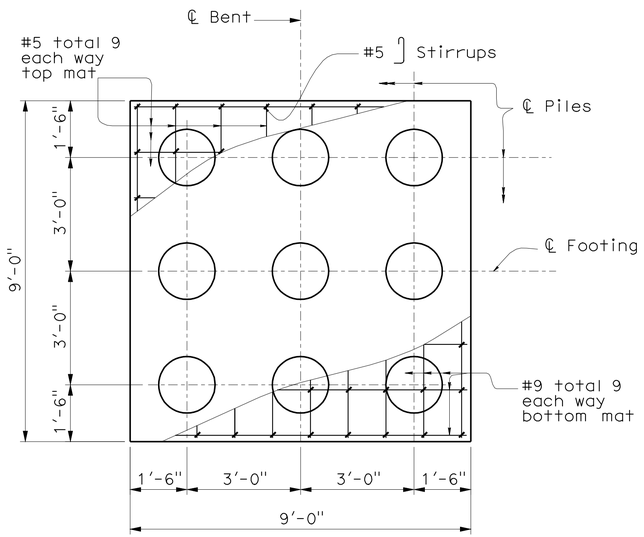

FOOTING PLAN (BENT 2 & 3)

½" = 1'

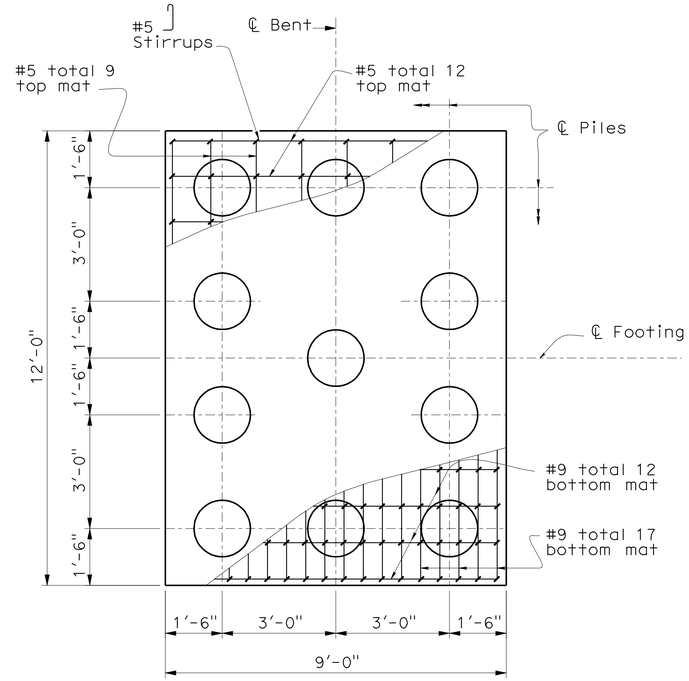

FOOTING PLAN (BENT 4 & 5)

½" = 1'

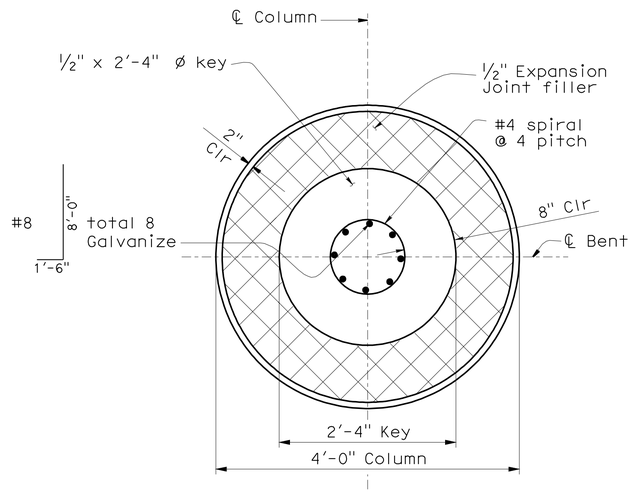

KEY DETAIL

1" = 1'

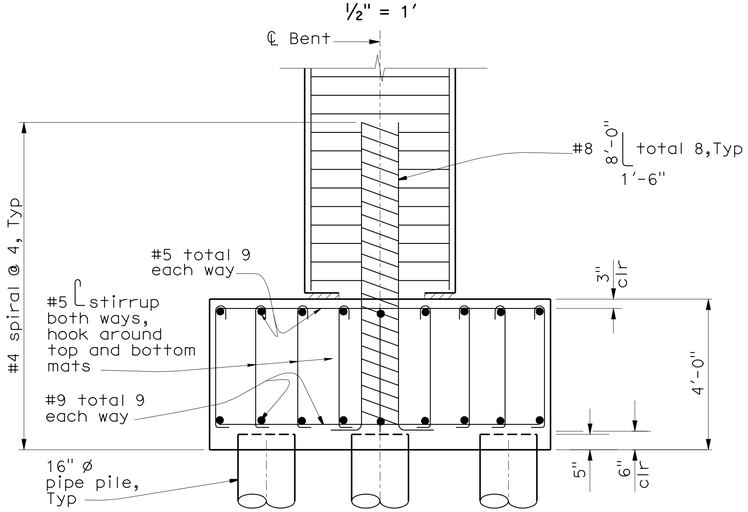

FOOTING SECTION (BENT 2 & 3)

½" = 1'

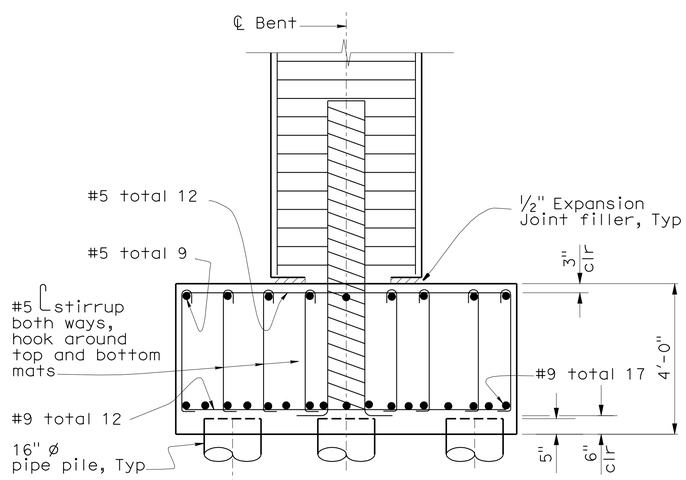

FOOTING SECTION (BENT 4 & 5)

½" = 1'

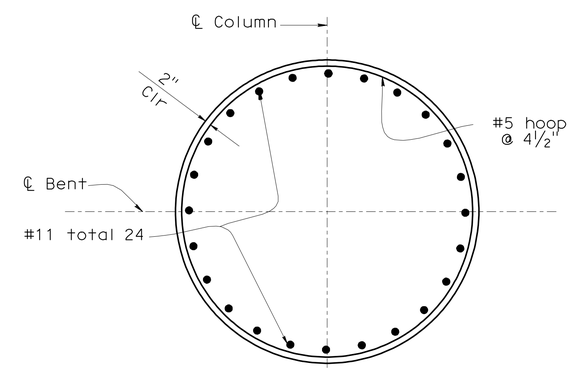

SECTION D-D

1" = 1'

	BY	CHECKED
DESIGN	Jenny Zhang	Prem Rimal
DETAILS	Farideh Rashedi/ MT	Prem Rimal
QUANTITIES	Tanya Wyckoff	Prem Rimal

STATE OF CALIFORNIA
DEPARTMENT OF TRANSPORTATION

DIVISION OF ENGINEERING SERVICES
STRUCTURE DESIGN
DESIGN BRANCH 18

BRIDGE NO. 53-1110
POST MILE 31.23

BUENA VISTA - WINONA UC (WIDEN)

BENT DETAILS NO. 1

STRUCTURES DESIGN DETAIL SHEET (ENGLISH) (REV. 09-01-10)

ORIGINAL SCALE IN INCHES FOR REDUCED PLANS 0 1 2 3

UNIT: 3603
PROJECT NUMBER & PHASE: 0700021119-1
CONTRACT NO.: 07-1218w1

DISREGARD PRINTS BEARING EARLIER REVISION DATES → REVISION DATES 10/25/06 1/31/12

SHEET 17 OF 52

FILE => e53-1110-h-b06_dt01.dgn

USERNAME => s114937 DATE PLOTTED => 22-MAY-2012 TIME PLOTTED => 09:13

DIST	COUNTY	ROUTE	POST MILES TOTAL PROJECT	SHEET No.	TOTAL SHEETS
07	LA	5	29.4/31.6	1053	1931

JEstrada. 1/31/12
REGISTERED CIVIL ENGINEER DATE

5-21-12
PLANS APPROVAL DATE

REGISTERED PROFESSIONAL ENGINEER
JORGE I. ESTRADA
No. C51473
Exp. 06-30-12
CIVIL
STATE OF CALIFORNIA

The State of California or its officers or agents shall not be responsible for the accuracy or completeness of electronic copies of this plan sheet.

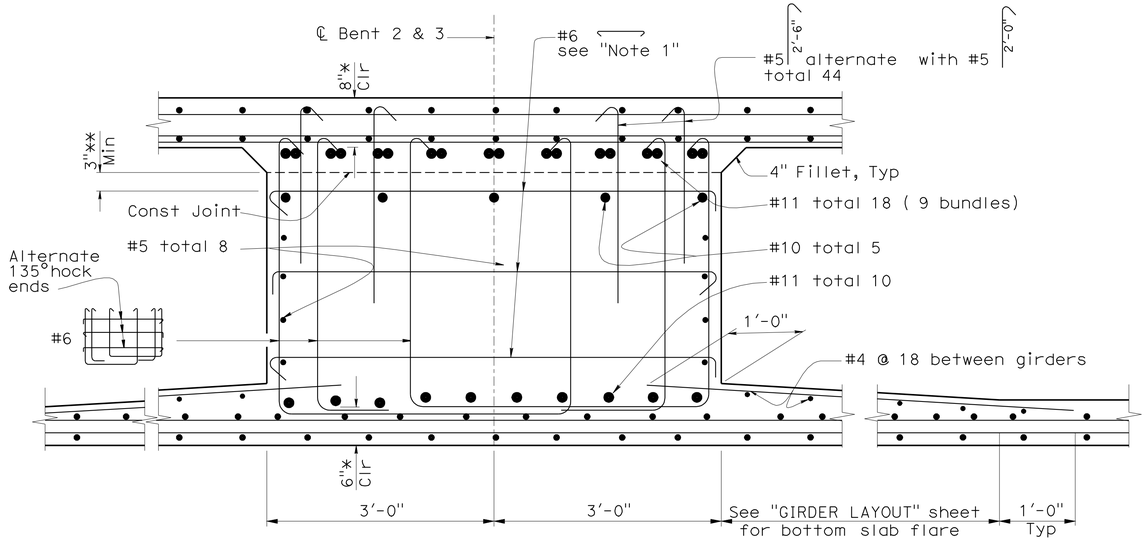

SECTION A-A

1" = 1'

Notes:
* Clearance to main cap reinforcement
** Reinforcement may be adjusted to clear prestressing ducts

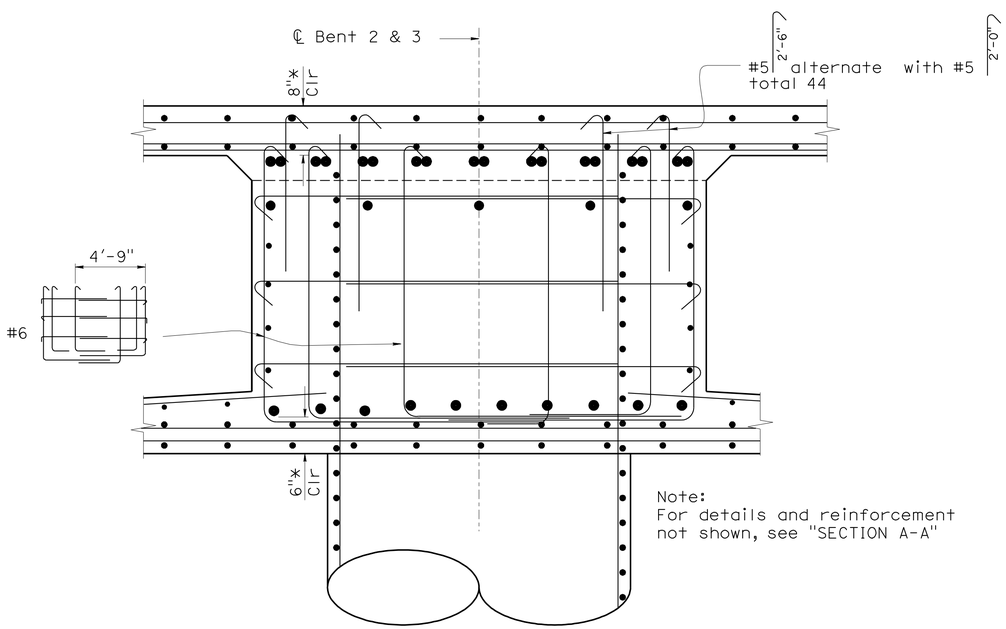

Note:
For details and reinforcement not shown, see "SECTION A-A"

SECTION B-B

1" = 1'

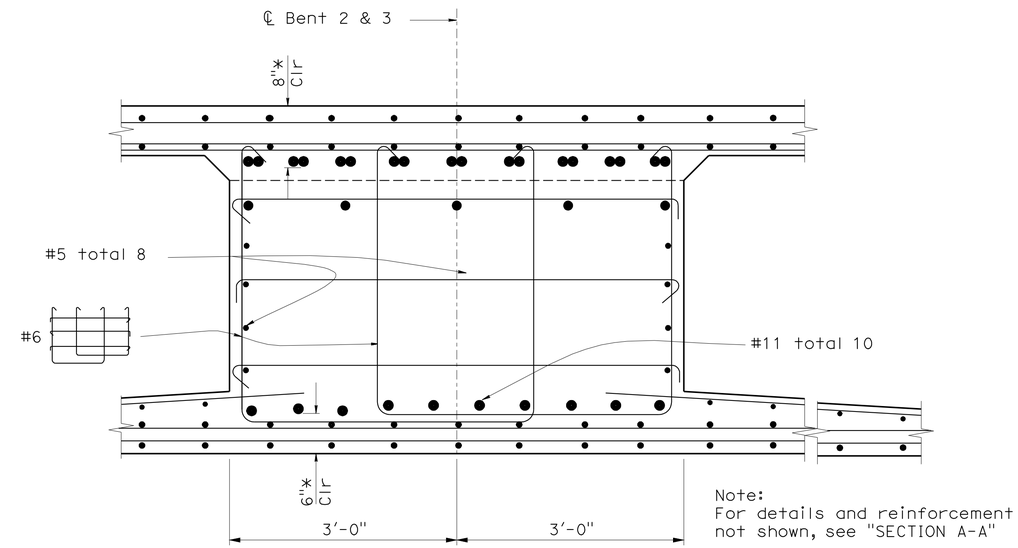

Note:
For details and reinforcement not shown, see "SECTION A-A"

SECTION C-C

1" = 1'

NOTE:
THE CONTRACTOR SHALL VERIFY ALL CONTROLLING FIELD DIMENSIONS BEFORE ORDERING OR FABRICATING ANY MATERIAL.

	BY	CHECKED
DESIGN	Jenny Zhang	Prem Rimal
DETAILS	Farideh Rashedi/ MT	Prem Rimal
QUANTITIES	Tanya Wyckoff	Prem Rimal

STATE OF CALIFORNIA
DEPARTMENT OF TRANSPORTATION

DIVISION OF ENGINEERING SERVICES
STRUCTURE DESIGN
DESIGN BRANCH 18

BRIDGE NO. 53-1110
POST MILE 31.23

BUENA VISTA - WINONA UC (WIDEN)
BENT DETAILS NO. 2

STRUCTURES DESIGN DETAIL SHEET (ENGLISH) (REV. 09-01-10)

ORIGINAL SCALE IN INCHES FOR REDUCED PLANS 0 1 2 3

UNIT: 3603
PROJECT NUMBER & PHASE: 0700021119-1
CONTRACT NO.: 07-1218w1

DISREGARD PRINTS BEARING EARLIER REVISION DATES
REVISION DATES: ~~10/25/06~~ 1/31/12

SHEET 18 OF 52

FILE => e53-1110-h-b06_dt02.dgn

USERNAME => s114937 DATE PLOTTED => 22-MAY-2012 TIME PLOTTED => 09:13

DIST	COUNTY	ROUTE	POST MILES TOTAL PROJECT	SHEET No.	TOTAL SHEETS
07	LA	5	29.4/31.6	1054	1931

JEstrada. 1/31/12
REGISTERED CIVIL ENGINEER DATE

5-21-12
PLANS APPROVAL DATE

REGISTERED PROFESSIONAL ENGINEER
JORGE I. ESTRADA
No. C51473
Exp. 06-30-12
CIVIL
STATE OF CALIFORNIA

The State of California or its officers or agents shall not be responsible for the accuracy or completeness of electronic copies of this plan sheet.

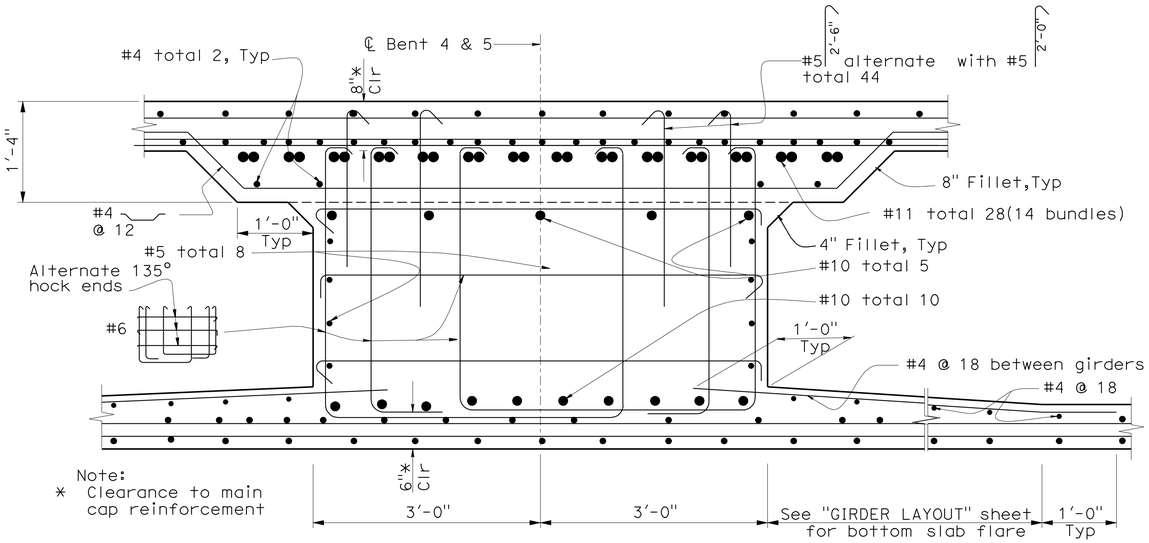

Note:
* Clearance to main cap reinforcement

SECTION E-E
1" = 1'

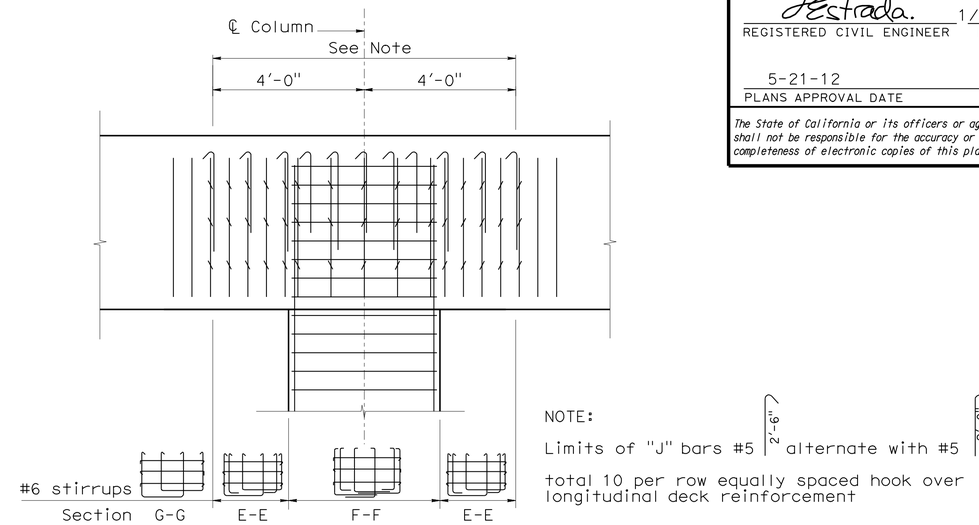

NOTE:
Limits of "J" bars #5 2'-6" alternate with #5 2'-0" total 10 per row equally spaced hook over longitudinal deck reinforcement

PART ELEVATION
NO SCALE

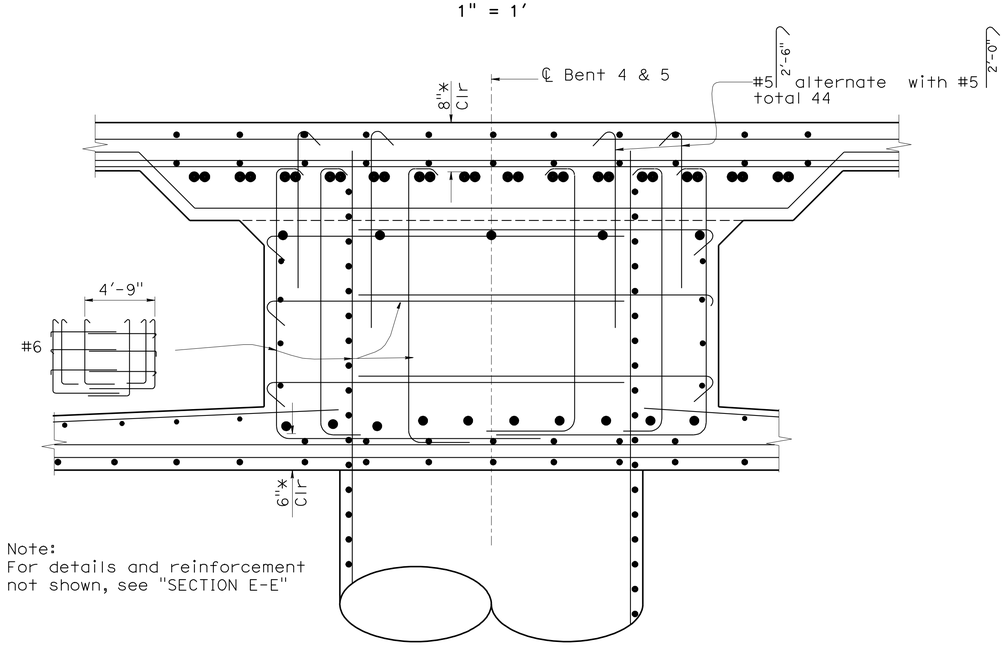

Note:
For details and reinforcement not shown, see "SECTION E-E"

SECTION F-F
1" = 1'

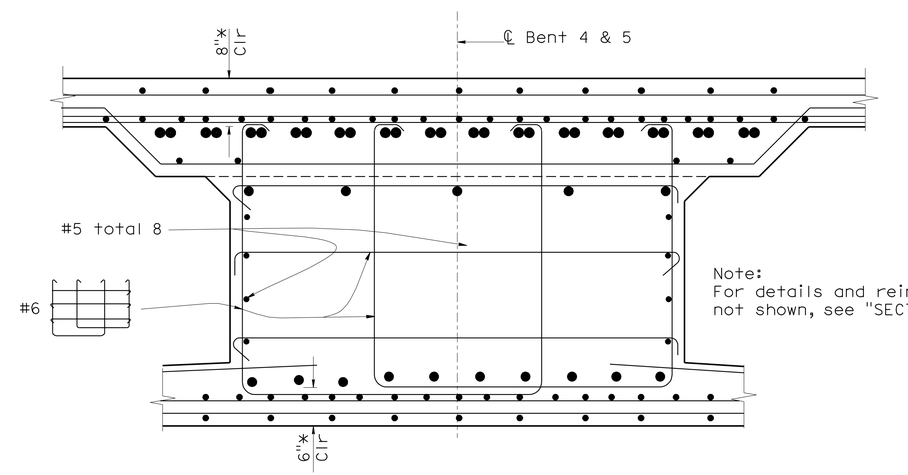

Note:
For details and reinforcement not shown, see "SECTION E-E"

SECTION G-G
1" = 1'

	BY	CHECKED
DESIGN	Jenny Zhang	Prem Rimal
DETAILS	Farideh Rashedi/ MT	Prem Rimal
QUANTITIES	Tanya Wyckoff	Prem Rimal

STATE OF CALIFORNIA
DEPARTMENT OF TRANSPORTATION

DIVISION OF ENGINEERING SERVICES
STRUCTURE DESIGN
DESIGN BRANCH 18

BRIDGE NO. 53-1110
POST MILE 31.23

BUENA VISTA - WINONA UC (WIDEN)
BENT DETAILS NO. 3

STRUCTURES DESIGN DETAIL SHEET (ENGLISH) (REV. 09-01-10)

ORIGINAL SCALE IN INCHES FOR REDUCED PLANS 0 1 2 3

UNIT: 3603
PROJECT NUMBER & PHASE: 0700021119-1
CONTRACT NO.: 07-1218W1

DISREGARD PRINTS BEARING EARLIER REVISION DATES

REVISION DATES: 10/25/06 1/31/12

SHEET 19 OF 52

FILE => e53-1110-h-b06_dt03.dgn

USERNAME => s114926 DATE PLOTTED => 11-JUL-2012 TIME PLOTTED => 11:21

DIST	COUNTY	ROUTE	POST MILES TOTAL PROJECT	SHEET No.	TOTAL SHEETS
07	LA	5	29.4/31.6	1055	1931

REGISTERED CIVIL ENGINEER — DATE 1/31/12

5-21-12
PLANS APPROVAL DATE

REGISTERED PROFESSIONAL ENGINEER — JORGE I. ESTRADA — No. C51473 — Exp. 06-30-12 — CIVIL — STATE OF CALIFORNIA

The State of California or its officers or agents shall not be responsible for the accuracy or completeness of electronic copies of this plan sheet.

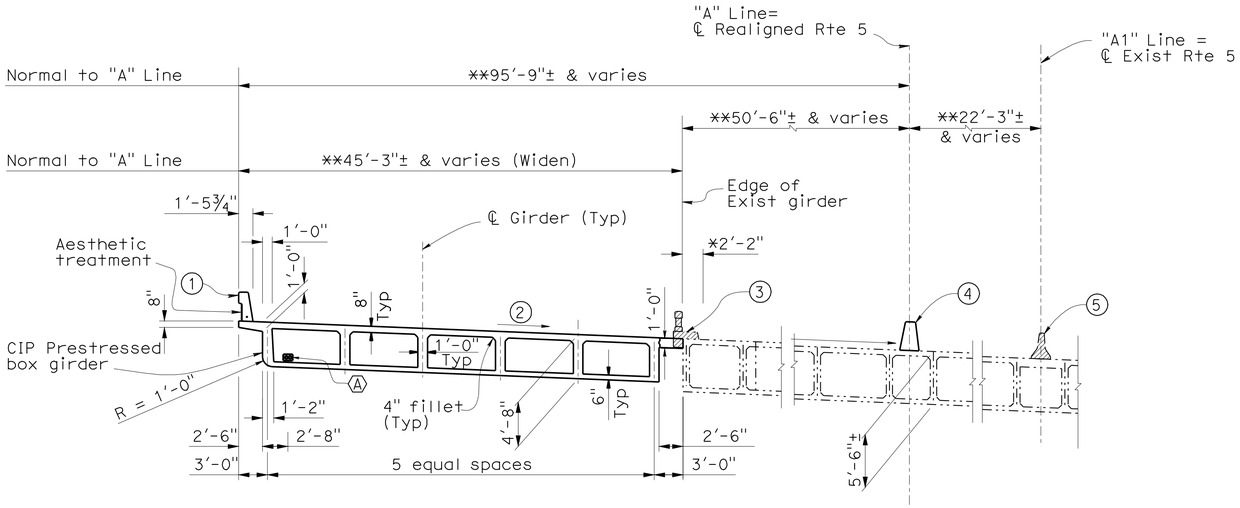

TYPICAL SECTION-ABUTMENT 1 TO HINGE (STA 1648+56.02± TO STA 1649+39.95±)

⅛" = 1'

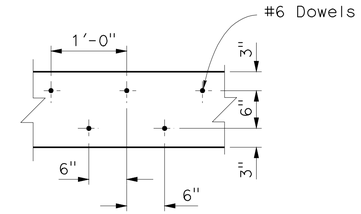

CLOSURE POUR DOWELS

1" = 1'

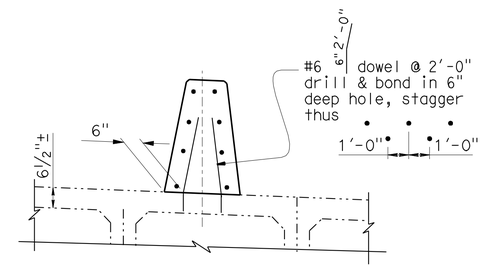

CONCRETE BARRIER TYPE 60A (MOD)

½" = 1'

Notes:

1. Concrete Barrier Type 736 Mod
2. Match existing cross slope
3. Remove existing concrete curb, railing & overhang
4. Concrete Barrier Type 60A (MOD)
5. Remove existing Barrier Type 50

UTILITIES

Ⓐ 1'-0" x 8" utility opening for 2-4" communication conduits

Ⓑ 1-2"C, see Electrical Plans.

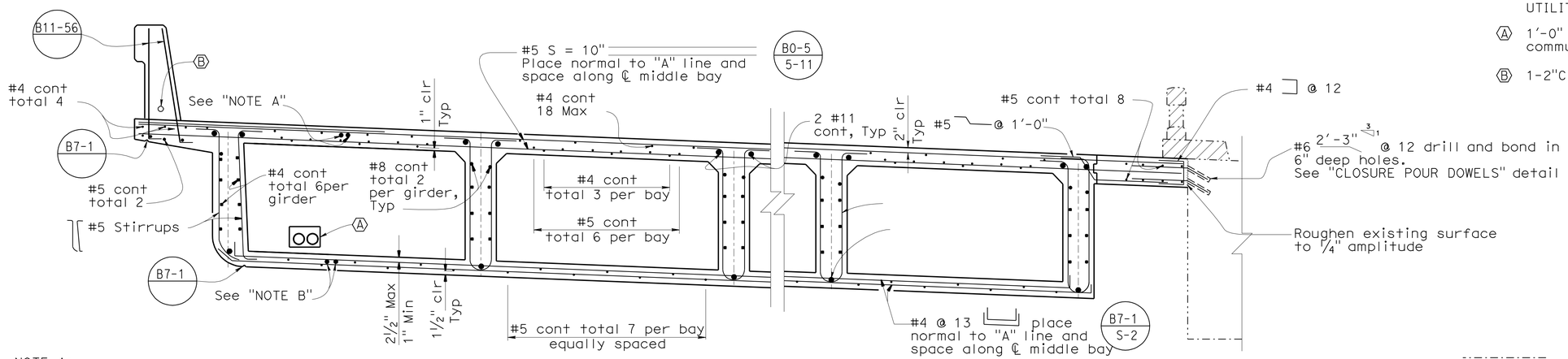

NOTE A:
Additional Top reinforcement, see "GIRDER REINFORCEMENT No. 2" sheet

NOTE B:
Additional Bottom reinforcement, see "GIRDER REINFORCEMENT No.1 "sheet

NOTE:
THE CONTRACTOR SHALL VERIFY ALL CONTROLLING FIELD DIMENSIONS BEFORE ORDERING OR FABRICATING ANY MATERIAL.

PART TYPICAL SECTION-REINFORCEMENT (STA 1648+56.02± TO STA 1649+39.95±)

½" = 1'

B0-5 B7-1 B8-5 B11-56

LEGEND

-·-·-·-·-	Indicates Existing Structure
———	Indicates New Construction
▨	Indicates Bridge Removal (Portion)
*	Limits of refinishing deck
**	Indicates the dimension @ ℄ Abut

	BY	CHECKED
DESIGN	Prem Rimal	Jorge Estrada
DETAILS	Farideh Rashedi/ MT	Jorge Estrada
QUANTITIES	Tanya Wyckoff	Prem Rimal

STATE OF CALIFORNIA
DEPARTMENT OF TRANSPORTATION

DIVISION OF ENGINEERING SERVICES
STRUCTURE DESIGN
DESIGN BRANCH 18

BRIDGE NO. 53-1110
POST MILE 31.23

BUENA VISTA - WINONA UC (WIDEN)
TYPICAL SECTION NO. 1

STRUCTURES DESIGN DETAIL SHEET (ENGLISH) (REV. 09-01-10)

ORIGINAL SCALE IN INCHES FOR REDUCED PLANS 0 1 2 3

UNIT: 3603
PROJECT NUMBER & PHASE: 0700021119-1
CONTRACT NO.: 07-1218W1

DISREGARD PRINTS BEARING EARLIER REVISION DATES

REVISION DATES: 2/27/06 1/31/12

SHEET 20 OF 52

FILE => e53-1110-k-ts01.dgn

USERNAME => s114937 DATE PLOTTED => 22-MAY-2012 TIME PLOTTED => 09:13

DIST	COUNTY	ROUTE	POST MILES TOTAL PROJECT	SHEET No.	TOTAL SHEETS
07	LA	5	29.4/31.6	1056	1931

REGISTERED CIVIL ENGINEER — DATE 1/31/12

5-21-12
PLANS APPROVAL DATE

REGISTERED PROFESSIONAL ENGINEER — JORGE I. ESTRADA — No. C51473 — Exp. 06-30-12 — CIVIL — STATE OF CALIFORNIA

The State of California or its officers or agents shall not be responsible for the accuracy or completeness of electronic copies of this plan sheet.

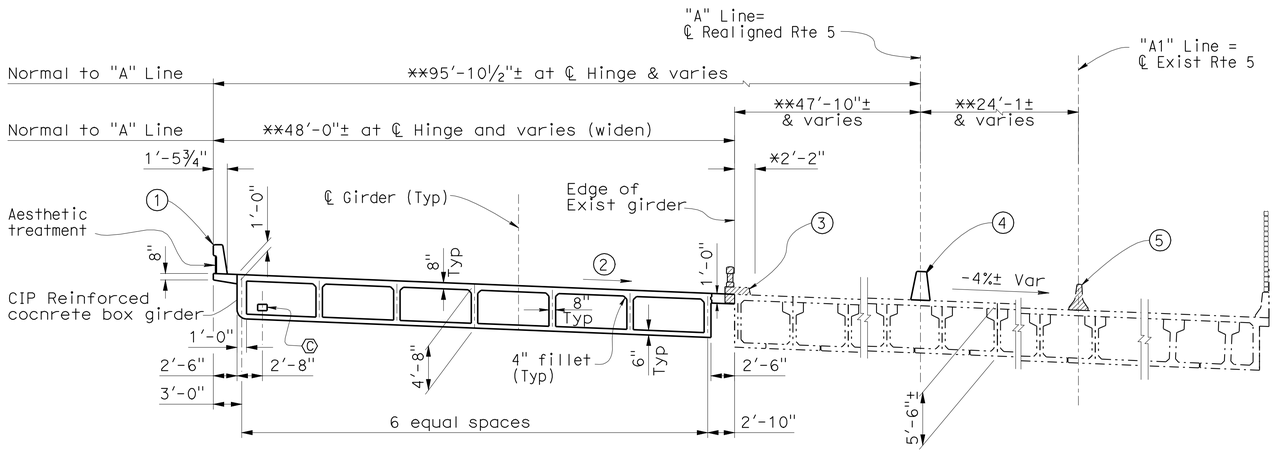

TYPICAL SECTION DROP SPAN BETWEEN HINGES (STA 1649+39.95± TO STA 1650+29.57±)

⅛" = 1'

NOTES:

1. Concrete Barrier Type 736 Mod
2. Match existing cross slope
3. Remove existing concrete curb, railing & overhang
4. Concrete Barrier Type 60A (MOD)
5. Remove existing Barrier Type 50

UTILITIES:

Ⓒ 1'-0" x 8" utility opening for 2-4" communication conduits

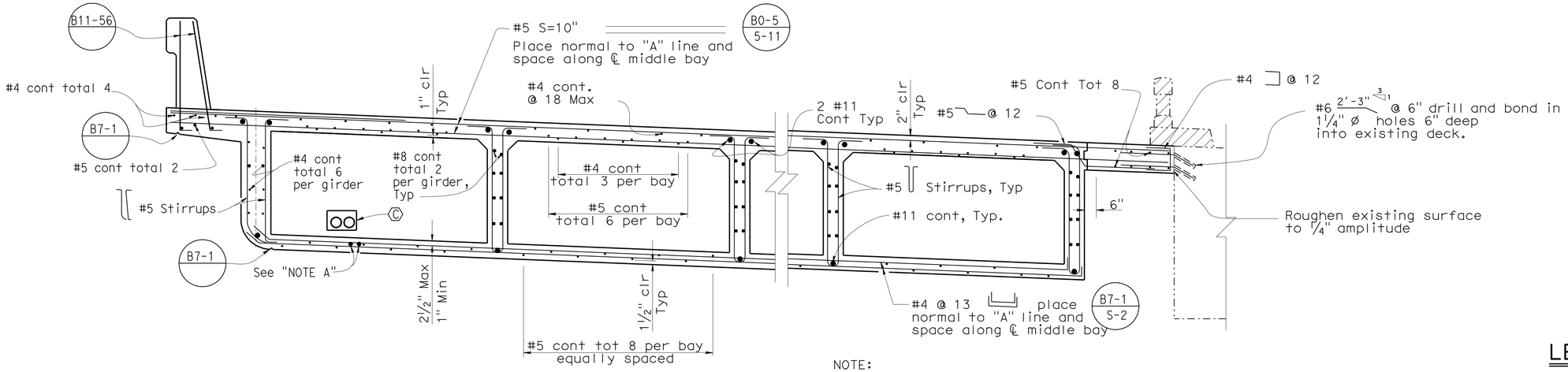

NOTE:

For closure pour dowels, see "CLOSURE POUR DOWELS" detail on "TYPICAL SECTION NO 1"

NOTE A
For bottom reinforcement, see "GIRDER REINFORCEMENT No.3" sheet

PART TYPICAL SECTION-REINFORCEMENT (STA 1649+39.95± TO STA 1650+29.57±)

½" = 1'

B0-5 B7-1 B11-56

NOTE:
THE CONTRACTOR SHALL VERIFY ALL CONTROLLING FIELD DIMENSIONS BEFORE ORDERING OR FABRICATING ANY MATERIAL.

LEGEND

- Indicates Existing Structure
- Indicates New Construction
- Indicates Bridge Removal (Portion)
- * Limits of refinishing deck
- ** Indicates the dimension @ ℄ Hinge near ℄ A1a

	BY	CHECKED
DESIGN	Prem Rimal	Xiahong Li
DETAILS	Farideh Rashedi/ MT	Prem Rimal
QUANTITIES	Tanya Wyckoff	Prem Rimal

STATE OF CALIFORNIA
DEPARTMENT OF TRANSPORTATION

DIVISION OF ENGINEERING SERVICES
STRUCTURE DESIGN
DESIGN BRANCH 18

BRIDGE NO. 53-1110
POST MILE 31.23

BUENA VISTA - WINONA UC (WIDEN)
TYPICAL SECTION NO. 2

STRUCTURES DESIGN DETAIL SHEET (ENGLISH) (REV. 09-01-10)

ORIGINAL SCALE IN INCHES FOR REDUCED PLANS 0 1 2 3

UNIT: 3603
PROJECT NUMBER & PHASE: 0700021119-1
CONTRACT NO.: 07-1218W1

DISREGARD PRINTS BEARING EARLIER REVISION DATES
REVISION DATES: ~~2/17/06~~ 1/31/12

SHEET 21 OF 52

FILE => e53-1110-k-ts02.dgn

USERNAME => S114937 DATE PLOTTED => 22-MAY-2012 TIME PLOTTED => 08:14

DIST	COUNTY	ROUTE	POST MILES TOTAL PROJECT	SHEET No.	TOTAL SHEETS
07	LA	5	29.4/31.6	1057	1931

REGISTERED CIVIL ENGINEER — DATE 1/31/12

5-21-12
PLANS APPROVAL DATE

REGISTERED PROFESSIONAL ENGINEER — JORGE I. ESTRADA — No. C51473 — Exp. 06-30-12 — CIVIL — STATE OF CALIFORNIA

The State of California or its officers or agents shall not be responsible for the accuracy or completeness of electronic copies of this plan sheet.

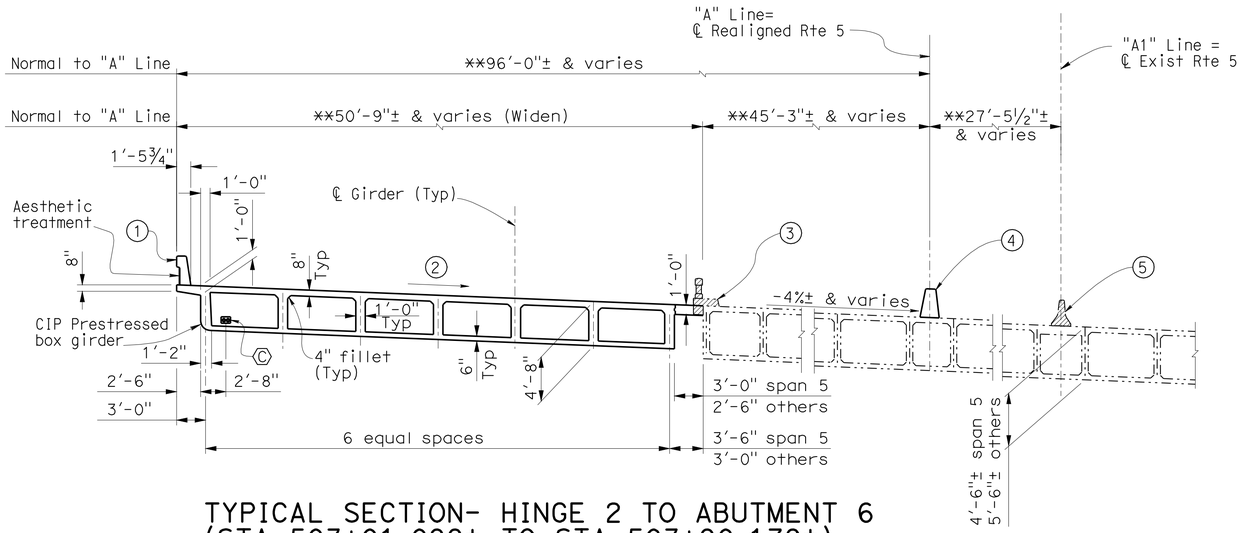

TYPICAL SECTION- HINGE 2 TO ABUTMENT 6 (STA 503+01.099± TO STA 503+90.179±)

⅛" = 1'

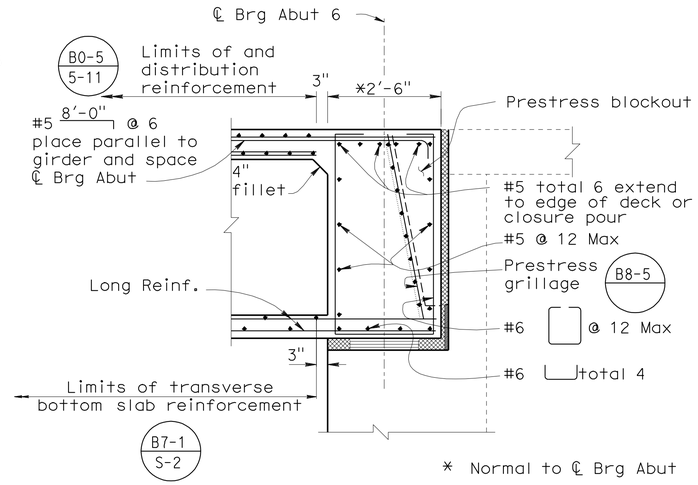

END DIAPHRAGM

NO SCALE

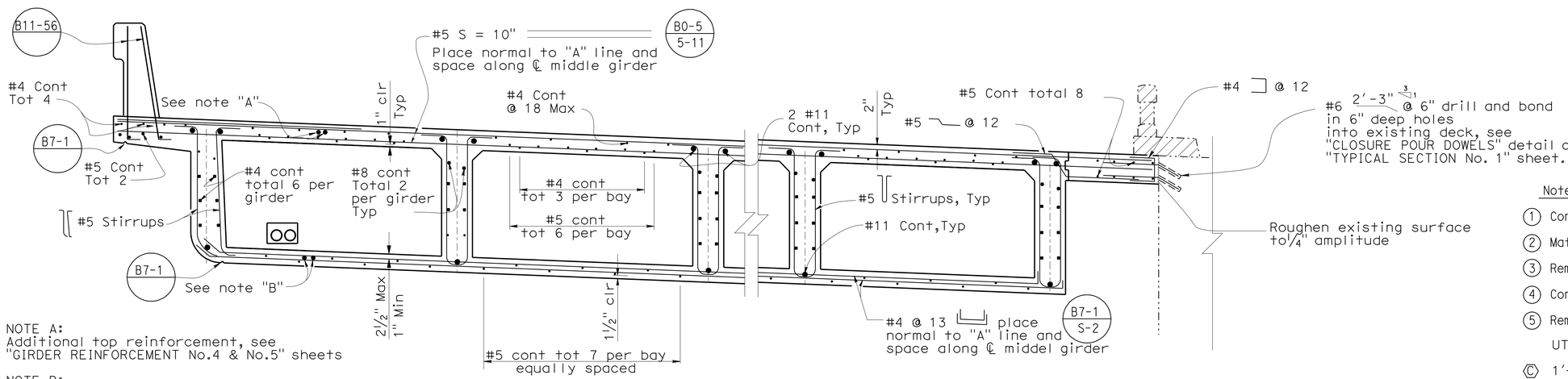

NOTE A:
Additional top reinforcement, see "GIRDER REINFORCEMENT No.4 & No.5" sheets

NOTE B:
Additional bottom reinforcement, see "GIRDER REINFORCEMENT No.4 & No.5 "sheets

PART TYPICAL SECTION-REINFORCEMENT (STA 503+01.099± TO STA 503+90.179±)

½" = 1'

Notes:

1. Concrete Barrier Type 736 Mod
2. Match existing cross slope
3. Remove existing concrete curb, railing & overhang
4. Concrete Barrier Type 60A(MOD)
5. Remove existing Barrier Type 50

UTILITIES

Ⓒ 1'-0" x 8" utility opening for 2-4" communication conduits

LEGEND

-·-·-·-·-	Indicates Existing Structure
———	Indicates New Construction
▨	Indicates Bridge Removal (Portion)
*	Limits of refinishing deck
**	Indicates the dimension @ ℄ Hinge near ℄ Bent 2

NOTE:
THE CONTRACTOR SHALL VERIFY ALL CONTROLLING FIELD DIMENSIONS BEFORE ORDERING OR FABRICATING ANY MATERIAL.

	BY	CHECKED
DESIGN	Prem Rimal	Xiahong Li
DETAILS	Farideh Rashedi/ MT	Xiahong Li
QUANTITIES	Tanya Wyckoff	Prem Rimal

STATE OF CALIFORNIA
DEPARTMENT OF TRANSPORTATION

DIVISION OF ENGINEERING SERVICES
STRUCTURE DESIGN
DESIGN BRANCH 18

BRIDGE NO. 53-1110
POST MILE 31.23

BUENA VISTA - WINONA UC (WIDEN)

TYPICAL SECTION NO. 3

STRUCTURES DESIGN DETAIL SHEET (ENGLISH) (REV. 09-01-10)

ORIGINAL SCALE IN INCHES FOR REDUCED PLANS 0 1 2 3

UNIT: 3603
PROJECT NUMBER & PHASE: 0700021119-1
CONTRACT NO.: 07-1218W1

DISREGARD PRINTS BEARING EARLIER REVISION DATES

REVISION DATES: 2/07/06 1/31/12

SHEET 22 OF 52

FILE => e53-1110-k-ts03.dgn

USERNAME => s174937 DATE PLOTTED => 22-MAY-2012 TIME PLOTTED => 09:14

DIST	COUNTY	ROUTE	POST MILES TOTAL PROJECT	SHEET No.	TOTAL SHEETS
07	LA	5	29.4/31.6	1058	1931

JEstrada. 1/31/12
REGISTERED CIVIL ENGINEER DATE

5-21-12
PLANS APPROVAL DATE

REGISTERED PROFESSIONAL ENGINEER
JORGE I. ESTRADA
No. C51473
Exp. 06-30-12
CIVIL
STATE OF CALIFORNIA

The State of California or its officers or agents shall not be responsible for the accuracy or completeness of electronic copies of this plan sheet.

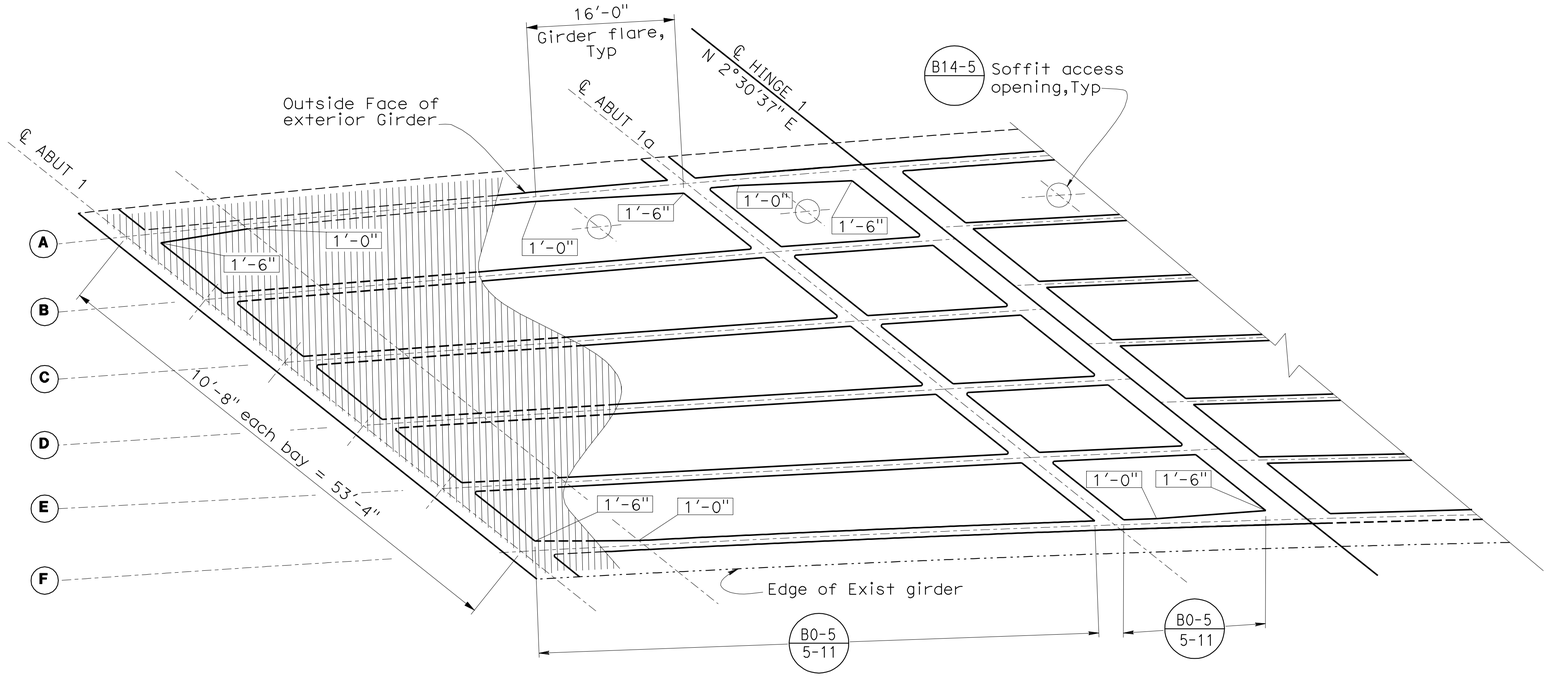

PLAN

1/8" = 1'

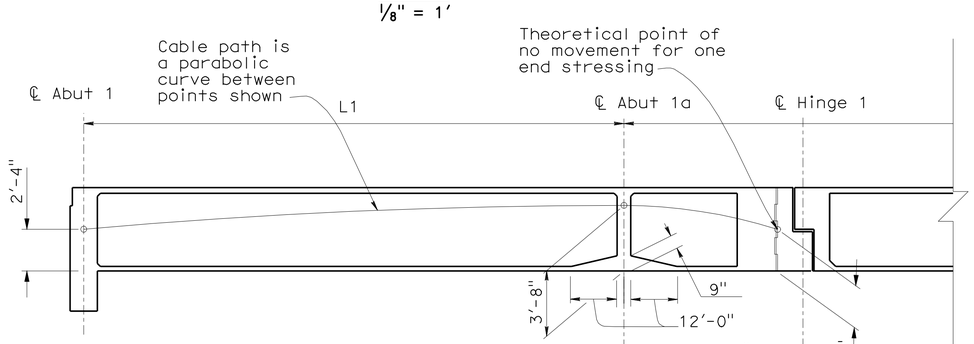

GIRDER A	# 5 ⋃ or ⋃ Stirrup Spacing	8 @ 12	@ 18 Max	15 @ 9	20 @ 6	30 @ 4	@ 5½ Max
GIRDER B	# 5 ⋃ or ⋃ Stirrup Spacing	8 @ 12	@ 18 Max	10 @ 12	10 @ 9	15 @ 7	@ 5½ Max
GIRDER C-F	# 5 ⋃ or ⋃ Stirrup Spacing	8 @ 12	@ 18 Max	15 @ 10	15 @ 8		@ 5½ Max

PRESTRESSING NOTES

270 KSI Low Relaxation Strand:

P_{jack} = 8320 kips

Anchor Set = ⅜ in

Total Number of Girders = 6

Distribution of prestress force (Pjack) between girders shall not exceed the ratio of 3:2. Maximum final force variation between girders shall not exceed 725 kips.

Concrete: f'_c = 4500 psi @ 28 days

f'_{ci} = 3600 psi @ time of stressing

Contractor shall submit elongation calculations based on initial stress at

⊠ = 0.959 times jacking stress.

One end stressing shall be performed from the long-span end only.

Notes:

1. XX Indicates girder stem width
2. ——— Indicates New Construction
3. —·—·— Indicates Existing Structure

DESIGN	BY Jorge Estrada	CHECKED Prem Rimal	
DETAILS	BY FR/ Minh Tran	CHECKED Prem Rimal/ JE	
QUANTITIES	BY Tanya Wyckoff	CHECKED Prem Rimal	

STATE OF CALIFORNIA
DEPARTMENT OF TRANSPORTATION

DIVISION OF ENGINEERING SERVICES
STRUCTURE DESIGN
DESIGN BRANCH 18

BRIDGE NO. 53-1110
POST MILE 31.23

BUENA VISTA - WINONA UC (WIDEN)
GIRDER LAYOUT NO. 1

STRUCTURES DESIGN DETAIL SHEET (ENGLISH) (REV. 09-01-10)

ORIGINAL SCALE IN INCHES FOR REDUCED PLANS 0 1 2 3

UNIT: 3603
PROJECT NUMBER & PHASE: 0700021119-1
CONTRACT NO.: 07-1218W1

DISREGARD PRINTS BEARING EARLIER REVISION DATES

REVISION DATES: ~~2/17/06~~ 1/31/12

SHEET 23 OF 52

FILE => e53-1110-1-g_1o01.dgn

USERNAME => s114937 DATE PLOTTED => 22-MAY-2012 TIME PLOTTED => 09:14

DIST	COUNTY	ROUTE	POST MILES TOTAL PROJECT	SHEET No.	TOTAL SHEETS
07	LA	5	29.4/31.6	1059	1931

JEstrada. 1/31/12
REGISTERED CIVIL ENGINEER DATE

5-21-12
PLANS APPROVAL DATE

REGISTERED PROFESSIONAL ENGINEER JORGE I. ESTRADA No. C51473 Exp. 06-30-12 CIVIL STATE OF CALIFORNIA

The State of California or its officers or agents shall not be responsible for the accuracy or completeness of electronic copies of this plan sheet.

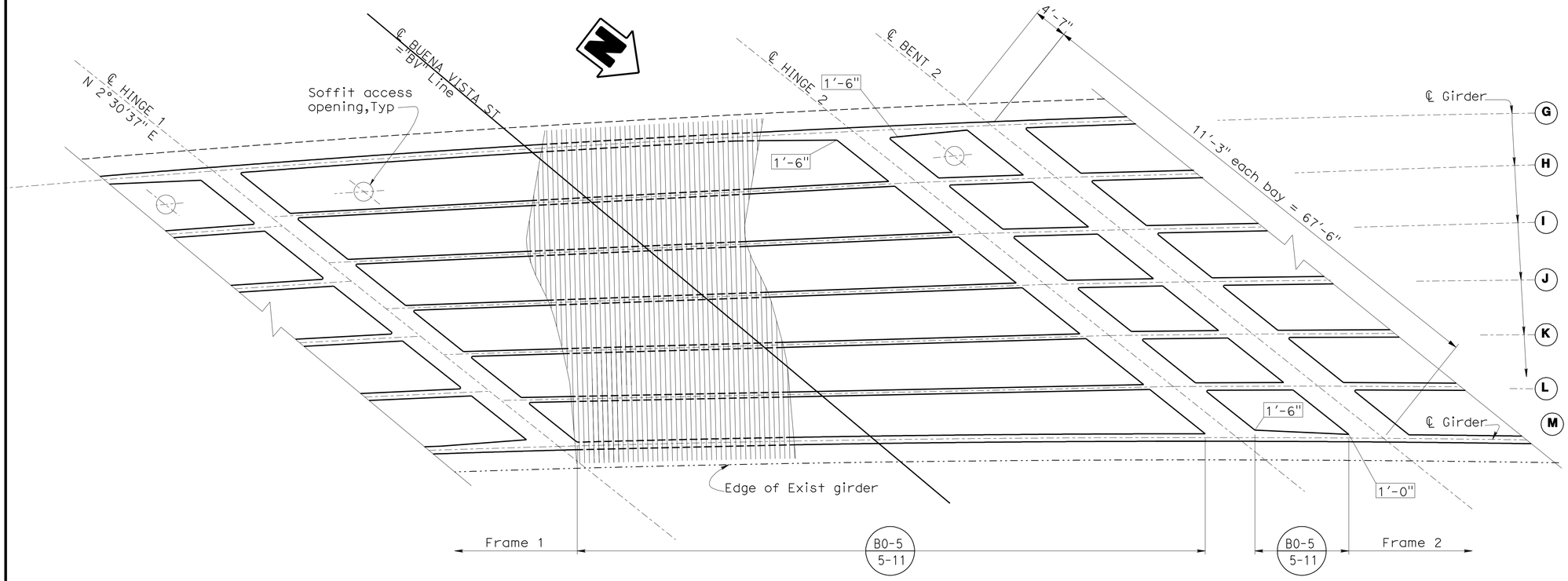

PLAN

1/8" = 1'

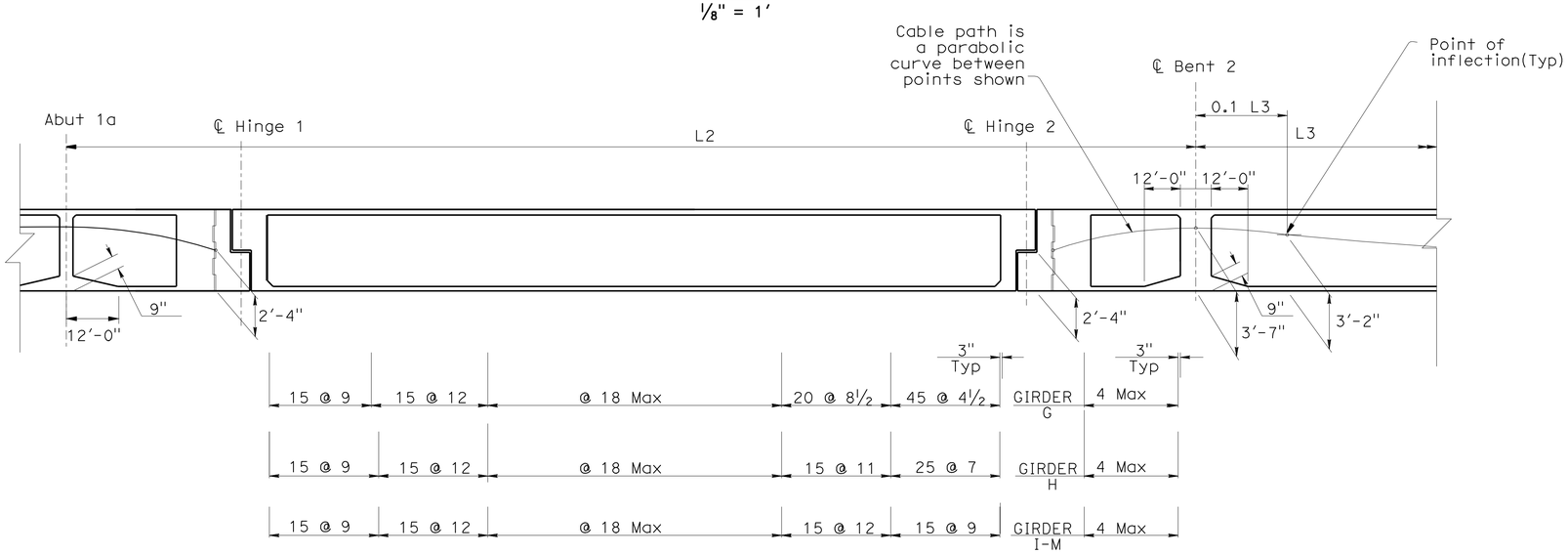

LONGITUDINAL SECTION

NO SCALE

PRESTRESSING NOTES (Frame 1)

270 KSI Low Relaxation Strand:

P_{jack} = 8320 kips

Anchor Set = 3/8 in

Total Number of Girders = 6

Distribution of prestress force (Pjack) between girders shall not exceed the ratio of 3:2. Maximum final force variation between girders shall not exceed 725 kips.

Concrete: f'_c = 4500 psi @ 28 days

f'_{ci} = 3600 psi @ time of stressing

Contractor shall submit elongation calculations based on initial stress at

☒ = 0.959 times jacking stress.

One end stressing shall be performed from the long-span end only.

Notes:

1. XX Indicates girder stem width
2. ——— Indicates New Construction
3. —·—·— Indicates Existing Structure

	BY	CHECKED
DESIGN	Jorge Estrada	Prem Rimal
DETAILS	Farideh Rashedi/ MT	Prem Rimal/ JE
QUANTITIES	Tanya Wyckoff	Prem Rimal

STATE OF CALIFORNIA
DEPARTMENT OF TRANSPORTATION

DIVISION OF ENGINEERING SERVICES
STRUCTURE DESIGN
DESIGN BRANCH 18

BRIDGE NO. 53-1110
POST MILE 31.23

BUENA VISTA - WINONA UC (WIDEN)

GIRDER LAYOUT NO. 2

STRUCTURES DESIGN DETAIL SHEET (ENGLISH) (REV. 09-01-10)

ORIGINAL SCALE IN INCHES FOR REDUCED PLANS 0 1 2 3

UNIT: 3603
PROJECT NUMBER & PHASE: 0700021119-1
CONTRACT NO.: 07-1218w1

DISREGARD PRINTS BEARING EARLIER REVISION DATES

REVISION DATES: 2/13/06 1/31/12

SHEET 24 OF 52

FILE => e53-1110-1-g_lo02.dgn

USERNAME => s114937 DATE PLOTTED => 22-MAY-2012 TIME PLOTTED => 08:14

DIST	COUNTY	ROUTE	POST MILES TOTAL PROJECT	SHEET No.	TOTAL SHEETS
07	LA	5	29.4/31.6	1060	1931

JEstrada. 1/31/12
REGISTERED CIVIL ENGINEER DATE

5-21-12
PLANS APPROVAL DATE

REGISTERED PROFESSIONAL ENGINEER
JORGE I. ESTRADA
No. C51473
Exp. 06-30-12
CIVIL
STATE OF CALIFORNIA

The State of California or its officers or agents shall not be responsible for the accuracy or completeness of electronic copies of this plan sheet.

Notes:
1. XX Indicates girder stem width
2. For Prestressing notes, see "GIRDER LAYOUT NO.3" sheet.
3. ——— Indicates New Construction
4. —·—·— Indicates Existing Structure

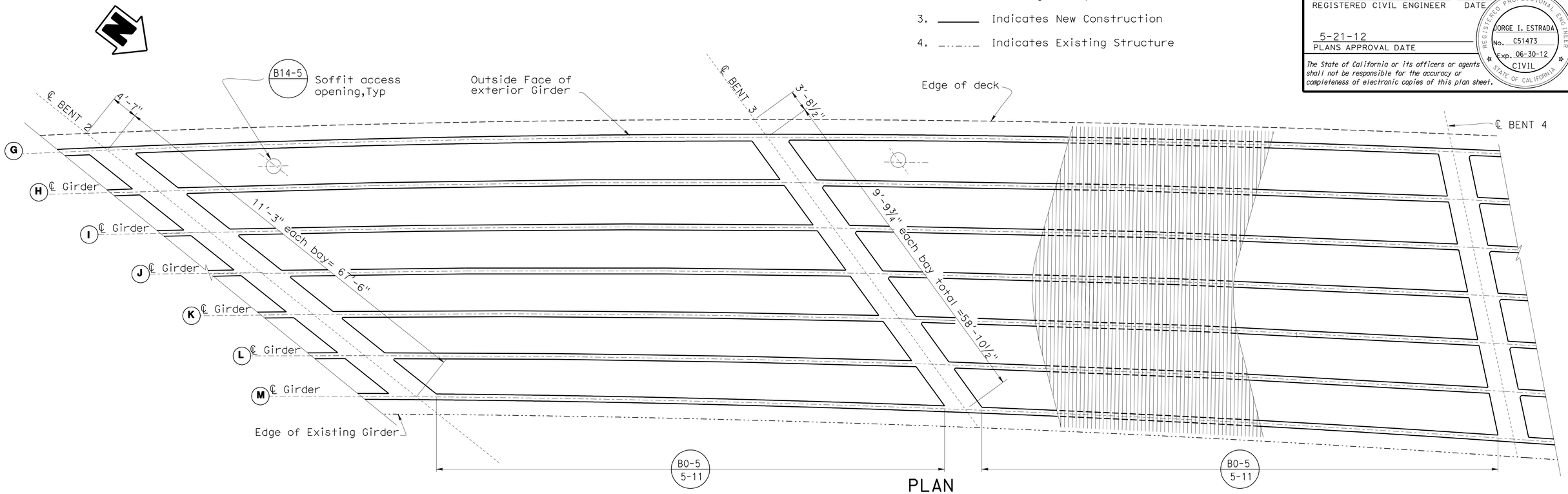

PLAN
NO SCALE

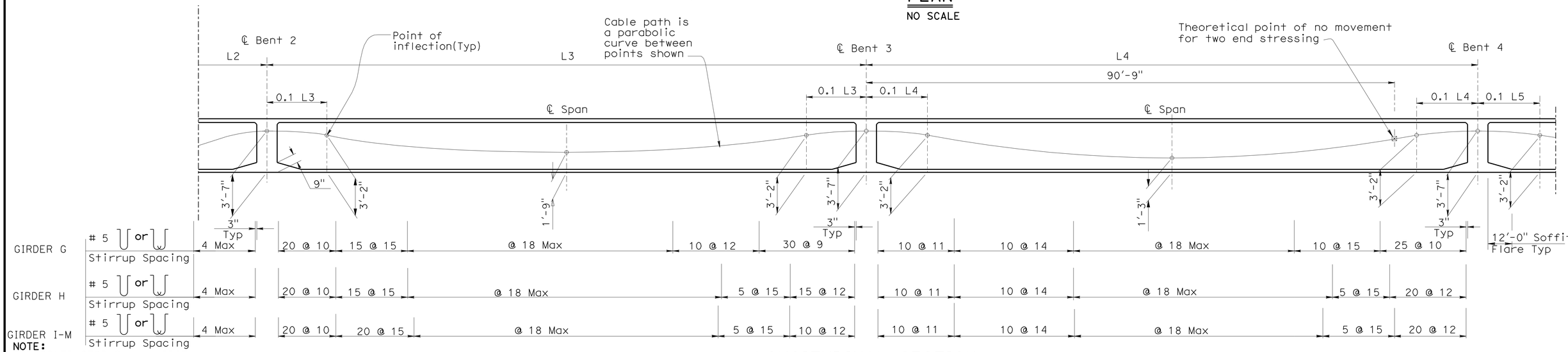

NOTE:
THE CONTRACTOR SHALL VERIFY ALL CONTROLLING FIELD DIMENSIONS BEFORE ORDERING OR FABRICATING ANY MATERIAL.

LONGITUDINAL SECTION
NO SCALE

	BY	CHECKED
DESIGN	Prem Rimal	Xiahong Li
DETAILS	Farideh Rashedi/ MT	Xiahong Li
QUANTITIES	Tanya Wyckoff	Prem Rimal

STATE OF CALIFORNIA
DEPARTMENT OF TRANSPORTATION

DIVISION OF ENGINEERING SERVICES
STRUCTURE DESIGN
DESIGN BRANCH 18

BRIDGE NO. 53-1110
POST MILE 31.23

BUENA VISTA - WINONA UC (WIDEN)
GIRDER LAYOUT NO. 3

STRUCTURES DESIGN DETAIL SHEET (ENGLISH) (REV. 09-01-10)

ORIGINAL SCALE IN INCHES FOR REDUCED PLANS 0 1 2 3

UNIT: 3603
PROJECT NUMBER & PHASE: 0700021119-1
CONTRACT NO.: 07-1218W1

DISREGARD PRINTS BEARING EARLIER REVISION DATES
REVISION DATES 10/4/06 1/31/12

SHEET 25 OF 52

FILE => e53-1110-1-g_lo03.dgn

USERNAME => s123631 DATE PLOTTED => 22-MAY-2012 TIME PLOTTED => 09:07

DIST	COUNTY	ROUTE	POST MILES TOTAL PROJECT	SHEET No.	TOTAL SHEETS
07	LA	5	29.4/31.6	1061	1931

JEstrada. 1/31/12
REGISTERED CIVIL ENGINEER DATE

5-21-12
PLANS APPROVAL DATE

REGISTERED PROFESSIONAL ENGINEER JORGE I. ESTRADA No. C51473 Exp. 06-30-12 CIVIL STATE OF CALIFORNIA

The State of California or its officers or agents shall not be responsible for the accuracy or completeness of electronic copies of this plan sheet.

Notes:
1. [xx] Indicates girder stem width
2. * measured along the girder
3. ——— Indicates New Construction
4. —··—··— Indicates Existing Structure

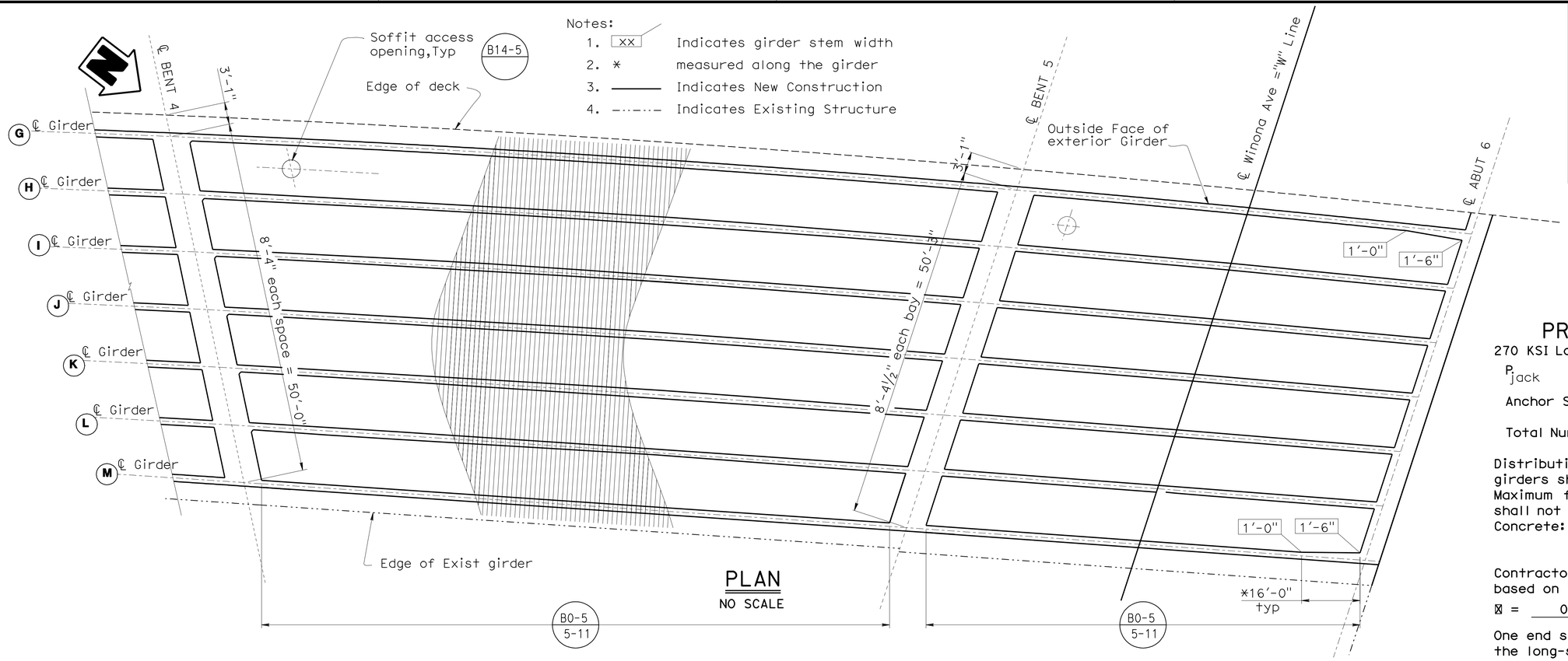

PLAN
NO SCALE

PRESTRESSING NOTES

270 KSI Low Relaxation Strand:

P_{jack} = 9900 kips

Anchor Set = 3/8 in

Total Number of Girders = 6

Distribution of prestress force (Pjack) between girders shall not exceed the ratio of 3:2. Maximum final force variation between girders shall not exceed 725 kips.

Concrete: f'_c = 4500 psi @ 28 days

f'_{ci} = 3600 psi @ time of stressing

Contractor shall submit elongation calculations based on initial stress at

⊠ = 0.959 times jacking stress.

One end stressing shall be performed from the long-span end only.

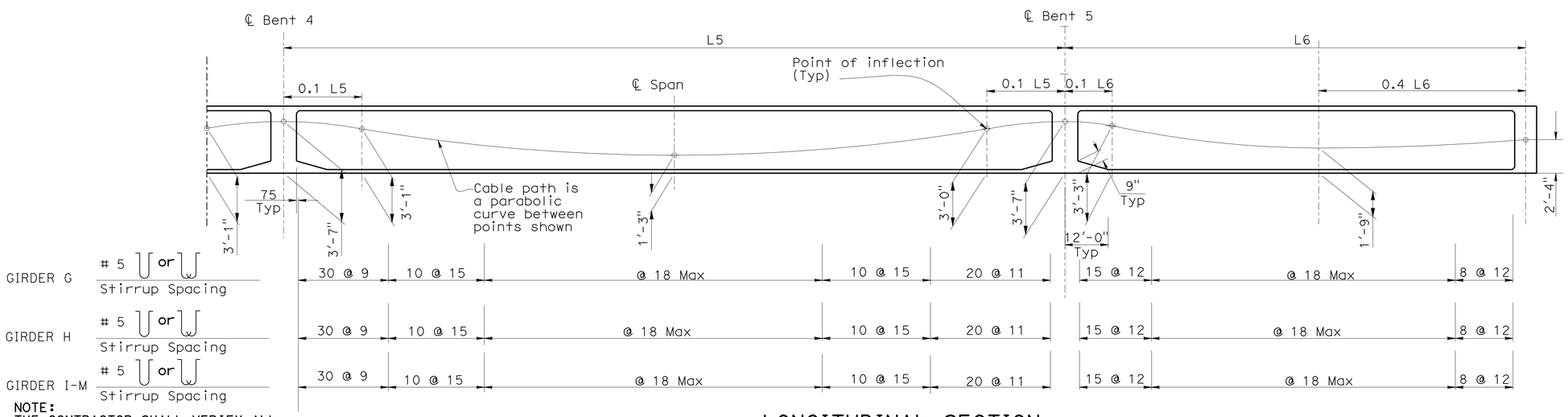

Note:
Prestressed frame is from Hinge 2 to Abutment 6

NOTE:
THE CONTRACTOR SHALL VERIFY ALL CONTROLLING FIELD DIMENSIONS BEFORE ORDERING OR FABRICATING ANY MATERIAL.

LONGITUDINAL SECTION
NO SCALE

	BY	CHECKED
DESIGN	Prem Rimal	Xiahong Li
DETAILS	Farideh Rashedi/ MT	Xiahong Li/ JE
QUANTITIES	Tanya Wyckoff	Prem Rimal

STATE OF CALIFORNIA
DEPARTMENT OF TRANSPORTATION

DIVISION OF ENGINEERING SERVICES
STRUCTURE DESIGN
DESIGN BRANCH 18

BRIDGE NO. 53-1110
POST MILE 31.23

BUENA VISTA - WINONA UC (WIDEN)
GIRDER LAYOUT NO. 4

STRUCTURES DESIGN DETAIL SHEET (ENGLISH) (REV. 09-01-10)

ORIGINAL SCALE IN INCHES FOR REDUCED PLANS 0 1 2 3

UNIT: 3603
PROJECT NUMBER & PHASE: 0700021119-1 CONTRACT NO.: 07-1218W1

DISREGARD PRINTS BEARING EARLIER REVISION DATES
REVISION DATES 10/4/06 1/31/12

SHEET 26 OF 52

FILE => e53-1110-1-g_lo04.dgn

USERNAME => s123631 DATE PLOTTED => 22-MAY-2012 TIME PLOTTED => 09:07

DIST	COUNTY	ROUTE	POST MILES TOTAL PROJECT	SHEET No.	TOTAL SHEETS
07	LA	5	29.4/31.6	1062	1931

JEstrada. 1/31/12
REGISTERED CIVIL ENGINEER DATE

5-21-12
PLANS APPROVAL DATE

REGISTERED PROFESSIONAL ENGINEER
JORGE I. ESTRADA
No. C51473
Exp. 06-30-12
CIVIL
STATE OF CALIFORNIA

The State of California or its officers or agents shall not be responsible for the accuracy or completeness of electronic copies of this plan sheet.

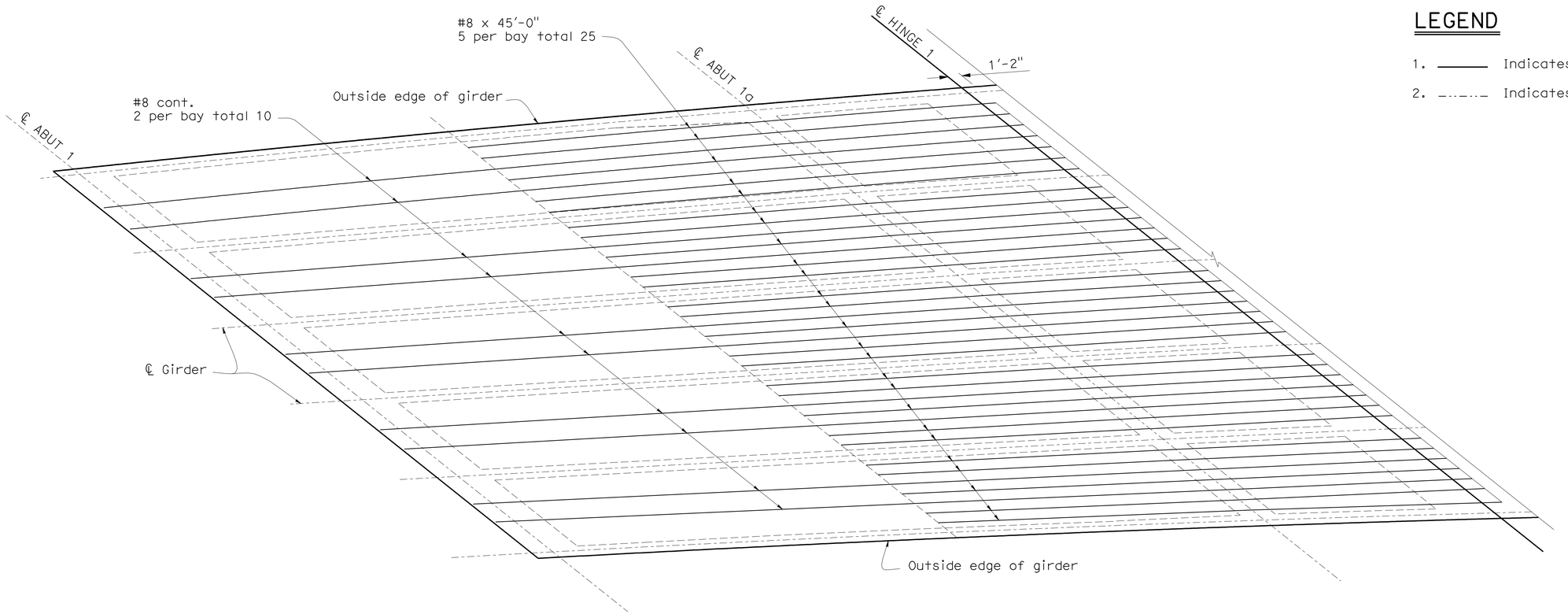

LEGEND

1. ——— Indicates New Structure
2. — · — · — Indicates Existing Structure

BOTTOM REINFORCEMENT (ABUT 1A)

3/16" = 1'

NOTE:
THE CONTRACTOR SHALL VERIFY ALL CONTROLLING FIELD DIMENSIONS BEFORE ORDERING OR FABRICATING ANY MATERIAL.

	BY	CHECKED
DESIGN	Prem Rimal	Jorge Estrada
DETAILS	Farideh Rashedi/ MT	Jorge Estrada
QUANTITIES	Tanya Wyckoff	Prem Rimal

STATE OF CALIFORNIA
DEPARTMENT OF TRANSPORTATION

DIVISION OF ENGINEERING SERVICES
STRUCTURE DESIGN
DESIGN BRANCH 18

BRIDGE NO. 53-1110
POST MILE 31.23

BUENA VISTA - WINONA UC (WIDEN)
GIRDER REINFORCEMENT NO. 1

STRUCTURES DESIGN DETAIL SHEET (ENGLISH) (REV. 09-01-10)

ORIGINAL SCALE IN INCHES FOR REDUCED PLANS 0 1 2 3

UNIT: 3603
PROJECT NUMBER & PHASE: 0700021119-1
CONTRACT NO.: 07-1218W1

DISREGARD PRINTS BEARING EARLIER REVISION DATES

REVISION DATES: 3/31/06 1/31/12

SHEET 27 OF 52

FILE => e53-1110-1-gir_rf01.dgn

USERNAME => s123631 DATE PLOTTED => 22-MAY-2012 TIME PLOTTED => 09:07

DIST	COUNTY	ROUTE	POST MILES TOTAL PROJECT	SHEET No.	TOTAL SHEETS
07	LA	5	29.4/31.6	1063	1931

JEstrada. 1/31/12
REGISTERED CIVIL ENGINEER DATE

5-21-12
PLANS APPROVAL DATE

REGISTERED PROFESSIONAL ENGINEER
JORGE I. ESTRADA
No. C51473
Exp. 06-30-12
CIVIL
STATE OF CALIFORNIA

The State of California or its officers or agents shall not be responsible for the accuracy or completeness of electronic copies of this plan sheet.

LEGEND

1. ——— Indicates New Structure
2. —·—·— Indicates Existing Structure

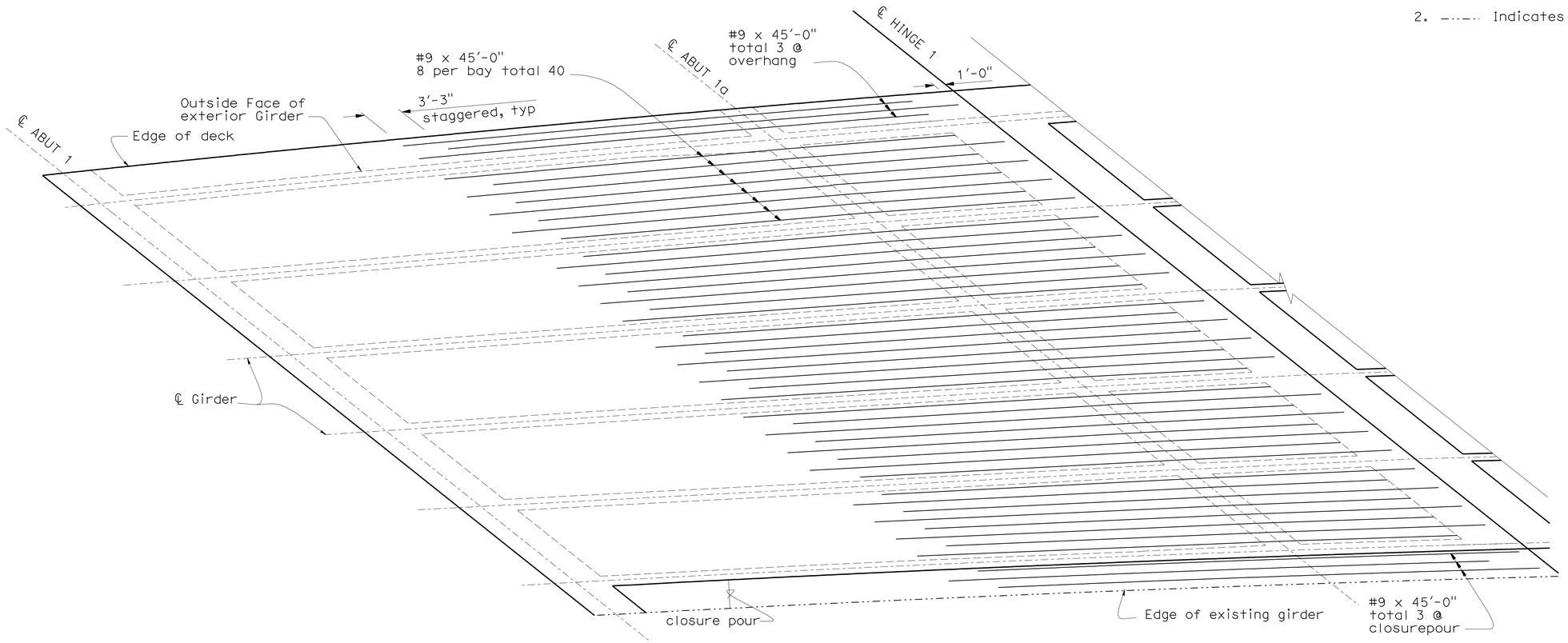

TOP REINFORCEMENT (ABUT 1A)

3/16" = 1'

NOTE:
THE CONTRACTOR SHALL VERIFY ALL CONTROLLING FIELD DIMENSIONS BEFORE ORDERING OR FABRICATING ANY MATERIAL.

	BY	CHECKED
DESIGN	Prem Rimal	Jorge Estrada
DETAILS	Farideh Rashedi/ MT	Jorge Estrada
QUANTITIES	Tanya Wyckoff	Prem Rimal

STATE OF CALIFORNIA
DEPARTMENT OF TRANSPORTATION

DIVISION OF ENGINEERING SERVICES
STRUCTURE DESIGN
DESIGN BRANCH 18

BRIDGE NO. 53-1110
POST MILE 31.23

BUENA VISTA - WINONA UC (WIDEN)
GIRDER REINFORCEMENT NO. 2

STRUCTURES DESIGN DETAIL SHEET (ENGLISH) (REV. 09-01-10)

ORIGINAL SCALE IN INCHES FOR REDUCED PLANS 0 1 2 3

UNIT: 3603
PROJECT NUMBER & PHASE: 0700021119-1 CONTRACT NO.: 07-1218W1

DISREGARD PRINTS BEARING EARLIER REVISION DATES

REVISION DATES: 3/1/06 1/31/12

SHEET 28 OF 52

FILE => e53-1110-1-gir_rf02.dgn

USERNAME => s123631 DATE PLOTTED => 22-MAY-2012 TIME PLOTTED => 08:07

DIST	COUNTY	ROUTE	POST MILES TOTAL PROJECT	SHEET No.	TOTAL SHEETS
07	LA	5	29.4/31.6	1064	1931

J Estrada. 1/31/12
REGISTERED CIVIL ENGINEER DATE

5-21-12
PLANS APPROVAL DATE

REGISTERED PROFESSIONAL ENGINEER
JORGE I. ESTRADA
No. C51473
Exp. 06-30-12
CIVIL
STATE OF CALIFORNIA

The State of California or its officers or agents shall not be responsible for the accuracy or completeness of electronic copies of this plan sheet.

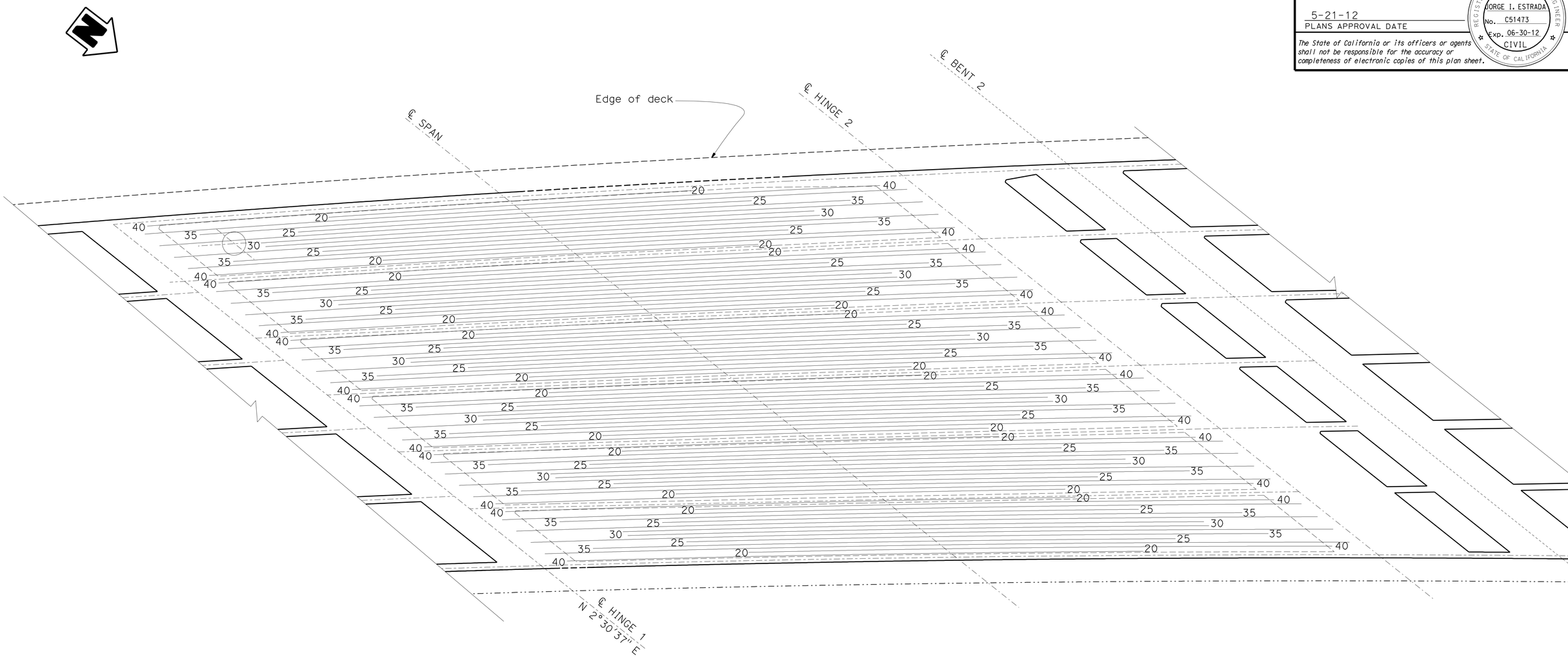

BOTTOM REINFORCEMENT (SPAN BETWEEN HINGES)

3/16" = 1'

NOTES:

1. All reinforcement #11 unless otherwise noted
2. Number at ends of bars indicates the distance in feet from centerline of span
3. Only "Ultimate" built splices are allowed in bottom reinforcement.
4. ——— Indicates New Construction
5. —·—·— Indicates Existing Structure

NOTE:
THE CONTRACTOR SHALL VERIFY ALL CONTROLLING FIELD DIMENSIONS BEFORE ORDERING OR FABRICATING ANY MATERIAL.

	BY	CHECKED
DESIGN	Prem Rimal	Jorge Estrada
DETAILS	Farideh Rashedi/ MT	Jorge Estrada
QUANTITIES	Tanya Wyckoff	Prem Rimal

STATE OF CALIFORNIA
DEPARTMENT OF TRANSPORTATION

DIVISION OF ENGINEERING SERVICES
STRUCTURE DESIGN
DESIGN BRANCH 18

BRIDGE NO. 53-1110
POST MILE 31.23

BUENA VISTA - WINONA UC (WIDEN)
GIRDER REINFORCEMENT NO. 3

STRUCTURES DESIGN DETAIL SHEET (ENGLISH) (REV. 09-01-10)

ORIGINAL SCALE IN INCHES FOR REDUCED PLANS 0 1 2 3

UNIT: 3603
PROJECT NUMBER & PHASE: 0700021119-1
CONTRACT NO.: 07-1218W1

DISREGARD PRINTS BEARING EARLIER REVISION DATES

REVISION DATES: ~~10/26/07~~ 1/31/12

SHEET 29 OF 52

FILE => e53-1110-1-gir_rf03.dgn

USERNAME => s123631 DATE PLOTTED => 22-MAY-2012 TIME PLOTTED => 09:07

DIST	COUNTY	ROUTE	POST MILES TOTAL PROJECT	SHEET No.	TOTAL SHEETS
07	LA	5	29.4/31.6	1065	1931

JEstrada. 1/31/12
REGISTERED CIVIL ENGINEER DATE

5-21-12
PLANS APPROVAL DATE

REGISTERED PROFESSIONAL ENGINEER
JORGE I. ESTRADA
No. C51473
Exp. 06-30-12
CIVIL
STATE OF CALIFORNIA

The State of California or its officers or agents shall not be responsible for the accuracy or completeness of electronic copies of this plan sheet.

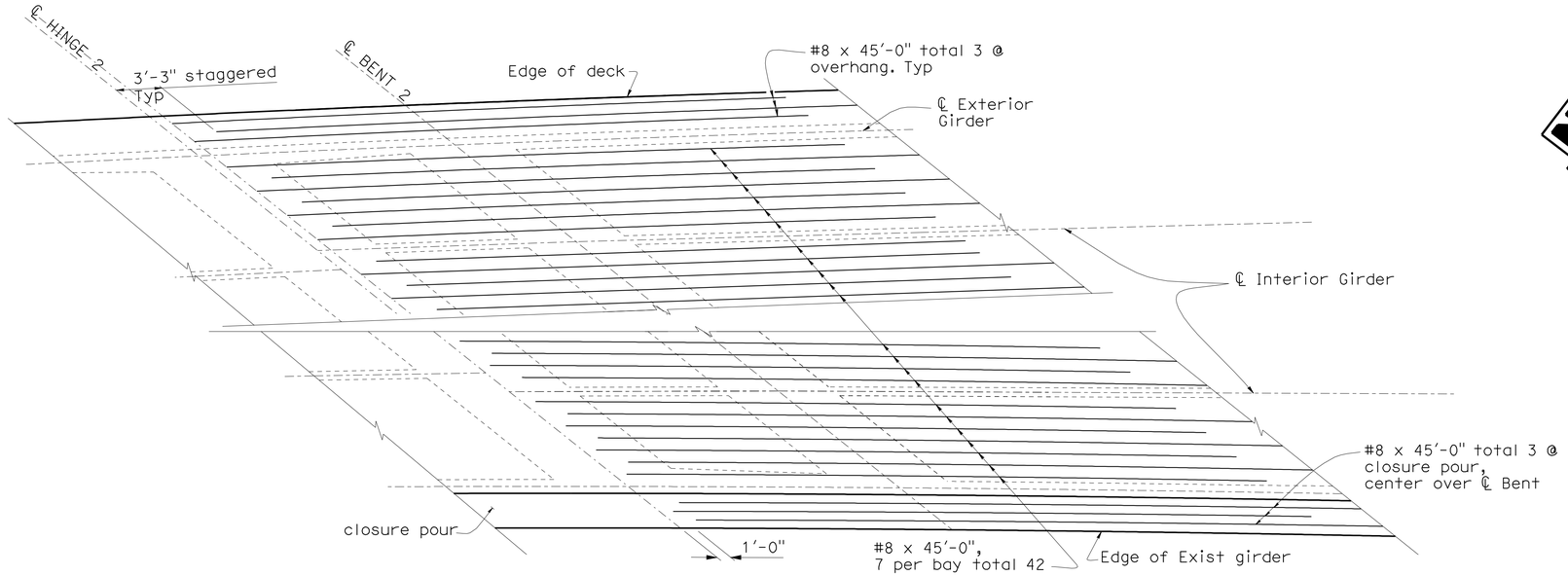

TOP REINFORCEMENT(BENT 2)

3/16" = 1'

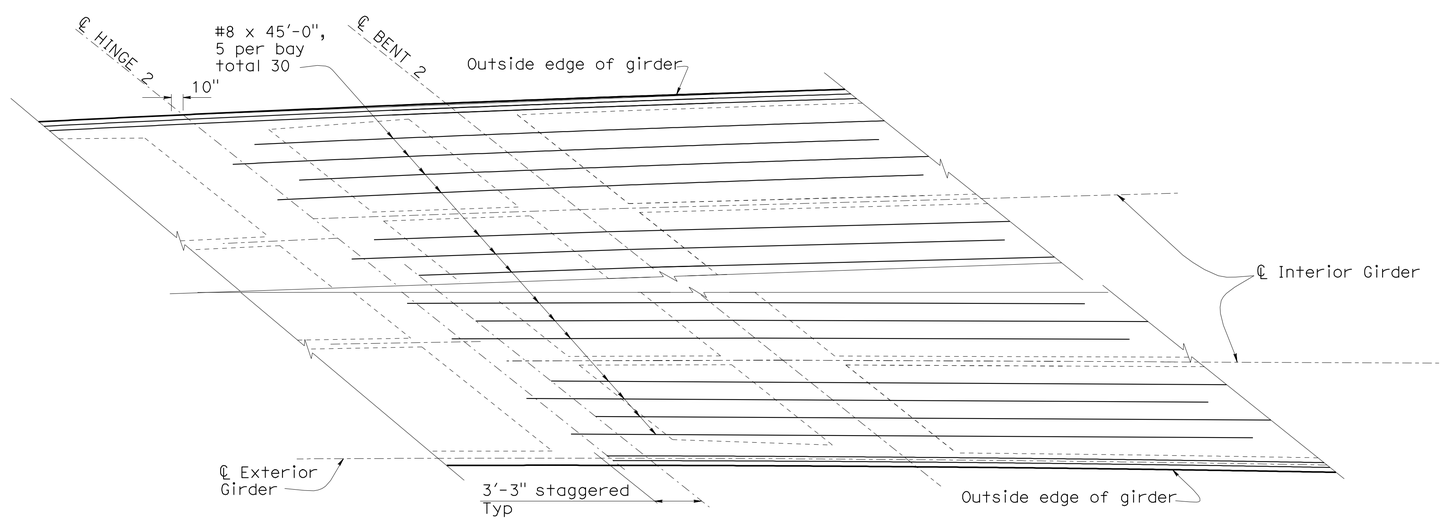

BOTTOM REINFORCEMENT(BENT 2)

3/16" = 1'

NOTES:

1. All reinforcement #36 unless otherwise noted
2. _____ Indicates New Construction
3. —·—·— Indicates Existing Structure

NOTE:
THE CONTRACTOR SHALL VERIFY ALL CONTROLLING FIELD DIMENSIONS BEFORE ORDERING OR FABRICATING ANY MATERIAL.

	BY	CHECKED
DESIGN	Prem Rimal	Jorge Estrada
DETAILS	Farideh Rashedi/ MT	Jorge Estrada
QUANTITIES	Tanya Wyckoff	Prem Rimal

STATE OF CALIFORNIA
DEPARTMENT OF TRANSPORTATION

DIVISION OF ENGINEERING SERVICES
STRUCTURE DESIGN
DESIGN BRANCH 18

BRIDGE NO. 53-1110
POST MILE 31.23

BUENA VISTA - WINONA UC (WIDEN)
GIRDER REINFORCEMENT NO. 4

STRUCTURES DESIGN DETAIL SHEET (ENGLISH) (REV. 09-01-10)

ORIGINAL SCALE IN INCHES FOR REDUCED PLANS 0 1 2 3

UNIT: 3603
PROJECT NUMBER & PHASE: 0700021119-1
CONTRACT NO.: 07-1218W1

DISREGARD PRINTS BEARING EARLIER REVISION DATES

REVISION DATES: 11/4/07 1/31/12

SHEET 30 OF 52

FILE => e53-1110-1-gir_rf04.dgn

USERNAME => s123631 DATE PLOTTED => 22-MAY-2012 TIME PLOTTED => 09:07

DIST	COUNTY	ROUTE	POST MILES TOTAL PROJECT	SHEET No.	TOTAL SHEETS
07	LA	5	29.4/31.6	1066	1931

JEstrada. 1/31/12
REGISTERED CIVIL ENGINEER DATE

5-21-12
PLANS APPROVAL DATE

REGISTERED PROFESSIONAL ENGINEER
JORGE I. ESTRADA
No. C51473
Exp. 06-30-12
CIVIL
STATE OF CALIFORNIA

The State of California or its officers or agents shall not be responsible for the accuracy or completeness of electronic copies of this plan sheet.

NOTES:

1. ——— Indicates New Construction
2. —·—·— Indicates Existing Structure

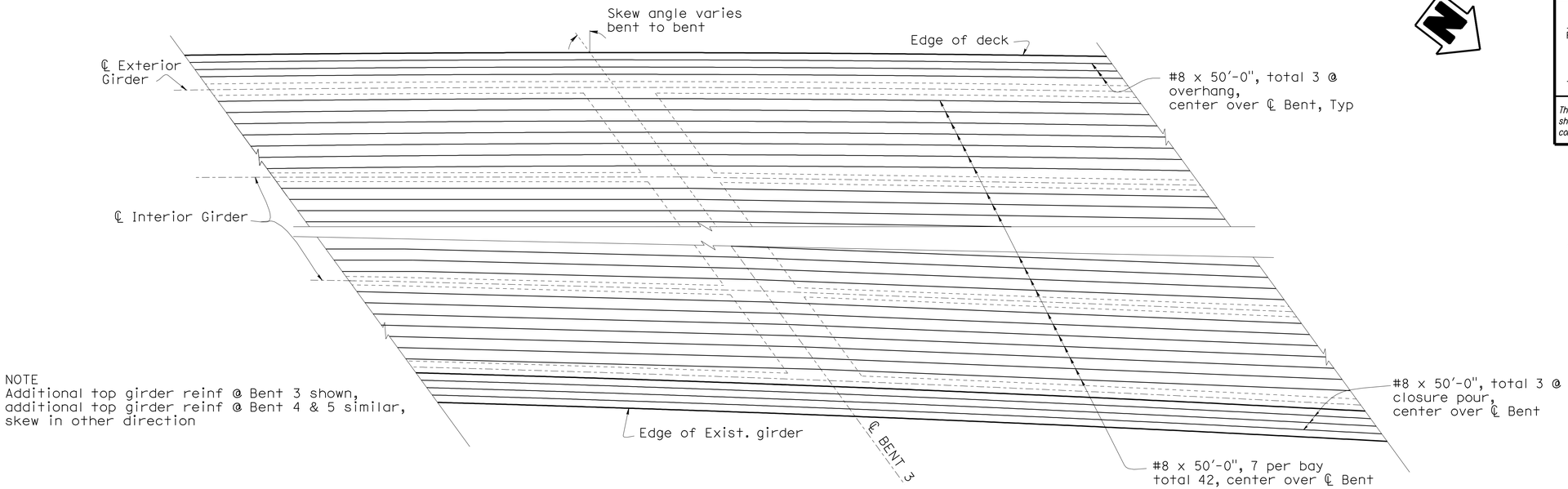

TOP REINFORCEMENT (BENT 3)

3/16" = 1'

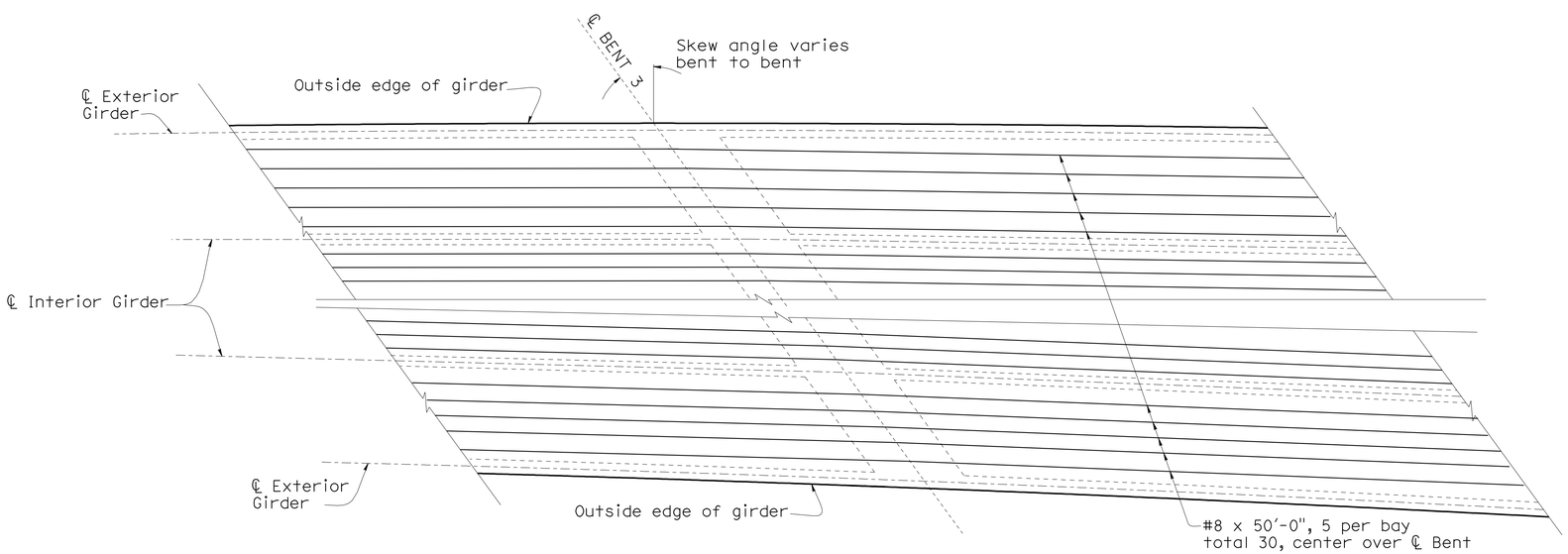

BOTTOM REINFORCEMENT (BENT 3)

3/16" = 1'

NOTE:
THE CONTRACTOR SHALL VERIFY ALL CONTROLLING FIELD DIMENSIONS BEFORE ORDERING OR FABRICATING ANY MATERIAL.

	BY	CHECKED
DESIGN	Prem Rimal	Jorge Estrada
DETAILS	Farideh Rashedi/ MT	Jorge Estrada
QUANTITIES	Tanya Wyckoff	Prem Rimal

STATE OF CALIFORNIA
DEPARTMENT OF TRANSPORTATION

DIVISION OF ENGINEERING SERVICES
STRUCTURE DESIGN
DESIGN BRANCH 18

BRIDGE NO. 53-1110
POST MILE 31.23

BUENA VISTA - WINONA UC (WIDEN)
GIRDER REINFORCEMENT NO. 5

STRUCTURES DESIGN DETAIL SHEET (ENGLISH) (REV. 09-01-10)

ORIGINAL SCALE IN INCHES FOR REDUCED PLANS 0 1 2 3

UNIT: 3603
PROJECT NUMBER & PHASE: 0700021119-1
CONTRACT NO.: 07-1218W1

DISREGARD PRINTS BEARING EARLIER REVISION DATES

REVISION DATES: 11/17/07 1/31/12

SHEET 31 OF 52

FILE => e53-1110-l-gir_rf05.dgn

USERNAME => s123631 DATE PLOTTED => 22-MAY-2012 TIME PLOTTED => 09:08

DIST	COUNTY	ROUTE	POST MILES TOTAL PROJECT	SHEET No.	TOTAL SHEETS
07	LA	5	29.4/31.6	1067	1931

REGISTERED CIVIL ENGINEER — DATE 1/31/12

5-21-12
PLANS APPROVAL DATE

REGISTERED PROFESSIONAL ENGINEER — JORGE I. ESTRADA — No. C51473 — Exp. 06-30-12 — CIVIL — STATE OF CALIFORNIA

The State of California or its officers or agents shall not be responsible for the accuracy or completeness of electronic copies of this plan sheet.

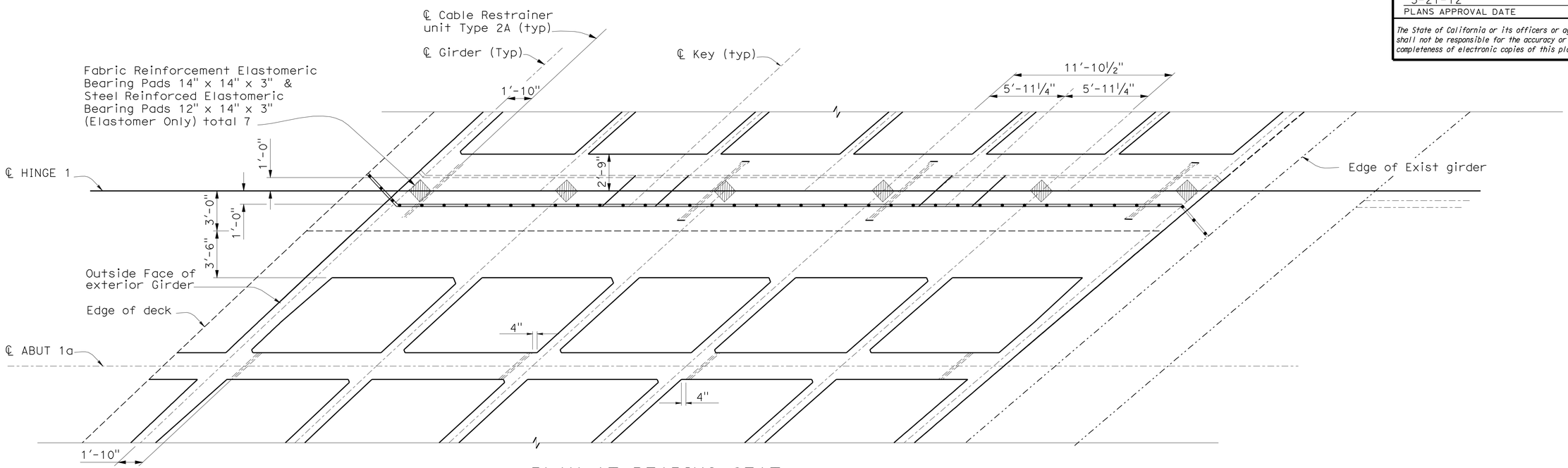

PLAN AT BEARING SEAT

¼" = 1'

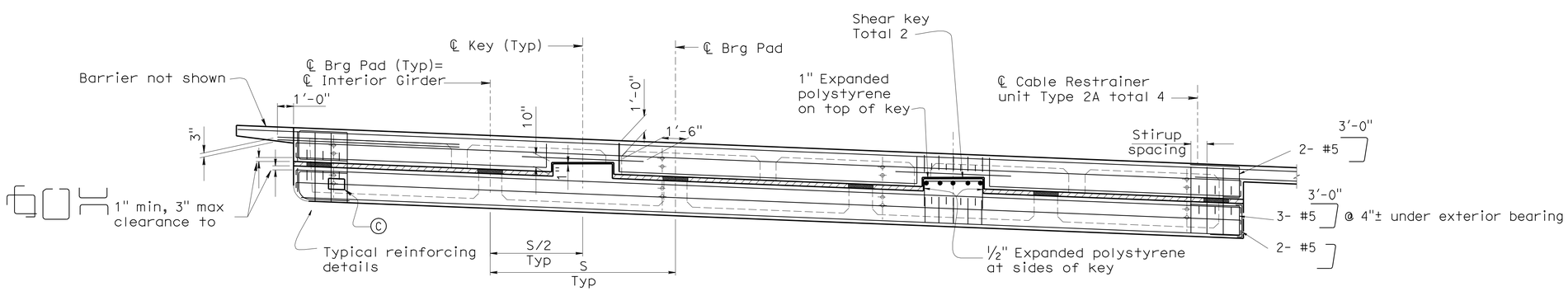

SECTION AT ℄ HINGE

¼" = 1'

NOTE:
THE CONTRACTOR SHALL VERIFY ALL CONTROLLING FIELD DIMENSIONS BEFORE ORDERING OR FABRICATING ANY MATERIAL.

	BY	CHECKED
DESIGN	Prem Rimal	Jorge Estrada
DETAILS	Farideh Rashedi/ MT	Jorge Estrada
QUANTITIES	Tanya Wyckoff	Prem Rimal

STATE OF CALIFORNIA
DEPARTMENT OF TRANSPORTATION

DIVISION OF ENGINEERING SERVICES
STRUCTURE DESIGN
DESIGN BRANCH 18

BRIDGE NO. 53-1110
POST MILE 31.23

BUENA VISTA - WINONA UC (WIDEN)
HINGE 1 LAYOUT

STRUCTURES DESIGN DETAIL SHEET (ENGLISH) (REV. 09-01-10)

ORIGINAL SCALE IN INCHES FOR REDUCED PLANS 0 1 2 3

UNIT: 3603
PROJECT NUMBER & PHASE: 0700021119-1
CONTRACT NO.: 07-1218w1

DISREGARD PRINTS BEARING EARLIER REVISION DATES → REVISION DATES 11/17/06 1/31/12

SHEET 32 OF 52

FILE => e53-1110-n-hinge01.dgn

USERNAME => s123631 DATE PLOTTED => 22-MAY-2012 TIME PLOTTED => 09:08

DIST	COUNTY	ROUTE	POST MILES TOTAL PROJECT	SHEET No.	TOTAL SHEETS
07	LA	5	29.4/31.6	1068	1931

JEstrada. 1/31/12
REGISTERED CIVIL ENGINEER DATE

5-21-12
PLANS APPROVAL DATE

REGISTERED PROFESSIONAL ENGINEER
JORGE I. ESTRADA
No. C51473
Exp. 06-30-12
CIVIL
STATE OF CALIFORNIA

The State of California or its officers or agents shall not be responsible for the accuracy or completeness of electronic copies of this plan sheet.

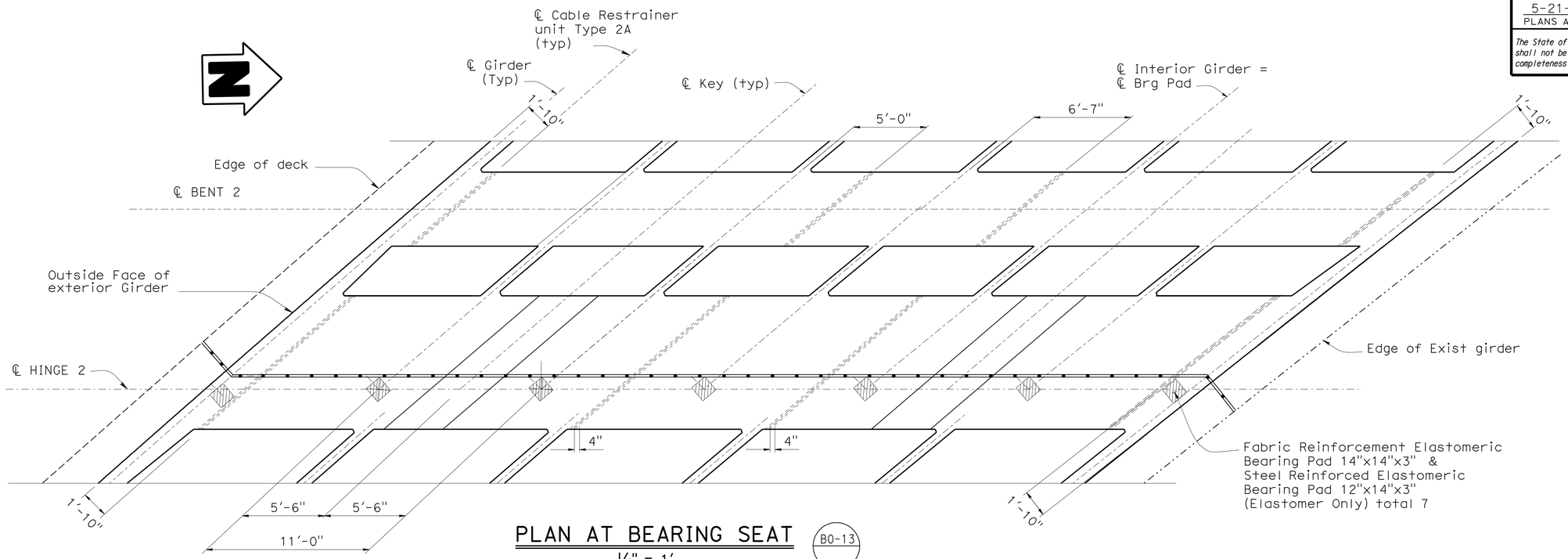

PLAN AT BEARING SEAT

B0-13

1/4" = 1'

LEGEND

Indicates Existing Structure

Indicates New Structure

Expanded polystyrene same thickness as Bearing Assembly

Ⓒ 12"x8" opening for 2-4" conduits, see "TYPICAL SECTION" sheet

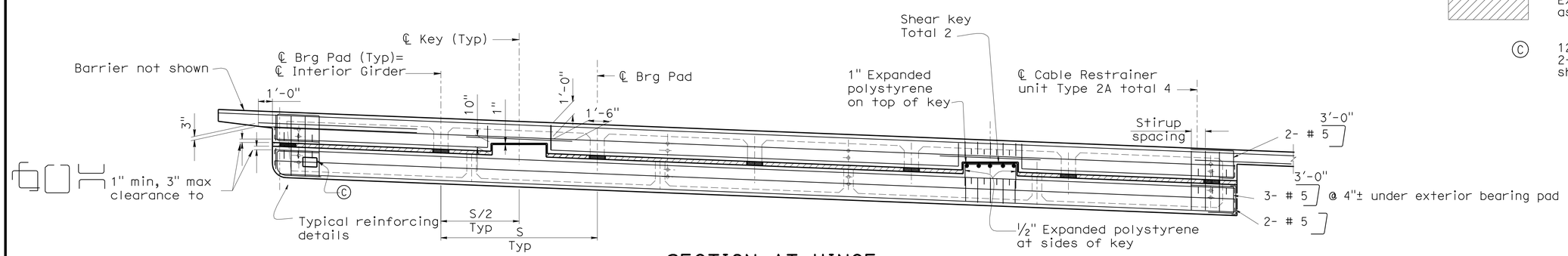

SECTION AT HINGE

1/4" = 1'

NOTE:
THE CONTRACTOR SHALL VERIFY ALL CONTROLLING FIELD DIMENSIONS BEFORE ORDERING OR FABRICATING ANY MATERIAL.

	BY	CHECKED
DESIGN	Prem Rimal	Jorge Estrada
DETAILS	Farideh Rashedi/ MT	Jorge Estrada
QUANTITIES	Tanya Wyckoff	Prem Rimal

STATE OF CALIFORNIA
DEPARTMENT OF TRANSPORTATION

DIVISION OF ENGINEERING SERVICES
STRUCTURE DESIGN
DESIGN BRANCH 18

BRIDGE NO. 53-1110
POST MILE 31.23

BUENA VISTA - WINONA UC (WIDEN)
HINGE 2 LAYOUT

STRUCTURES DESIGN DETAIL SHEET (ENGLISH) (REV. 09-01-10)

ORIGINAL SCALE IN INCHES FOR REDUCED PLANS 0 1 2 3

UNIT: 3603
PROJECT NUMBER & PHASE: 0700021119-1
CONTRACT NO.: 07-1218w1

DISREGARD PRINTS BEARING EARLIER REVISION DATES

REVISION DATES: ~~11/17/06~~ 1/31/12

SHEET 33 OF 52

FILE => e53-1110-n-hinge02.dgn

USERNAME => s123631 DATE PLOTTED => 22-MAY-2012 TIME PLOTTED => 09:08

DIST	COUNTY	ROUTE	POST MILES TOTAL PROJECT	SHEET No.	TOTAL SHEETS
07	LA	5	29.4/31.6	1069	1931

REGISTERED CIVIL ENGINEER — DATE 1/31/12

PLANS APPROVAL DATE 5-21-12

REGISTERED PROFESSIONAL ENGINEER — JORGE I. ESTRADA No. C51473 Exp. 06-30-12 CIVIL — STATE OF CALIFORNIA

The State of California or its officers or agents shall not be responsible for the accuracy or completeness of electronic copies of this plan sheet.

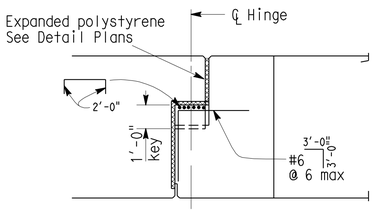

SECTION B-B

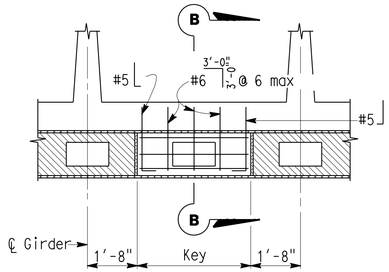

PLAN

KEY DETAIL

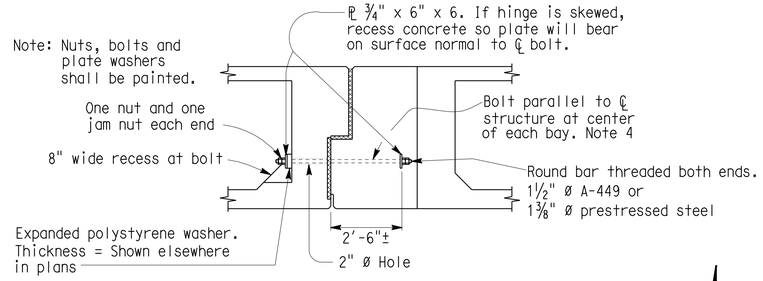

EQUALIZING BOLT DETAIL

Note:

Nuts, bolts and plate washer shall be painted

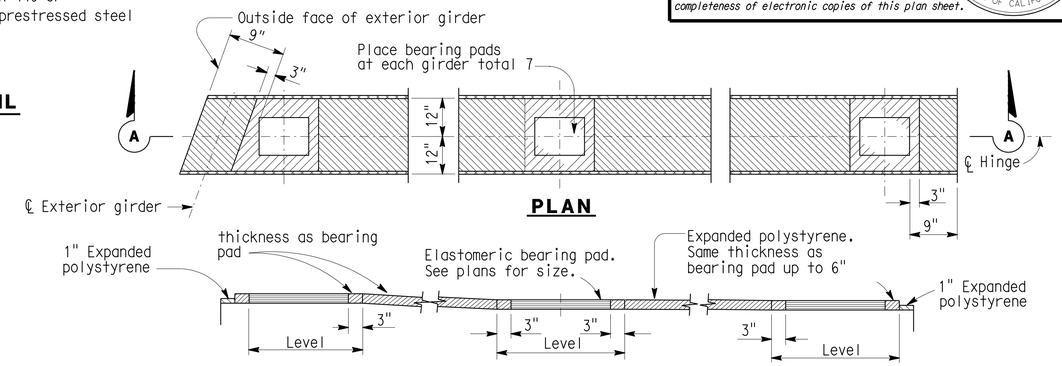

PLAN

SECTION A-A

TYPICAL BEARING DETAIL

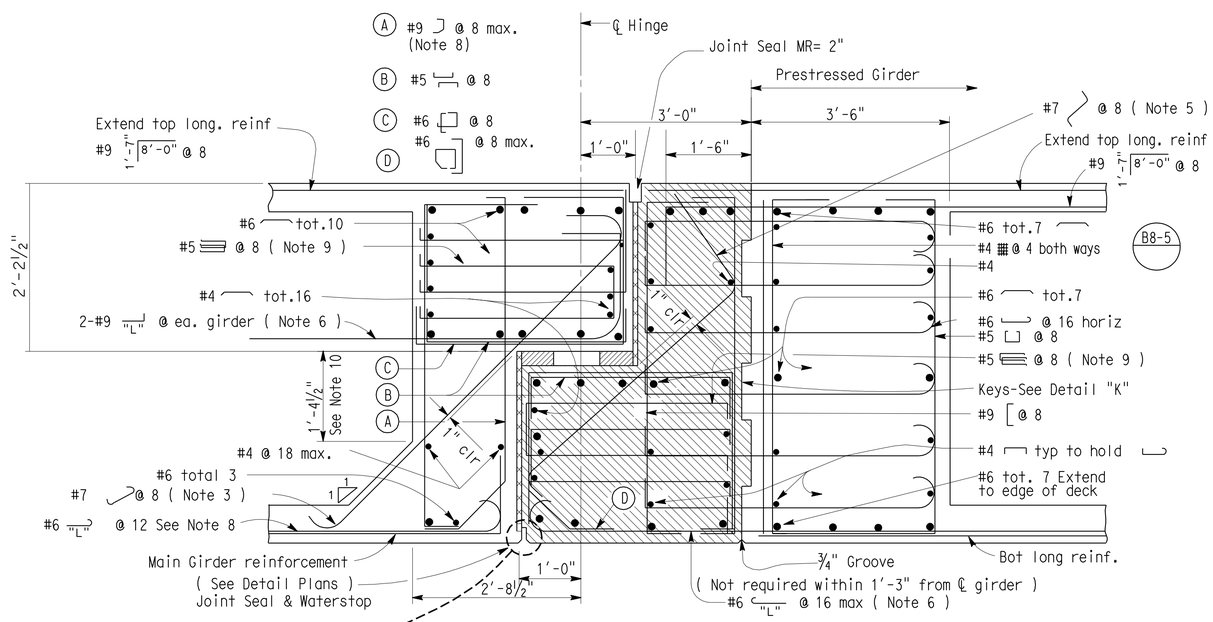

SECTION THRU HINGE 2

NO SCALE

Note: Hinge 2 shown, hinge 1 similar

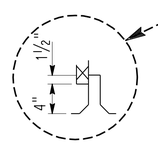

NOTES:

1. See Bridge Details B0-13 / 13-1 & B0-13 / 13-2
2. To provide for free movement of the completed hinge, concrete is to be excluded from the joint by sealing all openings.
3. Bars may be placed with hooks horizontal if required for clearance.
4. When the key interferes with the placement of the equalizing bolt, place two bolts at 3 ft centers in either adjacent cell.
5. Adjust angle of bars at key to clear.
6. "L" = 10'-0"
7. Reinforcement shall be spaced along ℄ of hinge and placed parallel to ℄ structure.
8. #7 @ 8 when structure depth is less than 6'-0".
9. #5 @ 8 when structure depth is less than 3'-0".
10. When girder depth is less than 5'-0"± reduce dimension as required to provide 4 in min fillet.

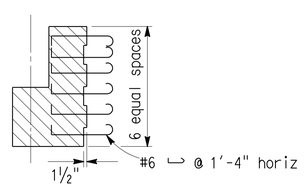

DETAIL K

Indicates cast-in-place concrete to be placed after supporting side of hinge is constructed and bearing pads are properly positioned. Concrete to be same strength grade as cast-in-place prestressed concrete. Falsework shall remain in place until concrete has attained a strength of at least 3000 psi.

	BY	CHECKED
DESIGN	Prem Rimal	Jorge Estrada
DETAILS	Farideh Rashedi/ MT	Jorge Estrada
QUANTITIES	Tanya Wyckoff	Prem Rimal

STATE OF CALIFORNIA DEPARTMENT OF TRANSPORTATION

DIVISION OF ENGINEERING SERVICES STRUCTURE DESIGN — DESIGN BRANCH 18

BRIDGE NO. 53-1110 — POST MILE 31.23

BUENA VISTA - WINONA UC (WIDEN)

HINGE DETAILS

STRUCTURES DESIGN DETAIL SHEET (ENGLISH) (REV. 09-01-10)

ORIGINAL SCALE IN INCHES FOR REDUCED PLANS 0 1 2 3

UNIT: 3603

PROJECT NUMBER & PHASE: 0700021119-1 — CONTRACT NO.: 07-1218w1

DISREGARD PRINTS BEARING EARLIER REVISION DATES

REVISION DATES: ~~12/4/06~~ 1/31/12

SHEET 34 OF 52

FILE => e53-1110-n-hingedt.dgn

USERNAME => s123631 DATE PLOTTED => 22-MAY-2012 TIME PLOTTED => 09:08

DIST	COUNTY	ROUTE	POST MILES TOTAL PROJECT	SHEET No.	TOTAL SHEETS
07	LA	5	29.4/31.6	1070	1931

REGISTERED CIVIL ENGINEER — DATE 1/31/12

5-21-12
PLANS APPROVAL DATE

REGISTERED PROFESSIONAL ENGINEER — JORGE I. ESTRADA No. C51473 Exp. 06-30-12 CIVIL — STATE OF CALIFORNIA

The State of California or its officers or agents shall not be responsible for the accuracy or completeness of electronic copies of this plan sheet.

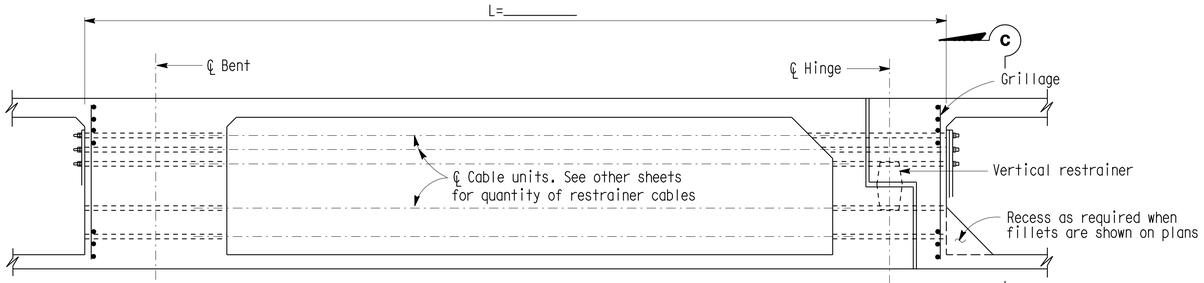

TYPE A

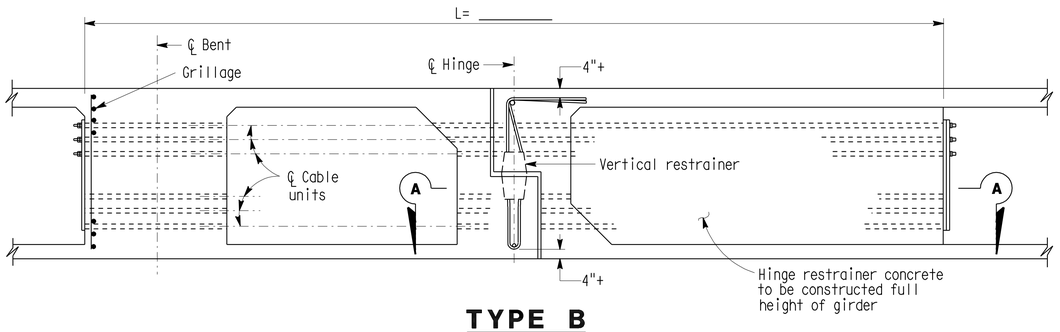

TYPE B

LONGITUDINAL HINGE RESTRAINER

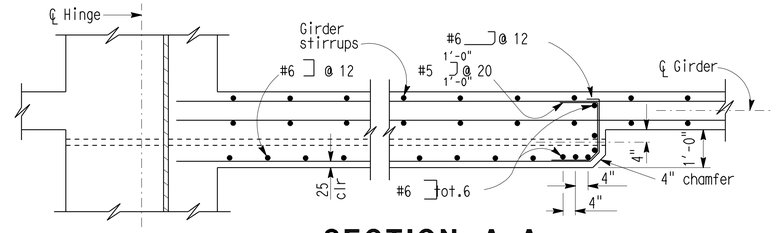

SECTION A-A

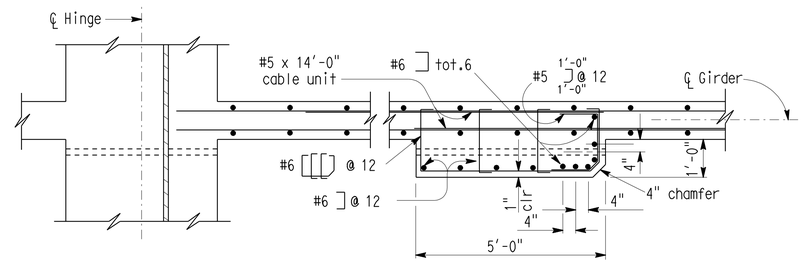

SECTION A-A (ALTERNATIVE)

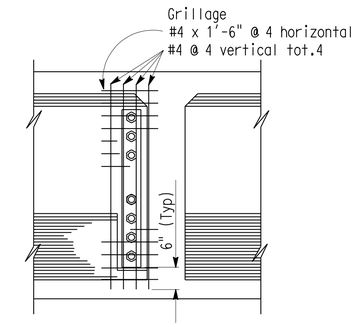

SECTION C-C

Note:Slope to match sloping exterior girders.

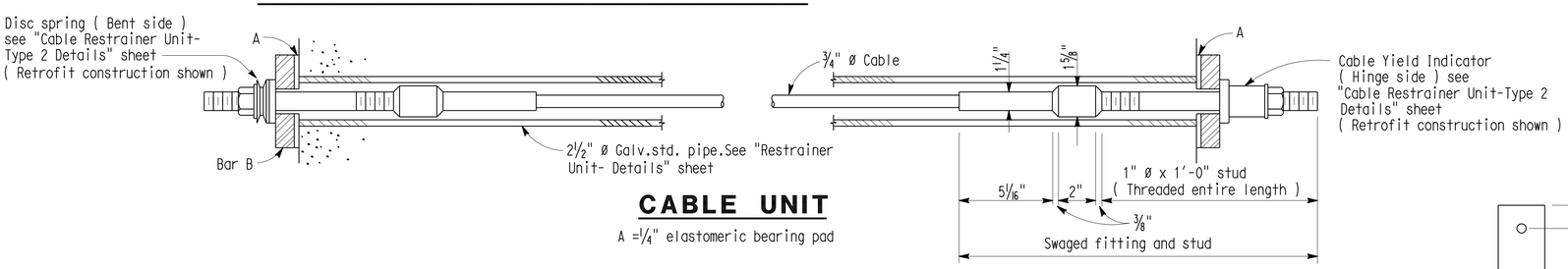

CABLE UNIT

A =¼" elastomeric bearing pad

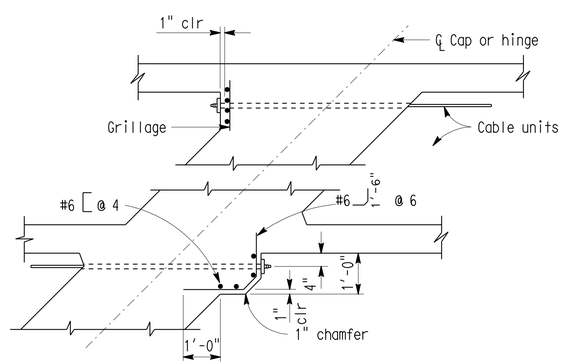

END ANCHORAGE DETAILS AT HINGE OR CAP PART PLAN

NOTES:

Restrainer units to be on tangent alignment.

Anchor nuts shall not be set until 30 days following completion of prestressing for CIP prestressed bridges.

See other sheets for location and number of longitudinal and vertical hinge restrainers, and table of joint openings.

Contractor may install restrainers in horizontal arrangement with approval of the Engineer. The location shall be in the middle 1/3 depth of the structure.

An alternative is to place restrainers in two horizontal layers, equally located above and below the mid structure depth. The number of restrainers in each layer shall not differ by more than one.

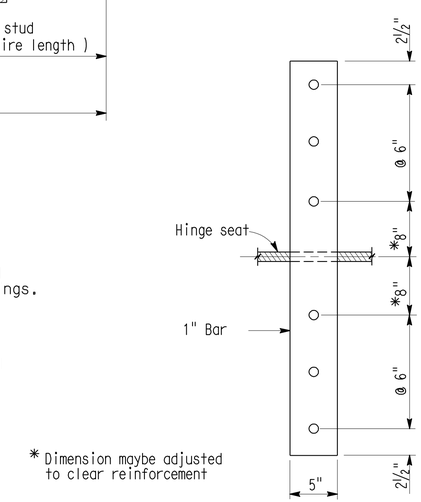

* Dimension maybe adjusted to clear reinforcement

DETAIL - BAR B

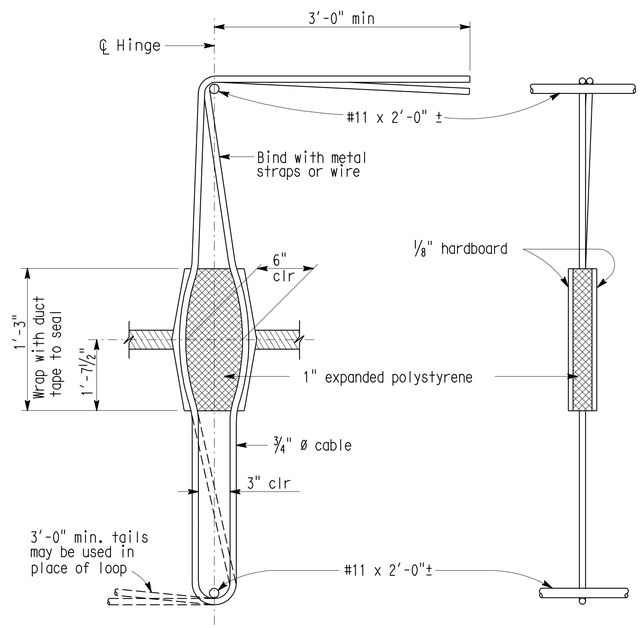

ELEVATION **SECTION**

VERTICAL RESTRAINER

STANDARD DRAWING		
FILE NO. xs7-410-e	APPROVED BY X (RESPONSIBLE TECHNICAL SPECIALIST)	RELEASED BY X (RESPONSIBLE OFFICE CHIEF)
	APPROVAL DATE X-X-X	RELEASE DATE X-X-X

STATE OF CALIFORNIA DEPARTMENT OF TRANSPORTATION — DIVISION OF ENGINEERING SERVICES

BRIDGE NO. 53-1110 — POST MILE 31.23

BUENA VISTA - WINONA UC (WIDEN)

CABLE RESTRAINER UNIT - TYPE 2

DS OSD 2147A (ENGLISH STANDARD DRAWING "XS" BORDER REV. (08-10-10)

ORIGINAL SCALE IN INCHES FOR REDUCED PLANS 0 1 2 3

UNIT: 3603
PROJECT NUMBER & PHASE: 0700021119-1 CONTRACT NO.: 07-1218w1

DISREGARD PRINTS BEARING EARLIER REVISION DATES — REVISION DATES 10/24/08 1/31/12

SHEET 35 OF 52

FILE => e53-1110-n-hngres01.dgn

USERNAME => s123631 DATE PLOTTED => 22-MAY-2012 TIME PLOTTED => 09:08

DIST	COUNTY	ROUTE	POST MILES TOTAL PROJECT	SHEET No.	TOTAL SHEETS
07	LA	5	29.4/31.6	1071	1931

REGISTERED CIVIL ENGINEER — DATE 1/31/12

5-21-12
PLANS APPROVAL DATE

The State of California or its officers or agents shall not be responsible for the accuracy or completeness of electronic copies of this plan sheet.

REGISTERED PROFESSIONAL ENGINEER — JORGE I. ESTRADA No. C51473 Exp. 06-30-12 CIVIL — STATE OF CALIFORNIA

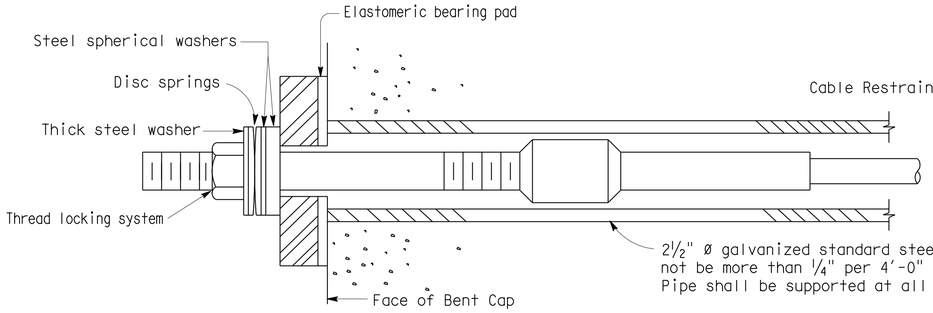

BENT SIDE
(Retrofit construction shown)

CABLE UNIT

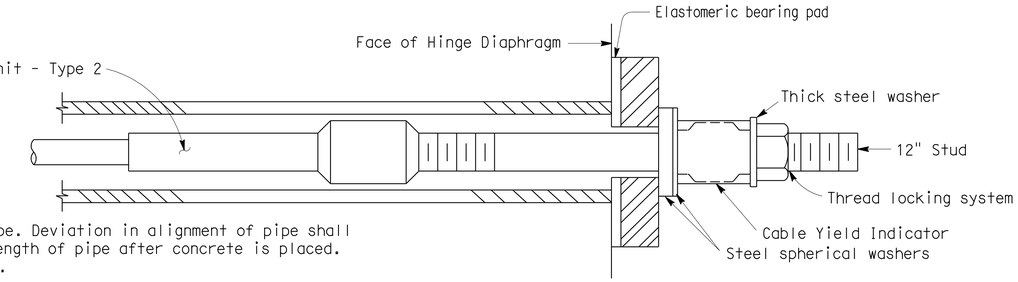

HINGE SIDE
(Retrofit construction shown)

DISC SPRINGS AND WASHERS

"All dimensions in inches, except as noted"

	DISC SPRING					STEEL SPHERICAL WASHER			THICK WASHER		
L*	ID	OD	t	H	COLOR CODE	ID	OD	Nom thick.	ID	OD	t**
00.0 - 25.0	1.00	2.00	0.065	0.130	WHITE	1.19	2.25	0.50	1.03	2.00	0.25
25.1 - 31.9	1.00	2.00	0.084	0.136	RED	1.19	2.25	0.50	1.03	2.00	0.25
32.0 - 37.9	1.00	2.00	0.097	0.145	BLUE	1.19	2.25	0.50	1.03	2.00	0.25
38.0 - 45.0	1.25	2.50	0.120	0.180	YELLOW	1.31	2.50	0.50	1.16	2.00	0.25

* For limits of length L (ft), use effective length of cable, from face-to-face outer surfaces of anchorage plate or bearing bar. Refer to Bridge detail sheets for approximate length required.

** Minimum value

Note: All OD and ID dimensions for washers and disc springs shall meet the dimensional tolerances for harden steel washers, ASTM F436

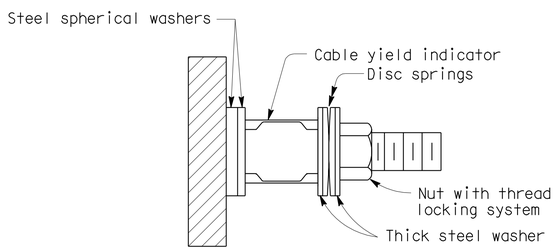

ADJUSTMENT END
(New construction shown)

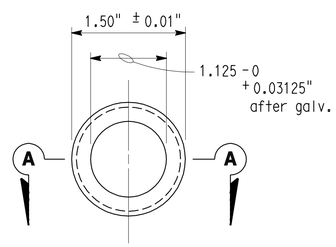

END VIEW

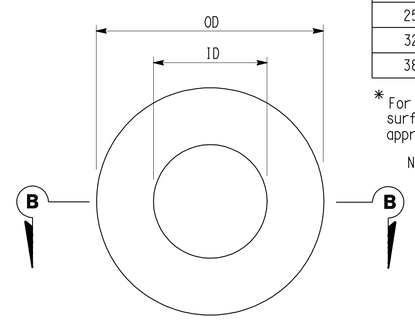

PLAN

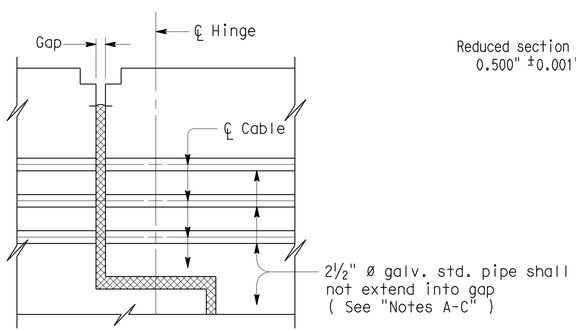

HINGE DETAIL

NOTES:

A. The ends of pipe shall be covered or capped to prevent concrete and debris from entering the pipe until hinge concrete is placed.

B. Care should be taken to align the pipes on each side of the hinge.

C. All ends of pipes must be flush with or slightly recessed from the concrete. The inside edges of the pipes must be smooth to prevent fraying of cables.

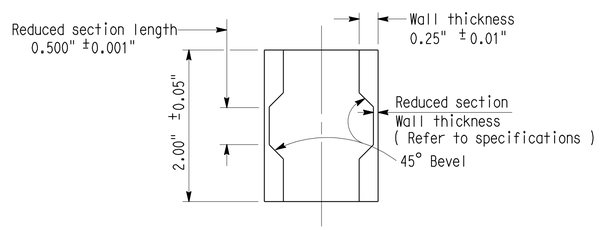

SECTION A-A

"All dimensions are before galvanizing except as noted"

CABLE YIELD INDICATOR

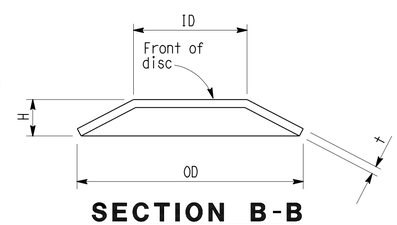

SECTION B-B
(Single spring)

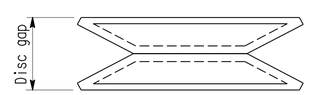

AS INSTALLED ON STUD

DISC SPRING

Note: For dimensions not shown, see table

RESTRAINER UNIT INSTALLATION PROCEDURE

NEW CONSTRUCTION:

1. Install Cable Yield Indicator, spherical washers, disc springs, nut and washers on the hinge side of restrainers as shown in "Adjustment End" detail. Disc springs shall be installed front to front as shown in "Disc Spring" detail.
2. Place only nut and washer on bent side of restrainers. Place thread locking system on bent side stud prior to installing nut and washers, and prior to setting the cable.
3. Tighten nut on the cable from the adjustment end of restrainer until the disc springs collapse and there is no disc gap remaining between the discs. The cable should be approximately straight with no sag.
4. See Item 5 of Retrofit Construction.

RETROFIT CONSTRUCTION:

1. Install disc springs on bent side of cable system using spherical washers to align discs to stud. Discs shall be installed front to front as shown in "Disc Spring" detail. detail. Install Cable Yield Indicator, spherical washers, nut and washer on the hinge side of restrainers as shown in "Cable Unit" detail.
2. If existing retrofit cables are being reused, 12" studs shall be installed.
3. Place thread locking system on bent side stud prior to installing nut and washers, and prior to setting the cable.
4. Tighten the cable from hinge side of restrainer until the disc springs at the opposite end collapse, and there is no disc gap remaining between the discs. The cable should be approximately straight with no sag.
5. Place thread locking system on hinge side stud after tightening the cable, but before backing off the nut. Back off the nut at hinge side a distance equal to maximum additional amount that the hinge joint is expected to open, relative to existing ambient conditions, as shown on the plans for movement rating.

NOTE: If the cable needs to be secured from turning while tightening, use double nut locking technique on the stud to protect the threads.

DIST	COUNTY	ROUTE	POST MILES TOTAL PROJECT	SHEET No.	TOTAL SHEETS
07	LA	5	29.4/31.6	1072	1931

JEstrada. 1/31/12
REGISTERED CIVIL ENGINEER DATE

5-21-12
PLANS APPROVAL DATE

REGISTERED PROFESSIONAL ENGINEER
JORGE I. ESTRADA
No. C51473
Exp. 06-30-12
CIVIL
STATE OF CALIFORNIA

The State of California or its officers or agents shall not be responsible for the accuracy or completeness of electronic copies of this plan sheet.

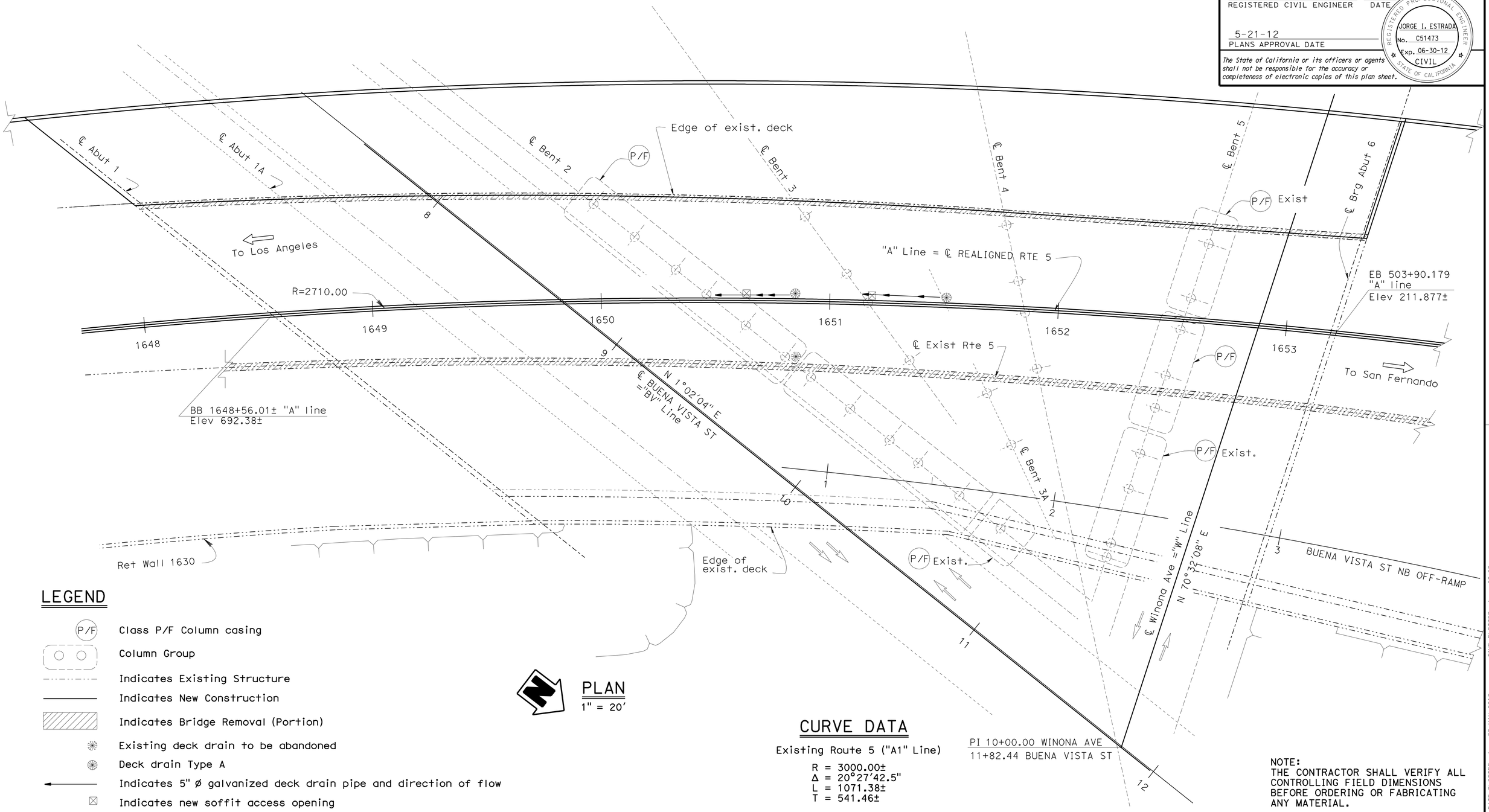

LEGEND

- P/F — Class P/F Column casing
- Column Group
- Indicates Existing Structure
- Indicates New Construction
- Indicates Bridge Removal (Portion)
- Existing deck drain to be abandoned
- Deck drain Type A
- Indicates 5" ø galvanized deck drain pipe and direction of flow
- Indicates new soffit access opening

PLAN
1" = 20'

CURVE DATA

Existing Route 5 ("A1" Line)

R = 3000.00±
Δ = 20°27'42.5"
L = 1071.38±
T = 541.46±

PI 10+00.00 WINONA AVE
11+82.44 BUENA VISTA ST

NOTE:
THE CONTRACTOR SHALL VERIFY ALL CONTROLLING FIELD DIMENSIONS BEFORE ORDERING OR FABRICATING ANY MATERIAL.

	BY	CHECKED
DESIGN	Xiahong Li	Jorge Estrada
DETAILS	Farideh Rashedi/ MT	X. Li/ JE
QUANTITIES	Tanya Wyckoff	Prem Rimal

STATE OF CALIFORNIA
DEPARTMENT OF TRANSPORTATION

DIVISION OF ENGINEERING SERVICES
STRUCTURE DESIGN
DESIGN BRANCH 18

BRIDGE NO. 53-1110
POST MILE 31.23

BUENA VISTA - WINONA UC (WIDEN)
SEISMIC RETROFIT DETAILS NO. 1

STRUCTURES DESIGN DETAIL SHEET (ENGLISH) (REV. 09-01-10)

ORIGINAL SCALE IN INCHES FOR REDUCED PLANS 0 1 2 3

UNIT: 3603
PROJECT NUMBER & PHASE: 0700021119-1
CONTRACT NO.: 07-1218W1

DISREGARD PRINTS BEARING EARLIER REVISION DATES

REVISION DATES: ~~9/6/07~~ 1/31/12

SHEET 37 OF 52

FILE => e53-1110-o-erdt01.dgn

USERNAME => s123631 DATE PLOTTED => 22-MAY-2012 TIME PLOTTED => 09:09

DIST	COUNTY	ROUTE	POST MILES TOTAL PROJECT	SHEET No.	TOTAL SHEETS
07	LA	5	29.4/31.6	1073	1931

REGISTERED CIVIL ENGINEER — DATE 1/31/12

5-21-12
PLANS APPROVAL DATE

REGISTERED PROFESSIONAL ENGINEER — JORGE I. ESTRADA — No. C51473 — Exp. 06-30-12 — CIVIL — STATE OF CALIFORNIA

The State of California or its officers or agents shall not be responsible for the accuracy or completeness of electronic copies of this plan sheet.

NOTES: Southbound widening not shown for clarity

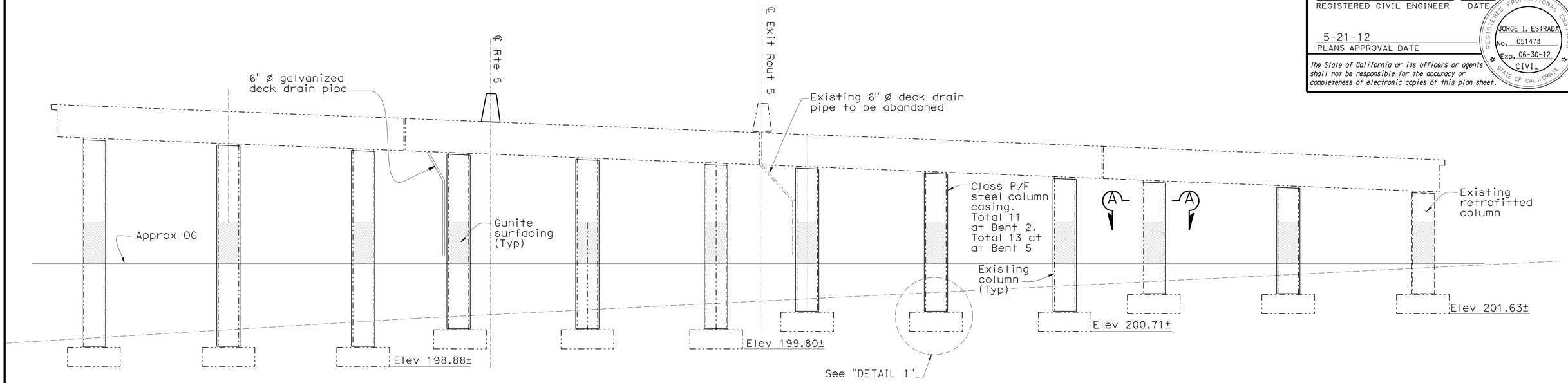

ELEVATION AT BENT 2 (BENT 5 SIMILAR)

NO SCALE

LEGEND

- Indicates existing structure
- Indicates new construction
- Indicates structure excavation
- Indicates structure backfill

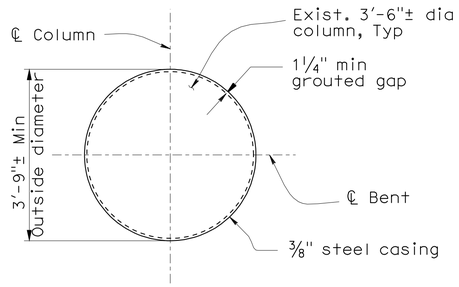

SECTION A-A

NO SCALE

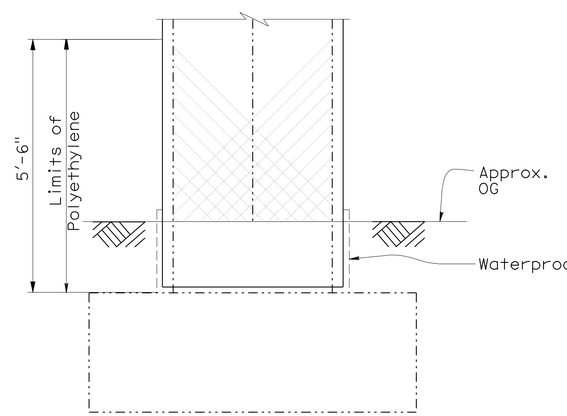

DETAIL 1

NO SCALE

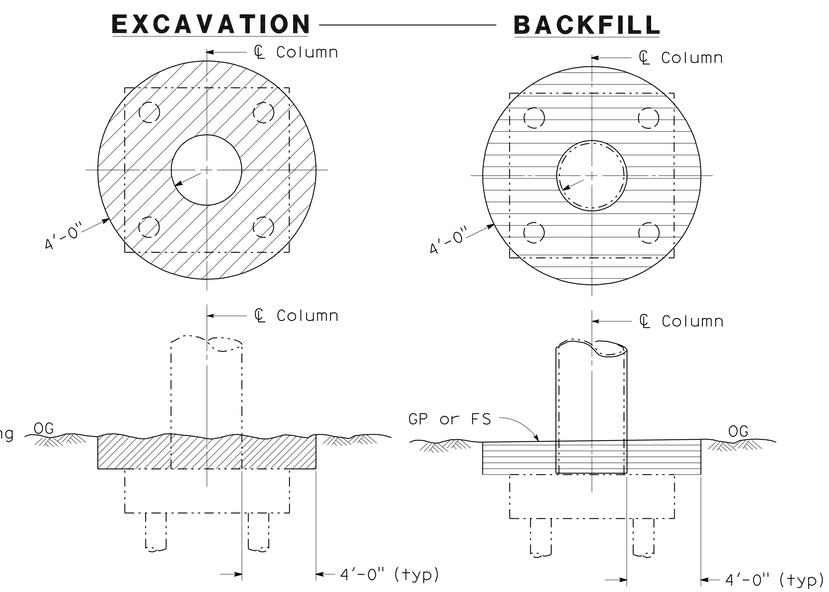

LIMITS OF PAYMENT FOR EXCAVATION AND BACKFILL

COLUMN CASING ONLY

NOTES:

1. For existing deck drain to be relocated,see "GENERAL PLAN NO. 1" sheet.
2. The contractor shall remove the existing anti- graffiti from column prior to the column casing installation.
3. For steel casing details, see "STEEL COLUMN CASING" sheet.

	BY	CHECKED
DESIGN	Xiahong Li	Jorge Estrada
DETAILS	Farideh Rashedi/ MT	X. Li/ JE
QUANTITIES	Tanya Wyckoff	Prem Rimal

STATE OF CALIFORNIA
DEPARTMENT OF TRANSPORTATION

DIVISION OF ENGINEERING SERVICES
STRUCTURE DESIGN
DESIGN BRANCH 18

BRIDGE NO. 53-1110
POST MILE 31.23

BUENA VISTA - WINONA UC (WIDEN)
SEISMIC RETROFIT DETAILS NO. 2

STRUCTURES DESIGN DETAIL SHEET (ENGLISH) (REV. 09-01-10)

ORIGINAL SCALE IN INCHES FOR REDUCED PLANS 0 1 2 3

UNIT: 3603
PROJECT NUMBER & PHASE: 0700021119-1
CONTRACT NO.: 07-1218w1

DISREGARD PRINTS BEARING EARLIER REVISION DATES

REVISION DATES: ~~3/6/07~~ 1/31/12

SHEET 38 OF 52

FILE => e53-1110-o-erdt02.dgn

USERNAME => s123631 DATE PLOTTED => 22-MAY-2012 TIME PLOTTED => 09:09

DIST	COUNTY	ROUTE	POST MILES TOTAL PROJECT	SHEET No.	TOTAL SHEETS
07	LA	5	29.4/31.6	1074	1931

REGISTERED CIVIL ENGINEER — DATE 1/31/12

5-21-12
PLANS APPROVAL DATE

REGISTERED PROFESSIONAL ENGINEER — JORGE I. ESTRADA — No. C51473 — Exp. 06-30-12 — CIVIL — STATE OF CALIFORNIA

The State of California or its officers or agents shall not be responsible for the accuracy or completeness of electronic copies of this plan sheet.

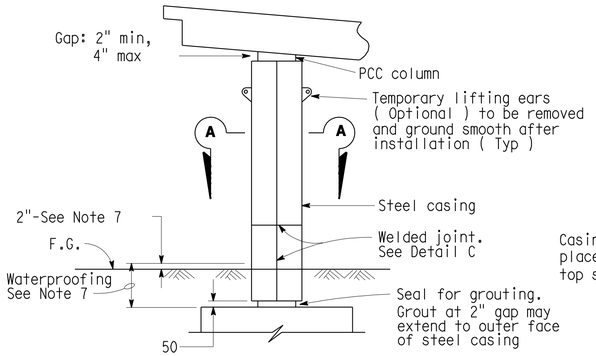

CLASS F COLUMN

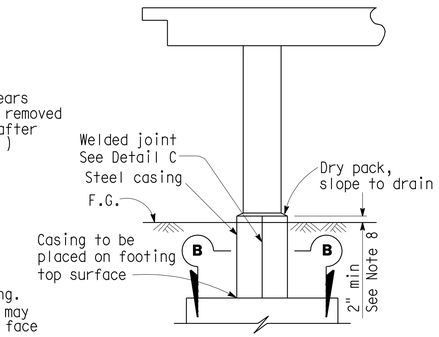

CLASS P COLUMN

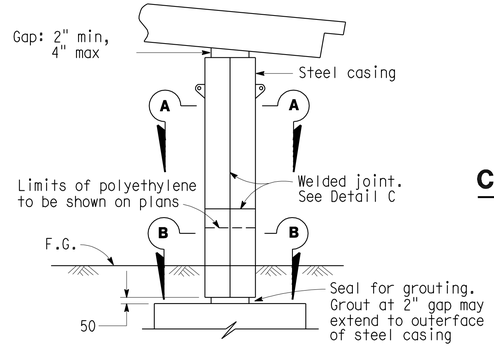

CLASS P/F COLUMN

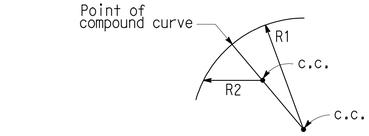

ELLIPTICAL CASING DETAIL CLASS P, F AND P/F COLUMN

Radii R1 and R2 to be determined by the Contractor subject to the approval of the Engineer

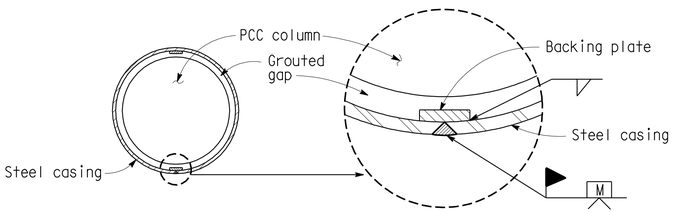

SECTION A-A ROUND COLUMN

Minimum inside diameter of steel casing = 1½" greater than nominal column diameter for Class F and 2½" for Class P/F

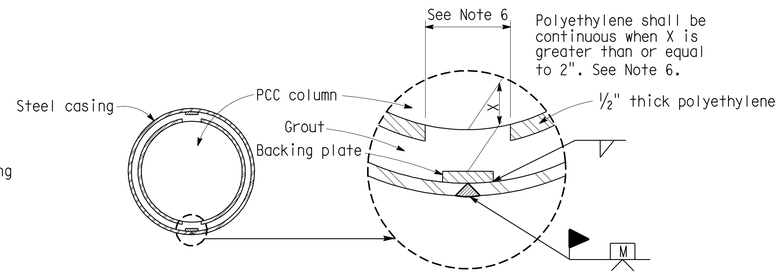

SECTION B-B ROUND COLUMN

Minimum inside diameter of steel casing = 2½" greater than nominal column diameter for Class P and Class P/F.

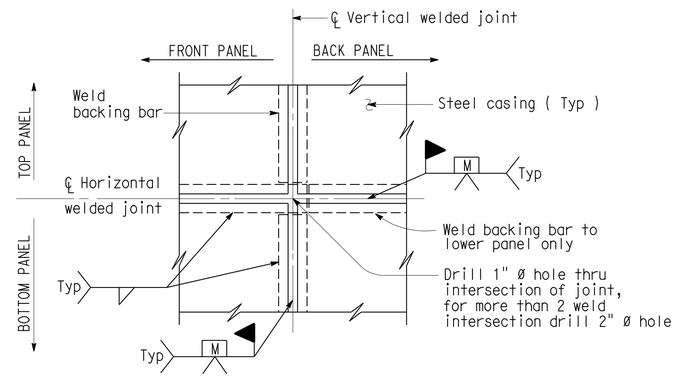

(TWO WELDED INTERSECTION JOINT)

DETAIL C

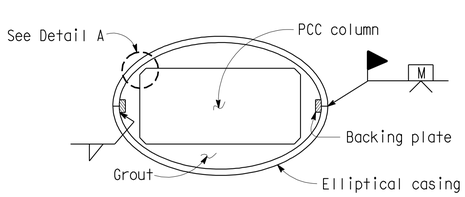

SECTION A-A RECTANGULAR COLUMN

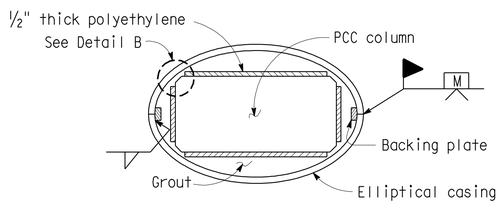

SECTION B-B RECTANGULAR COLUMN

DETAIL A

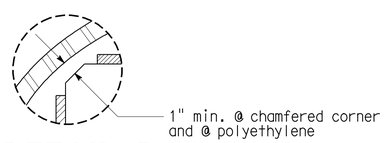

DETAIL B

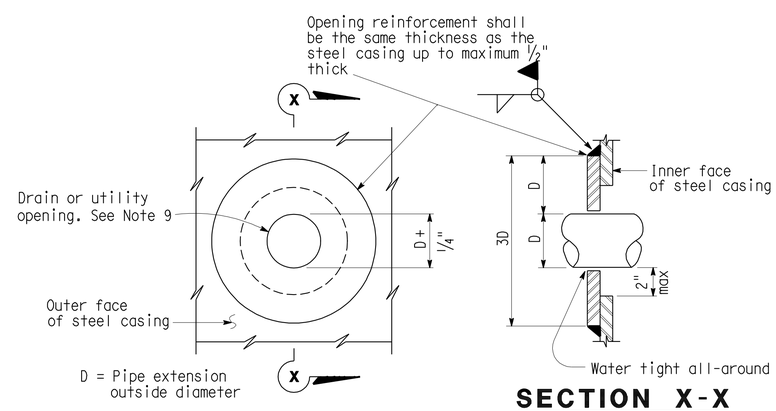

SECTION X-X

CASING OPENING

Note: Opening reinforcement required for drain or utility openings larger than 4"

NOTES:

1) For varying thickness steel casing inside surface to remain flush. Minimum clearance from PCC column to casing shall be maintained.
2) Appropriate injection nozzles to be provided on casing, but removed and ground flush following completion of grouting operation.
3) All voids between steel casing and polyethylene (Class P and Class P/F), and steel casing and PCC column (Class F) to be filled with grout.
4) Location and number of vertical and horizontal welds to be determined by the Contractor, and subject to the approval of the Engineer. The location of casing welds are for illustration. No skip welds allowed.
5) Circular steel casing to be ¼" thick minimum for casings with a 4'-4" diameter or less; all other steel casings to be ⅜" thick unless noted differently on contract plans. Backing plates to be the same thickness as casing up to maximum ½" thick.
6) Contractor shall remove 12" polyethylene strip behind backing plate if backing plate is closer than 2" from polyethylene.
7) Waterproof limits for steel casings. Typical for Classes "P", "F" and "P/F".
8) Minimum length of Classes "P" and "F" casing shall be 1.50 times the largest dimension of prismatic section of column, or 2" above finished grade whichever is greater. Lengths other than the specified minimum shall be shown on Detail sheets.
9) For pipe extensions, opening shall be no more than ¼" greater than the pipe extension diameter. For other openings, the opening diameter to be determined by the Engineer.

NO SCALE

_____ STANDARD DRAWING

FILE NO. xsXX-XXX-X

APPROVED BY X — RESPONSIBLE TECHNICAL SPECIALIST
APPROVAL DATE X-X-X

RELEASED BY X — RESPONSIBLE OFFICE CHIEF
RELEASE DATE X-X-X

STATE OF CALIFORNIA — DEPARTMENT OF TRANSPORTATION

DIVISION OF ENGINEERING SERVICES

BRIDGE NO. 53-1110
POST MILE 31.23

BUENA VISTA - WINONA UC (WIDEN)
STEEL COLUMN CASINGS
SEISMIC RETROFIT DETAILS NO. 3

DS OSD 2147A (ENGLISH STANDARD DRAWING "XS" BORDER REV. (08-10-10)

ORIGINAL SCALE IN INCHES FOR REDUCED PLANS 0 1 2 3

UNIT: 3603
PROJECT NUMBER & PHASE: 0700021119-1
CONTRACT NO.: 07-1218w1

DISREGARD PRINTS BEARING EARLIER REVISION DATES

REVISION DATES: 1/18/08 1/31/12

SHEET 39 OF 52

FILE => e53-1110-o-erdt03.dgn

USERNAME => s123631 DATE PLOTTED => 22-MAY-2012 TIME PLOTTED => 09:09

DIST	COUNTY	ROUTE	POST MILES TOTAL PROJECT	SHEET No.	TOTAL SHEETS
07	LA	5	29.4/31.6	1075	1931

JEstrada. 1/31/12
REGISTERED CIVIL ENGINEER DATE

5-21-12
PLANS APPROVAL DATE

REGISTERED PROFESSIONAL ENGINEER
JORGE I. ESTRADA
No. C51473
Exp. 06-30-12
CIVIL
STATE OF CALIFORNIA

The State of California or its officers or agents shall not be responsible for the accuracy or completeness of electronic copies of this plan sheet.

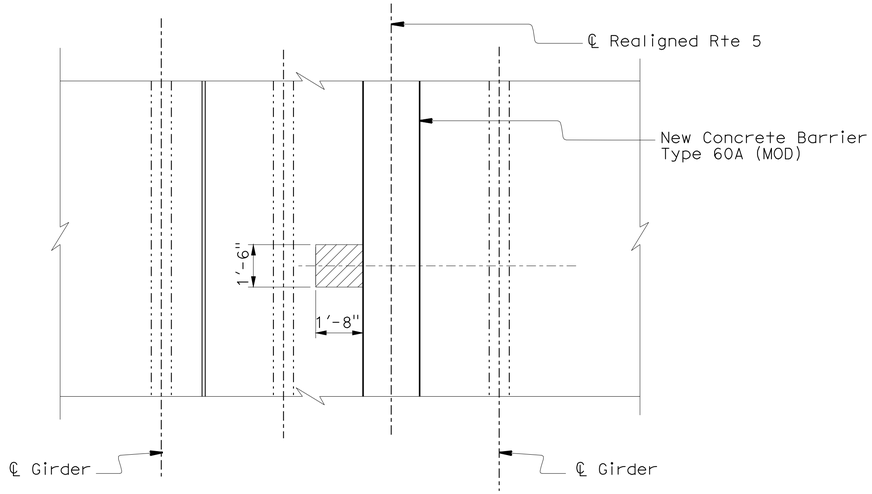

CONCRETE REMOVAL

3/8" = 1'

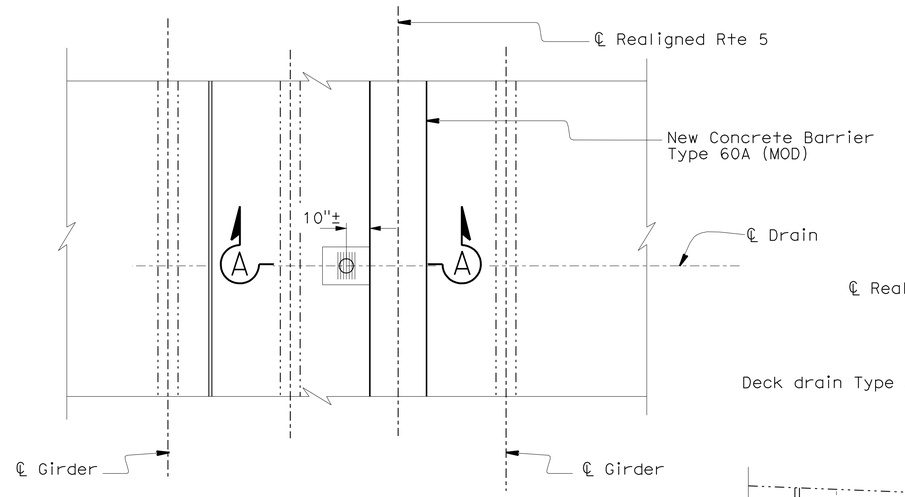

DRAIN INSTALLATION

3/8 " = 1'

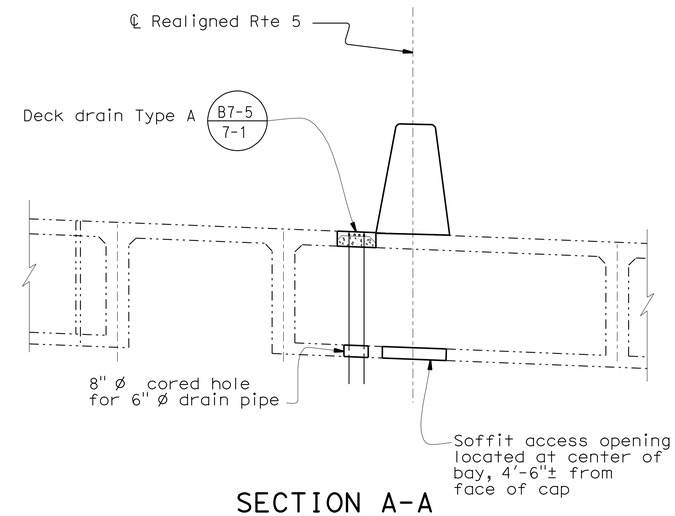

SECTION A-A

No Scale

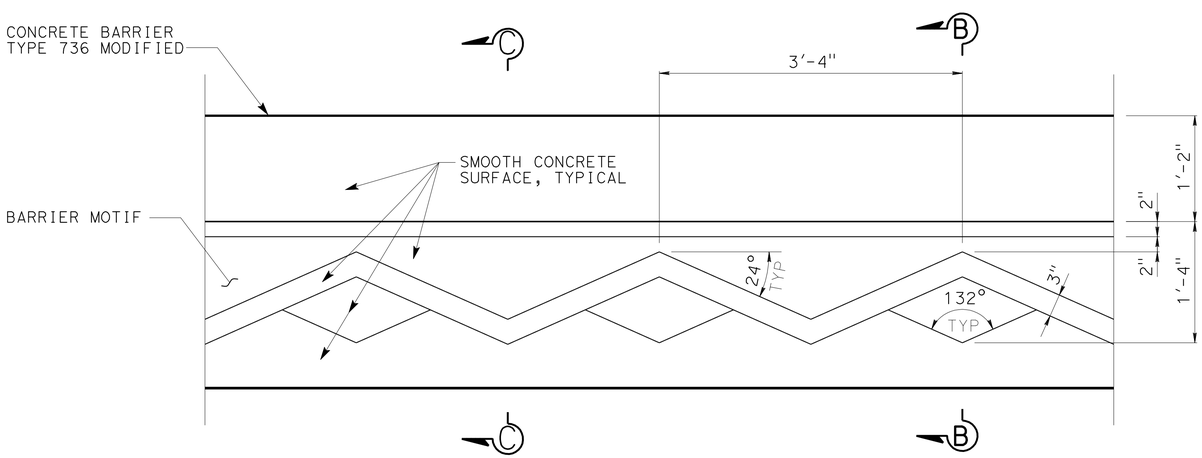

BARRIER AESTHETIC TREATMENT

No Scale

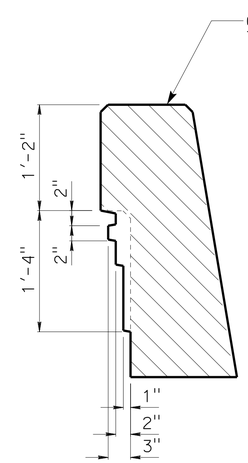

SECTION B-B

No Scale

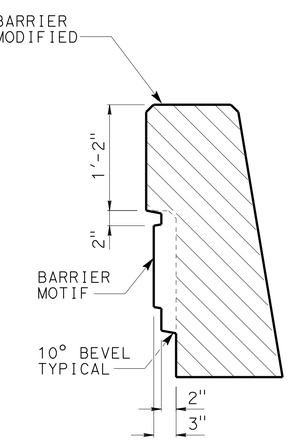

SECTION C-C

No Scale

	BY	CHECKED
DESIGN	Prem Rimal	Jorge Estrada
DETAILS	Farideh Rashedi/ MT	Jorge Estrada
QUANTITIES	Tanya Wyckoff	Prem Rimal

STATE OF CALIFORNIA
DEPARTMENT OF TRANSPORTATION

DIVISION OF ENGINEERING SERVICES
STRUCTURE DESIGN
DESIGN BRANCH 18

BRIDGE NO. 53-1110
POST MILE 31.23

BUENA VISTA - WINONA UC (WIDEN)
MISCELLANEOUS DETAILS

STRUCTURES DESIGN DETAIL SHEET (ENGLISH) (REV. 09-01-10)

ORIGINAL SCALE IN INCHES FOR REDUCED PLANS 0 1 2 3

UNIT: 3603
PROJECT NUMBER & PHASE: 0700021119-1
CONTRACT NO.: 07-1218w1

DISREGARD PRINTS BEARING EARLIER REVISION DATES

REVISION DATES: 9/6/07 1/31/12

SHEET 40 OF 52

FILE => e53-1110-o-misc.dgn

USERNAME => s123631 DATE PLOTTED => 22-MAY-2012 TIME PLOTTED => 09:10

DIST	COUNTY	ROUTE	POST MILES TOTAL PROJECT	SHEET No.	TOTAL SHEETS
07	LA	5	29.4/31.6	1076	1931

REGISTERED CIVIL ENGINEER — DATE 1/31/12

5-21-12
PLANS APPROVAL DATE

REGISTERED PROFESSIONAL ENGINEER — JORGE I. ESTRADA — No. C51473 — Exp. 06-30-12 — CIVIL — STATE OF CALIFORNIA

The State of California or its officers or agents shall not be responsible for the accuracy or completeness of electronic copies of this plan sheet.

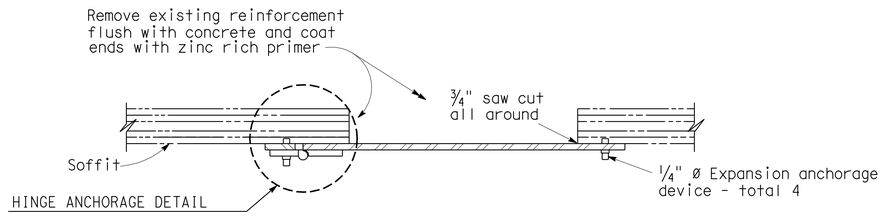

SECTION A-A

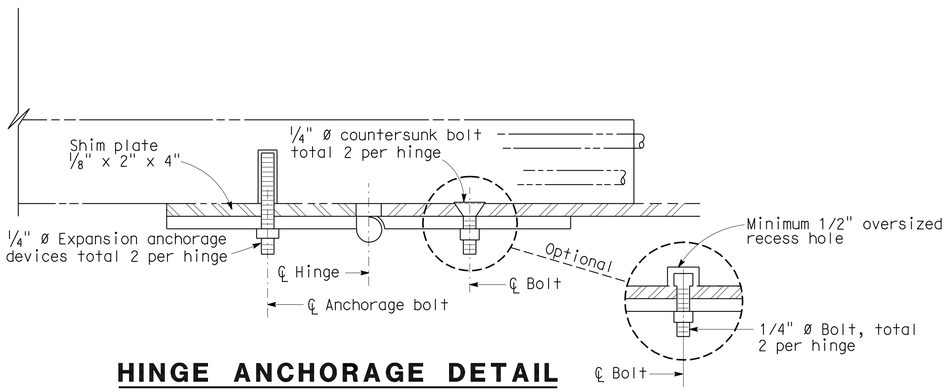

HINGE ANCHORAGE DETAIL

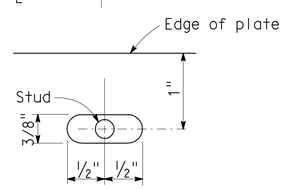

DETAIL A

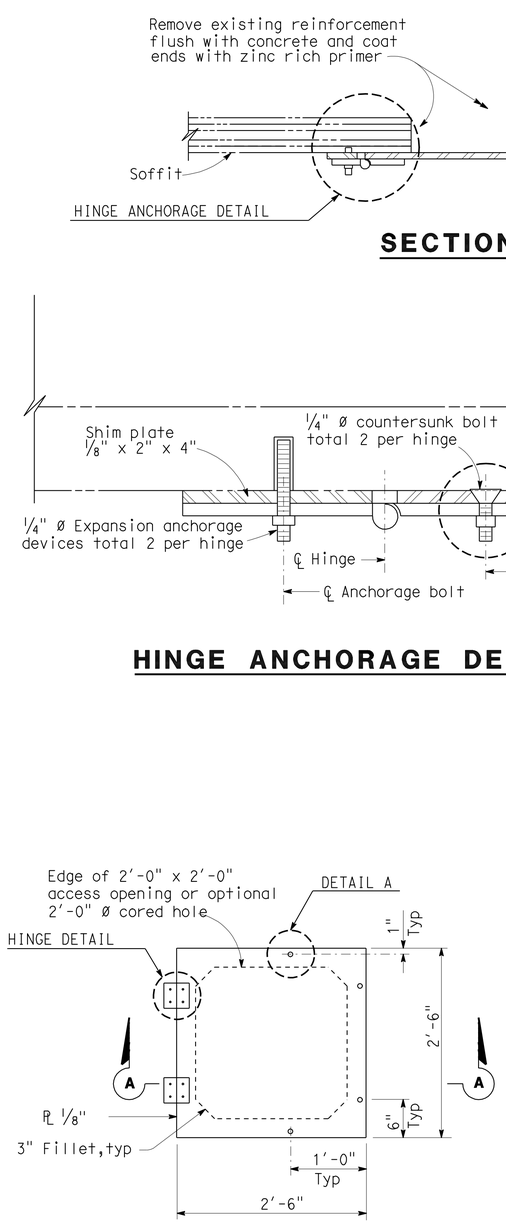

SOFFIT ACCESS DOOR ASSEMBLY

Note: Soffit access door opening direction to be determined by the Engineer

NOTES:

1. Non-removable pin in hinge.
2. Hinge assembly to be galvanized, brass or stainless steel.
3. Use thread locking system for all hinge nuts.
4. Hinge assembly to be minimum 1/8" thick.

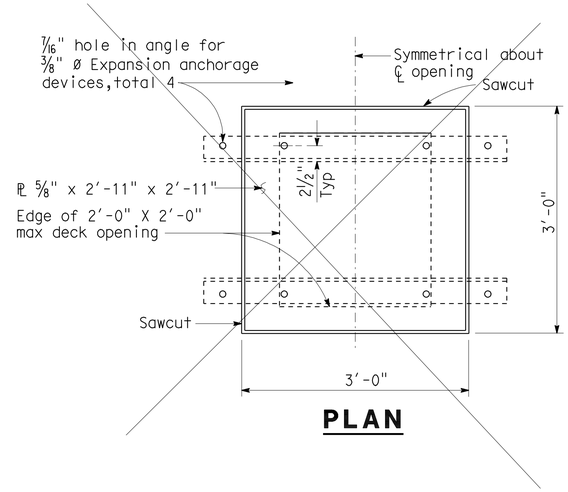

PLAN

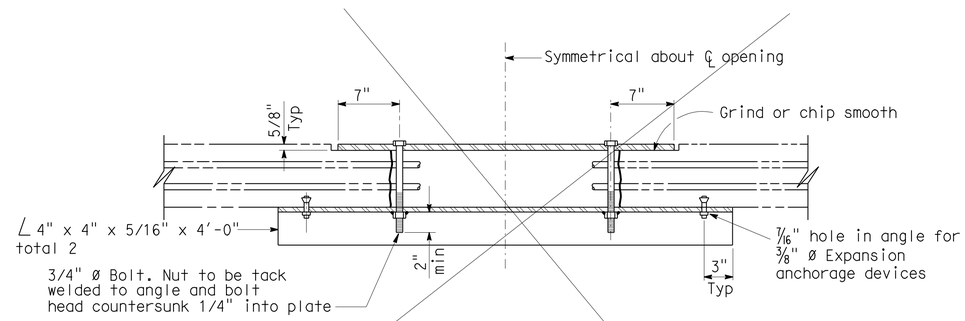

TEMPORARY DECK COVER PLATE

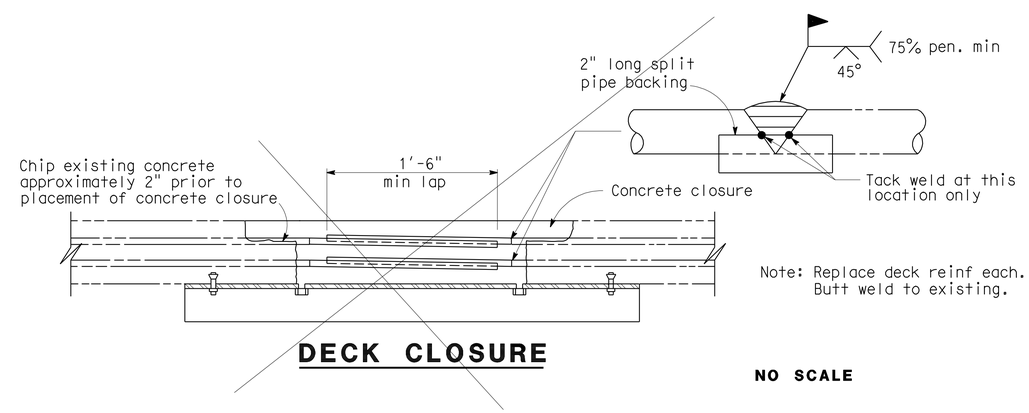

Note: Replace deck reinf each. Butt weld to existing.

DECK CLOSURE

NO SCALE

STANDARD DRAWING

FILE NO. xsXX-XXX-X

APPROVED BY X — RESPONSIBLE TECHNICAL SPECIALIST
APPROVAL DATE X-X-X

RELEASED BY X — RESPONSIBLE OFFICE CHIEF
RELEASE DATE X-X-X

STATE OF CALIFORNIA — DEPARTMENT OF TRANSPORTATION

DIVISION OF ENGINEERING SERVICES

BRIDGE NO. 53-1110
POST MILE 31.23

BUENA VISTA - WINONA UC (WIDEN)

DECK AND SOFFIT OPENINGS

DS OSD 2147A (ENGLISH STANDARD DRAWING "XS" BORDER REV. (08-10-10)

ORIGINAL SCALE IN INCHES FOR REDUCED PLANS 0 1 2 3

UNIT: 3603
PROJECT NUMBER & PHASE: 0700021119-1
CONTRACT NO.: 07-1218W1

DISREGARD PRINTS BEARING EARLIER REVISION DATES

REVISION DATES: 9/6/07 1/31/12

SHEET 41 OF 52

FILE => e53-1110-p-aodt.dgn

USERNAME => s124496 DATE PLOTTED => 25-MAY-2012 TIME PLOTTED => 11:20

DIST	COUNTY	ROUTE	POST MILES TOTAL PROJECT	SHEET No.	TOTAL SHEETS
07	LA	5	29.4/31.6	1077	1931

REGISTERED CIVIL ENGINEER — DATE 1/31/12

5-21-12
PLANS APPROVAL DATE

REGISTERED PROFESSIONAL ENGINEER — JORGE I. ESTRADA — No. C51473 — Exp. 06-30-12 — CIVIL — STATE OF CALIFORNIA

The State of California or its officers or agents shall not be responsible for the accuracy or completeness of electronic copies of this plan sheet.

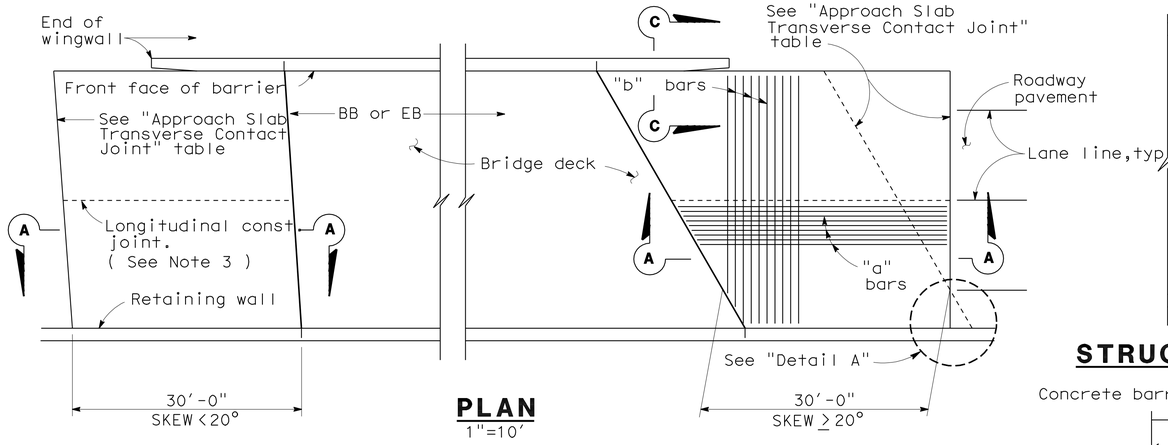

PLAN
1"=10'

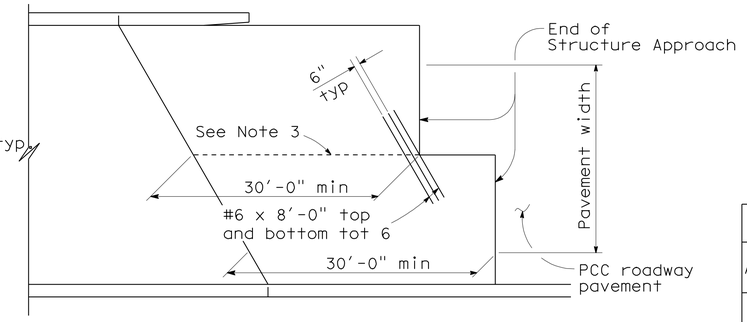

STRUCTURE APPROACH - END STAGGER DETAIL
No Scale

APPROACH SLAB TRANSVERSE CONTACT JOINT		
APPROACH SKEW	WITH AC ROADWAY PAVEMENT	WITH PCC ROADWAY PAVEMENT
< 20°	Parallel to face of paving notch	Parallel to face of paving notch
20° - 45°	Parallel to face of P N use (Detail A)	Stagger lines 24' to 36' apart.
> 45°	Parallel to face of P N use (Detail A)	Stagger at each lane line.

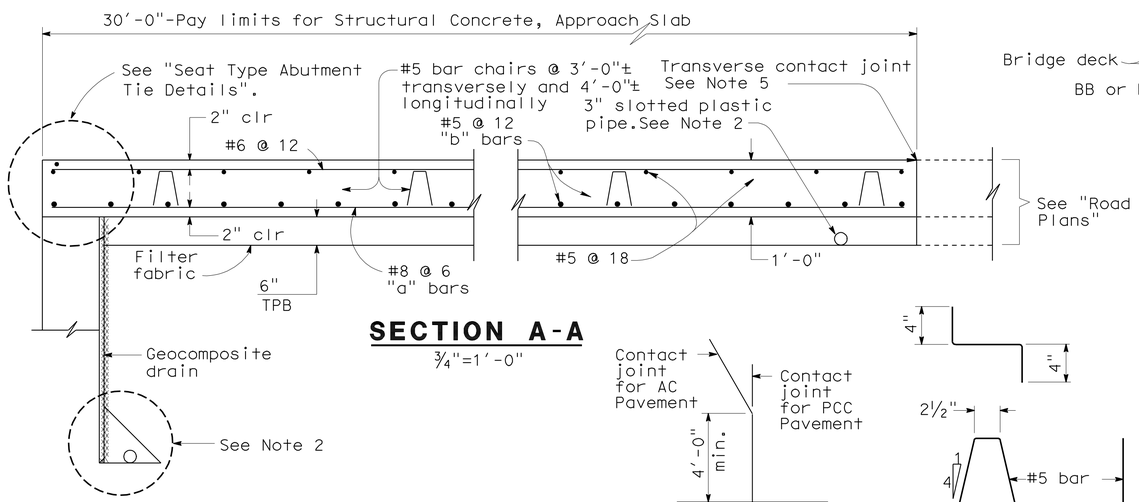

SECTION A-A
¾"=1'-0"

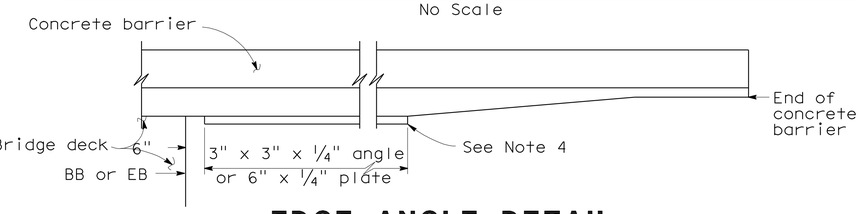

EDGE ANGLE DETAIL
½"=1'-0"

DETAIL A
No Scale

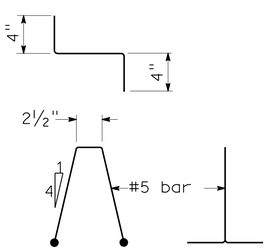

BAR CHAIR DETAIL
1½"=1'-0"

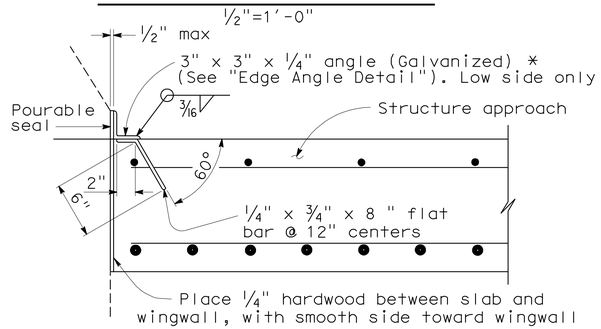

*(TO BE USED WITH TYPE 25 OR TYPE 27 CONCRETE BARRIER)

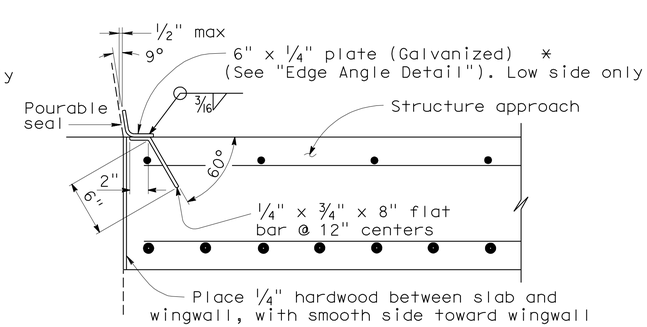

*(TO BE USED WITH TYPE 732 OR TYPE 736 CONCRETE BARRIER)

DETAIL B
1½"=1'-0"

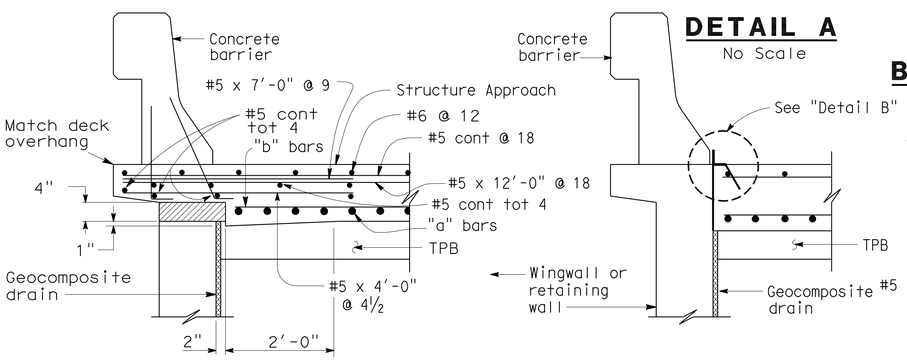

TYPE E-1 TYPE E-2

SECTION C-C
¾"=1'-0"

(Type E-1 to be used,unless otherwise shown on plans)

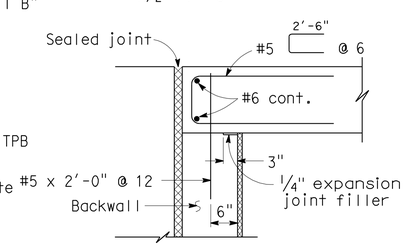

MR ≤ 2"

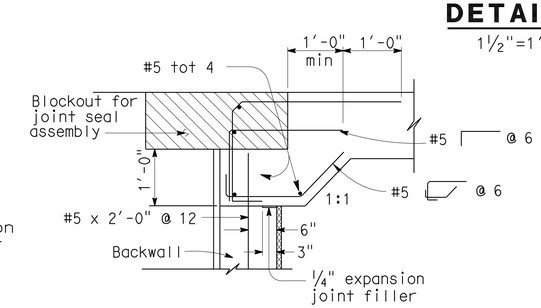

MR > 2"

SEAT TYPE ABUTMENT TIE DETAILS (SEE NOTE 1)
¾"=1'-0"

NOTES:

1. For details not shown,see Structure Plans. For MR ≤ 2",adjust bar reinforcement to clear a sawcut for sealed joint,when required.
2. For drainage details,see "Structure Approach Drainage Details" sheet.
3. Longitudinal construction joints,when permitted by the Engineer, shall be located on lane lines.
4. End angle or plate at beginning of barrier transition, end of wingwall or end of structure approach as applicable.
5. For transverse contact joint with new PCC paving, refer to Standard Plan P10.
6. At the contractor's option, approach slab transverse reinforcement may be placed parallel to paving notch. Spacing of transverse reinforcement is measured along ℄ roadway.

Remove all polystyrene.

STANDARD DRAWING				
RELEASE DATE 3/14/05	DESIGN	BY M.TRAFFALIS	CHECKED E.THORKILDSEN	RELEASED BY
FILE NO. xs3-120e	DETAILS	BY R.YEE	CHECKED E.THORKILDSEN	OFFICE CHIEF
	SUBMITTED	BY M.HA	DRAWING DATE 4/98	

STATE OF CALIFORNIA
DEPARTMENT OF TRANSPORTATION

DIVISION OF ENGINEERING SERVICES

BRIDGE NO. 53-1110
POST MILE 31.23

BUENA VISTA - WINONA UC (WIDEN)
STRUCTURE APPROACH TYPE N (30S)

DS OSD 2147A (ENGLISH STANDARD DRAWING "XS" BORDER REV. (08-10-10)

ORIGINAL SCALE IN INCHES FOR REDUCED PLANS 0 1 2 3

UNIT: 3603
PROJECT NUMBER & PHASE: 0700021119-1
CONTRACT NO.: 07-1218w1

DISREGARD PRINTS BEARING EARLIER REVISION DATES

REVISION DATES: 1/20/08 1/31/12

SHEET 42 OF 52

FILE => e53-1110-s-sadt01.dgn

USERNAME => s123631 DATE PLOTTED => 22-MAY-2012 TIME PLOTTED => 09:10

DIST	COUNTY	ROUTE	POST MILES TOTAL PROJECT	SHEET No.	TOTAL SHEETS
07	LA	5	29.4/31.6	1078	1931

REGISTERED CIVIL ENGINEER — DATE 1/31/12

5-21-12
PLANS APPROVAL DATE

REGISTERED PROFESSIONAL ENGINEER — JORGE I. ESTRADA — No. C51473 — Exp. 06-30-12 — CIVIL — STATE OF CALIFORNIA

The State of California or its officers or agents shall not be responsible for the accuracy or completeness of electronic copies of this plan sheet.

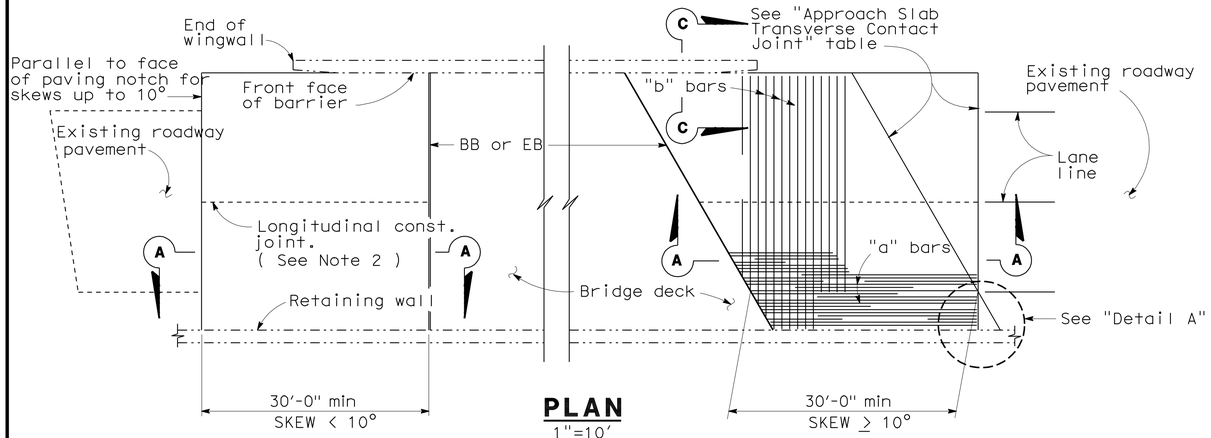

PLAN
1"=10'

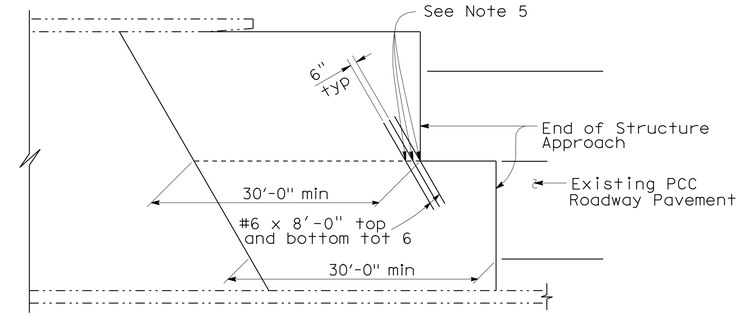

STRUCTURE APPROACH - END STAGGER DETAIL
No Scale

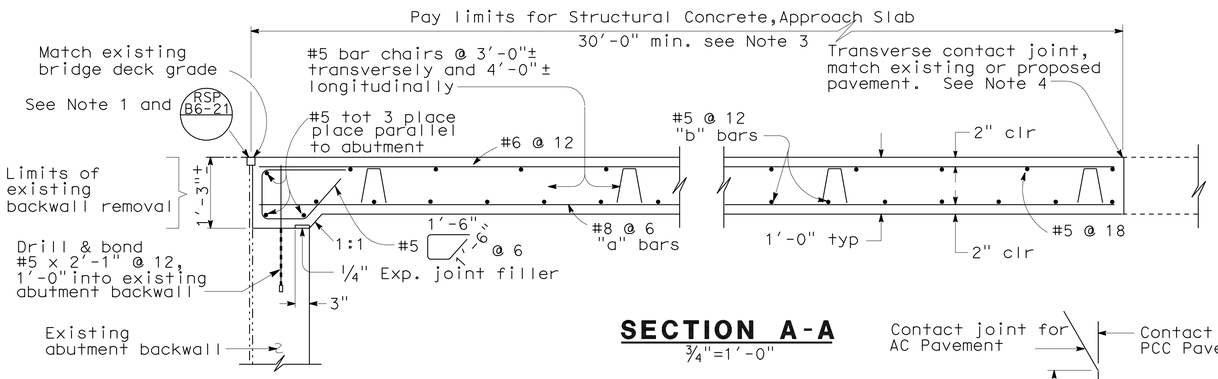

SECTION A-A
3/4"=1'-0"

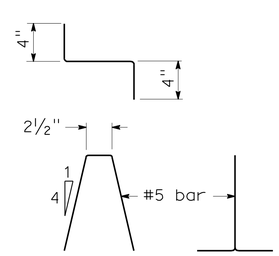

BAR CHAIR DETAIL
1 1/2"=1'-0"

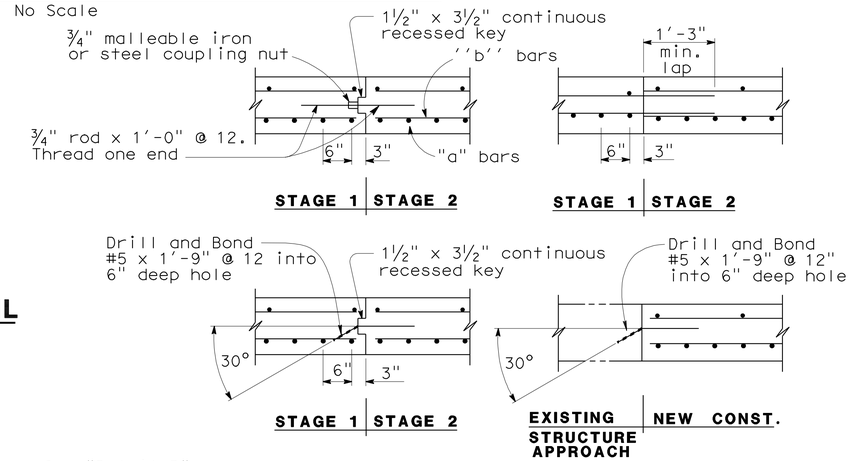

LONGITUDINAL CONSTRUCTION JOINT ALTERNATIVES
3/4"=1'-0"

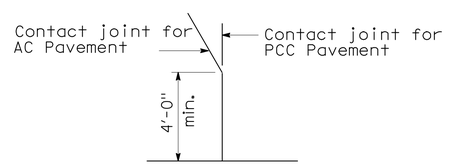

DETAIL A
No Scale

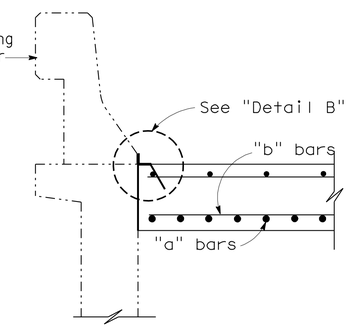

SECTION C-C
3/4"=1'-0"

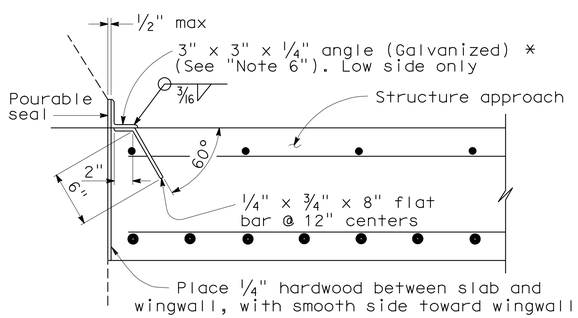

***(TO BE USED WITH TYPE 25 OR TYPE 27 CONCRETE BARRIER)**

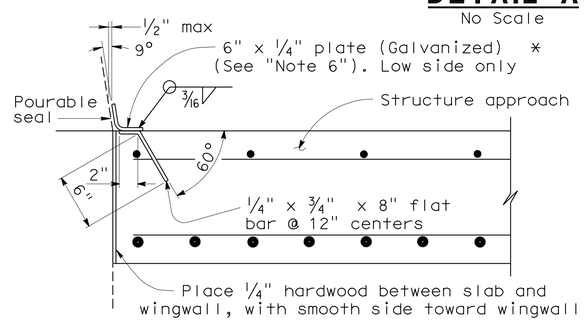

***(TO BE USED WITH TYPE 732 OR TYPE 736 CONCRETE BARRIER)**

DETAIL B
1 1/2"=1'-0"

APPROACH SLAB TRANSVERSE CONTACT JOINT		
APPROACH SKEW	WITH AC ROADWAY PAVEMENT	WITH PCC ROADWAY PAVEMENT
< 10°	Parallel to face of paving notch	Parallel to face of paving notch
10°- 45°	Parallel to face of P N use (Detail A)	Stagger lines 24' to 36' apart
> 45°	Parallel to face of P N use (Detail A)	Stagger at each lane line

NOTES:

1. Sealed joint, for M.R. see Structure Plans. Adjust bar reinforcement to clear a sawcut for sealed joint, when required.
2. Longitudinal construction joints, when permitted by Engineer, shall be located on lane lines.
3. Transverse contact joint shall be a minimum of 5'-0" from an existing or constructed weakened plane joint.
4. For transverse contact joint with new PCC paving, refer to Standard Plan P10.
5. Couplers are required for stage construction.
6. End angle or plate at beginning of barrier transition, end of wingwall or end of structure approach as applicable.

NOTE:

THE CONTRACTOR SHALL VERIFY ALL CONTROLLING FIELD DIMENSIONS BEFORE ORDERING OR FABRICATING ANY MATERIAL.

STANDARD DRAWING

RELEASE DATE 3/14/05	DESIGN	BY M.TRAFFALIS	CHECKED E.THORKILDSEN	RELEASED BY
	DETAILS	BY R.YEE	CHECKED E.THORKILDSEN	
FILE NO. xs3-130e	SUBMITTED	BY M.HA	DRAWING DATE 8/92	OFFICE CHIEF

STATE OF CALIFORNIA
DEPARTMENT OF TRANSPORTATION

DIVISION OF ENGINEERING SERVICES

BRIDGE NO. 53-1110
POST MILE 31.23

BUENA VISTA - WINONA UC (WIDEN)
STRUCTURE APPROACH TYPE R (30S)

DS OSD 2147A (ENGLISH STANDARD DRAWING "XS" BORDER REV. (08-10-10)

ORIGINAL SCALE IN INCHES FOR REDUCED PLANS 0 1 2 3

UNIT: 3603
PROJECT NUMBER & PHASE: 0700021119-1
CONTRACT NO.: 07-1218W1

DISREGARD PRINTS BEARING EARLIER REVISION DATES 1/20/08 1/31/12

SHEET 43 OF 52

FILE => e53-1110-s-sadt02.dgn

USERNAME => s123631 DATE PLOTTED => 22-MAY-2012 TIME PLOTTED => 09:10

DIST	COUNTY	ROUTE	POST MILES TOTAL PROJECT	SHEET No.	TOTAL SHEETS
07	LA	5	29.4/31.6	1079	1931

REGISTERED CIVIL ENGINEER — DATE 1/31/12

5-21-12
PLANS APPROVAL DATE

REGISTERED PROFESSIONAL ENGINEER — JORGE I. ESTRADA — No. C51473 — Exp. 06-30-12 — CIVIL — STATE OF CALIFORNIA

The State of California or its officers or agents shall not be responsible for the accuracy or completeness of electronic copies of this plan sheet.

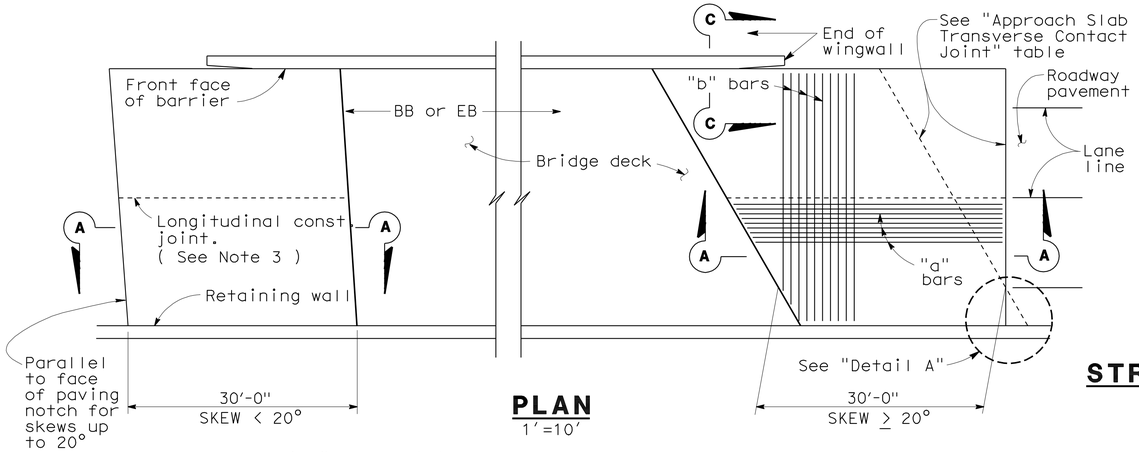

PLAN
1'=10'

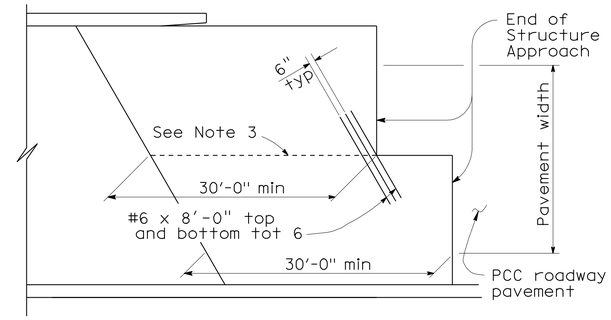

STRUCTURE APPROACH - END STAGGER DETAIL
No Scale

APPROACH SLAB TRANSVERSE CONTACT JOINT		
APPROACH SKEW	WITH AC ROADWAY PAVEMENT	WITH PCC ROADWAY PAVEMENT
< 20°	Parallel to face of paving notch	Parallel to face of paving notch
20°- 45°	Parallel to face of P N use (Detail A)	Stagger lines 24' to 36' apart
> 45°	Parallel to face of P N use (Detail A)	Stagger at each lane line

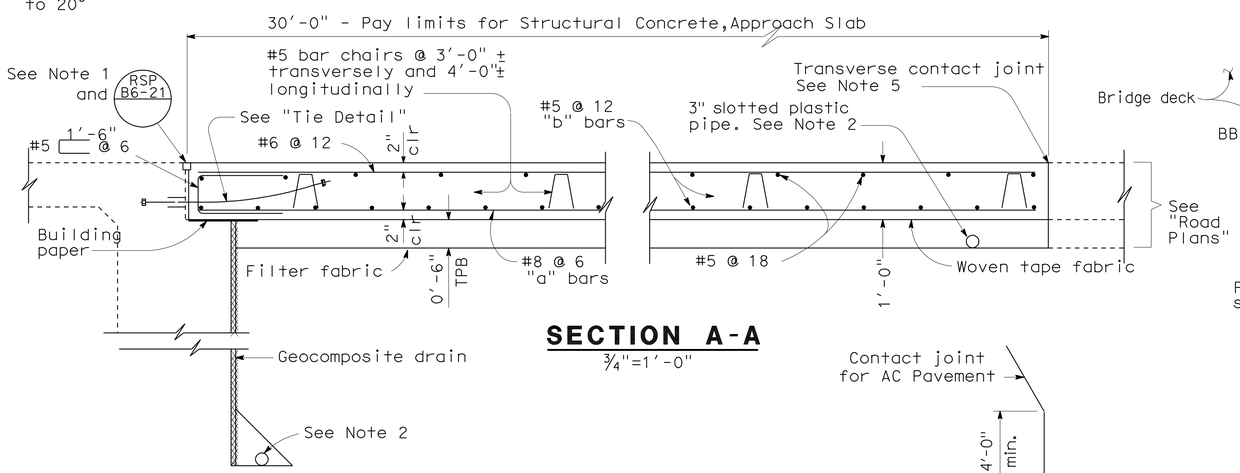

SECTION A-A
¾"=1'-0"

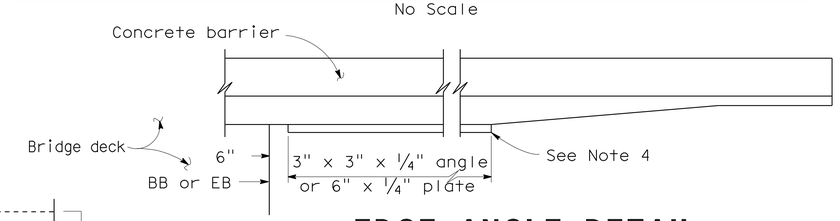

EDGE ANGLE DETAIL
½"=1'-0"

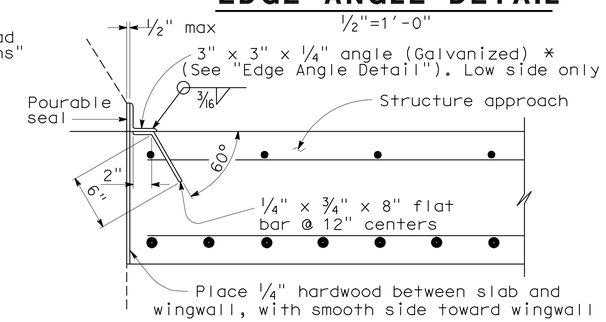

*(TO BE USED WITH TYPE 25 OR TYPE 27 CONCRETE BARRIER)

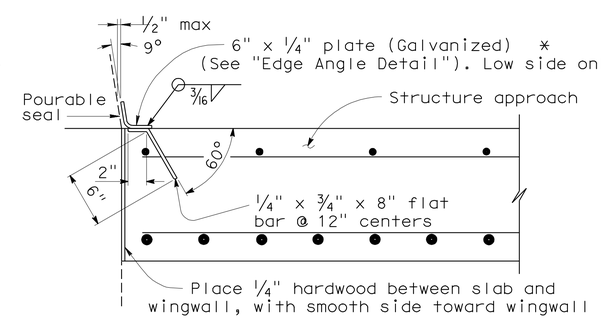

*(TO BE USED WITH TYPE 732 OR TYPE 736 CONCRETE BARRIER)

DETAIL B
1½"=1'-0"

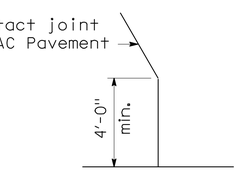

DETAIL A
No Scale

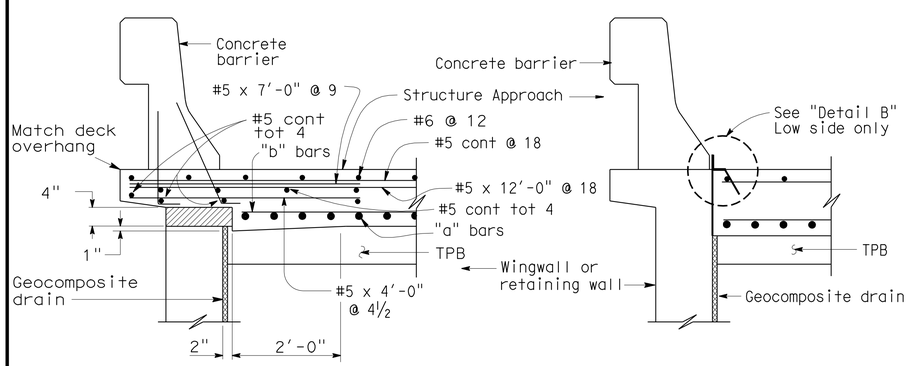

TYPE E-1 TYPE E-2

SECTION C-C
¾"=1'-0"

(Type E-1 to be used,unless otherwise shown on plans)

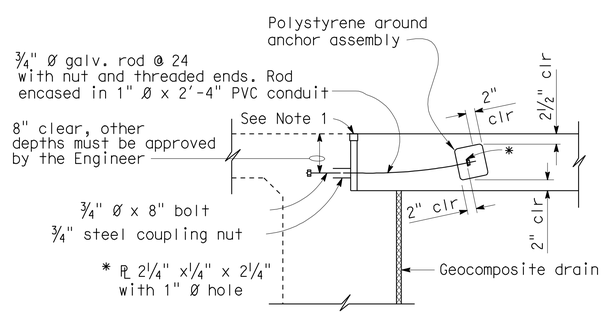

TIE DETAIL
¾"=1'-0"

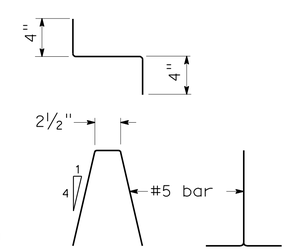

BAR CHAIR DETAIL
1½"=1'-0"

NOTES:

1. For details not noted or shown,see Structure Plans.
2. For drainage details,see "Structure Approach Drainage Details" sheet.
3. Longitudinal construction joints,when permitted by the Engineer,shall be located on lane lines.
4. End angle or plate at beginning of barrier transition, end of wingwall or end of structure approach, as applicable.
5. For transverse contact joint with new PCC paving, refer to Standard Plan P10.
6. At the contractor's option,approach slab transverse reinforcement may be placed parallel to paving notch. Spacing of transverse reinforcement is measured along ℄ roadway.

Polystyrene to be removed.

STANDARD DRAWING

FILE NO. xs3-180e

APPROVED BY M. Ha — RESPONSIBLE TECHNICAL SPECIALIST
APPROVAL DATE 8-12-08

RELEASED BY O. Alcantara — RESPONSIBLE OFFICE CHIEF
RELEASE DATE 8-12-08

STATE OF CALIFORNIA DEPARTMENT OF TRANSPORTATION

DIVISION OF ENGINEERING SERVICES

BRIDGE NO. 53-1110
POST MILE 31.23

BUENA VISTA - WINONA UC (WIDEN)
STRUCTURE APPROACH TYPE N (30D)

DS OSD 2147A (ENGLISH STANDARD DRAWING "XS" BORDER REV. (08-10-10)

ORIGINAL SCALE IN INCHES FOR REDUCED PLANS 0 1 2 3

UNIT: 3603
PROJECT NUMBER & PHASE: 0700021119-1
CONTRACT NO.: 07-1218w1

DISREGARD PRINTS BEARING EARLIER REVISION DATES

REVISION DATES 1/20/08 1/31/12

SHEET 44 OF 52

FILE => e53-1110-s-sadt03.dgn

USERNAME => s123631 DATE PLOTTED => 22-MAY-2012 TIME PLOTTED => 03:10

DIST	COUNTY	ROUTE	POST MILES TOTAL PROJECT	SHEET No.	TOTAL SHEETS
07	LA	5	29.4/31.6	1080	1931

dEstrada. 1/31/12
REGISTERED CIVIL ENGINEER DATE

5-21-12
PLANS APPROVAL DATE

REGISTERED PROFESSIONAL ENGINEER JORGE I. ESTRADA No. C51473 Exp. 06-30-12 CIVIL STATE OF CALIFORNIA

The State of California or its officers or agents shall not be responsible for the accuracy or completeness of electronic copies of this plan sheet.

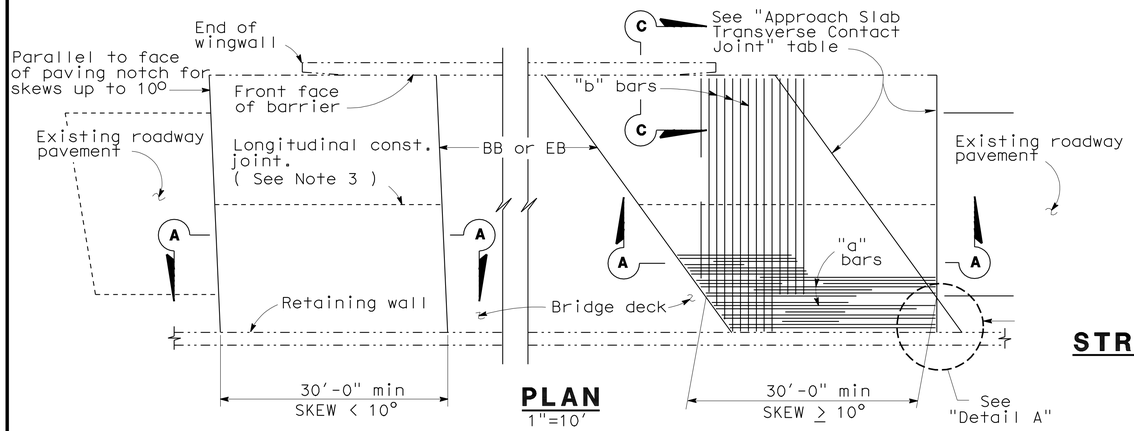

PLAN
1"=10'

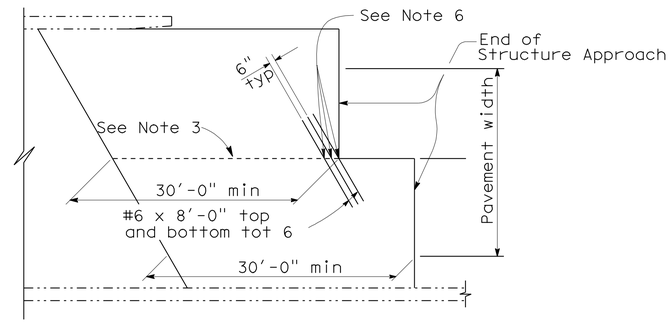

STRUCTURE APPROACH - END STAGGER DETAIL
No Scale

APPROACH SLAB TRANSVERSE CONTACT JOINT		
APPROACH SKEW	WITH AC ROADWAY PAVEMENT	WITH PCC ROADWAY PAVEMENT
< 10°	Parallel to face of paving notch	Parallel to face of paving notch
10° - 45°	Parallel to face of P N use (Detail A)	Stagger lines 24' to 36' apart
> 45°	Parallel to face of P N use (Detail A)	Stagger at each lane line

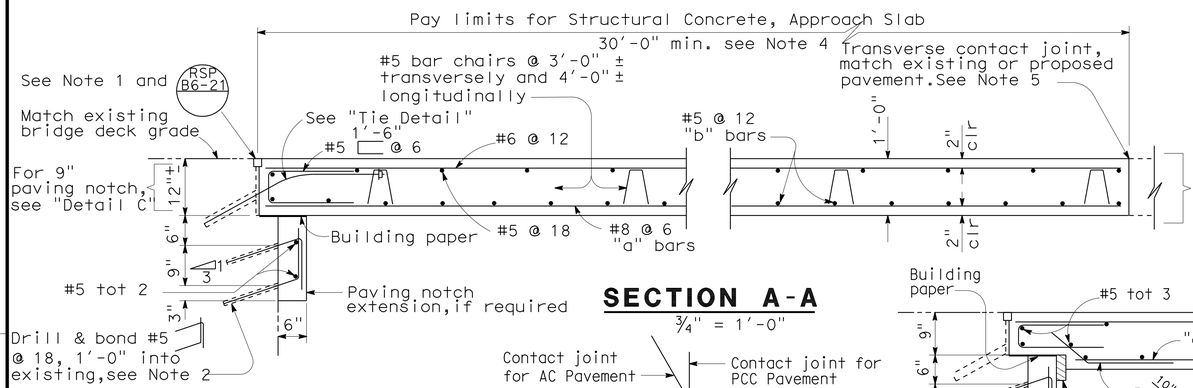

SECTION A-A
¾" = 1'-0"

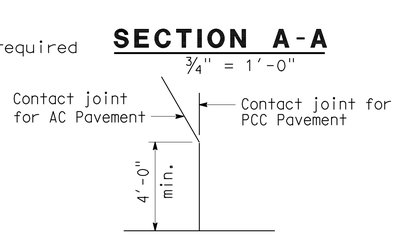

DETAIL A
No Scale

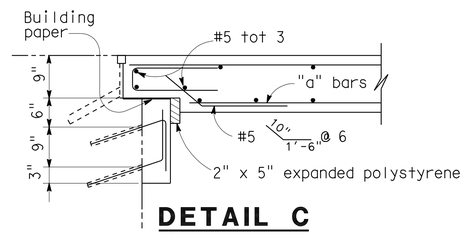

DETAIL C
¾" = 1'-0"

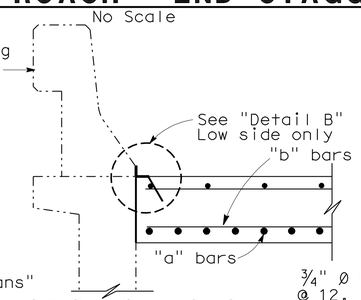

SECTION C-C
¾" = 1'-0"

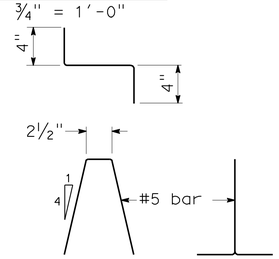

BAR CHAIR DETAIL
1½" = 1'-0"

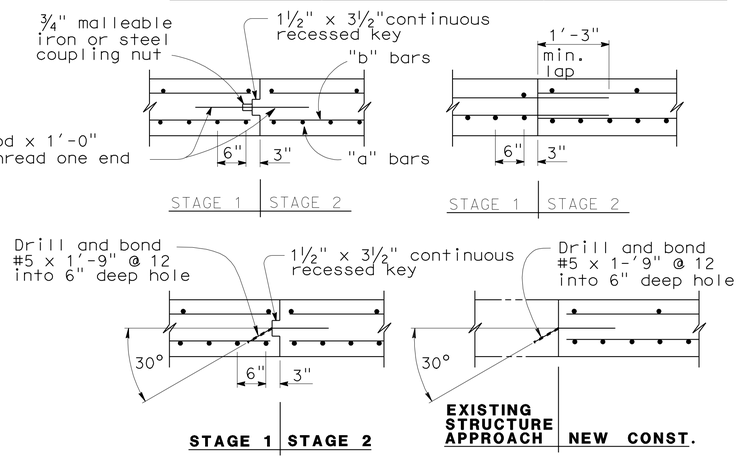

LONGITUDINAL CONSTRUCTION JOINT ALTERNATIVES
¾" = 1'-0"

NOTES:

1. For details not shown or noted,see Structure Plans. Adjust bar reinforcement to clear a sawcut for sealed joint,when required.
2. Space to avoid existing prestress anchorages and main reinforcement.
3. Longitudinal construction joints,when permitted by the Engineer,shall be located on lane lines.
4. Transverse contact joint shall be a minimum of 5'-0" from an existing or constructed weakened plane joint.
5. For transverse contact joint with new PCC paving. refer to Standard Plan P10.
6. Couplers are required for stage construction.
7. End angle or plate at beginning of barrier transition, end of wingwall or end of structure approach as applicable.

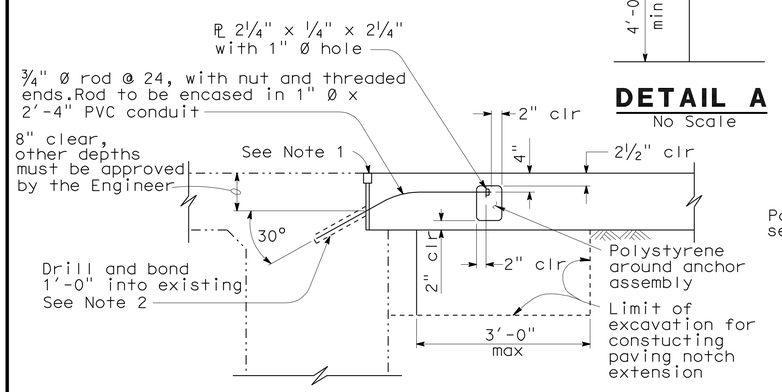

TIE DETAIL
¾" = 1'-0"

NOTE:
THE CONTRACTOR SHALL VERIFY ALL CONTROLLING FIELD DIMENSIONS BEFORE ORDERING OR FABRICATING ANY MATERIAL.

NOTE: For details not shown,see "Section A-A".

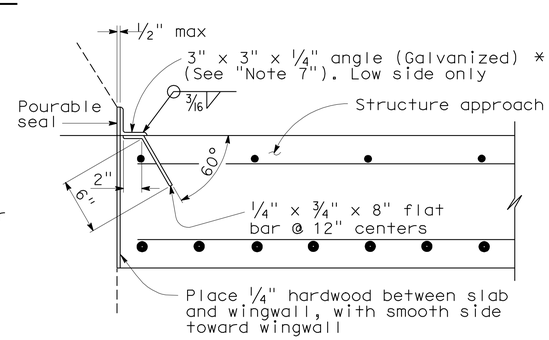

*(TO BE USED WITH TYPE 25 OR TYPE 27 CONCRETE BARRIER)

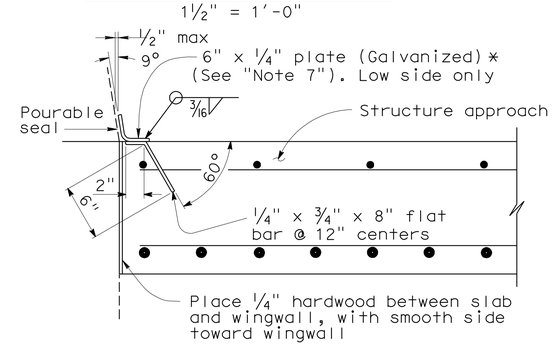

*(TO BE USED WITH TYPE 732 OR TYPE 736 CONCRETE BARRIER)

DETAIL B
1½" = 1'-0"

STANDARD DRAWING				
RELEASE DATE 3/14/05	DESIGN	BY M.TRAFFALIS	CHECKED E.THORKILDSEN	RELEASED BY
FILE NO. xs3-140e	DETAILS	BY R.YEE	CHECKED E.THORKILDSEN	
	SUBMITTED	BY M.HA	DRAWING DATE 8/92	OFFICE CHIEF

STATE OF CALIFORNIA
DEPARTMENT OF TRANSPORTATION

DIVISION OF ENGINEERING SERVICES

BRIDGE NO. 53-1110
POST MILE 31.23

BUENA VISTA - WINONA UC (WIDEN)
STRUCTURE APPROACH TYPE R (30D)

DS OSD 2147A (ENGLISH STANDARD DRAWING "XS" BORDER REV. (08-10-10)

ORIGINAL SCALE IN INCHES FOR REDUCED PLANS 0 1 2 3

UNIT: 3603
PROJECT NUMBER & PHASE: 0700021119-1
CONTRACT NO.: 07-1218w1

DISREGARD PRINTS BEARING EARLIER REVISION DATES

REVISION DATES: ~~1/20/08~~ 1/31/12

SHEET 45 OF 52

FILE => e53-1110-s-sadt04.dgn

USERNAME => s124496 DATE PLOTTED => 22-MAY-2012 TIME PLOTTED => 08:31

DIST	COUNTY	ROUTE	POST MILES TOTAL PROJECT	SHEET No.	TOTAL SHEETS
07	LA	5	29.4/31.6	1081	1931

REGISTERED CIVIL ENGINEER — DATE 1/31/12

5-21-12
PLANS APPROVAL DATE

REGISTERED PROFESSIONAL ENGINEER — JORGE I. ESTRADA — No. C51473 — Exp. 06-30-12 — CIVIL — STATE OF CALIFORNIA

The State of California or its officers or agents shall not be responsible for the accuracy or completeness of electronic copies of this plan sheet.

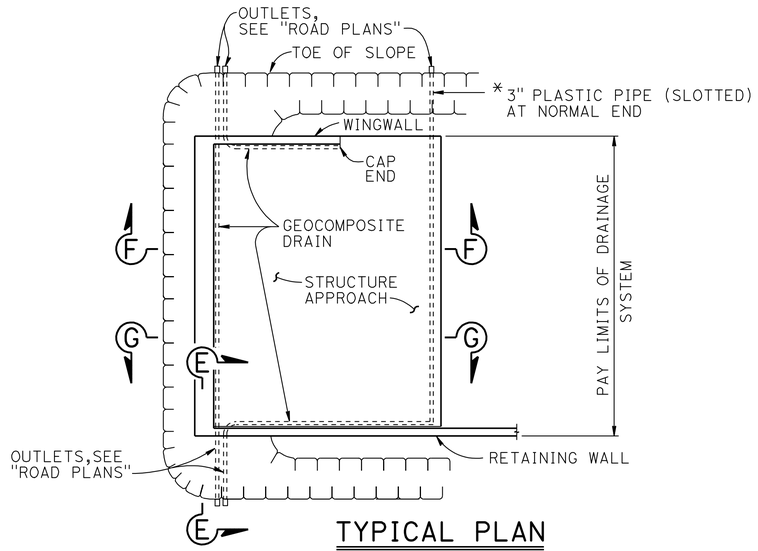

TYPICAL PLAN

1" = 10'

* FOR PIPE LAYOUT AT STAGGERED END, SEE "DETAIL B"

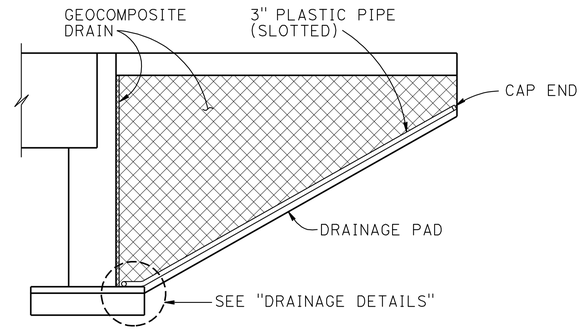

CANTILEVER WINGWALL

SECTION F-F

1/4" = 1'-0"

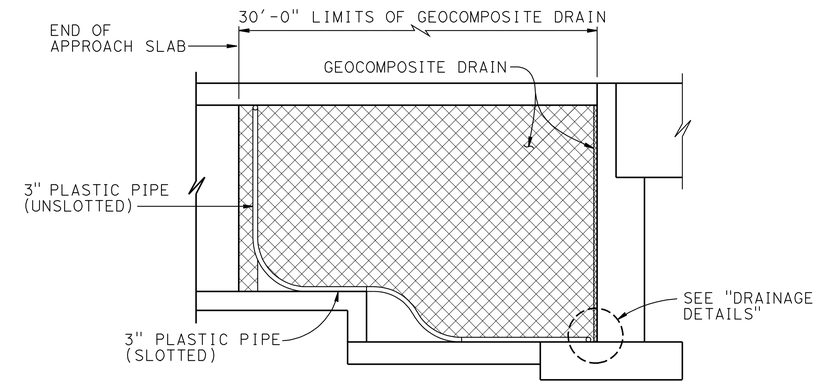

RETAINING WALL WINGWALL DRAINAGE DETAILS

SECTION G-G

1/4" = 1'-0"

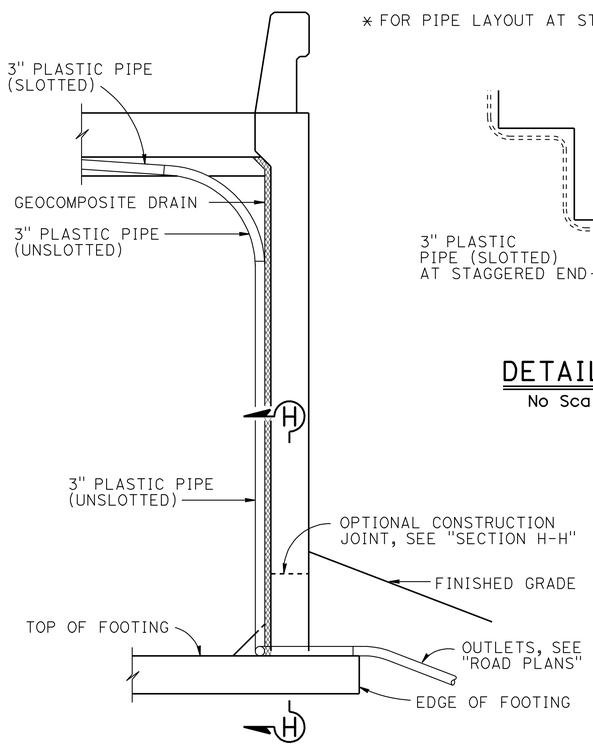

SECTION E-E

1/2" = 1'-0"

NOTE: Bends and junctions in 3" plastic pipe are 30" radius Min

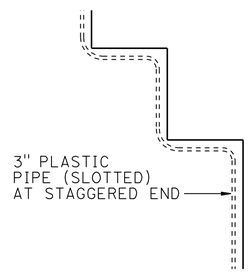

DETAIL B

No Scale

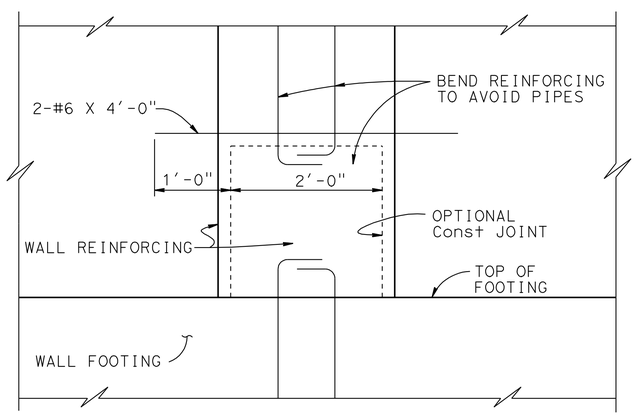

SECTION H-H

1" = 1'-0"

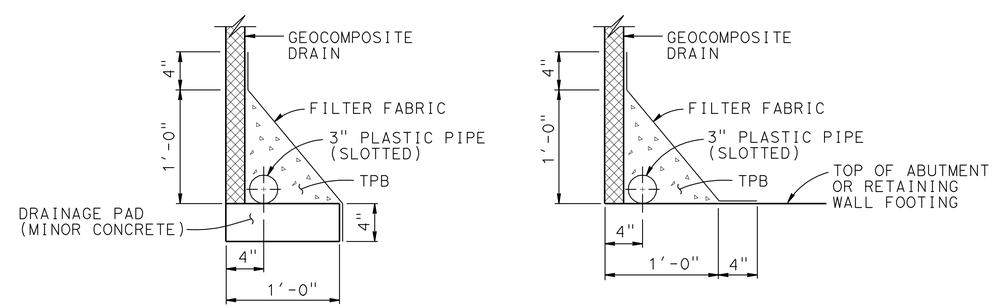

WITHOUT FOOTING

WITH FOOTING

DRAINAGE DETAILS

1 1/2" = 1'-0"

STANDARD DRAWING

FILE NO. **xs3-110**

APPROVAL DATE July 2011

STATE OF **CALIFORNIA** DEPARTMENT OF TRANSPORTATION

DIVISION OF ENGINEERING SERVICES

BRIDGE NO. 53-1110

POST MILE 31.23

BUENA VISTA - WINONA UC (WIDEN)

STRUCTURE APPROACH DRAINAGE DETAILS

DS OSD 2147A (ENGLISH STANDARD DRAWING "XS" BORDER REV. (02-02-11)

ORIGINAL SCALE IN INCHES FOR REDUCED PLANS 0 1 2 3

UNIT: 3603
PROJECT NUMBER & PHASE: 0700021119-1
CONTRACT NO.: 07-1218W1

DISREGARD PRINTS BEARING EARLIER REVISION DATES

REVISION DATES: 1/20/08 1/31/12

SHEET 46 OF 52

FILE => e53-1110-s-sadt05.dgn

USERNAME => s124496 DATE PLOTTED => 22-MAY-2012 TIME PLOTTED => 08:31

DIST	COUNTY	ROUTE	POST MILES TOTAL PROJECT	SHEET No	TOTAL SHEETS
07	LA	5	29.4/31.6	1082	1931

Joseph S. Pratt 1-31-12
CERTIFIED ENGINEERING GEOLOGIST

5-21-12
PLANS APPROVAL DATE

PROFESSIONAL GEOLOGIST Joseph S. Pratt No. 2141 Exp. 5-31-13 CERTIFIED ENGINEERING GEOLOGIST STATE OF CALIFORNIA

The State of California or its officers or agents shall not be responsible for the accuracy or completeness of electronic copies of this plan sheet.

BENCH MARKS

BM PRHV333 Elev 693.627 ft
Fd Brass Disk on shldr. SBND LA-5; ±42.6 ft from south end Buena Vista/Winona UC (Br. No. 53-1110); ±11.8 ft from white stripe ETW; 64.289 ft Lt Sta 1647+61.51 C/L Rte 5 (Prop).
N 1894696.28
E 6459607.018

BM PRHV611 Elev 694.251 ft
Fd Geodetic Control Mark ±8.9 ft east of the east curb of NBND LA-5; ±68.9 ft south of Call Box #5-314; between NBND Buena Vista St. Off-ramp and On-ramp; 102.567 ft Rt Sta 1657+19.04 C/L Rte 5 (Prop).
N 1895580.234
E 6459215.635

BM PRHV909 Elev 696.094 ft
Fd PK Nail in SBND LA-5 AC shoulder between Buena Vista St. Off-ramp and On-ramp; 43.894 ft Lt Sta 1657+24.72 C/L Rte 5 (Prop).
N 1895518.509
E 6459082.695

NAD83, NAVD88

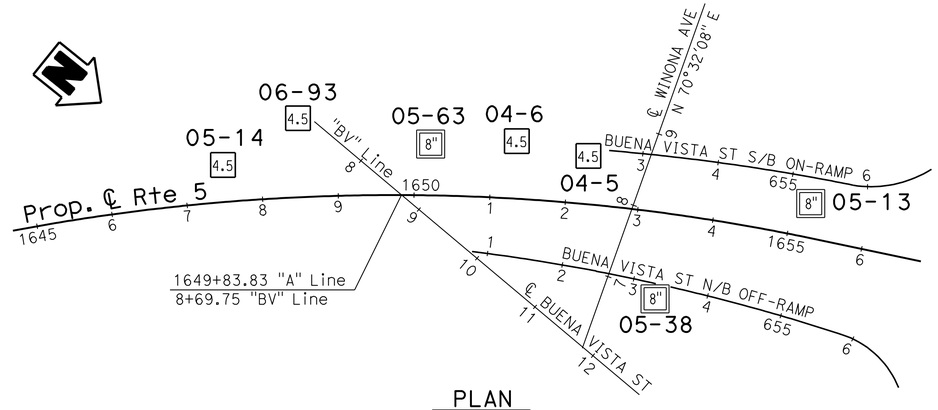

PLAN
1" = 100'

LEGEND:

- (M) Moisture Content
- (PA) Particle Size Analysis
- (PI) Plasticity, Index, Liquid Limit
- (CR) Corrosivity Testing
- (CP) Compaction

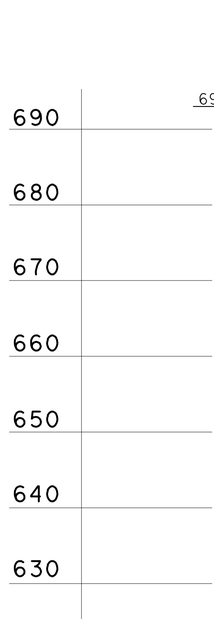

Note: No ground water encountered during field investigation.

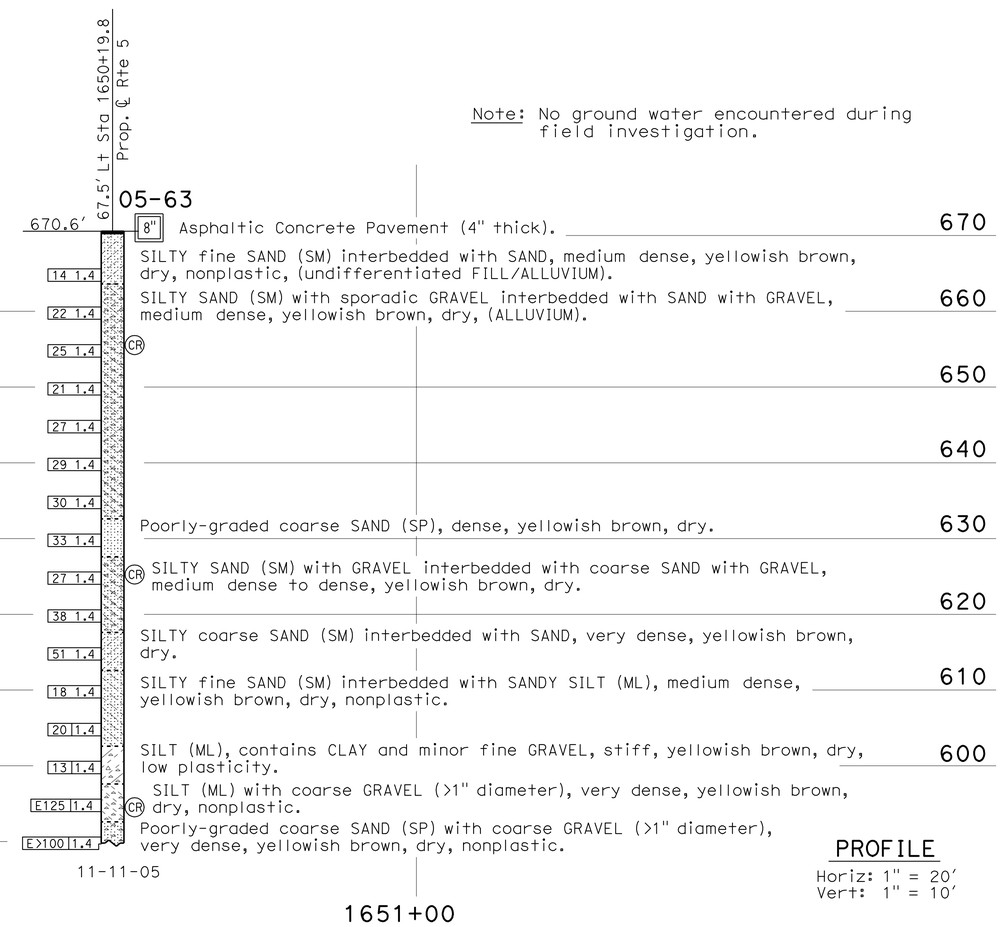

PROFILE
Horiz: 1" = 20'
Vert: 1" = 10'

LEGEND OF BORING OPERATIONS

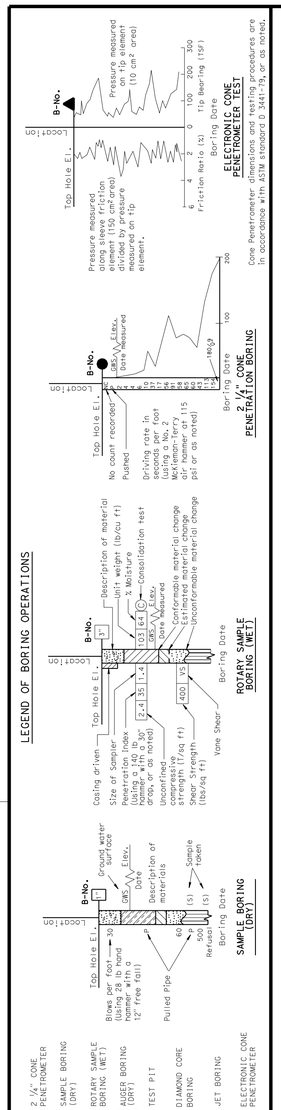

LEGEND OF EARTH MATERIALS

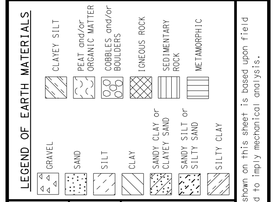

CONSISTENCY CLASSIFICATION FOR SOILS

According to the Standard Penetration Test

SPT N-Value (Blows/foot)	Granular	SPT N-Value (Blows/foot)	Cohesive
0-4	Very Loose	<2	Very Soft
5-10	Loose	2-4	Soft
11-30	Medium Dense	5-8	Medium stiff
31-50	Dense	9-15	Stiff
>50	Very Dense	16-30	Very Stiff
		31-60	Hard
		>60	Very Hard

NOTE: Classification of earth material as shown on this sheet is based upon field inspection and is not to be construed to imply mechanical analysis.

ENGINEERING SERVICES	GEOTECHNICAL SERVICES
DRAWN BY	I.G-Remmen
CHECKED BY	J. Pratt

FIELD INVESTIGATION BY: K. Lai

STATE OF CALIFORNIA
DEPARTMENT OF TRANSPORTATION

DIVISION OF ENGINEERING SERVICES
STRUCTURE DESIGN
DESIGN BRANCH 18

BRIDGE NO. 53-1110
POST MILE 31.23

BUENA VISTA - WINONA UC (WIDEN)
LOG OF TEST BORINGS 1 OF 6

OGS LOG OF TEST BORINGS SHEET (ENGLISH) (REV. 5/25/07)

ORIGINAL SCALE IN INCHES FOR REDUCED PLANS 0 1 2 3

UNIT: 3603
PROJECT NUMBER & PHASE: 0700021119-1
CONTRACT NO.: 07-1218W1

DISREGARD PRINTS BEARING EARLIER REVISION DATES

REVISION DATES				SHEET	OF
01-25-12	01-26-12			47	52

FILE => e53-1110-z-ltb01.dgn

USERNAME => s124496 DATE PLOTTED => 22-MAY-2012 TIME PLOTTED => 08:32

DIST	COUNTY	ROUTE	POST MILES TOTAL PROJECT	SHEET No	TOTAL SHEETS
07	LA	5	29.4/31.6	1083	1931

Joseph S. Pratt 1-31-12
CERTIFIED ENGINEERING GEOLOGIST

5-21-12
PLANS APPROVAL DATE

PROFESSIONAL GEOLOGIST Joseph S. Pratt No. 2141 Exp. 5-31-13 CERTIFIED ENGINEERING GEOLOGIST STATE OF CALIFORNIA

The State of California or its officers or agents shall not be responsible for the accuracy or completeness of electronic copies of this plan sheet.

LEGEND:

- (M) Moisture Content
- (PA) Particle Size Analysis
- (PI) Plasticity, Index, Liquid Limit
- (CR) Corrosivity Testing
- (CP) Compaction

FOR PLAN VIEW, SEE
"LOG OF TEST BORINGS 1 OF 6"

104.3' Lt Sta 1648+53.6
Prop. ℄ Rte 5

06-93

667.9'

4.5 Asphaltic Concrete Pavement (6").
SILTY fine SAND (SM) with GRAVEL, estimated medium dense, brown, dry, nonplastic, (Road Base material).
SILTY fine SAND (SM) gradationally interbedded with SANDY SILT (ML), estimated loose, brown, dry, nonplastic, (undifferentiated FILL/ALUVIUM).

660 — Poorly-graded fine SAND (SP), contains minor scattered GRAVEL (0 to 10%), loose to medium dense, yellowish brown to brown, moist, nonplastic, contains rootlets below elevation +664', (ALLUVIUM). — 660

14 | 1.4
20 | 1.4
23 | 1.4
26 | 1.4
32 | 1.4
29 | 1.4
36 | 1.4
29 | 1.4
42 | 1.4
30 | 1.4
26 | 1.4
44 | 1.4
23 | 1.4
12 | 1.4
E125 | 1.4
E93 | 1.4
E>100 | 1.4
E>100 | 1.4
E>100 | 1.4
E>100 | 1.4
E>100 | 1.4

Poorly-graded fine SAND (SP) with fine to coarse GRAVEL (15%), medium dense, yellowish brown, moist, nonplastic.
Well-graded SAND (SW) with scattered fine GRAVEL (10 to 15%), medium dense, yellowish brown, moist, nonplastic, clean.

650 — Well-graded fine to coarse GRAVEL (GW) with fine to coarse SAND matrix (35%) interbedded with well-graded SAND (SW) with GRAVEL (15%), medium dense, varicolored to yellowish brown, moist, nonplastic. — 650

SILTY fine SAND (SM) gradationally interbedded with SAND SILT (ML), medium dense, brown, moist, nonplastic, micaceous.

640 — Well-graded fine to coarse SAND (SW) with fine to coarse GRAVEL (20 to 45%), dense to medium dense, yellowish brown, moist, nonplastic. — 640

SILTY fine SAND (SM) with GRAVEL (20 to 35%), medium dense, brown, moist, nonplastic.
(CP) Well-graded SAND (SW) with GRAVEL (25 to 35%), dense, yellowish brown, moist, nonplastic.

630 — Well-graded fine to coarse SAND (SW) with fine GRAVEL (15 to 20%) interbedded with minor SILTY fine SAND (SM), dense, yellowish brown to brown, moist, nonplastic. — 630

Well-graded fine to coarse SAND (SW), medium dense, yellowish brown, moist, nonplastic.
Well-graded SAND (SW) with GRAVEL (30%), estimated medium dense to dense, yellowish brown, moist, nonplastic.
Poorly-graded fine SAND (SP), dense, yellowish brown, moist, nonplastic.

620 — Poorly-graded fine SAND with SILT (SP-SM) and fine GRAVEL (20%), dense, yellowish brown, moist, nonplastic. — 620

Well-graded SAND with SILT (SW-SM) and GRAVEL (15%) interbedded with well-graded SAND (SW) with GRAVEL (15%), medium dense, yellowish brown, moist, nonplastic.

SILTY fine SAND (SM), medium dense, brown, moist, nonplastic.

610 — Well-graded SAND (SW) with fine GRAVEL (15 to 20%), contains 5% SILT, medium dense, moist, nonplastic. — 610

SILTY fine SAND (SM), contains 35 to 40% SILT, estimated medium dense, brown, moist, nonplastic.
Well-graded SAND (SW) with scattered coarse and fine GRAVEL (15 to 20%), dense, yellowish brown, moist, nonplastic.

600 — SILTY fine SAND (SM) interbedded with poorly-graded fine SAND (SP), medium dense, brown to yellowish brown, moist, nonplastic.
SILTY fine SAND (SM) interbedded with well-graded SAND (SW) with GRAVEL (20%), estimated medium dense, moist, nonplastic. — 600

(M)(PA)(PI)(CR) SANDY lean CLAY (CL) interbedded with minor silty fine SAND (SM), stiff/minor medium dense, brown, moist, medium plasticity to minor nonplastic.

590 — Well-graded coarse to fine GRAVEL (GW) with fine to medium SAND matrix (30 to 40%) and scattered COBBLES (≤ 5") interbedded with well-graded SAND (SW) with coarse and fine GRAVEL (30%) and poorly-graded medium SAND (SP), very dense, varicolored to yellowish brown, moist; nonplastic; subrounded to subangular hard (slightly weathered) GRANITOID and SCHIST rock fragments, variable hard rock drilling. — 590

580 — 580

SAND, estimated very dense.

570 — (CR) Well-graded coarse to fine GRAVEL (GW) with scattered COBBLES (≤ 4") and SAND matrix interbedded with SAND, very dense, varicolored to yellowish brown, moist, nonplastic, GRANITOID rock fragments, variable hard rock, drilling. — 570

BOULDER (≤ 18").
COBBLES

560 — GRAVEL with scattered COBBLES and SAND, estimated very dense.
COBBLES and BOULDER, varicolored, soft (intensely weathered to decomposed) granitoid rock fragments. — 560

1-31-06

1648+50 1649+00 1650+00

Note: No ground water encountered during field investigation.

PROFILE
Horiz: 1" = 10'
Vert: 1" = 10'

LEGEND OF BORING OPERATIONS

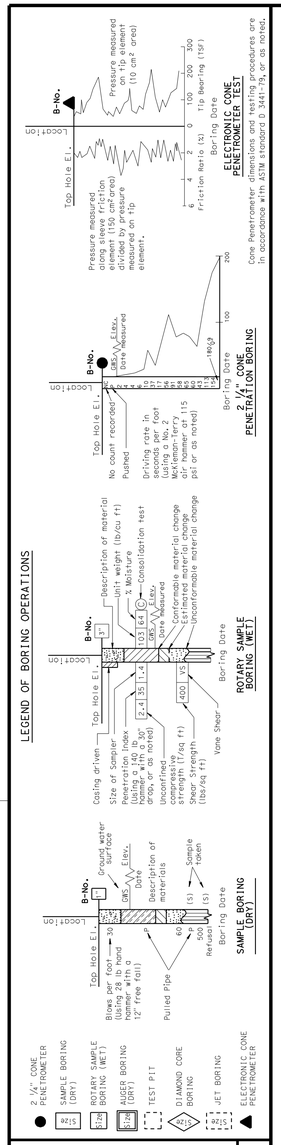

LEGEND OF EARTH MATERIALS

GRAVEL, SAND, SILT, CLAY, SANDY CLAY or CLAYEY SAND, SANDY SILT or SILTY SAND, SILTY CLAY, CLAYEY SILT, PEAT and/or ORGANIC MATTER, COBBLES and/or BOULDERS, IGNEOUS ROCK, SEDIMENTARY ROCK, METAMORPHIC

CONSISTENCY CLASSIFICATION FOR SOILS
According to the Standard Penetration Test

SPT N-Value (Blows/foot)	Granular	SPT N-Value (Blows/foot)	Cohesive
0-4	Very Loose	<2	Very Soft
5-10	Loose	2-4	Soft
11-30	Medium Dense	5-8	Medium stiff
31-50	Dense	9-15	Stiff
>50	Very Dense	16-30	Very Stiff
		31-60	Hard
		>60	Very Hard

NOTE: Classification of earth material as shown on this sheet is based upon field inspection and is not to be construed to imply mechanical analysis.

ENGINEERING SERVICES	GEOTECHNICAL SERVICES
DRAWN BY	I.G-Remmen
CHECKED BY	J. Pratt

FIELD INVESTIGATION BY: J. Pratt, B. Hettick

STATE OF CALIFORNIA DEPARTMENT OF TRANSPORTATION

DIVISION OF ENGINEERING SERVICES STRUCTURE DESIGN
DESIGN BRANCH 18

BRIDGE NO. 53-1110
POST MILE 31.23

BUENA VISTA - WINONA UC (WIDEN)
LOG OF TEST BORINGS 2 OF 6

OGS LOG OF TEST BORINGS SHEET (ENGLISH) (REV. 5/25/07)

ORIGINAL SCALE IN INCHES FOR REDUCED PLANS 0 1 2 3

UNIT: 3603
PROJECT NUMBER & PHASE: 0700021119-1
CONTRACT NO.: 07-1218W1

DISREGARD PRINTS BEARING EARLIER REVISION DATES → 01-25-12 01-26-12

SHEET 48 OF 52

FILE => e53-1110-z-ltb02.dgn

USERNAME => s124496 DATE PLOTTED => 22-MAY-2012 TIME PLOTTED => 08:32

DIST	COUNTY	ROUTE	POST MILES TOTAL PROJECT	SHEET No	TOTAL SHEETS
07	LA	5	29.4/31.6	1084	1931

Joseph S. Pratt 1-31-12
CERTIFIED ENGINEERING GEOLOGIST

5-21-12
PLANS APPROVAL DATE

PROFESSIONAL GEOLOGIST — Joseph S. Pratt No. 2141 Exp. 5-31-13 — CERTIFIED ENGINEERING GEOLOGIST — STATE OF CALIFORNIA

The State of California or its officers or agents shall not be responsible for the accuracy or completeness of electronic copies of this plan sheet.

LEGEND:

- (M) Moisture Content
- (PA) Particle Size Analysis
- (PI) Plasticity, Index, Liquid Limit
- (CR) Corrosivity Testing
- (CP) Compaction

FOR PLAN VIEW, SEE
"LOG OF TEST BORINGS 1 OF 6"

Note: No ground water encountered during field investigation.

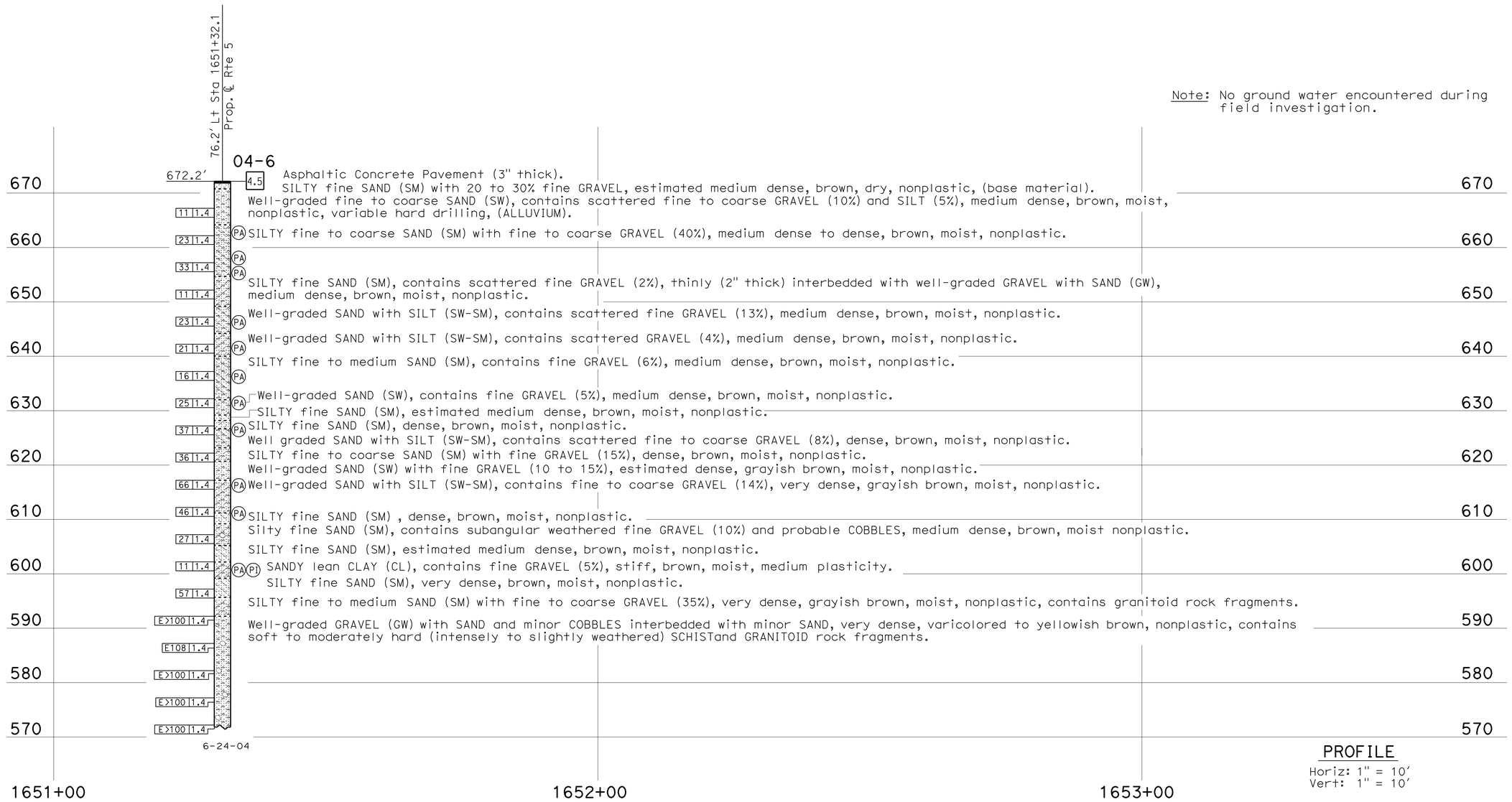

PROFILE
Horiz: 1" = 10'
Vert: 1" = 10'

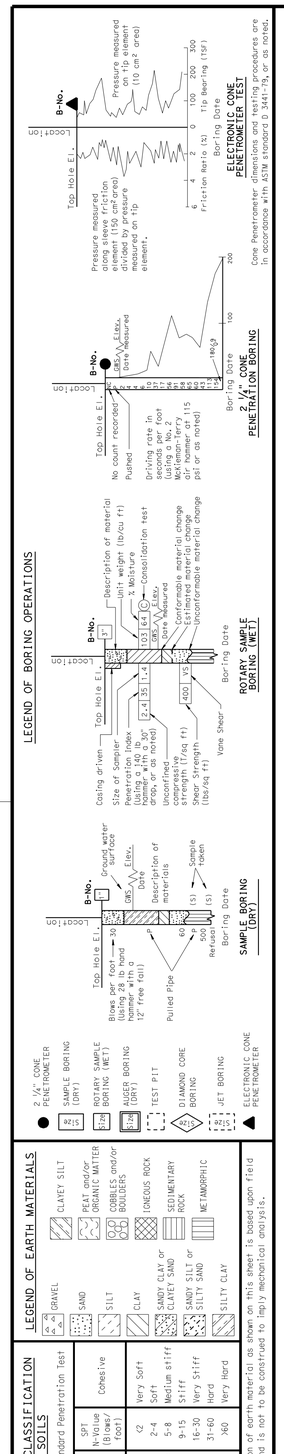

ENGINEERING SERVICES	GEOTECHNICAL SERVICES
DRAWN BY	I.G-Remmen
CHECKED BY	J. Pratt

FIELD INVESTIGATION BY: J. Pratt, B. Hettick, P. Truong

STATE OF CALIFORNIA DEPARTMENT OF TRANSPORTATION

DIVISION OF ENGINEERING SERVICES STRUCTURE DESIGN — DESIGN BRANCH 18

BRIDGE NO. 53-1110 — POST MILE 31.23

BUENA VISTA - WINONA UC (WIDEN)
LOG OF TEST BORINGS 3 OF 6

OGS LOG OF TEST BORINGS SHEET (ENGLISH) (REV. 5/25/07)

ORIGINAL SCALE IN INCHES FOR REDUCED PLANS 0 1 2 3

UNIT: 3603
PROJECT NUMBER & PHASE: 0700021119-1 CONTRACT NO.: 07-1218W1

DISREGARD PRINTS BEARING EARLIER REVISION DATES → REVISION DATES 01-25-12 01-26-12

SHEET 49 OF 52

FILE => e53-1110-z-ltb03.dgn

USERNAME => s124496 DATE PLOTTED => 22-MAY-2012 TIME PLOTTED => 08:32

DIST	COUNTY	ROUTE	KILOMETER POST TOTAL PROJECT	SHEET No	TOTAL SHEETS
07	LA	5	29.4/31.6	1085	1931

Joseph S. Pratt 1-31-12
CERTIFIED ENGINEERING GEOLOGIST

5-21-12
PLANS APPROVAL DATE

PROFESSIONAL GEOLOGIST Joseph S. Pratt No. 2141 Exp. 5-31-13 CERTIFIED ENGINEERING GEOLOGIST STATE OF CALIFORNIA

The State of California or its officers or agents shall not be responsible for the accuracy or completeness of electronic copies of this plan sheet.

LEGEND:

- (M) Moisture Content
- (PA) Particle Size Analysis
- (PI) Plasticity, Index, Liquid Limit
- (CR) Corrosivity Testing
- (CP) Compaction

FOR PLAN VIEW, SEE
"LOG OF TEST BORINGS 1 OF 6"

63.8 Lt Sta 1652+25.3
Prop. ℄ Rte 5

04-5

673.4′ | 4.5 Asphalt Concrete Pavement (5").

SILTY fine SAND (SM) contains 25% fine GRAVEL, estimated medium dense, brown, dry, nonplastic, (Base Material).
Well-graded SAND (SW) with fine and coarse GRAVEL, medium dense, light brown, moist, nonplastic, (ALLUVIUM).
SILTY fine to medium SAND (SM), medium dense, brown, moist, nonplastic.
Poorly-graded coarse GRAVEL (GP), contains COBBLES (up to 6"), estimated medium dense, varicolored, nonplastic.
Poorly-graded SAND with SILT & 25% coarse GRAVEL (SP-SM), medium dense, yellowish brown, moist, nonplastic.
Well-graded SAND with fine GRAVEL (SW), medium dense to dense, light brown and yellow, moist, nonplastic.
Well-graded fine to coarse GRAVEL (GW), estimated medium dense, light brown, moist, nonplastic, subrounded to subangular (slightly weathered) rock fragments.
Well-graded SAND with fine GRAVEL (SW), medium dense, light brown, moist, nonplastic.
SILTY fine SAND (SM), contains 2-5% CLAY and 2-5% fine GRAVEL, medium dense, brown, moist, nonplastic.
Poorly-graded coarse GRAVEL (GP) with fine to coarse SAND and 6" COBBLES (subangular), estimated medium dense, light brown and gray, moist.
Poorly-graded coarse GRAVEL (GP), medium dense, light brown, moist, decomposed & intensely weathered rock fragments.
Well-graded SAND with 10 to 20% fine GRAVEL (SW), medium dense, light brown, moist.
Well-graded SAND with SILT and 20% GRAVEL (SW-SM), dense, brown, moist, nonplastic.
SILTY fine SAND (SM), contains 5% CLAY, loose, brown, moist, nonplastic.

SILTY fine SAND (SM), contains 5% fine GRAVEL, medium dense, brown, moist, nonplastic.
SILTY fine SAND (SM), contains 5% coarse GRAVEL, estimated medium dense, light brown, moist, nonplastic.
SILTY fine SAND (SM), contains 5% CLAY, medium dense, brown, moist, nonplastic.
SILTY fine to medium SAND (SM), contains 5% fine GRAVEL, dense, light brown, moist, nonplastic

COBBLES and GRAVEL, contains <5% fine GRAVEL, light brown, decomposed soft rock fragments.
SILTY fine to medium SAND (SM), contains 5% fine GRAVEL, dense, light brown, moist, nonplastic.
SILTY medium to coarse SAND (SM), contains 10-15% fine to coarse GRAVEL, dense, brown, moist, nonplastic.

SILTY fine SAND (SM), dense, brown, moist, nonplastic.
Poorly-graded fine to medium SAND (SP), contains 5% fine GRAVEL and 5% SILT, dense, light brown, moist, nonplastic.
SANDY SILT (ML), loose, brown, moist, nonplastic.
Lean CLAY with SAND (CL), firm, yellowish brown, moist, medium plasticity.

Well-graded GRAVEL (GW) with SAND, contains COBBLES (5"), very dense, gray and light brown, subangular and subrounded rock fragments.

Well-graded GRAVEL (GW) with SAND and COBBLES (4 to 8" diameter) and interbedded SAND, very dense, varicolored to yellowish brown, contains subrounded to subangular hard (slightly weathered) to very soft (decomposed to intensely weathered) GRANITOID, SCHIST, and GNESSIC rock fragments.

21	1.4	22	1.4	44	1.4	11	1.4	24	1.4	41	1.4
6	1.4	14	1.4	13	1.4	36	1.4	40	1.4	58	1.4
38	1.4	8	1.4	E>100	1.4	E106	1.4	E>100	1.4	E>100	1.4

CR, PA, PI, 4"

6-23-04

Note: No ground water encountered during field investigation.

670, 660, 650, 640, 630, 620, 610, 600, 590, 580, 570

1652+00 1653+00 1654+00

PROFILE
Horiz: 1" = 10′
Vert: 1" = 10′

LEGEND OF BORING OPERATIONS

LEGEND OF EARTH MATERIALS: GRAVEL, SAND, SILT, CLAY, SANDY CLAY or CLAYEY SAND, SANDY SILT or CLAYEY SILT, SILTY CLAY, CLAYEY SILT, PEAT and/or ORGANIC MATTER, COBBLES and/or BOULDERS, IGNEOUS ROCK, SEDIMENTARY ROCK, METAMORPHIC

CONSISTENCY CLASSIFICATION FOR SOILS
According to the Standard Penetration Test

SPT N-Value (Blows/foot)	Granular	SPT N-Value (Blows/foot)	Cohesive
0-4	Very Loose	<2	Very Soft
5-10	Loose	2-4	Soft
11-30	Medium Dense	5-8	Medium stiff
31-50	Dense	9-15	Stiff
>50	Very Dense	16-30	Very Stiff
		31-60	Hard
		>60	Very Hard

NOTE: Classification of earth material as shown on this sheet is based upon field inspection and is not to be construed to imply mechanical analysis.

ENGINEERING SERVICES	GEOTECHNICAL SERVICES
DRAWN BY	I.G-Remmen
CHECKED BY	J. Pratt

FIELD INVESTIGATION BY: J. Pratt, B. Hettick, B. McGahey

STATE OF CALIFORNIA DEPARTMENT OF TRANSPORTATION

DIVISION OF ENGINEERING SERVICES STRUCTURE DESIGN
DESIGN BRANCH 18

BRIDGE NO. 53-1110
POST MILE 31.23

BUENA VISTA - WINONA UC (WIDEN)
LOG OF TEST BORINGS 4 OF 6

OGS LOG OF TEST BORINGS SHEET (ENGLISH) (REV. 5/25/07)

ORIGINAL SCALE IN INCHES FOR REDUCED PLANS 0 1 2 3

UNIT: 3603
PROJECT NUMBER & PHASE: 0700021119-1 CONTRACT NO.: 07-1218W1

DISREGARD PRINTS BEARING EARLIER REVISION DATES 01-25-12 01-26-12

SHEET 50 OF 52

FILE => e53-1110-z-ltb04.dgn

USERNAME => s124496 DATE PLOTTED => 22-MAY-2012 TIME PLOTTED => 08:32

DIST	COUNTY	ROUTE	KILOMETER POST TOTAL PROJECT	SHEET No	TOTAL SHEETS
07	LA	5	29.4/31.6	1086	1931

Joseph S. Pratt 1-31-12
CERTIFIED ENGINEERING GEOLOGIST

5-21-12
PLANS APPROVAL DATE

PROFESSIONAL GEOLOGIST Joseph S. Pratt No. 2141 Exp. 5-31-13 CERTIFIED ENGINEERING GEOLOGIST STATE OF CALIFORNIA

The State of California or its officers or agents shall not be responsible for the accuracy or completeness of electronic copies of this plan sheet.

LEGEND:

- (M) Moisture Content
- (PA) Particle Size Analysis
- (PI) Plasticity, Index, Liquid Limit
- (CR) Corrosivity Testing
- (CP) Compaction

FOR PLAN VIEW, SEE
"LOG OF TEST BORINGS 1 OF 6"

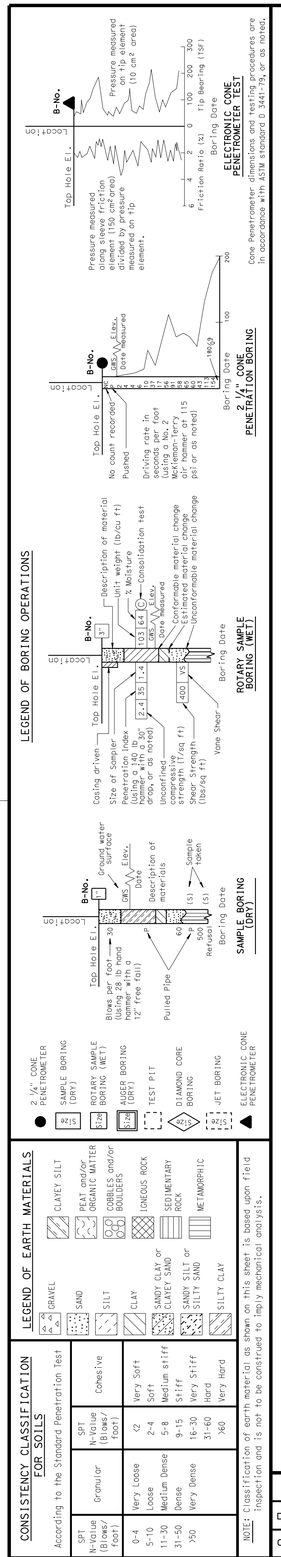

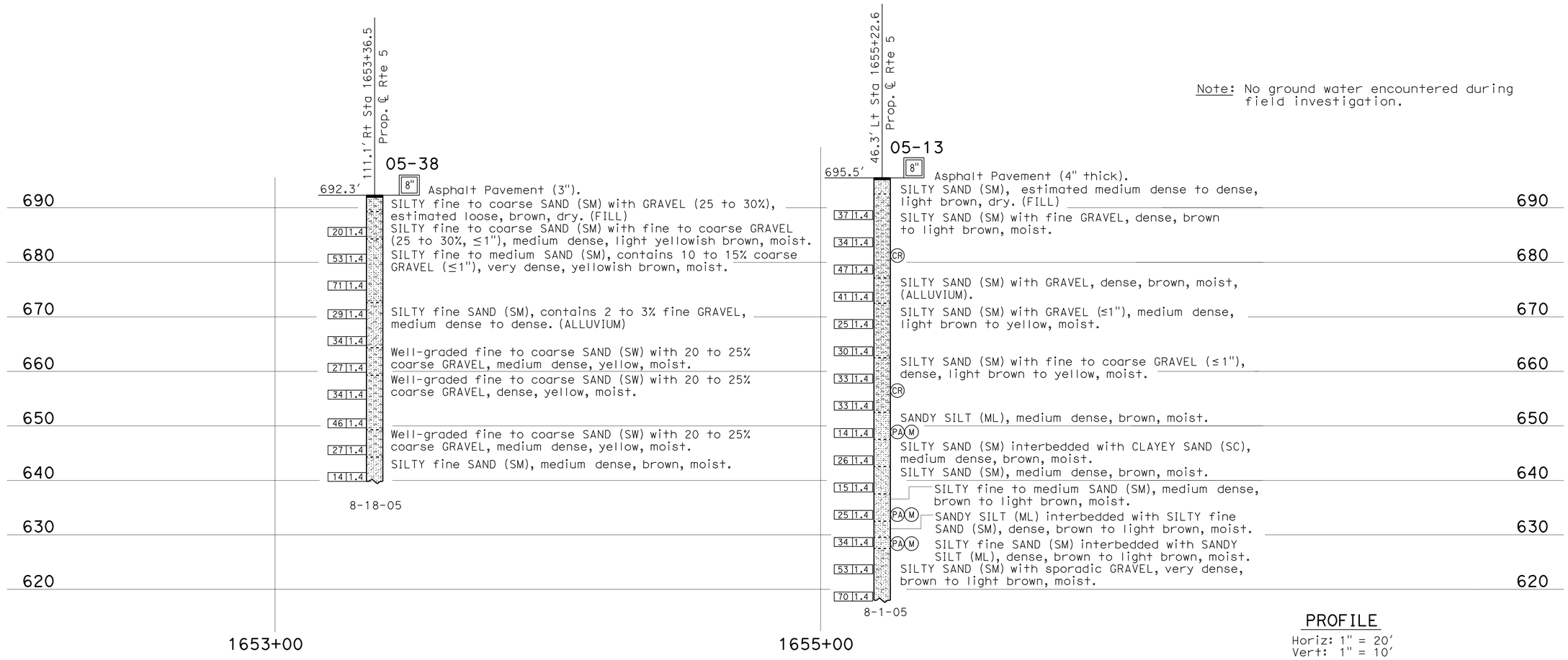

Note: No ground water encountered during field investigation.

PROFILE
Horiz: 1" = 20'
Vert: 1" = 10'

ENGINEERING SERVICES	GEOTECHNICAL SERVICES
DRAWN BY	I.G-Remmen
CHECKED BY	J. Pratt

FIELD INVESTIGATION BY: M. Abouzalan

STATE OF CALIFORNIA DEPARTMENT OF TRANSPORTATION

DIVISION OF ENGINEERING SERVICES STRUCTURE DESIGN DESIGN BRANCH 18

BRIDGE NO. 53-1110
POST MILE 31.23

BUENA VISTA - WINONA UC (WIDEN)
LOG OF TEST BORINGS 5 OF 6

OGS LOG OF TEST BORINGS SHEET (ENGLISH) (REV. 5/25/07)

ORIGINAL SCALE IN INCHES FOR REDUCED PLANS 0 1 2 3

UNIT: 3603
PROJECT NUMBER & PHASE: 0700021119-1
CONTRACT NO.: 07-1218W1

DISREGARD PRINTS BEARING EARLIER REVISION DATES

REVISION DATES 01-25-12

SHEET 51 OF 52

FILE => e53-1110-z-ltb05.dgn

USERNAME => s124496 DATE PLOTTED => 22-MAY-2012 TIME PLOTTED => 08:32

FED. ROAD DIV. No	STATE	PROJ. No.	FISCAL YEAR	SHEET No.	TOTAL SHEETS
7	CAL.			393	448

I-081-3 (6)

DIST.	COUNTY	ROUTE	SECTION	SHEET NO.	TOTAL SHEETS
VII	LA				

BRIDGE ENGINEER — CIVIL ENGINEER - LICENSE #

DATE APPROVED AUGUST 1 1958

TO ACCOMPANY PLANS DATED 5-21-12

DIVISION OF ENGINEERING SERVICES - MATERIALS AND GEOTECHNICAL SERVICES

As-Built Log of Test Borings sheet is considered an informational document only. As such, the State of California registration seal with signature, license number and registration certificate expiration date confirm that this is a true and accurate copy of the original document. It does not attest to the accuracy or validity of the information contained in the original document. This drawing is available and presented only for the convenience of any bidder, contractor or other interested party.

DIST.	COUNTY	ROUTE	POST MILE-TOTAL PROJECT	Sheet No.	Total Sheets
07	LA	5	29.4/31.6	1087	1931

CERTIFIED ENGINEERING GEOLOGIST — DATE 1/31/12

PROFESSIONAL GEOLOGIST — Joseph S. Pratt — No. 2141 — Exp. 5-31-13 — CERTIFIED ENGINEERING GEOLOGIST — STATE OF CALIFORNIA

BUENA VISTA - WINONA UC (WIDEN)

LOG OF TEST BORINGS 6 OF 6

UNIT: 3643	CONTRACT No.	BRIDGE No.
PROJ. No. & PHASE: 07000211191	07-1218W1	53-1110

VERT DATUM: NGVD29 CONVERSION: NAVD88= NGVD29 + 2.58 ft — Sheet of

NOTE: A COPY OF THIS LOG OF TEST BORINGS IS AVAILABLE AT OFFICE OF STRUCTURE MAINTENANCE AND INVESTIGATIONS, SACRAMENTO, CALIFORNIA

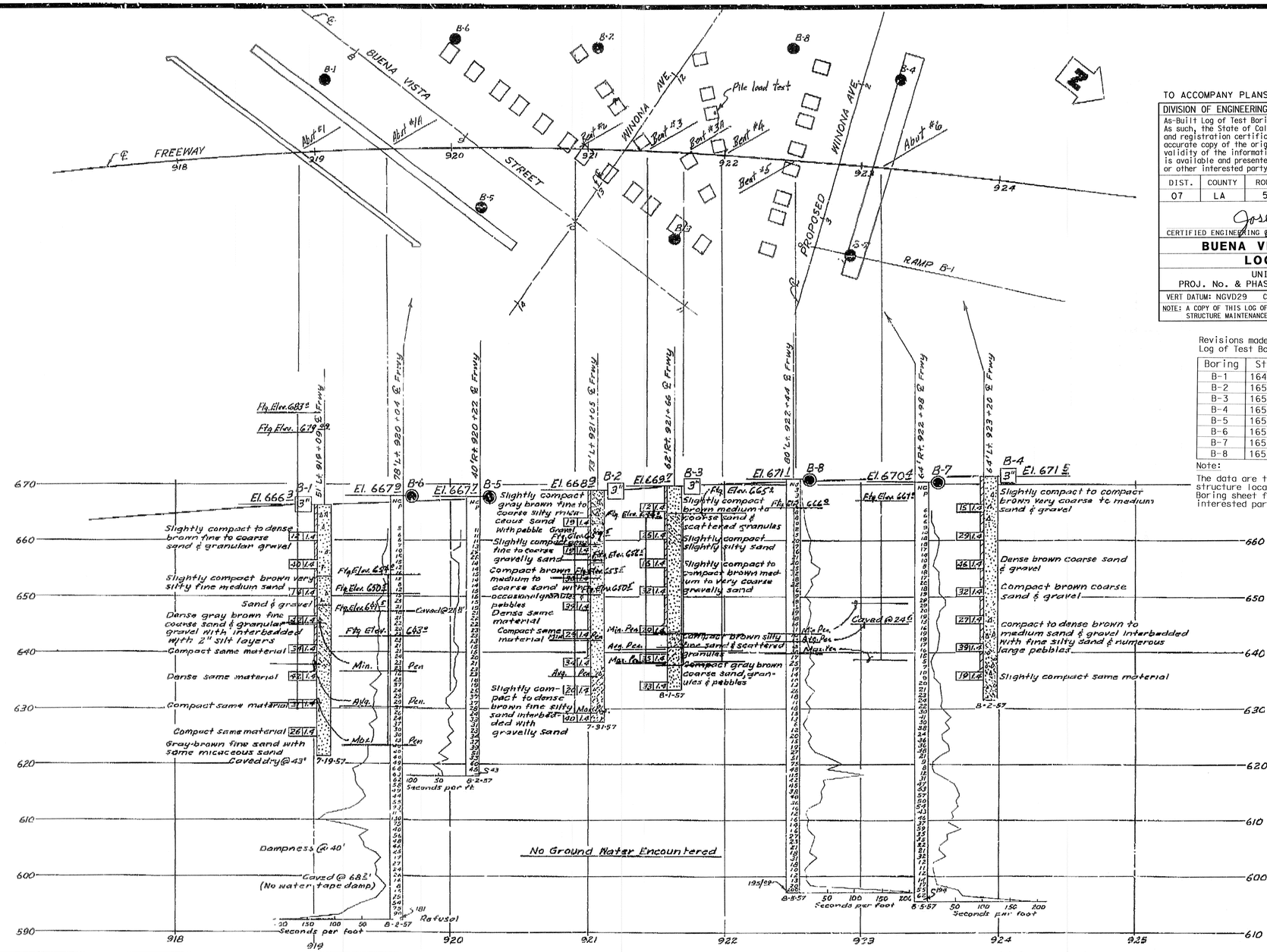

Revisions made to this Log of Test Borings from the original 1957 As-Built Log of Test Borings are the addition of the following table and note:

Boring	Station	Offset from Prop. ℄ Rte 5
B-1	1649+05.1	27.2 ft Left
B-2	1651+03.1	43.7 ft Left
B-3	1651+61.7	92.6 ft Right
B-4	1653+19.9	30.5 ft Left
B-5	1650+16.4	67.1 ft Right
B-6	1650+01.5	51.4 ft Left
B-7	1652+95.5	97.1 ft Right
B-8	1652+43.4	47.8 ft Left

Note:

The data are the As-Built Test Borings referenced to the proposed new structure location. This table is presented on the As-Built Log of Test Boring sheet for the convenience of any bidder, contractor or other interested party.

AS BUILT PLANS
Contract No. 59-7VC59
Date Completed
Document No. 70002271

B.M. 97-L.A-54
Ramset nail in S.W. curb ret. at int. of Buena Vista St. & Winona Ave.
Elev. 667.862

6-22-61 A.W.D. L.Y. 9-61

BRIDGE DEPARTMENT

FIELD STUDY by Eggen 8-2-57
DRAWN by Bystedt 9-13-57
CHECKED by
Approval Recommended by
Engineering Geologist
Chief, Bridge Maintenance

CLASSIFICATION OF MATERIAL BASED ON STANDARD GRADE SIZE LIMITS

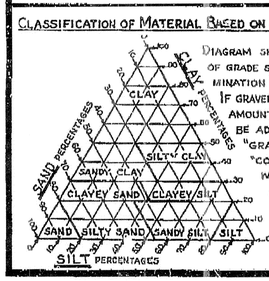

DIAGRAM SHOWING THE BASIS FOR ESTIMATES OF GRADE SIZE DISTRIBUTION USED IN DETERMINATION OF CLASS NAMES.

IF GRAVEL IS PRESENT IN APPRECIABLE AMOUNTS THE TERM "GRAVELLY" MAY BE ADDED TO THE CLASS NAME, VIZ. "GRAVELLY SAND". THE TERMS "COARSE", "MEDIUM" AND "FINE" WHEN USED TO DESCRIBE SAND, SILT AND GRAVEL REFER TO STANDARD GRADE SIZE LIMITS.

LEGEND OF EARTH MATERIALS

- GRAVEL
- SAND
- SILTY
- CLAY
- SANDY CLAY OR CLAYEY SAND
- SANDY SILT OR SILTY SAND
- SILTY CLAY OR CLAYEY SILT
- PEAT AND/OR ORGANIC MATTER
- FILL MATERIAL
- IGNEOUS ROCK
- SEDIMENTARY ROCK
- METAMORPHIC ROCK

LEGEND OF BORING OPERATIONS

- PLAN OF ANY BORING
- PENETROMETER
- 2½" CONE PENETROMETER
- SAMPLER BORING (DRY)
- ROTARY BORING (WET)
- AUGER BORING (DRY)
- JET BORING
- CORE BORING
- TEST PIT

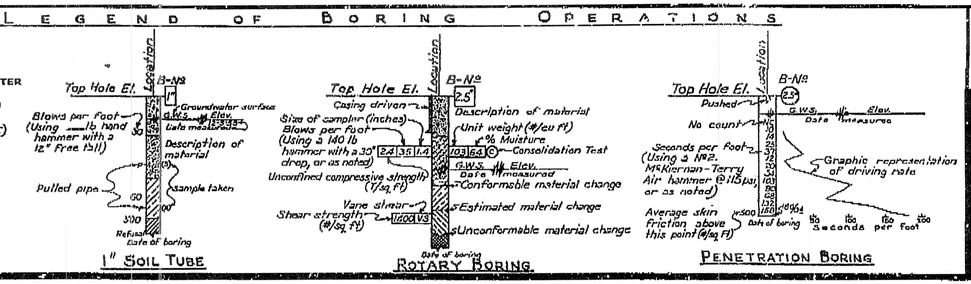

NOTES

The contractor's attention is directed to Section 2, Article (c) of the Standard Specifications and to the Special Provisions accompanying this set of plans.

Classification of earth material as shown on this sheet is based upon field inspection and is not to be construed to imply mechanical analysis.

STATE OF CALIFORNIA
DEPARTMENT OF PUBLIC WORKS
DIVISION OF HIGHWAYS

BUENA VISTA — WINONA UNDERCROSSING

LOG OF TEST BORINGS

SCALE Horiz. 1"=40' Vert. 1"=10' — BRIDGE 53-1110 — FILE — DRAWING C-3927-30

395

PREL. DRAWING NO. P-3927 33

e53-1110-z-ltb06.tif

DIST	COUNTY	ROUTE	POST MILES TOTAL PROJECT	SHEET No.	TOTAL SHEETS
07	LA	5	29.4/31.6	1088	1931

JEstrada. 01/31/12
REGISTERED CIVIL ENGINEER DATE

5-21-12
PLANS APPROVAL DATE

REGISTERED PROFESSIONAL ENGINEER JORGE I. ESTRADA No. C51473 Exp. 06-30-12 CIVIL STATE OF CALIFORNIA

The State of California or its officers or agents shall not be responsible for the accuracy or completeness of electronic copies of this plan sheet.

INDEX TO PLANS

Sheet No.	Title
1	GENERAL PLAN
2	FOUNDATION PLAN
3	STRUCTURE PLAN NO. 1
4	STRUCTURE PLAN NO. 2
5	RETAINING WALL 7SW DETAILS NO. 1
6	RETAINING WALL 7SW DETAILS NO. 2
7	TIEDOWN ANCHOR DETAILS NO.1
8	TIEDOWN ANCHOR DETAILS NO.2
9	ARCHITECTURAL TREATMENT NO. 1
10	ARCHITECTURAL TREATMENT NO. 2
11	ARCHITECTURAL TREATMENT NO. 3
12	LOG OF TEST BORINGS 1 OF 4
13	LOG OF TEST BORINGS 2 OF 4
14	LOG OF TEST BORINGS 3 OF 4
15	LOG OF TEST BORINGS 4 OF 4

STANDARD PLANS DATED MAY 2006

A10A- A10B	ACRONYMS AND ABBREVIATIONS
A10C- A10D	SYMBOLS
A62B	LIMITS OF PAYMENT FOR EXCAVATION AND BACKFILL BRIDGE SURCHARGE AND WALL
RSP A76A	CONCRETE BARRIER TYPE 60
B0-3	BRIDGE DETAILS
B3-1	RETAINING WALL TYPE 1 H = 4' THROUGH 30'
B3-8	RETAINING WALL DETAILS NO. 1
B3-9	RETAINING WALL DETAILS NO. 2
B11-52	CHAIN LINK RAILING TYPE 7
B11-56	CONCRETE BARRIER TYPE 736
RSP ES-6A	ELECTRICAL SYSTEM (LIGHTING STANDARD TYPES 15 AND 21)

STANDARD PLAN SHEET NO.

DETAIL NO.

QUANTITIES

STRUCTURE EXCAVATION (RETAINING WALL)	2,147	CY
STRUCTURE BACKFILL (RETAINING WALL)	1,528	CY
PERVIOUS BACKFILL MATERIAL	125	CY
TIEDOWN ANCHOR	21	EA
STRUCTURAL CONCRETE, RETAINING WALL	872	CY
ARCHITECTURAL TREATMENT	5,579	SQFT
BAR REINFORCING STEEL (RETAINING WALL)	80,428	LB
CHAIN LINK RAILING (TYPE 7)	440	LF
CONCRETE BARRIER (TYPE 736A MODIFIED)	440	LF

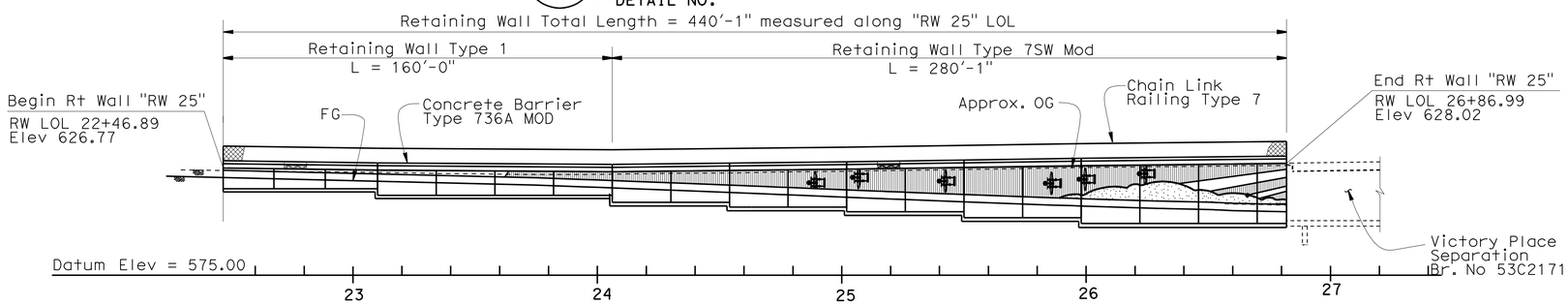

DEVELOPED ELEVATION

1" = 30'-0"

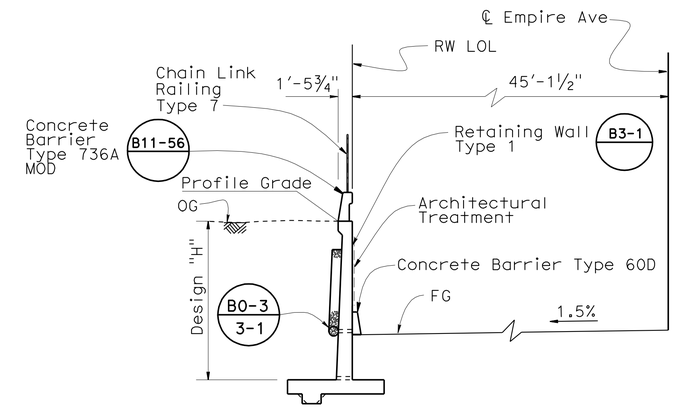

TYPICAL SECTION A-A (TYPE 1)

No Scale

Notes:

1. For spread footing data table see "STRUCTURE PLAN No. 2" sheet
2. Relocation of existing utilities prior to this Contract by Others
3. For electrolier locations and pedestal details, see "Structure Plan No. 2" sheet

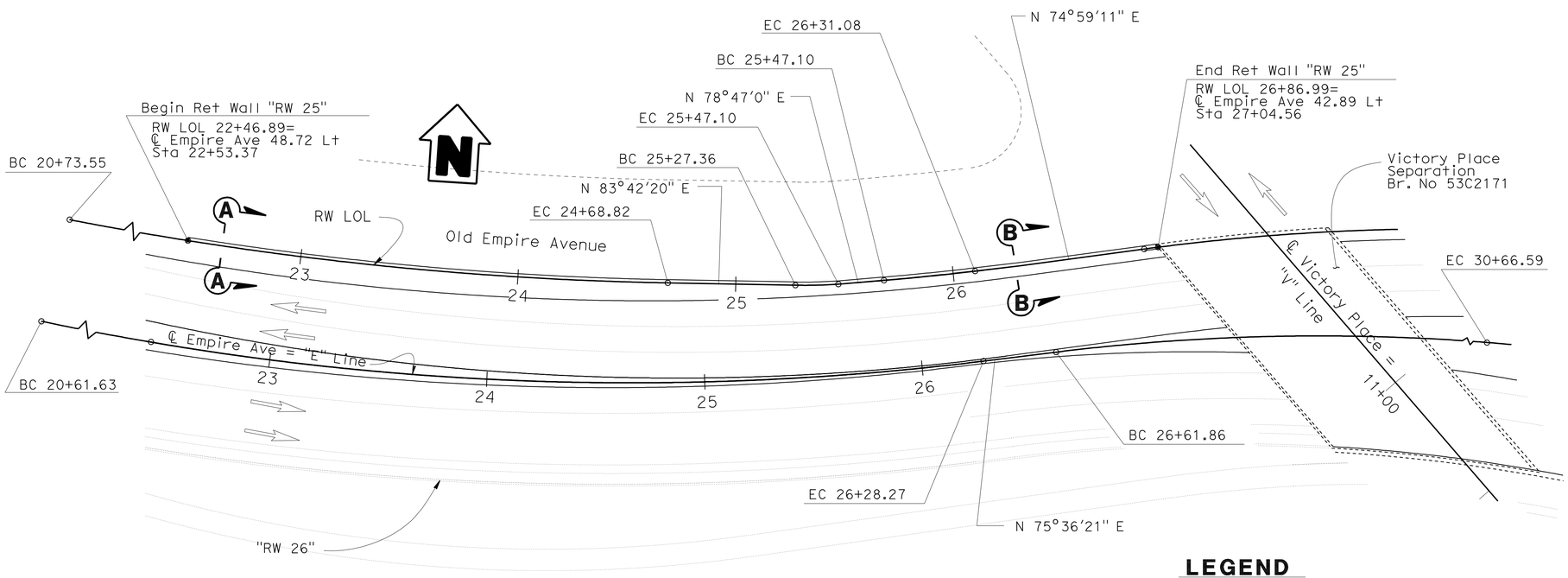

PLAN

1" = 30'-0"

LEGEND

Indicates Limits of bridge

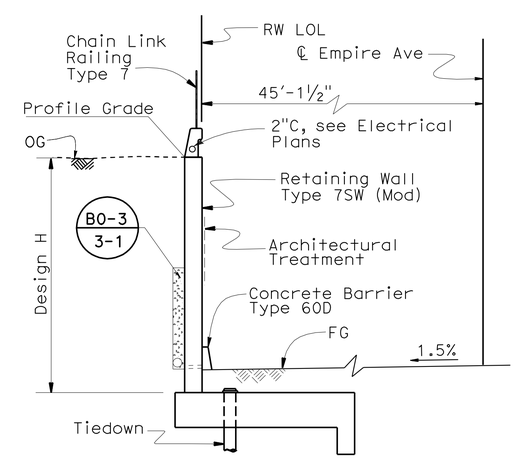

TYPICAL SECTION B-B (TYPE 7SW Mod)

NO SCALE

MIKE POPE DESIGN ENGINEER	DESIGN	BY DAVID P MURRAY	CHECKED J. RUIZ / I. KARAM	LOAD FACTOR DESIGN	LIVE LOADING: HS20-44 AND ALTERNATIVE AND PERMIT DESIGN LOAD
	DETAILS	BY JINLI GUO	CHECKED DAVID P MURRAY	LAYOUT BY JINLI GUO	CHECKED DAVID MURRAY
	QUANTITIES	BY JOSH RUNNION	CHECKED CORY COWDEN	SPECIFICATIONS BY JAMES CHOI	PLANS AND SPECS COMPARED

STATE OF CALIFORNIA
DEPARTMENT OF TRANSPORTATION

DIVISION OF ENGINEERING SERVICES
STRUCTURE DESIGN
DESIGN BRANCH 18

BRIDGE NO. RW 25
POST MILE 30.53

RETAINING WALL 25
GENERAL PLAN

ALL DIMENSIONS ARE IN FEET UNLESS OTHERWISE SHOWN

ORIGINAL SCALE IN INCHES FOR REDUCED PLANS 0 1 2 3

UNIT: 3603
PROJECT NUMBER & PHASE: 07000211191
CONTRACT NO.: 07-1218W1

DISREGARD PRINTS BEARING EARLIER REVISION DATES

REVISION DATES: 09/02/11 01/23/12 04/30/12

SHEET 1 OF 15

STRUCTURES DESIGN GENERAL PLAN SHEET (ENGLISH) (REV.09-01-10)

FILE => 53-rw25-a-gp.dgn

USERNAME => s124496 DATE PLOTTED => 22-MAY-2012 TIME PLOTTED => 08:32

DIST	COUNTY	ROUTE	POST MILES TOTAL PROJECT	SHEET No.	TOTAL SHEETS
07	LA	5	29.4/31.6	1089	1931

JEstrada. 01/31/12
REGISTERED CIVIL ENGINEER DATE

5-21-12
PLANS APPROVAL DATE

REGISTERED PROFESSIONAL ENGINEER
JORGE I. ESTRADA
No. C51473
Exp. 06-30-12
CIVIL
STATE OF CALIFORNIA

The State of California or its officers or agents shall not be responsible for the accuracy or completeness of electronic copies of this plan sheet.

CURVE DATA

No.	R	Δ	T	L
A	1588.84	14°15'14"	198.66	395.27
B	229.66	04°55'25"	9.87	19.74
C	1267.71	03°47'44"	42.01	83.98
D	1313.97	24°42'31"	287.80	566.65
E	983.17	23°35'11"	205.27	404.73
F	1364.17	27°42'34"	336.45	659.74
H	552.00	06°14'20"	30.08	60.11
I	809.71	02°21'07"	16.62	33.24

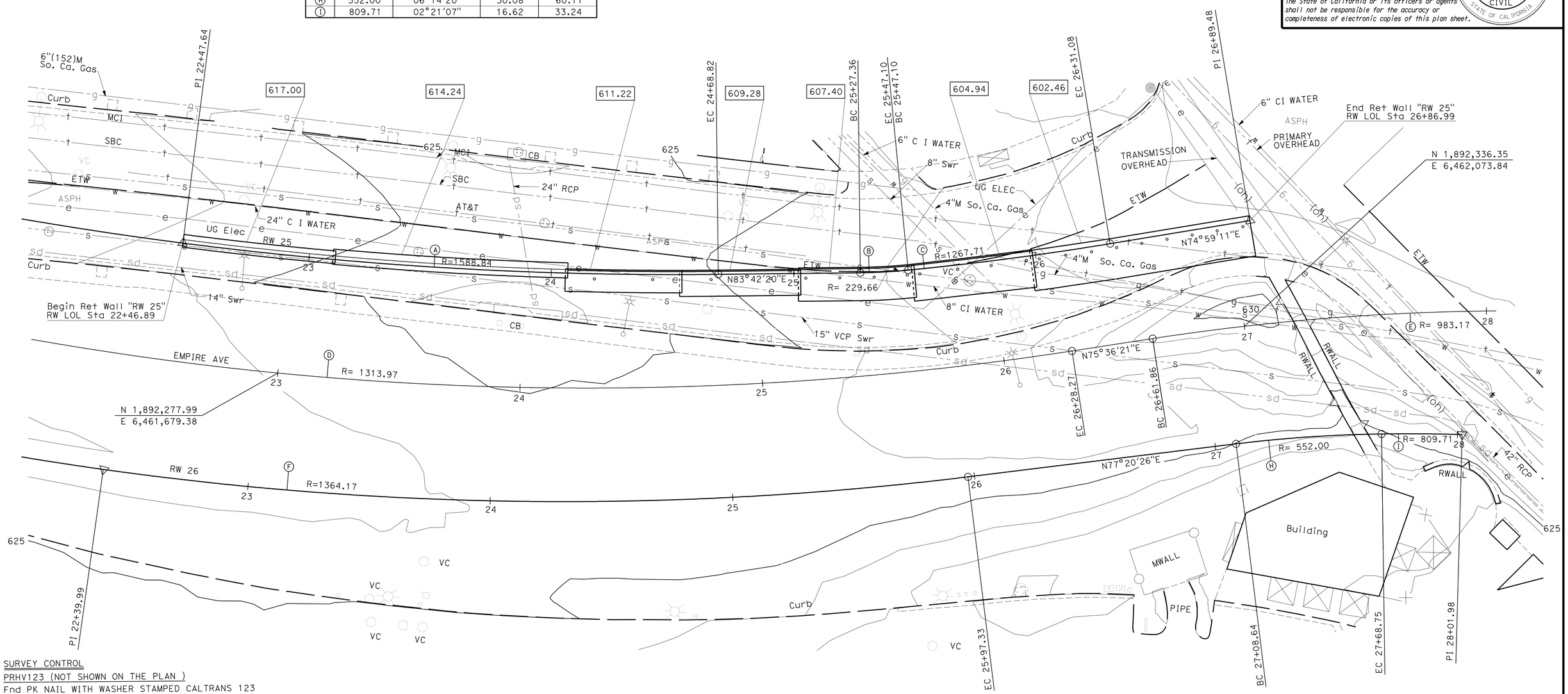

SURVEY CONTROL

PRHV123 (NOT SHOWN ON THE PLAN)

Fnd PK NAIL WITH WASHER STAMPED CALTRANS 123
88.00 Lt "A1" LINE. Rte 5
Sta. 1581+75.69
N 1,890,470.97
E 6,464,594.96
EL.=598.93

PRHV127 (NOT SHOWN ON THE PLAN)

Fnd PK NAIL WITH WASHER STAMPED CALTRANS 127
67.36 Lt "A1" LINE. Rte 5
Sta. 1585+96.99
N 1,890,753.54
E 6,464,269.04
EL.=604.23

LEGEND

o Indicates tiedown for Type 7 Retaining Wall

xxx.xx Indicates bottom of footing elevation

PRELIMINARY INVESTIGATION SECTION

SCALE 1"=20'	VERT.DATUM NAVD88	PHOTOGRAMMETRY AS OF: X			
	HORZ.DATUM NAD83(1991.35)	SURVEYED	BY District	CHECKED	BY Don Ivy 10/24/11
ALIGNMENT TIES Dist. Traverse Sheet		DRAFTED	BY J. Zhou 10/24/11	CHECKED	BY L. LEW 10/24/11

DESIGN	BY DAVID P MURRAY	CHECKED	J. RUIZ / I. KARAM
DETAILS	BY JINLI GUO	CHECKED	DAVID P MURRAY
QUANTITIES	BY JOSH RUNNION	CHECKED	CORY COWDEN

STATE OF CALIFORNIA
DEPARTMENT OF TRANSPORTATION

DIVISION OF ENGINEERING SERVICES
STRUCTURE DESIGN
DESIGN BRANCH 18

BRIDGE NO. RW 25
POST MILE 30.53

RETAINING WALL 25
FOUNDATION PLAN

STRUCTURES FOUNDATION PLAN SHEET (ENGLISH) (REV. 09-01-10)

ORIGINAL SCALE IN INCHES FOR REDUCED PLANS 0 1 2 3

UNIT: 3603
PROJECT NUMBER & PHASE: 07000211191
CONTRACT NO.: 07-1218W1

DISREGARD PRINTS BEARING EARLIER REVISION DATES

REVISION DATES 12-6-11

SHEET 2 OF 15

FILE => 53-rw25-b-fpl.dgn

DIST	COUNTY	ROUTE	POST MILES TOTAL PROJECT	SHEET No.	TOTAL SHEETS
07	LA	5	29.4/31.6	1090	1931

REGISTERED CIVIL ENGINEER 01/31/12 DATE

5-21-12
PLANS APPROVAL DATE

REGISTERED PROFESSIONAL ENGINEER JORGE I. ESTRADA No. C51473 Exp. 06-30-12 CIVIL STATE OF CALIFORNIA

The State of California or its officers or agents shall not be responsible for the accuracy or completeness of electronic copies of this plan sheet.

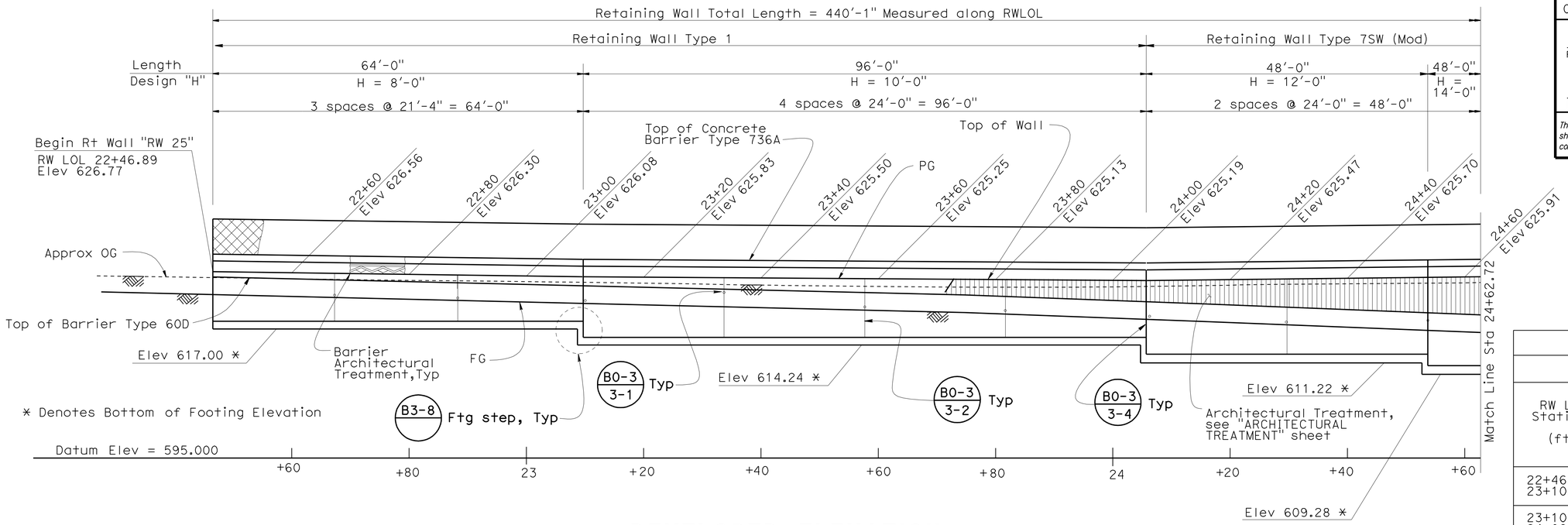

DEVELOPED ELEVATION

1"=10'-0"

Note:
Between sta 24+06.89 and 25+02.89 top of the wall shall be haunched to fit barrier, see B11-56

SPREAD FOOTING DATA TABLE		
TYPE 1 RETAINING WALL		
RW LOL Stationing (ft)	BOTTOM OF OVER EXCAVATION ELEVATION (ft)	Gross Allowable Soil Bearing Pressure ASD (q_{all})* (ksf)
22+46.89 to 23+10.89	N/A	2.2
23+10.89 to 24+06.89	N/A	2.5
TYPE 7 (MOD) RETAINING WALL		
RW LOL Stationing (ft)	BOTTOM OF OVER EXCAVATION ELEVATION (ft)	Ultimate Bearing Pressure Required (ksf)
24+06.89 to 24+54.89	608.22	5.5
24+54.86 to 25+02.89	606.28	6.0
25+02.89 to 25+50.89	604.40	5.25
25+50.89 to 25+98.98	601.94	6.25
25+98.89 to 26+86.89	599.46	6.00

*NOTES: Allowable Stress Design (ASD). The Maximum Contact Pressure (q_{max}), is not to exceed the recommended Gross Allowable Soil Bearing Pressure (q_{all}). The Ultimate Soil Bearing Capacity (q_{ult}), will equal or exceed 3 times the recommended Gross Allowable Soil Bearing Pressure (q_{all}).

CURVE DATA				
	R		T	L
1	1588.836	14°15'14.3"	198.660	395.269
4	1313.971	24°42'30.8"	287.797	566.646

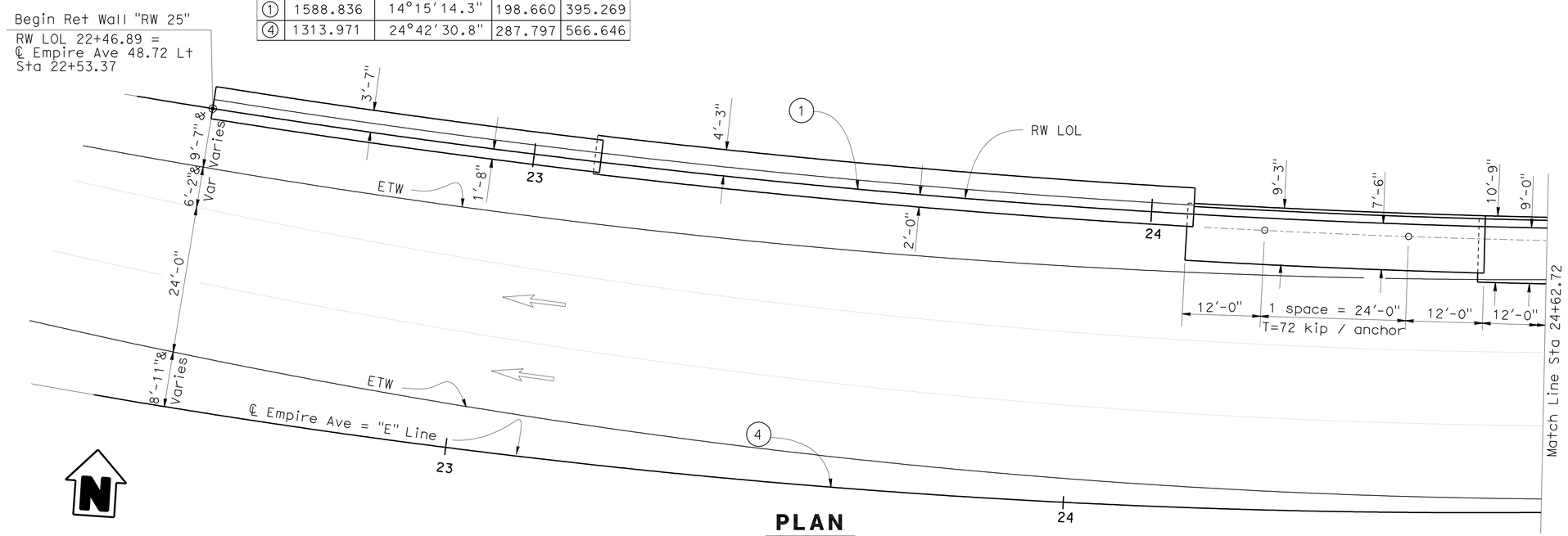

PLAN

1"=10'-0"

DESIGN	BY DAVID P MURRAY	CHECKED J. RUIZ / I. KARAM	
DETAILS	BY JINLI GUO	CHECKED DAVID P MURRAY	
QUANTITIES	BY JOSH RUNNION	CHECKED CORY COWDEN	

STATE OF CALIFORNIA
DEPARTMENT OF TRANSPORTATION

DIVISION OF ENGINEERING SERVICES
STRUCTURE DESIGN
DESIGN BRANCH 18

BRIDGE NO. RW 25
POST MILE 30.53

RETAINING WALL 25
STRUCTURE PLAN NO. 1

STRUCTURES DESIGN DETAIL SHEET (ENGLISH) (REV. 09-01-10)
ALL DIMENSIONS ARE IN FEET UNLESS OTHERWISE SHOWN

ORIGINAL SCALE IN INCHES FOR REDUCED PLANS 0 1 2 3

UNIT: 3603
PROJECT NUMBER & PHASE: 07000211191
CONTRACT NO.: 07-1218W1

DISREGARD PRINTS BEARING EARLIER REVISION DATES
REVISION DATES 09-05-11 1-31-12 03-26-12

SHEET 3 OF 15

FILE => 53-rw25-c-sp01.dgn

USERNAME => s124496 DATE PLOTTED => 22-MAY-2012 TIME PLOTTED => 08:33

DIST	COUNTY	ROUTE	POST MILES TOTAL PROJECT	SHEET No.	TOTAL SHEETS
07	LA	5	29.4/31.6	1091	1931

REGISTERED CIVIL ENGINEER — DATE 01/31/12

5-21-12
PLANS APPROVAL DATE

REGISTERED PROFESSIONAL ENGINEER — JORGE I. ESTRADA — No. C51473 — Exp. 06-30-12 — CIVIL — STATE OF CALIFORNIA

The State of California or its officers or agents shall not be responsible for the accuracy or completeness of electronic copies of this plan sheet.

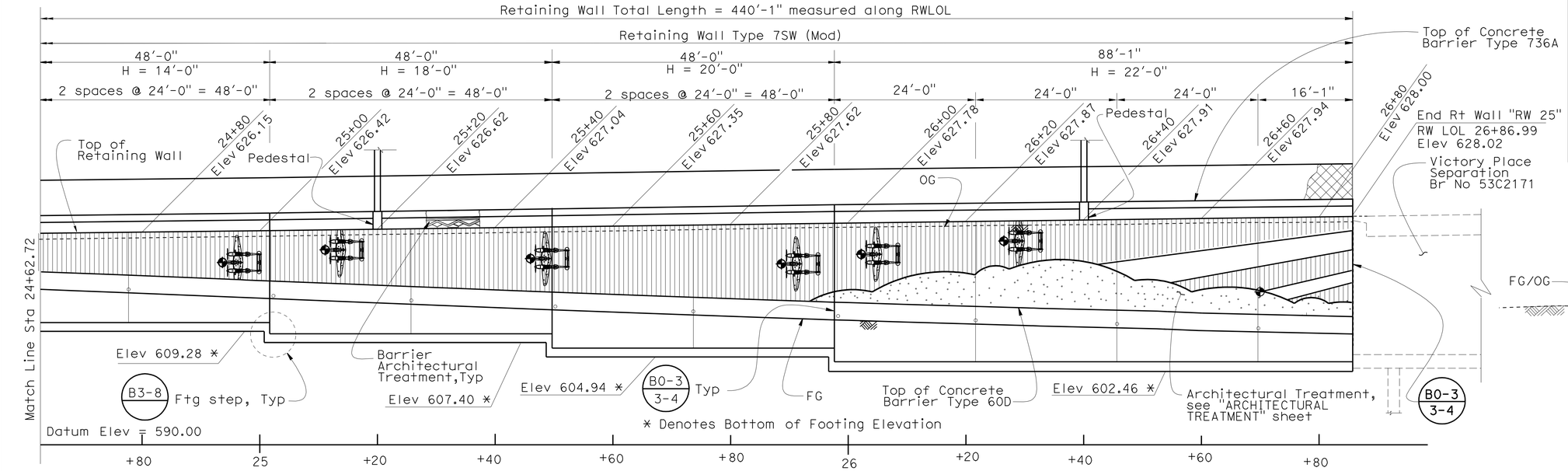

DEVELOPED ELEVATION

1" =10'-0"

CURVE DATA				
	R	Δ	T	L
1	1588.836	14°15'14.3"	198.660	395.269
2	229.658	04°55'24.9"	9.874	19.735
3	1267.714	03°47'44.1"	42.005	83.980
4	1313.971	24°42'30.8"	287.797	566.646
5	983.167	23°35'10.8"	205.272	404.730

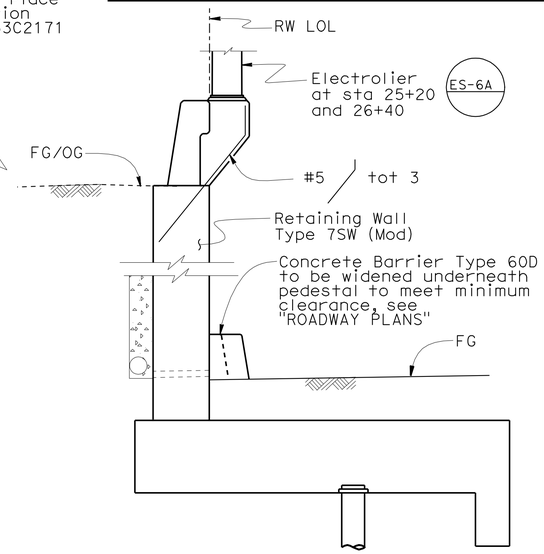

PEDESTAL ELEVATION

NO SCALE

NOTES:

1. For details not shown on "PEDESTAL ELEVATION", see B11-56
2. Between sta 24+06.89 and 25+02.89 top of wall shall be haunched to fit barrier

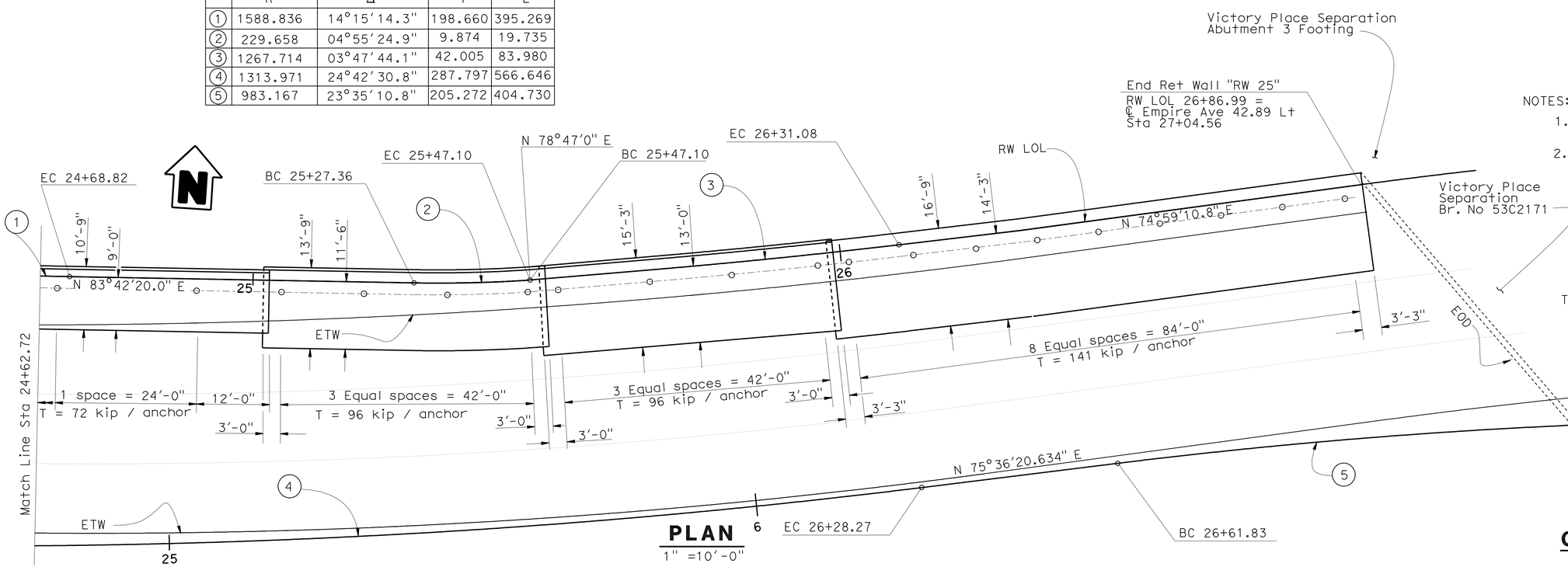

PLAN

1" =10'-0"

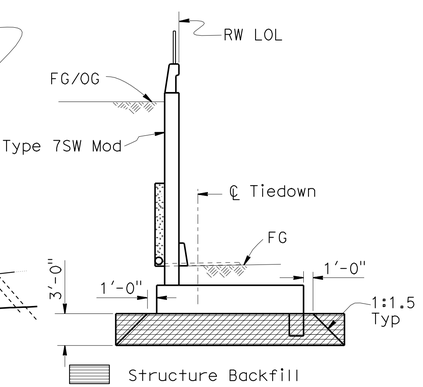

From Sta 24+06.89 to Sta 26+86.99

OVER EXCAVATION LIMITS

1/8" = 1'-0"

DESIGN	BY DAVID P MURRAY	CHECKED J. RUIZ / I. KARAM	
DETAILS	BY JINLI GUO	CHECKED DAVID P MURRAY	
QUANTITIES	BY JOSH RUNNION	CHECKED CORY COWDEN	

STATE OF CALIFORNIA
DEPARTMENT OF TRANSPORTATION

DIVISION OF ENGINEERING SERVICES
STRUCTURE DESIGN
DESIGN BRANCH 18

BRIDGE NO. RW 25
POST MILE 30.53

RETAINING WALL 25
STRUCTURE PLAN NO. 2

STRUCTURES DESIGN DETAIL SHEET (ENGLISH) (REV. 09-01-10)
ALL DIMENSIONS ARE IN FEET UNLESS OTHERWISE SHOWN

ORIGINAL SCALE IN INCHES FOR REDUCED PLANS 0 1 2 3

UNIT: 3603
PROJECT NUMBER & PHASE: 07000211191
CONTRACT NO.: 07-1218W1

DISREGARD PRINTS BEARING EARLIER REVISION DATES
REVISION DATES 09/02/11 01/31/12 03-25-12

SHEET 4 OF 15

FILE => 53-rw25-c-sp02.dgn

USERNAME => s124496 DATE PLOTTED => 22-MAY-2012 TIME PLOTTED => 08:33

DIST	COUNTY	ROUTE	POST MILES TOTAL PROJECT	SHEET No.	TOTAL SHEETS
07	LA	5	29.4/31.6	1092	1931

REGISTERED CIVIL ENGINEER — DATE 01/31/12

5-21-12
PLANS APPROVAL DATE

The State of California or its officers or agents shall not be responsible for the accuracy or completeness of electronic copies of this plan sheet.

REGISTERED PROFESSIONAL ENGINEER — JORGE I. ESTRADA — No. C51473 — Exp. 06-30-12 — CIVIL — STATE OF CALIFORNIA

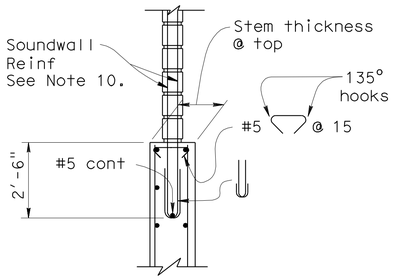

DETAIL A

No Scale

WALL OFFSET

No Scale

Values for offsetting forms to be determined by engineer

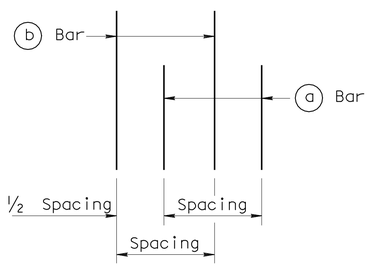

REBAR SPACING

No Scale

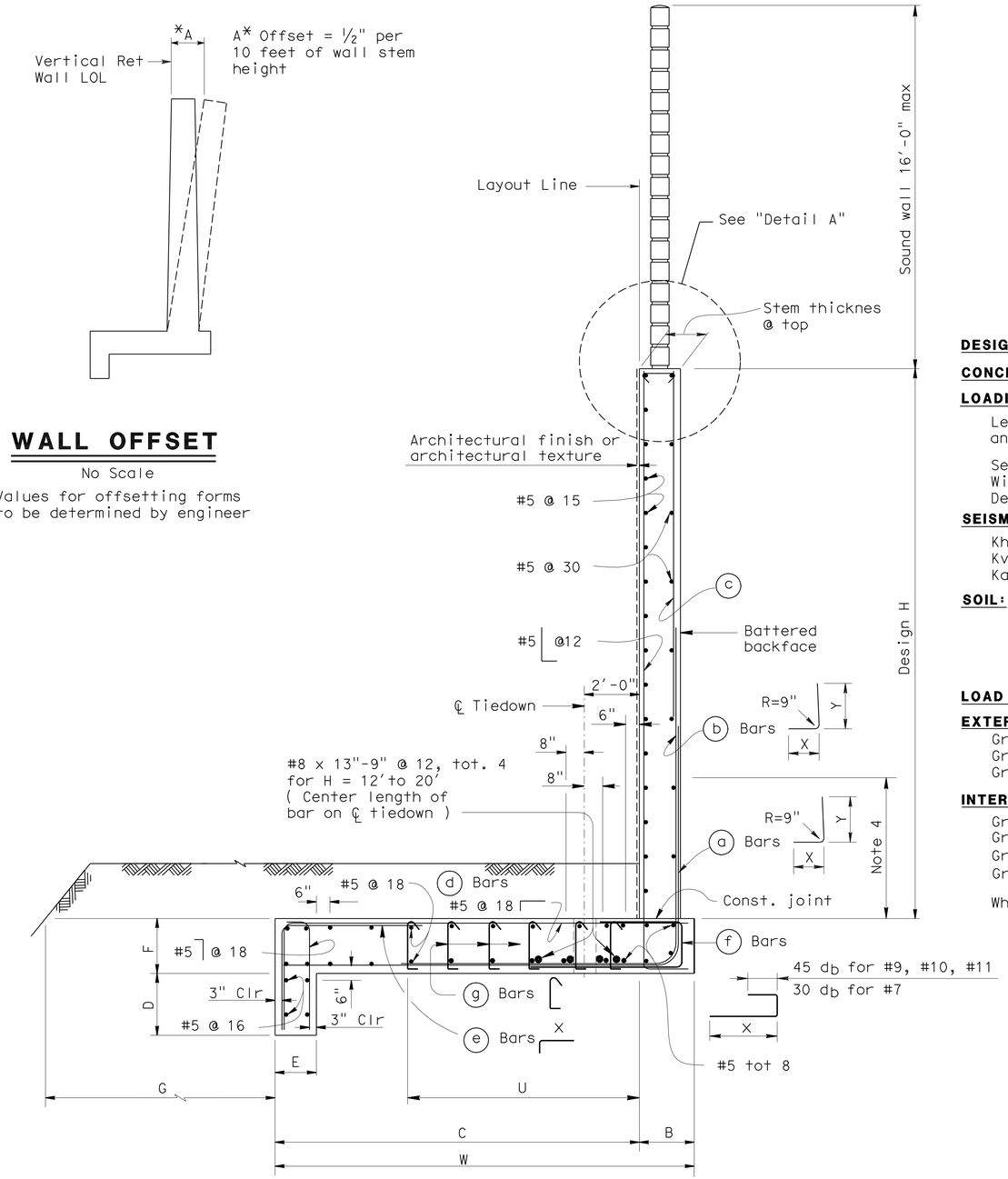

SPREAD FOOTING SECTION

No Scale

GENERAL NOTES

1. For soundwall and retaining wall architectural finish or texture, see details elsewhere in project plans.
2. For details not shown and drainage notes, see B3-8
3. Footing coverage, 2'-0" minimum.
4. Limit of no splicing rebars = H/3.
5. Increasing stem thickness not permitted.
6. Place footing key concrete against undisturbed material.
7. Shift (a) bars, (b) bars, and (c) bars as required to clear formed hole for tiedown.
8. No reinforcements in footing key for H= 8' to H=12'.
9. Maximum distance from ℄ tiedown to edge of footing = 0.4(S).
10. For soundwall reinforcements, see "Soundwall Masonry Block" Sheets in Standard Plan.

DESIGN DATA

DESIGN: Load Factor Design (LFD)

CONCRETE: Reinforced Concrete, f'c = 3600 psi
fy = 60,000 psi

LOADING CASE:

Level ground with 240 psf live load surcharge and 16' Soundwall

Seismic Load = 0.3 Dead Load
Wind Load = 30 psf
Dead Load of Soundwall = 1414 lb/Lf

SEISMIC LOAD: SOIL

Kh = 0.3g
Kv = 0.0
Kae : Mononobe-Okabe Method

SOIL: $\emptyset$ = 34° γ = 120 pcf
Equivalent fluid pressure:
STATIC = 36 pcf for determination of toe pressure
SEISMIC = Coulomb's Theory

LOAD COMBINATIONS:

EXTERNAL STABILITY:

Group 1 : D + E + SC + 0.75T (F.S. Sliding > 1.5)
Group 2 : D + E + SC + W + 0.75T (F.S. Sliding > 1.2)
Group 3 : D + PYM + P_{av} + V + 1.0 T (F.S. Sliding > 1.0)

INTERNAL STABILITY: (LFD)

Group A : βD + 1.7 E + 1.7 SC + 0.75 T
Group B : βD + 1.7 E + 1.3 W + 0.75 T
Group C :(Stem) 1.0 D + 1.0 E + 1.0 EQD + 1.0 EQE
Group C :(Footing) D + PYM + P_{av} + V + 1.0 T

Where : β = 1.0 or 1.3 whichever controls design
D = Dead Load
E = Lateral Earth Pressure
P_{av} = Vertical Earth Pressure
SC = Live Load Surcharge
W = Wind Load
EQD = Seismic Dead Load
EQE = Seismic Lateral Earth Pressure
PYM = Probable Yield Moment (1.3 x Nominal Yield Moment of Stem)
V = Possible Shear at Base of Stem associated with Probable Yield Moment
T = Design Force for Vertical Tiedown

STANDARD DRAWING
FILE NO. xs14-380-1x
APPROVAL DATE July 2011

STATE OF CALIFORNIA
DEPARTMENT OF TRANSPORTATION

DIVISION OF ENGINEERING SERVICES

BRIDGE NO. RW 25
POST MILE 30.53

RETAINING WALL 25

RETAINING WALL TYPE 7SW - DETAILS NO.1

DS OSD 2147A (ENGLISH STANDARD DRAWING "XS" BORDER REV. (02-02-11)

ORIGINAL SCALE IN INCHES FOR REDUCED PLANS 0 1 2 3

UNIT: 3603
PROJECT NUMBER & PHASE: 07000211191
CONTRACT NO.: 07-1218W1

DISREGARD PRINTS BEARING EARLIER REVISION DATES

REVISION DATES 10-11-11

SHEET 5 OF 15

FILE => 53-rw25-g-rwdt01.dgn

USERNAME => s124496 DATE PLOTTED => 22-MAY-2012 TIME PLOTTED => 08:33

DIST	COUNTY	ROUTE	POST MILES TOTAL PROJECT	SHEET No.	TOTAL SHEETS
07	LA	5	29.4/31.6	1093	1931

REGISTERED CIVIL ENGINEER — DATE 01/31/12

5-21-12
PLANS APPROVAL DATE

REGISTERED PROFESSIONAL ENGINEER — JORGE I. ESTRADA — No. C51473 — Exp. 06-30-12 — CIVIL — STATE OF CALIFORNIA

The State of California or its officers or agents shall not be responsible for the accuracy or completeness of electronic copies of this plan sheet.

TABLE 1: TABLE OF DIMENSIONS AND DATA

Design H		8′	10′	12′	14′	16′	18′	20′	22′	24′	26′	28′	30′	32′
W		7′-6"	8′-0"	9′-3"	10′-9"	12′-3"	13′-9"	15′-3"	16′-9"	18′-3"	19′-6"	21′-0"	22′-6"	24′-0"
C		6′-0"	6′-6"	7′-6"	9′-0"	10′-3"	11′-6"	13′-0"	14′-3"	15′-3"	16′-6"	17′-6"	18′-6"	20′-0"
B		1′-6"	1′-6"	1′-9"	1′-9"	2′-0"	2′-3"	2′-3"	2′-6"	3′-0"	3′-0"	3′-6"	4′-0"	4′-0"
F		2′-6"	2′-6"	2′-6"	2′-6"	2′-6"	2′-6"	3′-0"	3′-3"	3′-3"	3′-9"	4′-0"	4′-0"	4′-3"
D (Footing Key Depth)		1′-0"	1′-0"	1′-0"	1′-6"	1′-9"	2′-0"	2′-3"	2′-3"	2′-9"	3′-0"	3′-0"	3′-0"	3′-0"
E		1′-3"	1′-3"	1′-3"	1′-3"	1′-3"	1′-6"	1′-6"	1′-6"	1′-6"	1′-9"	1′-9"	1′-9"	1′-9"
Stem Thickness @ Top		1′-0"	1′-0"	1′-3"	1′-3"	1′-6"	1′-9"	1′-9"	2′-0"	2′-0"	2′-0"	2′-0"	2′-3"	2′-3"
Batter		0	0	0	0	0	0	0	0	1/4:12	1/4:12	1/2:12	1/2:12	1/2:12
G (Minimum)		7′-6"	7′-6"	7′-6"	8′-6"	9′-3"	10′-3"	11′-0"	12′-0"	13′-0"	14′-0"	15′-6"	15′-9"	16′-3"
ⓐ Bars				#7@18	#5@6	#9@18	#9@18	#9@12	#9@12	#7@6	#7@6	#10@12	#10@12	#11@12
X				Cont	Cont	Cont	Cont	Cont	Cont	Cont	Cont	Cont	Cont	Cont
Y				5′-6"	5′-6"	8′-6"	8′-9"	8′-9"	9′-0"	9′-9"	11′-3"	13′-3"	14′-3"	15′-3"
ⓑ Bars		#5@9	#6@9	#7@18	#5@6	#9@18	#9@18	#9@12	#9@12	#7@6	#7@6	#10@12	#10@12	#11@12
X		Cont	Cont	3′-6"	2′-6"	6′-3"	7′-9"	6′-9"	7′-9"	8′-6"	8′-0"	12′-6"	13′-6"	14′-9"
Y		Cont	Cont	Cont	Cont	12′-0"	13′-6"	14′-0"	15′-9"	17′-9"	20′-3"	22′-3"	24′-9"	24′-9"
Placement, ◯				Ⓐ	Ⓑ	Ⓐ	Ⓐ	Ⓐ	Ⓐ	Ⓑ	Ⓑ	Ⓑ	Ⓑ	Ⓐ
ⓒ Bars						#8@18	#8@18	#8@12	#8@12	#6@6	#6@6	#9@12	#9@12	#10@12
Placement, ◯						Ⓒ	Ⓒ	Ⓒ	Ⓒ	Ⓒ	Ⓒ	Ⓒ	Ⓒ	Ⓒ
ⓓ Bars		#5@18	#5@18	#5@18	#5@18	#5@18	#5@18	#5@18	#5@18	#5@18	#5@18	#5@18	#5@18	#5@18
ⓔ Bars								#5@18	#5@18	#5@18	#5@18	#5@18	#5@18	#5@18
X								5′-0"	5′-6"	6′-0"	6′-6"	7′-0"	7′-6"	7′-6"
Placement, ◯								Ⓓ	Ⓓ	Ⓓ	Ⓓ	Ⓓ	Ⓓ	Ⓓ
ⓕ Bars						#9@18	#9@18	#9@18	#9@18	#9@6	#7@6	#10@6	#10@6	#11@6
X						3′-9"	6′-0"	5′-0"	6′-0"	5′-3"	5′-3"	6′-6"	8′-3"	8′-9"
ⓖ Bars										#4@15	#4@15	#4@15	#4@12	#4@12
U										7′-6"	7′-6"	8′-9"	9′-9"	11′-9"
Tie Down Design Force (T) k/ft		0	0	3	3	3	8	8	14	14	21	25	29	34
Tie Down Maximum Spacing (S) ft		0	0	32	32	32	20	20	12	12	9	9	8	7
Ultimate Bearing Capacity Required (ksf)		3.75	4.25	5.50	6.00	5.75	5.25	6.25	6.00	7.75	6.75	7.75	7.75	8.00
H_D (N)	Group 1 k/m (k/ft)	2.21 (8.1)	3.09 (8.74)	4.51 (9.69)	5.29 (11.6)	6.77 (14.44)	8.44 (17.77)	10.29 (21.08)	12.57 (26)	14.55 (29.25)	17.23 (34.66)	20.40 (42.24)	23.25 (47.66)	26.26 (52.42)
	Group 2 k/m (k/ft)	4.54 (10.06)	5.9 (11.16)	7.15 (12.66)	8.9 (15.46)	11.46 (19.38)	15 (24.15)	17.59 (28.77)	23.4 (35.24)	25.6 (40.14)	32.12 (47.36)	38.55 (57.31)	40.96 (64.9)	45.89 (71.93)

LEGEND FOR BAR PLACEMENT:

Ⓐ : Alternate placement of ⓐ bars and ⓑ bars

Ⓑ : Bundle ⓐ bars and ⓑ bars

Ⓒ : Splice ⓒ bars to ⓑ bars

Ⓓ : Bundle ⓓ bars and ⓔ bars

H_D : Horizontal driving force

(N) : Sum of vertical forces

Cont : Continuous

STANDARD DRAWING

FILE NO. xs14-380-2x — APPROVAL DATE July 2011

STATE OF CALIFORNIA DEPARTMENT OF TRANSPORTATION

DIVISION OF ENGINEERING SERVICES

BRIDGE NO. RW 25 — POST MILE 30.53

RETAINING WALL 25

RETAINING WALL TYPE 7SW - DETAILS NO. 2

DS OSD 2147A (ENGLISH STANDARD DRAWING "XS" BORDER REV. (02-02-11)

ORIGINAL SCALE IN INCHES FOR REDUCED PLANS 0 1 2 3

UNIT: 3603
PROJECT NUMBER & PHASE: 07000211191
CONTRACT NO.: 07-1218W1

DISREGARD PRINTS BEARING EARLIER REVISION DATES

REVISION DATES: 10-12-11, 04-19-12

SHEET 6 OF 15

FILE => 53-rw25-g-rwdt02.dgn

USERNAME => s124436 DATE PLOTTED => 22-MAY-2012 TIME PLOTTED => 08:33

DIST	COUNTY	ROUTE	POST MILES TOTAL PROJECT	SHEET No.	TOTAL SHEETS
07	LA	5	29.4/31.6	1094	1931

JEstrada. 01/31/12
REGISTERED CIVIL ENGINEER DATE

5-21-12
PLANS APPROVAL DATE

REGISTERED PROFESSIONAL ENGINEER
JORGE I. ESTRADA
No. C51473
Exp. 06-30-12
CIVIL
STATE OF CALIFORNIA

The State of California or its officers or agents shall not be responsible for the accuracy or completeness of electronic copies of this plan sheet.

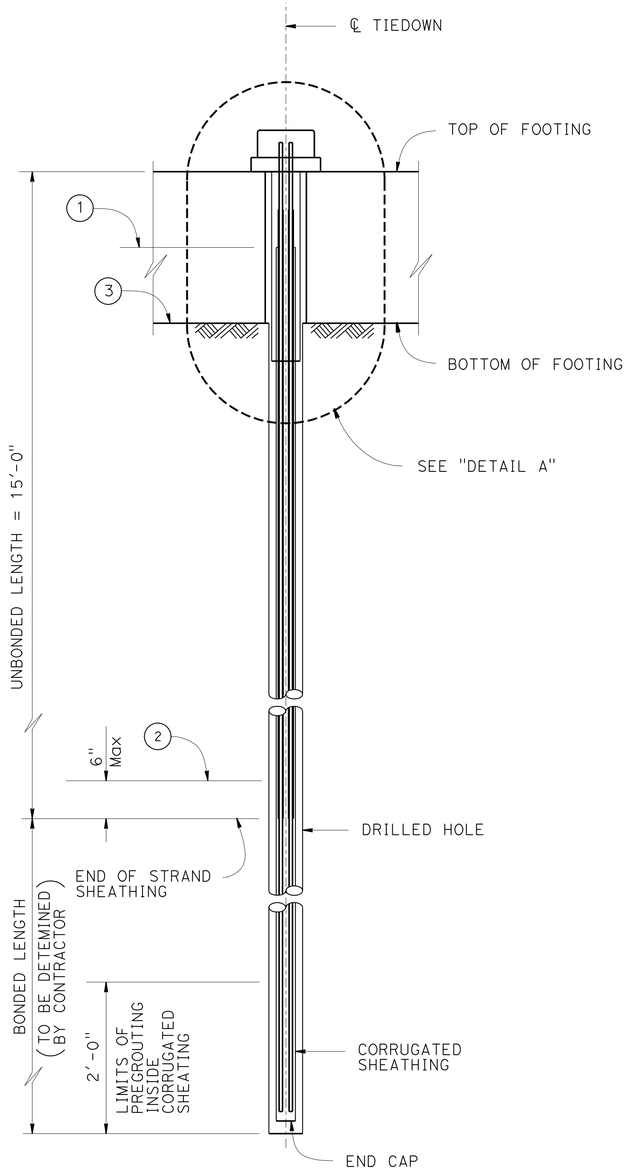

TIEDOWN ANCHOR DETAILS (STRANDS)

SCALE 1"=1'

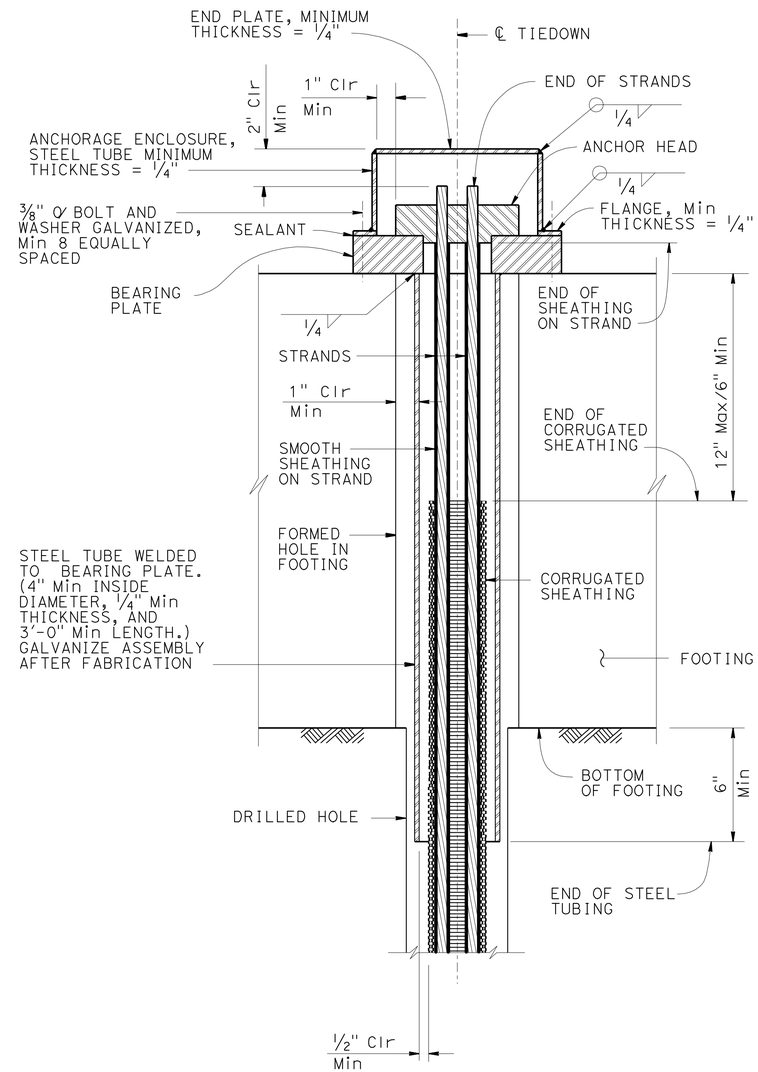

DETAIL A

Scale 3"= 1'

GENERAL NOTES-TIEDOWN ANCHOR

PRESTRESSING (TIEDOWNS):
BARS- ASTM Designation: A722 Type II
STRANDS-ASTM Designation: A416
T= DESIGN FORCE PER TIEDOWN (kips)
fpu= MINIMUM TENSILE STRENGTH OF PRESTRESSING STEEL (ksi)

As= MINIMUM CROSS SECTIONAL AREA OF PRESTRESSING STEEL IN TIEDOWN TENDON (square inches)

$$As\ (min) = \frac{1.5T}{0.75\ fpu}$$

NOTES:

1. Anchorage enclosure shall have provisions to allow injecting grout at low end and venting at high end. Galvanize enclosure after fabrication.

2. Alternative anchor enclosure shown on sheet "TIEDOWN ANCHOR DETAILS No.2" sheet

(1) Level of initial grouting inside corrugated sheathing

(2) Level of initial grouting in drilled hole.

(3) Level of secondary grouting in drilled hole.

STANDARD DRAWING
FILE NO. xs12-030-1x
APPROVAL DATE July 2011

STATE OF CALIFORNIA
DEPARTMENT OF TRANSPORTATION

DIVISION OF ENGINEERING SERVICES

BRIDGE NO. RW 25
POST MILE 30.53

RETAINING WALL 25
TIEDOWN ANCHOR DETAILS NO. 1

DS OSD 2147A (ENGLISH STANDARD DRAWING "XS" BORDER REV. (02-02-11)

ORIGINAL SCALE IN INCHES FOR REDUCED PLANS 0 1 2 3

UNIT: 3603
PROJECT NUMBER & PHASE: 07000211191
CONTRACT NO.: 07-1218W1

DISREGARD PRINTS BEARING EARLIER REVISION DATES

REVISION DATES 10-12-11

SHEET 7 OF 15

FILE => 53-rw25-g-rwdt03.dgn

USERNAME => s124496 DATE PLOTTED => 22-MAY-2012 TIME PLOTTED => 08:33

DIST	COUNTY	ROUTE	POST MILES TOTAL PROJECT	SHEET No.	TOTAL SHEETS
07	LA	5	29.4/31.6	1095	1931

JEstrada. 01/31/12
REGISTERED CIVIL ENGINEER DATE

5-21-12
PLANS APPROVAL DATE

REGISTERED PROFESSIONAL ENGINEER JORGE I. ESTRADA No. C51473 Exp. 06-30-12 CIVIL STATE OF CALIFORNIA

The State of California or its officers or agents shall not be responsible for the accuracy or completeness of electronic copies of this plan sheet.

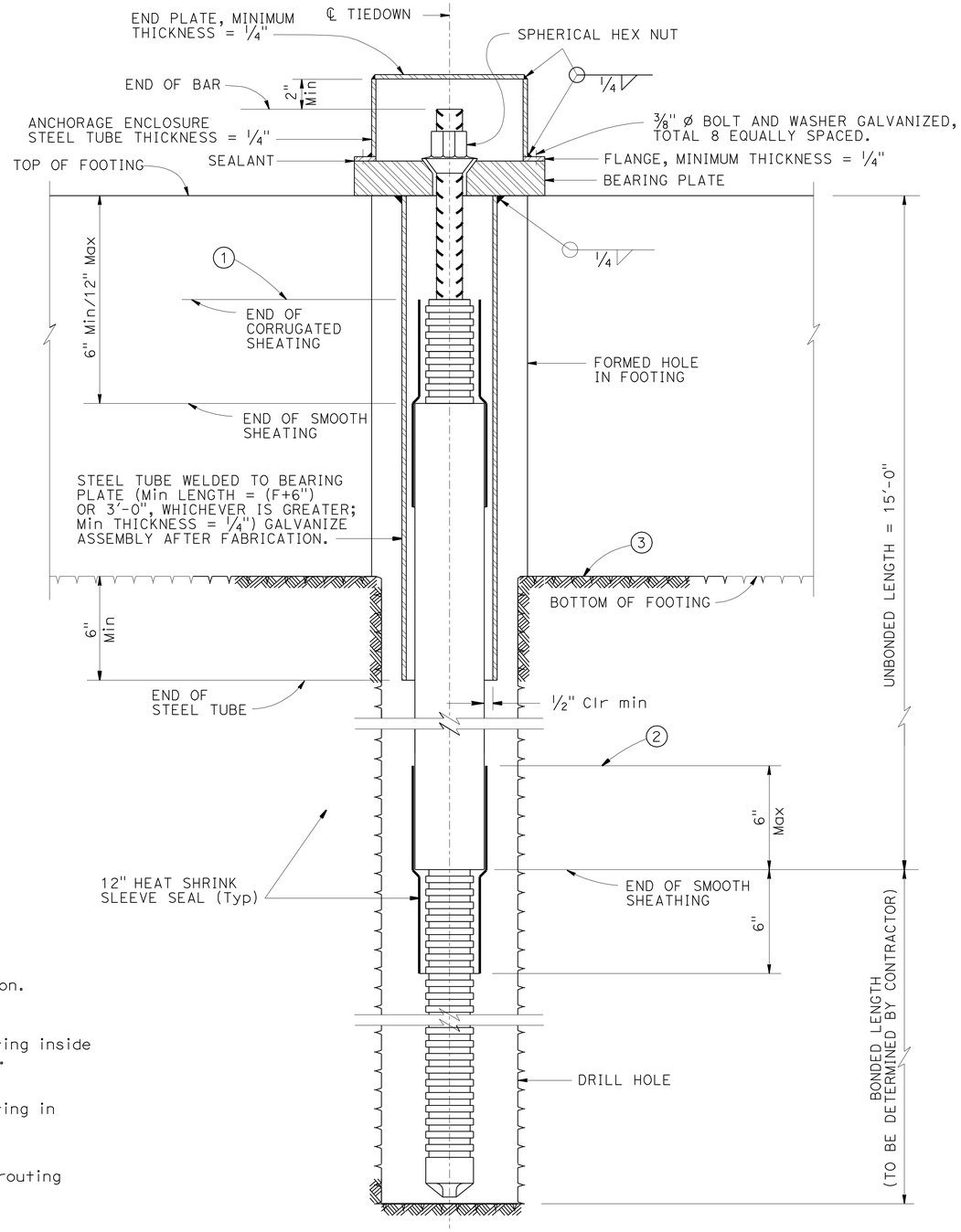

TIEDOWN TENDON DETAILS (BAR)

Scale 3"= 1'

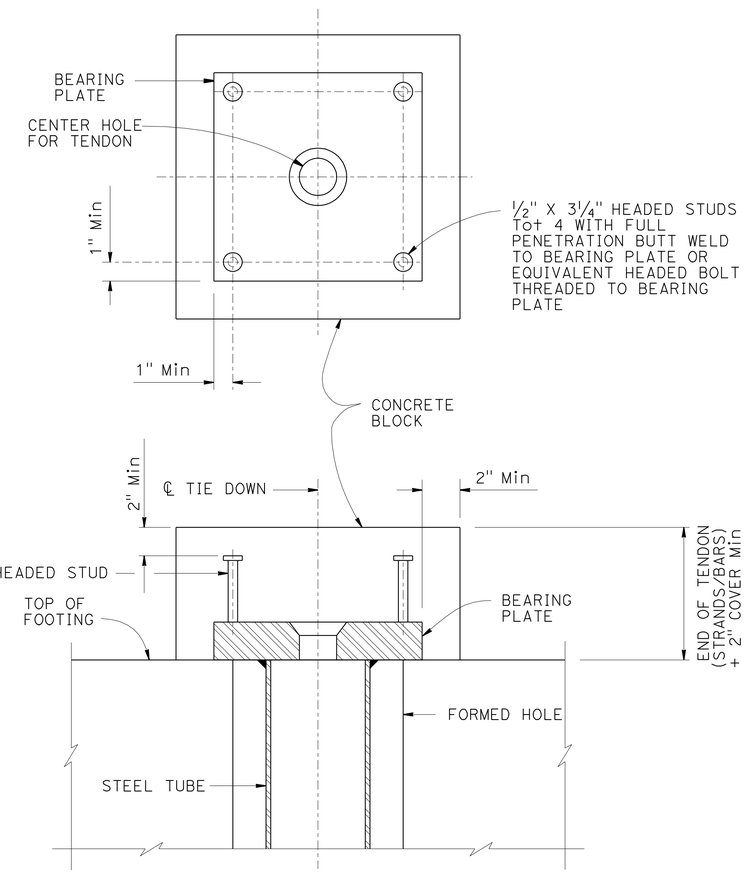

ANCHOR ENCLOSURE (ALTERNATIVE)

Scale 3"= 1'

NOTE:

Anchorage enclosure shall have provision to allow injecting grout at low end and venting at high end. Galvanize enclosure after fabrication.

1. Level of initial grouting inside corrugated sheathing.
2. Level of initial grouting in drilled hole.
3. Level of secondary grouting in drilled hole.

STANDARD DRAWING		STATE OF CALIFORNIA DEPARTMENT OF TRANSPORTATION	DIVISION OF ENGINEERING SERVICES	BRIDGE NO. RW 25 / POST MILE 30.53	RETAINING WALL 25
FILE NO. xs12-030-2x	APPROVAL DATE July 2011				TIEDOWN ANCHOR DETAILS NO. 2

DS OSD 2147A (ENGLISH STANDARD DRAWING "XS" BORDER REV. (02-02-11)

ORIGINAL SCALE IN INCHES FOR REDUCED PLANS 0 1 2 3

UNIT: 3603
PROJECT NUMBER & PHASE: 07000211191
CONTRACT NO.: 07-1218W1

DISREGARD PRINTS BEARING EARLIER REVISION DATES

REVISION DATES: 10-11-11

SHEET 8 OF 15

FILE => 53-rw25-g-rwdt04.dgn

USERNAME => s124496 DATE PLOTTED => 22-MAY-2012 TIME PLOTTED => 08:33

DIST	COUNTY	ROUTE	POST MILES TOTAL PROJECT	SHEET No.	TOTAL SHEETS
07	LA	5	29.4/31.6	1096	1931

JEstrada. 01/31/12
REGISTERED CIVIL ENGINEER DATE

5-21-12
PLANS APPROVAL DATE

REGISTERED PROFESSIONAL ENGINEER
JORGE I. ESTRADA
No. C51473
Exp. 06-30-12
CIVIL
STATE OF CALIFORNIA

The State of California or its officers or agents shall not be responsible for the accuracy or completeness of electronic copies of this plan sheet.

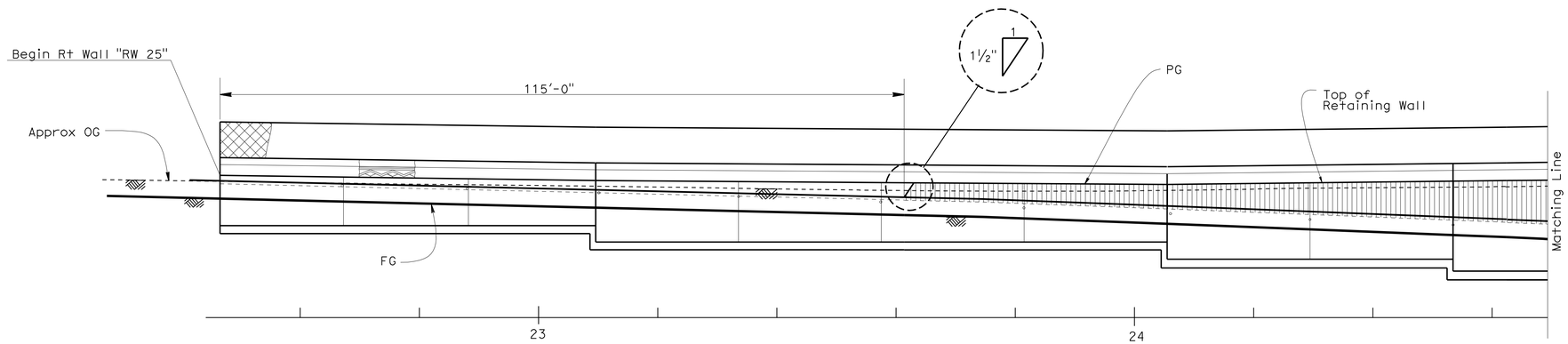

NOTE:
For location of "SECTION C-C" and "SECTION D-D", see "ARCHITECTURAL TREATMENT NO. 3" sheet

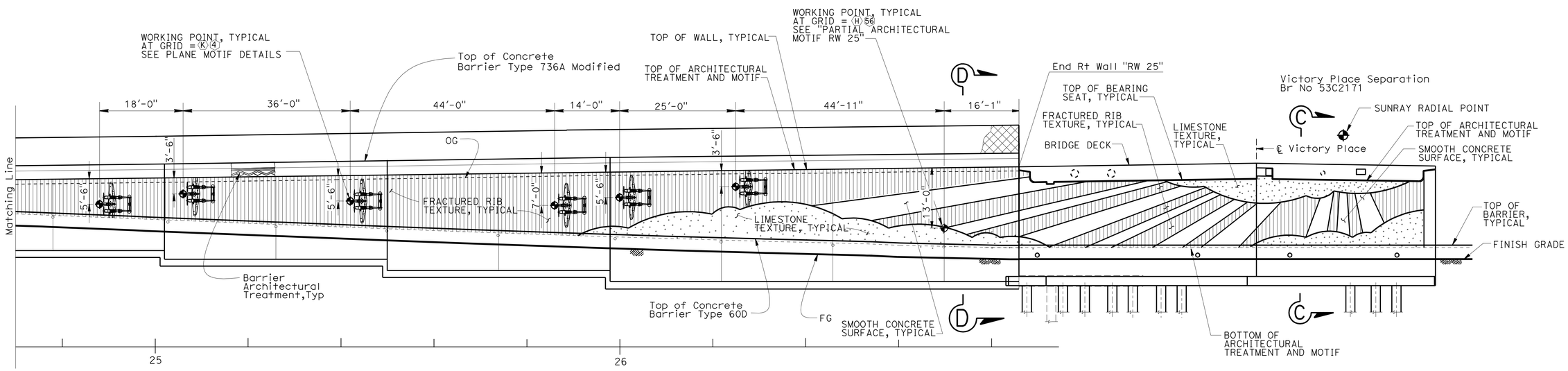

DEVELOPED ELEVATION - RW 25

NO SCALE

DESIGN	BY ISSAC TASABIA	CHECKED DAVID P MURRAY	
DETAILS	BY JINLI GUO	CHECKED	
QUANTITIES	BY JOSH RUNNION	CHECKED CORY COWDEN	

STATE OF CALIFORNIA
DEPARTMENT OF TRANSPORTATION

DIVISION OF ENGINEERING SERVICES
STRUCTURE DESIGN
DESIGN BRANCH 18

BRIDGE NO. RW 25
POST MILE 30.53

RETAINING WALL 25
ARCHITECTURAL TREATMENT NO. 1

STRUCTURES DESIGN DETAIL SHEET (ENGLISH) (REV. 09-01-10)

ORIGINAL SCALE IN INCHES FOR REDUCED PLANS 0 1 2 3

UNIT: 3603
PROJECT NUMBER & PHASE: 07000211191
CONTRACT NO.: 07-1218W1

DISREGARD PRINTS BEARING EARLIER REVISION DATES

REVISION DATES: 9-7-07 | 1-31-11 | 10-12-11 | 2-8-12

SHEET 9 OF 15

FILE => 53-rw25-u-archdt01.dgn

USERNAME => s124496 DATE PLOTTED => 22-MAY-2012 TIME PLOTTED => 08:33

DIST	COUNTY	ROUTE	POST MILES TOTAL PROJECT	SHEET No.	TOTAL SHEETS
07	LA	5	29.4/31.6	1097	1931

dEstrada. 01/31/12
REGISTERED CIVIL ENGINEER DATE

5-21-12
PLANS APPROVAL DATE

REGISTERED PROFESSIONAL ENGINEER
JORGE I. ESTRADA
No. C51473
Exp. 06-30-12
CIVIL
STATE OF CALIFORNIA

The State of California or its officers or agents shall not be responsible for the accuracy or completeness of electronic copies of this plan sheet.

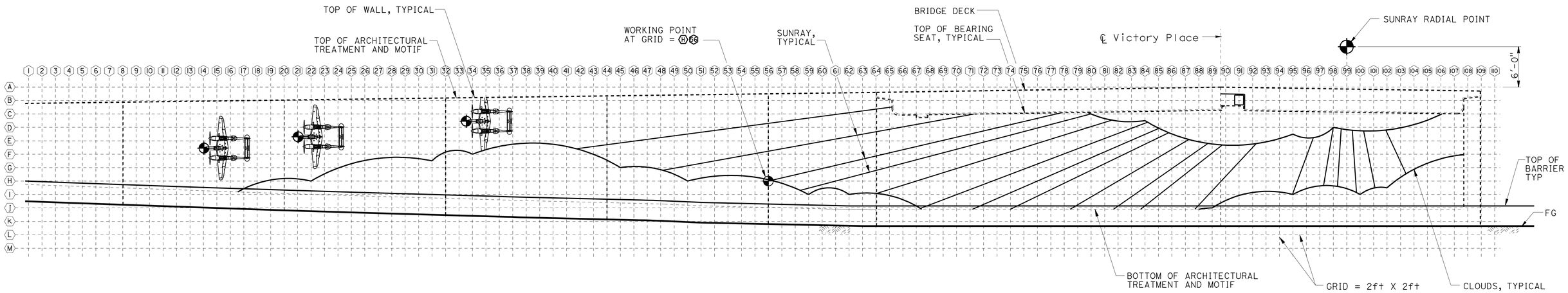

PARTIAL ARCHITECTURAL MOTIF AT ABUTMENT 3 & RW 25

NO SCALE

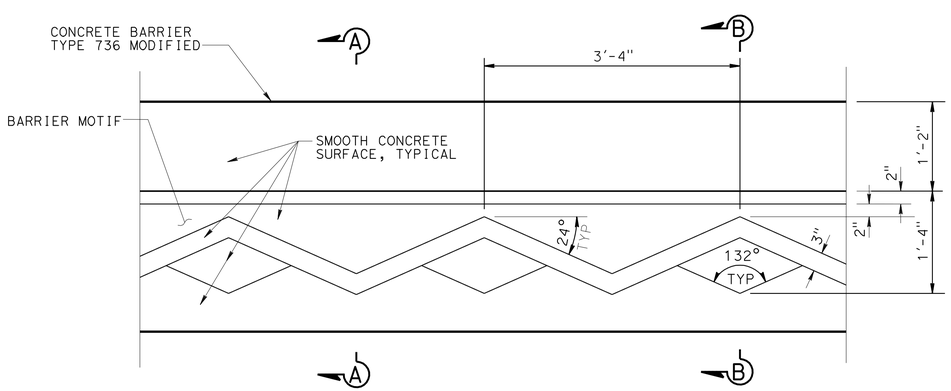

BARRIER AESTHETIC TREATMENT

NO SCALE

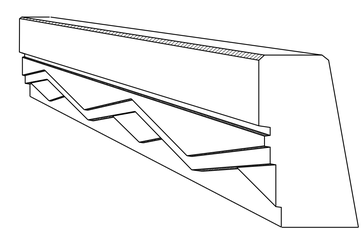

PERSPECTIVE VIEW

NO SCALE

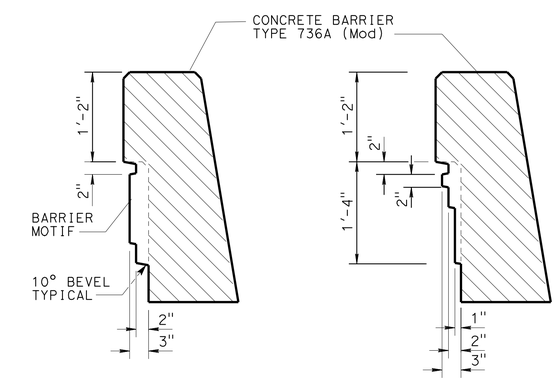

SECTION A-A

NO SCALE

SECTION B-B

NO SCALE

DESIGN	BY ISAAC TASABIA	CHECKED DAVID P MURRAY	
DETAILS	BY JINLI GUO	CHECKED DAVID P MURRAY	
QUANTITIES	BY JOSH RUNNION	CHECKED CORY COWDEN	

STATE OF CALIFORNIA
DEPARTMENT OF TRANSPORTATION

DIVISION OF ENGINEERING SERVICES
STRUCTURE DESIGN
DESIGN BRANCH 18

BRIDGE NO. RW 25
POST MILE 30.53

RETAINING WALL 25
ARCHITECTURAL TREATMENT NO. 2

STRUCTURES DESIGN DETAIL SHEET (ENGLISH) (REV. 09-01-10)

ORIGINAL SCALE IN INCHES FOR REDUCED PLANS 0 1 2 3

UNIT: 3603
PROJECT NUMBER & PHASE: 07000211191
CONTRACT NO.: 07-1218W1

DISREGARD PRINTS BEARING EARLIER REVISION DATES

REVISION DATES: 9-2-07 7-31-11 10-12-11 2-8-12

SHEET 10 OF 15

FILE => 53-rw25-u-archdt02.dgn

USERNAME => s124496 DATE PLOTTED => 22-MAY-2012 TIME PLOTTED => 08:33

DIST	COUNTY	ROUTE	POST MILES TOTAL PROJECT	SHEET No.	TOTAL SHEETS
07	LA	5	29.4/31.6	1098	1931

dEstrada. 01/31/12
REGISTERED CIVIL ENGINEER DATE

5-21-12
PLANS APPROVAL DATE

REGISTERED PROFESSIONAL ENGINEER JORGE I. ESTRADA No. C51473 Exp. 06-30-12 CIVIL STATE OF CALIFORNIA

The State of California or its officers or agents shall not be responsible for the accuracy or completeness of electronic copies of this plan sheet.

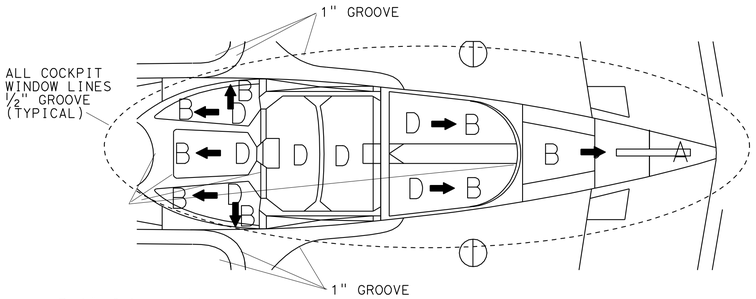

Relief Legend

O = LOL
A = 1"
B = 2"
C = 2½"
D = 3"

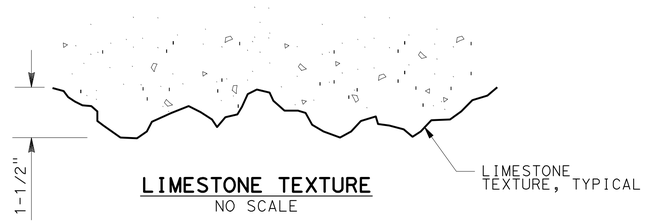

LIMESTONE TEXTURE
NO SCALE

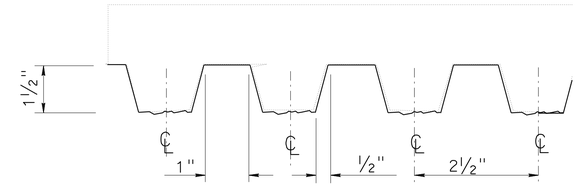

FRACTURED GRANITE TEXTURE
NO SCALE

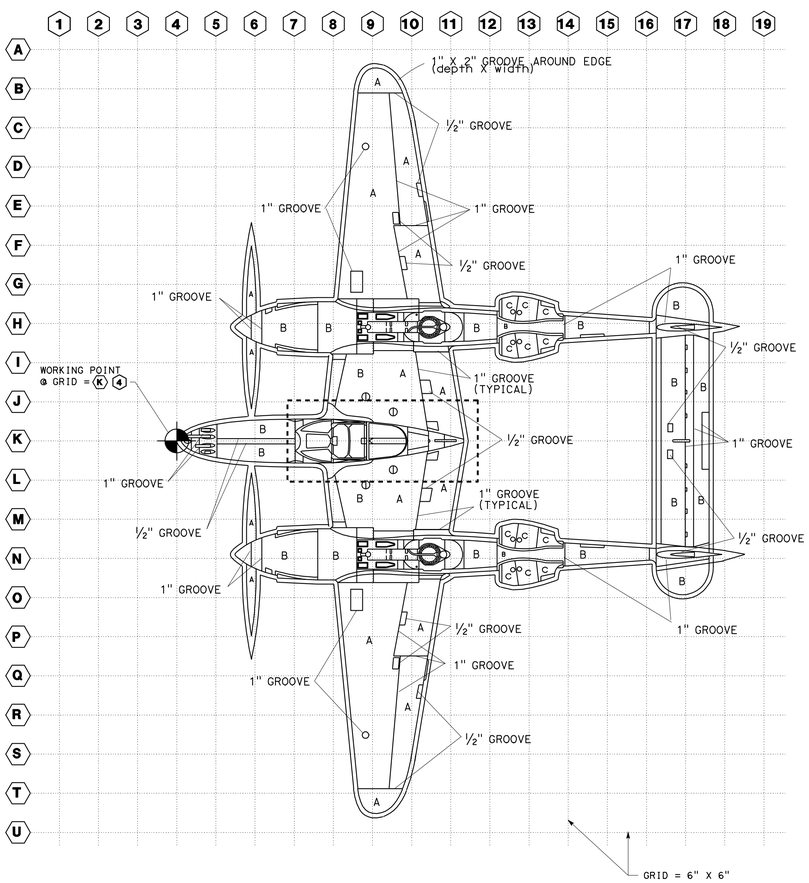

PLANE MOTIF
NO SCALE

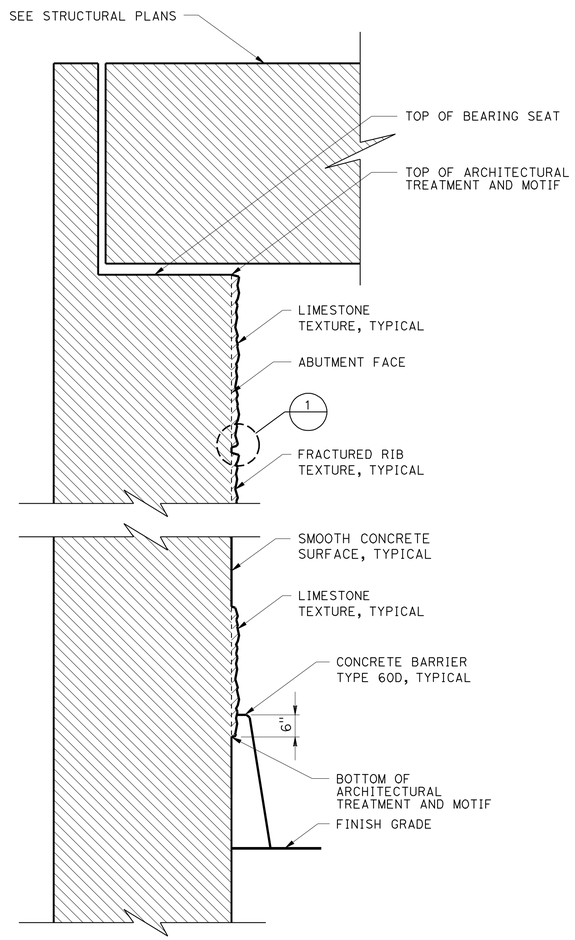

SECTION C-C
NO SCALE

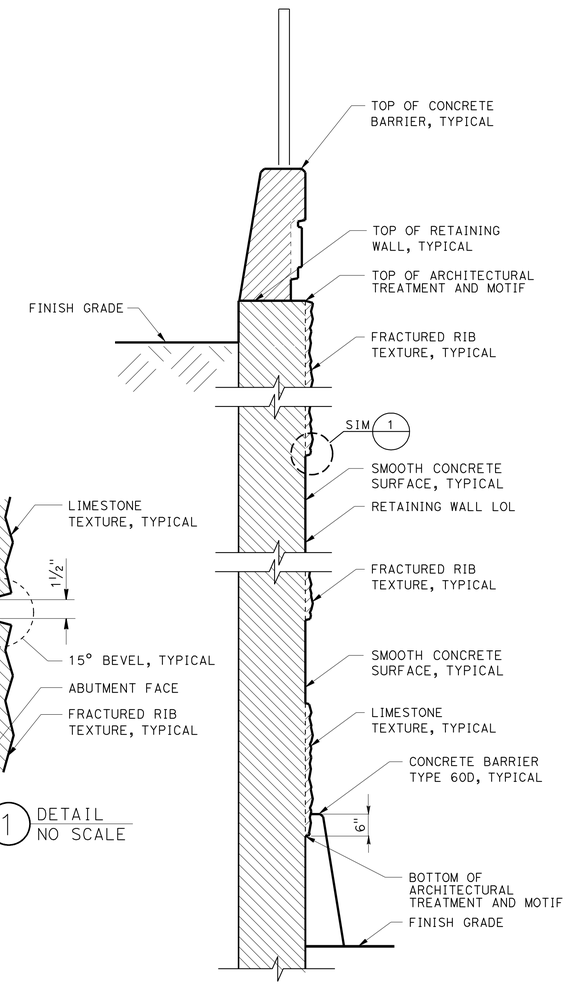

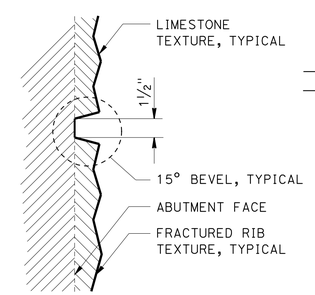

1 DETAIL
NO SCALE

SECTION D-D
NO SCALE

DESIGN	BY ISAAC TASABIA	CHECKED DAVID P MURRAY	
DETAILS	BY JINLI GUO	CHECKED DAVID P MURRAY	
QUANTITIES	BY JOSH RUNNION	CHECKED CORY COWDEN	

STATE OF CALIFORNIA
DEPARTMENT OF TRANSPORTATION

DIVISION OF ENGINEERING SERVICES
STRUCTURE DESIGN
DESIGN BRANCH 18

BRIDGE NO. RW 25
POST MILE 30.53

RETAINING WALL 25
ARCHITECTURAL TREATMENT NO. 3

STRUCTURES DESIGN DETAIL SHEET (ENGLISH) (REV. 09-01-10)

ORIGINAL SCALE IN INCHES FOR REDUCED PLANS 0 1 2 3

UNIT: 3603
PROJECT NUMBER & PHASE: 07000211191
CONTRACT NO.: 07-1218W1

DISREGARD PRINTS BEARING EARLIER REVISION DATES

REVISION DATES: 9-7-07 1-31-11 10-12-11 2-8-12

SHEET 11 OF 15

FILE => 53-rw25-u-archdt03.dgn

USERNAME => s124496 DATE PLOTTED => 22-MAY-2012 TIME PLOTTED => 08:33

DIST	COUNTY	ROUTE	POST MILES TOTAL PROJECT	SHEET No	TOTAL SHEETS
07	LA	5	29.4/31.6	1099	1931

Joseph S. Pratt 2-7-12
CERTIFIED ENGINEERING GEOLOGIST

5-21-12
PLANS APPROVAL DATE

Joseph S. Pratt No. 2141 Exp. 5-31-13 CERTIFIED ENGINEERING GEOLOGIST STATE OF CALIFORNIA

The State of California or its officers or agents shall not be responsible for the accuracy or completeness of electronic copies of this plan sheet.

BENCH MARK

BM PRHV302 Elev 627.869′
Fd Chiseled "X" on island-median, NE of LA-5/San Fernando Rd SB (tunnel); ±10 ft from electrolier; ±1.6 ft from top curb, 176.527′ Lt Sta 1613+01.41 ℄ Rte 5 (Prop).
N 1892485.336
E 6462244.53
NAD83, NAVD88

LEGEND:

- (M) Moisture Content
- (PA) Particle Size Analysis
- (PI) Plasticity, Index, Liquid Limit
- (CR) Corrosivity Testing
- (CP) Compaction

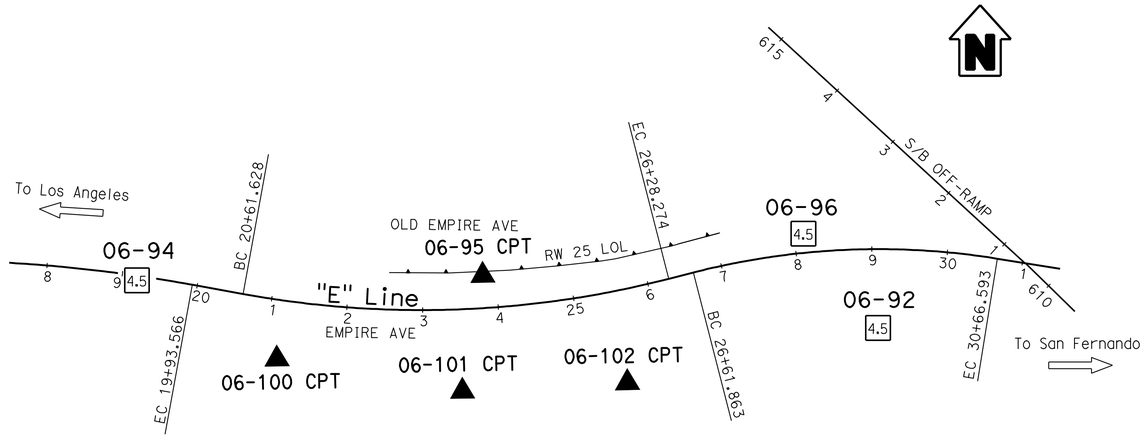

PLAN

1" = 100′

Note: No ground water encountered during field investigation.

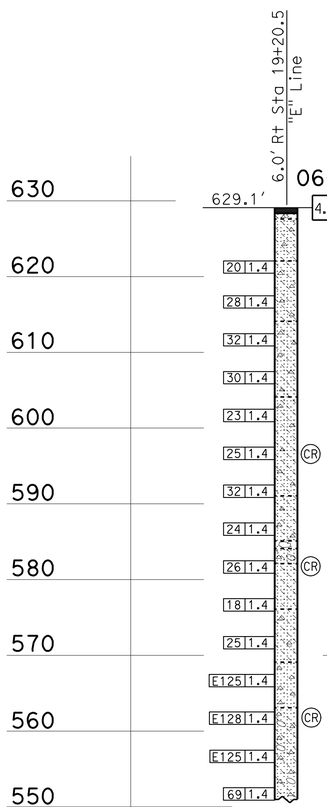

Asphalt Concrete Pavement (10" thick).
SAND with GRAVEL (40%), estimated medium dense, dry, brown, (road base material).
Poorly-graded fine to medium SAND (SP), contains scattered subangular coarse GRAVEL (2 to 5%), estimated loose, yellowish brown, moist, nonplastic, clean, (trench FILL).

Poorly-graded fine SAND (SP) with scattered coarse GRAVEL (10 to 40%) interbedded with well-graded GRAVEL (GW) with fine SAND matrix (35 to 40%), medium dense, yellowish brown to varicolored, moist, nonplastic, contains subrounded elongate hard (slightly weathered) gneiss and GRANITOID rock fragments, (ALLUVIUM).

Well-graded SAND (SW) with fine to coarse GRAVEL (30 to 45 %) thickly interbedded (12" to 24" thick) with well-graded fine to coarse GRAVEL (GW) with fine to medium SAND matrix, dense, yellowish brown to varicolored, moist, nonplastic, contains subrounded hard (slightly weathered) GRANITOID and DIORITE rock fragments.

Well-graded SAND (SW) with GRAVEL (15 to 35%) interbedded with well-graded GRAVEL (GW) lenses, SILTY fine to medium SAND (SM), and well-graded SAND with SILT (SW-SM) and GRAVEL (15%), medium dense to dense, yellowish brown to varicolored, moist, nonplastic, crosslaminated.

Poorly-graded fine to medium SAND with SILT (SP-SM) and sporadic GRAVEL (0 to 20%) moderately interbedded (12" thick) with GRAVEL, medium dense, yellowish brown to varicolored, moist, nonplastic.

BOULDER (12" diameter), hard GRANITOID, hard rock drilling.
SILTY fine SAND (SM) interbedded with coarse GRAVEL and COBBLES ≤(4" diameter), medium dense, grayish brown to varicolored, moist, nonplastic.
SILTY fine SAND (SM, 15 to 30% SILT) interbedded with minor SANDY SILT (ML, containing 5 to 10% CLAY), medium dense, brown, moist, nonplastic, micaceous.

SILTY fine SAND (SM), contains minor sporadic GRAVEL (2 to 10%) interbedded with minor SANDY SILT (ML) and CLAYEY fine SAND (SC), medium dense, brown to grayish brown, moist, dominantly nonplastic, rare low plasticity.

Poorly-graded fine SAND (SP) with GRAVEL (15 to 35%) moderately interbedded (12" thick) with GRAVEL lenses and SILTY fine SAND (SM), very dense, yellowish brown, moist, nonplastic, crossbedded, variable hard rock drilling.

Well-graded coarse to fine GRAVEL (GW) with fine SAND to minor SILTY fine SAND matrix (30%) and scattered COBBLES (≤ 8" length) and possible BOULDERS (≤ 12" length) interbedded with SAND, very dense, varicolored to yellowish brown, moist, nonplastic, contains subangular to subrounded hard (slightly weathered) GRANITOID and SCHIST rock fragments.

PROFILE

Horiz: 1" = 10′
Vert: 1" = 10′

ENGINEERING SERVICES	GEOTECHNICAL SERVICES
DRAWN BY	I.G-Remmen
CHECKED BY	J. Pratt, A. Mehrazar

FIELD INVESTIGATION BY: J. Pratt

STATE OF CALIFORNIA DEPARTMENT OF TRANSPORTATION

DIVISION OF ENGINEERING SERVICES STRUCTURE DESIGN DESIGN BRANCH 18

BRIDGE NO. RW 25
POST MILE 30.53

RETAINING WALL NO. 25
LOG OF TEST BORINGS 1 OF 4

OGS LOG OF TEST BORINGS SHEET (ENGLISH) (REV. 5/25/07)

ORIGINAL SCALE IN INCHES FOR REDUCED PLANS 0 1 2 3

UNIT: 3603
PROJECT NUMBER & PHASE: 07000211191
CONTRACT NO.: 07-1218W1

DISREGARD PRINTS BEARING EARLIER REVISION DATES

REVISION DATES: ~~02-03-12~~ 02-07-12

SHEET 12 OF 15

FILE => 53-rw25-z-ltb-1of4.dgn

USERNAME => s1244396 DATE PLOTTED => 22-MAY-2012 TIME PLOTTED => 08:34

DIST	COUNTY	ROUTE	POST MILES TOTAL PROJECT	SHEET No	TOTAL SHEETS
07	LA	5	29.4/31.6	1100	1931

Joseph S. Pratt 2-7-12
CERTIFIED ENGINEERING GEOLOGIST

5-21-12
PLANS APPROVAL DATE

PROFESSIONAL GEOLOGIST Joseph S. Pratt No. 2141 Exp. 5-31-13 CERTIFIED ENGINEERING GEOLOGIST STATE OF CALIFORNIA

The State of California or its officers or agents shall not be responsible for the accuracy or completeness of electronic copies of this plan sheet.

FOR PLAN VIEW, SEE
"LOG OF TEST BORINGS 1 OF 4"

Note: No ground water encountered during field investigation.

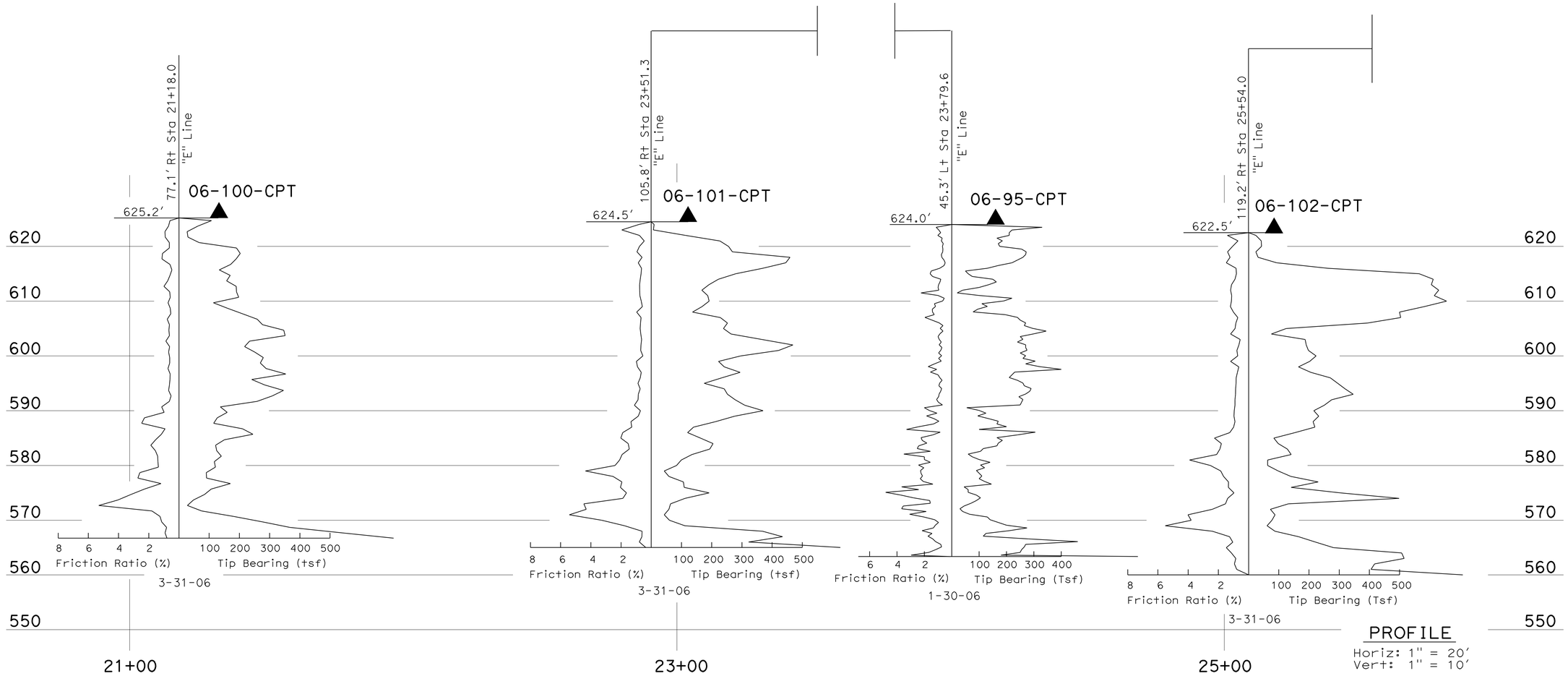

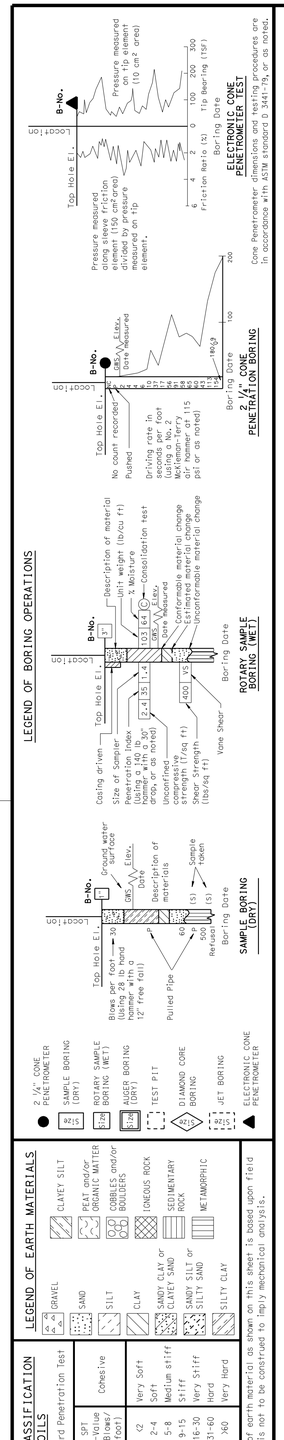

ENGINEERING SERVICES	GEOTECHNICAL SERVICES
DRAWN BY	I.G-Remmen
CHECKED BY	J. Pratt, A Mehrazar

FIELD INVESTIGATION BY:
S. Friet
J. Pratt, D. Toth

STATE OF CALIFORNIA
DEPARTMENT OF TRANSPORTATION

DIVISION OF ENGINEERING SERVICES
STRUCTURE DESIGN
DESIGN BRANCH 18

BRIDGE NO. RW 25
POST MILE 30.53

RETAINING WALL NO. 25
LOG OF TEST BORINGS 2 OF 4

OGS LOG OF TEST BORINGS SHEET (ENGLISH) (REV. 5/25/07)

ORIGINAL SCALE IN INCHES FOR REDUCED PLANS 0 1 2 3

UNIT: 3603
PROJECT NUMBER & PHASE: 07000211191
CONTRACT NO.: 07-1218W1

DISREGARD PRINTS BEARING EARLIER REVISION DATES

REVISION DATES: 01-27-12 02-05-12 02-07-12
SHEET 13 OF 15

FILE => 53-rw25-z-ltb-2of4.dgn

USERNAME => s124196 DATE PLOTTED => 22-MAY-2012 TIME PLOTTED => 06:53