DIST	COUNTY	ROUTE	POST MILES TOTAL PROJECT	SHEET No.	TOTAL SHEETS
07	LA	5	29.4/31.6	901	1931

REGISTERED CIVIL ENGINEER — DATE 2-04-12

5-21-12
PLANS APPROVAL DATE

REGISTERED PROFESSIONAL ENGINEER — Ulysses N. Smpardos — No. 61018 — Exp. 12/31/12 — CIVIL — STATE OF CALIFORNIA

The State of California or its officers or agents shall not be responsible for the accuracy or completeness of electronic copies of this plan sheet.

Notes:

1. For Architectural Treatment on MSE Wall, see "MISCELLANEOUS DETAILS NO. 2" sheet.
2. Finish Grade approximaly equal to Original Ground.

Legend:

Ⓓ to Ⓑ - Indicates Soil Reinforcement designation letter. For details, see "STEEL REINFORCEMENT FOR LOAD CASE 1" Table on "INDEX TO PLANS" sheet.

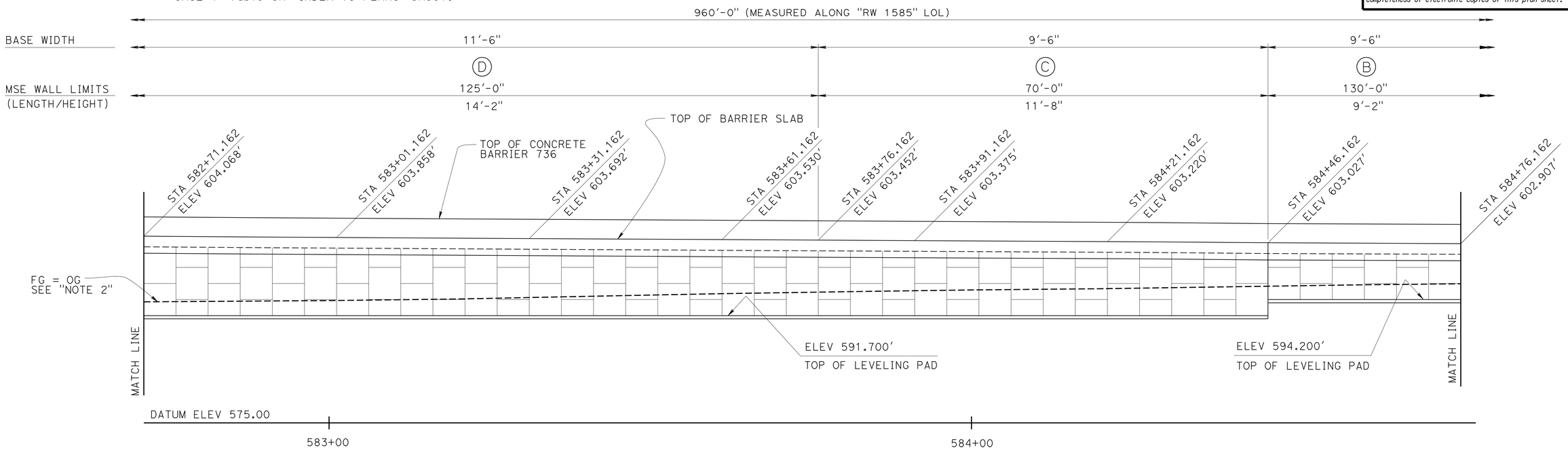

ELEVATION (MIRRORED & DEVELOPED)

1/8" = 1'-0"

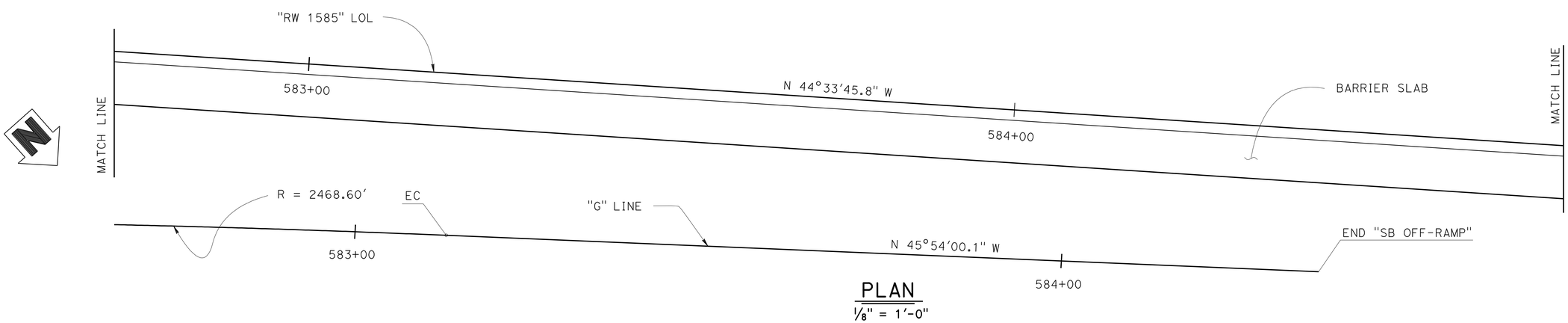

PLAN

1/8" = 1'-0"

DESIGN	BY Gabriel Galo	CHECKED Shervin Pahlavan	
DETAILS	BY L. Goldthwait/S. Cholda	CHECKED Shervin Pahlavan	
QUANTITIES	BY Gabriel Galo	CHECKED Traci Menard	

STATE OF CALIFORNIA
DEPARTMENT OF TRANSPORTATION

DIVISION OF ENGINEERING SERVICES
STRUCTURE DESIGN
DESIGN BRANCH 15

BRIDGE NO. 53E0164
POST MILE 29.9

RETAINING WALL NO. 1585
STRUCTURE PLAN NO. 3

STRUCTURES DESIGN DETAIL SHEET (ENGLISH) (REV. 09-01-10)

ORIGINAL SCALE IN INCHES FOR REDUCED PLANS 0 1 2 3

UNIT: 3604
PROJECT NUMBER & PHASE: 0700021119
CONTRACT NO.: 07-1218W1

DISREGARD PRINTS BEARING EARLIER REVISION DATES

REVISION DATES: 12-01-11 04-12-12 03-06-12 04-11-12

SHEET 8 OF 26

FILE => 53e0164-g-det03.dgn

USERNAME => s109858 DATE PLOTTED => 22-MAY-2012 TIME PLOTTED => 08:39

DIST	COUNTY	ROUTE	POST MILES TOTAL PROJECT	SHEET No.	TOTAL SHEETS
07	LA	5	29.4/31.6	902	1931

Ulysses N. Smpardos 2-04-12
REGISTERED CIVIL ENGINEER DATE

5-21-12
PLANS APPROVAL DATE

REGISTERED PROFESSIONAL ENGINEER Ulysses N. Smpardos No. 61018 Exp. 12/31/12 CIVIL STATE OF CALIFORNIA

The State of California or its officers or agents shall not be responsible for the accuracy or completeness of electronic copies of this plan sheet.

Notes:

1. For Architectural Treatment on MSE Wall, see "MISCELLANEOUS DETAILS NO. 2" sheet.
2. Finish Grade approximaly equal to Original Ground.
3. For details, see "SIGN SUPPORT DETAILS" sheet.

Legend:

(B) - Indicates Soil Reinforcement designation letter. For details, see "STEEL REINFORCEMENT FOR LOAD CASE 1" Table on "INDEX TO PLANS" sheet.

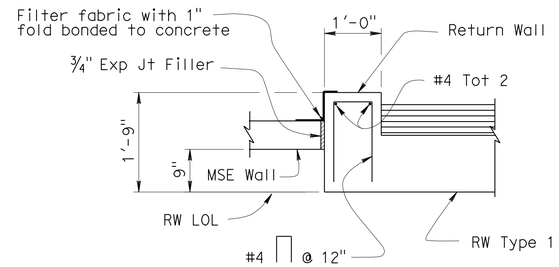

SECTION A-A

3/4" = 1'-0"

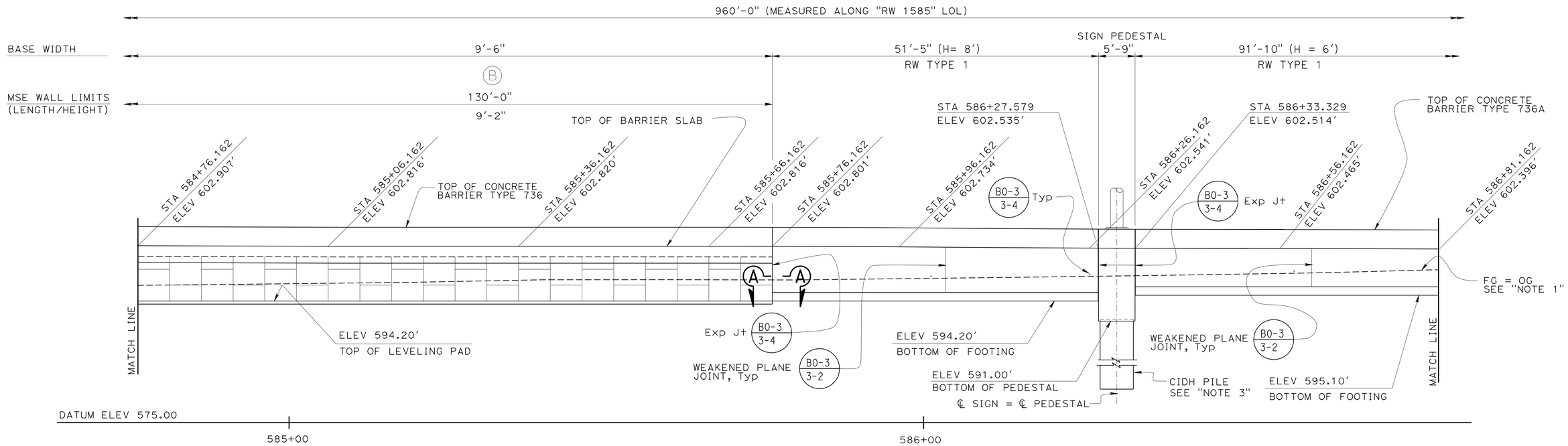

ELEVATION (MIRRORED & DEVELOPED)

1/8" = 1'-0"

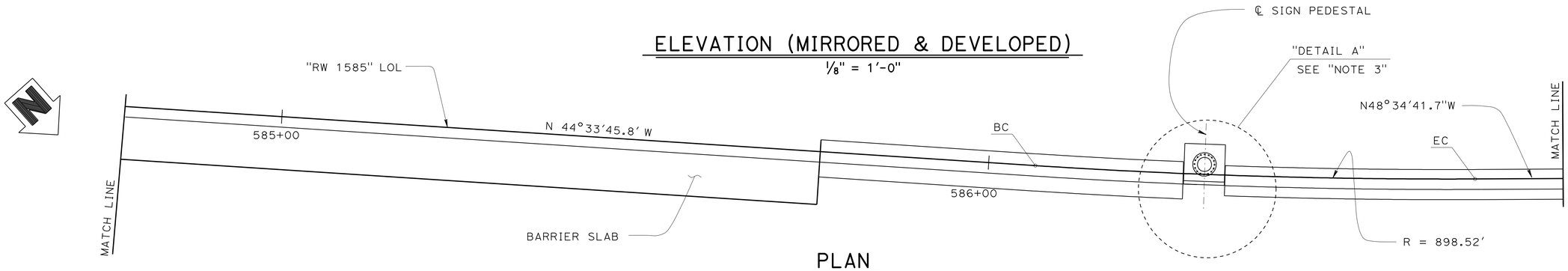

PLAN

1/8" = 1'-0"

DESIGN	BY Gabriel Galo	CHECKED Shervin Pahlavan	
DETAILS	BY L. Goldthwait/S. Cholda	CHECKED Shervin Pahlavan	
QUANTITIES	BY Gabriel Galo	CHECKED Traci Menard	

STATE OF CALIFORNIA
DEPARTMENT OF TRANSPORTATION

DIVISION OF ENGINEERING SERVICES
STRUCTURE DESIGN
DESIGN BRANCH 15

BRIDGE NO. 53E0164
POST MILE 29.9

RETAINING WALL NO. 1585
STRUCTURE PLAN NO. 4

STRUCTURES DESIGN DETAIL SHEET (ENGLISH) (REV. 09-01-10)

ORIGINAL SCALE IN INCHES FOR REDUCED PLANS 0 1 2 3

UNIT: 3604
PROJECT NUMBER & PHASE: 0700021119

07-1218W1

DISREGARD PRINTS BEARING EARLIER REVISION DATES

REVISION DATES 12-01-11 03-06-12 04-09-12 04-12-12

SHEET 9 OF 26

FILE => 53e0164-g-det04.dgn

USERNAME => s109858 DATE PLOTTED => 22-MAY-2012 TIME PLOTTED => 08:39

DIST	COUNTY	ROUTE	POST MILES TOTAL PROJECT	SHEET No.	TOTAL SHEETS
07	LA	5	29.4/31.6	903	1931

Ulysses N. Smpardos 2-04-12
REGISTERED CIVIL ENGINEER DATE

5-21-12
PLANS APPROVAL DATE

REGISTERED PROFESSIONAL ENGINEER
Ulysses N. Smpardos
No. 61018
Exp. 12/31/12
CIVIL
STATE OF CALIFORNIA

The State of California or its officers or agents shall not be responsible for the accuracy or completeness of electronic copies of this plan sheet.

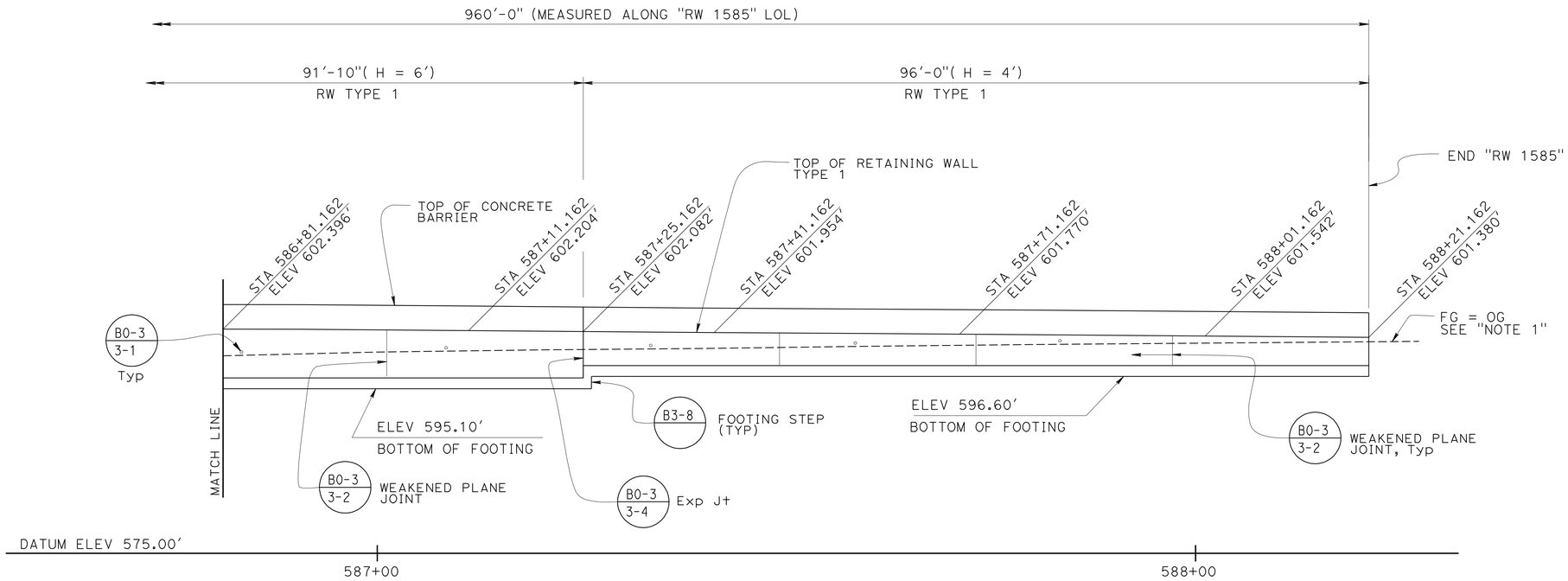

ELEVATION (MIRRORED & DEVELOPED)

1/8" = 1'-0"

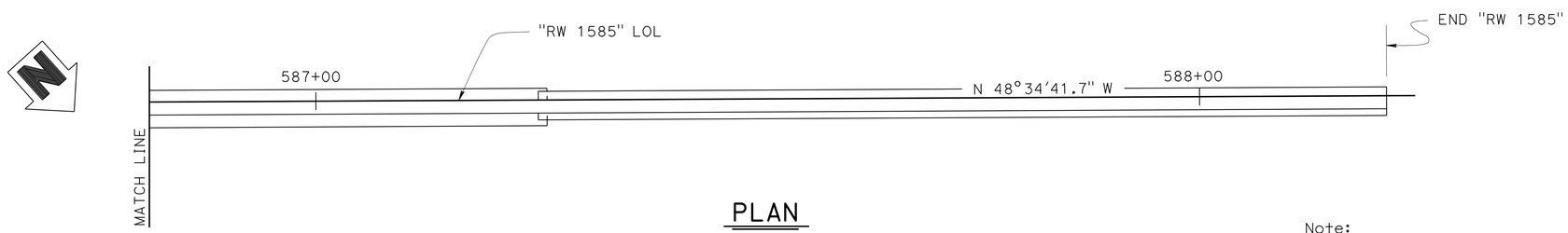

PLAN

1/8" = 1'-0"

Note:

1. Finish Grade approximately equal to Original Ground.

DESIGN	BY Gabriel Galo	CHECKED Shervin Pahlavan	
DETAILS	BY L. Goldthwait/S. Cholda	CHECKED Shervin Pahlavan	
QUANTITIES	BY Gabriel Galo	CHECKED Traci Menard	

STATE OF CALIFORNIA
DEPARTMENT OF TRANSPORTATION

DIVISION OF ENGINEERING SERVICES
STRUCTURE DESIGN
DESIGN BRANCH 15

BRIDGE NO. 53E0164
POST MILE 29.9

RETAINING WALL NO. 1585
STRUCTURE PLAN NO. 5

STRUCTURES DESIGN DETAIL SHEET (ENGLISH) (REV. 09-01-10)

ORIGINAL SCALE IN INCHES FOR REDUCED PLANS 0 1 2 3

UNIT: 3604
PROJECT NUMBER & PHASE: 0700021119
CONTRACT NO.: 07-1218W1

DISREGARD PRINTS BEARING EARLIER REVISION DATES

REVISION DATES: 12-01-11 04-11-12 03-06-12 03-29-12

SHEET 10 OF 26

FILE => 53e0164-g-det05.dgn

USERNAME => s109858 DATE PLOTTED => 22-MAY-2012 TIME PLOTTED => 08:39

DIST	COUNTY	ROUTE	POST MILES TOTAL PROJECT	SHEET No.	TOTAL SHEETS
07	LA	5	29.4/31.6	904	1931

Ulysses N. Smpardos 2-04-12
REGISTERED CIVIL ENGINEER DATE

5-21-12
PLANS APPROVAL DATE

REGISTERED PROFESSIONAL ENGINEER
Ulysses N. Smpardos
No. 61018
Exp. 12/31/12
CIVIL
STATE OF CALIFORNIA

The State of California or its officers or agents shall not be responsible for the accuracy or completeness of electronic copies of this plan sheet.

Legend:

Limits of Structure Excavation (Retaining Wall).

Limits of Structure Backfill (Retaining Wall).

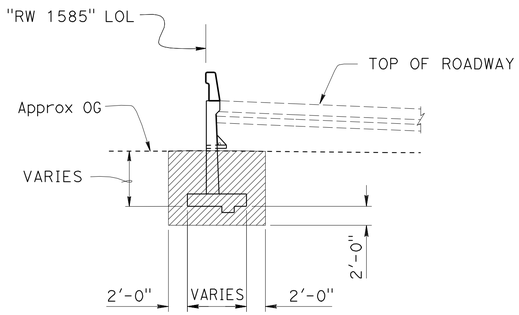

LIMITS OF EXCAVATION

1/8" = 1'-0"

Notes

1. Locate underdrain behind bottom level of welded wire mats wherever possible, or at elevation needed to drain, as elsewhere on plans.
2. Maximum spacing of outlet pipe is 200 feet.
3. At sags in profile of underdrain, install outlet pipe for each direction of flow.
4. Place perforated pipe underdrain of diameter shown elswhere on plans or minimum 4" Ø smoothed wall PVC.
5. For MSE Wall details, see "STRUCTURE PLAN NO. 1" through "STRUCTURE PLAN NO. 5" sheet.

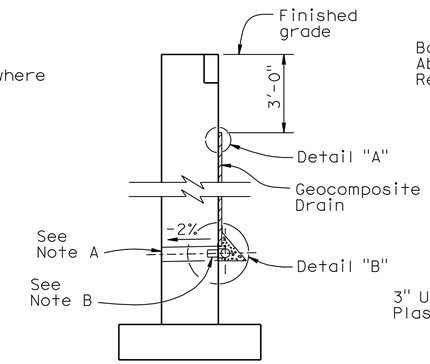

WALL SECTION

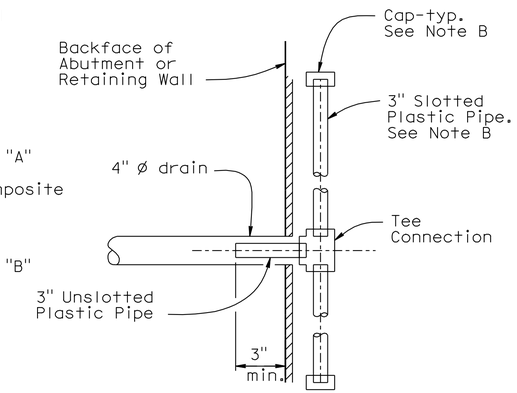

SECTION A-A

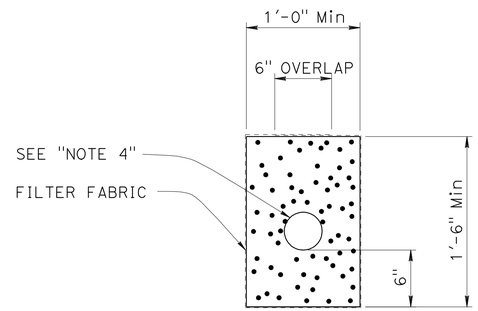

UNDERDRAIN DETAIL

1 1/2" = 1'-0"

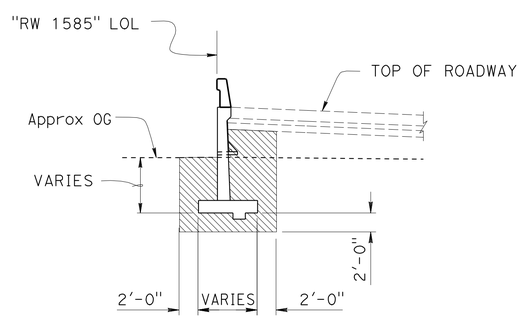

LIMITS OF BACKFILL

1/8" = 1'-0"

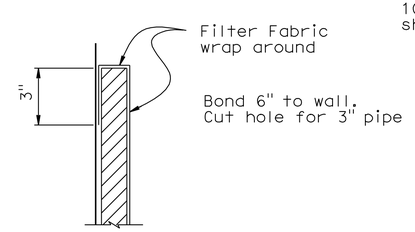

DETAIL "A"

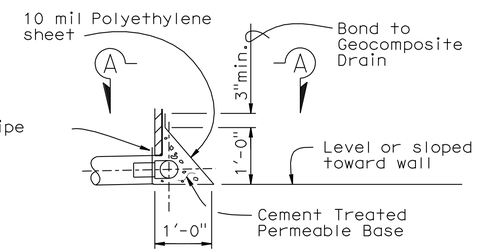

DETAIL "B"

WEEP HOLE AND GEOCOMPOSITE DRAIN

ALTERNATIVE TO BRIDGE DETAIL (BO-3 / 3-1)

Notes:

A. 4" Ø drains at intermediate sag points and at 25' max center to center (9' c-c for Type 3 and 9'-3" c-c for Type 4 retaining walls).
For walls adjacent to sidewalks or curbs, provide 4" cast iron or asbestos cement pipe under the sidewalk to discharge through curb face.
Exposed wall drains shall be located 3"± above finished grade.

B. Geocomposite drain, cement treated permeable base, and 3"Ø slotted plastic pipe continuous behind retaining wall or abutment. Cap ends of pipe. Provide "Tee" connection at each 4" Ø drain.

C. Connect the low end of plastic pipe to the main outlet pipe as apprlicable.

	BY	CHECKED
DESIGN	Gabriel Galo	Shervin Pahlavan
DETAILS	Stan Cholda	Shervin Pahlavan
QUANTITIES	Gabriel Galo	Traci Menard

STATE OF CALIFORNIA
DEPARTMENT OF TRANSPORTATION

DIVISION OF ENGINEERING SERVICES
STRUCTURE DESIGN
DESIGN BRANCH 15

BRIDGE NO. 53E0164
POST MILE 29.9

RETAINING WALL NO. 1585
MISCELLANEOUS DETAILS NO. 1

STRUCTURES DESIGN DETAIL SHEET (ENGLISH) (REV. 09-01-10)

ORIGINAL SCALE IN INCHES FOR REDUCED PLANS 0 1 2 3

UNIT: 3604
PROJECT NUMBER & PHASE: 0700021119
CONTRACT NO.: 07-1218W1

DISREGARD PRINTS BEARING EARLIER REVISION DATES

REVISION DATES: 12-09-11 04-18-12 04-25-12 03-17-12

SHEET 11 OF 26

FILE => 53e0164-m-misc01.dgn

USERNAME => s109858 DATE PLOTTED => 22-MAY-2012 TIME PLOTTED => 08:39

DIST	COUNTY	ROUTE	POST MILES TOTAL PROJECT	SHEET No.	TOTAL SHEETS
07	LA	5	29.4/31.6	905	1931

Ulysses N. Smpardos 2-04-12
REGISTERED CIVIL ENGINEER DATE

5-21-12
PLANS APPROVAL DATE

REGISTERED PROFESSIONAL ENGINEER
Ulysses N. Smpardos
No. 61018
Exp. 12/31/12
CIVIL
STATE OF CALIFORNIA

The State of California or its officers or agents shall not be responsible for the accuracy or completeness of electronic copies of this plan sheet.

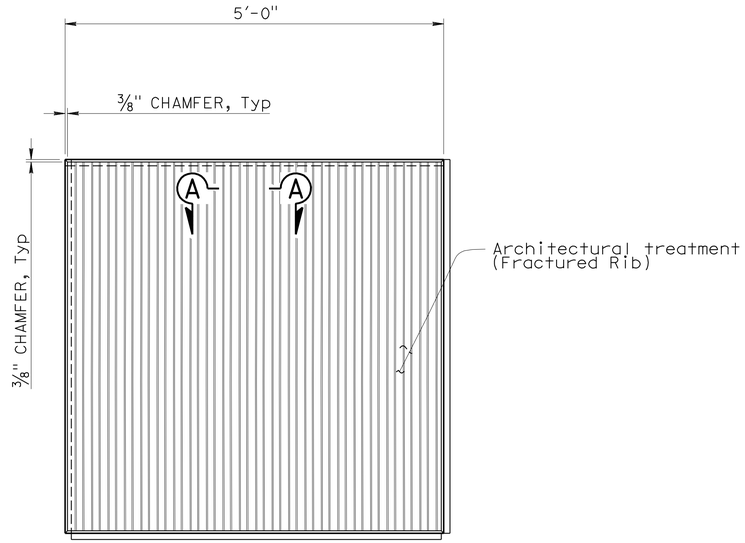

ELEVATION
1" = 1'-0"

INTERMEDIATE PANEL W/ARCHITECTURAL TREATMENT

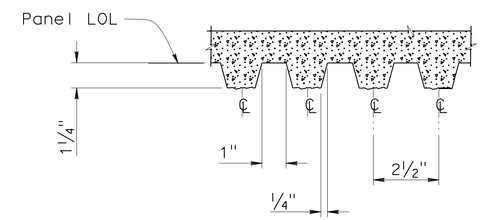

SECTION A-A
NO SCALE

ARCHITECTURAL TREATMENT

Notes:

1. Intermediate panel with Architectural treatment shown. Bottom and top panels similar.
2. No chamfer is placed at bottom of a bottom panel.

	BY	CHECKED
DESIGN	Gabriel Galo	Shervin Pahlavan
DETAILS	Stan Cholda	Shervin Pahlavan
QUANTITIES	Gabriel Galo	Traci Menard

STATE OF CALIFORNIA
DEPARTMENT OF TRANSPORTATION

DIVISION OF ENGINEERING SERVICES
STRUCTURE DESIGN
DESIGN BRANCH 15

BRIDGE NO. 53E0164
POST MILE 29.9

RETAINING WALL NO. 1585
MISCELLANEOUS DETAILS NO. 2

STRUCTURES DESIGN DETAIL SHEET (ENGLISH) (REV. 09-01-10)

ORIGINAL SCALE IN INCHES FOR REDUCED PLANS 0 1 2 3

UNIT: 3604
PROJECT NUMBER & PHASE: 0700021119
CONTRACT NO.: 07-1218W1

DISREGARD PRINTS BEARING EARLIER REVISION DATES

REVISION DATES: 03-08-12

SHEET 12 OF 26

FILE => 53e0164-m-misc02.dgn

USERNAME => s103858 DATE PLOTTED => 22-MAY-2012 TIME PLOTTED => 08:39

DIST	COUNTY	ROUTE	POST MILES TOTAL PROJECT	SHEET No.	TOTAL SHEETS
07	LA	5	29.4/31.6	906	1931

Ulysses N. Smpardos 2-04-12
REGISTERED CIVIL ENGINEER DATE

5-21-12
PLANS APPROVAL DATE

REGISTERED PROFESSIONAL ENGINEER Ulysses N. Smpardos No. 61018 Exp. 12/31/12 CIVIL STATE OF CALIFORNIA

The State of California or its officers or agents shall not be responsible for the accuracy or completeness of electronic copies of this plan sheet.

TABLE 1

DRAINAGE PIPE LOCATION								
DRAINAGE SEGMENT E			DRAINAGE SEGMENT D			DRAINAGE SEGMENT C		
LOCATION NUMBER	STATION	ELEVATION	LOCATION NUMBER	STATION	ELEVATION	LOCATION NUMBER	STATION	ELEVATION
1	0.667′ RT 578+66.005 "RW 1585" LOL	—	9	0.667′ RT 579+63.662 "RW 1585" LOL	—	15	0.667′ RT 580+71.340 "RW 1585" LOL	—
2	9.667′ RT 578+66.005 "RW 1585" LOL	605.490′	10	18.667′ RT 579+63.662 "RW 1585" LOL	590.170′	16	17.667′ RT 580+71.340 "RW 1585" LOL	592.076′
3	9.667′ RT 578+86.162 "RW 1585" LOL	—	11	18.667′ RT 579+79.994 "RW 1585" LOL	—	17	17.667′ RT 580+81.970 "RW 1585" LOL	—
4	13.667′ RT 578+90.178 "RW 1585" LOL	602.000′	12	17.667′ RT 579+81.093 "RW 1585" LOL	590.443′	18	13.667′ RT 580+86.093 "RW 1585" LOL	592.340′
5	13.667′ RT 579+11.162 "RW 1585" LOL	—	13	17.667′ RT 580+65.988 "RW 1585" LOL	591.770′	19	13.667′ RT 581+80.997 "RW 1585" LOL	594.037′
6	18.667′ RT 579+16.190 "RW 1585" LOL	598.420′	14	0.667′ RT 580+65.988 "RW 1585" LOL	—	20	0.667′ RT 581+80.997 "RW 1585" LOL	—
7	18.667′ RT 579+58.662 "RW 1585" LOL	592.440′						
8	0.667′ RT 579+58.662 "RW 1585" LOL	—						

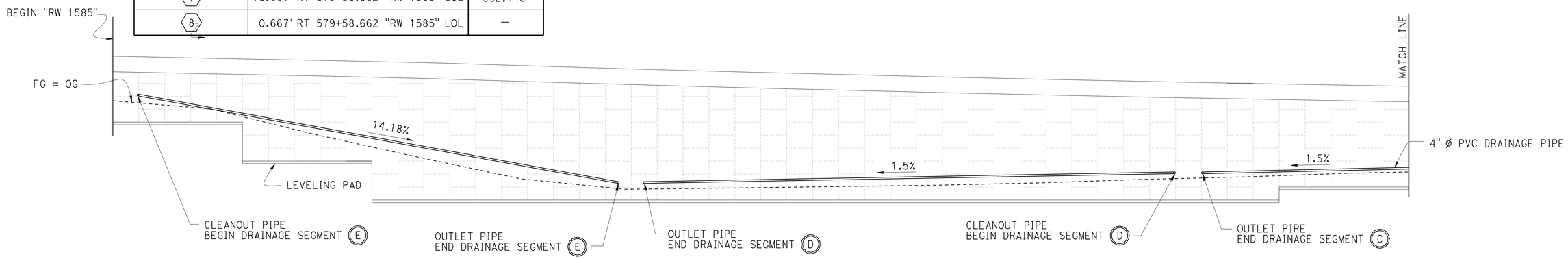

ELEVATION
1" = 10′-0"

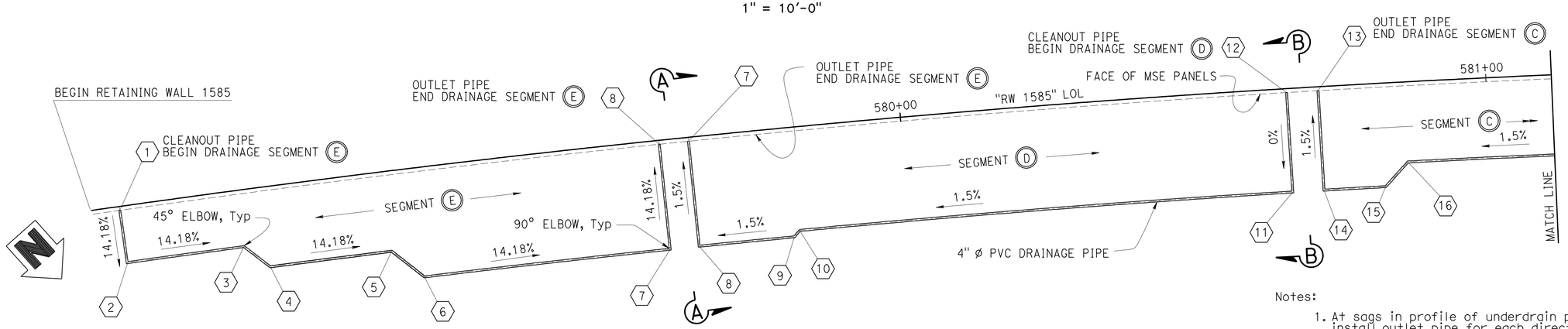

PLAN
1" = 10′-0"

Legend:

(XX) Indicates pipe location along drainage line

Notes:

1. At sags in profile of underdrain pipe, install outlet pipe for each direction of flow.
2. Elevations are given at Invert of pipe.
3. Use PVC perforated pipe 4" Ø for drainage.
4. Cleanout pipe and outlet pipe must be non-perfarated PVC pipe 4" Ø.
5. For pipe location along drainage line , see "TABLE 1".
6. Outlet pipes and cleanout pipes shall be located 6" Min above finish grade.
7. At outlet pipe anchor firmly to backface a 6" square aluminum or galvanized steel wire 1/4" mesh hardware cloth, minimum wire diameter 0.025"

	BY	CHECKED
DESIGN	Gabriel Galo	Shervin Pahlavan
DETAILS	Stan Cholda	Shervin Pahlavan
QUANTITIES	Gabriel Galo	Traci Menard

STATE OF CALIFORNIA
DEPARTMENT OF TRANSPORTATION

DIVISION OF ENGINEERING SERVICES
STRUCTURE DESIGN
DESIGN BRANCH 15

BRIDGE NO. 53E0164
POST MILE 29.9

RETAINING WALL NO. 1585
DRAINAGE DETAILS NO. 1

STRUCTURES DESIGN DETAIL SHEET (ENGLISH) (REV. 09-01-10)

ORIGINAL SCALE IN INCHES FOR REDUCED PLANS 0 1 2 3

UNIT: 3604
PROJECT NUMBER & PHASE: 0700021119
CONTRACT NO.: 07-1218W1

DISREGARD PRINTS BEARING EARLIER REVISION DATES

REVISION DATES 04-11-12 06-11-12 06-12-12 06-06-12

SHEET 13 OF 26

FILE => 53e0164-r-ddet01.dgn

USERNAME => s121614 DATE PLOTTED => 13-JUN-2012 TIME PLOTTED => 09:43

DIST	COUNTY	ROUTE	POST MILES TOTAL PROJECT	SHEET No.	TOTAL SHEETS
07	LA	5	29.4/31.6	907	1931

Ulysses N. Smpardos 2-04-12
REGISTERED CIVIL ENGINEER DATE

5-21-12
PLANS APPROVAL DATE

REGISTERED PROFESSIONAL ENGINEER Ulysses N. Smpardos No. 61018 Exp. 12/31/12 CIVIL STATE OF CALIFORNIA

The State of California or its officers or agents shall not be responsible for the accuracy or completeness of electronic copies of this plan sheet.

TABLE 1 (CONTINUE)

DRAINAGE PIPE LOCATION					
DRAINAGE SEGMENT (B)			DRAINAGE SEGMENT (A)		
LOCATION NUMBER	STATION	ELEVATION	LOCATION NUMBER	STATION	ELEVATION
21	0.667' RT 581+86.327 "RW 1585" LOL	–	27	0.667' RT 583+81.331 "RW 1585" LOL	–
22	13.667' RT 581+86.327 "RW 1585" LOL	594.434'	28	9.667' RT 583+81.331 "RW 1585" LOL	596.884'
23	13.667' RT 582+49.138 "RW 1585" LOL	–	29	9.667' RT 584+45.669 "RW 1585" LOL	599.272'
24	11.000' RT 582+51.162 "RW 1585" LOL	595.210'	30	0.667' RT 585+70.990" RW 1585" LOL	–
25	11.000' RT 583+76.000 "RW 1585" LOL	596.771'			
26	0.667' RT 583+76.000 "RW 1585" LOL	–			

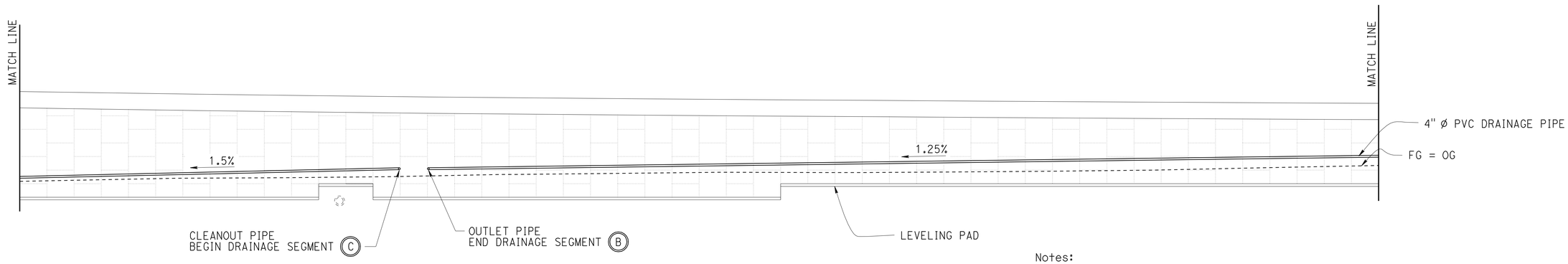

ELEVATION
1" = 10'-0"

Notes:

1. At sags in profile of underdrain pipe, install outlet pipe for each direction of flow.
2. Elevations are given at Invert of pipe.
3. Use PVC pipe 4" ø for drainage.
4. Cleanout pipe must be non-perfarated PVC pipe 4" ø.
5. For pipe location along drainage line , see "TABLE 1".

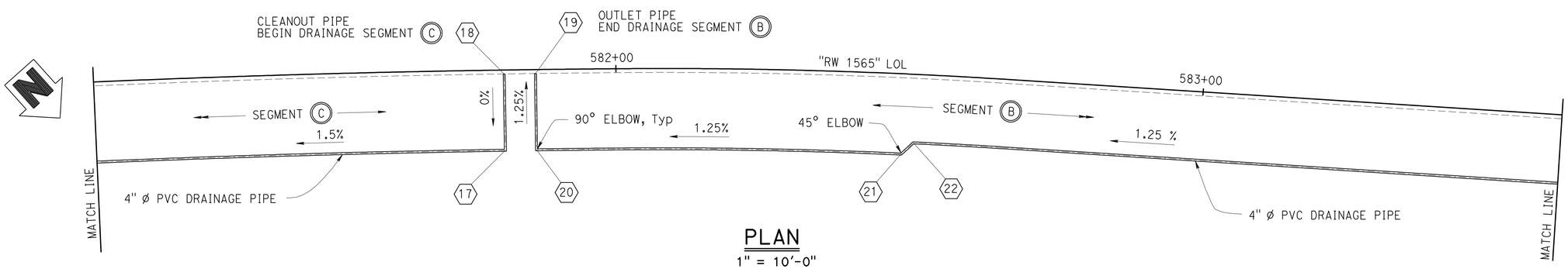

PLAN
1" = 10'-0"

Legend:

(XX) Indicates pipe location along drainage line

DESIGN	BY Gabriel Galo	CHECKED Shervin Pahlavan	
DETAILS	BY Stan Cholda	CHECKED Shervin Pahlavan	
QUANTITIES	BY Gabriel Galo	CHECKED Traci Menard	

STATE OF CALIFORNIA
DEPARTMENT OF TRANSPORTATION

DIVISION OF ENGINEERING SERVICES
STRUCTURE DESIGN
DESIGN BRANCH 15

BRIDGE NO. 53E0164
POST MILE 29.9

RETAINING WALL NO. 1585
DRAINAGE DETAILS NO. 2

STRUCTURES DESIGN DETAIL SHEET (ENGLISH) (REV. 09-01-10)

ORIGINAL SCALE IN INCHES FOR REDUCED PLANS 0 1 2 3

UNIT: 3604
PROJECT NUMBER & PHASE: 0700021119
CONTRACT NO.: 07-1218W1

DISREGARD PRINTS BEARING EARLIER REVISION DATES

REVISION DATES: 04-11-12 06-12-12 06-06-12 06-11-12

SHEET 14 OF 26

FILE => 53e0164-r-ddet02.dgn

USERNAME => s121614 DATE PLOTTED => 13-JUN-2012 TIME PLOTTED => 09:43

DIST	COUNTY	ROUTE	POST MILES TOTAL PROJECT	SHEET No.	TOTAL SHEETS
07	LA	5	29.4/31.6	908	1931

REGISTERED CIVIL ENGINEER — DATE: 2-04-12

5-21-12
PLANS APPROVAL DATE

REGISTERED PROFESSIONAL ENGINEER — Ulysses N. Smpardos — No. 61018 — Exp. 12/31/12 — CIVIL — STATE OF CALIFORNIA

The State of California or its officers or agents shall not be responsible for the accuracy or completeness of electronic copies of this plan sheet.

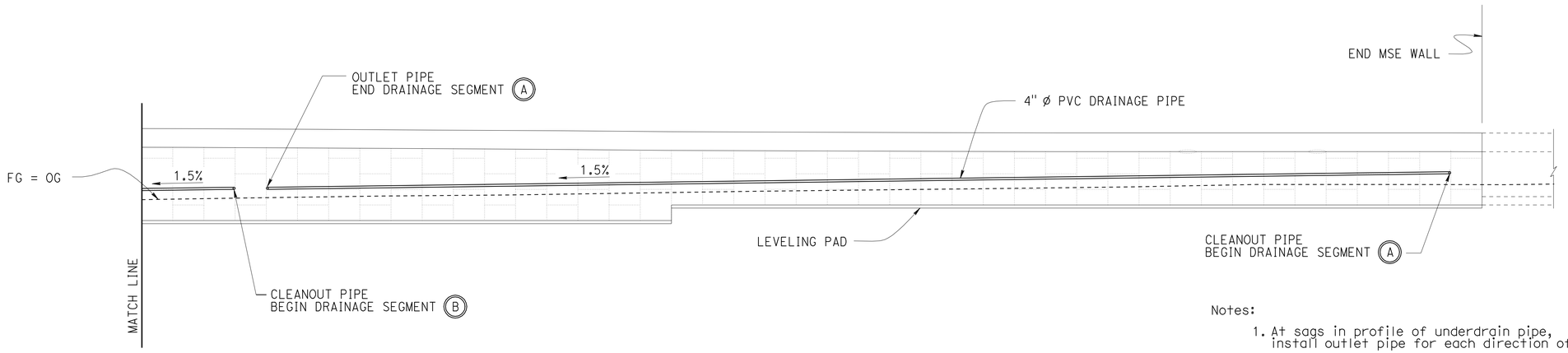

ELEVATION
1" = 10'-0"

Notes:

1. At sags in profile of underdrain pipe, install outlet pipe for each direction of flow.
2. Elevations are given at Invert of pipe.
3. Use PVC pipe 4" ø for drainage.
4. Cleanout pipe must be non-perfarated PVC pipe 4" ø.
5. For pipe location along drainage line , see "TABLE 1" on "DRAINAGE LAYOUT NO. 2" sheet.

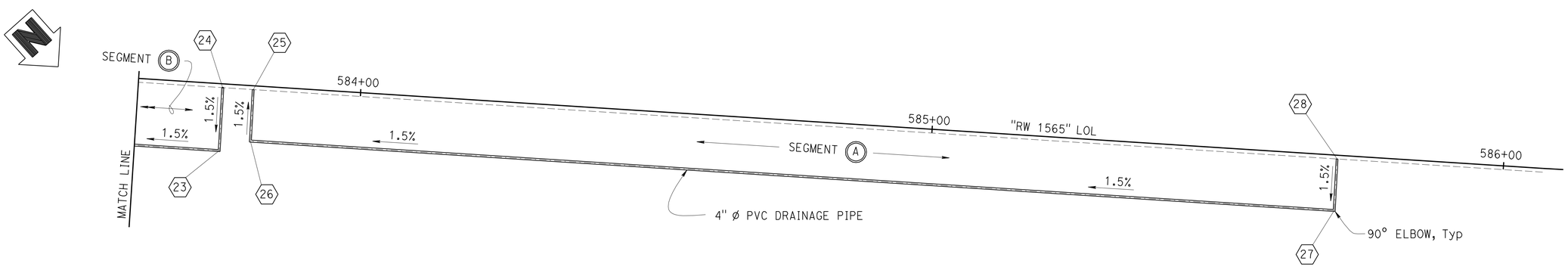

PLAN
1" = 10'-0"

Legend:

(X) Indicates pipe location along drainage line

DESIGN	BY Gabriel Galo	CHECKED Shervin Pahlavan	
DETAILS	BY Stan Cholda	CHECKED Shervin Pahlavan	
QUANTITIES	BY Gabriel Galo	CHECKED Traci Menard	

STATE OF CALIFORNIA
DEPARTMENT OF TRANSPORTATION

DIVISION OF ENGINEERING SERVICES
STRUCTURE DESIGN
DESIGN BRANCH 15

BRIDGE NO. 53E0164
POST MILE 29.9

RETAINING WALL NO. 1585
DRAINAGE DETAILS NO. 3

STRUCTURES DESIGN DETAIL SHEET (ENGLISH) (REV. 09-01-10)

ORIGINAL SCALE IN INCHES FOR REDUCED PLANS 0 1 2 3

UNIT: 3604
PROJECT NUMBER & PHASE: 0700021119
CONTRACT NO.: 07-1218W1

DISREGARD PRINTS BEARING EARLIER REVISION DATES

REVISION DATES: ~~04-11-12~~ 04-12-12

SHEET 15 OF 26

FILE => 53e0164-r-ddet03.dgn

USERNAME => s109858 DATE PLOTTED => 22-MAY-2012 TIME PLOTTED => 08:40

DIST	COUNTY	ROUTE	POST MILES TOTAL PROJECT	SHEET No.	TOTAL SHEETS
07	LA	5	29.4/31.6	909	1931

Ulysses N. Smpardos 2-04-12
REGISTERED CIVIL ENGINEER DATE

5-21-12
PLANS APPROVAL DATE

REGISTERED PROFESSIONAL ENGINEER
Ulysses N. Smpardos
No. 61018
Exp. 12/31/12
CIVIL
STATE OF CALIFORNIA

The State of California or its officers or agents shall not be responsible for the accuracy or completeness of electronic copies of this plan sheet.

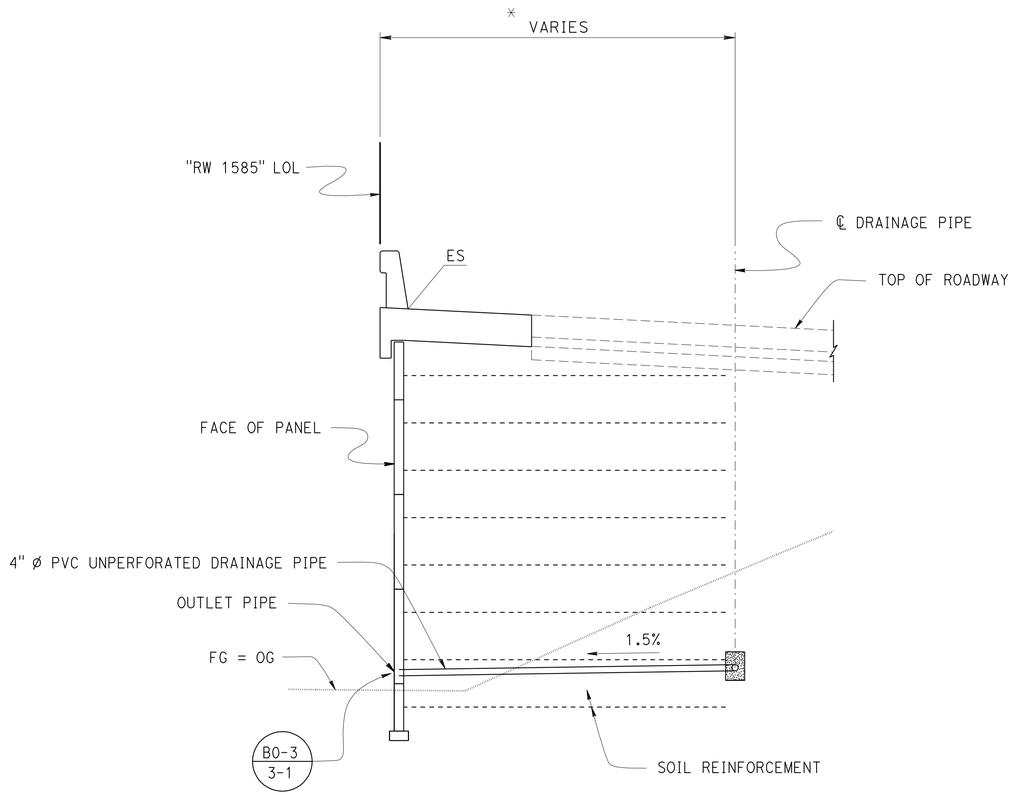

SECTION A-A
1/4" = 1'-0"

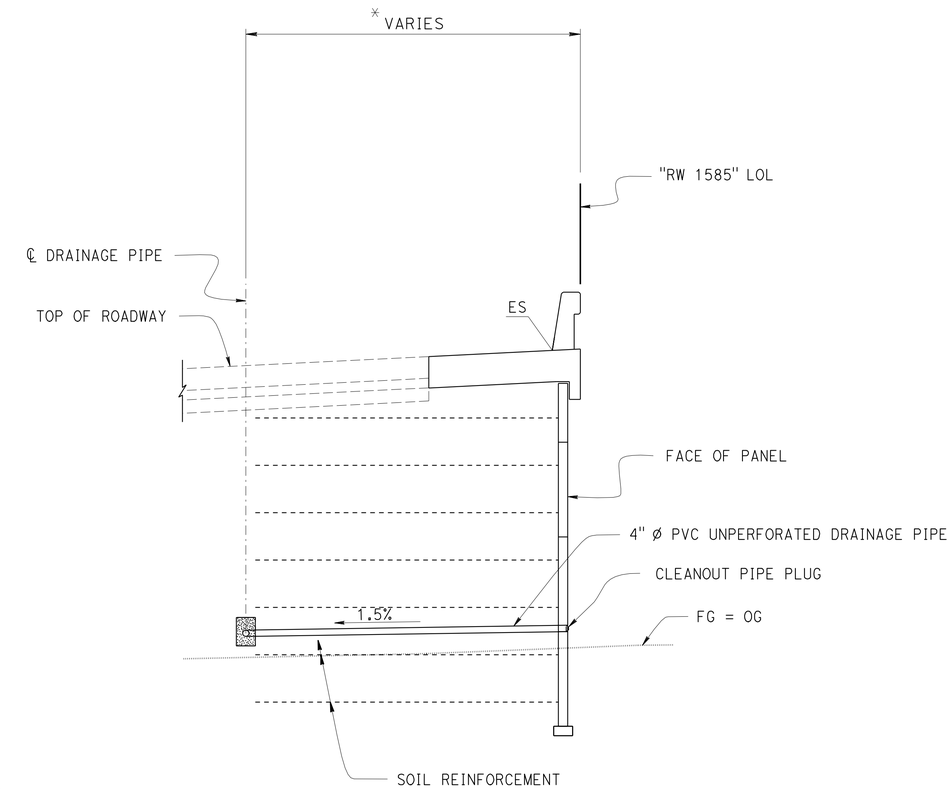

SECTION B-B
1/4" = 1'-0"

* For location and elevation, see "TABLE 1" on "DRAINAGE DETAILS NO. 1" and "DRAINAGE DETAILS NO. 2" sheets.

	BY	CHECKED
DESIGN	Gabriel Galo	Shervin Pahlavan
DETAILS	Stan Cholda	Shervin Pahlavan
QUANTITIES	Gabriel Galo	Traci Menard

STATE OF CALIFORNIA
DEPARTMENT OF TRANSPORTATION

DIVISION OF ENGINEERING SERVICES
STRUCTURE DESIGN
DESIGN BRANCH 15

BRIDGE NO. 53E0164
POST MILE 29.9

RETAINING WALL NO. 1585
DRAINAGE DETAILS NO. 4

STRUCTURES DESIGN DETAIL SHEET (ENGLISH) (REV. 09-01-10)

ORIGINAL SCALE IN INCHES FOR REDUCED PLANS 0 1 2 3

UNIT: 3604
PROJECT NUMBER & PHASE: 0700021119
CONTRACT NO.: 07-1218W1

DISREGARD PRINTS BEARING EARLIER REVISION DATES

REVISION DATES 3-28-12 4-12-12 4-24-12

SHEET 16 OF 26

FILE => 53e0164-r-ddet04.dgn

USERNAME => s109858 DATE PLOTTED => 22-MAY-2012 TIME PLOTTED => 08:40

DIST	COUNTY	ROUTE	POST MILES TOTAL PROJECT	SHEET No.	TOTAL SHEETS
07	LA	5	29.4/31.6	910	1931

Ulysses N. Smpardos 2-04-12
REGISTERED CIVIL ENGINEER DATE

5-21-12
PLANS APPROVAL DATE

REGISTERED PROFESSIONAL ENGINEER
Ulysses N. Smpardos
No. 61018
Exp. 12/31/12
CIVIL
STATE OF CALIFORNIA

The State of California or its officers or agents shall not be responsible for the accuracy or completeness of electronic copies of this plan sheet.

NOTES:

1. For baseplate and anchorage details not shown or noted, see S3
2. For pedestal and CIDH pile details not shown or noted, see S7
3. Apply Filter Fabric from FG to bottom of Type 1 Retaining Wall footings

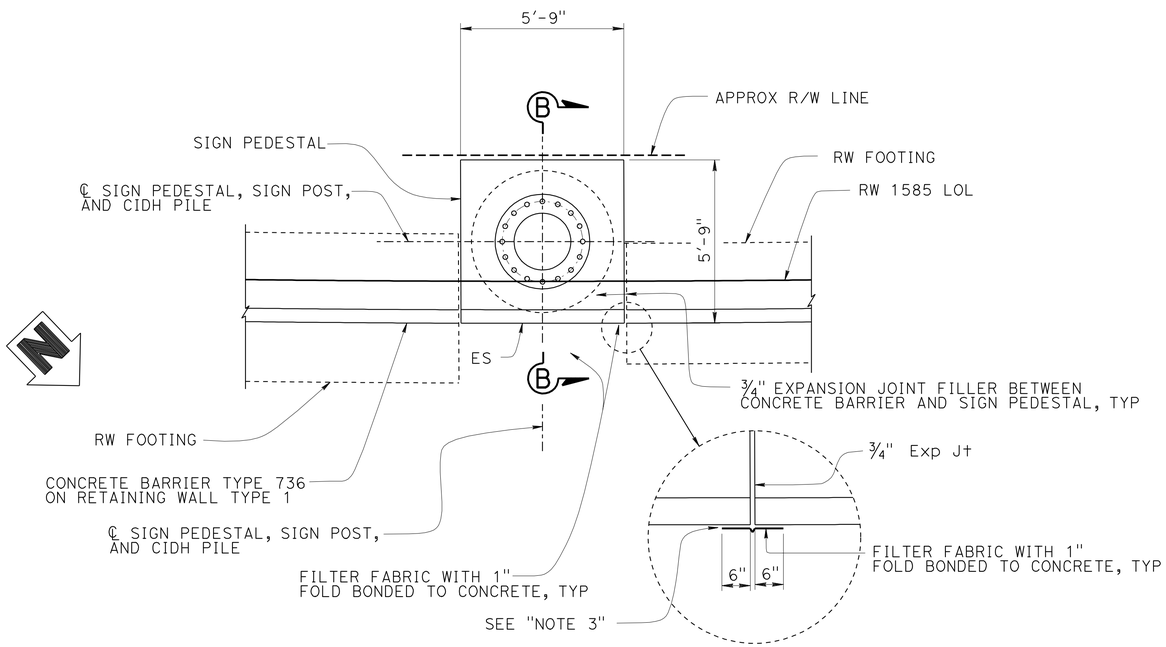

DETAIL A
⅜" = 1'-0"

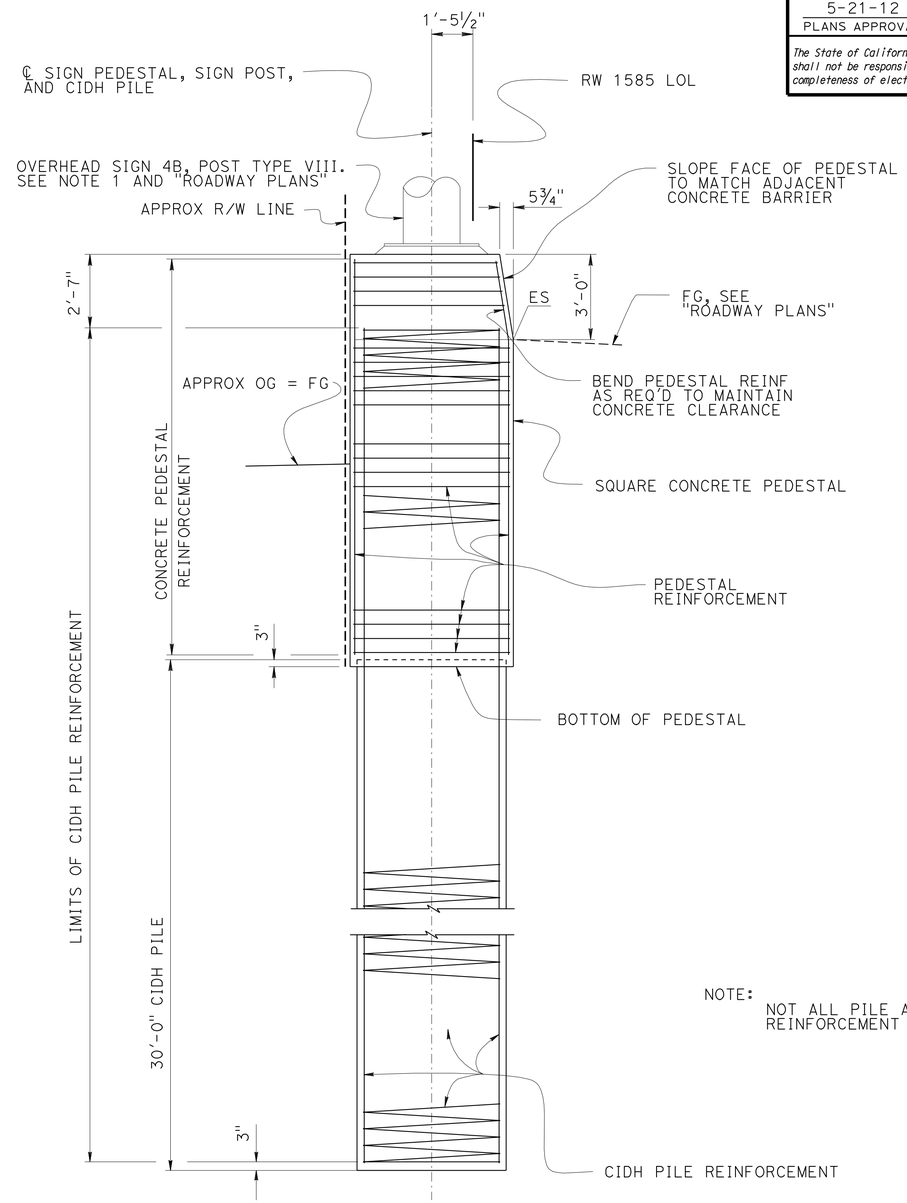

NOTE:
NOT ALL PILE AND PEDESTAL REINFORCEMENT SHOWN

SECTION B-B (S7)
⅜" = 1'-0"

DESIGN	BY P. Hong	CHECKED Ulysses Smpardos	
DETAILS	BY Stan Cholda	CHECKED Ulysses Smpardos	
QUANTITIES	BY Gabriel Galo	CHECKED Traci Menard	

STATE OF CALIFORNIA
DEPARTMENT OF TRANSPORTATION

DIVISION OF ENGINEERING SERVICES
STRUCTURE DESIGN
DESIGN BRANCH 15

BRIDGE NO. 53E0164
POST MILE 29.9

RETAINING WALL NO. 1585
SIGN SUPPORT DETAILS

STRUCTURES DESIGN DETAIL SHEET (ENGLISH) (REV. 09-01-10)

ORIGINAL SCALE IN INCHES FOR REDUCED PLANS 0 1 2 3

UNIT: 3604
PROJECT NUMBER & PHASE: 0700021119
CONTRACT NO.: 07-1218W1

DISREGARD PRINTS BEARING EARLIER REVISION DATES
REVISION DATES 03-30-12 04-24-12 03-28-12 04-11-12
SHEET 17 OF 26

53e0164-t-lsdt.dgn

USERNAME => s103858 DATE PLOTTED => 22-MAY-2012 TIME PLOTTED => 08:40

DIST	COUNTY	ROUTE	POST MILES TOTAL PROJECT	SHEET No.	TOTAL SHEETS
07	LA	5	29.4/31.6	911	1931

Ulysses N. Smpardos 2-04-12
REGISTERED CIVIL ENGINEER DATE

5-21-12
PLANS APPROVAL DATE

REGISTERED PROFESSIONAL ENGINEER Ulysses N. Smpardos No. 61018 Exp. 12/31/12 CIVIL STATE OF CALIFORNIA

The State of California or its officers or agents shall not be responsible for the accuracy or completeness of electronic copies of this plan sheet.

DESIGN DATA

DESIGN: AASHTO LRFD Bridge Design Specifications, 4th Edition with California Amendments.

WS: 33 psf on sound wall

F_t : 54 kips on barrier

EQE: k_h = 0.2
k_v = 0.0

REINFORCED CONCRETE: f'c = 3600 psi
fy = 60 ksi
n = 8

③ NOTES:

1. Clearance to reinforcing steel in concrete barrier to be 1".
2. Not all barrier reinforcement shown.
3. No expansion joints in concrete barrier or barrier slab within wall limits.
4. Specific concrete barrier to be used is shown elsewhere in Project Plans.
5. Minimum slab length: 40 ft

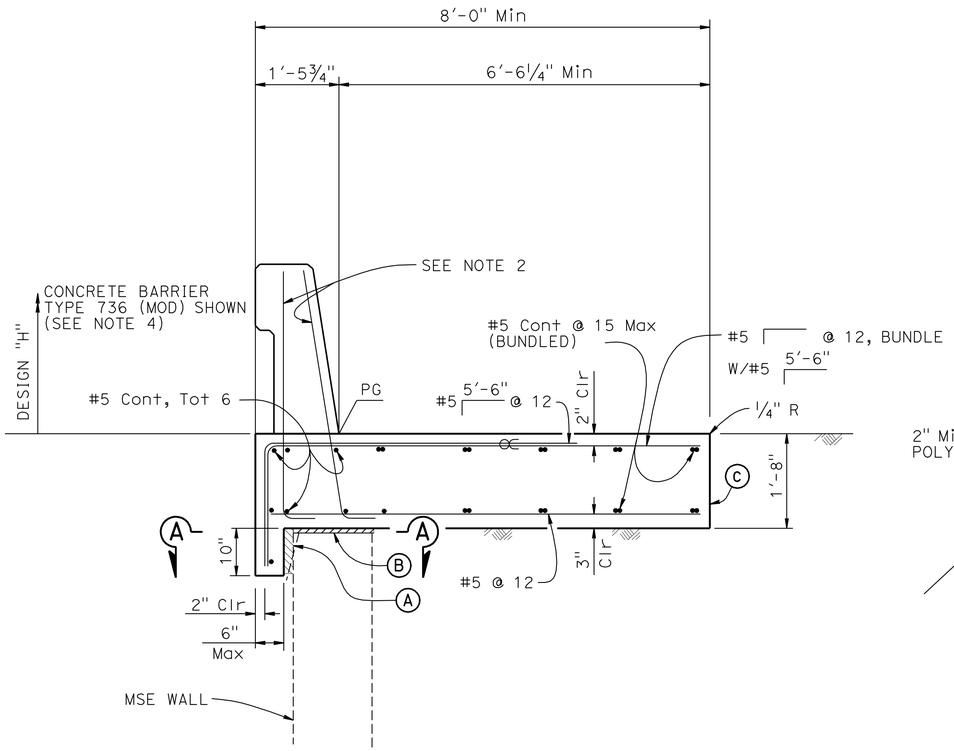

② CONCRETE BARRIER SLAB

¾" = 1'-0"

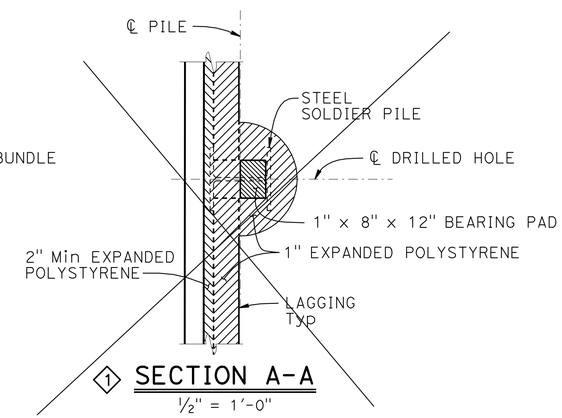

① SECTION A-A

½" = 1'-0"

(For Soldier Pile Wall only)

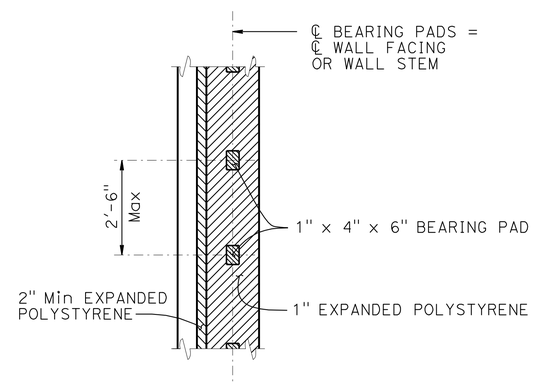

SECTION A-A

½" = 1'-0"

(For all other Earth Retaining Systems)

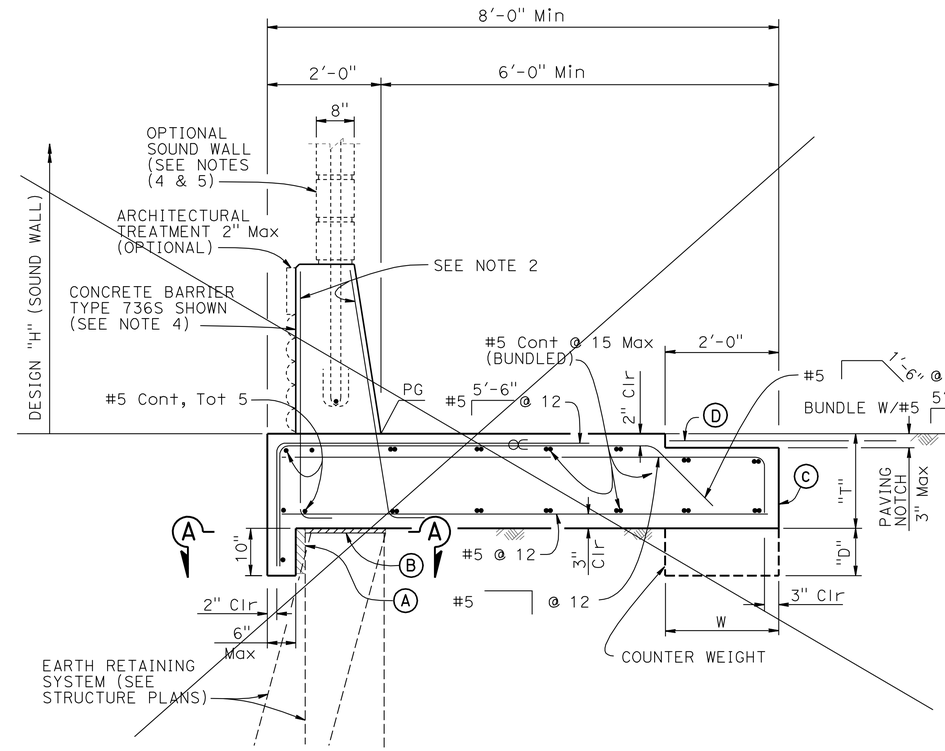

① CONCRETE BARRIER SLAB WITH PAVING NOTCH

¾" = 1'-0"

NOTES:

Ⓐ 2" Min Expanded polystyrene

Ⓑ 1" Expanded Polystyrene on MSE and concrete stem walls, See "SECTION A-A" for Soldier PIle Walls

Ⓒ Contact joint

~~Ⓓ 4'-0" wide pavement reinforcing fabric~~

∝ Indicates bundled bars

① BARRIER SLAB DIMENSIONS

DESIGN "H" OF SOUND WALL	NO SW	12'-4"	14'-4"	16'-4"
BARRIER TYPE	732 736 742	736 S	736 S	736 S
T	1'-8"	1'-8"	2'-0"	2'-0"
W	N/A	N/A	N/A	2'-0"
D	N/A	N/A	N/A	0'-9"

STANDARD DRAWING

FILE NO. xs12-090

APPROVAL DATE January 2012

① Deleted Detail
② Modified Detail
③ Modified Notes

STATE OF CALIFORNIA DEPARTMENT OF TRANSPORTATION

DIVISION OF ENGINEERING SERVICES

BRIDGE NO. 53E0164
POST MILE 29.9

RETAINING WALL NO. 1585
CONCRETE BARRIER SLAB DETAILS

DS OSD 2147A (ENGLISH STANDARD DRAWING "XS" BORDER REV. (02-02-11)

ORIGINAL SCALE IN INCHES FOR REDUCED PLANS 0 1 2 3

UNIT: 3604
PROJECT NUMBER & PHASE: 0700021119
CONTRACT NO.: 07-1218W1

DISREGARD PRINTS BEARING EARLIER REVISION DATES

REVISION DATES 03-07-12 06-07-12 06-11-12 06-12-12

SHEET 18 OF 26

FILE => 53e0164-u-csd.dgn

USERNAME => s12161 4 DATE PLOTTED => 13-JUN-2012 TIME PLOTTED => 09:44

DIST	COUNTY	ROUTE	POST MILES TOTAL PROJECT	SHEET No.	TOTAL SHEETS
07	LA	5	29.4/31.6	912	1931

REGISTERED CIVIL ENGINEER — DATE 2-04-12

5-21-12
PLANS APPROVAL DATE

REGISTERED PROFESSIONAL ENGINEER — Ulysses N. Smpardos — No. 61018 — Exp. 12/31/12 — CIVIL — STATE OF CALIFORNIA

The State of California or its officers or agents shall not be responsible for the accuracy or completeness of electronic copies of this plan sheet.

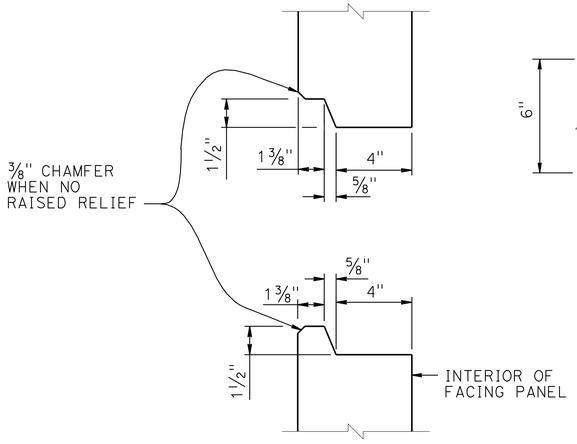

HORIZONTAL JOINT DETAIL

3" = 1'-0"

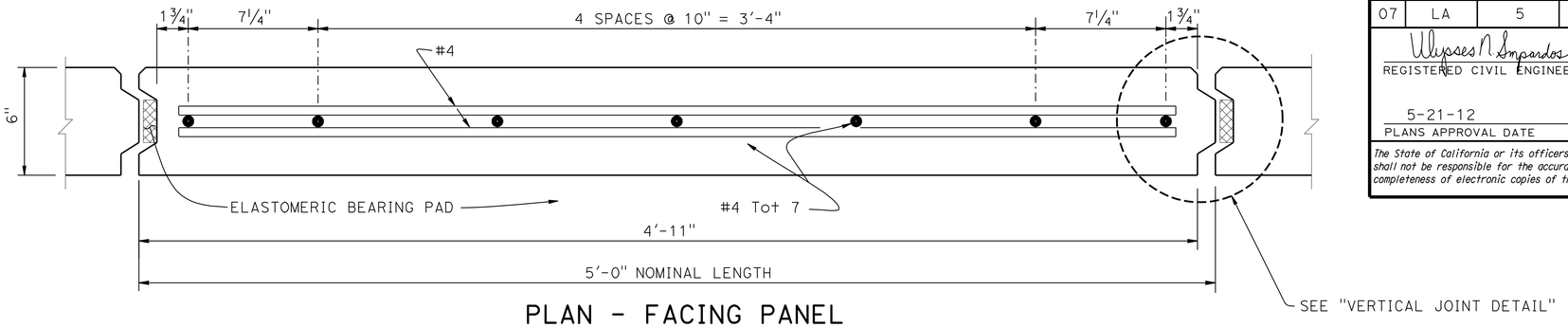

PLAN - FACING PANEL

3" = 1'-0"

NOTES:

1. Architectural treatment not shown
2. Place reinforced elastomeric bearing pads in all of the panel joints between the panels. Place one in each vertical joint where the horizontal joints intersect. Place two per panel in each horizontal joint:
   3/4" x 2 3/8" x 6" for vertical joints
   3/4" x 4" x 6" for horizontal joints
3. Bond a strip of filter fabric, 1'-0" wide, over the full length of all panel joints
4. Top layer of welded wire mats attached parallel to top of panel when top of wall is angled or curved as shown elsewhere in "STRUCTURE PLANS"
5. Eliminate mid level mat when closer than 6" to top mat, continue variable dimension between remaining mats

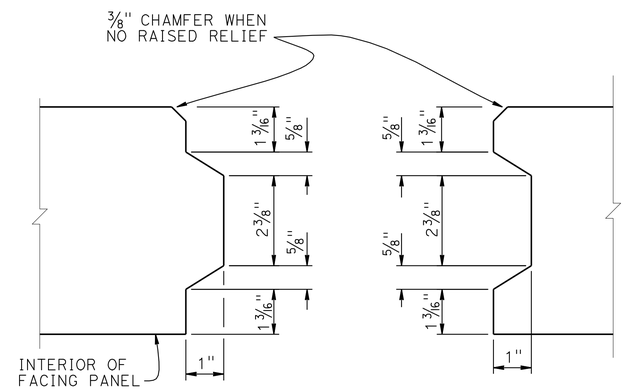

VERTICAL JOINT DETAIL

6" = 1'-0"

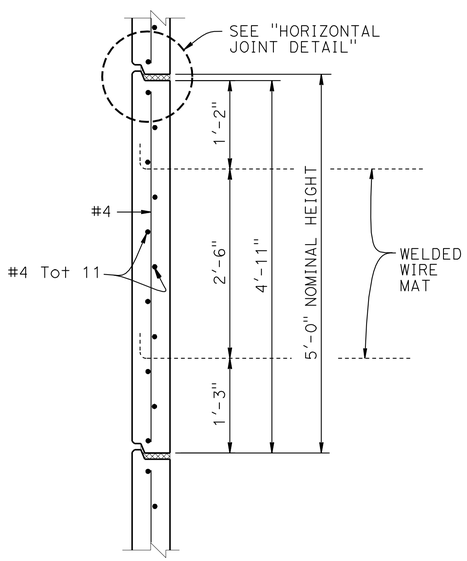

INTERMEDIATE PANEL

1" = 1'-0"

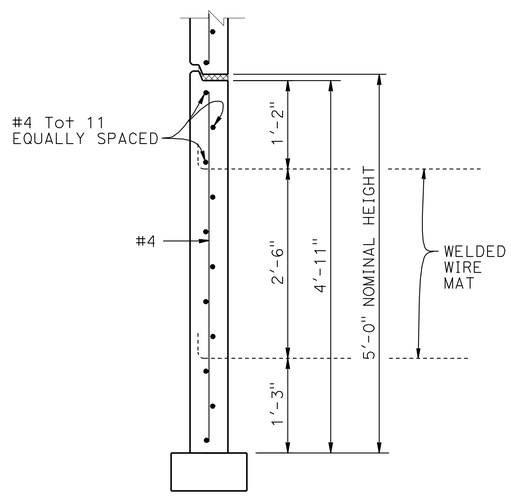

BOTTOM PANEL

1" = 1'-0"

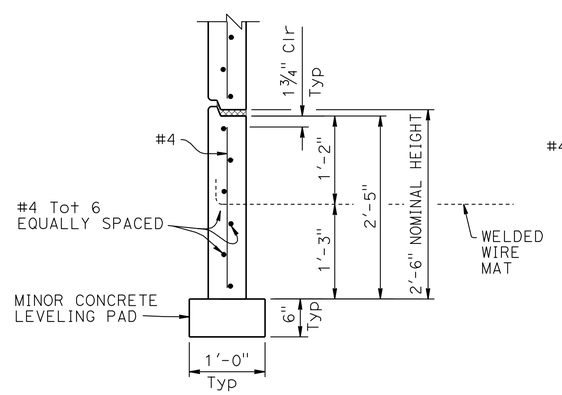

BOTTOM HALF PANEL

1" = 1'-0"

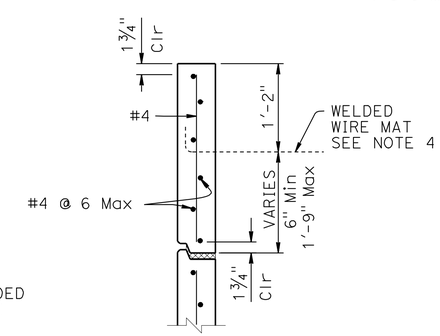

TOP HALF PANEL

1" = 1'-0"

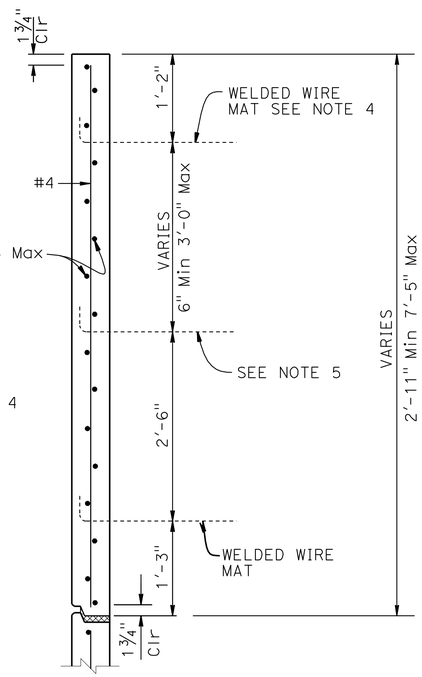

TOP PANEL WITH MULTIPLE MATS

1" = 1'-0"

STANDARD DRAWING

FILE NO. xs13-020-1

APPROVAL DATE January 2012

STATE OF CALIFORNIA
DEPARTMENT OF TRANSPORTATION

DIVISION OF ENGINEERING SERVICES

BRIDGE NO. 53E0164
POST MILE 29.9

RETAINING WALL NO. 1585
MECHANICALLY STABILIZED EMBANKMENT
DETAILS NO. 1

DS OSD 2147A (ENGLISH STANDARD DRAWING "XS" BORDER REV. (02-02-11)

ORIGINAL SCALE IN INCHES FOR REDUCED PLANS 0 1 2 3

UNIT: 3604
PROJECT NUMBER & PHASE: 0700021119
CONTRACT NO.: 07-1218W1

DISREGARD PRINTS BEARING EARLIER REVISION DATES

REVISION DATES 03-19-12

SHEET 19 OF 26

FILE => 53e0164-w-xs13-det01.dgn

USERNAME => s109858 DATE PLOTTED => 22-MAY-2012 TIME PLOTTED => 08:40

DIST	COUNTY	ROUTE	POST MILES TOTAL PROJECT	SHEET No.	TOTAL SHEETS
07	LA	5	29.4/31.6	913	1931

Ulysses N. Smpardos 2-04-12
REGISTERED CIVIL ENGINEER DATE

5-21-12
PLANS APPROVAL DATE

REGISTERED PROFESSIONAL ENGINEER Ulysses N. Smpardos No. 61018 Exp. 12/31/12 CIVIL STATE OF CALIFORNIA

The State of California or its officers or agents shall not be responsible for the accuracy or completeness of electronic copies of this plan sheet.

GENERAL NOTES
LOAD & RESISTANCE FACTOR DESIGN

DESIGN: AASHTO LRFD Bridge Design Specifications, 4th Edition with California Amendments

LIVE LOAD: Surcharge = 240 lb/ft^2

SOIL PARAMETERS:

Internal design ϕ = 34°, γ = 120 lb/ft^3

External design ϕ(Retained Backfill) = 30°, γ = 120 lb/ft^3

ϕ(Foundation) = 30°

K_h = 0.2

PRECAST CONCRETE PANELS:

f'c = 4,000 psi (Concrete compressive strength at 28 days)

fy = 60,000 psi (Yield strength of reinforcement)

SOIL REINFORCEMENT:

Welded wire mats: fy = 65,000 psi (Yield strength)

Coupler: fy = 36,000 psi (Yield strength)

Corrosion rate = 1.1 mils/year

REINFORCED CONCRETE:

f'c = 3,600 psi, except as noted

(Concrete compressive strength at 28 days)

fy = 60,000 psi (Yield strength of reinforcement)

MSE = Mechanically Stabilized Embankment

NOTES:

(A) Distance as required to permit coupler to be swaged

(B) Place #4 x 3'-2", centered on connector mat, but not welded to it

(C) All transverse wires size W15 at various spacing as shown elsewhere in plans

(D) Size of longitudinal wires shown elsewhere in plans

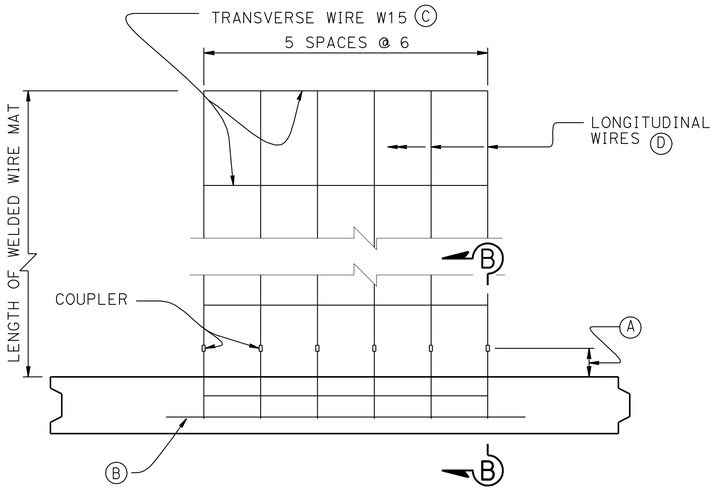

PLAN OF PANEL WITH SIX WIRE MAT

1½" = 1'-0"

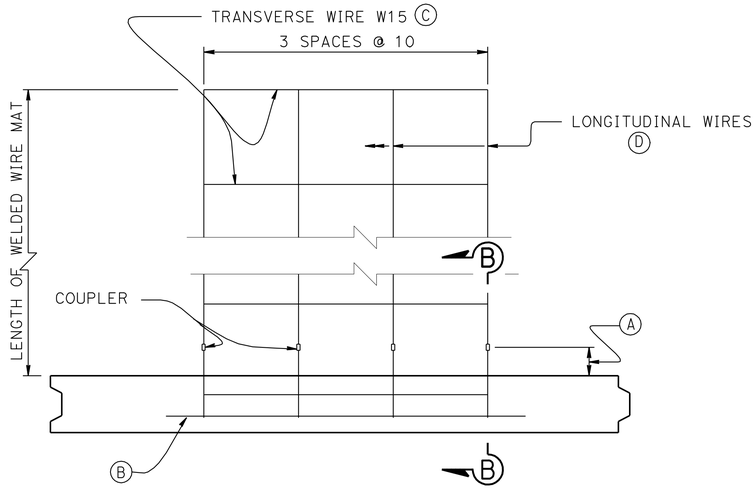

PLAN OF PANEL WITH FOUR WIRE MAT

1½" = 1'-0"

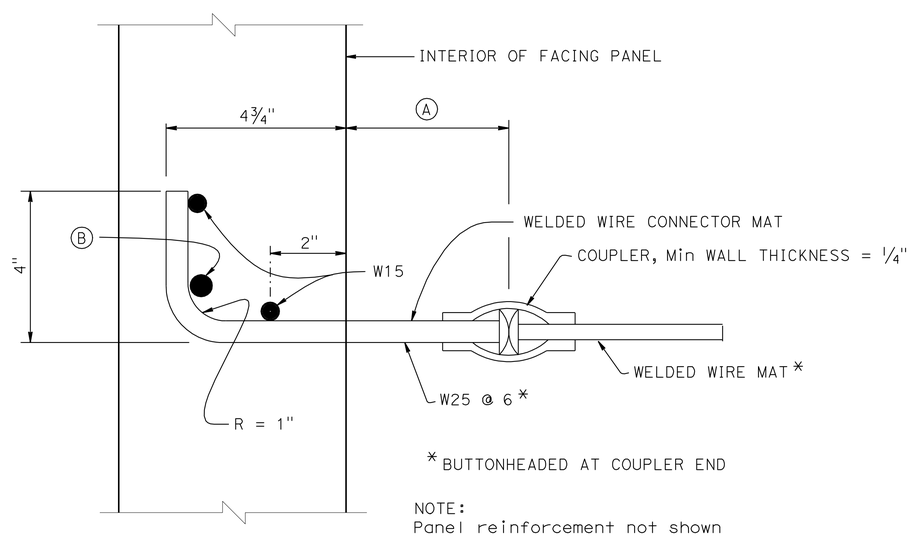

NOTE:
Panel reinforcement not shown

SECTION B-B

6" = 1'-0"

STANDARD DRAWING

FILE NO. xs13-020-2

APPROVAL DATE January 2012

STATE OF CALIFORNIA DEPARTMENT OF TRANSPORTATION

DIVISION OF ENGINEERING SERVICES

BRIDGE NO. 53E0164

POST MILE 29.9

RETAINING WALL NO. 1585
MECHANICALLY STABILIZED EMBANKMENT
DETAILS NO. 2

DS OSD 2147A (ENGLISH STANDARD DRAWING "XS" BORDER REV. (02-02-11)

ORIGINAL SCALE IN INCHES FOR REDUCED PLANS 0 1 2 3

UNIT: 3604
PROJECT NUMBER & PHASE: 0700021119 CONTRACT NO.: 07-1218W1

DISREGARD PRINTS BEARING EARLIER REVISION DATES

REVISION DATES

SHEET 20 OF 26

FILE => 53e0164-w-xs13-det02.dgn

USERNAME => s109858 DATE PLOTTED => 22-MAY-2012 TIME PLOTTED => 08:41

DIST	COUNTY	ROUTE	POST MILES TOTAL PROJECT	SHEET No.	TOTAL SHEETS
07	LA	5	29.4/31.6	914	1931

Ulysses N. Smpardos 2-04-12
REGISTERED CIVIL ENGINEER DATE

5-21-12
PLANS APPROVAL DATE

REGISTERED PROFESSIONAL ENGINEER Ulysses N. Smpardos No. 61018 Exp. 12/31/12 CIVIL STATE OF CALIFORNIA

The State of California or its officers or agents shall not be responsible for the accuracy or completeness of electronic copies of this plan sheet.

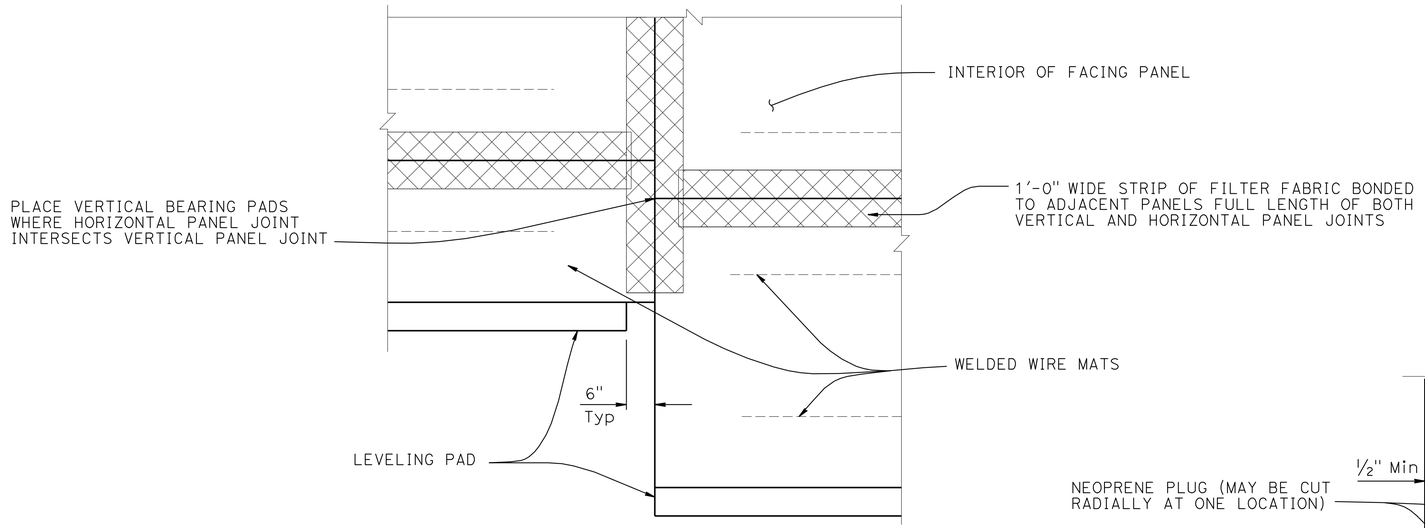

PART ELEVATION

3/4" = 1'-0"

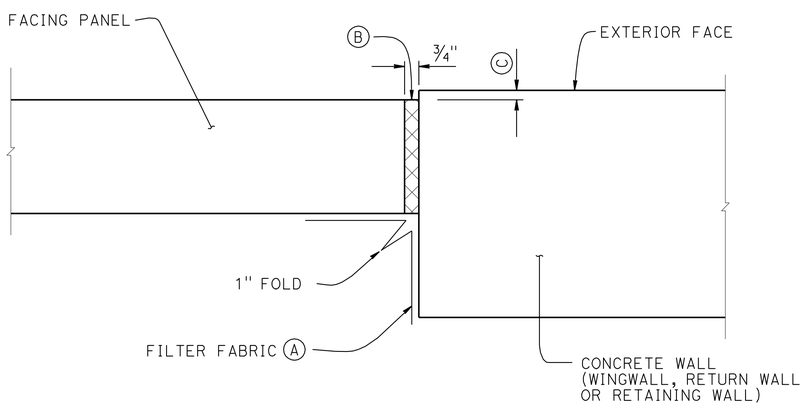

MSE FACING PANEL-TO-CONCRETE WALL JOINT DETAIL

3" = 1'-0"

NOTES:

(A) Bond a strip of filter fabric, 1'-6" wide, to back of MSE panels and the adjacent concrete wall for entire length of vertical joint

(B) Bond expansion joint material to the concrete wall

(C) Offset between face of MSE facing panel and face of the concrete wall as dictated by location of layout lines shown elsewhere in "STRUCTURE PLANS"

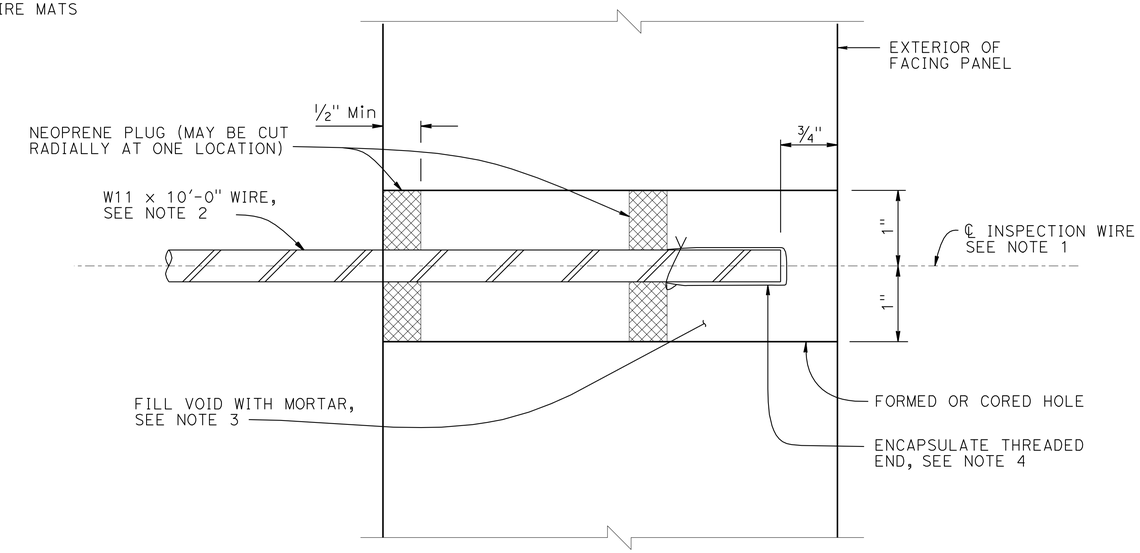

SECTION THRU INSPECTION WIRE

NO SCALE

NOTES:

1. Center inspection wire in facing panel.
2. Fabricated inspection wire from W11 wire representative of the welded wire mats, with 3/8" ø 16 UNC threads for at least 1 1/2" of one end.
3. Place inspection wire horizontal and perpendicular to the wall panel prior to backfilling.
4. Encapsulate threaded end with corrosion inhibiting mastic, vinyl covering, and secure with plastic tie.

UNC = Unified Coarse Threads

RETAINING WALL NO. 1585

MECHANICALLY STABILIZED EMBANKMENT

DETAILS NO. 3

STANDARD DRAWING

FILE NO. xs13-020-3

APPROVAL DATE January 2012

STATE OF CALIFORNIA DEPARTMENT OF TRANSPORTATION

DIVISION OF ENGINEERING SERVICES

BRIDGE NO. 53E0164

POST MILE 29.9

DS OSD 2147A (ENGLISH STANDARD DRAWING "XS" BORDER REV. (02-02-11)

ORIGINAL SCALE IN INCHES FOR REDUCED PLANS 0 1 2 3

UNIT: 3604
PROJECT NUMBER & PHASE: 0700021119
CONTRACT NO.: 07-1218W1

DISREGARD PRINTS BEARING EARLIER REVISION DATES

REVISION DATES 03-19-12

SHEET 21 OF 26

FILE => 53e0164-w-xs13-det03.dgn

USERNAME => s109858 DATE PLOTTED => 22-MAY-2012 TIME PLOTTED => 08:41

DIST	COUNTY	ROUTE	POST MILES TOTAL PROJECT	SHEET No.	TOTAL SHEETS
07	LA	5	29.4/31.6	915	1931

Ulysses N. Smpardos 2-04-12
REGISTERED CIVIL ENGINEER DATE

5-21-12
PLANS APPROVAL DATE

REGISTERED PROFESSIONAL ENGINEER Ulysses N. Smpardos No. 61018 Exp. 12/31/12 CIVIL STATE OF CALIFORNIA

The State of California or its officers or agents shall not be responsible for the accuracy or completeness of electronic copies of this plan sheet.

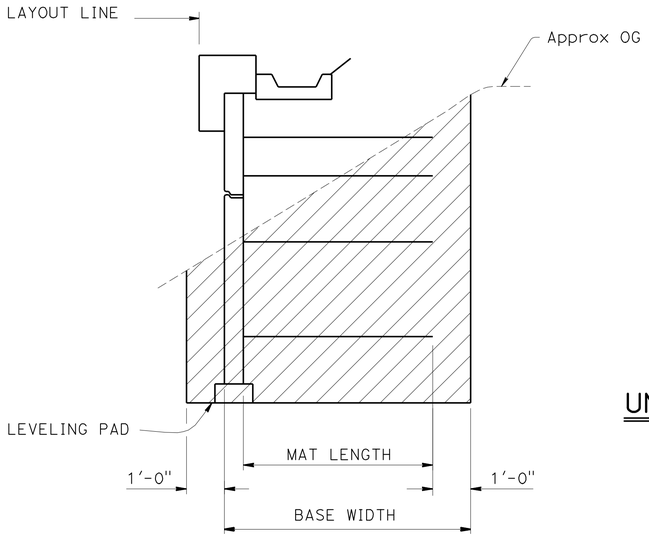

LIMITS OF EXCAVTION

½" = 1'-0"

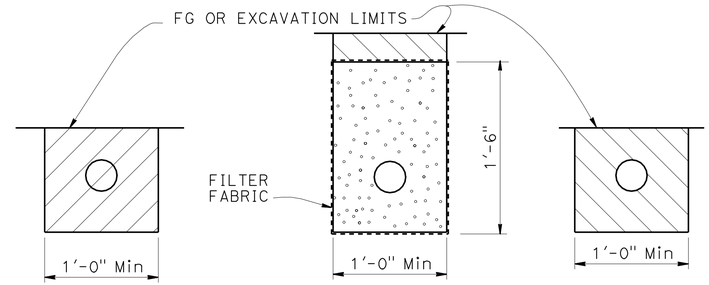

OUTLET PIPE CLEANOUT PIPE

EXCAVATION BACKFILL

UNPERFORATED OUTLET OR CLEAN OUT PIPE FOR UNDERDRAIN

NO SCALE

NOTES:

1. Limits to FG except to GP when in roadway section
2. Locate underdrain behind bottom level of welded wire mats wherever possible, or at elevation needed to drain, as shown elsewhere on plans
3. Place perforated pipe underdrain of diameter shown elsewhere on plans or minimum 4" ø smoothed wall PVC or minimum 8" ø corrugated HDPE
4. Maximum spacing of outlet pipe is 200 feet
5. At sags in profile of underdrain, install outlet pipe for each direction of flow

LEGEND:

- Limits of Structure Excavation
- Limits of Structure Backfill
- Limits of Permeable Material

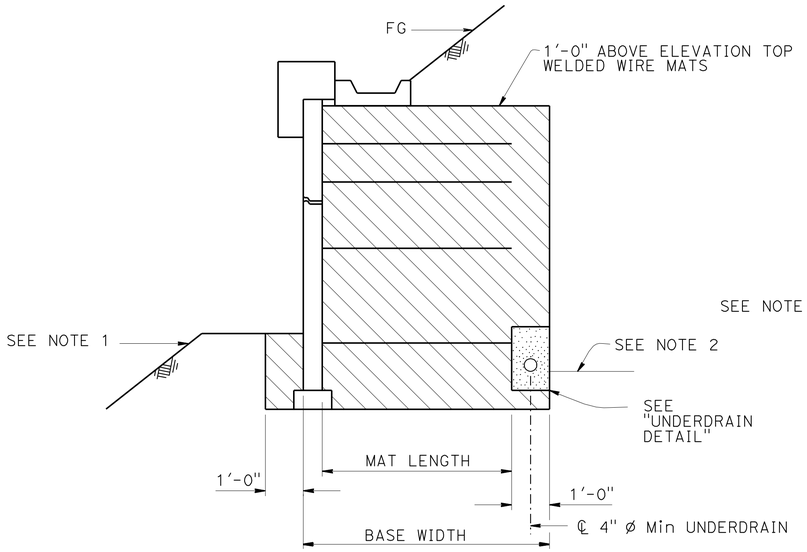

SLOPING FINISHED SURFACE

½" = 1'-0"

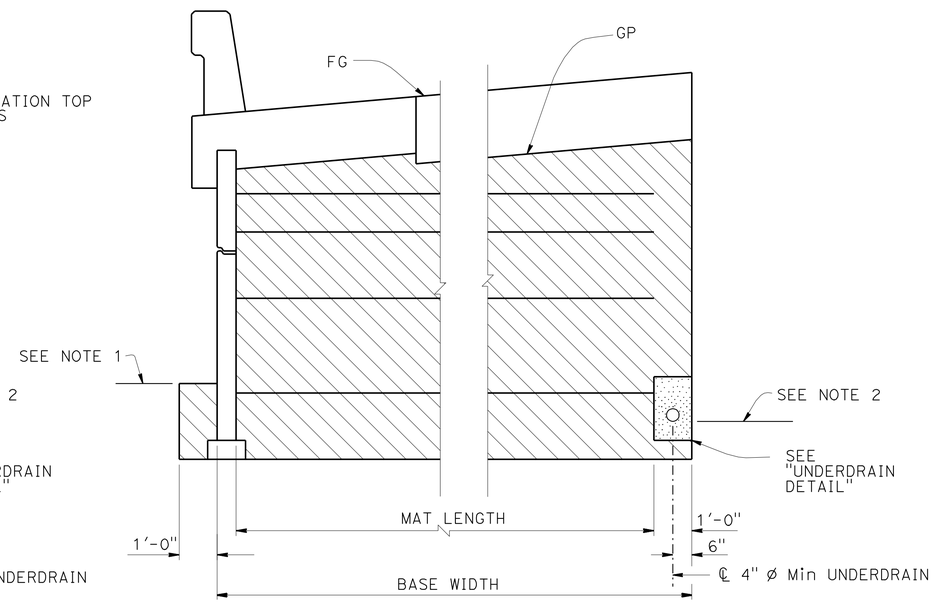

ROADWAY SECTION

½" = 1'-0"

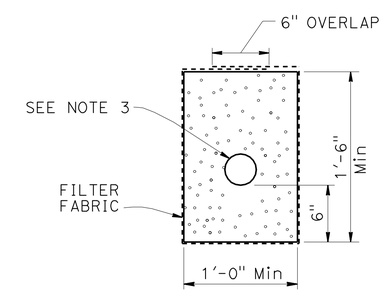

UNDERDRAIN DETAIL

LIMITS OF BACKFILL

STANDARD DRAWING

FILE NO. xs13-020-6

APPROVAL DATE January 2012

STATE OF CALIFORNIA DEPARTMENT OF TRANSPORTATION

DIVISION OF ENGINEERING SERVICES

BRIDGE NO. 53E0164

POST MILE 29.9

RETAINING WALL 1585

MECHANICALLY STABILIZED EMBANKMENT DETAILS NO. 6

DS OSD 2147A (ENGLISH STANDARD DRAWING "XS" BORDER REV. (02-02-11)

ORIGINAL SCALE IN INCHES FOR REDUCED PLANS 0 1 2 3

UNIT: 3604
PROJECT NUMBER & PHASE: 0700021119
CONTRACT NO.: 07-1218W1

DISREGARD PRINTS BEARING EARLIER REVISION DATES

REVISION DATES 04-24-12

SHEET 22 OF 26

FILE => 53e0164-x-xs13-020-6.dgn

USERNAME => s109858 DATE PLOTTED => 22-MAY-2012 TIME PLOTTED => 08:41

DIST	COUNTY	ROUTE	POST MILES TOTAL PROJECT	SHEET No	TOTAL SHEETS
07	LA	5	29.4/31.6	916	1931

REGISTERED GEOTECHNICAL ENGINEER 1-3-12

5-21-12
PLANS APPROVAL DATE

REGISTERED PROFESSIONAL ENGINEER Deepa Wathugala No. 2674 Exp. 9-30-12 GEOTECHNICAL STATE OF CALIFORNIA

The State of California or its officers or agents shall not be responsible for the accuracy or completeness of electronic copies of this plan sheet.

This LOTB sheet was prepared in accordance with the Caltrans Soil & Rock Logging, Classification, & Presentation Manual (2010 Edition).

BENCH MARK

BM PRHV 1005 Elev +617.66′
Fd Lead and Tack on TOC of the median island of Burbank Blvd O.C. Fwy 5, +/- 13′ E of the W end of the median island.
NAVD 88

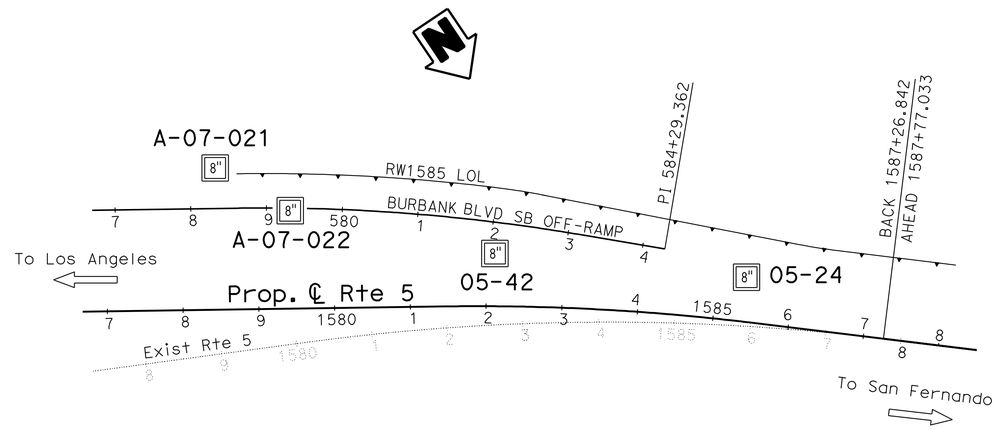

PLAN

1" = 100′

Note: Ground water was not encountered in borings R-07-021 and A-07-022.

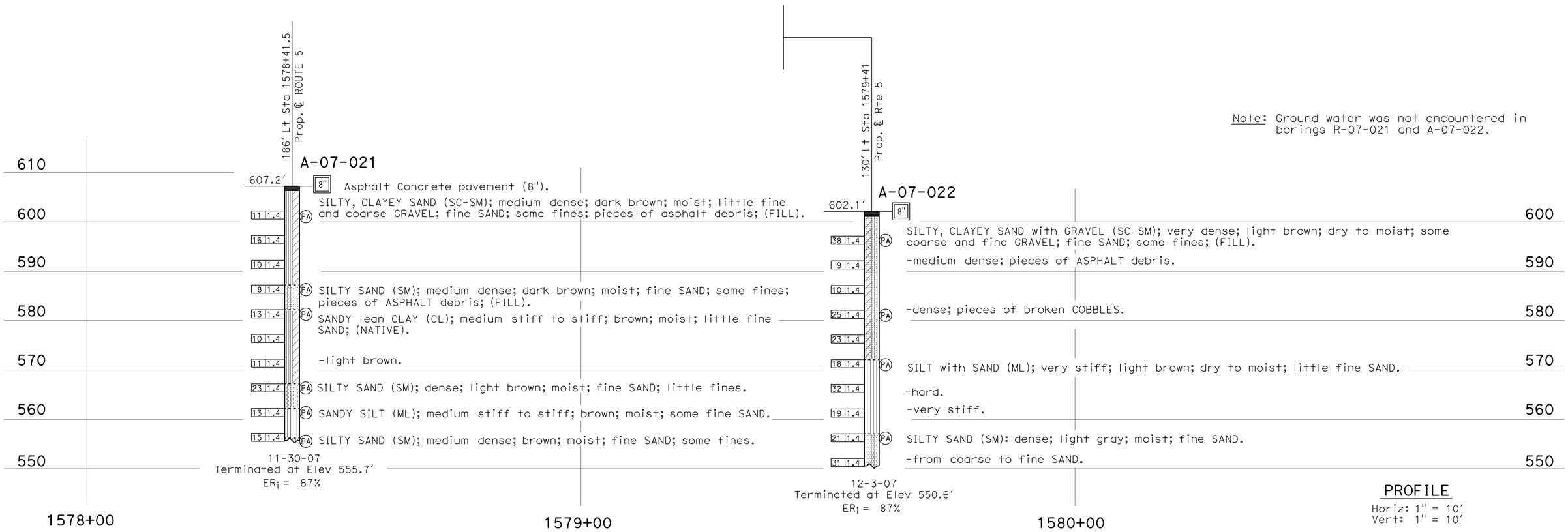

PROFILE

Horiz: 1" = 10′
Vert: 1" = 10′

ENGINEERING SERVICES	MATERIALS AND GEOTECHNICAL SERVICES	STATE OF CALIFORNIA DEPARTMENT OF TRANSPORTATION	DIVISION OF ENGINEERING SERVICES STRUCTURE DESIGN DESIGN BRANCH 15	BRIDGE NO. 53E0164 POST MILE 29.9	RETAINING WALL NO. 1585 LOG OF TEST BORINGS 1 OF 4
FUNCTIONAL SUPERVISOR NAME: C. Liu	DRAWN BY: C. Christian, I.G-Remmen CHECKED BY: F. Gerami	FIELD INVESTIGATION BY: C. Lee			

OGS CIVIL LOG OF TEST BORINGS SHEET

ORIGINAL SCALE IN INCHES FOR REDUCED PLANS 0 1 2 3

UNIT: 3643
PROJECT NUMBER & PHASE: 07000211191 CONTRACT NO.: 07-1218W1

DISREGARD PRINTS BEARING EARLIER REVISION DATES

REVISION DATES 10-25-11 12-20-11 01-03-12 SHEET 23 OF 26

FILE => 53e0164-z-1tb_01.dgn

USERNAME => s109858 DATE PLOTTED => 22-MAY-2012 TIME PLOTTED => 08:41

DIST	COUNTY	ROUTE	POST MILES TOTAL PROJECT	SHEET No	TOTAL SHEETS
07	LA	5	29.4/31.6	917	1931

REGISTERED GEOTECHNICAL ENGINEER 1-3-12

5-21-12
PLANS APPROVAL DATE

REGISTERED PROFESSIONAL ENGINEER Deepa Wathugala No. 2674 Exp. 9-30-12 GEOTECHNICAL STATE OF CALIFORNIA

The State of California or its officers or agents shall not be responsible for the accuracy or completeness of electronic copies of this plan sheet.

REFERENCE: CALTRANS SOIL & ROCK LOGGING, CLASSIFICATION, AND PRESENTATION MANUAL (2010)

CEMENTATION

Description	Criteria
Weak	Crumbles or breaks with handling or little finger pressure.
Moderate	Crumbles or breaks with considerable finger pressure.
Strong	Will not crumble or break with finger pressure.

BOREHOLE IDENTIFICATION

Symbol	Hole Type	Description
Size	A	Auger Boring (hollow or solid stem bucket)
Size	R RW RC P	Rotary drilled boring (conventional) Rotary drilled with self-casing wire-line Rotary core with continuously-sampled, self-casing wire-line Rotary percussion boring (air)
Size	R	Rotary drilled diamond core
Size	HD HA	Hand driven (1-inch soil tube) Hand Auger
●	D	Dynamic Cone Penetration Boring
▲	CPT	Cone Penetration Test (ASTM D 5778)
⬚	O	Other (note on LOTB)

Note: Size in inches.

CONSISTENCY OF COHESIVE SOILS

Description	Shear Strength (tsf)	Pocket Penetrometer Measurement, PP, (tsf)	Torvane Measurement, TV, (tsf)	Vane Shear Measurement, VS, (tsf)
Very Soft	Less than 0.12	Less than 0.25	Less than 0.12	Less than 0.12
Soft	0.12 - 0.25	0.25 - 0.5	0.12 - 0.25	0.12 - 0.25
Medium Stiff	0.25 - 0.5	0.5 - 1	0.25 - 0.5	0.25 - 0.5
Stiff	0.5 - 1	1 - 2	0.5 - 1	0.5 - 1
Very Stiff	1 - 2	2 - 4	1 - 2	1 - 2
Hard	Greater than 2	Greater than 4	Greater than 2	Greater than 2

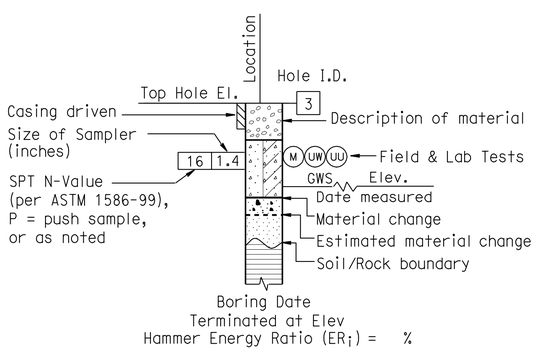

ROTARY BORING

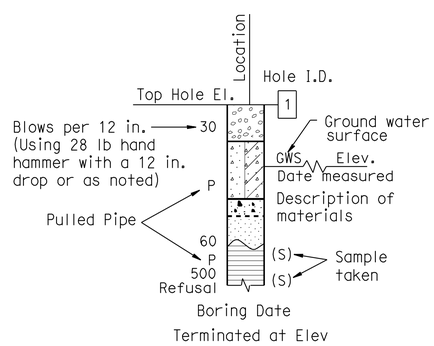

HAND BORING

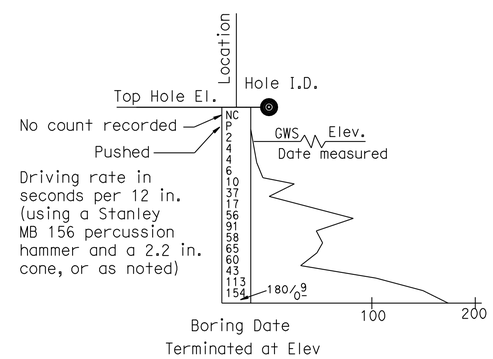

DYNAMIC CONE PENETRATION BORING

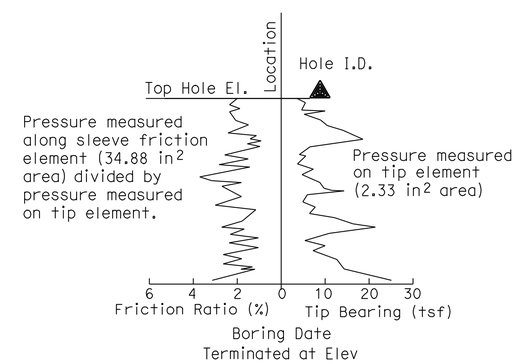

CONE PENETRATION TEST (CPT) BORING

ENGINEERING SERVICES	GEOTECHNICAL SERVICES	STATE OF CALIFORNIA DEPARTMENT OF TRANSPORTATION	DIVISION OF ENGINEERING SERVICES STRUCTURE DESIGN DESIGN BRANCH 15	BRIDGE NO. 53E0164 POST MILE 29.9	RETAINING WALL NO. 1585 LOG OF TEST BORINGS 2 OF 4
	PREPARED BY: I.G-Remmen				

GS LOTB SOIL LEGEND

ORIGINAL SCALE IN INCHES FOR REDUCED PLANS 0 1 2 3

UNIT: 3643
PROJECT NUMBER & PHASE: 07000211191 CONTRACT NO.: 07-1218W1

DISREGARD PRINTS BEARING EARLIER REVISION DATES

REVISION DATES

SHEET 24 OF 26

FILE => 53e0164-z-ltb_02.dgn

USERNAME => s109858 DATE PLOTTED => 22-MAY-2012 TIME PLOTTED => 08:41

REFERENCE: CALTRANS SOIL & ROCK LOGGING, CLASSIFICATION, AND PRESENTATION MANUAL (2010)

DIST	COUNTY	ROUTE	POST MILES TOTAL PROJECT	SHEET No	TOTAL SHEETS
07	LA	5	29.4/31.6	918	1931

REGISTERED GEOTECHNICAL ENGINEER 1-3-12

5-21-12
PLANS APPROVAL DATE

REGISTERED PROFESSIONAL ENGINEER Deepa Wathugala No. 2674 Exp. 9-30-12 GEOTECHNICAL STATE OF CALIFORNIA

The State of California or its officers or agents shall not be responsible for the accuracy or completeness of electronic copies of this plan sheet.

GROUP SYMBOLS AND NAMES

Graphic/Symbol	Group Names
GW	Well-graded GRAVEL Well-graded GRAVEL with SAND
GP	Poorly-graded GRAVEL Poorly-graded GRAVEL with SAND
GW-GM	Well-graded GRAVEL with SILT Well-graded GRAVEL with SILT and SAND
GW-GC	Well-graded GRAVEL with CLAY (or SILTY CLAY) Well-graded GRAVEL with CLAY and SAND (or SILTY CLAY and SAND)
GP-GM	Poorly-graded GRAVEL with SILT Poorly-graded GRAVEL with SILT and SAND
GP-GC	Poorly-graded GRAVEL with CLAY (or SILTY CLAY) Poorly-graded GRAVEL with CLAY and SAND (or SILTY CLAY and SAND)
GM	SILTY GRAVEL SILTY GRAVEL with SAND
GC	CLAYEY GRAVEL CLAYEY GRAVEL with SAND
GC-GM	SILTY, CLAYEY GRAVEL SILTY, CLAYEY GRAVEL with SAND
SW	Well-graded SAND Well-graded SAND with GRAVEL
SP	Poorly-graded SAND Poorly-graded SAND with GRAVEL
SW-SM	Well-graded SAND with SILT Well-graded SAND with SILT and GRAVEL
SW-SC	Well-graded SAND with CLAY (or SILTY CLAY) Well-graded SAND with CLAY and GRAVEL (or SILTY CLAY and GRAVEL)
SP-SM	Poorly-graded SAND with SILT Poorly-graded SAND with SILT and GRAVEL
SP-SC	Poorly-graded SAND with CLAY (or SILTY CLAY) Poorly-graded SAND with CLAY and GRAVEL (or SILTY CLAY and GRAVEL)
SM	SILTY SAND SILTY SAND with GRAVEL
SC	CLAYEY SAND CLAYEY SAND with GRAVEL
SC-SM	SILTY, CLAYEY SAND SILTY, CLAYEY SAND with GRAVEL
PT	PEAT
	COBBLES COBBLES and BOULDERS BOULDERS

Graphic/Symbol	Group Names
CL	Lean CLAY Lean CLAY with SAND Lean CLAY with GRAVEL SANDY lean CLAY SANDY lean CLAY with GRAVEL GRAVELLY lean CLAY GRAVELLY lean CLAY with SAND
CL-ML	SILTY CLAY SILTY CLAY with SAND SILTY CLAY with GRAVEL SANDY SILTY CLAY SANDY SILTY CLAY with GRAVEL GRAVELLY SILTY CLAY GRAVELLY SILTY CLAY with SAND
ML	SILT SILT with SAND SILT with GRAVEL SANDY SILT SANDY SILT with GRAVEL GRAVELLY SILT GRAVELLY SILT with SAND
OL	ORGANIC lean CLAY ORGANIC lean CLAY with SAND ORGANIC lean CLAY with GRAVEL SANDY ORGANIC lean CLAY SANDY ORGANIC lean CLAY with GRAVEL GRAVELLY ORGANIC lean CLAY GRAVELLY ORGANIC lean CLAY with SAND
OL	ORGANIC SILT ORGANIC SILT with SAND ORGANIC SILT with GRAVEL SANDY ORGANIC SILT SANDY ORGANIC SILT with GRAVEL GRAVELLY ORGANIC SILT GRAVELLY ORGANIC SILT with SAND
CH	Fat CLAY Fat CLAY with SAND Fat CLAY with GRAVEL SANDY fat CLAY SANDY fat CLAY with GRAVEL GRAVELLY fat CLAY GRAVELLY fat CLAY with SAND
MH	Elastic SILT Elastic SILT with SAND Elastic SILT with GRAVEL SANDY elastic SILT SANDY elastic SILT with GRAVEL GRAVELLY elastic SILT GRAVELLY elastic SILT with SAND
OH	ORGANIC fat CLAY ORGANIC fat CLAY with SAND ORGANIC fat CLAY with GRAVEL SANDY ORGANIC fat CLAY SANDY ORGANIC fat CLAY with GRAVEL GRAVELLY ORGANIC fat CLAY GRAVELLY ORGANIC fat CLAY with SAND
OH	ORGANIC elastic SILT ORGANIC elastic SILT with SAND ORGANIC elastic SILT with GRAVEL SANDY ORGANIC elastic SILT SANDY ORGANIC elastic SILT with GRAVEL GRAVELLY ORGANIC elastic SILT GRAVELLY ORGANIC elastic SILT with SAND
OL/OH	ORGANIC SOIL ORGANIC SOIL with SAND ORGANIC SOIL with GRAVEL SANDY ORGANIC SOIL SANDY ORGANIC SOIL with GRAVEL GRAVELLY ORGANIC SOIL GRAVELLY ORGANIC SOIL with SAND

FIELD AND LABORATORY TESTING

- (C) Consolidation (ASTM D 2435)
- (CL) Collapse Potential (ASTM D 5333)
- (CP) Compaction Curve (CTM 216)
- (CR) Corrosivity Testing (CTM 643, CTM 422, CTM 417)
- (CU) Consolidated Undrained Triaxial (ASTM D 4767)
- (DS) Direct Shear (ASTM D 3080)
- (EI) Expansion Index (ASTM D 4829)
- (M) Moisture Content (ASTM D 2216)
- (OC) Organic Content-% (ASTM D 2974)
- (P) Permeability (CTM 220)
- (PA) Particle Size Analysis (ASTM D 422)
- (PI) Plasticity Index (AASHTO T 90) Liquid Limit (AASHTO T 89)
- (PL) Point Load Index (ASTM D 5731)
- (PM) Pressure Meter
- (R) R-Value (CTM 301)
- (SE) Sand Equivalent (CTM 217)
- (SG) Specific Gravity (AASHTO T 100)
- (SL) Shrinkage Limit (ASTM D 427)
- (SW) Swell Potential (ASTM D 4546)
- (UC) Unconfined Compression-Soil (ASTM D 2166) Unconfined Compression-Rock (ASTM D 2938)
- (UU) Unconsolidated Undrained Triaxial (ASTM D 2850)
- (UW) Unit Weight (ASTM D 4767)

APPARENT DENSITY OF COHESIONLESS SOILS

Description	SPT N_{60} (Blows / 12 in.)
Very Loose	0 - 5
Loose	5 - 10
Medium Dense	10 - 30
Dense	30 - 50
Very Dense	Greater than 50

MOISTURE

Description	Criteria
Dry	No discernable moisture
Moist	Moisture present, but no free water
Wet	Visible free water

PERCENT OR PROPORTION OF SOILS

Description	Criteria
Trace	Particles are present but estimated to be less than 5%
Few	5% - 10%
Little	15% - 25%
Some	30% - 45%
Mostly	50% - 100%

PARTICLE SIZE

Description		Size (in.)
Boulder		Greater than 12
Cobble		3 - 12
Gravel	Coarse	3/4 - 3
	Fine	1/5 - 3/4
Sand	Coarse	1/16 - 1/5
	Medium	1/64 - 1/16
	Fine	1/300 - 1/64
Silt and Clay		Less than 1/300

ENGINEERING SERVICES

GEOTECHNICAL SERVICES
PREPARED BY: I.G-Remmen

STATE OF CALIFORNIA
DEPARTMENT OF TRANSPORTATION

DIVISION OF ENGINEERING SERVICES
STRUCTURE DESIGN
DESIGN BRANCH 15

BRIDGE NO. 53E0164
POST MILE 29.9

RETAINING WALL NO. 1585
LOG OF TEST BORINGS 3 OF 4

GS LOTB SOIL LEGEND

ORIGINAL SCALE IN INCHES FOR REDUCED PLANS 0 1 2 3

UNIT: 3643
PROJECT NUMBER & PHASE: 07000211191
CONTRACT NO.: 07-1218W1

DISREGARD PRINTS BEARING EARLIER REVISION DATES

REVISION DATES

SHEET 25 OF 26

FILE => 53e0164-z-ltb_03.dgn

USERNAME => s103858 DATE PLOTTED => 22-MAY-2012 TIME PLOTTED => 08:41

DIST	COUNTY	ROUTE	KILOMETER POST TOTAL PROJECT	SHEET No	TOTAL SHEETS
07	LA	5	29.4/31.6	919	1931

Joseph S. Pratt 1-3-12
CERTIFIED ENGINEERING GEOLOGIST

5-21-12
PLANS APPROVAL DATE

PROFESSIONAL GEOLOGIST Joseph S. Pratt No. 2141 Exp. 5-31-13 CERTIFIED ENGINEERING GEOLOGIST STATE OF CALIFORNIA

The State of California or its officers or agents shall not be responsible for the accuracy or completeness of electronic copies of this plan sheet.

LEGEND:

- (M) Moisture Content
- (PA) Particle Size Analysis
- (PI) Plasticity, Index, Liquid Limit
- (CR) Corrosivity Testing

FOR PLAN VIEW, SEE
"LOG OF TEST BORINGS 1 OF 4"

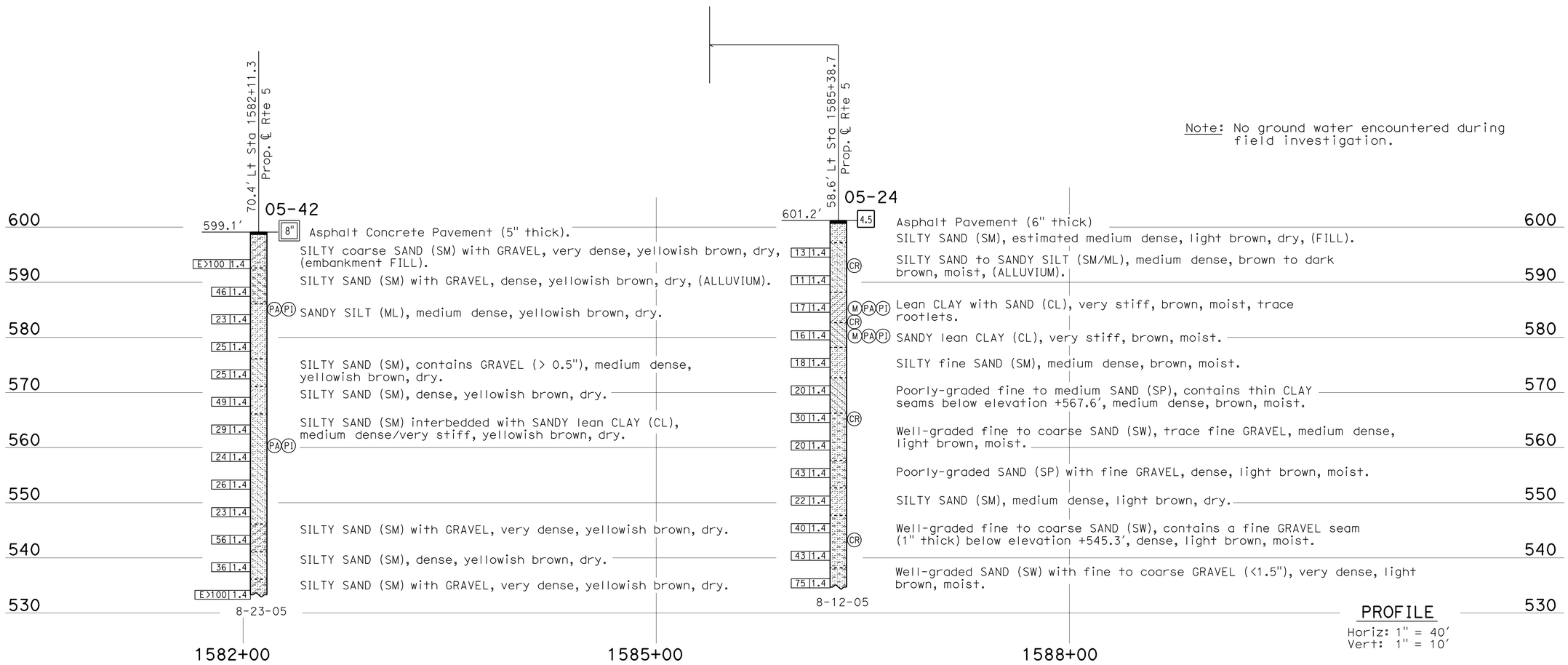

Note: No ground water encountered during field investigation.

PROFILE
Horiz: 1" = 40'
Vert: 1" = 10'

LEGEND OF BORING OPERATIONS

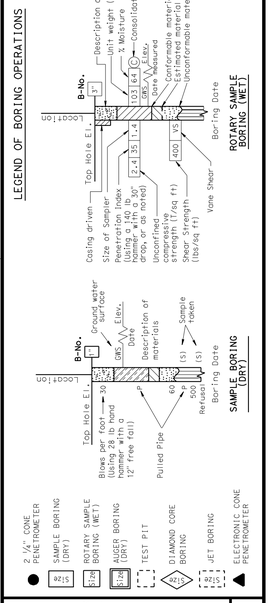

LEGEND OF EARTH MATERIALS

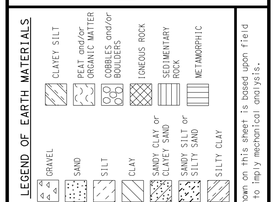

CONSISTENCY CLASSIFICATION FOR SOILS
According to the Standard Penetration Test

SPT N-Value (Blows/ Foot)	Granular	SPT N-Value (Blows/ Foot)	Cohesive
0-4	Very Loose	<2	Very Soft
5-10	Loose	2-4	Soft
11-30	Medium Dense	5-8	Medium stiff
31-50	Dense	9-15	Stiff
>50	Very Dense	16-30	Very Stiff
		31-60	Hard
		>60	Very Hard

NOTE: Classification of earth material as shown on this sheet is based upon field inspection and is not to be construed to imply mechanical analysis.

ENGINEERING SERVICES	GEOTECHNICAL SERVICES
DRAWN BY	I.G-Remmen
CHECKED BY	J. Pratt, D. Wathugala

FIELD INVESTIGATION BY: K. Lai, E. Schramm

STATE OF CALIFORNIA DEPARTMENT OF TRANSPORTATION

DIVISION OF ENGINEERING SERVICES STRUCTURE DESIGN
DESIGN BRANCH 15

BRIDGE NO. 53E0164
POST MILE 29.9

RETAINING WALL NO. 1585
LOG OF TEST BORINGS 4 OF 4

OGS LOG OF TEST BORINGS SHEET (ENGLISH) (REV. 5/25/07)

ORIGINAL SCALE IN INCHES FOR REDUCED PLANS 0 1 2 3

UNIT: 3643
PROJECT NUMBER & PHASE: 07000211191
CONTRACT NO.: 07-1218W1

DISREGARD PRINTS BEARING EARLIER REVISION DATES

REVISION DATES: 12-20-11 01-03-12

SHEET 26 OF 26

FILE => 53e0164-z-1tb_04.dgn

USERNAME => s109858 DATE PLOTTED => 22-MAY-2012 TIME PLOTTED => 08:42

DIST	COUNTY	ROUTE	POST MILES TOTAL PROJECT	SHEET No.	TOTAL SHEETS
07	LA	5	29.4/31.6	920	1931

dEstrada. 01/31/12
REGISTERED CIVIL ENGINEER DATE

5-21-12
PLANS APPROVAL DATE

REGISTERED PROFESSIONAL ENGINEER
JORGE I. ESTRADA
No. C51473
Exp. 06-30-12
CIVIL
STATE OF CALIFORNIA

The State of California or its officers or agents shall not be responsible for the accuracy or completeness of electronic copies of this plan sheet.

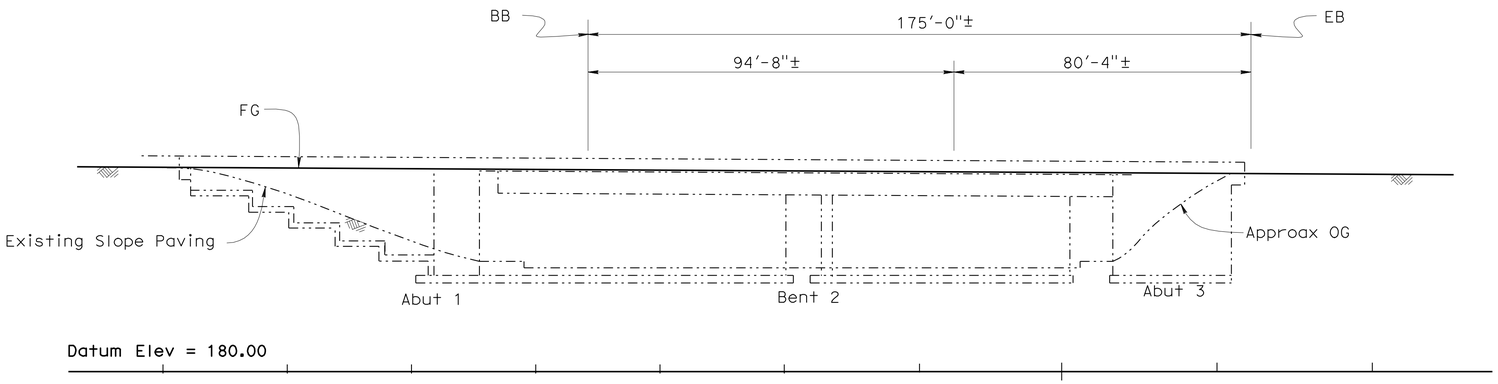

ELEVATION
1"= 20'-0"

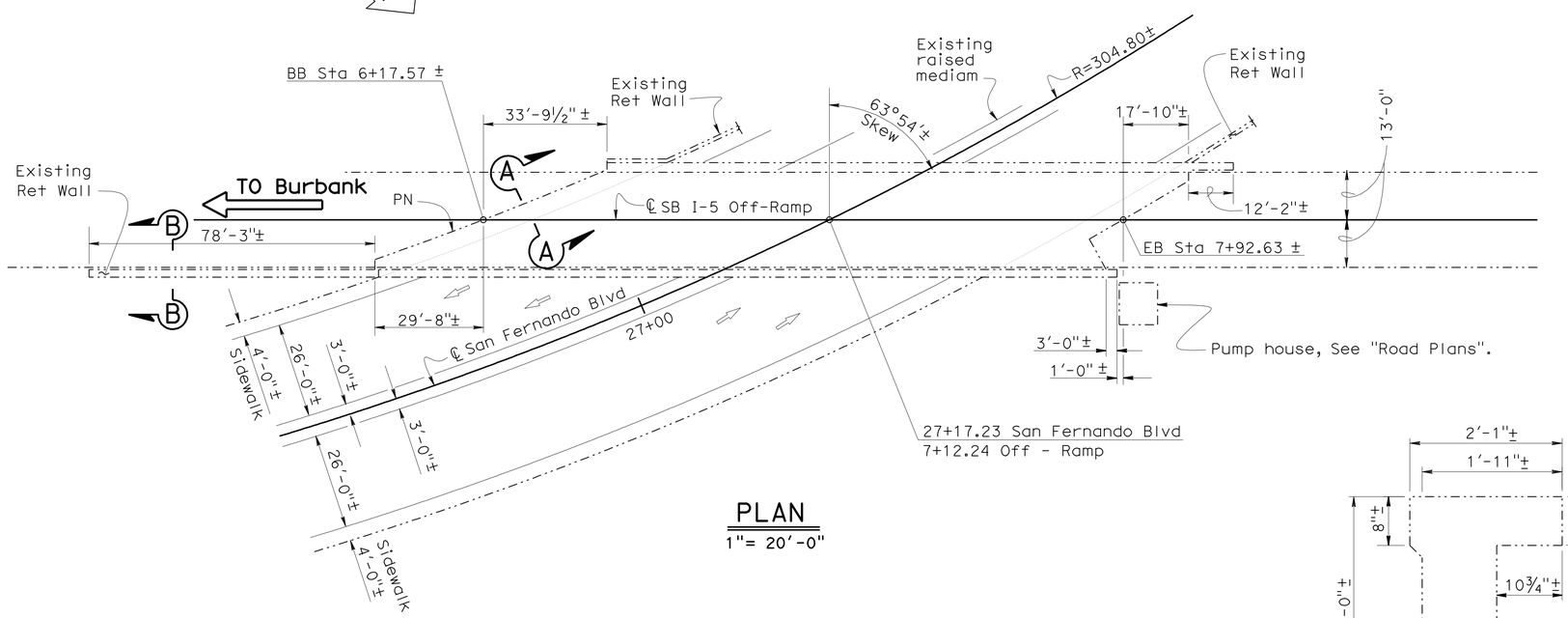

PLAN
1"= 20'-0"

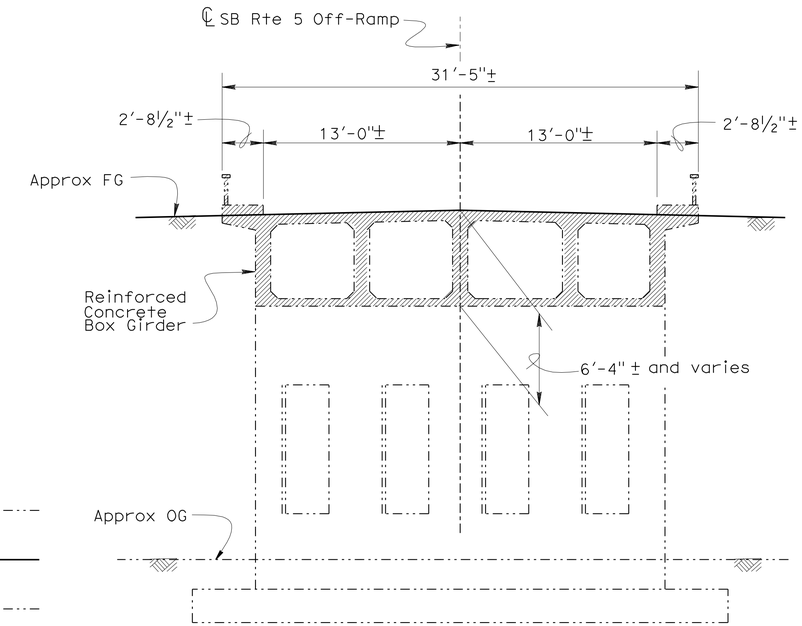

TYPICAL SECTION
1"=5'-0"

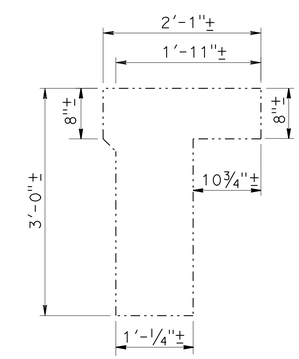

SECTION B-B
1"=1'-0"

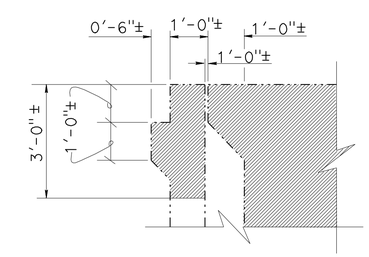

SECTION A-A
½"=1'-0"

LEGEND:

- Indicates existing structure
- Indicates Limits of Bridge Removal (Portion)

QUANTITIES

BRIDGE REMOVAL (PORTION), LOCATION C — LUMP SUM

DESIGN	BY JORGE ESTRADA	CHECKED RUPERD WILSON	LOAD FACTOR DESIGN	LIVE LOADING: HS20-44 AND ALTERNATIVE AND PERMIT DESIGN LOAD	
DETAILS	BY JINLI GUO	CHECKED JORGE ESTRADA	LAYOUT	BY JINLI GUO	CHECKED JORGE ESTRADA
QUANTITIES	BY RUPERD WILSON	CHECKED CORY COWDEN	SPECIFICATIONS	BY JAMES CHOI	PLANS AND SPECS COMPARED

X MIKE POPE
DESIGN ENGINEER

STATE OF CALIFORNIA
DEPARTMENT OF TRANSPORTATION

DIVISION OF ENGINEERING SERVICES
STRUCTURE DESIGN
DESIGN BRANCH 18

BRIDGE NO. 53-0535K
POST MILE 30.83

REMOVE BRIDGE
SAN FERNANDO BLVD UC - OFF RAMP
GENERAL PLAN

ORIGINAL SCALE IN INCHES FOR REDUCED PLANS 0 1 2 3

UNIT: 3603
PROJECT NUMBER & PHASE: 07000211191
CONTRACT NO.: 07-1218W1

DISREGARD PRINTS BEARING EARLIER REVISION DATES

REVISION DATES: 03-23-10 04-26-10 03-21-11

SHEET 1 OF 1

USERNAME => s124196 DATE PLOTTED => 25-MAY-2012 TIME PLOTTED => 11:19

STRUCTURES DESIGN GENERAL PLAN SHEET (ENGLISH) (REV.09-01-10)

FILE => 53-0535k-a-gp-offramp.dgn

DIST	COUNTY	ROUTE	POST MILES TOTAL PROJECT	SHEET No.	TOTAL SHEETS
07	LA	5	29.4/31.6	921	1931

dEstrada. 01/31/12
REGISTERED CIVIL ENGINEER DATE

5-21-12
PLANS APPROVAL DATE

REGISTERED PROFESSIONAL ENGINEER
JORGE I. ESTRADA
No. C51473
Exp. 06-30-12
CIVIL
STATE OF CALIFORNIA

The State of California or its officers or agents shall not be responsible for the accuracy or completeness of electronic copies of this plan sheet.

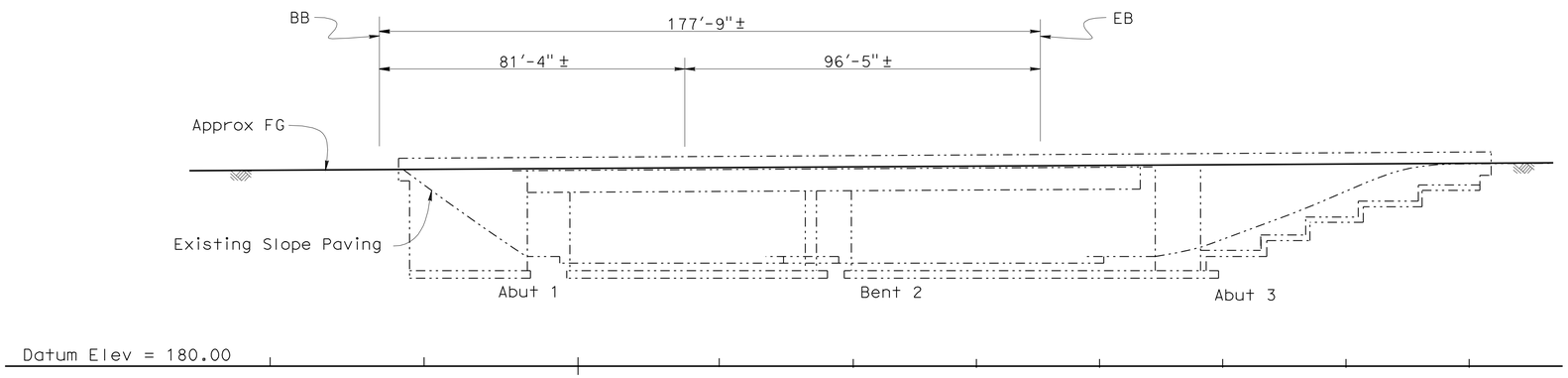

MIRROR ELEVATION
1"= 20'-0"

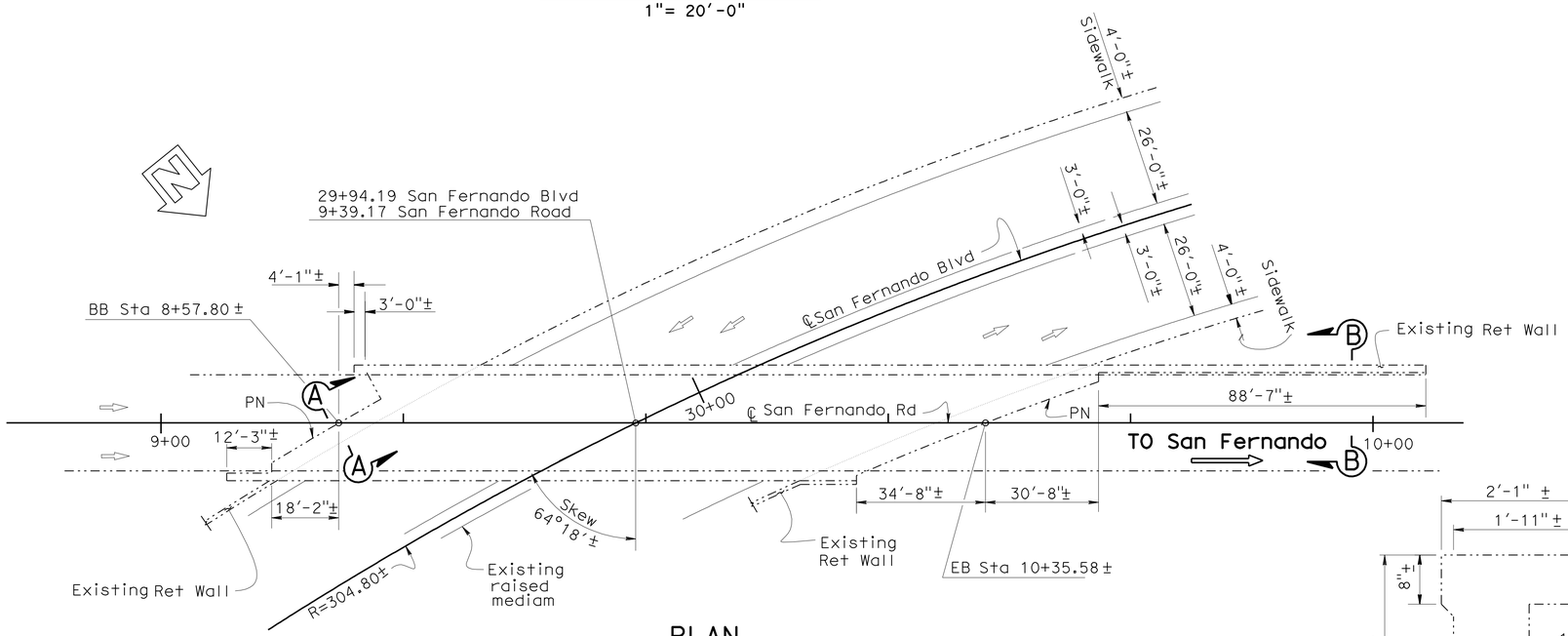

PLAN
1"= 20'-0"

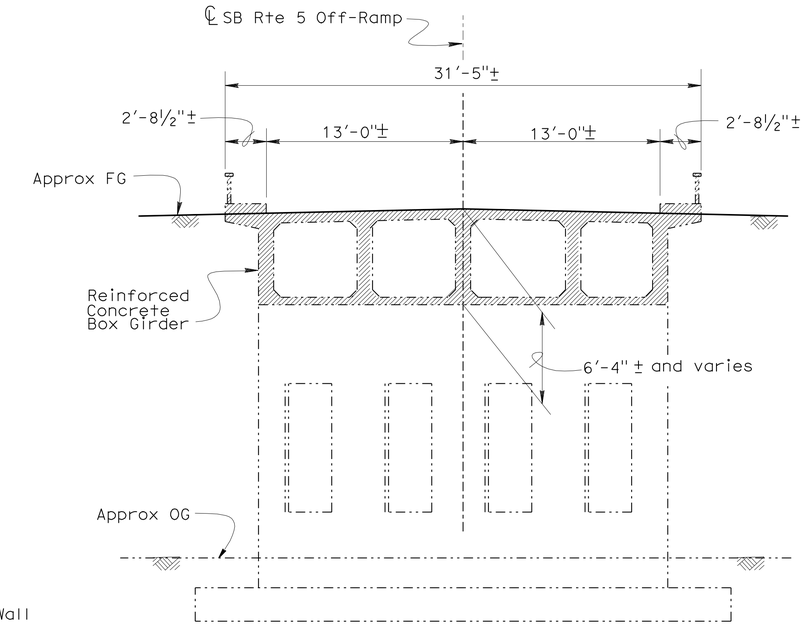

TYPICAL SECTION
1"= 5'-0"

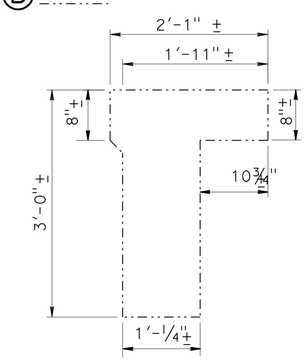

SECTION B-B
1"= 1'-0"

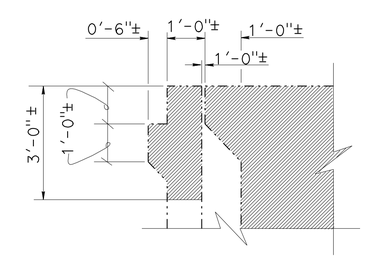

SECTION A-A
½"= 1'-0"

LEGEND:

- Indicates existing structure
- Indicates Limits of Bridge Removal (Portion)

QUANTITIES

BRIDGE REMOVAL (PORTION), LOCATION B — LUMP SUM

MIKE POPE, DESIGN ENGINEER	DESIGN	BY JORGE ESTRADA	CHECKED RUPERD WILSON	LOAD FACTOR DESIGN	LIVE LOADING: HS20-44 AND ALTERNATIVE AND PERMIT DESIGN LOAD
	DETAILS	BY JINLI GUO	CHECKED JORGE ESTRADA	LAYOUT BY JINLI GUO	CHECKED JORGE ESTRADA
	QUANTITIES	BY RUPERD WILSON	CHECKED CORY COWDEN	SPECIFICATIONS BY JAMES CHOI	PLANS AND SPECS COMPARED

STATE OF CALIFORNIA
DEPARTMENT OF TRANSPORTATION

DIVISION OF ENGINEERING SERVICES
STRUCTURE DESIGN
DESIGN BRANCH 18

BRIDGE NO. 53-0536
POST MILE 30.86

REMOVE BRIDGE
SAN FERNANDO BLVD UC - BRIDGE B
GENERAL PLAN

ORIGINAL SCALE IN INCHES FOR REDUCED PLANS 0 1 2 3

UNIT: 3603
PROJECT NUMBER & PHASE: 07000211191
CONTRACT NO.: 07-1218W1

DISREGARD PRINTS BEARING EARLIER REVISION DATES

REVISION DATES: 03-23-10 08-23-11

SHEET 1 OF 1

STRUCTURES DESIGN GENERAL PLAN SHEET (ENGLISH) (REV.09-01-10)

FILE => 53-0536-a-gp-b.dgn

USERNAME => s117606 DATE PLOTTED => 22-MAY-2012 TIME PLOTTED => 06:58

DIST	COUNTY	ROUTE	POST MILES TOTAL PROJECT	SHEET No.	TOTAL SHEETS
07	LA	5	29.4/31.6	922	1931

JEstrada. 01/31/12
REGISTERED CIVIL ENGINEER DATE

5-21-12
PLANS APPROVAL DATE

REGISTERED PROFESSIONAL ENGINEER
JORGE I. ESTRADA
No. C51473
Exp. 06-30-12
CIVIL
STATE OF CALIFORNIA

The State of California or its officers or agents shall not be responsible for the accuracy or completeness of electronic copies of this plan sheet.

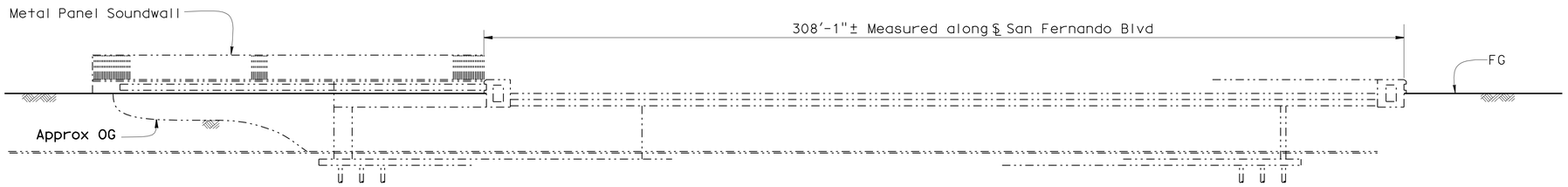

Datum Elev = 175.00

INDEX TO PLANS

Sheet No.	Title
1.	GENERAL PLAN
2.	MISCELLANEOUS DETAILS

SECTION A-A

1"=20'-0"

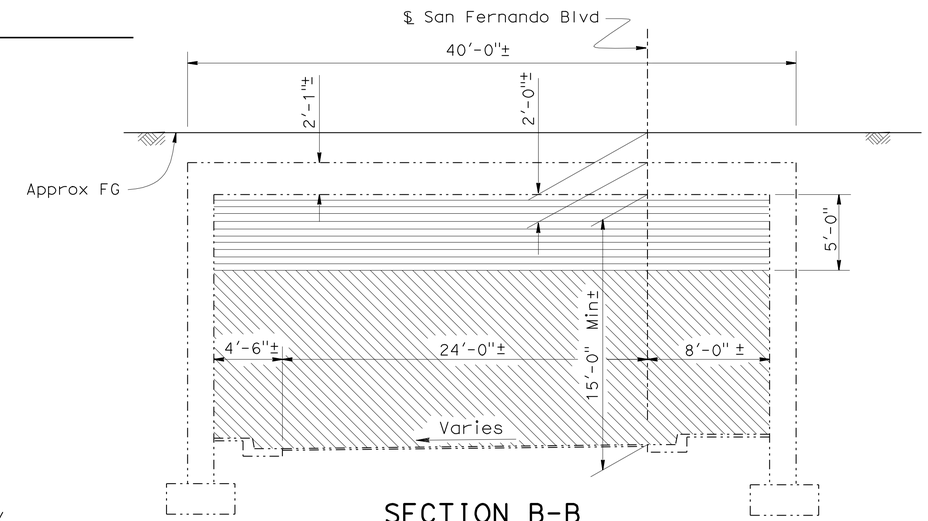

SECTION B-B

1"= 5'-0"

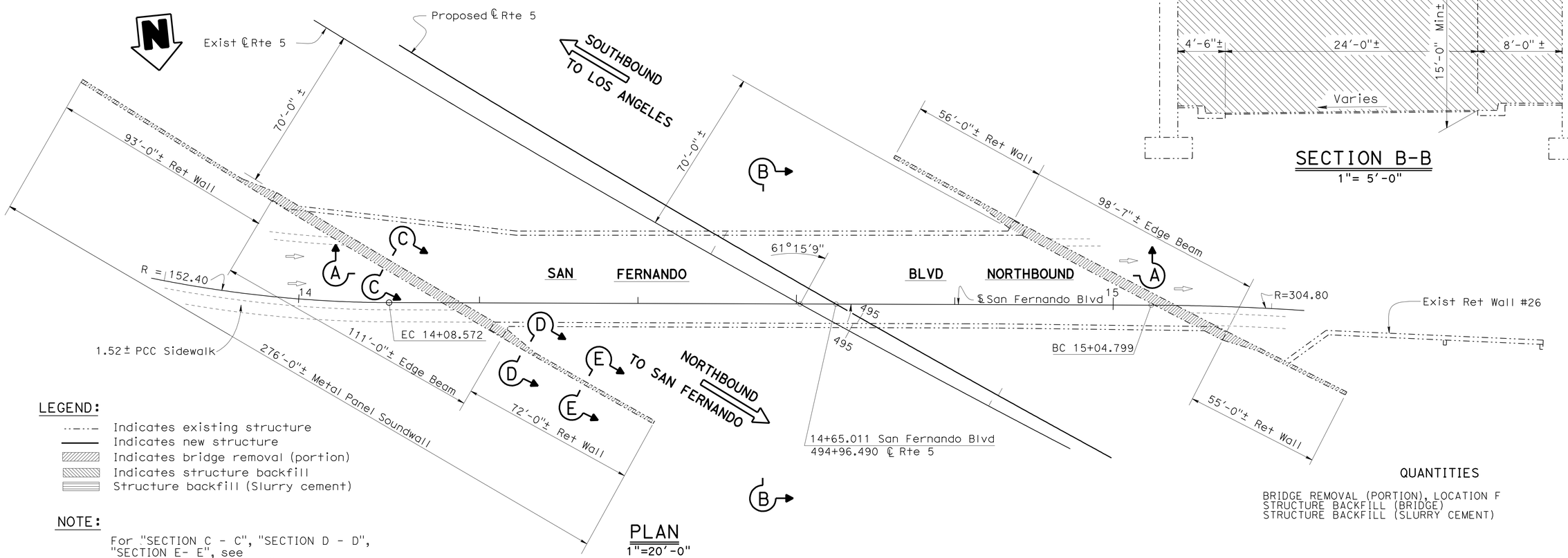

PLAN

1"=20'-0"

LEGEND:

- Indicates existing structure
- Indicates new structure
- Indicates bridge removal (portion)
- Indicates structure backfill
- Structure backfill (Slurry cement)

NOTE:

For "SECTION C - C", "SECTION D - D", "SECTION E- E", see "MISCELLANEOUS DETAILS" sheet.

QUANTITIES

BRIDGE REMOVAL (PORTION), LOCATION F	LUMP SUM
STRUCTURE BACKFILL (BRIDGE)	3,970 CY
STRUCTURE BACKFILL (SLURRY CEMENT)	1,985 CY

ABANDON BRIDGE

SAN FERNANDO BLVD UC - NORTHBOUND

GENERAL PLAN

MIKE POPE
DESIGN ENGINEER

	BY	CHECKED
DESIGN	JORGE ESTRADA	RUPERD WILSON
DETAILS	JINLI GUO	JORGE ESTRADA
QUANTITIES	RUPERD WILSON	CORY COWDEN

LOAD FACTOR DESIGN — LIVE LOADING: HS20-44 AND ALTERNATIVE AND PERMIT DESIGN LOAD

	BY	CHECKED
LAYOUT	JINLI GUO	JORGE ESTRADA
SPECIFICATIONS	JAMES CHOI	PLANS AND SPECS COMPARED

STATE OF CALIFORNIA
DEPARTMENT OF TRANSPORTATION

DIVISION OF ENGINEERING SERVICES
STRUCTURE DESIGN
DESIGN BRANCH 18

BRIDGE NO. 53-1109
POST MILE 30.75

ORIGINAL SCALE IN INCHES FOR REDUCED PLANS 0 1 2 3

UNIT: 3603
PROJECT NUMBER & PHASE: 07000211191
CONTRACT NO.: 07-1218W1

DISREGARD PRINTS BEARING EARLIER REVISION DATES

REVISION DATES: 12-05-09 12-24-09 03-11-11

SHEET 1 OF 2

STRUCTURES DESIGN GENERAL PLAN SHEET (ENGLISH) (REV.09-01-10)

FILE => 53-1109-a-gp.dgn

USERNAME => s117606 DATE PLOTTED => 22-MAY-2012 TIME PLOTTED => 06:58

DIST	COUNTY	ROUTE	POST MILES TOTAL PROJECT	SHEET No.	TOTAL SHEETS
07	LA	5	29.4/31.6	923	1931

JEstrada. 01/31/12
REGISTERED CIVIL ENGINEER DATE

5-21-12
PLANS APPROVAL DATE

REGISTERED PROFESSIONAL ENGINEER
JORGE I. ESTRADA
No. C51473
Exp. 06-30-12
CIVIL
STATE OF CALIFORNIA

The State of California or its officers or agents shall not be responsible for the accuracy or completeness of electronic copies of this plan sheet.

Construction Sequence:

1. Place structure backfill under bridge within 5′ from soffit of bridge deck
2. Place slurry cement under bridge Slurry to be in contact with soffit of bridge deck
3. Remove edge beam

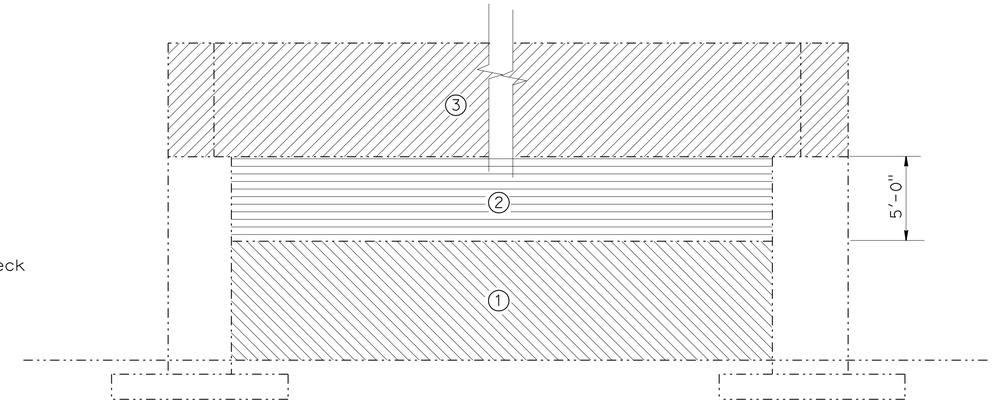

Portal Elevation
BACKFILL & CONCRETE REMOVAL DIAGRAM
No Scale

LEGEND:

- Indicates existing structure
- Indicates new structure
- Indicates Bridge Removal (Portion)
- Indicates structure backfill
- Structure backfill (slurry cement)

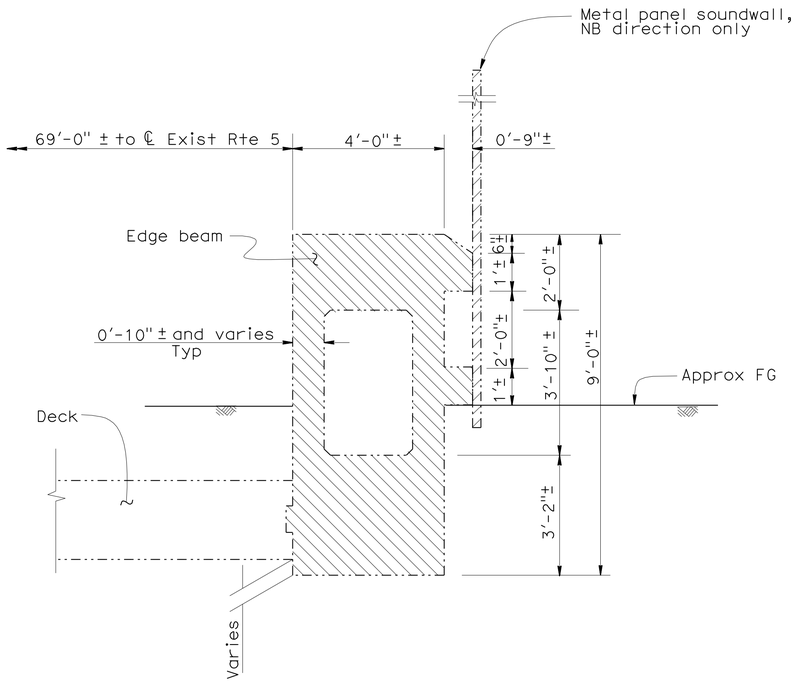

SECTION C - C
½" = 1′

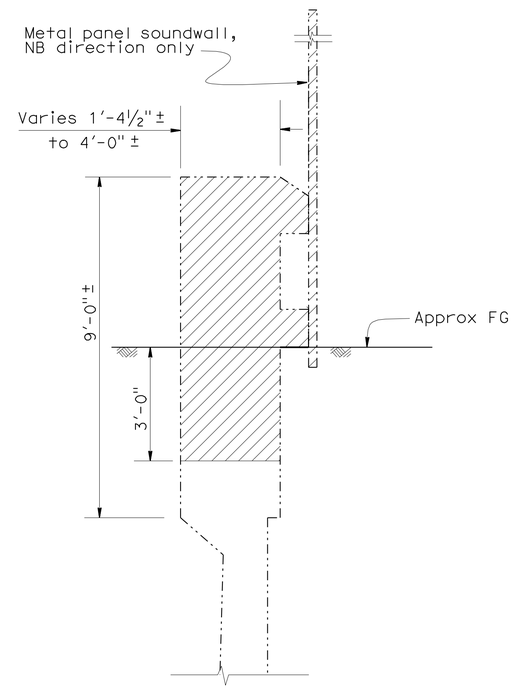

SECTION D - D
½" = 1′

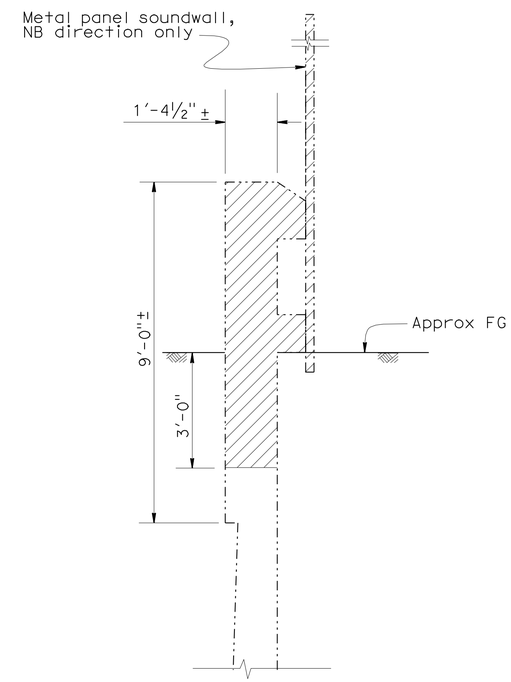

SECTION E - E
½" = 1′

DESIGN	BY JORGE ESTRADA	CHECKED RUPERD WILSON	
DETAILS	BY JINLI GUO	CHECKED JORGE ESTRADA	
QUANTITIES	BY RUPERD WILSON	CHECKED CORY COWDEN	

STATE OF CALIFORNIA
DEPARTMENT OF TRANSPORTATION

DIVISION OF ENGINEERING SERVICES
STRUCTURE DESIGN
DESIGN BRANCH 18

BRIDGE NO. 53-1109
POST MILE 30.75

ABANDON BRIDGE
SAN FERNANDO BLVD UC - NORTHBOUND
MISCELLANEOUS DETAILS

STRUCTURES DESIGN DETAIL SHEET (ENGLISH) (REV. 09-01-10)

ORIGINAL SCALE IN INCHES FOR REDUCED PLANS 0 1 2 3

UNIT: 3603
PROJECT NUMBER & PHASE: 07000211191
CONTRACT NO.: 07-1218W1

DISREGARD PRINTS BEARING EARLIER REVISION DATES

REVISION DATES 10-08-10 10-14-10 03-15-11

SHEET 2 OF 2

FILE => 53-1109-e-det.dgn

USERNAME => s117606 DATE PLOTTED => 22-MAY-2012 TIME PLOTTED => 06:58

DIST	COUNTY	ROUTE	POST MILES TOTAL PROJECT	SHEET No.	TOTAL SHEETS
07	LA	5	29.4/31.6	924	1931

REGISTERED CIVIL ENGINEER — DATE 01-30-12

5-21-12
PLANS APPROVAL DATE

REGISTERED PROFESSIONAL ENGINEER — Jorge I. Estrada No. C51473 Exp. 06-30-12 CIVIL — STATE OF CALIFORNIA

The State of California or its officers or agents shall not be responsible for the accuracy or completeness of electronic copies of this plan sheet.

UTILITIES:

Ⓐ 2-4"c Communication conduits
Ⓑ 1-2"c Lighting conduit

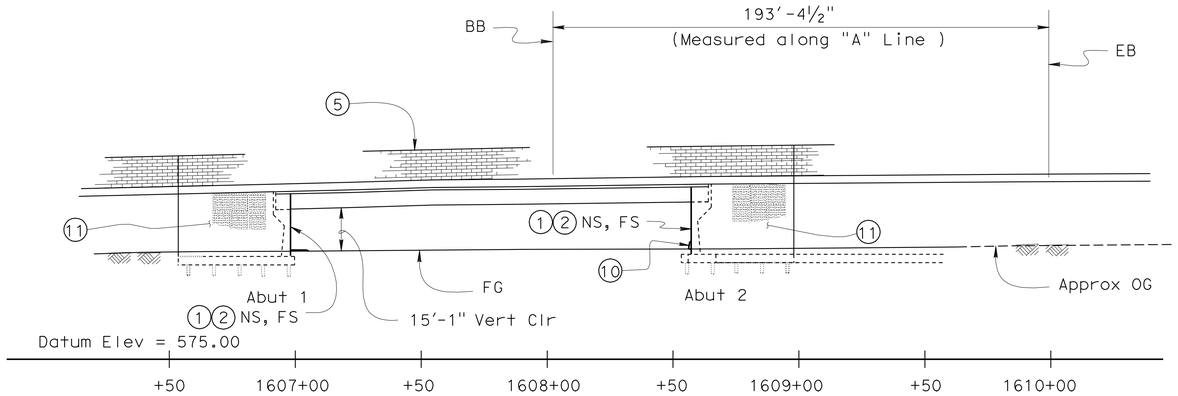

ELEVATION
1"=30'

NOTES:

1. For General Notes and Pile Data Table, see "INDEX TO PLANS" sheet
2. Relocation of existing utilities prior to this Contract by Others.

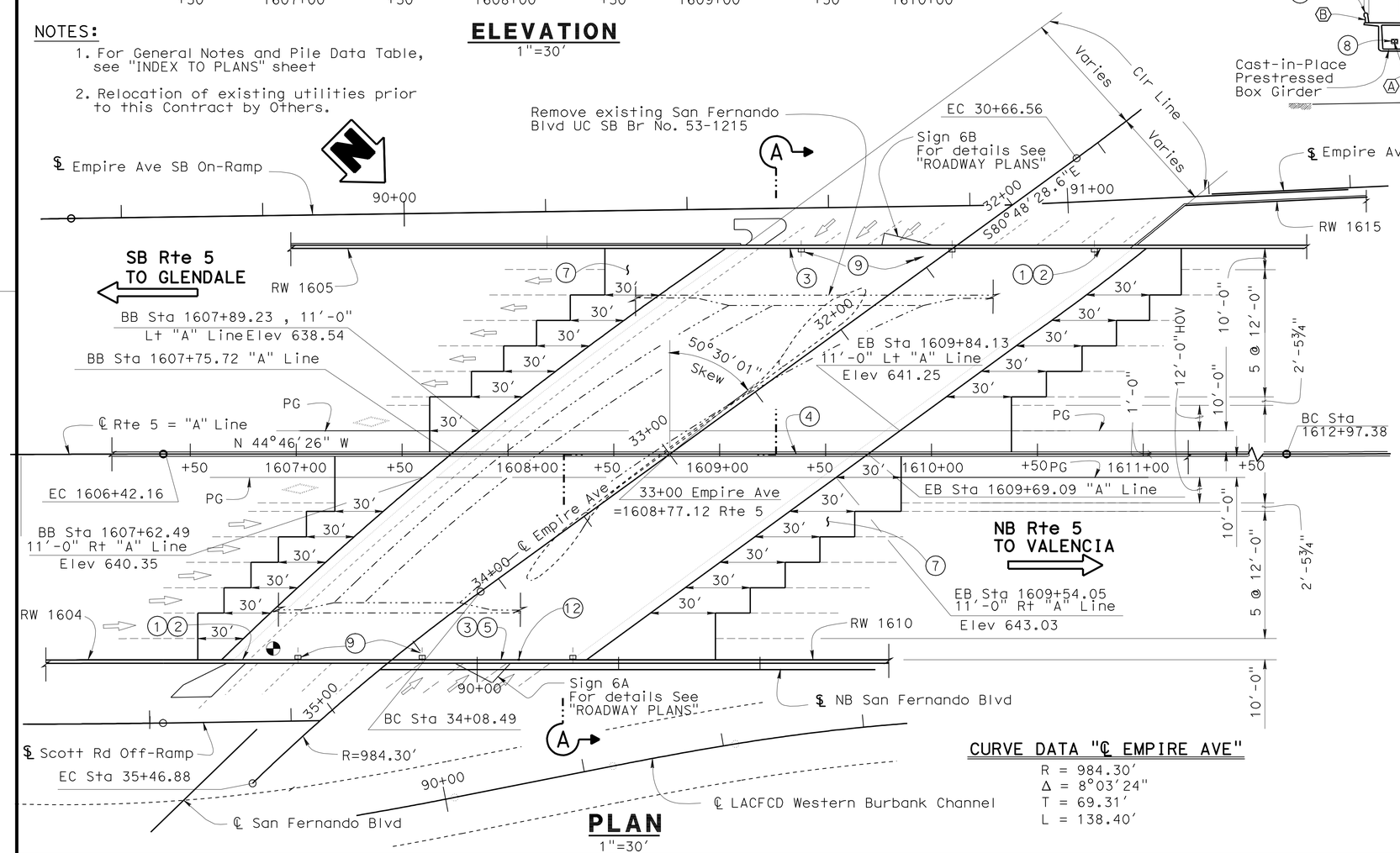

PLAN
1"=30'

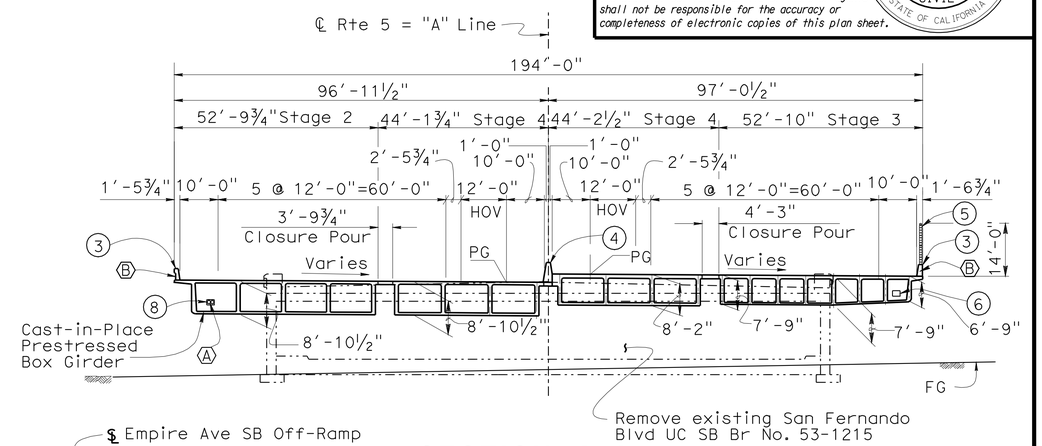

SECTION A-A
1"=20'

LEGEND:

- Indicates existing structure
- Indicates new structure
- Indicates point of minimum vertical clearance

1. Paint "EMPIRE AVE UC"
2. Paint "Bridge No. 53-2920"
3. Concrete Barrier Type 736 MOD
4. Concrete Barrier Type 60A MOD
5. Masonry Block Soundwall
6. 2'-0" X 1'-6" Future Utility Opening
7. Structure Approach Type N(30S)
8. 2'-0" x 1'-6" Utility Opening
9. Deck drain Type D-3
10. Concrete Barrier Type 60D see "ROADWAY PLANS"
11. Architectural Treatment
12. Signal head under bridge overhang, see "SIGN PLANS"

CURVE DATA "℄ EMPIRE AVE"

R = 984.30'
Δ = 8°03'24"
T = 69.31'
L = 138.40'

QUANTITIES

BRIDGE REMOVAL, LOCATION A	LUMP	SUM
STRUCTURE EXCAVATION (BRIDGE)	17,433	CY
STRUCTURE BACKFILL (BRIDGE)	7,220	CY
PERVIOUS BACKFILL MATERIAL	527	CY
24" CAST-IN-DRILLED-HOLE CONCRETE PILING	19,144	LF
PRESTRESSING CAST-IN-PLACE CONCRETE	LUMP	SUM
STRUCTURAL CONCRETE, BRIDGE FOOTING	1,727	CY
STRUCTURAL CONCRETE, BRIDGE	5,896	CY
STRUCTURAL CONCRETE, APPROACH SLAB (TYPE N)	539	CY
ARCHITECTURAL TREATMENT	785	SQFT
SOUND WALL (MASONRY BLOCK)	2,740	SQFT
JOINT SEAL (MR 2")	635	LF
BAR REINFORCING STEEL (BRIDGE)	1,884,206	LB
MISCELLANEOUS METAL (BRIDGE)	4,425	LB
CONCRETE BARRIER (TYPE 60A MODIFIED)	319	LF
CONCRETE BARRIER (TYPE 736 MODIFIED)	524	LF

MICHAEL POPE
DESIGN ENGINEER

	BY	CHECKED
DESIGN	GERRARD HIGHT	JORGE ESTRADA
DETAILS	JINLI GUO/F. RASHEDI	JORGE ESTRADA
QUANTITIES	M. POPE/M. SCHOTT	CORY COWDEN

LOAD FACTOR DESIGN — LIVE LOADING: HS20-44 AND ALTERNATIVE AND PERMIT DESIGN LOAD
LAYOUT — BY JINLI GUO — CHECKED JORGE ESTRADA
SPECIFICATIONS — BY James Choi — PLANS AND SPECS COMPARED X

STATE OF CALIFORNIA
DEPARTMENT OF TRANSPORTATION

DIVISION OF ENGINEERING SERVICES
STRUCTURE DESIGN
DESIGN BRANCH 18

BRIDGE NO. 53-2920
POST MILE 30.47

EMPIRE AVE UC (REPLACE)
GENERAL PLAN

ORIGINAL SCALE IN INCHES FOR REDUCED PLANS 0 1 2 3

UNIT: 3603
PROJECT NUMBER & PHASE: 0700021119-1
CONTRACT NO.: 07-1218W1

DISREGARD PRINTS BEARING EARLIER REVISION DATES — REVISION DATES 09-04-09 4-30-12 4-19-12 — SHEET 1 OF 53

USERNAME => s128843 DATE PLOTTED => 11-JUL-2012 TIME PLOTTED => 10:05

STRUCTURES DESIGN GENERAL PLAN SHEET (ENGLISH) (REV.09-01-10)

FILE => 53-2920rl-a-gp01.dgn

DIST	COUNTY	ROUTE	POST MILES TOTAL PROJECT	SHEET No.	TOTAL SHEETS
07	LA	5	29.4/31.6	925	1931

J Estrada. 01-30-12
REGISTERED CIVIL ENGINEER DATE

5-21-12
PLANS APPROVAL DATE

REGISTERED PROFESSIONAL ENGINEER Jorge I. Estrada No. C51473 Exp. 06-30-12 CIVIL STATE OF CALIFORNIA

The State of California or its officers or agents shall not be responsible for the accuracy or completeness of electronic copies of this plan sheet.

GENERAL NOTES
LOAD FACTOR DESIGN

DESIGN: CALTRANS BRIDGE DESIGN SPECIFICATION-April 2000 (LFD) (1996 16th Edition AASHTO with Interims and Revisions by CALTRANS)

SEISMIC DESIGN: Caltrans Seismic Design Criteria (SDC), Version 1.3 February 2004

DEAD LOAD: Includes 35 psf for future wearing surface.

LIVE LOAD: HS20-44 and alternative and permit design load.

SEISMIC LOADING: Site Specific Acceleration Response Spectra Curve

REINFORCED CONCRETE:
f_y = 60 ksi
f'_c = See "CONCRETE STRENGTH AND TYPE LIMITS"
n = 8
Transverse Deck Slabs (Working Stress Design)
f_s = 20 ksi
f_c = 1200 psi
n = 10

PRESTRESSED CONCRETE: See "PRESTRESSING NOTES" sheet

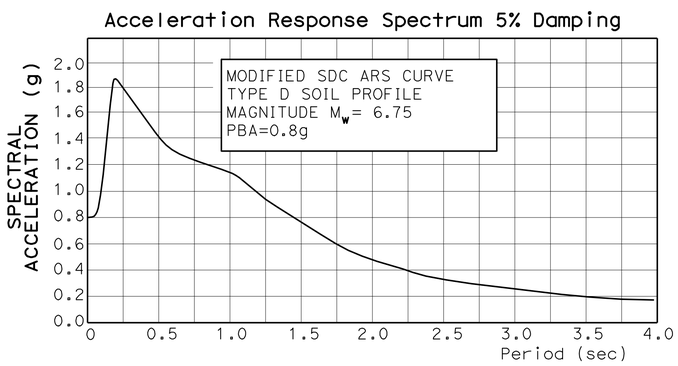

ARS CURVE

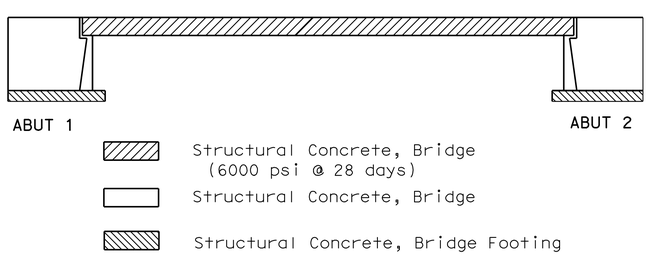

CONCRETE STRENGTH AND TYPE LIMITS

No Scale

PILE DATA TABLE

Location	Pile Type & Diameter	Design Loading (Kip)	Nominal Resistance		Bottom of Pile Footing Elevation (ft)	Design Pile Tip Elevation (ft)	Specified Pile Tip Elevation (ft)
			Compression (Kip)	Tension (Kip)			
Abut 1 Left (A)	CIDH 24"	140	280	0	+606.75	+579.4(1) +574.0(2)	+574.0
Abut 1 Right (B)	CIDH 24"	140	280	0	+609.25	+582.0(1) +577.0(2)	+577.0
Abut 2 Left (C)	CIDH 24"	140	280	0	+604.25	+577.1(1) +571.0(2)	+571.0
Abut 2 Left (D)	CIDH 24"	140	280	0	+606.00	+579.4(1) +574.0(2)	+574.0
Abut 2 Right (E)	CIDH 24"	140	280	0	+607.50	+581.4(1) +575.0(2)	+575.0
Abut 2 Right (F)	CIDH 24"	140	280	0	+609.00	+582.0(1) +577.0(2)	+577.0
Abut 2 Right (G)	CIDH 24"	140	280	0	+610.75	+583.0(1) +578.0(2)	+578.0

NOTES: Design tip elevation is controlled by the following demands:

(1) Nominal Resistance in Compression (≤ .5 inch vertical deflection at top of pile

(2) Nominal Lateral Resistance-Free Head Condition (specified 0.25 inch lateral deflection at top of pile)

STANDARD PLANS DATED MAY 2006

A10A-A10B	ACRONYMS AND ABBREVIATIONS
A10C-A10D	SYMBOLS
A62C	LIMITS OF PAYMENT FOR EXCAVATION AND BACKFILL - BRIDGE
RSP A76A	CONCRETE BARRIER TYPE 60
BO-1	BRIDGE DETAILS
BO-5	BRIDGE DETAILS
BO-13	BRIDGE DETAILS
B2-3	400 mm AND 600 mm CAST-IN-DRILLED-HOLE CONCRETE PILE
B3-9	RETAINING WALL DETAILS NO.2
B7-1	BOX GIRDER DETAILS
B7-7	DECK DRAIN TYPE D-3
B7-8	DECK DRAINAGE DETAILS
B7-10	UTILITY OPENING BOX GIRDER
B8-5	CAST-IN-PLACE PRESTRESSED GIRDER DETAILS
B14-3	COMMUNICATION AND SPRINKLER CONTROL CONDUITS (CONDUIT LESS THAN SIZE 103)
B14-4	WATER SUPPLY LINE(BRIDGE)(PIPE SIZE LESS THAN NPS4)
B14-5	WATER SUPPLY LINE (DETAILS)(PIPE SIZE LESS THAN NPS4)
T3	TEMPORARY RAILING (TYPE K)
BO-3	BRIDGE DETAILS
B3-8	RETAINING WALL DETAILS NO.1
B6-21	JOINT SEALS (MAXIMUM MOVEMENT RATING=2")
B11-56	CONCRETE BARRIER TYPE 736
NSP TSA	TEMPORARY RAILING (TYPE K)

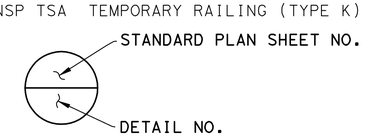

INDEX TO PLANS

Sheet No.	Title
1	GENERAL PLAN
2	INDEX TO PLANS
3	DECK CONTOURS
4	CONSTRUCTION STAGING
5	FOUNDATION PLAN NO.1
6	FOUNDATION PLAN NO.2
7	ABUTMENT 1 LAYOUT
8	ABUTMENT 2 LAYOUT
9	ABUTMENT 1 PILE LAYOUT
10	ABUTMENT 2 PILE LAYOUT
11	ABUTMENT DETAILS NO.1
12	ABUTMENT DETAILS NO.2
13	ABUTMENT DETAILS NO.3
14	ABUTMENT DETAILS NO.4
15	ABUTMENT DETAILS NO.5
16	ABUTMENT DETAILS NO.6
17	ABUTMENT DETAILS NO.7
18	ABUTMENT DETAILS NO.8
19	ABUTMENT DETAILS NO.9
20	ABUTMENT DETAILS NO.10
21	ABUTMENT DETAILS NO.11
22	ABUTMENT DETAILS NO.12
23	ABUTMENT DETAILS NO.13
24	ABUTMENT DETAILS NO.14
25	ABUTMENT DETAILS NO.15
26	ABUTMENT DETAILS NO.16
27	TYPICAL SECTION NO.1
28	TYPICAL SECTION NO.2
29	TYPICAL SECTION NO.3
30	GIRDER LAYOUT NO.1
31	GIRDER LAYOUT NO.2
32	GIRDER LAYOUT NO.3
33	GIRDER LAYOUT NO.4
34	GIRDER LAYOUT NO.5
35	GIRDER REINFORCEMENT NO.1
36	GIRDER REINFORCEMENT NO.2
37	GIRDER REINFORCEMENT NO.3
38	GIRDER REINFORCEMENT NO.4
39	GIRDER REINFORCEMENT NO.5
40	PRESTRESSING NOTES
41	SOUNDWALL MASONRY BLOCK ON BRIDGE
42	STRUCTURE APPROACH TYPE N(30S)
43	STRUCTURE APPROACH DRAINAGE DETAILS
44	MISCELLANEOUS DETAILS No.1
45	MISCELLANEOUS DETAILS No.2
46	MISCELLANEOUS DETAILS No.3
47	LOG OF TEST BORING 1 OF 7
48	LOG OF TEST BORING 2 OF 7
49	LOG OF TEST BORING 3 OF 7
50	LOG OF TEST BORING 4 OF 7
51	LOG OF TEST BORING 5 OF 7
52	LOG OF TEST BORING 6 OF 7
53	LOG OF TEST BORING 7 OF 7

	BY	CHECKED
DESIGN	GERRARD HIGHT	CORY COWDEN
DETAILS	FARIDEH RASHEDI	GERRARD HIGHT
QUANTITIES	MIKE POPE	CORY COWDEN

STATE OF CALIFORNIA
DEPARTMENT OF TRANSPORTATION

DIVISION OF ENGINEERING SERVICES
STRUCTURE DESIGN
DESIGN BRANCH 18

BRIDGE NO. 53-2920
POST MILE 30.47

EMPIRE AVE UC (REPLACE)
INDEX TO PLANS

STRUCTURES DESIGN DETAIL SHEET (ENGLISH) (REV. 09-01-10)

ORIGINAL SCALE IN INCHES FOR REDUCED PLANS 0 1 2 3

UNIT: 3603
PROJECT NUMBER & PHASE: 0700021119-1
CONTRACT NO.: 07-1218W1

DISREGARD PRINTS BEARING EARLIER REVISION DATES

REVISION DATES: 4-29-02 4-08-09 1-04-12

SHEET 2 OF 53

FILE => 53-2920ri-a-ltp.dgn

USERNAME => s119571 DATE PLOTTED => 22-MAY-2012 TIME PLOTTED => 08:24

DIST	COUNTY	ROUTE	POST MILES TOTAL PROJECT	SHEET No.	TOTAL SHEETS
07	LA	5	29.4/31.6	926	1931

REGISTERED CIVIL ENGINEER 01-30-12 DATE

5-21-12
PLANS APPROVAL DATE

REGISTERED PROFESSIONAL ENGINEER J. I. Estrada No. C 51473 Exp. 6-30-2012 CIVIL STATE OF CALIFORNIA

The State of California or its officers or agents shall not be responsible for the accuracy or completeness of electronic copies of this plan sheet.

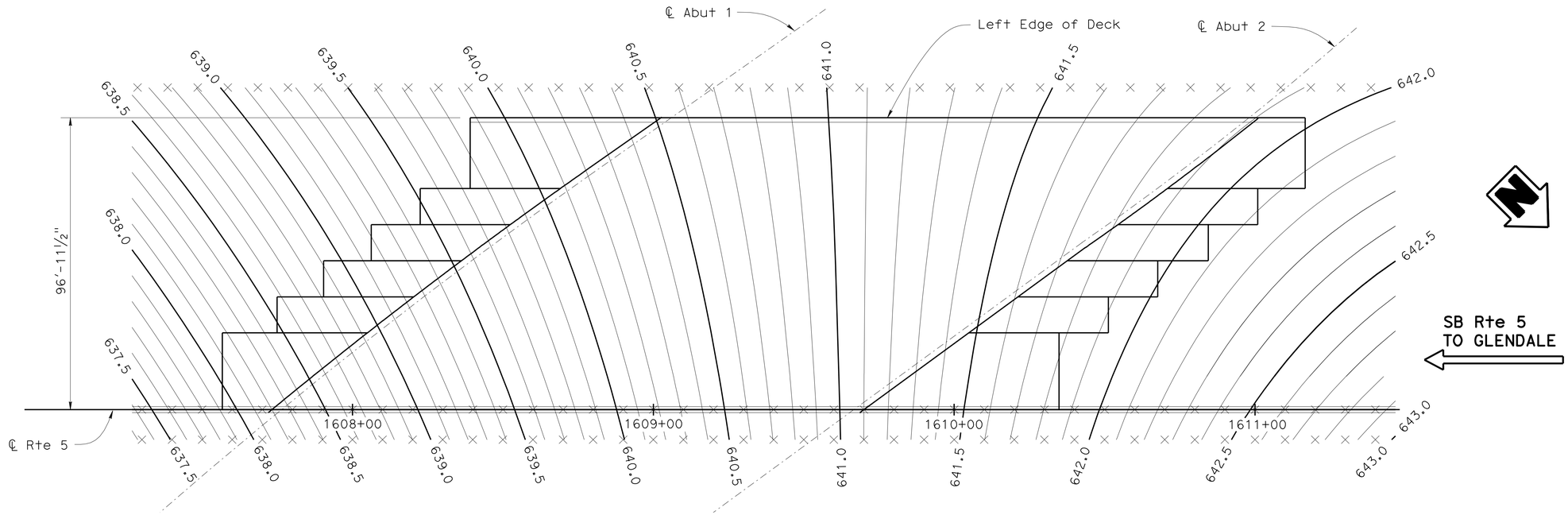

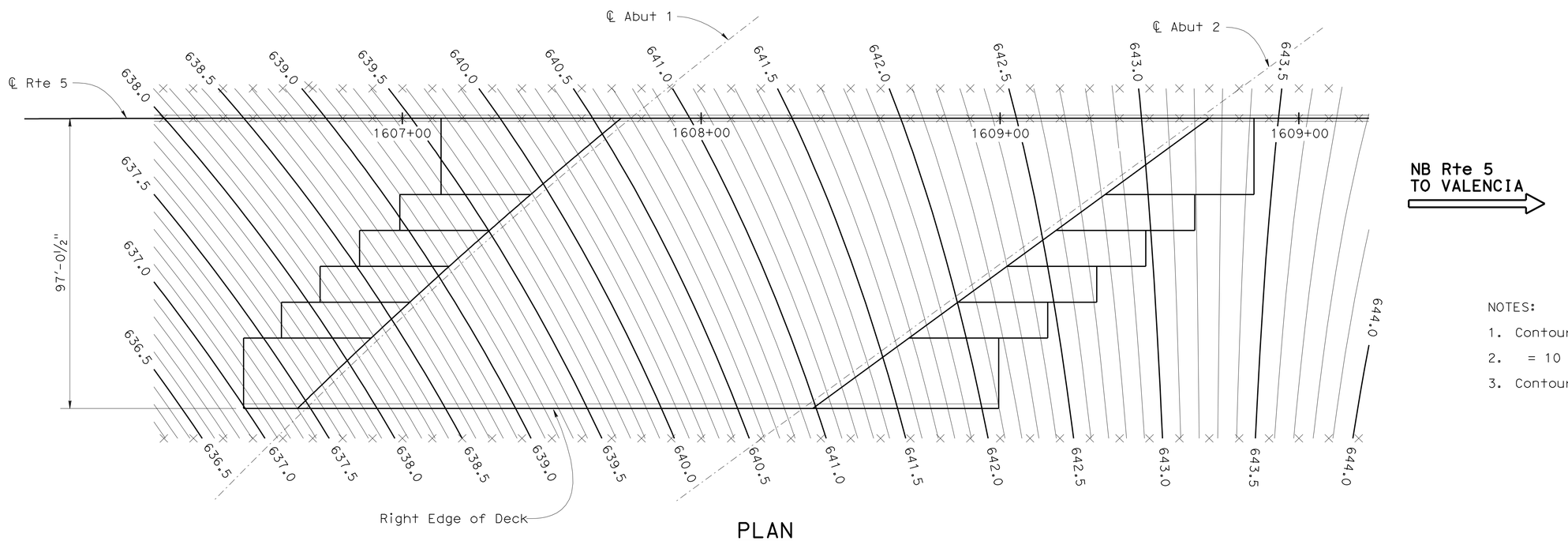

NOTES:

1. Contour interval = 0.10 feet
2. = 10 foot intervals along station line
3. Contours do not include camber

PLAN

1" = 20'

	BY	CHECKED
DESIGN	GERRARD HIGHT	CORY COWDEN
DETAILS	MICHAEL POPE	GERRARD HIGHT
QUANTITIES	CORY COWDEN	JOSH RUNNION

STATE OF CALIFORNIA
DEPARTMENT OF TRANSPORTATION

DIVISION OF ENGINEERING SERVICES
STRUCTURE DESIGN
DESIGN BRANCH 18

BRIDGE NO. 53-2920
POST MILE 30.47

EMPIRE AVE UC (REPLACE)
DECK CONTOURS

STRUCTURES DESIGN DETAIL SHEET (ENGLISH) (REV. 09-01-10)

ORIGINAL SCALE IN INCHES FOR REDUCED PLANS 0 1 2 3

UNIT: 3603
PROJECT NUMBER & PHASE: 0700021119-1
CONTRACT NO.: 07-1218W1

DISREGARD PRINTS BEARING EARLIER REVISION DATES

REVISION DATES 01/02/11 12/06/11 12/22/11

SHEET 3 OF 53

FILE => 53-2920rl-b-dc01.dgn

USERNAME => s119571 DATE PLOTTED => 22-MAY-2012 TIME PLOTTED => 08:24

DIST	COUNTY	ROUTE	POST MILES TOTAL PROJECT	SHEET No.	TOTAL SHEETS
07	LA	5	29.4/31.6	927	1931

REGISTERED CIVIL ENGINEER 01-30-12 DATE

5-21-12
PLANS APPROVAL DATE

REGISTERED PROFESSIONAL ENGINEER Jorge I. Estrada No. C51473 Exp. 06-30-12 CIVIL STATE OF CALIFORNIA

The State of California or its officers or agents shall not be responsible for the accuracy or completeness of electronic copies of this plan sheet.

LEGEND:

- Indicates existing structure
- Indicates new structure
- Indicates bridge removal

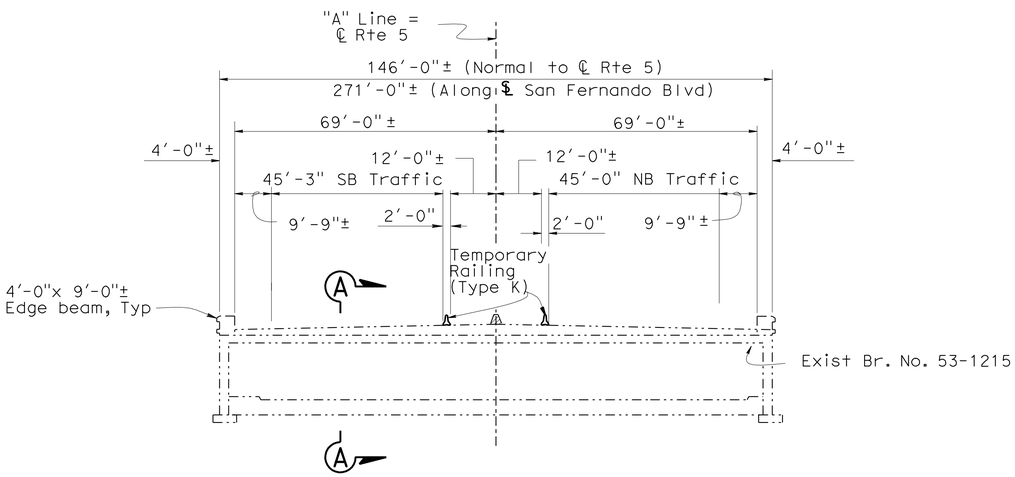

STAGE 1
1":20'

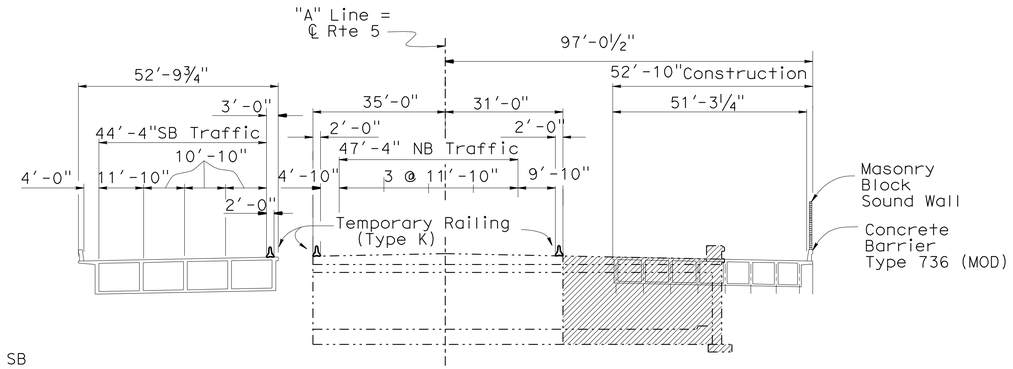

STAGE 3
1":20'

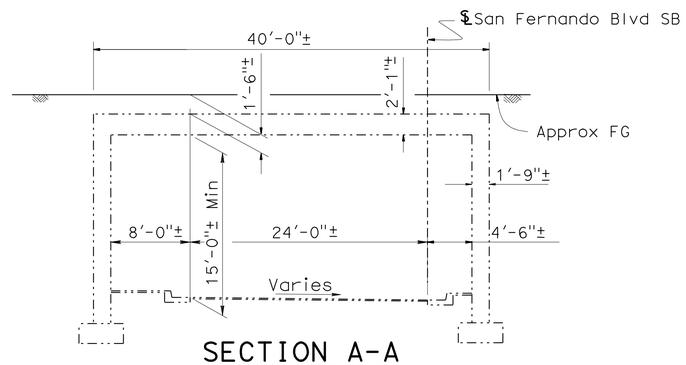

SECTION A-A
⅛"= 1'-0"

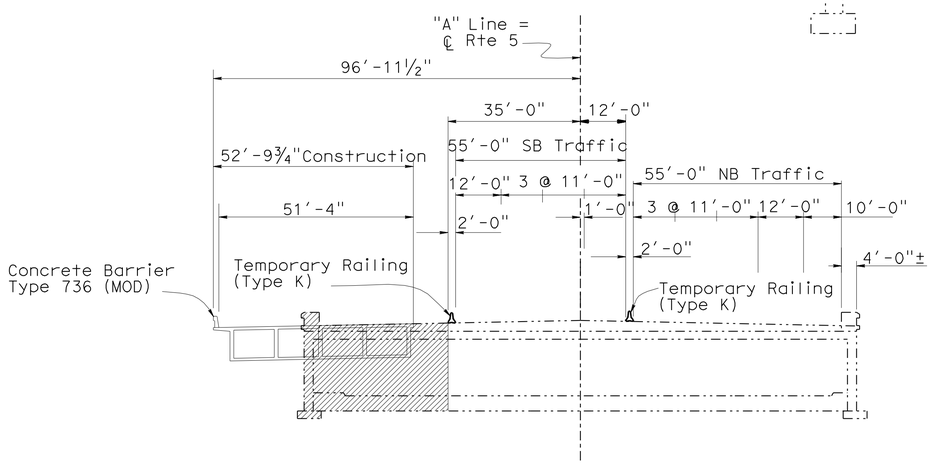

STAGE 2
1":20'

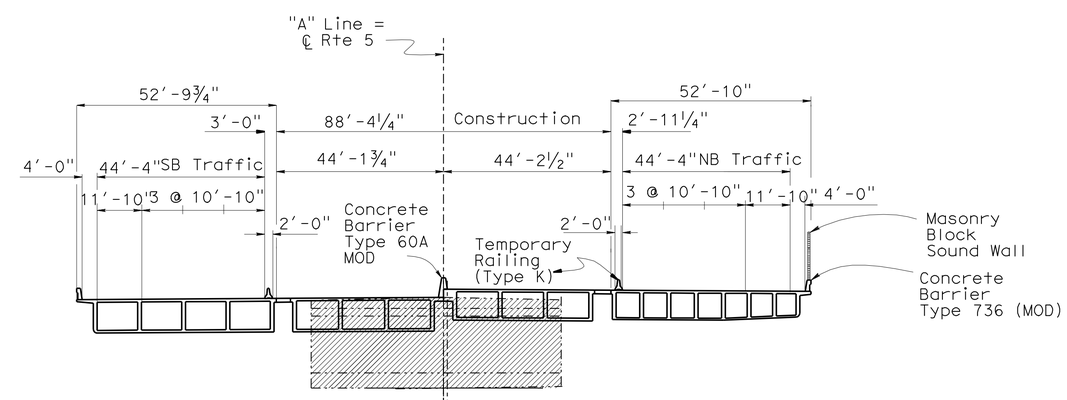

STAGE 4
1":20'

DESIGN	BY GERRARD HIGHT	CHECKED JORGE ESTRADA	
DETAILS	BY JINLI GUO	CHECKED GERRARD HIGHT	
QUANTITIES	BY M. POPE/M. SCHOTT	CHECKED CORY COWDEN	

STATE OF CALIFORNIA
DEPARTMENT OF TRANSPORTATION

DIVISION OF ENGINEERING SERVICES
STRUCTURE DESIGN
DESIGN BRANCH 18

BRIDGE NO. 53-2920
POST MILE 30.47

EMPIRE AVE UC (REPLACE)
CONSTRUCTION STAGING

STRUCTURES DESIGN DETAIL SHEET (ENGLISH) (REV. 09-01-10)

ORIGINAL SCALE IN INCHES FOR REDUCED PLANS 0 1 2 3

UNIT: 3603
PROJECT NUMBER & PHASE: 0700021119-1
CONTRACT NO.: 07-1218W1

DISREGARD PRINTS BEARING EARLIER REVISION DATES

REVISION DATES: 6-26-05 | 10-28-11 | 4-17-12

SHEET 4 OF 53

FILE => 53-2920r1-c-constaging01.dgn

USERNAME => s119571 DATE PLOTTED => 22-MAY-2012 TIME PLOTTED => 08:24

DIST	COUNTY	ROUTE	POST MILES TOTAL PROJECT	SHEET No.	TOTAL SHEETS
07	LA	5	29.4/31.6	928	1931

J.Estrada. 01/31/12
REGISTERED CIVIL ENGINEER DATE

5-21-12
PLANS APPROVAL DATE

REGISTERED PROFESSIONAL ENGINEER Jorge I. Estrada No. C51473 Exp. 06-30-12 CIVIL STATE OF CALIFORNIA

The State of California or its officers or agents shall not be responsible for the accuracy or completeness of electronic copies of this plan sheet.

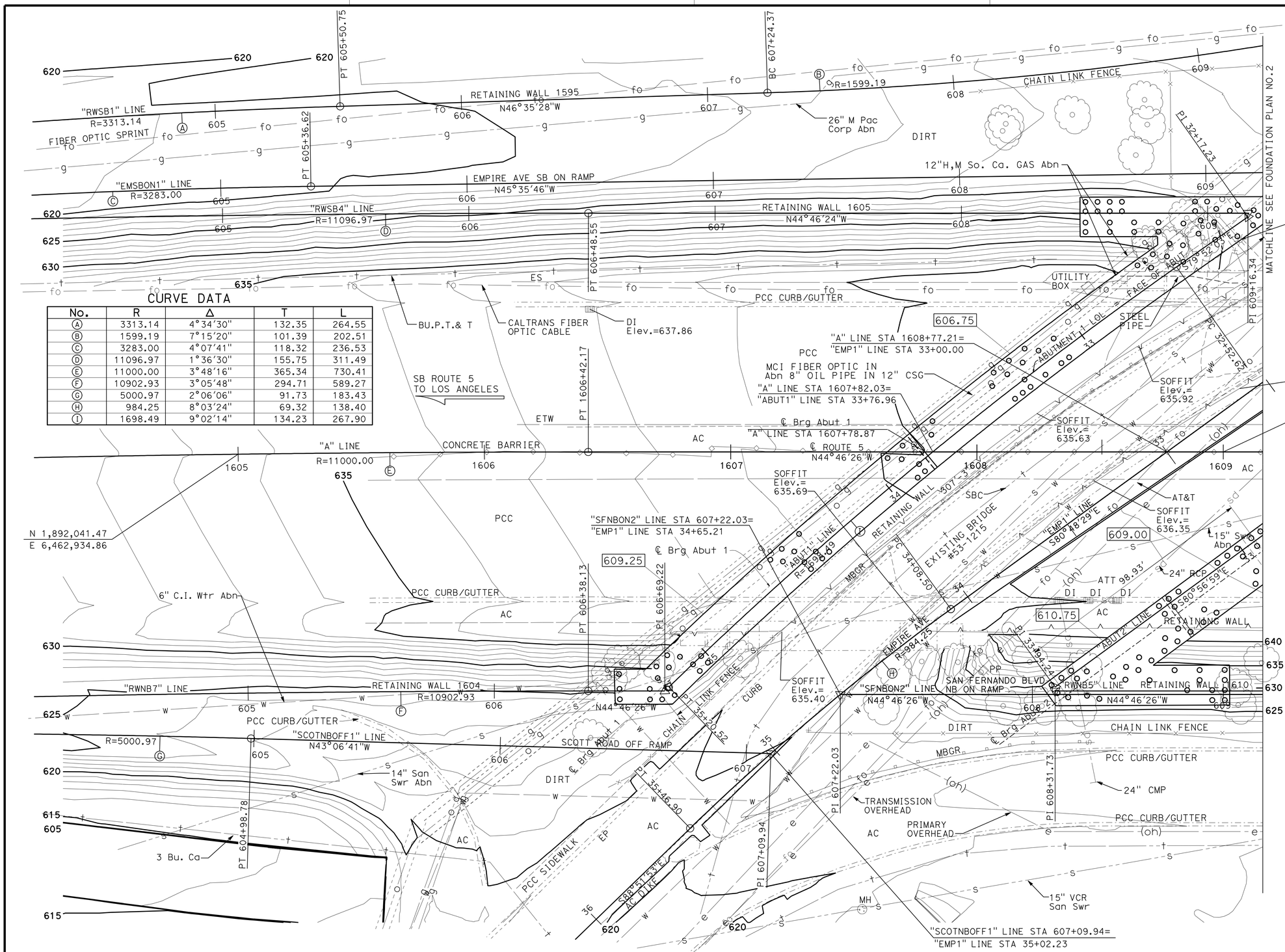

CURVE DATA

No.	R	Δ	T	L
A	3313.14	4°34'30"	132.35	264.55
B	1599.19	7°15'20"	101.39	202.51
C	3283.00	4°07'41"	118.32	236.53
D	11096.97	1°36'30"	155.75	311.49
E	11000.00	3°48'16"	365.34	730.41
F	10902.93	3°05'48"	294.71	589.27
G	5000.97	2°06'06"	91.73	183.43
H	984.25	8°03'24"	69.32	138.40
I	1698.49	9°02'14"	134.23	267.90

SURVEY CONTROL

PRHV 213 (NOT SHOWN ON PLAN)
Fnd SPIKE & TIN
227.64 FT Lt. ℄ ROUTE 5
Sta. 1608+76.03
N 1,892,147.44
E 6,462,507.77
Elev. = 623.38

PRHV 301 (SHOWN ON PLAN NO.2)
Fnd CHISEL "X"
78.51 FT Lt. ℄ ROUTE 5
Sta. 1609+27.67
N 1,892,289.13
E 6,462,,577.27
Elev. = 622.62

NOTE:
ALL UTILITY LINES ARE PER DISTRICT UTILITY MAP

PRELIMINARY INVESTIGATION SECTION

SCALE	VERT.DATUM NAVD88	PHOTOGRAMMETRY AS OF: X			
1"=20'	HORZ.DATUM NAD83 (1991.35)	SURVEYED	BY DISTRICT	CHECKED	BY D.IVY 10/2011
ALIGNMENT TIES Dist. Traverse Sheet		DRAFTED	BY T.ZOLNIKOV 10/2011	CHECKED	BY L.LEW 10/2011

DESIGN	BY GERRARD HIGHT	CHECKED CORY COWDEN
DETAILS	BY FARIDEH RASHEDI	CHECKED GERRARD HIGHT
QUANTITIES	BY M. POPE/M. SCHOTT	CHECKED M. POPE/M. SCHOTT

STATE OF CALIFORNIA
DEPARTMENT OF TRANSPORTATION

DIVISION OF ENGINEERING SERVICES
STRUCTURE DESIGN
DESIGN BRANCH 18

BRIDGE NO. 53-2920
POST MILE 30.47

EMPIRE AVE UC (REPLACE)
FOUNDATION PLAN NO.1

STRUCTURES FOUNDATION PLAN SHEET (ENGLISH) (REV. 09-01-10)

ORIGINAL SCALE IN INCHES FOR REDUCED PLANS 0 1 2 3

UNIT: 3603
PROJECT NUMBER & PHASE: 0700021119 1
CONTRACT NO.: 07-1218W1

DISREGARD PRINTS BEARING EARLIER REVISION DATES

REVISION DATES 10/31/11 04/17/12 04/17/12

SHEET 5 OF 53

FILE => 53-2920r1-e-fpl01.dgn

DIST	COUNTY	ROUTE	POST MILES TOTAL PROJECT	SHEET No.	TOTAL SHEETS
07	LA	5	29.4/31.6	929	1931

dEstrada. 01/31/12
REGISTERED CIVIL ENGINEER DATE

5-21-12
PLANS APPROVAL DATE

REGISTERED PROFESSIONAL ENGINEER Jorge I. Estrada No. C51473 Exp. 06-30-12 CIVIL STATE OF CALIFORNIA

The State of California or its officers or agents shall not be responsible for the accuracy or completeness of electronic copies of this plan sheet.

CURVE DATA

No.	R	Δ	T	L
J	983.17	23°35'11"	205.27	404.73
K	6561.70	12°58'21"	746.01	1485.64
L	6645.59	5°37'43"	326.69	652.85
M	1024.42	5°35'35"	48.67	97.27

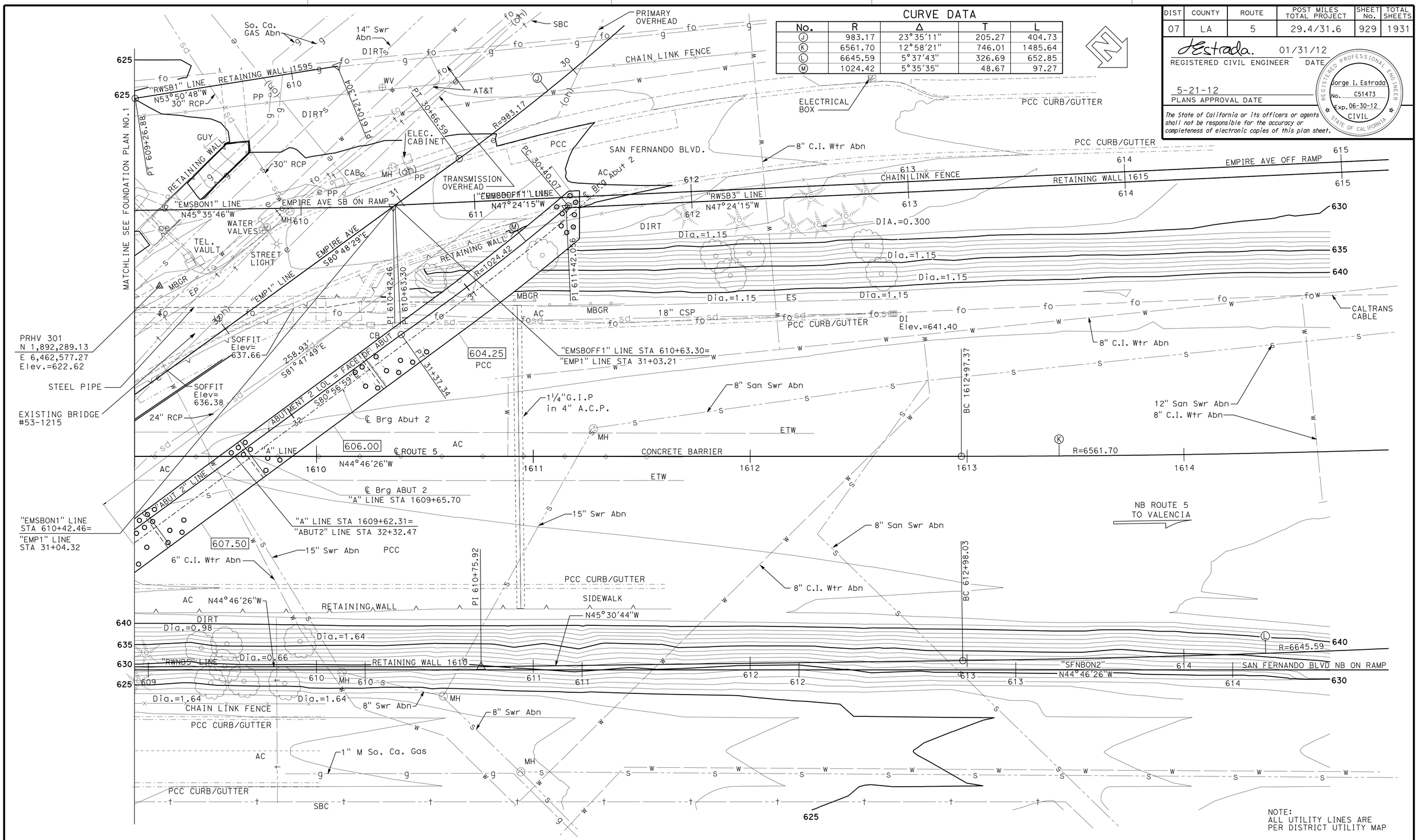

PRELIMINARY INVESTIGATION SECTION							
SCALE 1"=20'	VERT.DATUM NAVD88	PHOTOGRAMMETRY AS OF: X					
	HORZ.DATUM NAD83 (1991.35)	SURVEYED	BY DISTRICT	CHECKED	BY D.IVY	10/2011	
ALIGNMENT TIES Dist. Traverse Sheet		DRAFTED	BY T.ZOLNIKOV	10/2011	CHECKED BY L.LEW	10/2011	

STRUCTURES FOUNDATION PLAN SHEET (ENGLISH) (REV. 09-01-10)

DESIGN	BY GERREAD HIGHT	CHECKED CORY COWDEN
DETAILS	BY FARIDEH RASHEDI	CHECKED GERRARD HIGHT
QUANTITIES	BY M.POPE/M. SCHOTT	CHECKED M.POPE/M. SCHOTT

ORIGINAL SCALE IN INCHES FOR REDUCED PLANS 0 1 2 3

STATE OF CALIFORNIA
DEPARTMENT OF TRANSPORTATION

DIVISION OF ENGINEERING SERVICES
STRUCTURE DESIGN
DESIGN BRANCH 18

BRIDGE NO. 53-2920
POST MILE 30.47

EMPIRE AVE UC (REPLACE)
FOUNDATION PLAN NO.2

UNIT: 3603
PROJECT NUMBER & PHASE: 0700021119 1
CONTRACT NO.: 07-1218W1

DISREGARD PRINTS BEARING EARLIER REVISION DATES

REVISION DATES 10/31/11 04/17/12 04/17/12

SHEET 6 OF 53

FILE => 53-2920rl-e-fpl02.dgn

DIST	COUNTY	ROUTE	POST MILES TOTAL PROJECT	SHEET No.	TOTAL SHEETS
07	LA	5	29.4/31.6	930	1931

JEstrada. 01-30-12
REGISTERED CIVIL ENGINEER DATE

5-21-12
PLANS APPROVAL DATE

REGISTERED PROFESSIONAL ENGINEER Jorge I. Estrada No. C51473 Exp. 06-30-12 CIVIL STATE OF CALIFORNIA

The State of California or its officers or agents shall not be responsible for the accuracy or completeness of electronic copies of this plan sheet.

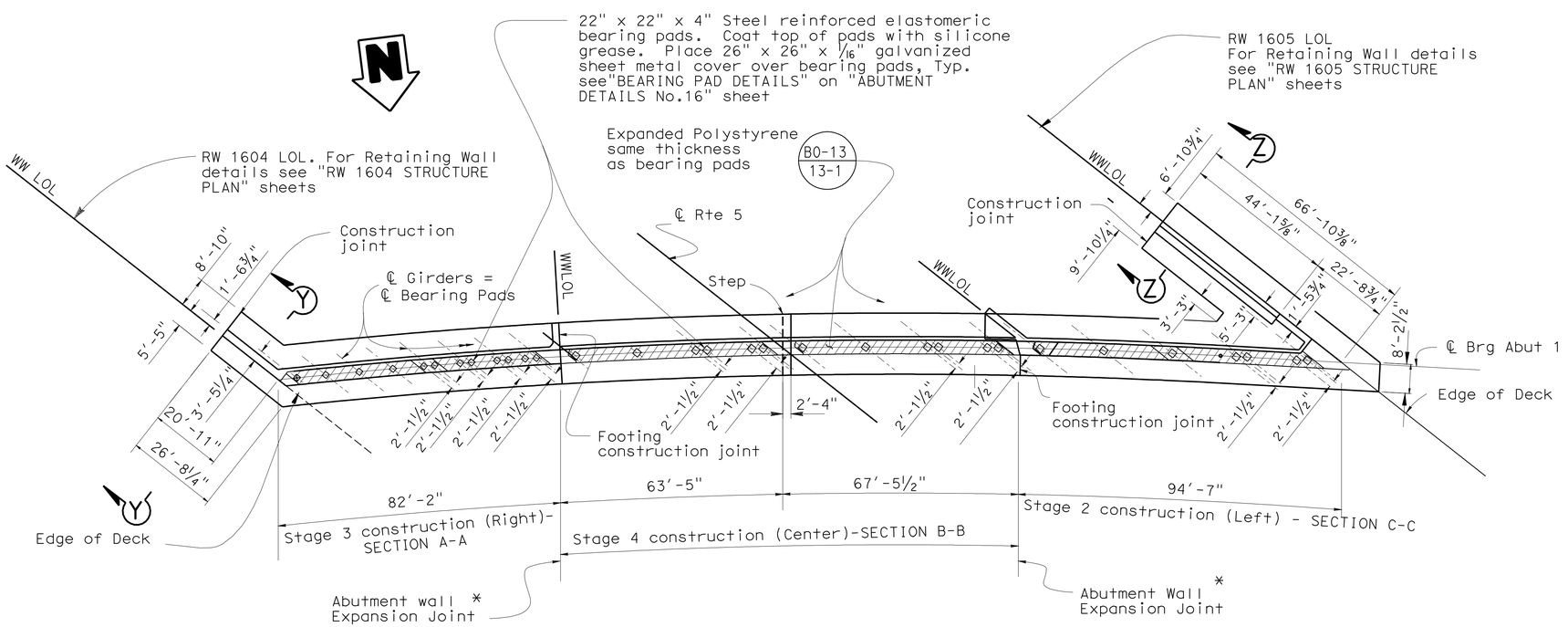

ABUTMENT 1 PLAN

1" = 20'

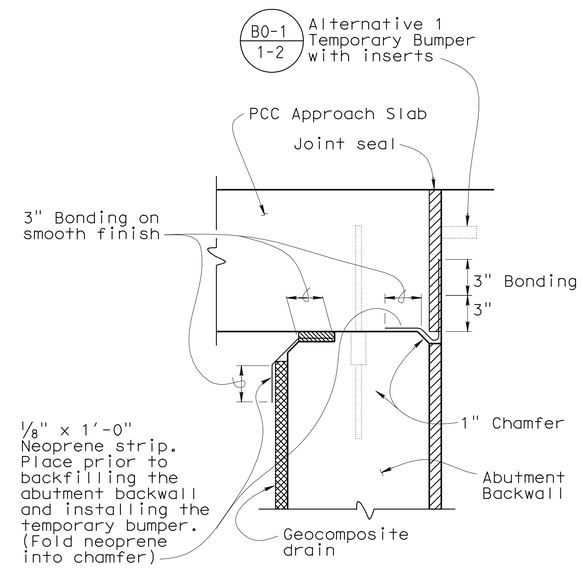

JOINT PROTECTION DETAIL

No Scale

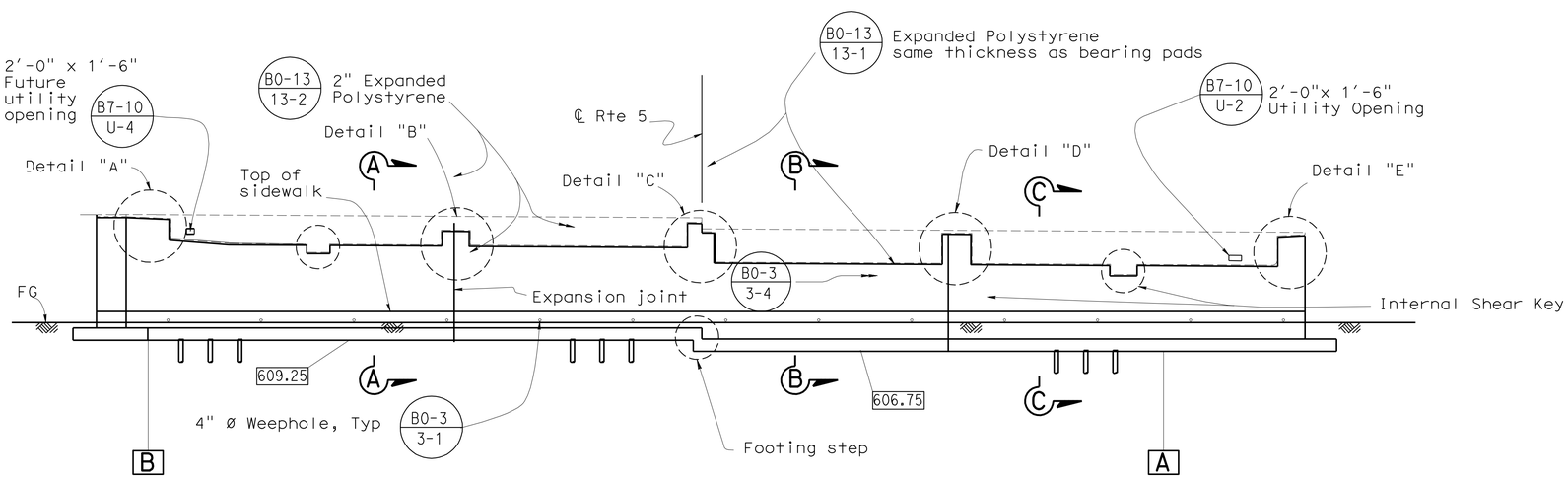

ABUTMENT 1 ELEVATION

1" = 20'

Notes:
1. For "DETAIL A" see "ABUTMENT DETAILS NO.7" sheet
2. For "DETAIL B" see "ABUTMENT DETAILS NO.8" sheet
3. For "DETAIL C" see "ABUTMENT DETAILS NO.9" sheet
4. For "DETAIL D" see "ABUTMENT DETAILS NO.10" sheet
5. For "DETAIL E" see "ABUTMENT DETAILS NO.11" sheet
6. For "SECTION Y-Y" and "SECTION Z-Z" see "ABUTMENT DETAILS NO.3" sheet
7. For footing step details see"ABUTMENT 2 LAYOUT" sheet
8. For "INTERNAL SHEAR KEY DETAILS " see "ABUTMENT DETAILS NO.16" sheet
9. For "SECTION A-A, B-B, AND C-C" see "ABUTMENT DETAILS No.1" sheet

LEGEND

XX Abutment footing locations,for details see pile "Pile Data Table" on "INDEX TO PLANS" Sheet

	BY	CHECKED
DESIGN	G. HIGHT	CORY COWDEN
DETAILS	M. JOHNSON	GERRAD HIGHT
QUANTITIES	MIKE POPE/M.SCHOTT	CORY COWDEN

STATE OF CALIFORNIA DEPARTMENT OF TRANSPORTATION

DIVISION OF ENGINEERING SERVICES STRUCTURE DESIGN DESIGN BRANCH 18

BRIDGE NO. 53-2920
POST MILE 30.47

EMPIRE AVE UC (REPLACE)
ABUTMENT 1 LAYOUT

STRUCTURES DESIGN DETAIL SHEET (ENGLISH) (REV. 09-01-10)

ORIGINAL SCALE IN INCHES FOR REDUCED PLANS 0 1 2 3

UNIT: 3603
PROJECT NUMBER & PHASE: 0700021119-1
CONTRACT NO.: 07-1218W1

DISREGARD PRINTS BEARING EARLIER REVISION DATES

REVISION DATES: 2-1-08 5-18-09 11-14-11

SHEET 7 OF 53

FILE => 53-2920r1-f-a01_lo01.dgn

USERNAME => s128843 DATE PLOTTED => 11-JUL-2012 TIME PLOTTED => 10:05

DIST	COUNTY	ROUTE	POST MILES TOTAL PROJECT	SHEET No.	TOTAL SHEETS
07	LA	5	29.4/31.6	931	1931

dEstrada. 01-30-12
REGISTERED CIVIL ENGINEER DATE

5-21-12
PLANS APPROVAL DATE

REGISTERED PROFESSIONAL ENGINEER Jorge I. Estrada No. C51473 Exp. 06-30-12 CIVIL STATE OF CALIFORNIA

The State of California or its officers or agents shall not be responsible for the accuracy or completeness of electronic copies of this plan sheet.

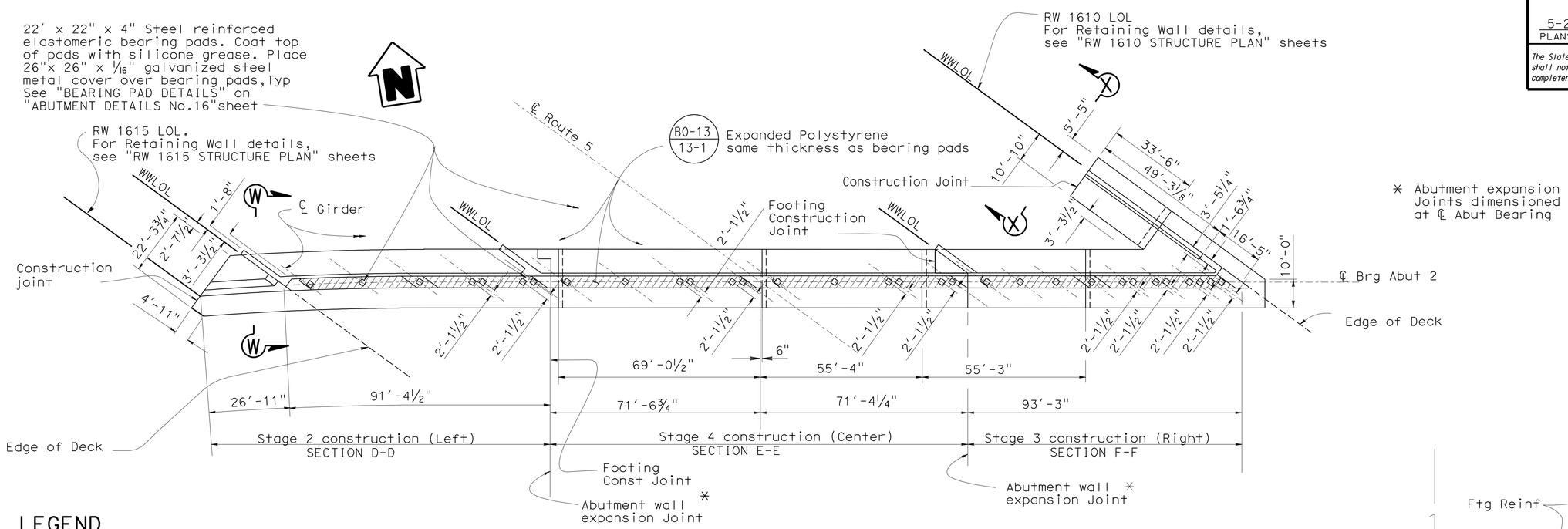

* Abutment expansion Joints dimensioned at ℄ Abut Bearing

ABUTMENT 2 PLAN

1" = 20'

LEGEND

XX Abutment footing locations, for details see "Pile Data Table" on"INDEX TO PLAN" sheet

XXXX Bottom of footing elevation

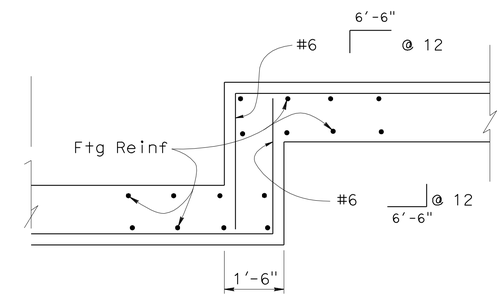

FOOTING STEP DETAIL

No Scale

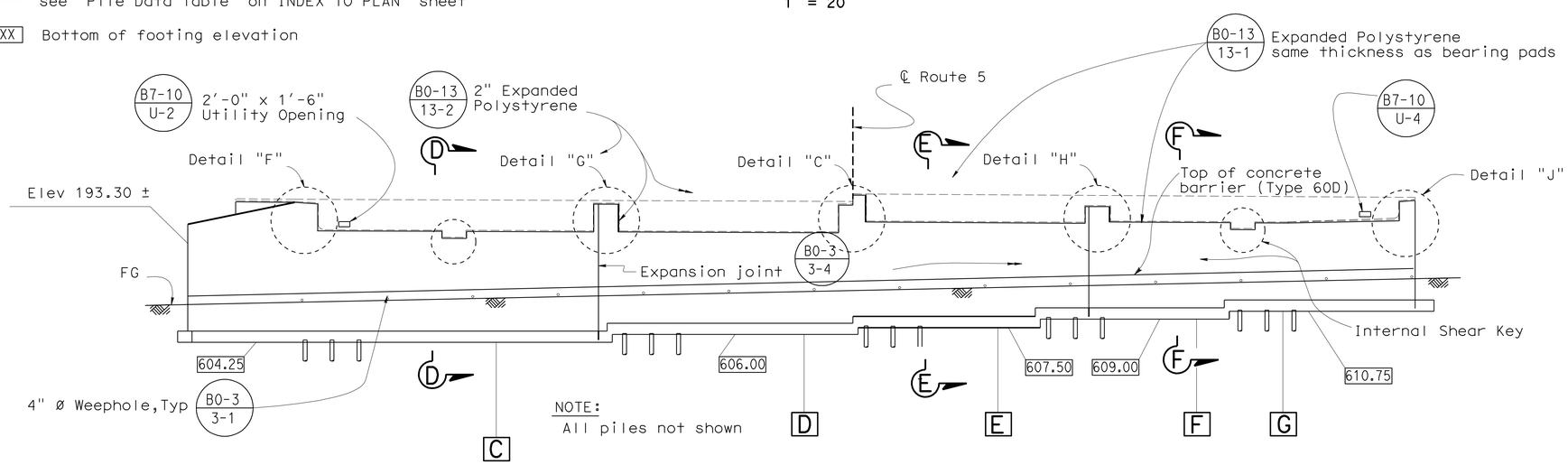

NOTE:
All piles not shown

ABUTMENT 2 ELEVATION

1" = 20'

Notes:
1. For "DETAIL C" see "ABUTMENT DETAILS NO.9" sheet
2. For "DETAIL F" see "ABUTMENT DETAILS NO.12" sheet
3. For "DETAIL G" see "ABUTMENT DETAILS NO.13" sheet
4. For "DETAIL H" see "ABUTMENT DETAILS NO.14" sheet
5. For "DETAIL J" see "ABUTMENT DETAILS NO.15" sheet
6. For "SECTION W-W" and "SECTION X-X" see "ABUTMENT DETAILS NO.4" sheet
7. For "INTERNAL SHEAR KEY DETAILS " see "ABUTMENT DETAILS NO.16" sheet
8. For "SECTION D-D, E-E AND F-F " see "ABUTMENT DETAILS No. 2" sheet

	BY	CHECKED
DESIGN	GERRARD HIGHT	CORY COWDEN
DETAILS	M. JOHNSON	GERRARD HIGHT
QUANTITIES	M. POPE/M. SCHOTT	CORY COWDEN

STATE OF CALIFORNIA
DEPARTMENT OF TRANSPORTATION

DIVISION OF ENGINEERING SERVICES
STRUCTURE DESIGN
DESIGN BRANCH 18

BRIDGE NO. 53-2920
POST MILE 30.47

EMPIRE AVE UC (REPLACE)
ABUTMENT 2 LAYOUT

STRUCTURES DESIGN DETAIL SHEET (ENGLISH) (REV. 09-01-10)

ORIGINAL SCALE IN INCHES FOR REDUCED PLANS 0 1 2 3

UNIT: 3603
PROJECT NUMBER & PHASE: 0700021119-1
CONTRACT NO.: 07-1218W1

DISREGARD PRINTS BEARING EARLIER REVISION DATES

REVISION DATES 2-8-08 5-16-09 11-14-11

SHEET 8 OF 53

FILE => 53-2920ri-f-a01_io02.dgn

USERNAME => s119571 DATE PLOTTED => 22-MAY-2012 TIME PLOTTED => 08:25

DIST	COUNTY	ROUTE	POST MILES TOTAL PROJECT	SHEET No.	TOTAL SHEETS
07	LA	5	29.4/31.6	932	1931

J.Estrada. 01-30-12
REGISTERED CIVIL ENGINEER DATE

5-21-12
PLANS APPROVAL DATE

REGISTERED PROFESSIONAL ENGINEER
Jorge I. Estrada
No. C51473
Exp. 06-30-12
CIVIL
STATE OF CALIFORNIA

The State of California or its officers or agents shall not be responsible for the accuracy or completeness of electronic copies of this plan sheet.

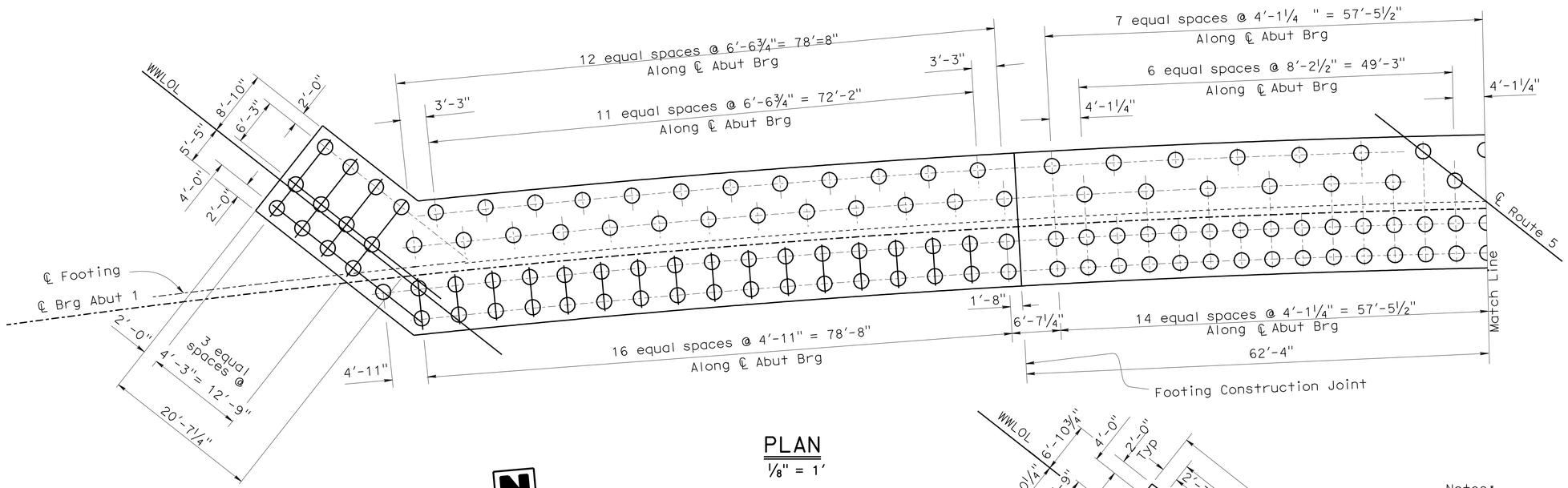

PLAN
1/8" = 1'

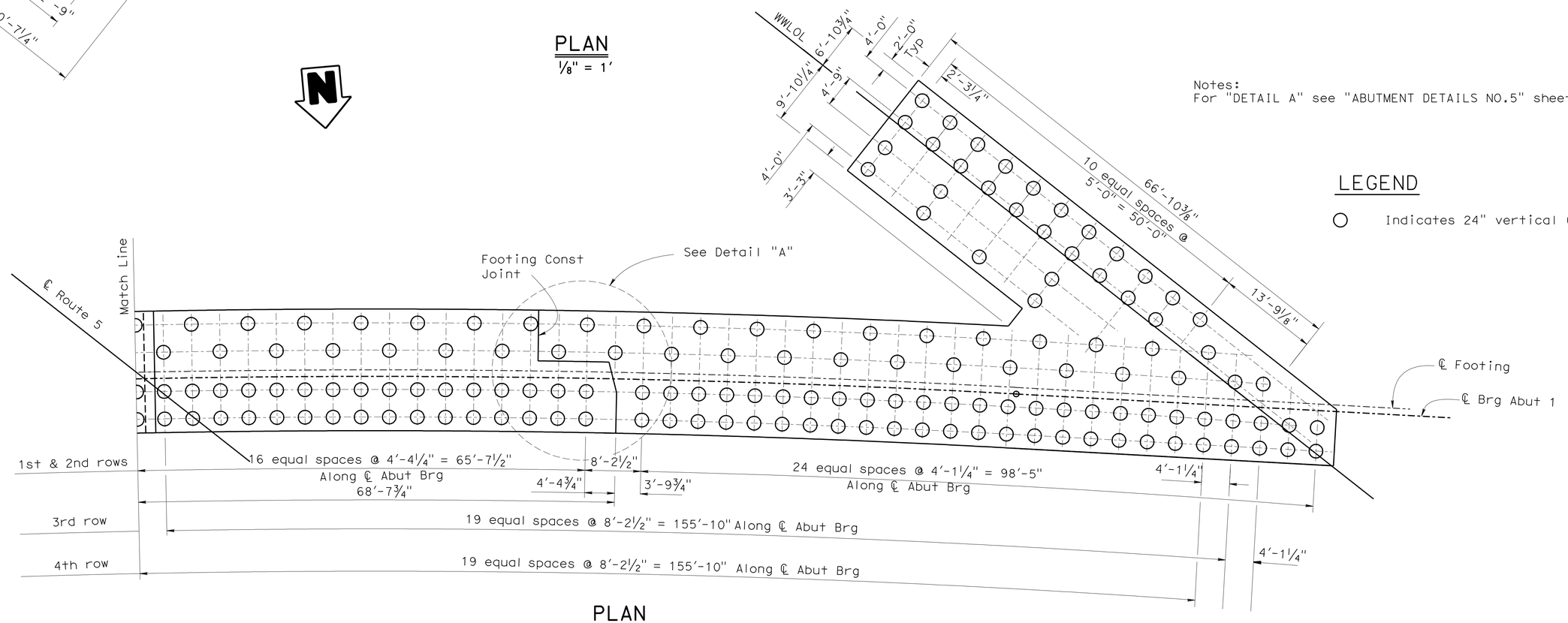

PLAN
1/8" = 1'

Notes:
For "DETAIL A" see "ABUTMENT DETAILS NO.5" sheet

LEGEND

○ Indicates 24" vertical CIDH pile

	BY	CHECKED
DESIGN	GERRARD HIGHT	CORY COWDEN
DETAILS	J. GUO	GERRARD HIGHT
QUANTITIES	CORY COWDEN	M. POPE/M. SCHOTT

STATE OF CALIFORNIA
DEPARTMENT OF TRANSPORTATION

DIVISION OF ENGINEERING SERVICES
STRUCTURE DESIGN
DESIGN BRANCH 18

BRIDGE NO. 53-2920
POST MILE 30.47

EMPIRE AVE UC (REPLACE)
ABUTMENT 1 PILE LAYOUT

STRUCTURES DESIGN DETAIL SHEET (ENGLISH) (REV. 09-01-10)

ORIGINAL SCALE IN INCHES FOR REDUCED PLANS 0 1 2 3

UNIT: 3603
PROJECT NUMBER & PHASE: 0700021119-1 CONTRACT NO.: 07-1218W1

DISREGARD PRINTS BEARING EARLIER REVISION DATES

REVISION DATES: 01-26-08 7-08-08 12-26-08

SHEET 9 OF 53

FILE => 53-2920r1-f-a01_l003.dgn

USERNAME => s119571 DATE PLOTTED => 22-MAY-2012 TIME PLOTTED => 08:25

DIST	COUNTY	ROUTE	POST MILES TOTAL PROJECT	SHEET No.	TOTAL SHEETS
07	LA	5	29.4/31.6	933	1931

JEstrada. 01-30-12
REGISTERED CIVIL ENGINEER DATE

5-21-12
PLANS APPROVAL DATE

REGISTERED PROFESSIONAL ENGINEER Jorge I. Estrada No. C51473 Exp. 06-30-12 CIVIL STATE OF CALIFORNIA

The State of California or its officers or agents shall not be responsible for the accuracy or completeness of electronic copies of this plan sheet.

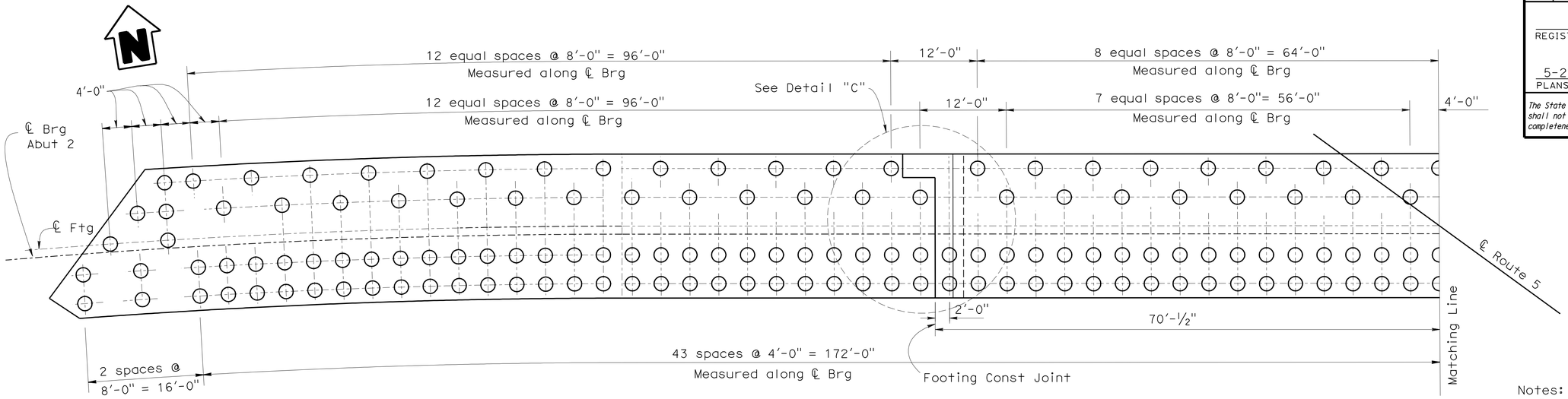

PLAN
1/8" = 1'

Notes:
1. For "DETAIL B" and "DETAIL C" see "ABUTMENT DETAILS NO.5"

LEGEND

○ Indicates 24" vertical CIDH pile

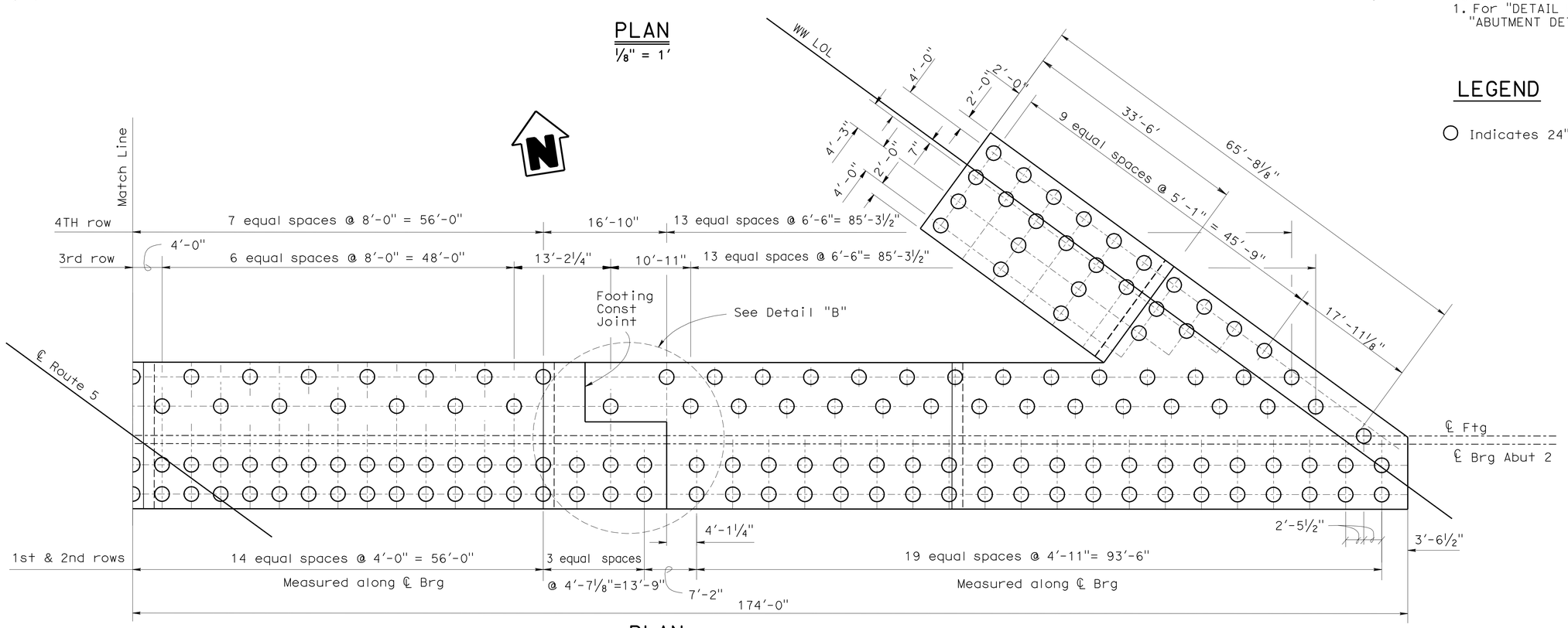

PLAN
1/8" = 1'

	BY	CHECKED
DESIGN	GERRARD HIGHT	CORY COWDEN
DETAILS	J. GUO	GERRARD HIGHT
QUANTITIES	CORY COWDEN	M. POPE/M. SCHOTT

STATE OF CALIFORNIA
DEPARTMENT OF TRANSPORTATION

DIVISION OF ENGINEERING SERVICES
STRUCTURE DESIGN
DESIGN BRANCH 18

BRIDGE NO. 53-2920
POST MILE 30.47

EMPIRE AVE UC (REPLACE)
ABUTMENT 2 PILE LAYOUT

STRUCTURES DESIGN DETAIL SHEET (ENGLISH) (REV. 09-01-10)

ORIGINAL SCALE IN INCHES FOR REDUCED PLANS 0 1 2 3

UNIT: 3603
PROJECT NUMBER & PHASE: 0700021119-1
CONTRACT NO.: 07-1218W1

DISREGARD PRINTS BEARING EARLIER REVISION DATES

REVISION DATES: 6-16-09 6-15-08 12-26-08

SHEET 10 OF 53

FILE => 53-2920r1-f-a01_i004.dgn

USERNAME => s119571 DATE PLOTTED => 22-MAY-2012 TIME PLOTTED => 08:25

DIST	COUNTY	ROUTE	POST MILES TOTAL PROJECT	SHEET No.	TOTAL SHEETS
07	LA	5	29.4/31.6	934	1931

REGISTERED CIVIL ENGINEER 01-30-12 DATE

5-21-12
PLANS APPROVAL DATE

REGISTERED PROFESSIONAL ENGINEER Jorge I. Estrada No. C51473 Exp. 06-30-12 CIVIL STATE OF CALIFORNIA

The State of California or its officers or agents shall not be responsible for the accuracy or completeness of electronic copies of this plan sheet.

NOTE
For origin of "SECTION A-A, B-B, C-C" see "ABUTMENT 1 LAYOUT" sheet

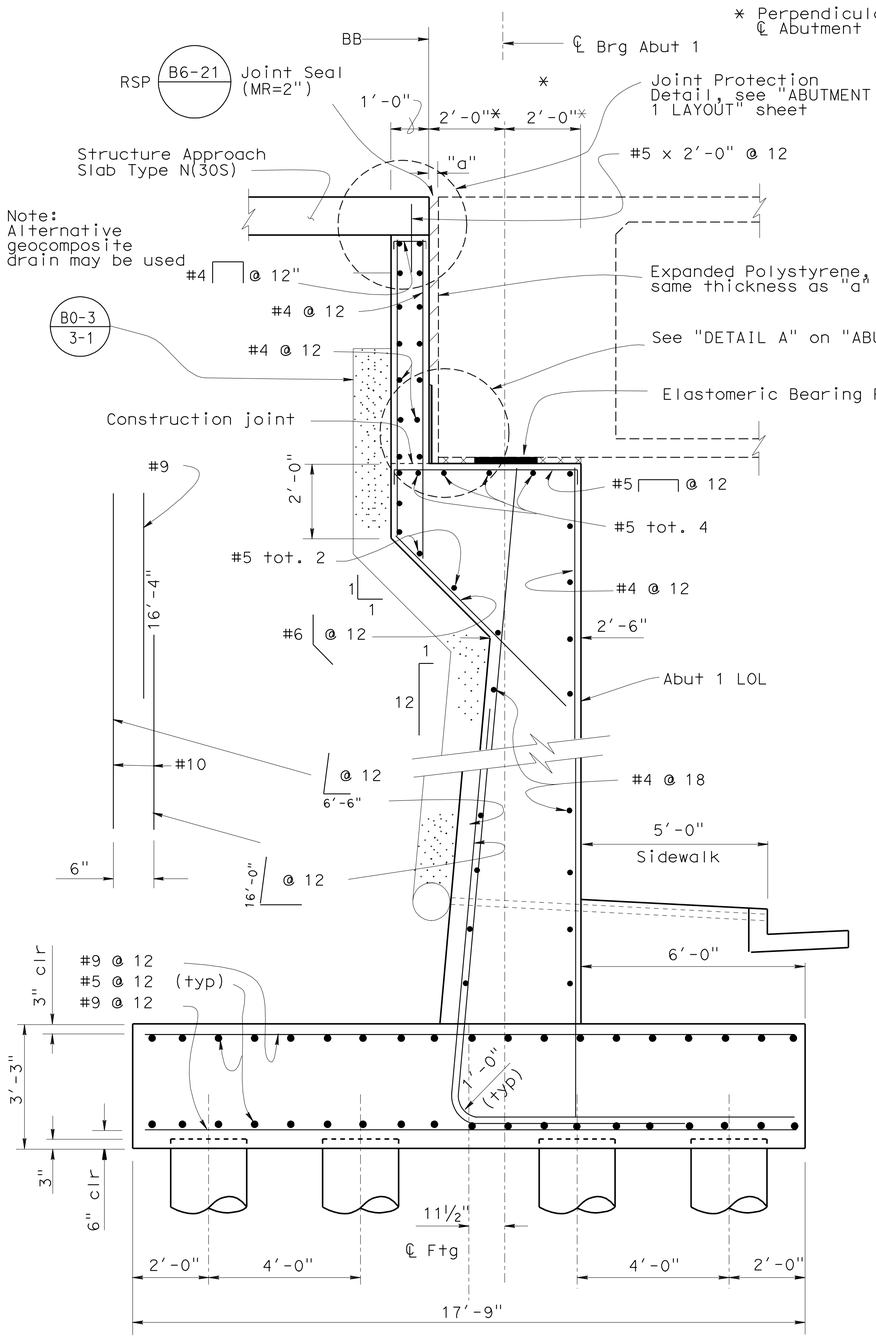

SECTION A-A RIGHT (STAGE 3)
½" = 1'

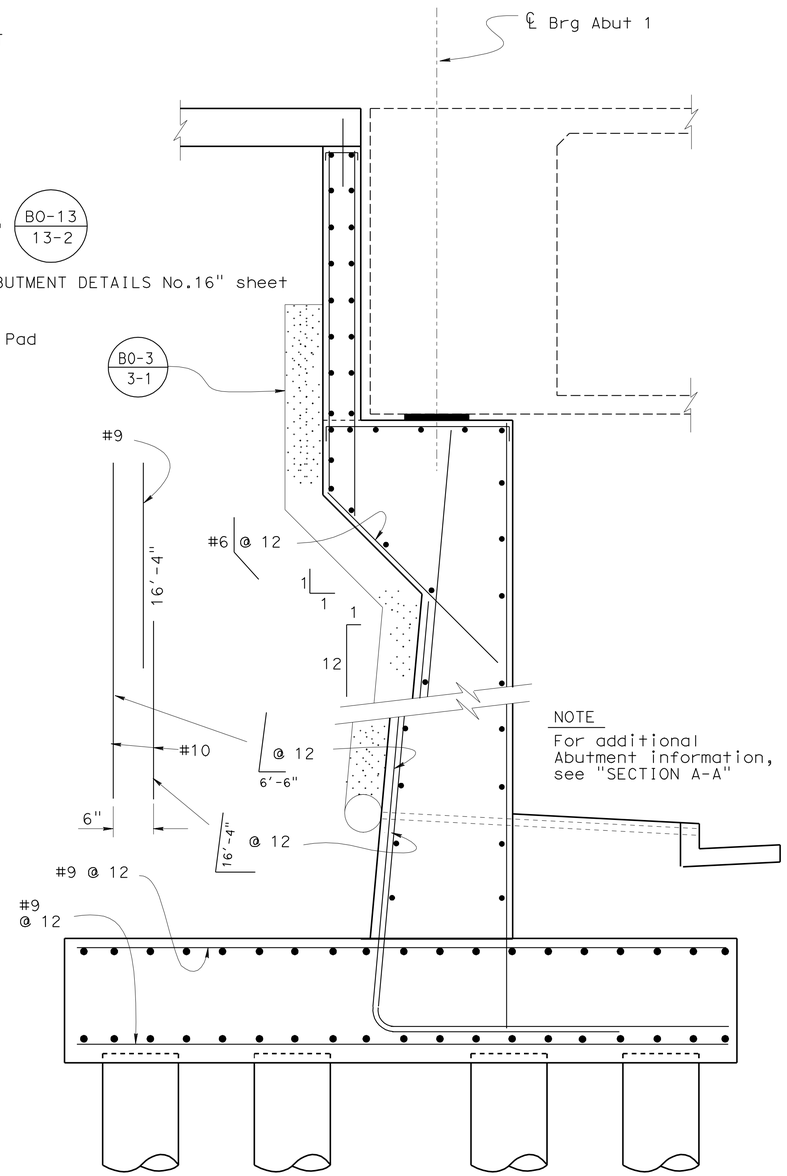

NOTE
For additional Abutment information, see "SECTION A-A"

SECTION B-B CENTER (STAGE4)
½" = 1'

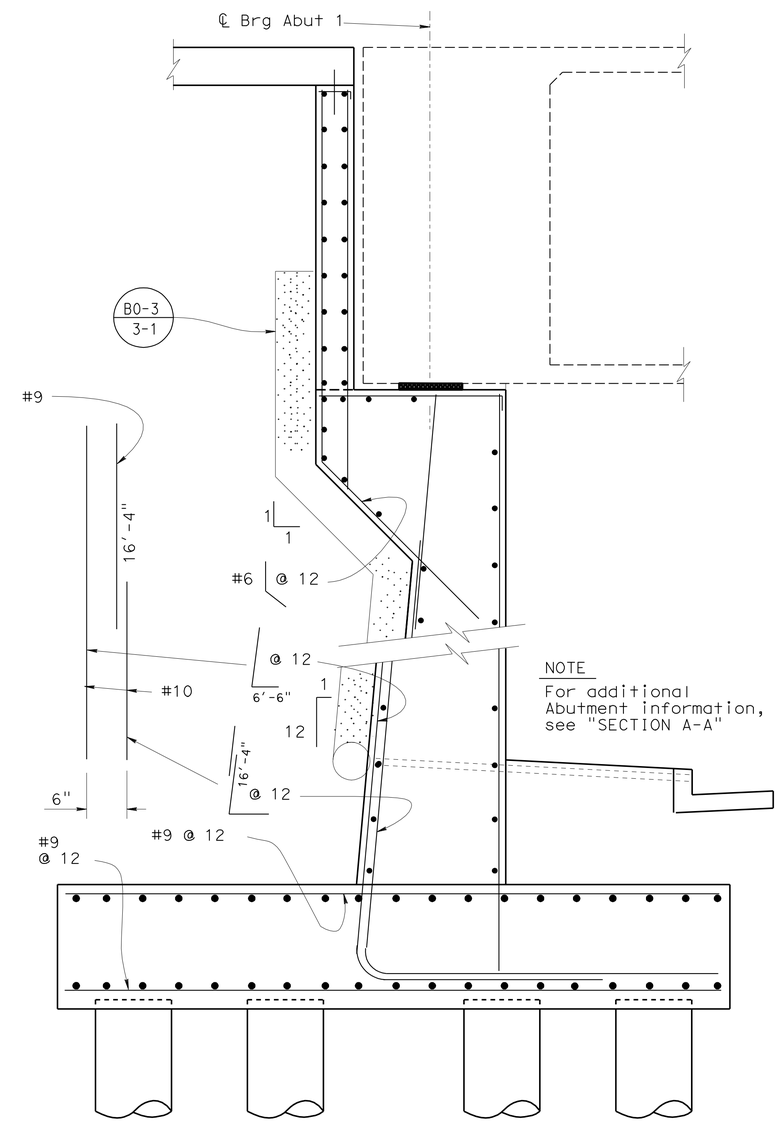

NOTE
For additional Abutment information, see "SECTION A-A"

SECTION C-C LEFT (STAGE 2)
½" = 1'

DESIGN	BY GERRARD HIGHT	CHECKED CORY COWDEN	
DETAILS	BY M. JOHNSON	CHECKED GERRARD HIGHT	
QUANTITIES	BY M. POPE/M. SCHOTT	CHECKED CORY COWDEN	

STATE OF CALIFORNIA
DEPARTMENT OF TRANSPORTATION

DIVISION OF ENGINEERING SERVICES
STRUCTURE DESIGN
DESIGN BRANCH 18

BRIDGE NO. 53-2920
POST MILE 30.47

EMPIRE AVE UC (REPLACE)
ABUTMENT DETAILS NO. 1

STRUCTURES DESIGN DETAIL SHEET (ENGLISH) (REV. 09-01-10)

ORIGINAL SCALE IN INCHES FOR REDUCED PLANS 0 1 2 3

UNIT: 3603
PROJECT NUMBER & PHASE: 0700021119-1
CONTRACT NO.: 07-1218W1

DISREGARD PRINTS BEARING EARLIER REVISION DATES

REVISION DATES: 9-13-07 4-17-12 4-04-12

SHEET 11 OF 53

FILE => 53-2920r1-f-a01dt01.dgn

USERNAME => s113571 DATE PLOTTED => 22-MAY-2012 TIME PLOTTED => 08:25

DIST	COUNTY	ROUTE	POST MILES TOTAL PROJECT	SHEET No.	TOTAL SHEETS
07	LA	5	29.4/31.6	935	1931

REGISTERED CIVIL ENGINEER 01-30-12 DATE

5-21-12
PLANS APPROVAL DATE

REGISTERED PROFESSIONAL ENGINEER Jorge I. Estrada No. C51473 Exp. 06-30-12 CIVIL STATE OF CALIFORNIA

The State of California or its officers or agents shall not be responsible for the accuracy or completeness of electronic copies of this plan sheet.

Note:
For origin of "SECTION D-D, E-E and F-F" see "ABUTMENT 2 LAYOUT" sheet

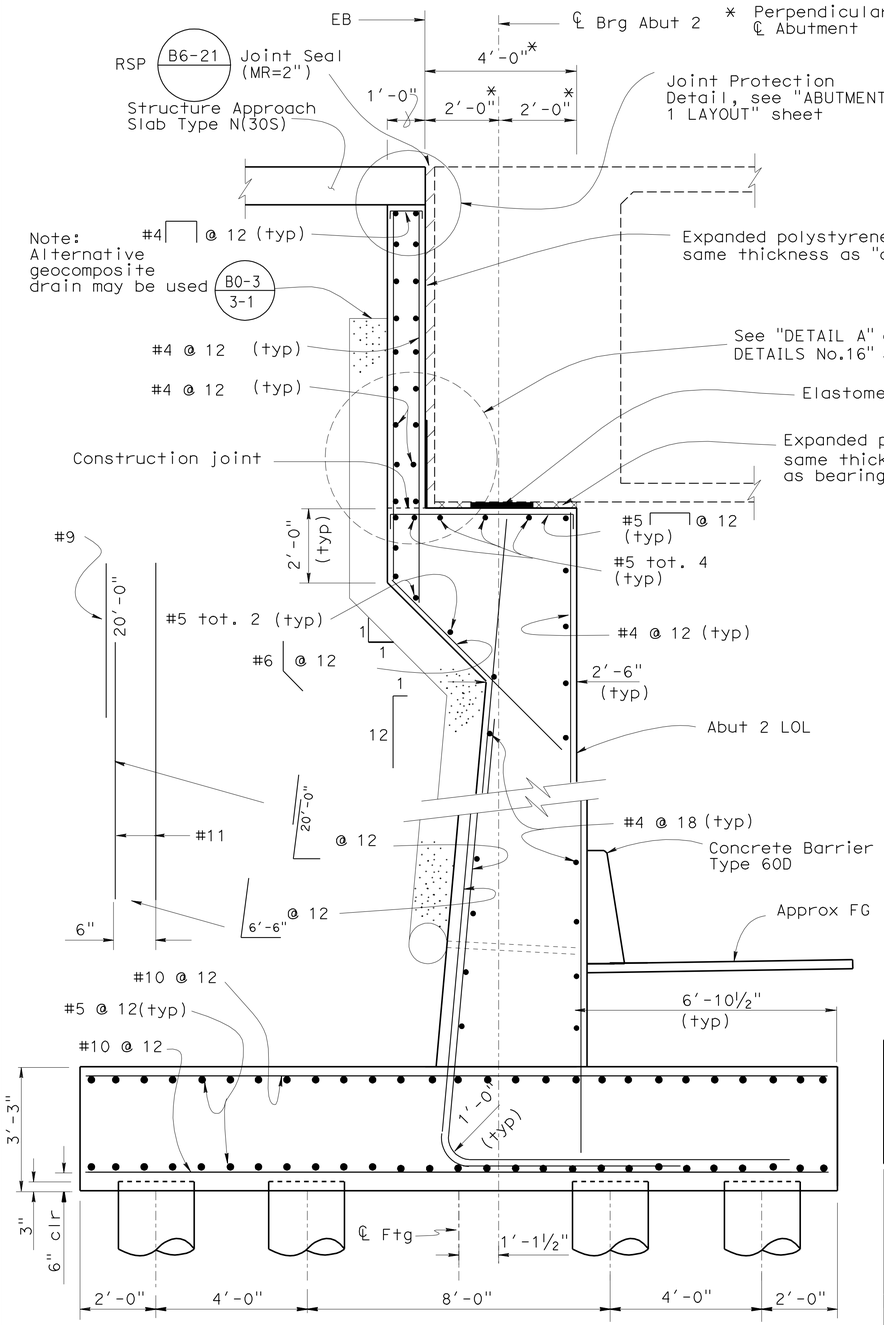

SECTION D-D LEFT (STAGE 2)

½" = 1'

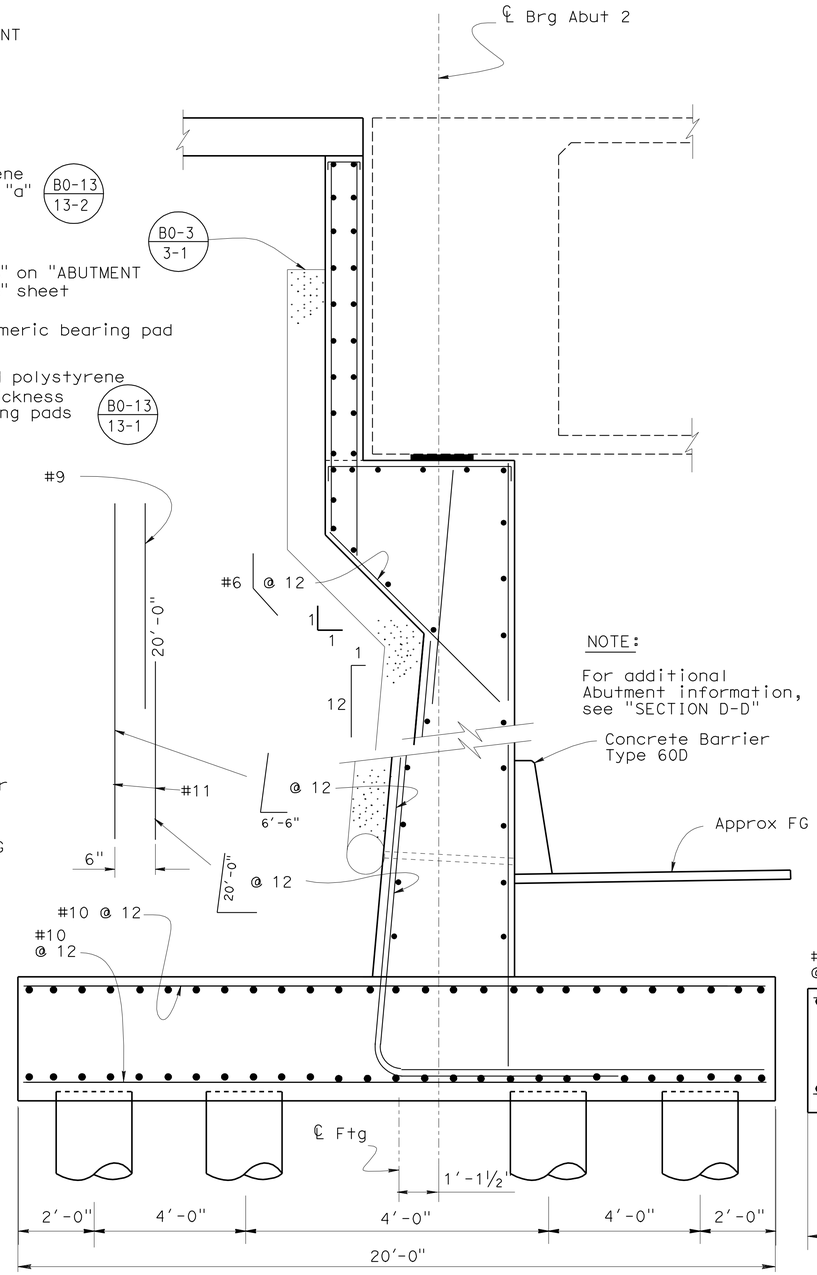

NOTE:

For additional Abutment information, see "SECTION D-D"

Concrete Barrier Type 60D

SECTION E-E CENTER (STAGE 4)

½" = 1'

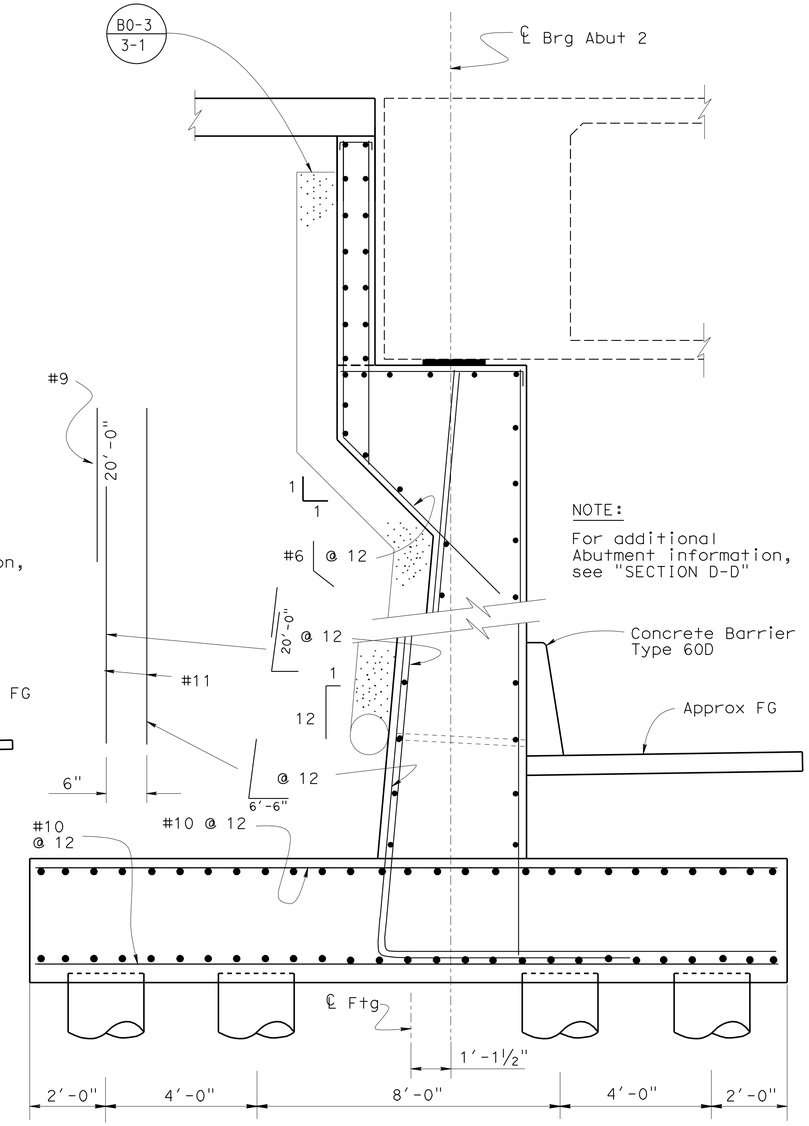

NOTE:

For additional Abutment information, see "SECTION D-D"

Concrete Barrier Type 60D

SECTION F-F RIGHT (STAGE 3)

½" = 1'

	BY	CHECKED
DESIGN	GERRARD HIGHT	CORY COWDEN
DETAILS	M. JOHNSON/J. GUO	GERRARD HIGHT
QUANTITIES	M. POPE/M. SCHOTT	CORY COWDEN

STATE OF CALIFORNIA
DEPARTMENT OF TRANSPORTATION

DIVISION OF ENGINEERING SERVICES
STRUCTURE DESIGN
DESIGN BRANCH 18

BRIDGE NO. 53-2920
POST MILE 30.47

EMPIRE AVE UC (REPLACE)
ABUTMENT DETAILS NO. 2

STRUCTURES DESIGN DETAIL SHEET (ENGLISH) (REV. 09-01-10)

ORIGINAL SCALE IN INCHES FOR REDUCED PLANS 0 1 2 3

UNIT: 3603
PROJECT NUMBER & PHASE: 0700021119-1
CONTRACT NO.: 07-1218W1

DISREGARD PRINTS BEARING EARLIER REVISION DATES

REVISION DATES 9-24-07 1-25-08 4-17-12

SHEET 12 OF 53

FILE => 53-2920ri-f-a01dt02.dgn

USERNAME => s111926 DATE PLOTTED => 22-MAY-2012 TIME PLOTTED => 07:43

DIST	COUNTY	ROUTE	POST MILES TOTAL PROJECT	SHEET No.	TOTAL SHEETS
07	LA	5	29.4/31.6	936	1931

REGISTERED CIVIL ENGINEER 01-30-12 DATE

5-21-12
PLANS APPROVAL DATE

REGISTERED PROFESSIONAL ENGINEER Jorge I. Estrada No. C51473 Exp. 06-30-12 CIVIL STATE OF CALIFORNIA

The State of California or its officers or agents shall not be responsible for the accuracy or completeness of electronic copies of this plan sheet.

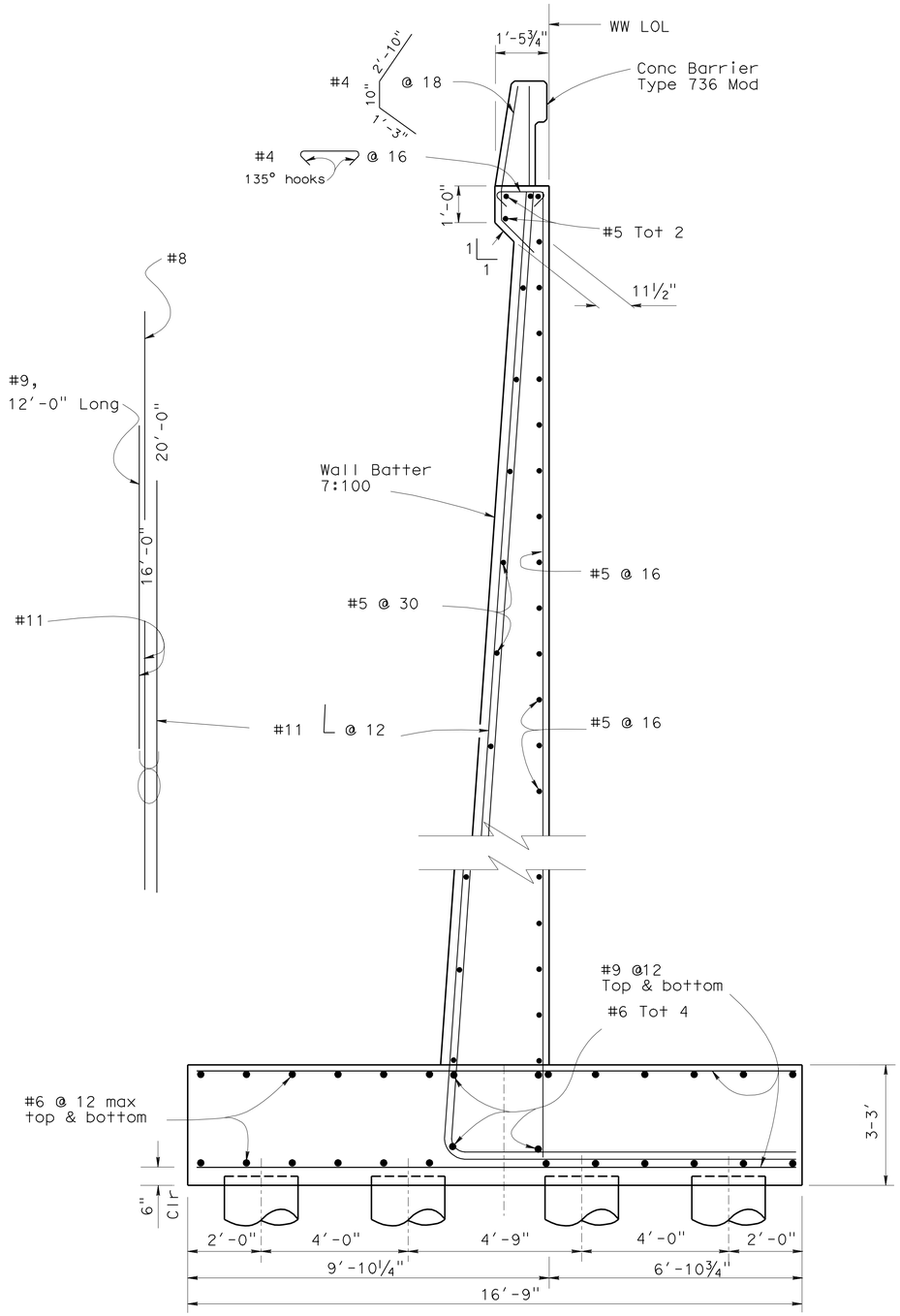

SECTION Z-Z

½" = 1'

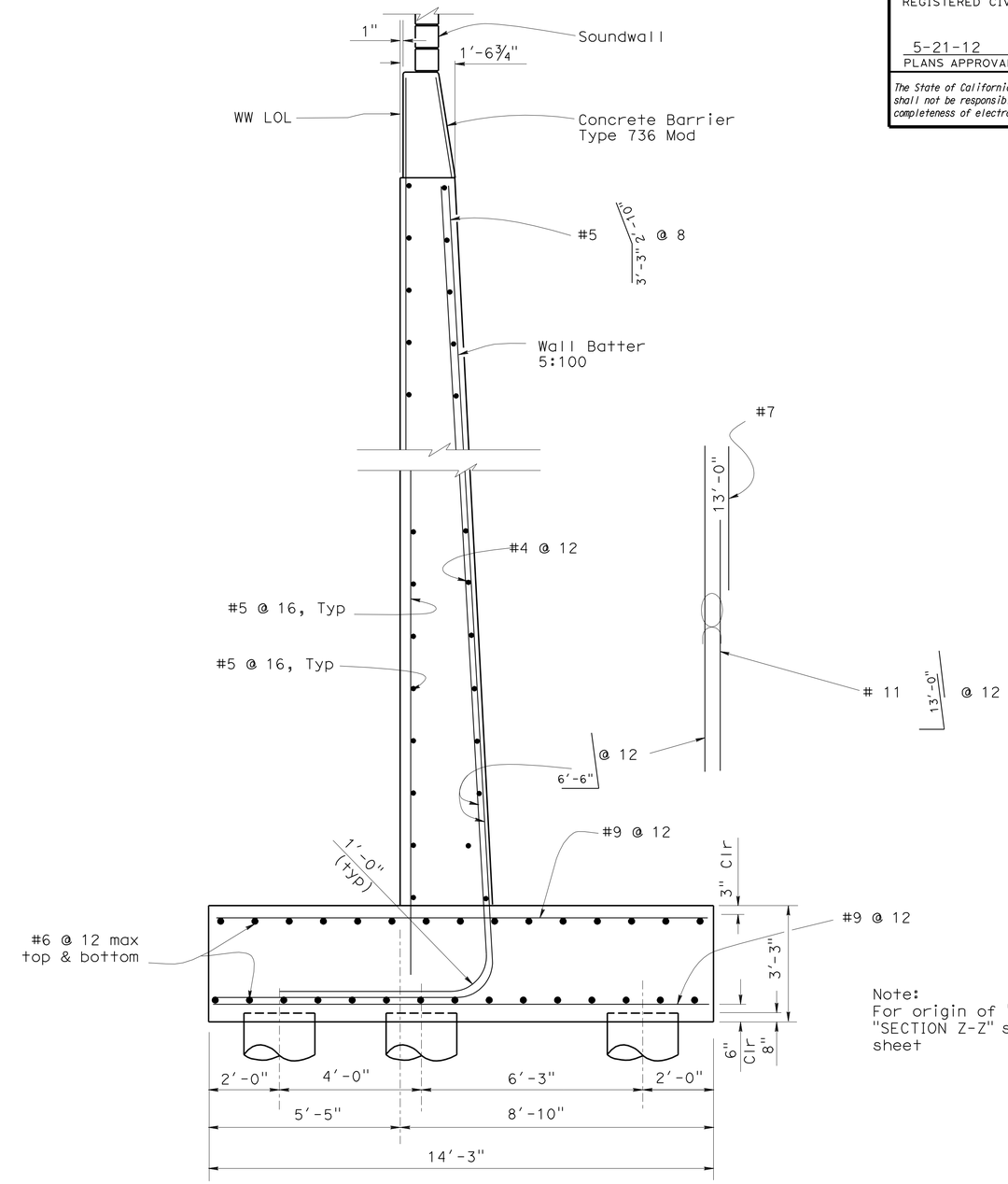

SECTION Y-Y

½" = 1'

Note:
For origin of "SECTION Y-Y" and "SECTION Z-Z" see "ABUTMENT 1 LAYOUT" sheet

	BY	CHECKED
DESIGN	GERRARD HIGHT	CORY COWDEN
DETAILS	M. JOHNSON	GERRARD HIGHT
QUANTITIES	M. .POPE/M. SCHOTT	CORY COWDEN

STATE OF CALIFORNIA
DEPARTMENT OF TRANSPORTATION

DIVISION OF ENGINEERING SERVICES
STRUCTURE DESIGN
DESIGN BRANCH 18

BRIDGE NO. 53-2920
POST MILE 30.47

EMPIRE AVE UC (REPLACE)
ABUTMENT DETAILS NO. 3

STRUCTURES DESIGN DETAIL SHEET (ENGLISH) (REV. 09-01-10)

ORIGINAL SCALE IN INCHES FOR REDUCED PLANS 0 1 2 3

UNIT: 3603
PROJECT NUMBER & PHASE: 0700021119-1
CONTRACT NO.: 07-1218W1

DISREGARD PRINTS BEARING EARLIER REVISION DATES

REVISION DATES: 9-19-08 10-20-08 5-20-09

SHEET 13 OF 53

FILE => 53-2920rl-f-a01dt03.dgn

USERNAME => s114926 DATE PLOTTED => 22-MAY-2012 TIME PLOTTED => 07:43

DIST	COUNTY	ROUTE	POST MILES TOTAL PROJECT	SHEET No.	TOTAL SHEETS
07	LA	5	29.4/31.6	937	1931

J Estrada. 01-30-12
REGISTERED CIVIL ENGINEER DATE

5-21-12
PLANS APPROVAL DATE

REGISTERED PROFESSIONAL ENGINEER Jorge I. Estrada No. C51473 Exp. 06-30-12 CIVIL STATE OF CALIFORNIA

The State of California or its officers or agents shall not be responsible for the accuracy or completeness of electronic copies of this plan sheet.

Notes:

For origin of "SECTION X-X" and "SECTION W-W" see "ABUTMENT 2 LAYOUT" sheet

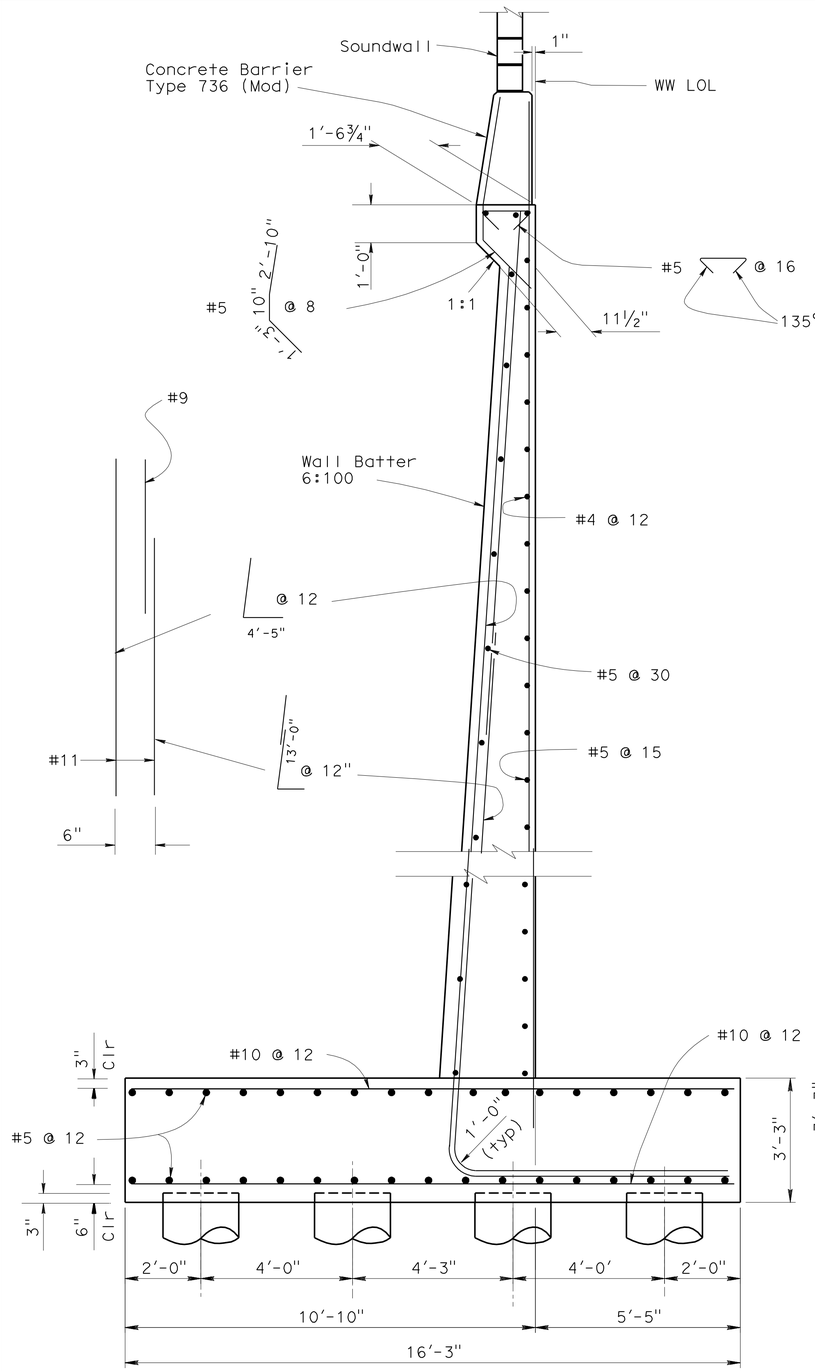

SECTION X-X

½" = 1'

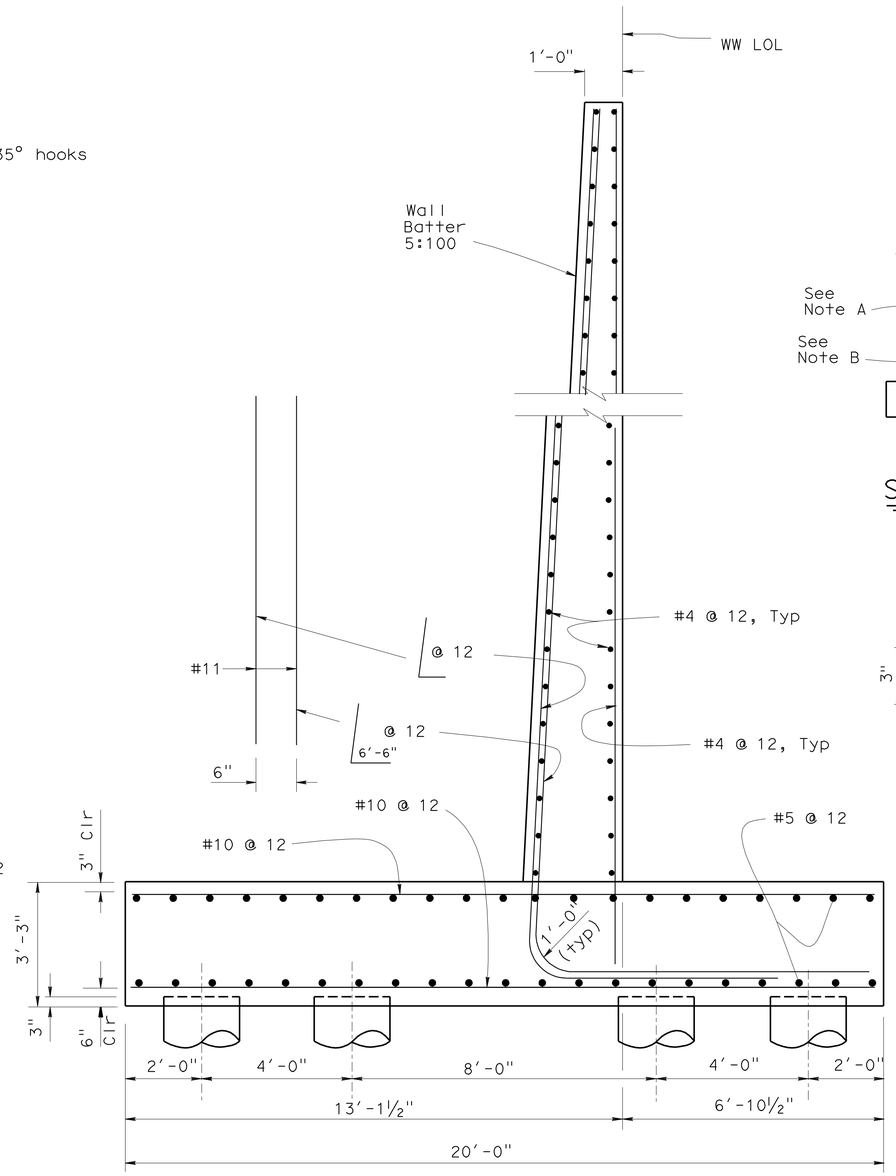

SECTION W-W

½" = 1'

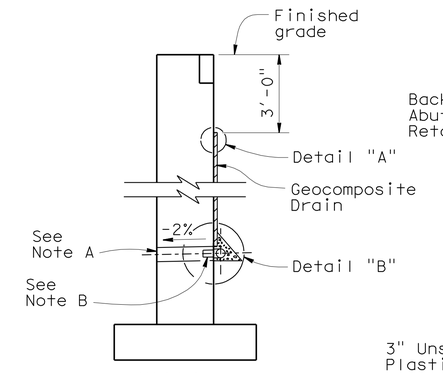

WALL SECTION

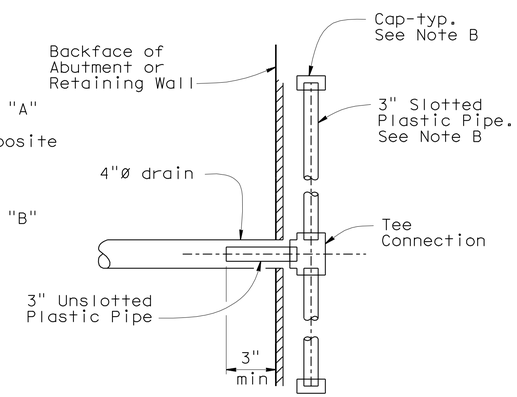

SECTION A-A

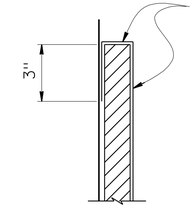

DETAIL "A"

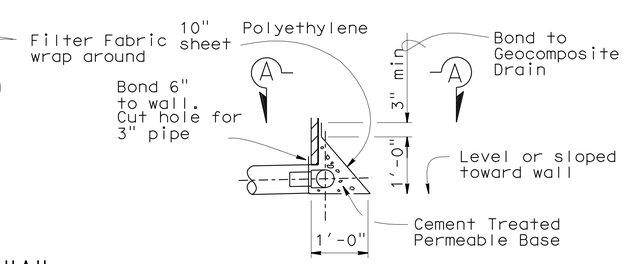

DETAIL "B"

WEEP HOLE AND GEOCOMPOSITE DRAIN

NO SCALE

ALTERNATIVE TO BRIDGE DETAIL BO-3 / 3-1

Notes:

A. Geocomposite drain, cement treated permeable base, and 3" Ø slotted plastic pipe continuous behind retaining wall or abutment. Cap ends of pipe. Provide "Tee" connection at each 4"Ø drain.

B. Connect the low end of plastic pipe to the main outlet pipe as applicable.

	BY	CHECKED
DESIGN	GERRARD HIGHT	CORY COWDEN
DETAILS	M.JOHNSON	GERRARD HIGHT
QUANTITIES	M. POPE/M. SCHOTT	CORY COWDEN

STATE OF CALIFORNIA
DEPARTMENT OF TRANSPORTATION

DIVISION OF ENGINEERING SERVICES
STRUCTURE DESIGN
DESIGN BRANCH 18

BRIDGE NO. 53-2920
POST MILE 30.47

EMPIRE AVE UC (REPLACE)
ABUTMENT DETAILS NO.4

STRUCTURES DESIGN DETAIL SHEET (ENGLISH) (REV. 09-01-10)

ORIGINAL SCALE IN INCHES FOR REDUCED PLANS 0 1 2 3

UNIT: 3603
PROJECT NUMBER & PHASE: 0700021119-1
CONTRACT NO.: 07-1218W1

DISREGARD PRINTS BEARING EARLIER REVISION DATES

REVISION DATES: 9-10-08 7-14-08 5-20-09

SHEET 14 OF 53

FILE => 53-2920r1-f-a01dt04.dgn

USERNAME => s114926 DATE PLOTTED => 22-MAY-2012 TIME PLOTTED => 07:43

DIST	COUNTY	ROUTE	POST MILES TOTAL PROJECT	SHEET No.	TOTAL SHEETS
07	LA	5	29.4/31.6	938	1931

REGISTERED CIVIL ENGINEER — DATE 01-30-12

PLANS APPROVAL DATE 5-21-12

REGISTERED PROFESSIONAL ENGINEER — Jorge I. Estrada — No. C51473 — Exp. 06-30-12 — CIVIL — STATE OF CALIFORNIA

The State of California or its officers or agents shall not be responsible for the accuracy or completeness of electronic copies of this plan sheet.

Notes:

1. Lap splices or mechanical couplers are allowed at footing construction joints
2. Hooked rebars required for traverse reinforcement
3. For origin of "DETAIL A" see "ABUTMENT 1 PILE LAYOUT" sheet
4. For origin of "DETAIL B" and "DETAIL C" see "ABUTMENT 2 PILE LAYOUT" sheet

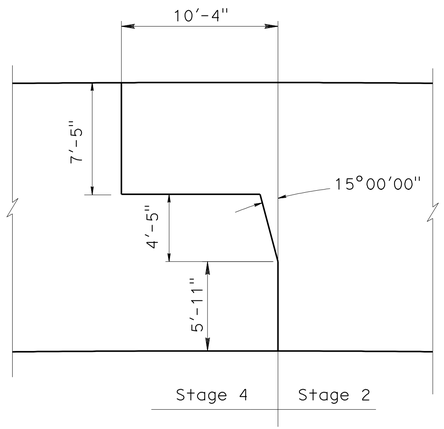

FOOTING CONSTRUCTION JOINT

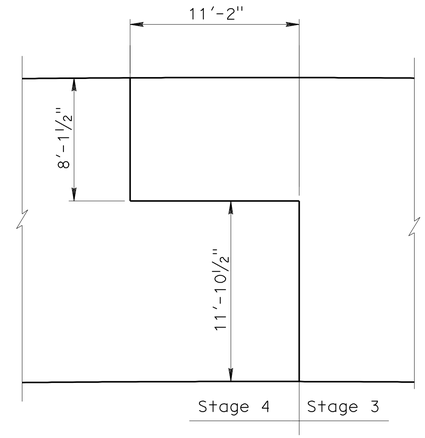

FOOTING CONSTRUCTION JOINT

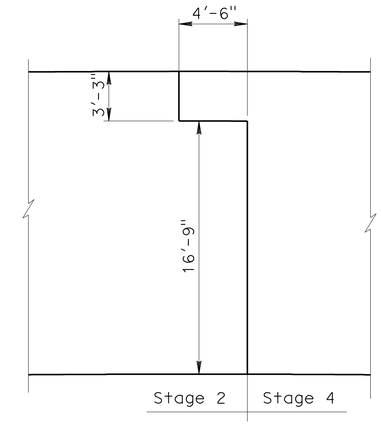

FOOTING CONSTRUCTION JOINT

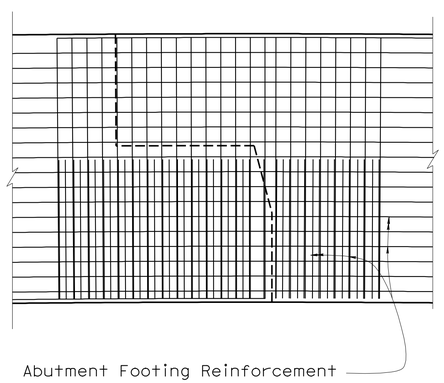

FOOTING REINFORCEMENT PLAN

DETAIL A
1" = 5'

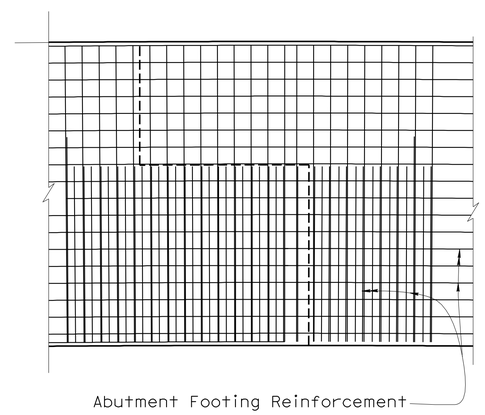

FOOTING REINFORCEMENT PLAN

DETAIL B
1" = 5'

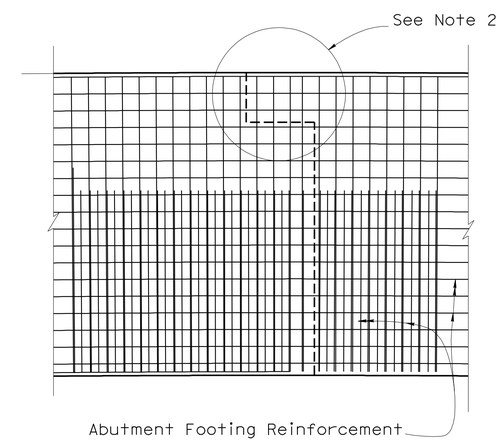

FOOTING REINFORCEMENT PLAN

DETAIL C
1" = 5'

	BY	CHECKED
DESIGN	GERRARD HIGHT	CORY COWDEN
DETAILS	M. JOHNSON/F. RASHEDI	GERRAD HIGHT
QUANTITIES	CORY COWDEN	M. POPE/M. SCHOTT

STATE OF CALIFORNIA
DEPARTMENT OF TRANSPORTATION

DIVISION OF ENGINEERING SERVICES
STRUCTURE DESIGN
DESIGN BRANCH 18

BRIDGE NO. 53=2920
POST MILE 30.47

EMPIRE AVE UC (REPLACE)
ABUTMENT DETAILS NO.5

STRUCTURES DESIGN DETAIL SHEET (ENGLISH) (REV. 09-01-10)

ORIGINAL SCALE IN INCHES FOR REDUCED PLANS 0 1 2 3

UNIT: 3603
PROJECT NUMBER & PHASE: 0700021119-1
CONTRACT NO.: 07-1218W1

DISREGARD PRINTS BEARING EARLIER REVISION DATES

REVISION DATES: 9-19-08 12-19-08 5-20-09

SHEET 15 OF 53

FILE => 53-2920r1-f-a01dt05.dgn

USERNAME => s114926 DATE PLOTTED => 22-MAY-2012 TIME PLOTTED => 07:43

DIST	COUNTY	ROUTE	POST MILES TOTAL PROJECT	SHEET No.	TOTAL SHEETS
07	LA	5	29.4/31.6	939	1931

REGISTERED CIVIL ENGINEER — DATE 01-30-12

5-21-12
PLANS APPROVAL DATE

REGISTERED PROFESSIONAL ENGINEER — Jorge I. Estrada — No. C51473 — Exp. 06-30-12 — CIVIL — STATE OF CALIFORNIA

The State of California or its officers or agents shall not be responsible for the accuracy or completeness of electronic copies of this plan sheet.

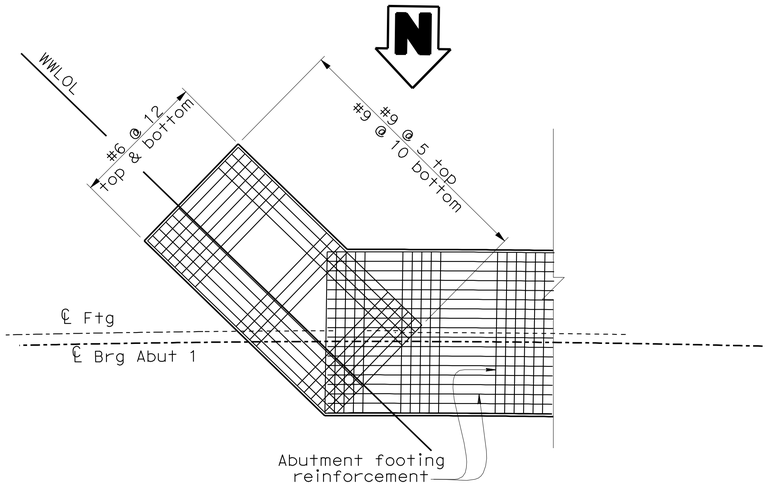

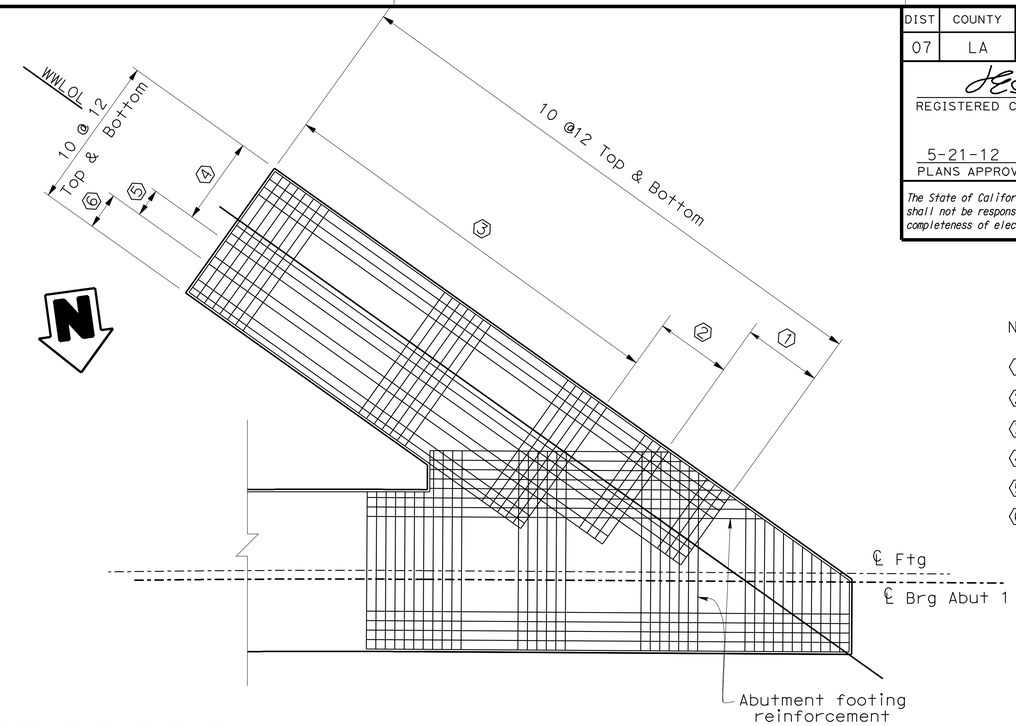

Notes: L= Length

1. L = 9'-0" Total 8
2. L = 12'-0" Total 8
3. L = 16'-0" @ 12
4. L = 59'-0" Total 10
5. L = 51'-0" Total 3
6. L = 43'-0" Total 4

ABUTMENT 1 FOOTING REINFORCEMENT

1/8"=1'

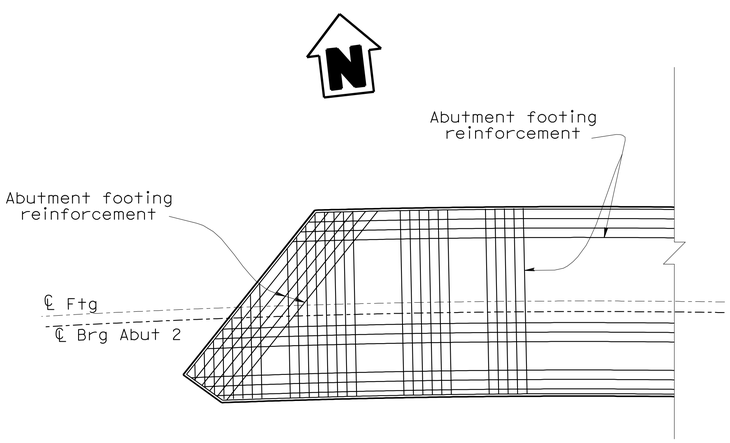

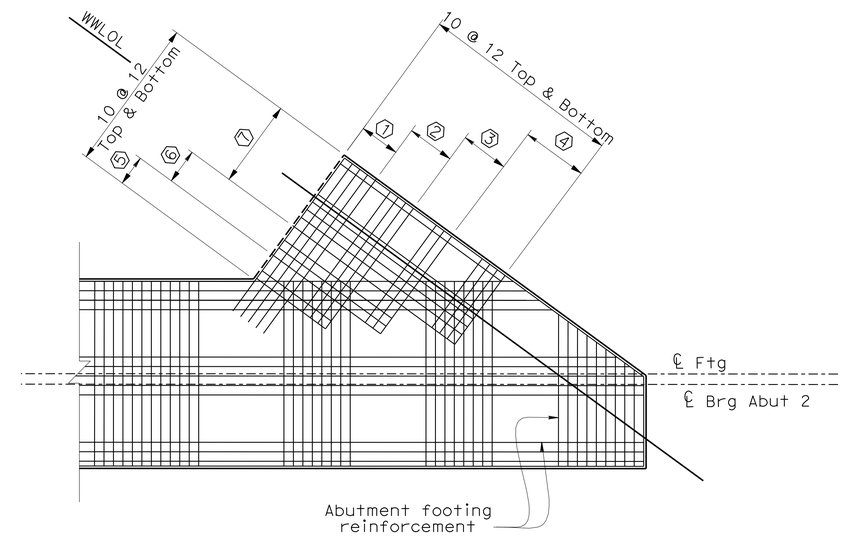

Notes: L= Length

1. L = 9'-0" Total 5
2. L = 16'-0" Total 5
3. L = 13'-0" Total 5
4. L = 9'-0" Total 7
5. L = 9'-0" Total 3
6. L = 14'-0" Total 4
7. L = 21'-0" Total 10

ABUTMENT 2 FOOTING REINFORCEMENT

1/8"=1'

	BY	CHECKED
DESIGN	GERRARD HIGHT	CORY COWDEN
DETAILS	FARIDEH RASHEDI	GERRARD HIGHT
QUANTITIES	CORY COWDEN	M. POPE/M. SCHOTT

STATE OF CALIFORNIA
DEPARTMENT OF TRANSPORTATION

DIVISION OF ENGINEERING SERVICES
STRUCTURE DESIGN
DESIGN BRANCH 18

BRIDGE NO. 53-2920
POST MILE 30.47

EMPIRE AVE UC (REPLACE)
ABUTMENT DETAILS NO. 6

STRUCTURES DESIGN DETAIL SHEET (ENGLISH) (REV. 09-01-10)

ORIGINAL SCALE IN INCHES FOR REDUCED PLANS 0 1 2 3

UNIT: 3603
PROJECT NUMBER & PHASE: 0700021119-1
CONTRACT NO.: 07-1218W1

DISREGARD PRINTS BEARING EARLIER REVISION DATES 10-09-11

REVISION DATES

SHEET 16 OF 53

FILE => 53-2920r1-f-a01dt06.dgn

USERNAME => s114926 DATE PLOTTED => 22-MAY-2012 TIME PLOTTED => 07:43

DIST	COUNTY	ROUTE	POST MILES TOTAL PROJECT	SHEET No.	TOTAL SHEETS
07	LA	5	29.4/31.6	940	1931

dEstrada. 01-30-12
REGISTERED CIVIL ENGINEER DATE

5-21-12
PLANS APPROVAL DATE

REGISTERED PROFESSIONAL ENGINEER
Jorge I. Estrada
No. C51473
Exp. 06-30-12
CIVIL
STATE OF CALIFORNIA

The State of California or its officers or agents shall not be responsible for the accuracy or completeness of electronic copies of this plan sheet.

Note:
For origin of "DETAIL A" see "ABUTMENT 1 LAYOUT" sheet

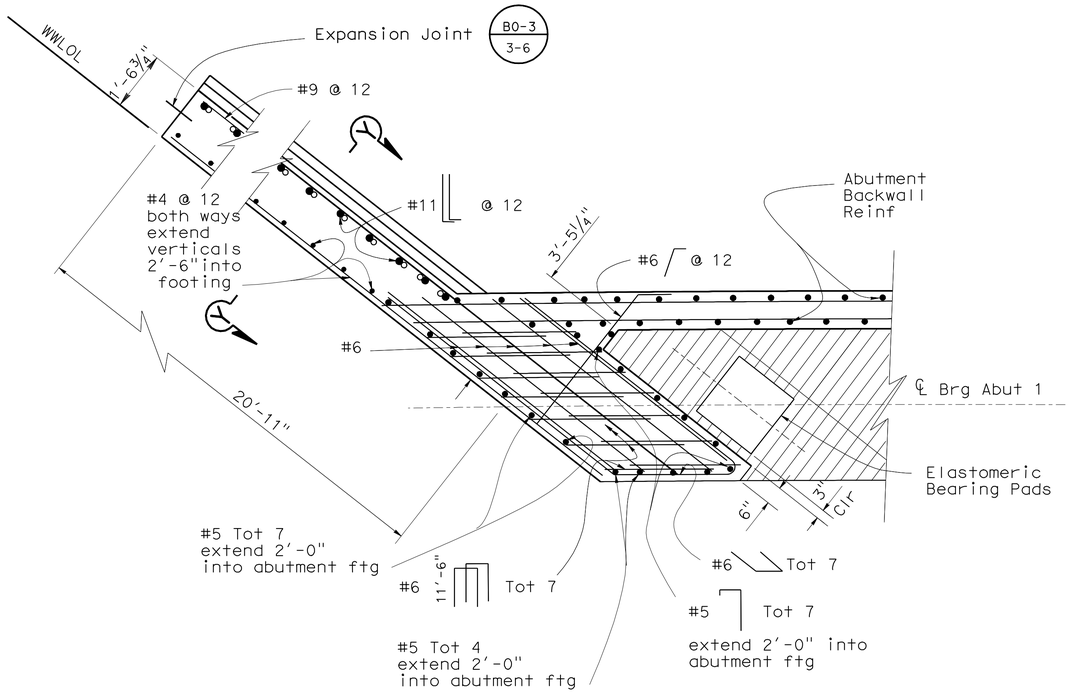

SECTION A-A

½" = 1'

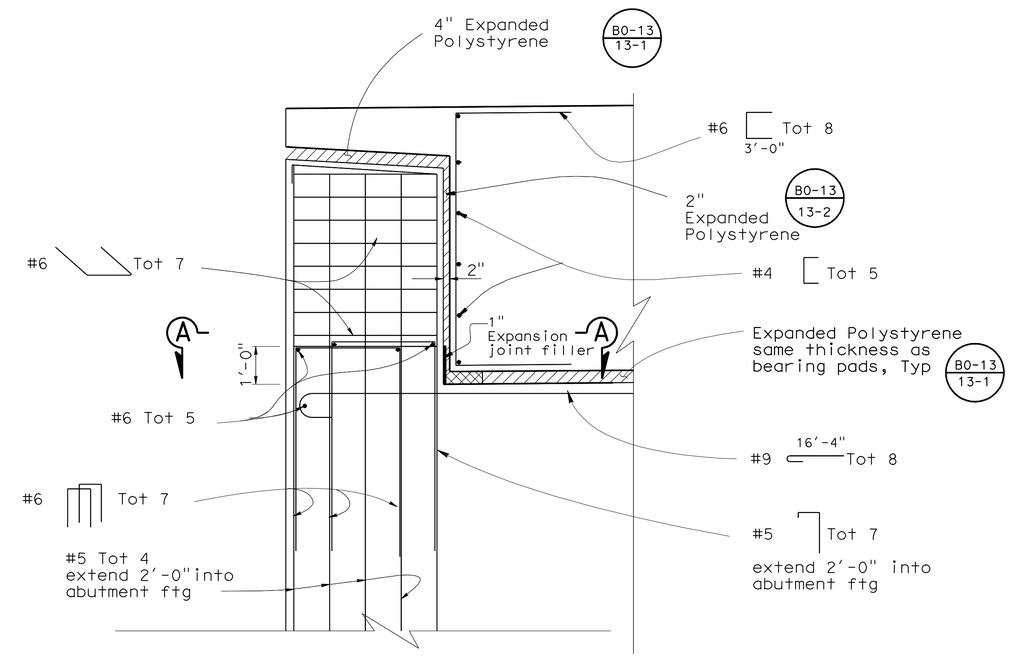

ELEVATION- DETAIL A

½" = 1'

	BY	CHECKED
DESIGN	GERRARD HIGHT	CORY COWDEN
DETAILS	M. JOHNSON	GERRARD HIGHT
QUANTITIES	CORY COWDEN	M. POPE/M. SCHOTT

STATE OF CALIFORNIA
DEPARTMENT OF TRANSPORTATION

DIVISION OF ENGINEERING SERVICES
STRUCTURE DESIGN
DESIGN BRANCH 18

BRIDGE NO. 53-2920
POST MILE 30.47

EMPIRE AVE UC (REPLACE)
ABUTMENT DETAILS NO.7

STRUCTURES DESIGN DETAIL SHEET (ENGLISH) (REV. 09-01-10)

ORIGINAL SCALE IN INCHES FOR REDUCED PLANS 0 1 2 3

UNIT: 3603
PROJECT NUMBER & PHASE: 0700021119-1
CONTRACT NO.: 07-1218W1

DISREGARD PRINTS BEARING EARLIER REVISION DATES

REVISION DATES 11-06-08 8-06-08 10-09-11

SHEET 17 OF 53

FILE => 53-2920ri-f-a01dt07.dgn

USERNAME => s114926 DATE PLOTTED => 22-MAY-2012 TIME PLOTTED => 07:43

DIST	COUNTY	ROUTE	POST MILES TOTAL PROJECT	SHEET No.	TOTAL SHEETS
07	LA	5	29.4/31.6	941	1931

JEstrada. 01-30-12
REGISTERED CIVIL ENGINEER DATE

5-21-12
PLANS APPROVAL DATE

REGISTERED PROFESSIONAL ENGINEER
Jorge I. Estrada
No. C51473
Exp. 06-30-12
CIVIL
STATE OF CALIFORNIA

The State of California or its officers or agents shall not be responsible for the accuracy or completeness of electronic copies of this plan sheet.

Notes:
1. Stage 2 construction shear key may be constructed after stressing of superstructure is completed
2. For origin of "DETAILS B" see "ABUTMENT 1 LAYOUT" sheet

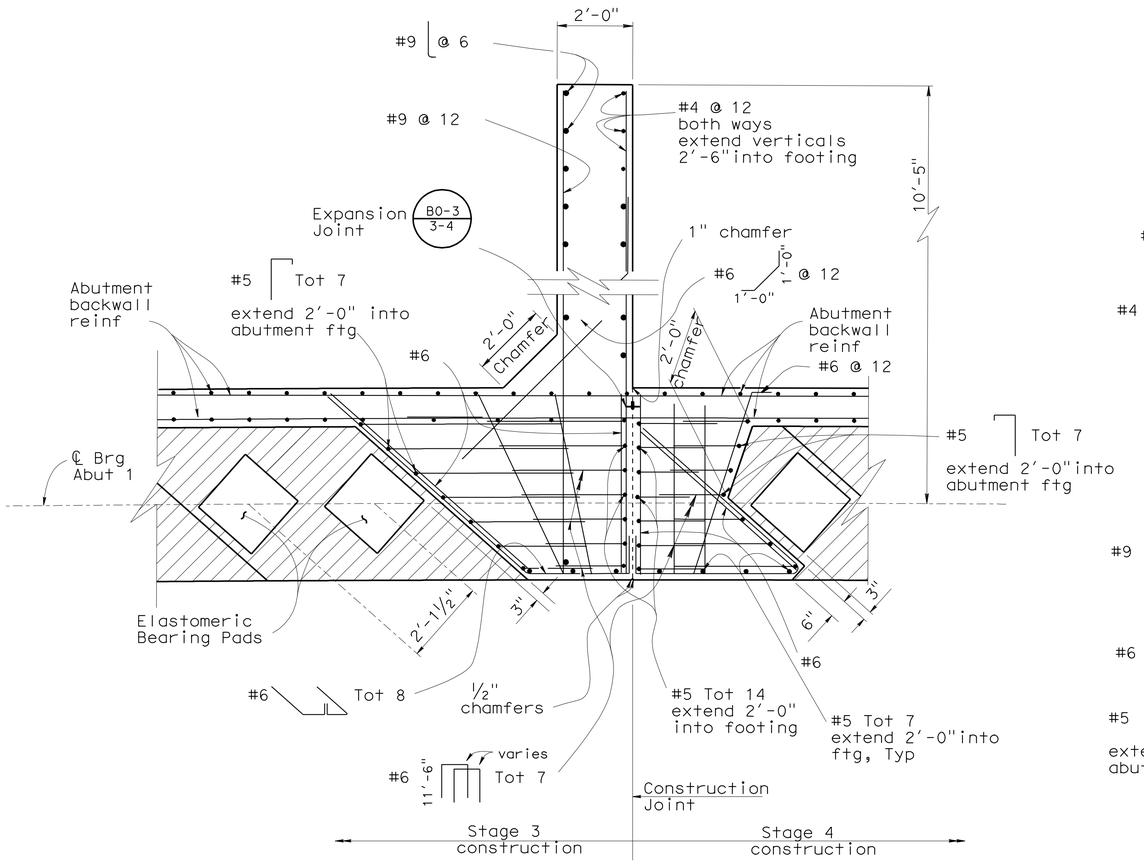

SECTION A-A

½" = 1'

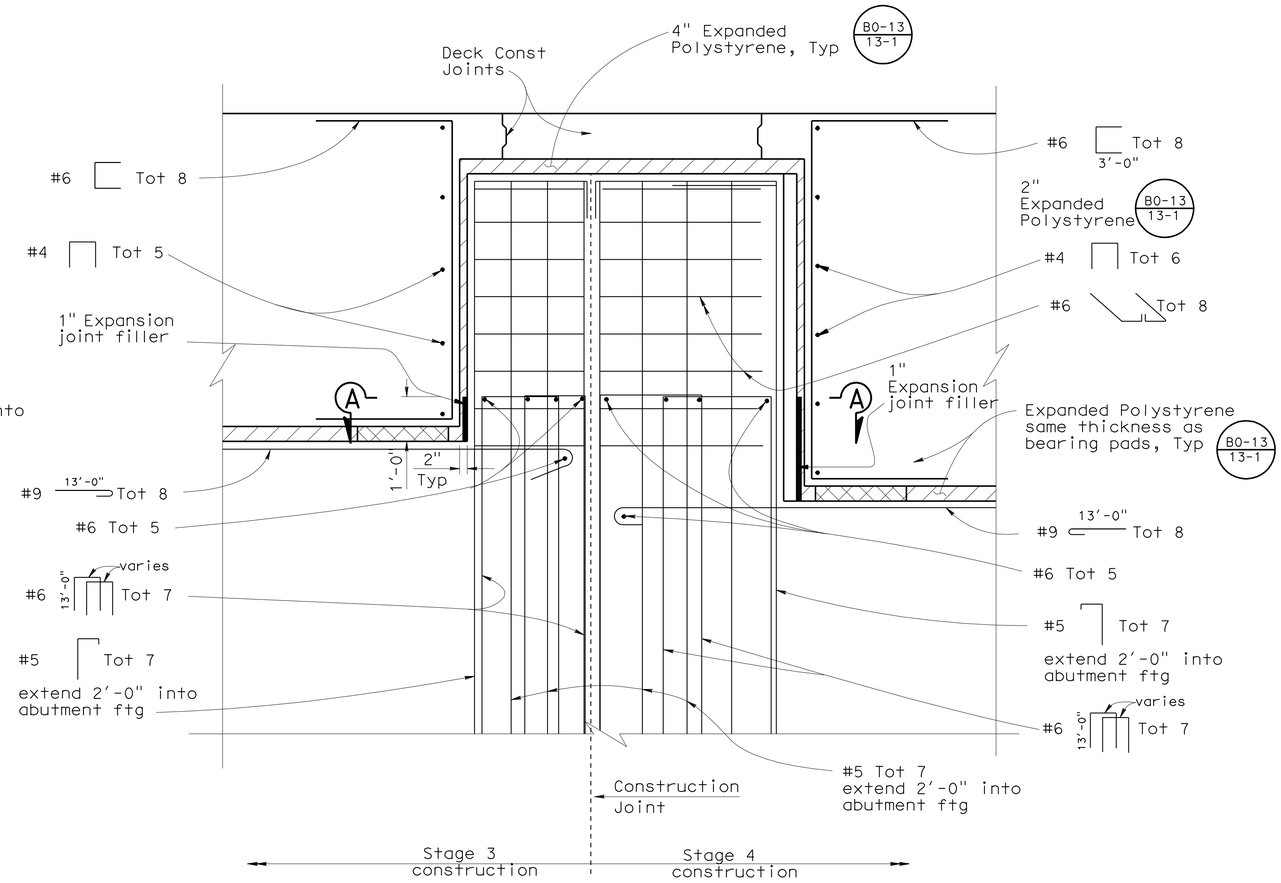

DETAIL "B"

½" = 1'

DESIGN	BY GERRARD HIGHT	CHECKED CORY COWDEN	
DETAILS	BY M.JOHNSON	CHECKED GERRARD HIGHT	
QUANTITIES	BY M. POPE/M. SCHOTT	CHECKED CORY COWDEN	

STATE OF CALIFORNIA
DEPARTMENT OF TRANSPORTATION

DIVISION OF ENGINEERING SERVICES
STRUCTURE DESIGN
DESIGN BRANCH 18

BRIDGE NO. 53-2920
POST MILE 30.47

EMPIRE AVE UC (REPLACE)
ABUTMENT DETAILS NO.8

STRUCTURES DESIGN DETAIL SHEET (ENGLISH) (REV. 09-01-10)

ORIGINAL SCALE IN INCHES FOR REDUCED PLANS 0 1 2 3

UNIT: 3603
PROJECT NUMBER & PHASE: 0700021119-1 CONTRACT NO.: 07-1218W1

DISREGARD PRINTS BEARING EARLIER REVISION DATES

REVISION DATES: 7-30-08 12-26-08 5-18-11

SHEET 18 OF 53

FILE => 53-2920ri-f-a01dt08.dgn

USERNAME => s114926 DATE PLOTTED => 22-MAY-2012 TIME PLOTTED => 07:43

DIST	COUNTY	ROUTE	POST MILES TOTAL PROJECT	SHEET No.	TOTAL SHEETS
07	LA	5	29.4/31.6	942	1931

JEstrada. 01-30-12
REGISTERED CIVIL ENGINEER DATE

5-21-12
PLANS APPROVAL DATE

REGISTERED PROFESSIONAL ENGINEER
Jorge I. Estrada
No. C51473
Exp. 06-30-12
CIVIL
STATE OF CALIFORNIA

The State of California or its officers or agents shall not be responsible for the accuracy or completeness of electronic copies of this plan sheet.

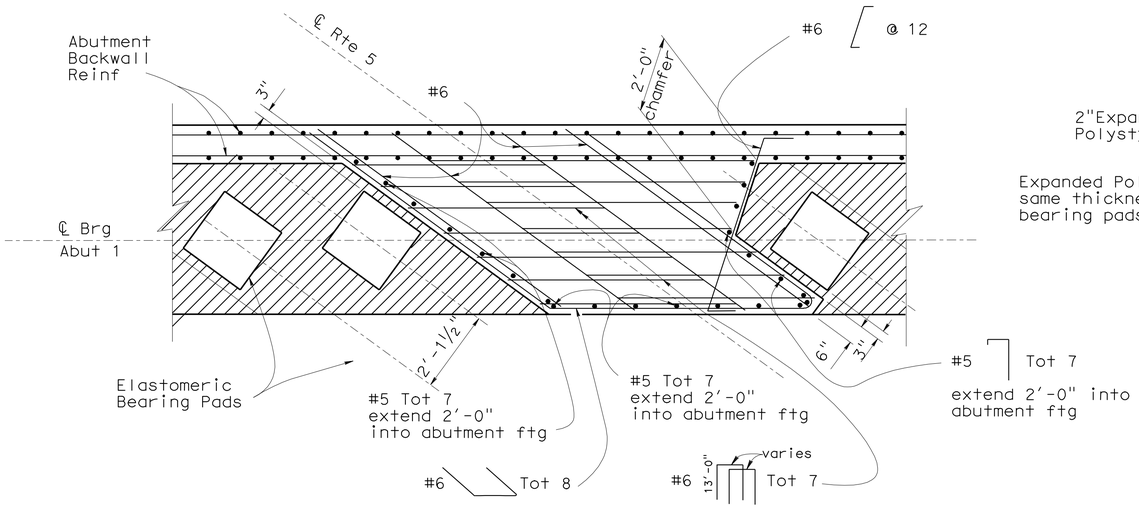

SECTION A-A

½" = 1'

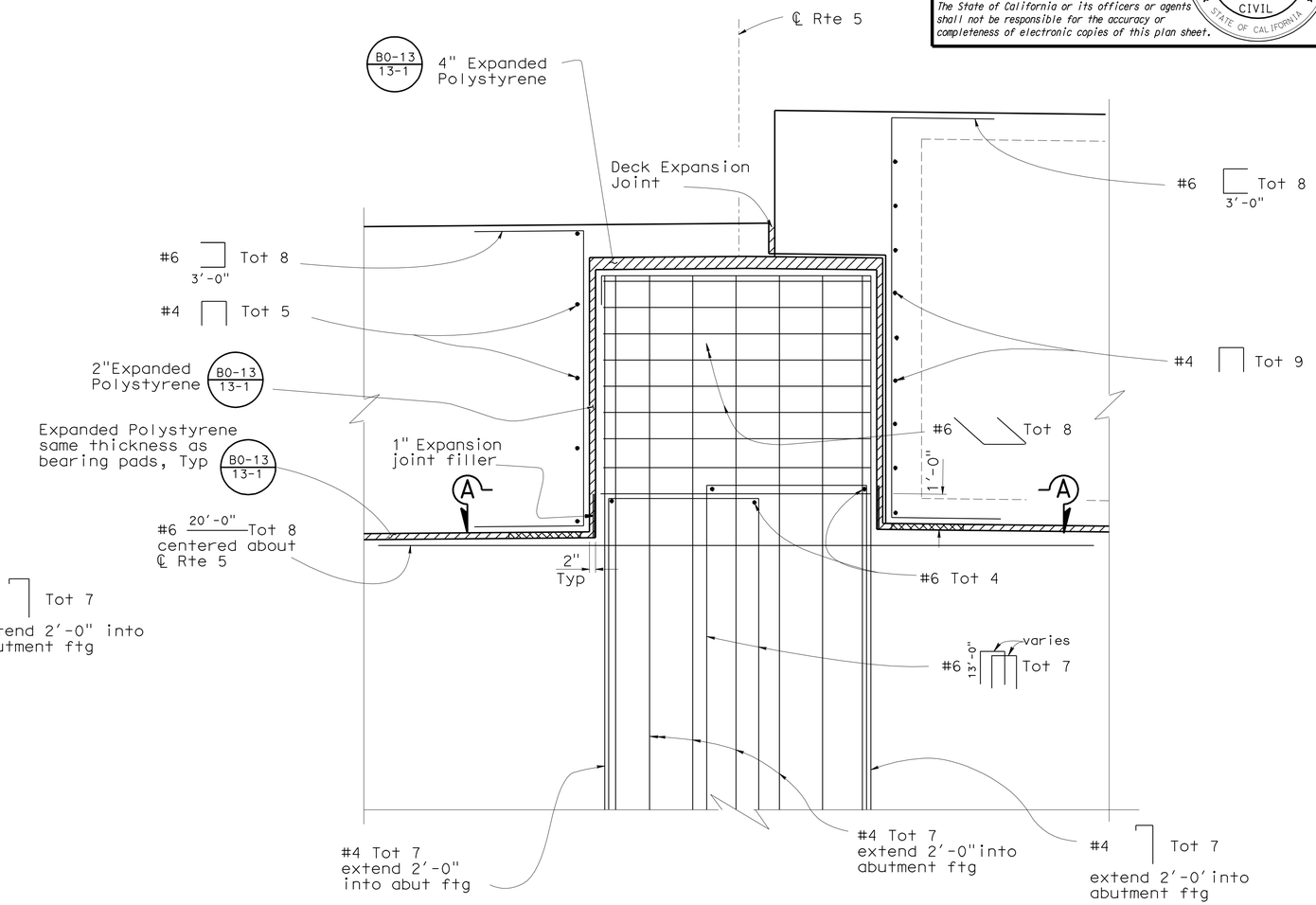

Abutment 2 shown, Abutment 1 similar but opposite.

ELEVATION-DETAIL "C"

½" = 1'

	BY	CHECKED
DESIGN	GERRARD HIGHT	CORY COWDEN
DETAILS	M. JOHNSON	GERRARD HIGHT
QUANTITIES	M. POPE/M. SCHOTT	CORY COWDEN

STATE OF CALIFORNIA
DEPARTMENT OF TRANSPORTATION

DIVISION OF ENGINEERING SERVICES
STRUCTURE DESIGN
DESIGN BRANCH 18

BRIDGE NO. 53-2920
POST MILE 30.47

EMPIRE AVE UC (REPLACE)
ABUTMENT DETAILS NO.9

STRUCTURES DESIGN DETAIL SHEET (ENGLISH) (REV. 09-01-10)

ORIGINAL SCALE IN INCHES FOR REDUCED PLANS 0 1 2 3

UNIT: 3603
PROJECT NUMBER & PHASE: 0700021119-1
CONTRACT NO.: 07-1218W1

DISREGARD PRINTS BEARING EARLIER REVISION DATES

REVISION DATES: 10-01-08 10-14-08 12-26-08

SHEET 19 OF 53

FILE => 53-2920r1-f-a01dt09.dgn

USERNAME => s114926 DATE PLOTTED => 22-MAY-2012 TIME PLOTTED => 07:44

DIST	COUNTY	ROUTE	POST MILES TOTAL PROJECT	SHEET No.	TOTAL SHEETS
07	LA	5	29.4/31.6	943	1931

REGISTERED CIVIL ENGINEER — DATE 01-30-12

5-21-12
PLANS APPROVAL DATE

REGISTERED PROFESSIONAL ENGINEER — Jorge I. Estrada — No. C51473 — Exp. 06-30-12 — CIVIL — STATE OF CALIFORNIA

The State of California or its officers or agents shall not be responsible for the accuracy or completeness of electronic copies of this plan sheet.

Notes:
1. Stage 2 construction top of wingwall shear key may be constructed after stressing of superstructure is completed
2. For origin of "DETAIL D" see "ABUTMENT 1 LAYOUT"sheet

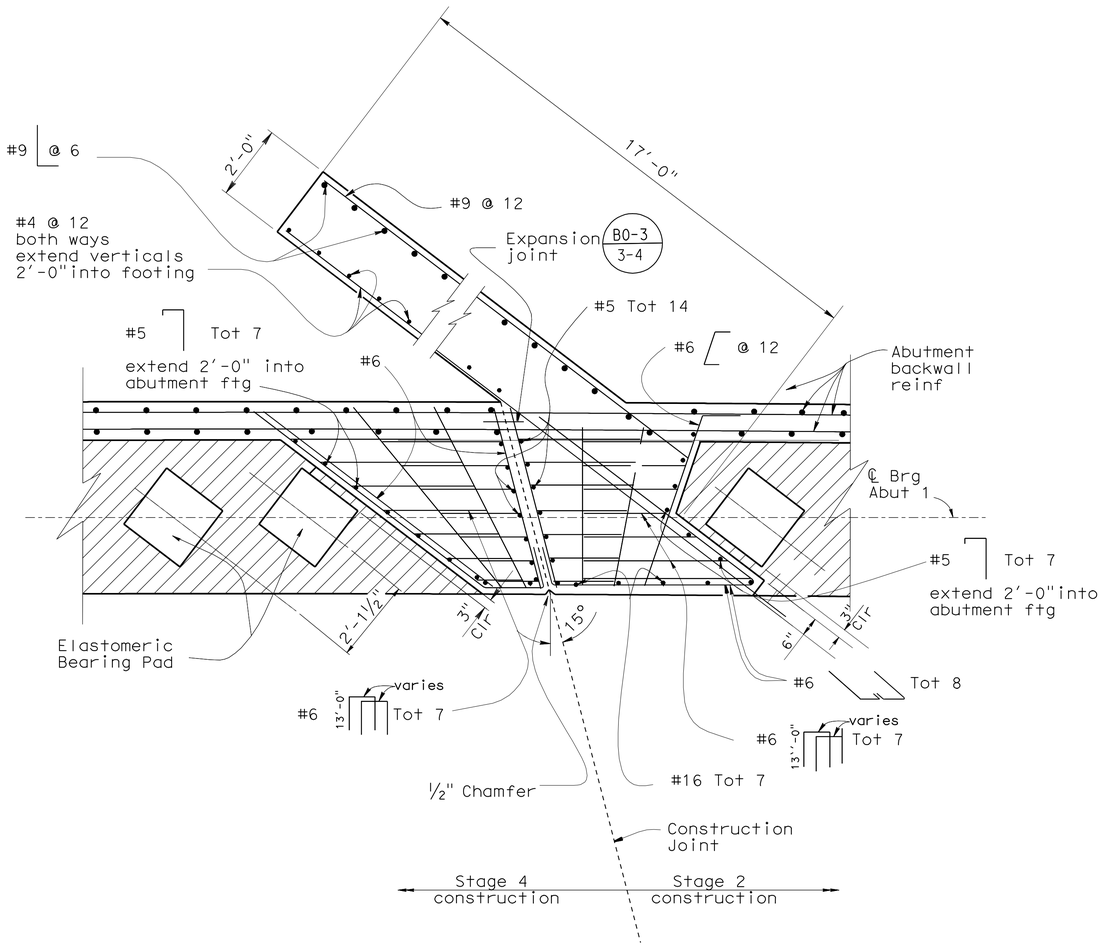

SECTION A-A
½" = 1'

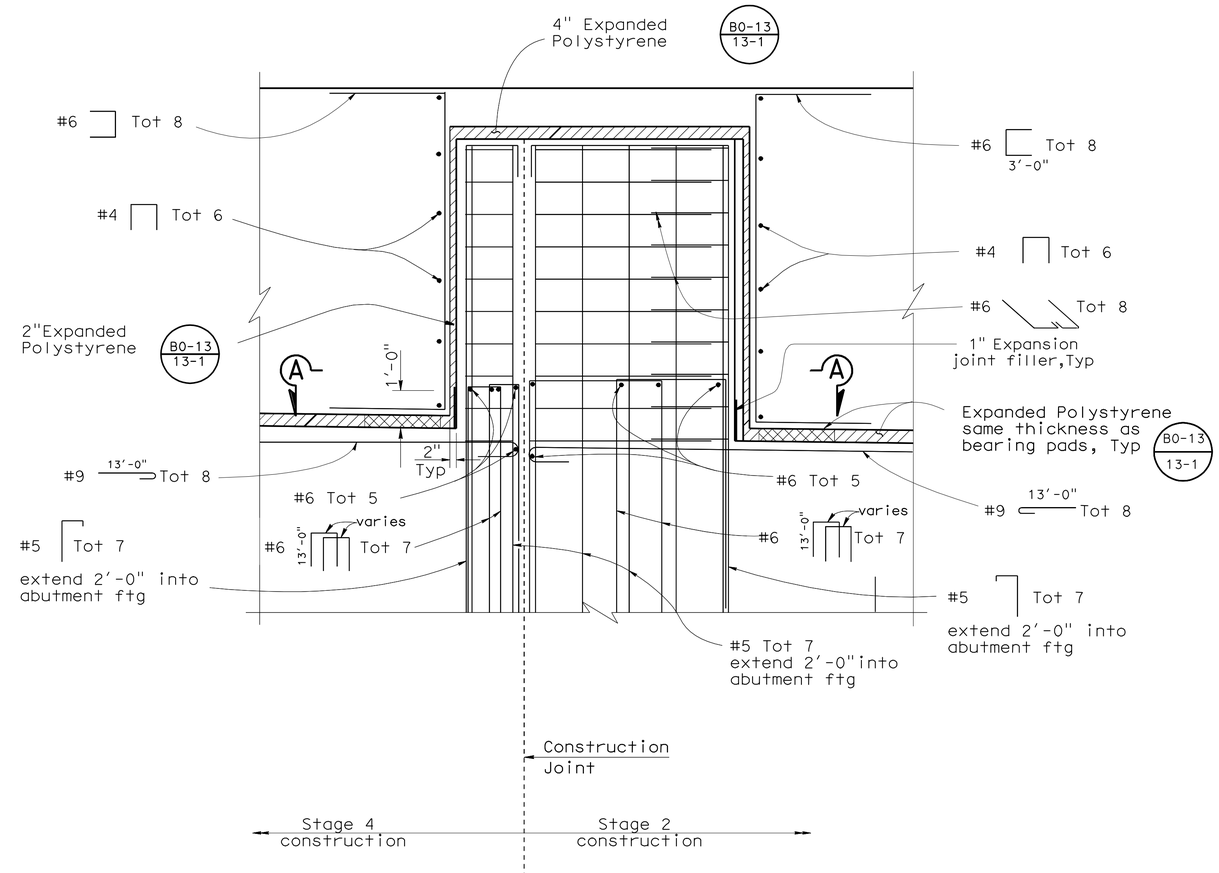

DETAIL "D"
½" = 1'

	BY	CHECKED
DESIGN	GERRARD HIGHT	CORY COWDEN
DETAILS	M. JOHNSON	GERRARD HIGHT
QUANTITIES	M. POPE/M. SCHOTT	CORY COWDEN

ORIGINAL SCALE IN INCHES FOR REDUCED PLANS 0 1 2 3

STATE OF CALIFORNIA
DEPARTMENT OF TRANSPORTATION

DIVISION OF ENGINEERING SERVICES
STRUCTURE DESIGN
DESIGN BRANCH 18

BRIDGE NO. 53-2920
POST MILE 30.47

EMPIRE AVE UC (REPLACE)
ABUTMENT DETAILS NO.10

UNIT: 3603
PROJECT NUMBER & PHASE: 0700021119-1
CONTRACT NO.: 07-1218W1

DISREGARD PRINTS BEARING EARLIER REVISION DATES

REVISION DATES 7-26-08 9-08-08 12-26-08

SHEET 20 OF 53

FILE => 53-2920ri-f-a01dt10.dgn

USERNAME => s114936 DATE PLOTTED => 22-MAY-2012 TIME PLOTTED => 07:44

DIST	COUNTY	ROUTE	POST MILES TOTAL PROJECT	SHEET No.	TOTAL SHEETS
07	LA	5	29.4/31.6	944	1931

REGISTERED CIVIL ENGINEER — DATE 01-30-12

5-21-12
PLANS APPROVAL DATE

REGISTERED PROFESSIONAL ENGINEER — Jorge I. Estrada — No. C51473 — Exp. 06-30-12 — CIVIL — STATE OF CALIFORNIA

The State of California or its officers or agents shall not be responsible for the accuracy or completeness of electronic copies of this plan sheet.

Note:
For origin of "DETAILS E" see " ABUTMENT 1 LAYOUT" sheet

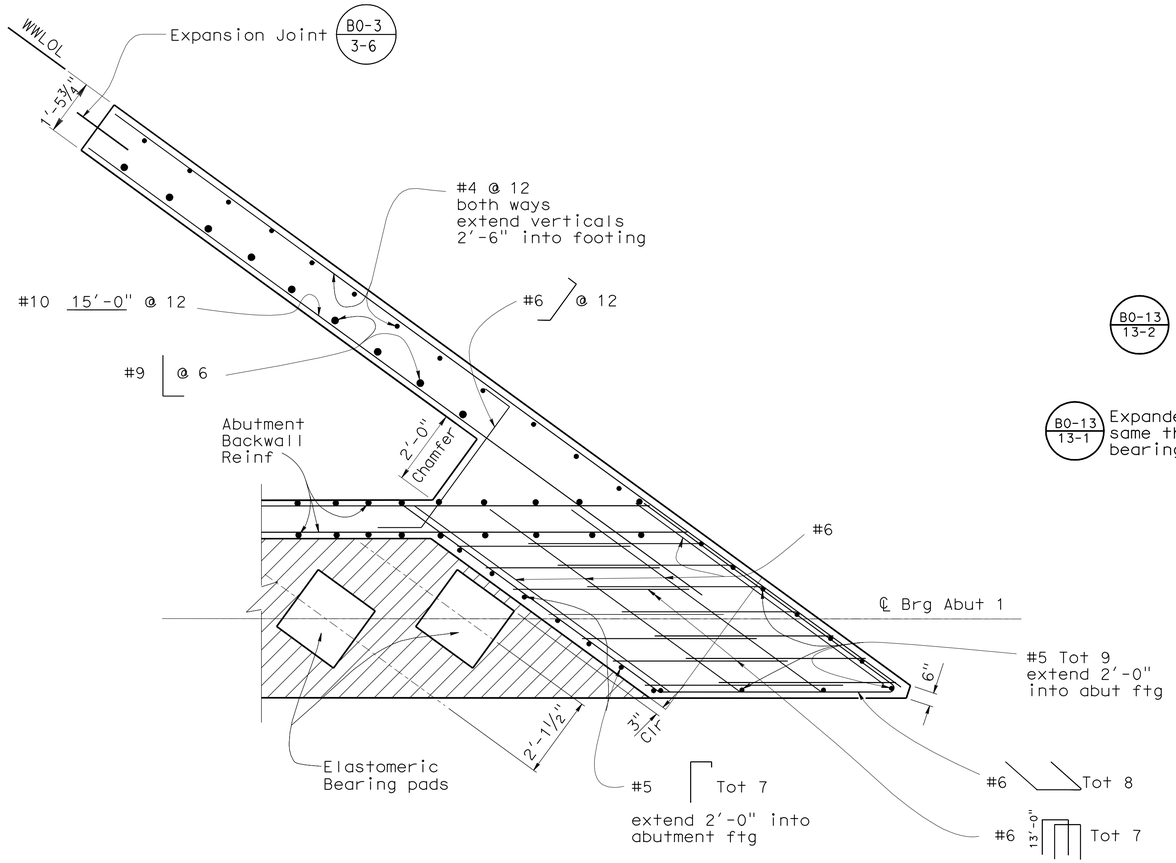

SECTION A-A

½" = 1'

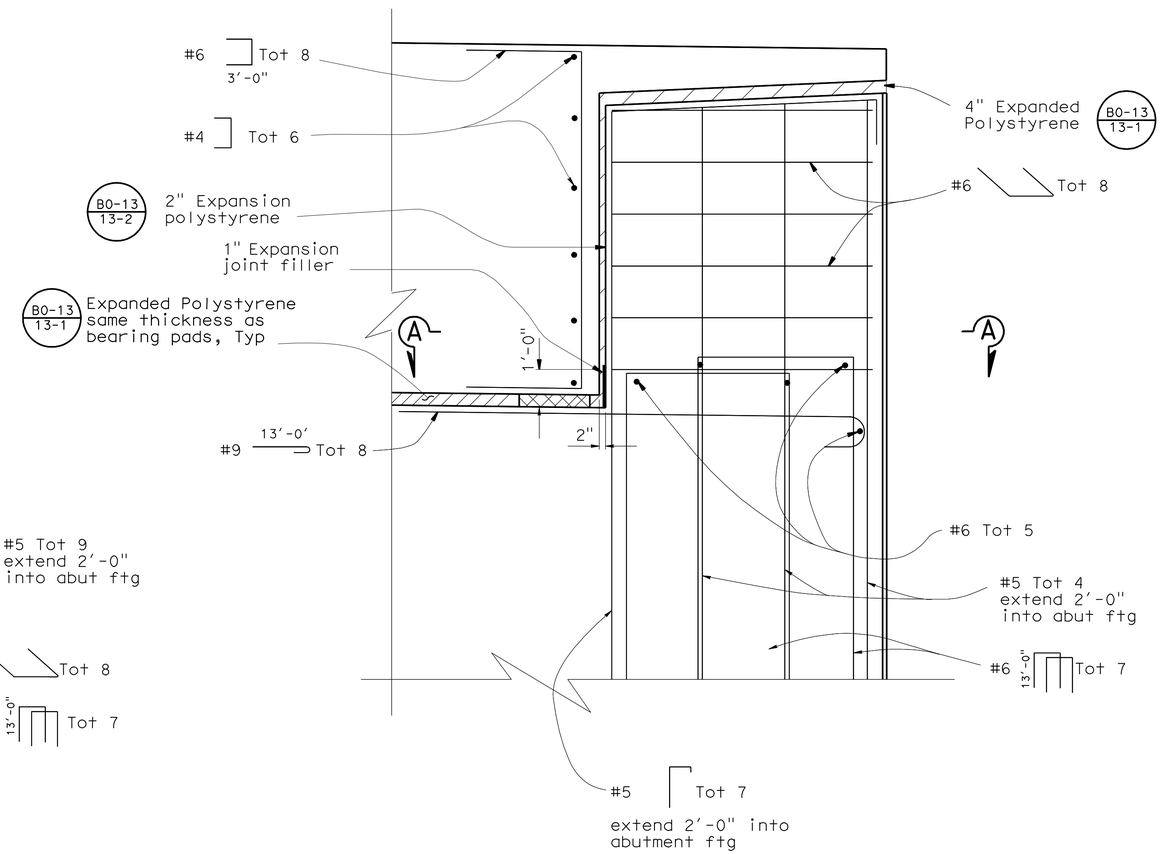

ELEVATION- DETAIL '"E"

½" = 1'

DESIGN	BY GERRARD HIGHT	CHECKED CORY COWDEN	
DETAILS	BY M. JOHNSON	CHECKED GERRARD HIGHT	
QUANTITIES	BY M. POPE/M. SCHOTT	CHECKED CORY COWDEN	

STATE OF CALIFORNIA
DEPARTMENT OF TRANSPORTATION

DIVISION OF ENGINEERING SERVICES
STRUCTURE DESIGN
DESIGN BRANCH 18

BRIDGE NO. 53-2930
POST MILE 30.47

EMPIRE AVE UC (REPLACE)
ABUTMENT DETAILS NO. 11

STRUCTURES DESIGN DETAIL SHEET (ENGLISH) (REV. 09-01-10)

ORIGINAL SCALE IN INCHES FOR REDUCED PLANS 0 1 2 3

UNIT: 3603
PROJECT NUMBER & PHASE: 0700021119-1
CONTRACT NO.: 07-1218W1

DISREGARD PRINTS BEARING EARLIER REVISION DATES

REVISION DATES: 10-01-08 12-26-08 5-18-11

SHEET 21 OF 53

FILE => 53-2920r1-f-a01dt11.dgn

USERNAME => s174926 DATE PLOTTED => 22-MAY-2012 TIME PLOTTED => 07:44

DIST	COUNTY	ROUTE	POST MILES TOTAL PROJECT	SHEET No.	TOTAL SHEETS
07	LA	5	29.4/31.6	945	1931

JEstrada. 01-30-12
REGISTERED CIVIL ENGINEER DATE

5-21-12
PLANS APPROVAL DATE

REGISTERED PROFESSIONAL ENGINEER
Jorge I. Estrada
No. C51473
Exp. 06-30-12
CIVIL
STATE OF CALIFORNIA

The State of California or its officers or agents shall not be responsible for the accuracy or completeness of electronic copies of this plan sheet.

Note:
For origin of "DETAIL F" see "ABUTMENT 2 LAYOUT" sheet

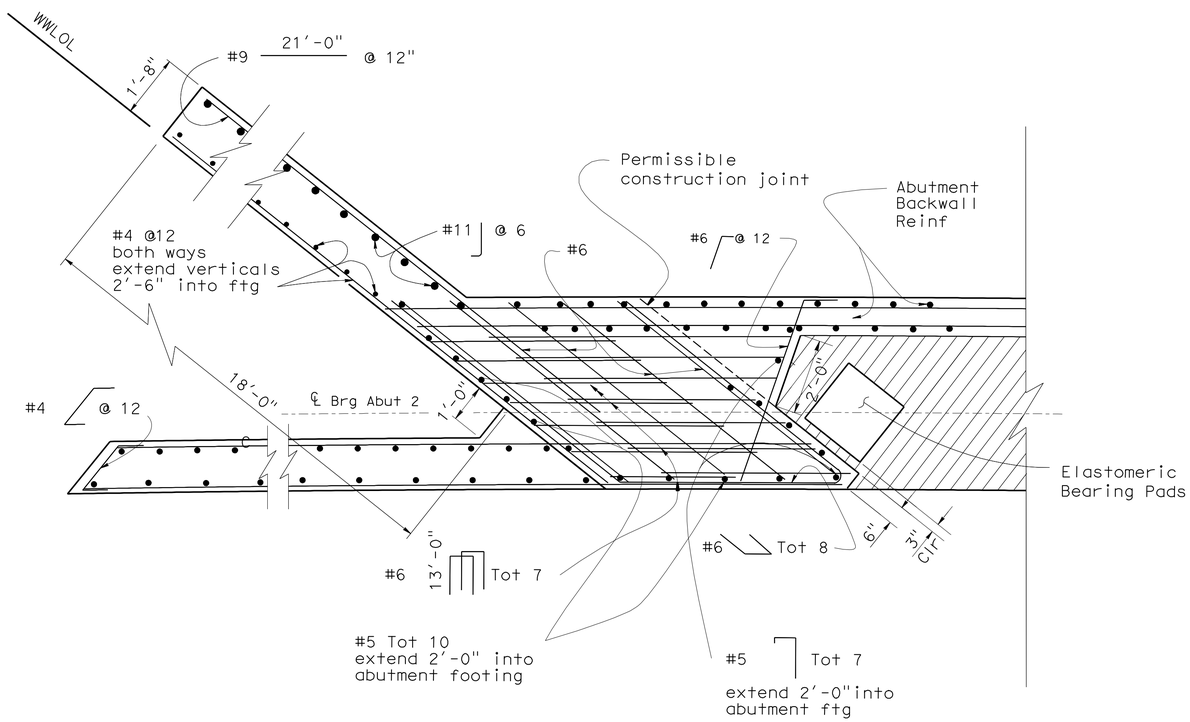

SECTION A-A

½"=1'

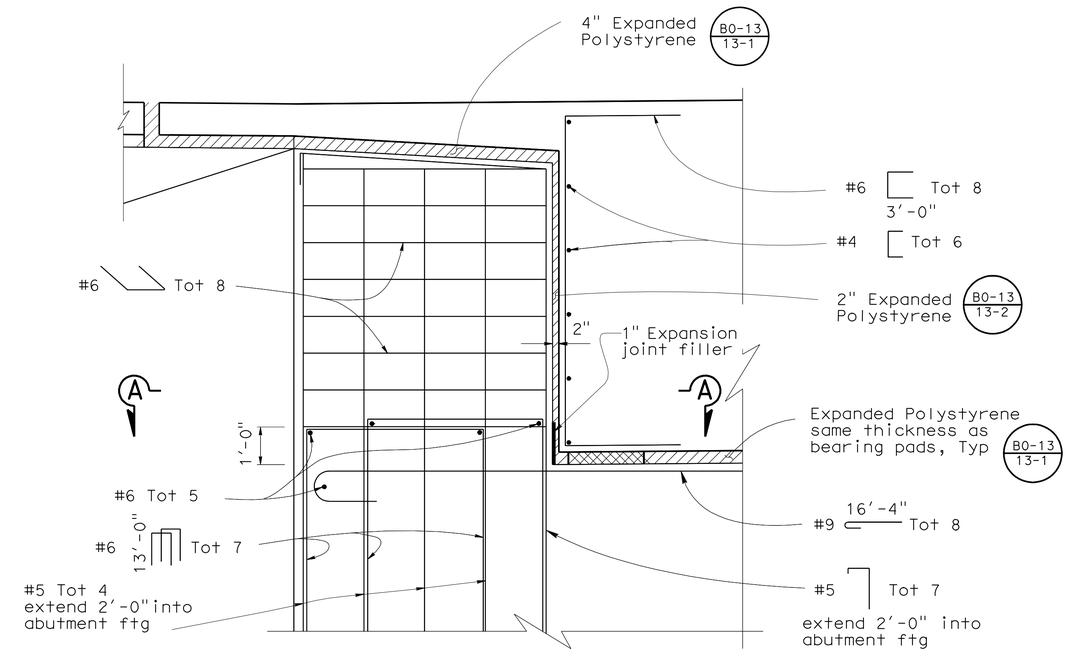

ELEVATION - DETAIL "F"

½"=1'

DESIGN	BY GERRARD HIGHT	CHECKED CORY COWDEN	
DETAILS	BY M. JOHNSON	CHECKED GERRARD HIGHT	
QUANTITIES	BY M. POPE/M. SCHOTT	CHECKED CORY COWDEN	

STATE OF CALIFORNIA
DEPARTMENT OF TRANSPORTATION

DIVISION OF ENGINEERING SERVICES
STRUCTURE DESIGN
DESIGN BRANCH 18

BRIDGE NO. 53-2920
POST MILE 30.47

EMPIRE AVE UC (REPLACE)
ABUTMENT DETAILS NO. 12

STRUCTURES DESIGN DETAIL SHEET (ENGLISH) (REV. 09-01-10)

ORIGINAL SCALE IN INCHES FOR REDUCED PLANS 0 1 2 3

UNIT: 3603
PROJECT NUMBER & PHASE: 0700021119-1
CONTRACT NO.: 07-1218W1

DISREGARD PRINTS BEARING EARLIER REVISION DATES

REVISION DATES: 8-26-08 11-26-08 5-26-09

SHEET 22 OF 53

FILE => 53-2920r1-f-a01dt12.dgn

USERNAME => s114926 DATE PLOTTED => 22-MAY-2012 TIME PLOTTED => 07:54

DIST	COUNTY	ROUTE	POST MILES TOTAL PROJECT	SHEET No.	TOTAL SHEETS
07	LA	5	29.4/31.6	946	1931

dEstrada. 01-30-12
REGISTERED CIVIL ENGINEER DATE

5-21-12
PLANS APPROVAL DATE

REGISTERED PROFESSIONAL ENGINEER
Jorge I. Estrada
No. C51473
Exp. 06-30-12
CIVIL
STATE OF CALIFORNIA

The State of California or its officers or agents shall not be responsible for the accuracy or completeness of electronic copies of this plan sheet.

Note:
1. Stage 2 construction shear key may be constructed after stressing of super structure is completed
2. For original of "DETAIL G" see "ABUTMENT 2 LAYOUT" sheet

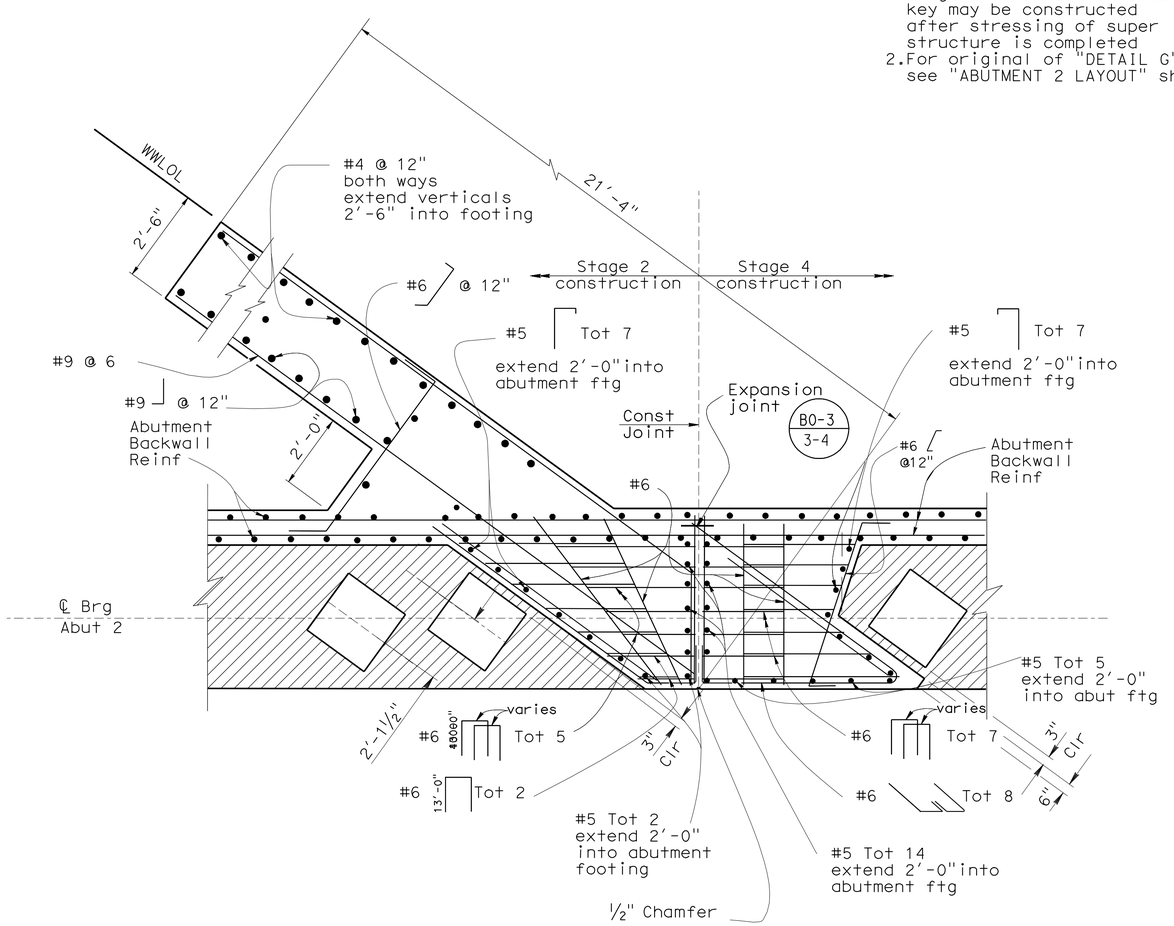

SECTION A-A

½" = 1'

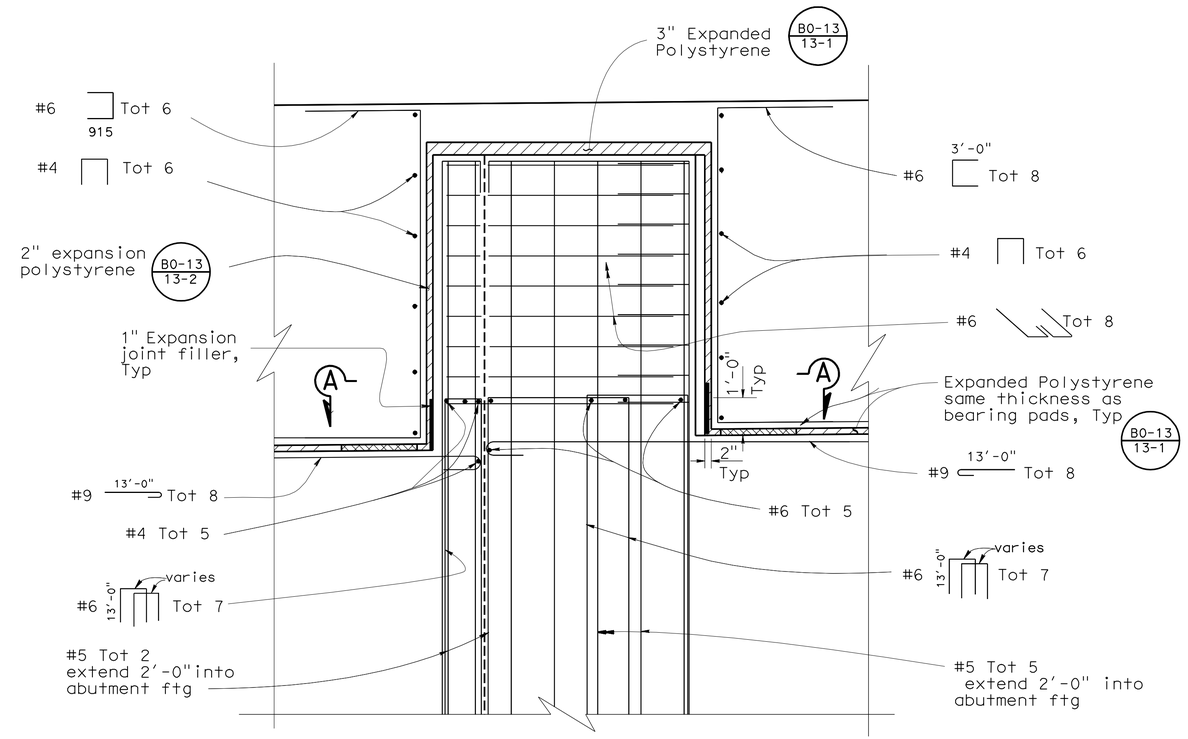

ELEVATION- DETAIL "G"

½" = 1'

DESIGN	BY GERRARD HIGHT	CHECKED CORY COWDEN	
DETAILS	BY M. JOHNSON	CHECKED GERRARD HIGHT	
QUANTITIES	BY M. POPE/M. SCHOTT	CHECKED CORY COWDEN	

STATE OF CALIFORNIA
DEPARTMENT OF TRANSPORTATION

DIVISION OF ENGINEERING SERVICES
STRUCTURE DESIGN
DESIGN BRANCH 18

BRIDGE NO. 53-2920
POST MILE 30.47

EMPIRE AVE UC (REPLACE)
ABUTMENT DETAILS NO. 13

STRUCTURES DESIGN DETAIL SHEET (ENGLISH) (REV. 09-01-10)

ORIGINAL SCALE IN INCHES FOR REDUCED PLANS 0 1 2 3

UNIT: 3603
PROJECT NUMBER & PHASE: 0700021119-1
CONTRACT NO.: 07-1218W1

DISREGARD PRINTS BEARING EARLIER REVISION DATES

REVISION DATES: 7-25-08 5-26-09 5-18-11

SHEET 23 OF 53

FILE => 53-2920r1-f-a01dt13.dgn

USERNAME => s114937 DATE PLOTTED => 22-MAY-2012 TIME PLOTTED => 07:38

DIST	COUNTY	ROUTE	KILOMETER POST TOTAL PROJECT	SHEET No	TOTAL SHEETS
07	LA	5	29.4/31.6	947	1931

REGISTERED CIVIL ENGINEER 01-30-12 DATE

5-21-12
PLANS APPROVAL DATE

REGISTERED PROFESSIONAL ENGINEER Jorge I. Estrada No. C51473 Exp. 06-30-12 CIVIL STATE OF CALIFORNIA

The State of California or its officers or agents shall not be responsible for the accuracy or completeness of electronic copies of this plan sheet.

Notes:

1. Stage 1 construction top of wingwall shear key may be constructed after stressing of superstructure is completed

2. For origin of "DETAILS H" see "ABUTMENT 2 LAYOUT" sheet

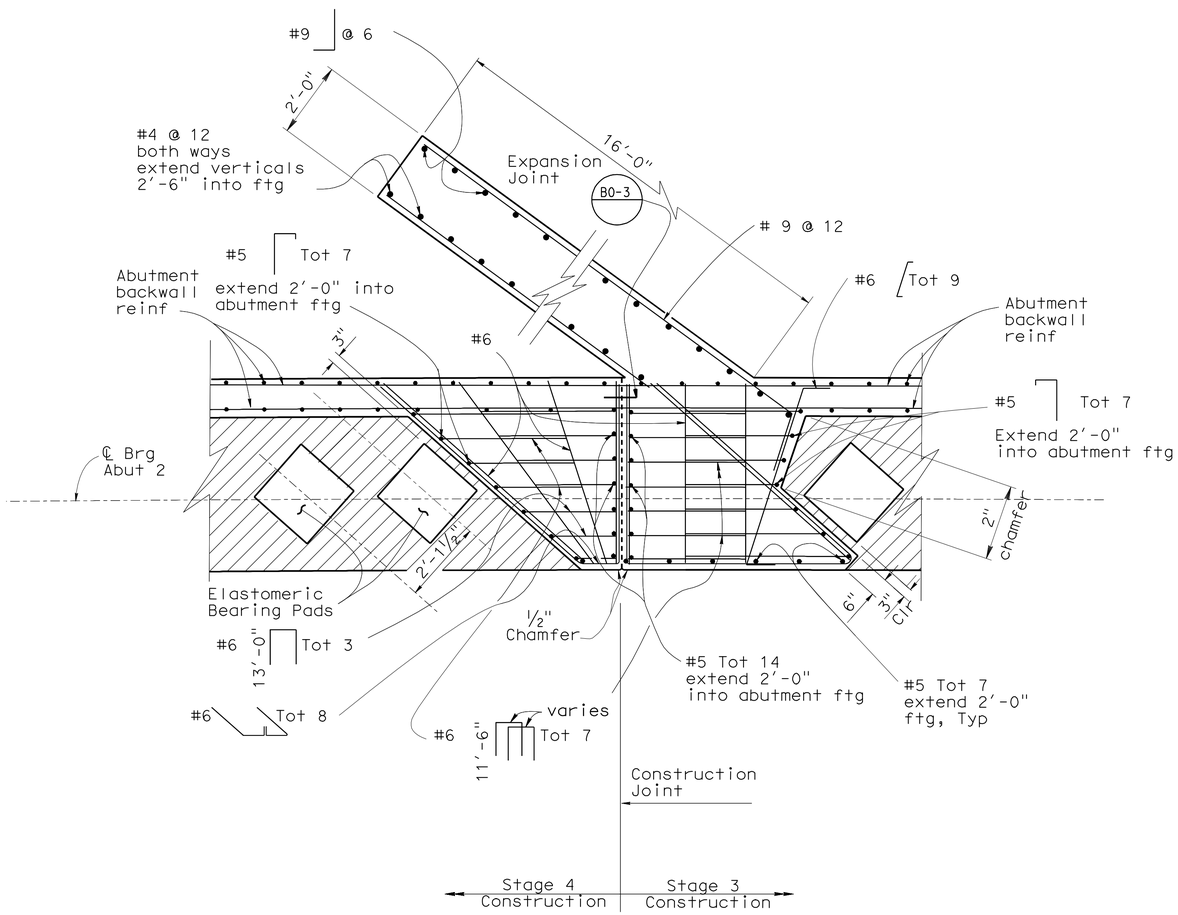

SECTION B-B

½" = 1'

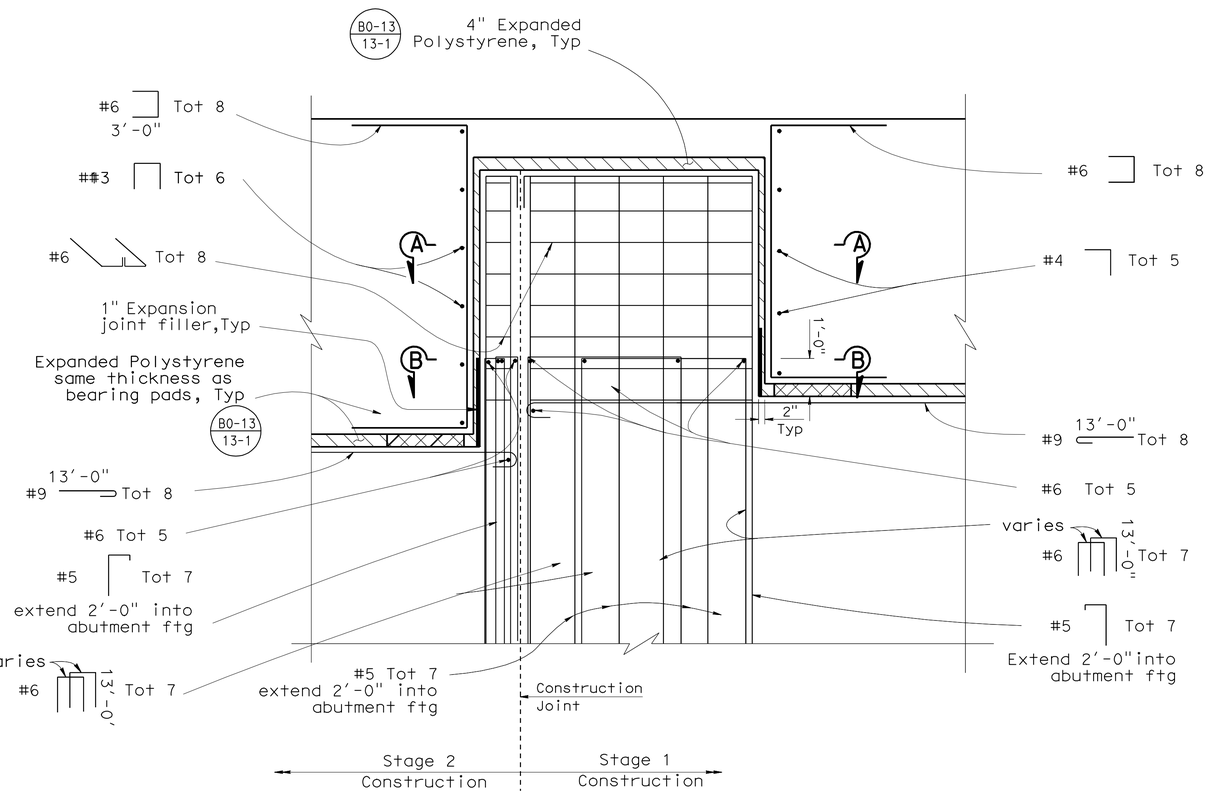

DETAIL "H"

½" = 1'

DESIGN	BY GERRARD HIGHT	CHECKED CORY COWDEN	
DETAILS	BY M. JOHNSON	CHECKED GERRARD HIGHT	
QUANTITIES	BY M. POPE/M. SCHOTT	CHECKED X	

STATE OF CALIFORNIA DEPARTMENT OF TRANSPORTATION

DIVISION OF ENGINEERING SERVICES STRUCTURE DESIGN DESIGN BRANCH 18

BRIDGE NO. 53-2920
POST MILE 30.47

EMPIRE AVE UC (REPLACE)

ABUTMENT DETAILS NO.14

STRUCTURES DESIGN DETAIL SHEET (ENGLISH) (REV. 09-01-10)

ORIGINAL SCALE IN INCHES FOR REDUCED PLANS 0 1 2 3

UNIT: 3603
PROJECT NUMBER & PHASE: 0700021119-1 CONTRACT NO.: 07-1218W1

DISREGARD PRINTS BEARING EARLIER REVISION DATES

REVISION DATES 7-23-08 12-09-08 11-09-10

SHEET 24 OF 53

FILE => 53-2920r1-f-a01dt14.dgn

USERNAME => s114937 DATE PLOTTED => 22-MAY-2012 TIME PLOTTED => 07:47

DIST	COUNTY	ROUTE	POST MILES TOTAL PROJECT	SHEET No.	TOTAL SHEETS
07	LA	5	29.4/31.6	948	1931

JEstrada. 01-30-12
REGISTERED CIVIL ENGINEER DATE

5-21-12
PLANS APPROVAL DATE

REGISTERED PROFESSIONAL ENGINEER
Jorge I. Estrada
No. C51473
Exp. 06-30-12
CIVIL
STATE OF CALIFORNIA

The State of California or its officers or agents shall not be responsible for the accuracy or completeness of electronic copies of this plan sheet.

Note:
For origin of "DETAILS J" see "ABUTMENT 2 LAYOUT"sheet

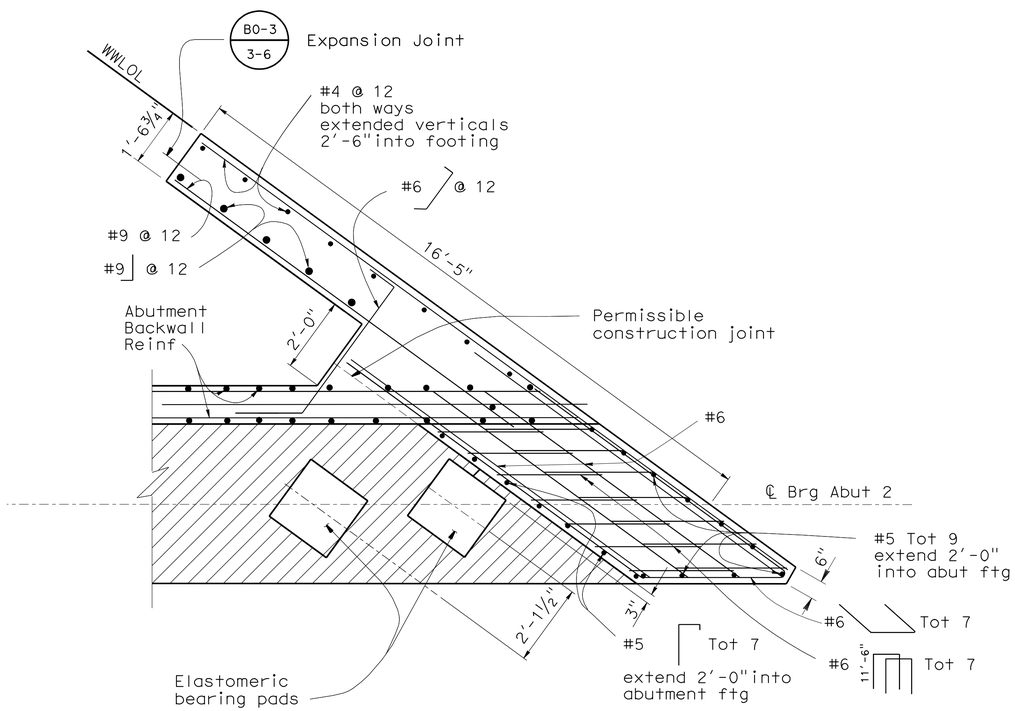

SECTION A-A

½" = 1'

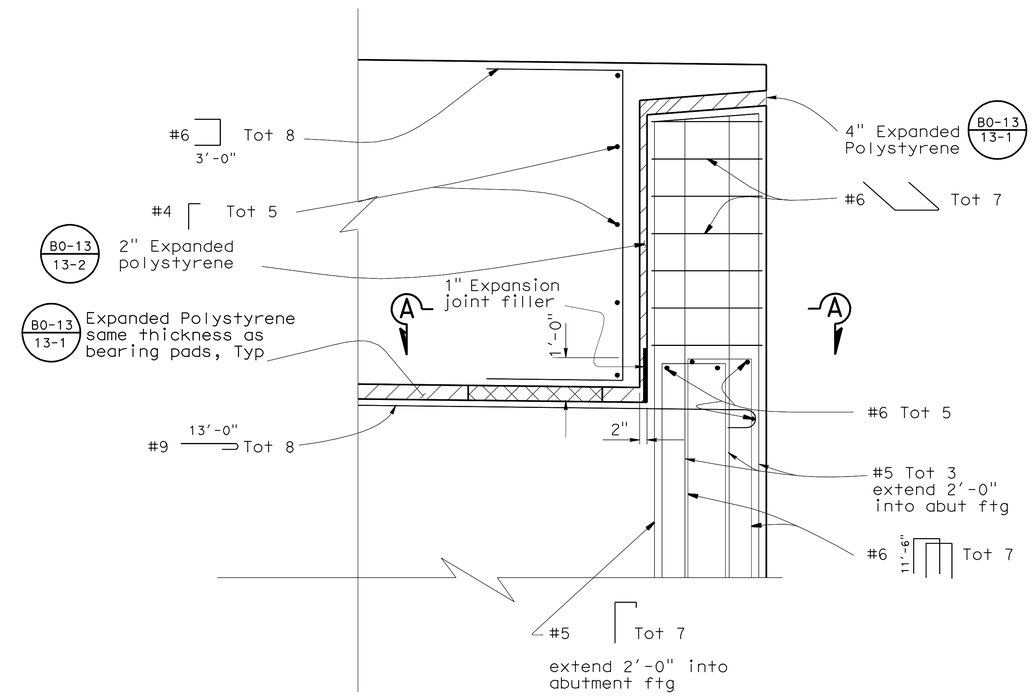

ELEVATION- DETAIL "J"

½" = 1'

DESIGN	BY GERRARD HIGHT	CHECKED CORY COWDEN	
DETAILS	BY M. JOHNSON	CHECKED GERRARD HIIGHT	
QUANTITIES	BY M. POPE/ M. SCHOTT	CHECKED CORY COWDEN	

STATE OF CALIFORNIA
DEPARTMENT OF TRANSPORTATION

DIVISION OF ENGINEERING SERVICES
STRUCTURE DESIGN
DESIGN BRANCH 18

BRIDGE NO. 53-2920
POST MILE 30.47

EMPIRE AVE UC (REPLACE)
ABUTMENT DETAILS NO. 15

STRUCTURES DESIGN DETAIL SHEET (ENGLISH) (REV. 09-01-10)

ORIGINAL SCALE IN INCHES FOR REDUCED PLANS 0 1 2 3

UNIT: 3603
PROJECT NUMBER & PHASE: 0700021119-1
CONTRACT NO.: 07-1218W1

DISREGARD PRINTS BEARING EARLIER REVISION DATES

REVISION DATES: 9-19-08 12-29-08 9-25-09

SHEET 25 OF 53

USERNAME => s114937 DATE PLOTTED => 22-MAY-2012 TIME PLOTTED => 07:39

FILE => 53-2920ri-f-a01dt15.dgn

DIST	COUNTY	ROUTE	POST MILES TOTAL PROJECT	SHEET No.	TOTAL SHEETS
07	LA	5	29.4/31.6	949	1931

REGISTERED CIVIL ENGINEER — DATE 01-30-12

PLANS APPROVAL DATE 5-21-12

REGISTERED PROFESSIONAL ENGINEER — Jorge I. Estrada — No. C51473 — Exp. 06-30-12 — CIVIL — STATE OF CALIFORNIA

The State of California or its officers or agents shall not be responsible for the accuracy or completeness of electronic copies of this plan sheet.

Notes:

1. For origin of "SECTION A-A", see "GIRDER LAYOUT" sheets
2. End diaphragm at Abutment 1 shown, end diaphragm at Abutment 2 similar

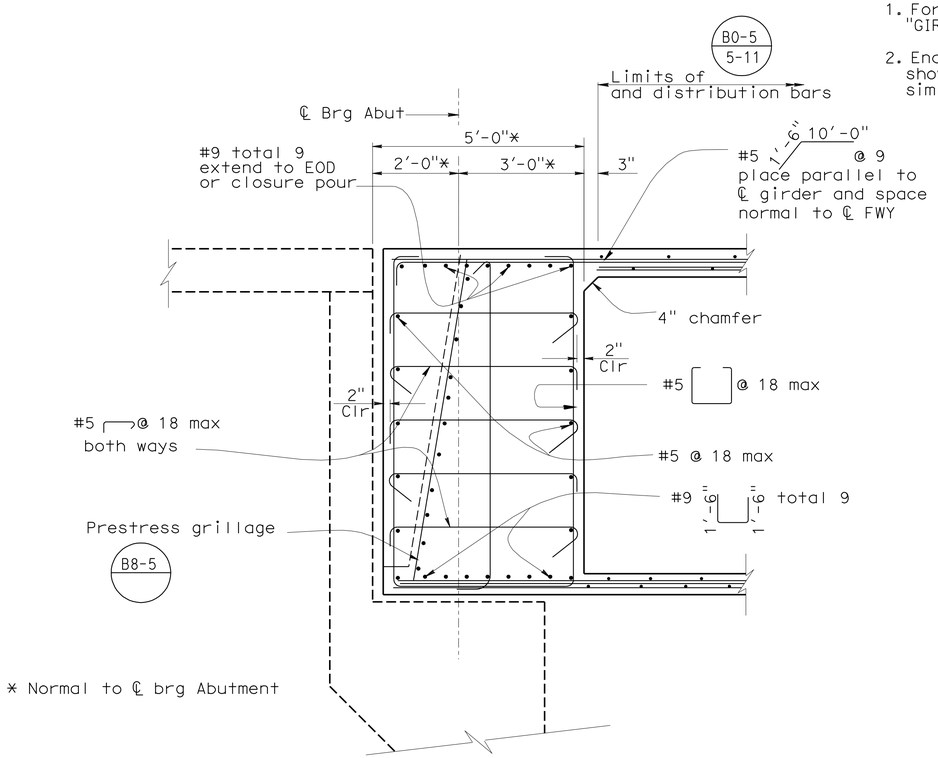

SECTION A-A

½" = 1'

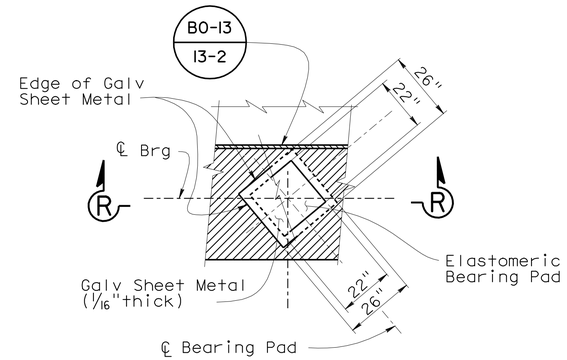

PLAN

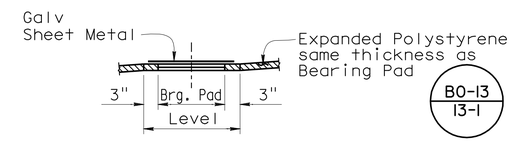

SECTION R-R

BEARING PAD DETAIL

No Scale

Details typical at all bearing pads

NOTES:

1. Coat top of Bearing Pad with silicone grease prior to placing sheet metal.
2. All expanded polystyrene to be removed a minimum of 100mm from all exposed surfaces.

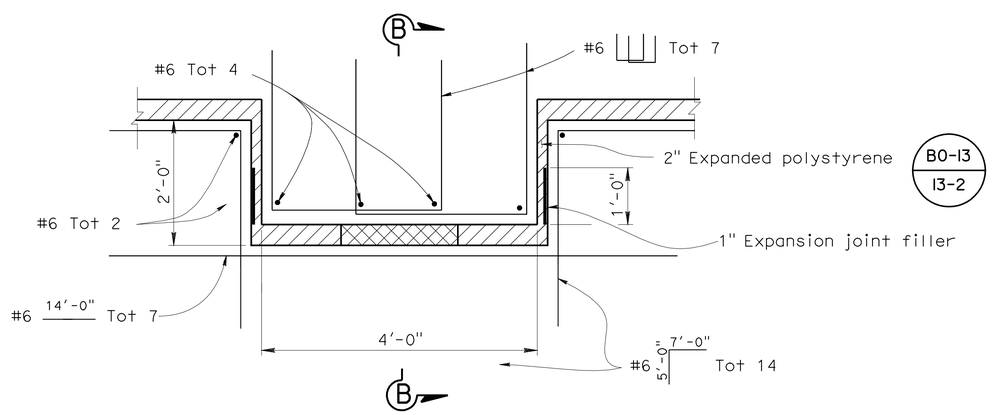

INTERNAL SHEAR KEYS

NO SCALE

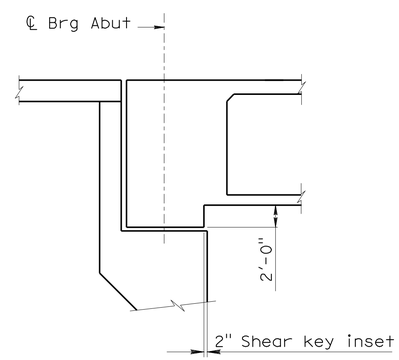

SECTION B-B

NO SCALE

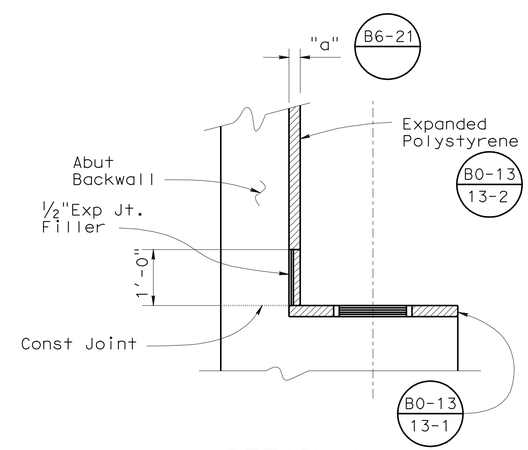

DETAIL A

NO SCALE

DESIGN	BY GERRARD HIGHT	CHECKED CORY COWDEN	
DETAILS	BY FARIDEH RASHEDI	CHECKED GERRARD HIGHT	
QUANTITIES	BY M. POPE/M, SCHOTT	CHECKED CORY COWDEN	

STATE OF CALIFORNIA DEPARTMENT OF TRANSPORTATION

DIVISION OF ENGINEERING SERVICES STRUCTURE DESIGN DESIGN BRANCH 18

BRIDGE NO. 53-2920 — POST MILE 30.47

EMPIRE AVENUE UC

ABUTMENT DETAILS NO. 16

STRUCTURES DESIGN DETAIL SHEET (ENGLISH) (REV. 09-01-10)

ORIGINAL SCALE IN INCHES FOR REDUCED PLANS 0 1 2 3

UNIT: 3603

PROJECT NUMBER & PHASE: 0700021119-1 CONTRACT NO.: 07-1218W1

DISREGARD PRINTS BEARING EARLIER REVISION DATES

REVISION DATES 9-30-08 5-29-09 7-10-12

SHEET 26 OF 53

FILE => 53-2920r1-f-a01dt16.dgn

USERNAME => s124496 DATE PLOTTED => 11-JUL-2012 TIME PLOTTED => 08:14

DIST	COUNTY	ROUTE	POST MILES TOTAL PROJECT	SHEET No.	TOTAL SHEETS
07	LA	5	29.4/31.6	950	1931

dEstrada. 01-30-12
REGISTERED CIVIL ENGINEER DATE

5-21-12
PLANS APPROVAL DATE

REGISTERED PROFESSIONAL ENGINEER Jorge I. Estrada No. C51473 Exp. 06-30-12 CIVIL STATE OF CALIFORNIA

The State of California or its officers or agents shall not be responsible for the accuracy or completeness of electronic copies of this plan sheet.

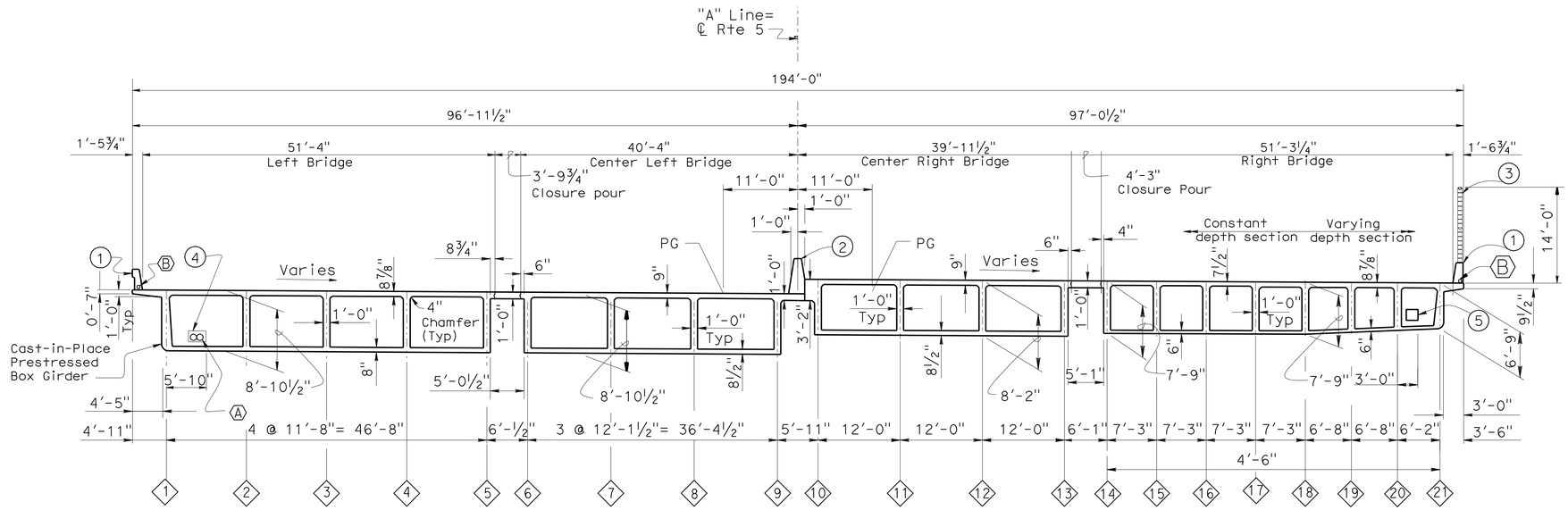

TYPICAL SECTION

1" = 10'

UTILITIES

(A) 2-4" Communication conduits

(B) 1-2"C Lighting conduit

Notes:

1. Concrete Barrier Type 736 (Mod)
2. Concrete Barrier Type 60A (Mod)
3. Masonry Block Soundwall
4. 2'-0" x 1'-6" utility opening
5. 2'-0" x 1'-6" future utility opening

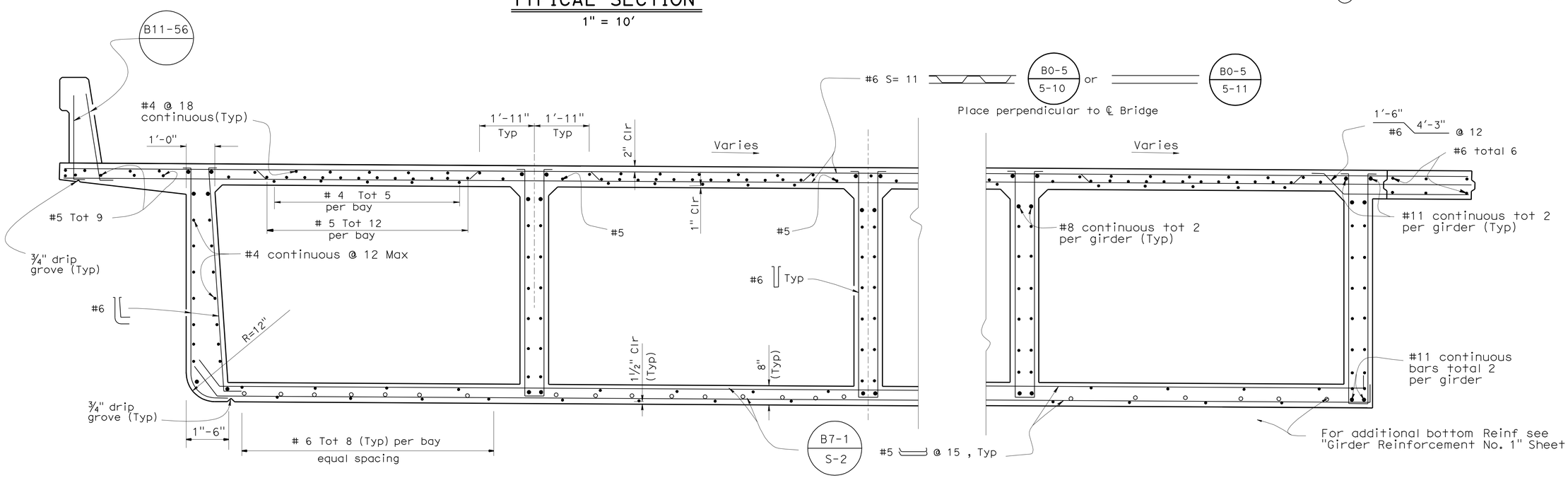

PART TYPICAL SECTION (LEFT BRIDGE)

½" = 1'

B0-5 5-10 | B0-5 5-11 | B7-1 S-2 | B11-56

	BY	CHECKED
DESIGN	GERRARD HIGHT	CORY COWDEN
DETAILS	FARIDEH RASHEDI	GERRARD HIGHT
QUANTITIES	M. POPE/M. SCHOTT	CORY COWDEN

STATE OF CALIFORNIA
DEPARTMENT OF TRANSPORTATION

DIVISION OF ENGINEERING SERVICES
STRUCTURE DESIGN
DESIGN BRANCH 18

BRIDGE NO. 53-2920
POST MILE 30.47

EMPIRE AVE UC (REPLACE)

TYPICAL SECTION NO.1

STRUCTURES DESIGN DETAIL SHEET (ENGLISH) (REV. 09-01-10)

ORIGINAL SCALE IN INCHES FOR REDUCED PLANS 0 1 2 3

UNIT: 3603
PROJECT NUMBER & PHASE: 0700021119-1
CONTRACT NO.: 07-1218W1

DISREGARD PRINTS BEARING EARLIER REVISION DATES

REVISION DATES 1-25-07 12-29-08 8-27-11

SHEET 27 OF 53

FILE => 53-2920ri-k-ts01.dgn

USERNAME => s124436 DATE PLOTTED => 25-MAY-2012 TIME PLOTTED => 11:20

DIST	COUNTY	ROUTE	POST MILES TOTAL PROJECT	SHEET No.	TOTAL SHEETS
07	LA	5	29.4/31.6	951	1931

JEstrada. 01-30-12
REGISTERED CIVIL ENGINEER DATE

5-21-12
PLANS APPROVAL DATE

REGISTERED PROFESSIONAL ENGINEER
Jorge I. Estrada
No. C51473
Exp. 06-30-12
CIVIL
STATE OF CALIFORNIA

The State of California or its officers or agents shall not be responsible for the accuracy or completeness of electronic copies of this plan sheet.

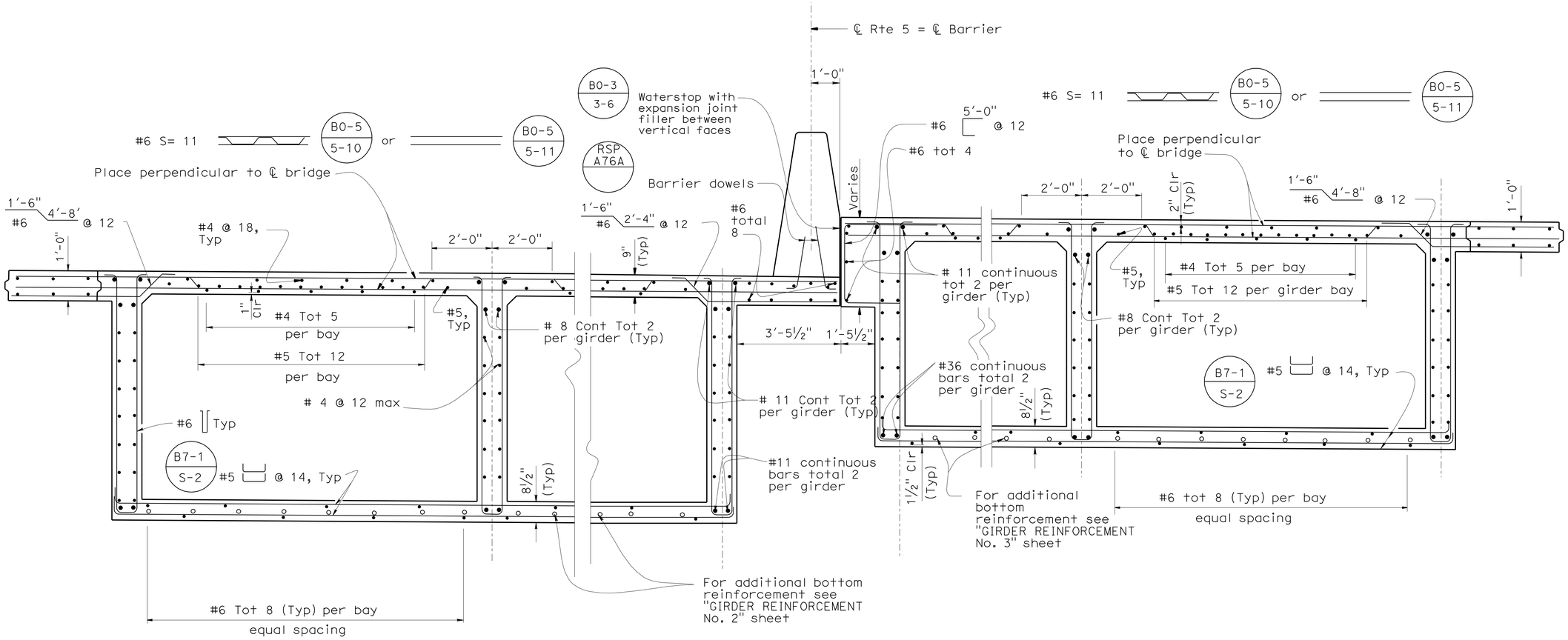

PART TYPICAL SECTION (CENTER LEFT BRIDGE) B0-5 5-10 B0-5 5-11 B7-1 S-2 PART TYPICAL SECTION (CENTER RIGHT BRIDGE)

½" = 1' ½" = 1'

DESIGN	BY GERRARD HIGHT	CHECKED CORY COWDEN	
DETAILS	BY FARIDEH RASHEDI	CHECKED GERRARD HIGHT	
QUANTITIES	BY M. POPE/M. SCHOTT	CHECKED CORY COWDEN	

STATE OF CALIFORNIA
DEPARTMENT OF TRANSPORTATION

DIVISION OF ENGINEERING SERVICES
STRUCTURE DESIGN
DESIGN BRANCH 18

BRIDGE NO. 53-2920
POST MILE 30.47

EMPIRE AVE UC (REPLACE)
TYPICAL SECTION NO. 2

STRUCTURES DESIGN DETAIL SHEET (ENGLISH) (REV. 09-01-10)

ORIGINAL SCALE IN INCHES FOR REDUCED PLANS 0 1 2 3

UNIT: 3603
PROJECT NUMBER & PHASE: 0700021119-1 CONTRACT NO.: 07-1218W1

DISREGARD PRINTS BEARING EARLIER REVISION DATES

REVISION DATES 7-23-07 1-28-08 5-27-11

SHEET 28 OF 53

FILE => 53-2920r1-k-ts02.dgn

USERNAME => s114937 DATE PLOTTED => 22-MAY-2012 TIME PLOTTED => 07:39

DIST	COUNTY	ROUTE	POST MILES TOTAL PROJECT	SHEET No.	TOTAL SHEETS
07	LA	5	29.4/31.6	952	1931

REGISTERED CIVIL ENGINEER 01-30-12 DATE

5-21-12
PLANS APPROVAL DATE

REGISTERED PROFESSIONAL ENGINEER Jorge I. Estrada No. C51473 Exp. 06-30-12 CIVIL STATE OF CALIFORNIA

The State of California or its officers or agents shall not be responsible for the accuracy or completeness of electronic copies of this plan sheet.

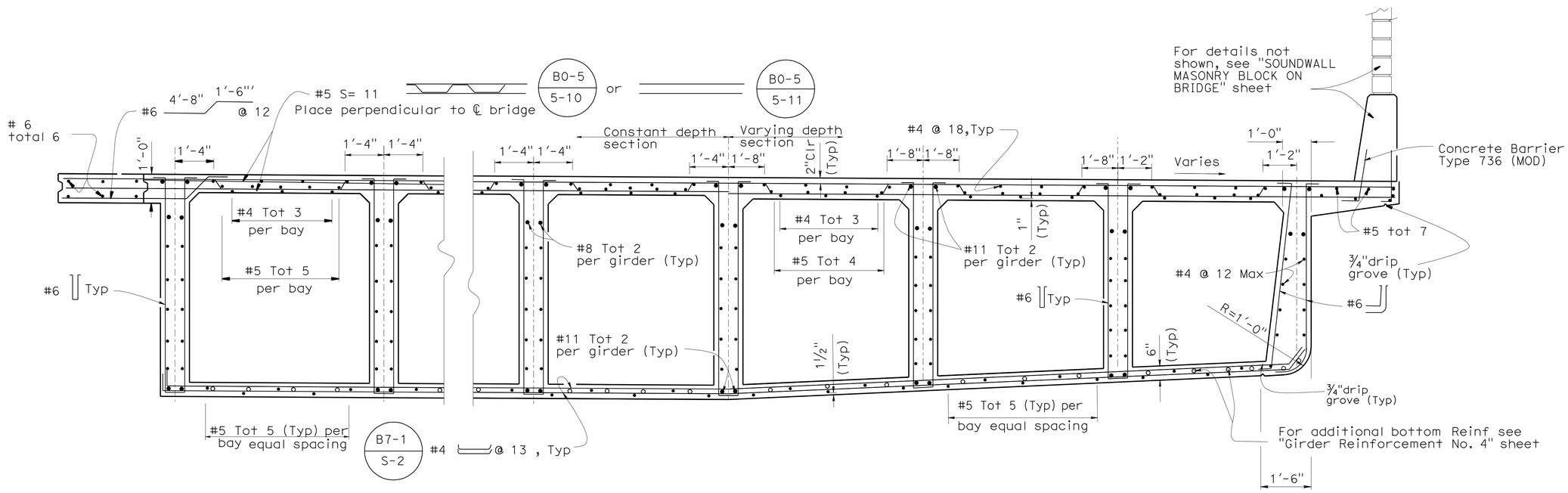

PART TYPICAL SECTION (RIGHT BRIDGE)

1/2" = 1'

B0-5 5-10 | B0-5 5-11 | B7-1 S-2 | B11-56

DESIGN	BY GERRARD HIGHT	CHECKED CORY COWDEN	
DETAILS	BY FARIDEH RASHEDI	CHECKED GERRARD HIGHT	
QUANTITIES	BY M. POPE/M. SCHOTT	CHECKED CORY COWDEN	

STATE OF CALIFORNIA
DEPARTMENT OF TRANSPORTATION

DIVISION OF ENGINEERING SERVICES
STRUCTURE DESIGN
DESIGN BRANCH 18

BRIDGE NO. 53-2920
POST MILE 30.47

EMPIRE AVE UC (REPLACE)
TYPICAL SECTION NO.3

STRUCTURES DESIGN DETAIL SHEET (ENGLISH) (REV. 09-01-10)

ORIGINAL SCALE IN INCHES FOR REDUCED PLANS 0 1 2 3

UNIT: 3603
PROJECT NUMBER & PHASE: 0700021119-1
CONTRACT NO.: 07-1218W1

DISREGARD PRINTS BEARING EARLIER REVISION DATES

REVISION DATES 1-25-07 1-28-08 11-19-10

SHEET 29 OF 53

FILE => 53-2920rl-k-ts03.dgn

USERNAME => s114937 DATE PLOTTED => 22-MAY-2012 TIME PLOTTED => 07:39

DIST	COUNTY	ROUTE	POST MILES TOTAL PROJECT	SHEET No.	TOTAL SHEETS
07	LA	5	29.4/31.6	953	1931

REGISTERED CIVIL ENGINEER — DATE 01-30-12

5-21-12
PLANS APPROVAL DATE

REGISTERED PROFESSIONAL ENGINEER — Jorge I. Estrada — No. C51473 — Exp. 06-30-12 — CIVIL — STATE OF CALIFORNIA

The State of California or its officers or agents shall not be responsible for the accuracy or completeness of electronic copies of this plan sheet.

Note:
For "SECTION A-A" see "ABUTMENT DETAILS No.16" sheet

LEGEND

- Deck drain type D-3
- Girders stem width in inches
- Indicates galvanized deck drain pipe and direction of flow

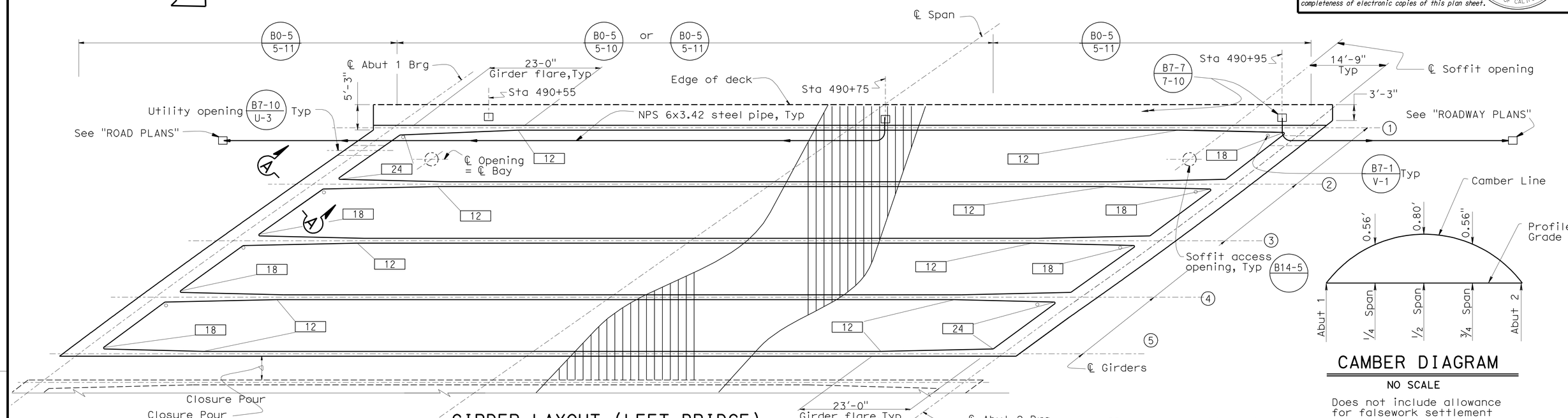

GIRDER LAYOUT (LEFT BRIDGE)

1: 125

CAMBER DIAGRAM

NO SCALE

Does not include allowance for falsework settlement

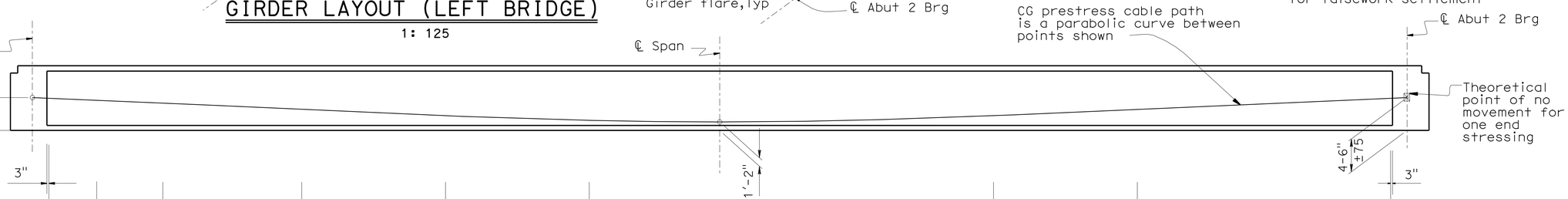

Girder 1	# 6 U stirrup spacing	20@4 / 24@4½ / 42 @ 5½ / 29 @ 8 / 20 @ 12 / @ 18 / 20 @ 12 / 47 @ 9
Girder 2	# 6 U stirrup spacing	15@5 / 20 @ 6 / 33 @ 7 / 23 @ 10 / 15 @ 15 / @ 18 / 30 @ 15 / 20 @ 12 / 20 @ 10
Girder 3	# 6 U stirrup spacing	22 @ 9 / 20 @ 12 / 16 @ 15 / @ 18 / 16 @ 15 / 20 @ 12 / 22 @ 9
Girder 4	# 6 U stirrup spacing	20 @ 10 / 20 @ 12 / 30 @ 15 / @ 18 / 15 @ 15 / 23 @ 10 / 33 @ 7 / 20 @ 6" / 15@5
Girder 5	# 6 U stirrup spacing	47 @ 9 / 20 @ 12 / @ 18 / 20 @ 12 / 29 @ 8 / 42 @ 5½ / 24@4½ / 20@4

LONGITUDINAL SECTION (LEFT BRIDGE)

NO SCALE

	BY	CHECKED
DESIGN	GERRARD HIGHT	CORY COWDEN
DETAILS	FARIDEH RASHEDI	GERRARD HIGHT
QUANTITIES	CORY COWDEN	M. POPE/M, SCHOTT

STATE OF CALIFORNIA
DEPARTMENT OF TRANSPORTATION

DIVISION OF ENGINEERING SERVICES
STRUCTURE DESIGN
DESIGN BRANCH 18

BRIDGE NO. 53-2920
POST MILE 30.47

EMPIRE AVE UC (REPLACE)
GIRDER LAYOUT NO.1

STRUCTURES DESIGN DETAIL SHEET (ENGLISH) (REV. 09-01-10)

ORIGINAL SCALE IN INCHES FOR REDUCED PLANS 0 1 2 3

UNIT: 3603
PROJECT NUMBER & PHASE: 0700021119-1
CONTRACT NO.: 07-1218W1

DISREGARD PRINTS BEARING EARLIER REVISION DATES

REVISION DATES: 7-23-07 7-28-08 12-29-10

SHEET 30 OF 53

FILE => 53-2920ri-l-g_lo01.dgn

USERNAME => s114937 DATE PLOTTED => 22-MAY-2012 TIME PLOTTED => 07:39

DIST	COUNTY	ROUTE	POST MILES TOTAL PROJECT	SHEET No.	TOTAL SHEETS
07	LA	5	29.4/31.6	954	1931

REGISTERED CIVIL ENGINEER — DATE 01-30-12

5-21-12
PLANS APPROVAL DATE

REGISTERED PROFESSIONAL ENGINEER — Jorge I. Estrada — No. C51473 — Exp. 06-30-12 — CIVIL — STATE OF CALIFORNIA

The State of California or its officers or agents shall not be responsible for the accuracy or completeness of electronic copies of this plan sheet.

LEGEND

Girder stem width in inches

Note:
For "SECTION A-A" see "ABUTMENT DETAILS No.16" sheet

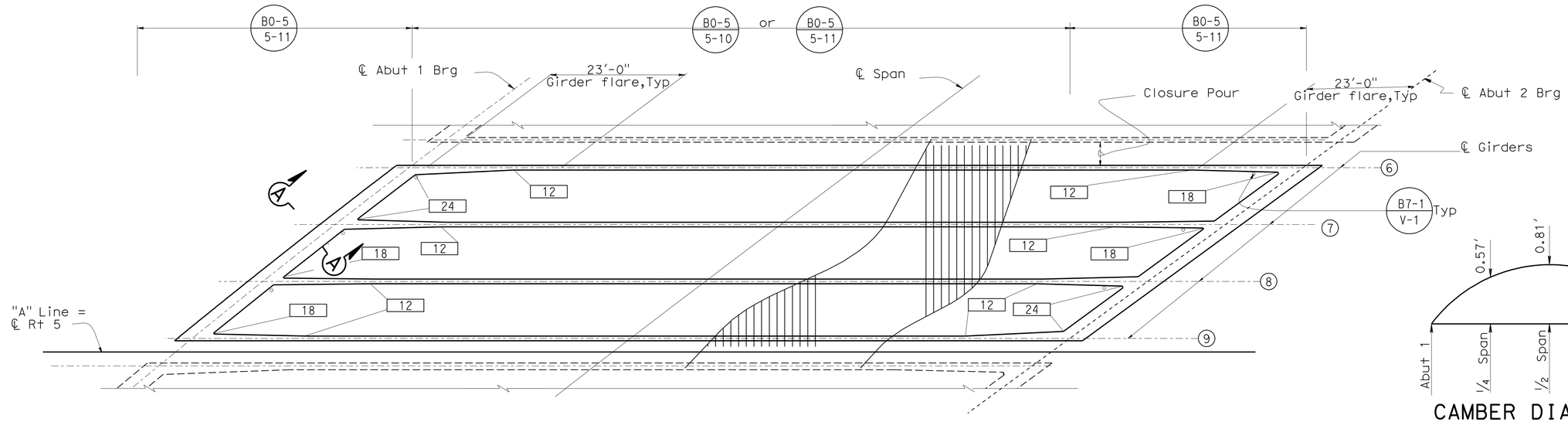

GIRDER LAYOUT(CENTER LEFT BRIDGE)

1": 10'

CAMBER DIAGRAM

NO SCALE

Does not include allowance for falsework settlement

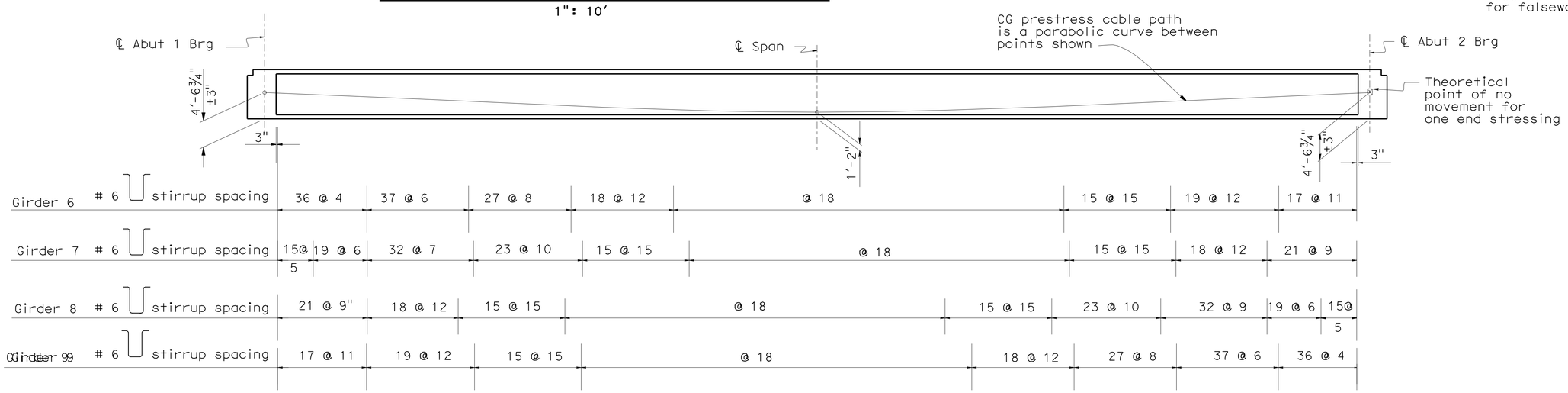

LONGITUDINAL SECTION (CENTER LEFT BRIDGE)

NO SCALE

	BY	CHECKED
DESIGN	GERRARD HIGHT	CORY COWDEN
DETAILS	FARIDEH RASHEDI	GERRARD HIGHT
QUANTITIES	M. POPE/M. SCHOTT	CORY COWDEN

STATE OF CALIFORNIA
DEPARTMENT OF TRANSPORTATION

DIVISION OF ENGINEERING SERVICES
STRUCTURE DESIGN
DESIGN BRANCH 18

BRIDGE NO. 53-2920
POST MILE 30.47

EMPIRE AVE UC (REPLACE)
GIRDER LAYOUT NO.2

STRUCTURES DESIGN DETAIL SHEET (ENGLISH) (REV. 09-01-10)

ORIGINAL SCALE IN INCHES FOR REDUCED PLANS 0 1 2 3

UNIT: 3603
PROJECT NUMBER & PHASE: 0700021119-1
CONTRACT NO.: 07-1218W1

DISREGARD PRINTS BEARING EARLIER REVISION DATES

REVISION DATES: 1-28-07 1-28-08 5-27-11

SHEET 31 OF 53

FILE => 53-2920r1-1-g_1o02.dgn

USERNAME => s114937 DATE PLOTTED => 22-MAY-2012 TIME PLOTTED => 07:40

DIST	COUNTY	ROUTE	POST MILES TOTAL PROJECT	SHEET No.	TOTAL SHEETS
07	LA	5	29.4/31.6	955	1931

J.Estrada. 01-30-12
REGISTERED CIVIL ENGINEER DATE

5-21-12
PLANS APPROVAL DATE

REGISTERED PROFESSIONAL ENGINEER
Jorge I. Estrada
No. C51473
Exp. 06-30-12
CIVIL
STATE OF CALIFORNIA

The State of California or its officers or agents shall not be responsible for the accuracy or completeness of electronic copies of this plan sheet.

LEGEND

Girder stem width in inches

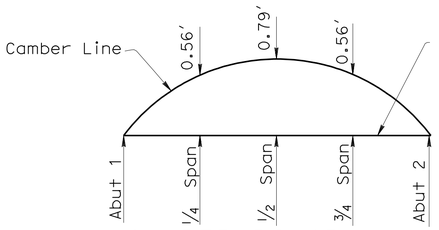

CAMBER DIAGRAM
NO SCALE

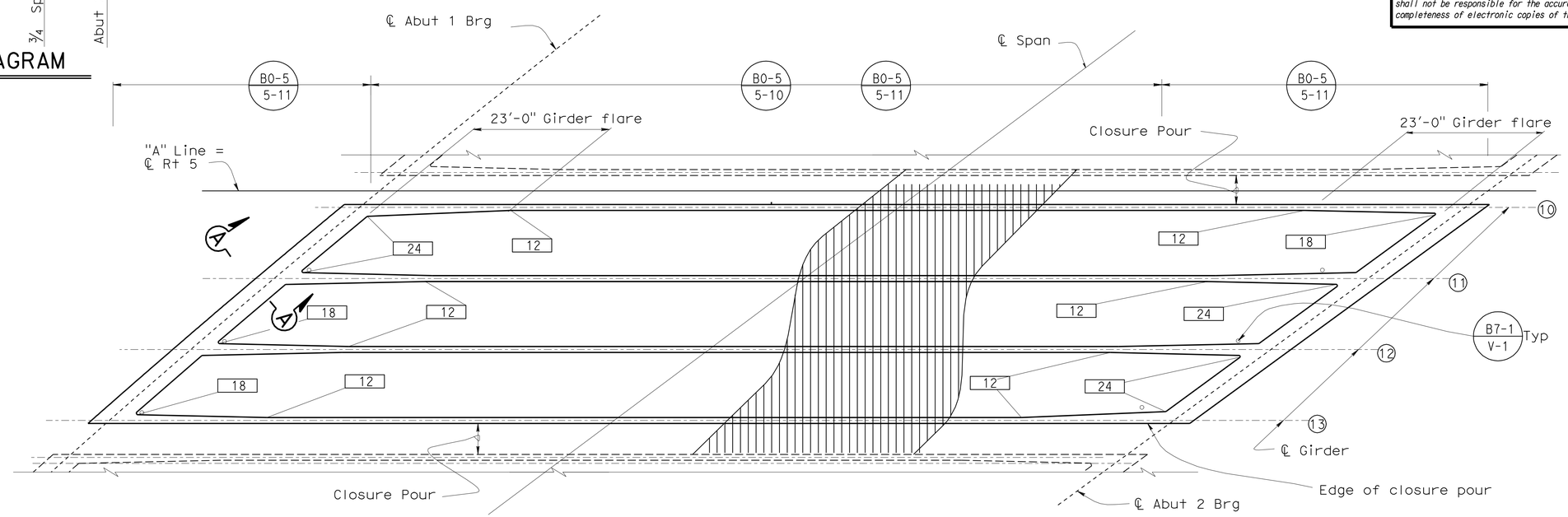

GIRDER LAYOUT (CENTER RIGHT BRIDGE)

1": 10'

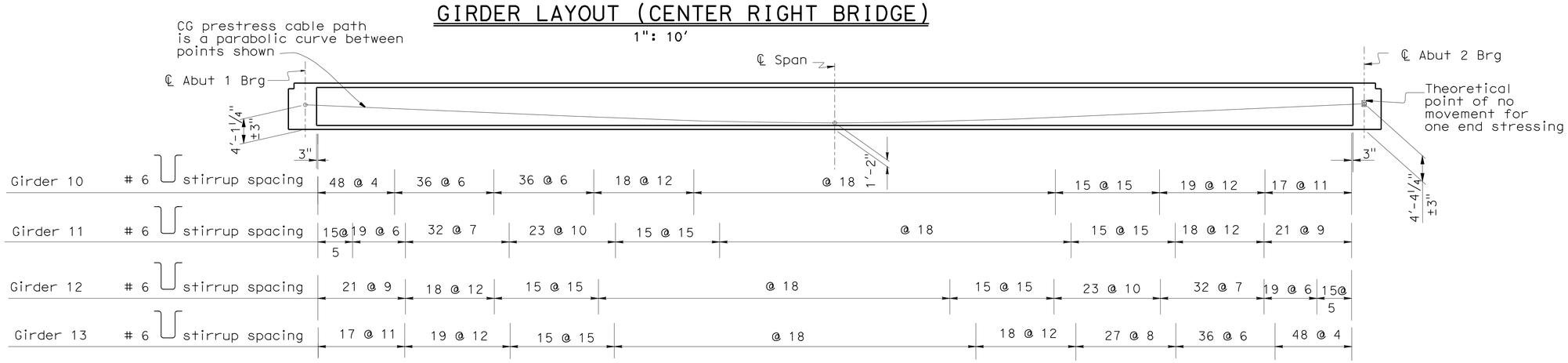

LONGITUDINAL SECTION (CENTER RIGHT BRIDGE)

NO SCALE

	BY	CHECKED
DESIGN	XGERRARD HIGHT	CORY COWDEN
DETAILS	FARIDEH RASHEDI	CORY COWDEN
QUANTITIES	CORY COWDEN	MIKE POPE

STATE OF CALIFORNIA
DEPARTMENT OF TRANSPORTATION

DIVISION OF ENGINEERING SERVICES
STRUCTURE DESIGN
DESIGN BRANCH 18

BRIDGE NO. 53-2920
POST MILE 30.47

EMPIRE AVE UC (REPLACE)
GIRDER LAYOUT NO. 3

STRUCTURES DESIGN DETAIL SHEET (ENGLISH) (REV. 09-01-10)

ORIGINAL SCALE IN INCHES FOR REDUCED PLANS 0 1 2 3

UNIT: 3603
PROJECT NUMBER & PHASE: 0700021119-1
CONTRACT NO.: 07-1218W1

DISREGARD PRINTS BEARING EARLIER REVISION DATES

REVISION DATES: 1-28-07 1-28-08

SHEET 32 OF 53

FILE => 53-2920r1-1-g_lo03.dgn

USERNAME => s114937 DATE PLOTTED => 22-MAY-2012 TIME PLOTTED => 07:40

DIST	COUNTY	ROUTE	POST MILES TOTAL PROJECT	SHEET No.	TOTAL SHEETS
07	LA	5	29.4/31.6	956	1931

REGISTERED CIVIL ENGINEER — DATE 01-30-12

5-21-12
PLANS APPROVAL DATE

REGISTERED PROFESSIONAL ENGINEER — Jorge I. Estrada — No. C51473 — Exp. 06-30-12 — CIVIL — STATE OF CALIFORNIA

The State of California or its officers or agents shall not be responsible for the accuracy or completeness of electronic copies of this plan sheet.

LEGEND

Girder stem width in inches

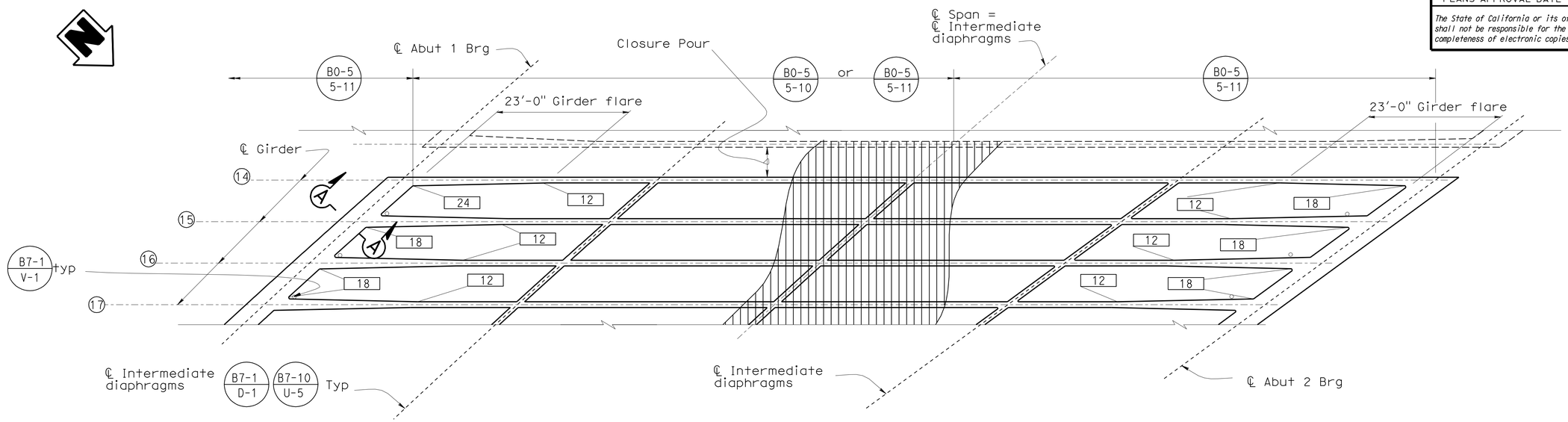

GIRDER LAYOUT (RIGHT BRIDGE GIRDERS 14-17)

1": 10'

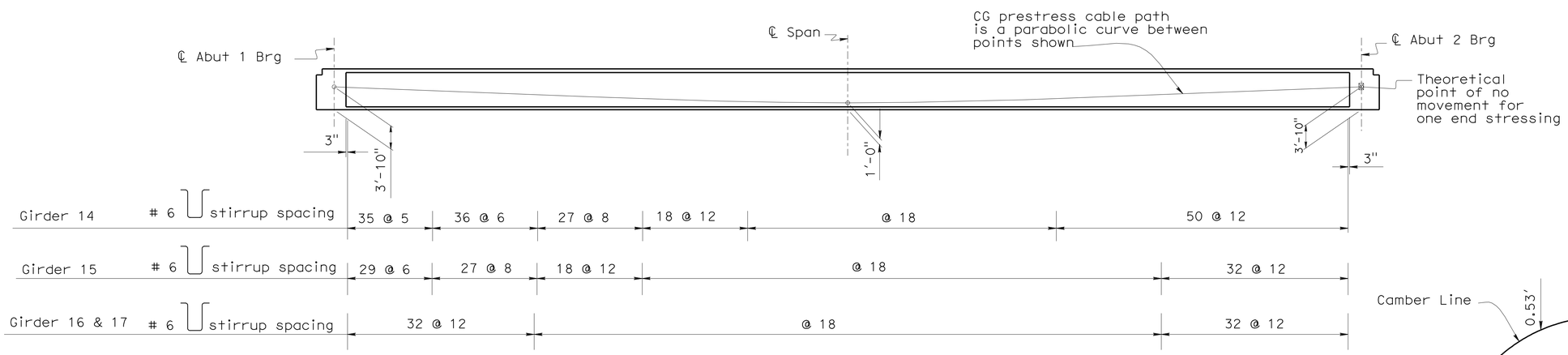

LONGITUDINAL SECTION (RIGHT BRIDGE GIRDERS 14-17)

NO SCALE

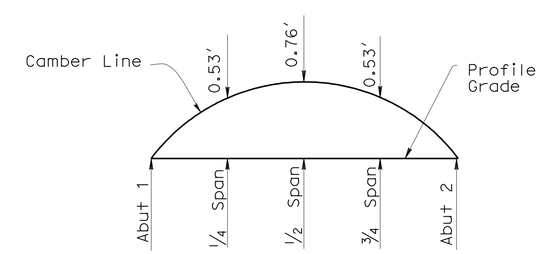

Does not include allowance for falsework settlement

CAMBER DIAGRAM

NO SCALE

DESIGN	BY GERRARD HIGHT	CHECKED CORY COWDEN	
DETAILS	BY FARIDEH RASHEDI	CHECKED GERRARD HIGHT	
QUANTITIES	BY M. POPE/M. SCHOTT	CHECKED CORY COWDEN	

STATE OF CALIFORNIA
DEPARTMENT OF TRANSPORTATION

DIVISION OF ENGINEERING SERVICES
STRUCTURE DESIGN
DESIGN BRANCH 18

BRIDGE NO. 53-2920
POST MILE 30.47

EMPIRE AVE UC (REPLACE)
GIRDER LAYOUT NO. 4

STRUCTURES DESIGN DETAIL SHEET (ENGLISH) (REV. 09-01-10)

ORIGINAL SCALE IN INCHES FOR REDUCED PLANS 0 1 2 3

UNIT: 3603
PROJECT NUMBER & PHASE: 0700021119-1
CONTRACT NO.: 07-1218W1

DISREGARD PRINTS BEARING EARLIER REVISION DATES

REVISION DATES: 7-25-07 9-28-11

SHEET 33 OF 53

FILE => 53-2920ri-1-g_io04.dgn

USERNAME => s114937 DATE PLOTTED => 22-MAY-2012 TIME PLOTTED => 07:40

DIST	COUNTY	ROUTE	POST MILES TOTAL PROJECT	SHEET No.	TOTAL SHEETS
07	LA	5	29.4/31.6	957	1931

REGISTERED CIVIL ENGINEER 01-30-12 DATE

5-21-12
PLANS APPROVAL DATE

REGISTERED PROFESSIONAL ENGINEER Jorge I. Estrada No. C51473 Exp. 06-30-12 CIVIL STATE OF CALIFORNIA

The State of California or its officers or agents shall not be responsible for the accuracy or completeness of electronic copies of this plan sheet.

LEGEND

- Deck drain type D-3
- Girder stem width in inches
- Indicates galvanized deck drain pipe and direction of flow

Note:
For "SECTION A-A" see "ABUTMENT DETAILS No.16" sheet

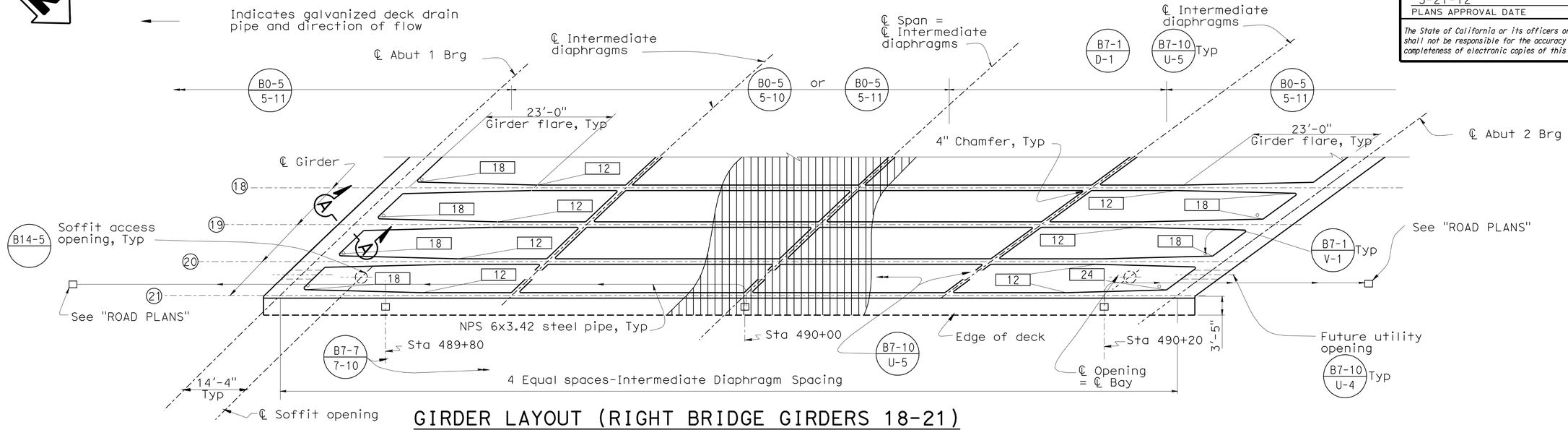

GIRDER LAYOUT (RIGHT BRIDGE GIRDERS 18-21)

1": 10'

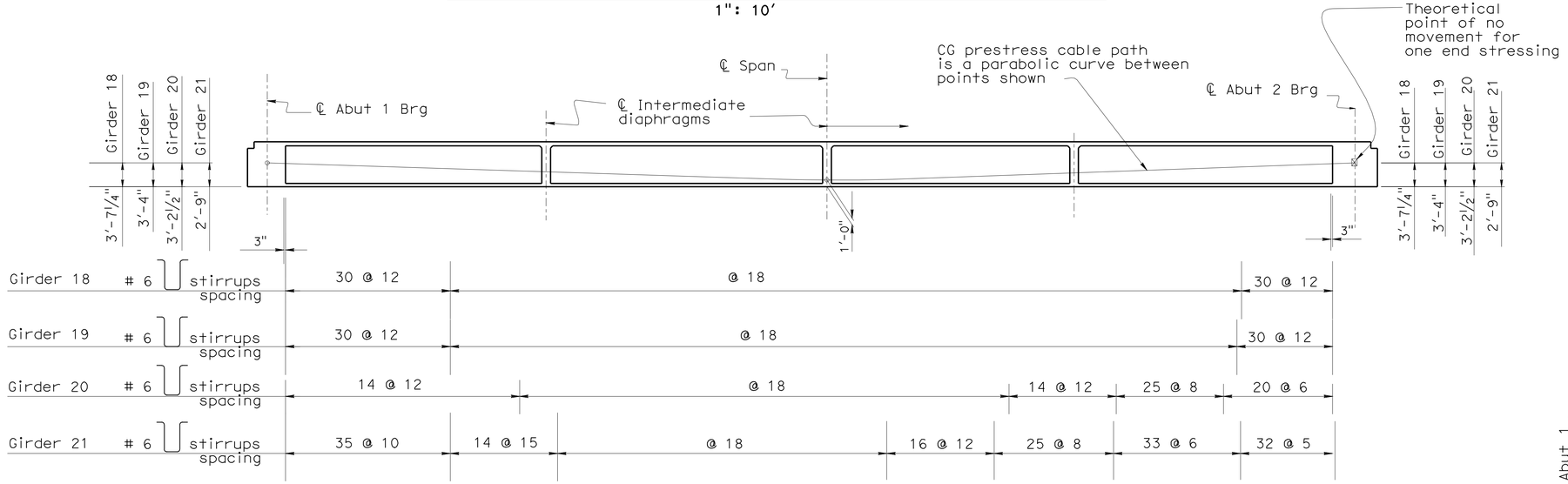

LONGITUDINAL SECTION (RIGHT BRIDGE GIRDERS 18-21)

NO SCALE

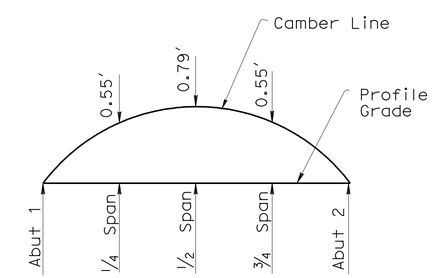

CAMBER DIAGRAM

NO SCALE
Does not include allowance for falsework settlement

DESIGN	BY GERRARD HIGHT	CHECKED CORY COWDEN	
DETAILS	BY FARIDEH RASHEDI	CHECKED GERRARD HIGHT	
QUANTITIES	BY M. POPE/M. SCHOTT	CHECKED CORY COWDEN	

STATE OF CALIFORNIA
DEPARTMENT OF TRANSPORTATION

DIVISION OF ENGINEERING SERVICES
STRUCTURE DESIGN
DESIGN BRANCH 18

BRIDGE NO. 53-2920
POST MILE 30.47

EMPIRE AVE UC (REPLACE)
GIRDER LAYOUT NO. 5

STRUCTURES DESIGN DETAIL SHEET (ENGLISH) (REV. 09-01-10)

ORIGINAL SCALE IN INCHES FOR REDUCED PLANS 0 1 2 3

UNIT: 3603
PROJECT NUMBER & PHASE: 0700021119-1
CONTRACT NO.: 07-1218W1

DISREGARD PRINTS BEARING EARLIER REVISION DATES

REVISION DATES 1-25-07 1-28-08 5-28-11

SHEET 34 OF 53

FILE => 53-2920r1-1-g_1o05.dgn

USERNAME => s128843 DATE PLOTTED => 11-JUL-2012 TIME PLOTTED => 10:05

DIST	COUNTY	ROUTE	POST MILES TOTAL PROJECT	SHEET No.	TOTAL SHEETS
07	LA	5	29.4/31.6	958	1931

JEstrada. 01-30-12
REGISTERED CIVIL ENGINEER DATE

5-21-12
PLANS APPROVAL DATE

REGISTERED PROFESSIONAL ENGINEER
Jorge I. Estrada
No. C51473
Exp. 06-30-12
CIVIL
STATE OF CALIFORNIA

The State of California or its officers or agents shall not be responsible for the accuracy or completeness of electronic copies of this plan sheet.

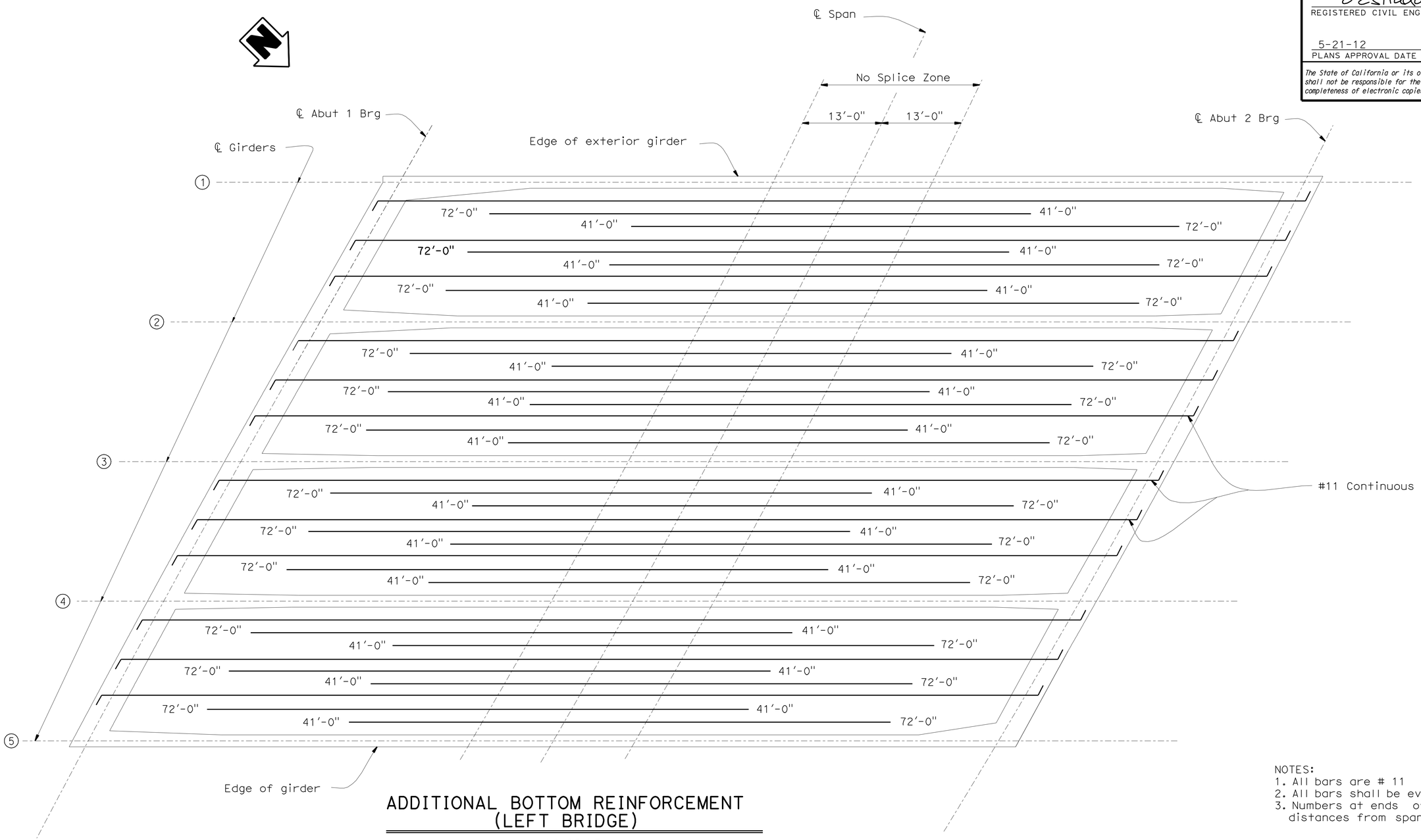

ADDITIONAL BOTTOM REINFORCEMENT (LEFT BRIDGE)

NO SCALE

NOTES:
1. All bars are # 11
2. All bars shall be evenly spaced
3. Numbers at ends of bars represent distances from span centerline

DESIGN	BY GERRARD HIGHT	CHECKED CORY COWDEN	
DETAILS	BY FARIDEH RASHEDI	CHECKED GERRARD HIGHT	
QUANTITIES	BY CORY COWDEN	CHECKED MICHAEL POPE	

STATE OF CALIFORNIA
DEPARTMENT OF TRANSPORTATION

DIVISION OF ENGINEERING SERVICES
STRUCTURE DESIGN
DESIGN BRANCH 18

BRIDGE NO. 53-2920
POST MILE 30.47

EMPIRE AVE UC (REPLACE)
GIRDER REINFORCEMENT NO.1

STRUCTURES DESIGN DETAIL SHEET (ENGLISH) (REV. 09-01-10)

ORIGINAL SCALE IN INCHES FOR REDUCED PLANS 0 1 2 3

UNIT: 3603
PROJECT NUMBER & PHASE: 0700021119-1
CONTRACT NO.: 07-1218W1

DISREGARD PRINTS BEARING EARLIER REVISION DATES

REVISION DATES 1-23-07 1-28-08 5-28-09

SHEET 35 OF 53

FILE => 53-2920ri-o-gir_rf01.dgn

USERNAME => s119571 DATE PLOTTED => 22-MAY-2012 TIME PLOTTED => 08:25

DIST	COUNTY	ROUTE	POST MILES TOTAL PROJECT	SHEET No.	TOTAL SHEETS
07	LA	5	29.4/31.6	959	1931

JEstrada. 01-30-12
REGISTERED CIVIL ENGINEER DATE

5-21-12
PLANS APPROVAL DATE

REGISTERED PROFESSIONAL ENGINEER
Jorge I. Estrada
No. C51473
Exp. 06-30-12
CIVIL
STATE OF CALIFORNIA

The State of California or its officers or agents shall not be responsible for the accuracy or completeness of electronic copies of this plan sheet.

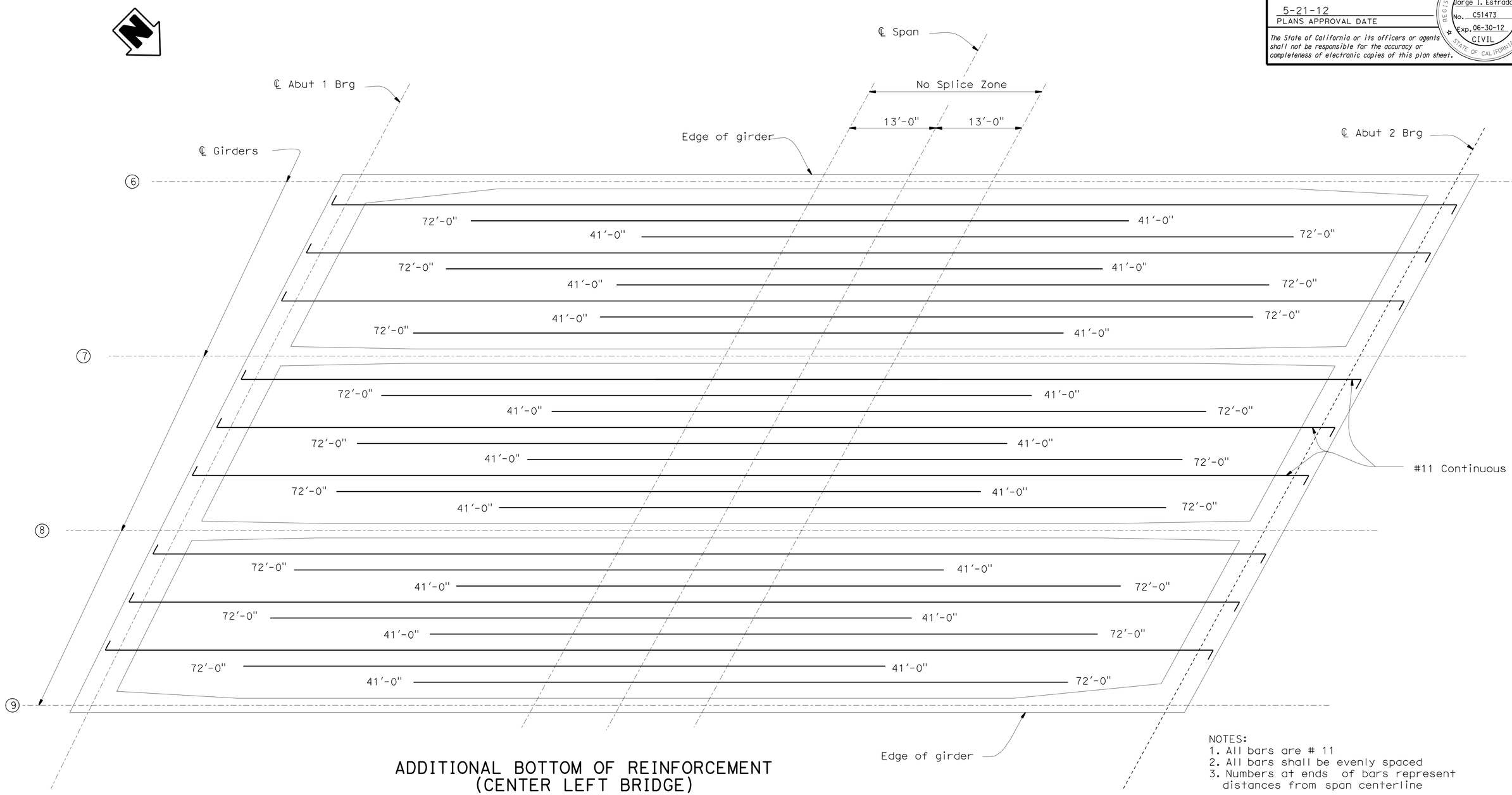

NOTES:
1. All bars are # 11
2. All bars shall be evenly spaced
3. Numbers at ends of bars represent distances from span centerline

ADDITIONAL BOTTOM OF REINFORCEMENT (CENTER LEFT BRIDGE)

NO SCALE

	BY	CHECKED
DESIGN	GERRARD HIGHT	CORY COWDEN
DETAILS	FARIDEH RASHEDI	GERRARD HIGHT
QUANTITIES	CORY COWDEN	M. POPE/ M. SCHOTT

STATE OF CALIFORNIA
DEPARTMENT OF TRANSPORTATION

DIVISION OF ENGINEERING SERVICES
STRUCTURE DESIGN
DESIGN BRANCH 18

BRIDGE NO. 53-2920
POST MILE 30.47

EMPIRE AVE UC (REPLACE)
GIRDER REINFORCEMENT NO. 2

STRUCTURES DESIGN DETAIL SHEET (ENGLISH) (REV. 09-01-10)

ORIGINAL SCALE IN INCHES FOR REDUCED PLANS 0 1 2 3

UNIT: 3603
PROJECT NUMBER & PHASE: 0700021119-1
CONTRACT NO.: 07-1218W1

DISREGARD PRINTS BEARING EARLIER REVISION DATES

REVISION DATES: 1-25-07 1-28-08 5-28-09

SHEET 36 OF 53

FILE => 53-2920ri-o-gir_rf02.dgn

USERNAME => s119571 DATE PLOTTED => 22-MAY-2012 TIME PLOTTED => 08:25

DIST	COUNTY	ROUTE	POST MILES TOTAL PROJECT	SHEET No.	TOTAL SHEETS
07	LA	5	29.4/31.6	960	1931

REGISTERED CIVIL ENGINEER — DATE: 01-30-12

5-21-12
PLANS APPROVAL DATE

REGISTERED PROFESSIONAL ENGINEER — Jorge I. Estrada — No. C51473 — Exp. 06-30-12 — CIVIL — STATE OF CALIFORNIA

The State of California or its officers or agents shall not be responsible for the accuracy or completeness of electronic copies of this plan sheet.

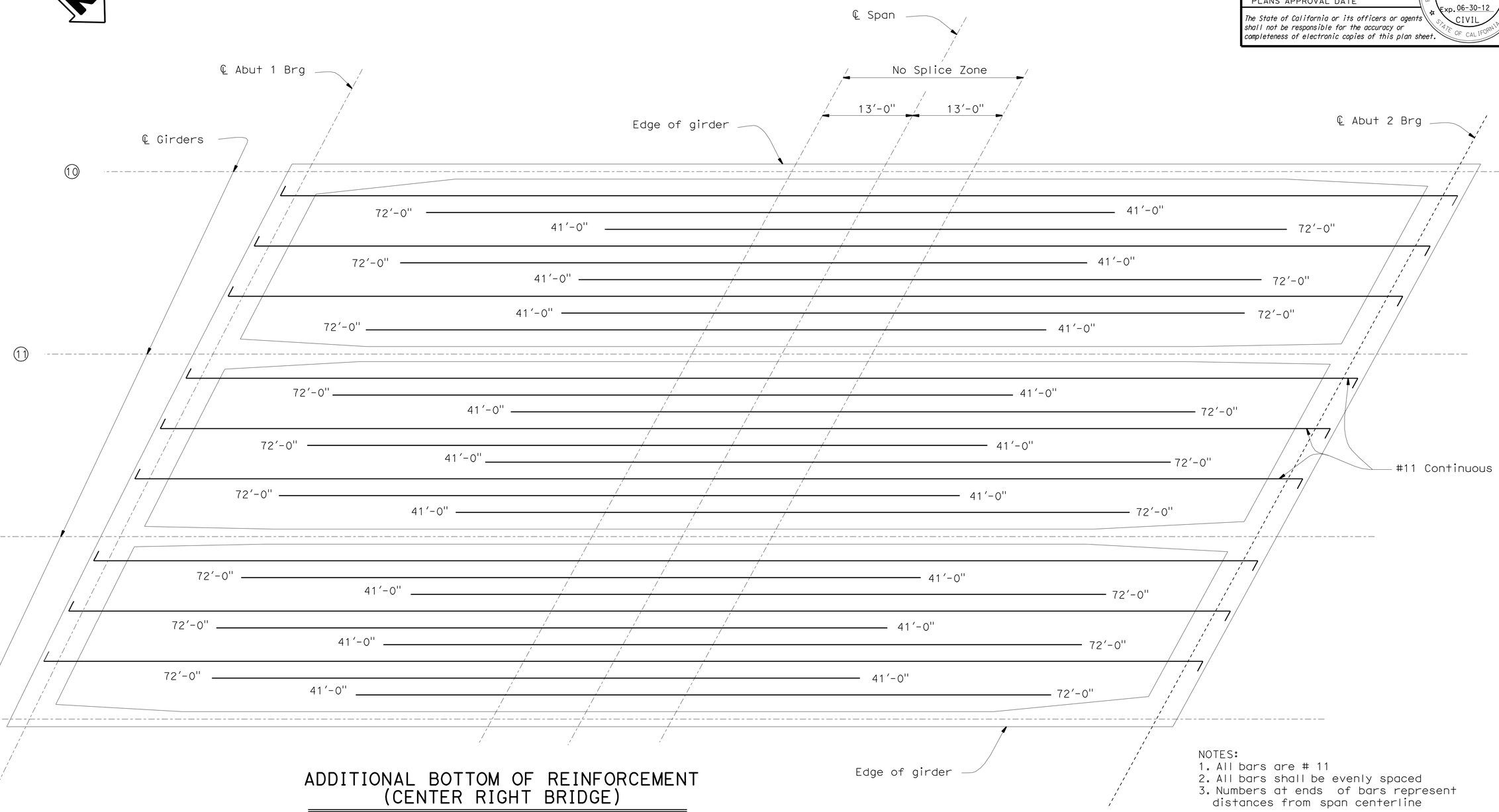

NOTES:
1. All bars are # 11
2. All bars shall be evenly spaced
3. Numbers at ends of bars represent distances from span centerline

ADDITIONAL BOTTOM OF REINFORCEMENT (CENTER RIGHT BRIDGE)

NO SCALE

	BY	CHECKED
DESIGN	GERRAD HIGHT	CORY COWDEN
DETAILS	FARIDEH RASHEDI	GERRARD HIGHT
QUANTITIES	M. POPE/M. SCHOTT	CORY COWDEN

STATE OF CALIFORNIA
DEPARTMENT OF TRANSPORTATION

DIVISION OF ENGINEERING SERVICES
STRUCTURE DESIGN
DESIGN BRANCH 18

BRIDGE NO. 53-2920
POST MILE 30.47

EMPIRE AVE UC (REPLACE)
GIRDER REINFORCEMENT NO. 3

STRUCTURES DESIGN DETAIL SHEET (ENGLISH) (REV. 09-01-10)

ORIGINAL SCALE IN INCHES FOR REDUCED PLANS 0 1 2 3

UNIT: 3603
PROJECT NUMBER & PHASE: 0700021119-1
CONTRACT NO.: 07-1218W1

DISREGARD PRINTS BEARING EARLIER REVISION DATES

REVISION DATES: 1-25-07 1-28-08 5-28-09

SHEET 37 OF 53

FILE => 53-2920ri-o-gir_rf03.dgn

USERNAME => s119571 DATE PLOTTED => 22-MAY-2012 TIME PLOTTED => 08:25

DIST	COUNTY	ROUTE	POST MILES TOTAL PROJECT	SHEET No.	TOTAL SHEETS
07	LA	5	29.4/31.6	961	1931

JEstrada. 01-30-12
REGISTERED CIVIL ENGINEER DATE

5-21-12
PLANS APPROVAL DATE

REGISTERED PROFESSIONAL ENGINEER
Jorge I. Estrada
No. C51473
Exp. 06-30-12
CIVIL
STATE OF CALIFORNIA

The State of California or its officers or agents shall not be responsible for the accuracy or completeness of electronic copies of this plan sheet.

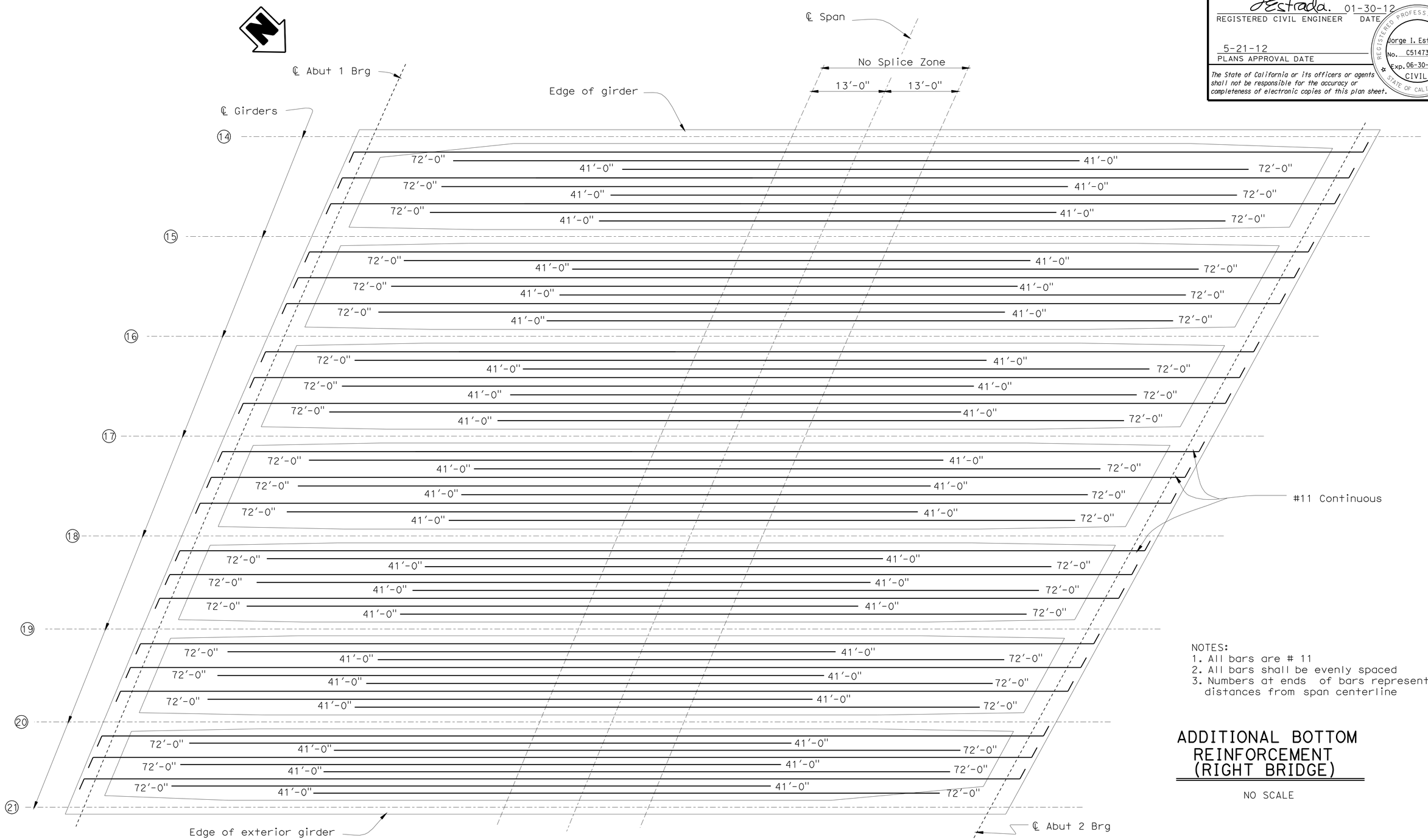

NOTES:
1. All bars are # 11
2. All bars shall be evenly spaced
3. Numbers at ends of bars represent distances from span centerline

ADDITIONAL BOTTOM REINFORCEMENT (RIGHT BRIDGE)

NO SCALE

	BY	CHECKED
DESIGN	GERRARD HIGHT	CORY COWDEN
DETAILS	FARIDEH RASHEDI	GERRARD HIGHT
QUANTITIES	M. POPE/M. SCHOTT	CORY COWDEN

STATE OF CALIFORNIA
DEPARTMENT OF TRANSPORTATION

DIVISION OF ENGINEERING SERVICES
STRUCTURE DESIGN
DESIGN BRANCH 18

BRIDGE NO. 53-2920
POST MILE 30.47

EMPIRE AVE UC (REPLACE)
GIRDER REINFORCEMENT NO. 4

STRUCTURES DESIGN DETAIL SHEET (ENGLISH) (REV. 09-01-10)

ORIGINAL SCALE IN INCHES FOR REDUCED PLANS 0 1 2 3

UNIT: 3603
PROJECT NUMBER & PHASE: 0700021119-1
CONTRACT NO.: 07-1218W1

DISREGARD PRINTS BEARING EARLIER REVISION DATES

REVISION DATES: 1-29-07 1-28-08 5-29-09

SHEET 38 OF 53

FILE => 53-2920rl-o-gir_rf04.dgn

USERNAME => s128843 DATE PLOTTED => 11-JUL-2012 TIME PLOTTED => 10:08

DIST	COUNTY	ROUTE	POST MILES TOTAL PROJECT	SHEET No.	TOTAL SHEETS
07	LA	5	29.4/31.6	962	1931

REGISTERED CIVIL ENGINEER — DATE 01-30-12

5-21-12
PLANS APPROVAL DATE

REGISTERED PROFESSIONAL ENGINEER — Jorge I. Estrada — No. C51473 — Exp. 06-30-12 — CIVIL — STATE OF CALIFORNIA

The State of California or its officers or agents shall not be responsible for the accuracy or completeness of electronic copies of this plan sheet.

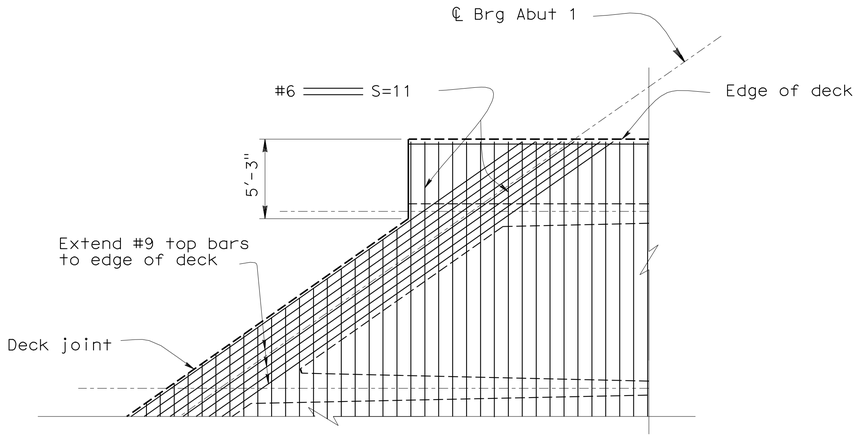

ABUT 1 (LEFT BRIDGE)

1"=5'

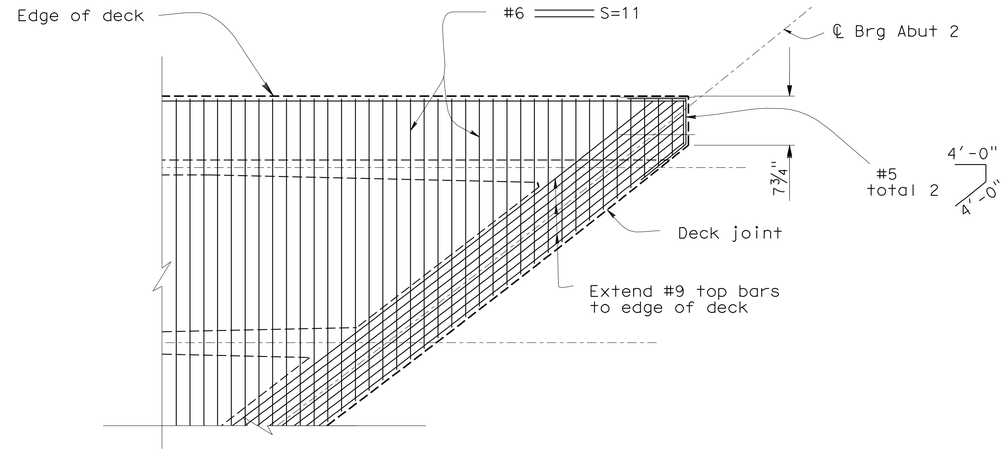

ABUT 2 (LEFT BRIDGE)

1"=5'

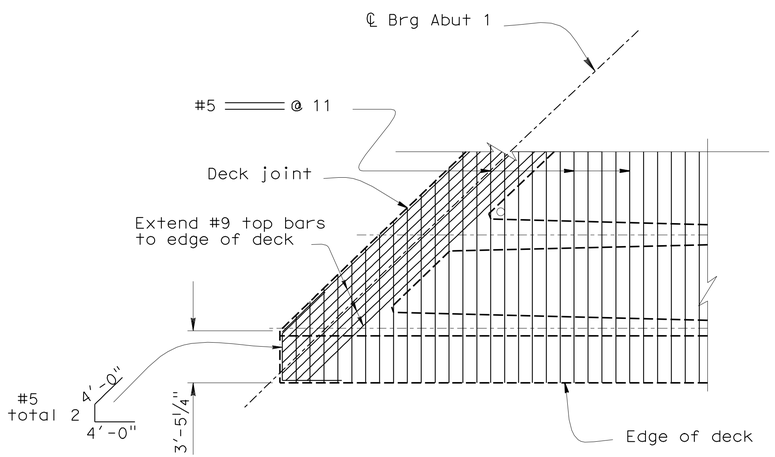

ABUT 1 (RIGHT BRIDGE)

1"=5'

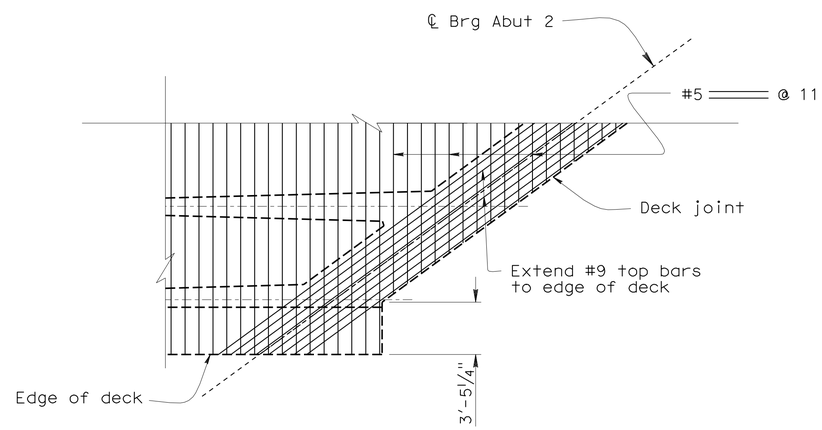

ABUT 2 (RIGHT BRIDGE)

1"=5'

	BY	CHECKED
DESIGN	GERRARD HIGHT	CORY COWDEN
DETAILS	FARIDEH RASHEDI	GERRARD HIGHT
QUANTITIES	M. POPE/M. SCHOTT	CORY COWDEN

STATE OF CALIFORNIA
DEPARTMENT OF TRANSPORTATION

DIVISION OF ENGINEERING SERVICES
STRUCTURE DESIGN
DESIGN BRANCH 18

BRIDGE NO. 53-2920
POST MILE 30.47

EMPIRE AVE UC (REPLACE)
GIRDER REINFORCEMENT NO.5

STRUCTURES DESIGN DETAIL SHEET (ENGLISH) (REV. 09-01-10)

ORIGINAL SCALE IN INCHES FOR REDUCED PLANS 0 1 2 3

UNIT: 3603
PROJECT NUMBER & PHASE: 0700021119-1
CONTRACT NO.: 07-1218W1

DISREGARD PRINTS BEARING EARLIER REVISION DATES

REVISION DATES: 9-15-08 10-06-08 11-10-08

SHEET 39 OF 53

FILE => 53-2920r1-o-gir_rf05.dgn

USERNAME => s119571 DATE PLOTTED => 22-MAY-2012 TIME PLOTTED => 08:26

DIST	COUNTY	ROUTE	POST MILES TOTAL PROJECT	SHEET No.	TOTAL SHEETS
07	LA	5	29.4/31.6	963	1931

JEstrada. 01-30-12
REGISTERED CIVIL ENGINEER DATE

5-21-12
PLANS APPROVAL DATE

REGISTERED PROFESSIONAL ENGINEER Jorge I. Estrada No. C51473 Exp. 06-30-12 CIVIL STATE OF CALIFORNIA

The State of California or its officers or agents shall not be responsible for the accuracy or completeness of electronic copies of this plan sheet.

LEFT BRIDGE

PRESTRESSING NOTES

270 ksi Low Relaxation Strands:

Pjack = 16,500 kips

Anchor Set = 0.375 in.

Total Number of Girders = 5

Friction curvature coeff μ = 15×10^{-2} (1/rad)
Friction wobble coeff K = 2×10^{-4} (1/in.)

Distribution of prestress force (Pjack) between girders shall not exceed the ratio of 3:2.

Maximum final force variation between girders shall not exceed 725 kips.

Concrete: f'_c = 6000 psi @ 28 days
f'_{ci} = 4500 psi @ time of stressing

Contractor shall submit elongation calculations based on initial stress at ☒ = 0.974 times jacking stress

☒ - Indicates point of no movement for one end stressing.
One end stressing can be preformed from either end.

CENTER LEFT BRIDGE

PRESTRESSING NOTES

270 ksi Low Relaxation Strands:

Pjack = 13,100 kips

Anchor Set = 0.375 in.

Total Number of Girders = 4

Friction curvature coeff μ = 15×10^{-2} (1/rad)
Friction wobble coeff K = 2×10^{-4} (1/in.)

Distribution of prestress force (Pjack) between girders shall not exceed the ratio of 3:2.

Maximum final force variation between girders shall not exceed 725 kips.

Concrete: f'_c = 6000 psi @ 28 days
f'_{ci} = 4500 psi @ time of stressing

Contractor shall submit elongation calculations based on initial stress at ☒ = 0.972 times jacking stress

☒ - Indicates point of no movement for one end stressing.
One end stressing can be preformed from either end.

FALSEWORK RELEASE

Alternative 1:

Falsework shall be released as soon as permitted by the specifications. Closure pour shall not be placed sooner than 60 days after the falsework had been released.

Alternative 2:

Falsework shall not be released less than 28 days after the last concrete has been placed. Closure pour shall not be placed sooner than 14 days after the falsework has been released.

When Falsework Release Alternative 2 is used, camber values are 0.75 times those shown.

CENTER RIGHT BRIDGE

PRESTRESSING NOTES

270 ksi Low Relaxation Strands:

Pjack = 13,100 kips

Anchor Set = 0.375 in.

Total Number of Girders = 4

Friction curvature coeff μ = 15×10^{-2} (1/rad)
Friction wobble coeff K = 2×10^{-4} (1/in.)

Distribution of prestress force (Pjack) between girders shall not exceed the ratio of 3:2.

Maximum final force variation between girders shall not exceed 725 kips.

Concrete: f'_c = 6000 psi @ 28 days
f'_{ci} = 4500 psi @ time of stressing

Contractor shall submit elongation calculations based on initial stress at ☒ = 0.973 times jacking stress

☒ - Indicates point of no movement for one end stressing.
One end stressing can be preformed from either end.

RIGHT BRIDGE (GIRDER 14-17)

PRESTRESSING NOTES

270 ksi Low Relaxation Strands:

Pjack = 10,200 kips

Anchor Set = 0.375 in.

Total Number of Girders = 4

Friction curvature coeff μ = 15×10^{-2} (1/rad)
Friction wobble coeff K = 2×10^{-4} (1/in.)

Distribution of prestress force (Pjack) between girders shall not exceed the ratio of 3:2.

Maximum final force variation between girders shall not exceed 725 kips.

Concrete: f'_c = 6000 psi @ 28 days
f'_{ci} = 4500 psi @ time of stressing

Contractor shall submit elongation calculations based on initial stress at ☒ = 0.976 times jacking stress

☒ - Indicates point of no movement for one end stressing.
One end stressing can be preformed from either end.

RIGHT BRIDGE (GIRDER 18-21)

PRESTRESSING NOTES

270 ksi Low Relaxation Strands:	Girder 18	Girder 19	Girder 20	Girder 21
Pjack	= 2600 kips	= 2600 kips	= 2700 kips	= 3200 kips
Anchor Set	= 0.375 in.	= 0.375 in.	= 0.375 in.	= 0.375 in.
Total Number of Girders	= 1	= 1	= 1	= 1

Friction curvature coeff μ = 15×10^{-2} (1/rad)
Friction wobble coeff K = 2×10^{-4} (1/in.)

Distribution of prestress force (Pjack) between girders shall not exceed the ratio of 3:2.

Maximum final force variation between girders shall not exceed 725 kips.

Concrete: f'_c = 6000 psi @ 28 days
f'_{ci} = 4500 psi @ time of stressing

Contractor shall submit elongation calculations based on initial stress at ☒ = 0.989 times jacking stress

☒ - Indicates point of no movement for one end stressing.
One end stressing can be preformed from either end.

DESIGN	BY GERRARD HIGHT	CHECKED CORY COWDEN	
DETAILS	BY FARIDEH RASHEDI	CHECKED GERRARD HIGHT	
QUANTITIES	BY M. POPE/M. SCHOTT	CHECKED CORY COWDEN	

STATE OF CALIFORNIA
DEPARTMENT OF TRANSPORTATION

DIVISION OF ENGINEERING SERVICES
STRUCTURE DESIGN
DESIGN BRANCH 18

BRIDGE NO. 53-2920
POST MILE 30.47

EMPIRE AV UC (REPLACE)
PRESTRESSING NOTES

STRUCTURES DESIGN DETAIL SHEET (ENGLISH) (REV. 09-01-10)

ORIGINAL SCALE IN INCHES FOR REDUCED PLANS 0 1 2 3

UNIT: 3603
PROJECT NUMBER & PHASE: 0700021119-1
CONTRACT NO.: 07-1218W1

DISREGARD PRINTS BEARING EARLIER REVISION DATES

REVISION DATES 11-20-10 10-8-11 04/17/12

SHEET 40 OF 53

FILE => 53-2920rl-s-sadd01.dgn

USERNAME => s119571 DATE PLOTTED => 22-MAY-2012 TIME PLOTTED => 08:26

DIST	COUNTY	ROUTE	POST MILES TOTAL PROJECT	SHEET No.	TOTAL SHEETS
07	LA	5	29.4/31.6	964	1931

REGISTERED CIVIL ENGINEER — DATE 01-30-12

PLANS APPROVAL DATE 5-21-12

REGISTERED PROFESSIONAL ENGINEER — Jorge I. Estrada No. C51473 Exp. 06-30-12 CIVIL — STATE OF CALIFORNIA

The State of California or its officers or agents shall not be responsible for the accuracy or completeness of electronic copies of this plan sheet.

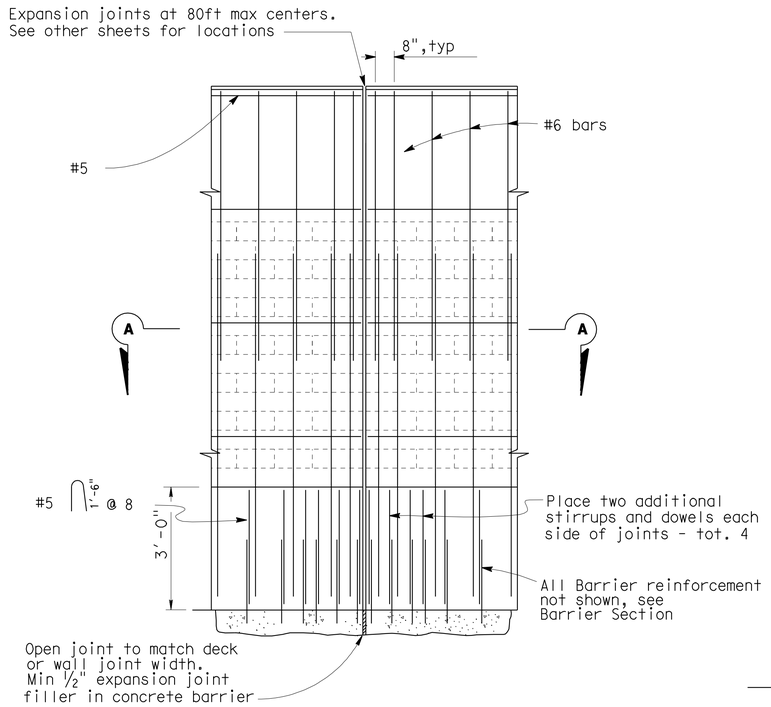

DECK AND WALL JOINT ELEVATION

Rail Joints shall be located at Deck and principal wall joints.

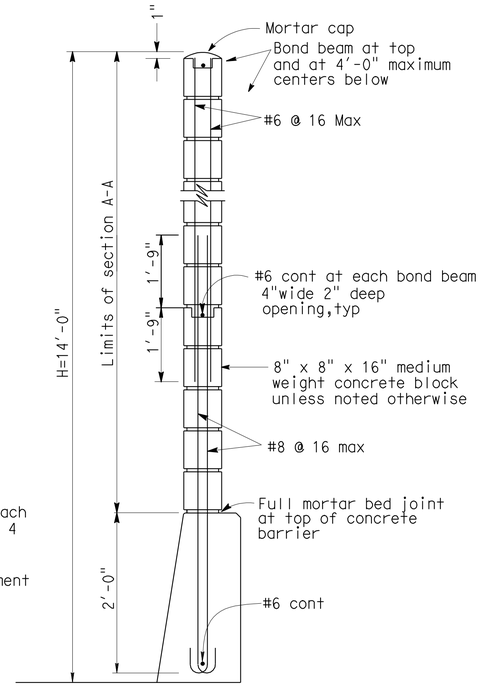

SOUNDWALL SECTION

For Sound Wall on structure approach and on Barrier grout bottom three courses completely

GENERAL NOTES

Note A: For type of block and joint finish, see other sheets and or Roadway Plans.

Note B: When blocks are laid in stacked bond, ladder type, galvanized joint reinforcement shall be provided. A minimum of 2 wire continuous at 4'-0" maximum to be used. Locate reinforcement in joints that are at the approximate midpoint between bond beams.

Note C: Horizontal joints shall be tooled concave or may be weathered.
Vertical joints shall be tooled concave or may be raked.

Note D: All masonry to be high strength unless otherwise noted. Special inspection required.

Note E: For dimensions and reinforcement not shown, see "Typical Section" sheet.

Note F: Expansion Joints in concrete barrier and soundwall (Masonry Block) near Abut 1 and 2 to match deck joints and at ends of wing walls.

Note G: For architectural treatment see " MISCELLANEOUS SHEET".

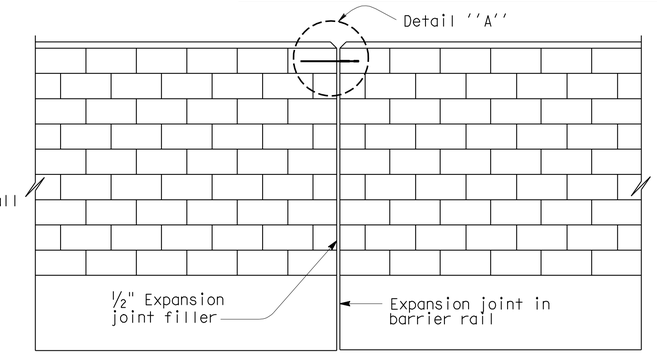

ALIGNMENT KEY DETAIL

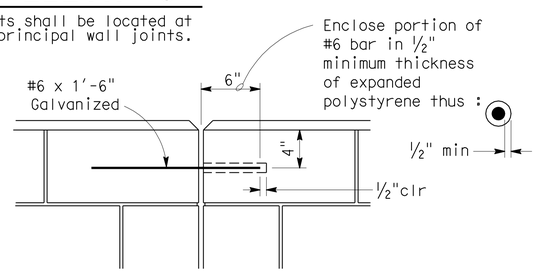

DETAIL A

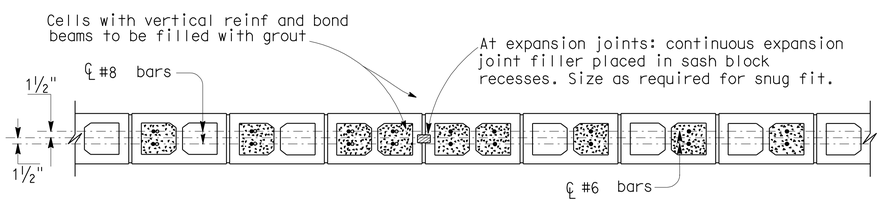

SECTION A- A

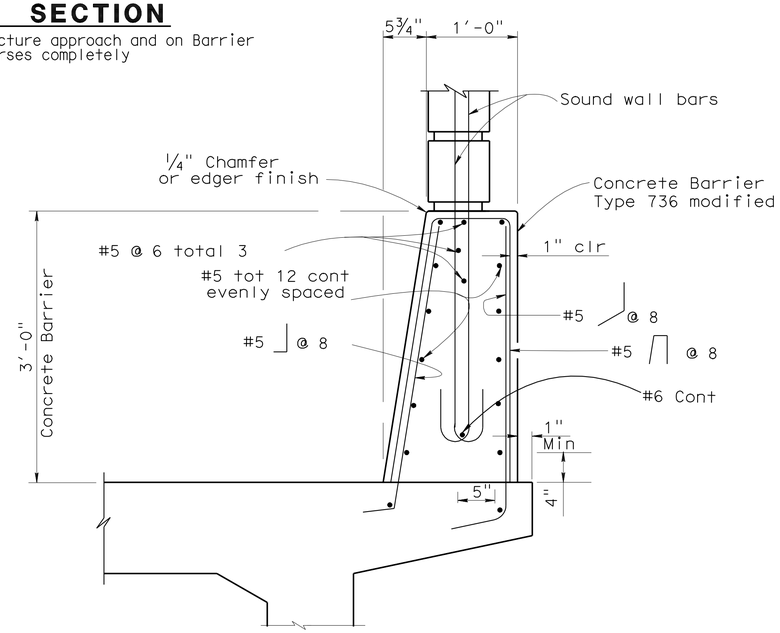

BARRIER ON BRIDGE SECTION

DESIGN NOTES

DESIGN

Uniform Building Code,1994 Edition and the Bridge Design Specifications.

DESIGN WIND LOAD

31 psf

DESIGN SEISMIC LOAD

1.0 Dead Load

REINFORCED CONCRETE

f'c = 3250 psi
fy = 6000 psi

CONCRETE MASONRY

HIGH STRENGTH

f'm = 2700 psi
fm = 900 psi
fs = 24000 psi
n = 14.32

LOADING COMBINATIONS FOR CONCRETE MASONRY USING WORKING STRESS DESIGN WITH A PERCENT OF BASIC UNIT STRESS OF 133

Group 1: D + W
Group 2: D + EQD

Railing Loads: See "INDEX TO PLANS" sheet
D = Dead load
W = Wind load
EQD = Seismic dead load (1.0D)

LOADING COMBINATIONS FOR REINFORCED CONCRETE USING LOAD FACTOR DESIGN

Group A: BD + 1.3W
Group B: BD + 1.0EQD
Where: B=1.0 or 1.3 whichever controls in design
D=Dead Load
W=Wind Load
EQD=Seismic Dead Load (2.0D)

STRENGTH REDUCTION FACTORS, Ø

Reinforced concrete:
For flexure ———— Ø=0.90
For shear ———— Ø=0.85
For axial compression ———— Ø=0.70

NOTE 1:
Barrier and Deck are designed by the ultimate strength method. Concrete Masonry designed by the working stress method.

DESIGN	BY GERRARD HIGHT	CHECKED CORY COWDEN	
DETAILS	BY FARIDEH RASHEDI	CHECKED GERRARD HIGHT	
QUANTITIES	BY CORY COWDEN	CHECKED M. POPE/M. SCHOTT	

STATE OF CALIFORNIA
DEPARTMENT OF TRANSPORTATION

DIVISION OF ENGINEERING SERVICES
STRUCTURE DESIGN
DESIGN BRANCH 18

BRIDGE NO. 53-2920
POST MILE 30.47

EMPIRE AVE UC (REPLACE)

SOUND WALL - MASONRY BLOCK ON BRIDGE

STRUCTURES DESIGN DETAIL SHEET (ENGLISH) (REV. 09-01-10)

ORIGINAL SCALE IN INCHES FOR REDUCED PLANS 0 1 2 3

UNIT: 3603
PROJECT NUMBER & PHASE: 0700021119-1
CONTRACT NO.: 07-1218W1

DISREGARD PRINTS BEARING EARLIER REVISION DATES

REVISION DATES 05-16-09

SHEET 41 OF 53

FILE => 53-2920rl-s-sadd02.dgn

USERNAME => s119571 DATE PLOTTED => 22-MAY-2012 TIME PLOTTED => 08:26

DIST	COUNTY	ROUTE	POST MILES TOTAL PROJECT	SHEET No.	TOTAL SHEETS
07	LA	5	29.4/31.6	965	1931

REGISTERED CIVIL ENGINEER 01-30-12 DATE

5-21-12
PLANS APPROVAL DATE

The State of California or its officers or agents shall not be responsible for the accuracy or completeness of electronic copies of this plan sheet.

REGISTERED PROFESSIONAL ENGINEER Jorge I. Estrada No. C51473 Exp. 06-30-12 CIVIL STATE OF CALIFORNIA

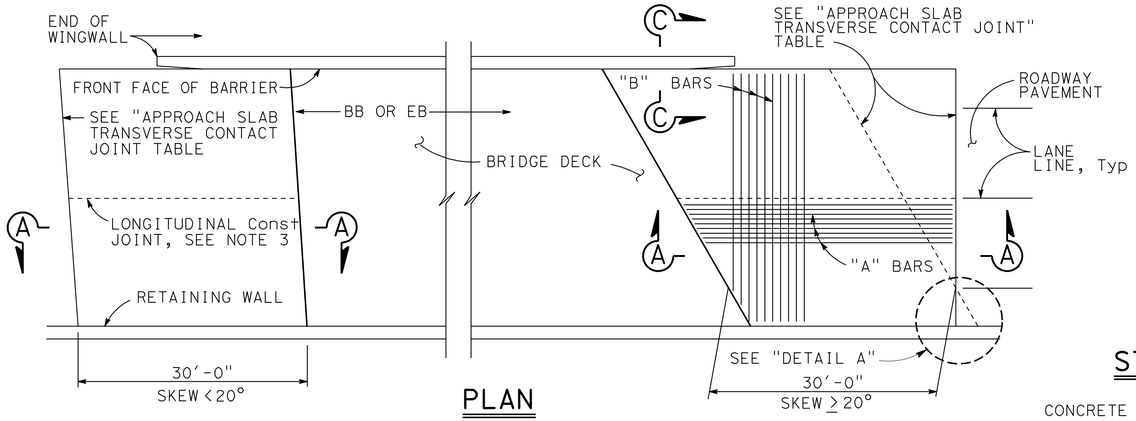

PLAN
1" = 10'

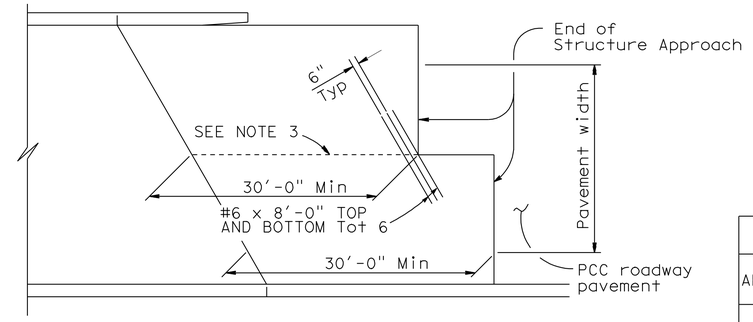

STRUCTURE APPROACH - END STAGGER DETAIL
No Scale

APPROACH SLAB TRANSVERSE CONTACT JOINT		
APPROACH SKEW	WITH AC ROADWAY PAVEMENT	WITH PCC ROADWAY PAVEMENT
< 20°	PARALLEL TO FACE OF PN	PARALLEL TO FACE OF PN
20° - 45°	PARALLEL TO FACE OF PN USE "DETAIL A"	STAGGER LINES 24' TO 36' APART
> 45°	PARALLEL TO FACE OF PN USE "DETAIL A"	STAGGER AT EACH LANE LINE

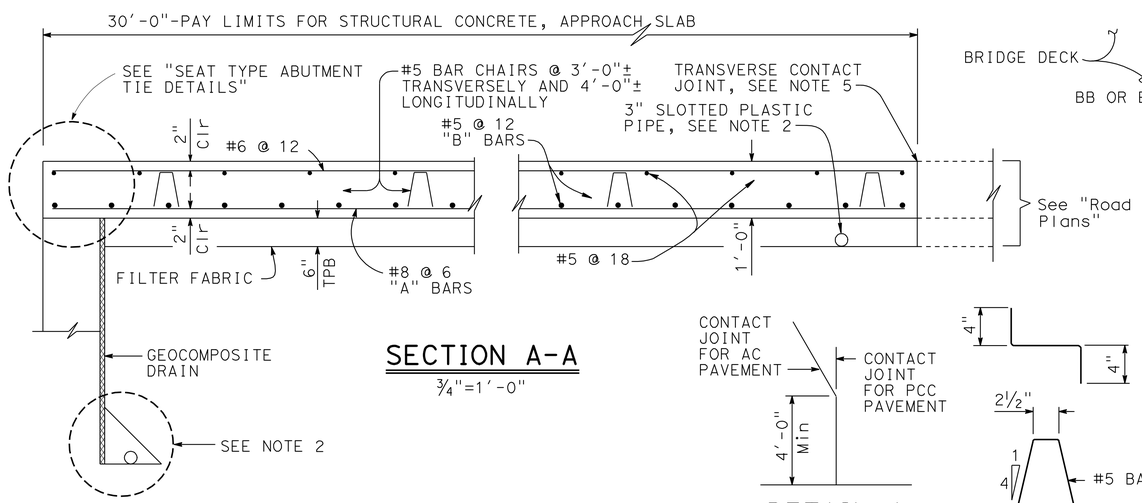

SECTION A-A
¾"=1'-0"

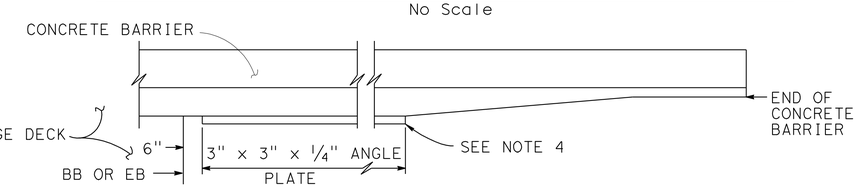

EDGE ANGLE DETAIL
½"=1'-0"

DETAIL A
No Scale

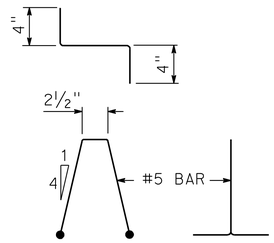

BAR CHAIR DETAIL
1½"=1'-0"

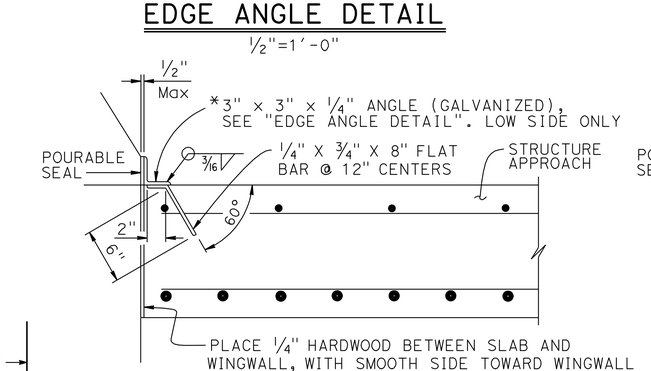

*(TO BE USED WITH CONCRETE BARRIER WITH VERTICAL FACE)

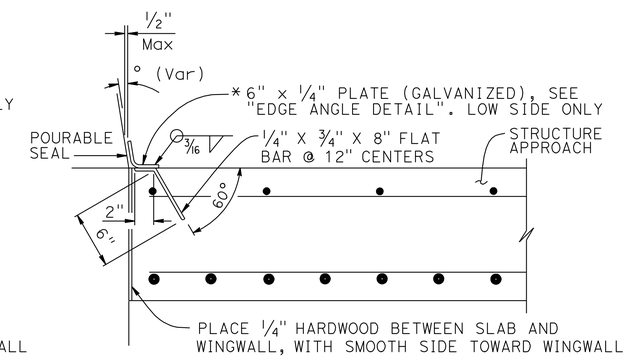

*(TO BE USED WITH CONCRETE BARRIER WITH SLOPING FACE)

DETAIL B
1½" = 1'-0"

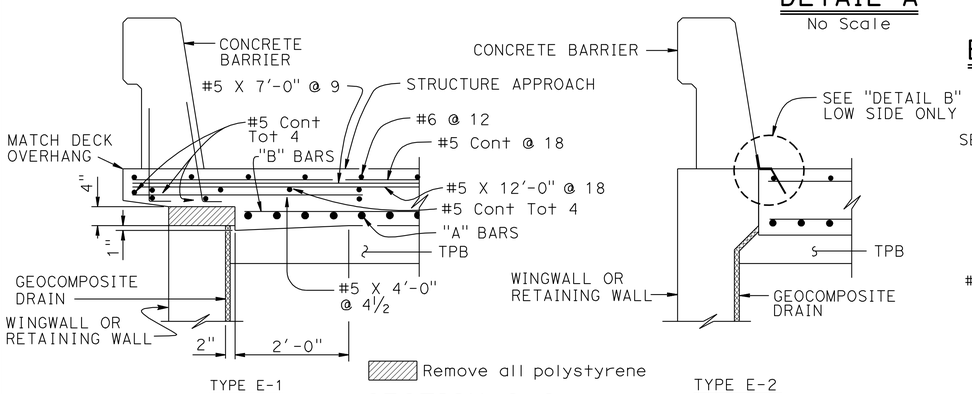

SECTION C-C
¾"=1'-0"

(Type E-1 to be used, unless otherwise shown on plans)

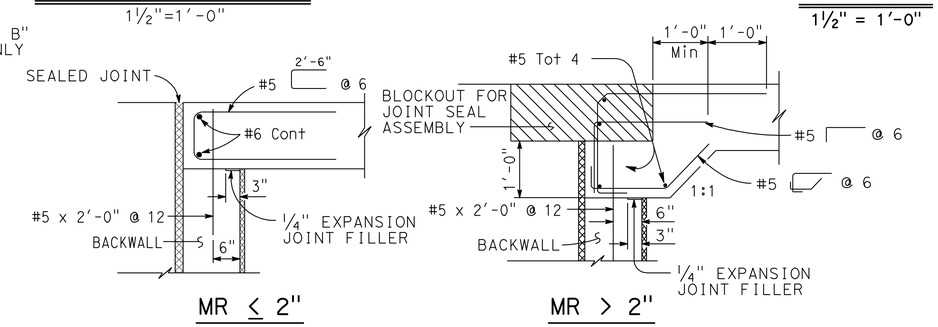

MR ≤ 2" MR > 2"

SEAT TYPE ABUTMENT TIE DETAILS (SEE NOTE 1)
¾"=1'-0"

NOTES:
1. For details not shown, see Structure Plans. For MR ≤ 2", adjust bar reinforcement to clear a sawcut for sealed joint, when required
2. For drainage details, see "STRUCTURE APPROACH DRAINAGE DETAILS" sheet
3. Longitudinal construction joints, when permitted by the Engineer, shall be located on lane lines
4. End angle or plate at beginning of barrier transition, end of wingwall or end of structure approach as applicable
5. For transverse contact joint with new PCC paving, refer to Standard Plan P10
6. At the Contractor's option, approach slab transverse reinforcement may be placed parallel to paving notch. Spacing of transverse reinforcement is measured along ℄ roadway

STANDARD DRAWING
FILE NO. xs3-120
APPROVAL DATE July 2011

STATE OF CALIFORNIA
DEPARTMENT OF TRANSPORTATION

DIVISION OF ENGINEERING SERVICES

BRIDGE NO. 53-2920
POST MILE 30.47

EMPIRE AV UC (REPLACE)
STRUCTURE APPROACH TYPE N(30S)

DS OSD 2147A (ENGLISH STANDARD DRAWING "XS" BORDER REV. (02-02-11)

ORIGINAL SCALE IN INCHES FOR REDUCED PLANS 0 1 2 3

UNIT: 3603
PROJECT NUMBER & PHASE: 0700021119-1
CONTRACT NO.: 07-1218W1

DISREGARD PRINTS BEARING EARLIER REVISION DATES

REVISION DATES 1-10-10 SHEET 42 OF 53

FILE => 53-2920r1-s-sadd03.dgn

USERNAME => s119571 DATE PLOTTED => 22-MAY-2012 TIME PLOTTED => 09:25

DIST	COUNTY	ROUTE	POST MILES TOTAL PROJECT	SHEET No.	TOTAL SHEETS
07	LA	5	29.4/31.6	966	1931

dEstrada. 01-30-12
REGISTERED CIVIL ENGINEER DATE

5-21-12
PLANS APPROVAL DATE

REGISTERED PROFESSIONAL ENGINEER
Jorge I. Estrada
No. C51473
Exp. 06-30-12
CIVIL
STATE OF CALIFORNIA

The State of California or its officers or agents shall not be responsible for the accuracy or completeness of electronic copies of this plan sheet.

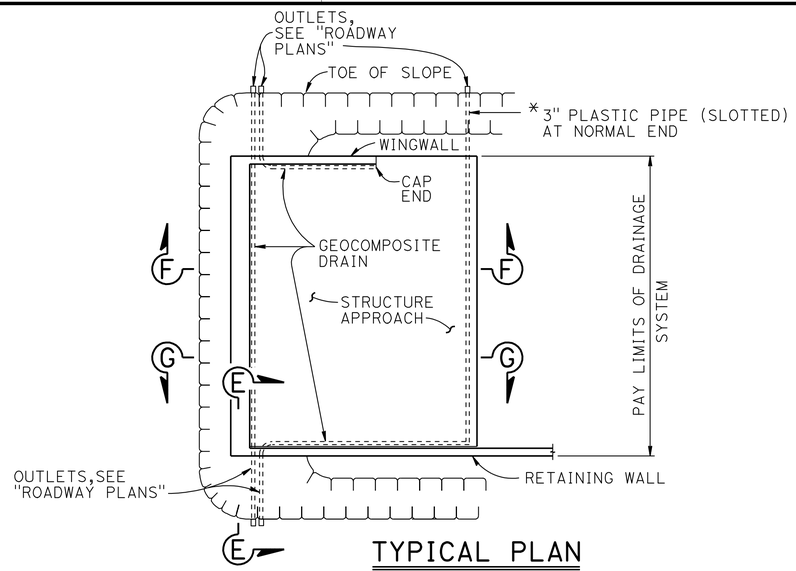

TYPICAL PLAN

1" = 10'

* FOR PIPE LAYOUT AT STAGGERED END, SEE "DETAIL B"

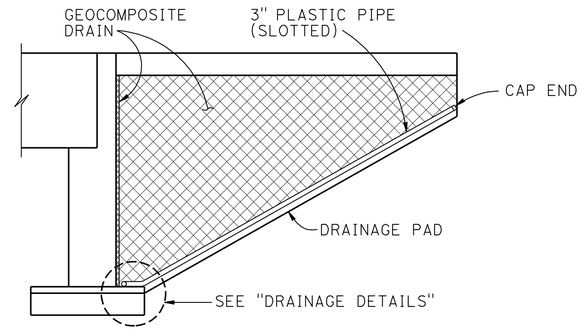

CANTILEVER WINGWALL

SECTION F-F

1/4" = 1'-0"

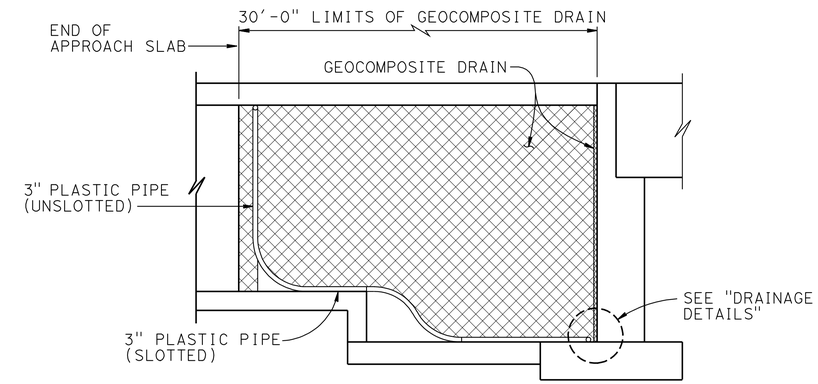

RETAINING WALL WINGWALL DRAINAGE DETAILS

SECTION G-G

1/4" = 1'-0"

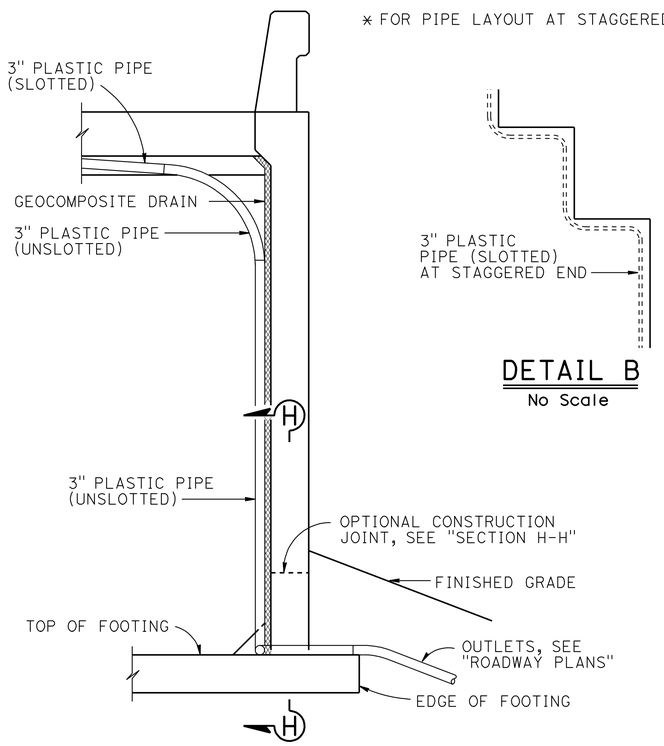

DETAIL B

No Scale

SECTION E-E

1/2" = 1'-0"

NOTE: Bends and junctions in 3" plastic pipe are 30" radius Min

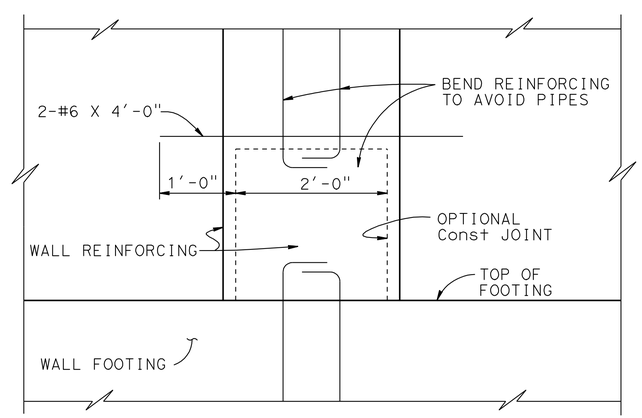

SECTION H-H

1" = 1'-0"

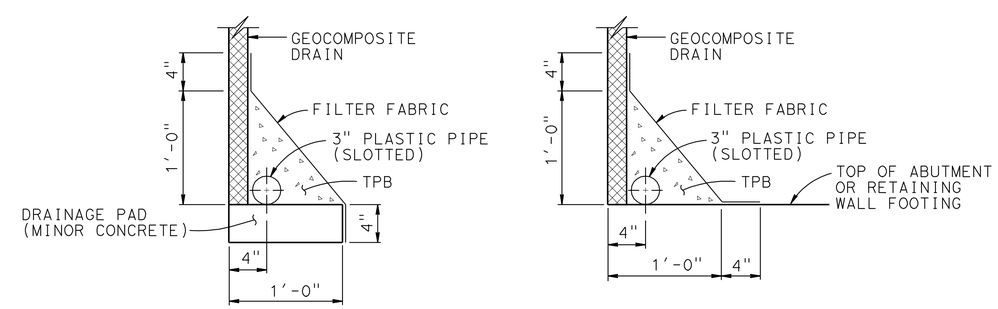

WITHOUT FOOTING

WITH FOOTING

DRAINAGE DETAILS

1 1/2" = 1'-0"

STANDARD DRAWING

FILE NO. xs3-110

APPROVAL DATE July 2011

STATE OF CALIFORNIA
DEPARTMENT OF TRANSPORTATION

DIVISION OF ENGINEERING SERVICES

BRIDGE NO. 53-2920
POST MILE 30.47

EMPIRE AVE UC (REPLACE)

STRUCTURE APPROACH DRAINAGE DETAILS

DS OSD 2147A (ENGLISH STANDARD DRAWING "XS" BORDER REV. (02-02-11)

ORIGINAL SCALE IN INCHES FOR REDUCED PLANS 0 1 2 3

UNIT: 3603
PROJECT NUMBER & PHASE: 0700021119-1
CONTRACT NO.: 07-1218W1

DISREGARD PRINTS BEARING EARLIER REVISION DATES

REVISION DATES 11-2-11

SHEET 43 OF 53

FILE => 53-2920rl-s-sadd04.dgn

USERNAME => s119571 DATE PLOTTED => 22-MAY-2012 TIME PLOTTED => 09:25

DIST	COUNTY	ROUTE	POST MILES TOTAL PROJECT	SHEET No.	TOTAL SHEETS
07	LA	5	29.4/31.6	967	1931

REGISTERED CIVIL ENGINEER — DATE 01-30-12

PLANS APPROVAL DATE 5-21-12

REGISTERED PROFESSIONAL ENGINEER — Jorge I. Estrada No. C51473 Exp. 06-30-12 CIVIL — STATE OF CALIFORNIA

The State of California or its officers or agents shall not be responsible for the accuracy or completeness of electronic copies of this plan sheet.

NOTE: CONCRETE COLOR SHALL BE 'SANDSTONE' (FEDERAL STANDARD COLOR 30318)

FRACTURED GRANITE TEXTURE SHALL RUN PERPENDICULAR TO PLUMB.

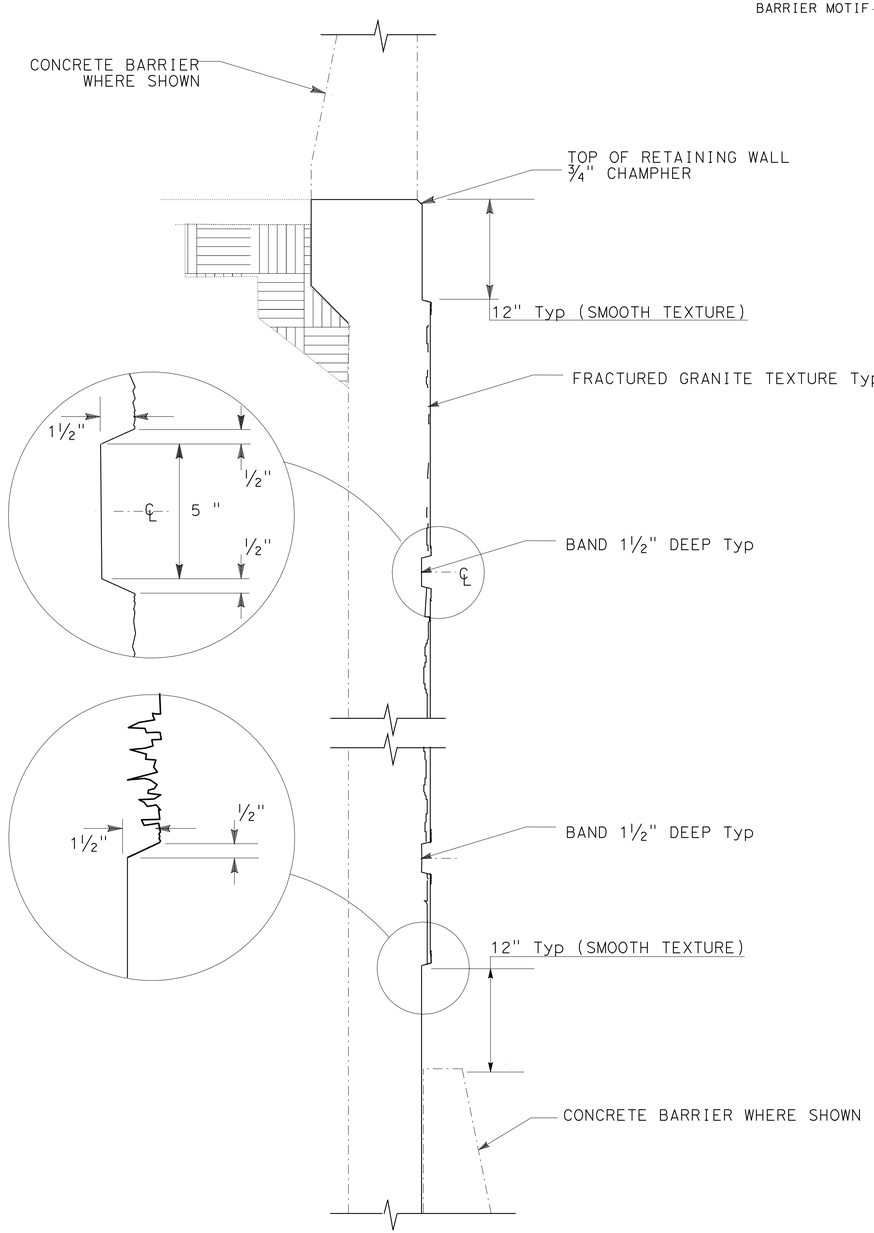

RETAINING WALL TYPICAL SECTION

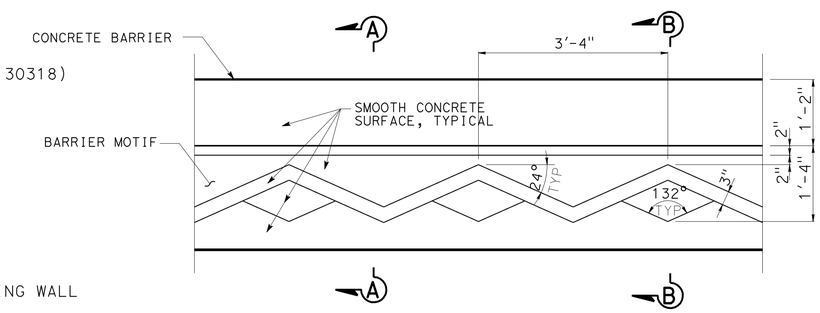

BARRIER AESTHETIC TREATMENT

No Scale

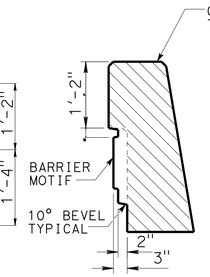

SECTION A-A

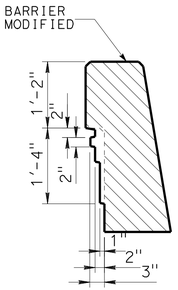

SECTION B-B

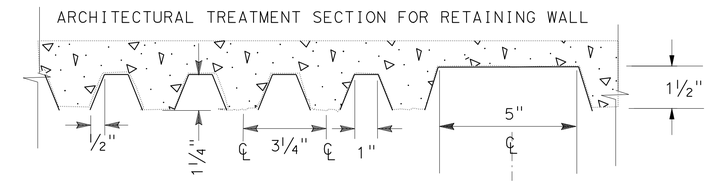

FRACTURED GRANITE TEXTURE & BAND

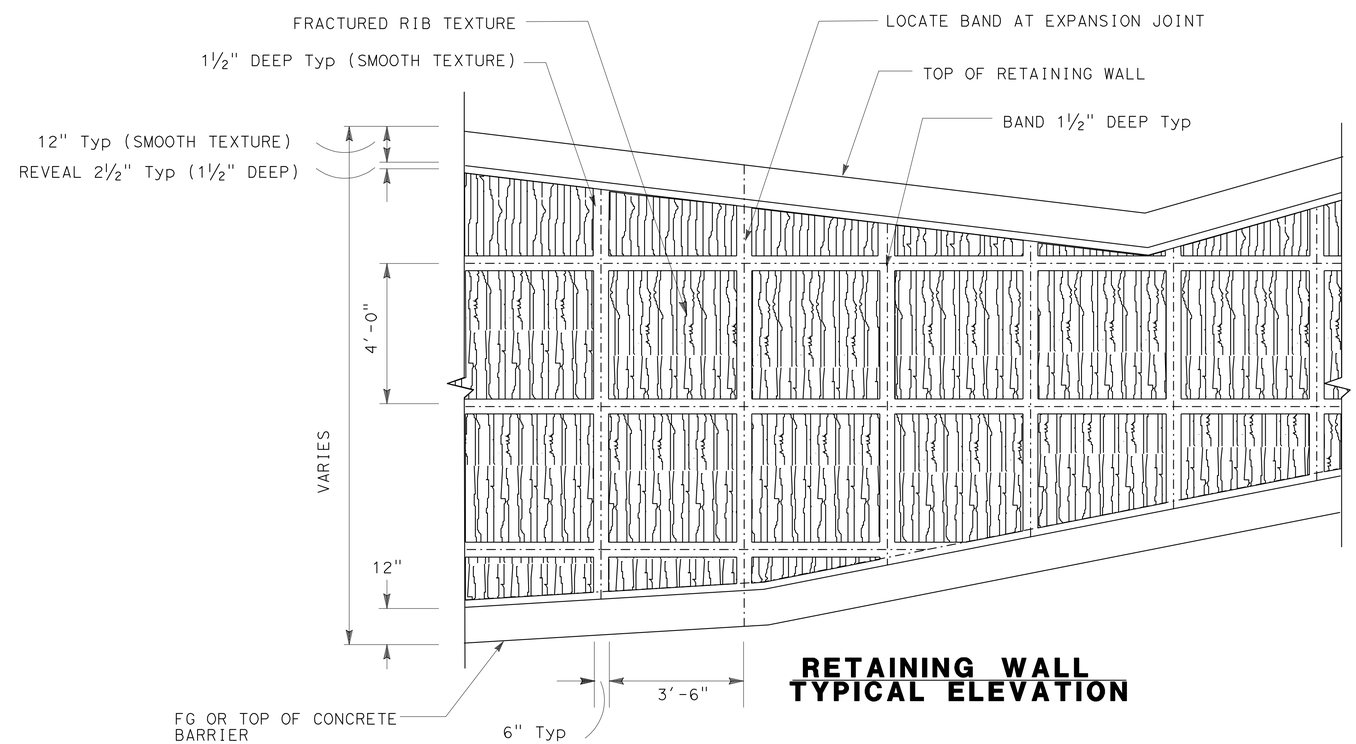

RETAINING WALL TYPICAL ELEVATION

DESIGN	BY GERRARD HIGHT	CHECKED CORY COWDEN	
DETAILS	BY FARIDEH RASHEDI	CHECKED JORGE ESTRADA	
QUANTITIES	BY M. POPE/M. SCHOTT	CHECKED CORY COWDEN	

STATE OF CALIFORNIA DEPARTMENT OF TRANSPORTATION

DIVISION OF ENGINEERING SERVICES STRUCTURE DESIGN DESIGN BRANCH 18

BRIDGE NO. 53-2920 POST MILE 30.47

EMPIRE AVE UC (REPLACE)

MISCELLANEOUS DETAILS No.1

STRUCTURES DESIGN DETAIL SHEET (ENGLISH) (REV. 09-01-10)

ORIGINAL SCALE IN INCHES FOR REDUCED PLANS 0 1 2 3

UNIT: 3603

PROJECT NUMBER & PHASE: 0700021119-1

CONTRACT NO.: 07-1218W1

DISREGARD PRINTS BEARING EARLIER REVISION DATES

REVISION DATES: 2-11-06 10-5-08 1-04-12

SHEET 44 OF 53

FILE => 53-2920rl-u-miscdt01.dgn

USERNAME => s119571 DATE PLOTTED => 22-MAY-2012 TIME PLOTTED => 09:26

DIST	COUNTY	ROUTE	POST MILES TOTAL PROJECT	SHEET No.	TOTAL SHEETS
07	LA	5	29.4/31.6	968	1931

dEstrada. 01-30-12
REGISTERED CIVIL ENGINEER DATE

5-21-12
PLANS APPROVAL DATE

REGISTERED PROFESSIONAL ENGINEER
Jorge I. Estrada
No. C51473
Exp. 06-30-12
CIVIL
STATE OF CALIFORNIA

The State of California or its officers or agents shall not be responsible for the accuracy or completeness of electronic copies of this plan sheet.

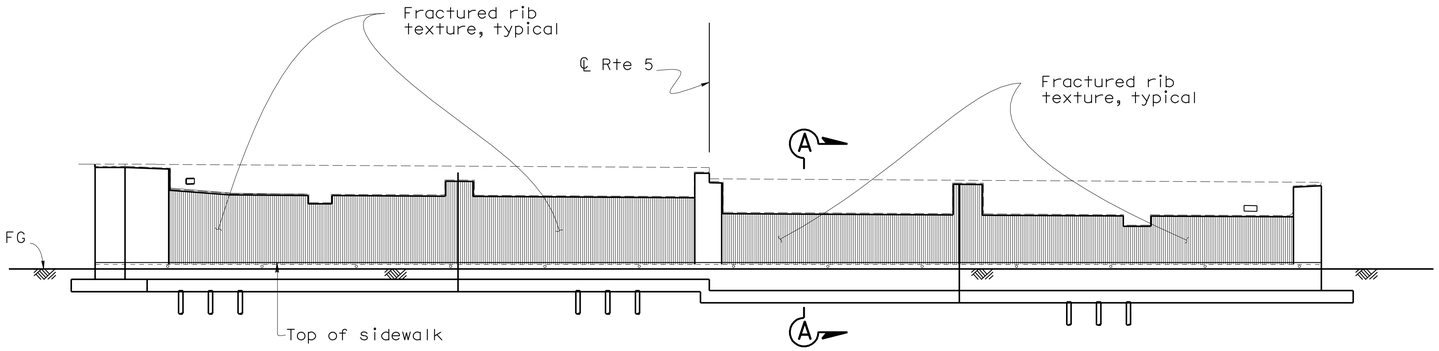

ABUTMENT 1 ELEVATION

NO SCALE

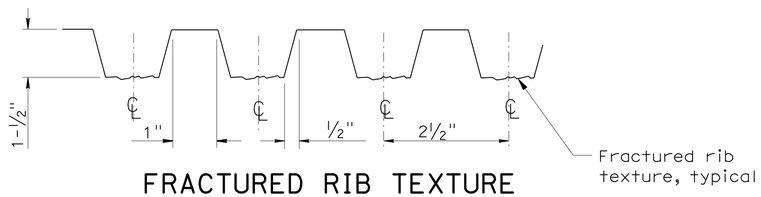

FRACTURED RIB TEXTURE

NO SCALE

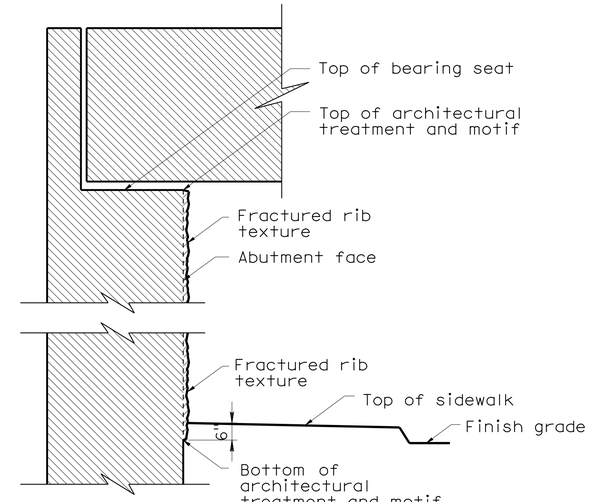

SECTION A-A

NO SCALE

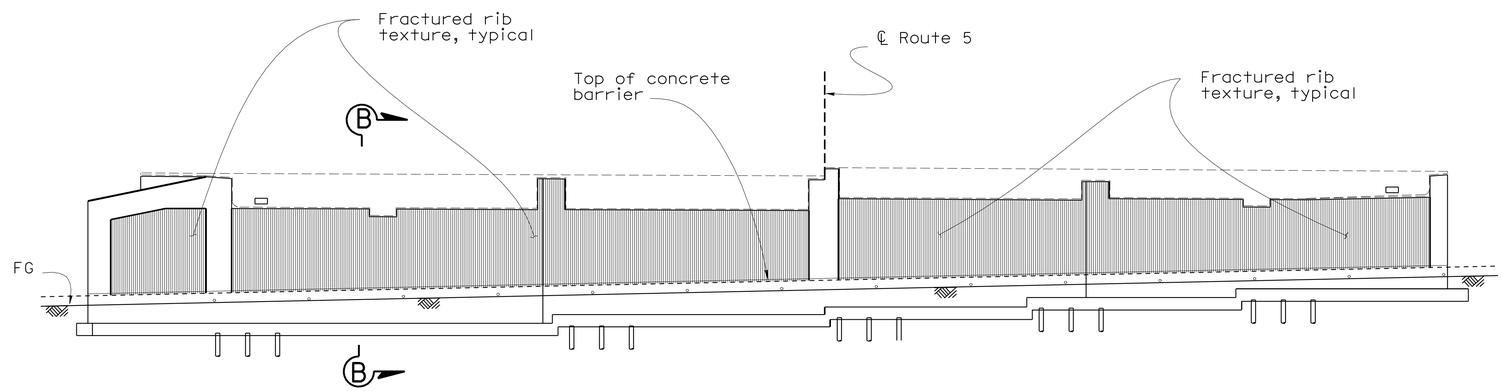

ABUTMENT 2 ELEVATION

NO SCALE

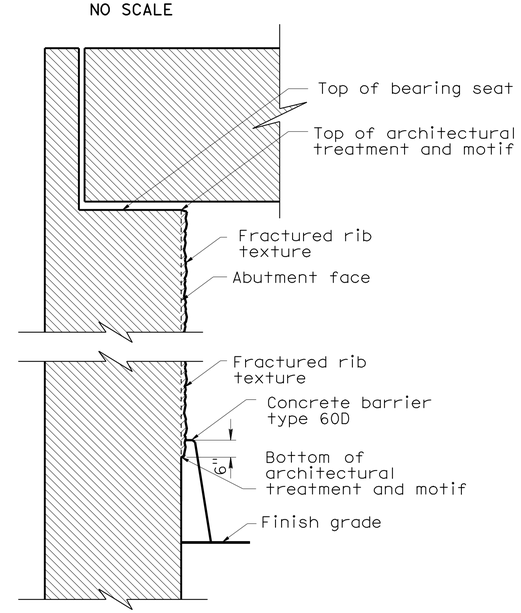

SECTION B-B

NO SCALE

DESIGN	BY GERRARD HIGHT	CHECKED CORY COWDEN	
DETAILS	BY FARIDEH RASHEDI	CHECKED GERRARD HIGHT	
QUANTITIES	BY CORY COWDEN	CHECKED MICHAEL POPE	

STATE OF CALIFORNIA
DEPARTMENT OF TRANSPORTATION

DIVISION OF ENGINEERING SERVICES
STRUCTURE DESIGN
DESIGN BRANCH 18

BRIDGE NO. 53-2920
POST MILE 30.47

EMPIRE AVE UC (REPLACE)
MISCELLANEOUS DETAILS No.2

STRUCTURES DESIGN DETAIL SHEET (ENGLISH) (REV. 09-01-10)

ORIGINAL SCALE IN INCHES FOR REDUCED PLANS 0 1 2 3

UNIT: 3603
PROJECT NUMBER & PHASE: 0700021119-1
CONTRACT NO.: 07-1218W1

DISREGARD PRINTS BEARING EARLIER REVISION DATES

REVISION DATES: 1-31-12 4-17-12

SHEET 45 OF 53

FILE => 53-2920ri-u-misdt02.dgn

USERNAME => s119571 DATE PLOTTED => 22-MAY-2012 TIME PLOTTED => 09:25

DIST	COUNTY	ROUTE	POST MILES TOTAL PROJECT	SHEET No.	TOTAL SHEETS
07	LA	5	29.4/31.6	969	1931

REGISTERED CIVIL ENGINEER — DATE 01-30-12

PLANS APPROVAL DATE 5-21-12

REGISTERED PROFESSIONAL ENGINEER — Jorge I. Estrada — No. 06-30-12 — Exp. 06-30-12 — CIVIL — STATE OF CALIFORNIA

The State of California or its officers or agents shall not be responsible for the accuracy or completeness of electronic copies of this plan sheet.

LEGEND

	SYMBOL	NOMINAL SIZE	TEXTURE	COLOR
A		8" x 8" x 16"	4-SCORE SPLIT FACE REVERSE SIDE PRECISION BLOCK	
B		8" x 8" x 16"	PRECISION FACE REVERSE SIDE 4-SCORE SPLIT FACE	

NOTES:
1. BOND (TYPE 1) STAKED BOND.
2. MORTAR COLOR TO MATCH BLOCK.
3. TOOLED JOINTS.
4. BLOCKS ON BRIDGE SHALL BE PRECISION BLOCK BOTH SIDES (MEDIUM WEIGHT).
5. PILASTER EFFECT (PRECISION SIDE TO FREEWAY) IS NOT TO BE USED ON END ADJACENT TO BRIDGE.
6. PLACE ELEVATION CHANGE AT EXPANSION JOINTS WHERE POSSIBLE

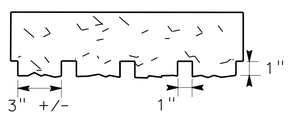

4 SCORE SPLIT FACE

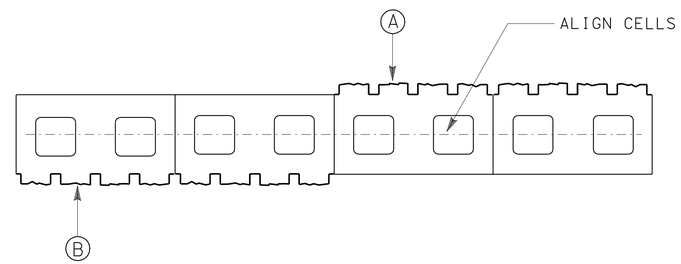

BLOCK ALIGNMENT

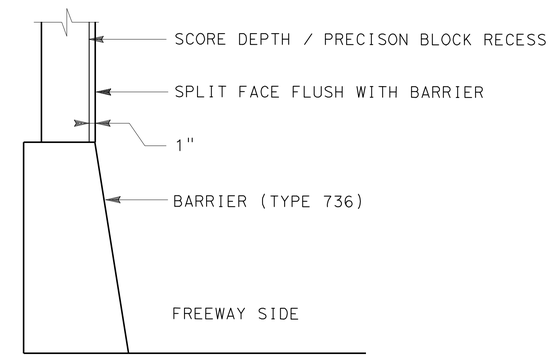

BARRIER SECTION

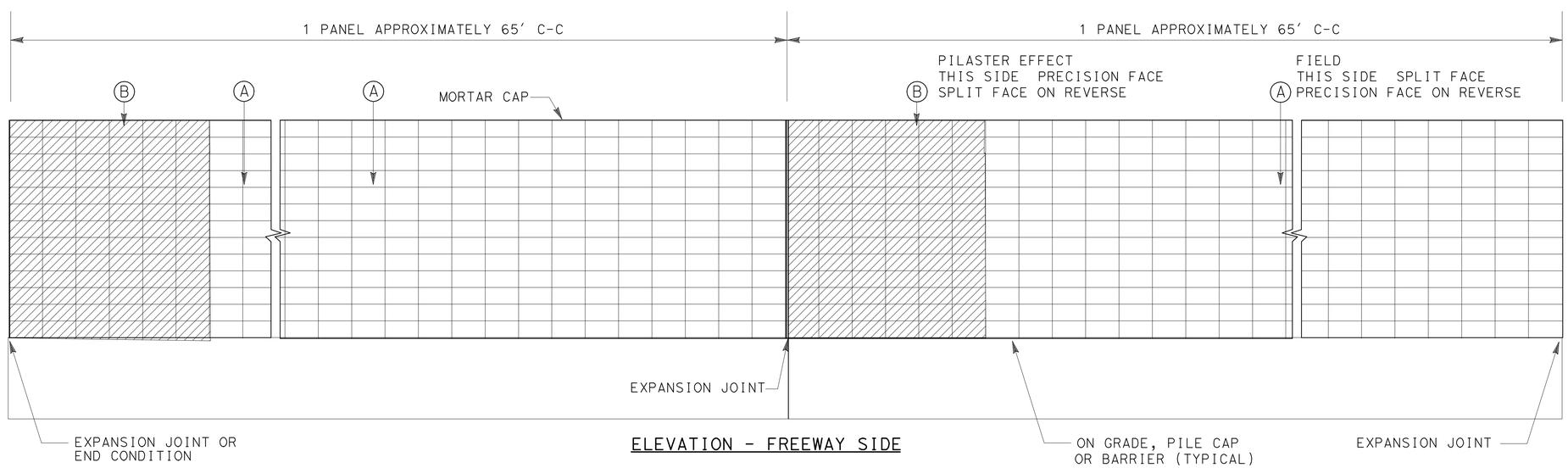

ELEVATION - FREEWAY SIDE

APPROVED FOR AESTHETIC WORK ONLY

WALL PATTERN

NO SCALE

AESTHETIC SOUNDWALL DETAILS

	BY	CHECKED
DESIGN	GERRARD HIGHT	CORY COWDEN
DETAILS	FARIDEH RASHEDI	GERRARD HIGHT
QUANTITIES	MIKE POPE	CORY COWDEN

STATE OF CALIFORNIA
DEPARTMENT OF TRANSPORTATION

DIVISION OF ENGINEERING SERVICES
STRUCTURE DESIGN
DESIGN BRANCH 18

BRIDGE NO. 53-2920
POST MILE 30.47

EMPIRE AVE UC (REPLACE)
MISCELLANEOUS DETAILS NO.3

STRUCTURES DESIGN DETAIL SHEET (ENGLISH) (REV. 09-01-10)

ORIGINAL SCALE IN INCHES FOR REDUCED PLANS 0 1 2 3

UNIT: 3603
PROJECT NUMBER & PHASE: 0700021119-1
CONTRACT NO.: 07-1218W1

DISREGARD PRINTS BEARING EARLIER REVISION DATES

REVISION DATES

SHEET 46 OF 53

FILE => 53-2920r1-u-misdt03.dgn

USERNAME => s119571 DATE PLOTTED => 22-MAY-2012 TIME PLOTTED => 09:25

DIST	COUNTY	ROUTE	POST MILES TOTAL PROJECT	SHEET No	TOTAL SHEETS
07	LA	5	29.4/31.6	970	1931

Joseph S. Pratt 1-27-12
CERTIFIED ENGINEERING GEOLOGIST

5-21-12
PLANS APPROVAL DATE

PROFESSIONAL GEOLOGIST Joseph S. Pratt No. 2141 Exp. 5-31-13 CERTIFIED ENGINEERING GEOLOGIST STATE OF CALIFORNIA

The State of California or its officers or agents shall not be responsible for the accuracy or completeness of electronic copies of this plan sheet.

BENCH MARKS

BM PRHV901 Elev 616.908 ft
Fd PK Nail SBND LA-5 shoulder; ±7.2 ft in from EP; across from NBND sign "Scott Road" Off-ramp; 66.219 ft Lt Sta 1598+99.41 C/L Rte 5 (Prop).
N 1891582.874
E 6463330.787

BM PRHV902 Elev 635.442 ft
Fd PK Nail in gore area at Scott Rd NBND Off-ramp; 68.429 ft Rt Sta 1605+67.67 C/L Rte 5 (Prop).
N 1892137.571
E 6462934.971

BM PRHV903 Elev 641.701 ft
Fd PK Nail SBND LA-5 shoulder; ±9.2 ft north of concrete barrier SBND San Fernando Rd. Bridge; ±9.5 ft in from EP; 69.054 ft Lt Sta 1610+60.79 C/L Rte 5 (Prop).
N 1892390.293
E 6462490.218

BM PRHV302 Elev 627.869 ft
Fd Chiseled "X" on island-median, N/E of LA-5/San Fernando Rd. SBND. UC (tunnel); ±10 ft from electrolier; ±1.6 ft from top curb, 176.527 ft Lt Sta 1613+01.41 C/L Rte 5 (Prop).
N 1892485.336
E 6462244.53

NAD83, NAVD88

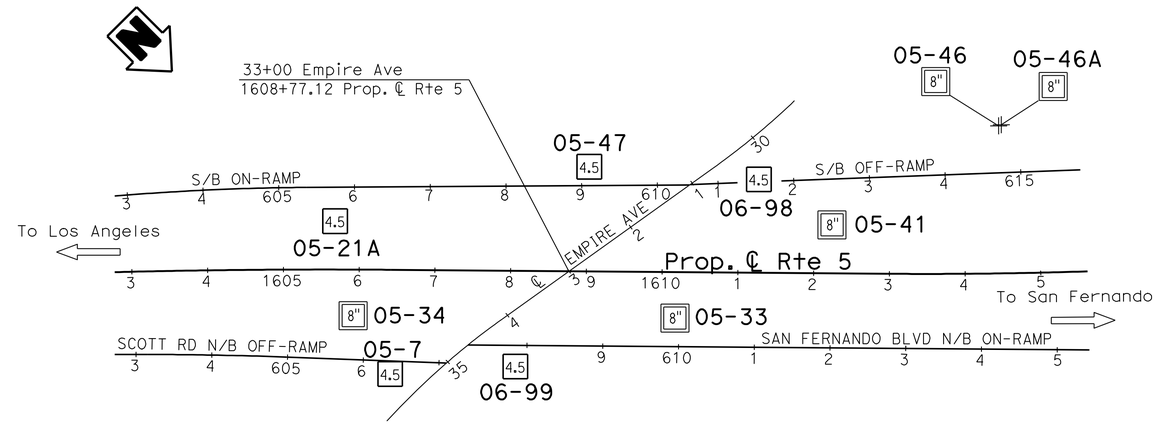

PLAN

1" = 100'

LEGEND:

- (M) Moisture Content
- (PA) Particle Size Analysis
- (PI) Plasticity, Index, Liquid Limit
- (CR) Corrosivity Testing
- (CP) Compaction

Note: No ground water encountered during field investigation.

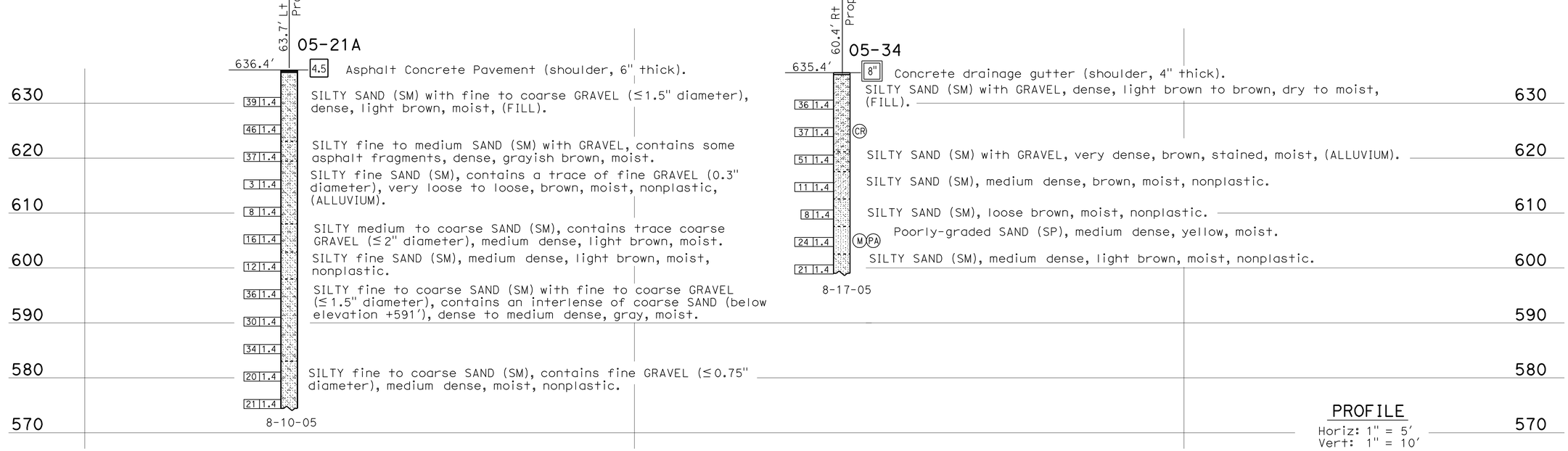

PROFILE

Horiz: 1" = 5'
Vert: 1" = 10'

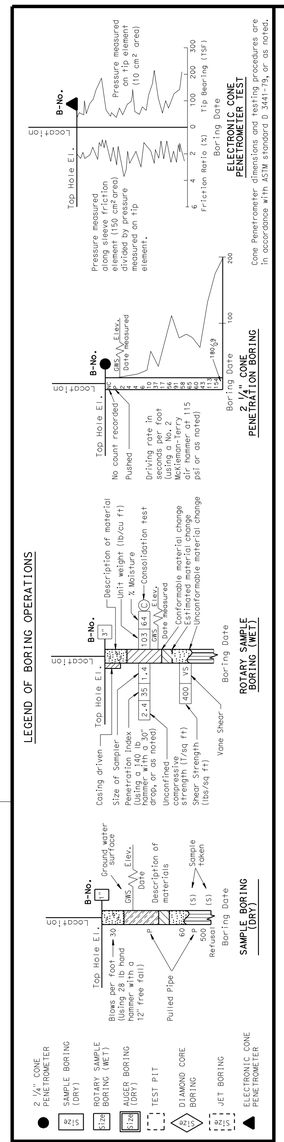

CONSISTENCY CLASSIFICATION FOR SOILS
According to the Standard Penetration Test

SPT N-Value (Blows/foot)	Granular	SPT N-Value (Blows/foot)	Cohesive
0-4	Very Loose	<2	Very Soft
5-10	Loose	2-4	Soft
11-30	Medium Dense	5-8	Medium stiff
31-50	Dense	9-15	Stiff
>50	Very Dense	16-30	Very Stiff
		31-60	Hard
		>60	Very Hard

NOTE: Classification of earth material as shown on this sheet is based upon field inspection and is not to be construed to imply mechanical analysis.

ENGINEERING SERVICES	GEOTECHNICAL SERVICES
DRAWN BY	I.G-Remmen
CHECKED BY	J. Pratt

FIELD INVESTIGATION BY: E. Schramm, M. Abouzalan

STATE OF CALIFORNIA
DEPARTMENT OF TRANSPORTATION

DIVISION OF ENGINEERING SERVICES
STRUCTURE DESIGN
DESIGN BRANCH 18

BRIDGE NO. 53-2920
POST MILE 30.45

EMPIRE AVE UC (REPLACE)
LOG OF TEST BORINGS 1 OF 7

OGS LOG OF TEST BORINGS SHEET (ENGLISH) (REV. 5/25/07)

ORIGINAL SCALE IN INCHES FOR REDUCED PLANS 0 1 2 3

UNIT: 3643
PROJECT NUMBER & PHASE: 07000211191
CONTRACT NO.: 07-1218W1

DISREGARD PRINTS BEARING EARLIER REVISION DATES

REVISION DATES: 01-23-12 01-26-12

SHEET 47 OF 53

FILE => 53-2920rl-z-ltb01.dgn

USERNAME => s113571 DATE PLOTTED => 22-MAY-2012 TIME PLOTTED => 09:25

DIST	COUNTY	ROUTE	POST MILES TOTAL PROJECT	SHEET No	TOTAL SHEETS
07	LA	5	29.4/31.6	971	1931

Joseph S. Pratt 1-27-12
CERTIFIED ENGINEERING GEOLOGIST

5-21-12
PLANS APPROVAL DATE

PROFESSIONAL GEOLOGIST Joseph S. Pratt No. 2141 Exp. 5-31-13 CERTIFIED ENGINEERING GEOLOGIST STATE OF CALIFORNIA

The State of California or its officers or agents shall not be responsible for the accuracy or completeness of electronic copies of this plan sheet.

LEGEND:

- (M) Moisture Content
- (PA) Particle Size Analysis
- (PI) Plasticity, Index, Liquid Limit
- (CR) Corrosivity Testing
- (CP) Compaction

FOR PLAN VIEW, SEE
"LOG OF TEST BORINGS 1 OF 7"

Note: No ground water encountered during field investigation.

Concrete 4" thick.

SILTY SAND (SM) with GRAVEL, estimated medium dense to dense, light brown, dry.

SILTY fine to coarse SAND (SM) with coarse and fine GRAVEL (15 to 40%), dense to very dense, brown to yellowish brown, moist, nonplastic, (FILL).

SILTY fine SAND (SM), loose, yellowish brown, dry, (undifferentiated FILL/ALLUVIUM).

SILTY fine to medium SAND (SM) with fine to coarse GRAVEL (25 to 30%), dense, brown, moist, nonplastic, (ALLUVIUM).

Poorly-graded fine SAND (SP), contains minor fine GRAVEL (2 to 5%), medium dense, light yellowish brown, moist, nonplastic, clean.

SILTY fine SAND with fine GRAVEL (5%) (SM), medium dense, yellowish brown to brown, moist, nonplastic.

SILTY fine SAND (SM), medium dense, yellowish brown, dry, (ALLUVIUM).

SILTY fine to coarse SAND (SM) with GRAVEL (≥0.5" diameter), medium dense, yellowish brown to brown, dry.

SILTY SAND (SM) with coarse GRAVEL, very dense, brown, dry.

SILTY SAND (SM) with GRAVEL interbedded with SANDY SILT (ML), medium dense, yellowish brown to olive brown, dry.

SILTY SAND (SM) interbedded with CLAYEY SAND (SC), loose, brown to gray, dry.

SANDY SILT (ML) with minor CLAY (<5%), medium dense, olive brown to yellowish brown, dry.

SANDY SILT (ML), dense, yellowish brown, dry.

SILTY fine to coarse SAND (SM) with GRAVEL, dense to very dense, yellowish brown, dry.

SANDY SILT (ML) with GRAVEL (≥0.5" diameter), dense, yellowish brown, dry

SILTY fine SAND (SM) with GRAVEL, dense, brown, dry.

SILTY SAND (SM) with GRAVEL (≥0.5" diameter), very dense, light brown to yellowish brown, dry.

PROFILE
Horiz: 1" = 20'
Vert: 1" = 10'

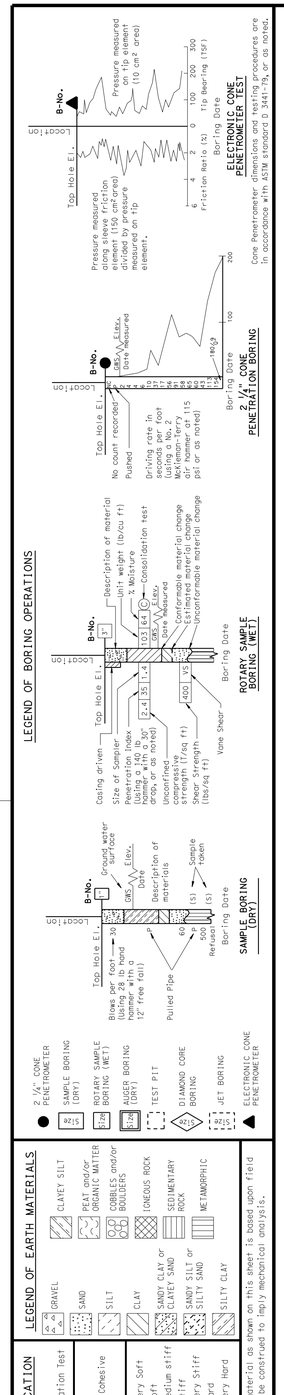

ENGINEERING SERVICES	GEOTECHNICAL SERVICES
DRAWN BY	I.G-Remmen
CHECKED BY	J. Pratt

FIELD INVESTIGATION BY: K. Lai, M. Abouzalan

STATE OF CALIFORNIA DEPARTMENT OF TRANSPORTATION

DIVISION OF ENGINEERING SERVICES STRUCTURE DESIGN DESIGN BRANCH 18

BRIDGE NO. 53-2920
POST MILE 30.45

EMPIRE AVE UC (REPLACE)
LOG OF TEST BORINGS 2 OF 7

OGS LOG OF TEST BORINGS SHEET (ENGLISH) (REV. 5/25/07)

ORIGINAL SCALE IN INCHES FOR REDUCED PLANS 0 1 2 3

UNIT: 3643
PROJECT NUMBER & PHASE: 07000211191
CONTRACT NO.: 07-1218W1

DISREGARD PRINTS BEARING EARLIER REVISION DATES

REVISION DATES 01-25-12 01-26-12

SHEET 48 OF 53

FILE => 53-2920rl-z-ltb02.dgn

USERNAME => s19571 DATE PLOTTED => 22-MAY-2012 TIME PLOTTED => 09:26

DIST	COUNTY	ROUTE	POST MILES TOTAL PROJECT	SHEET No	TOTAL SHEETS
07	LA	5	29.4/31.6	972	1931

Joseph S. Pratt 1-27-12
CERTIFIED ENGINEERING GEOLOGIST

5-21-12
PLANS APPROVAL DATE

PROFESSIONAL GEOLOGIST Joseph S. Pratt No. 2141 Exp. 5-31-13 CERTIFIED ENGINEERING GEOLOGIST STATE OF CALIFORNIA

The State of California or its officers or agents shall not be responsible for the accuracy or completeness of electronic copies of this plan sheet.

LEGEND:

- (M) Moisture Content
- (PA) Particle Size Analysis
- (PI) Plasticity, Index, Liquid Limit
- (CR) Corrosivity Testing
- (CP) Compaction

FOR PLAN VIEW, SEE
"LOG OF TEST BORINGS 1 OF 7"

Note: No ground water encountered during field investigation.

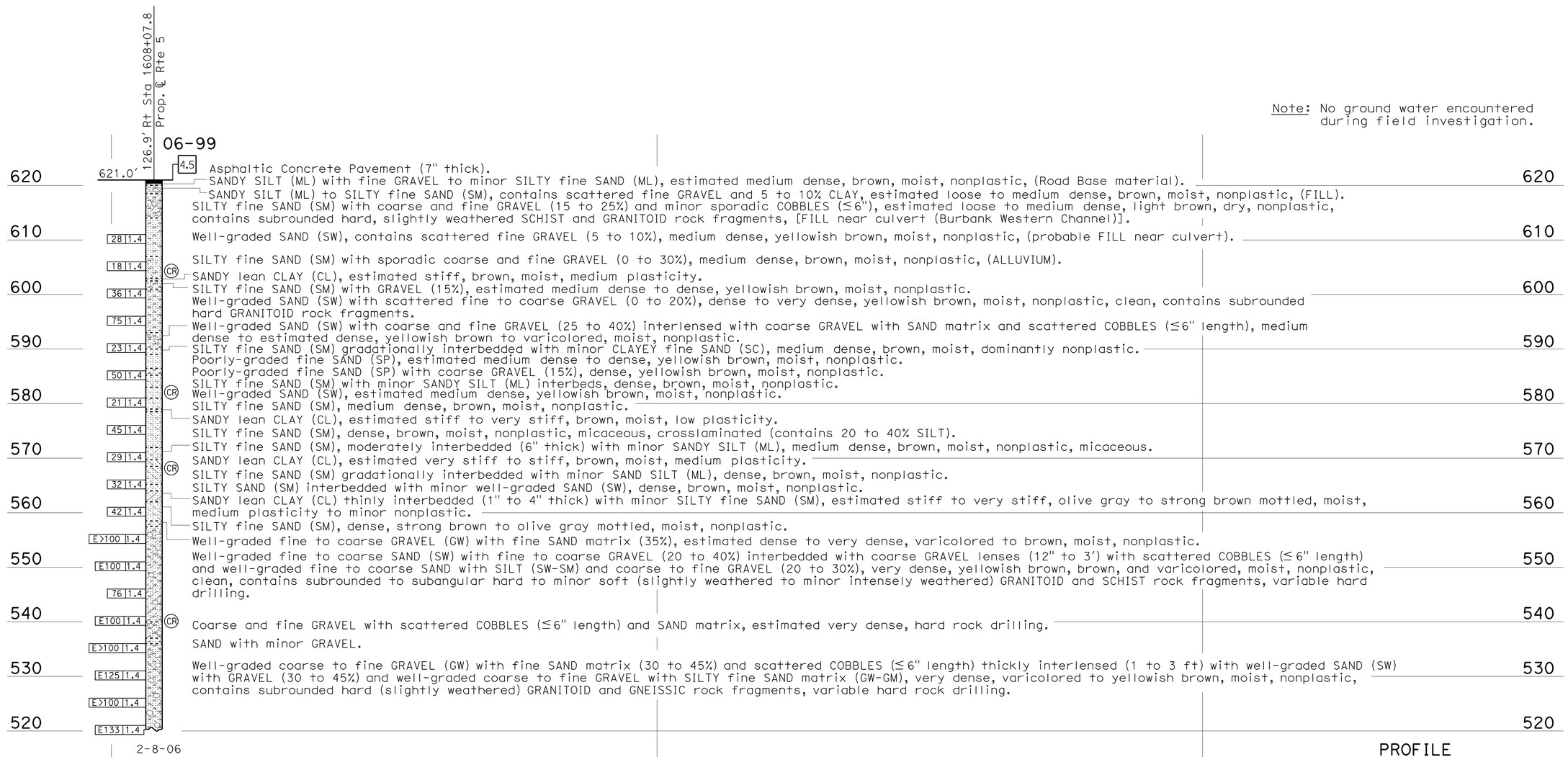

PROFILE
Horiz: 1" = 10'
Vert: 1" = 10'

LEGEND OF BORING OPERATIONS

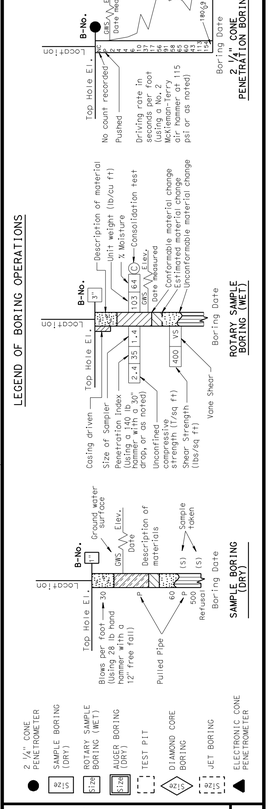

LEGEND OF EARTH MATERIALS

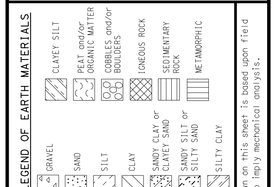

CONSISTENCY CLASSIFICATION FOR SOILS
According to the Standard Penetration Test

SPT N-Value (Blows/Foot)	Granular	SPT N-Value (Blows/Foot)	Cohesive
0-4	Very Loose	<2	Very Soft
5-10	Loose	2-4	Soft
11-30	Medium Dense	5-8	Medium stiff
31-50	Dense	9-15	Stiff
>50	Very Dense	16-30	Very Stiff
		31-60	Hard
		>60	Very Hard

NOTE: Classification of earth material as shown on this sheet is based upon field inspection and is not to be construed to imply mechanical analysis.

ENGINEERING SERVICES	GEOTECHNICAL SERVICES
DRAWN BY	I.G-Remmen
CHECKED BY	J. Pratt

FIELD INVESTIGATION BY: J. Pratt

STATE OF CALIFORNIA DEPARTMENT OF TRANSPORTATION

DIVISION OF ENGINEERING SERVICES STRUCTURE DESIGN DESIGN BRANCH 18

BRIDGE NO. 53-2920
POST MILE 30.45

EMPIRE AVE UC (WIDEN)
LOG OF TEST BORINGS 3 OF 7

OGS LOG OF TEST BORINGS SHEET (ENGLISH) (REV. 5/25/07)

ORIGINAL SCALE IN INCHES FOR REDUCED PLANS 0 1 2 3

UNIT: 3643
PROJECT NUMBER & PHASE: 07000211191
CONTRACT NO.: 07-1218W1

DISREGARD PRINTS BEARING EARLIER REVISION DATES

REVISION DATES: 01-25-12 01-26-12

SHEET 49 OF 53

FILE => 53-2920rl-z-ltb03.dgn

USERNAME => s19571 DATE PLOTTED => 22-MAY-2012 TIME PLOTTED => 09:26

OGS LOG OF TEST BORINGS SHEET (ENGLISH) (REV. 5/25/07)

CONSISTENCY CLASSIFICATION FOR SOILS

According to the Standard Penetration Test

SPT N-Value (Blows/ foot)	Granular	SPT N-Value (Blows/ foot)	Cohesive
0-4	Very Loose	<2	Very Soft
5-10	Loose	2-4	Soft
11-30	Medium Dense	5-8	Medium stiff
31-50	Dense	9-15	Stiff
>50	Very Dense	16-30	Very Stiff
		31-60	Hard
		>60	Very Hard

NOTE: Classification of earth material as shown on this sheet is based upon field inspection and is not to be construed to imply mechanical analysis.

LEGEND OF EARTH MATERIALS

GRAVEL, SAND, SILT, CLAY, SANDY CLAY or CLAYEY SAND, SANDY SILT or SILTY SAND, SILTY CLAY, CLAYEY SILT, PEAT and/or ORGANIC MATTER, COBBLES and/or BOULDERS, IGNEOUS ROCK, SEDIMENTARY ROCK, METAMORPHIC

LEGEND OF BORING OPERATIONS

2 1/4" CONE PENETROMETER; SAMPLE BORING (DRY); ROTARY SAMPLE BORING (WET); AUGER BORING (DRY); TEST PIT; DIAMOND CORE BORING; JET BORING; ELECTRONIC CONE PENETROMETER

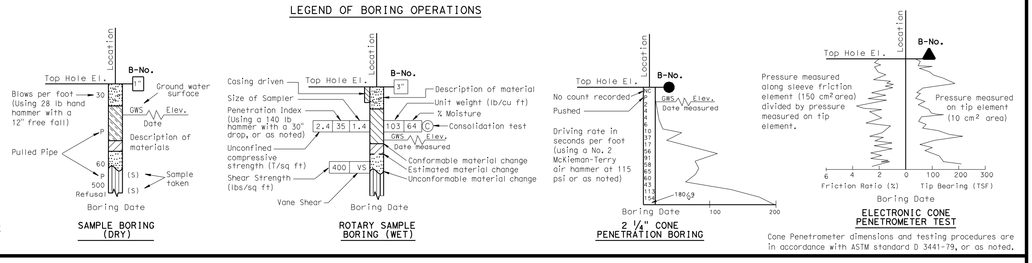

Cone Penetrometer dimensions and testing procedures are in accordance with ASTM standard D 3441-79, or as noted.

ENGINEERING SERVICES

GEOTECHNICAL SERVICES

DRAWN BY I.G-Remmen

CHECKED BY J. Pratt

FIELD INVESTIGATION BY: J. Pratt, B. Hettick

ORIGINAL SCALE IN INCHES FOR REDUCED PLANS 0 1 2 3

STATE OF CALIFORNIA
DEPARTMENT OF TRANSPORTATION

DIVISION OF ENGINEERING SERVICES
STRUCTURE DESIGN
DESIGN BRANCH 18

BRIDGE NO. 53-2920
POST MILE 30.45

UNIT: 3643
PROJECT NUMBER & PHASE: 0700021191
CONTRACT NO.: 07-1218W1

DISREGARD PRINTS BEARING EARLIER REVISION DATES

REVISION DATES 01-25-12 01-26-12

SHEET 50 OF 53

EMPIRE AVE UC (WIDEN)

LOG OF TEST BORINGS 4 OF 7

FILE => 53-2920T-2-1tb04.dgn

LEGEND:

- (M) Moisture Content
- (PA) Particle Size Analysis
- (PI) Plasticity, Index, Liquid Limit
- (CR) Corrosivity Testing
- (CP) Compaction

FOR PLAN VIEW, SEE
"LOG OF TEST BORINGS 1 OF 7"

Note: No ground water encountered during field investigation.

138.2' Lt Sta 1609+02.9
Prop. ℄ Rte 5

05-47

624.0'

4.5 Poorly-graded coarse GRAVEL with fine to medium SAND (GP), estimated loose to medium dense, varicolored to yellowish brown, dry, nonplastic, (FILL-ballast).

620 — Poorly-graded fine SAND (SP), contains 0 to 15% scattered coarse GRAVEL, interbedded with SILTY fine SAND (SM), loose, brown to light brown, dry to moist, nonplastic, (ALLUVIUM).

3 1.4 SILTY fine to medium SAND (SM), contains sporadic scattered GRAVEL (0 to 15%), medium dense, brown, moist, nonplastic.

610 — 29 1.4 (PA)(PI)(CR) Coarse GRAVEL with 20% COBBLES (≤5") and fine to medium SAND matrix (30%), dense to estimated very dense, varicolored to yellowish brown, moist, nonplastic, hard (slightly weathered) GRANITOID and SCHIST rock fragments, very hard drilling.

7 1.4 SILTY fine to medium SAND (SM), contains 2 to 10% GRAVEL and sporadic COBBLES (≤5"), medium dense, brown, moist, nonplastic, moderate water loss to sediments during drilling.

600 — 23 1.4 Fine to medium SAND with SILT (SP-SM), contains 0 to 10% scattered fine to coarse GRAVEL, interbedded with well-graded fine to medium SAND with SILT (SW-SM) and SILTY fine SAND (SM), contains 5 to 10% GRAVEL, medium dense, yellowish brown to brown, moist, nonplastic, moderate water loss.

23 1.4

590 — 11 1.4 (PA)(PI)(CR) SILTY fine SAND (SM) interbedded with SANDY SILT (ML) and poorly-graded fine SAND with SILT (SP-SM), medium dense to loose, light grayish brown, brown, and yellowish brown, moist to minor wet (minor perched water between Elevs 592.5 to 591.5'), nonplastic.

8 1.4 Well-graded fine to coarse SAND (SW) with GRAVEL interbedded with minor SANDY SILT (ML), estimated loose to medium dense, yellowish brown to light grayish brown, moist, nonplastic.

580 — 23 1.4 Poorly-graded fine SAND with SILT (SP-SM) interbedded with SILT (ML) and SILTY fine SAND (SM), medium dense, brown to grayish brown, moist, nonplastic.

22 1.4 Poorly-graded fine SAND (SP), medium dense, light grayish brown, moist, nonplastic.

570 — 32 1.4 (CR) Poorly-graded coarse GRAVEL (GP) lenses (1 to 2' thick) with scattered COBBLES (≤6") and SAND matrix (30 to 40%) interlensed with poorly-graded fine to medium SAND (SP) and SILTY fine SAND (SM), dense, varicolored to light grayish brown and yellowish brown, moist, nonplastic, hard subrounded GRANITOID and SCHIST rock fragments, sporadic hard drilling.

29 1.4 SILTY fine SAND (SM) interbedded with minor SANDY SILT (ML) and poorly-graded fine SAND (SP), medium dense, reddish brown, yellowish brown, and strong brown, moist, nonplastic, (intensely weathered PALEOSOL).

560 — 21 1.4 Lean CLAY (CL), very stiff, light olive to yellowish brown mottled, moist, medium plasticity.

Well-graded fine to coarse SAND (SW) with 10 to 15% GRAVEL interlensed with Well-graded coarse to fine GRAVEL (GW) with scattered COBBLES (≤6") and SAND matrix (30%), very dense, varicolored, grayish brown, and brown, moist, nonplastic, subrounded to well rounded hard (slightly weathered) GNEISS, GRANITE, and SCHIST rock fragments, hard drilling.

E105 1.4

550 — 3.9 Well-graded GRAVEL (GW)/COBBLE (≤6") unit with fine to medium SAND (SW) matrix, estimated very dense, varicolored to yellowish brown, moist, nonplastic, subrounded hard (slightly weathered) SCHIST, GRANITOID, and GNEISS rock fragments. (CR)

E100 1.4 Well-graded SAND (SW) with GRAVEL (15%) interbedded with well-graded fine to coarse GRAVEL (GW)/COBBLE (≤6") lenses with fine to medium SAND matrix (30%), very dense, varicolored to yellowish brown, moist, nonplastic, subrounded to subangular hard (slightly weathered) to minor soft (intensely weathered) SCHIST and GRANITOID rock fragments, hard drilling, moderate water loss to sediments, SAND lenses (6" to 1' thick).

540 — SANDY SILT (ML) interbedded with SILTY fine SAND (SM), estimated medium dense, brown to yellowish brown, moist, nonplastic, micaceous, thinly interbedded (1 to 3" thick).

Well-graded SAND (SW, 50%) interbedded with well-graded GRAVEL (GW) with scattered COBBLES (≤5") and medium to coarse SAND matrix, estimated very dense, light grayish brown to varicolored, moist, nonplastic.

530 — E125 1.4 SILTY fine SAND (SM) interbedded with SANDY SILT (ML), very dense, strong brown, reddish brown and yellowish brown, (CR) moist, nonplastic, thin interbeds (1" thick), micaceous, moderate water loss to sediments.

Poorly-graded coarse GRAVEL (GP) with minor scattered COBBLES (≤5") and fine to coarse SAND (SW) matrix (30 to 40%), moderately (6" to 1' thick) interbedded with Well-graded fine to coarse SAND (SW), estimated very dense, varicolored to yellowish brown, moist, nonplastic, subrounded hard to minor soft (slightly weathered to intensely weathered) SCHIST and GRANITOID rock fragments.

520 — (CR) Well-graded GRAVEL (GW) with SAND matrix (30 to 40%) and scattered COBBLES (≤6") interlensed with 50% well graded fine to coarse SAND (SW) with intermittent (0 to 30%) scattered coarse GRAVEL, estimated very dense, varicolored to yellowish brown, moist, nonplastic, subrounded hard (slightly weathered), SCHIST and GRANITOID rock fragments.

510 — 84 1.4 SILTY fine to coarse SAND (SM) with GRAVEL (20 to 30%) interbedded with well-graded fine to coarse GRAVEL (GW) with COBBLES (≤6"), very dense, brown to yellowish brown, moist, nonplastic, contains subrounded to subangular hard (slightly weathered) to minor soft (intensely weathered) SCHIST and GRANITOID rock fragments.

81 1.4 (CR)

E108 1.4

500 — SILTY fine SAND (SM), brown, moist, nonplastic.

(CR) SILTY fine SAND (SM), contains 5% CLAY, brown to dark brown, moist, nonplastic.

SILTY fine SAND (SM), brown, moist, nonplastic.

490 — 59 1.4 (CR) SANDY CLAY (CL), contains scattered fine GRAVEL (5 to 10%), hard, brown, varicolored, and yellowish brown, moist, medium plasticity, subrounded (intensely weathered) SCHIST and GRANITOID rock fragments.

SILTY fine to coarse SAND (SM), contains 5% CLAY and scattered poorly graded GRAVEL (5%; ≤2"), dense, brown, moist, nonplastic.

34 1.4 (PI) SANDY CLAY (CL), very stiff to hard, brown, moist, medium plasticity.

(CR) SILTY SAND (SM), dense brown, moist, nonplastic.

480 — 80 1.4 CLAYEY fine SAND (SC), estimated very stiff to hard, brown to strong brown, moist, low plasticity.

(CR) SILTY fine SAND (SM), contains 5% GRAVEL (≤2"), very dense, brown, moist, nonplastic.

SANDY lean CLAY (CL), contains 10% scattered GRAVEL (≤2"), brown, estimated stiff to hard, moist, medium plasticity.

SILTY SAND (SM), contains 5% scattered GRAVEL (≤2"), estimated very dense, light brown to brown, moist, nonplastic.

470 — CLAYEY fine SAND (SC), estimated hard, strong brown, moist, medium plasticity.

SILTY fine to coarse SAND (SM) with 30% GRAVEL and scattered COBBLES interbedded with well-graded fine to coarse GRAVEL (GW) with sporadic COBBLES (≤6"), est. very dense, brown to strong brown, moist, non-plastic, subrounded to subangular, hard (slightly weathered), SCHIST and GRANITOID rock fragments.

460 — SILTY GRAVEL (GM) with SAND and COBBLES (≤6"), estimated very dense, brownish gray to gray, moist, sub-angular hard (slightly weathered) SCHIST and GRANITOID rock fragments.

Well-graded SAND (SW) with coarse GRAVEL and COBBLES (≤5") interlensed with poorly-graded coarse GRAVEL (GP) with COBBLES (≤6") and SAND matrix (30 to 40%), estimated very dense, varicolored, yellowish brown, and grayish brown, moist, nonplastic, subrounded hard (slightly weathered), GRANITOID and SCHIST rock fragments.

450 — SILTY fine SAND (SM), contains 2% fine GRAVEL, interbedded with well-graded SAND (SW), very dense, brown to yellowish brown, moist, nonplastic.

Well-graded fine to medium SAND (SW), contains 2 to 5% coarse GRAVEL and COBBLES (≤4"), estimated very dense, light grayish brown, yellowish brown, and brown, moist, nonplastic.

440 — SILTY fine SAND (SM), estimated very dense, brown, moist, nonplastic.

9-30-05

1609+00 — 1610+00

PROFILE

Horiz: 1" = 10'
Vert: 1" = 10'

Joseph S. Pratt 1-27-12
CERTIFIED ENGINEERING GEOLOGIST

5-21-12
PLANS APPROVAL DATE

The state of California or its officers or agents shall not be responsible for the accuracy or completeness of electronic copies of this plan sheet.

PROFESSIONAL GEOLOGIST Joseph S. Pratt No. 2141 Exp. 5-31-13 CERTIFIED ENGINEERING GEOLOGIST STATE OF CALIFORNIA

DIST	COUNTY	ROUTE	POST MILES TOTAL PROJECT	SHEET NO	TOTAL SHEETS
07	LA	5	29.4/31.6	973	1931

USERNAME => s119571 DATE PLOTTED => 22-MAY-2012 TIME PLOTTED => 09:26

DIST	COUNTY	ROUTE	POST MILES TOTAL PROJECT	SHEET No	TOTAL SHEETS
07	LA	5	29.4/31.6	974	1931

Joseph S. Pratt 1-27-12
CERTIFIED ENGINEERING GEOLOGIST

5-21-12
PLANS APPROVAL DATE

PROFESSIONAL GEOLOGIST — Joseph S. Pratt No. 2141 Exp. 5-31-13 — CERTIFIED ENGINEERING GEOLOGIST — STATE OF CALIFORNIA

The State of California or its officers or agents shall not be responsible for the accuracy or completeness of electronic copies of this plan sheet.

LEGEND:

- (M) Moisture Content
- (PA) Particle Size Analysis
- (PI) Plasticity, Index, Liquid Limit
- (CR) Corrosivity Testing
- (CP) Compaction

FOR PLAN VIEW, SEE
"LOG OF TEST BORINGS 1 OF 7"

Note: No ground water encountered during field investigation.

Asphaltic concrete pavement (8" thick).
SAND and GRAVEL, brown, (Road Base material).
SILTY fine SAND (SM) interbedded with SAND, estimated loose, yellowish brown, (probable ALLUVIUM).
Coarse GRAVEL (GW) with SAND matrix (30 to 40%) and scattered COBBLES (3 to 6" length) interbedded with SAND, estimated medium dense to loose, varicolored to brown, moist, contains subrounded hard (slightly weathered) DIORITE and GRANITOID rock fragments, (probable ALLUVIUM).
SILTY fine SAND (SM) with scattered GRAVEL (0 to 30%), loose, brown, moist, nonplastic, micaceous, (ALLUVIUM).
Coarse GRAVEL and COBBLES moderately interbedded with SAND, estimated medium dense.
SILTY fine SAND (SM) interbedded with minor fine SAND with SILT (SP-SM), loose, brown to yellowish brown, moist, nonplastic.
Coarse GRAVEL, SAND, and minor scattered COBBLES (≤ 6" diameter), estimated medium dense.
SILTY fine SAND (SM), medium dense, brown, moist, nonplastic.
Poorly-graded fine SAND (SP), medium dense, yellowish brown to grayish brown, moist, nonplastic, clean.
SANDY SILT (ML) to SILTY fine SAND (SM) interbedded with fine SAND with SILT (SP-SM), estimated medium dense, brown to yellowish brown, moist, nonplastic, micaceous.
Well-graded SAND (SW) with scattered GRAVEL (5 to 20%), contains a moderately thick (12" thick) coarse GRAVEL lense below elevation +601', dense, yellowish brown, moist, nonplastic.
SANDY lean CLAY (CL) gradationally interbedded with minor SANDY SILT (ML), hard/minor dense, light brown to strong brown mottled, dry to slightly moist, medium plasticity to minor nonplastic, (PALEOSOL hardpan).
Well-graded SAND (SW) with scattered fine GRAVEL (5 to 15%), dense, yellowish brown, moist, nonplastic.
Coarse GRAVEL with SAND matrix, estimated dense.
SANDY SILT (ML) interbedded with minor SILTY fine SAND (SM), loose, brown, moist, nonplastic.
SANDY lean CLAY (CL), estimated firm to stiff, brown, moist, medium plasticity.
Poorly-graded fine to medium SAND with coarse and fine GRAVEL (10 to 15%) interbedded with minor SILTY fine SAND (SM), medium dense, yellowish brown, moist, nonplastic, clean.
SILTY fine SAND (SM) gradationally interbedded with SANDY SILT (ML), estimated medium dense, brown, moist, nonplastic.
Poorly-graded fine SAND with SILT (SP-SM), SILTY fine SAND (SM), and poorly graded fine SAND (SP), contains intermittent scattered GRAVEL (0 to 10%), dense to medium dense, yellowish brown to brown, moist, nonplastic, clean, crosslaminated.
SANDY SILT (ML), medium dense, brown, moist, nonplastic, micaceous.
SANDY lean CLAY (CL), very stiff, brown, moist, medium plasticity.
SILTY fine SAND (SM) gradationally interbedded with SANDY SILT (ML), medium dense, brown to strong brown, moist, nonplastic, micaceous.
SILTY fine SAND (SM) interbedded with rare SANDY SILT (ML), dense, strong brown to brown, moist, nonplastic.
Well-graded SAND (SW), dense, yellowish brown, moist, nonplastic.
Coarse GRAVEL with scattered COBBLES.
Well-graded SAND (SW) with GRAVEL (40%), very dense, yellowish brown, moist, nonplastic.
Well-graded fine to coarse GRAVEL (GW) with fine SAND matrix (30 to 35%) and scattered COBBLES (≤ 6" length) interlensed with SAND with intermittent scattered GRAVEL, very dense, varicolored to yellowish brown, moist, nonplastic, variable hard rock drilling.
Well-graded coarse to fine GRAVEL (GW) with SAND matrix (30 to 35%) thickly interbedded (12" to 24" thick) with SAND with GRAVEL, very dense, varicolored to yellowish brown, moist, nonplastic, variable hard rock drilling.
GRAVEL with scattered COBBLES thickly interbedded (12" to 18" thick) with SAND with GRAVEL, estimated very dense.
SILTY fine to medium SAND (SM) with GRAVEL (20 to 45%) interbedded with GRAVEL, very dense, yellowish brown to varicolored, moist, nonplastic.
Well-graded coarse to fine GRAVEL (GW) with SAND matrix and intermittent scattered COBBLES thickly interbedded (12" to 24" thick) with well-graded SAND (SW) with GRAVEL (30 to 40%), very dense, varicolored, yellowish brown, and strong brown, moist, nonplastic.

PROFILE
Horiz: 1" = 20'
Vert: 1" = 10'

LEGEND OF BORING OPERATIONS

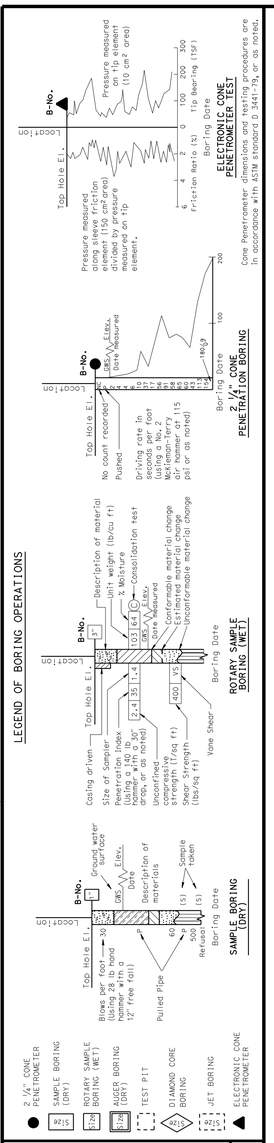

LEGEND OF EARTH MATERIALS

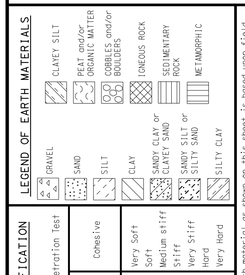

CONSISTENCY CLASSIFICATION FOR SOILS
According to the Standard Penetration Test

SPT N-Value (Blows/ft)	Granular	SPT N-Value (Blows/ft)	Cohesive
0-4	Very Loose	<2	Very Soft
5-10	Loose	2-4	Soft
11-30	Medium Dense	5-8	Medium stiff
31-50	Dense	9-15	Stiff
>50	Very Dense	16-30	Very Stiff
		31-60	Hard
		>60	Very Hard

NOTE: Classification of earth material as shown on this sheet is based upon field inspection and is not to be construed to imply mechanical analysis.

ENGINEERING SERVICES	GEOTECHNICAL SERVICES
DRAWN BY	I.G-Remmen
CHECKED BY	J. Pratt

FIELD INVESTIGATION BY: J. Pratt

STATE OF CALIFORNIA DEPARTMENT OF TRANSPORTATION

DIVISION OF ENGINEERING SERVICES STRUCTURE DESIGN
DESIGN BRANCH 18

BRIDGE NO. 53-2920
POST MILE 30.45

EMPIRE AVE UC (REPLACE)
LOG OF TEST BORINGS 5 OF 7

OGS LOG OF TEST BORINGS SHEET (ENGLISH) (REV. 5/25/07)

ORIGINAL SCALE IN INCHES FOR REDUCED PLANS 0 1 2 3

UNIT: 3643
PROJECT NUMBER & PHASE: 07000211191
CONTRACT NO.: 07-1218W1

DISREGARD PRINTS BEARING EARLIER REVISION DATES
REVISION DATES 01-23-12 01-26-12
SHEET 51 OF 53

FILE => 53-2920rl-z-ltb05.dgn

USERNAME => s113571 DATE PLOTTED => 22-MAY-2012 TIME PLOTTED => 09:26

DIST	COUNTY	ROUTE	POST MILES TOTAL PROJECT	SHEET No	TOTAL SHEETS
07	LA	5	29.4/31.6	975	1931

Joseph S. Pratt 1-27-12
CERTIFIED ENGINEERING GEOLOGIST

5-21-12
PLANS APPROVAL DATE

PROFESSIONAL GEOLOGIST Joseph S. Pratt No. 2141 Exp. 5-31-13 CERTIFIED ENGINEERING GEOLOGIST STATE OF CALIFORNIA

The State of California or its officers or agents shall not be responsible for the accuracy or completeness of electronic copies of this plan sheet.

LEGEND:

- (M) Moisture Content
- (PA) Particle Size Analysis
- (PI) Plasticity, Index, Liquid Limit
- (CR) Corrosivity Testing
- (CP) Compaction

FOR PLAN VIEW, SEE
"LOG OF TEST BORINGS 1 OF 7"

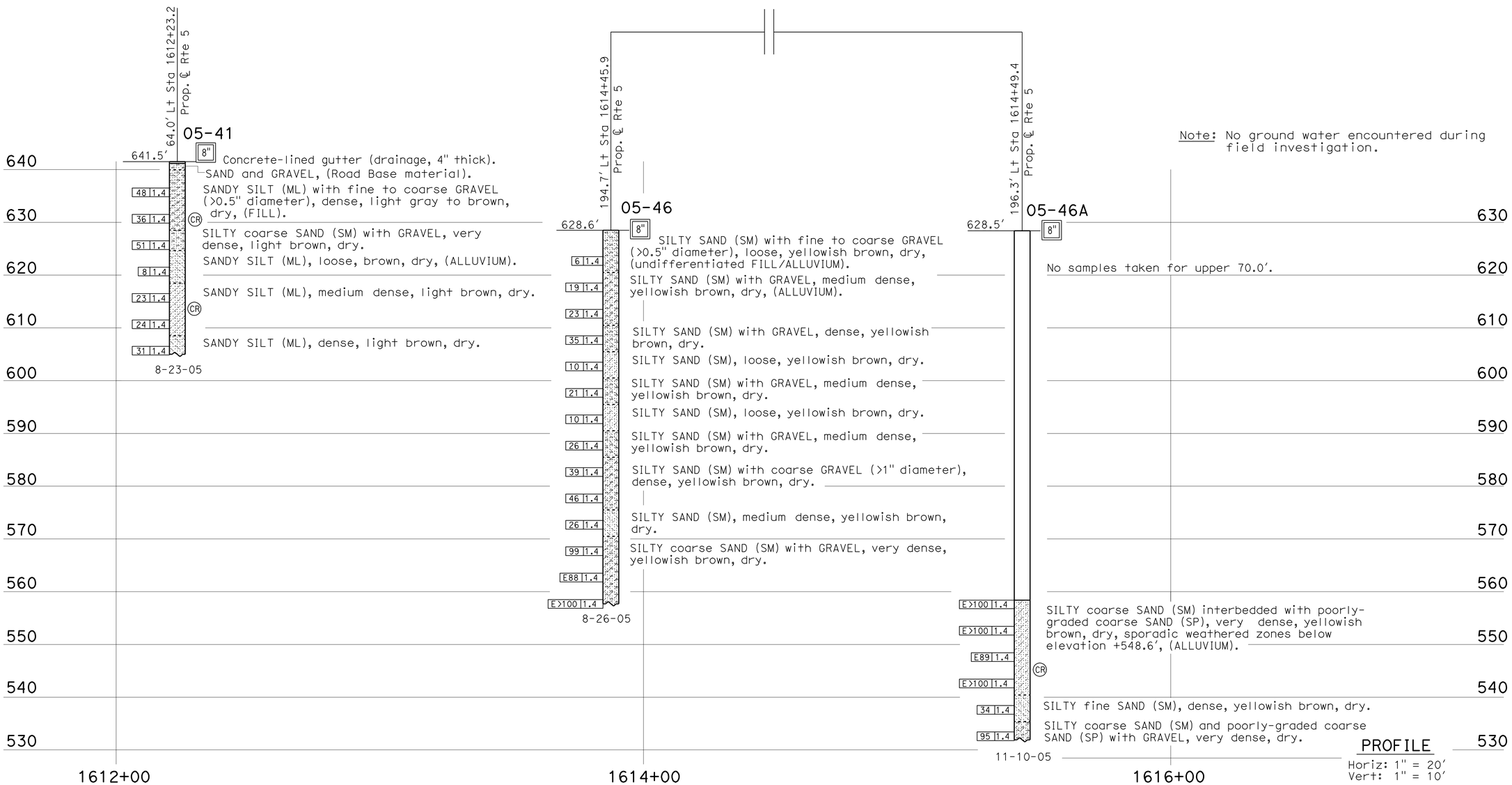

Note: No ground water encountered during field investigation.

PROFILE
Horiz: 1" = 20'
Vert: 1" = 10'

LEGEND OF BORING OPERATIONS

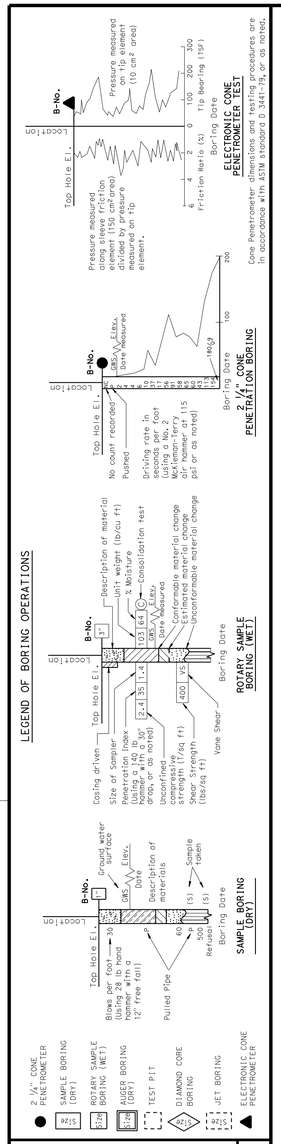

LEGEND OF EARTH MATERIALS

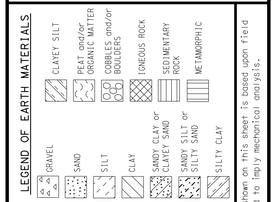

CONSISTENCY CLASSIFICATION FOR SOILS

According to the Standard Penetration Test

SPT N-Value (Blows/ Foot)	Granular	SPT N-Value (Blows/ Foot)	Cohesive
0-4	Very Loose	<2	Very Soft
5-10	Loose	2-4	Soft
11-30	Medium Dense	5-8	Medium stiff
31-50	Dense	9-15	Stiff
>50	Very Dense	16-30	Very Stiff
		31-60	Hard
		>60	Very Hard

NOTE: Classification of earth material as shown on this sheet is based upon field inspection and is not to be construed to imply mechanical analysis.

ENGINEERING SERVICES	GEOTECHNICAL SERVICES
DRAWN BY	I.G-Remmen
CHECKED BY	J. Pratt

FIELD INVESTIGATION BY: K. Lai

STATE OF CALIFORNIA
DEPARTMENT OF TRANSPORTATION

DIVISION OF ENGINEERING SERVICES
STRUCTURE DESIGN
DESIGN BRANCH 18

BRIDGE NO. 53-2920
POST MILE 30.45

EMPIRE AVE UC (WIDEN)
LOG OF TEST BORINGS 6 OF 7

OGS LOG OF TEST BORINGS SHEET (ENGLISH) (REV. 5/25/07)

ORIGINAL SCALE IN INCHES FOR REDUCED PLANS 0 1 2 3

UNIT: 3643
PROJECT NUMBER & PHASE: 07000211191
CONTRACT NO.: 07-1218W1

DISREGARD PRINTS BEARING EARLIER REVISION DATES

REVISION DATES 01-25-12 01-26-12

SHEET 52 OF 53

FILE => 53-2920rl-z-ltb06.dgn

USERNAME => s119571 DATE PLOTTED => 22-MAY-2012 TIME PLOTTED => 09:27

I-081-3 (6)

FED. AID DIV. No	STATE	PROJ. No.	FISCAL YEAR	SHEET No	TOTAL SHEETS
7	CAL.			355	448

DIST.	COUNTY	ROUTE	SECTION	SHEET No	TOTAL SHEETS
VII	LA				

BRIDGE ENGINEER — CIVIL ENGINEER – LICENSE

DATE APPROVED AUGUST . 1968

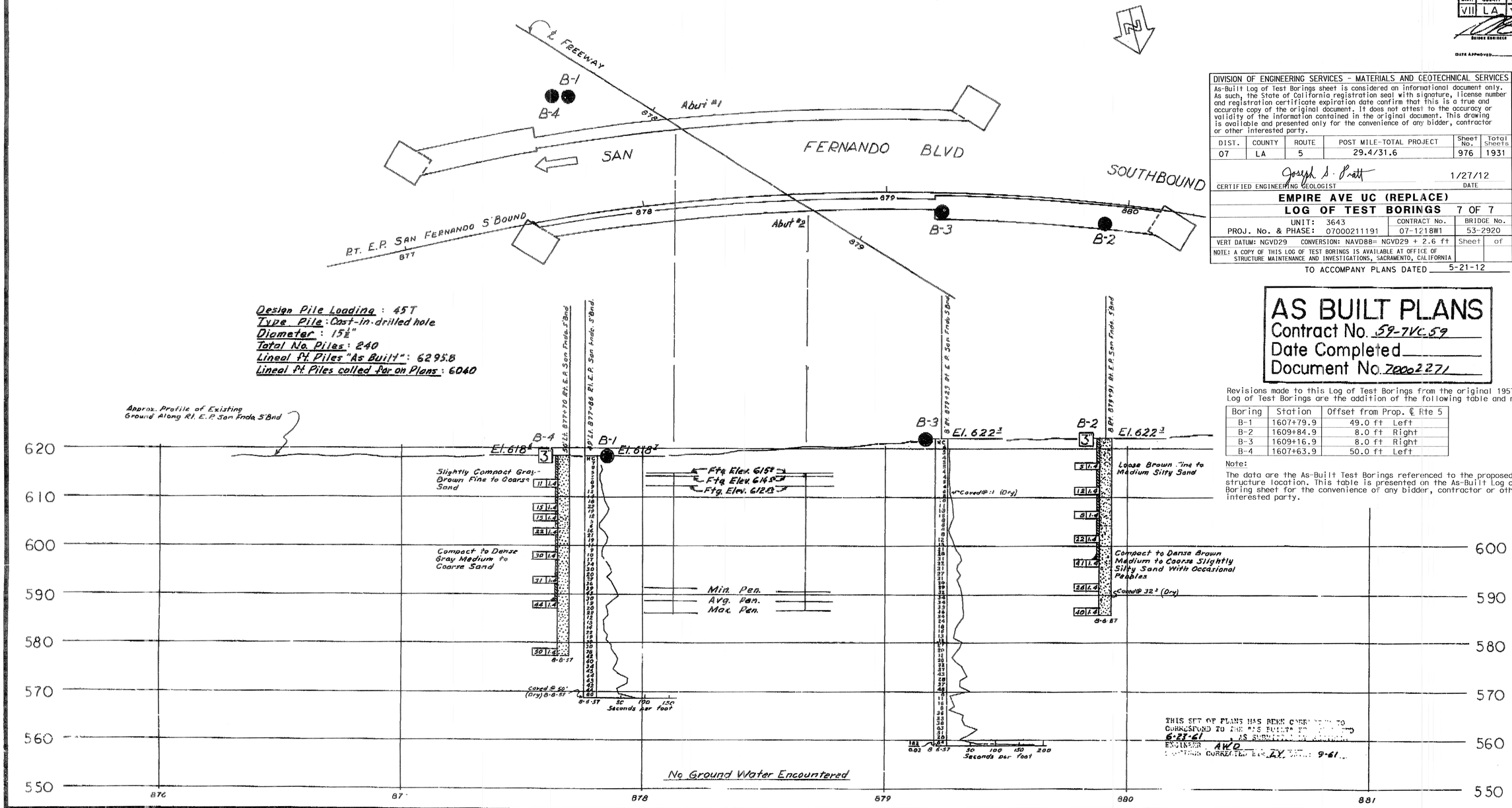

DIVISION OF ENGINEERING SERVICES – MATERIALS AND GEOTECHNICAL SERVICES

As-Built Log of Test Borings sheet is considered an informational document only. As such, the State of California registration seal with signature, license number and registration certificate expiration date confirm that this is a true and accurate copy of the original document. It does not attest to the accuracy or validity of the information contained in the original document. This drawing is available and presented only for the convenience of any bidder, contractor or other interested party.

DIST.	COUNTY	ROUTE	POST MILE-TOTAL PROJECT	Sheet No.	Total Sheets
07	LA	5	29.4/31.6	976	1931

Joseph S. Pratt — 1/27/12
CERTIFIED ENGINEERING GEOLOGIST — DATE

PROFESSIONAL GEOLOGIST — Joseph S. Pratt — No. 2141 — Exp. 5-31-13 — CERTIFIED ENGINEERING GEOLOGIST — STATE OF CALIFORNIA

EMPIRE AVE UC (REPLACE)

LOG OF TEST BORINGS 7 OF 7

UNIT: 3643	CONTRACT No.	BRIDGE No.
PROJ. No. & PHASE: 07000211191	07-1218W1	53-2920

VERT DATUM: NGVD29 CONVERSION: NAVD88= NGVD29 + 2.6 ft — Sheet of

NOTE: A COPY OF THIS LOG OF TEST BORINGS IS AVAILABLE AT OFFICE OF STRUCTURE MAINTENANCE AND INVESTIGATIONS, SACRAMENTO, CALIFORNIA

TO ACCOMPANY PLANS DATED 5-21-12

AS BUILT PLANS
Contract No. 59-7Vc.59
Date Completed
Document No. 70002271

Revisions made to this Log of Test Borings from the original 1957 As-Built Log of Test Borings are the addition of the following table and note:

Boring	Station	Offset from Prop. ℄ Rte 5
B-1	1607+79.9	49.0 ft Left
B-2	1609+84.9	8.0 ft Right
B-3	1609+16.9	8.0 ft Right
B-4	1607+63.9	50.0 ft Left

Note:
The data are the As-Built Test Borings referenced to the proposed new structure location. This table is presented on the As-Built Log of Test Boring sheet for the convenience of any bidder, contractor or other interested party.

CLASSIFICATION OF MATERIAL BASED ON STANDARD GRADE SIZE LIMITS

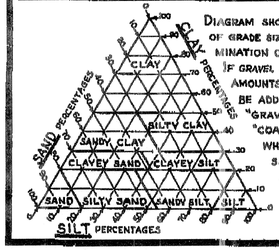

DIAGRAM SHOWING THE BASIS FOR ESTIMATES OF GRADE SIZE DISTRIBUTION USED IN DETERMINATION OF CLASS NAMES. IF GRAVEL IS PRESENT IN APPRECIABLE AMOUNTS THE TERM "GRAVELLY" MAY BE ADDED TO THE CLASS NAME, VIZ. "GRAVELLY SAND". THE TERMS "COARSE", "MEDIUM" AND "FINE" WHEN USED TO DESCRIBE SAND, SILT AND GRAVEL REFER TO STANDARD GRADE SIZE LIMITS.

LEGEND OF EARTH MATERIALS

- GRAVEL
- SAND
- SILT
- CLAY
- SANDY CLAY OR CLAYEY SAND
- SANDY SILT OR SILTY SAND
- SILTY CLAY OR CLAYEY SILT
- PEAT AND/OR ORGANIC MATTER
- FILL MATERIAL
- IGNEOUS ROCK
- SEDIMENTARY ROCK
- METAMORPHIC ROCK

LEGEND OF BORING OPERATIONS

- PLAN OF ANY BORING
- PENETROMETER
- 2¼" CONE PENETROMETER
- SAMPLER BORING (DRY)
- ROTARY BORING (WET)
- AUGER BORING (DRY)
- JET BORING
- CORE BORING
- TEST PIT

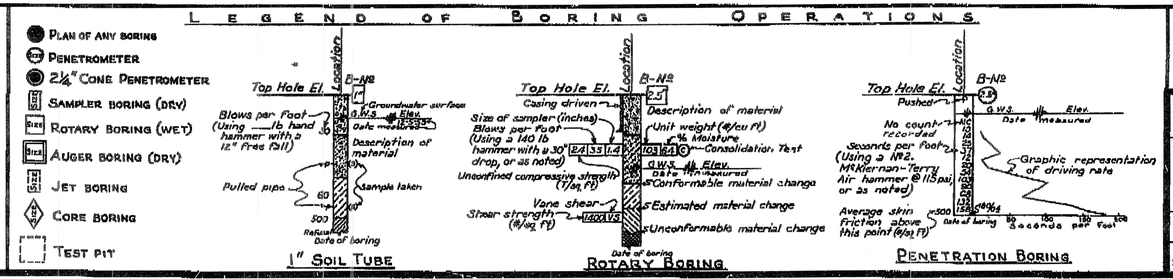

NOTES

The contractor's attention is directed to Section 2, Article (c) of the Standard Specifications and to the Special Provisions accompanying this set of plans.

Classification of earth material as shown on this sheet is based upon field inspection and is not to be construed to imply mechanical analysis.

STATE OF CALIFORNIA
DEPARTMENT OF PUBLIC WORKS
DIVISION OF HIGHWAYS

SAN FERNANDO BLVD. UNDERCROSSING SOUTHBOUND

LOG OF TEST BORINGS

SCALE	BRIDGE	FILE	DRAWING
Horiz. 1"=20' Vert. 1"=10'	53-1215	E-5	C-4438-8

BRIDGE DEPARTMENT

CHECKED

357

PREP. DRAWING D.P. 4438 '27 53-2920rl-z-1tb07.tif 53 OF 53

DIST	COUNTY	ROUTE	POST MILES TOTAL PROJECT	SHEET No.	TOTAL SHEETS
07	LA	5	29.4/31.6	977	1931

REGISTERED CIVIL ENGINEER — DATE 01/31/12

5-21-12
PLANS APPROVAL DATE

REGISTERED PROFESSIONAL ENGINEER — JORGE I. ESTRADA — No. C51473 — Exp. 06/30/12 — CIVIL — STATE OF CALIFORNIA

The State of California or its officers or agents shall not be responsible for the accuracy or completeness of electronic copies of this plan sheet.

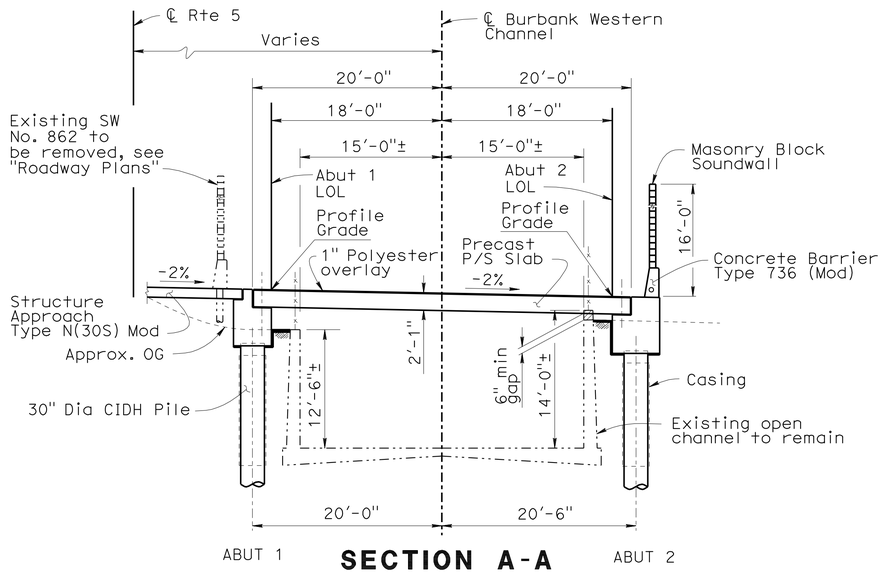

SECTION A-A

1' = 1/8"

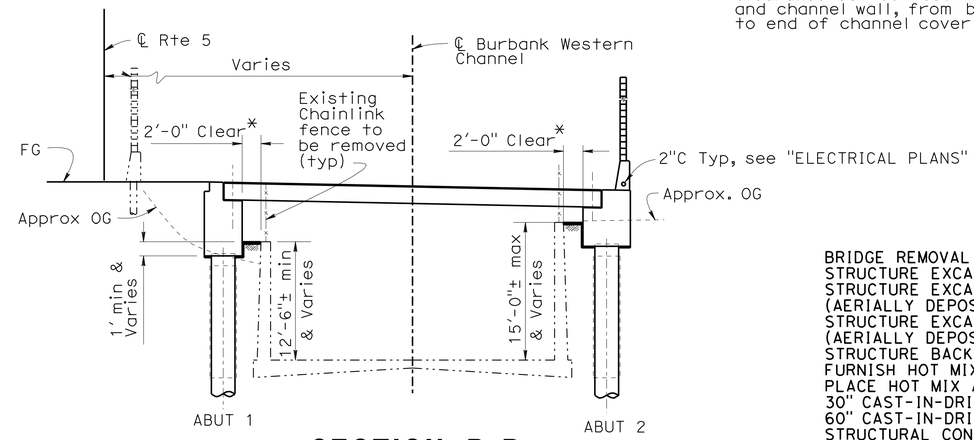

SECTION B-B

1' = 1/8"

NOTE
For details not shown see Section A-A

* Clearance between abutment and channel wall, from begin to end of channel cover

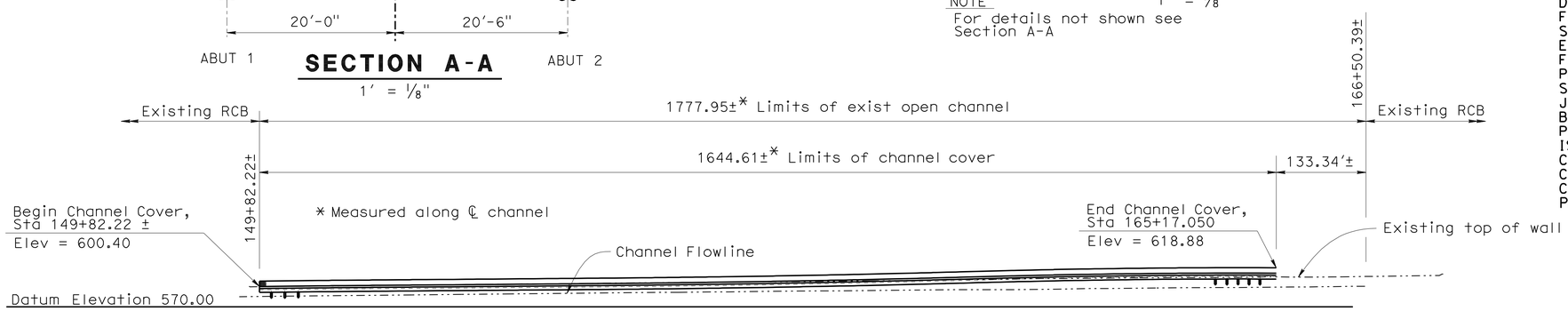

DEVELOPED ELEVATION

1"-100'

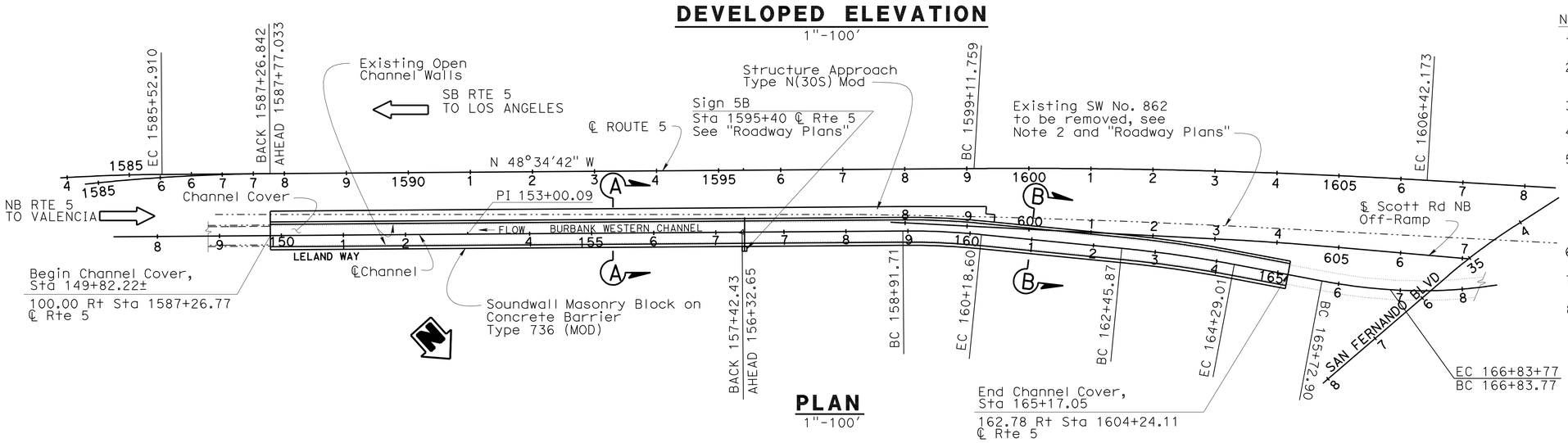

PLAN

1"-100'

QUANTITIES

BRIDGE REMOVAL (PORTION), LOCATION G	LUMP SUM	
STRUCTURE EXCAVATION (BRIDGE)	1,792	CY
STRUCTURE EXCAVATION (TYPE Z-3) (AERIALLY DEPOSITED LEAD)	51	CY
STRUCTURE EXCAVATION (TYPE Y-1) (AERIALLY DEPOSITED LEAD)	311	CY
STRUCTURE BACKFILL (BRIDGE)	977	CY
FURNISH HOT MIX ASPHALT (CHANNEL)	124	TON
PLACE HOT MIX ASHPALT (CHANNEL)	735	SQYD
30" CAST-IN-DRILLED-HOLE CONCRETE PILING	18,528	LF
60" CAST-IN-DRILLED-HOLE CONCRETE PILING	22	LF
STRUCTURAL CONCRETE, BRIDGE	2,951	CY
STRUCTURAL CONCRETE, APPROACH SLAB (TYPE N MODIFIED)	750	CY
DRILL AND BOND DOWEL	519	LF
FURNISH PRECAST PRESTRESSED CONCRETE SLAB (TYPE SIV)	65,800	SQFT
ERECT PRECAST PRESTRESSED CONCRETE DECK UNIT	206	EA
FURNISH POLYESTER CONCRETE OVERLAY	5,483	CF
PLACE POLYESTER CONCRETE OVERLAY	65,800	SQFT
SOUND WALL (MASONRY BLOCK)	21,385	SQFT
JOINT SEAL (MR 1/2")	5,410	LF
BAR REINFORCING STEEL (BRIDGE)	1,640,856	LB
PUBLIC SAFETY PLAN	LUMP SUM	
ISOLATION CASING	244,264	LB
CHAIN LINK FENCE (TYPE CL-6)	39	LF
CONCRETE BARRIER (TYPE 736 MODIFIED)	258	LF
CONCRETE BARRIER (TYPE 736SV)	1,645	LF
PREPARE CONCRETE BRIDGE DECK SURFACE	65,800	SQFT

LEGEND

Indicates Existing Structure
Indicates New Constuction
Bridge Removal (Portion)

NOTES:

1. For Curve Data see Structure Plan sheets
2. Existing SW No. 862 to remain until construction of new soundwall at Abut 2 is completed
3. For General Notes and Pile Data Table see "Index to Plans" sheet
4. For manhole and Survey point locations see "Panel Layout" sheets
5. The Contractor shall be extra cautious working in the vicinity of existing Burbank Western Channel. For the purpose of soil compaction, the Contractor shall use hand held equipment when working adjacent or over the existing channel in order to not cause any structural damage to the channel.
6. For limits of excavation for Aerially Deposited Lead (ADL), see "Abutment Details No.2" sheet
7. Relocation of existing utilities prior to this Contract by Others.
8. For electrolier locations and pedestal details, see "MISCELLANEOUS DETAILS" sheet.

BURBANK WESTERN CHANNEL
CHANNEL COVER
GENERAL PLAN

MIKE POPE
DESIGN ENGINEER

	BY	CHECKED
DESIGN	J. ESTRADA	M. OKIMURA/D.R. MURRAY
DETAILS	SURAJ DUTTA	J.ESTRADA
QUANTITIES	DAVID R MURRAY	PREM RIMAL

LOAD FACTOR DESIGN — LIVE LOADING: HS20-44 AND ALTERNATIVE AND PERMIT DESIGN LOAD
LAYOUT — BY S. DUTTA — CHECKED J. ESTRADA
SPECIFICATIONS — BY JAMES CHOI — PLANS AND SPECS COMPARED X

ORIGINAL SCALE IN INCHES FOR REDUCED PLANS 0 1 2 3

STATE OF CALIFORNIA
DEPARTMENT OF TRANSPORTATION

DIVISION OF ENGINEERING SERVICES
STRUCTURE DESIGN
DESIGN BRANCH 18

BRIDGE NO. 53-3078
POST MILE 30.10

UNIT: 3603
PROJECT NUMBER & PHASE: 0700021119-1
CONTRACT NO.: 07-1218w1

DISREGARD PRINTS BEARING EARLIER REVISION DATES → 03/18/10 01/30/12 04/30/12 01/31/12

SHEET 1 OF 40

FILE => 53-3078-a-gp.dgn

STRUCTURES DESIGN GENERAL PLAN SHEET (ENGLISH) (REV.09-01-10)

USERNAME => s114640 DATE PLOTTED => 19-JUN-2012 TIME PLOTTED => 08:19

DIST	COUNTY	ROUTE	POST MILES TOTAL PROJECT	SHEET No.	TOTAL SHEETS
07	LA	5	29.4/31.6	978	1931

REGISTERED CIVIL ENGINEER — DATE 01/31/12

5-21-12
PLANS APPROVAL DATE

REGISTERED PROFESSIONAL ENGINEER — JORGE I. ESTRADA — No. C51473 — Exp. 06/30/12 — CIVIL — STATE OF CALIFORNIA

The State of California or its officers or agents shall not be responsible for the accuracy or completeness of electronic copies of this plan sheet.

Acceleration Response Spectrum 5% Damping

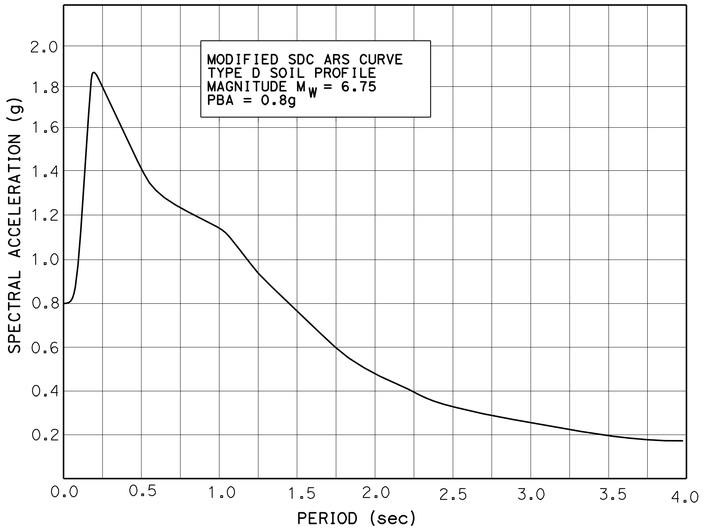

ARS CURVE

GENERAL NOTES
LOAD FACTOR DESIGN

DESIGN: CALTRANS BRIDGE DESIGN SPECIFICATION-April 2000 (LFD) (1996 16th Edition AASHTO with Interims and Revisions by CALTRANS)

SEISMIC DESIGN: Caltrans Seismic Design Criteria (SDC), Version 1.3 February 2004

DEAD LOAD: Includes 35psf for future wearing surface.

LIVE LOAD: HS20-44 and alternative and permit design load.

SEISMIC LOADING: Site Specific Acceleration Response Spectra Curve

REINFORCED CONCRETE: f_y = 60,000 psi
f'_c = See "CONCRETE STRENGTH AND TYPE LIMITS"
n = 8

PRESTRESSED CONCRETE: For "General Notes" See "PC/PS CONCRETE SLAB GIRDER" sheet

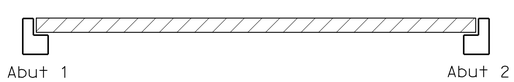

CONCRETE STRENGTH AND TYPE LIMITS

No Scale

Structural Concrete, Bridge (3600 psi @ 30 days)

Prestressed Slab Girder, see "PC/PS Concrete slab Girder" sheet.

PILE DATA TABLE

Location	Pile Type /Diameter	Design Loading (kips)	Nominal Resistance Compression (kips)	Nominal Resistance Tension (kips)	Channel Cover CL STA (ft)	Pile Cut-off Elevation (ft)	Design Pile Tip Elevation (ft)	Specified Pile Tip Elevation (ft)
Abutment 1	CIDH 30"	200	400	0	149+82.22	595.38	547.38	547.38
Abutment 1	CIDH 30"	200	400	0	150+78.37	596.60	548.60	548.60
Abutment 1	CIDH 30"	200	400	0	151+74.49	597.69	549.69	549.69
Abutment 1	CIDH 30"	200	400	0	152+70.62	598.66	550.66	550.66
Abutment 1	CIDH 30"	200	400	0	153+66.74	599.51	551.51	551.51
Abutment 1	CIDH 30"	200	400	0	154+62.87	600.23	552.23	552.23
Abutment 1	CIDH 30"	200	400	0	155+58.99	600.97	552.97	552.97
Abutment 1	CIDH 30"	200	400	0	156+55.12	602.01	554.01	554.01
Abutment 1	CIDH 30"	200	400	0	156+41.46	603.39	555.39	555.39
Abutment 1	CIDH 30"	200	400	0	157+37.59	605.07	557.07	557.07
Abutment 1	CIDH 30"	200	400	0	158+33.71	606.41	558.41	558.41
Abutment 1	CIDH 30"	200	400	0	159+29.88	607.65	559.65	559.65
Abutment 1	CIDH 30"	200	400	0	160+25.97	608.25	560.25	560.25
Abutment 1	CIDH 30"	200	400	0	161+22.09	608.75	560.75	560.75
Abutment 1	CIDH 30"	200	400	0	162+18.22	611.50	563.50	563.50
Abutment 1	CIDH 30"	200	400	0	163+14.34	613.31	565.31	565.31
Abutment 1	CIDH 30"	200	400	0	164+10.47	613.60	565.60	565.60
Abutment 1	CIDH 30"	200	400	0	165+17.05	613.75	565.75	565.75
Abutment 2	CIDH 30"	200	400	0	149+82.22	594.66	546.66	546.66
Abutment 2	CIDH 30"	200	400	0	150+78.37	595.88	547.88	547.88
Abutment 2	CIDH 30"	200	400	0	151+74.49	596.97	548.97	548.97
Abutment 2	CIDH 30"	200	400	0	152+70.62	597.94	549.94	549.94
Abutment 2	CIDH 30"	200	400	0	153+66.74	598.79	550.79	550.79
Abutment 2	CIDH 30"	200	400	0	154+62.87	599.51	551.51	551.51
Abutment 2	CIDH 30"	200	400	0	155+58.99	600.25	552.25	552.25
Abutment 2	CIDH 30"	200	400	0	156+55.12	601.29	553.29	553.29
Abutment 2	CIDH 30"	200	400	0	156+41.46	602.67	554.67	554.67
Abutment 2	CIDH 30"	200	400	0	157+37.59	604.37	556.37	556.37
Abutment 2	CIDH 30"	200	400	0	158+33.71	606.39	558.39	558.39
Abutment 2	CIDH 30"	200	400	0	159+29.88	608.58	560.58	560.58
Abutment 2	CIDH 30"	200	400	0	160+25.97	609.67	561.67	561.67
Abutment 2	CIDH 30"	200	400	0	161+22.09	610.92	562.92	562.92
Abutment 2	CIDH 30"	200	400	0	162+18.22	611.75	563.75	563.75
Abutment 2	CIDH 30"	200	400	0	163+14.34	612.08	564.08	564.08
Abutment 2	CIDH 30"	200	400	0	164+10.47	612.75	564.75	564.75
Abutment 2	CIDH 30"	200	400	0	165+17.05	612.67	564.67	564.67

Note: Design tip elevation is controlled by the following demands:
(1) Nominal Resistance in Compression.
(2) Nominal Lateral Resistance - Free Head Condition

Note: Pile cut-off elevations and specified pile tip elevations shall be interpolated between stations shown

INDEX TO PLANS

Sheet No.	Title
1	GENERAL PLAN
2	INDEX TO PLANS
3	FOUNDATION PLAN NO.1
4	FOUNDATION PLAN NO.2
5	FOUNDATION PLAN NO.3
6	ABUTMENT 1 & 2 LAYOUT NO. 1
7	ABUTMENT 1 & 2 LAYOUT NO. 2
8	ABUTMENT 1 & 2 LAYOUT NO. 3
9	ABUTMENT 1 & 2 LAYOUT NO. 4
10	ABUTMENT 1 & 2 LAYOUT NO. 5
11	ABUTMENT 1 & 2 LAYOUT NO. 6
12	ABUTMENT DETAILS NO. 1
13	ABUTMENT DETAILS NO. 2
14	30" CAST-IN-DRILLED HOLE CONCRETE PILE
15	PC/PS CONCRETE SLAB GIRDER
16	MISCELLANEOUS DETAILS
17	PANEL LAYOUT NO. 1
18	PANEL LAYOUT NO. 2
19	PANEL LAYOUT NO. 3
20	PANEL LAYOUT NO. 4
21	PANEL LAYOUT NO. 5
22	PANEL LAYOUT NO. 6
23	AESTHETIC SOUNDWALL DETAILS
24	STRUCTURE APPROACH TYPE N(30S)
25	DRAINAGE DETAILS
26	PROFILE NO. 1
27	PROFILE NO. 2
28	PROFILE NO. 3
29	PROFILE NO. 4
30	PROFILE NO. 5
31	PROFILE NO. 6
32	PROFILE NO. 7
33	PROFILE NO. 8
34	LOG OF TEST BORINGS 1 OF 7
35	LOG OF TEST BORINGS 2 OF 7
36	LOG OF TEST BORINGS 3 OF 7
37	LOG OF TEST BORINGS 4 OF 7
38	LOG OF TEST BORINGS 5 OF 7
39	LOG OF TEST BORINGS 6 OF 7
40	LOG OF TEST BORINGS 7 OF 7

STANDARD PLANS DATED MAY 2006

Sheet No.	Title
A10A-A10B	ACRONYMS AND ABBREVIATIONS
A10C-A10D	SYMBOLS
A62C	LIMITS OF PAYMENT FOR EXCAVATION AND BACKFILL BRIDGE
B0-3	BRIDGE DETAILS
B0-13	BRIDGE DETAILS
RSP B6-21	JOINT SEALS (MAXIMUM MOVEMENT RATING = 2")
B7-11	UTILITY DETAILS
B11-7	CHAIN LINK RAILING
RSP B15-6,7	SOUNDWALL MASONRY BLOCK ON TYPE 736S/SV BARRIER DETAILS (1,2)
RSP ES-6A	ELECTRICAL SYSTEMS (LIGHTING STANDARD TYPES 15 AND 21)

STANDARD PLAN SHEET NO.
DETAIL NO.

DESIGN	BY J. ESTRADA	CHECKED M. OKIMURA	
DETAILS	BY SURAJ DUTTA	CHECKED J.ESTRADA	
QUANTITIES	BY DAVID R MURRAY	CHECKED PREM RIMAL	

STATE OF CALIFORNIA
DEPARTMENT OF TRANSPORTATION

DIVISION OF ENGINEERING SERVICES
STRUCTURE DESIGN
DESIGN BRANCH 18

BRIDGE NO. 53-3078
POST MILE 30.07

BURBANK WESTERN CHANNEL
CHANNEL COVER
INDEX TO PLANS

STRUCTURES DESIGN DETAIL SHEET (ENGLISH) (REV. 09-01-10)

ORIGINAL SCALE IN INCHES FOR REDUCED PLANS 0 1 2 3

UNIT: 3603
PROJECT NUMBER & PHASE: 0700021119-1
CONTRACT NO.: 07-1218W1

DISREGARD PRINTS BEARING EARLIER REVISION DATES

REVISION DATES 01/18/12 12/10/11 07/12/06

SHEET 2 OF 40

FILE => 53-3078-a-itp.dgn

USERNAME => s174640 DATE PLOTTED => 19-JUN-2012 TIME PLOTTED => 08:20

DIST	COUNTY	ROUTE	POST MILES TOTAL PROJECT	SHEET No.	TOTAL SHEETS
07	LA	5	29.4/31.6	979	1931

JEstrada. 01/31/12
REGISTERED CIVIL ENGINEER DATE

5-21-12
PLANS APPROVAL DATE

REGISTERED PROFESSIONAL ENGINEER
JORGE I. ESTRADA
No. C51473
Exp. 06/30/12
CIVIL
STATE OF CALIFORNIA

The State of California or its officers or agents shall not be responsible for the accuracy or completeness of electronic copies of this plan sheet.

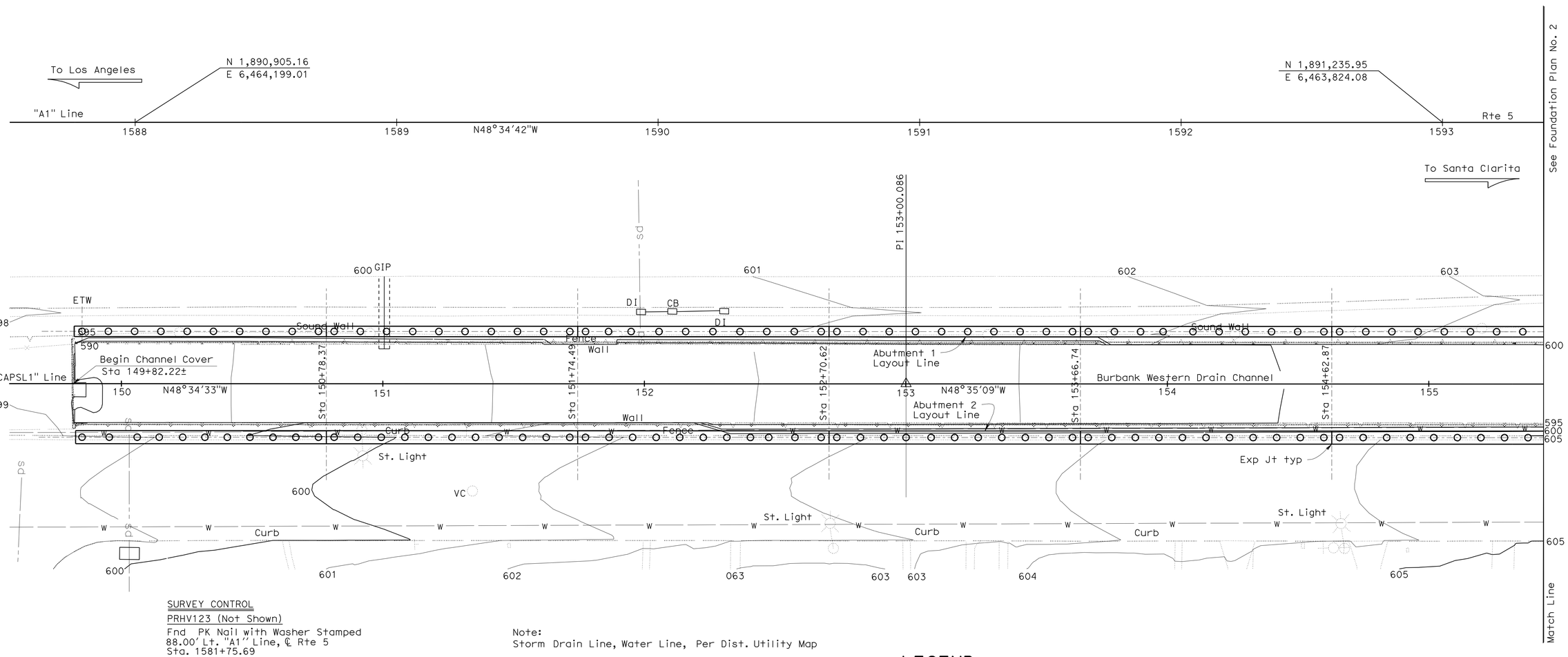

SURVEY CONTROL

PRHV123 (Not Shown)

Fnd PK Nail with Washer Stamped
88.00' Lt. "A1" Line, ℄ Rte 5
Sta. 1581+75.69
N 1,890,470.97
E 6,464,594.96
EL.=598.93

PRHV127 (Not Shown)

Fnd PK Nail with Washer Stamped
67.36' Lt. "A1" Line, ℄ Rte 5
Sta. 1585+96.99
N 1,890,753.54
E 6,464,269.04
EL.=604.23

Note:
Storm Drain Line, Water Line, Per Dist. Utility Map

LEGEND

o Indicates concrete piles

PRELIMINARY INVESTIGATION SECTION							
SCALE 1"=20'	VERT.DATUM NGVD 88	PHOTOGRAMMETRY AS OF: X					
	HORZ.DATUM NAD83 (1991.35)	SURVEYED	BY District	CHECKED	BY John Borden 10/2011		
ALIGNMENT TIES	Dist. Traverse Sheet	DRAFTED	BY Sharon Zheng 10/2011	CHECKED	BY Lawrence Lew 10/2011		

DESIGN	BY J. ESTRADA	CHECKED M. OKIMURA/D.R. MURRAY
DETAILS	BY SURAJ DUTTA	CHECKED J.ESTRADA
QUANTITIES	BY DAVID R MURRAY	CHECKED PREM RIMAL

STATE OF CALIFORNIA
DEPARTMENT OF TRANSPORTATION

DIVISION OF ENGINEERING SERVICES
STRUCTURE DESIGN
DESIGN BRANCH 18

BRIDGE NO. 53-3078
POST MILE 30.10

BURBANK WESTERN CHANNEL
CHANNEL COVER
FOUNDATION PLAN NO. 01

STRUCTURES FOUNDATION PLAN SHEET (ENGLISH) (REV. 09-01-10)

ORIGINAL SCALE IN INCHES FOR REDUCED PLANS 0 1 2 3

UNIT: 3646
PROJECT NUMBER & PHASE: 0700021119-1 CONTRACT NO.: 07-121w1

DISREGARD PRINTS BEARING EARLIER REVISION DATES → REVISION DATES 10/31/2011 1/24/12

SHEET 3 40 39

FILE => 53-3078-e-fp01.dgn

DIST	COUNTY	ROUTE	POST MILES TOTAL PROJECT	SHEET No.	TOTAL SHEETS
07	LA	5	29.4/31.6	980	1931

REGISTERED CIVIL ENGINEER — DATE 01/31/12

5-21-12
PLANS APPROVAL DATE

REGISTERED PROFESSIONAL ENGINEER — JORGE I. ESTRADA — No. C51473 — Exp. 06/30/12 — CIVIL — STATE OF CALIFORNIA

The State of California or its officers or agents shall not be responsible for the accuracy or completeness of electronic copies of this plan sheet.

CURVE DATA

No.	R	Δ	T	L
Ⓐ	1205.80	6°01′46"	63.50	126.89

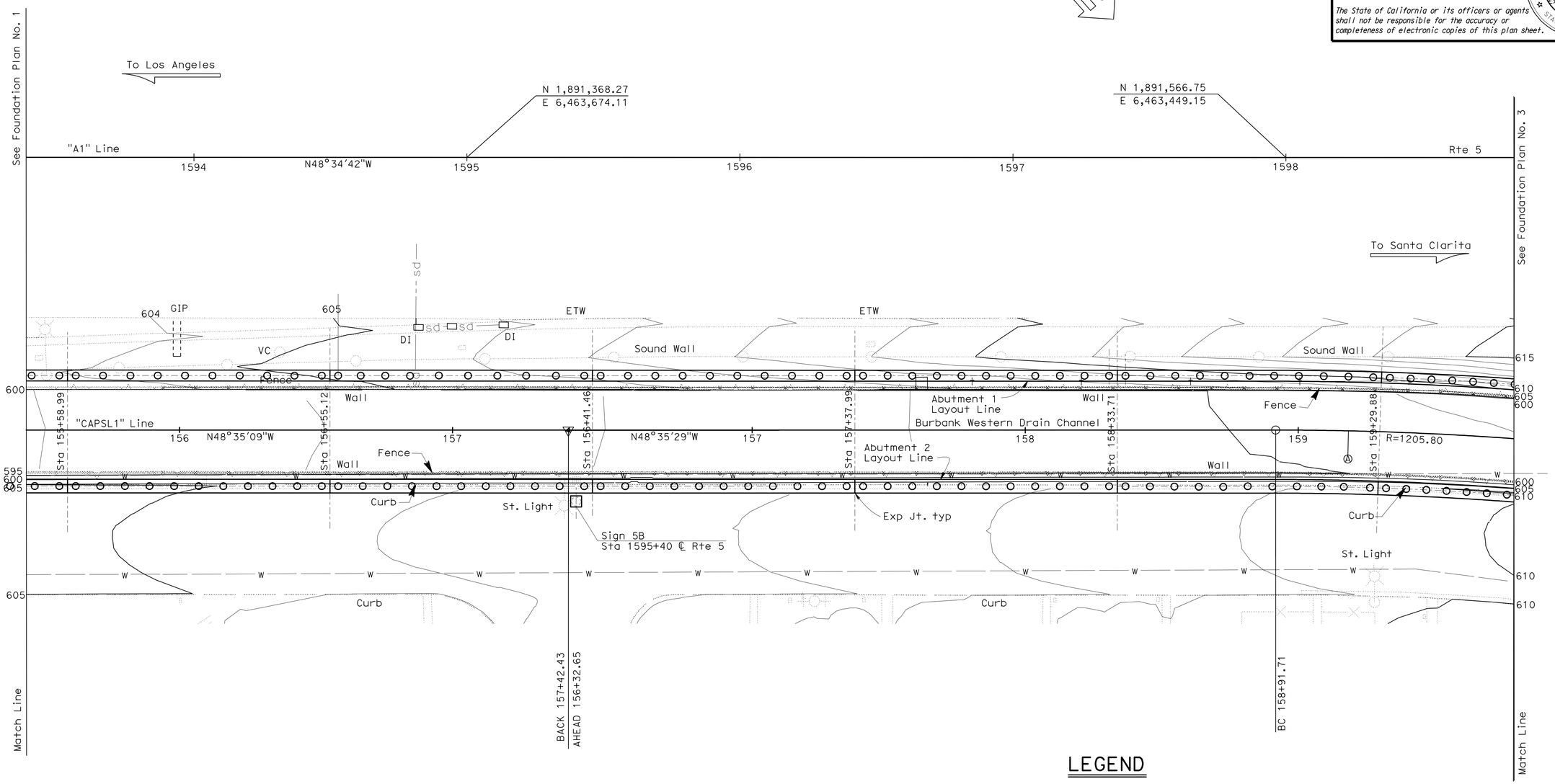

LEGEND

○ Indicates Piles

Note:
Tele Line, Storm Drain Line, Water Line, Per Dist. Utility Map

PRELIMINARY INVESTIGATION SECTION

SCALE 1"=20′	VERT.DATUM NGVD 88	PHOTOGRAMMETRY AS OF: X		
	HORZ.DATUM NAD83 (1991.35)	SURVEYED	BY District	CHECKED BY John Borden 10/2011
ALIGNMENT TIES Dist. Traverse Sheet		DRAFTED	BY Sharon Zheng 10/2011	CHECKED BY Lawrence Lew 10/2011

DESIGN	BY J. ESTRADA	CHECKED M. OKIMURA/D.R. MURRAY
DETAILS	BY SURAJ DUTTA	CHECKED J.ESTRADA
QUANTITIES	BY DAVID R MURRAY	CHECKED PREM RIMAL

STATE OF CALIFORNIA
DEPARTMENT OF TRANSPORTATION

DIVISION OF ENGINEERING SERVICES
STRUCTURE DESIGN
DESIGN BRANCH 18

BRIDGE NO. 53-3078
POST MILE 30.10

BURBANK WESTERN CHANNEL
CHANNEL COVER
FOUNDATION PLAN NO. 02

STRUCTURES FOUNDATION PLAN SHEET (ENGLISH) (REV. 09-01-10)

ORIGINAL SCALE IN INCHES FOR REDUCED PLANS 0 1 2 3

UNIT: 3646
PROJECT NUMBER & PHASE: 0700021119-1
CONTRACT NO.: 07-121w1

DISREGARD PRINTS BEARING EARLIER REVISION DATES

REVISION DATES: 10/31/2011 1/24/12

SHEET 4 OF 40

FILE => 53-3078-e-fp02.dgn

DIST	COUNTY	ROUTE	POST MILES TOTAL PROJECT	SHEET No.	TOTAL SHEETS
07	LA	5	29.4/31.6	981	1931

REGISTERED CIVIL ENGINEER — DATE 01/31/12

5-21-12
PLANS APPROVAL DATE

REGISTERED PROFESSIONAL ENGINEER — JORGE I. ESTRADA — No. C51473 — Exp. 06/30/12 — CIVIL — STATE OF CALIFORNIA

The State of California or its officers or agents shall not be responsible for the accuracy or completeness of electronic copies of this plan sheet.

CURVE DATA

No.	R	Δ	T	L
Ⓐ	1205.80	6°01′46″	63.50	126.89
Ⓑ	2066.78	5°04′38″	91.63	183.14
Ⓔ	11000.00	3°48′16″	365.34	730.41

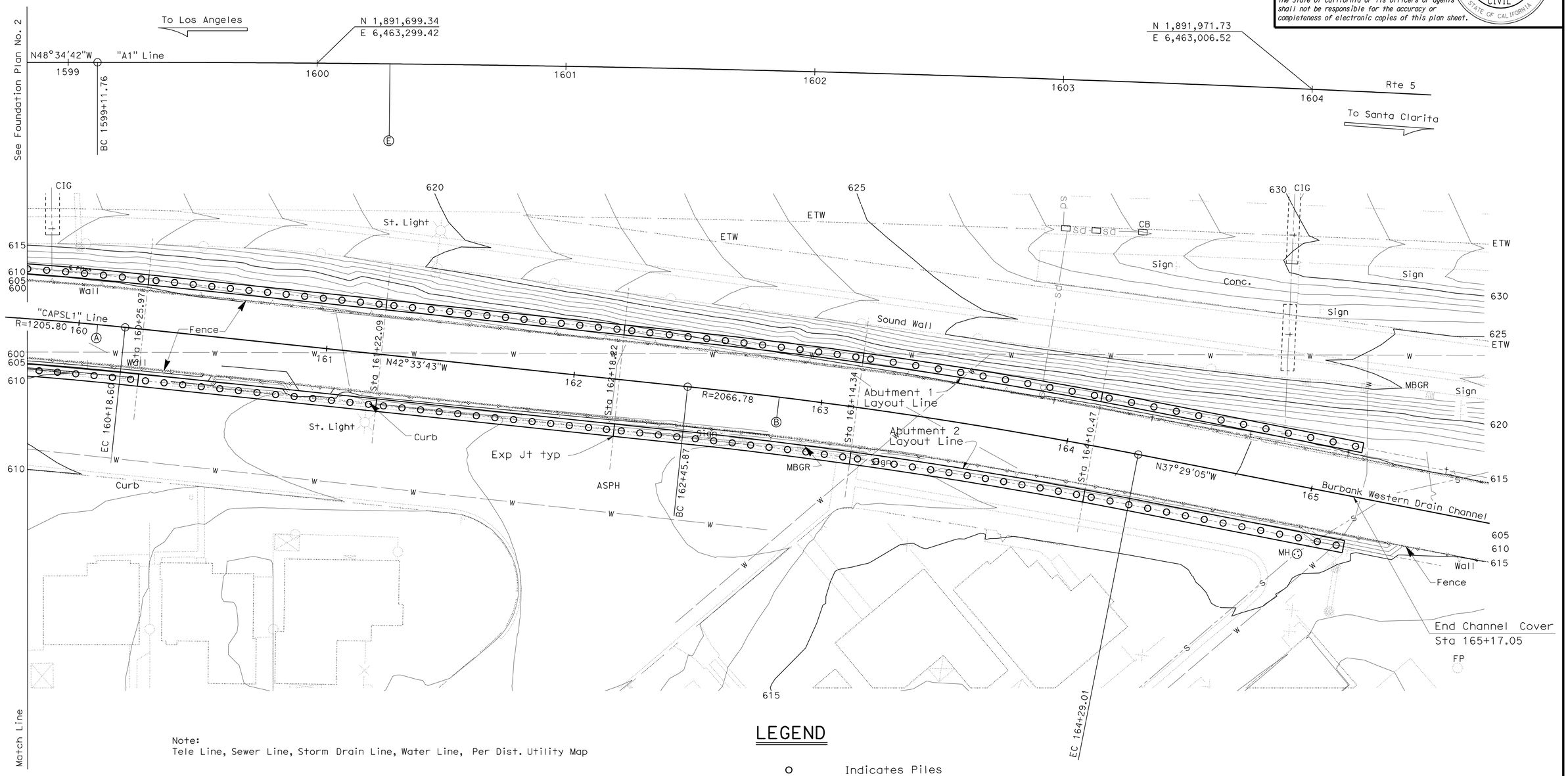

Note:
Tele Line, Sewer Line, Storm Drain Line, Water Line, Per Dist. Utility Map

LEGEND

○ Indicates Piles

PRELIMINARY INVESTIGATION SECTION							
SCALE 1"=20′	VERT.DATUM NGVD 88	PHOTOGRAMMETRY AS OF: X					
	HORZ.DATUM NAD83 (1991.35)	SURVEYED	BY District	CHECKED	BY John Borden 10/2011		
ALIGNMENT TIES Dist. Traverse Sheet		DRAFTED	BY Sharon Zheng 10/2011	CHECKED	BY Lawrence Lew 10/2011		

DESIGN	BY J. ESTRADA	CHECKED M. OKIMURA/D.R. MURRAY
DETAILS	BY SURAJ DUTTA	CHECKED J.ESTRADA
QUANTITIES	BY DAVID R MURRAY	CHECKED PREM RIMAL

STATE OF CALIFORNIA
DEPARTMENT OF TRANSPORTATION

DIVISION OF ENGINEERING SERVICES
STRUCTURE DESIGN
DESIGN BRANCH 18

BRIDGE NO. 53-3078
POST MILE 30.10

BURBANK WESTERN CHANNEL
CHANNEL COVER
FOUNDATION PLAN NO. 03

STRUCTURES FOUNDATION PLAN SHEET (ENGLISH) (REV. 09-01-10)

ORIGINAL SCALE IN INCHES FOR REDUCED PLANS 0 1 2 3

UNIT: 3646
PROJECT NUMBER & PHASE: 0700021119-1
CONTRACT NO.: 07-121w1

DISREGARD PRINTS BEARING EARLIER REVISION DATES → 10/31/2011 1/24/12

SHEET 5 OF 40

FILE => 53-3078-e-fp03.dgn

DIST	COUNTY	ROUTE	POST MILES TOTAL PROJECT	SHEET No.	TOTAL SHEETS
07	LA	5	29.4/31.6	982	1931

REGISTERED CIVIL ENGINEER — DATE 01/31/12

5-21-12
PLANS APPROVAL DATE

REGISTERED PROFESSIONAL ENGINEER — JORGE I. ESTRADA — No. C51473 — Exp. 06/30/12 — CIVIL — STATE OF CALIFORNIA

The State of California or its officers or agents shall not be responsible for the accuracy or completeness of electronic copies of this plan sheet.

LEGEND:

- Existing Structure
- New Construction
- 30" CIDH Pile

NOTE:
Soundwall and barrier not shown for clarity

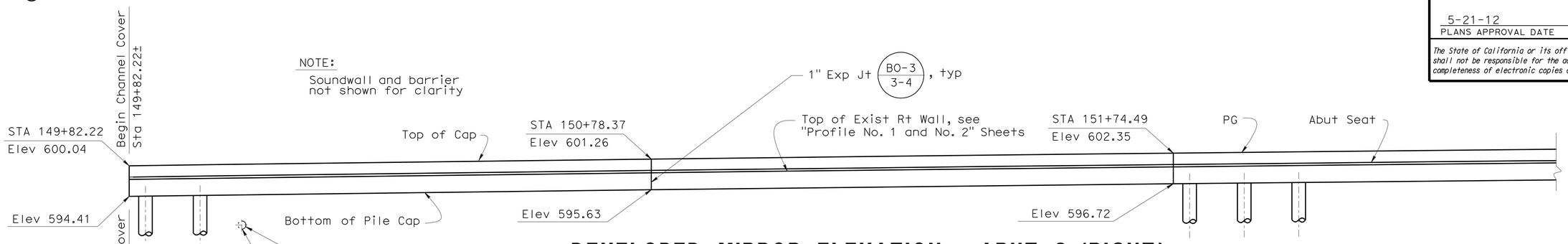

DEVELOPED MIRROR ELEVATION - ABUT 2 (RIGHT)

1" = 10'

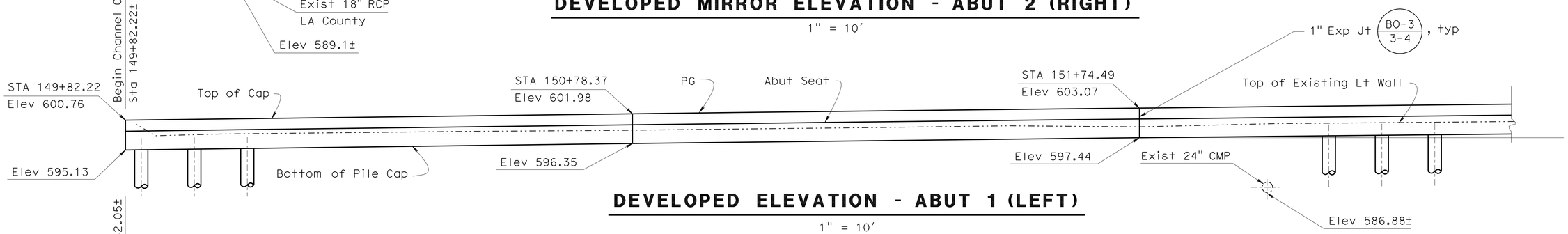

DEVELOPED ELEVATION - ABUT 1 (LEFT)

1" = 10'

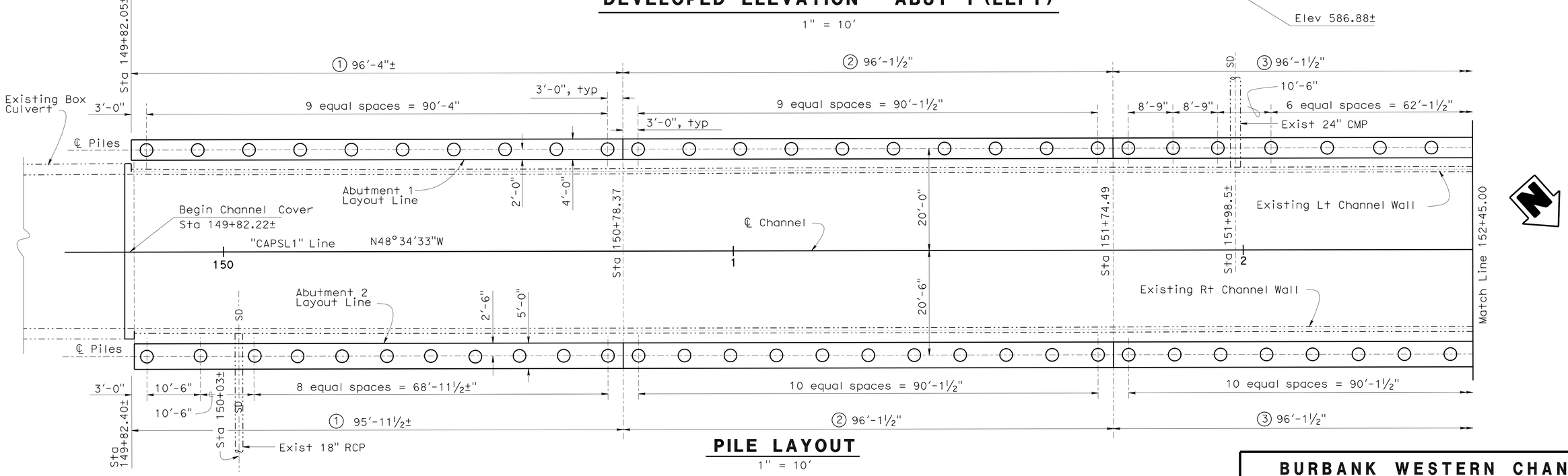

PILE LAYOUT

1" = 10'

DESIGN	BY J. ESTRADA	CHECKED M. OKIMURA	
DETAILS	BY SURAJ DUTTA	CHECKED J.ESTRADA	
QUANTITIES	BY DAVID R MURRAY	CHECKED PREM RIMAL	

STATE OF CALIFORNIA
DEPARTMENT OF TRANSPORTATION

DIVISION OF ENGINEERING SERVICES
STRUCTURE DESIGN
DESIGN BRANCH 18

BRIDGE NO. 53-3078
POST MILE 30.07

BURBANK WESTERN CHANNEL
CHANNEL COVER
ABUTMENT 1 & 2 LAYOUT NO. 1

STRUCTURES DESIGN DETAIL SHEET (ENGLISH) (REV. 09-01-10)

ORIGINAL SCALE IN INCHES FOR REDUCED PLANS 0 1 2 3

UNIT: 3603
PROJECT NUMBER & PHASE: 0700021119-1
CONTRACT NO.: 07-1218w1

DISREGARD PRINTS BEARING EARLIER REVISION DATES

REVISION DATES 03/18/11 04/16/12 04/25/12 07/12/12 — SHEET 6 OF 40

FILE => 53-3078-f-abtlay01.dgn

DATE PLOTTED => 22-MAY-2012 TIME PLOTTED => 09:37

s128843

DIST	COUNTY	ROUTE	POST MILES TOTAL PROJECT	SHEET No.	TOTAL SHEETS
07	LA	5	29.4/31.6	983	1931

REGISTERED CIVIL ENGINEER — DATE 01/31/12

5-21-12
PLANS APPROVAL DATE

REGISTERED PROFESSIONAL ENGINEER — JORGE I. ESTRADA — No. C51473 — Exp. 06/30/12 — CIVIL — STATE OF CALIFORNIA

The State of California or its officers or agents shall not be responsible for the accuracy or completeness of electronic copies of this plan sheet.

LEGEND:

- Existing Structure
- New Construction
- 30" CIDH Pile

NOTE:
Soundwall and barrier not shown for clarity

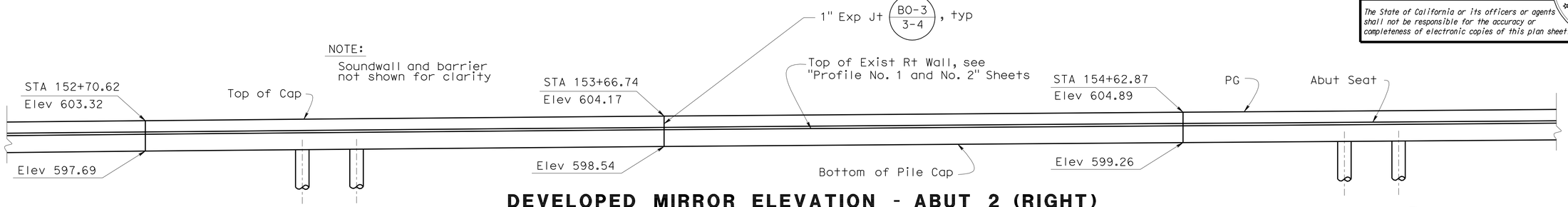

DEVELOPED MIRROR ELEVATION - ABUT 2 (RIGHT)

1" = 10'

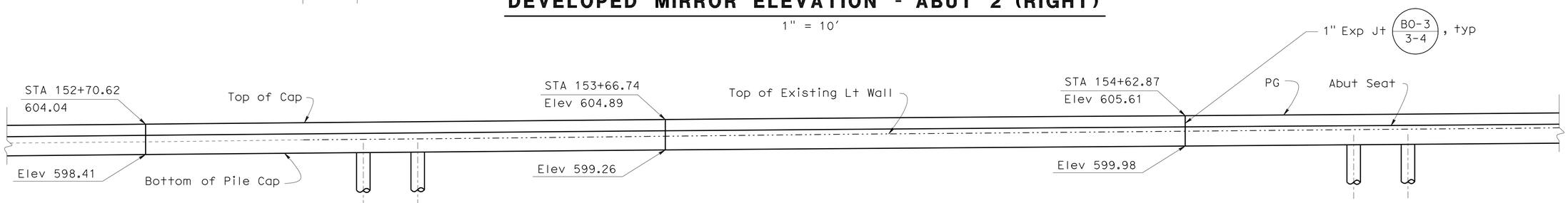

DEVELOPED ELEVATION - ABUT 1 (LEFT)

1" = 10'

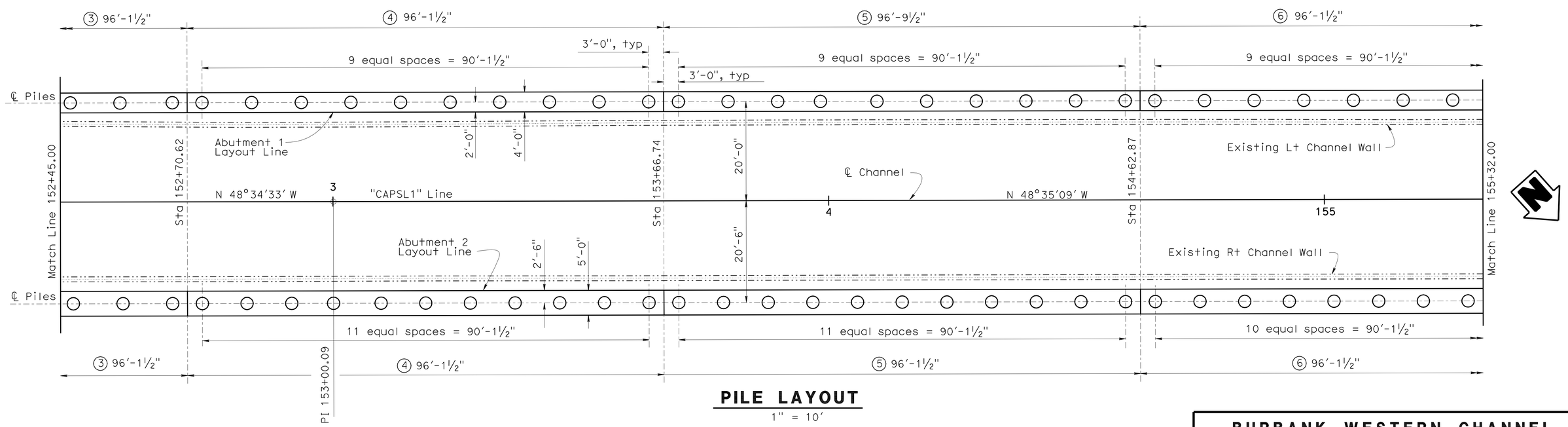

PILE LAYOUT

1" = 10'

DESIGN	BY J. ESTRADA	CHECKED M. OKIMURA	
DETAILS	BY SURAJ DUTTA	CHECKED J.ESTRADA	
QUANTITIES	BY DAVID R MURRAY	CHECKED PREM RIMAL	

STATE OF CALIFORNIA
DEPARTMENT OF TRANSPORTATION

DIVISION OF ENGINEERING SERVICES
STRUCTURE DESIGN
DESIGN BRANCH 18

BRIDGE NO. 53-3078
POST MILE 30.07

BURBANK WESTERN CHANNEL
CHANNEL COVER
ABUTMENT 1 & 2 LAYOUT NO. 2

STRUCTURES DESIGN DETAIL SHEET (ENGLISH) (REV. 09-01-10)

ORIGINAL SCALE IN INCHES FOR REDUCED PLANS 0 1 2 3

UNIT: 3603
PROJECT NUMBER & PHASE: 0700021119-1
CONTRACT NO.: 07-1218w1

DISREGARD PRINTS BEARING EARLIER REVISION DATES

REVISION DATES: 03/18/11 12/10/11 07/12/05

SHEET 7 OF 40

FILE => 53-3078-f-abtlay02.dgn

USERNAME => s128843 DATE PLOTTED => 22-MAY-2012 TIME PLOTTED => 09:37

DIST	COUNTY	ROUTE	POST MILES TOTAL PROJECT	SHEET No.	TOTAL SHEETS
07	LA	5	29.4/31.6	984	1931

REGISTERED CIVIL ENGINEER — DATE 01/31/12

5-21-12
PLANS APPROVAL DATE

REGISTERED PROFESSIONAL ENGINEER — JORGE I. ESTRADA — No. C51473 — Exp. 06/30/12 — CIVIL — STATE OF CALIFORNIA

The State of California or its officers or agents shall not be responsible for the accuracy or completeness of electronic copies of this plan sheet.

LEGEND:

- Existing Structure
- New Construction
- 30" CIDH Pile

NOTE:

For Section A-A see "Miscellaneous Details" sheet

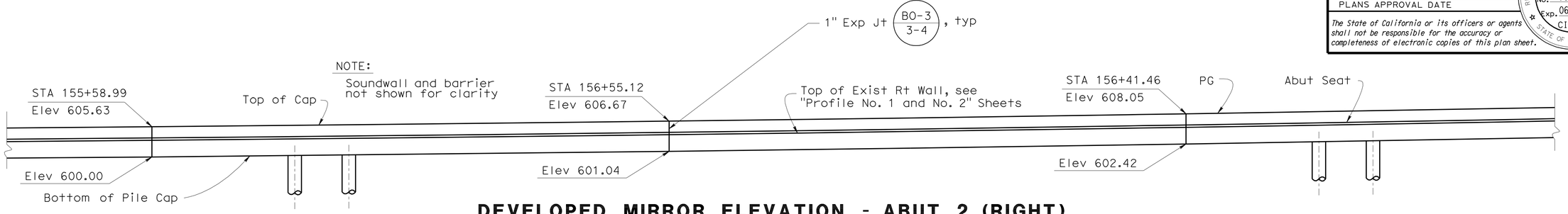

DEVELOPED MIRROR ELEVATION - ABUT 2 (RIGHT)

1" = 10'

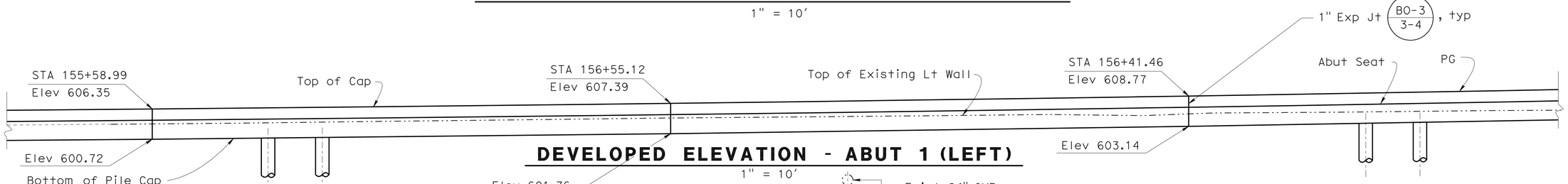

DEVELOPED ELEVATION - ABUT 1 (LEFT)

1" = 10'

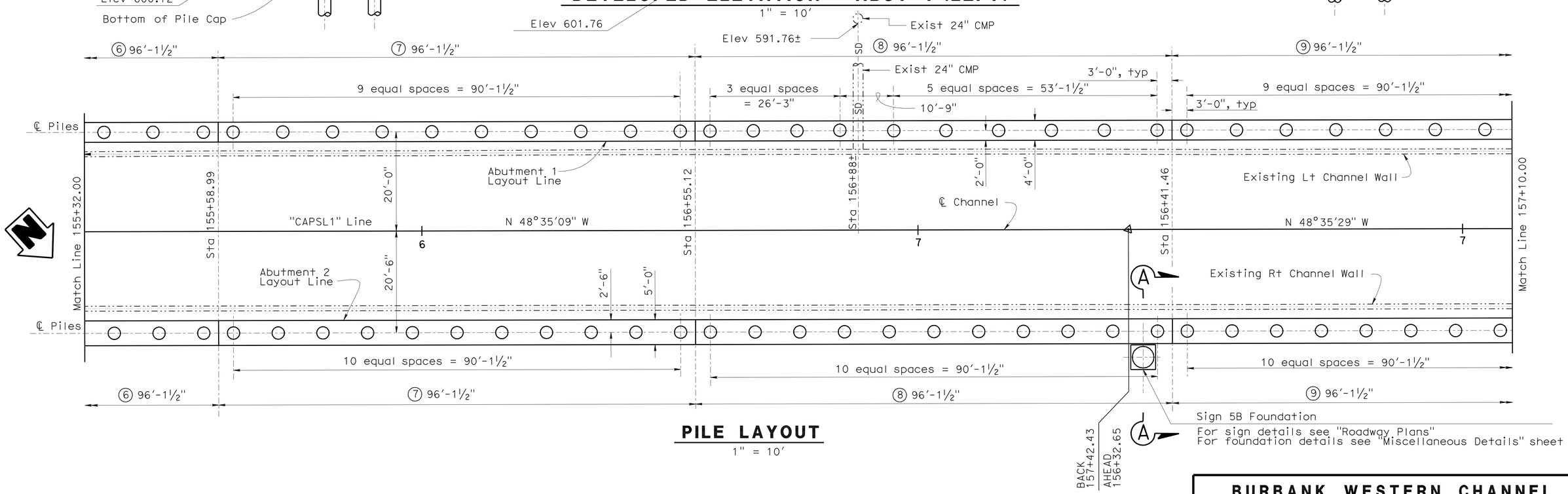

PILE LAYOUT

1" = 10'

DESIGN	BY J. ESTRADA	CHECKED M. OKIMURA	
DETAILS	BY SURAJ DUTTA	CHECKED J.ESTRADA	
QUANTITIES	BY DAVID R MURRAY	CHECKED PREM RIMAL	

STATE OF CALIFORNIA
DEPARTMENT OF TRANSPORTATION

DIVISION OF ENGINEERING SERVICES
STRUCTURE DESIGN
DESIGN BRANCH 18

BRIDGE NO. 53-3078
POST MILE 30.07

BURBANK WESTERN CHANNEL
CHANNEL COVER
ABUTMENT 1 & 2 LAYOUT NO. 3

STRUCTURES DESIGN DETAIL SHEET (ENGLISH) (REV. 09-01-10)

ORIGINAL SCALE IN INCHES FOR REDUCED PLANS 0 1 2 3

UNIT: 3603
PROJECT NUMBER & PHASE: 0700021119-1
CONTRACT NO.: 07-1218w1

DISREGARD PRINTS BEARING EARLIER REVISION DATES

REVISION DATES 03/18/11 04/19/11 04/25/11 07/12/05

SHEET 8 OF 40

FILE => 53-3078-f-abtlay03.dgn

USERNAME => s128843 DATE PLOTTED => 22-MAY-2012 TIME PLOTTED => 09:38

DIST	COUNTY	ROUTE	POST MILES TOTAL PROJECT	SHEET No.	TOTAL SHEETS
07	LA	5	29.4/31.6	985	1931

JEstrada. 01/31/12
REGISTERED CIVIL ENGINEER DATE

5-21-12
PLANS APPROVAL DATE

REGISTERED PROFESSIONAL ENGINEER
JORGE I. ESTRADA
No. C51473
Exp. 06/30/12
CIVIL
STATE OF CALIFORNIA

The State of California or its officers or agents shall not be responsible for the accuracy or completeness of electronic copies of this plan sheet.

LEGEND:

- Existing Structure
- New Construction
- 30" CIDH Pile

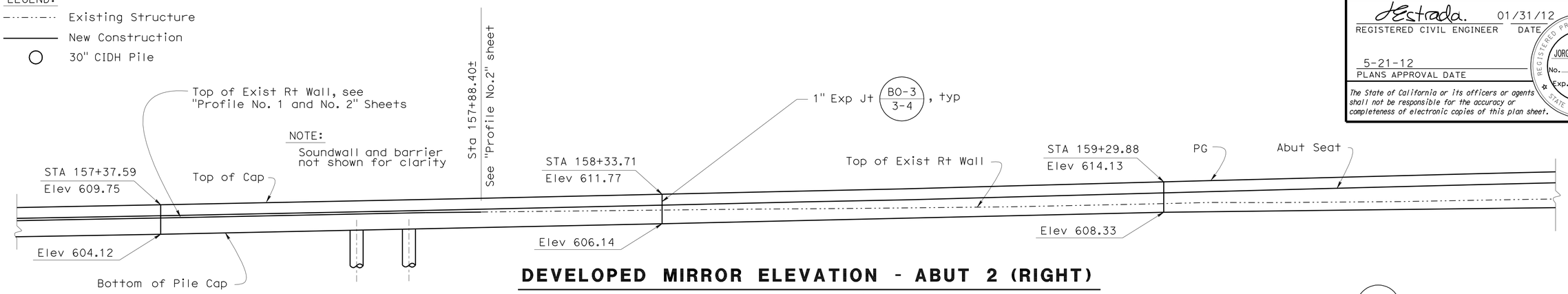

DEVELOPED MIRROR ELEVATION - ABUT 2 (RIGHT)

1" = 10'

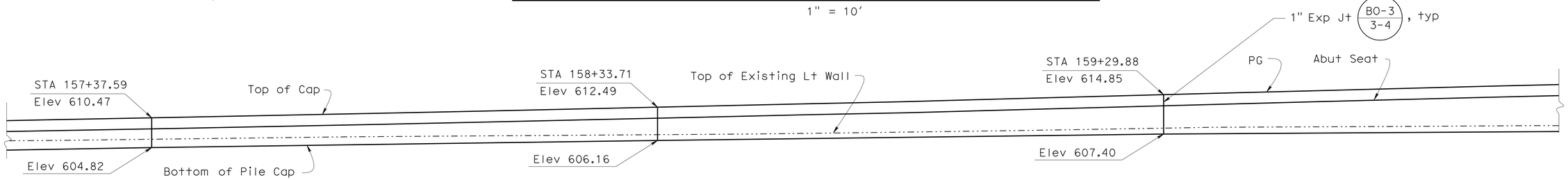

DEVELOPED ELEVATION - ABUT 1 (LEFT)

1" = 10'

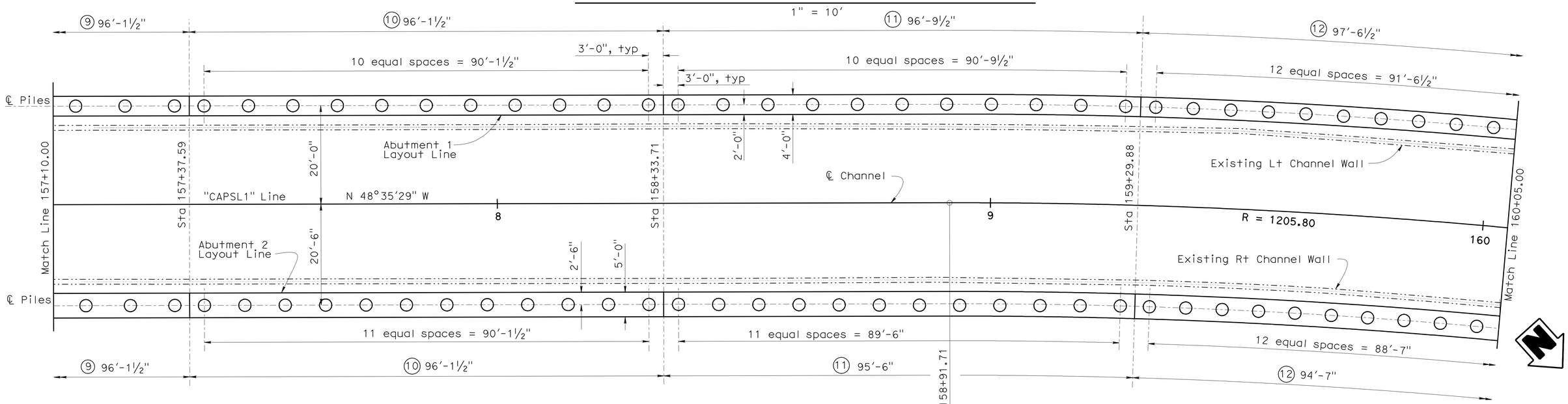

PILE LAYOUT

1" = 10'

DESIGN	BY J. ESTRADA	CHECKED M. OKIMURA	
DETAILS	BY SURAJ DUTTA	CHECKED J.ESTRADA	
QUANTITIES	BY DAVID R MURRAY	CHECKED PREM RIMAL	

STATE OF CALIFORNIA
DEPARTMENT OF TRANSPORTATION

DIVISION OF ENGINEERING SERVICES
STRUCTURE DESIGN
DESIGN BRANCH 18

BRIDGE NO. 53-3078
POST MILE 30.07

BURBANK WESTERN CHANNEL
CHANNEL COVER
ABUTMENT 1 & 2 LAYOUT NO. 4

STRUCTURES DESIGN DETAIL SHEET (ENGLISH) (REV. 09-01-10)

ORIGINAL SCALE IN INCHES FOR REDUCED PLANS 0 1 2 3

UNIT: 3603
PROJECT NUMBER & PHASE: 0700021119-1
CONTRACT NO.: 07-1218w1

DISREGARD PRINTS BEARING EARLIER REVISION DATES

REVISION DATES 03/18/11 12/10/11 07/12/09

SHEET 9 OF 40

FILE => 53-3078-f-abtlay04.dgn

USERNAME => s128843 DATE PLOTTED => 22-MAY-2012 TIME PLOTTED => 09:38

DIST	COUNTY	ROUTE	POST MILES TOTAL PROJECT	SHEET No.	TOTAL SHEETS
07	LA	5	29.4/31.6	986	1931

REGISTERED CIVIL ENGINEER — DATE 01/31/12

PLANS APPROVAL DATE 5-21-12

REGISTERED PROFESSIONAL ENGINEER — JORGE I. ESTRADA — No. C51473 — Exp. 06/30/12 — CIVIL — STATE OF CALIFORNIA

The State of California or its officers or agents shall not be responsible for the accuracy or completeness of electronic copies of this plan sheet.

LEGEND:

- Existing Structure
- New Construction
- 30" CIDH Pile

NOTE:
Soundwall and barrier not shown for clarity

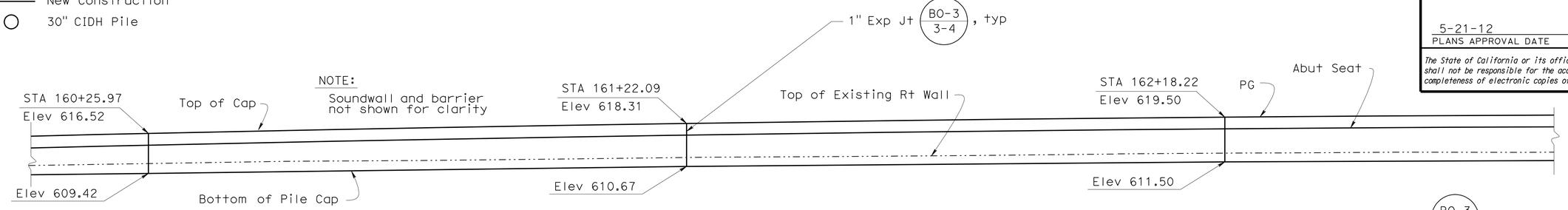

DEVELOPED MIRROR ELEVATION - ABUT 2 (RIGHT)

1" = 10'

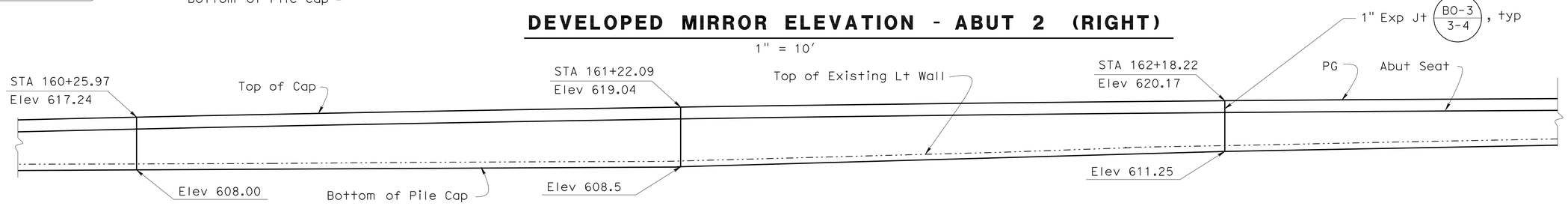

DEVELOPED ELEVATION - ABUT 1 (LEFT)

1" = 10'

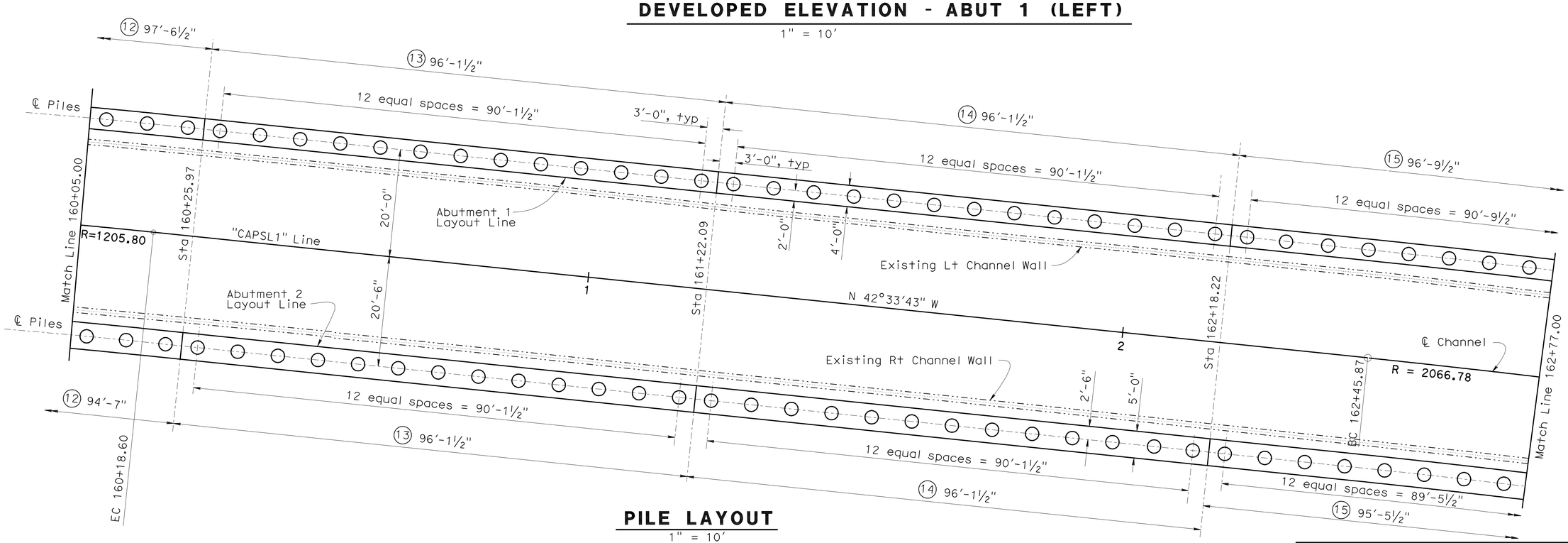

PILE LAYOUT

1" = 10'

DESIGN	BY J. ESTRADA	CHECKED M. OKIMURA	
DETAILS	BY SURAJ DUTTA	CHECKED J.ESTRADA	
QUANTITIES	BY DAVID R MURRAY	CHECKED PREM RIMAL	

STATE OF CALIFORNIA
DEPARTMENT OF TRANSPORTATION

DIVISION OF ENGINEERING SERVICES
STRUCTURE DESIGN
DESIGN BRANCH 18

BRIDGE NO. 53-3078
POST MILE 30.07

BURBANK WESTERN CHANNEL
CHANNEL COVER
ABUTMENT 1 & 2 LAYOUT NO. 5

STRUCTURES DESIGN DETAIL SHEET (ENGLISH) (REV. 09-01-10)

ORIGINAL SCALE IN INCHES FOR REDUCED PLANS 0 1 2 3

UNIT: 3603
PROJECT NUMBER & PHASE: 0700021119-1
CONTRACT NO.: 07-1218w1

DISREGARD PRINTS BEARING EARLIER REVISION DATES

REVISION DATES 03/18/11 12/10/11 07/12/09

SHEET 10 OF 40

FILE => 53-3078-f-abtlay05.dgn

USERNAME => s114640 DATE PLOTTED => 22-MAY-2012 TIME PLOTTED => 08:09

DIST	COUNTY	ROUTE	POST MILES TOTAL PROJECT	SHEET No.	TOTAL SHEETS
07	LA	5	29.4/31.6	987	1931

REGISTERED CIVIL ENGINEER — DATE 01/31/12

5-21-12
PLANS APPROVAL DATE

REGISTERED PROFESSIONAL ENGINEER — JORGE I. ESTRADA — No. C51473 — Exp. 06/30/12 — CIVIL — STATE OF CALIFORNIA

The State of California or its officers or agents shall not be responsible for the accuracy or completeness of electronic copies of this plan sheet.

LEGEND:
- Existing Structure
- New Construction
- 30" CIDH Pile

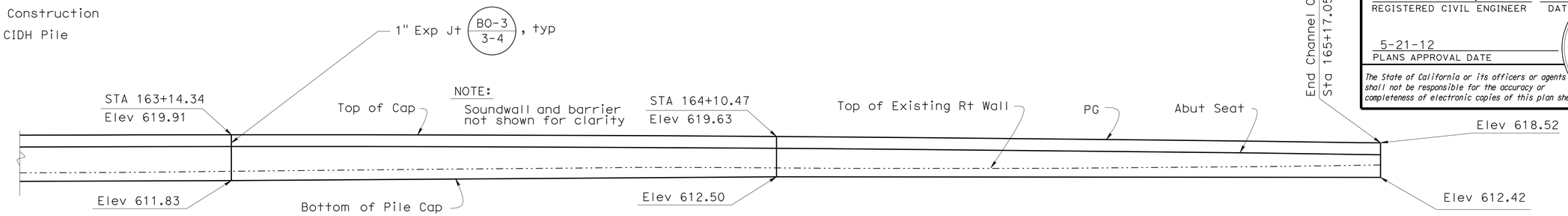

DEVELOPED MIRROR ELEVATION - ABUT 2 (RIGHT)

1" = 10'

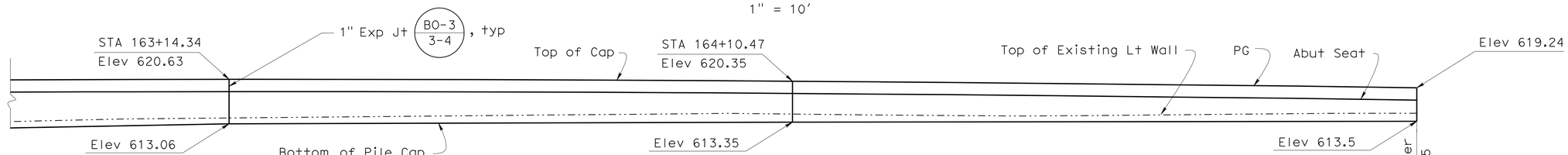

DEVELOPED ELEVATION - ABUT 1 (LEFT)

1" = 10'

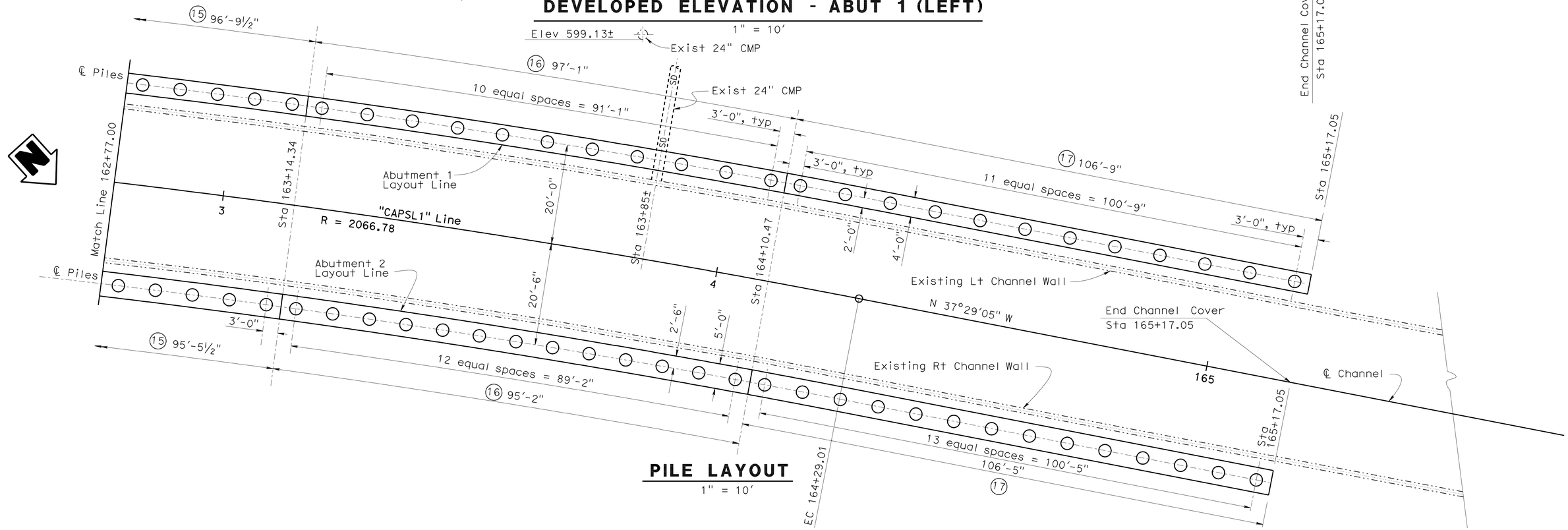

PILE LAYOUT

1" = 10'

DESIGN	BY J. ESTRADA	CHECKED M. OKIMURA	
DETAILS	BY SURAJ DUTTA	CHECKED J.ESTRADA	
QUANTITIES	BY DAVID R MURRAY	CHECKED PREM RIMAL	

STATE OF CALIFORNIA
DEPARTMENT OF TRANSPORTATION

DIVISION OF ENGINEERING SERVICES
STRUCTURE DESIGN
DESIGN BRANCH 18

BRIDGE NO. 53-3078
POST MILE 30.07

BURBANK WESTERN CHANNEL
CHANNEL COVER
ABUTMENT 1 & 2 LAYOUT NO. 6

STRUCTURES DESIGN DETAIL SHEET (ENGLISH) (REV. 09-01-10)

ORIGINAL SCALE IN INCHES FOR REDUCED PLANS 0 1 2 3

UNIT: 3603
PROJECT NUMBER & PHASE: 0700021119-1
CONTRACT NO.: 07-1218w1

DISREGARD PRINTS BEARING EARLIER REVISION DATES

REVISION DATES 03/18/11 04/19/11 04/25/12 07/12/05

SHEET 11 OF 40

FILE => 53-3078-f-abtlay06.dgn

USERNAME => s114640 DATE PLOTTED => 22-MAY-2012 TIME PLOTTED => 08:09

DIST	COUNTY	ROUTE	POST MILES TOTAL PROJECT	SHEET No.	TOTAL SHEETS
07	LA	5	29.4/31.6	988	1931

REGISTERED CIVIL ENGINEER — DATE 01/31/12

5-21-12
PLANS APPROVAL DATE

REGISTERED PROFESSIONAL ENGINEER — JORGE I. ESTRADA — No. C51473 — Exp. 06/30/12 — CIVIL — STATE OF CALIFORNIA

The State of California or its officers or agents shall not be responsible for the accuracy or completeness of electronic copies of this plan sheet.

LEGEND:

Existing Structure

New Construction

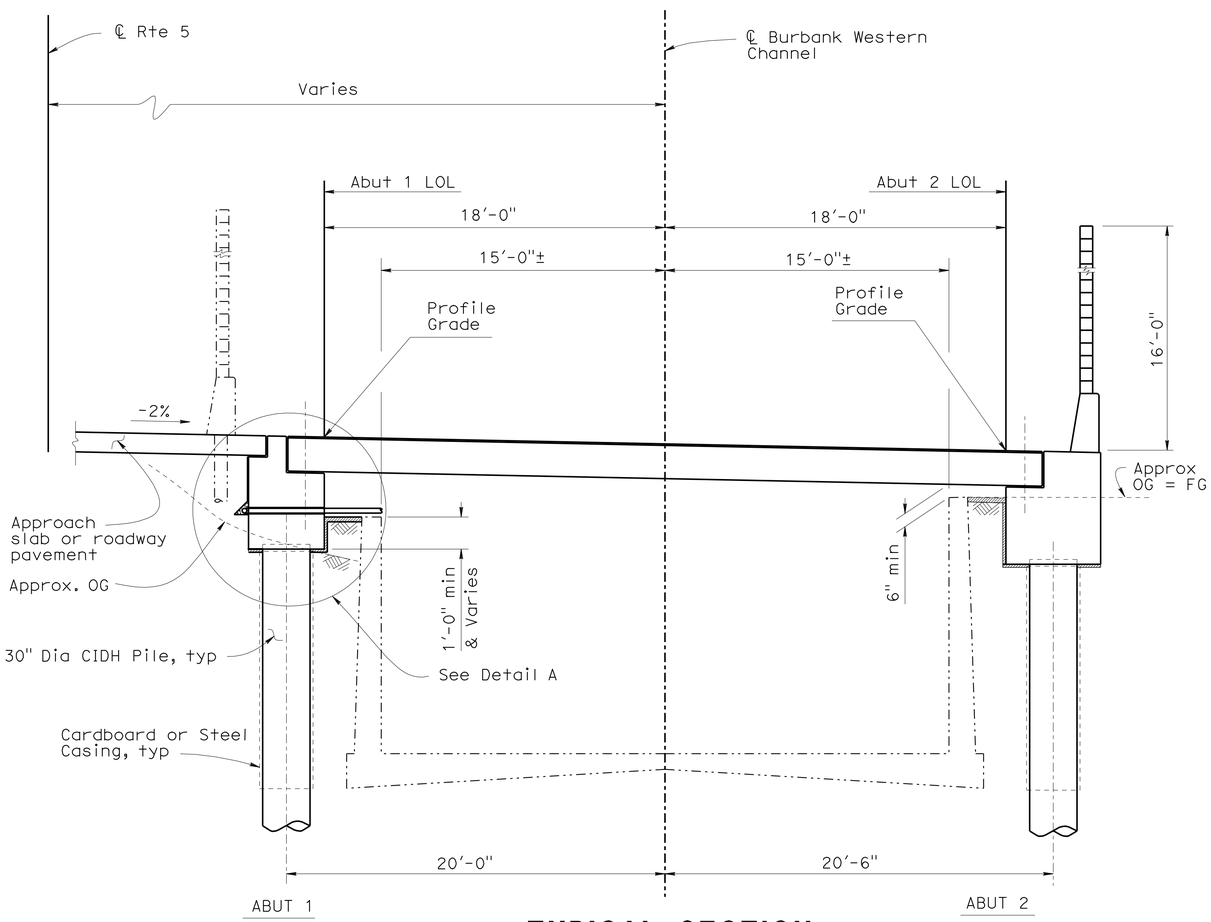

TYPICAL SECTION

1' = 1/4"

PROFILE GRADE		
STA	ABUT 1	ABUT 2
150+00	600.99	600.27
+20	601.25	600.53
+40	601.51	600.79
+60	601.75	601.03
+80	602.00	601.28
151+00	602.23	601.51
+20	602.47	601.75
+40	602.69	601.97
+60	602.91	602.19
+80	603.13	602.41
152+00	603.34	602.62
+20	603.55	602.83
+40	603.75	603.03
+60	603.94	603.22
+80	604.13	603.41
153+00	604.31	603.59
+20	604.49	603.77
+40	604.67	603.95
+60	604.83	604.11
+80	605.00	604.28
154+00	605.15	604.43
+20	605.30	604.58
+40	605.45	604.73
+60	605.59	604.87
+80	605.73	605.01
155+00	605.87	605.15
+20	606.02	605.30
+40	606.18	605.46
+60	606.36	605.64
+80	606.55	605.83
156+00	606.75	606.03
+20	606.97	606.25
+40	607.21	606.49
+60	607.46	606.74
+80	607.72	607.00
157+00	607.99	607.27
+20	608.28	607.56
+40	608.59	607.87
+42.43	608.63	607.91
156+40	608.74	608.02
+60	609.07	608.35
+80	609.41	608.69
157+00	609.76	609.04
+20	610.13	609.41
+40	610.51	609.79
+60	610.91	610.19
+80	611.32	610.60
158+00	611.74	611.02
+20	612.18	611.46
+40	612.63	611.91
+60	613.10	612.38
+80	613.52	612.80
159+00	614.06	613.34
+20	614.59	613.87
+40	615.11	614.39
+60	615.63	614.91
+80	616.14	615.42

PROFILE GRADE		
STA	ABUT 1	ABUT 2
160+00	616.64	615.92
+20	617.11	616.39
+40	617.54	616.82
+60	617.95	617.23
+80	618.33	617.61
161+00	618.68	617.96
+20	619.00	618.28
+40	619.30	618.58
+60	619.56	618.84
+80	619.80	619.08
162+00	620.01	619.29
+20	620.19	619.47
+40	620.34	619.62
+60	620.46	619.74
+80	620.55	619.83
163+00	620.61	619.89
+20	620.64	619.92
+40	620.63	619.91
+60	620.59	619.87
+80	620.52	619.80
164+00	620.42	619.70
+20	620.28	619.56
+40	620.11	619.39
+60	619.92	619.20
+80	619.71	618.99
165+00	619.49	618.77
+17.05	619.24	618.52
165+20	619.13	618.53

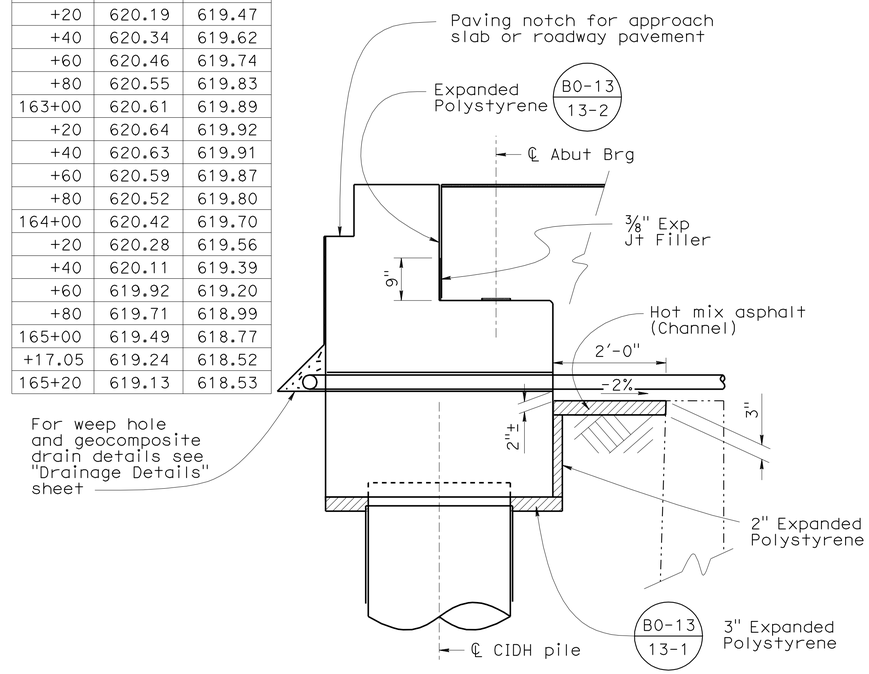

DETAIL A

1' = 3/4"

NOTE:

Abut 1 shown
Abut 2 similar (except weep hole and geocomposite drain details do not apply)

NOTES

1. Construct Abutment 2 and Soundwall, place backfill behind Abutment 2.
2. Construct abutment 1
3. Place concrete slab panels
4. Place backfill behind Abutment 1
5. The Contractor shall be extra cautious working in the vicinity of existing Burbank Western Channel. For the purpose of soil compaction, the Contractor shall use hand held equipment when working adjacent or over the existing channel in order to not cause any structural damage to the channel.

DESIGN	BY J. ESTRADA	CHECKED M. OKIMURA/D.R. MURRAY	
DETAILS	BY SURAJ DUTTA	CHECKED J.ESTRADA	
QUANTITIES	BY DAVID R MURRAY	CHECKED PREM RIMAL	

STATE OF CALIFORNIA
DEPARTMENT OF TRANSPORTATION

DIVISION OF ENGINEERING SERVICES
STRUCTURE DESIGN
DESIGN BRANCH 18

BRIDGE NO. 53-3078
POST MILE 30.07

BURBANK WESTERN CHANNEL
CHANNEL COVER
ABUTMENT DETAILS NO. 1

STRUCTURES DESIGN DETAIL SHEET (ENGLISH) (REV. 09-01-10)

ORIGINAL SCALE IN INCHES FOR REDUCED PLANS 0 1 2 3

UNIT: 3603
PROJECT NUMBER & PHASE: 0700021119-1
CONTRACT NO.: 07-1218w1

DISREGARD PRINTS BEARING EARLIER REVISION DATES

REVISION DATES 06/11/12 12/14/12 01/04/13 02/12/13 07/12/13

SHEET 12 OF 40

FILE => 53-3078-f-abutdet.dgn

USERNAME => s121614 DATE PLOTTED => 19-JUN-2013 TIME PLOTTED => 07:54

DIST	COUNTY	ROUTE	POST MILES TOTAL PROJECT	SHEET No.	TOTAL SHEETS
07	LA	5	29.4/31.6	989	1931

REGISTERED CIVIL ENGINEER — DATE 01/31/12

5-21-12
PLANS APPROVAL DATE

REGISTERED PROFESSIONAL ENGINEER — JORGE I. ESTRADA — No. C51473 — Exp. 06/30/12 — CIVIL — STATE OF CALIFORNIA

The State of California or its officers or agents shall not be responsible for the accuracy or completeness of electronic copies of this plan sheet.

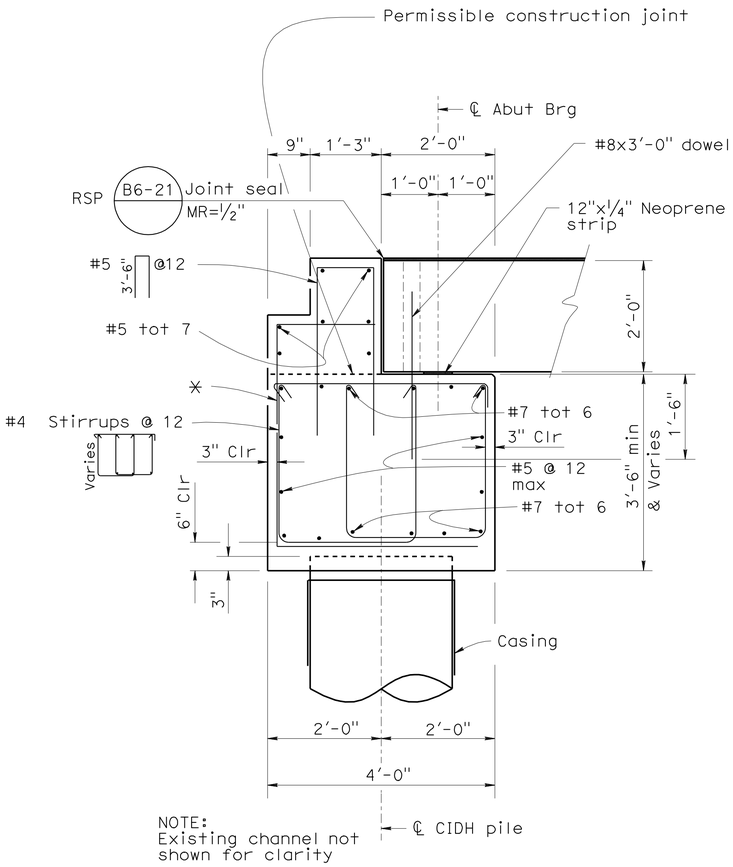

NOTE:
Existing channel not shown for clarity

ABUTMENT 1

1' = 3/4"

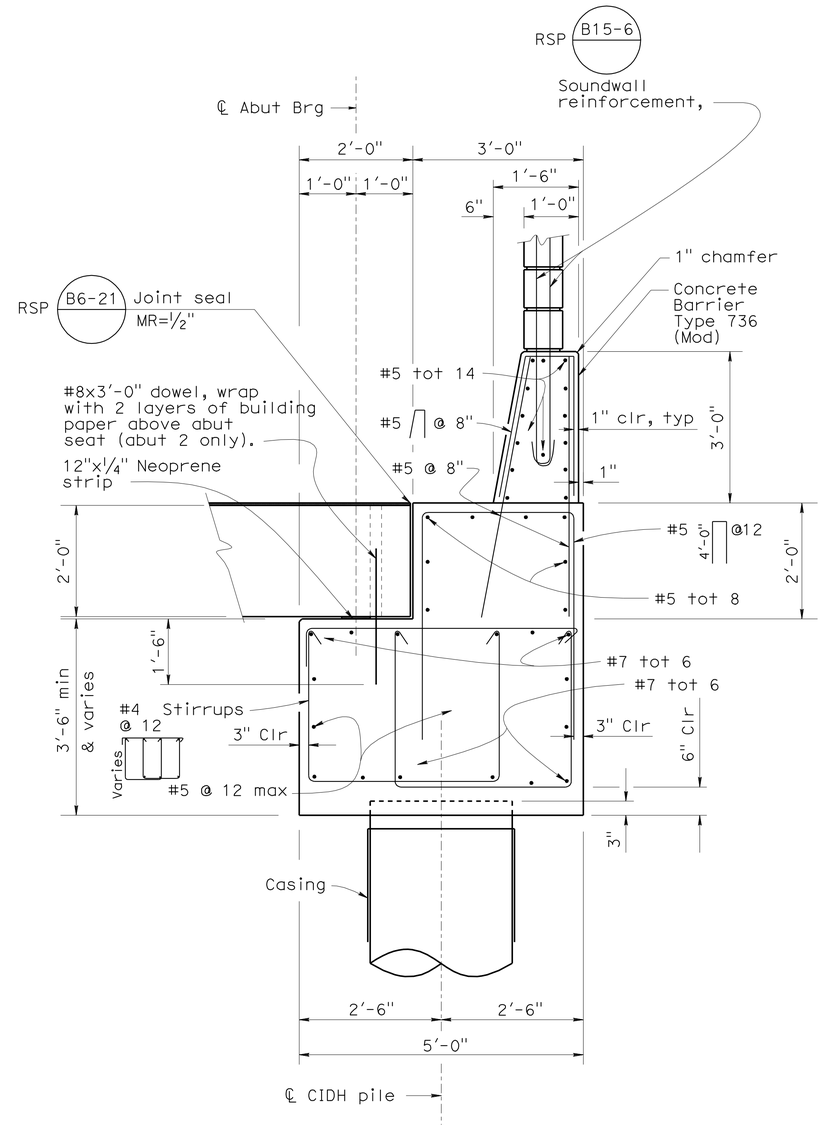

ABUTMENT 2

1' = 3/4"

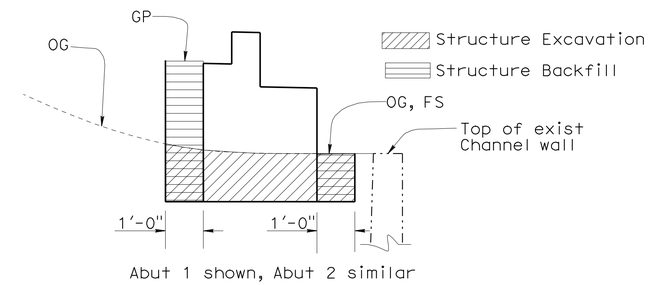

Abut 1 shown, Abut 2 similar

LIMITS OF STRUCTURE EXCAVATION AND BACKFILL

No scale

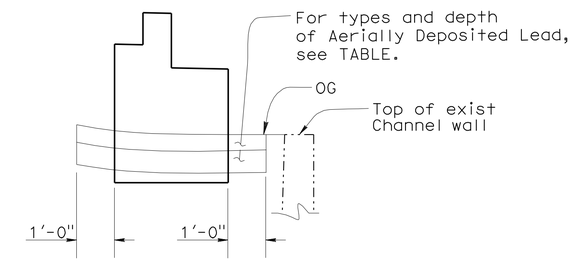

LIMITS OF STRUCTURE EXCAVATION, AERIALLY DEPOSITED LEAD (ADL)

No Scale

Abut 1 shown, Abut 2 similar

AERIALLY DEPOSITED LEAD

ADL TYPE	DEPTH H, FT	STATION LIMIT	
		FROM	TO
Y-1	2.00	STA 1593+50.00	STA 1600+49.00
Z-3	2.50	STA 1603+70.00	STA 1605+70.00

Note: Stations are centerline of Rte 5

* #5 @ 12 Sta 149+82.22 to Sta 157+37.59

* #5 Varies @ 12 Sta 157+37.59 to Sta 165+17.00

DESIGN	BY J. ESTRADA	CHECKED M. OKIMURA/D.R. MURRAY	
DETAILS	BY SURAJ DUTTA	CHECKED J.ESTRADA	
QUANTITIES	BY DAVID R MURRAY	CHECKED PREM RIMAL	

STATE OF CALIFORNIA
DEPARTMENT OF TRANSPORTATION

DIVISION OF ENGINEERING SERVICES
STRUCTURE DESIGN
DESIGN BRANCH 18

BRIDGE NO. 53-3078
POST MILE 30.07

BURBANK WESTERN CHANNEL
CHANNEL COVER
ABUTMENT DETAILS NO. 2

STRUCTURES DESIGN DETAIL SHEET (ENGLISH) (REV. 09-01-10)

ORIGINAL SCALE IN INCHES FOR REDUCED PLANS 0 1 2 3

UNIT: 3603
PROJECT NUMBER & PHASE: 0700021119-1
CONTRACT NO.: 07-1218w1

DISREGARD PRINTS BEARING EARLIER REVISION DATES

REVISION DATES 03/18/11 12/19/11 04/25/12 04/19/08

SHEET 13 OF 40

FILE => 53-3078-f-abutdet2.dgn

USERNAME => s114640 DATE PLOTTED => 22-MAY-2012 TIME PLOTTED => 08:09

DIST	COUNTY	ROUTE	POST MILES TOTAL PROJECT	SHEET No.	TOTAL SHEETS
07	LA	5	29.4/31.6	990	1931

REGISTERED CIVIL ENGINEER — DATE 01/31/12

5-21-12
PLANS APPROVAL DATE

REGISTERED PROFESSIONAL ENGINEER — JORGE I. ESTRADA — No. C51473 — Exp. 06/30/12 — CIVIL — STATE OF CALIFORNIA

The State of California or its officers or agents shall not be responsible for the accuracy or completeness of electronic copies of this plan sheet.

Notes

1. For Specified Pile Tip Elevation, see Pile Data Table on "Index to Plans" Sheet.
2. All hoops are "Ultimate" butt spliced continous.
3. Extend casing to the bottom of the existing open channel invert slab. For invert slab elevations see "Profile" sheets
4. Cardboard casing shall be manufactured using high strength, water resistant paper.
5. No splices allowed in longitudinal pile reinforcement
6. Inspection tubes needed if slurry displacement method is used. If inspection tubes are not needed, rearrange bundled bars with an equal space.

Design Notes

Reinforced Concrete: f_y = 60,000 psi

f'c = 4,000 psi

Design Capacity: See Pile Data Table on "Index to plans" sheet

LEGEND:

Existing Structure

New Construction

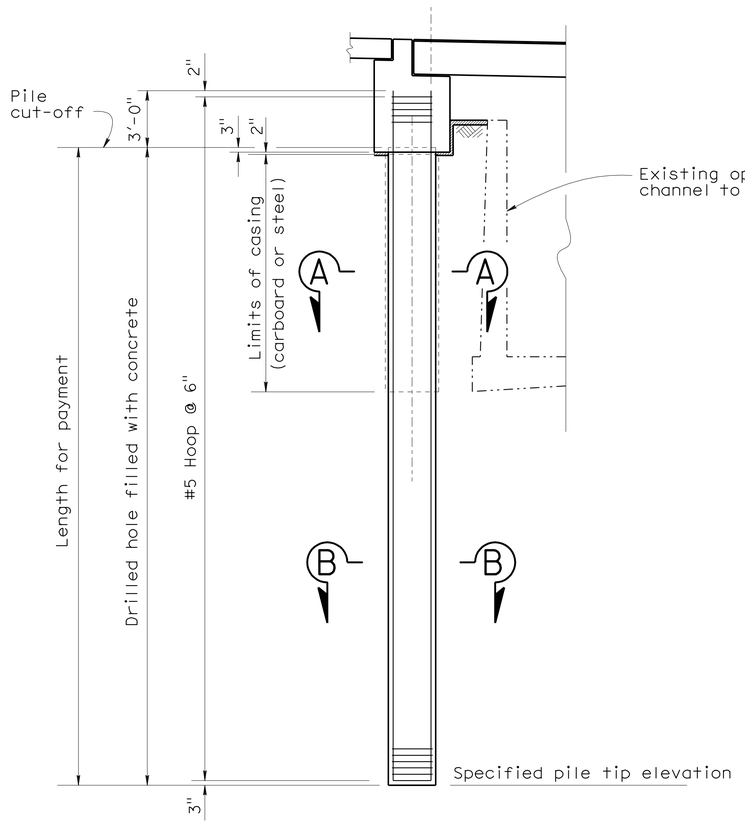

CIDH PILE AT ABUT 1

1' = ¾"

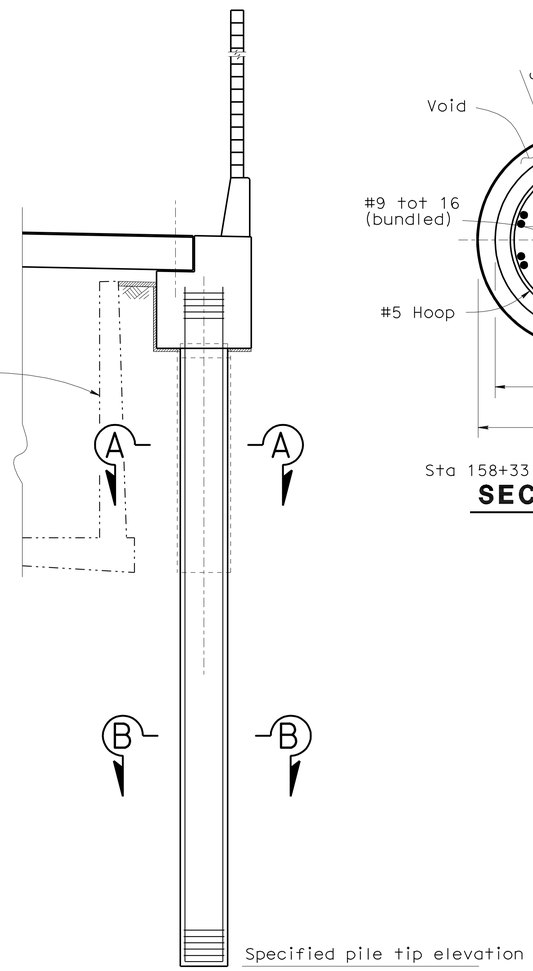

CIDH PILE AT ABUT 2

1' = ¾"

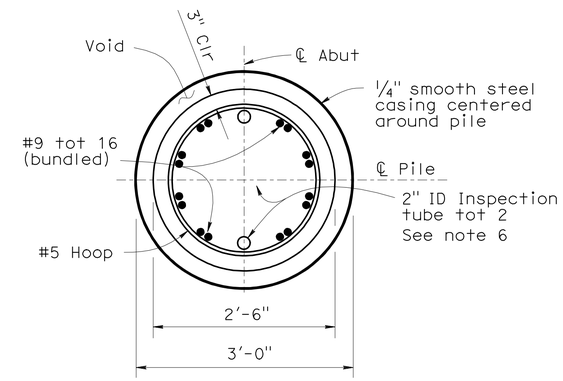

Sta 158+33.71 to Sta 165+17.05

SECTION A-A

1' = 1"

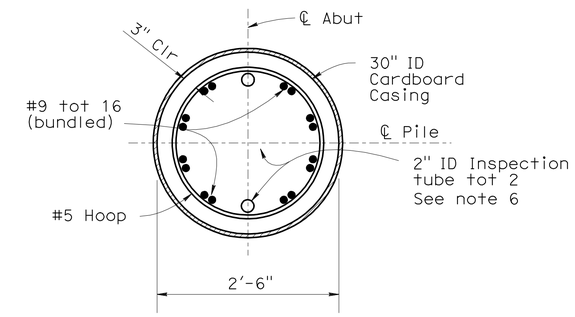

Sta 149+82.22 to Sta 158+33.71

SECTION A-A

1' = 1"

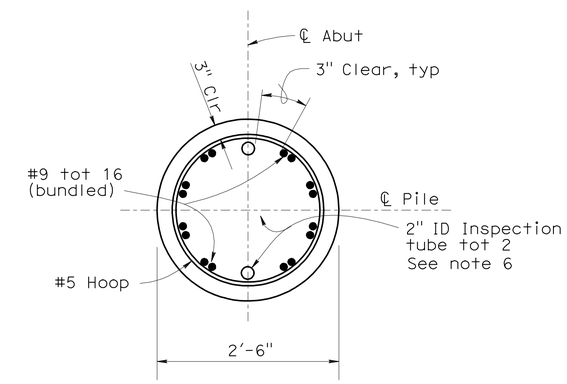

SECTION B-B

1' = 1"

DESIGN	BY J. ESTRADA	CHECKED M. OKIMURA	
DETAILS	BY SURAJ DUTTA	CHECKED J.ESTRADA	
QUANTITIES	BY DAVID R MURRAY	CHECKED PREM RIMAL	

STATE OF CALIFORNIA
DEPARTMENT OF TRANSPORTATION

DIVISION OF ENGINEERING SERVICES
STRUCTURE DESIGN
DESIGN BRANCH 18

BRIDGE NO. 53-3078
POST MILE 30.07

BURBANK WESTERN CHANNEL

CHANNEL COVER

30" CAST-IN-DRILLED HOLE CONCRETE PILE

STRUCTURES DESIGN DETAIL SHEET (ENGLISH) (REV. 09-01-10)

ORIGINAL SCALE IN INCHES FOR REDUCED PLANS 0 1 2 3

UNIT: 3603
PROJECT NUMBER & PHASE: 0700021119-1
CONTRACT NO.: 07-1218W1

DISREGARD PRINTS BEARING EARLIER REVISION DATES

REVISION DATES 08/18/10 06/11/12 03/18/10 07/12/08

SHEET 14 OF 40

FILE => 53-3078-f-abutpile.dgn

USERNAME => DATE PLOTTED => 19-JUN-2012 TIME PLOTTED => 07:54

DIST	COUNTY	ROUTE	POST MILES TOTAL PROJECT	SHEET No.	TOTAL SHEETS
07	LA	5	29.4/31.6	991	1931

REGISTERED CIVIL ENGINEER — DATE 01/31/12

5-21-12
PLANS APPROVAL DATE

REGISTERED PROFESSIONAL ENGINEER — JORGE I. ESTRADA — No. C51473 — Exp. 06/30/12 — CIVIL — STATE OF CALIFORNIA

The State of California or its officers or agents shall not be responsible for the accuracy or completeness of electronic copies of this plan sheet.

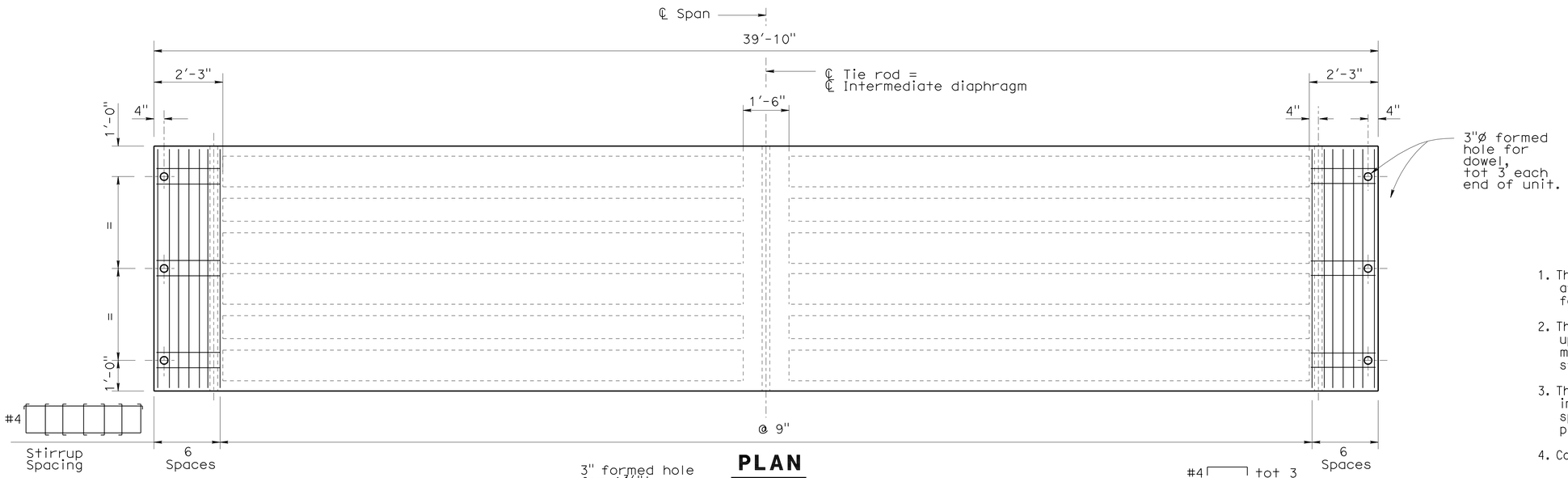

PLAN
1' = ½"

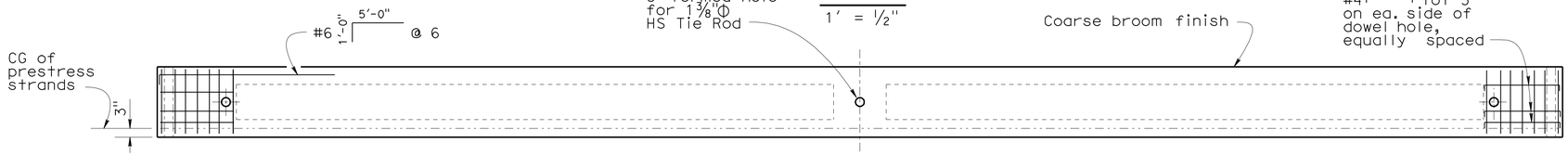

ELEVATION
1' = ½"

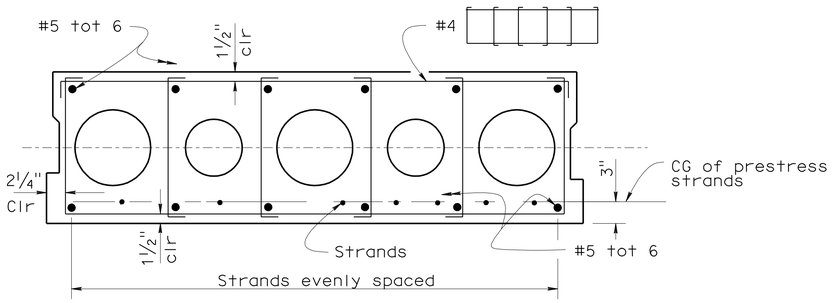

PANEL REINFORCEMENT
PANEL I
1' = 1"

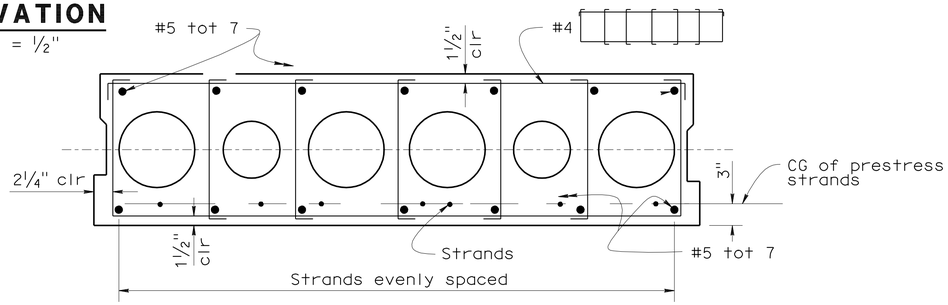

PANEL REINFORCEMENT
PANELS A THROUGH H
1' = 1"

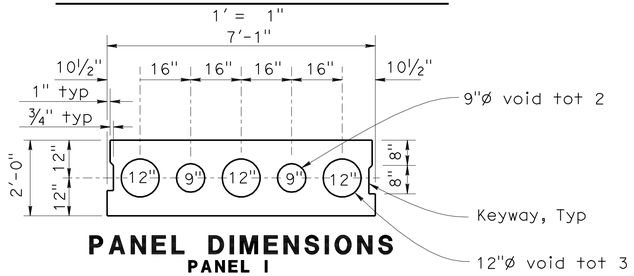

PANEL DIMENSIONS
PANEL I
1' = ½"

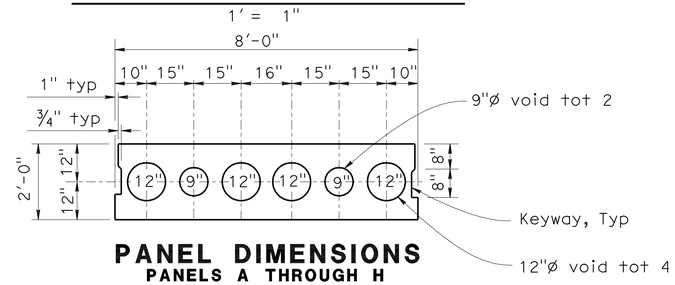

PANEL DIMENSIONS
PANELS A THROUGH H
1' = ½"

GENERAL NOTES

1. The Jacking Force (P) is the jacking force required at the point of control along the span. The jacking force does not include any fabrication specific losses
2. The maximum tensile stress in the prestressing steel upon release shall not exceed 75% of the specified minimum ultimate tensile strength of the prestressing steel
3. The maximum temporary tensile stress (jacking stress) in the prestressing steel shall not exceed 80% of the specified minimum ultimate tensile strength of the prestressing steel
4. Concrete Strength:
   f'ci is at time of initial stressing
   f'c is at 28 days
5. Keyways to be filled with grout
6. See other sheets for railing requirements
7. Engineer should specify numbers (or percentage) of debond strands and debond length if required
8. Wearing surface required on completed bridge deck surface

Girder location or designation and length	Jacking Force (P) in Kips	Concrete Strength (ksi)	
		f'ci	f'c
A-H	861	4.0	5.0
I	760	4.0	5.0

DESIGN	BY J. ESTRADA	CHECKED D.R. MURRAY	
DETAILS	BY SURAJ DUTTA	CHECKED J.ESTRADA	
QUANTITIES	BY DAVID R MURRAY	CHECKED PREM RIMAL	

STATE OF CALIFORNIA
DEPARTMENT OF TRANSPORTATION

DIVISION OF ENGINEERING SERVICES
STRUCTURE DESIGN
DESIGN BRANCH 18

BRIDGE NO. 53-3078
POST MILE 30.07

BURBANK WESTERN CHANNEL
CHANNEL COVER
PC/PS CONCRETE SLAB GIRDER

STRUCTURES DESIGN DETAIL SHEET (ENGLISH) (REV. 09-01-10)

ORIGINAL SCALE IN INCHES FOR REDUCED PLANS 0 1 2 3

UNIT: 3603
PROJECT NUMBER & PHASE: 0700021119-1
CONTRACT NO.: 07-1218W1

DISREGARD PRINTS BEARING EARLIER REVISION DATES

REVISION DATES: 03/18/11 12/10/11 07/12/05

SHEET 15 OF 40

FILE => 53-3078-g-pc_ps.dgn

USERNAME => s114640 DATE PLOTTED => 22-MAY-2012 TIME PLOTTED => 08:09

DIST	COUNTY	ROUTE	POST MILES TOTAL PROJECT	SHEET No.	TOTAL SHEETS
07	LA	5	29.4/31.6	992	1931

REGISTERED CIVIL ENGINEER — DATE 01/31/12

5-21-12
PLANS APPROVAL DATE

REGISTERED PROFESSIONAL ENGINEER — Jorge I. Estrada — No. C51473 — Exp. 06-30-12 — CIVIL — STATE OF CALIFORNIA

The State of California or its officers or agents shall not be responsible for the accuracy or completeness of electronic copies of this plan sheet.

Post Tensioning Notes:

Tie Rod P_F = 162 kips

Notes:

1. Longitudinal keyways to be filled with mortar prior to post-tensioning tie rods.
2. 3"Ø formed holes in diaphragms to be filled with grout before overlay is placed.
3. Tie rod blockouts to be filled with Class"D" concrete after grout has been placed.
4. Polyester Concrete Overlay to be placed after tensioning tie rods.
5. Tie rod units shall be galvanized after fabrication.

LEGEND

- Indicates Existing Structure
- Indicates New Constuction
- Concrete Removal (Portion)

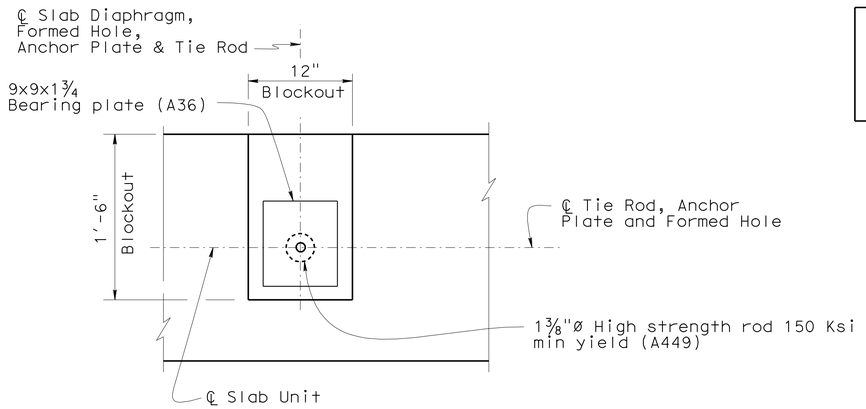

SECTION M-M

1' = 1½"

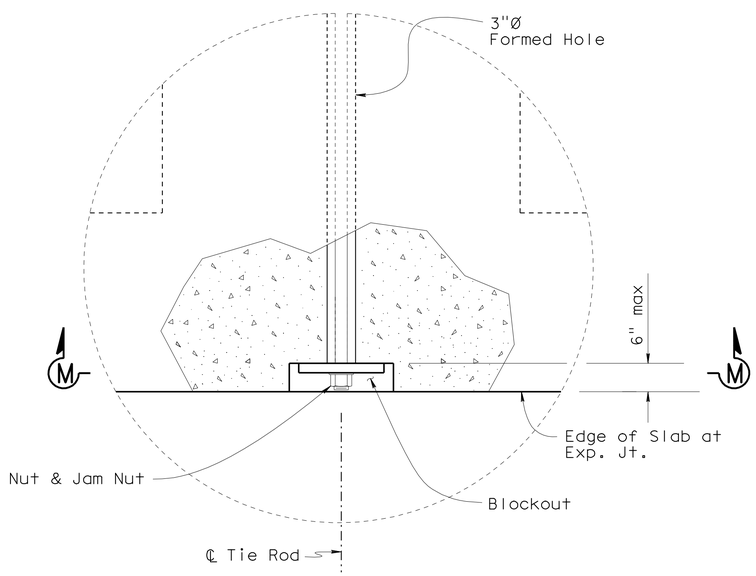

END DETAIL

1 = 1½"

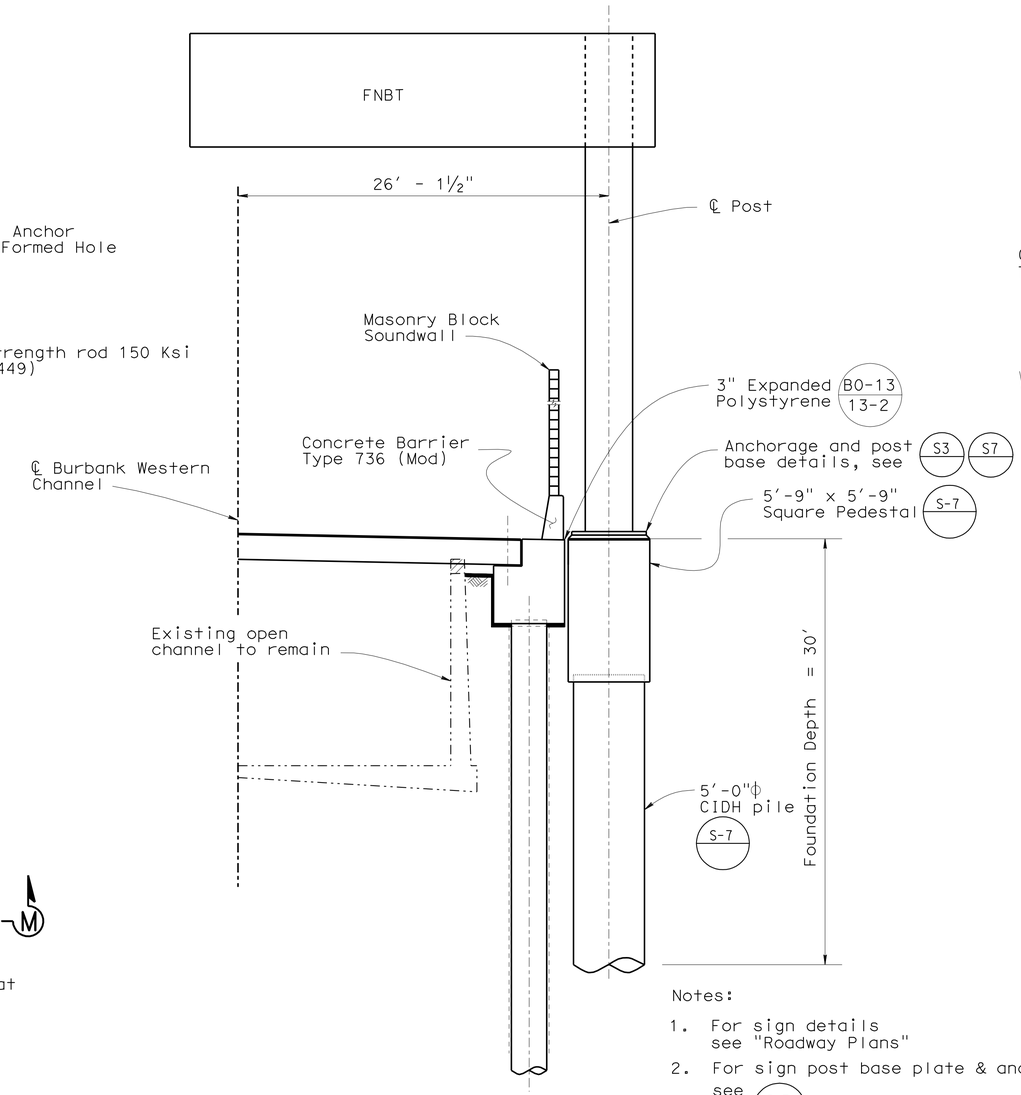

SECTION A-A

1' = 3/16"

Notes:

1. For sign details see "Roadway Plans"
2. For sign post base plate & anchor bolt details, see S-3
3. For pedestal & pile details not shown see S-7
4. For origin of Section A-A see "Abutment 1 & 2 Layout No.3" sheet

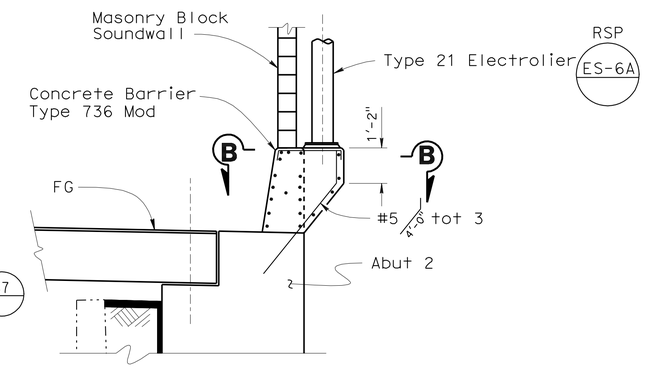

PEDESTAL ELEVATION

⅜" = 1'-0"

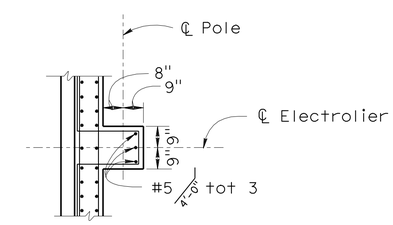

SECTION B-B

⅜" = 1'-0"

NOTES:

1. For pedestal details not shown, see B11-56
2. Electrolier Locations (Stations along ℄ Rte 5): 1588+26, 1590+27, 1592+10, 1593+90, 1595+70, 1597+50

DESIGN	BY J. ESTRADA	CHECKED D.R. MURRAY	
DETAILS	BY SURAJ DUTTA	CHECKED J.ESTRADA	
QUANTITIES	BY DAVID R MURRAY	CHECKED PREM RIMAL	

STATE OF CALIFORNIA
DEPARTMENT OF TRANSPORTATION

DIVISION OF ENGINEERING SERVICES
STRUCTURE DESIGN
DESIGN BRANCH 18

BRIDGE NO. 53-3078
POST MILE 30.07

BURBANK WESTERN CHANNEL
CHANNEL COVER
MISCELLANEOUS DETAILS

STRUCTURES DESIGN DETAIL SHEET (ENGLISH) (REV. 09-01-10)

ORIGINAL SCALE IN INCHES FOR REDUCED PLANS 0 1 2 3

UNIT: 3603
PROJECT NUMBER & PHASE: 0700021119-1
CONTRACT NO.: 07-1218W1

DISREGARD PRINTS BEARING EARLIER REVISION DATES

REVISION DATES 03/18/11 12/10/11 05/15/12 07/12/08

SHEET 16 OF 40

FILE => 53-3078-g-tie_rod.dgn

USERNAME => s114640 DATE PLOTTED => 22-MAY-2012 TIME PLOTTED => 08:09

DIST	COUNTY	ROUTE	POST MILES TOTAL PROJECT	SHEET No.	TOTAL SHEETS
07	LA	5	29.4/31.6	993	1931

JEstrada. 01/31/12
REGISTERED CIVIL ENGINEER DATE

5-21-12
PLANS APPROVAL DATE

REGISTERED PROFESSIONAL ENGINEER JORGE I. ESTRADA No. C51473 Exp. 06/30/12 CIVIL STATE OF CALIFORNIA

The State of California or its officers or agents shall not be responsible for the accuracy or completeness of electronic copies of this plan sheet.

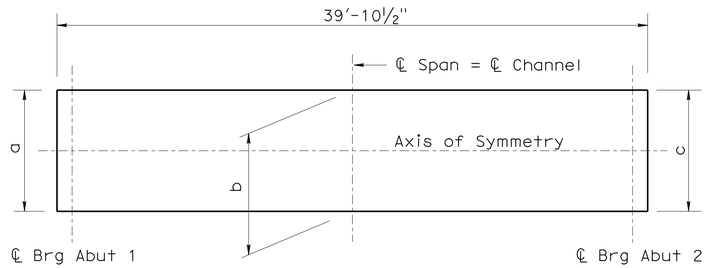

PANEL DIMENSIONS
PANELS B and I
no scale

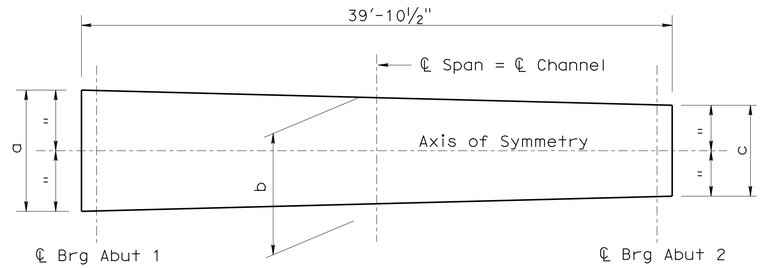

PANEL DIMENSIONS
PANELS D and G
no scale

LEGEND:

- Existing Structure
- New Construction
- Panel Name
- Concrete removal (portion)
- Manhole
- Survey point - Chiseled "X" placed on invert of existing channel directly beneath manhole

Panel	a	b	c	No. of Panels
A	8'-1 7/8"	8'-0"	7'-10 1/8"	1
B	8'-0"	8'-0"	8'-0"	158
C	8'-1 1/8"	8'-0"	7'-10 7/8"	1
D	8'-1 5/8"	8'-0"	7'-10 3/8"	15
E	8'-0 1/8"	8'-0"	7'-11 7/8"	1
F	8'-0 1/2"	8'-0"	7'-11 1/2"	1
G	8'-0 7/8"	8'-0"	7'-11 1/8"	22
H	8'-0 1/4"	8'-0"	7'-11 3/4"	1
I	7'-1"	7'-1"	7'-1"	6

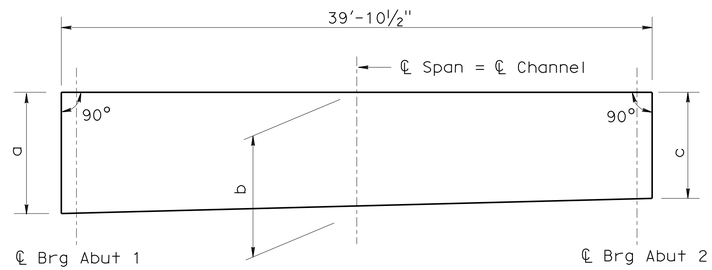

PANEL DIMENSIONS
PANELS A,E and H
no scale

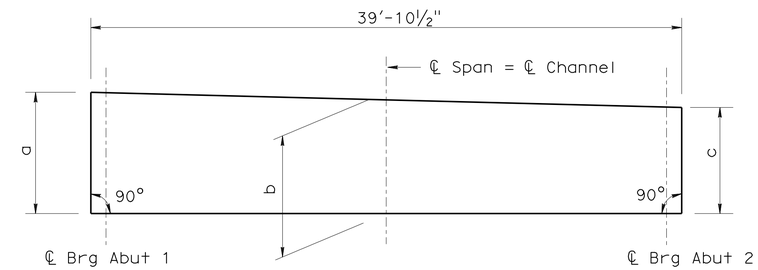

PANEL DIMENSIONS
PANELS C and F
no scale

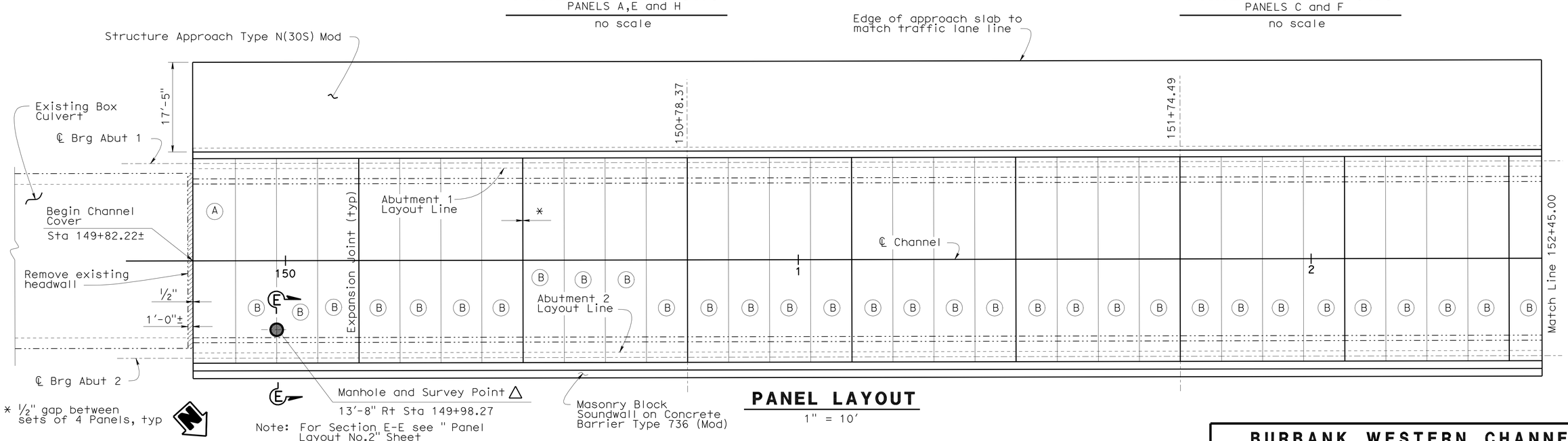

PANEL LAYOUT
1" = 10'

DESIGN	BY J. ESTRADA	CHECKED D.R. MURRAY	
DETAILS	BY SURAJ DUTTA	CHECKED J.ESTRADA	
QUANTITIES	BY DAVID R MURRAY	CHECKED PREM RIMAL	

STATE OF CALIFORNIA
DEPARTMENT OF TRANSPORTATION

DIVISION OF ENGINEERING SERVICES
STRUCTURE DESIGN
DESIGN BRANCH 18

BRIDGE NO. 53-3078
POST MILE 30.07

BURBANK WESTERN CHANNEL
CHANNEL COVER
PANEL LAYOUT NO. 1

STRUCTURES DESIGN DETAIL SHEET (ENGLISH) (REV. 09-01-10)

ORIGINAL SCALE IN INCHES FOR REDUCED PLANS 0 1 2 3

UNIT: 3603
PROJECT NUMBER & PHASE: 0700021119-1
CONTRACT NO.: 07-1218w1

DISREGARD PRINTS BEARING EARLIER REVISION DATES → 03/19/11 12/10/11 07/12/08

REVISION DATES

SHEET 17 OF 40

FILE => 53-3078-h-pl_layout01.dgn

USERNAME => s114640 DATE PLOTTED => 22-MAY-2012 TIME PLOTTED => 08:03

DIST	COUNTY	ROUTE	POST MILES TOTAL PROJECT	SHEET No.	TOTAL SHEETS
07	LA	5	29.4/31.6	994	1931

JEstrada. 01/31/12
REGISTERED CIVIL ENGINEER DATE

5-21-12
PLANS APPROVAL DATE

REGISTERED PROFESSIONAL ENGINEER
JORGE I. ESTRADA
No. C51473
Exp. 06/30/12
CIVIL
STATE OF CALIFORNIA

The State of California or its officers or agents shall not be responsible for the accuracy or completeness of electronic copies of this plan sheet.

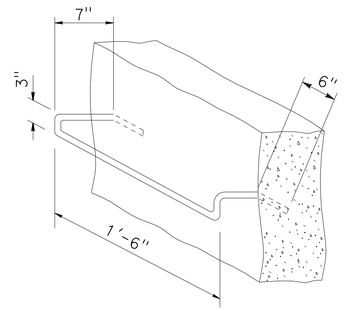

BAR STEP
LADDER RUNG DETAILS

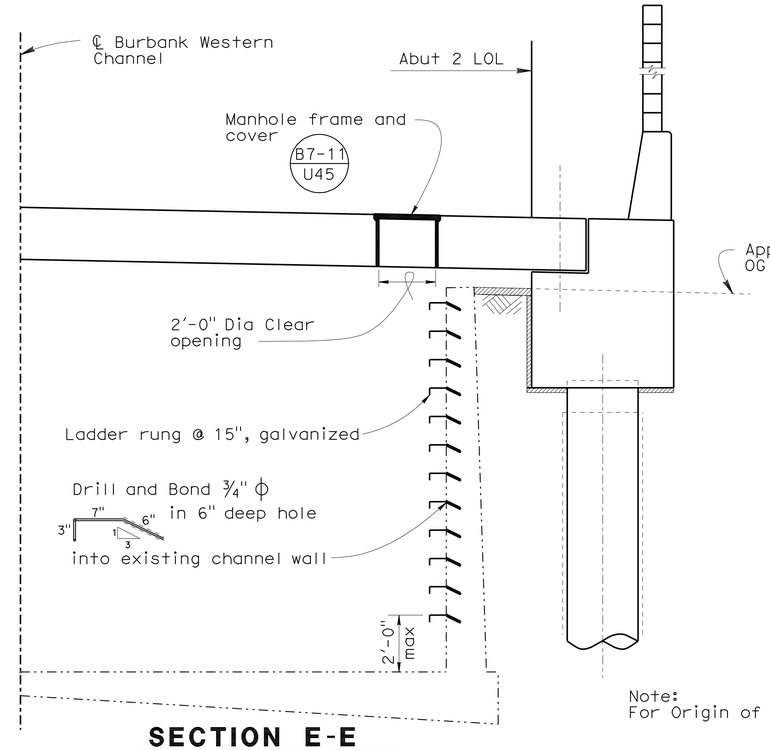

SECTION E-E
1' = ⅜"

Note:
For Origin of Section E-E see " Panel Layout No.1" Sheet

LEGEND:

- New Construction
- Panel Name
- Manhole
- Survey point - Chiseled "X" placed on invert of existing channel directly beneath manhole

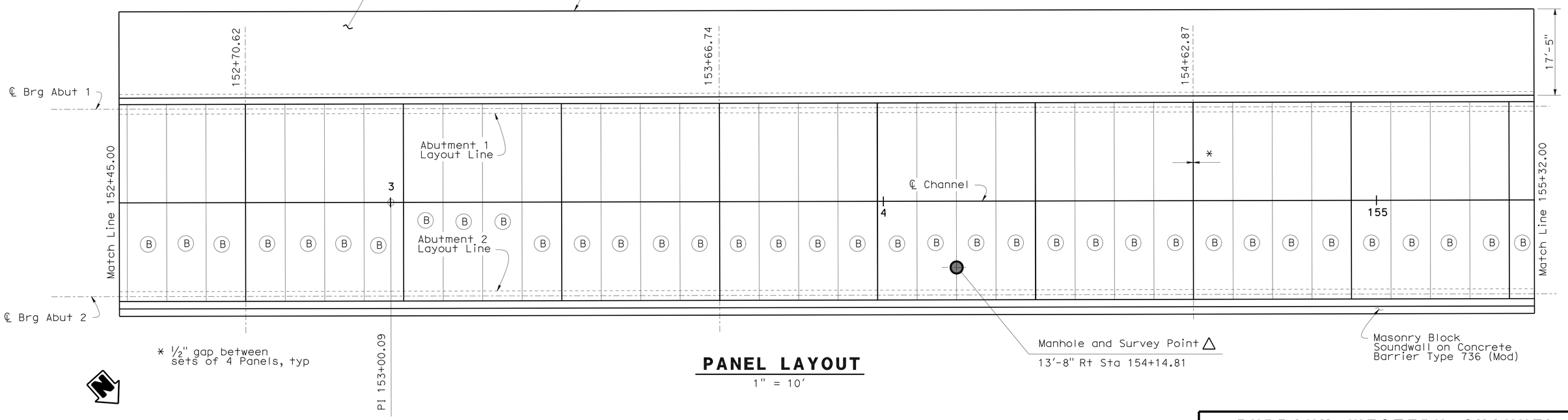

PANEL LAYOUT
1" = 10'

DESIGN	BY J. ESTRADA	CHECKED D.R. MURRAY
DETAILS	BY SURAJ DUTTA	CHECKED J.ESTRADA
QUANTITIES	BY DAVID R MURRAY	CHECKED PREM RIMAL

STATE OF CALIFORNIA
DEPARTMENT OF TRANSPORTATION

DIVISION OF ENGINEERING SERVICES
STRUCTURE DESIGN
DESIGN BRANCH 18

BRIDGE NO. 53-3078
POST MILE 47.30/60.9

BURBANK WESTERN CHANNEL
CHANNEL COVER
PANEL LAYOUT NO. 2

STRUCTURES DESIGN DETAIL SHEET (ENGLISH) (REV. 09-01-10)

ORIGINAL SCALE IN INCHES FOR REDUCED PLANS 0 1 2 3

UNIT: 3603
PROJECT NUMBER & PHASE: 0700021119-1
CONTRACT NO.: 07-1218w1

DISREGARD PRINTS BEARING EARLIER REVISION DATES
REVISION DATES 03/18/11 12/10/11 07/12/08
SHEET 18 OF 40

FILE => 53-3078-h-pl_layout02.dgn

USERNAME => s114640 DATE PLOTTED => 19-JUN-2012 TIME PLOTTED => 08:20

DIST	COUNTY	ROUTE	POST MILES TOTAL PROJECT	SHEET No.	TOTAL SHEETS
07	LA	5	29.4/31.6	995	1931

JEstrada. 01/31/12
REGISTERED CIVIL ENGINEER DATE

5-21-12
PLANS APPROVAL DATE

REGISTERED PROFESSIONAL ENGINEER
JORGE I. ESTRADA
No. C51473
Exp. 06/30/12
CIVIL
STATE OF CALIFORNIA

The State of California or its officers or agents shall not be responsible for the accuracy or completeness of electronic copies of this plan sheet.

LEGEND:

——— New Construction

(X) Panel Name

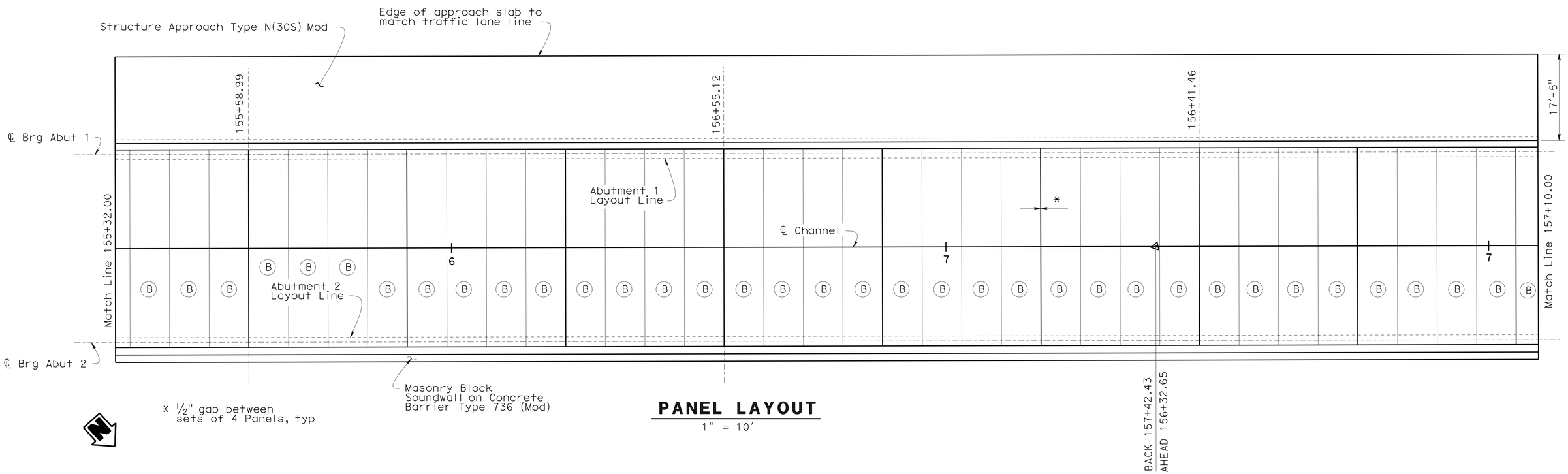

* ½" gap between sets of 4 Panels, typ

PANEL LAYOUT

1" = 10'

DESIGN	BY J. ESTRADA	CHECKED D.R. MURRAY	
DETAILS	BY SURAJ DUTTA	CHECKED J.ESTRADA	
QUANTITIES	BY DAVID R MURRAY	CHECKED PREM RIMAL	

STATE OF CALIFORNIA
DEPARTMENT OF TRANSPORTATION

DIVISION OF ENGINEERING SERVICES
STRUCTURE DESIGN
DESIGN BRANCH 18

BRIDGE NO. 53-3078
POST MILE 30.07

BURBANK WESTERN CHANNEL
CHANNEL COVER
PANEL LAYOUT NO. 3

STRUCTURES DESIGN DETAIL SHEET (ENGLISH) (REV. 09-01-10)

ORIGINAL SCALE IN INCHES FOR REDUCED PLANS 0 1 2 3

UNIT: 3603
PROJECT NUMBER & PHASE: 0700021119-1
CONTRACT NO.: 07-1218w1

DISREGARD PRINTS BEARING EARLIER REVISION DATES → 03/18/11 12/10/11 07/12/08

REVISION DATES

SHEET 19 OF 40

FILE => 53-3078-h-pl_layout03.dgn

USERNAME => s114640 DATE PLOTTED => 19-JUN-2012 TIME PLOTTED => 08:20

DIST	COUNTY	ROUTE	POST MILES TOTAL PROJECT	SHEET No.	TOTAL SHEETS
07	LA	5	29.4/31.6	996	1931

JEstrada. 01/31/12
REGISTERED CIVIL ENGINEER DATE

5-21-12
PLANS APPROVAL DATE

REGISTERED PROFESSIONAL ENGINEER
JORGE I. ESTRADA
No. C51473
Exp. 06/30/12
CIVIL
STATE OF CALIFORNIA

The State of California or its officers or agents shall not be responsible for the accuracy or completeness of electronic copies of this plan sheet.

LEGEND:

- New Construction
- Panel Name
- Manhole
- Survey point - Chiseled "X" placed on invert of existing channel directly beneath manhole

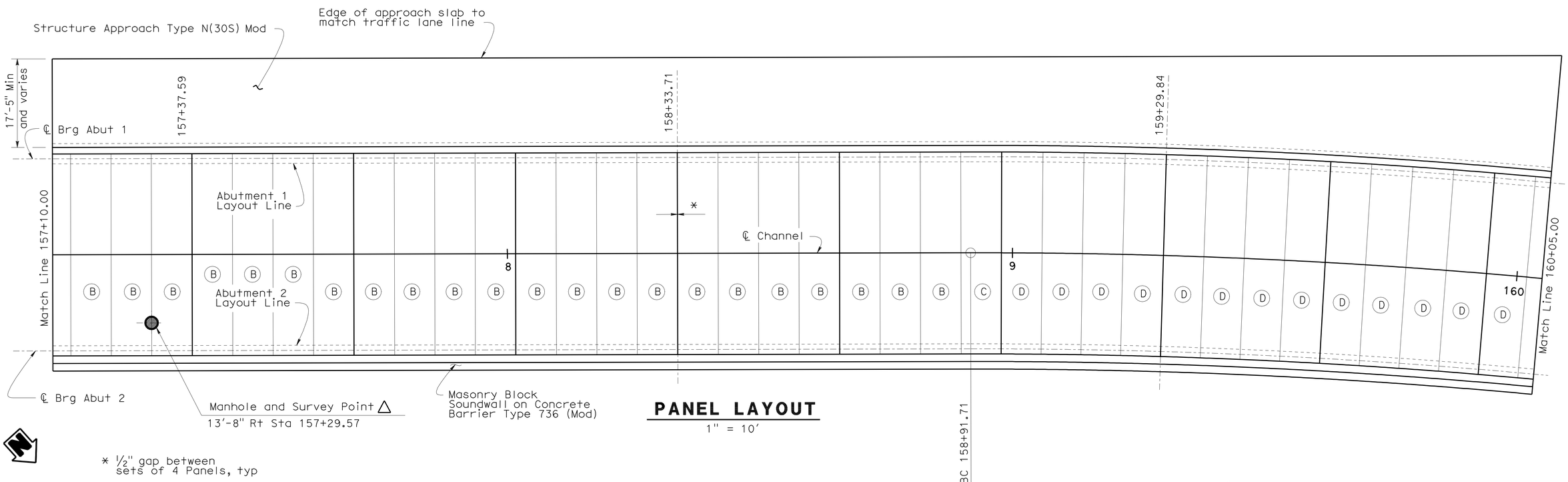

PANEL LAYOUT

1" = 10'

DESIGN	BY J. ESTRADA	CHECKED D.R. MURRAY	
DETAILS	BY SURAJ DUTTA	CHECKED J.ESTRADA	
QUANTITIES	BY DAVID R MURRAY	CHECKED PREM RIMAL	

STATE OF CALIFORNIA
DEPARTMENT OF TRANSPORTATION

DIVISION OF ENGINEERING SERVICES
STRUCTURE DESIGN
DESIGN BRANCH 18

BRIDGE NO. 53-3078
POST MILE 30.07

BURBANK WESTERN CHANNEL
CHANNEL COVER
PANEL LAYOUT NO. 4

STRUCTURES DESIGN DETAIL SHEET (ENGLISH) (REV. 09-01-10)

ORIGINAL SCALE IN INCHES FOR REDUCED PLANS 0 1 2 3

UNIT: 3603
PROJECT NUMBER & PHASE: 0700021119-1
CONTRACT NO.: 07-1218W1

DISREGARD PRINTS BEARING EARLIER REVISION DATES

REVISION DATES 03/18/11 12/10/11 07/12/08

SHEET 20 OF 40

FILE => 53-3078-h-pl_layout04.dgn

USERNAME => s114640 DATE PLOTTED => 19-JUN-2012 TIME PLOTTED => 0820

DIST	COUNTY	ROUTE	POST MILES TOTAL PROJECT	SHEET No.	TOTAL SHEETS
07	LA	5	29.4/31.6	997	1931

J.Estrada. 01/31/12
REGISTERED CIVIL ENGINEER DATE

5-21-12
PLANS APPROVAL DATE

REGISTERED PROFESSIONAL ENGINEER
JORGE I. ESTRADA
No. C51473
Exp. 06/30/12
CIVIL
STATE OF CALIFORNIA

The State of California or its officers or agents shall not be responsible for the accuracy or completeness of electronic copies of this plan sheet.

LEGEND:

- New Construction
- ⓧ Panel Name
- Manhole
- △ Survey point - Chiseled "X" placed on invert of existing channel directly beneath manhole

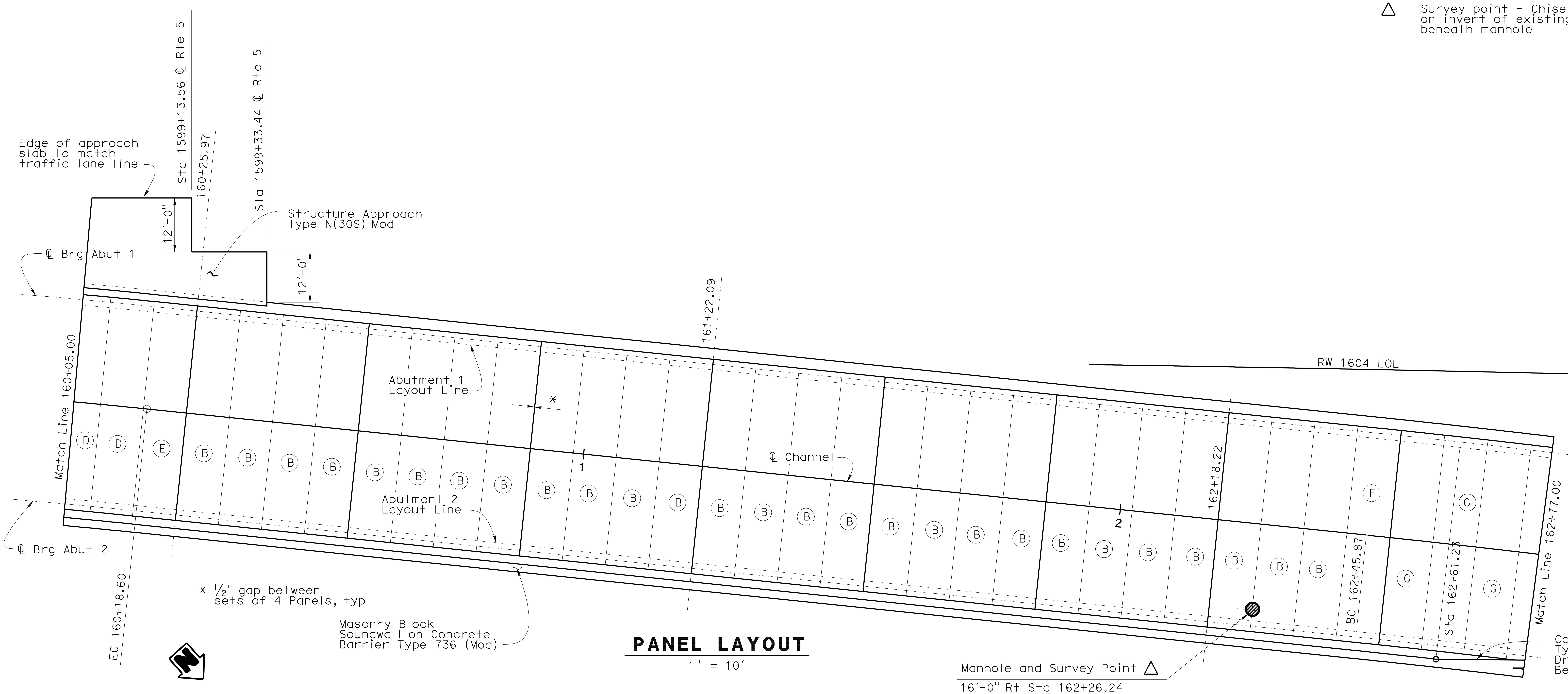

PANEL LAYOUT

1" = 10′

	BY	CHECKED
DESIGN	J. ESTRADA	D.R. MURRAY
DETAILS	SURAJ DUTTA	J.ESTRADA
QUANTITIES	DAVID R MURRAY	PREM RIMAL

STATE OF CALIFORNIA
DEPARTMENT OF TRANSPORTATION

DIVISION OF ENGINEERING SERVICES
STRUCTURE DESIGN
DESIGN BRANCH 18

BRIDGE NO. 53-3078
POST MILE 30.07

BURBANK WESTERN CHANNEL
CHANNEL COVER
PANEL LAYOUT NO. 5

STRUCTURES DESIGN DETAIL SHEET (ENGLISH) (REV. 09-01-10)

ORIGINAL SCALE IN INCHES FOR REDUCED PLANS 0 1 2 3

UNIT: 3603
PROJECT NUMBER & PHASE: 0700021119-1
CONTRACT NO.: 07-1218w1

DISREGARD PRINTS BEARING EARLIER REVISION DATES →

REVISION DATES: 03/18/11 12/10/11 07/12/08

SHEET 21 OF 40

FILE => 53-3078-h-pl_layout05.dgn

USERNAME => s114640 DATE PLOTTED => 22-MAY-2012 TIME PLOTTED => 08:09

DIST	COUNTY	ROUTE	POST MILES TOTAL PROJECT	SHEET No.	TOTAL SHEETS
07	LA	5	29.4/31.6	998	1931

REGISTERED CIVIL ENGINEER — DATE 01/31/12

PLANS APPROVAL DATE 5-21-12

REGISTERED PROFESSIONAL ENGINEER — JORGE I. ESTRADA — No. C51473 — Exp. 06/30/12 — CIVIL — STATE OF CALIFORNIA

The State of California or its officers or agents shall not be responsible for the accuracy or completeness of electronic copies of this plan sheet.

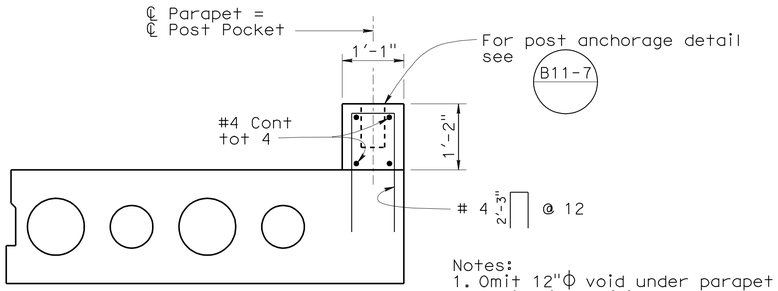

Notes:
1. Omit 12"Φ void under parapet
2. Chain link railing not shown

SECTION D-D

1' = ¾"

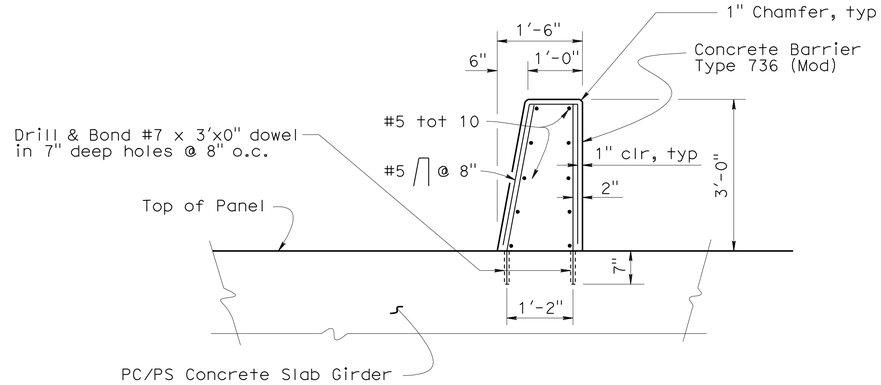

SECTION C-C

1' = ¾"

Note:

1. Concrete barrier to be placed after tie rods in the panels have been tensioned

LEGEND:

- Existing Structure
- New Construction
- (⊗) Panel Name
- ✳ Survey point - Chiseled "X" placed on top of existing channel wall, 15'-0" ± Rt 165+25.00

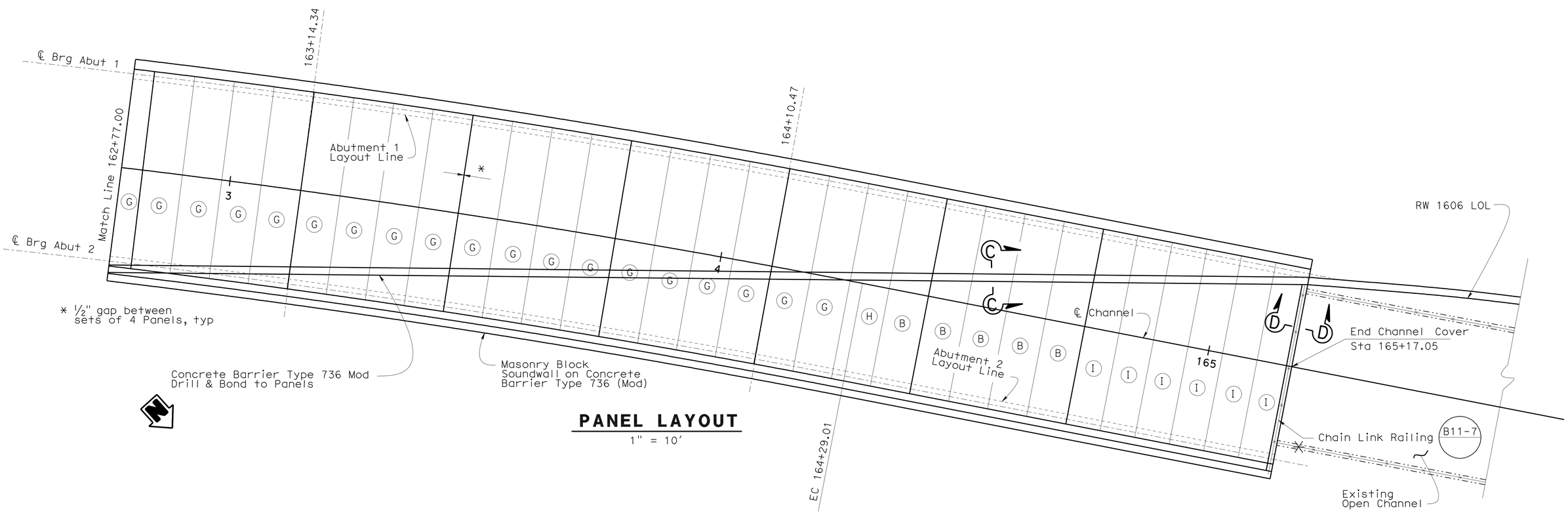

PANEL LAYOUT

1" = 10'

DESIGN	BY J. ESTRADA	CHECKED D.R. MURRAY	
DETAILS	BY SURAJ DUTTA	CHECKED J.ESTRADA	
QUANTITIES	BY DAVID R MURRAY	CHECKED PREM RIMAL	

STATE OF CALIFORNIA
DEPARTMENT OF TRANSPORTATION

DIVISION OF ENGINEERING SERVICES
STRUCTURE DESIGN
DESIGN BRANCH 18

BRIDGE NO. 53-3078
POST MILE 30.07

BURBANK WESTERN CHANNEL
CHANNEL COVER
PANEL LAYOUT NO. 6

STRUCTURES DESIGN DETAIL SHEET (ENGLISH) (REV. 09-01-10)

ORIGINAL SCALE IN INCHES FOR REDUCED PLANS 0 1 2 3

UNIT: 3603
PROJECT NUMBER & PHASE: 0700021119-1
CONTRACT NO.: 07-1218w1

DISREGARD PRINTS BEARING EARLIER REVISION DATES

REVISION DATES: 03/18/11 12/10/11 07/12/06

SHEET 22 OF 40

FILE => 53-3078-h-pl_layout06.dgn

USERNAME => s114640 DATE PLOTTED => 22-MAY-2012 TIME PLOTTED => 08:09

DIST	COUNTY	ROUTE	POST MILES TOTAL PROJECT	SHEET No.	TOTAL SHEETS
07	LA	5	29.4/31.6	999	1931

JEstrada. 01/31/12
REGISTERED CIVIL ENGINEER DATE

5-21-12
PLANS APPROVAL DATE

REGISTERED PROFESSIONAL ENGINEER
JORGE I. ESTRADA
No. C51473
Exp. 06/30/12
CIVIL
STATE OF CALIFORNIA

The State of California or its officers or agents shall not be responsible for the accuracy or completeness of electronic copies of this plan sheet.

LEGEND

	SYMBOL	NOMINAL SIZE	TEXTURE
(A)		8" × 8" × 16"	4-SCORE SPLIT FACE REVERSE SIDE PRECISION BLOCK
(B)		8" × 8" × 16"	PRECISION FACE REVERSE SIDE 4-SCORE SPLIT FACE

NOTES:
1. BOND (TYPE 1) STAKED BOND.
2. MORTAR COLOR TO MATCH BLOCK.
3. TOOLED JOINTS.
4. BLOCKS ON BRIDGE SHALL BE PRECISION BLOCK BOTH SIDES (MEDIUM WEIGHT).
5. PILASTER EFFECT (PRECISION SIDE TO FREEWAY) IS NOT TO BE USED ON END ADJACENT TO BRIDGE.
6. PLACE ELEVATION CHANGE AT EXPANSION JOINTS WHERE POSSIBLE

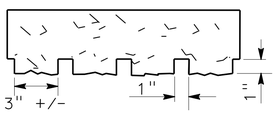

4 SCORE SPLIT FACE

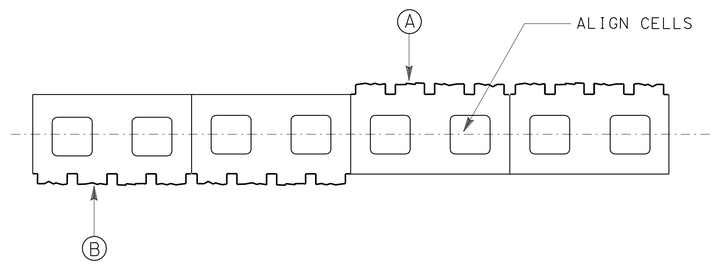

BLOCK ALIGNMENT

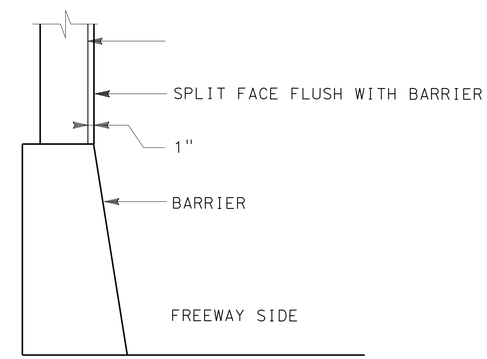

BARRIER SECTION

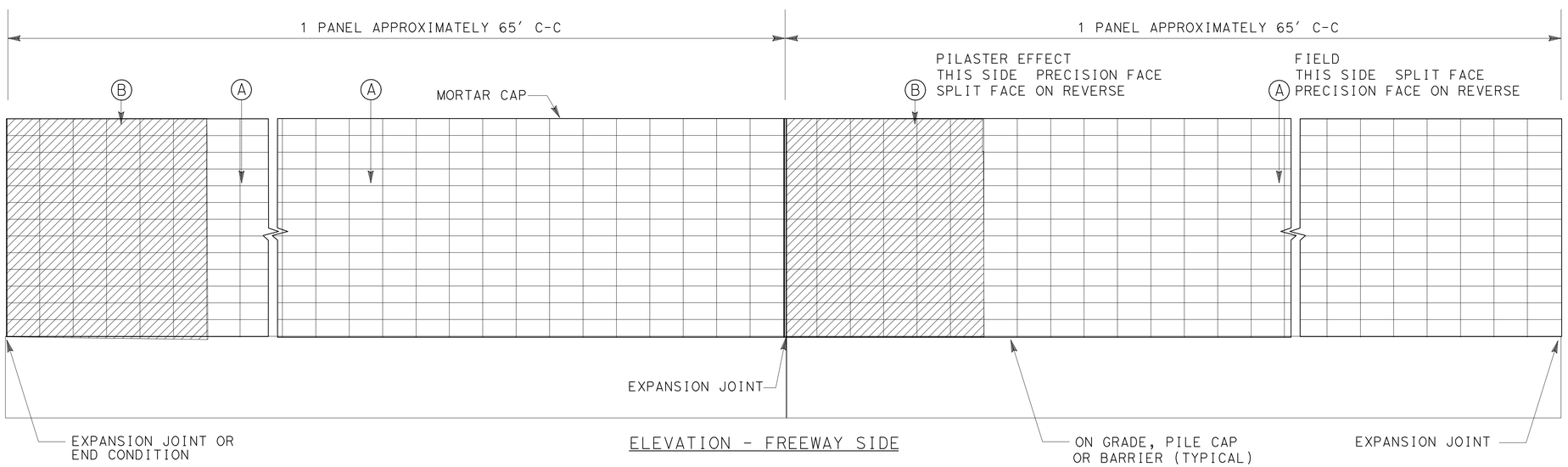

ELEVATION - FREEWAY SIDE

WALL PATTERN

DESIGN	BY J. ESTRADA	CHECKED D.R. MURRAY	
DETAILS	BY SURAJ DUTTA	CHECKED J.ESTRADA	
QUANTITIES	BY DAVID R MURRAY	CHECKED PREM RIMAL	

STATE OF CALIFORNIA
DEPARTMENT OF TRANSPORTATION

DIVISION OF ENGINEERING SERVICES
STRUCTURE DESIGN
DESIGN BRANCH 18

BRIDGE NO. 53-3078
POST MILE 30.07

BURBANK WESTERN CHANNEL
CHANNEL COVER
AESTHETIC SOUNDWALL DETAILS

STRUCTURES DESIGN DETAIL SHEET (ENGLISH) (REV. 09-01-10)

ORIGINAL SCALE IN INCHES FOR REDUCED PLANS 0 1 2 3

UNIT: 3603
PROJECT NUMBER & PHASE: 0700021119-1
CONTRACT NO.: 07-1218W1

DISREGARD PRINTS BEARING EARLIER REVISION DATES

REVISION DATES 03/18/11 12/10/11 07/12/05

SHEET 23 OF 40

FILE => 53-3078-l-ase_trment.dgn

USERNAME => s114640 DATE PLOTTED => 22-MAY-2012 TIME PLOTTED => 08:09

DIST	COUNTY	ROUTE	POST MILES TOTAL PROJECT	SHEET No.	TOTAL SHEETS
07	LA	5	29.4/31.6	1000	1931

REGISTERED CIVIL ENGINEER — DATE 01/31/12

PLANS APPROVAL DATE 5-21-12

REGISTERED PROFESSIONAL ENGINEER — JORGE I. ESTRADA — No. C51473 — Exp. 06/30/12 — CIVIL — STATE OF CALIFORNIA

The State of California or its officers or agents shall not be responsible for the accuracy or completeness of electronic copies of this plan sheet.

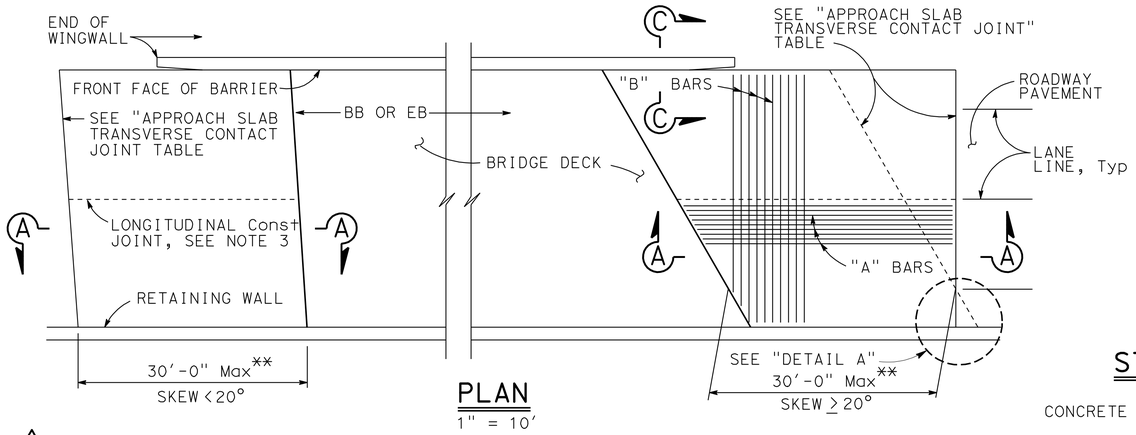

PLAN

1" = 10'

1 ** See Panel Layout sheets for actual dimension

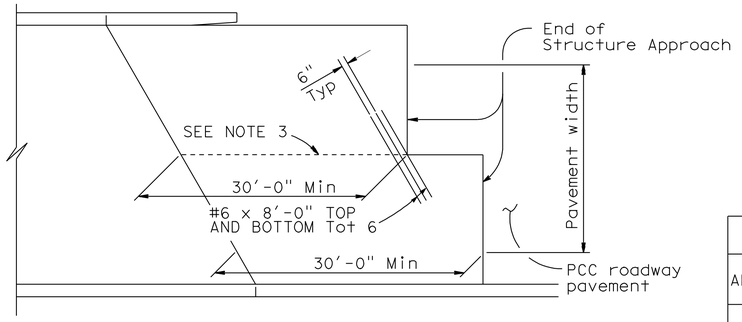

STRUCTURE APPROACH - END STAGGER DETAIL

No Scale

APPROACH SLAB TRANSVERSE CONTACT JOINT		
APPROACH SKEW	WITH AC ROADWAY PAVEMENT	WITH PCC ROADWAY PAVEMENT
< 20°	PARALLEL TO FACE OF PN	PARALLEL TO FACE OF PN
20° - 45°	PARALLEL TO FACE OF PN USE "DETAIL A"	STAGGER LINES 24' TO 36' APART
> 45°	PARALLEL TO FACE OF PN USE "DETAIL A"	STAGGER AT EACH LANE LINE

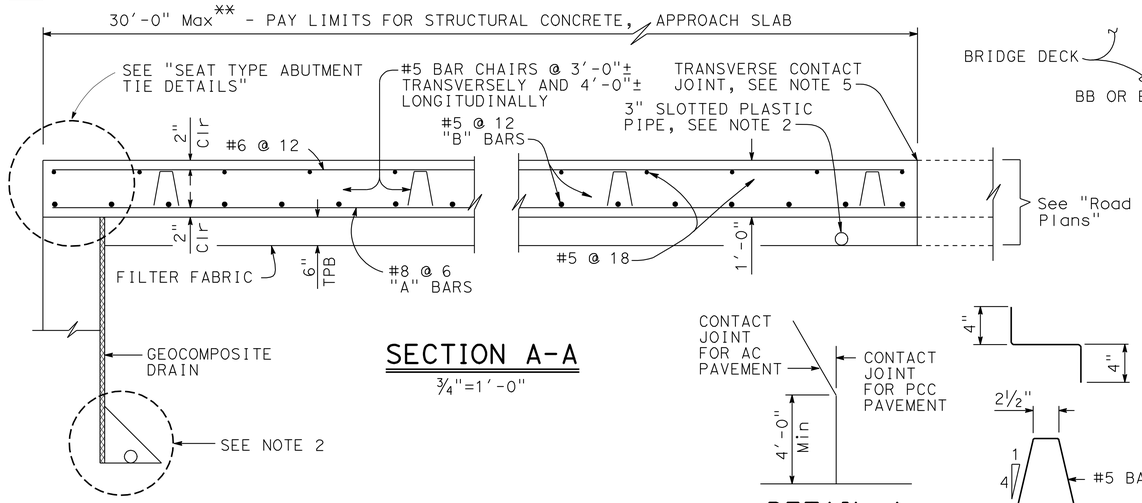

SECTION A-A

¾"=1'-0"

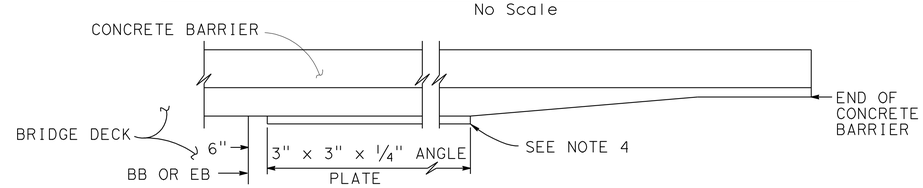

EDGE ANGLE DETAIL

½"=1'-0"

DETAIL A

No Scale

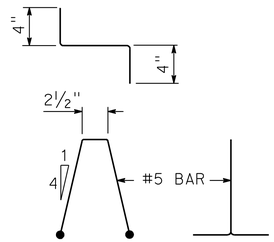

BAR CHAIR DETAIL

1½"=1'-0"

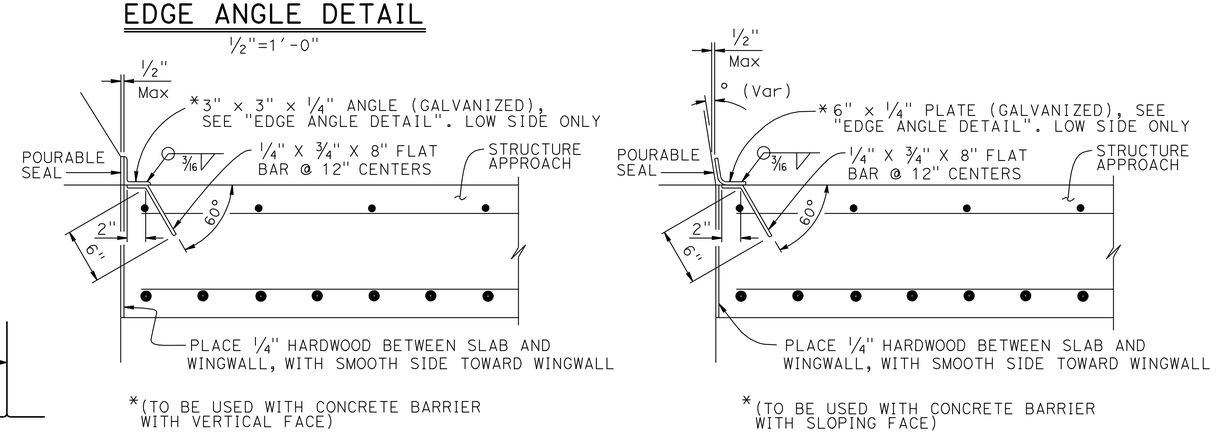

DETAIL B

1½" = 1'-0"

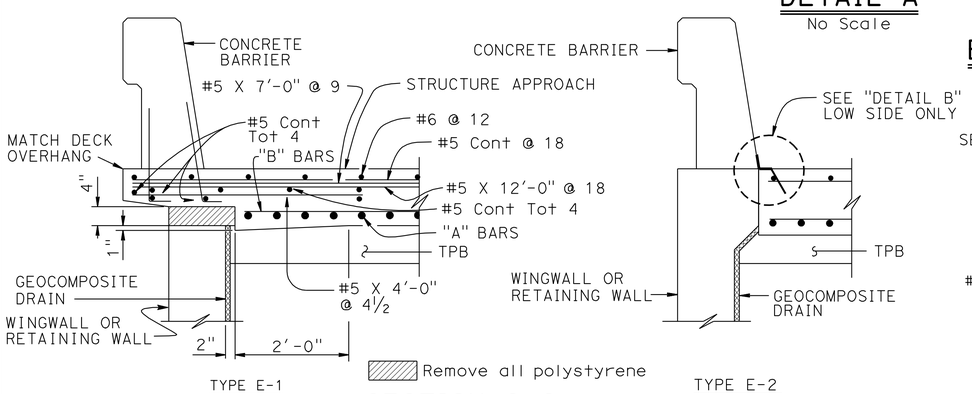

SECTION C-C

¾"=1'-0"

(Type E-1 to be used, unless otherwise shown on plans)

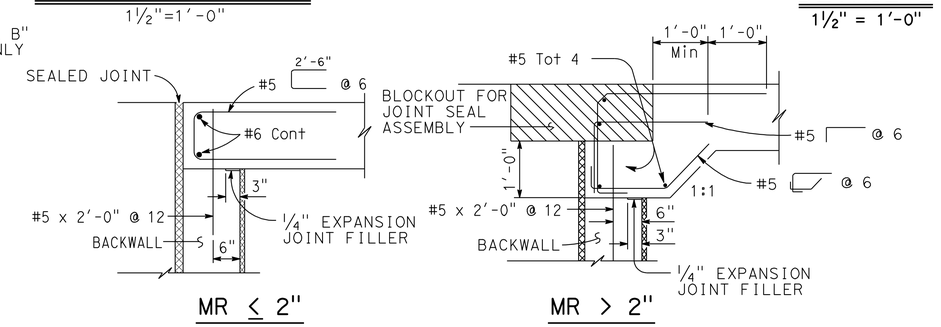

SEAT TYPE ABUTMENT TIE DETAILS (SEE NOTE 1)

¾"=1'-0"

NOTES:

1. For details not shown, see Structure Plans. For MR ≤ 2", adjust bar reinforcement to clear a sawcut for sealed joint, when required
2. For drainage details, see "STRUCTURE APPROACH DRAINAGE DETAILS" sheet
3. Longitudinal construction joints, when permitted by the Engineer, shall be located on lane lines
4. End angle or plate at beginning of barrier transition, end of wingwall or end of structure approach as applicable
5. For transverse contact joint with new PCC paving, refer to Standard Plan P10
6. At the Contractor's option, approach slab transverse reinforcement may be placed parallel to paving notch. Spacing of transverse reinforcement is measured along ℄ roadway

STANDARD DRAWING

FILE NO. xs3-120

APPROVAL DATE July 2011

1 Noted added

STATE OF CALIFORNIA DEPARTMENT OF TRANSPORTATION

DIVISION OF ENGINEERING SERVICES

BRIDGE NO. 53-3078

POST MILE 30.07

BURBANK WESTERN CHANNEL

CHANNEL COVER

STRUCTURE APPROACH TYPE N(30S)

DS OSD 2147A (ENGLISH STANDARD DRAWING "XS" BORDER REV. (02-02-11)

ORIGINAL SCALE IN INCHES FOR REDUCED PLANS 0 1 2 3

UNIT: 3603

PROJECT NUMBER & PHASE: 0700021119-1

CONTRACT NO.: 07-1218W1

DISREGARD PRINTS BEARING EARLIER REVISION DATES

REVISION DATES 03/18/11 12/10/11 07/12/08

SHEET 24 OF 40

FILE => 53-3078-j-astructapp_n30s.dgn

USERNAME => s121614 DATE PLOTTED => 19-JUN-2012 TIME PLOTTED => 10:56