DIST	COUNTY	ROUTE	POST MILES TOTAL PROJECT	SHEET No.	TOTAL SHEETS
07	LA	5	29.4/31.6	801	1931

Ulysses N. Smpardos 2-04-12
REGISTERED CIVIL ENGINEER DATE

5-21-12
PLANS APPROVAL DATE

REGISTERED PROFESSIONAL ENGINEER
Ulysses N. Smpardos
No. 61018
Exp. 12/31/12
CIVIL
STATE OF CALIFORNIA

The State of California or its officers or agents shall not be responsible for the accuracy or completeness of electronic copies of this plan sheet.

INDEX TO PLANS

SHEET NO.	TITLE
1.	GENERAL PLAN NO. 1
2.	GENERAL PLAN NO. 2
3.	INDEX TO PLANS
4.	FOUNDATION PLAN NO. 1
5.	FOUNDATION PLAN NO. 2
6.	STRUCTURE PLAN NO. 1
7.	STRUCTURE PLAN NO. 2
8.	STRUCTURE PLAN NO. 3
9.	STRUCTURE PLAN NO. 4
10.	STRUCTURE PLAN NO. 5
11.	MISCELLANEOUS DETAILS NO. 1
12.	MISCELLANEOUS DETAILS NO. 2
13.	MISCELLANEOUS DETAILS NO. 3
14.	MISCELLANEOUS DETAILS NO. 4
15.	MISCELLANEOUS DETAILS NO. 5
16.	ARCHITECTURAL DETAILS NO. 1
17.	ARCHITECTURAL DETAILS NO. 2
18.	ARCHITECTURAL DETAILS NO. 3
19.	CONCRETE BARRIER TYPE 60D (MOD) NO. 1
20.	CONCRETE BARRIER TYPE 60D (MOD) NO. 2
21.	DRAINAGE DETAILS NO. 1
22.	DRAINAGE DETAILS NO. 2
23.	DRAINAGE DETAILS NO. 3
24.	DRAINAGE DETAILS NO. 4
25.	LIGHTING SUPPORT DETAILS
26.	CONCRETE BARRIER SLAB DETAILS
27.	MECHANICALLY STABILIZED EMBANKMENT DETAILS NO. 1
28.	MECHANICALLY STABILIZED EMBANKMENT DETAILS NO. 2
29.	MECHANICALLY STABILIZED EMBANKMENT DETAILS NO. 3
30.	MECHANICALLY STABILIZED EMBANKMENT DETAILS NO. 6 *
31.	LOG OF TEST BORINGS 1 OF 4
32.	LOG OF TEST BORINGS 2 OF 4
33.	LOG OF TEST BORINGS 3 OF 4
34.	LOG OF TEST BORINGS 4 OF 4

STANDARD PLANS DATED MAY 2006

A10A	ACRONYMS AND ABBREVIATIONS (SHEET 1 OF 2)
A10B	ACRONYMS AND ABBREVIATIONS (SHEET 2 OF 2)
B0-3	BRIDGE DETAILS
D102	UNDERDRAINS
B3-1	RETAINING WALL TYPE 1 - H=4′ THROUGH 30′
B3-8	RETAINING WALL DETAILS NO. 1
B11-56	CONCRETE BARRIER TYPE 736
ES-6B	ELECTRICAL SYSTEMS (LIGHTING STANDARD TYPES 15 AND 21 BARRIER RAIL MOUNTED DETAILS)
ES-6H	ELECTRICAL SYSTEMS (LIGHTING STANDARD, TYPES 35 AND 36-20A, 10 DEGREE TYPE)
RSP A76A	CONCRETE BARRIER TYPE 60
RSP B11-47	CABLE RAILING
RSP ES-7B	ELECTRICAL SYSTEMS (SIGNAL AND LIGHTING STANDARD TYPE 1 STANDARD AND EQUIPMENT NUMBERING)

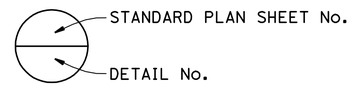

Note:

For General Notes, see "DESIGN DATA" on "CONCRETE BARRIER SLAB DETAILS" sheet and "GENERAL NOTES LOAD AND RESISTANCE FACTOR DESIGN" on "MECHANICALLY STABILIZED EMBANKMENT-DETAILS NO. 2" sheet.

* "MECHANICALLY STABILIZED EMBANKMENT DETAILS NO. 4" and "MECHANICALLY STABILIZED EMBANKMENT NO. 5" sheets are not part of "INDEX TO PLANS"

STEEL SOIL REINFORCEMENT FOR LOAD CASE 1

SOIL REINFORCEMENT DESIGNATION LETTER	Ⓐ	Ⓑ	Ⓒ	Ⓓ	Ⓔ	Ⓕ	Ⓖ	Ⓗ
WALL HEIGHT	6′-8"	9′-2"	11′-8"	14′-2"	16′-8"	19′-2"	21′-8"	24′-2"
WALL BASE WIDTH	9′-6"	9′-6"	9′-6"	11′-6"	13′-6"	15′-6"	17′-6"	18′-6"
	TOP 4-W15xW15 @ 6	TOP 4-W15xW15 @ 6	TOP 4-W15xW15 @ 6	TOP 4-W15xW15 @ 6	TOP 4-W15xW15 @ 6	TOP 4-W15xW15 @ 6	TOP 4-W15xW15 @ 6	TOP 4-W15xW15 @ 6
	BOT 4-W15xW15 @ 6	1 OF 4-W15xW15 @ 6	2 OF 4-W15xW15 @ 6	3 OF 4-W15xW15 @ 6	3 OF 4-W15xW15 @ 6	4 OF 4-W15xW15 @ 6	4 OF 4-W15xW15 @ 18	4 OF 4-W15xW15 @ 18
	———	BOT 4-W15xW15 @ 6	BOT 4-W20xW15 @ 9	BOT 4-W20xW15 @ 9	1 OF 4-W20xW15 @ 9	1 OF 4-W20xW15 @ 9	2 OF 4-W20xW15 @ 24	3 OF 4-W20xW15 @ 24
	———	———	———	———	BOT 4-W20xW15 @ 9	BOT 4-W20xW15 @ 9	BOT 4-W20xW15 @ 24	BOT 4-W20xW15 @ 24

SOIL REINFORCEMENT DESIGNATION LETTER	Ⓘ	Ⓙ	Ⓚ	Ⓛ	Ⓜ	Ⓝ	Ⓞ	Ⓟ
WALL HEIGHT	26′-8"	29′-2"	31′-8"	34′-2"	36′-8"	39′-2"	41′-8"	44′-2"
WALL BASE WIDTH	20′-6"	21′-6"	23′-6"	25′-6"	26′-6"	29′-6"	30′-6"	33′-6"
	TOP 4-W15xW15 @ 6	TOP 4-W15xW15 @ 6	TOP 4-W15xW15 @ 6	TOP 4-W15xW15 @ 18	TOP 4-W15xW15 @ 18	TOP 4-W15xW15 @ 18	TOP 4-W15xW15 @ 18	TOP 4-W15xW15 @ 18
	4 OF 4-W15xW15 @ 18	4 OF 4-W15xW15 @ 18	4 OF 4-W15xW15 @ 18	4 OF 4-W15xW15 @ 18	4 OF 4-W15xW15 @ 18	4 OF 4-W15xW15 @ 18	4 OF 4-W15xW15 @ 18	4 OF 4-W15xW15 @ 18
	3 OF 4-W20xW15 @ 24	3 OF 4-W20xW15 @ 24	4 OF 4-W20xW15 @ 24	4 OF 4-W20xW15 @ 24	4 OF 4-W20xW15 @ 24	5 OF 4-W20xW15 @ 24	5 OF 4-W20xW15 @ 24	5 OF 4-W20xW15 @ 24
	1 OF 6-W25xW15 @ 24	2 OF 6-W25xW15 @ 24	2 OF 6-W25xW15 @ 30	3 OF 6-W25xW15 @ 30	4 OF 6-W25xW15 @ 30	4 OF 6-W25xW15 @ 30	5 OF 6-W25xW15 @ 30	6 OF 6-W25xW15 @ 30
	BOT 6-W25xW15 @ 24	BOT 6-W25xW15 @ 24	BOT 6-W25xW15 @ 30	BOT 6-W25xW15 @ 30	BOT 6-W25xW15 @ 30	BOT 6-W25xW15 @ 30	BOT 6-W25xW15 @ 30	BOT 6-W25xW15 @ 30

DIST	COUNTY	ROUTE	POST MILES TOTAL PROJECT	SHEET No.	TOTAL SHEETS
07	LA	5	29.4/31.6	802	1931

Ulysses N. Smpardos 2-04-12
REGISTERED CIVIL ENGINEER DATE

5-21-12
PLANS APPROVAL DATE

REGISTERED PROFESSIONAL ENGINEER Ulysses N. Smpardos No. 61018 Exp. 12/31/12 CIVIL STATE OF CALIFORNIA

The State of California or its officers or agents shall not be responsible for the accuracy or completeness of electronic copies of this plan sheet.

LEGEND:

xxx.xx' INDICATES BOTTOM OF FOOTING ELEVATION

CURVE DATA

No.	R	Δ	T	L
A	2691.76	14°29'33"	342.26	680.87
B	3297.30	25°39'04"	750.68	1476.19
C	2590.55	11°56'2"	270.77	539.57

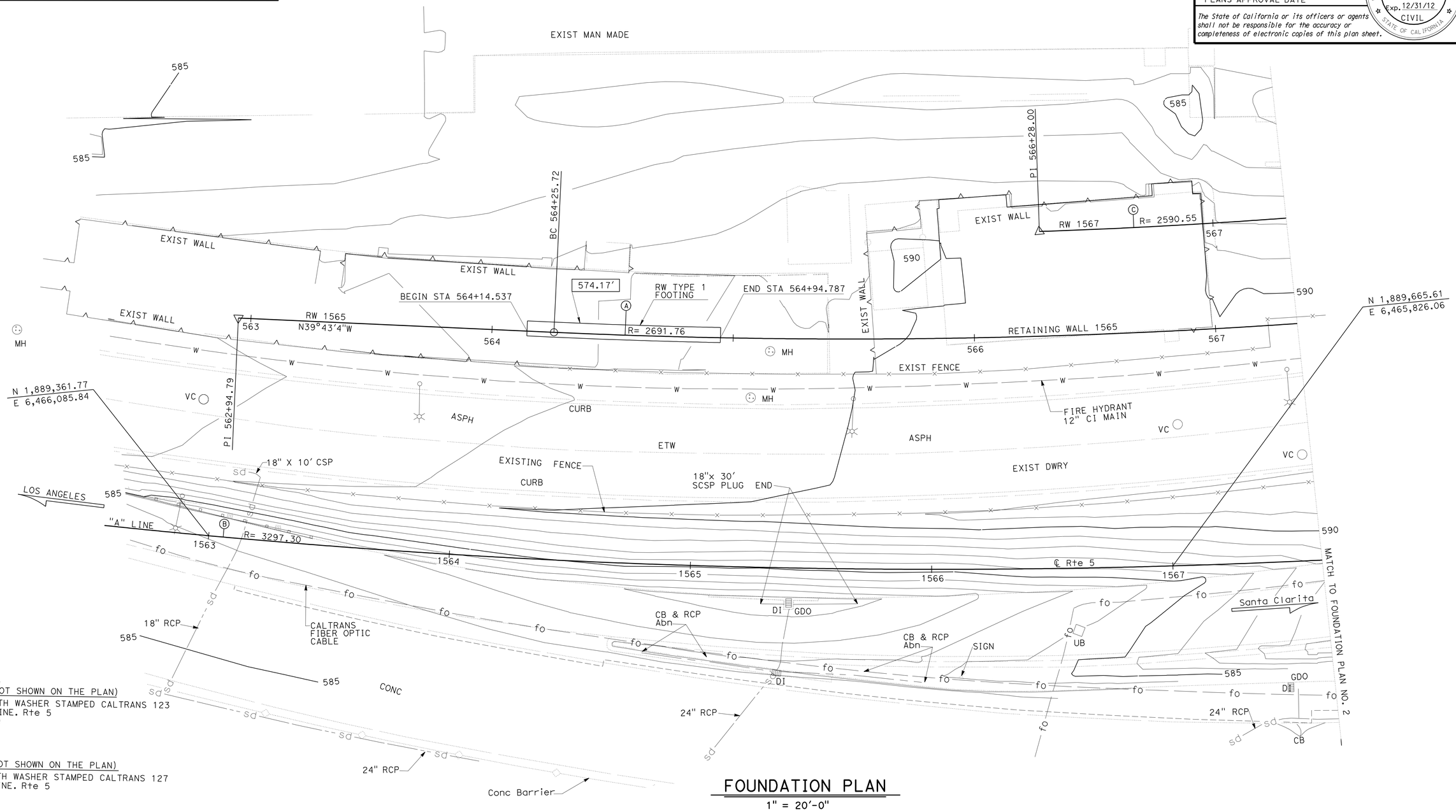

SURVEY CONTROL

123 (STAMPED NOT SHOWN ON THE PLAN)
Fnd PK NAIL WITH WASHER STAMPED CALTRANS 123
88.00 Lt "A1" LINE. Rte 5
Sta. 1581+75.69
N 1,890,470.97
E 6,464,594.96
EL.=598.93

127 (STAMPED NOT SHOWN ON THE PLAN)
Fnd PK NAIL WITH WASHER STAMPED CALTRANS 127
67.36 Lt "A1" LINE. Rte 5
Sta. 1585+96.99
N 1,890,753.54
E 6,464,269.04
EL.=604.23

FOUNDATION PLAN

1" = 20'-0"

PRELIMINARY INVESTIGATION SECTION

SCALE	VERT.DATUM NGVD88	PHOTOGRAMMETRY AS OF: X			
1"=20'	HORZ.DATUM NAD83	SURVEYED	BY District	CHECKED	BY Don Ivy 10/21/11
ALIGNMENT TIES Dist. Traverse Sheet		DRAFTED	BY J. Zhou 10/21/11	CHECKED	BY L. LEW 10/21/11

	BY	CHECKED
DESIGN	Gabriel Galo	Shervin Pahlavan
DETAILS	Stan Cholda	Shervin Pahlavan
QUANTITIES	Gabriel Galo	F.Feng/J. Jauregui

STATE OF CALIFORNIA
DEPARTMENT OF TRANSPORTATION

DIVISION OF ENGINEERING SERVICES
STRUCTURE DESIGN
DESIGN BRANCH 15

BRIDGE NO. 53E0161
POST MILE 29.8

RETAINING WALL NO. 1565
FOUNDATION PLAN NO. 1

STRUCTURES FOUNDATION PLAN SHEET (ENGLISH) (REV. 09-01-10)

ORIGINAL SCALE IN INCHES FOR REDUCED PLANS 0 1 2 3

UNIT: 3604
PROJECT NUMBER & PHASE: 0700021119
CONTRACT NO.: 07-1218W1

DISREGARD PRINTS BEARING EARLIER REVISION DATES

REVISION DATES 12-06-11 01-18-12 03-29-12

SHEET 4 OF 34

FILE => 53e0161-e-fpl01.dgn

DIST	COUNTY	ROUTE	POST MILES TOTAL PROJECT	SHEET No.	TOTAL SHEETS
07	LA	5	29.4/31.6	803	1931

Ulysses N. Smpardos 2-04-12
REGISTERED CIVIL ENGINEER DATE

5-21-12
PLANS APPROVAL DATE

REGISTERED PROFESSIONAL ENGINEER
Ulysses N. Smpardos
No. 61018
Exp. 12/31/12
CIVIL
STATE OF CALIFORNIA

The State of California or its officers or agents shall not be responsible for the accuracy or completeness of electronic copies of this plan sheet.

CURVE DATA

No.	R	Δ	T	L
Ⓐ	2691.76	14°29′33″	342.26	680.87
Ⓑ	3297.30	25°39′04″	750.68	1476.19
Ⓒ	2590.55	11°56′2″	270.77	539.57

LEGEND:
○ - INDICATES CIDH PILES

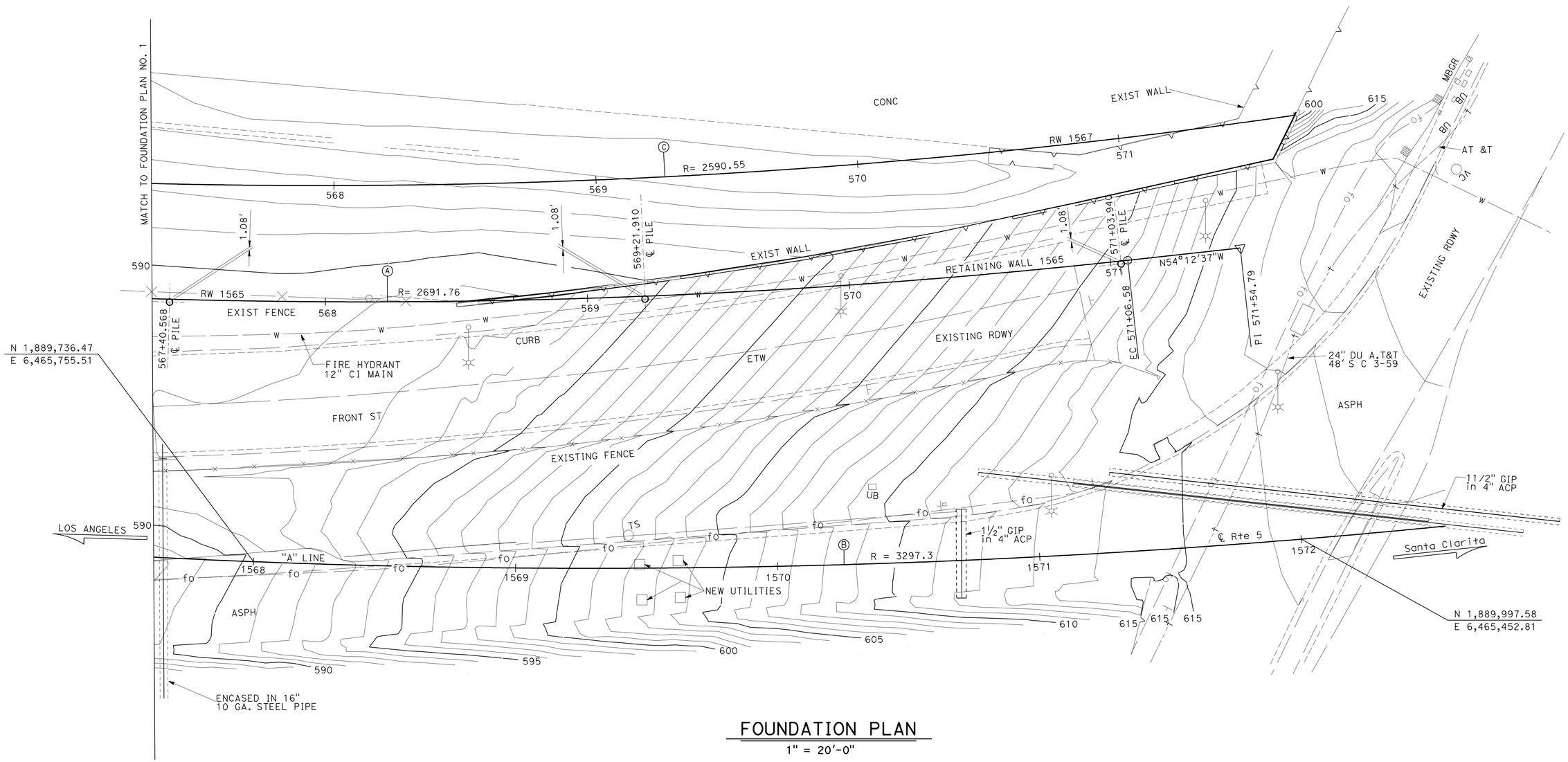

FOUNDATION PLAN

1" = 20′-0"

PRELIMINARY INVESTIGATION SECTION					
SCALE 1"=20′	VERT.DATUM NAVD 88	PHOTOGRAMMETRY AS OF: X			
	HORZ.DATUM NGVD83	SURVEYED	BY District	CHECKED	BY Don Ivy 10/21/11
ALIGNMENT TIES Dist. Traverse Sheet		DRAFTED	BY J. Zhou 10/21/11	CHECKED	BY L. Lew 10/21/11

DESIGN	BY Gabriel Galo	CHECKED Shervin Pahlavan
DETAILS	BY Stan Cholda	CHECKED Shervin Pahlavan
QUANTITIES	BY Gabriel Galo	CHECKED F.Feng/J. Jauregui

STATE OF CALIFORNIA
DEPARTMENT OF TRANSPORTATION

DIVISION OF ENGINEERING SERVICES
STRUCTURE DESIGN
DESIGN BRANCH

BRIDGE NO. 53E0161
POST MILE 29.8

RETAINING WALL NO. 1565
FOUNDATION PLAN NO. 2

STRUCTURES FOUNDATION PLAN SHEET (ENGLISH) (REV. 09-01-10)

ORIGINAL SCALE IN INCHES FOR REDUCED PLANS 0 1 2 3

UNIT:
PROJECT NUMBER & PHASE:

DISREGARD PRINTS BEARING EARLIER REVISION DATES

REVISION DATES: 12-08-11 01-13-12 03-02-12 04-07-12

SHEET 5 OF 34

FILE => 53e0161-e-fpi02.dgn

DIST	COUNTY	ROUTE	POST MILES TOTAL PROJECT	SHEET No.	TOTAL SHEETS
07	LA	5	29.4/31.6	804	1931

Ulysses N. Smpardos 2-04-12
REGISTERED CIVIL ENGINEER DATE

5-21-12
PLANS APPROVAL DATE

REGISTERED PROFESSIONAL ENGINEER
Ulysses N. Smpardos
No. 61018
Exp. 12/31/12
CIVIL
STATE OF CALIFORNIA

The State of California or its officers or agents shall not be responsible for the accuracy or completeness of electronic copies of this plan sheet.

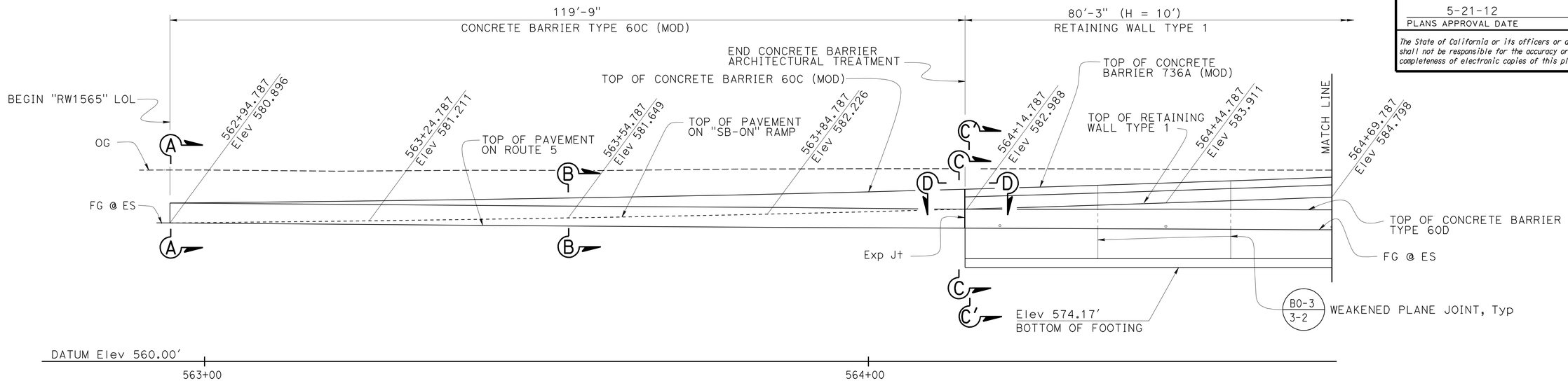

ELEVATION (DEVELOPED)

1/8" = 1'-0"

Note:

1. For "SECTION A-A", "SECTION B-B", "SECTION C-C " and "SECTION C'-C'", see "MISCELLANEOUS DETAILS NO. 3" sheet.
2. For "SECTION D-D", see "MISCELLANEOUS DETAILS NO. 4" sheet.
3. For Architectural Treatment on Concrete Barrier Type 736A (Mod) and Type 736 (Mod) see "ARCHITECTURAL DETAILS NO. 3" sheet.

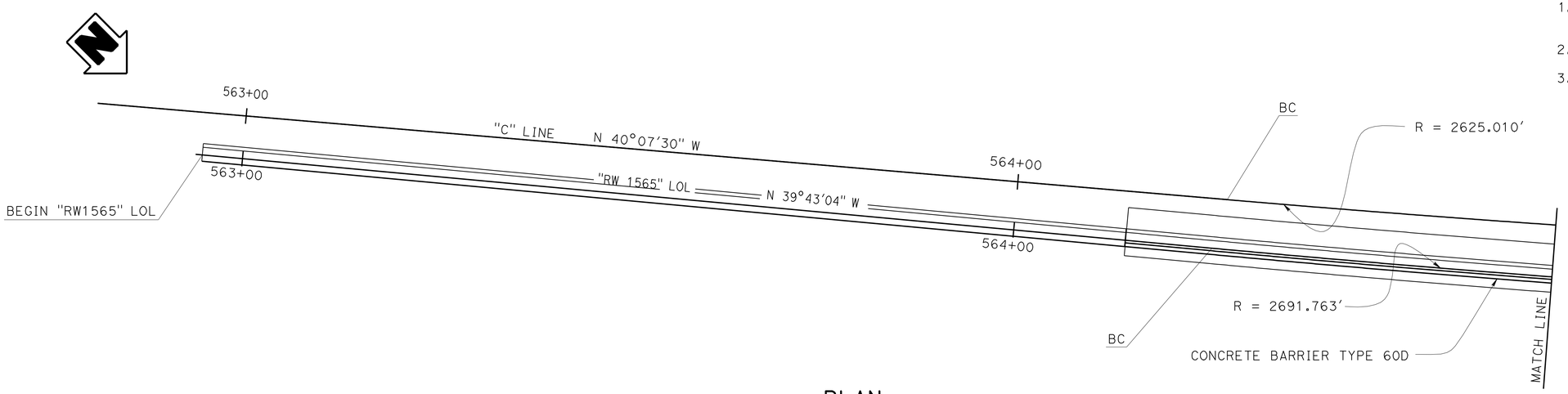

PLAN

1/8" = 1'-0"

DESIGN	BY Gabriel Galo	CHECKED Shervin Pahlavan	
DETAILS	BY Stan Cholda	CHECKED Shervin Pahlavan	
QUANTITIES	BY Gabriel Galo	CHECKED F.Feng/J. Jauregui	

STATE OF CALIFORNIA
DEPARTMENT OF TRANSPORTATION

DIVISION OF ENGINEERING SERVICES
STRUCTURE DESIGN
DESIGN BRANCH 15

BRIDGE NO. 53E0161
POST MILE 29X8

RETAINING WALL NO. 1565
STRUCTURE PLAN NO. 1

STRUCTURES DESIGN DETAIL SHEET (ENGLISH) (REV. 09-01-10)

ORIGINAL SCALE IN INCHES FOR REDUCED PLANS 0 1 2 3

UNIT: 3604
PROJECT NUMBER & PHASE: 0700021119
CONTRACT NO.: 07-1218W1

DISREGARD PRINTS BEARING EARLIER REVISION DATES

REVISION DATES: 11-22-11 06-06-12 03-19-12 03-27-12

SHEET 6 OF 34

FILE => 53e0161-g-sp_01.dgn

USERNAME => s121614 DATE PLOTTED => 14-JUN-2012 TIME PLOTTED => 05:47

DIST	COUNTY	ROUTE	POST MILES TOTAL PROJECT	SHEET No.	TOTAL SHEETS
07	LA	5	29.4/31.6	805	1931

Ulysses N. Smpardos 2-04-12
REGISTERED CIVIL ENGINEER DATE

5-21-12
PLANS APPROVAL DATE

REGISTERED PROFESSIONAL ENGINEER Ulysses N. Smpardos No. 61018 Exp. 12/31/12 CIVIL STATE OF CALIFORNIA

The State of California or its officers or agents shall not be responsible for the accuracy or completeness of electronic copies of this plan sheet.

Note:

1. For "SECTION E-E" see "MISCELLANEOUS DETAILS NO. 4" sheet.
2. For Architectural Treatment on Concrete Barrier and MSE Wall see "ARCHITECTURAL DETAILS NO. 1" through "ARCHITECTURAL DETAILS NO. 3" sheets.
3. For Ramp Meter details, see "MISCELLANEOUS DETAILS NO. 5" sheet.

Legend:

Ⓒ to Ⓕ - Indicates Soil Reinforcement designation letter. For details, see "STEEL REINFORCEMENT FOR LOAD CASE 1" Table on "INDEX TO PLANS" sheet.

D.H. - Denote Design Height.

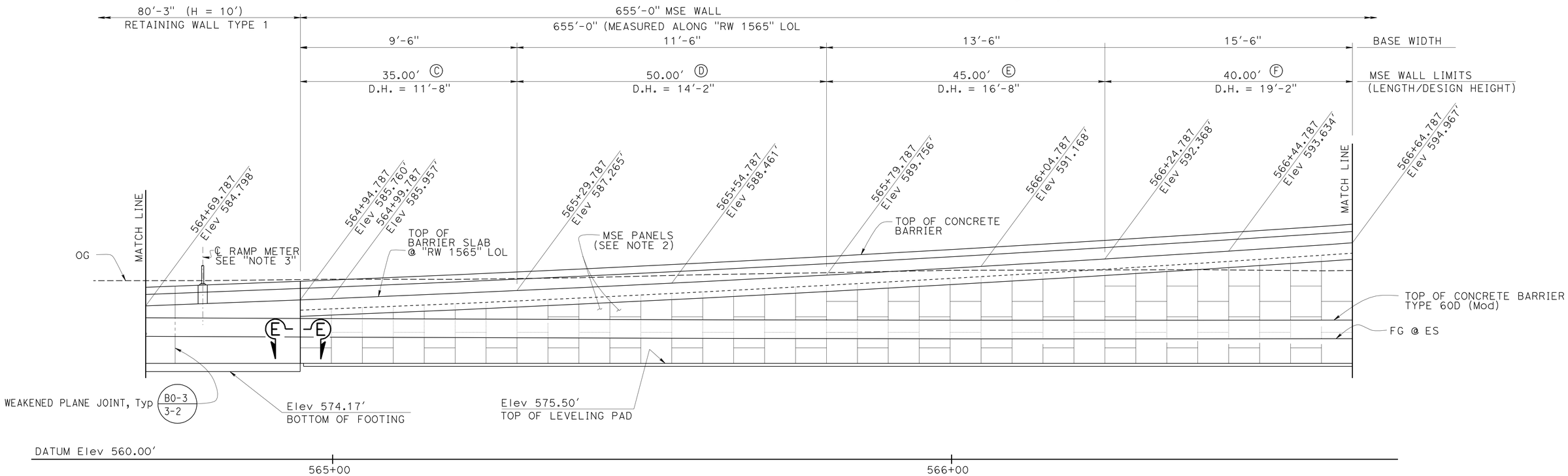

ELEVATION (DEVELOPED)

1/8" = 1'-0"

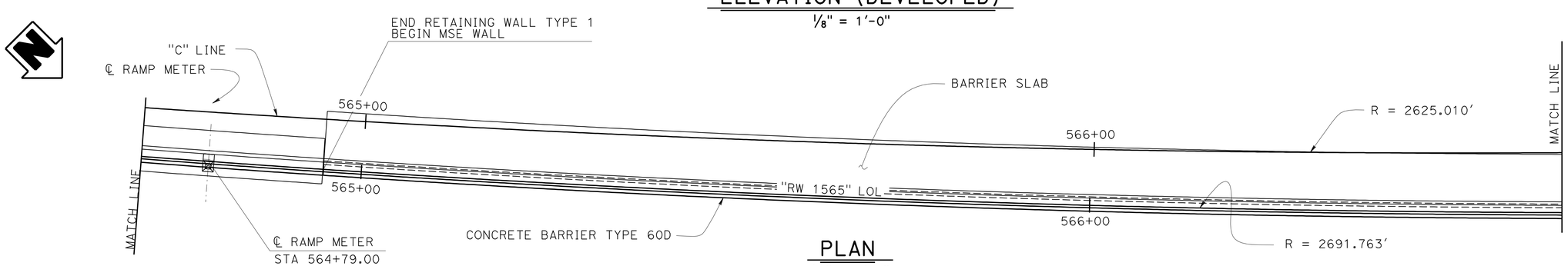

PLAN

1/8" = 1'-0"

DESIGN	BY Gabriel Galo	CHECKED Shervin Pahlavan	
DETAILS	BY Stan Cholda	CHECKED Shervin Pahlavan	
QUANTITIES	BY Gabriel Galo	CHECKED F.Feng/J. Jauregui	

STATE OF CALIFORNIA
DEPARTMENT OF TRANSPORTATION

DIVISION OF ENGINEERING SERVICES
STRUCTURE DESIGN
DESIGN BRANCH 15

BRIDGE NO. 53E0161
POST MILE 29.8

RETAINING WALL NO. 1565
STRUCTURE PLAN NO. 2

STRUCTURES DESIGN DETAIL SHEET (ENGLISH) (REV. 09-01-10)

ORIGINAL SCALE IN INCHES FOR REDUCED PLANS 0 1 2 3

UNIT: 3604
PROJECT NUMBER & PHASE: 0700021119
CONTRACT NO.: 07-1218W1

DISREGARD PRINTS BEARING EARLIER REVISION DATES

REVISION DATES: 11-23-11 03-27-12 03-28-12 03-29-12

SHEET 7 OF 34

FILE => 53e0161-g-sp_02.dgn

USERNAME => s121614 DATE PLOTTED => 14-JUN-2012 TIME PLOTTED => 09:47

DIST	COUNTY	ROUTE	POST MILES TOTAL PROJECT	SHEET No.	TOTAL SHEETS
07	LA	5	29.4/31.6	806	1931

REGISTERED CIVIL ENGINEER — DATE 2-04-12

PLANS APPROVAL DATE 5-21-12

REGISTERED PROFESSIONAL ENGINEER — Ulysses N. Smpardos — No. 61018 — Exp. 12/31/12 — CIVIL — STATE OF CALIFORNIA

The State of California or its officers or agents shall not be responsible for the accuracy or completeness of electronic copies of this plan sheet.

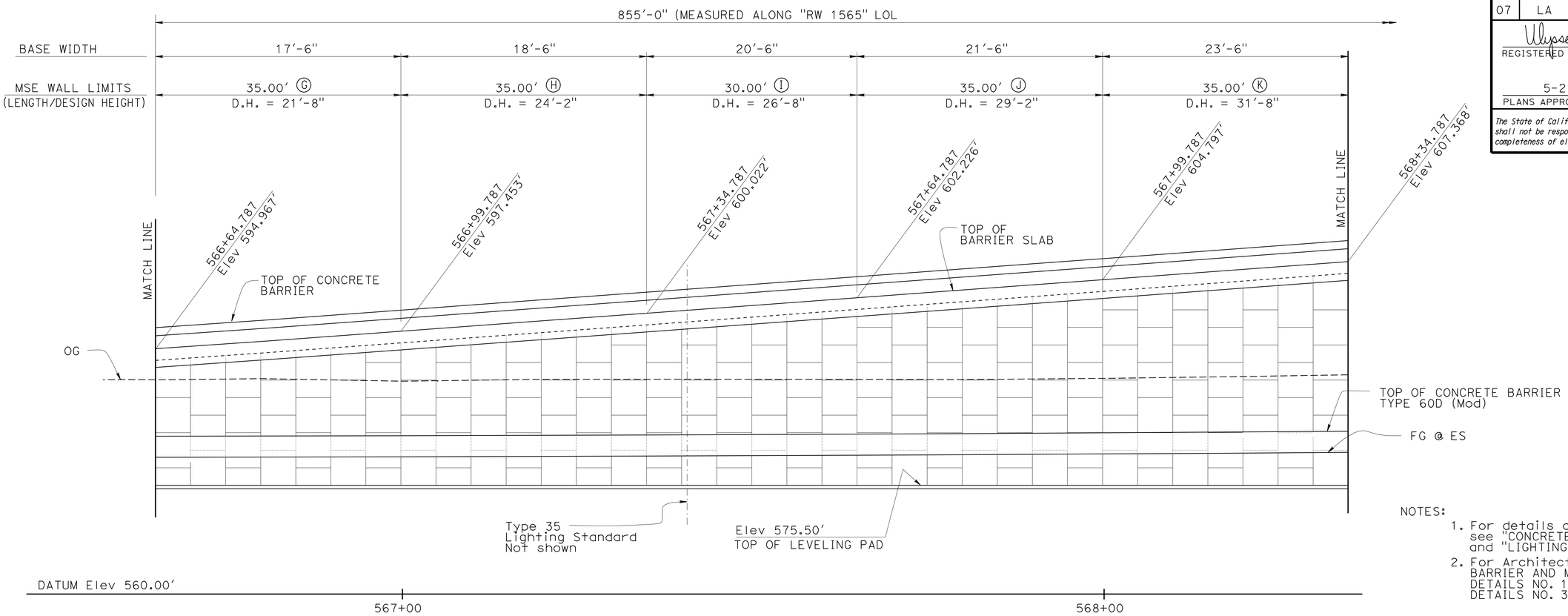

ELEVATION (DEVELOPED)

1/8" = 1'-0"

NOTES:

1. For details of Type 35 Lighting Standards, see "CONCRETE BARRIER TYPE 60D (Mod) NO. 1" and "LIGHTING SUPPORT DETAILS" sheet.
2. For Architectural Treatment on CONCRETE BARRIER AND MSE WALL, see "ARCHITECTURAL DETAILS NO. 1" through "ARCHITECTURAL DETAILS NO. 3" sheets.

Legend:

G to K - Indicates Soil Reinforcement designation letter. For details, see "STEEL REINFORCEMENT FOR LOAD CASE 1" Table on "INDEX TO PLANS" sheet.

D.H. - Denote Design Height.

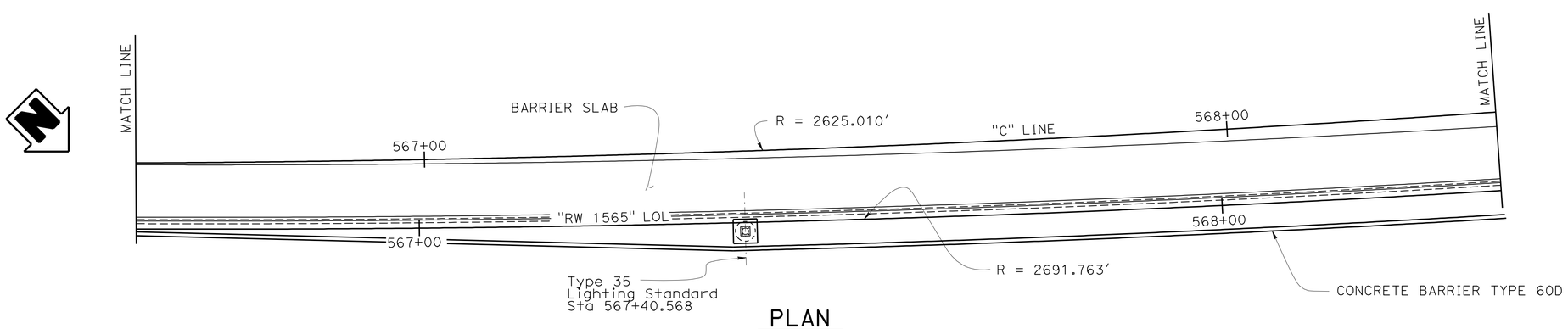

PLAN

1/8" = 1'-0"

	BY	CHECKED
DESIGN	Gabriel Galo	Shervin Pahlavan
DETAILS	Stan Cholda	Shervin Pahlavan
QUANTITIES	Gabriel Galo	F.Feng/J. Jauregui

STATE OF CALIFORNIA — DEPARTMENT OF TRANSPORTATION

DIVISION OF ENGINEERING SERVICES — STRUCTURE DESIGN — DESIGN BRANCH 15

BRIDGE NO. 53E0161 — POST MILE 29.8

RETAINING WALL NO. 1565
STRUCTURE PLAN NO. 3

STRUCTURES DESIGN DETAIL SHEET (ENGLISH) (REV. 09-01-10)

ORIGINAL SCALE IN INCHES FOR REDUCED PLANS 0 1 2 3

UNIT: 3604
PROJECT NUMBER & PHASE: 0700021119
CONTRACT NO.: 07-1218W1

DISREGARD PRINTS BEARING EARLIER REVISION DATES

REVISION DATES: 11-24-11 03-27-12 05-25-12 06-06-12

SHEET 8 OF 34

FILE => 53e0161-g-sp_03.dgn

USERNAME => s132614 DATE PLOTTED => 14-JUN-2012 TIME PLOTTED => 09:47

DIST	COUNTY	ROUTE	POST MILES TOTAL PROJECT	SHEET No.	TOTAL SHEETS
07	LA	5	29.4/31.6	807	1931

Ulysses N. Smpardos 2-04-12
REGISTERED CIVIL ENGINEER DATE

5-21-12
PLANS APPROVAL DATE

REGISTERED PROFESSIONAL ENGINEER Ulysses N. Smpardos No. 61018 Exp. 12/31/12 CIVIL STATE OF CALIFORNIA

The State of California or its officers or agents shall not be responsible for the accuracy or completeness of electronic copies of this plan sheet.

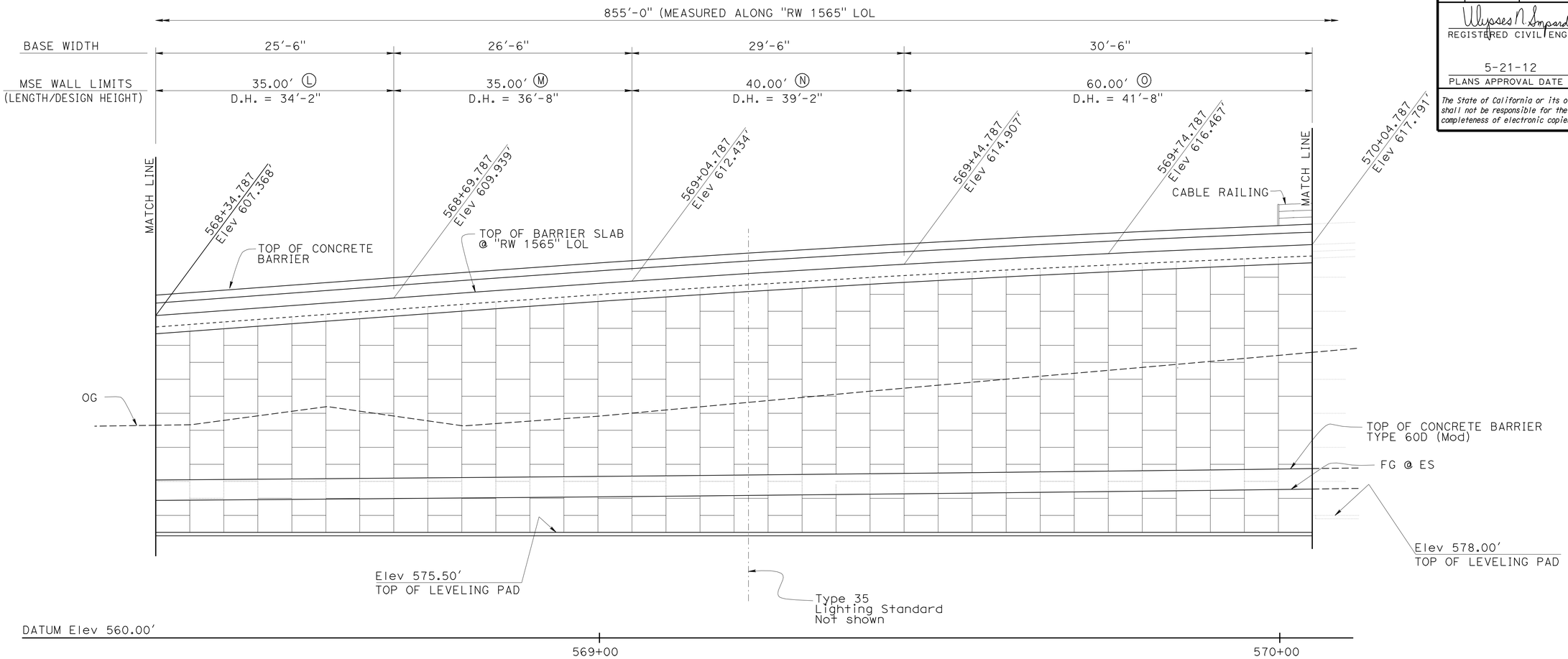

ELEVATION (DEVELOPED)

1/8" = 1'-0"

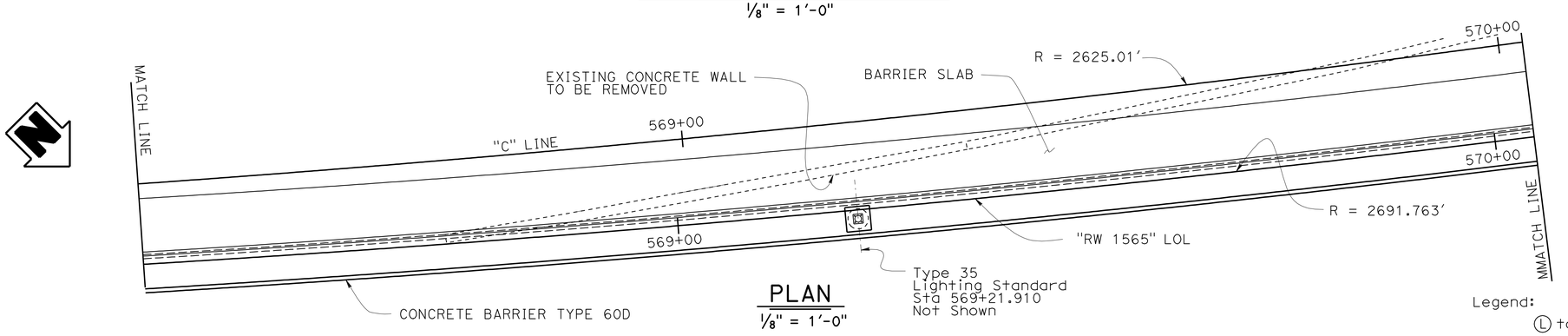

PLAN

1/8" = 1'-0"

NOTES:

1. For details of Type 35 Lighting Standards, see "CONCRETE BARRIER TYPE 60D (Mod) NO. 1" and "LIGHTING SUPPORT DETAILS" sheet.
2. For Architectural Treatment on CONCRETE BARRIER AND MSE WALL, see "ARCHITECTURAL DETAILS NO. 1" through "ARCHITECTURAL DETAILS NO. 3" sheets.

Legend:

Ⓛ to Ⓞ - Indicates Soil Reinforcement designation letter. For details, see "STEEL REINFORCEMENT FOR LOAD CASE 1" Table on "INDEX TO PLANS" sheet.

D.H. - Denote Design Height.

	BY	CHECKED
DESIGN	Gabriel Galo	Shervin Pahlavan
DETAILS	Stan Cholda	Shervin Pahlavan
QUANTITIES	Gabriel Galo	F.Feng/J. Jauregui

STATE OF CALIFORNIA
DEPARTMENT OF TRANSPORTATION

DIVISION OF ENGINEERING SERVICES
STRUCTURE DESIGN
DESIGN BRANCH 15

BRIDGE NO. 53E0161
POST MILE 29.8

RETAINING WALL NO. 1565
STRUCTURE PLAN NO. 4

STRUCTURES DESIGN DETAIL SHEET (ENGLISH) (REV. 09-01-10)

ORIGINAL SCALE IN INCHES FOR REDUCED PLANS 0 1 2 3

UNIT: 3604
PROJECT NUMBER & PHASE: 0700021119
CONTRACT NO.: 07-1218W1

DISREGARD PRINTS BEARING EARLIER REVISION DATES

REVISION DATES: 11-25-11 06-06-12 03-28-12 05-25-12

SHEET 9 OF 34

FILE => 53e0161-g-sp_04.dgn

USERNAME => s121614 DATE PLOTTED => 14-JUN-2012 TIME PLOTTED => 05:47

DIST	COUNTY	ROUTE	POST MILES TOTAL PROJECT	SHEET No.	TOTAL SHEETS
07	LA	5	29.4/31.6	808	1931

REGISTERED CIVIL ENGINEER — DATE 2-04-12

5-21-12
PLANS APPROVAL DATE

REGISTERED PROFESSIONAL ENGINEER — Ulysses N. Smpardos — No. 61018 — Exp. 12/31/12 — CIVIL — STATE OF CALIFORNIA

The State of California or its officers or agents shall not be responsible for the accuracy or completeness of electronic copies of this plan sheet.

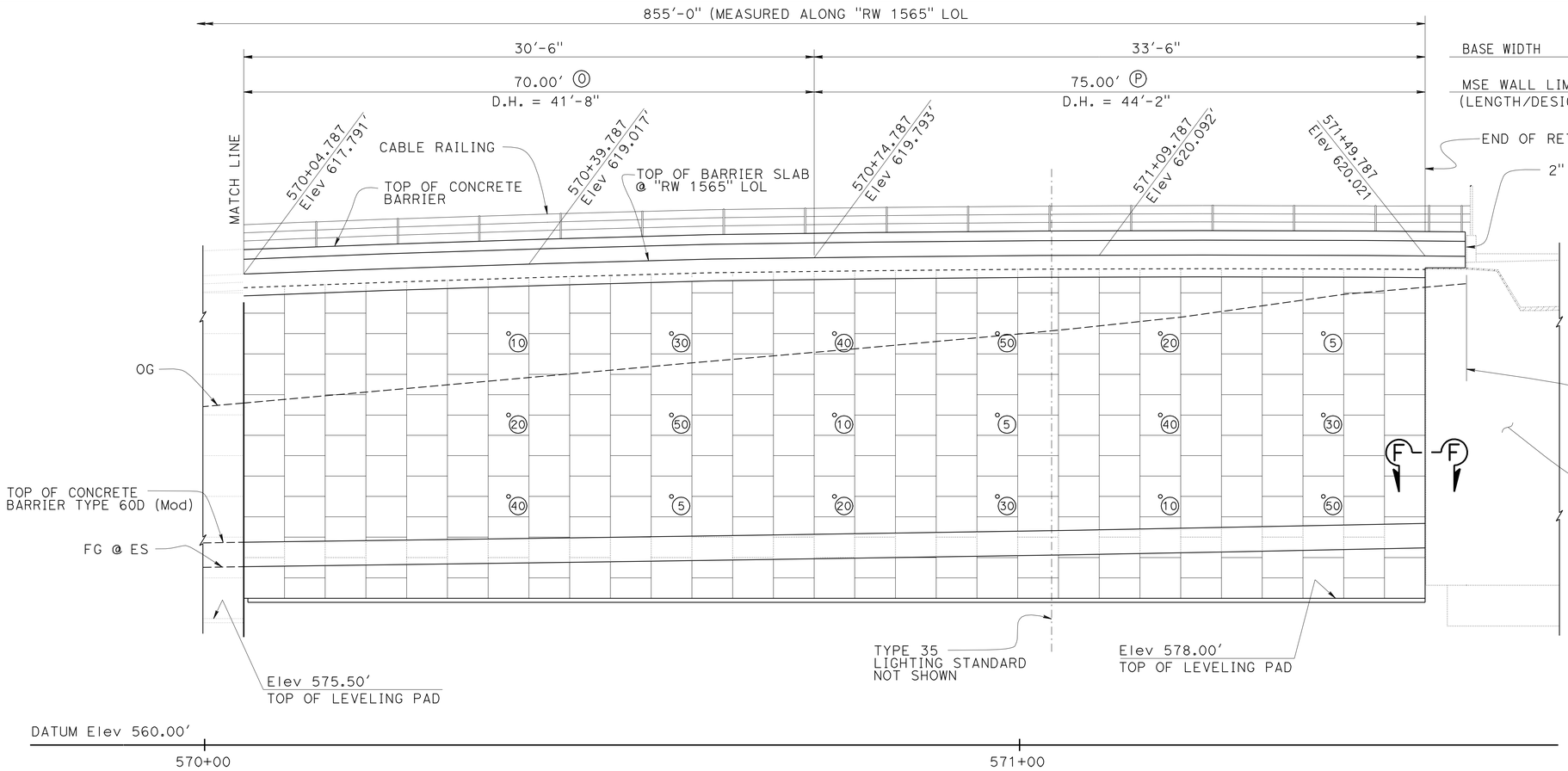

ELEVATION (DEVELOPED)

1/8" = 1'-0"

Indicates location of inspection wire placement

Indicates interval in years from time of construction to time of removal of inspection wire

50

PANEL LEGEND

NO SCALE

NOTES:

1. For "SECTION F-F", see "MISCELLANEOUS DETAIL NO. 5" sheet. For "DETAIL A" see "MISCELLANEOUS DETAILS NO. 2A" sheet.
2. For details of Type 35 Lighting Standards, see "CONCRETE BARRIER TYPE 60D (Mod) NO. 1" and "LIGHTING SUPPORT DETAILS" sheet.
3. For Architectural Treatment on Concrete Barrier and MSE Wall see "ARCHITECTURAL DETAILS NO. 1" through "ARCHITECTURAL DETAILS NO. 3" sheets.

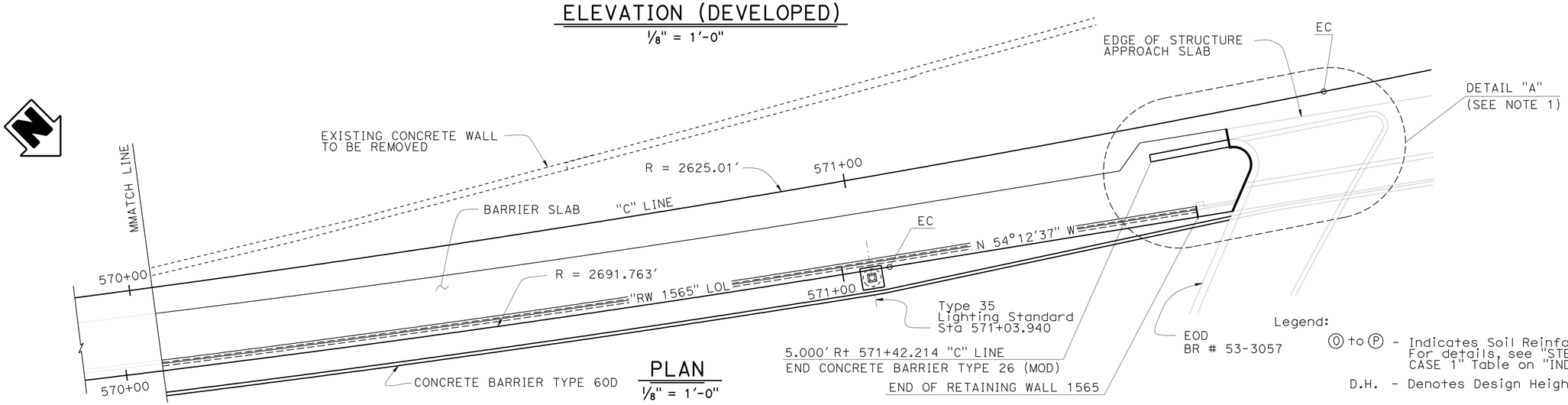

PLAN

1/8" = 1'-0"

Legend:

Ⓞ to Ⓟ - Indicates Soil Reinforcement designation letter. For details, see "STEEL REINFORCEMENT FOR LOAD CASE 1" Table on "INDEX TO PLANS" sheet.

D.H. - Denotes Design Height.

	BY	CHECKED
DESIGN	Gabriel Galo	Shervin Pahlavan
DETAILS	Stan Cholda	Shervin Pahlavan
QUANTITIES	Gabriel Galo	F.Feng/J. Jauregui

STATE OF CALIFORNIA
DEPARTMENT OF TRANSPORTATION

DIVISION OF ENGINEERING SERVICES
STRUCTURE DESIGN
DESIGN BRANCH 15

BRIDGE NO. 53E0161
POST MILE 29.8

RETAINING WALL NO. 1565
STRUCTURE PLAN NO. 5

STRUCTURES DESIGN DETAIL SHEET (ENGLISH) (REV. 09-01-10)

ORIGINAL SCALE IN INCHES FOR REDUCED PLANS 0 1 2 3

UNIT: 3604
PROJECT NUMBER & PHASE: 0700021119
CONTRACT NO.: 07-1218W1

DISREGARD PRINTS BEARING EARLIER REVISION DATES

REVISION DATES: 11-28-11 05-30-12 06-06-12 03-28-12

SHEET 10 OF 34

FILE => 53e0161-g-sp_05.dgn

USERNAME => s127614 DATE PLOTTED => 14-JUN-2012 TIME PLOTTED => 09:47

DIST	COUNTY	ROUTE	POST MILES TOTAL PROJECT	SHEET No.	TOTAL SHEETS
07	LA	5	29.4/31.6	809	1931

Ulysses N. Smpardos 2-04-12
REGISTERED CIVIL ENGINEER DATE

5-21-12
PLANS APPROVAL DATE

REGISTERED PROFESSIONAL ENGINEER Ulysses N. Smpardos No. 61018 Exp. 12/31/12 CIVIL STATE OF CALIFORNIA

The State of California or its officers or agents shall not be responsible for the accuracy or completeness of electronic copies of this plan sheet.

Legend:

- Limits of Structure Excavation paid as Earth Retaining Structure (Mechanically Stabilized Embankment Wall)
- Limits of Structure Excavation (Petroleum Hydrocarbon)
- Limits of Structure Backfill paid as Earth Retaining Structure (Mechanically Stabilized Embankment Wall)

Notes

1. Locate underdrain behind bottom level of welded wire mats wherever possible, or at elevation needed to drain, as elsewhere on plans.
2. Maximum spacing of outlet pipe is 200 feet.
3. At sags in profile of underdrain, install outlet pipe for each direction of flow.
4. Place perforated pipe underdrain of diameter shown elsewhere on plans or minimum 4" Ø Smoothed Wall PVC or minimum 8" Ø Corrugated HDPE.

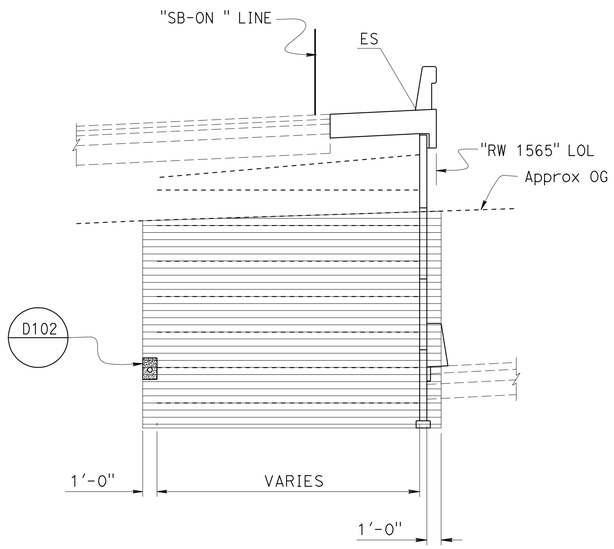

LIMITS OF EXCAVATION
3/16" = 1'-0"
STA 564+95.017 TO STA 567+20.000±

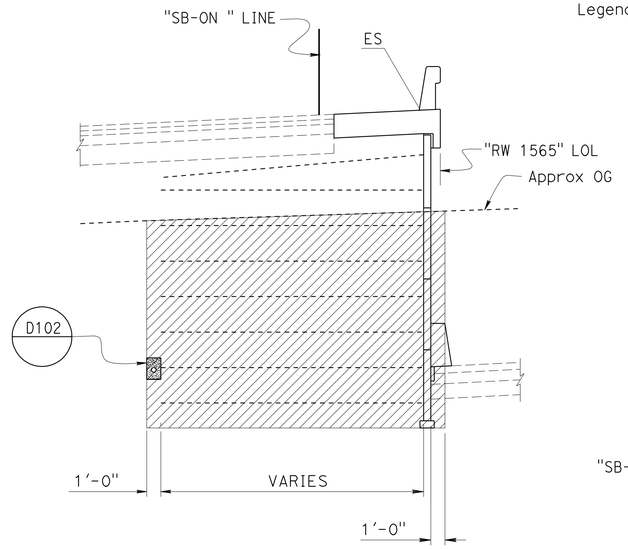

LIMITS OF EXCAVATION
3/16" = 1'-0"
STA 567+20.000 TO STA 568+80.000

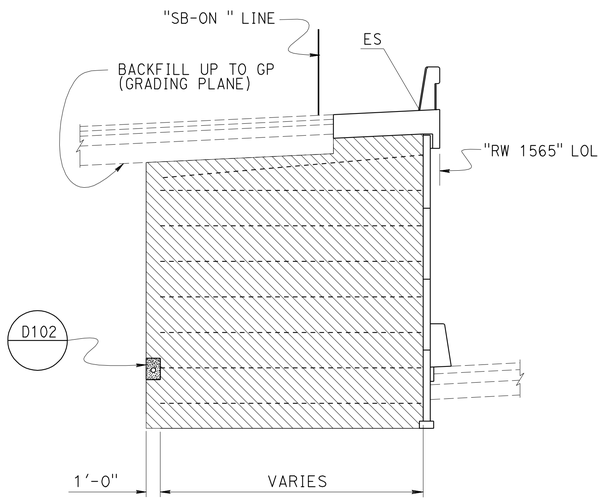

LIMITS OF BACKFILL
3/16" = 1'-0"
STA 564+95.017 TO STA 568+80.000

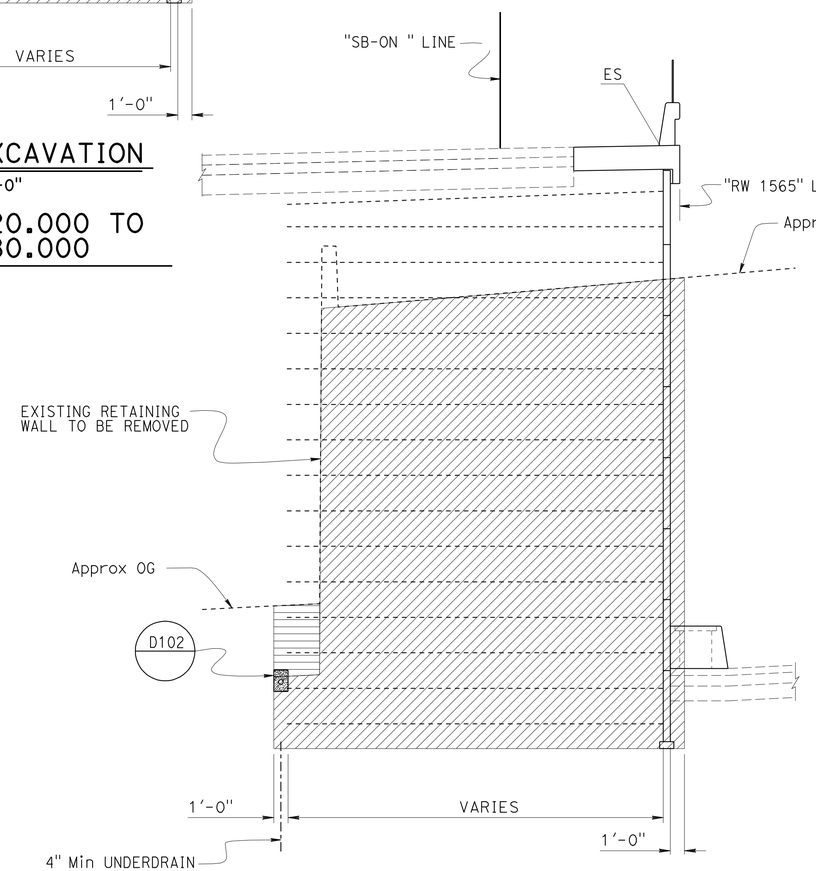

LIMITS OF EXCAVATION
3/16" = 1'-0"

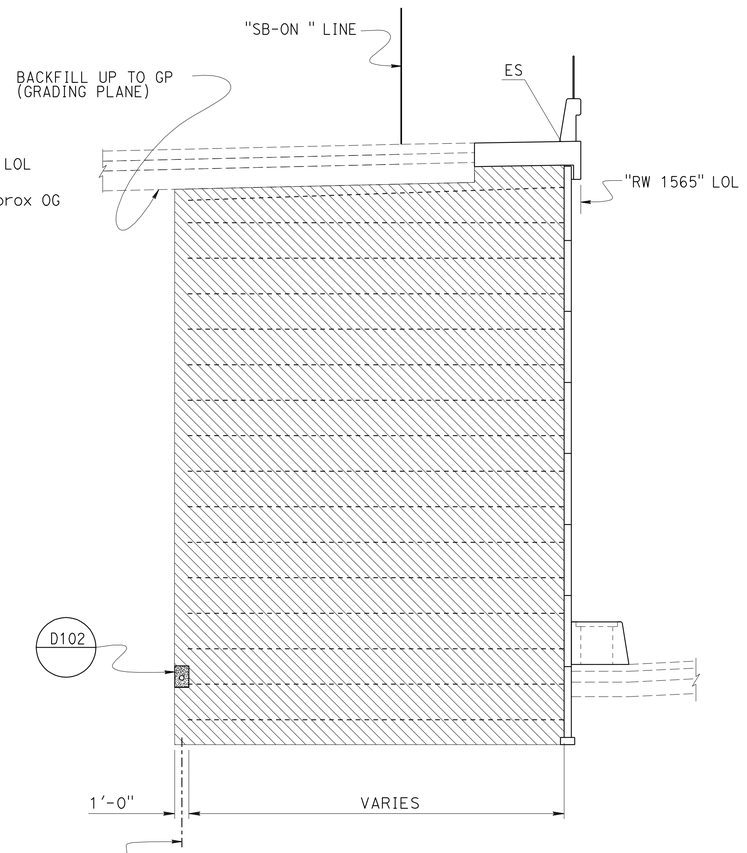

LIMITS OF BACKFILL
3/16" = 1'-0"

LIMITS OF EXCAVATION AND BACKFILL
STA 568+80.000 TO STA 571+49.787

DESIGN	BY Gabriel Galo	CHECKED Shervin Pahlavan	
DETAILS	BY Stan Cholda	CHECKED Shervin Pahlavan	
QUANTITIES	BY Gabriel Galo	CHECKED F.Feng/J. Jauregui	

STATE OF CALIFORNIA
DEPARTMENT OF TRANSPORTATION

DIVISION OF ENGINEERING SERVICES
STRUCTURE DESIGN
DESIGN BRANCH 15

BRIDGE NO. 53E0161
POST MILE 29.8

RETAINING WALL NO. 1565
MISCELLANEOUS DETAILS NO. 1

STRUCTURES DESIGN DETAIL SHEET (ENGLISH) (REV. 09-01-10)

ORIGINAL SCALE IN INCHES FOR REDUCED PLANS 0 1 2 3

UNIT: 3604
PROJECT NUMBER & PHASE: 0700021119
CONTRACT NO.: 07-1218W1

DISREGARD PRINTS BEARING EARLIER REVISION DATES

REVISION DATES 11-28-11 05-25-12 06-06-12 03-27-12

SHEET 11 OF 34

FILE => 53e0161-m-misc_01.dgn

USERNAME => s121614 DATE PLOTTED => 14-JUN-2012 TIME PLOTTED => 05:47

DIST	COUNTY	ROUTE	POST MILES TOTAL PROJECT	SHEET No.	TOTAL SHEETS
07	LA	5	29.4/31.6	810	1931

Ulysses N. Smpardos 2-04-12
REGISTERED CIVIL ENGINEER DATE

5-21-12
PLANS APPROVAL DATE

REGISTERED PROFESSIONAL ENGINEER
Ulysses N. Smpardos
No. 61018
Exp. 12/31/12
CIVIL
STATE OF CALIFORNIA

The State of California or its officers or agents shall not be responsible for the accuracy or completeness of electronic copies of this plan sheet.

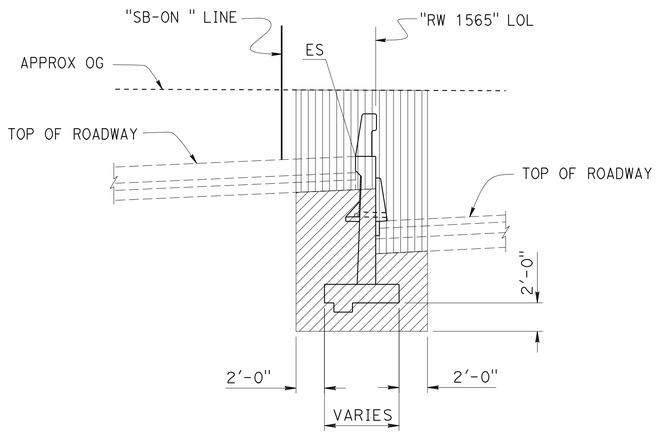

LIMITS OF EXCAVATION
3/16" = 1'-0"

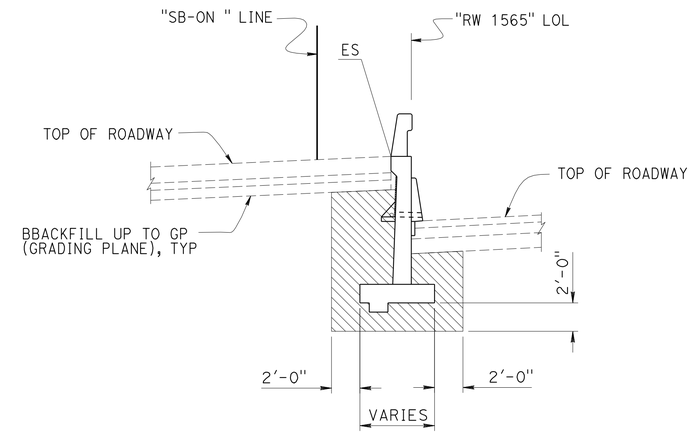

LIMITS OF BACKFILL
3/16" = 1'-0"

LIMITS OF EXCAVATION AND BACKFILL - TYPE 1 RETAINING WALL

Legend:

- Limits of Structure Excavation (Petroleum Hydrocarbon)
- Limits of Roadway Excavation (Petroleum Hydrocarbon)
- Limits of Structure Backfill

	BY	CHECKED
DESIGN	Gabriel Galo	Shervin Pahlavan
DETAILS	Stan Cholda	Shervin Pahlavan
QUANTITIES	Gabriel Galo	F.Feng/J. Jauregui

STATE OF CALIFORNIA
DEPARTMENT OF TRANSPORTATION

DIVISION OF ENGINEERING SERVICES
STRUCTURE DESIGN
DESIGN BRANCH 15

BRIDGE NO. 53E0161
POST MILE 29.8

RETAINING WALL NO. 1565
MISCELLANEOUS DETAILS NO. 2

STRUCTURES DESIGN DETAIL SHEET (ENGLISH) (REV. 09-01-10)

ORIGINAL SCALE IN INCHES FOR REDUCED PLANS 0 1 2 3

UNIT: 3604
PROJECT NUMBER & PHASE: 0700021119
CONTRACT NO.: 07-1218W1

DISREGARD PRINTS BEARING EARLIER REVISION DATES

REVISION DATES: ~~02-05-12~~ ~~02-25-12~~ ~~03-14-12~~ 03-27-12

SHEET 12 OF 34

FILE => 53e0161-m-misc_02.dgn

USERNAME => s121614 DATE PLOTTED => 22-MAY-2012 TIME PLOTTED => 07:32

DIST	COUNTY	ROUTE	POST MILES TOTAL PROJECT	SHEET No.	TOTAL SHEETS
07	LA	5	29.4/31.6	811	1931

Ulysses N. Smpardos 2-04-12
REGISTERED CIVIL ENGINEER DATE

5-21-12
PLANS APPROVAL DATE

REGISTERED PROFESSIONAL ENGINEER Ulysses N. Smpardos No. 61018 Exp. 12/31/12 CIVIL STATE OF CALIFORNIA

The State of California or its officers or agents shall not be responsible for the accuracy or completeness of electronic copies of this plan sheet.

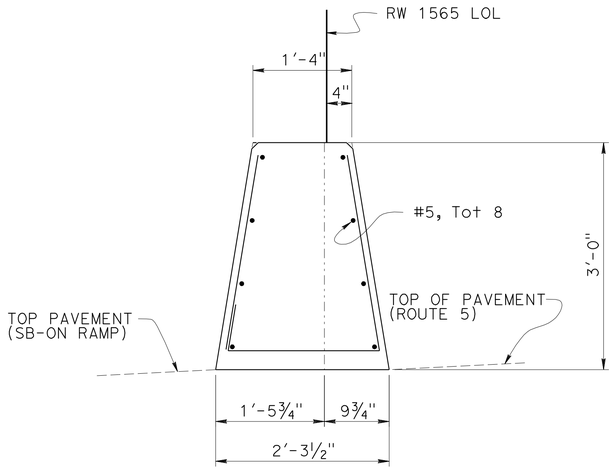

SECTION A-A

1" = 1'-0"

(SEE "NOTE 1")

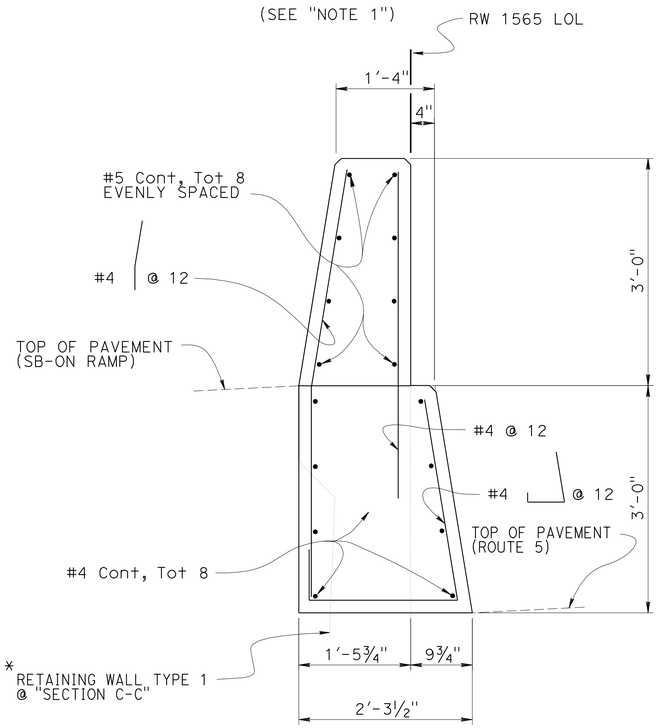

* SEE "VIEW ON RETAINING WALL TYPE 1 @ "SECTION C'-C'"

SECTION C-C

1" = 1'-0"

(SEE "NOTE 2")

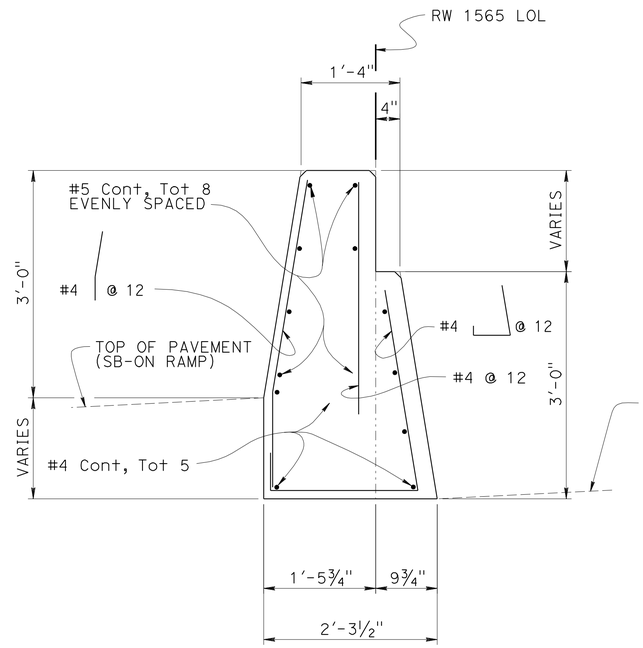

SECTION B-B

1" = 1'-0"

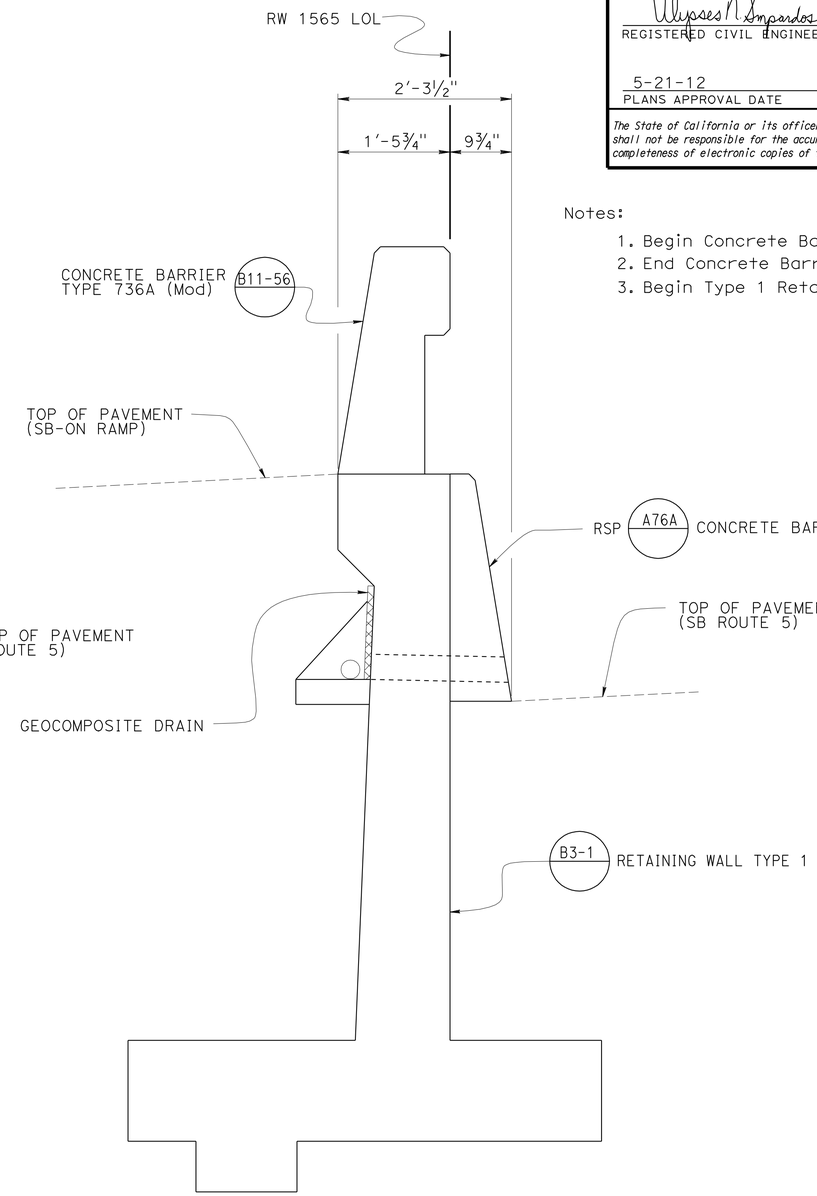

SECTION C'-C'

1" = 1'-0"

(SEE "NOTE 3")

Notes:

1. Begin Concrete Barrier Type 60C (Mod).
2. End Concrete Barrier Type 60C (Mod).
3. Begin Type 1 Retaining Wall.

	BY	CHECKED
DESIGN	Gabriel Galo	Shervin Pahlavan
DETAILS	Stan Cholda	Shervin Pahlavan
QUANTITIES	Gabriel Galo	F.Feng/J. Jauregui

STATE OF CALIFORNIA
DEPARTMENT OF TRANSPORTATION

DIVISION OF ENGINEERING SERVICES
STRUCTURE DESIGN
DESIGN BRANCH 15

BRIDGE NO. 53E0161
POST MILE 29.8

RETAINING WALL NO. 1565
MISCELLANEOUS DETAILS NO. 3

STRUCTURES DESIGN DETAIL SHEET (ENGLISH) (REV. 09-01-10)

ORIGINAL SCALE IN INCHES FOR REDUCED PLANS 0 1 2 3

UNIT: 3604
PROJECT NUMBER & PHASE: 0700021119
CONTRACT NO.: 07-1218W1

DISREGARD PRINTS BEARING EARLIER REVISION DATES → 03-05-12 04-25-12 03-14-12 03-28-12

SHEET 13 OF 34

FILE => 53e0161-m-misc_03.dgn

USERNAME => s121614 DATE PLOTTED => 22-MAY-2012 TIME PLOTTED => 07:32

DIST	COUNTY	ROUTE	POST MILES TOTAL PROJECT	SHEET No.	TOTAL SHEETS
07	LA	5	29.4/31.6	812	1931

Ulysses N. Smpardos 2-04-12
REGISTERED CIVIL ENGINEER DATE

5-21-12
PLANS APPROVAL DATE

REGISTERED PROFESSIONAL ENGINEER
Ulysses N. Smpardos
No. 61018
Exp. 12/31/12
CIVIL
STATE OF CALIFORNIA

The State of California or its officers or agents shall not be responsible for the accuracy or completeness of electronic copies of this plan sheet.

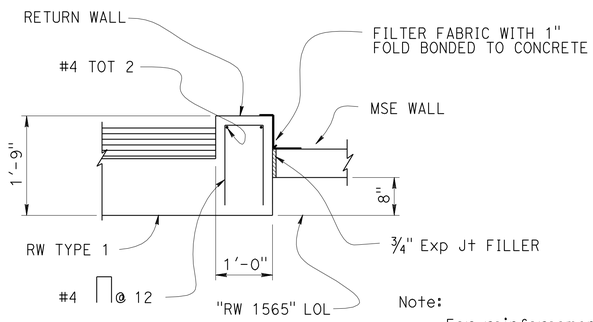

Note:
For reinforcement not shown, see "Section D-D".

SECTION E-E
¾" = 1'-0"

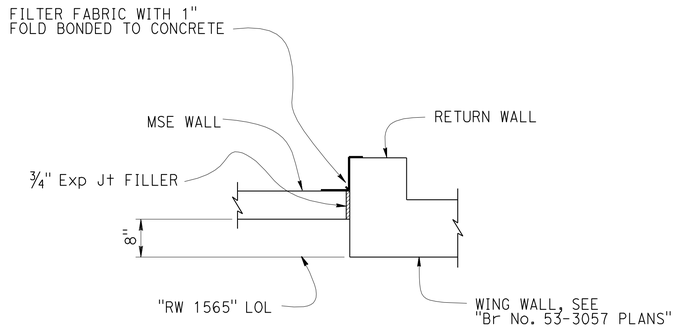

SECTION F-F
¾" = 1'-0"

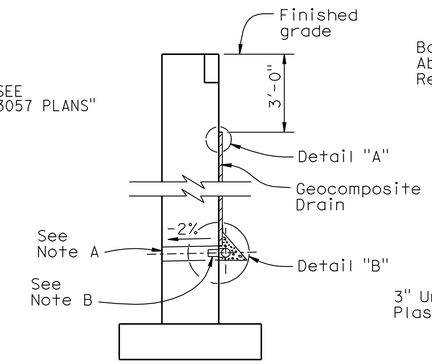

WALL SECTION

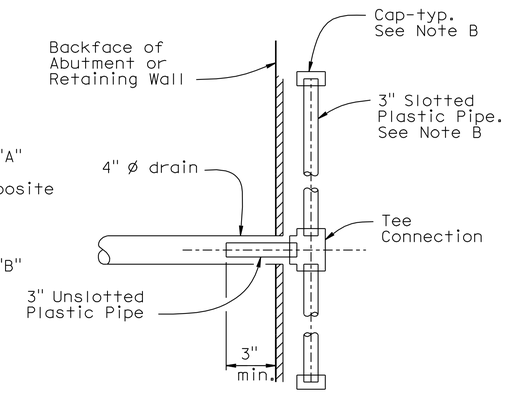

SECTION A-A

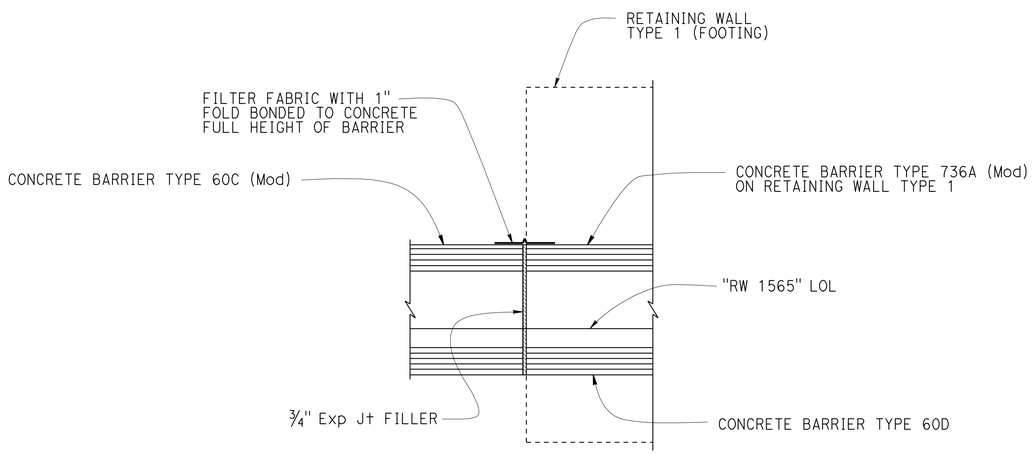

SECTION D-D
¾" = 1'-0"

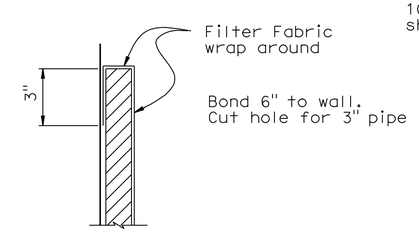

DETAIL "A"

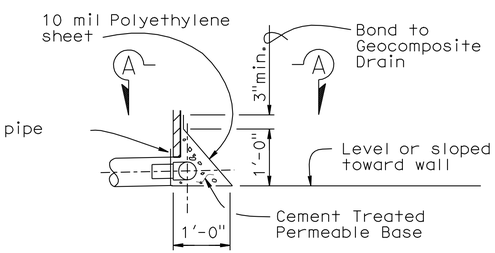

DETAIL "B"

WEEP HOLE AND GEOCOMPOSITE DRAIN

ALTERNATIVE TO BRIDGE DETAIL (B0-3 / 3-1)

Notes:

A. 4" ø drains at intermediate sag points and at 25' max center to center (9' c-c for Type 3 and 9'-3" c-c for Type 4 retaining walls).
For walls adjacent to sidewalks or curbs, provide 4" cast iron or asbestos cement pipe under the sidewalk to discharge through curb face.
Exposed wall drains shall be located 3"± above finished grade.

B. Geocomposite drain, cement treated permeable base, and 3"ø slotted plastic pipe continuous behind retaining wall or abutment. Cap ends of pipe. Provide "Tee" connection at each 4" ø drain.

C. Connect the low end of plastic pipe to the main outlet pipe as apprlicable.

DESIGN	BY Gabriel Galo	CHECKED Shervin Pahlavan	
DETAILS	BY Stan Cholda	CHECKED Shervin Pahlavan	
QUANTITIES	BY Gabriel Galo	CHECKED F.Feng/J. Jauregui	

STATE OF CALIFORNIA
DEPARTMENT OF TRANSPORTATION

DIVISION OF ENGINEERING SERVICES
STRUCTURE DESIGN
DESIGN BRANCH 15

BRIDGE NO. 53E0161
POST MILE 29.8

RETAINING WALL NO. 1565
MISCELLANEOUS DETAILS NO. 4

STRUCTURES DESIGN DETAIL SHEET (ENGLISH) (REV. 09-01-10)

ORIGINAL SCALE IN INCHES FOR REDUCED PLANS 0 1 2 3

UNIT: 3604
PROJECT NUMBER & PHASE: 0700021119
CONTRACT NO.: 07-1218W1

DISREGARD PRINTS BEARING EARLIER REVISION DATES

REVISION DATES: 02-01-12 05-25-12 06-06-12 04-25-12

SHEET 14 OF 34

FILE => 53e0161-m-misc_04.dgn

USERNAME => s121614 DATE PLOTTED => 14-JUN-2012 TIME PLOTTED => 09:47

DIST	COUNTY	ROUTE	POST MILES TOTAL PROJECT	SHEET No.	TOTAL SHEETS
07	LA	5	29.4/31.6	813	1931

Ulysses N. Smpardos 2-04-12
REGISTERED CIVIL ENGINEER DATE

5-21-12
PLANS APPROVAL DATE

REGISTERED PROFESSIONAL ENGINEER
Ulysses N. Smpardos
No. 61018
Exp. 12/31/12
CIVIL
STATE OF CALIFORNIA

The State of California or its officers or agents shall not be responsible for the accuracy or completeness of electronic copies of this plan sheet.

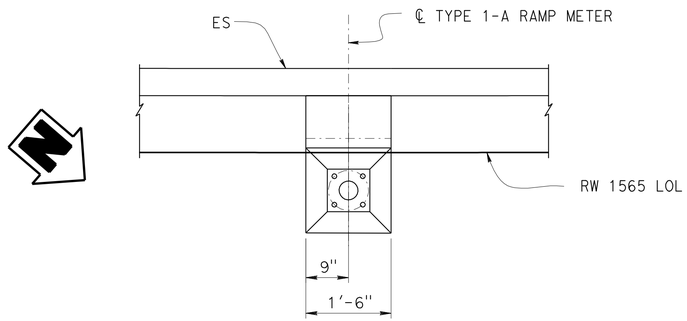

PLAN
¾" = 1'-0"

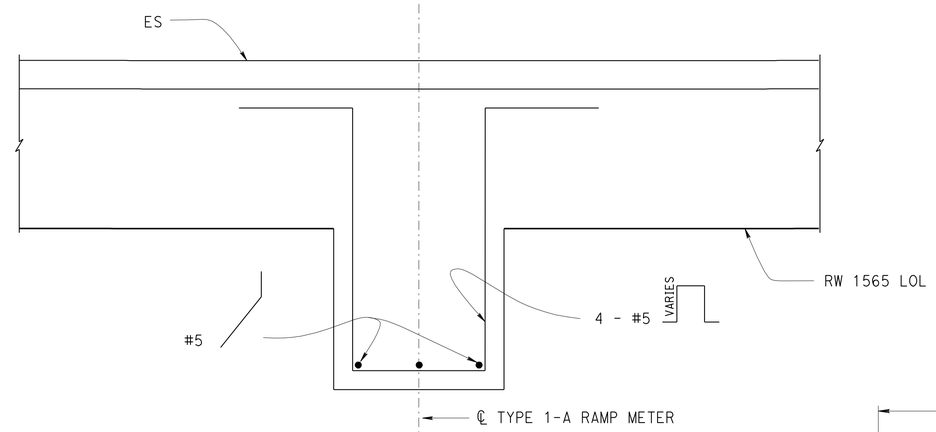

SECTION B-B
1½" = 1'-0"

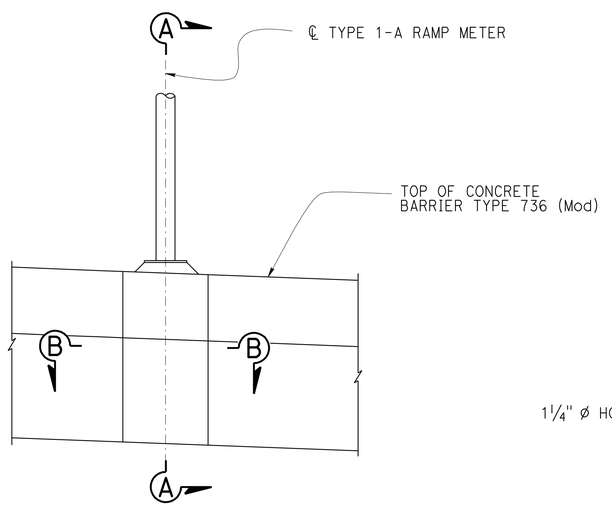

ELEVATION
¾" = 1'-0"

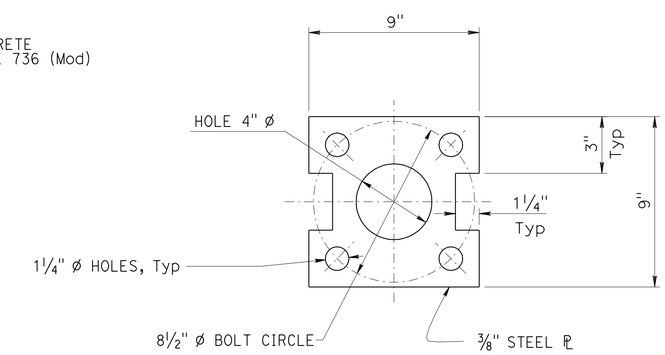

DETAIL X
3" = 1'-0"

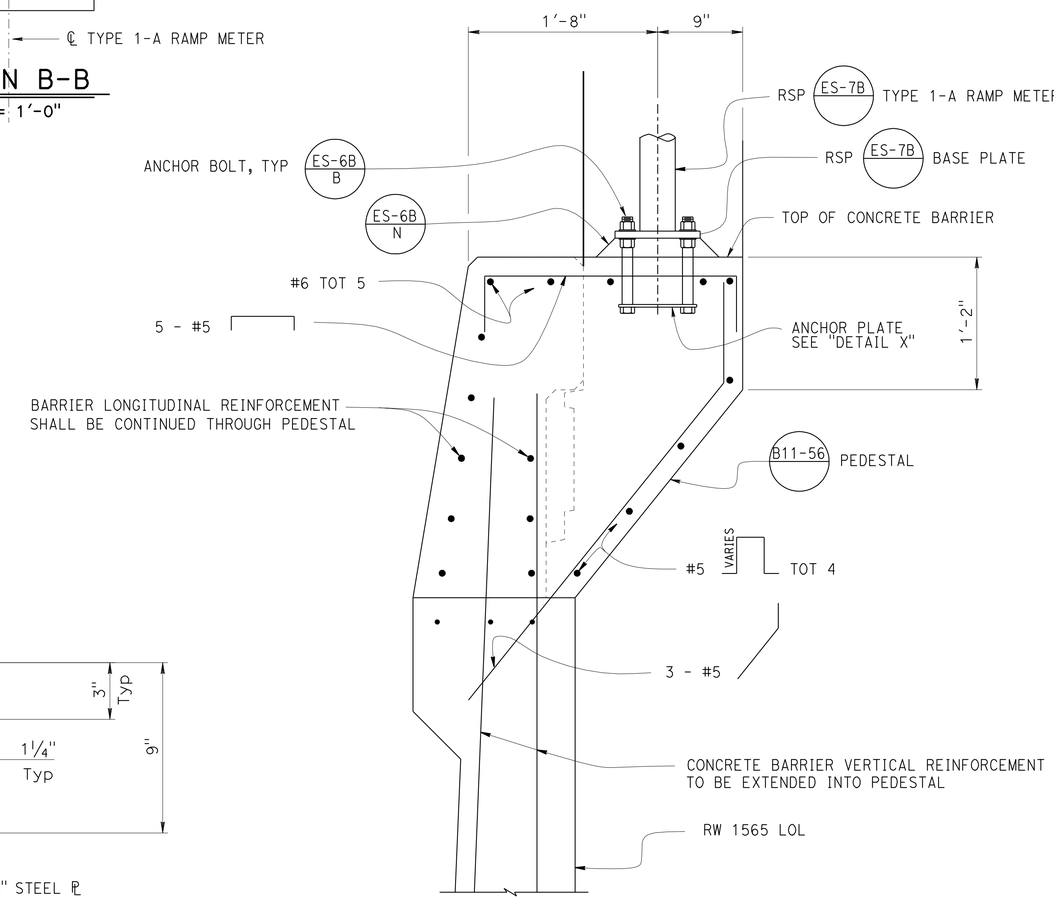

SECTION A-A
1½" = 1'-0"

DESIGN	BY Gabriel Galo	CHECKED Shervin Pahlavan	
DETAILS	BY Stan Cholda	CHECKED Shervin Pahlavan	
QUANTITIES	BY Gabriel Galo	CHECKED F.Feng/J. Jauregui	

STATE OF CALIFORNIA
DEPARTMENT OF TRANSPORTATION

DIVISION OF ENGINEERING SERVICES
STRUCTURE DESIGN
DESIGN BRANCH 15

BRIDGE NO. 53E0161
POST MILE 29.8

RETAINING WALL NO. 1565
MISCELLANEOUS DETAILS NO. 5

STRUCTURES DESIGN DETAIL SHEET (ENGLISH) (REV. 09-01-10)

ORIGINAL SCALE IN INCHES FOR REDUCED PLANS 0 1 2 3

UNIT: 3604
PROJECT NUMBER & PHASE: 0700021119
CONTRACT NO.: 07-1218W1

DISREGARD PRINTS BEARING EARLIER REVISION DATES

REVISION DATES: 03-09-12 04-23-12 03-27-12 03-28-12

SHEET 15 OF 34

FILE => 53e0161-m-misc_05.dgn

USERNAME => s121614 DATE PLOTTED => 22-MAY-2012 TIME PLOTTED => 07:33

DIST	COUNTY	ROUTE	POST MILES TOTAL PROJECT	SHEET No.	TOTAL SHEETS
07	LA	5	29.4/31.6	814	1931

REGISTERED CIVIL ENGINEER 2-04-12 DATE

5-21-12
PLANS APPROVAL DATE

REGISTERED PROFESSIONAL ENGINEER Ulysses N. Smpardos No. 61018 Exp. 12/31/12 CIVIL STATE OF CALIFORNIA

The State of California or its officers or agents shall not be responsible for the accuracy or completeness of electronic copies of this plan sheet.

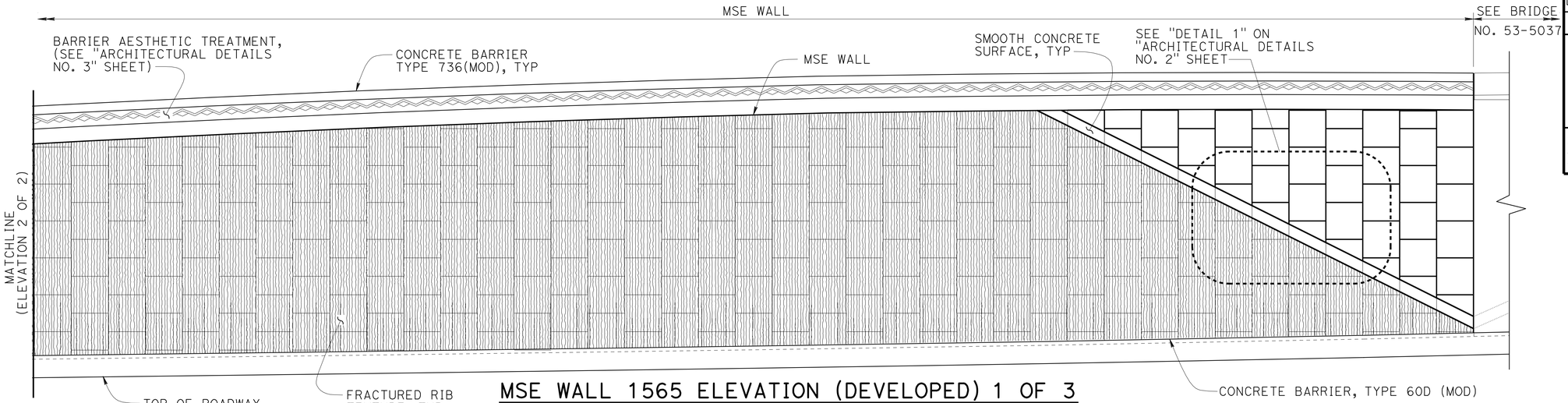

MSE WALL 1565 ELEVATION (DEVELOPED) 1 OF 3

1/8" = 1'-0"

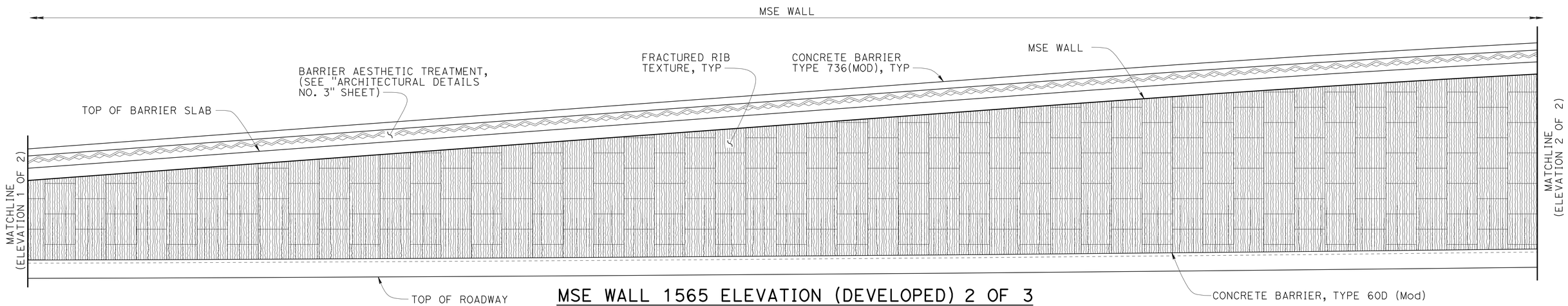

MSE WALL 1565 ELEVATION (DEVELOPED) 2 OF 3

1/8" = 1'-0"

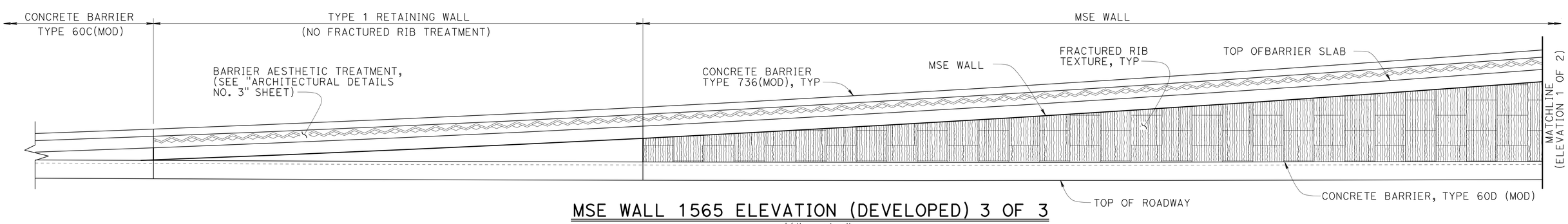

MSE WALL 1565 ELEVATION (DEVELOPED) 3 OF 3

1/8" = 1'-0"

DESIGN	BY I. Tasabia	CHECKED H. Chavez	
DETAILS	BY T. Trefz/I. Tasabia	CHECKED H. Chavez/G. Galo	
QUANTITIES	BY G. Galo	CHECKED F. Feng/J. Jauregui	

STATE OF CALIFORNIA
DEPARTMENT OF TRANSPORTATION

DIVISION OF ENGINEERING SERVICES
STRUCTURE DESIGN
DESIGN BRANCH 15

BRIDGE NO. 53E0161
POST MILE 29.8

RETAINING WALL NO. 1565
ARCHITECTURAL DETAILS NO. 1

STRUCTURES DESIGN DETAIL SHEET (ENGLISH) (REV. 09-01-10)

ORIGINAL SCALE IN INCHES FOR REDUCED PLANS 0 1 2 3

UNIT: 3604
PROJECT NUMBER & PHASE: 0700021119
CONTRACT NO.: 07-1218W1

DISREGARD PRINTS BEARING EARLIER REVISION DATES

REVISION DATES 02-15-12 02-23-12

SHEET 16 OF 34

FILE => 53e0161-p-arch_01.dgn

USERNAME => s12614 DATE PLOTTED => 22-MAY-2012 TIME PLOTTED => 07:33

DIST	COUNTY	ROUTE	POST MILES TOTAL PROJECT	SHEET No.	TOTAL SHEETS
07	LA	5	29.4/31.6	815	1931

REGISTERED CIVIL ENGINEER 2-04-12 DATE

5-21-12
PLANS APPROVAL DATE

REGISTERED PROFESSIONAL ENGINEER Ulysses N. Smpardos No. 61018 Exp. 12/31/12 CIVIL STATE OF CALIFORNIA

The State of California or its officers or agents shall not be responsible for the accuracy or completeness of electronic copies of this plan sheet.

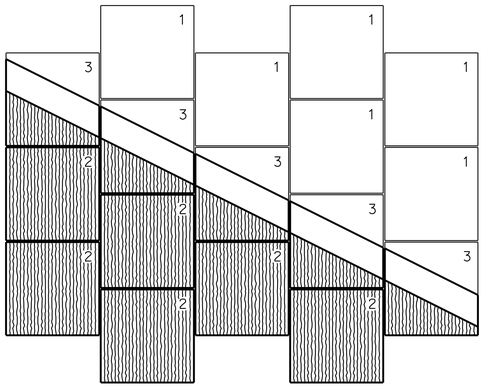

DETAIL 1
NO SCALE

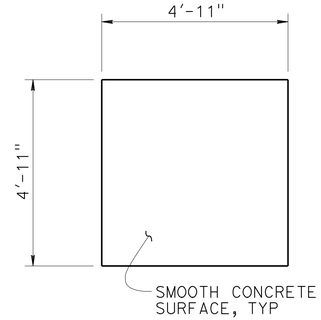

PANEL 1

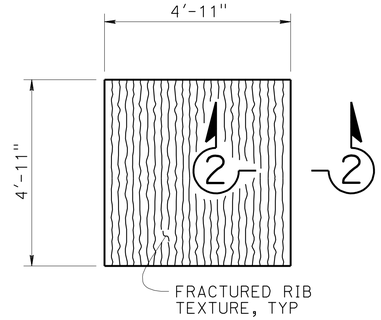

PANEL 2

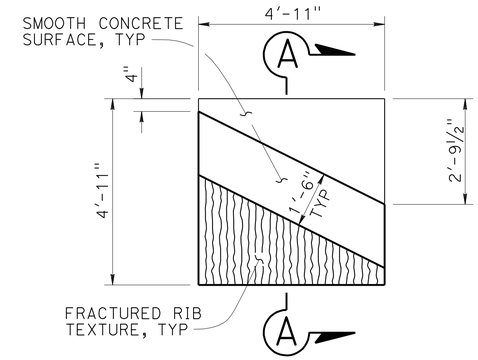

PANEL 3

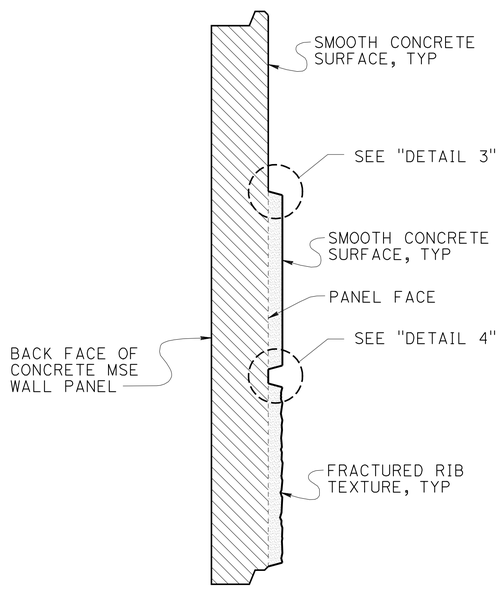

SECTION A-A
NO SCALE

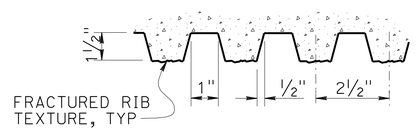

DETAIL 2
NO SCALE

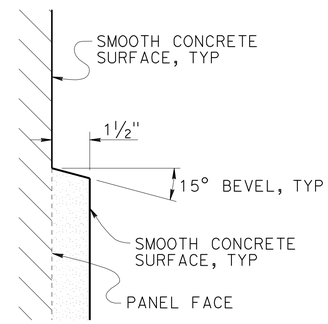

DETAIL 3
NO SCALE

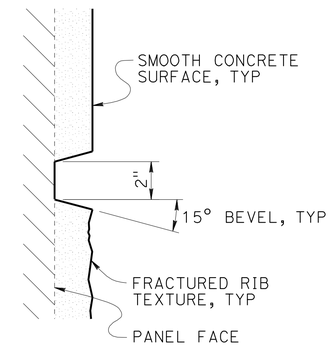

DETAIL 4
NO SCALE

DESIGN	BY I. Tasabia	CHECKED H. Chavez	
DETAILS	BY T. Trefz/I. Tasabia	CHECKED H. Chavez/G. Galo	
QUANTITIES	BY G. Galo	CHECKED F. Feng/J. Jauregui	

STATE OF CALIFORNIA
DEPARTMENT OF TRANSPORTATION

DIVISION OF ENGINEERING SERVICES
STRUCTURE DESIGN
DESIGN BRANCH 15

BRIDGE NO. 53E0161
POST MILE 29.8

RETAINING WALL NO. 1565
ARCHITECTURAL DETAILS NO. 2

STRUCTURES DESIGN DETAIL SHEET (ENGLISH) (REV. 09-01-10)

ORIGINAL SCALE IN INCHES FOR REDUCED PLANS 0 1 2 3

UNIT: 3604
PROJECT NUMBER & PHASE: 0700021119
CONTRACT NO.: 07-1218W1

DISREGARD PRINTS BEARING EARLIER REVISION DATES

REVISION DATES: 02-08-12 03-28-12 04-21-12

SHEET 17 OF 34

FILE => 53e0161-p-arch_02.dgn

USERNAME => s121614 DATE PLOTTED => 22-MAY-2012 TIME PLOTTED => 07:33

DIST	COUNTY	ROUTE	POST MILES TOTAL PROJECT	SHEET No.	TOTAL SHEETS
07	LA	5	29.4/31.6	816	1931

Ulysses N. Smpardos 2-04-12
REGISTERED CIVIL ENGINEER DATE

5-21-12
PLANS APPROVAL DATE

REGISTERED PROFESSIONAL ENGINEER
Ulysses N. Smpardos
No. 61018
Exp. 12/31/12
CIVIL
STATE OF CALIFORNIA

The State of California or its officers or agents shall not be responsible for the accuracy or completeness of electronic copies of this plan sheet.

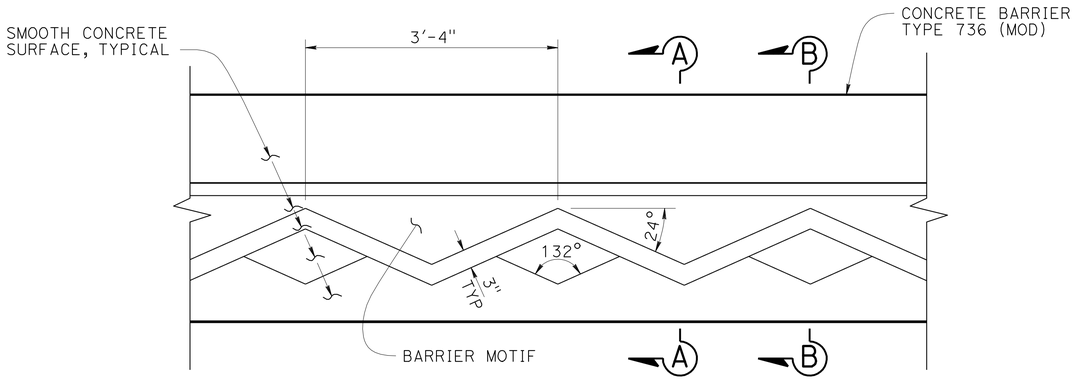

ELEVATION - CONCRETE BARRIER TYPE 736 (MOD) AND 736A (MOD)

1" = 1'-0"

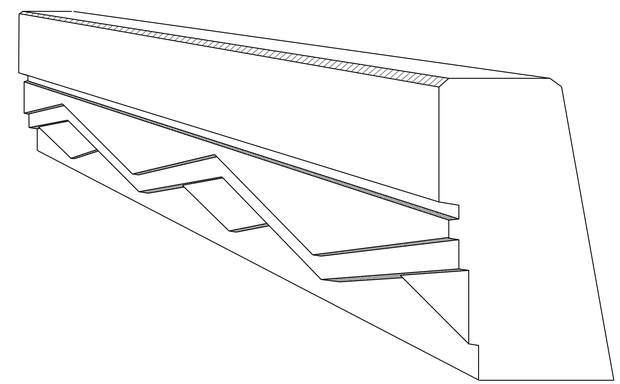

PERSPECTIVE VIEW

NO SCALE

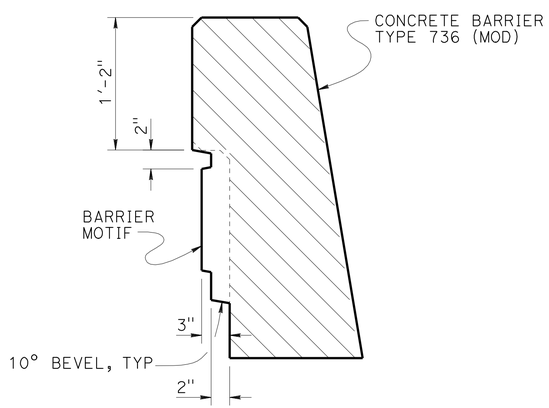

SECTION A-A

1½" = 1'-0"

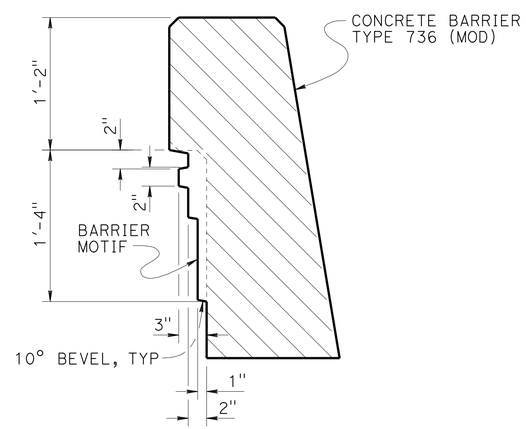

SECTION B-B

1½" = 1'-0"

DESIGN	BY I. Tasabia	CHECKED H. Chavez	
DETAILS	BY T. Trefz	CHECKED H. Chavez	
QUANTITIES	BY G. Galo	CHECKED F. Feng/J. Jauregui	

STATE OF CALIFORNIA
DEPARTMENT OF TRANSPORTATION

DIVISION OF ENGINEERING SERVICES
STRUCTURE DESIGN
DESIGN BRANCH 15

BRIDGE NO. 53E0161
POST MILE 29.8

RETAINING WALL NO. 1565
ARCHITECTURAL DETAILS NO. 3

STRUCTURES DESIGN DETAIL SHEET (ENGLISH) (REV. 09-01-10)

ORIGINAL SCALE IN INCHES FOR REDUCED PLANS 0 1 2 3

UNIT: 3604
PROJECT NUMBER & PHASE: 0700021119
CONTRACT NO.: 07-1218W1

DISREGARD PRINTS BEARING EARLIER REVISION DATES

REVISION DATES 02-09-12 02-23-12 03-28-12

SHEET 18 OF 34

FILE => 53e0161-p-arch_03.dgn

USERNAME => s121614 DATE PLOTTED => 22-MAY-2012 TIME PLOTTED => 07:33

NOTE:
For "SECTION A-A" & "SECTION B-B", see "CONCRETE BARRIER TYPE 60D (MOD) NO. 2" sheet.

DIST	COUNTY	ROUTE	POST MILES TOTAL PROJECT	SHEET No.	TOTAL SHEETS
07	LA	5	29.4/31.6	817	1931

Ulysses N. Smpardos 2-04-12
REGISTERED CIVIL ENGINEER DATE

5-21-12
PLANS APPROVAL DATE

REGISTERED PROFESSIONAL ENGINEER
Ulysses N. Smpardos
No. 61018
Exp. 12/31/12
CIVIL
STATE OF CALIFORNIA

The State of California or its officers or agents shall not be responsible for the accuracy or completeness of electronic copies of this plan sheet.

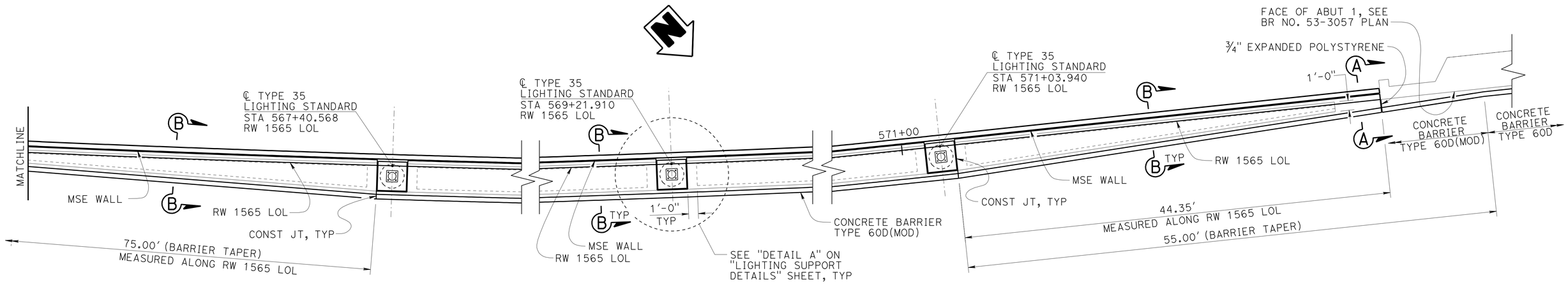

PLAN 2 OF 2
1" = 5'-0"

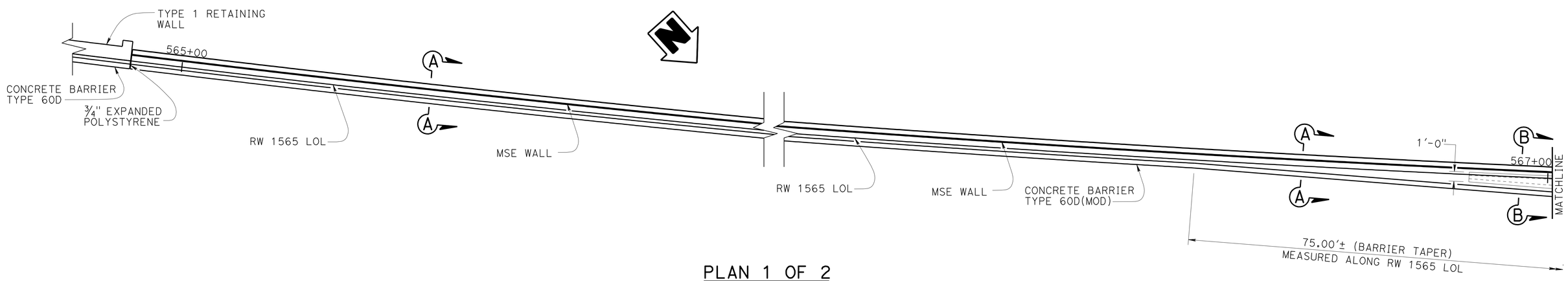

PLAN 1 OF 2
1" = 5'-0"

	BY	CHECKED
DESIGN	A. Herrera/U. Smpardos	U. Smpardos
DETAILS	T. Trefz	U. Smpardos
QUANTITIES	G. Galo	F.Feng/J. Jauregui

STATE OF CALIFORNIA
DEPARTMENT OF TRANSPORTATION

DIVISION OF ENGINEERING SERVICES
STRUCTURE DESIGN
DESIGN BRANCH 15

BRIDGE NO. 53E0161
POST MILE 29.8

RETAINING WALL NO. 1565
CONCRETE BARRIER TYPE 60D (MOD) NO. 1

STRUCTURES DESIGN DETAIL SHEET (ENGLISH) (REV. 09-01-10)

ORIGINAL SCALE IN INCHES FOR REDUCED PLANS 0 1 2 3

UNIT: 3604
PROJECT NUMBER & PHASE: 0700021119
CONTRACT NO.: 07-1218W1

DISREGARD PRINTS BEARING EARLIER REVISION DATES

REVISION DATES 02-27-12 02-27-12 03-21-12

SHEET 19 OF 34

FILE => 53e0161-q-bar_01.dgn

USERNAME => s121614 DATE PLOTTED => 22-MAY-2012 TIME PLOTTED => 07:33

NOTES:

1. Reinforcement shall extend continuously through construction joints.
2. Contractor options for fill between concrete barrier walls:
   A. Place 4" PCC at base between concrete barrier walls.
   B. Place 1'-0" of granular material at base between walls.
   C. Place granular material from base to bottom of 4" cap.
   D. Monolithic concrete with foam blockouts is not permitted.
3. Adjust height of concrete barrier wall at MSE panel at superelevated roadways to provide level grade across top of concrete barrier cap.

DIST	COUNTY	ROUTE	POST MILES TOTAL PROJECT	SHEET No.	TOTAL SHEETS
07	LA	5	29.4/31.6	818	1931

Ulysses N. Smpardos 2-04-12
REGISTERED CIVIL ENGINEER DATE

5-21-12
PLANS APPROVAL DATE

REGISTERED PROFESSIONAL ENGINEER
Ulysses N. Smpardos
No. 61018
Exp. 12/31/12
CIVIL
STATE OF CALIFORNIA

The State of California or its officers or agents shall not be responsible for the accuracy or completeness of electronic copies of this plan sheet.

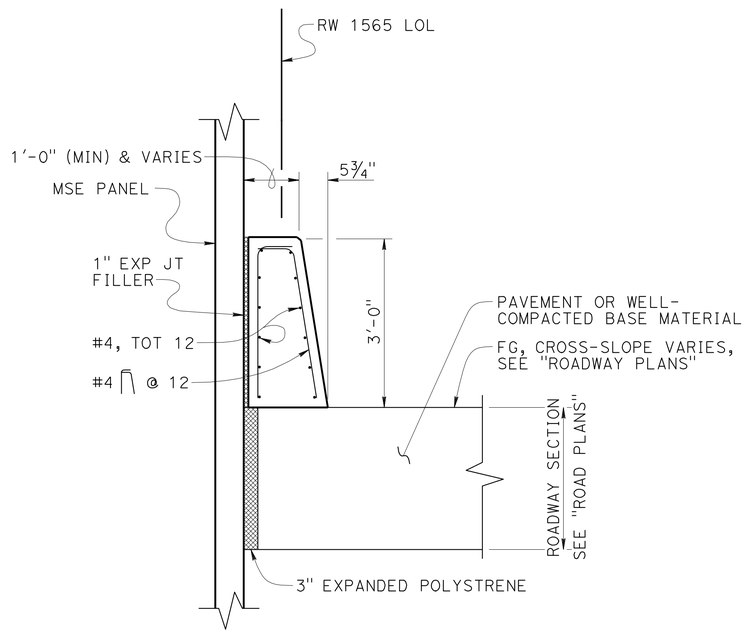

SECTION A-A
¾" = 1'-0"

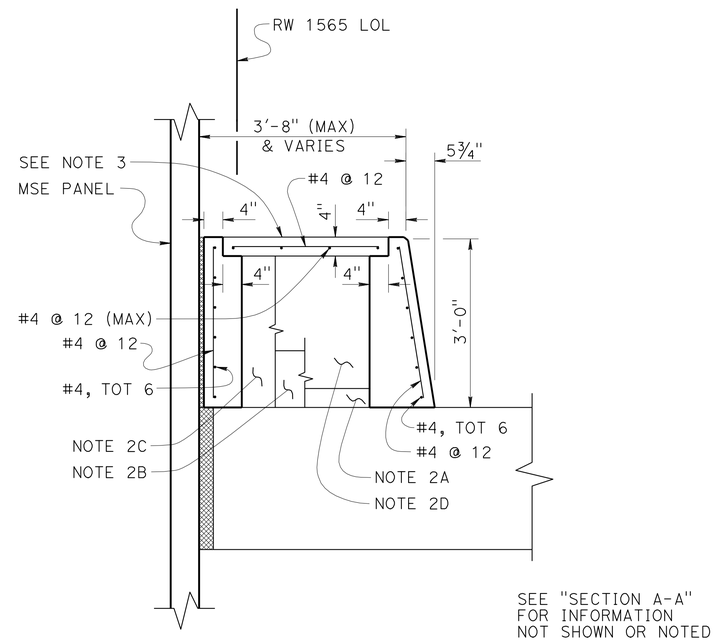

SECTION B-B
¾" = 1'-0"

DESIGN	BY G. Galo	CHECKED U. Smpardos	
DETAILS	BY T. Trefz	CHECKED U. Smpardos	
QUANTITIES	BY G. Galo	CHECKED F.Feng/J. Jauregui	

STATE OF CALIFORNIA
DEPARTMENT OF TRANSPORTATION

DIVISION OF ENGINEERING SERVICES
STRUCTURE DESIGN
DESIGN BRANCH 15

BRIDGE NO. 53E0161
POST MILE 29.8

RETAINING WALL NO. 1565
CONCRETE BARRIER TYPE 60D (MOD) NO. 2

STRUCTURES DESIGN DETAIL SHEET (ENGLISH) (REV. 09-01-10)

ORIGINAL SCALE IN INCHES FOR REDUCED PLANS 0 1 2 3

UNIT: 3604
PROJECT NUMBER & PHASE: 0700021119
CONTRACT NO.: 07-1218W1

DISREGARD PRINTS BEARING EARLIER REVISION DATES

REVISION DATES: 02-21-12

SHEET 20 OF 34

FILE => 53e0161-q-bar_02.dgn

USERNAME => s121614 DATE PLOTTED => 22-MAY-2012 TIME PLOTTED => 07:34

DIST	COUNTY	ROUTE	POST MILES TOTAL PROJECT	SHEET No.	TOTAL SHEETS
07	LA	5	29.4/31.6	819	1931

REGISTERED CIVIL ENGINEER 2-04-12 DATE

5-21-12
PLANS APPROVAL DATE

REGISTERED PROFESSIONAL ENGINEER Ulysses N. Smpardos No. 61018 Exp. 12/31/12 CIVIL STATE OF CALIFORNIA

The State of California or its officers or agents shall not be responsible for the accuracy or completeness of electronic copies of this plan sheet.

TABLE 1

DRAINAGE PIPE LOCATION

LOCATION NUMBER	STATION	ELEVATION	LOCATION NUMBER	STATION	ELEVATION	LOCATION NUMBER	STATION	ELEVATION
1	0.667′ Lt 565+14.444 "RW 1565" LOL	–	7	13.667′ Lt 566+21.174 "RW 1565" LOL	580.087′	13	17.667′ Lt 566+98.780 "RW 1565" LOL	–
2	9.667′ Lt 565+14.444 "RW 1565" LOL	581.509′	8	0.667′ Lt 566+21.174 "RW 1565" LOL	–	14	18.667′ Lt 566+99.787 "RW 1565" LOL	581.654′
3	9.667′ Lt 565+27.787 "RW 1565" LOL	581.331′	9	0.667′ Lt 566+40.589 "RW 1565" LOL	–			
4	11.667′ Lt 565+29.787 "RW 1565" LOL	–	10	15.667′ Lt 566+40.589 "RW 1565" LOL	580.801′			
5	11.667′ Lt 565+77.776 "RW 1565" LOL	580.665′	11	15.667′ Lt 566+62.771 "RW 1565" LOL	–			
6	13.667′ Lt 565+79.787 "RW 1565" LOL	–	12	17.667′ Lt 566+64.787 "RW 1565" LOL	581.151′			

Notes:

1. At sags in profile of underdrain pipe, install outlet pipe for each direction of flow.
2. Elevations are given at Invert of pipe.
3. Use PVC perforated pipe 4" Ø for drainage.
4. Cleanout pipe and outlet pipe must be non-perfarated PVC pipe 4" Ø.
5. For pipe location along drainage line , see "TABLE 1".
6. Outlet pipes and cleanout pipes shall be located 6" Min above finish grade.
7. At outlet pipe anchor firmly to backface a 6" square aluminum or galvanized steel wire 1/4" mesh hardware cloth, minimum wire diameter 0.025"
8. For "SECTION A-A" AND "SECTION B-B", see "DRAINAGE DETAILS NO. 4" sheet.

Legend:

(XX) Indicates pipe location along drainage line

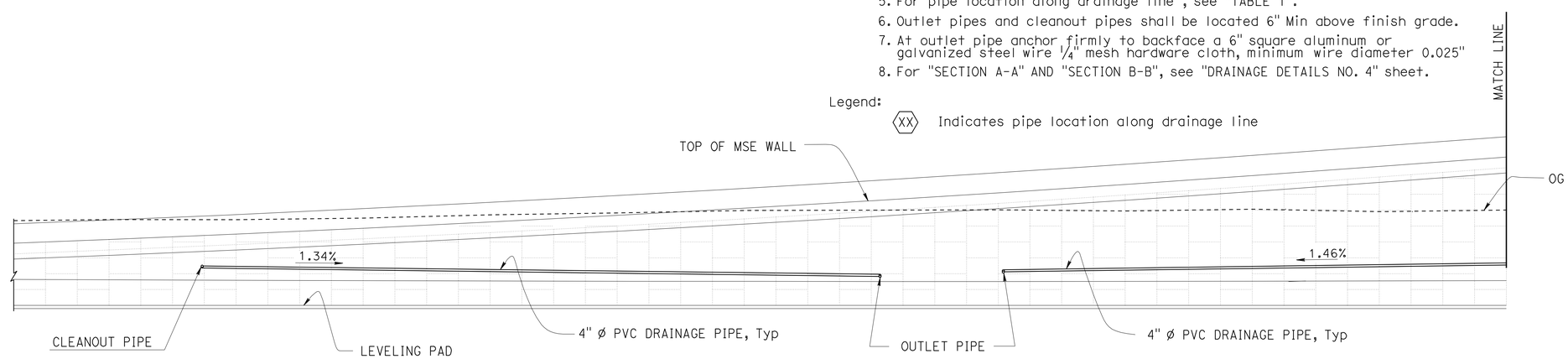

ELEVATION

1" = 10′-0"

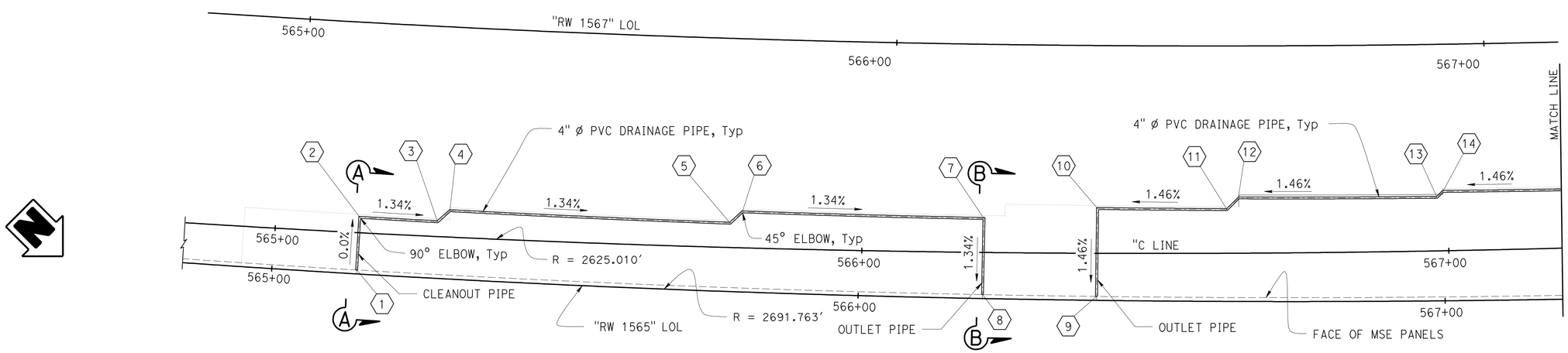

PLAN

1" = 10′-0"

DESIGN	BY Gabriel Galo	CHECKED Shervin Pahlavan	
DETAILS	BY Stan Cholda	CHECKED Shervin Pahlavan	
QUANTITIES	BY Gabriel Galo	CHECKED F. Feng/J. Jauregui	

STATE OF CALIFORNIA DEPARTMENT OF TRANSPORTATION

DIVISION OF ENGINEERING SERVICES STRUCTURE DESIGN DESIGN BRANCH 15

BRIDGE NO. 53E0161 POST MILE 29.8

RETAINING WALL NO. 1565 DRAINAGE DETAILS NO. 1

STRUCTURES DESIGN DETAIL SHEET (ENGLISH) (REV. 09-01-10)

ORIGINAL SCALE IN INCHES FOR REDUCED PLANS 0 1 2 3

UNIT: 3604
PROJECT NUMBER & PHASE: 0700021119
CONTRACT NO.: 07-1218W1

DISREGARD PRINTS BEARING EARLIER REVISION DATES

REVISION DATES 6-06-12 6-06-12 6-06-12 5-31-12

SHEET 21 OF 34

FILE => 53e0161-r-ddet01.dgn

USERNAME => s121614 DATE PLOTTED => 14-JUN-2012 TIME PLOTTED => 05:48

DIST	COUNTY	ROUTE	POST MILES TOTAL PROJECT	SHEET No.	TOTAL SHEETS
07	LA	5	29.4/31.6	820	1931

REGISTERED CIVIL ENGINEER — DATE 2-04-12

5-21-12
PLANS APPROVAL DATE

REGISTERED PROFESSIONAL ENGINEER — Ulysses N. Smpardos — No. 61018 — Exp. 12/31/12 — CIVIL — STATE OF CALIFORNIA

The State of California or its officers or agents shall not be responsible for the accuracy or completeness of electronic copies of this plan sheet.

TABLE 1

DRAINAGE PIPE LOCATION

LOCATION NUMBER	STATION	ELEVATION	LOCATION NUMBER	STATION	ELEVATION	LOCATION NUMBER	STATION	ELEVATION
15	18.667′ LT 567+32.771 "RW 1565" LOL	—	21	23.667′ RT 568+32.768 "RW 1565" LOL	—	27	29.667′ RT 569+43.775 "RW 1565" LOL	—
16	20.667′ RT 567+34.787 "RW 1565" LOL	582.160′	22	25.667′ RT 568+34.787 "RW 1565" LOL	583.604′	28	30.667′ RT 569+44.787 "RW 1565" LOL	585.189′
17	20.667′ RT 567+63.781 "RW 1565" LOL	—	23	25.667′ RT 568+68.777 "RW 1585" LOL	—	29	30.667′ RT 570.71.783 "RW 1565" LOL	—
18	21.667′ RT 567+64.787 "RW 1565" LOL	582.594′	24	26.667′ RT 568+69.787 "RW 1565" LOL	584.109′	30	33.667′ RT 570+74.787 "RW 1565" LOL	587.060′
19	21.667′ RT 567+97.769 "RW 1565" LOL	—	25	26.667′ RT 569+1.754 "RW 1565" LOL	—	31	33.667′ RT 571+45.140 "RW 1565" LOL	588.078′
20	23.667′ RT 567+99.787 "RW 1565" LOL	583.099′	26	29.667′ RT 569+4.787 "RW 1565" LOL	584.613′	32	0.667′ RT 571+45.140 "RW 1565" LOL	—

Notes:

1. At sags in profile of underdrain pipe, install outlet pipe for each direction of flow.
2. Elevations are given at Invert of pipe.
3. Use PVC pipe 4" ø for drainage.
4. Cleanout pipe must be non-perfarated PVC pipe 4" ø.
5. For pipe location along drainage line , see "TABLE 1".

Legend:

(XX) Indicates pipe location along drainage line

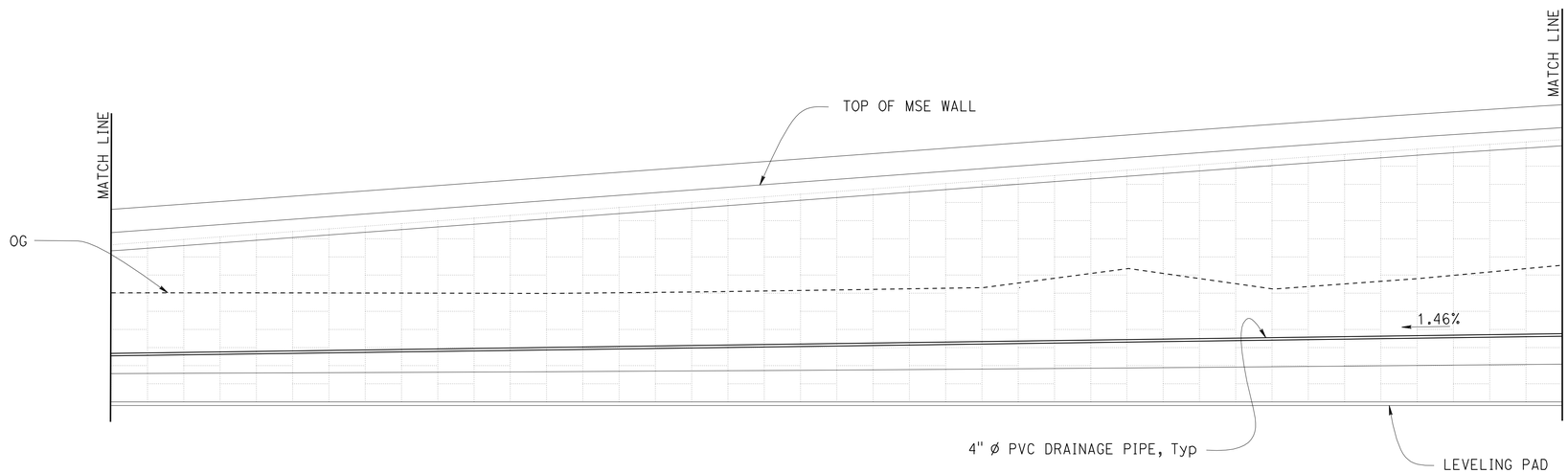

ELEVATION

1" = 10′-0"

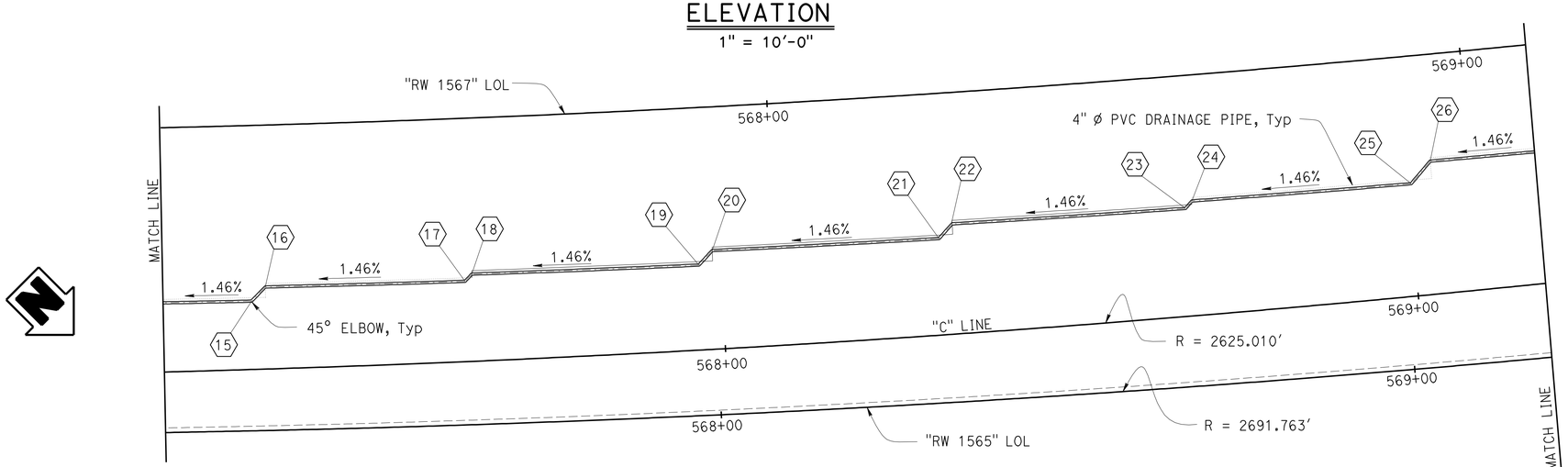

PLAN

1" = 10′-0"

DESIGN	BY Gabriel Galo	CHECKED Shervin Pahlavan	
DETAILS	BY Stan Cholda	CHECKED Shervin Pahlavan	
QUANTITIES	BY Gabriel Galo	CHECKED F. Feng/J. Jauregui	

STATE OF CALIFORNIA
DEPARTMENT OF TRANSPORTATION

DIVISION OF ENGINEERING SERVICES
STRUCTURE DESIGN
DESIGN BRANCH 15

BRIDGE NO. 53E0161
POST MILE 29.8

RETAINING WALL NO. 1565
DRAINAGE DETAILS NO. 2

STRUCTURES DESIGN DETAIL SHEET (ENGLISH) (REV. 09-01-10)

ORIGINAL SCALE IN INCHES FOR REDUCED PLANS 0 1 2 3

UNIT: 3604
PROJECT NUMBER & PHASE: 0700021119
CONTRACT NO.: 07-1218W1

DISREGARD PRINTS BEARING EARLIER REVISION DATES

REVISION DATES: 5-06-12 6-06-12 5-26-12 6-01-12

SHEET 22 OF 34

FILE => 53e0161-r-ddet02.dgn

USERNAME => DATE PLOTTED => 14-JUN-2012 TIME PLOTTED => 05:48

DIST	COUNTY	ROUTE	POST MILES TOTAL PROJECT	SHEET No.	TOTAL SHEETS
07	LA	5	29.4/31.6	821	1931

Ulysses N. Smpardos 2-04-12
REGISTERED CIVIL ENGINEER DATE

5-21-12
PLANS APPROVAL DATE

REGISTERED PROFESSIONAL ENGINEER
Ulysses N. Smpardos
No. 61018
Exp. 12/31/12
CIVIL
STATE OF CALIFORNIA

The State of California or its officers or agents shall not be responsible for the accuracy or completeness of electronic copies of this plan sheet.

Notes:

1. At sags in profile of underdrain pipe, install outlet pipe for each direction of flow.
2. Elevations are given at Invert of pipe.
3. Use PVC pipe 4" ø for drainage.
4. Cleanout pipe must be non-perfarated PVC pipe 4" ø.
5. For pipe location along drainage line , see "TABLE 1". on "DRAINAGE DETAILS NO. 2: sheet.

Legend:

(XX) Indicates pipe location along drainage line

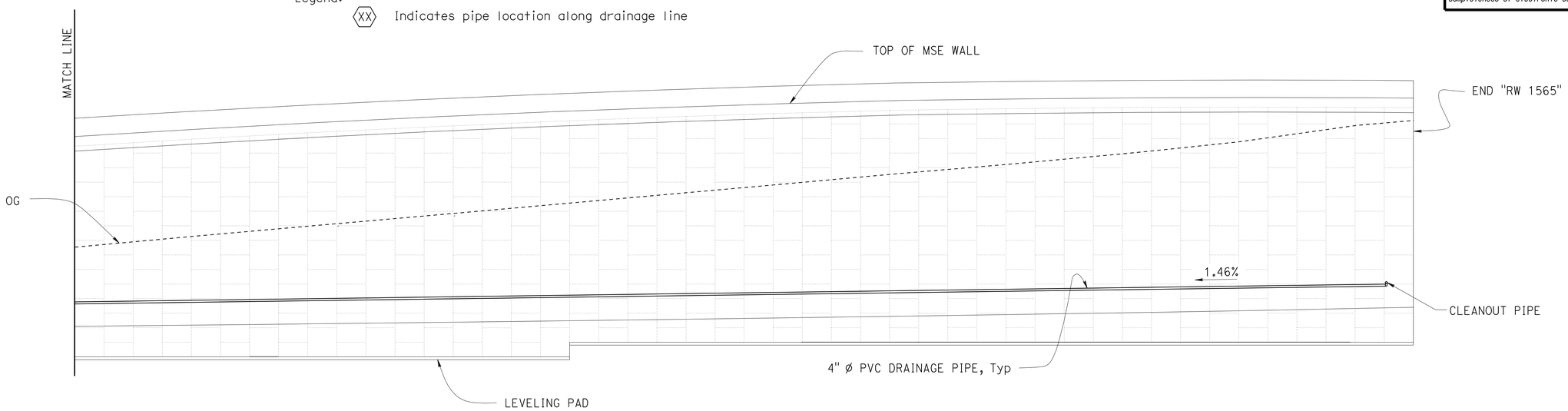

ELEVATION

1" = 10'-0"

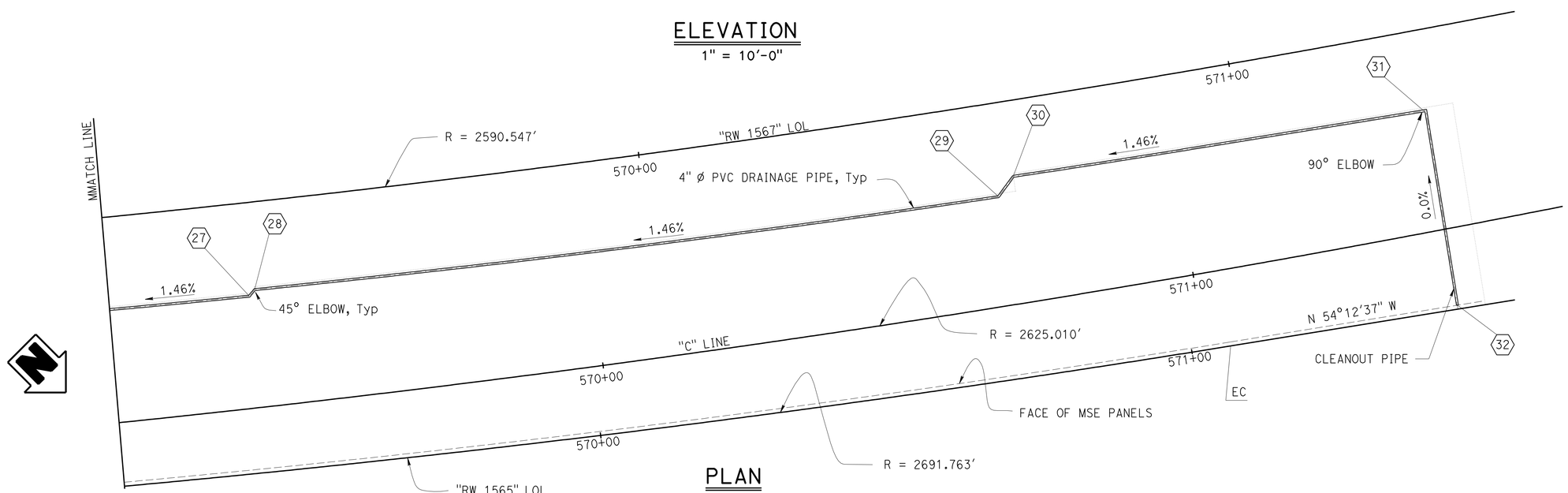

PLAN

1" = 10'-0"

DESIGN	BY Gabriel Galo	CHECKED Shervin Pahlavan	
DETAILS	BY Stan Cholda	CHECKED Shervin Pahlavan	
QUANTITIES	BY Gabriel Galo	CHECKED F. Feng/J. Jauregui	

STATE OF CALIFORNIA
DEPARTMENT OF TRANSPORTATION

DIVISION OF ENGINEERING SERVICES
STRUCTURE DESIGN
DESIGN BRANCH 15

BRIDGE NO. 53E0161
POST MILE 29.8

RETAINING WALL NO. 1565
DRAINAGE DETAILS NO. 3

STRUCTURES DESIGN DETAIL SHEET (ENGLISH) (REV. 09-01-10)

ORIGINAL SCALE IN INCHES FOR REDUCED PLANS 0 1 2 3

UNIT: 3604
PROJECT NUMBER & PHASE: 0700021119
CONTRACT NO.: 07-1218W1

DISREGARD PRINTS BEARING EARLIER REVISION DATES

REVISION DATES: 6-08-12 6-11-12 6-28-12 6-08-12

SHEET 23 OF 34

FILE => 53e0161-r-ddet03.dgn

USERNAME => s121614 DATE PLOTTED => 14-JUN-2012 TIME PLOTTED => 05:48

DIST	COUNTY	ROUTE	POST MILES TOTAL PROJECT	SHEET No.	TOTAL SHEETS
07	LA	5	29.4/31.6	822	1931

Ulysses N. Smpardos 2-04-12
REGISTERED CIVIL ENGINEER DATE

5-21-12
PLANS APPROVAL DATE

REGISTERED PROFESSIONAL ENGINEER
Ulysses N. Smpardos
No. 61018
Exp. 12/31/12
CIVIL
STATE OF CALIFORNIA

The State of California or its officers or agents shall not be responsible for the accuracy or completeness of electronic copies of this plan sheet.

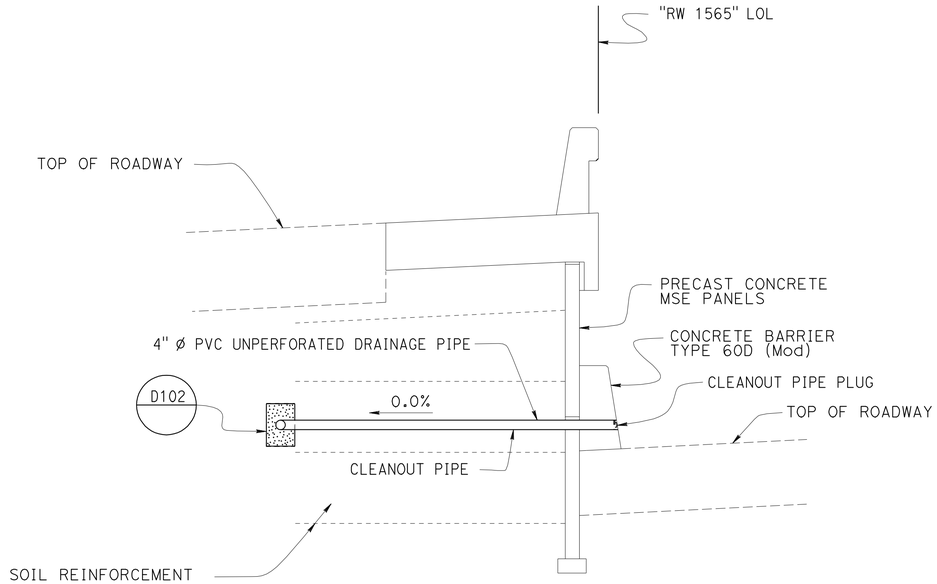

SECTION A-A

3/8" = 1'-0"

CLEANOUT PIPE, Typ

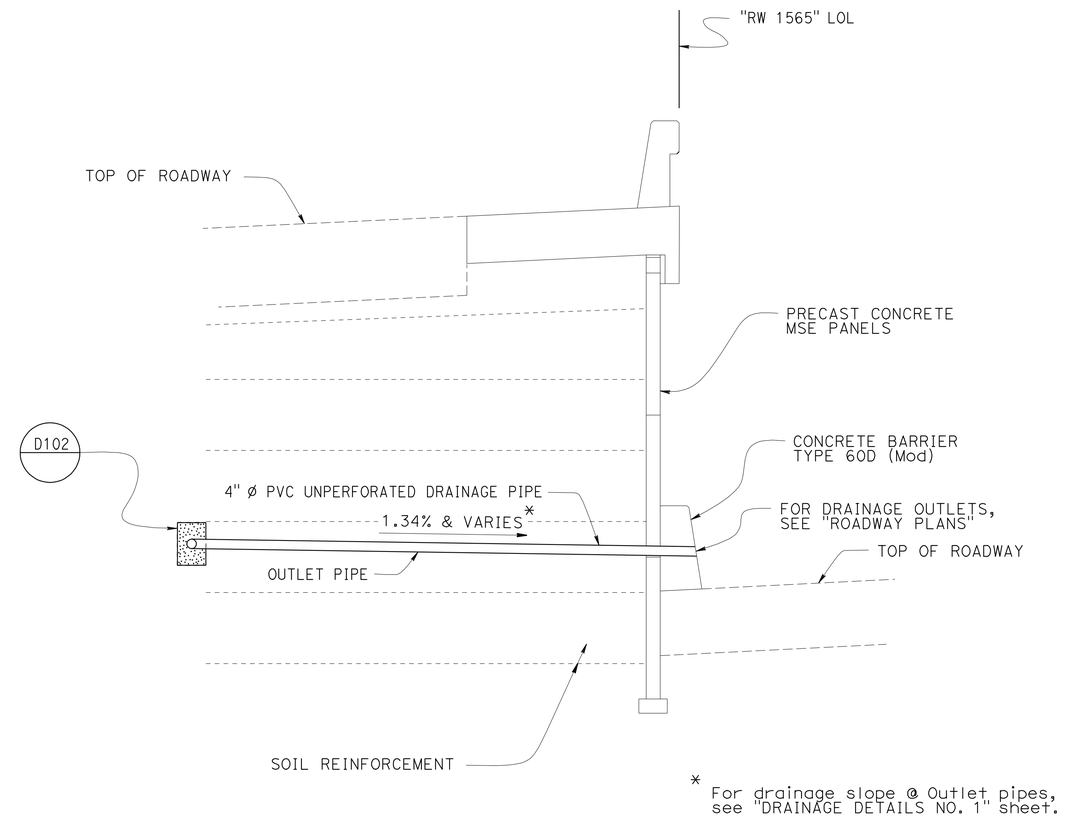

SECTION B-B

3/8" = 1'-0"

OUTLET PIPE, Typ

DESIGN	BY Gabriel Galo	CHECKED Shervin Pahlavan	
DETAILS	BY Stan Cholda	CHECKED Shervin Pahlavan	
QUANTITIES	BY Gabriel Galo	CHECKED F. Feng/J. Jauregui	

STATE OF CALIFORNIA
DEPARTMENT OF TRANSPORTATION

DIVISION OF ENGINEERING SERVICES
STRUCTURE DESIGN
DESIGN BRANCH 15

BRIDGE NO. 53E0161
POST MILE 29.8

RETAINING WALL NO. 1565
DRAINAGE DETAILS NO. 4

STRUCTURES DESIGN DETAIL SHEET (ENGLISH) (REV. 09-01-10)

ORIGINAL SCALE IN INCHES FOR REDUCED PLANS 0 1 2 3

UNIT: 3604
PROJECT NUMBER & PHASE: 0700021119
CONTRACT NO.: 07-1218W1

DISREGARD PRINTS BEARING EARLIER REVISION DATES

REVISION DATES: 6-06-12 5-30-12 6-06-12 5-21-12

SHEET 24 OF 34

FILE => 53e0161-r-ddet04.dgn

USERNAME => s121614 DATE PLOTTED => 14-JUN-2012 TIME PLOTTED => 05:48

DIST	COUNTY	ROUTE	POST MILES TOTAL PROJECT	SHEET No.	TOTAL SHEETS
07	LA	5	29.4/31.6	823	1931

Ulysses N. Smpardos 2-04-12
REGISTERED CIVIL ENGINEER DATE

5-21-12
PLANS APPROVAL DATE

REGISTERED PROFESSIONAL ENGINEER Ulysses N. Smpardos No. 61018 Exp. 12/31/12 CIVIL STATE OF CALIFORNIA

The State of California or its officers or agents shall not be responsible for the accuracy or completeness of electronic copies of this plan sheet.

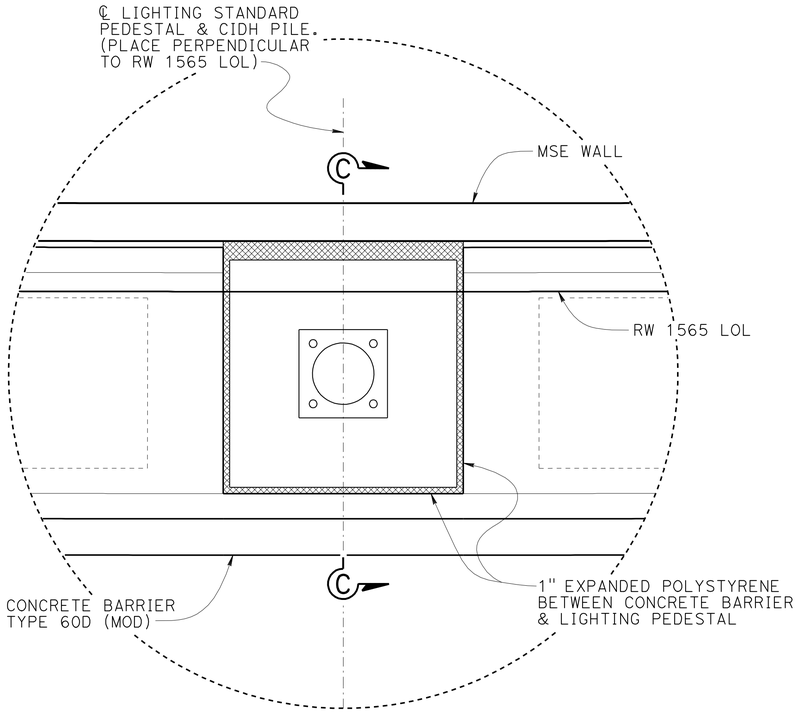

DETAIL A
1" = 1'-0"

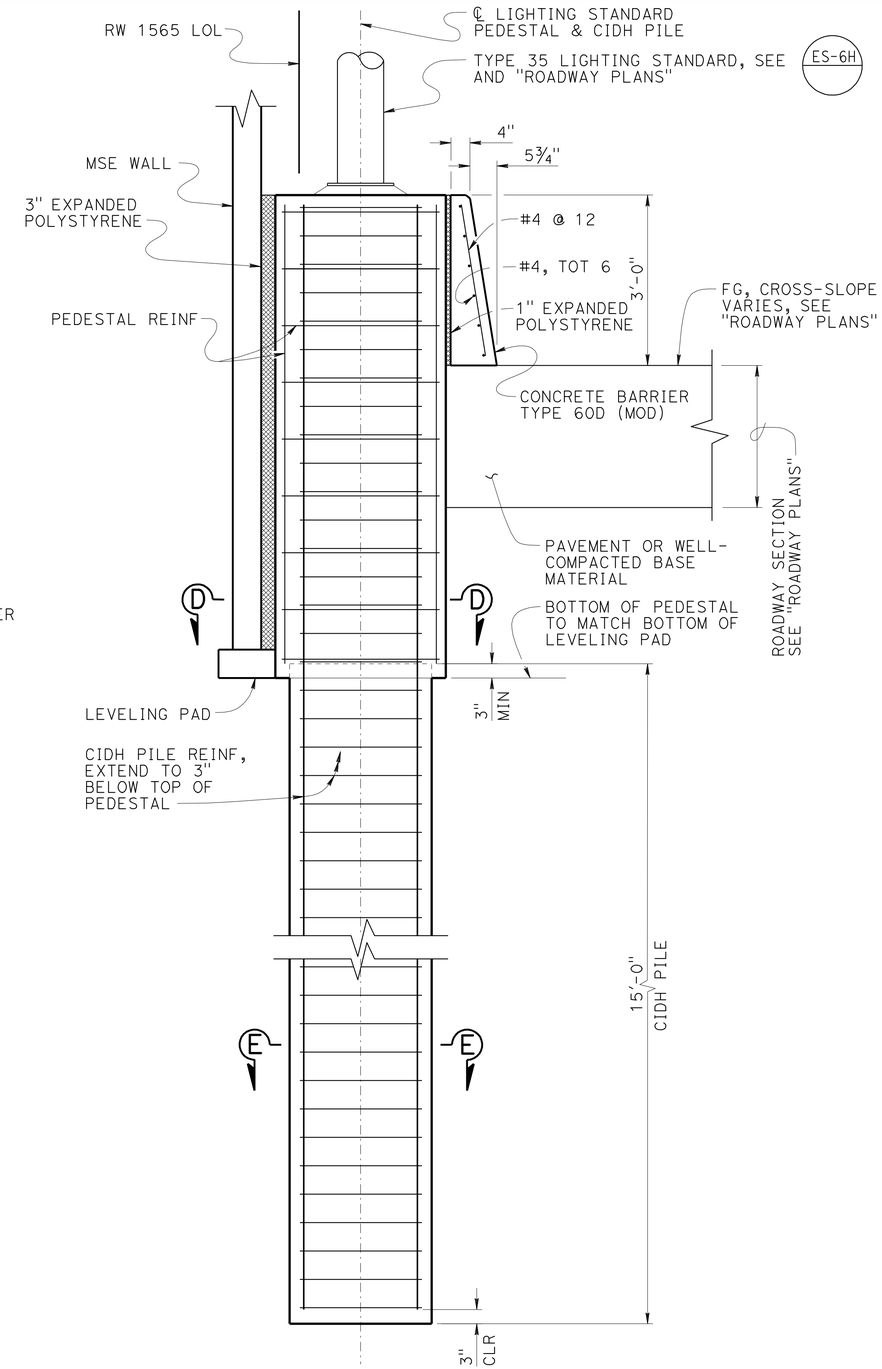

SECTION C-C
¾" = 1'-0"

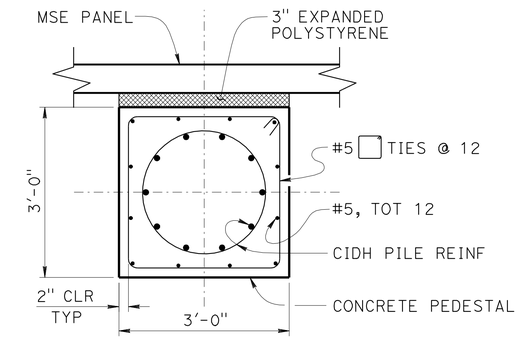

SECTION D-D
¾" = 1'-0"

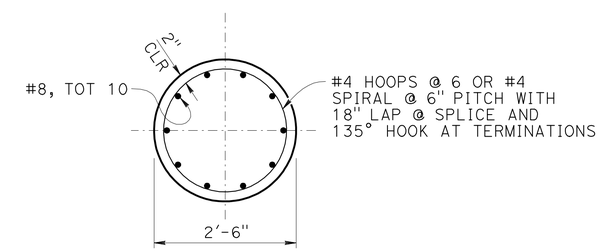

SECTION E-E
¾" = 1'-0"

	BY	CHECKED
DESIGN	A. Herrera	U. Smpardos
DETAILS	T. Trefz	U. Smpardos
QUANTITIES	G. Galo	F.Feng/J. Jauregui

STATE OF CALIFORNIA
DEPARTMENT OF TRANSPORTATION

DIVISION OF ENGINEERING SERVICES
STRUCTURE DESIGN
DESIGN BRANCH 15

BRIDGE NO. 53E0161
POST MILE 29.8

RETAINING WALL NO. 1565
LIGHTING SUPPORT DETAILS

STRUCTURES DESIGN DETAIL SHEET (ENGLISH) (REV. 09-01-10)

ORIGINAL SCALE IN INCHES FOR REDUCED PLANS 0 1 2 3

UNIT: 3604
PROJECT NUMBER & PHASE: 0700021119
CONTRACT NO.: 07-1218W1

DISREGARD PRINTS BEARING EARLIER REVISION DATES

REVISION DATES: 02-28-12 03-27-12 03-28-12 04-21-12

SHEET 25 OF 34

FILE => 53e0161-t-lsdt.dgn

USERNAME => s121614 DATE PLOTTED => 22-MAY-2012 TIME PLOTTED => 07:34

DIST	COUNTY	ROUTE	POST MILES TOTAL PROJECT	SHEET No.	TOTAL SHEETS
07	LA	5	29.4/31.6	824	1931

REGISTERED CIVIL ENGINEER — DATE 2-04-12

5-21-12
PLANS APPROVAL DATE

REGISTERED PROFESSIONAL ENGINEER — Ulysses N. Smpardos — No. 61018 — Exp. 12/31/12 — CIVIL — STATE OF CALIFORNIA

The State of California or its officers or agents shall not be responsible for the accuracy or completeness of electronic copies of this plan sheet.

DESIGN DATA

DESIGN: AASHTO LRFD Bridge Design Specifications, 4th Edition with California Amendments.

WS: 33 psf on sound wall

F_t : 54 kips on barrier

EQE: $k_h = 0.2$
$k_v = 0.0$

REINFORCED CONCRETE: f'c = 3600 psi
fy = 60 ksi
n = 8

③ NOTES:

1. Clearance to reinforcing steel in concrete barrier to be 1".
2. Not all barrier reinforcement shown.
3. No expansion joints in concrete barrier or barrier slab within wall limits.
4. Specific concrete barrier to be used is shown elsewhere in Project Plans.
5. Minimum slab length: 40 ft

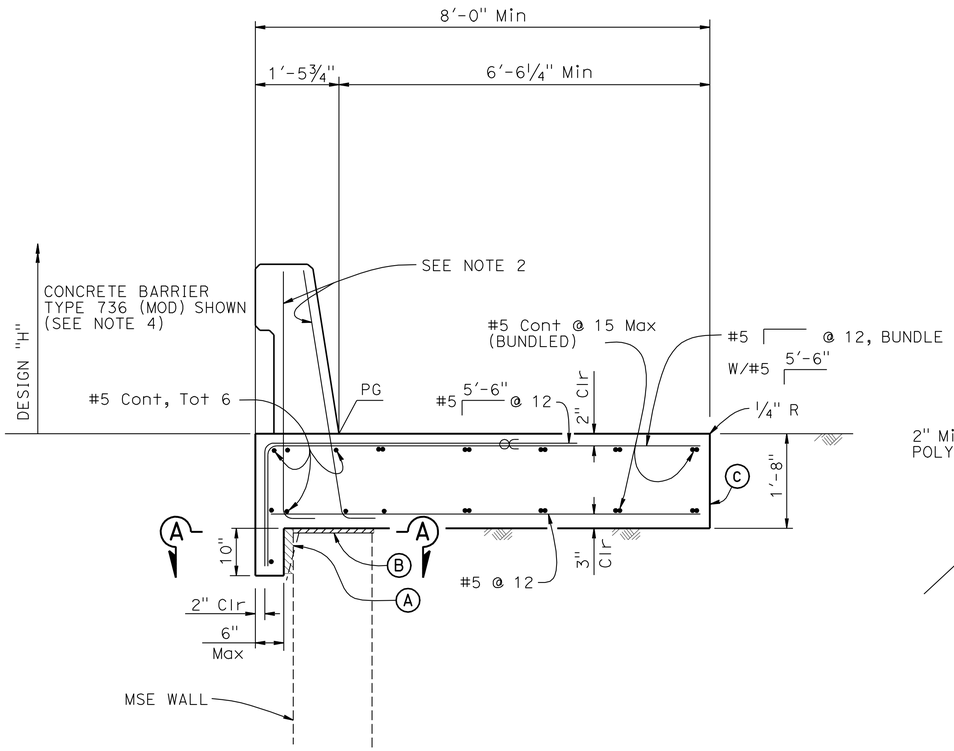

② CONCRETE BARRIER SLAB

¾" = 1'-0"

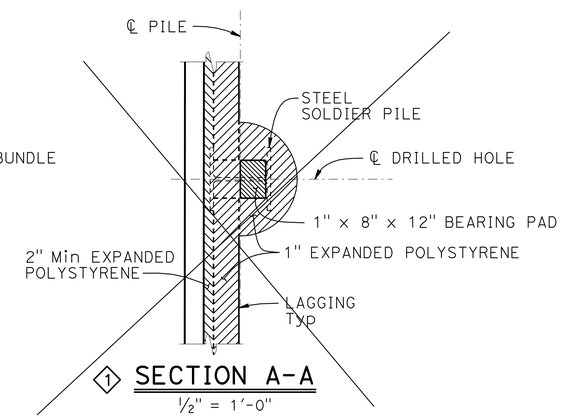

① SECTION A-A

½" = 1'-0"

(For Soldier Pile Wall only)

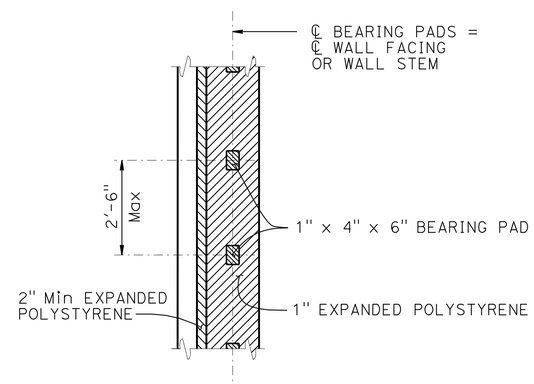

SECTION A-A

½" = 1'-0"

(For all other Earth Retaining Systems)

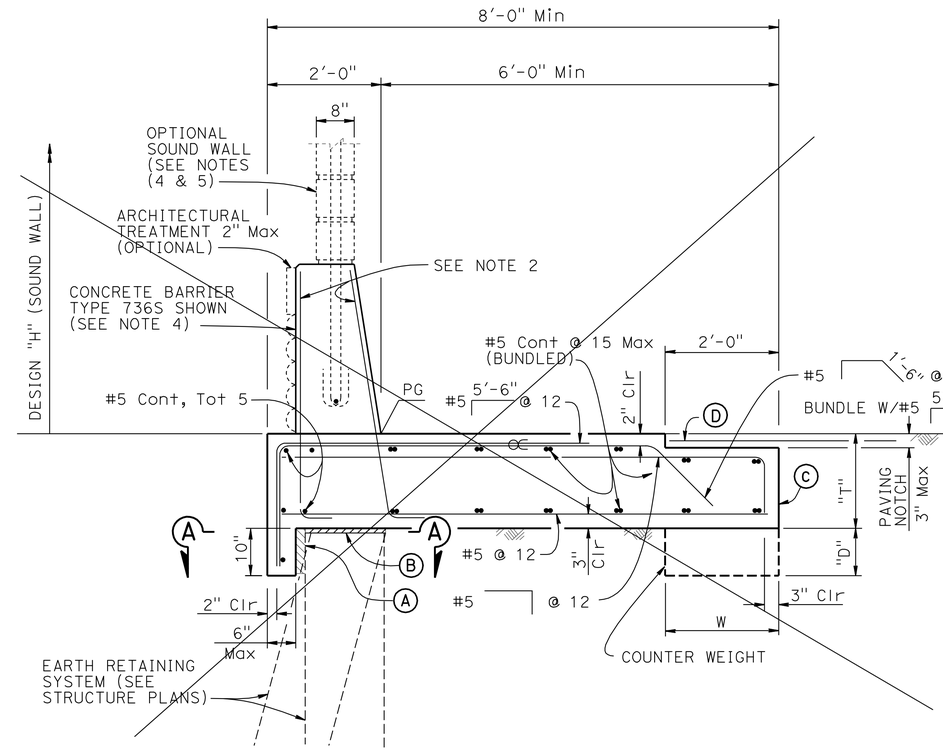

① CONCRETE BARRIER SLAB WITH PAVING NOTCH

¾" = 1'-0"

① BARRIER SLAB DIMENSIONS

DESIGN "H" OF SOUND WALL	NO SW	12'-4"	14'-4"	16'-4"
BARRIER TYPE	732 736 742	736 S	736 S	736 S
T	1'-8"	1'-8"	2'-0"	2'-0"
W	N/A	N/A	N/A	2'-0"
D	N/A	N/A	N/A	0'-9"

NOTES:

Ⓐ 2" Min Expanded polystyrene

Ⓑ 1" Expanded Polystyrene on MSE and concrete stem walls, See "SECTION A-A" for Soldier PIle Walls

Ⓒ Contact joint

~~Ⓓ 4'-0" wide pavement reinforcing fabric~~

∝ Indicates bundled bars

STANDARD DRAWING

FILE NO. xs12-090

APPROVAL DATE January 2012

① Deleted Detail ② Modified Detail ③ Modified Notes

STATE OF CALIFORNIA DEPARTMENT OF TRANSPORTATION

DIVISION OF ENGINEERING SERVICES

BRIDGE NO. 53E0161

POST MILE 29.8

RETAINING WALL NO. 1565

CONCRETE BARRIER SLAB DETAILS

DS OSD 2147A (ENGLISH STANDARD DRAWING "XS" BORDER REV. (02-02-11)

ORIGINAL SCALE IN INCHES FOR REDUCED PLANS 0 1 2 3

UNIT: 3604
PROJECT NUMBER & PHASE: 0700021119
CONTRACT NO.: 07-1218W1

DISREGARD PRINTS BEARING EARLIER REVISION DATES

REVISION DATES: 03-07-12 06-06-12 03-29-12 04-11-12

SHEET 26 OF 34

FILE => 53e0161-u-csd.dgn

USERNAME => s12161d DATE PLOTTED => 14-JUN-2012 TIME PLOTTED => 05:48

DIST	COUNTY	ROUTE	POST MILES TOTAL PROJECT	SHEET No.	TOTAL SHEETS
07	LA	5	29.4/31.6	825	1931

REGISTERED CIVIL ENGINEER — DATE 2-04-12

5-21-12
PLANS APPROVAL DATE

REGISTERED PROFESSIONAL ENGINEER — Ulysses N. Smpardos — No. 61018 — Exp. 12/31/12 — CIVIL — STATE OF CALIFORNIA

The State of California or its officers or agents shall not be responsible for the accuracy or completeness of electronic copies of this plan sheet.

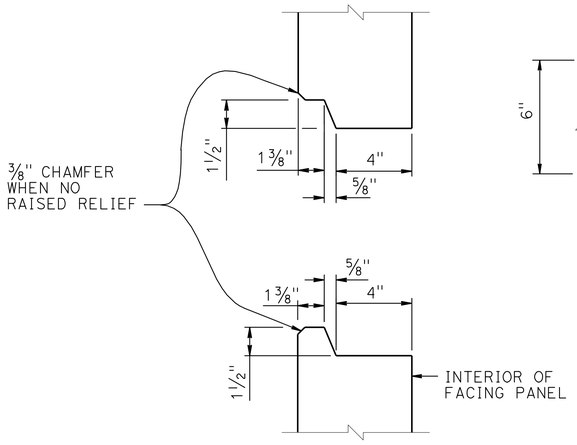

HORIZONTAL JOINT DETAIL

3" = 1'-0"

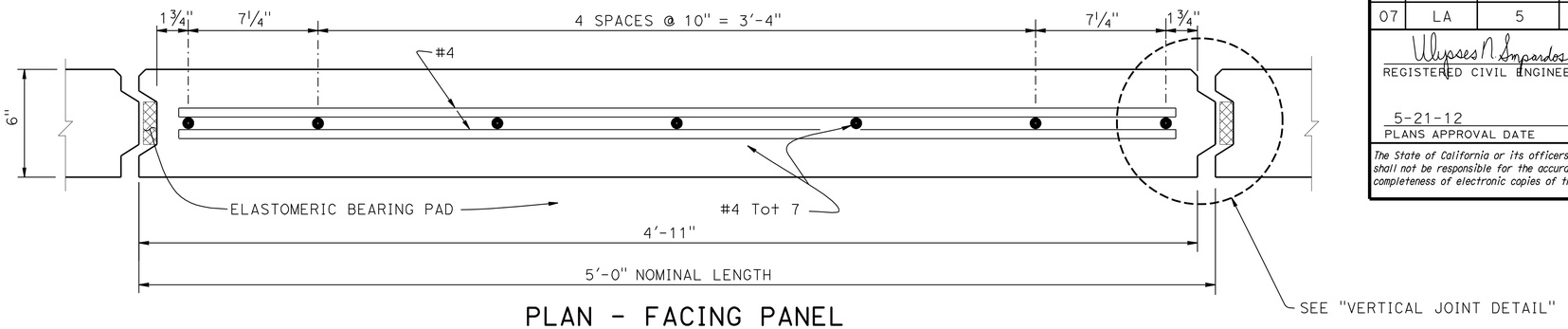

PLAN - FACING PANEL

3" = 1'-0"

NOTES:

1. Architectural treatment not shown
2. Place reinforced elastomeric bearing pads in all of the panel joints between the panels. Place one in each vertical joint where the horizontal joints intersect. Place two per panel in each horizontal joint:
   3/4" x 2 3/8" x 6" for vertical joints
   3/4" x 4" x 6" for horizontal joints
3. Bond a strip of filter fabric, 1'-0" wide, over the full length of all panel joints
4. Top layer of welded wire mats attached parallel to top of panel when top of wall is angled or curved as shown elsewhere in "STRUCTURE PLANS"
5. Eliminate mid level mat when closer than 6" to top mat, continue variable dimension between remaining mats

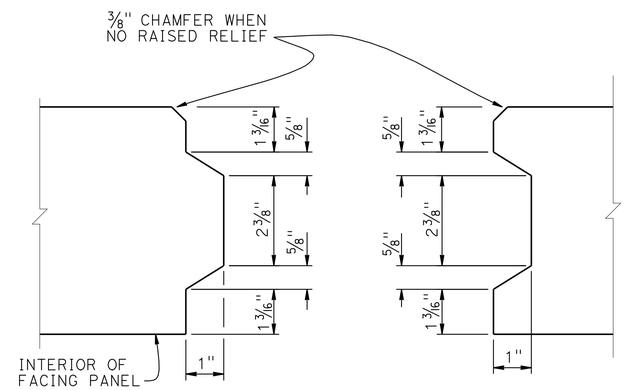

VERTICAL JOINT DETAIL

6" = 1'-0"

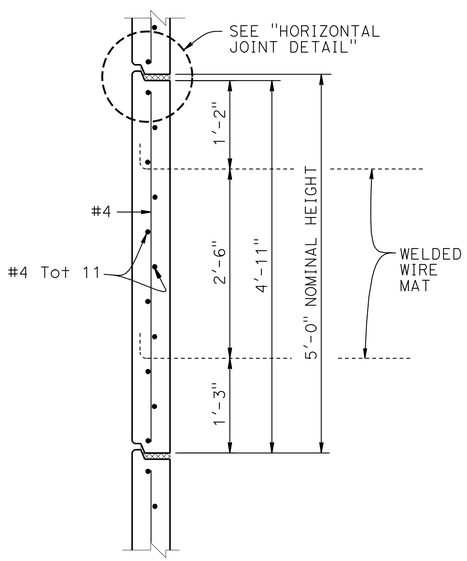

INTERMEDIATE PANEL

1" = 1'-0"

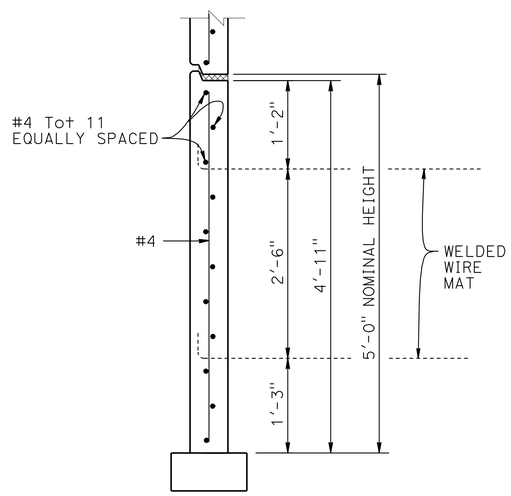

BOTTOM PANEL

1" = 1'-0"

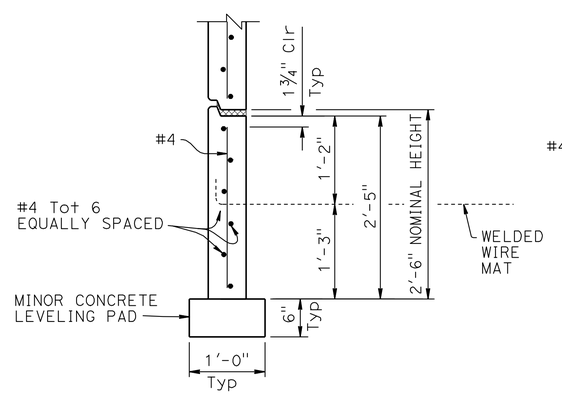

BOTTOM HALF PANEL

1" = 1'-0"

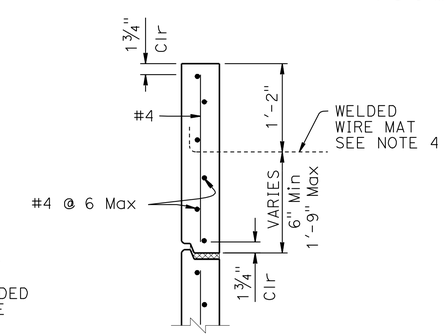

TOP HALF PANEL

1" = 1'-0"

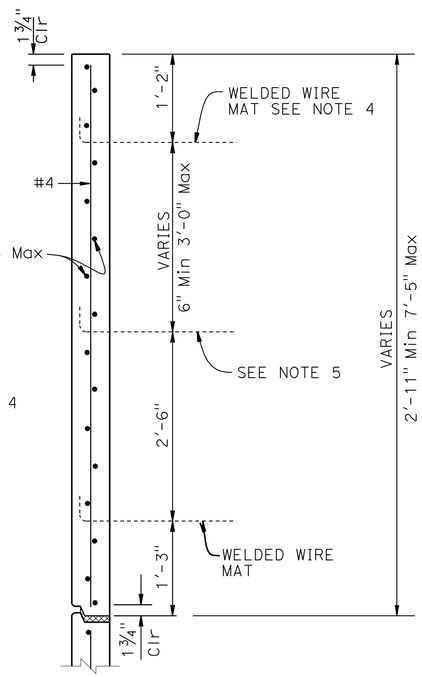

TOP PANEL WITH MULTIPLE MATS

1" = 1'-0"

STANDARD DRAWING

FILE NO. xs13-020-1

APPROVAL DATE January 2012

STATE OF CALIFORNIA
DEPARTMENT OF TRANSPORTATION

DIVISION OF ENGINEERING SERVICES

BRIDGE NO. 53E0161
POST MILE 29.8

RETAINING WALL 1565
MECHANICALLY STABILIZED EMBANKMENT
DETAILS NO. 1

DS OSD 2147A (ENGLISH STANDARD DRAWING "XS" BORDER REV. (02-02-11)

ORIGINAL SCALE IN INCHES FOR REDUCED PLANS 0 1 2 3

UNIT: 3604
PROJECT NUMBER & PHASE: 0700021119
CONTRACT NO.: 07-1218W1

DISREGARD PRINTS BEARING EARLIER REVISION DATES

REVISION DATES 03-19-12

SHEET 27 OF 34

FILE => 53e0161-x-xs13-020-1.dgn

USERNAME => s12614 DATE PLOTTED => 22-MAY-2012 TIME PLOTTED => 07:34

DIST	COUNTY	ROUTE	POST MILES TOTAL PROJECT	SHEET No.	TOTAL SHEETS
07	LA	5	29.4/31.6	826	1931

Ulysses N. Smpardos 2-04-12
REGISTERED CIVIL ENGINEER DATE

5-21-12
PLANS APPROVAL DATE

REGISTERED PROFESSIONAL ENGINEER Ulysses N. Smpardos No. 61018 Exp. 12/31/12 CIVIL STATE OF CALIFORNIA

The State of California or its officers or agents shall not be responsible for the accuracy or completeness of electronic copies of this plan sheet.

GENERAL NOTES
LOAD & RESISTANCE FACTOR DESIGN

DESIGN: AASHTO LRFD Bridge Design Specifications, 4th Edition with California Amendments

LIVE LOAD: Surcharge = 240 lb/ft^2

SOIL PARAMETERS:

Internal design ϕ = 34°, γ = 120 lb/ft^3

External design ϕ(Retained Backfill) = 30°, γ = 120 lb/ft^3

ϕ(Foundation) = 30°

K_h = 0.2

PRECAST CONCRETE PANELS:

f'c = 4,000 psi (Concrete compressive strength at 28 days)

fy = 60,000 psi (Yield strength of reinforcement)

SOIL REINFORCEMENT:

Welded wire mats: fy = 65,000 psi (Yield strength)

Coupler: fy = 36,000 psi (Yield strength)

Corrosion rate = 1.1 mils/year

REINFORCED CONCRETE:

f'c = 3,600 psi, except as noted

(Concrete compressive strength at 28 days)

fy = 60,000 psi (Yield strength of reinforcement)

MSE = Mechanically Stabilized Embankment

NOTES:

(A) Distance as required to permit coupler to be swaged

(B) Place #4 x 3'-2", centered on connector mat, but not welded to it

(C) All transverse wires size W15 at various spacing as shown elsewhere in plans

(D) Size of longitudinal wires shown elsewhere in plans

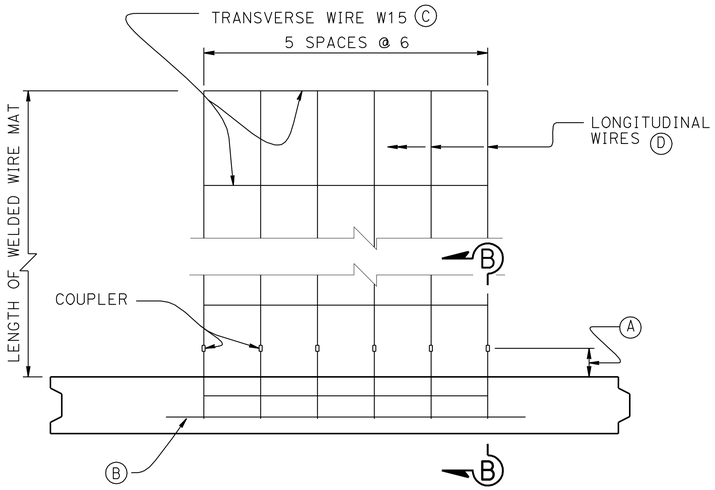

PLAN OF PANEL WITH SIX WIRE MAT

1½" = 1'-0"

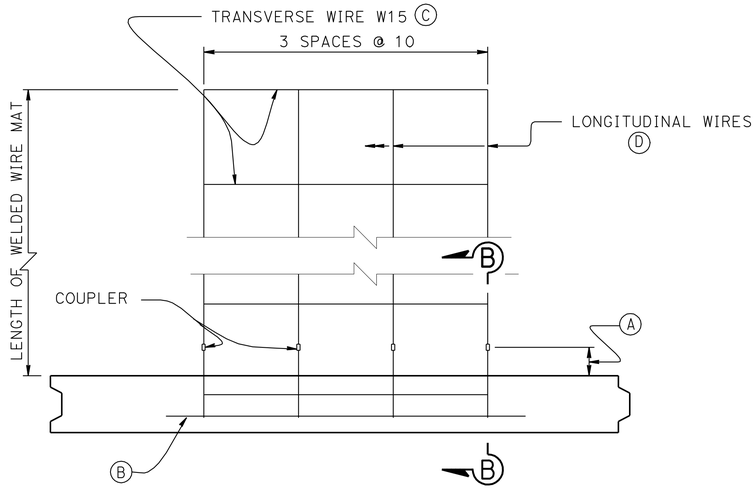

PLAN OF PANEL WITH FOUR WIRE MAT

1½" = 1'-0"

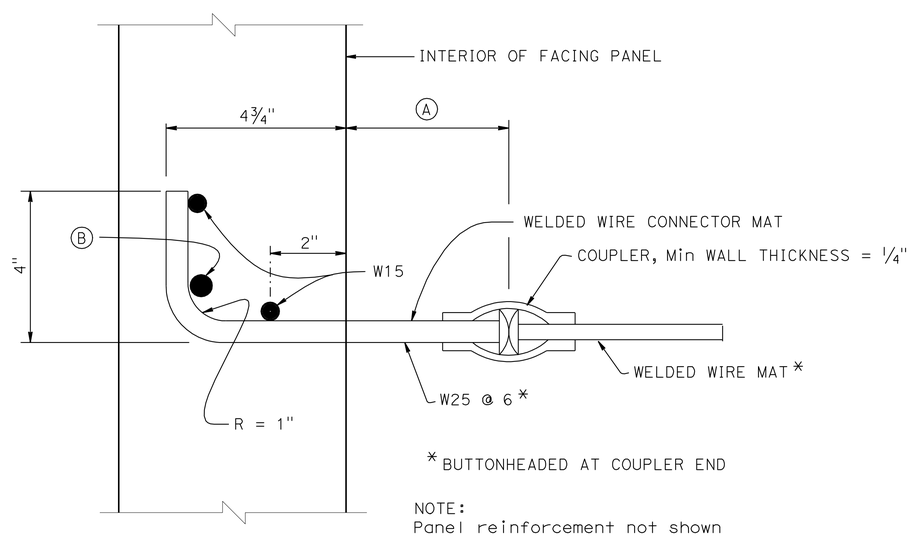

* BUTTONHEADED AT COUPLER END

NOTE:
Panel reinforcement not shown

SECTION B-B

6" = 1'-0"

STANDARD DRAWING

FILE NO. xs13-020-2

APPROVAL DATE January 2012

STATE OF CALIFORNIA DEPARTMENT OF TRANSPORTATION

DIVISION OF ENGINEERING SERVICES

BRIDGE NO. 53E0161

POST MILE 29.8

RETAINING WALL 1565

MECHANICALLY STABILIZED EMBANKMENT

DETAILS NO. 2

DS OSD 2147A (ENGLISH STANDARD DRAWING "XS" BORDER REV. (02-02-11)

ORIGINAL SCALE IN INCHES FOR REDUCED PLANS 0 1 2 3

UNIT: 3604
PROJECT NUMBER & PHASE: 0700021119 CONTRACT NO.: 07-1218W1

DISREGARD PRINTS BEARING EARLIER REVISION DATES

REVISION DATES

SHEET 28 OF 34

FILE => 53e0161-x-xs13-020-2.dgn

USERNAME => s121614 DATE PLOTTED => 22-MAY-2012 TIME PLOTTED => 07:35

DIST	COUNTY	ROUTE	POST MILES TOTAL PROJECT	SHEET No.	TOTAL SHEETS
07	LA	5	29.4/31.6	827	1931

REGISTERED CIVIL ENGINEER 2-04-12 DATE

5-21-12
PLANS APPROVAL DATE

REGISTERED PROFESSIONAL ENGINEER Ulysses N. Smpardos No. 61018 Exp. 12/31/12 CIVIL STATE OF CALIFORNIA

The State of California or its officers or agents shall not be responsible for the accuracy or completeness of electronic copies of this plan sheet.

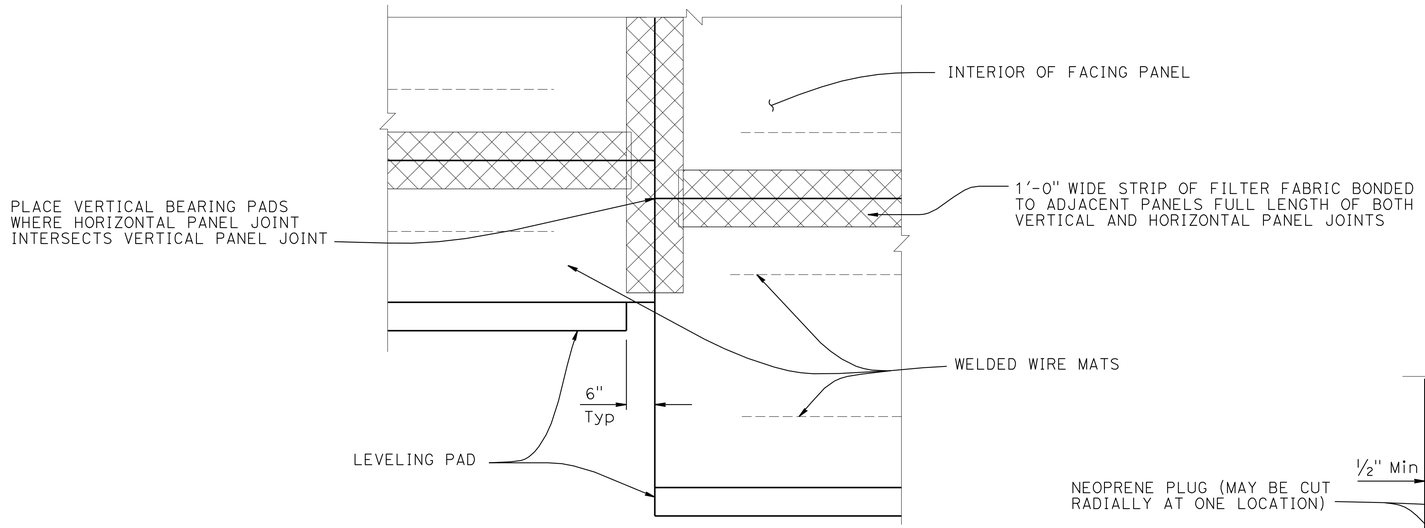

PART ELEVATION

3/4" = 1'-0"

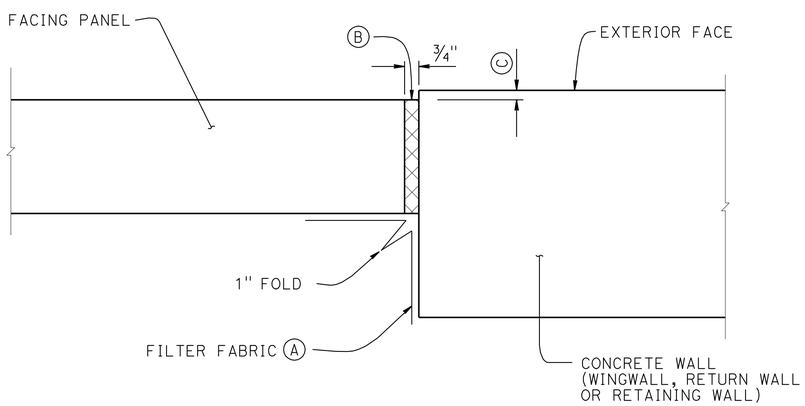

MSE FACING PANEL-TO-CONCRETE WALL JOINT DETAIL

3" = 1'-0"

NOTES:

(A) Bond a strip of filter fabric, 1'-6" wide, to back of MSE panels and the adjacent concrete wall for entire length of vertical joint

(B) Bond expansion joint material to the concrete wall

(C) Offset between face of MSE facing panel and face of the concrete wall as dictated by location of layout lines shown elsewhere in "STRUCTURE PLANS"

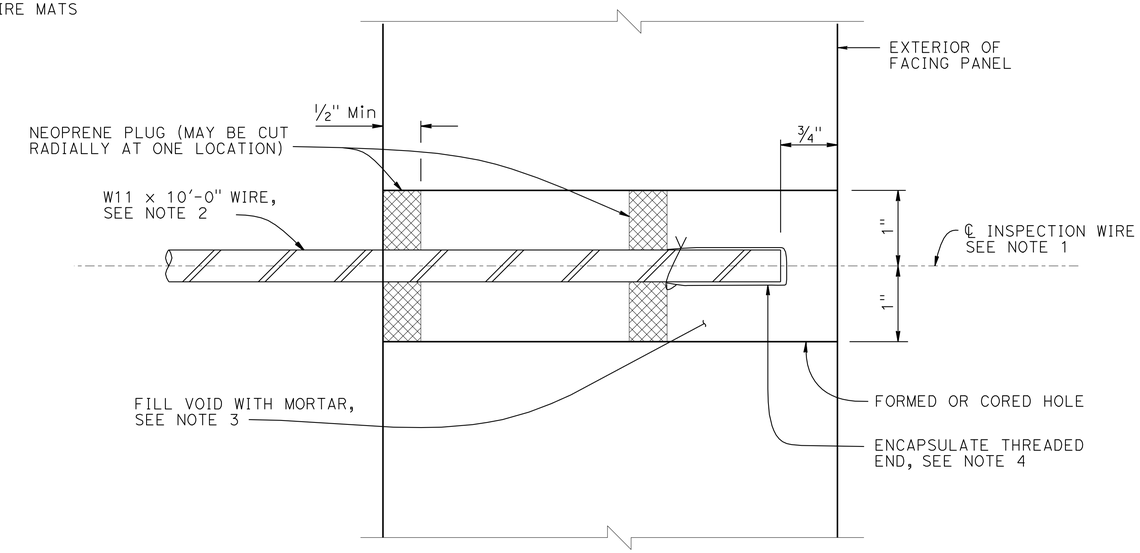

SECTION THRU INSPECTION WIRE

NO SCALE

NOTES:

1. Center inspection wire in facing panel.
2. Fabricated inspection wire from W11 wire representative of the welded wire mats, with 3/8" ø 16 UNC threads for at least 1 1/2" of one end.
3. Place inspection wire horizontal and perpendicular to the wall panel prior to backfilling.
4. Encapsulate threaded end with corrosion inhibiting mastic, vinyl covering, and secure with plastic tie.

UNC = Unified Coarse Threads

RETAINING WALL 1565

MECHANICALLY STABILIZED EMBANKMENT

DETAILS NO. 3

STANDARD DRAWING

FILE NO. xs13-020-3

APPROVAL DATE January 2012

STATE OF CALIFORNIA DEPARTMENT OF TRANSPORTATION

DIVISION OF ENGINEERING SERVICES

BRIDGE NO. 53E0161

POST MILE 29.8

DS OSD 2147A (ENGLISH STANDARD DRAWING "XS" BORDER REV. (02-02-11)

ORIGINAL SCALE IN INCHES FOR REDUCED PLANS 0 1 2 3

UNIT: 3604
PROJECT NUMBER & PHASE: 0700021119
CONTRACT NO.: 07-1218W1

DISREGARD PRINTS BEARING EARLIER REVISION DATES 03-19-12

REVISION DATES

SHEET 29 OF 34

FILE => 53e0161-x-xs13-020-3.dgn

USERNAME => s12614 DATE PLOTTED => 22-MAY-2012 TIME PLOTTED => 07:35

DIST	COUNTY	ROUTE	POST MILES TOTAL PROJECT	SHEET No.	TOTAL SHEETS
07	LA	5	29.4/31.6	828	1931

REGISTERED CIVIL ENGINEER — DATE 2-04-12

5-21-12
PLANS APPROVAL DATE

REGISTERED PROFESSIONAL ENGINEER — Ulysses N. Smpardos — No. 61018 — Exp. 12/31/12 — CIVIL — STATE OF CALIFORNIA

The State of California or its officers or agents shall not be responsible for the accuracy or completeness of electronic copies of this plan sheet.

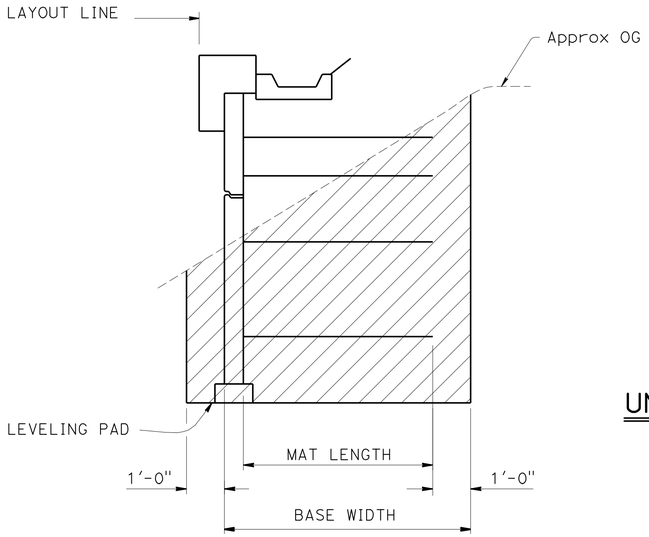

LIMITS OF EXCAVTION

½" = 1'-0"

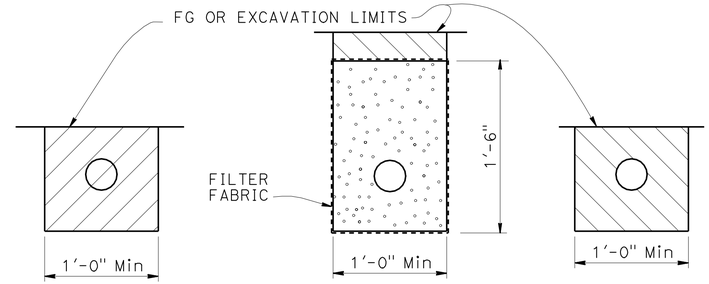

OUTLET PIPE — CLEANOUT PIPE

EXCAVATION — BACKFILL

UNPERFORATED OUTLET OR CLEAN OUT PIPE FOR UNDERDRAIN

NO SCALE

NOTES:

1. Limits to FG except to GP when in roadway section
2. Locate underdrain behind bottom level of welded wire mats wherever possible, or at elevation needed to drain, as shown elsewhere on plans
3. Place perforated pipe underdrain of diameter shown elsewhere on plans or minimum 4" ø smoothed wall PVC or minimum 8" ø corrugated HDPE
4. Maximum spacing of outlet pipe is 200 feet
5. At sags in profile of underdrain, install outlet pipe for each direction of flow

LEGEND:

- Limits of Structure Excavation
- Limits of Structure Backfill
- Limits of Permeable Material

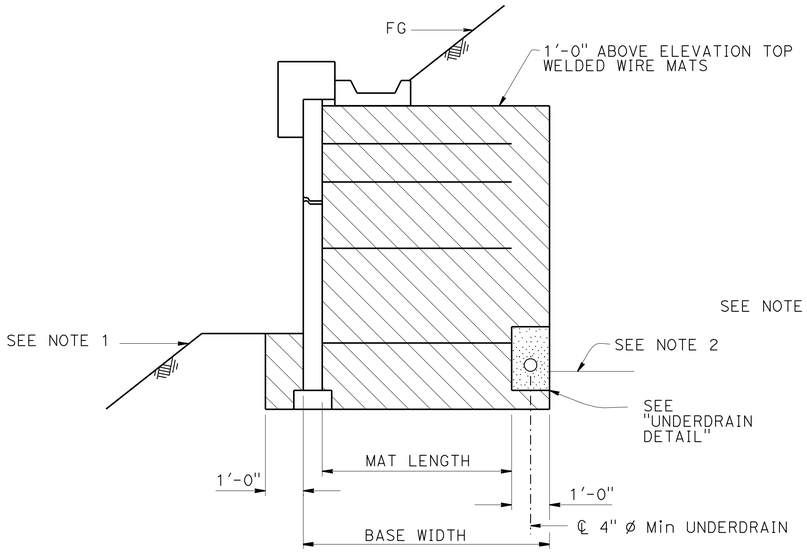

SLOPING FINISHED SURFACE

½" = 1'-0"

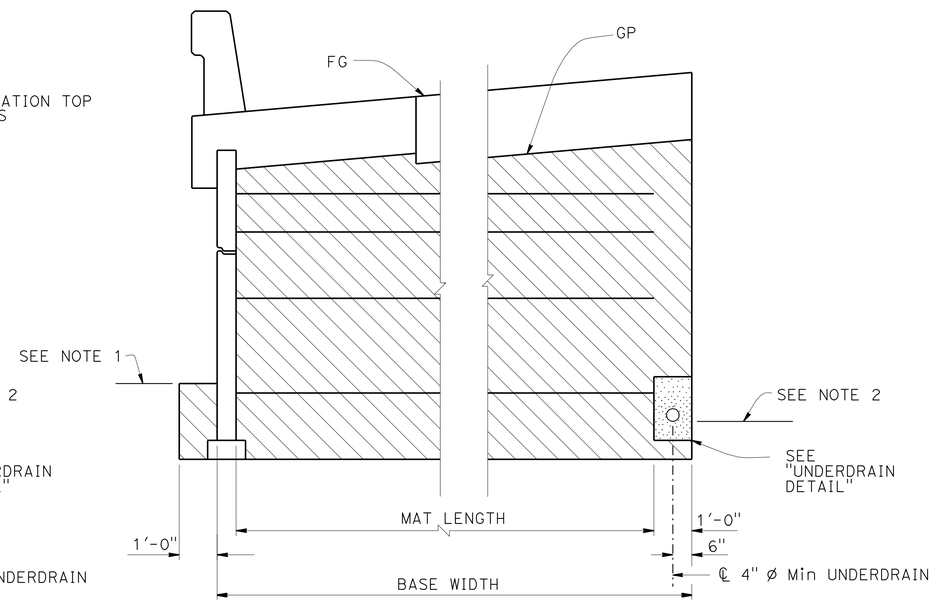

ROADWAY SECTION

½" = 1'-0"

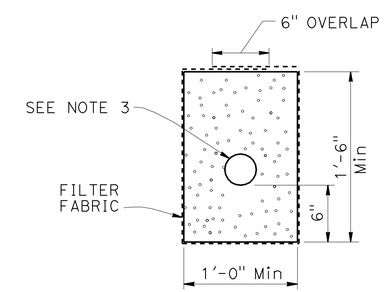

UNDERDRAIN DETAIL

LIMITS OF BACKFILL

STANDARD DRAWING

FILE NO. xs13-020-6 — APPROVAL DATE January 2012

STATE OF CALIFORNIA DEPARTMENT OF TRANSPORTATION

DIVISION OF ENGINEERING SERVICES

BRIDGE NO. 53E0161 — POST MILE 29.8

RETAINING WALL 1565
MECHANICALLY STABILIZED EMBANKMENT
DETAILS NO. 6

DS OSD 2147A (ENGLISH STANDARD DRAWING "XS" BORDER REV. (02-02-11)

ORIGINAL SCALE IN INCHES FOR REDUCED PLANS 0 1 2 3

UNIT: 3604
PROJECT NUMBER & PHASE: 0700021119
CONTRACT NO.: 07-1218W1

DISREGARD PRINTS BEARING EARLIER REVISION DATES

REVISION DATES: 04-24-12

SHEET 30 OF 34

FILE => 53e0161-x-xs13-020-6.dgn

USERNAME => s121614 DATE PLOTTED => 22-MAY-2012 TIME PLOTTED => 07:35

DIST	COUNTY	ROUTE	POST MILES TOTAL PROJECT	SHEET No	TOTAL SHEETS
07	LA	5	29.4/31.6	829	1931

REGISTERED GEOTECHNICAL ENGINEER 1-18-12

5-21-12
PLANS APPROVAL DATE

REGISTERED PROFESSIONAL ENGINEER Deepa Wathugala No. 2674 Exp. 9-30-12 GEOTECHNICAL STATE OF CALIFORNIA

The State of California or its officers or agents shall not be responsible for the accuracy or completeness of electronic copies of this plan sheet.

This LOTB sheet was prepared in accordance with the Caltrans Soil & Rock Logging, Classification, & Presentation Manual (2010 Edition).

BENCH MARK

BM PRHV 1005 Elev +617.66′
Fd Lead and Tack on TOC of the median island of Burbank Blvd O.C. Fwy 5, +/- 13′ E of the W end of the median island.
NAVD 88

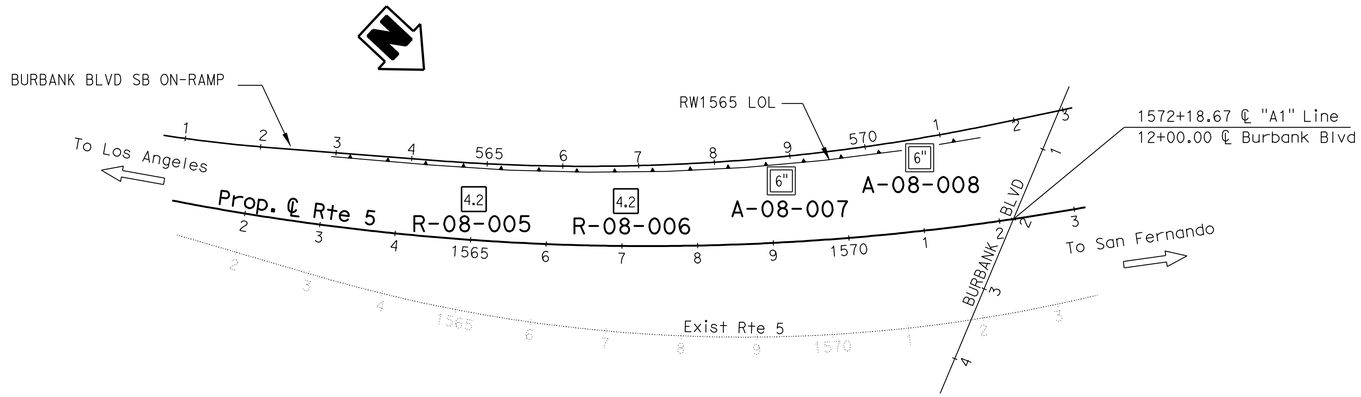

PLAN

1" = 100′

Note: Ground water was not encountered in borings R-08-005 and R-08-006.

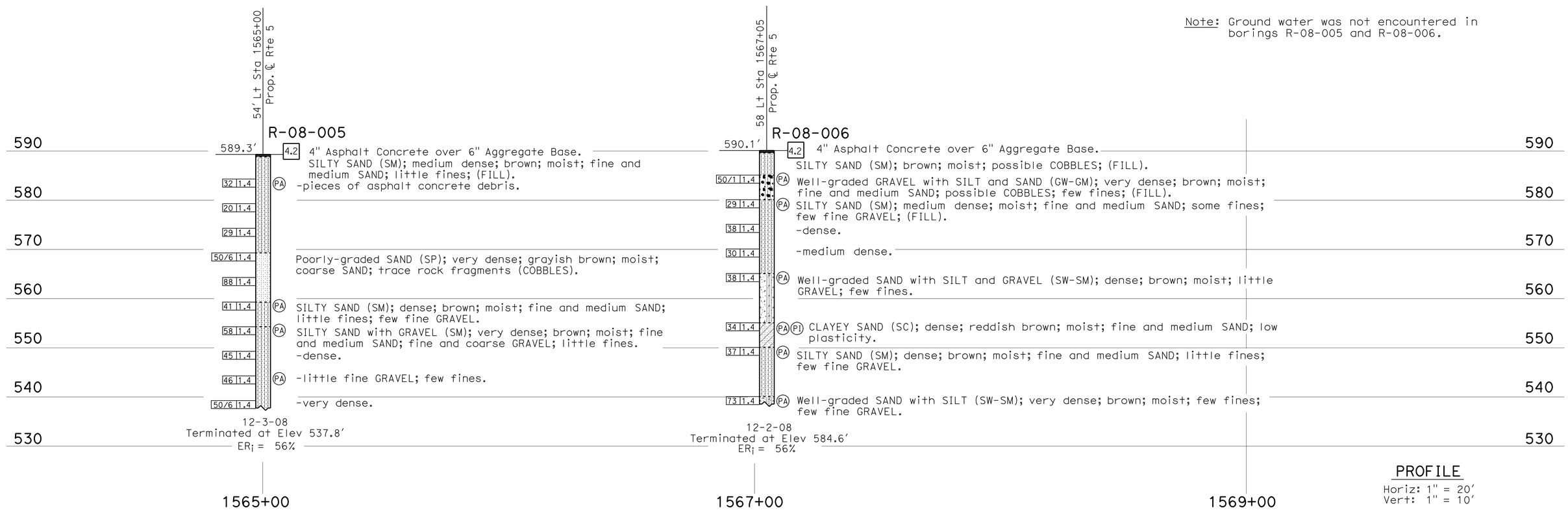

PROFILE

Horiz: 1" = 20′
Vert: 1" = 10′

ENGINEERING SERVICES	MATERIALS AND GEOTECHNICAL SERVICES	STATE OF CALIFORNIA DEPARTMENT OF TRANSPORTATION	DIVISION OF ENGINEERING SERVICES STRUCTURE DESIGN DESIGN BRANCH 15	BRIDGE NO. 53E0161 POST MILE 29.62/29.78	RETAINING WALL 1565 LOG OF TEST BORINGS 1 OF 4
FUNCTIONAL SUPERVISOR NAME: C. Liu	DRAWN BY: C. Christian, I.G-Remmen CHECKED BY: F. Gerami	FIELD INVESTIGATION BY: C. Lee			

OGS CIVIL LOG OF TEST BORINGS SHEET

ORIGINAL SCALE IN INCHES FOR REDUCED PLANS 0 1 2 3

UNIT: 3643
PROJECT NUMBER & PHASE: 07000211191 CONTRACT NO.: 07-1218W1

DISREGARD PRINTS BEARING EARLIER REVISION DATES

REVISION DATES: 09-29-11 10-25-11 01-09-12 02-03-12 SHEET 31 OF 34

FILE => 53e0161-z-ltb_01.dgn

USERNAME => s121614 DATE PLOTTED => 22-MAY-2012 TIME PLOTTED => 07:35

DIST	COUNTY	ROUTE	POST MILES TOTAL PROJECT	SHEET No	TOTAL SHEETS
07	LA	5	29.4/31.6	830	1931

REGISTERED GEOTECHNICAL ENGINEER 1-18-12

5-21-12
PLANS APPROVAL DATE

REGISTERED PROFESSIONAL ENGINEER Deepa Wathugala No. 2674 Exp. 9-30-12 GEOTECHNICAL STATE OF CALIFORNIA

The State of California or its officers or agents shall not be responsible for the accuracy or completeness of electronic copies of this plan sheet.

This LOTB sheet was prepared in accordance with the Caltrans Soil & Rock Logging, Classification, & Presentation Manual (2010 Edition).

FOR PLAN VIEW, SEE
"LOG OF TEST BORINGS 1 OF 4"

Note: Ground water was not encountered in borings A-08-007 and A-08-008.

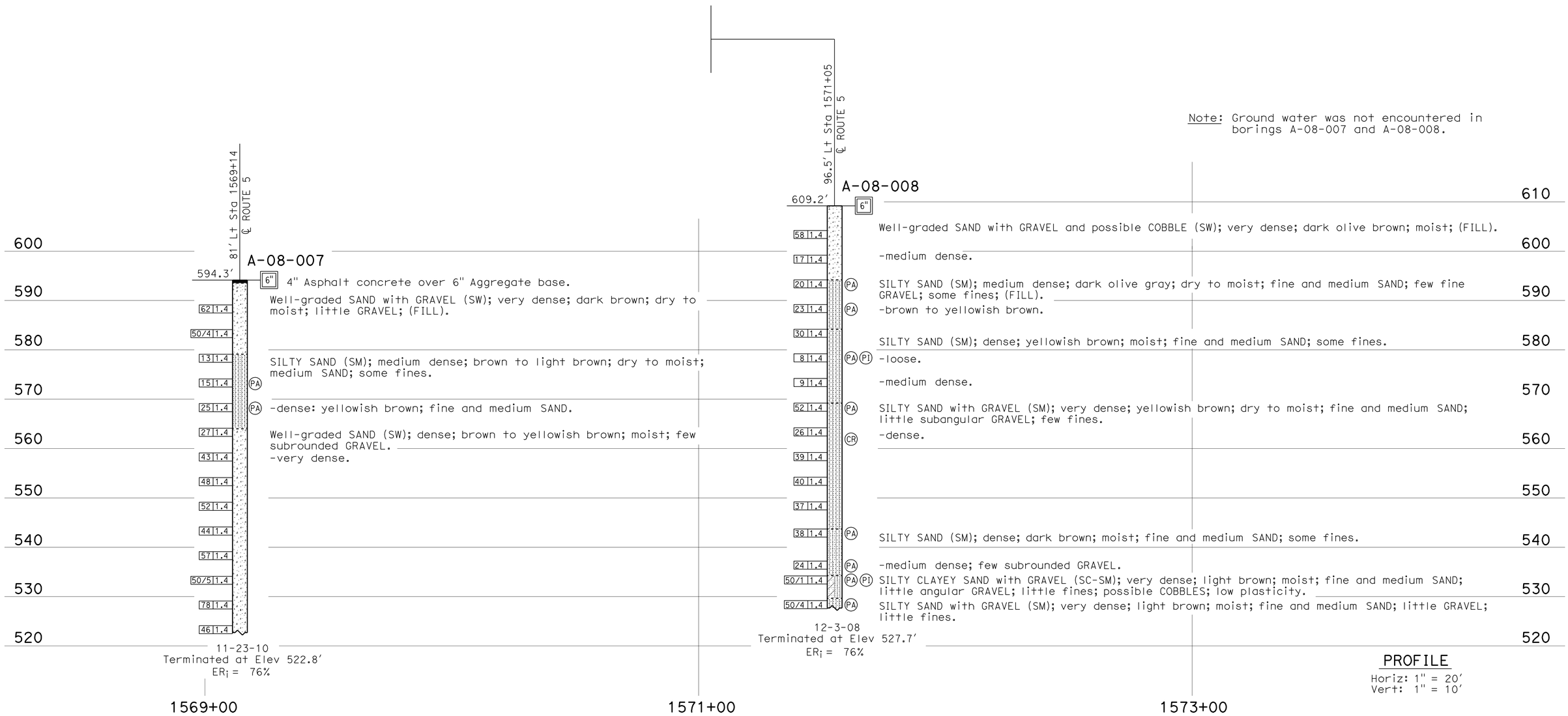

PROFILE
Horiz: 1" = 20'
Vert: 1" = 10'

ENGINEERING SERVICES	MATERIALS AND GEOTECHNICAL SERVICES	STATE OF CALIFORNIA DEPARTMENT OF TRANSPORTATION	DIVISION OF ENGINEERING SERVICES STRUCTURE DESIGN DESIGN BRANCH 15	BRIDGE NO. 53E0161 POST MILE 29.62/29.78	RETAINING WALL 1565 LOG OF TEST BORINGS 2 OF 4
FUNCTIONAL SUPERVISOR NAME: C. Liu	DRAWN BY: I.G-Remmen CHECKED BY: F. Gerami	FIELD INVESTIGATION BY: A. Tsegie			

OGS CIVIL LOG OF TEST BORINGS SHEET

ORIGINAL SCALE IN INCHES FOR REDUCED PLANS 0 1 2 3

UNIT: 3643
PROJECT NUMBER & PHASE: 07000211191 CONTRACT NO.: 07-1218W1

DISREGARD PRINTS BEARING EARLIER REVISION DATES

REVISION DATES: 09-29-11 10-25-11 01-09-12 02-03-12 | SHEET 32 OF 33

FILE => 53e0161-z-ltb_02.dgn

USERNAME => s121614 DATE PLOTTED => 22-MAY-2012 TIME PLOTTED => 07:35

DIST	COUNTY	ROUTE	POST MILES TOTAL PROJECT	SHEET No	TOTAL SHEETS
07	LA	5	29.4/31.6	831	1931

REGISTERED GEOTECHNICAL ENGINEER 1-18-12

5-21-12
PLANS APPROVAL DATE

REGISTERED PROFESSIONAL ENGINEER Deepa Wathugala No. 2674 Exp. 9-30-12 GEOTECHNICAL STATE OF CALIFORNIA

The State of California or its officers or agents shall not be responsible for the accuracy or completeness of electronic copies of this plan sheet.

REFERENCE: CALTRANS SOIL & ROCK LOGGING, CLASSIFICATION, AND PRESENTATION MANUAL (2010)

CEMENTATION

Description	Criteria
Weak	Crumbles or breaks with handling or little finger pressure.
Moderate	Crumbles or breaks with considerable finger pressure.
Strong	Will not crumble or break with finger pressure.

BOREHOLE IDENTIFICATION

Symbol	Hole Type	Description
Size	A	Auger Boring (hollow or solid stem bucket)
Size	R RW RC P	Rotary drilled boring (conventional) Rotary drilled with self-casing wire-line Rotary core with continuously-sampled, self-casing wire-line Rotary percussion boring (air)
Size	R	Rotary drilled diamond core
Size	HD HA	Hand driven (1-inch soil tube) Hand Auger
●	D	Dynamic Cone Penetration Boring
▲	CPT	Cone Penetration Test (ASTM D 5778)
⬚	O	Other (note on LOTB)

Note: Size in inches.

CONSISTENCY OF COHESIVE SOILS

Description	Shear Strength (tsf)	Pocket Penetrometer Measurement, PP, (tsf)	Torvane Measurement, TV, (tsf)	Vane Shear Measurement, VS, (tsf)
Very Soft	Less than 0.12	Less than 0.25	Less than 0.12	Less than 0.12
Soft	0.12 - 0.25	0.25 - 0.5	0.12 - 0.25	0.12 - 0.25
Medium Stiff	0.25 - 0.5	0.5 - 1	0.25 - 0.5	0.25 - 0.5
Stiff	0.5 - 1	1 - 2	0.5 - 1	0.5 - 1
Very Stiff	1 - 2	2 - 4	1 - 2	1 - 2
Hard	Greater than 2	Greater than 4	Greater than 2	Greater than 2

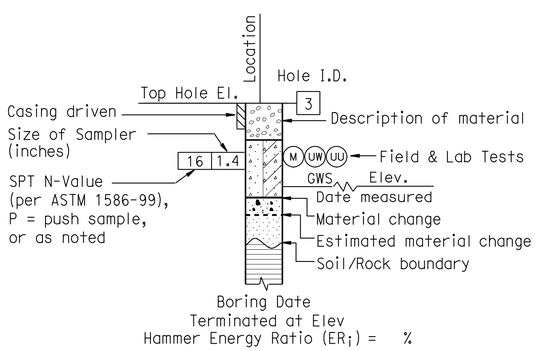

ROTARY BORING

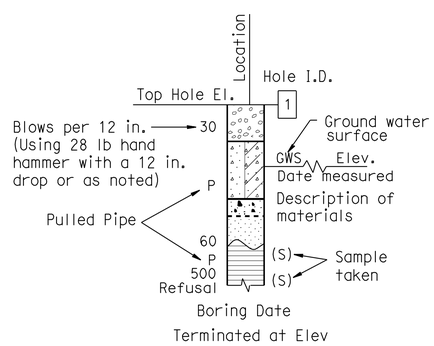

HAND BORING

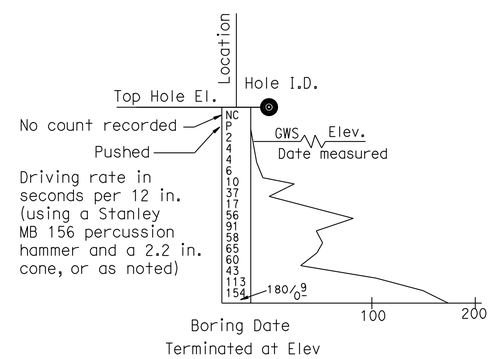

DYNAMIC CONE PENETRATION BORING

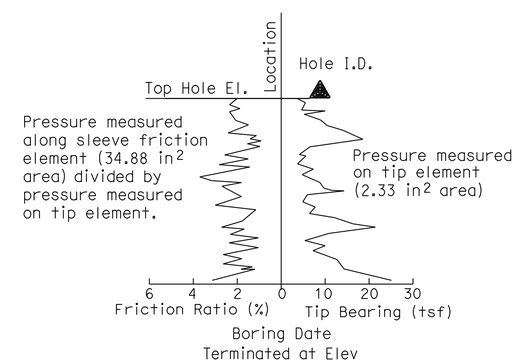

CONE PENETRATION TEST (CPT) BORING

ENGINEERING SERVICES	GEOTECHNICAL SERVICES	STATE OF CALIFORNIA DEPARTMENT OF TRANSPORTATION	DIVISION OF ENGINEERING SERVICES STRUCTURE DESIGN DESIGN BRANCH 15	BRIDGE NO. 53E0161 / POST MILE 29.62/29.78	RETAINING WALL 1565 LOG OF TEST BORINGS 3 OF 4
	PREPARED BY: I.G-Remmen				

GS LOTB SOIL LEGEND

ORIGINAL SCALE IN INCHES FOR REDUCED PLANS 0 1 2 3

UNIT: 3643
PROJECT NUMBER & PHASE: 07000211191 CONTRACT NO.: 07-1218W1

DISREGARD PRINTS BEARING EARLIER REVISION DATES

REVISION DATES 02-03-12

SHEET 33 OF 34

FILE => 53e0161-z-ltb_03.dgn

USERNAME => s121614 DATE PLOTTED => 22-MAY-2012 TIME PLOTTED => 07:35

REFERENCE: CALTRANS SOIL & ROCK LOGGING, CLASSIFICATION, AND PRESENTATION MANUAL (2010)

DIST	COUNTY	ROUTE	POST MILES TOTAL PROJECT	SHEET No	TOTAL SHEETS
07	LA	5	29.4/31.6	832	1931

REGISTERED GEOTECHNICAL ENGINEER 1-18-12

5-21-12
PLANS APPROVAL DATE

REGISTERED PROFESSIONAL ENGINEER
Deepa Wathugala
No. 2674
Exp. 9-30-12
GEOTECHNICAL
STATE OF CALIFORNIA

The State of California or its officers or agents shall not be responsible for the accuracy or completeness of electronic copies of this plan sheet.

GROUP SYMBOLS AND NAMES

Graphic/Symbol	Group Names	Graphic/Symbol	Group Names
GW	Well-graded GRAVEL Well-graded GRAVEL with SAND	CL	Lean CLAY Lean CLAY with SAND Lean CLAY with GRAVEL SANDY lean CLAY SANDY lean CLAY with GRAVEL GRAVELLY lean CLAY GRAVELLY lean CLAY with SAND
GP	Poorly-graded GRAVEL Poorly-graded GRAVEL with SAND		
GW-GM	Well-graded GRAVEL with SILT Well-graded GRAVEL with SILT and SAND	CL-ML	SILTY CLAY SILTY CLAY with SAND SILTY CLAY with GRAVEL SANDY SILTY CLAY SANDY SILTY CLAY with GRAVEL GRAVELLY SILTY CLAY GRAVELLY SILTY CLAY with SAND
GW-GC	Well-graded GRAVEL with CLAY (or SILTY CLAY) Well-graded GRAVEL with CLAY and SAND (or SILTY CLAY and SAND)		
GP-GM	Poorly-graded GRAVEL with SILT Poorly-graded GRAVEL with SILT and SAND	ML	SILT SILT with SAND SILT with GRAVEL SANDY SILT SANDY SILT with GRAVEL GRAVELLY SILT GRAVELLY SILT with SAND
GP-GC	Poorly-graded GRAVEL with CLAY (or SILTY CLAY) Poorly-graded GRAVEL with CLAY and SAND (or SILTY CLAY and SAND)		
GM	SILTY GRAVEL SILTY GRAVEL with SAND	OL	ORGANIC lean CLAY ORGANIC lean CLAY with SAND ORGANIC lean CLAY with GRAVEL SANDY ORGANIC lean CLAY SANDY ORGANIC lean CLAY with GRAVEL GRAVELLY ORGANIC lean CLAY GRAVELLY ORGANIC lean CLAY with SAND
GC	CLAYEY GRAVEL CLAYEY GRAVEL with SAND		
GC-GM	SILTY, CLAYEY GRAVEL SILTY, CLAYEY GRAVEL with SAND	OL	ORGANIC SILT ORGANIC SILT with SAND ORGANIC SILT with GRAVEL SANDY ORGANIC SILT SANDY ORGANIC SILT with GRAVEL GRAVELLY ORGANIC SILT GRAVELLY ORGANIC SILT with SAND
SW	Well-graded SAND Well-graded SAND with GRAVEL		
SP	Poorly-graded SAND Poorly-graded SAND with GRAVEL	CH	Fat CLAY Fat CLAY with SAND Fat CLAY with GRAVEL SANDY fat CLAY SANDY fat CLAY with GRAVEL GRAVELLY fat CLAY GRAVELLY fat CLAY with SAND
SW-SM	Well-graded SAND with SILT Well-graded SAND with SILT and GRAVEL		
SW-SC	Well-graded SAND with CLAY (or SILTY CLAY) Well-graded SAND with CLAY and GRAVEL (or SILTY CLAY and GRAVEL)	MH	Elastic SILT Elastic SILT with SAND Elastic SILT with GRAVEL SANDY elastic SILT SANDY elastic SILT with GRAVEL GRAVELLY elastic SILT GRAVELLY elastic SILT with SAND
SP-SM	Poorly-graded SAND with SILT Poorly-graded SAND with SILT and GRAVEL		
SP-SC	Poorly-graded SAND with CLAY (or SILTY CLAY) Poorly-graded SAND with CLAY and GRAVEL (or SILTY CLAY and GRAVEL)	OH	ORGANIC fat CLAY ORGANIC fat CLAY with SAND ORGANIC fat CLAY with GRAVEL SANDY ORGANIC fat CLAY SANDY ORGANIC fat CLAY with GRAVEL GRAVELLY ORGANIC fat CLAY GRAVELLY ORGANIC fat CLAY with SAND
SM	SILTY SAND SILTY SAND with GRAVEL		
SC	CLAYEY SAND CLAYEY SAND with GRAVEL	OH	ORGANIC elastic SILT ORGANIC elastic SILT with SAND ORGANIC elastic SILT with GRAVEL SANDY ORGANIC elastic SILT SANDY ORGANIC elastic SILT with GRAVEL GRAVELLY ORGANIC elastic SILT GRAVELLY ORGANIC elastic SILT with SAND
SC-SM	SILTY, CLAYEY SAND SILTY, CLAYEY SAND with GRAVEL		
PT	PEAT	OL/OH	ORGANIC SOIL ORGANIC SOIL with SAND ORGANIC SOIL with GRAVEL SANDY ORGANIC SOIL SANDY ORGANIC SOIL with GRAVEL GRAVELLY ORGANIC SOIL GRAVELLY ORGANIC SOIL with SAND
	COBBLES COBBLES and BOULDERS BOULDERS		

FIELD AND LABORATORY TESTING

- (C) Consolidation (ASTM D 2435)
- (CL) Collapse Potential (ASTM D 5333)
- (CP) Compaction Curve (CTM 216)
- (CR) Corrosivity Testing (CTM 643, CTM 422, CTM 417)
- (CU) Consolidated Undrained Triaxial (ASTM D 4767)
- (DS) Direct Shear (ASTM D 3080)
- (EI) Expansion Index (ASTM D 4829)
- (M) Moisture Content (ASTM D 2216)
- (OC) Organic Content-% (ASTM D 2974)
- (P) Permeability (CTM 220)
- (PA) Particle Size Analysis (ASTM D 422)
- (PI) Plasticity Index (AASHTO T 90) Liquid Limit (AASHTO T 89)
- (PL) Point Load Index (ASTM D 5731)
- (PM) Pressure Meter
- (R) R-Value (CTM 301)
- (SE) Sand Equivalent (CTM 217)
- (SG) Specific Gravity (AASHTO T 100)
- (SL) Shrinkage Limit (ASTM D 427)
- (SW) Swell Potential (ASTM D 4546)
- (UC) Unconfined Compression-Soil (ASTM D 2166) Unconfined Compression-Rock (ASTM D 2938)
- (UU) Unconsolidated Undrained Triaxial (ASTM D 2850)
- (UW) Unit Weight (ASTM D 4767)

APPARENT DENSITY OF COHESIONLESS SOILS

Description	SPT N_{60} (Blows / 12 in.)
Very Loose	0 - 5
Loose	5 - 10
Medium Dense	10 - 30
Dense	30 - 50
Very Dense	Greater than 50

MOISTURE

Description	Criteria
Dry	No discernable moisture
Moist	Moisture present, but no free water
Wet	Visible free water

PERCENT OR PROPORTION OF SOILS

Description	Criteria
Trace	Particles are present but estimated to be less than 5%
Few	5% - 10%
Little	15% - 25%
Some	30% - 45%
Mostly	50% - 100%

PARTICLE SIZE

Description		Size (in.)
Boulder		Greater than 12
Cobble		3 - 12
Gravel	Coarse	3/4 - 3
	Fine	1/5 - 3/4
Sand	Coarse	1/16 - 1/5
	Medium	1/64 - 1/16
	Fine	1/300 - 1/64
Silt and Clay		Less than 1/300

ENGINEERING SERVICES

GEOTECHNICAL SERVICES
PREPARED BY: I.G-Remmen

STATE OF CALIFORNIA
DEPARTMENT OF TRANSPORTATION

DIVISION OF ENGINEERING SERVICES
STRUCTURE DESIGN
DESIGN BRANCH 15

BRIDGE NO. 53E0161
POST MILE 29.62/29.78

RETAINING WALL 1565
LOG OF TEST BORINGS 4 OF 4

GS LOTB SOIL LEGEND

ORIGINAL SCALE IN INCHES FOR REDUCED PLANS 0 1 2 3

UNIT: 3643
PROJECT NUMBER & PHASE: 07000211191
CONTRACT NO.: 07-1218W1

DISREGARD PRINTS BEARING EARLIER REVISION DATES

REVISION DATES 02-03-12

SHEET 34 OF 34

FILE => 53e0161-z-ltb_04.dgn

USERNAME => s121614 DATE PLOTTED => 22-MAY-2012 TIME PLOTTED => 07:36

DIST	COUNTY	ROUTE	POST MILES TOTAL PROJECT	SHEET No.	TOTAL SHEETS
07	LA	5	29.4/31.6	833	1931

REGISTERED CIVIL ENGINEER — DATE 2-04-12

5-21-12
PLANS APPROVAL DATE

REGISTERED PROFESSIONAL ENGINEER — Ulysses N. Smpardos — No. 61018 — Exp. 12/31/12 — CIVIL — STATE OF CALIFORNIA

The State of California or its officers or agents shall not be responsible for the accuracy or completeness of electronic copies of this plan sheet.

QUANTITIES

STRUCTURE EXCAVATION (PETROLEUM HYDROCARBON AND AERIALLY DEPOSITED LEAD)	2,767	CY
STRUCTURE BACKFILL (RETAINING WALL)	1,920	CY
MECHANICALLY STABILIZED EMBANKMENT, LOCATION B	14,750	SQFT
STRUCTURAL CONCRETE, RETAINING WALL	855	CY
STRUCTURAL CONCRETE, BARRIER SLAB	308	CY
BAR REINFORCING STEEL (RETAINING WALL)	112,945	LB
CHAIN LINK RAILING (TYPE 7)	682	LF
CONCRETE BARRIER (TYPE 736)	605	LF
CONCRETE BARRIER (TYPE 736 MODIFIED)	48	LF

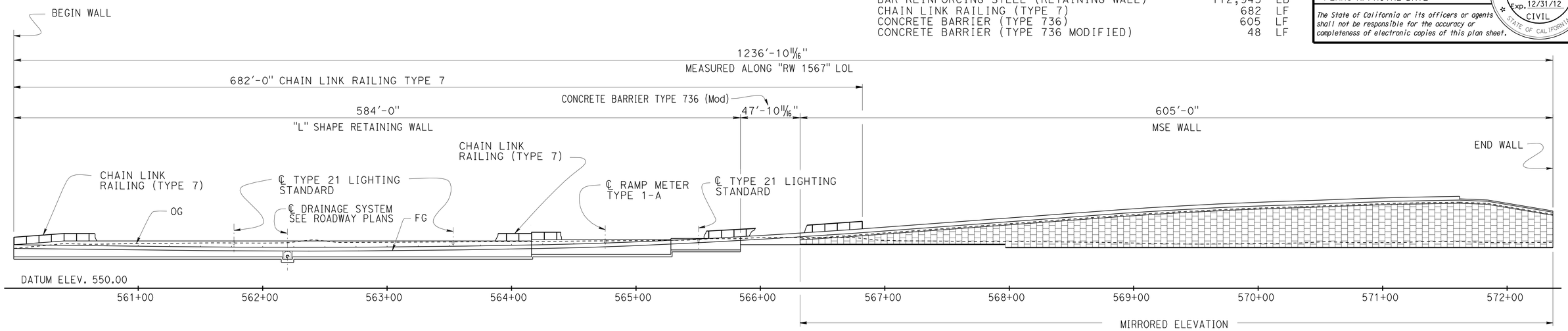

ELEVATION (DEVELOPED)

1" = 40'-0"

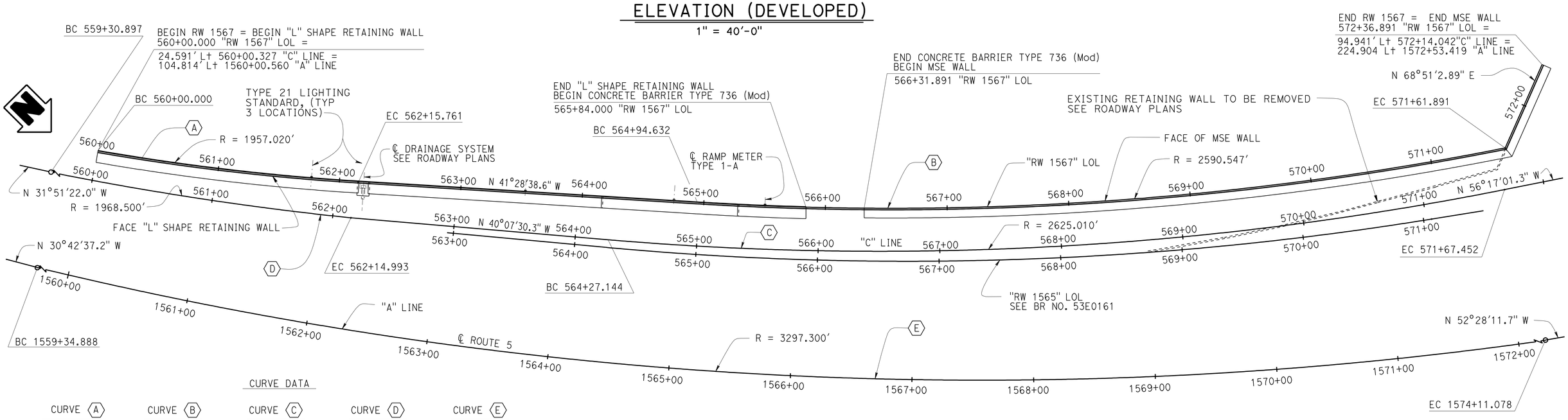

PLAN

1" = 40'-0"

CURVE DATA

CURVE A	CURVE B	CURVE C	CURVE D	CURVE E
R = 1957.020'	R = 2590.547	R = 2625.010'	R = 1968.500'	R = 3297.300'
Δ = 6°19'01"	Δ = 14°45'28.5"	Δ = 16°09'31"	Δ = 8°16'08"	Δ = 25°39'04"
T = 107.990'	T = 335.486'	T = 372.627'	T = 142.295'	T = 750.676'
L = 215.761'	L = 667.258'	L = 740.308'	L = 284.095'	L = 1476.191'

Traci Menard
DESIGN ENGINEER

	BY	CHECKED
DESIGN	Gabriel Galo	Shervin Pahlavan
DETAILS	Stan Cholda	Shervin Pahlavan
QUANTITIES	Gabriel Galo	Fred Feng

LOAD & RESISTANCE FACTOR DESIGN — LIVE LOADING: HL93 W/"LOW-BOY"; PERMIT DESIGN VEHICLE

	BY	CHECKED
LAYOUT	Gabriel Galo	Shervin Pahlavan
SPECIFICATIONS	James Choi	PLANS AND SPECS COMPARED: Ulysses Smpardos

ORIGINAL SCALE IN INCHES FOR REDUCED PLANS 0 1 2 3

STATE OF CALIFORNIA
DEPARTMENT OF TRANSPORTATION

DIVISION OF ENGINEERING SERVICES
STRUCTURE DESIGN
DESIGN BRANCH 15

BRIDGE NO. 53E0162
POST MILE 29.8

RETAINING WALL NO. 1567
GENERAL PLAN NO. 1

UNIT: 3604
PROJECT NUMBER & PHASE: 0700021119
CONTRACT NO.: 07-1218W1

DISREGARD PRINTS BEARING EARLIER REVISION DATES

REVISION DATES: 04-12-12 05-08-12 06-01-12 06-14-12

SHEET 1 OF 27

USERNAME => s124496 DATE PLOTTED => 15-JUN-2012 TIME PLOTTED => 13:57

STRUCTURES DESIGN GENERAL PLAN SHEET (ENGLISH) (REV.09-01-10)

FILE => 53e0162-a-gp01.dgn

DIST	COUNTY	ROUTE	POST MILES TOTAL PROJECT	SHEET No.	TOTAL SHEETS
07	LA	5	29.4/31.6	834	1931

REGISTERED CIVIL ENGINEER 2-04-12 DATE

5-21-12
PLANS APPROVAL DATE

REGISTERED PROFESSIONAL ENGINEER Ulysses N. Smpardos No. 61018 Exp. 12/31/12 CIVIL STATE OF CALIFORNIA

The State of California or its officers or agents shall not be responsible for the accuracy or completeness of electronic copies of this plan sheet.

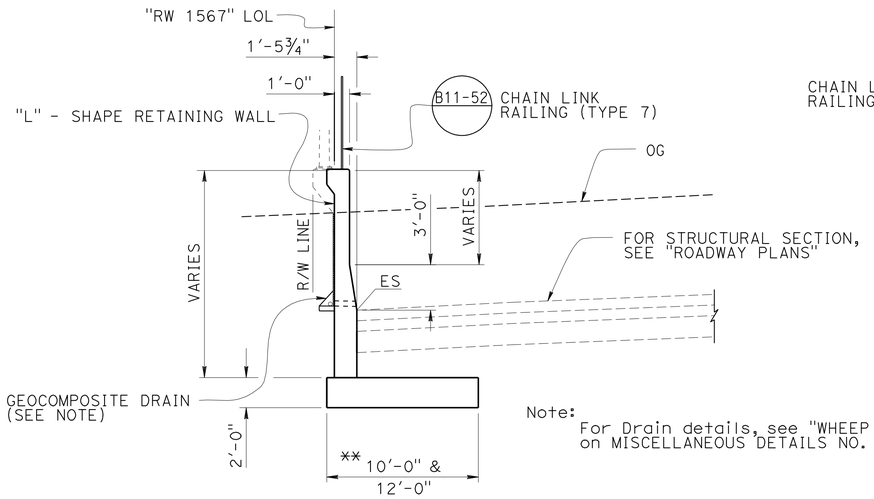

Note: For Drain details, see "WHEEP HOLE AND GEOCOMPOSITE DRAIN" on MISCELLANEOUS DETAILS NO. 2" sheet.

** See "STRUCTURE PLANS NO. 1" and "STRUCTURE PLANS NO. 2" sheets.

TYPICAL SECTION

1" = 5'-0"

STA 560+00.000 "RW 1567" LOL TO STA 565+84.000 "RW 1567" LOL

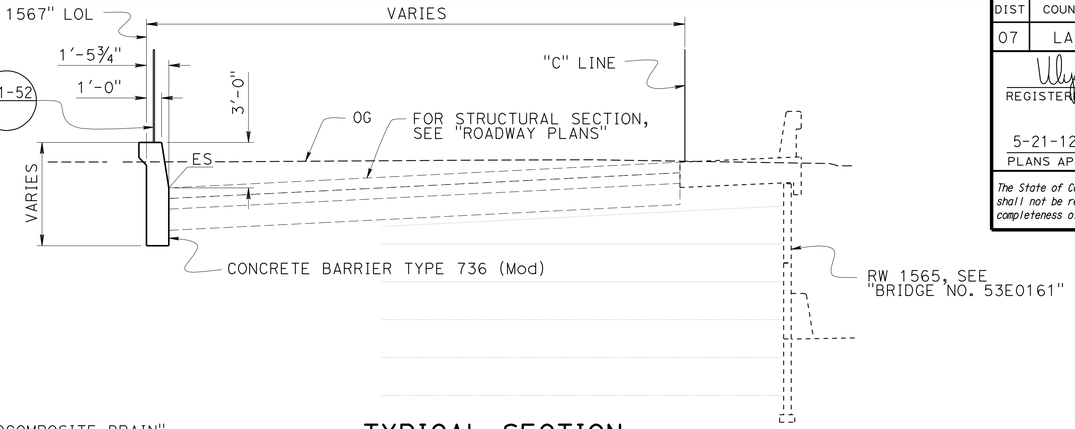

TYPICAL SECTION

1" = 5'-0"

STA 565+84.000 "RW 1567" LOL TO STA 566+31.891 "RW 1567" LOL

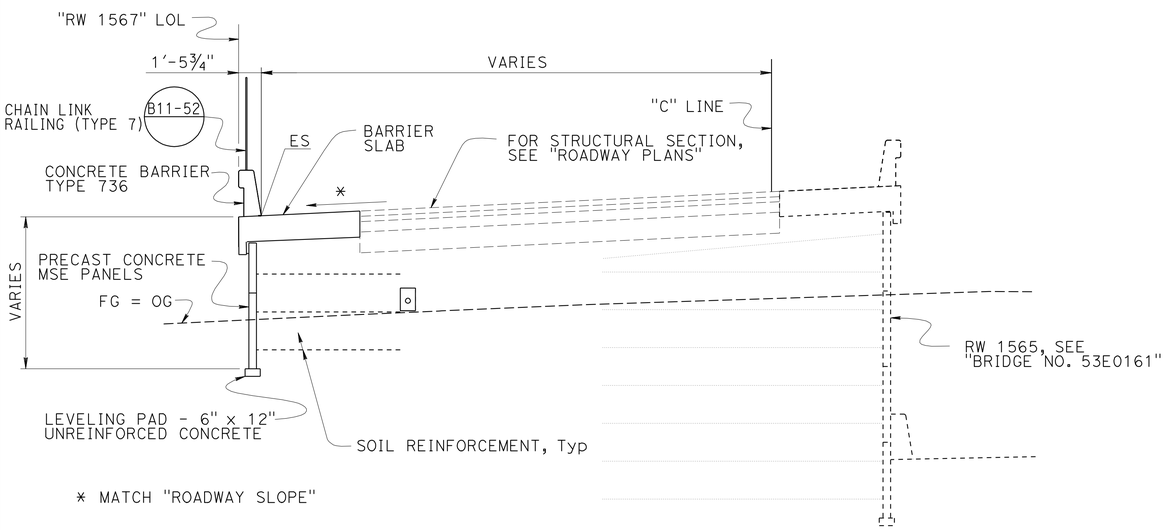

TYPICAL SECTION

1" = 5'-0"

STA 566+31.891 "RW 1567" LOL TO STA 568+37.658 "RW 1567" LOL

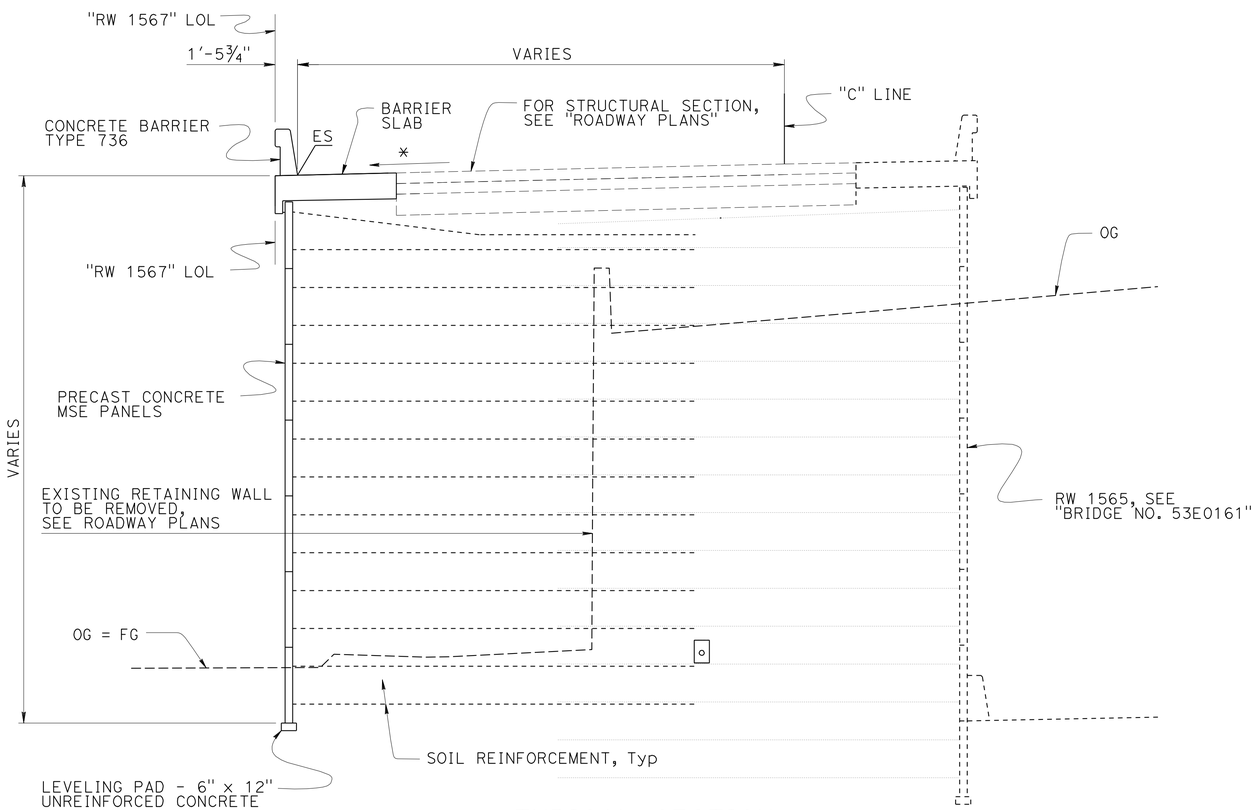

TYPICAL SECTION

1" = 5'-0"

STA 568+37.658 "RW 1567" LOL TO STA 572+36.891 "RW 1567" LOL

Traci Menard
DESIGN ENGINEER

	BY	CHECKED
DESIGN	Gabriel Galo	Shervin Pahlavan
DETAILS	Stan Cholda	Shervin Pahlavan
QUANTITIES	Gabriel Galo	Fred Feng

LOAD & RESISTANCE FACTOR DESIGN — LIVE LOADING: HL93 W/"LOW-BOY"; PERMIT DESIGN VEHICLE

	BY	CHECKED
LAYOUT	Gabriel Galo	Shervin Pahlavan
SPECIFICATIONS	James Choi	PLANS AND SPECS COMPARED Ulysses Smpardos

ORIGINAL SCALE IN INCHES FOR REDUCED PLANS 0 1 2 3

STATE OF CALIFORNIA
DEPARTMENT OF TRANSPORTATION

DIVISION OF ENGINEERING SERVICES
STRUCTURE DESIGN
DESIGN BRANCH 15

BRIDGE NO. 53E0162
POST MILE 29.8

RETAINING WALL NO. 1567
GENERAL PLAN NO. 2

UNIT: 3604
PROJECT NUMBER & PHASE: 0700021119
CONTRACT NO.: 07-1218W1

DISREGARD PRINTS BEARING EARLIER REVISION DATES

REVISION DATES: 04-12-12 04-26-12 06-01-12 06-14-12

SHEET 2 OF 27

USERNAME => s124496 DATE PLOTTED => 15-JUN-2012 TIME PLOTTED => 13:57

FILE => 53e0162-a-gp02.dgn

DIST	COUNTY	ROUTE	POST MILES TOTAL PROJECT	SHEET No.	TOTAL SHEETS
07	LA	5	29.4/31.6	835	1931

REGISTERED CIVIL ENGINEER — DATE 2-04-12

5-21-12
PLANS APPROVAL DATE

REGISTERED PROFESSIONAL ENGINEER — Ulysses N. Smpardos — No. 61018 — Exp. 12/31/12 — CIVIL — STATE OF CALIFORNIA

The State of California or its officers or agents shall not be responsible for the accuracy or completeness of electronic copies of this plan sheet.

INDEX TO PLANS

SHEET NO.	TITLE
1.	GENERAL PLAN NO. 1
2.	GENERAL PLAN NO. 2
3.	INDEX TO PLANS
4.	FOUNDATION PLAN NO. 1
5.	FOUNDATION PLAN NO. 2
6.	STRUCTURE PLAN NO. 1
7.	STRUCTURE PLAN NO. 2
8.	STRUCTURE PLAN NO. 3
9.	STRUCTURE PLAN NO. 4
10.	STRUCTURE PLAN NO. 5
11.	MISCELLANEOUS DETAILS NO. 1
12.	MISCELLANEOUS DETAILS NO. 2
13.	MISCELLANEOUS DETAILS NO. 3
14.	MISCELLANEOUS DETAILS NO. 4
15.	DRAINAGE DETAILS NO. 1
16.	DRAINAGE DETAILS NO. 2
17.	CONCRETE BARRIER SLAB DETAILS
18.	MECHANICALLY STABILIZED EMBANKMENT DETAILS NO. 1
19.	MECHANICALLY STABILIZED EMBANKMENT DETAILS NO. 2
20.	MECHANICALLY STABILIZED EMBANKMENT DETAILS NO. 3
21.	MECHANICALLY STABILIZED EMBANKMENT DETAILS NO. 6 *
22.	LOG OF TEST BORINGS 1 OF 6
23.	LOG OF TEST BORINGS 2 OF 6
24.	LOG OF TEST BORINGS 3 OF 6
25.	LOG OF TEST BORINGS 4 OF 6
26.	LOG OF TEST BORINGS 5 OF 6
27.	LOG OF TEST BORINGS 6 OF 6

* "MECHANICALLY STABILIZED EMBANKMENT DETAILS NO. 4" and "MECHANICALLY STABILIZED EMBANKMENT NO. 5" sheets are not part of "INDEX TO PLANS"

STANDARD PLANS DATED MAY 2006

A10A	ACRONYMS AND ABBREVIATIONS (SHEET 1 OF 2)
A10B	ACRONYMS AND ABBREVIATIONS (SHEET 2 OF 2)
B0-3	BRIDGE DETAILS
B3-8	RETAINING WALL DETAILS NO. 1
B11-52	CHAIN LINK RAILING TYPE 7
B11-56	CONCRETE BARRIER TYPE 736
B3-1	RETAINING WALL TYPE 1 - H=4′ THROUGH 30′
D102	UNDERDRAINS
RSP ES-6A	ELECTRICAL SYSTEMS (LIGHTING STANDARD TYPES 15 AND 21)
ES-6B	ELECTRICAL SYSTEMS (LIGHTING STANDARD, TYPES 15 AND 21 BARRIER RAIL MOUNTED DETAILS)
RSP ES-7B	ELECTRICAL SYSTEMS (SIGNAL AND LIGHTING STANDARD TYPE 1 STANDARD AND EQUIPMENT NUMBERING)

STANDARD PLAN SHEET No.

DETAIL No.

Notes:

For General Notes, see "DESIGN DATA" on "CONCRETE BARRIER SLAB DETAILS" sheet and "GENERAL NOTES LOAD AND RESISTANCE FACTOR DESIGN" on "MECHANICALLY STABILIZED EMBANKMENT-DETAILS NO. 2" sheet.

STEEL SOIL REINFORCEMENT FOR LOAD CASE 1

SOIL REINFORCEMENT DESIGNATION LETTER	Ⓐ	Ⓑ	Ⓒ	Ⓓ	Ⓔ	Ⓕ	Ⓖ	Ⓗ
WALL HEIGHT	6′-8"	9′-2"	11′-8"	14′-2"	16′-8"	19′-2"	21′-8"	24′-2"
WALL BASE WIDTH	9′-6"	9′-6"	9′-6"	11′-6"	13′-6"	15′-6"	17′-6"	18′-6"
	TOP 4-W15xW15 @ 6	TOP 4-W15xW15 @ 6	TOP 4-W15xW15 @ 6	TOP 4-W15xW15 @ 6	TOP 4-W15xW15 @ 6	TOP 4-W15xW15 @ 6	TOP 4-W15xW15 @ 6	TOP 4-W15xW15 @ 6
	BOT 4-W15xW15 @ 6	1 OF 4-W15xW15 @ 6	2 OF 4-W15xW15 @ 6	3 OF 4-W15xW15 @ 6	3 OF 4-W15xW15 @ 6	4 OF 4-W15xW15 @ 6	4 OF 4-W15xW15 @ 18	4 OF 4-W15xW15 @ 18
	———	BOT 4-W15xW15 @ 6	BOT 4-W20xW15 @ 9	BOT 4-W20xW15 @ 9	1 OF 4-W20xW15 @ 9	1 OF 4-W20xW15 @ 9	2 OF 4-W20xW15 @ 24	3 OF 4-W20xW15 @ 24
	———	———	———	———	BOT 4-W20xW15 @ 9	BOT 4-W20xW15 @ 9	BOT 4-W20xW15 @ 24	BOT 4-W20xW15 @ 24

SOIL REINFORCEMENT DESIGNATION LETTER	Ⓘ	Ⓙ	Ⓚ	Ⓛ	Ⓜ	Ⓝ	Ⓞ	Ⓟ
WALL HEIGHT	26′-8"	29′-2"	31′-8"	34′-2"	36′-8"	39′-2"	41′-8"	44′-2"
WALL BASE WIDTH	20′-6"	21′-6"	23′-6"	25′-6"	26′-6"	29′-6"	30′-6"	33′-6"
	TOP 4-W15xW15 @ 6	TOP 4-W15xW15 @ 6	TOP 4-W15xW15 @ 6	TOP 4-W15xW15 @ 18	TOP 4-W15xW15 @ 18	TOP 4-W15xW15 @ 18	TOP 4-W15xW15 @ 18	TOP 4-W15xW15 @ 18
	4 OF 4-W15xW15 @ 18	4 OF 4-W15xW15 @ 18	4 OF 4-W15xW15 @ 18	4 OF 4-W15xW15 @ 18	4 OF 4-W15xW15 @ 18	4 OF 4-W15xW15 @ 18	4 OF 4-W15xW15 @ 18	4 OF 4-W15xW15 @ 18
	3 OF 4-W20xW15 @ 24	3 OF 4-W20xW15 @ 24	4 OF 4-W20xW15 @ 24	4 OF 4-W20xW15 @ 24	4 OF 4-W20xW15 @ 24	5 OF 4-W20xW15 @ 24	5 OF 4-W20xW15 @ 24	5 OF 4-W20xW15 @ 24
	1 OF 6-W25xW15 @ 24	2 OF 6-W25xW15 @ 24	2 OF 6-W25xW15 @ 30	3 OF 6-W25xW15 @ 30	4 OF 6-W25xW15 @ 30	4 OF 6-W25xW15 @ 30	5 OF 6-W25xW15 @ 30	6 OF 6-W25xW15 @ 30
	BOT 6-W25xW15 @ 24	BOT 6-W25xW15 @ 24	BOT 6-W25xW15 @ 30	BOT 6-W25xW15 @ 30	BOT 6-W25xW15 @ 30	BOT 6-W25xW15 @ 30	BOT 6-W25xW15 @ 30	BOT 6-W25xW15 @ 30

	BY	CHECKED
DESIGN	Gabriel Galo	Shervin Pahlavan
DETAILS	Stan Cholda	Shervin Pahlavan
QUANTITIES	Gabriel Galo	Fred Feng

STATE OF CALIFORNIA
DEPARTMENT OF TRANSPORTATION

DIVISION OF ENGINEERING SERVICES
STRUCTURE DESIGN
DESIGN BRANCH 15

BRIDGE NO. 53E0162
POST MILE 29.8

RETAINING WALL NO. 1567
INDEX TO PLANS

STRUCTURES DESIGN DETAIL SHEET (ENGLISH) (REV. 09-01-10)

ORIGINAL SCALE IN INCHES FOR REDUCED PLANS 0 1 2 3

UNIT: 3604
PROJECT NUMBER & PHASE: 0700021119
CONTRACT NO.: 07-1218W1

DISREGARD PRINTS BEARING EARLIER REVISION DATES

REVISION DATES: 04-12-12 04-24-12 04-26-12 04-23-12

SHEET 3 OF 27

FILE => 53e0162-a-ltp.dgn

USERNAME => s121614 DATE PLOTTED => 22-MAY-2012 TIME PLOTTED => 07:36

DIST	COUNTY	ROUTE	POST MILES TOTAL PROJECT	SHEET No.	TOTAL SHEETS
07	LA	5	29.4/31.6	836	1931

Ulysses N. Smpardos 2-04-12
REGISTERED CIVIL ENGINEER DATE

5-21-12
PLANS APPROVAL DATE

REGISTERED PROFESSIONAL ENGINEER Ulysses N. Smpardos No. 61018 Exp. 12/31/12 CIVIL STATE OF CALIFORNIA

The State of California or its officers or agents shall not be responsible for the accuracy or completeness of electronic copies of this plan sheet.

LEGEND:

XXX.XX' INDICATES BOTTOM OF FOOTING ELEVATION

CURVE DATA

No.	R	Δ	T	L
A	1957.02	06°19'01"	107.99	215.76
B	2590.55	14°45'29"	335.49	667.26
C	2691.76	14°29'33"	342.26	680.86
D	3297.30	25°39'04"	750.68	1476.19

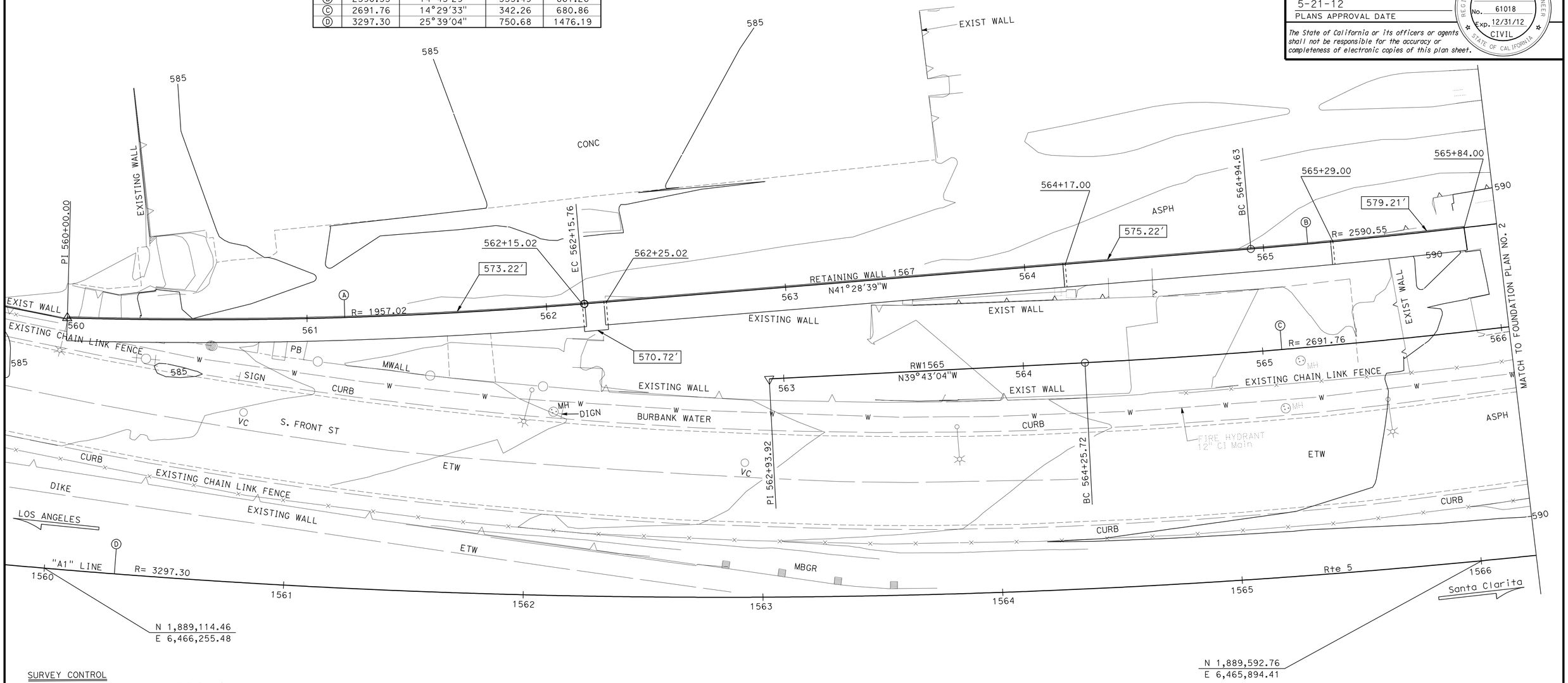

FOUNDATION PLAN

1" = 20'-0"

SURVEY CONTROL

123 (STAMPED NOT SHOWN ON THE PLAN)

Fnd PK NAIL WITH WASHER STAMPED CALTRANS 123
88.00 Lt "A1" LINE. Rte 5
Sta. 1581+75.69
N 1,890,470.97
E 6,464,594.96
EL.=598.93

127 (STAMPED NOT SHOWN ON THE PLAN)

Fnd PK NAIL WITH WASHER STAMPED CALTRANS 127
67.36 Lt "A1" LINE. Rte 5
Sta. 1585+96.99
N 1,890,753.54
E 6,464,269.04
EL.=604.23

Note: All utilities per district utility map.

PRELIMINARY INVESTIGATION SECTION

SCALE 1"=20'	VERT.DATUM NAVD 88	PHOTOGRAMMETRY AS OF: X			
	HORZ.DATUM NAD83 (1991.35)	SURVEYED	BY District	CHECKED	BY J. Pallares 11/09/11
ALIGNMENT TIES Dist. Traverse Sheet		DRAFTED	BY J. Zhou 11/08/11	CHECKED	BY L. Lew 11/15/11

DESIGN	BY Gabriel Galo	CHECKED Sharvin Pahlavan
DETAILS	BY Stan Cholda	CHECKED Shervin Pahlavan
QUANTITIES	BY Gabriel Galo	CHECKED Fred Fong

STATE OF CALIFORNIA
DEPARTMENT OF TRANSPORTATION

DIVISION OF ENGINEERING SERVICES
STRUCTURE DESIGN
DESIGN BRANCH 15

BRIDGE NO. 53E0162
POST MILE 29.8

RETAINING WALL NO. 1567
FOUNDATION PLAN NO. 1

STRUCTURES FOUNDATION PLAN SHEET (ENGLISH) (REV. 09-01-10)

ORIGINAL SCALE IN INCHES FOR REDUCED PLANS 0 1 2 3

UNIT: 3646
PROJECT NUMBER & PHASE: 070000000021119 CONTRACT NO.: 07-1218W1

DISREGARD PRINTS BEARING EARLIER REVISION DATES

REVISION DATES 04-14-12 04-16-12 05-30-12 06-14-12

SHEET 4 OF 27

FILE => 53e0162-e-fp01.dgn

DIST	COUNTY	ROUTE	POST MILES TOTAL PROJECT	SHEET No.	TOTAL SHEETS
07	LA	5	29.4/31.6	837	1931

Ulysses N Smpardos 2-04-12
REGISTERED CIVIL ENGINEER DATE

5-21-12
PLANS APPROVAL DATE

REGISTERED PROFESSIONAL ENGINEER Ulysses N. Smpardos No. 61018 Exp. 12/31/12 CIVIL STATE OF CALIFORNIA

The State of California or its officers or agents shall not be responsible for the accuracy or completeness of electronic copies of this plan sheet.

SURVEY CONTROL

123 (STAMPED NOT SHOWN ON THE PLAN)

Fnd PK NAI WITH WASHER STAMPED CALTRANS 123
88.00 Lt "A1" LINE. Rte 5
Sta. 1581+75.69
N 1,890,470.97
E 6,464,594.96
EL.=598.93

127 (STAMPED NOT SHOWN ON THE PLAN)

Fnd PK NAIL WITH WASHER STAMPED CALTRANS 127
67.36 Lt "A1" LINE. Rte 5
Sta. 1585+96.99
N 1,890,753.54
E 6,464,269.04
EL.=604.23

Note: All utilities per district utility map.

CURVE DATA

No.	R	Δ	T	L
Ⓑ	2590.55	14°45′29"	335.49	667.26
Ⓒ	2691.76	14°29′33"	342.26	680.86
Ⓓ	3297.30	25°39′04"	750.68	1476.19

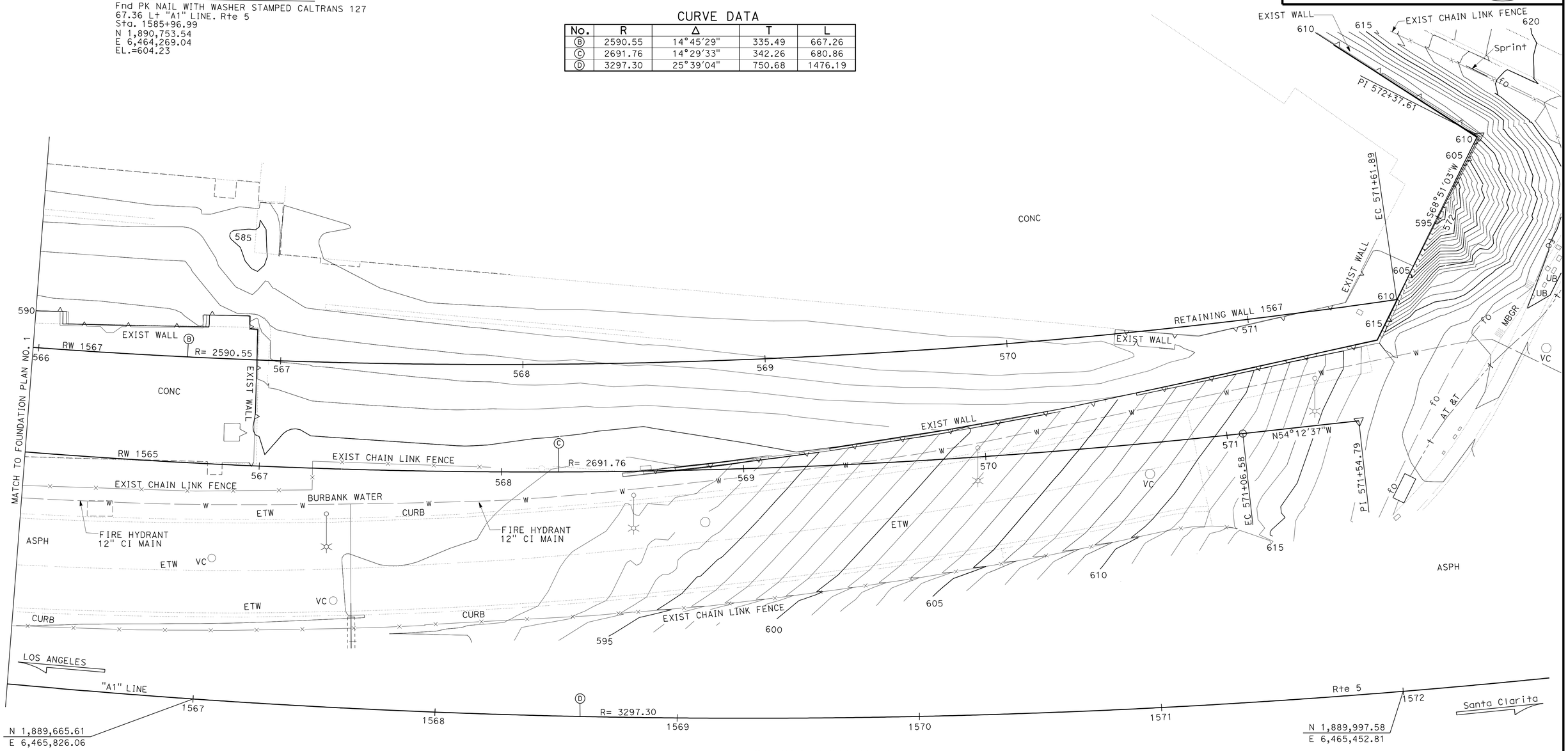

FOUNDATION PLAN

1" = 20′-0"

PRELIMINARY INVESTIGATION SECTION

SCALE	VERT.DATUM NAVD 88	PHOTOGRAMMETRY AS OF: X			
1"=20′	HORZ.DATUM NAD83 (1991.35)	SURVEYED	BY District	CHECKED	BY J. Pallares 11/10/11
ALIGNMENT TIES Dist. Traverse Sheet		DRAFTED	BY J. Zhou 10/21/11	CHECKED	BY L. Lew 11/15/11

DESIGN	BY Gabriel Galo	CHECKED	Sharvin Pahlavan
DETAILS	BY Stan Cholda	CHECKED	Sharvin Pahlavan
QUANTITIES	BY Gabriel Galo	CHECKED	Fred Fong

STATE OF CALIFORNIA
DEPARTMENT OF TRANSPORTATION

DIVISION OF ENGINEERING SERVICES
STRUCTURE DESIGN
DESIGN BRANCH 15

BRIDGE NO. 53E0162
POST MILE 29.8

RETAINING WALL NO. 1567
FOUNDATION PLAN NO. 2

STRUCTURES FOUNDATION PLAN SHEET (ENGLISH) (REV. 09-01-10)

ORIGINAL SCALE IN INCHES FOR REDUCED PLANS 0 1 2 3

UNIT: 3646
PROJECT NUMBER & PHASE: 070000000021119 CONTRACT NO.: 07-1218W1

DISREGARD PRINTS BEARING EARLIER REVISION DATES

REVISION DATES 04-14-12 06-14-12 06-14-12 06-14-12

SHEET 5 OF 27

FILE => 53e0162-e-fp02.dgn

DIST	COUNTY	ROUTE	POST MILES TOTAL PROJECT	SHEET No.	TOTAL SHEETS
07	LA	5	29.4/31.6	838	1931

Ulysses N. Smpardos 2-04-12
REGISTERED CIVIL ENGINEER DATE

5-21-12
PLANS APPROVAL DATE

REGISTERED PROFESSIONAL ENGINEER
Ulysses N. Smpardos
No. 61018
Exp. 12/31/12
CIVIL
STATE OF CALIFORNIA

The State of California or its officers or agents shall not be responsible for the accuracy or completeness of electronic copies of this plan sheet.

Note:
For "SECTION A-A", see "MISCELLANEOUS DETAILS NO. 2".

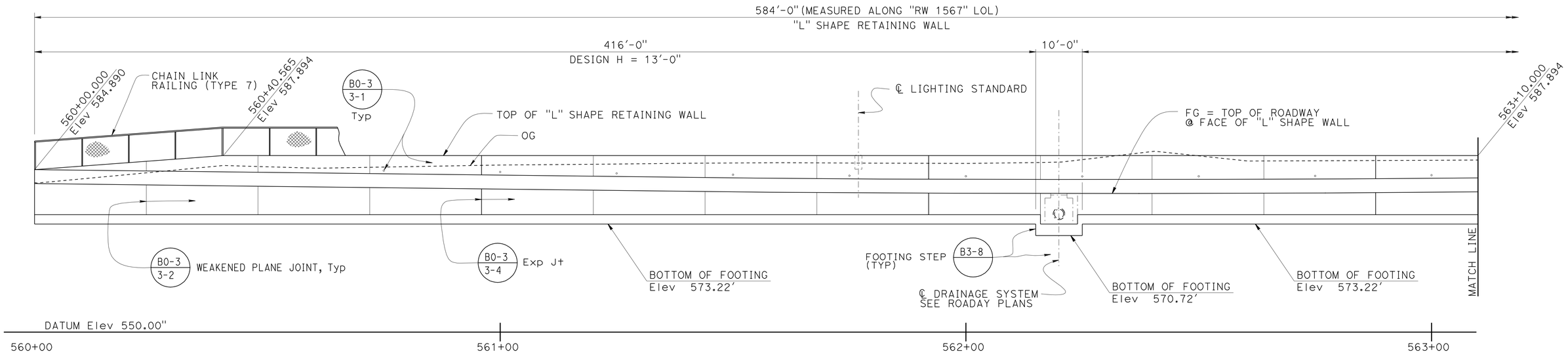

ELEVATION (DEVELOPED)

3/32" = 1'-0"

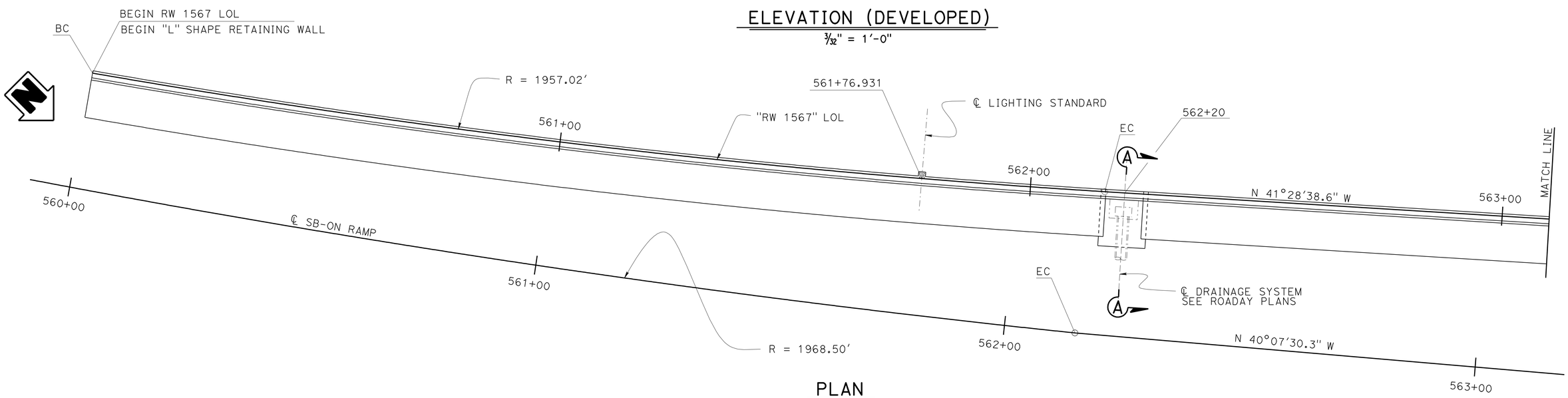

PLAN

3/32" = 1'-0"

	BY	CHECKED
DESIGN	Gabriel Galo	Shervin Pahlavan
DETAILS	Stan Cholda	Shervin Pahlavan
QUANTITIES	Gabriel Galo	Fred Feng

STATE OF CALIFORNIA
DEPARTMENT OF TRANSPORTATION

DIVISION OF ENGINEERING SERVICES
STRUCTURE DESIGN
DESIGN BRANCH 15

BRIDGE NO. 53E0162
POST MILE 29.8

RETAINING WALL NO. 1567
STRUCTURE PLAN NO. 1

STRUCTURES DESIGN DETAIL SHEET (ENGLISH) (REV. 09-01-10)

ORIGINAL SCALE IN INCHES FOR REDUCED PLANS 0 1 2 3

UNIT: 3604
PROJECT NUMBER & PHASE: 0700021119
CONTRACT NO.: 07-1218W1

DISREGARD PRINTS BEARING EARLIER REVISION DATES

REVISION DATES: 04-12-12 06-15-12 07-10-12 08-20-12

SHEET 6 OF 27

FILE => 53e0162-g-sp_01.dgn

USERNAME => s124496 DATE PLOTTED => 10-JUL-2012 TIME PLOTTED => 15:51

DIST	COUNTY	ROUTE	POST MILES TOTAL PROJECT	SHEET No.	TOTAL SHEETS
07	LA	5	29.4/31.6	839	1931

REGISTERED CIVIL ENGINEER — DATE 2-04-12

5-21-12
PLANS APPROVAL DATE

REGISTERED PROFESSIONAL ENGINEER — Ulysses N. Smpardos — No. 61018 — Exp. 12/31/12 — CIVIL — STATE OF CALIFORNIA

The State of California or its officers or agents shall not be responsible for the accuracy or completeness of electronic copies of this plan sheet.

Note:

1. For "SECTION B-B" and "SECTION C-C", see "MISCELLANEOUS DETAILS NO. 2" sheet.

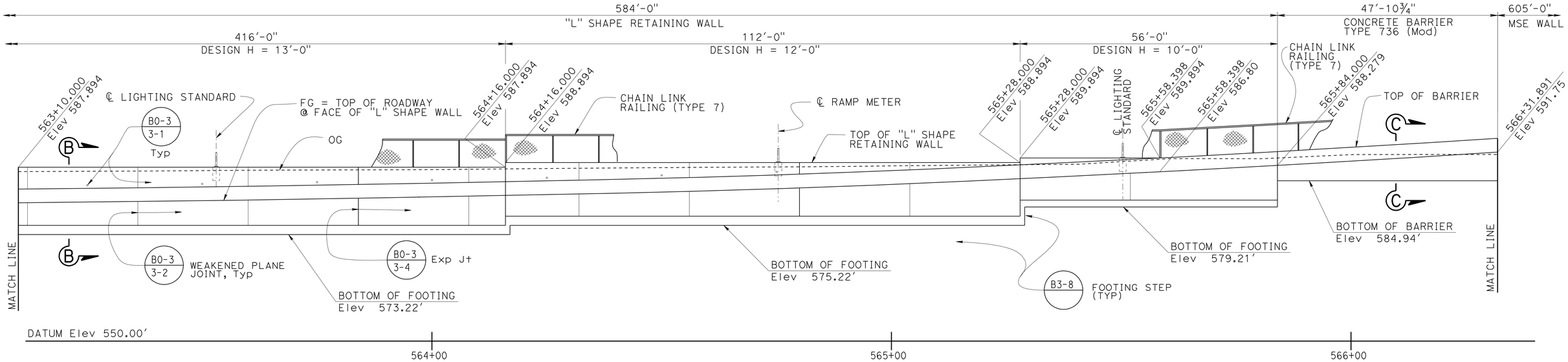

ELEVATION (DEVELOPED)

3/32" = 1'-0"

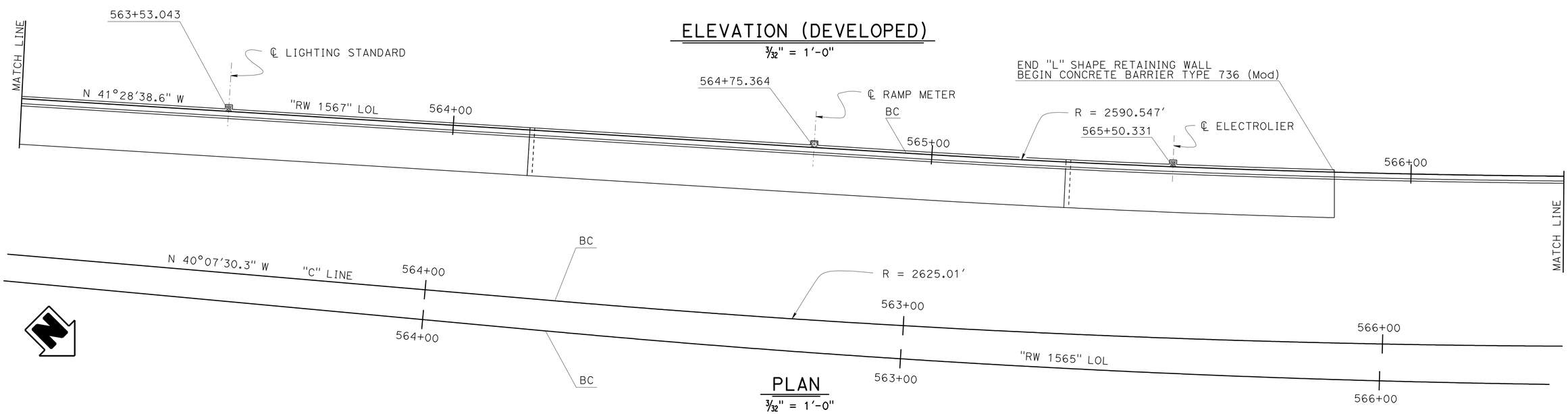

PLAN

3/32" = 1'-0"

DESIGN	BY Gabriel Galo	CHECKED Shervin Pahlavan	
DETAILS	BY Stan Cholda	CHECKED Shervin Pahlavan	
QUANTITIES	BY Gabriel Galo	CHECKED Fred Feng	

STATE OF CALIFORNIA
DEPARTMENT OF TRANSPORTATION

DIVISION OF ENGINEERING SERVICES
STRUCTURE DESIGN
DESIGN BRANCH 15

BRIDGE NO. 53E0162
POST MILE 29.8

RETAINING WALL NO. 1567
STRUCTURE PLAN NO. 2

STRUCTURES DESIGN DETAIL SHEET (ENGLISH) (REV. 09-01-10)

ORIGINAL SCALE IN INCHES FOR REDUCED PLANS 0 1 2 3

UNIT: 3604
PROJECT NUMBER & PHASE: 0700021119
CONTRACT NO.: 07-1218W1

DISREGARD PRINTS BEARING EARLIER REVISION DATES

REVISION DATES: 04-12-12 07-10-12 06-14-12 06-15-12

SHEET 7 OF 27

FILE => 53e0162-g-sp_02.dgn

USERNAME => s124496 DATE PLOTTED => 10-JUL-2012 TIME PLOTTED => 15:51

DIST	COUNTY	ROUTE	POST MILES TOTAL PROJECT	SHEET No.	TOTAL SHEETS
07	LA	5	29.4/31.6	840	1931

REGISTERED CIVIL ENGINEER 2-04-12 DATE

5-21-12
PLANS APPROVAL DATE

REGISTERED PROFESSIONAL ENGINEER Ulysses N. Smpardos No. 61018 Exp. 12/31/12 CIVIL STATE OF CALIFORNIA

The State of California or its officers or agents shall not be responsible for the accuracy or completeness of electronic copies of this plan sheet.

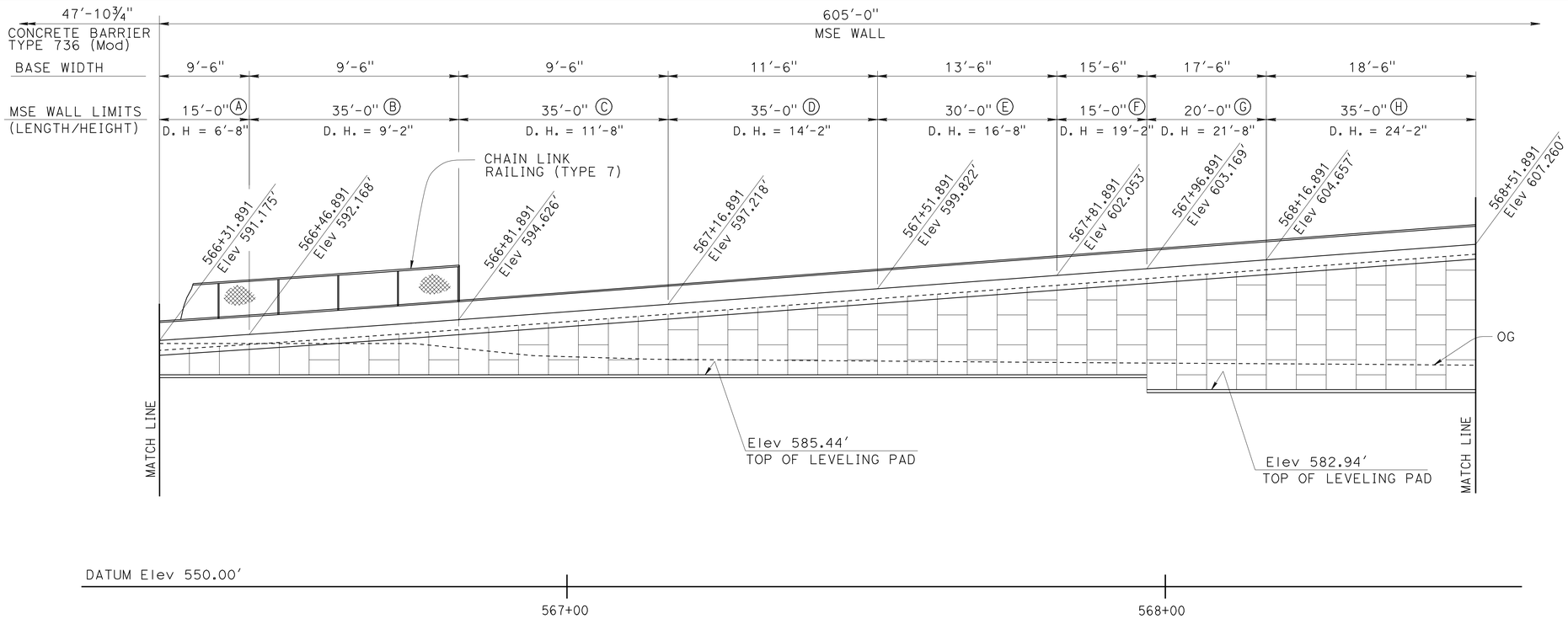

ELEVATION (MIRRORED & DEVELOPED)

3/32" = 1'-0"

Legend:

Ⓐ to Ⓗ - Indicates Soil Reinforcement designation letter. For details, see "STEEL REINFORCEMENT FOR LOAD CASE 1" Table on "INDEX TO PLANS" sheet.

D.H. - Denote Design Height.

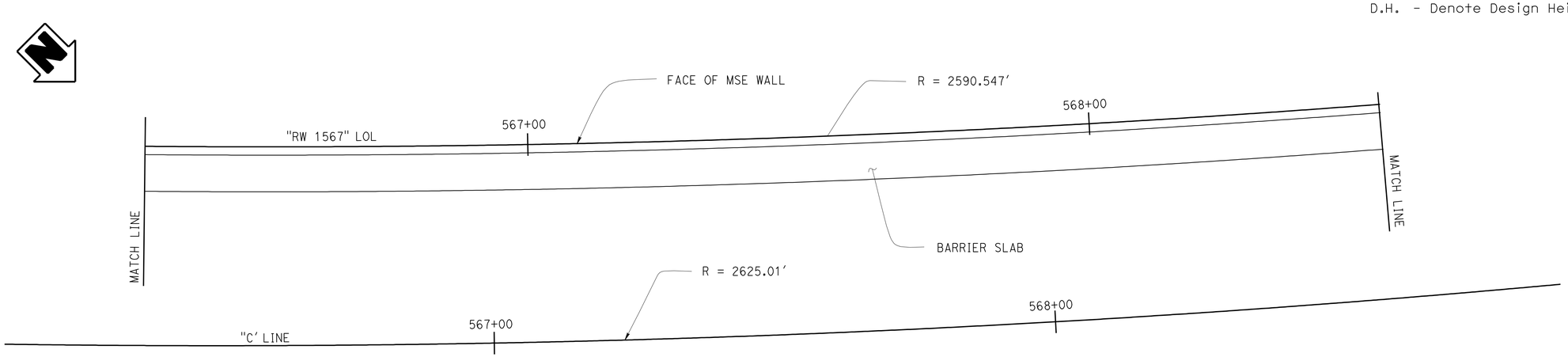

PLAN

3/32" = 1'-0"

DESIGN	BY Gabriel Galo	CHECKED Shervin Pahlavan	
DETAILS	BY Stan Cholda	CHECKED Shervin Pahlavan	
QUANTITIES	BY Gabriel Galo	CHECKED Fred Feng	

STATE OF CALIFORNIA DEPARTMENT OF TRANSPORTATION

DIVISION OF ENGINEERING SERVICES STRUCTURE DESIGN DESIGN BRANCH 15

BRIDGE NO. 53E0162
POST MILE 29.8

RETAINING WALL NO. 1567
STRUCTURE PLAN NO. 3

STRUCTURES DESIGN DETAIL SHEET (ENGLISH) (REV. 09-01-10)

ORIGINAL SCALE IN INCHES FOR REDUCED PLANS 0 1 2 3

UNIT: 3604
PROJECT NUMBER & PHASE: 0700021119
CONTRACT NO.: 07-1218W1

DISREGARD PRINTS BEARING EARLIER REVISION DATES

REVISION DATES 04-12-12 04-14-12 04-26-12

SHEET 8 OF 27

FILE => 53e0162-g-sp_03.dgn

USERNAME => s121614 DATE PLOTTED => 22-MAY-2012 TIME PLOTTED => 07:37

DIST	COUNTY	ROUTE	POST MILES TOTAL PROJECT	SHEET No.	TOTAL SHEETS
07	LA	5	29.4/31.6	841	1931

Ulysses N. Smpardos 2-04-12
REGISTERED CIVIL ENGINEER DATE

5-21-12
PLANS APPROVAL DATE

REGISTERED PROFESSIONAL ENGINEER Ulysses N. Smpardos No. 61018 Exp. 12/31/12 CIVIL STATE OF CALIFORNIA

The State of California or its officers or agents shall not be responsible for the accuracy or completeness of electronic copies of this plan sheet.

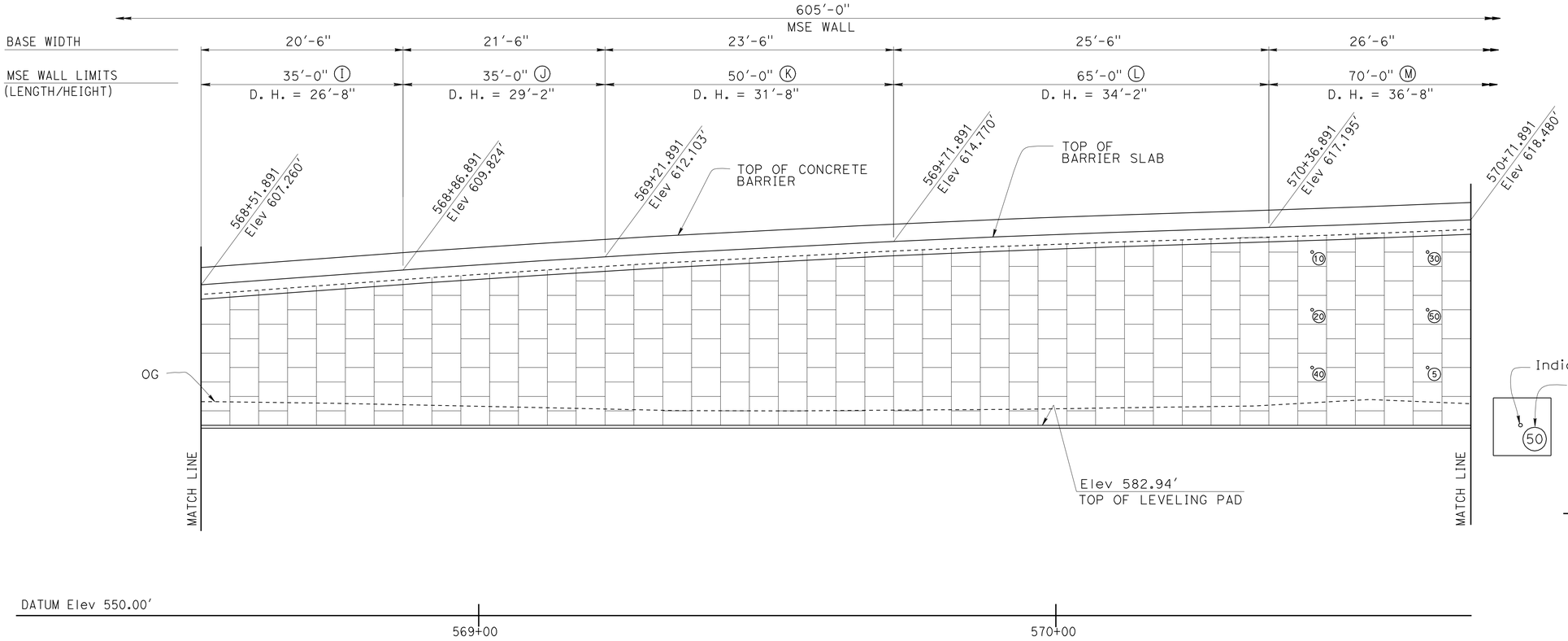

ELEVATION (MIRRORED & DEVELOPED)

3/32" = 1'-0"

PANEL LEGEND

NO SCALE

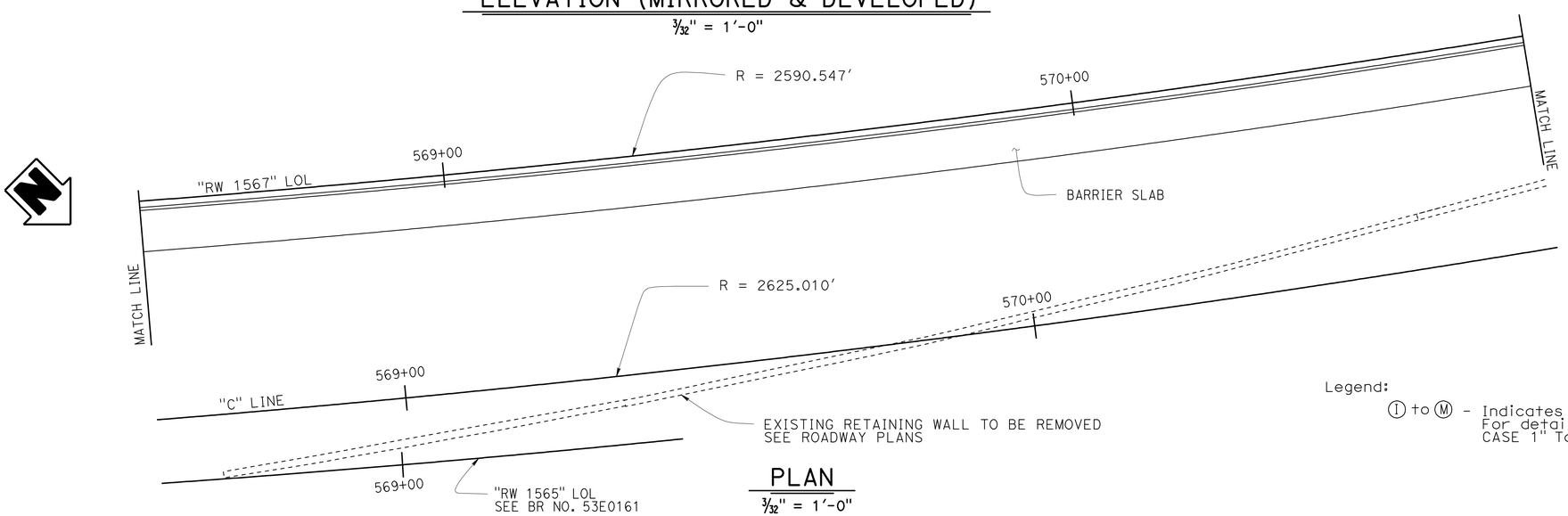

PLAN

3/32" = 1'-0"

Legend:

I to M - Indicates Soil Reinforcement designation letter. For details, see "STEEL REINFORCEMENT FOR LOAD CASE 1" Table on "INDEX TO PLANS" sheet.

	BY	CHECKED
DESIGN	Gabriel Galo	Shervin Pahlavan
DETAILS	Stan Cholda	Shervin Pahlavan
QUANTITIES	Gabriel Galo	Fred Feng

STATE OF CALIFORNIA
DEPARTMENT OF TRANSPORTATION

DIVISION OF ENGINEERING SERVICES
STRUCTURE DESIGN
DESIGN BRANCH 15

BRIDGE NO. 53E0162
POST MILE 29.8

RETAINING WALL NO. 1567
STRUCTURE PLAN NO. 4

STRUCTURES DESIGN DETAIL SHEET (ENGLISH) (REV. 09-01-10)

ORIGINAL SCALE IN INCHES FOR REDUCED PLANS 0 1 2 3

UNIT: 3604
PROJECT NUMBER & PHASE: 0700021119
CONTRACT NO.: 07-1218W1

DISREGARD PRINTS BEARING EARLIER REVISION DATES

REVISION DATES: 04-12-12 06-14-12 04-23-12 05-30-12

SHEET 9 OF 27

FILE => 53e0162-g-sp_04.dgn

USERNAME => s124496 DATE PLOTTED => 15-JUN-2012 TIME PLOTTED => 13:57

DIST	COUNTY	ROUTE	POST MILES TOTAL PROJECT	SHEET No.	TOTAL SHEETS
07	LA	5	29.4/31.6	842	1931

REGISTERED CIVIL ENGINEER — DATE 2-04-12

5-21-12
PLANS APPROVAL DATE

REGISTERED PROFESSIONAL ENGINEER — Ulysses N. Smpardos — No. 61018 — Exp. 12/31/12 — CIVIL — STATE OF CALIFORNIA

The State of California or its officers or agents shall not be responsible for the accuracy or completeness of electronic copies of this plan sheet.

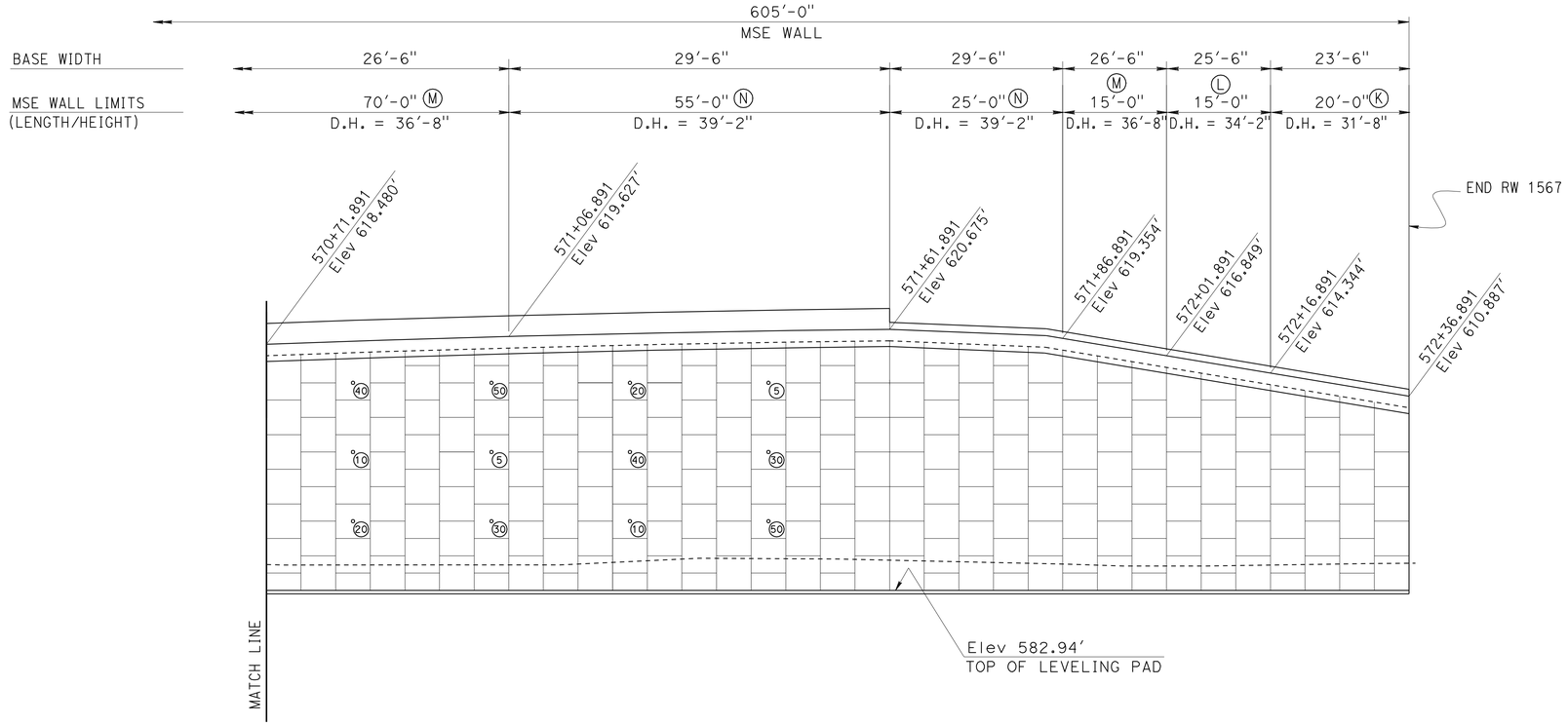

ELEVATION (MIRRORED & DEVELOPED)

3/32" = 1'-0"

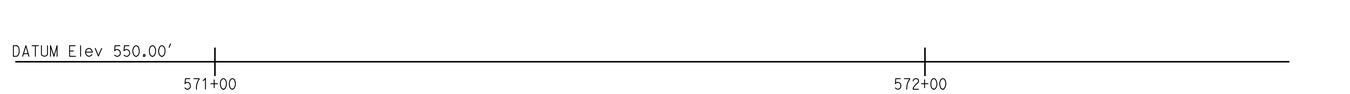

Indicates location of inspection wire placement

Indicates interval in years from time of construction to time of removal of inspection wire

(50)

PANEL LEGEND

NO SCALE

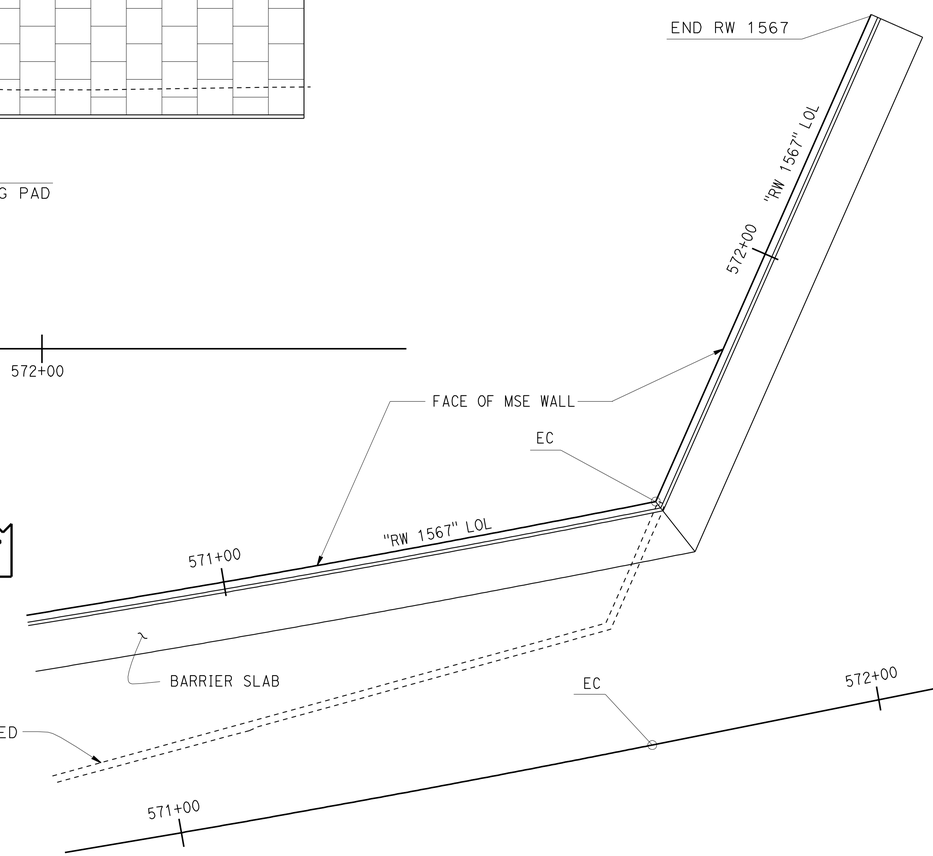

PLAN

3/32" = 1'-0"

Legend:

K to N - Indicates Soil Reinforcement designation letter. For details, see "STEEL REINFORCEMENT FOR LOAD CASE 1" Table on "INDEX TO PLANS" sheet.

	BY	CHECKED
DESIGN	Gabriel Galo	Shervin Pahlavan
DETAILS	Stan Cholda	Shervin Pahlavan
QUANTITIES	Gabriel Galo	Fred Feng

STATE OF CALIFORNIA
DEPARTMENT OF TRANSPORTATION

DIVISION OF ENGINEERING SERVICES
STRUCTURE DESIGN
DESIGN BRANCH 15

BRIDGE NO. 53E0162
POST MILE 29.8

RETAINING WALL NO. 1567
STRUCTURE PLAN NO. 5

STRUCTURES DESIGN DETAIL SHEET (ENGLISH) (REV. 09-01-10)

ORIGINAL SCALE IN INCHES FOR REDUCED PLANS 0 1 2 3

UNIT: 3604
PROJECT NUMBER & PHASE: 0700021119
CONTRACT NO.: 07-1218W1

DISREGARD PRINTS BEARING EARLIER REVISION DATES

REVISION DATES: 04-12-12 06-14-12 04-16-12 05-30-12

SHEET 10 OF 27

FILE => 53e0162-g-sp_05.dgn

USERNAME => s124936 DATE PLOTTED => 15-JUN-2012 TIME PLOTTED => 13:57

DIST	COUNTY	ROUTE	POST MILES TOTAL PROJECT	SHEET No.	TOTAL SHEETS
07	LA	5	29.4/31.6	843	1931

REGISTERED CIVIL ENGINEER — DATE 2-04-12

5-21-12
PLANS APPROVAL DATE

REGISTERED PROFESSIONAL ENGINEER — Ulysses N. Smpardos — No. 61018 — Exp. 12/31/12 — CIVIL — STATE OF CALIFORNIA

The State of California or its officers or agents shall not be responsible for the accuracy or completeness of electronic copies of this plan sheet.

Legend:

- Limits of Structure Excavation paid as Earth Retaining Structure (Mechanically Stabilized Embankment Wall)
- Limits of Structure Excavation (Petroleum Hydrocarbon)
- Limits of Structure Backfill paid as Earth Retaining Structure (Mechanically Stabilized Embankment Wall)
- Limits of Structure Backfill

Notes

1. Locate underdrain behind bottom level of welded wire mats wherever possible, or at elevation needed to drain, as elsewhere on plans.
2. Maximum spacing between cleanout pipe and outlet pipe is 200 feet.
3. At sags in profile of underdrain, install outlet pipe for each direction of flow.
4. Place perforated pipe underdrain of diameter shown elsewhere on plans, or Min 4" Ø Smoothed Wall PVC or Min 8" Ø Corrugated HDPE.

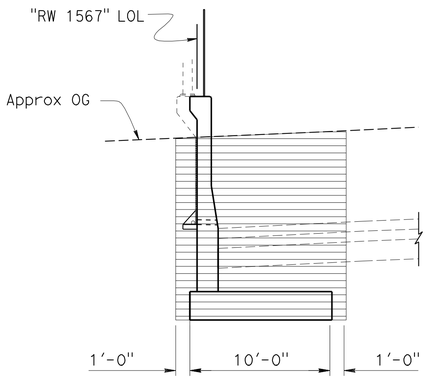

LIMITS OF EXCAVATION
3/16" = 1'-0"

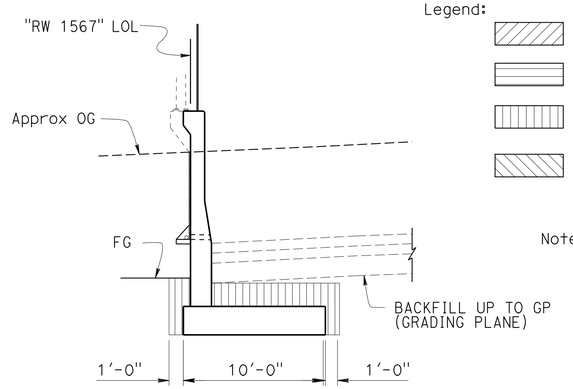

LIMITS OF BACKFILL
3/16" = 1'-0"

LIMITS OF EXCAVATION AND BACKFILL
STA 560+00.000 TO STA 565+84.000

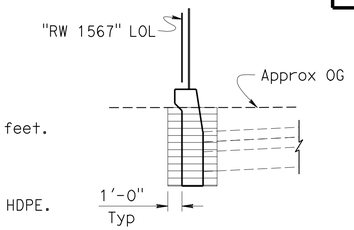

LIMITS OF EXCAVATION
3/16" = 1'-0"

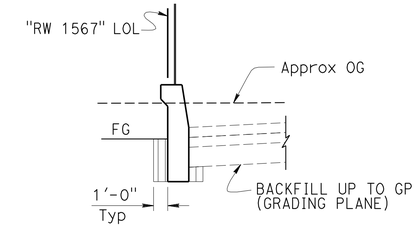

LIMITS OF BACKFILL
3/16" = 1'-0"

LIMITS OF EXCAVATION AND BACKFILL
STA 565+84.000 TO STA 566+31.891

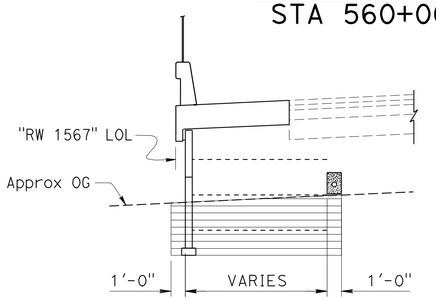

LIMITS OF EXCAVATION
3/16" = 1'-0"
STA 566+31.891 TO
STA 567+20.000±

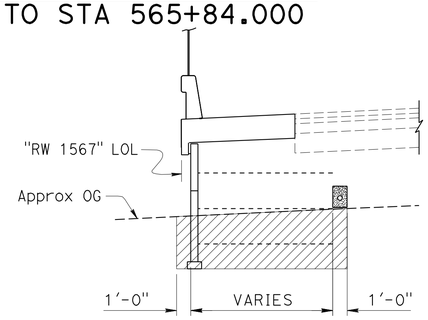

LIMITS OF EXCAVATION
3/16" = 1'-0"
STA 567+20.000± TO
STA 568+80.000±

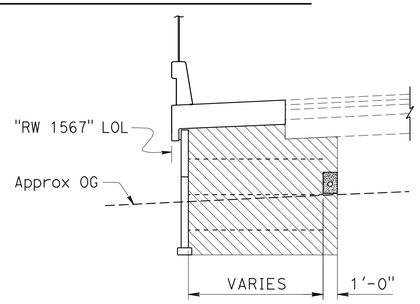

LIMITS OF BACKFILL
3/16" = 1'-0"
STA 566+31.891 TO
STA 567+80.000±

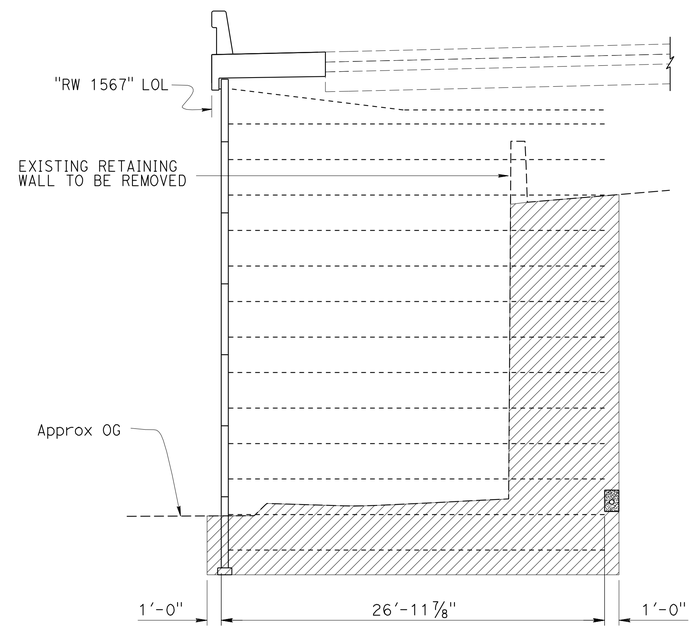

LIMITS OF EXCAVATION
3/16" = 1'-0"

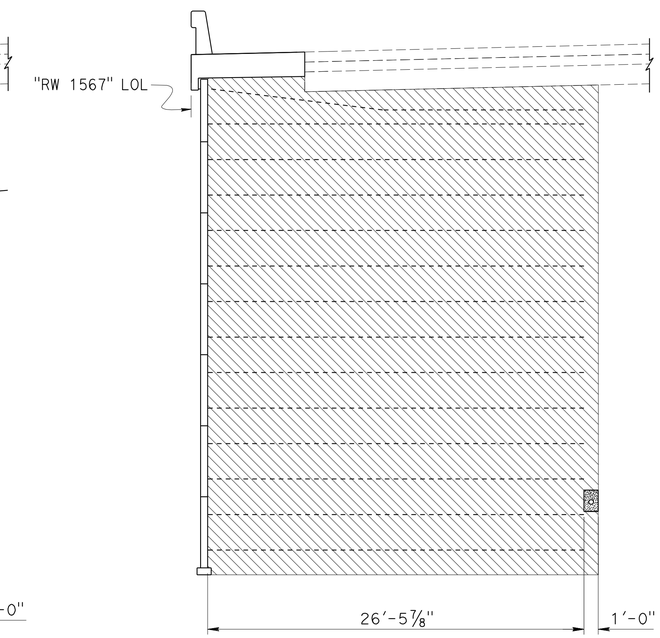

LIMITS OF BACKFILL
3/16" = 1'-0"

LIMITS OF EXCAVATION AND BACKFILL
STA 568+80.000± TO STA 572+37.608

	BY	CHECKED
DESIGN	Gabriel Galo	Shervin Pahlavan
DETAILS	Stan Cholda	Shervin Pahlavan
QUANTITIES	Gabriel Galo	Fred Feng

STATE OF CALIFORNIA
DEPARTMENT OF TRANSPORTATION

DIVISION OF ENGINEERING SERVICES
STRUCTURE DESIGN
DESIGN BRANCH 15

BRIDGE NO. 53E0162
POST MILE 29.8

RETAINING WALL NO. 1567
MISCELLANEOUS DETAILS NO. 1

STRUCTURES DESIGN DETAIL SHEET (ENGLISH) (REV. 09-01-10)

ORIGINAL SCALE IN INCHES FOR REDUCED PLANS 0 1 2 3

UNIT: 3604
PROJECT NUMBER & PHASE: 0700021119
CONTRACT NO.: 07-1218W1

DISREGARD PRINTS BEARING EARLIER REVISION DATES

REVISION DATES: 04-12-12 05-31-12 06-15-12 04-24-12

SHEET 11 OF 27

FILE => 53e0162-m-misc01.dgn

USERNAME => s124496 DATE PLOTTED => 15-JUN-2012 TIME PLOTTED => 13:57

DIST	COUNTY	ROUTE	POST MILES TOTAL PROJECT	SHEET No.	TOTAL SHEETS
07	LA	5	29.4/31.6	844	1931

REGISTERED CIVIL ENGINEER — DATE: 2-04-12

5-21-12
PLANS APPROVAL DATE

REGISTERED PROFESSIONAL ENGINEER — Ulysses N. Smpardos — No. 61018 — Exp. 12/31/12 — CIVIL — STATE OF CALIFORNIA

The State of California or its officers or agents shall not be responsible for the accuracy or completeness of electronic copies of this plan sheet.

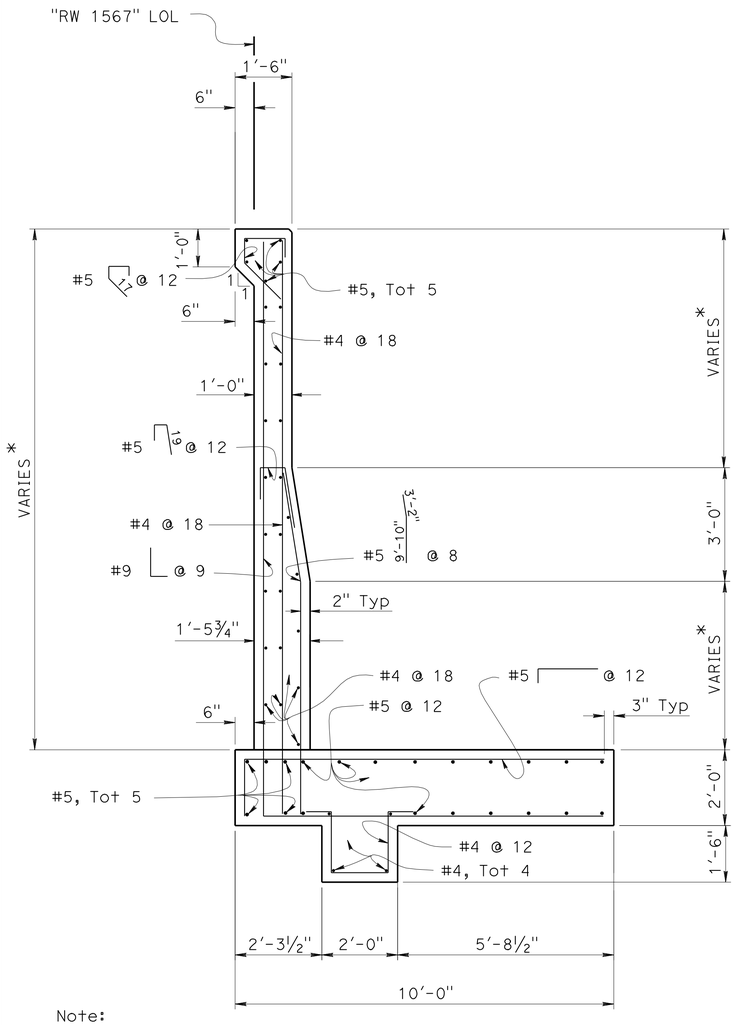

Note:
Geocomposite Drain not shown for clarity

SECTION B-B
½" = 1'-0"

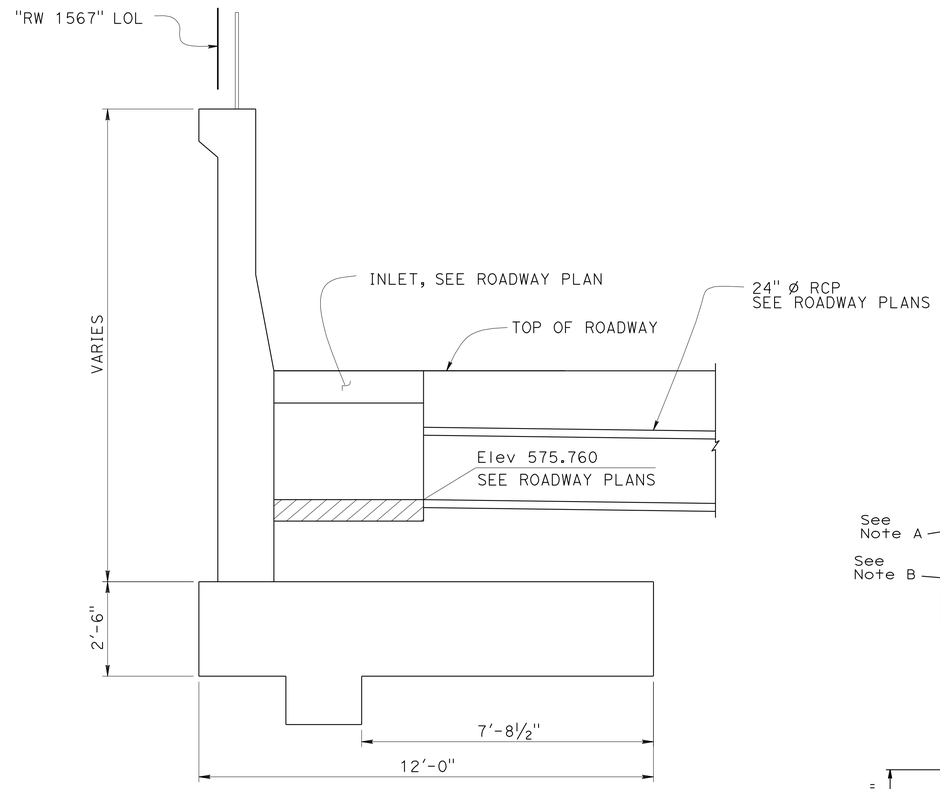

Note: For details not shown, see "SECTION A-A".

SECTION A-A
½" = 1'-0"

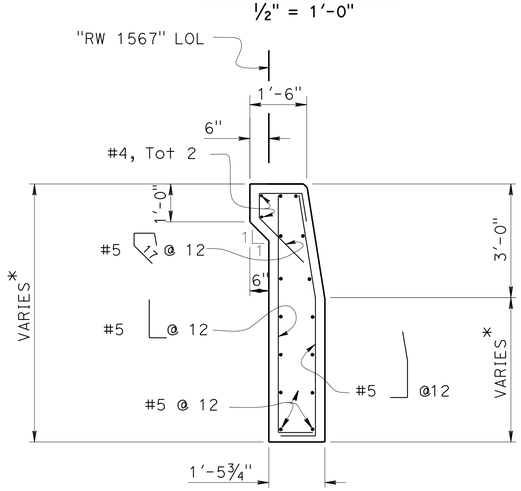

SECTION C-C
½" = 1'-0"

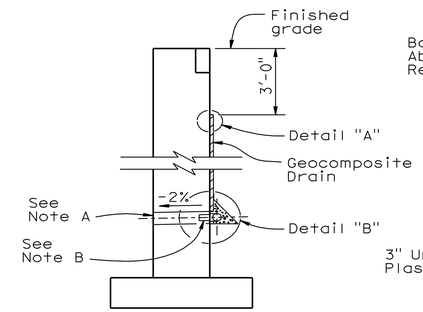

WALL SECTION

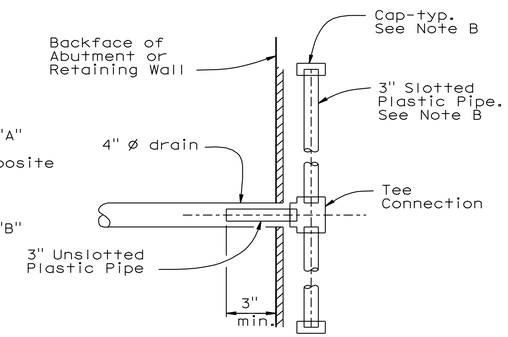

SECTION A-A

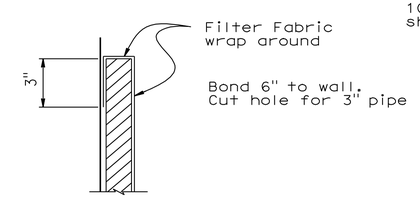

DETAIL "A"

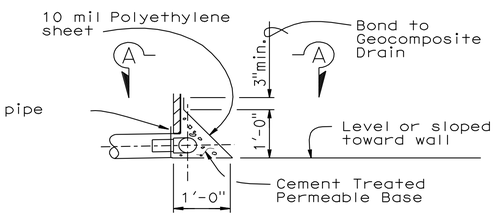

DETAIL "B"

WEEP HOLE AND GEOCOMPOSITE DRAIN

ALTERNATIVE TO BRIDGE DETAIL (BO-3 / 3-1)

Notes:

A. 4" ø drains at intermediate sag points and at 25' max center to center (9' c-c for Type 3 and 9'-3" c-c for Type 4 retaining walls).
For walls adjacent to sidewalks or curbs, provide 4" cast iron or asbestos cement pipe under the sidewalk to discharge through curb face.
Exposed wall drains shall be located 3"± above finished grade.

B. Geocomposite drain, cement treated permeable base, and 3"ø slotted plastic pipe continuous behind retaining wall or abutment. Cap ends of pipe. Provide "Tee" connection at each 4" ø drain.

C. Connect the low end of plastic pipe to the main outlet pipe as apprlicable.

* For details, see "STRUCTURE PLAN NO. 1", "STRUCTURE PLAN NO. 2" and Roadway Plans.

	BY	CHECKED
DESIGN	Gabriel Galo	Shervin Pahlavan
DETAILS	Stan Cholda	Shervin Pahlavan
QUANTITIES	Gabriel Galo	Fred Feng

STATE OF CALIFORNIA
DEPARTMENT OF TRANSPORTATION

DIVISION OF ENGINEERING SERVICES
STRUCTURE DESIGN
DESIGN BRANCH

BRIDGE NO.
POST MILE

MISCELLANEOUS DETAILS NO. 2

STRUCTURES DESIGN DETAIL SHEET (ENGLISH) (REV. 09-01-10)

ORIGINAL SCALE IN INCHES FOR REDUCED PLANS 0 1 2 3

UNIT:
PROJECT NUMBER & PHASE:
CONTRACT NO.:

DISREGARD PRINTS BEARING EARLIER REVISION DATES

REVISION DATES: 06-22-12 06-15-12 06-06-12 05-31-12

SHEET 12 OF

FILE => 53e0162-m-misc02.dgn

USERNAME => s124496 DATE PLOTTED => 15-JUN-2012 TIME PLOTTED => 13:57

DIST	COUNTY	ROUTE	POST MILES TOTAL PROJECT	SHEET No.	TOTAL SHEETS
07	LA	5	29.4/31.6	845	1931

REGISTERED CIVIL ENGINEER — 2-04-12 DATE

5-21-12
PLANS APPROVAL DATE

REGISTERED PROFESSIONAL ENGINEER — Ulysses N. Smpardos — No. 61018 — Exp. 12/31/12 — CIVIL — STATE OF CALIFORNIA

The State of California or its officers or agents shall not be responsible for the accuracy or completeness of electronic copies of this plan sheet.

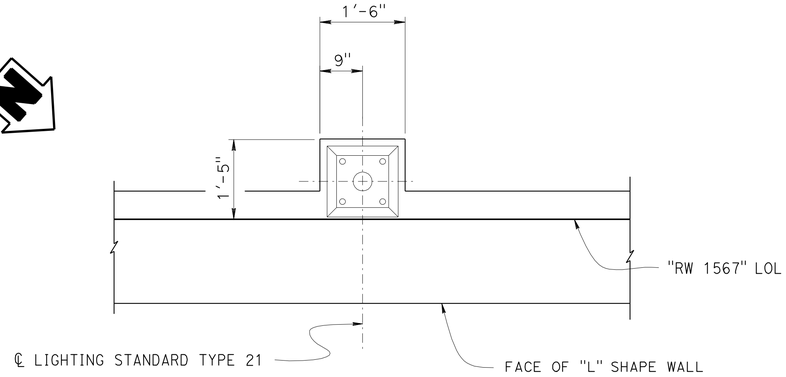

PLAN
3/4" = 1'-0"

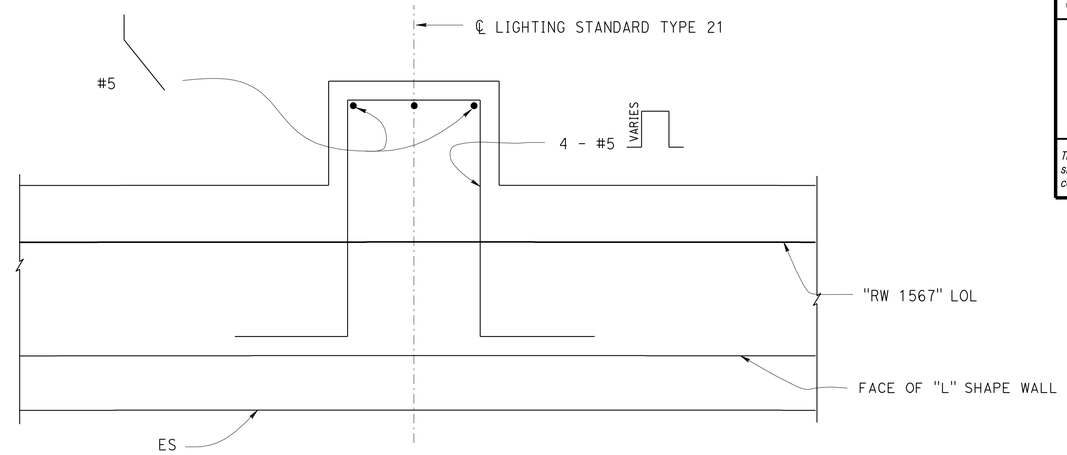

SECTION B-B
1 1/2" = 1'-0"

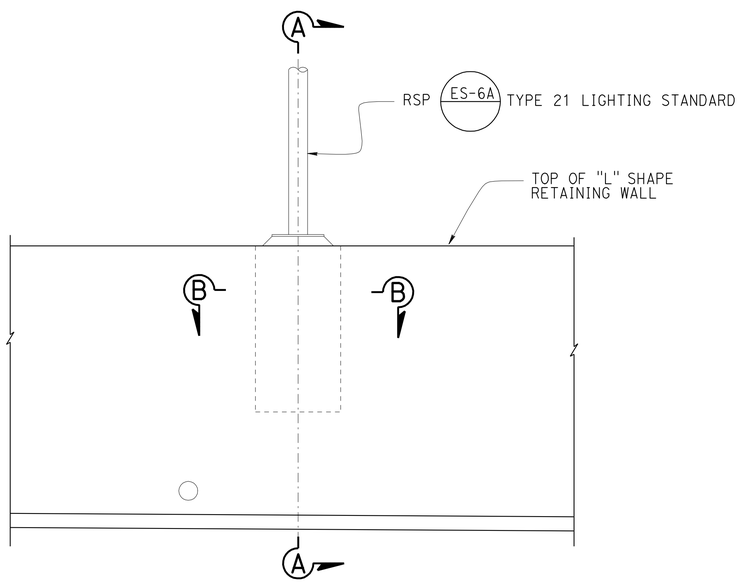

ELEVATION
3/4" = 1'-0"

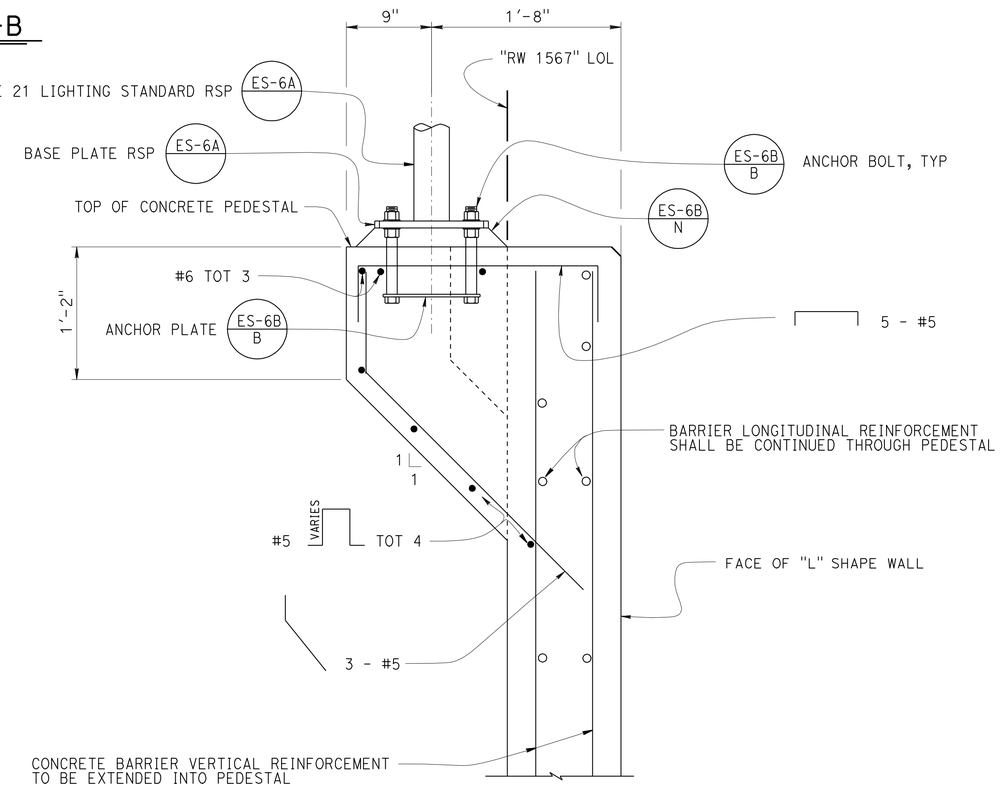

SECTION A-A
1 1/2" = 1'-0"

TYPE 21 ELECTROLIER DETAILS

	BY	CHECKED
DESIGN	Gabriel Galo	Shervin Pahlavan
DETAILS	Stan Cholda	Shervin Pahlavan
QUANTITIES	Gabriel Galo	Fred Feng

STATE OF CALIFORNIA
DEPARTMENT OF TRANSPORTATION

DIVISION OF ENGINEERING SERVICES
STRUCTURE DESIGN
DESIGN BRANCH 15

BRIDGE NO. 53E0162
POST MILE 29.8

RETAINING WALL NO. 1567
MISCELLANEOUS DETAILS NO. 3

STRUCTURES DESIGN DETAIL SHEET (ENGLISH) (REV. 09-01-10)

ORIGINAL SCALE IN INCHES FOR REDUCED PLANS 0 1 2 3

UNIT: 3604
PROJECT NUMBER & PHASE: 0700021119
CONTRACT NO.: 07-1218W1

DISREGARD PRINTS BEARING EARLIER REVISION DATES

REVISION DATES: 03-09-12 04-14-12 04-19-12 04-26-12

SHEET 13 OF 27

FILE => 53e0162-m-misc03.dgn

USERNAME => s132614 DATE PLOTTED => 22-MAY-2012 TIME PLOTTED => 07:38

DIST	COUNTY	ROUTE	POST MILES TOTAL PROJECT	SHEET No.	TOTAL SHEETS
07	LA	5	29.4/31.6	846	1931

REGISTERED CIVIL ENGINEER 2-04-12 DATE

5-21-12
PLANS APPROVAL DATE

REGISTERED PROFESSIONAL ENGINEER Ulysses N. Smpardos No. 61018 Exp. 12/31/12 CIVIL STATE OF CALIFORNIA

The State of California or its officers or agents shall not be responsible for the accuracy or completeness of electronic copies of this plan sheet.

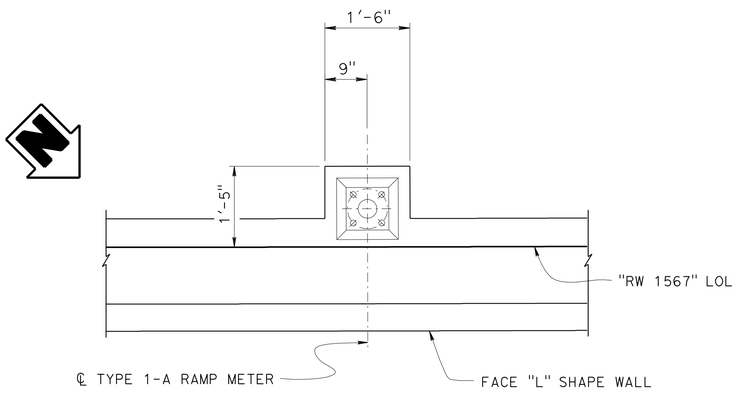

PLAN
3/4" = 1'-0"

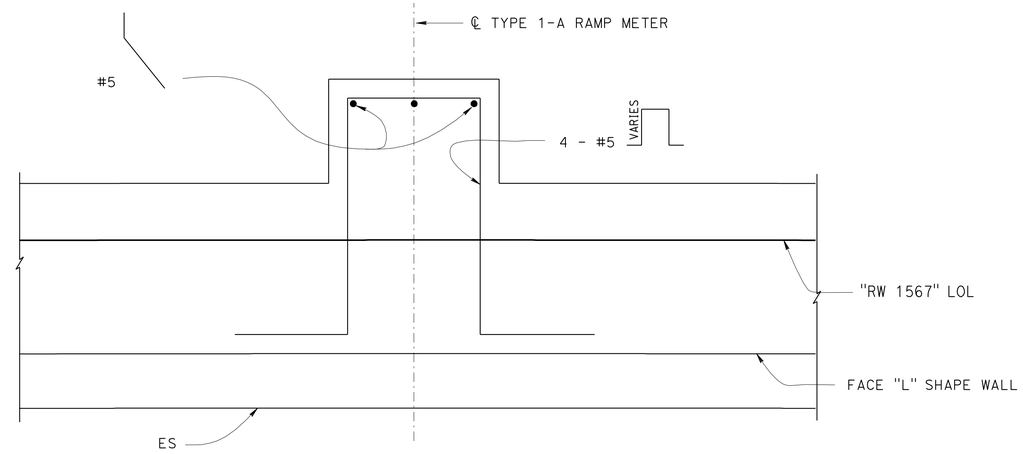

SECTION B-B
1 1/2" = 1'-0"

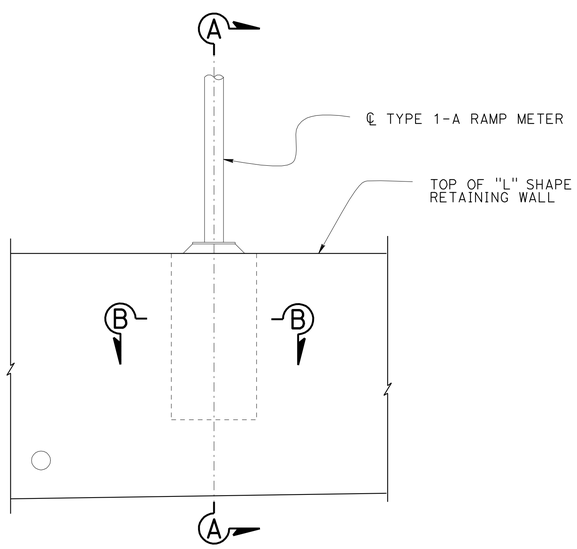

ELEVATION
3/4" = 1'-0"

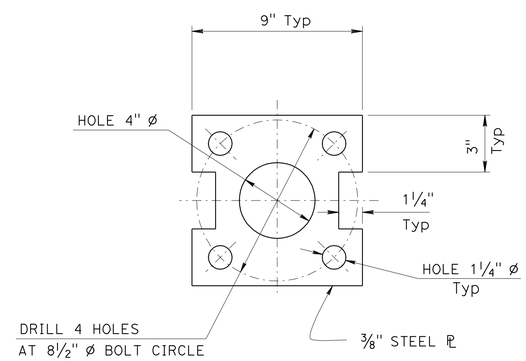

DETAIL X
3" = 1'-0"

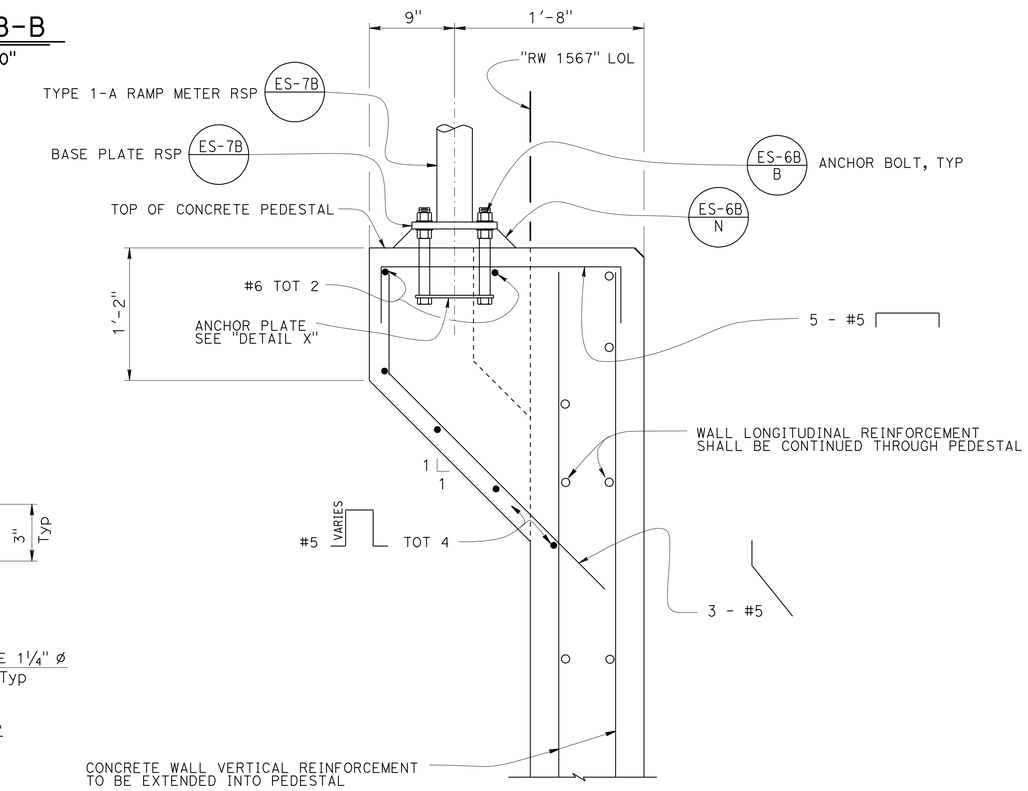

SECTION A-A
1 1/2" = 1'-0"

TYPE 1-A RAMP METER SIGNAL POLE DETAILS

DESIGN	BY Gabriel Galo	CHECKED Shervin Pahlavan	
DETAILS	BY Stan Cholda	CHECKED Shervin Pahlavan	
QUANTITIES	BY Gabriel Galo	CHECKED Fred Feng	

STATE OF CALIFORNIA
DEPARTMENT OF TRANSPORTATION

DIVISION OF ENGINEERING SERVICES
STRUCTURE DESIGN
DESIGN BRANCH 15

BRIDGE NO. 53E0162
POST MILE 29.8

RETAINING WALL NO. 1567
MISCELLANEOUS DETAILS NO. 4

STRUCTURES DESIGN DETAIL SHEET (ENGLISH) (REV. 09-01-10)

ORIGINAL SCALE IN INCHES FOR REDUCED PLANS 0 1 2 3

UNIT: 3604
PROJECT NUMBER & PHASE: 0700021119
CONTRACT NO.: 07-1218W1

DISREGARD PRINTS BEARING EARLIER REVISION DATES

REVISION DATES 03-08-12 06-15-12 05-30-12 06-01-12

SHEET 14 OF 27

FILE => 53e0162-m-misc04.dgn

USERNAME => 6124496 DATE PLOTTED => 15-JUN-2012 TIME PLOTTED => 13:57

DIST	COUNTY	ROUTE	POST MILES TOTAL PROJECT	SHEET No.	TOTAL SHEETS
07	LA	5	29.4/31.6	847	1931

REGISTERED CIVIL ENGINEER — DATE: 2-04-12

5-21-12
PLANS APPROVAL DATE

REGISTERED PROFESSIONAL ENGINEER — Ulysses N. Smpardos — No. 61018 — Exp. 12/31/12 — CIVIL — STATE OF CALIFORNIA

The State of California or its officers or agents shall not be responsible for the accuracy or completeness of electronic copies of this plan sheet.

TABLE 1

DRAINAGE PIPE LOCATION					
LOCATION NUMBER	STATION	ELEVATION	LOCATION NUMBER	STATION	ELEVATION
1	0.667′ RT 566+86.638 "RW 1567" LOL	–	7	13.667′ RT 567+80.898 "RW 1567" LOL	–
2	9.667′ RT 566+86.638 "RW 1567" LOL	590.303′	8	15.667′ RT 567+82.885 "RW 1567" LOL	588.763′
3	9.667′ RT 567+20.894 "RW 1567" LOL	–	9	15.667′ RT 567+95.899 "RW 1567" LOL	–
4	11.667′ RT 567+22.884 "RW 1567" LOL	589.724′	10	17.667′ RT 567+97.884 "RW 1567" LOL	588.522′
5	11.667′ RT 567+50.894 "RW 1567" LOL	–	11	17.667′ RT 568+1.726 "RW 1567" LOL	588.211′
6	13.667′ RT 567+52.887 "RW 1567" LOL	589.244′	12	0.667′ RT 568+1.726 "RW 1567" LOL	–

Notes:

1. At sags in profile of underdrain pipe, install outlet pipe for each direction of flow.
2. Elevations are given at Invert of pipe.
3. Use PVC perforated pipe 4" ø for drainage.
4. Cleanout pipe and outlet pipe must be non-perforated PVC pipe 4" ø.
5. For pipe location along drainage line , see "TABLE 1".
6. Outlet pipes and cleanout pipes shall be located 6" Min above finish grade.
7. At outlet pipe anchor firmly to backface a 6" square aluminum or galvanized steel wire 1/4" mesh hardware cloth, minimum wire diameter 0.025"
8. For "SECTION A-A" and "SECTION B-B", see "DRAINAGE DETAILS NO.2".

Legend:

(XX) Indicates pipe location along drainage line

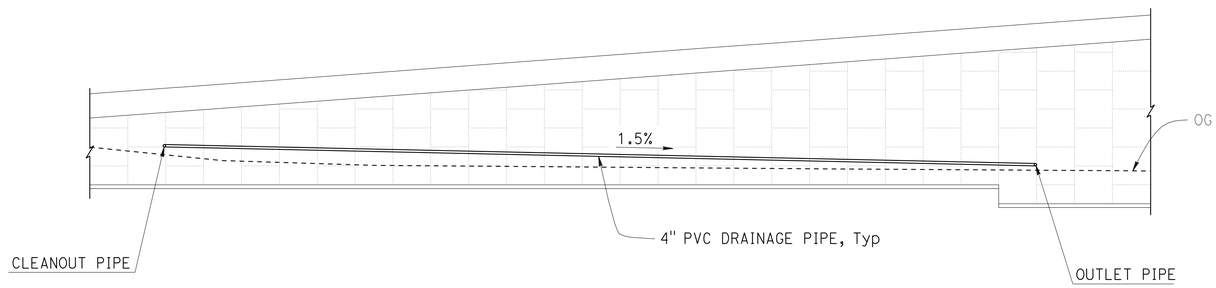

ELEVATION

1" = 10′-0"

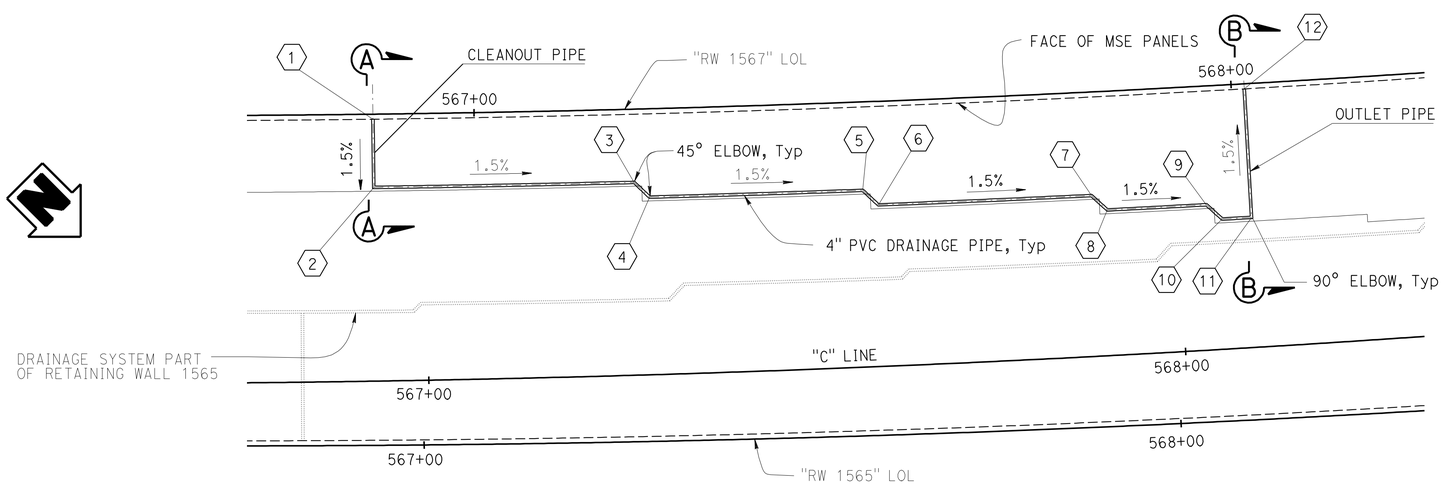

PLAN

1" = 10′-0"

DESIGN	BY Gabriel Galo	CHECKED Shervin Pahlavan	
DETAILS	BY Stan Cholda	CHECKED Shervin Pahlavan	
QUANTITIES	BY Gabriel Galo	CHECKED Fred Feng	

STATE OF CALIFORNIA
DEPARTMENT OF TRANSPORTATION

DIVISION OF ENGINEERING SERVICES
STRUCTURE DESIGN
DESIGN BRANCH 15

BRIDGE NO. 53E0162
POST MILE 29.8

RETAINING WALL NO. 1567
DRAINAGE DETAILS NO. 1

STRUCTURES DESIGN DETAIL SHEET (ENGLISH) (REV. 09-01-10)

ORIGINAL SCALE IN INCHES FOR REDUCED PLANS 0 1 2 3

UNIT: 3604
PROJECT NUMBER & PHASE: 0700021119
CONTRACT NO.: 07-1218W1

DISREGARD PRINTS BEARING EARLIER REVISION DATES

REVISION DATES: 04-21-12 04-24-12 04-25-12 04-26-12

SHEET 15 OF 27

FILE => 53e0162-r-ddet01.dgn

USERNAME => s121614 DATE PLOTTED => 22-MAY-2012 TIME PLOTTED => 07:38

DIST	COUNTY	ROUTE	POST MILES TOTAL PROJECT	SHEET No.	TOTAL SHEETS
07	LA	5	29.4/31.6	848	1931

Ulysses N. Smpardos 2-04-12
REGISTERED CIVIL ENGINEER DATE

5-21-12
PLANS APPROVAL DATE

REGISTERED PROFESSIONAL ENGINEER
Ulysses N. Smpardos
No. 61018
Exp. 12/31/12
CIVIL
STATE OF CALIFORNIA

The State of California or its officers or agents shall not be responsible for the accuracy or completeness of electronic copies of this plan sheet.

Note:
1. For Underdrain Details, see "MECHANICALLY STABILIZED EMBANKMENT DETAILS NO. 6" sheet.

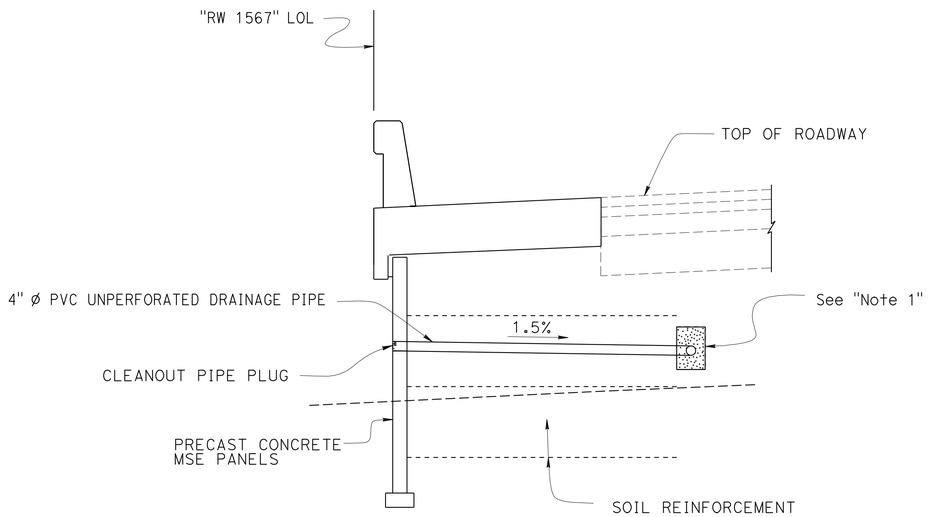

SECTION A-A
3/8" = 1'-0"

CLEANOUT PIPE

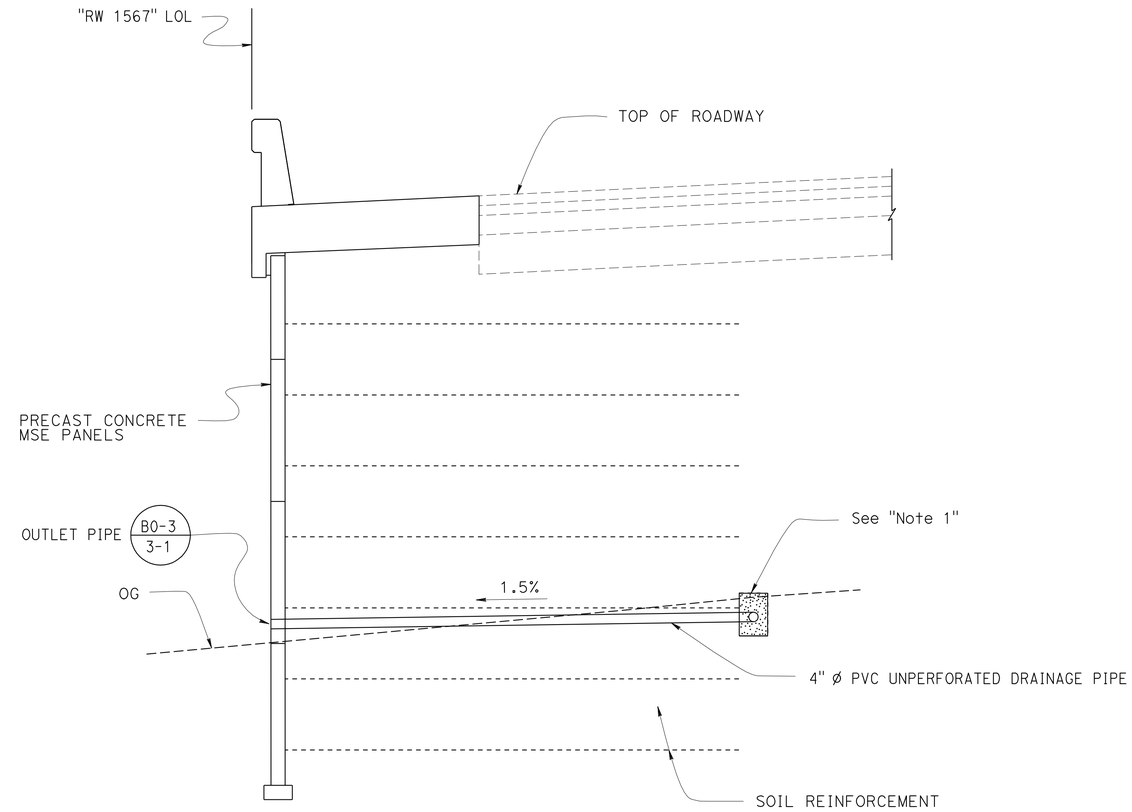

SECTION B-B
3/8" = 1'-0"

OUTLET PIPE

DESIGN	BY Gabriel Galo	CHECKED Shervin Pahlavan	
DETAILS	BY Stan Cholda	CHECKED Shervin Pahlavan	
QUANTITIES	BY Gabriel Galo	CHECKED Fred Feng	

STATE OF CALIFORNIA
DEPARTMENT OF TRANSPORTATION

DIVISION OF ENGINEERING SERVICES
STRUCTURE DESIGN
DESIGN BRANCH 15

BRIDGE NO. 53E0162
POST MILE 29.8

RETAINING WALL NO. 1567
DRAINAGE DETAILS NO. 2

STRUCTURES DESIGN DETAIL SHEET (ENGLISH) (REV. 09-01-10)

ORIGINAL SCALE IN INCHES FOR REDUCED PLANS 0 1 2 3

UNIT: 3604
PROJECT NUMBER & PHASE: 0700021119
CONTRACT NO.: 07-1218W1

DISREGARD PRINTS BEARING EARLIER REVISION DATES

REVISION DATES: 04-25-12 06-15-12 04-26-12 05-30-12

SHEET 16 OF 27

FILE => 53e0162-r-ddet02.dgn

USERNAME => s124496 DATE PLOTTED => 15-JUN-2012 TIME PLOTTED => 13:57

DIST	COUNTY	ROUTE	POST MILES TOTAL PROJECT	SHEET No.	TOTAL SHEETS
07	LA	5	29.4/31.6	849	1931

REGISTERED CIVIL ENGINEER — Ulysses N. Smpardos — DATE 2-04-12

5-21-12
PLANS APPROVAL DATE

REGISTERED PROFESSIONAL ENGINEER — Ulysses N. Smpardos — No. 61018 — Exp. 12/31/12 — CIVIL — STATE OF CALIFORNIA

The State of California or its officers or agents shall not be responsible for the accuracy or completeness of electronic copies of this plan sheet.

DESIGN DATA

DESIGN: AASHTO LRFD Bridge Design Specifications, 4th Edition with California Amendments.

WS: 33 psf on sound wall

F_t : 54 kips on barrier

EQE: k_h = 0.2
k_v = 0.0

REINFORCED CONCRETE: f'c = 3600 psi
fy = 60 ksi
n = 8

③ NOTES:

1. Clearance to reinforcing steel in concrete barrier to be 1".
2. Not all barrier reinforcement shown.
3. No expansion joints in concrete barrier or barrier slab within wall limits.
4. Specific concrete barrier to be used is shown elsewhere in Project Plans.
5. Minimum slab length: 40 ft

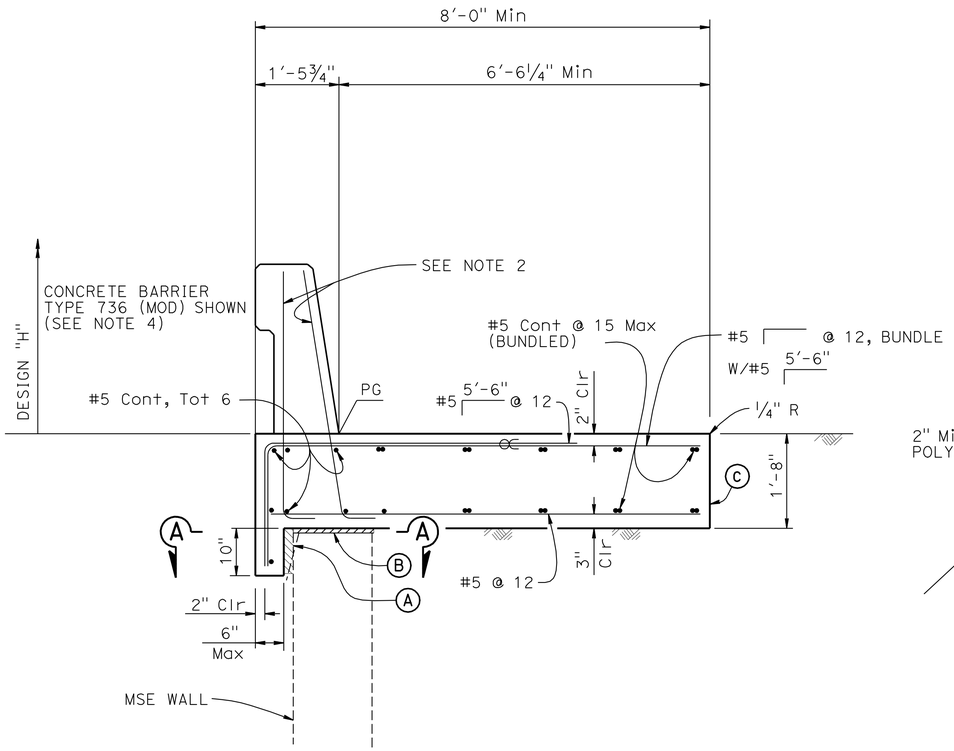

② CONCRETE BARRIER SLAB

¾" = 1'-0"

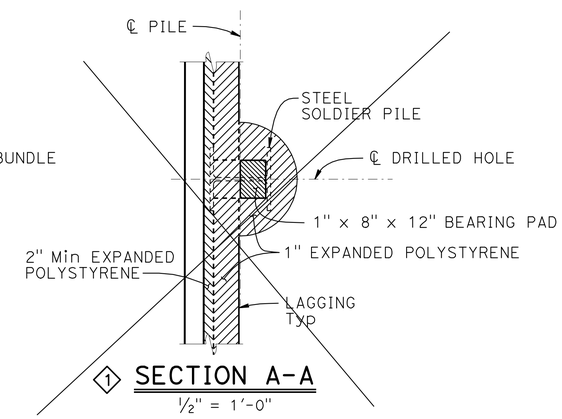

① SECTION A-A

½" = 1'-0"

(For Soldier Pile Wall only)

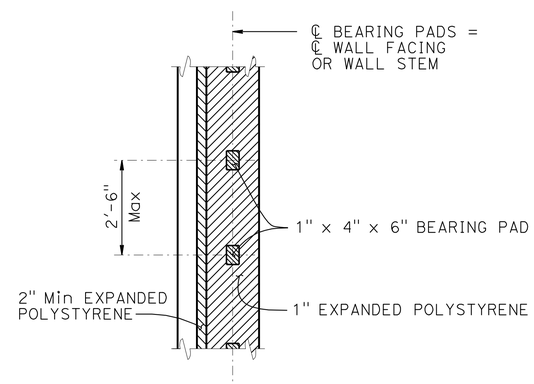

SECTION A-A

½" = 1'-0"

(For all other Earth Retaining Systems)

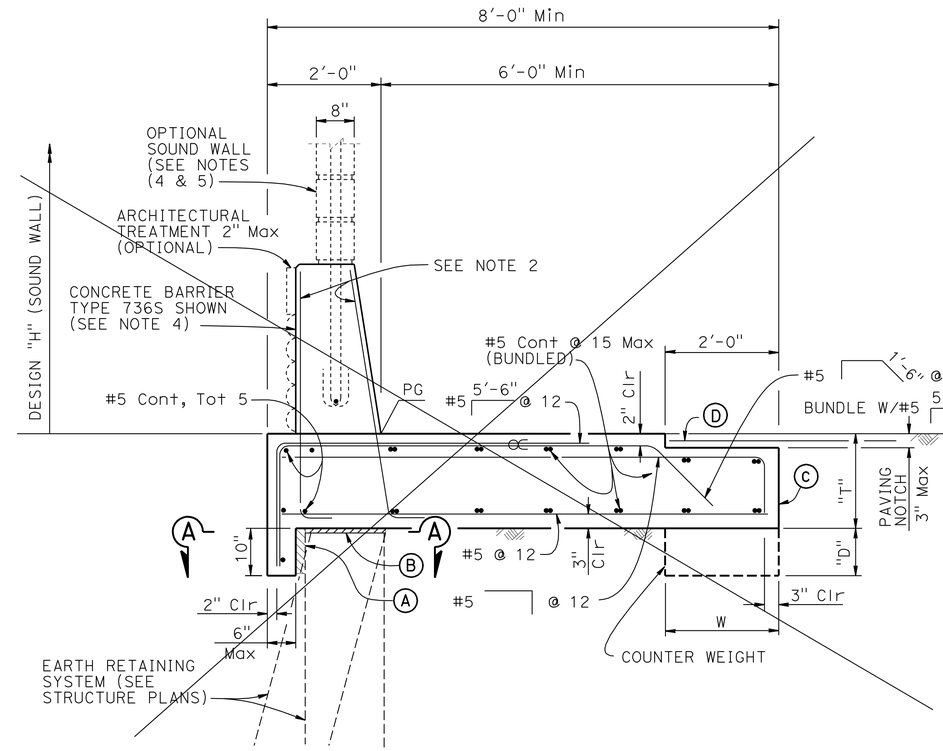

① CONCRETE BARRIER SLAB WITH PAVING NOTCH

¾" = 1'-0"

① BARRIER SLAB DIMENSIONS

DESIGN "H" OF SOUND WALL	NO SW	12'-4"	14'-4"	16'-4"
BARRIER TYPE	732 736 742	736 S	736 S	736 S
T	1'-8"	1'-8"	2'-0"	2'-0"
W	N/A	N/A	N/A	2'-0"
D	N/A	N/A	N/A	0'-9"

NOTES:

Ⓐ 2" Min Expanded polystyrene

Ⓑ 1" Expanded Polystyrene on MSE and concrete stem walls, See "SECTION A-A" for Soldier PIle Walls

Ⓒ Contact joint

~~Ⓓ 4'-0" wide pavement reinforcing fabric~~

∝ Indicates bundled bars

STANDARD DRAWING

FILE NO. xs12-090

APPROVAL DATE January 2012

① Deleted Detail ② Modified Detail ③ Modified Notes

STATE OF CALIFORNIA DEPARTMENT OF TRANSPORTATION

DIVISION OF ENGINEERING SERVICES

BRIDGE NO. 53E0162

POST MILE 29.8

RETAINING WALL NO. 1567

CONCRETE BARRIER SLAB DETAILS

DS OSD 2147A (ENGLISH STANDARD DRAWING "XS" BORDER REV. (02-02-11)

ORIGINAL SCALE IN INCHES FOR REDUCED PLANS 0 1 2 3

UNIT: 3604
PROJECT NUMBER & PHASE: 0700021119
CONTRACT NO.: 07-1218W1

DISREGARD PRINTS BEARING EARLIER REVISION DATES

REVISION DATES: 03-07-12 06-01-12 06-15-12 04-11-12

SHEET 17 OF 27

FILE => 53e0162-u-csd.dgn

USERNAME => s124496 DATE PLOTTED => 15-JUN-2012 TIME PLOTTED => 13:58

DIST	COUNTY	ROUTE	POST MILES TOTAL PROJECT	SHEET No.	TOTAL SHEETS
07	LA	5	29.4/31.6	850	1931

REGISTERED CIVIL ENGINEER — DATE 2-04-12

5-21-12
PLANS APPROVAL DATE

REGISTERED PROFESSIONAL ENGINEER — Ulysses N. Smpardos — No. 61018 — Exp. 12/31/12 — CIVIL — STATE OF CALIFORNIA

The State of California or its officers or agents shall not be responsible for the accuracy or completeness of electronic copies of this plan sheet.

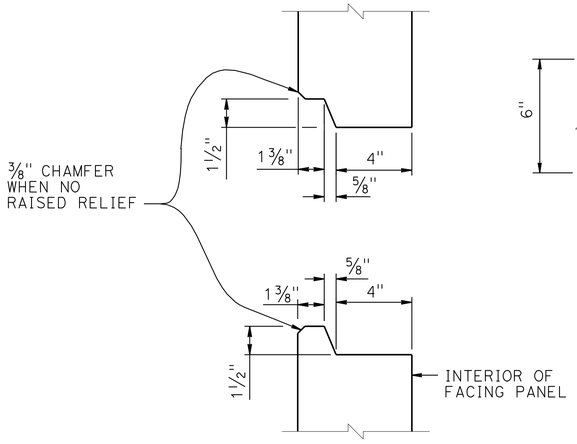

HORIZONTAL JOINT DETAIL

3" = 1'-0"

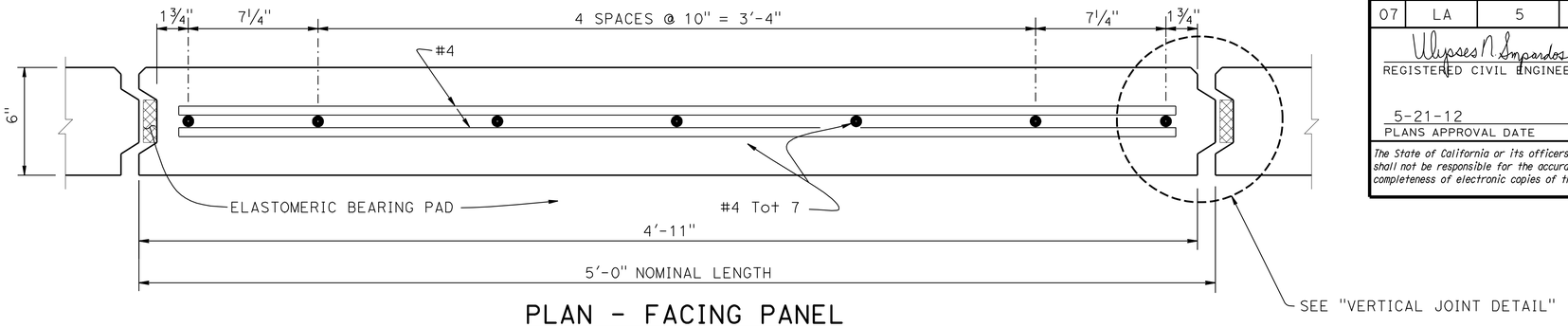

PLAN - FACING PANEL

3" = 1'-0"

NOTES:

1. Architectural treatment not shown
2. Place reinforced elastomeric bearing pads in all of the panel joints between the panels. Place one in each vertical joint where the horizontal joints intersect. Place two per panel in each horizontal joint:
   3/4" x 2 3/8" x 6" for vertical joints
   3/4" x 4" x 6" for horizontal joints
3. Bond a strip of filter fabric, 1'-0" wide, over the full length of all panel joints
4. Top layer of welded wire mats attached parallel to top of panel when top of wall is angled or curved as shown elsewhere in "STRUCTURE PLANS"
5. Eliminate mid level mat when closer than 6" to top mat, continue variable dimension between remaining mats

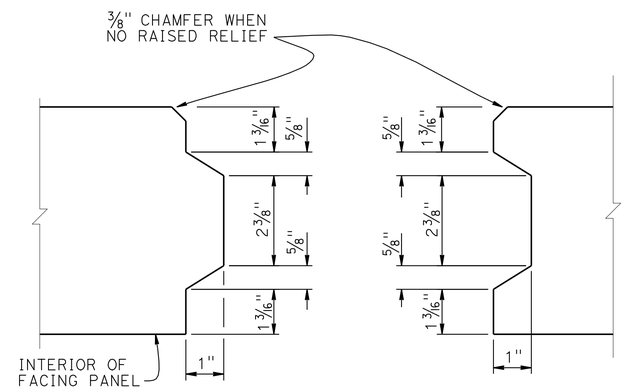

VERTICAL JOINT DETAIL

6" = 1'-0"

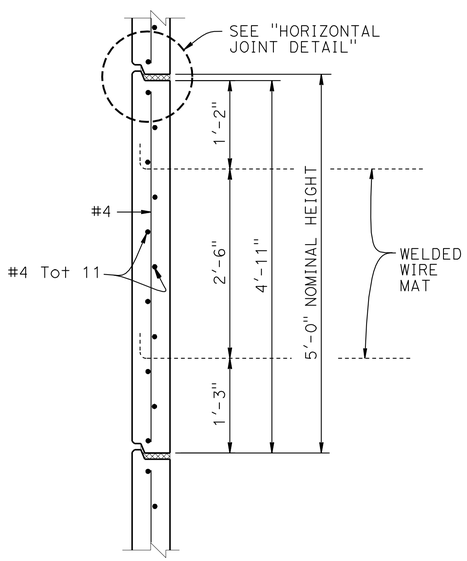

INTERMEDIATE PANEL

1" = 1'-0"

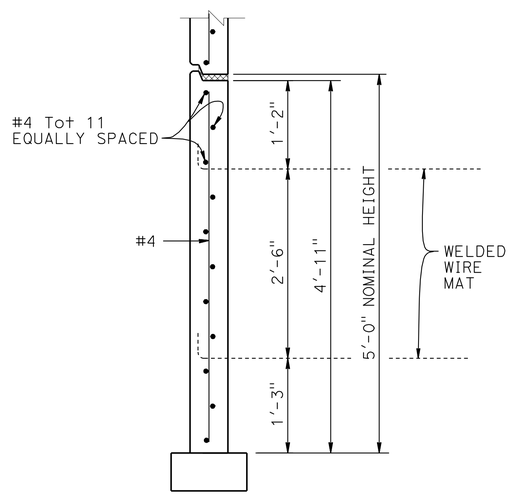

BOTTOM PANEL

1" = 1'-0"

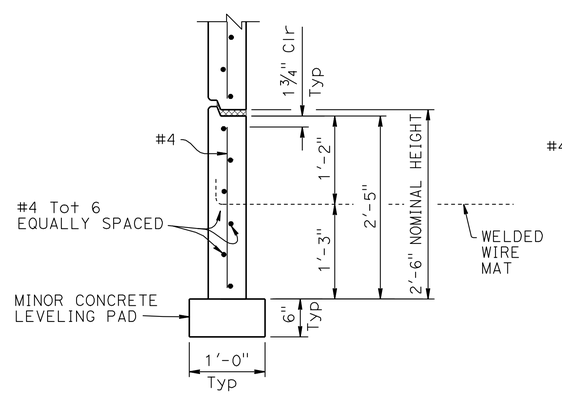

BOTTOM HALF PANEL

1" = 1'-0"

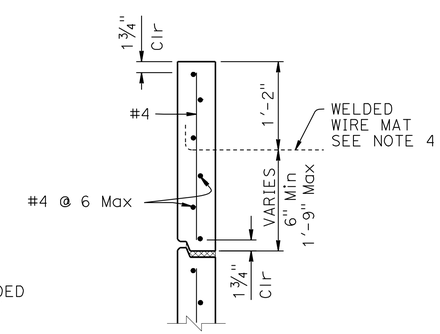

TOP HALF PANEL

1" = 1'-0"

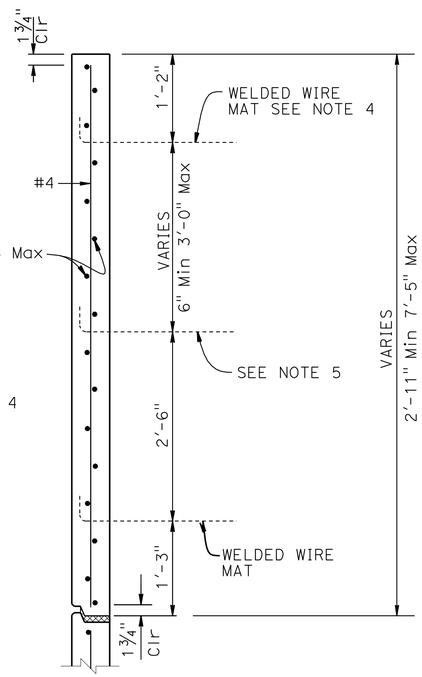

TOP PANEL WITH MULTIPLE MATS

1" = 1'-0"

STANDARD DRAWING

FILE NO. xs13-020-1

APPROVAL DATE January 2012

STATE OF CALIFORNIA
DEPARTMENT OF TRANSPORTATION

DIVISION OF ENGINEERING SERVICES

BRIDGE NO. 53E0162
POST MILE 29.8

RETAINING WALL 1567
MECHANICALLY STABILIZED EMBANKMENT
DETAILS NO. 1

DS OSD 2147A (ENGLISH STANDARD DRAWING "XS" BORDER REV. (02-02-11)

ORIGINAL SCALE IN INCHES FOR REDUCED PLANS 0 1 2 3

UNIT: 3604
PROJECT NUMBER & PHASE: 0700021119
CONTRACT NO.: 07-1218W1

DISREGARD PRINTS BEARING EARLIER REVISION DATES

REVISION DATES: 04-11-12

SHEET 18 OF 27

FILE => 53e0162-x-xs13-020-1.dgn

USERNAME => s12614 DATE PLOTTED => 22-MAY-2012 TIME PLOTTED => 07:38

DIST	COUNTY	ROUTE	POST MILES TOTAL PROJECT	SHEET No.	TOTAL SHEETS
07	LA	5	29.4/31.6	851	1931

Ulysses N. Smpardos 2-04-12
REGISTERED CIVIL ENGINEER DATE

5-21-12
PLANS APPROVAL DATE

REGISTERED PROFESSIONAL ENGINEER Ulysses N. Smpardos No. 61018 Exp. 12/31/12 CIVIL STATE OF CALIFORNIA

The State of California or its officers or agents shall not be responsible for the accuracy or completeness of electronic copies of this plan sheet.

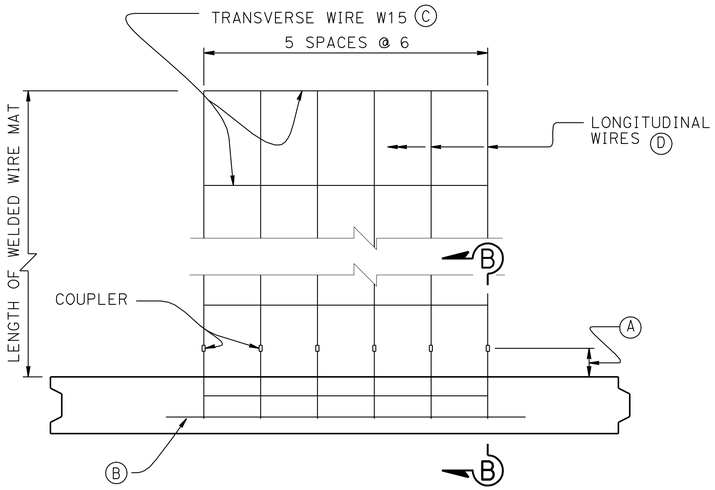

PLAN OF PANEL WITH SIX WIRE MAT

1½" = 1'-0"

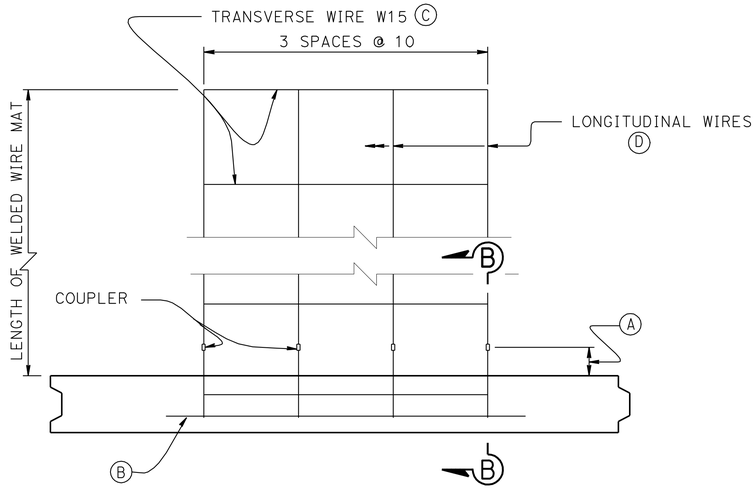

PLAN OF PANEL WITH FOUR WIRE MAT

1½" = 1'-0"

GENERAL NOTES
LOAD & RESISTANCE FACTOR DESIGN

DESIGN: AASHTO LRFD Bridge Design Specifications, 4th Edition with California Amendments

LIVE LOAD: Surcharge = 240 lb/ft^2

SOIL PARAMETERS:

Internal design ϕ = 34°, γ = 120 lb/ft^3

External design ϕ(Retained Backfill) = 30°, γ = 120 lb/ft^3

ϕ(Foundation) = 30°

K_h = 0.2

PRECAST CONCRETE PANELS:

f'c = 4,000 psi (Concrete compressive strength at 28 days)

fy = 60,000 psi (Yield strength of reinforcement)

SOIL REINFORCEMENT:

Welded wire mats: fy = 65,000 psi (Yield strength)

Coupler: fy = 36,000 psi (Yield strength)

Corrosion rate = 1.1 mils/year

REINFORCED CONCRETE:

f'c = 3,600 psi, except as noted

(Concrete compressive strength at 28 days)

fy = 60,000 psi (Yield strength of reinforcement)

MSE = Mechanically Stabilized Embankment

NOTES:

(A) Distance as required to permit coupler to be swaged

(B) Place #4 x 3'-2", centered on connector mat, but not welded to it

(C) All transverse wires size W15 at various spacing as shown elsewhere in plans

(D) Size of longitudinal wires shown elsewhere in plans

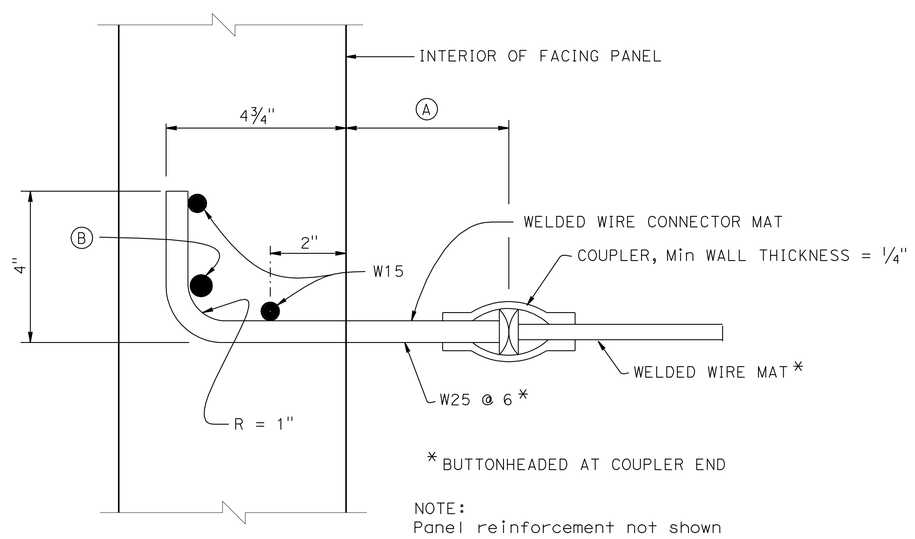

SECTION B-B

6" = 1'-0"

STANDARD DRAWING

FILE NO. xs13-020-2

APPROVAL DATE January 2012

STATE OF CALIFORNIA DEPARTMENT OF TRANSPORTATION

DIVISION OF ENGINEERING SERVICES

BRIDGE NO. 53E0162

POST MILE 29.8

RETAINING WALL 1567
MECHANICALLY STABILIZED EMBANKMENT
DETAILS NO. 2

DS OSD 2147A (ENGLISH STANDARD DRAWING "XS" BORDER REV. (02-02-11)

ORIGINAL SCALE IN INCHES FOR REDUCED PLANS 0 1 2 3

UNIT: 3604

PROJECT NUMBER & PHASE: 0700021119

CONTRACT NO.: 07-1218W1

DISREGARD PRINTS BEARING EARLIER REVISION DATES

REVISION DATES 04-12-12 04-14-12

SHEET 19 OF 27

FILE => 53e0162-x-xs13-020-2.dgn

USERNAME => s119571 DATE PLOTTED => 22-MAY-2012 TIME PLOTTED => 07:03

DIST	COUNTY	ROUTE	POST MILES TOTAL PROJECT	SHEET No.	TOTAL SHEETS
07	LA	5	29.4/31.6	852	1931

REGISTERED CIVIL ENGINEER — DATE 2-04-12

5-21-12
PLANS APPROVAL DATE

REGISTERED PROFESSIONAL ENGINEER — Ulysses N. Smpardos — No. 61018 — Exp. 12/31/12 — CIVIL — STATE OF CALIFORNIA

The State of California or its officers or agents shall not be responsible for the accuracy or completeness of electronic copies of this plan sheet.

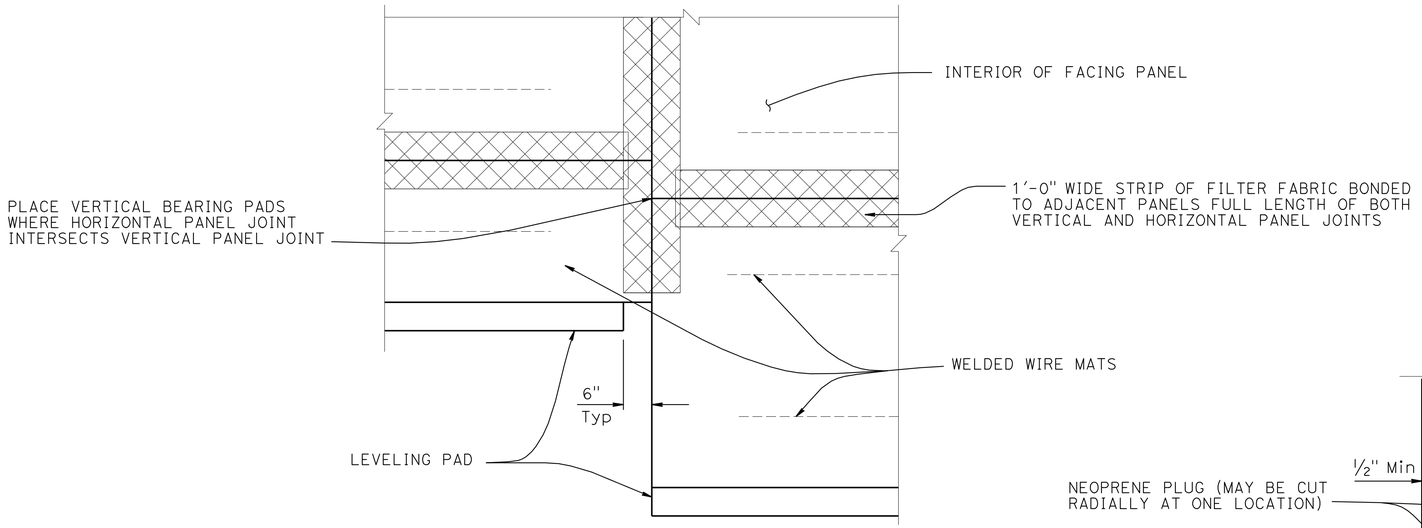

PART ELEVATION

3/4" = 1'-0"

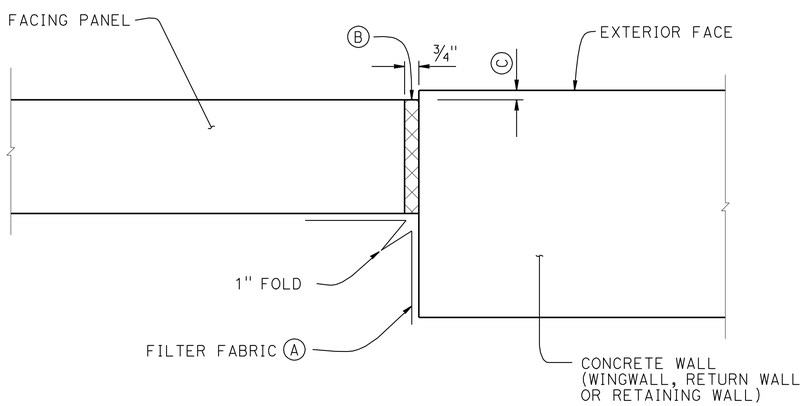

MSE FACING PANEL-TO-CONCRETE WALL JOINT DETAIL

3" = 1'-0"

NOTES:

(A) Bond a strip of filter fabric, 1'-6" wide, to back of MSE panels and the adjacent concrete wall for entire length of vertical joint

(B) Bond expansion joint material to the concrete wall

(C) Offset between face of MSE facing panel and face of the concrete wall as dictated by location of layout lines shown elsewhere in "STRUCTURE PLANS"

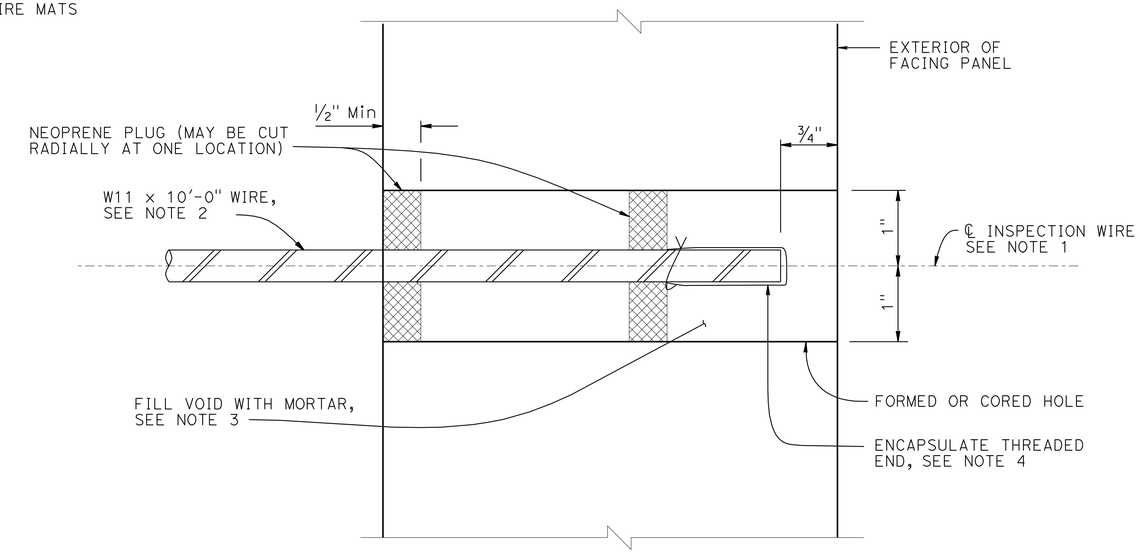

SECTION THRU INSPECTION WIRE

NO SCALE

NOTES:

1. Center inspection wire in facing panel.
2. Fabricated inspection wire from W11 wire representative of the welded wire mats, with 3/8" ø 16 UNC threads for at least 1 1/2" of one end.
3. Place inspection wire horizontal and perpendicular to the wall panel prior to backfilling.
4. Encapsulate threaded end with corrosion inhibiting mastic, vinyl covering, and secure with plastic tie.

UNC = Unified Coarse Threads

RETAINING WALL 1567

MECHANICALLY STABILIZED EMBANKMENT

DETAILS NO. 3

STANDARD DRAWING

FILE NO. xs13-020-3 — APPROVAL DATE January 2012

STATE OF CALIFORNIA DEPARTMENT OF TRANSPORTATION

DIVISION OF ENGINEERING SERVICES

BRIDGE NO. 53E0162 — POST MILE 29.8

DS OSD 2147A (ENGLISH STANDARD DRAWING "XS" BORDER REV. (02-02-11)

ORIGINAL SCALE IN INCHES FOR REDUCED PLANS 0 1 2 3

UNIT: PROJECT NUMBER & PHASE: CONTRACT NO.:

DISREGARD PRINTS BEARING EARLIER REVISION DATES 03-19-12

REVISION DATES — SHEET 20 OF 27

FILE => 53e0162-x-xs13-020-3.dgn

USERNAME => s119571 DATE PLOTTED => 22-MAY-2012 TIME PLOTTED => 07:03

DIST	COUNTY	ROUTE	POST MILES TOTAL PROJECT	SHEET No.	TOTAL SHEETS
07	LA	5	29.4/31.6	853	1931

Ulysses N. Smpardos 2-04-12
REGISTERED CIVIL ENGINEER DATE

5-21-12
PLANS APPROVAL DATE

REGISTERED PROFESSIONAL ENGINEER Ulysses N. Smpardos No. 61018 Exp. 12/31/12 CIVIL STATE OF CALIFORNIA

The State of California or its officers or agents shall not be responsible for the accuracy or completeness of electronic copies of this plan sheet.

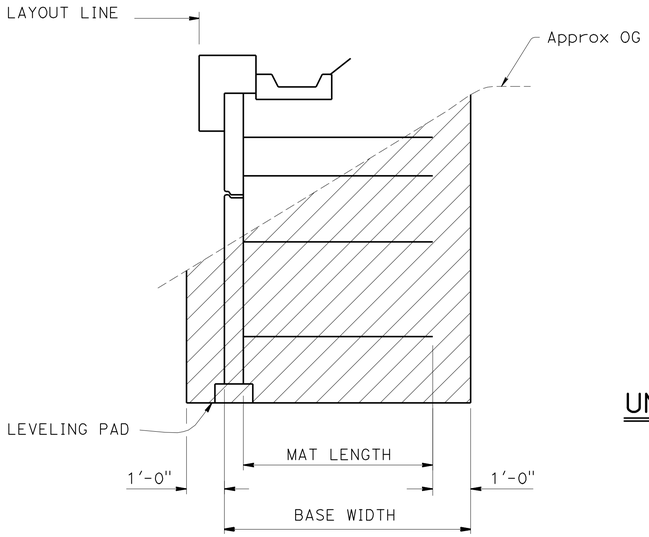

LIMITS OF EXCAVTION

½" = 1'-0"

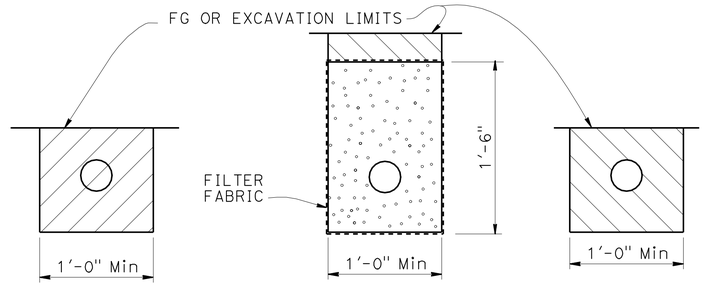

OUTLET PIPE CLEANOUT PIPE

EXCAVATION BACKFILL

UNPERFORATED OUTLET OR CLEAN OUT PIPE FOR UNDERDRAIN

NO SCALE

NOTES:

1. Limits to FG except to GP when in roadway section
2. Locate underdrain behind bottom level of welded wire mats wherever possible, or at elevation needed to drain, as shown elsewhere on plans
3. Place perforated pipe underdrain of diameter shown elsewhere on plans or minimum 4" ø smoothed wall PVC or minimum 8" ø corrugated HDPE
4. Maximum spacing of outlet pipe is 200 feet
5. At sags in profile of underdrain, install outlet pipe for each direction of flow

LEGEND:

- Limits of Structure Excavation
- Limits of Structure Backfill
- Limits of Permeable Material

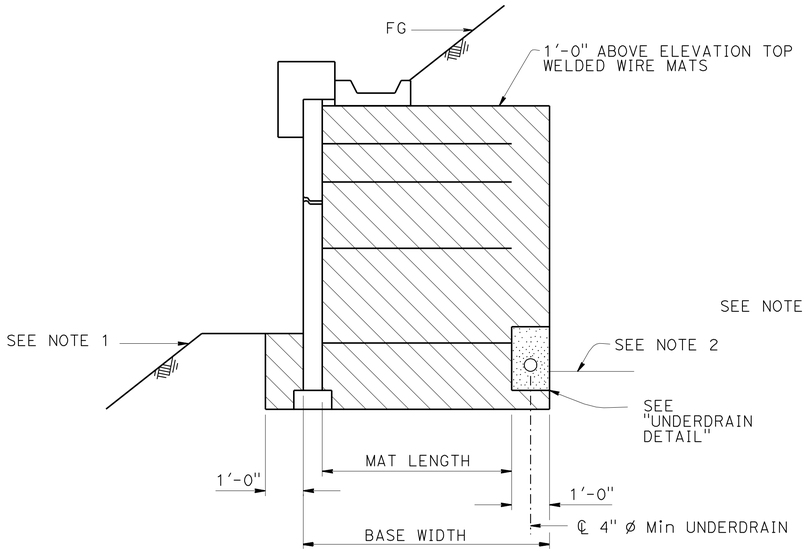

SLOPING FINISHED SURFACE

½" = 1'-0"

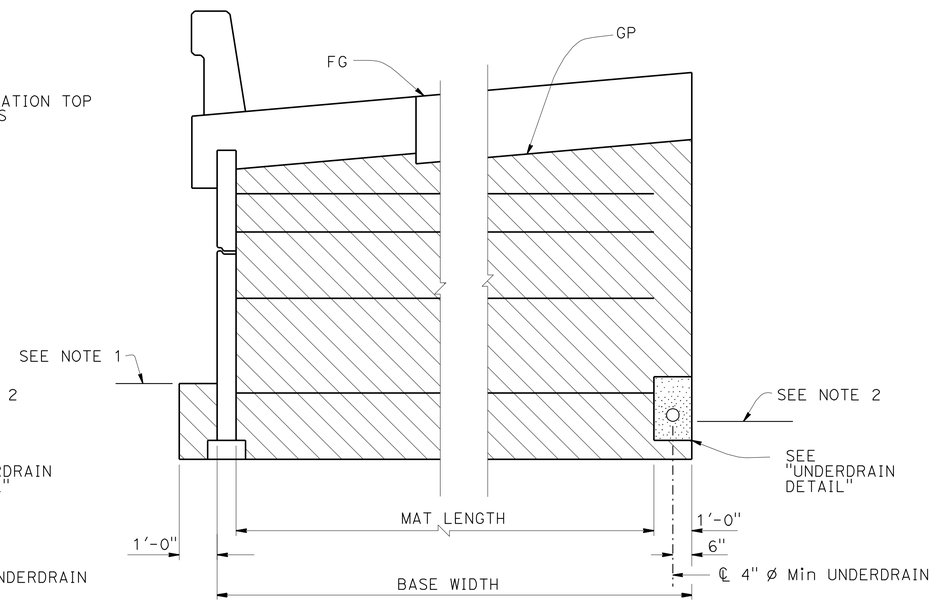

ROADWAY SECTION

½" = 1'-0"

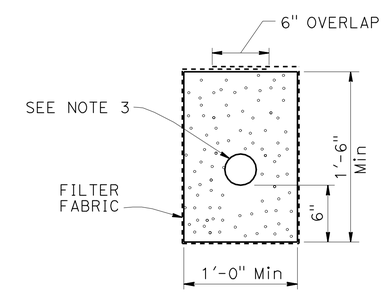

UNDERDRAIN DETAIL

LIMITS OF BACKFILL

STANDARD DRAWING

FILE NO. xs13-020-6

APPROVAL DATE January 2012

STATE OF CALIFORNIA DEPARTMENT OF TRANSPORTATION

DIVISION OF ENGINEERING SERVICES

BRIDGE NO. 53E0162

POST MILE 29.8

RETAINING WALL 1567

MECHANICALLY STABILIZED EMBANKMENT

DETAILS NO. 6

DS OSD 2147A (ENGLISH STANDARD DRAWING "XS" BORDER REV. (02-02-11)

ORIGINAL SCALE IN INCHES FOR REDUCED PLANS 0 1 2 3

UNIT: 3604
PROJECT NUMBER & PHASE: 0700021119

CONTRACT NO.: 07-1218W1

DISREGARD PRINTS BEARING EARLIER REVISION DATES

REVISION DATES 04-24-12

SHEET 21 OF 27

FILE => 53e0162-x-xs13-020-6.dgn

USERNAME => s119571 DATE PLOTTED => 22-MAY-2012 TIME PLOTTED => 07:03

DIST	COUNTY	ROUTE	POST MILES TOTAL PROJECT	SHEET No	TOTAL SHEETS
07	LA	5	29.4/31.6	854	1931

REGISTERED GEOTECHNICAL ENGINEER 2-7-12

5-21-12
PLANS APPROVAL DATE

REGISTERED PROFESSIONAL ENGINEER Deepa Wathugala No. 2674 Exp. 9-30-12 GEOTECHNICAL STATE OF CALIFORNIA

The State of California or its officers or agents shall not be responsible for the accuracy or completeness of electronic copies of this plan sheet.

This LOTB sheet was prepared in accordance with the Caltrans Soil & Rock Logging, Classification, & Presentation Manual (2010 Edition).

BENCH MARK

BM PRHV 1005 Elev +617.66′
Fd Lead and Tack on TOC of the median island of Burbank Blvd O.C. Fwy 5, +/- 13′ E of the W end of the median island.
NAVD 88

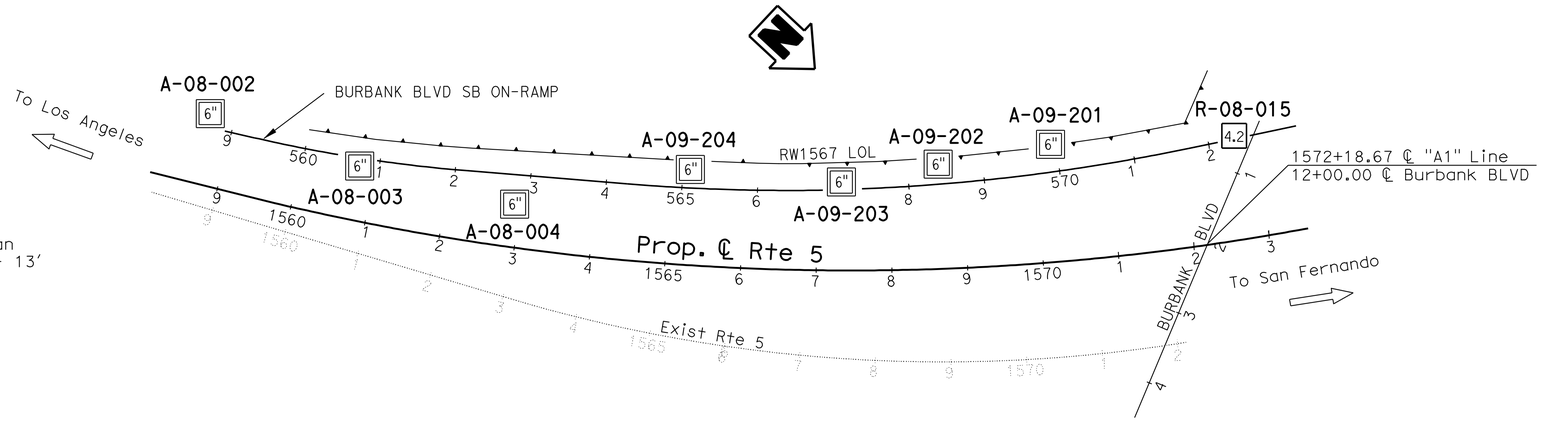

PLAN

1" = 100′

Note: Ground water was not encountered in borings A-08-002 and A-08-003.

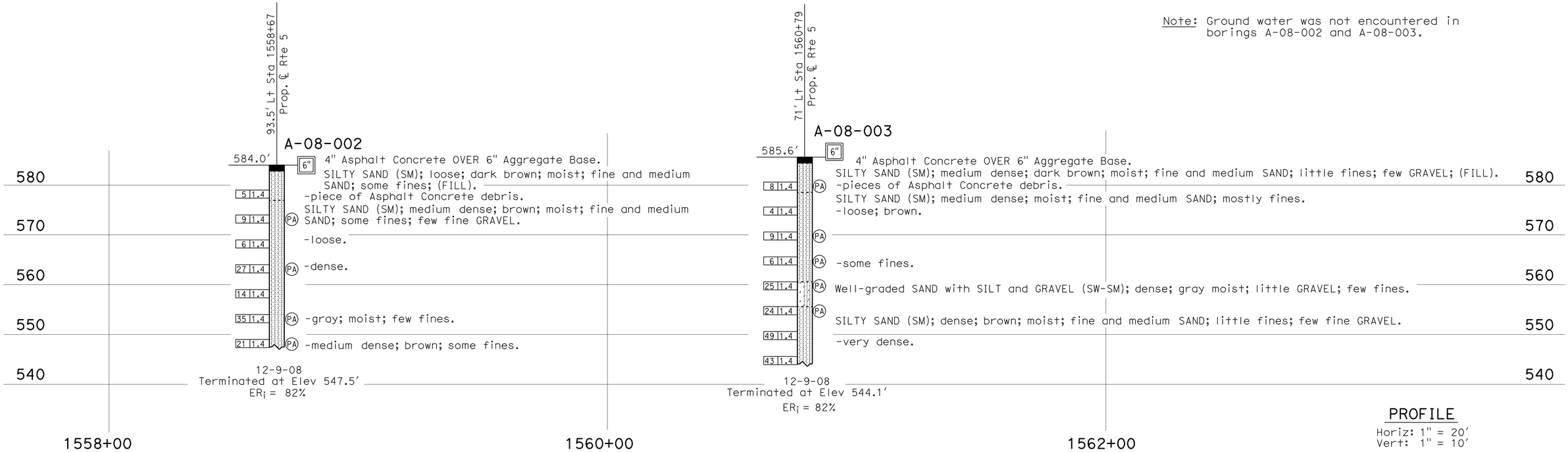

PROFILE

Horiz: 1" = 20′
Vert: 1" = 10′

ENGINEERING SERVICES	MATERIALS AND GEOTECHNICAL SERVICES	STATE OF CALIFORNIA DEPARTMENT OF TRANSPORTATION	DIVISION OF ENGINEERING SERVICES STRUCTURE DESIGN DESIGN BRANCH 15	BRIDGE NO. 53E0162 POST MILE 29.8	RETAINING WALL NO. 1567 LOG OF TEST BORINGS 1 OF 6
FUNCTIONAL SUPERVISOR NAME: C. Liu	DRAWN BY: C. Christian, I.G-Remmen CHECKED BY: F. Gerami	FIELD INVESTIGATION BY: C. Lee			

OGS CIVIL LOG OF TEST BORINGS SHEET

ORIGINAL SCALE IN INCHES FOR REDUCED PLANS 0 1 2 3

UNIT: 3643
PROJECT NUMBER & PHASE: 07000211191
CONTRACT NO.: 07-1218W1

DISREGARD PRINTS BEARING EARLIER REVISION DATES

REVISION DATES: 09-29-11 10-25-11 01-06-12 02-07-12

SHEET 22 OF 27

FILE => 53e0162-z-ltb_01.dgn

USERNAME => s119571 DATE PLOTTED => 22-MAY-2012 TIME PLOTTED => 07:03

DIST	COUNTY	ROUTE	POST MILES TOTAL PROJECT	SHEET No	TOTAL SHEETS
07	LA	5	29.4/31.6	855	1931

REGISTERED GEOTECHNICAL ENGINEER 2-7-12

5-21-12
PLANS APPROVAL DATE

REGISTERED PROFESSIONAL ENGINEER
Deepa Wathugala
No. 2674
Exp. 9-30-12
GEOTECHNICAL
STATE OF CALIFORNIA

The State of California or its officers or agents shall not be responsible for the accuracy or completeness of electronic copies of this plan sheet.

This LOTB sheet was prepared in accordance with the Caltrans Soil & Rock Logging, Classification, & Presentation Manual (2010 Edition).

FOR PLAN VIEW, SEE
"LOG OF TEST BORINGS 1 OF 6"

Note: Ground water was not encountered in borings A-08-004 and A-09-204.

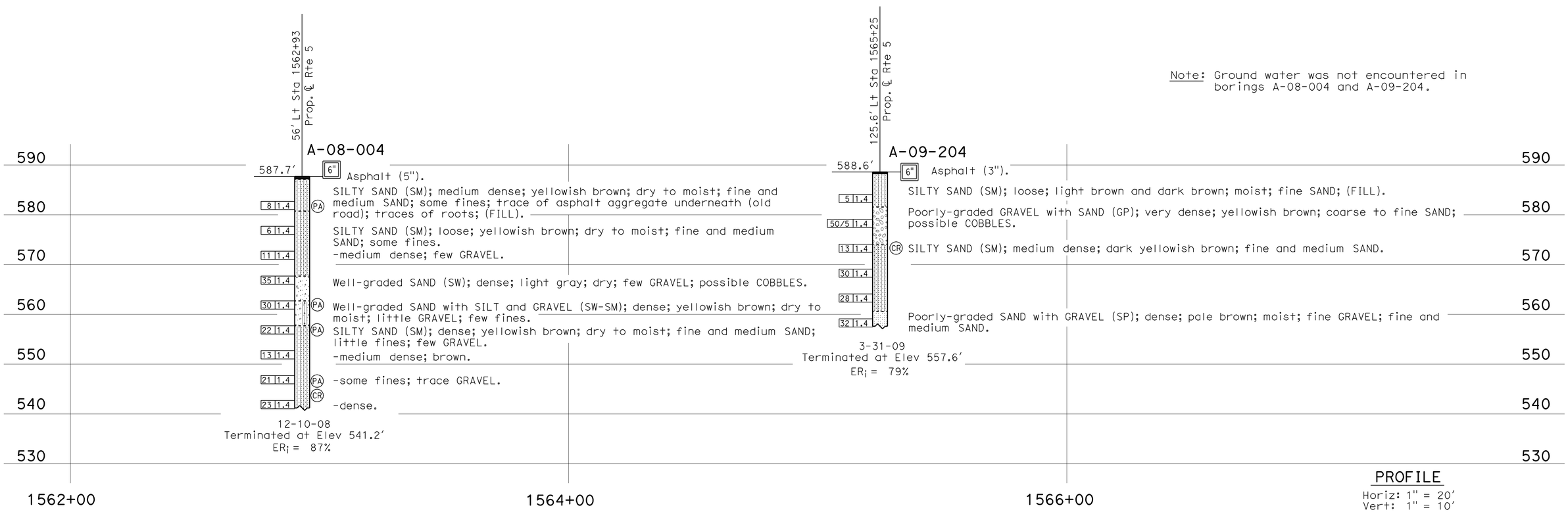

PROFILE
Horiz: 1" = 20'
Vert: 1" = 10'

ENGINEERING SERVICES	MATERIALS AND GEOTECHNICAL SERVICES	STATE OF CALIFORNIA DEPARTMENT OF TRANSPORTATION	DIVISION OF ENGINEERING SERVICES STRUCTURE DESIGN DESIGN BRANCH 15	BRIDGE NO. 53E0162 POST MILE 29.8	RETAINING WALL NO. 1567 LOG OF TEST BORINGS 2 OF 6
FUNCTIONAL SUPERVISOR NAME: C. Liu	DRAWN BY: C. Christian, I.G-Remmen CHECKED BY: F. Gerami	FIELD INVESTIGATION BY: A. Tsegie, C. Lee, P. McDonald			

OGS CIVIL LOG OF TEST BORINGS SHEET

ORIGINAL SCALE IN INCHES FOR REDUCED PLANS 0 1 2 3

UNIT: 3643
PROJECT NUMBER & PHASE: 07000211191 CONTRACT NO.: 07-1218W1

DISREGARD PRINTS BEARING EARLIER REVISION DATES

REVISION DATES				SHEET	OF
09-29-11	10-25-11	01-06-12	02-07-12	23	27

FILE => 53e0162-z-ltb_02.dgn

USERNAME => s119571 DATE PLOTTED => 22-MAY-2012 TIME PLOTTED => 07:03

DIST	COUNTY	ROUTE	POST MILES TOTAL PROJECT	SHEET No	TOTAL SHEETS
07	LA	5	29.4/31.6	856	1931

REGISTERED GEOTECHNICAL ENGINEER 2-7-12

5-21-12
PLANS APPROVAL DATE

REGISTERED PROFESSIONAL ENGINEER
Deepa Wathugala
No. 2674
Exp. 9-30-12
GEOTECHNICAL
STATE OF CALIFORNIA

The State of California or its officers or agents shall not be responsible for the accuracy or completeness of electronic copies of this plan sheet.

This LOTB sheet was prepared in accordance with the Caltrans Soil & Rock Logging, Classification, & Presentation Manual (2010 Edition).

FOR PLAN VIEW, SEE
"LOG OF TEST BORINGS 1 OF 6"

Note: Ground water was not encountered in borings R-09-203 and R-09-202.

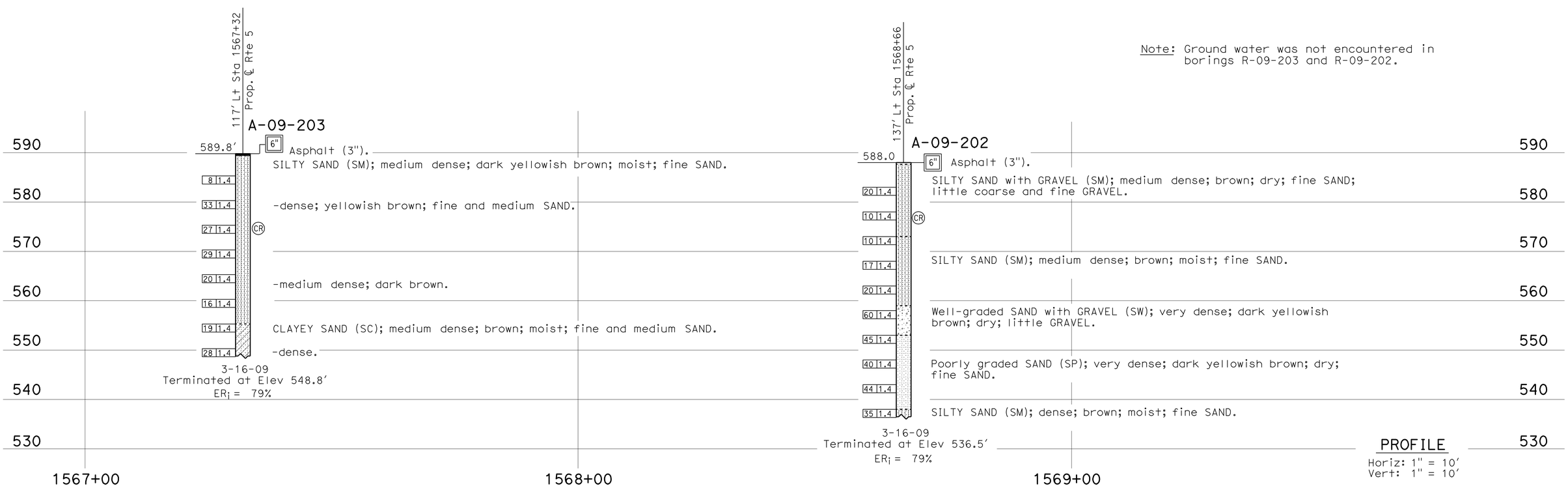

ENGINEERING SERVICES	MATERIALS AND GEOTECHNICAL SERVICES	STATE OF CALIFORNIA DEPARTMENT OF TRANSPORTATION	DIVISION OF ENGINEERING SERVICES STRUCTURE DESIGN DESIGN BRANCH 15	BRIDGE NO. 53E0162 / POST MILE 29.8	RETAINING WALL NO. 1567
FUNCTIONAL SUPERVISOR NAME: C. Liu	DRAWN BY: C. Christian, I.G-Remmen / CHECKED BY: F. Gerami	FIELD INVESTIGATION BY: C. Harris, P. McDonald, C. Lee			LOG OF TEST BORINGS 3 OF 6

OGS CIVIL LOG OF TEST BORINGS SHEET

ORIGINAL SCALE IN INCHES FOR REDUCED PLANS 0 1 2 3

UNIT: 3643
PROJECT NUMBER & PHASE: 07000211191 CONTRACT NO.: 07-1218W1

DISREGARD PRINTS BEARING EARLIER REVISION DATES → 09-29-11 10-25-11 01-06-12 02-01-12

SHEET 24 OF 27

FILE => 53e0162-z-ltb_03.dgn

USERNAME => s119571 DATE PLOTTED => 22-MAY-2012 TIME PLOTTED => 07:03

DIST	COUNTY	ROUTE	POST MILES TOTAL PROJECT	SHEET No	TOTAL SHEETS
07	LA	5	29.4/31.6	857	1931

REGISTERED GEOTECHNICAL ENGINEER 2-7-12

5-21-12
PLANS APPROVAL DATE

REGISTERED PROFESSIONAL ENGINEER Deepa Wathugala No. 2674 Exp. 9-30-12 GEOTECHNICAL STATE OF CALIFORNIA

The State of California or its officers or agents shall not be responsible for the accuracy or completeness of electronic copies of this plan sheet.

This LOTB sheet was prepared in accordance with the Caltrans Soil & Rock Logging, Classification, & Presentation Manual (2010 Edition).

FOR PLAN VIEW, SEE
"LOG OF TEST BORINGS 1 OF 6"

Note: Ground water was not encountered in borings A-09-201 and R-08-015.

PROFILE
Horiz: 1" = 20'
Vert: 1" = 10'

ENGINEERING SERVICES	MATERIALS AND GEOTECHNICAL SERVICES	STATE OF CALIFORNIA DEPARTMENT OF TRANSPORTATION	DIVISION OF ENGINEERING SERVICES STRUCTURE DESIGN DESIGN BRANCH 15	BRIDGE NO. 53E0162 POST MILE 29.8	RETAINING WALL NO. 1567 LOG OF TEST BORINGS 4 OF 6
FUNCTIONAL SUPERVISOR NAME: C. Liu	DRAWN BY: C. Christian, I.G-Remmen CHECKED BY: F. Gerami	FIELD INVESTIGATION BY: C. Harris, P. McDonald, M. Islam			

OGS CIVIL LOG OF TEST BORINGS SHEET

ORIGINAL SCALE IN INCHES FOR REDUCED PLANS 0 1 2 3

UNIT: 3643
PROJECT NUMBER & PHASE: 07000211191 CONTRACT NO.: 07-1218W1

DISREGARD PRINTS BEARING EARLIER REVISION DATES → REVISION DATES 09-29-11 10-25-11 01-06-12 02-07-12 SHEET 25 OF 27

FILE => 53e0162-z-1tb_04.dgn

USERNAME => s119571 DATE PLOTTED => 22-MAY-2012 TIME PLOTTED => 07:03

REFERENCE: CALTRANS SOIL & ROCK LOGGING, CLASSIFICATION, AND PRESENTATION MANUAL (2010)

DIST	COUNTY	ROUTE	POST MILES TOTAL PROJECT	SHEET No	TOTAL SHEETS
07	LA	5	29.4/31.6	858	1931

REGISTERED GEOTECHNICAL ENGINEER 2-7-12

5-21-12
PLANS APPROVAL DATE

REGISTERED PROFESSIONAL ENGINEER
Deepa Wathugala
No. 2674
Exp. 9-30-12
GEOTECHNICAL
STATE OF CALIFORNIA

The State of California or its officers or agents shall not be responsible for the accuracy or completeness of electronic copies of this plan sheet.

CEMENTATION

Description	Criteria
Weak	Crumbles or breaks with handling or little finger pressure.
Moderate	Crumbles or breaks with considerable finger pressure.
Strong	Will not crumble or break with finger pressure.

BOREHOLE IDENTIFICATION

Symbol	Hole Type	Description
Size	A	Auger Boring (hollow or solid stem bucket)
Size	R RW RC P	Rotary drilled boring (conventional) Rotary drilled with self-casing wire-line Rotary core with continuously-sampled, self-casing wire-line Rotary percussion boring (air)
Size	R	Rotary drilled diamond core
Size	HD HA	Hand driven (1-inch soil tube) Hand Auger
●	D	Dynamic Cone Penetration Boring
▲	CPT	Cone Penetration Test (ASTM D 5778)
⬚	O	Other (note on LOTB)

Note: Size in inches.

CONSISTENCY OF COHESIVE SOILS

Description	Shear Strength (tsf)	Pocket Penetrometer Measurement, PP, (tsf)	Torvane Measurement, TV, (tsf)	Vane Shear Measurement, VS, (tsf)
Very Soft	Less than 0.12	Less than 0.25	Less than 0.12	Less than 0.12
Soft	0.12 - 0.25	0.25 - 0.5	0.12 - 0.25	0.12 - 0.25
Medium Stiff	0.25 - 0.5	0.5 - 1	0.25 - 0.5	0.25 - 0.5
Stiff	0.5 - 1	1 - 2	0.5 - 1	0.5 - 1
Very Stiff	1 - 2	2 - 4	1 - 2	1 - 2
Hard	Greater than 2	Greater than 4	Greater than 2	Greater than 2

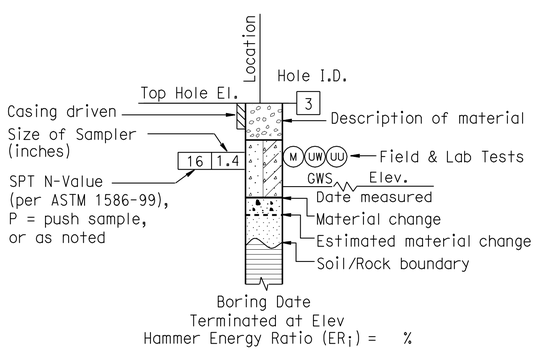

ROTARY BORING

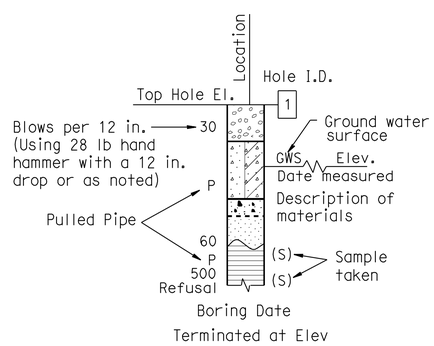

HAND BORING

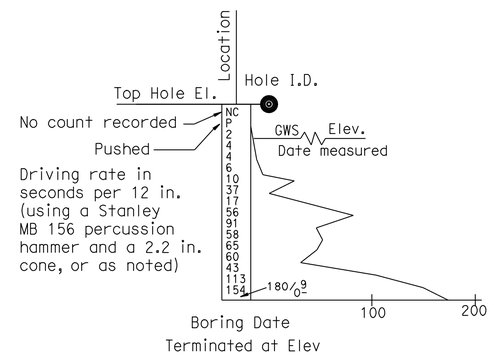

DYNAMIC CONE PENETRATION BORING

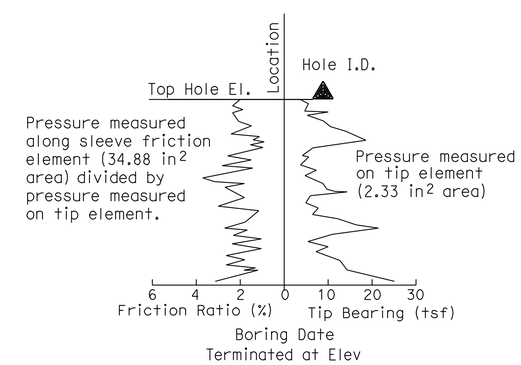

CONE PENETRATION TEST (CPT) BORING

ENGINEERING SERVICES	GEOTECHNICAL SERVICES	STATE OF CALIFORNIA DEPARTMENT OF TRANSPORTATION	DIVISION OF ENGINEERING SERVICES STRUCTURE DESIGN DESIGN BRANCH 15	BRIDGE NO. 53E0162 / POST MILE 29.8	RETAINING WALL NO. 1567 LOG OF TEST BORINGS 5 OF 6
	PREPARED BY: I.G-Remmen				

GS LOTB SOIL LEGEND

ORIGINAL SCALE IN INCHES FOR REDUCED PLANS 0 1 2 3

UNIT: 3643
PROJECT NUMBER & PHASE: 07000211191 CONTRACT NO.: 07-1218W1

DISREGARD PRINTS BEARING EARLIER REVISION DATES → 02-07-12

REVISION DATES | SHEET 26 OF 27

FILE => 53e0162-z-ltb_05.dgn

USERNAME => s119571 DATE PLOTTED => 22-MAY-2012 TIME PLOTTED => 07:03

REFERENCE: CALTRANS SOIL & ROCK LOGGING, CLASSIFICATION, AND PRESENTATION MANUAL (2010)

DIST	COUNTY	ROUTE	POST MILES TOTAL PROJECT	SHEET No	TOTAL SHEETS
07	LA	5	29.4/31.6	859	1931

REGISTERED GEOTECHNICAL ENGINEER 2-7-12

5-21-12
PLANS APPROVAL DATE

REGISTERED PROFESSIONAL ENGINEER
Deepa Wathugala
No. 2674
Exp. 9-30-12
GEOTECHNICAL
STATE OF CALIFORNIA

The State of California or its officers or agents shall not be responsible for the accuracy or completeness of electronic copies of this plan sheet.

GROUP SYMBOLS AND NAMES

Graphic/Symbol	Group Names	Graphic/Symbol	Group Names
GW	Well-graded GRAVEL Well-graded GRAVEL with SAND	CL	Lean CLAY Lean CLAY with SAND Lean CLAY with GRAVEL SANDY lean CLAY SANDY lean CLAY with GRAVEL GRAVELLY lean CLAY GRAVELLY lean CLAY with SAND
GP	Poorly-graded GRAVEL Poorly-graded GRAVEL with SAND		
GW-GM	Well-graded GRAVEL with SILT Well-graded GRAVEL with SILT and SAND	CL-ML	SILTY CLAY SILTY CLAY with SAND SILTY CLAY with GRAVEL SANDY SILTY CLAY SANDY SILTY CLAY with GRAVEL GRAVELLY SILTY CLAY GRAVELLY SILTY CLAY with SAND
GW-GC	Well-graded GRAVEL with CLAY (or SILTY CLAY) Well-graded GRAVEL with CLAY and SAND (or SILTY CLAY and SAND)		
GP-GM	Poorly-graded GRAVEL with SILT Poorly-graded GRAVEL with SILT and SAND	ML	SILT SILT with SAND SILT with GRAVEL SANDY SILT SANDY SILT with GRAVEL GRAVELLY SILT GRAVELLY SILT with SAND
GP-GC	Poorly-graded GRAVEL with CLAY (or SILTY CLAY) Poorly-graded GRAVEL with CLAY and SAND (or SILTY CLAY and SAND)		
GM	SILTY GRAVEL SILTY GRAVEL with SAND	OL	ORGANIC lean CLAY ORGANIC lean CLAY with SAND ORGANIC lean CLAY with GRAVEL SANDY ORGANIC lean CLAY SANDY ORGANIC lean CLAY with GRAVEL GRAVELLY ORGANIC lean CLAY GRAVELLY ORGANIC lean CLAY with SAND
GC	CLAYEY GRAVEL CLAYEY GRAVEL with SAND		
GC-GM	SILTY, CLAYEY GRAVEL SILTY, CLAYEY GRAVEL with SAND	OL	ORGANIC SILT ORGANIC SILT with SAND ORGANIC SILT with GRAVEL SANDY ORGANIC SILT SANDY ORGANIC SILT with GRAVEL GRAVELLY ORGANIC SILT GRAVELLY ORGANIC SILT with SAND
SW	Well-graded SAND Well-graded SAND with GRAVEL		
SP	Poorly-graded SAND Poorly-graded SAND with GRAVEL	CH	Fat CLAY Fat CLAY with SAND Fat CLAY with GRAVEL SANDY fat CLAY SANDY fat CLAY with GRAVEL GRAVELLY fat CLAY GRAVELLY fat CLAY with SAND
SW-SM	Well-graded SAND with SILT Well-graded SAND with SILT and GRAVEL		
SW-SC	Well-graded SAND with CLAY (or SILTY CLAY) Well-graded SAND with CLAY and GRAVEL (or SILTY CLAY and GRAVEL)	MH	Elastic SILT Elastic SILT with SAND Elastic SILT with GRAVEL SANDY elastic SILT SANDY elastic SILT with GRAVEL GRAVELLY elastic SILT GRAVELLY elastic SILT with SAND
SP-SM	Poorly-graded SAND with SILT Poorly-graded SAND with SILT and GRAVEL		
SP-SC	Poorly-graded SAND with CLAY (or SILTY CLAY) Poorly-graded SAND with CLAY and GRAVEL (or SILTY CLAY and GRAVEL)	OH	ORGANIC fat CLAY ORGANIC fat CLAY with SAND ORGANIC fat CLAY with GRAVEL SANDY ORGANIC fat CLAY SANDY ORGANIC fat CLAY with GRAVEL GRAVELLY ORGANIC fat CLAY GRAVELLY ORGANIC fat CLAY with SAND
SM	SILTY SAND SILTY SAND with GRAVEL		
SC	CLAYEY SAND CLAYEY SAND with GRAVEL	OH	ORGANIC elastic SILT ORGANIC elastic SILT with SAND ORGANIC elastic SILT with GRAVEL SANDY ORGANIC elastic SILT SANDY ORGANIC elastic SILT with GRAVEL GRAVELLY ORGANIC elastic SILT GRAVELLY ORGANIC elastic SILT with SAND
SC-SM	SILTY, CLAYEY SAND SILTY, CLAYEY SAND with GRAVEL		
PT	PEAT	OL/OH	ORGANIC SOIL ORGANIC SOIL with SAND ORGANIC SOIL with GRAVEL SANDY ORGANIC SOIL SANDY ORGANIC SOIL with GRAVEL GRAVELLY ORGANIC SOIL GRAVELLY ORGANIC SOIL with SAND
	COBBLES COBBLES and BOULDERS BOULDERS		

FIELD AND LABORATORY TESTING

- (C) Consolidation (ASTM D 2435)
- (CL) Collapse Potential (ASTM D 5333)
- (CP) Compaction Curve (CTM 216)
- (CR) Corrosivity Testing (CTM 643, CTM 422, CTM 417)
- (CU) Consolidated Undrained Triaxial (ASTM D 4767)
- (DS) Direct Shear (ASTM D 3080)
- (EI) Expansion Index (ASTM D 4829)
- (M) Moisture Content (ASTM D 2216)
- (OC) Organic Content-% (ASTM D 2974)
- (P) Permeability (CTM 220)
- (PA) Particle Size Analysis (ASTM D 422)
- (PI) Plasticity Index (AASHTO T 90) Liquid Limit (AASHTO T 89)
- (PL) Point Load Index (ASTM D 5731)
- (PM) Pressure Meter
- (R) R-Value (CTM 301)
- (SE) Sand Equivalent (CTM 217)
- (SG) Specific Gravity (AASHTO T 100)
- (SL) Shrinkage Limit (ASTM D 427)
- (SW) Swell Potential (ASTM D 4546)
- (UC) Unconfined Compression-Soil (ASTM D 2166) Unconfined Compression-Rock (ASTM D 2938)
- (UU) Unconsolidated Undrained Triaxial (ASTM D 2850)
- (UW) Unit Weight (ASTM D 4767)

APPARENT DENSITY OF COHESIONLESS SOILS

Description	SPT N_{60} (Blows / 12 in.)
Very Loose	0 - 5
Loose	5 - 10
Medium Dense	10 - 30
Dense	30 - 50
Very Dense	Greater than 50

MOISTURE

Description	Criteria
Dry	No discernable moisture
Moist	Moisture present, but no free water
Wet	Visible free water

PERCENT OR PROPORTION OF SOILS

Description	Criteria
Trace	Particles are present but estimated to be less than 5%
Few	5% - 10%
Little	15% - 25%
Some	30% - 45%
Mostly	50% - 100%

PARTICLE SIZE

Description		Size (in.)
Boulder		Greater than 12
Cobble		3 - 12
Gravel	Coarse	3/4 - 3
	Fine	1/5 - 3/4
Sand	Coarse	1/16 - 1/5
	Medium	1/64 - 1/16
	Fine	1/300 - 1/64
Silt and Clay		Less than 1/300

ENGINEERING SERVICES

GEOTECHNICAL SERVICES

PREPARED BY: I.G-Remmen

STATE OF CALIFORNIA
DEPARTMENT OF TRANSPORTATION

DIVISION OF ENGINEERING SERVICES
STRUCTURE DESIGN
DESIGN BRANCH 15

BRIDGE NO. 53E0162
POST MILE 29.8

RETAINING WALL NO. 1567
LOG OF TEST BORINGS 6 OF 6

GS LOTB SOIL LEGEND

ORIGINAL SCALE IN INCHES FOR REDUCED PLANS 0 1 2 3

UNIT: 3643
PROJECT NUMBER & PHASE: 07000211191
CONTRACT NO.: 07-1218W1

DISREGARD PRINTS BEARING EARLIER REVISION DATES

REVISION DATES 02-06-12

SHEET 27 OF 27

FILE => 53e0162-z-ltb_06.dgn

USERNAME => s119571 DATE PLOTTED => 22-MAY-2012 TIME PLOTTED => 07:04

DIST	COUNTY	ROUTE	POST MILES TOTAL PROJECT	SHEET No.	TOTAL SHEETS
07	LA	5	29.4/31.6	860	1931

REGISTERED CIVIL ENGINEER 2-15-12 DATE

5-21-12
PLANS APPROVAL DATE

REGISTERED PROFESSIONAL ENGINEER Ulysses N. Smpardos No. 61018 Exp. 12/31/12 CIVIL STATE OF CALIFORNIA

The State of California or its officers or agents shall not be responsible for the accuracy or completeness of electronic copies of this plan sheet.

Notes:

1. The contractor shall be extra cautious working in the vicinity of the existing Stough Canyon and Burbank Western Channels. For the purpose of soil compaction, the contractor shall use hand held equipment when working adjacent to or over the existing channels in order to not cause any structural damage to the channels.
2. For Wall Typical Sections see "GENERAL PLAN No. 2" sheet.

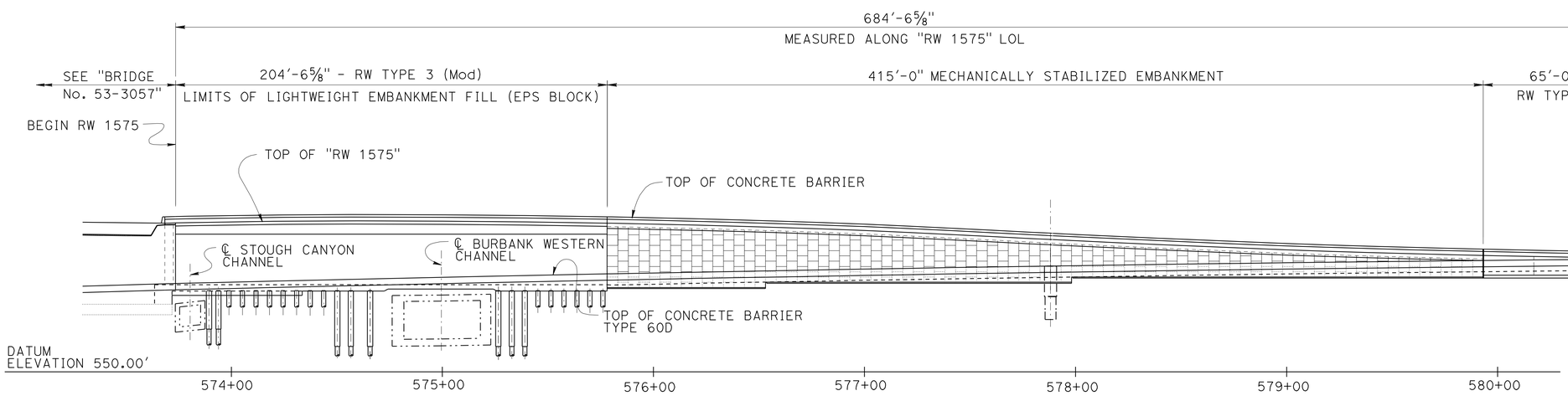

ELEVATION

1" = 30'-0"

QUANTITIES

STRUCTURE EXCAVATION (RETAINING WALL)	1,422	CY
STRUCTURE BACKFILL (RETAINING WALL)	3,362	CY
LIGHTWEIGHT FILL (EPS BLOCK)	11,711	CY
GASOLINE RESISTANT GEOMEMBRANE	4,477	SQYD
MECHANICALLY STABILIZED EMBANKMENT, LOCATION C	8,454	SQFT
24" CAST-IN-DRILLED-HOLE CONCRETE PILING	6,393	LF
60" CAST-IN-DRILLED-HOLE CONCRETE PILING	24	LF
STRUCTURAL CONCRETE, RETAINING WALL	1,740	CY
STRUCTURAL CONCRETE, BARRIER SLAB	212	CY
ARCHITECTURAL TREATMENT	12,487	SQFT
BAR REINFORCING STEEL (RETAINING WALL)	236,910	LB
CONCRETE BARRIER (TYPE 60D)	270	LF
CONCRETE BARRIER (TYPE 60D MODIFIED)	415	LF
CONCRETE BARRIER (TYPE 736 MODIFIED)	415	LF
CONCRETE BARRIER (TYPE 736A MODIFIED)	270	LF

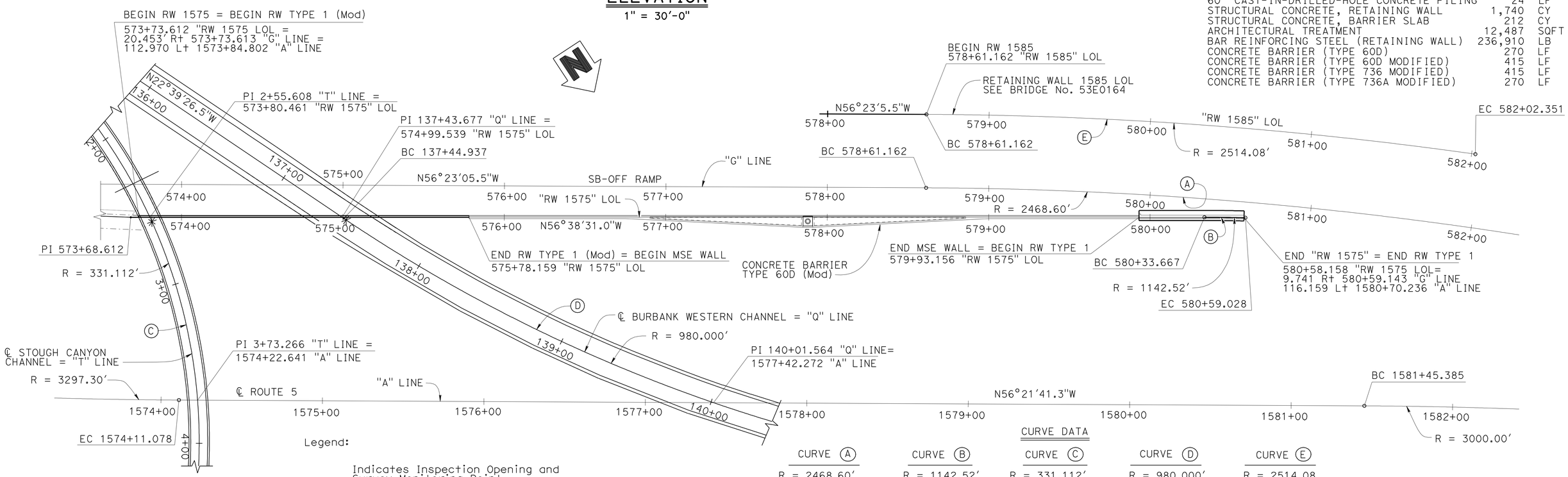

Legend:

✳ Indicates Inspection Opening and Survey Monitoring Point, Station 137+46.684 "Q" Line and 2+58.608 "T" Line, see "ELEVATION - INSPECTION OPENING" on "INDEX TO PLANS" sheet

PLAN

1" = 30'-0"

CURVE DATA

CURVE (A)	CURVE (B)	CURVE (C)	CURVE (D)	CURVE (E)
R = 2468.60'	R = 1142.52'	R = 331.112'	R = 980.000'	R = 2514.08
Δ = 10°29'05.3"	Δ = 1°16'18.5"	Δ = 53°45'25.8"	Δ = 25°55'06.8"	Δ = 7°46'32.5"
T = 226.503'	T = 12.681'	T = 167.827'	T = 225.517'	T = 170.857'
L = 451.740'	L = 25.361'	L = 310.662'	L = 443.317'	L = 341.189'

DESIGN	BY G. Galo/A. Logus	CHECKED J. Higareda/S. Pahlavan	LOAD & RESISTANCE FACTOR DESIGN	LIVE LOADING: HL93 W/"LOW-BOY"; PERMIT DESIGN VEHICLE
DETAILS	BY Stan Cholda/T. Cotton	CHECKED J. Higareda/S. Pahlavan	LAYOUT BY G. Galo	CHECKED Ulysses Smpardos
QUANTITIES	BY S. Moradi/A. Logus	CHECKED R. Novik/J. Jauregui	SPECIFICATIONS BY James Choi	PLANS AND SPECS COMPARED Ulysses Smpardos

Traci Menard
DESIGN ENGINEER

STATE OF CALIFORNIA
DEPARTMENT OF TRANSPORTATION

DIVISION OF ENGINEERING SERVICES
STRUCTURE DESIGN
DESIGN BRANCH 15

BRIDGE NO. 53E0163
POST MILE 29.8

RETAINING WALL NO. 1575
GENERAL PLAN NO. 1

ORIGINAL SCALE IN INCHES FOR REDUCED PLANS 0 1 2 3

UNIT: 3604
PROJECT NUMBER & PHASE: 0700021119
CONTRACT NO.: 07-1218W1

DISREGARD PRINTS BEARING EARLIER REVISION DATES

REVISION DATES 07-24-12 07-02-12 04-26-12 06-21-12

SHEET 1 OF 26

STRUCTURES DESIGN GENERAL PLAN SHEET (ENGLISH) (REV.09-01-10)

FILE => 53e0163-a-gp01.dgn

USERNAME => s124496 DATE PLOTTED => 11-JUL-2012 TIME PLOTTED => 14:04

DIST	COUNTY	ROUTE	POST MILES TOTAL PROJECT	SHEET No.	TOTAL SHEETS
07	LA	5	29.4/31.6	861	1931

Ulysses N. Smpardos 2-15-12
REGISTERED CIVIL ENGINEER DATE

5-21-12
PLANS APPROVAL DATE

REGISTERED PROFESSIONAL ENGINEER
Ulysses N. Smpardos
No. 61018
Exp. 12/31/12
CIVIL
STATE OF CALIFORNIA

The State of California or its officers or agents shall not be responsible for the accuracy or completeness of electronic copies of this plan sheet.

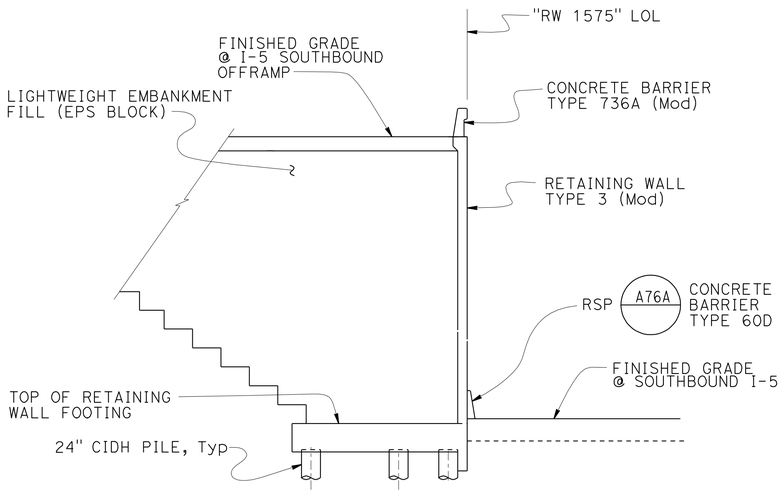

TYPICAL SECTION

1/8" = 1'-0"

MEASURED ALONG "RW 1575" LOL
STATION 573+73.612 TO STATION 575+78.159

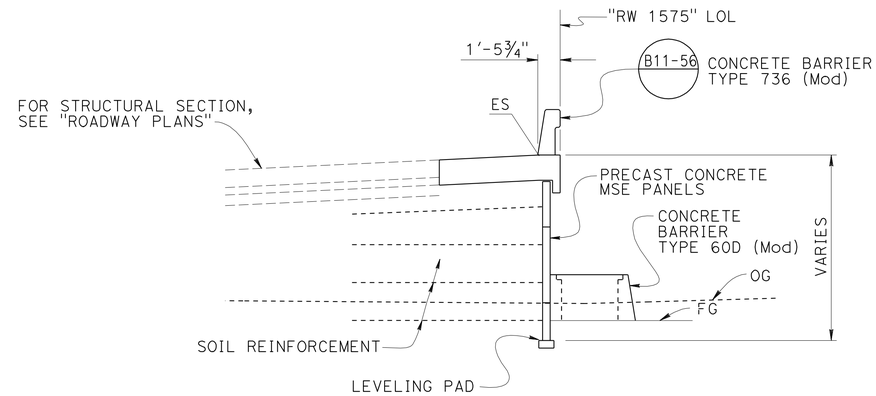

TYPICAL SECTION

1" = 5'-0"

MEASURED ALONG "RW 1575" LOL
STATION 575+78.159 TO STATION 579+93.156

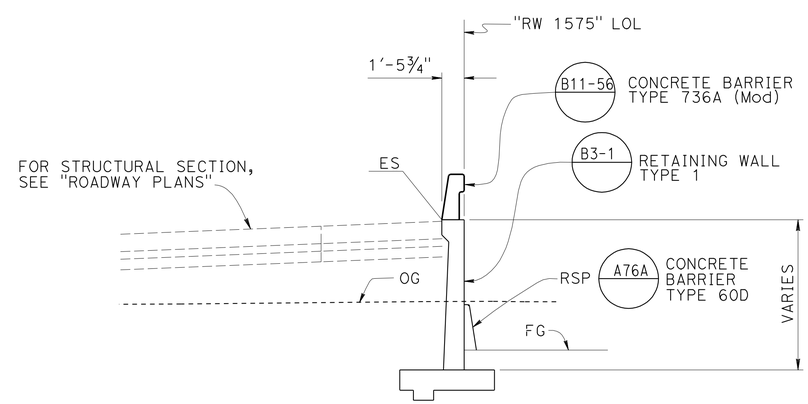

TYPICAL SECTION

1" = 5'-0"

MEASURED ALONG "RW 1575" LOL
STATION 579+93.156 TO STATION 580+58.158

DESIGN	BY G. Galo/A. Logus	CHECKED J. Higareda/C. Hensel	LOAD & RESISTANCE FACTOR DESIGN	LIVE LOADING: HL93 W/"LOW-BOY": PERMIT DESIGN VEHICLE	
DETAILS	BY Stan Cholda/T. Cotton	CHECKED J. Higareda/C. Hensel	LAYOUT	BY G. Galo	CHECKED Ulysses Smpardos
QUANTITIES	BY S. Moradi/A. Logus	CHECKED R. Novik/C. Hensel	SPECIFICATIONS	BY James Choi	PLANS AND SPECS COMPARED Ulysses Smpardos

Traci Menard
DESIGN ENGINEER

ORIGINAL SCALE IN INCHES FOR REDUCED PLANS 0 1 2 3

STATE OF CALIFORNIA
DEPARTMENT OF TRANSPORTATION

DIVISION OF ENGINEERING SERVICES
STRUCTURE DESIGN
DESIGN BRANCH 15

BRIDGE NO. 53E0163
POST MILE 29.8

RETAINING WALL NO. 1575
GENERAL PLAN NO. 2

UNIT: 3604
PROJECT NUMBER & PHASE: 0700021119
CONTRACT NO.: 07-1218W1

DISREGARD PRINTS BEARING EARLIER REVISION DATES

REVISION DATES: 03-21-12 07-06-12 07-11-12 04-16-12

SHEET 2 OF 26

STRUCTURES DESIGN GENERAL PLAN SHEET (ENGLISH) (REV.09-01-10)

FILE => 53e0163-a-gp02.dgn

USERNAME => s124496 DATE PLOTTED => 11-JUL-2012 TIME PLOTTED => 14:04

DIST	COUNTY	ROUTE	POST MILES TOTAL PROJECT	SHEET No.	TOTAL SHEETS
07	LA	5	29.4/31.6	862	1931

REGISTERED CIVIL ENGINEER 2-15-12 DATE

5-21-12
PLANS APPROVAL DATE

REGISTERED PROFESSIONAL ENGINEER Ulysses N. Smpardos No. 61018 Exp. 12/31/12 CIVIL STATE OF CALIFORNIA

The State of California or its officers or agents shall not be responsible for the accuracy or completeness of electronic copies of this plan sheet.

INDEX TO PLANS

SHEET NO.	TITLE
1.	GENERAL PLAN NO. 1
2.	GENERAL PLAN NO. 2
3.	INDEX TO PLANS
4.	FOUNDATION PLAN NO. 1
5.	FOUNDATION PLAN NO. 2
6.	STRUCTURE PLAN NO. 1
7.	STRUCTURE PLAN NO. 2
8.	STRUCTURE PLAN NO. 3
9.	MISCELLANEOUS DETAILS NO. 1
10.	MISCELLANEOUS DETAILS NO. 2
11.	MISCELLANEOUS DETAILS NO. 3
12.	MISCELLANEOUS DETAILS NO. 4
13.	MISCELLANEOUS DETAILS NO. 5
14.	ARCHITECTURAL DETAILS NO. 1
15.	ARCHITECTURAL DETAILS NO. 2
16.	ARCHITECTURAL DETAILS NO. 3
17.	CONCRETE BARRIER TYPE 60D (MOD)
18.	SIGN SUPPORT DETAILS
19.	CONCRETE BARRIER SLAB DETAILS
20.	MECHANICALLY STABILIZED EMBANKMENT DETAILS NO. 1
21.	MECHANICALLY STABILIZED EMBANKMENT DETAILS NO. 2
22.	MECHANICALLY STABILIZED EMBANKMENT DETAILS NO. 3
23.	LOG OF TEST BORINGS 1 OF 4
24.	LOG OF TEST BORINGS 2 OF 4
25.	LOG OF TEST BORINGS 3 OF 4
26.	LOG OF TEST BORINGS 4 OF 4

STANDARD PLANS DATED MAY 2006

	A10A	ACRONYMS AND ABBREVIATIONS (SHEET 1 OF 2)
	A10B	ACRONYMS AND ABBREVIATIONS (SHEET 2 OF 2)
	D102	UNDERDRAINS
	B0-3	BRIDGE DETAILS
	B0-13	BRIDGE DETAILS
	B3-1	RETAINING WALL TYPE 1 - H=4' THROUGH 30'
	B3-8	RETAINING WALL DETAILS No. 1
	B3-9	RETAINING WALL DETAILS No. 2
	B11-56	CONCRETE BARRIER TYPE 736
	S3	OVERHEAD SIGNS - TRUSS SINGLE POST TYPE BASE PLATE AND ANCHORAGE DETAILS
	S7	OVERHEAD SIGNS - TRUSS SINGLE POST TYPE SQUARE PEDESTAL PILE FOUNDATION
RSP	A76A	CONCRETE BARRIER TYPE 60

STANDARD PLAN SHEET No.

DETAIL No.

GENERAL NOTES-TYPE 3 (Mod) RETAINING WALL

DESIGN:

AASHTO LRFD BRIDGE DESIGN SPECIFICATIONS, 4TH Edition and California Amendments, dated December 2008

REINFORCED CONCRETE:

fy = 60 ksi
f'c = 4.0 ksi

PILE:

fy = 60 ksi
f'c = 4.0 ksi

SOIL PARAMETERS:

γ = 120 pcf
ϕ = 30 deg.
γ = Unit weight of soil
ϕ = Soil angle of internal friction

SEISMIC LOAD (SOIL):

PGA = 0.67g
Kh = PGA/3
Kv = 0.0

Note:
For General Notes not shown, see "DESIGN DATA" on "CONCRETE BARRIER SLAB DETAILS" sheet and "GENERAL NOTES LOAD AND RESISTANCE FACTOR DESIGN" on "MECHANICALLY STABILIZED EMBANKMENT DETAILS NO. 2" sheet.

PILE DATA TABLE

LOCATION	PILE TYPE	NOMINAL RESISTANCE		DESIGN TIP ELEVATION (ft)			SPECIFIED TIP ELEVATION (SEE NOTE 2)	NOMINAL DRIVING RESISTANCE REQUIRED (kips)
		Compression (kips)	Tension (kips)	(a)	(b)	(c)		
RW TYPE 3 (Mod)	24" Ø CIDH PILES WITH 26'-3" LONG CASINGS	500	30	524	558	546	524	N/A
	24" Ø CIDH PILES WITH 16'-0" LONG CASINGS	500	30	525	564	546	525	N/A
	24" Ø CIDH PILES WITHOUT CASINGS	500	30	530	578	546	530	N/A

Notes:

1. N/A = Not Applicable
2. Design Tip elevations are controlled by: (a) Compression, (b) Tension, (c) Settlement.
3. The Specified tip elevation shall not be raised above the design tip elevation for tolerable settlement.

STEEL SOIL REINFORCEMENT FOR LOAD CASE 1

SOIL REINFORCEMENT DESIGNATION LETTER	A	B	C	D	E	F	G	H
WALL HEIGHT	6'-8"	9'-2"	11'-8"	14'-2"	16'-8"	19'-2"	21'-8"	24'-2"
WALL BASE WIDTH	9'-6"	9'-6"	9'-6"	11'-6"	13'-6"	15'-6"	17'-6"	18'-6"
	TOP 4-W15xW15 @ 6	TOP 4-W15xW15 @ 6	TOP 4-W15xW15 @ 6	TOP 4-W15xW15 @ 6	TOP 4-W15xW15 @ 6	TOP 4-W15xW15 @ 6	TOP 4-W15xW15 @ 6	TOP 4-W15xW15 @ 6
	BOT 4-W15xW15 @ 6	1 OF 4-W15xW15 @ 6	2 OF 4-W15xW15 @ 6	3 OF 4-W15xW15 @ 6	3 OF 4-W15xW15 @ 6	4 OF 4-W15xW15 @ 6	4 OF 4-W15xW15 @ 18	4 OF 4-W15xW15 @ 18
	———	BOT 4-W15xW15 @ 6	BOT 4-W20xW15 @ 9	BOT 4-W20xW15 @ 9	1 OF 4-W20xW15 @ 9	1 OF 4-W20xW15 @ 9	2 OF 4-W20xW15 @ 24	3 OF 4-W20xW15 @ 24
	———	———	———	———	BOT 4-W20xW15 @ 9	BOT 4-W20xW15 @ 9	BOT 4-W20xW15 @ 24	BOT 4-W20xW15 @ 24

SOIL REINFORCEMENT DESIGNATION LETTER	I	J	K	L	M	N	O	P
WALL HEIGHT	26'-8"	29'-2"	31'-8"	34'-2"	36'-8"	39'-2"	41'-8"	44'-2"
WALL BASE WIDTH	20'-6"	21'-6"	23'-6"	25'-6"	26'-6"	29'-6"	30'-6"	33'-6"
	TOP 4-W15xW15 @ 6	TOP 4-W15xW15 @ 6	TOP 4-W15xW15 @ 6	TOP 4-W15xW15 @ 18	TOP 4-W15xW15 @ 18	TOP 4-W15xW15 @ 18	TOP 4-W15xW15 @ 18	TOP 4-W15xW15 @ 18
	4 OF 4-W15xW15 @ 18	4 OF 4-W15xW15 @ 18	4 OF 4-W15xW15 @ 18	4 OF 4-W15xW15 @ 18	4 OF 4-W15xW15 @ 18	4 OF 4-W15xW15 @ 18	4 OF 4-W15xW15 @ 18	4 OF 4-W15xW15 @ 18
	3 OF 4-W20xW15 @ 24	3 OF 4-W20xW15 @ 24	4 OF 4-W20xW15 @ 24	4 OF 4-W20xW15 @ 24	4 OF 4-W20xW15 @ 24	5 OF 4-W20xW15 @ 24	5 OF 4-W20xW15 @ 24	5 OF 4-W20xW15 @ 24
	1 OF 6-W25xW15 @ 24	2 OF 6-W25xW15 @ 24	2 OF 6-W25xW15 @ 30	3 OF 6-W25xW15 @ 30	4 OF 6-W25xW15 @ 30	4 OF 6-W25xW15 @ 30	5 OF 6-W25xW15 @ 30	6 OF 6-W25xW15 @ 30
	BOT 6-W25xW15 @ 24	BOT 6-W25xW15 @ 24	BOT 6-W25xW15 @ 30	BOT 6-W25xW15 @ 30	BOT 6-W25xW15 @ 30	BOT 6-W25xW15 @ 30	BOT 6-W25xW15 @ 30	BOT 6-W25xW15 @ 30

	BY	CHECKED
DESIGN	G. Galo/A. Logus	S. Pahlavan
DETAILS	Stan Cholda/T. Cotton	S. Pahlavan
QUANTITIES	S. Moradi/A. Logus	R. Novik/J. Jauregui

ORIGINAL SCALE IN INCHES FOR REDUCED PLANS 0 1 2 3

STATE OF CALIFORNIA
DEPARTMENT OF TRANSPORTATION

DIVISION OF ENGINEERING SERVICES
STRUCTURE DESIGN
DESIGN BRANCH 15

BRIDGE NO. 53E0163
POST MILE 29.8

RETAINING WALL NO. 1575
INDEX TO PLANS

UNIT: 3604
PROJECT NUMBER & PHASE: 0700021119
CONTRACT NO.: 07-1218W1

DISREGARD PRINTS BEARING EARLIER REVISION DATES

REVISION DATES: 04-04-12 07-06-12 07-09-12 07-10-12

SHEET 3 OF 26

USERNAME => s124196 DATE PLOTTED => 12-JUL-2012 TIME PLOTTED => 08:15

STRUCTURES DESIGN GENERAL PLAN SHEET (ENGLISH) (REV.09-01-10)

FILE => 53e0163-a-itp.dgn

DIST	COUNTY	ROUTE	POST MILES TOTAL PROJECT	SHEET No.	TOTAL SHEETS
07	LA	5	29.4/31.6	863	1931

Ulysses N. Smpardos 2-15-12
REGISTERED CIVIL ENGINEER DATE

5-21-12
PLANS APPROVAL DATE

REGISTERED PROFESSIONAL ENGINEER Ulysses N. Smpardos No. 61018 Exp. 12/31/12 CIVIL STATE OF CALIFORNIA

The State of California or its officers or agents shall not be responsible for the accuracy or completeness of electronic copies of this plan sheet.

CURVE DATA

No.	R	Δ	T	L
©	3297.30	25°39′04"	750.68	1476.19

Note:

For Bottom of Footing Elevations see "STRUCTURE PLAN NO. 1" sheet.

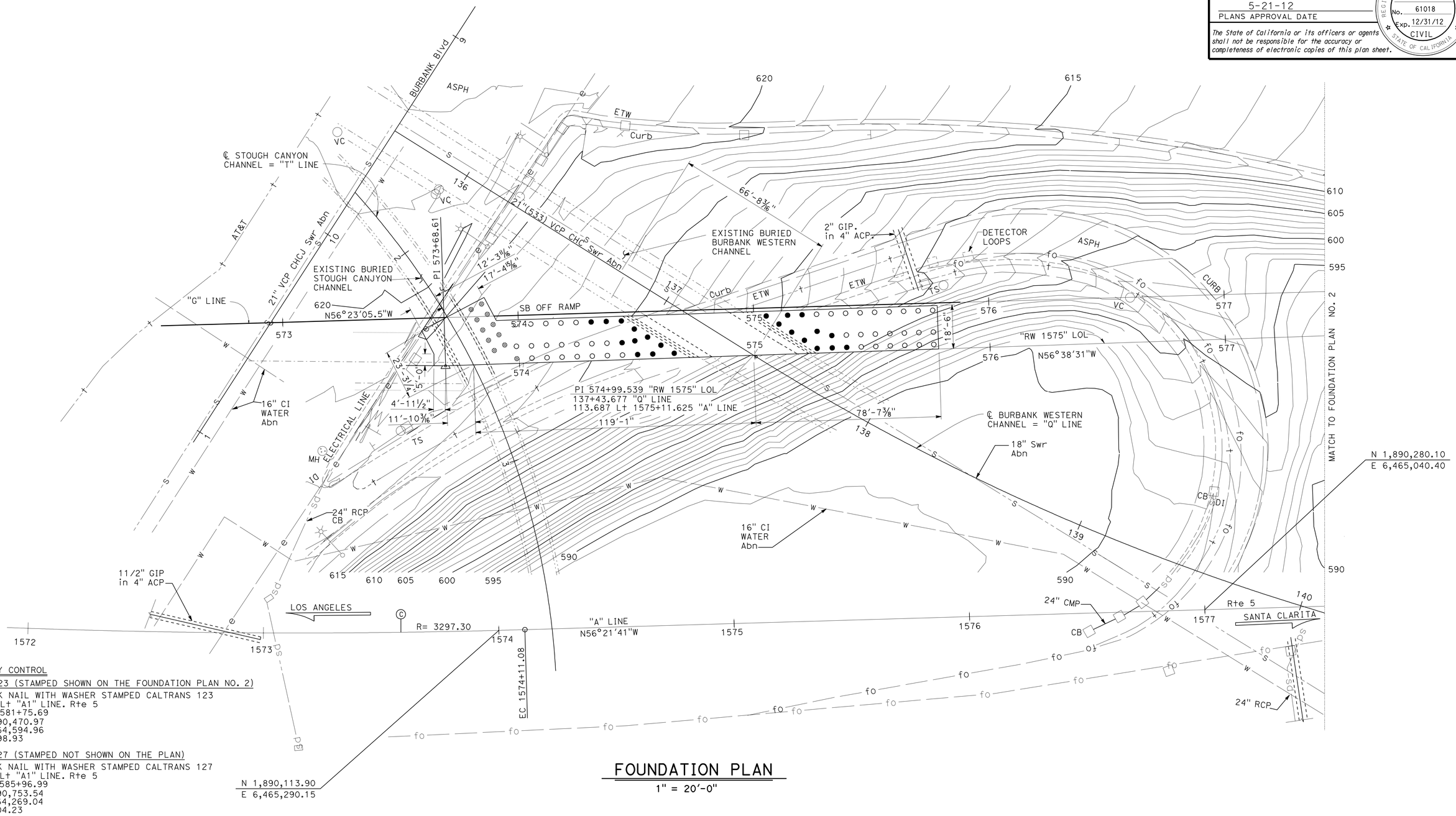

SURVEY CONTROL

PRHV123 (STAMPED SHOWN ON THE FOUNDATION PLAN NO. 2)

Fnd PK NAIL WITH WASHER STAMPED CALTRANS 123
88.00 Lt "A1" LINE. Rte 5
Sta. 1581+75.69
N 1,890,470.97
E 6,464,594.96
EL.=598.93

PRHV127 (STAMPED NOT SHOWN ON THE PLAN)

Fnd PK NAIL WITH WASHER STAMPED CALTRANS 127
67.36 Lt "A1" LINE. Rte 5
Sta. 1585+96.99
N 1,890,753.54
E 6,464,269.04
EL.=604.23

FOUNDATION PLAN

1" = 20′-0"

PRELIMINARY INVESTIGATION SECTION							
SCALE 1"=20′	VERT.DATUM NGVD88	PHOTOGRAMMETRY AS OF: X					
	HORZ.DATUM NAD83	SURVEYED	BY District	CHECKED	BY Don Ivy 10/23/11		
ALIGNMENT TIES Dist. Traverse Sheet		DRAFTED	BY J. Zhou 10/23/11	CHECKED	BY L. LEW 10/23/11		

	BY	CHECKED
DESIGN	G. Galo/A. Logus	C. Hensel
DETAILS	S. Cholda/H. Mauroschadt	C. Hensel
QUANTITIES	S. Moradi/A.Logus	C. Hensel

STATE OF CALIFORNIA
DEPARTMENT OF TRANSPORTATION

DIVISION OF ENGINEERING SERVICES
STRUCTURE DESIGN
DESIGN BRANCH 15

BRIDGE NO. 53E0163
POST MILE 29.8

RETAINING WALL NO. 1575
FOUNDATION PLAN No. 1

STRUCTURES FOUNDATION PLAN SHEET (ENGLISH) (REV. 09-01-10)

ORIGINAL SCALE IN INCHES FOR REDUCED PLANS 0 1 2 3

UNIT: 3604
PROJECT NUMBER & PHASE: 0700021119
CONTRACT NO.: 07-1218W1

DISREGARD PRINTS BEARING EARLIER REVISION DATES

REVISION DATES 07-02-12

SHEET 4 OF 26

FILE => 53e0163-e-fp01 .dgn

DIST	COUNTY	ROUTE	POST MILES TOTAL PROJECT	SHEET No.	TOTAL SHEETS
07	LA	5	29.4/31.6	864	1931

Ulysses N. Smpardos 2-15-12
REGISTERED CIVIL ENGINEER DATE

5-21-12
PLANS APPROVAL DATE

REGISTERED PROFESSIONAL ENGINEER Ulysses N. Smpardos No. 61018 Exp. 12/31/12 CIVIL STATE OF CALIFORNIA

The State of California or its officers or agents shall not be responsible for the accuracy or completeness of electronic copies of this plan sheet.

CURVE DATA

No.	R	Δ	T	L
(A)	1142.52	01°16'19"	12.68	25.36

Legend:

XXX.XX Denotes bottom of footing elevation

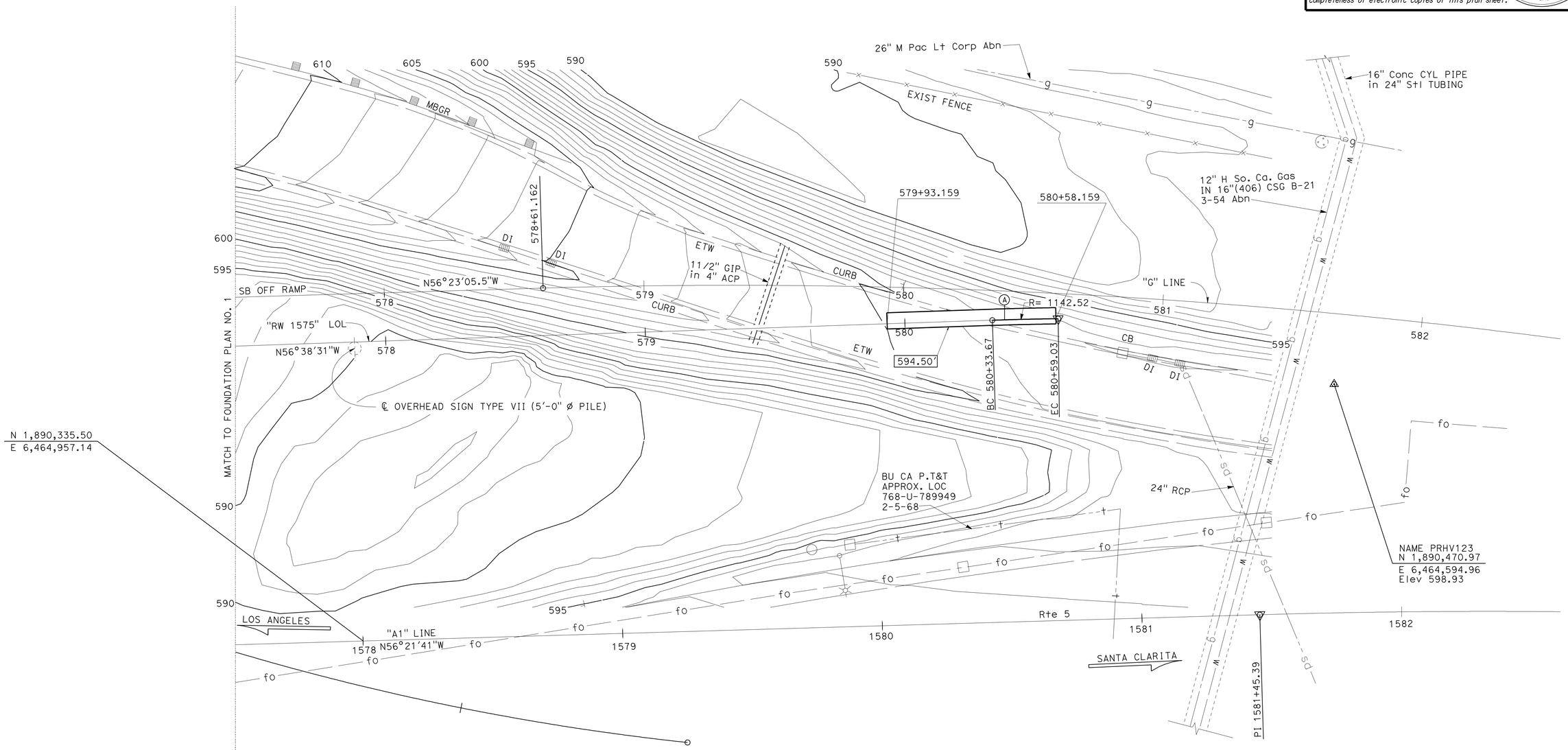

FOUNDATION PLAN

1" = 20'-0"

PRELIMINARY INVESTIGATION SECTION							
SCALE 1"=20'	VERT.DATUM NGVD88	PHOTOGRAMMETRY AS OF: X					
	HORZ.DATUM NAD83	SURVEYED	BY District	CHECKED	BY Don Ivy 10/23/11		
ALIGNMENT TIES Dist. Traverse Sheet		DRAFTED	BY J. Zhou 10/23/11	CHECKED	BY L. LEW 10/23/11		

	BY	CHECKED
DESIGN	G. Galo	S. Pahlavan
DETAILS	S. Cholda/H. Mauroschadt	S. Pahlavan
QUANTITIES	S. Moradi/A.Logus	R. Novik/J. Jauregui

STATE OF CALIFORNIA
DEPARTMENT OF TRANSPORTATION

DIVISION OF ENGINEERING SERVICES
STRUCTURE DESIGN
DESIGN BRANCH 15

BRIDGE NO. 53E0163
POST MILE 29.8

RETAINING WALL NO. 1575
FOUNDATION PLAN No. 2

STRUCTURES FOUNDATION PLAN SHEET (ENGLISH) (REV. 09-01-10)

ORIGINAL SCALE IN INCHES FOR REDUCED PLANS 0 1 2 3

UNIT: 3604
PROJECT NUMBER & PHASE: 0700021119
CONTRACT NO.: 07-1218W1

DISREGARD PRINTS BEARING EARLIER REVISION DATES

REVISION DATES: 01-24-12 07-02-12 04-04-12 06-21-12

SHEET 5 OF 26

FILE => 53e0163-e-fp02 .dgn

DIST	COUNTY	ROUTE	POST MILES TOTAL PROJECT	SHEET No.	TOTAL SHEETS
07	LA	5	29.4/31.6	865	1931

REGISTERED CIVIL ENGINEER — DATE 2-15-12

PLANS APPROVAL DATE 5-21-12

REGISTERED PROFESSIONAL ENGINEER — JOSE L. HIGAREDA — No. 62338 — Exp. 9-30-13 — CIVIL — STATE OF CALIFORNIA

The State of California or its officers or agents shall not be responsible for the accuracy or completeness of electronic copies of this plan sheet.

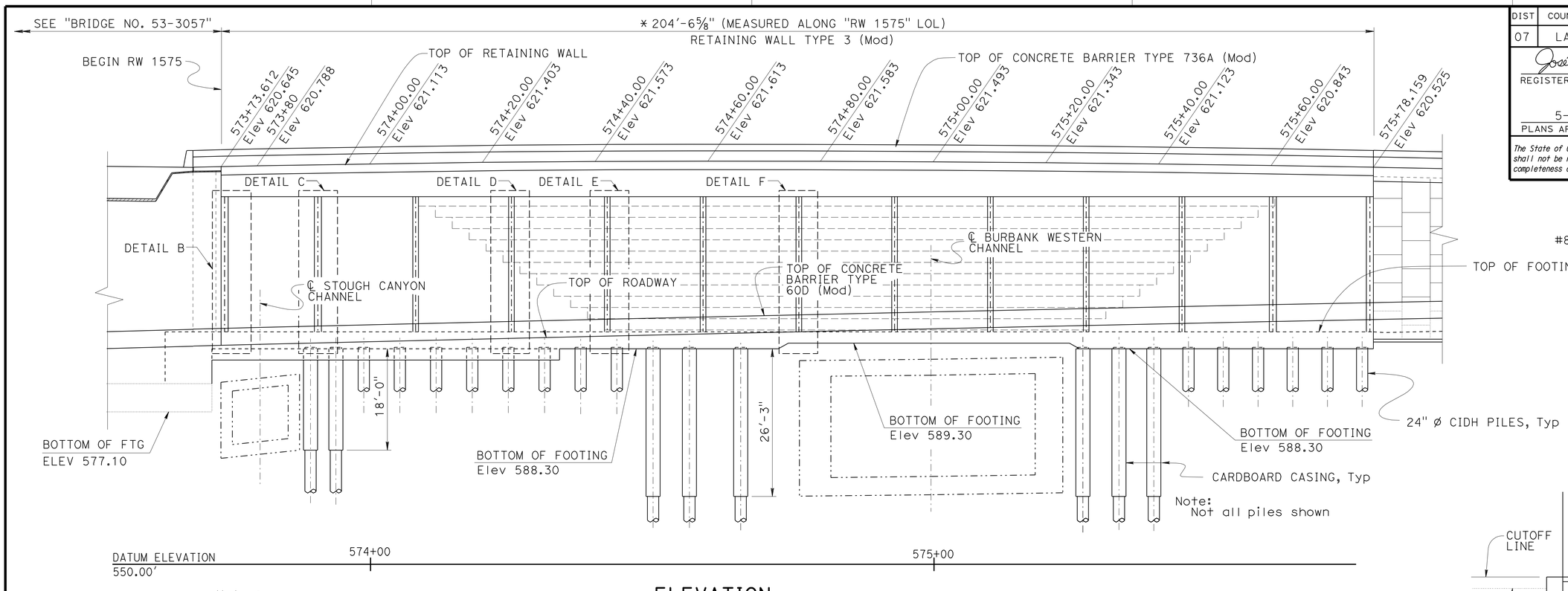

ELEVATION
1" = 10'-0"

Notes:

1. For pile layout and information not shown, see "MISCELLANEOUS DETAILS SHEET NO. 3" sheet.
2. For "SECTION A-A" see "MISCELLANEOUS DETAILS SHEET NO. 3" sheet.
3. For "DETAIL B" see "MISCELLANEOUS DETAILS SHEET NO. 4" sheet.
4. For "DEATIL C" see "MISCELLANEOUS DETAILS SHEET NO. 5" sheet.
5. For "DETAIL D" see "MISCELLANEOUS DETAILS SHEET NO. 6" sheet.
6. For "DETAIL E" see "MISCELLANEOUS DETAILS SHEET NO. 7" sheet.
7. For "DETAIL F" see "MISCELLANEOUS DETAILS SHEET NO. 8" sheet.
8. For "SECTION M-M" see "MISCELLANEOUS DETAILS SHEET NO. 8" sheet.

Pile Notes:

1. Reinforcement extending into footing shall be hooked as required to provide clearance to top of footing.
2. Lapped splices in spiral pile reinforcement shall be lapped at least 80 wire/bar diameters. Spiral pile reinforcement at splices and at ends shall be terminated with a 135° hook with a 6" tail hooked around a longitudinal bar.

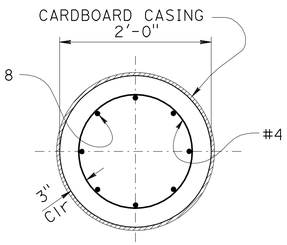

SECTION Z-Z
1" = 1'-0"

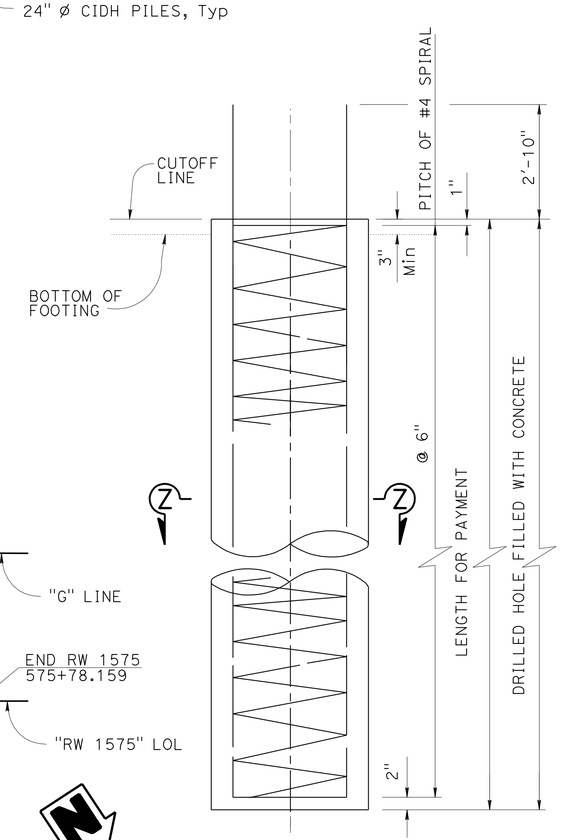

ELEVATION
1" = 1'-0"

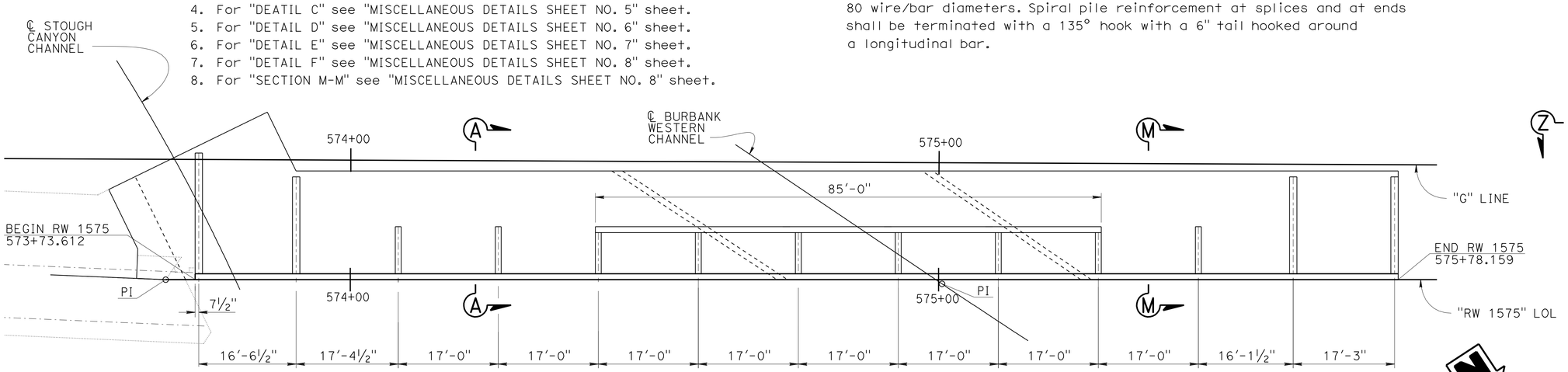

NOTE:
THE CONTRACTOR SHALL VERIFY ALL CONTROLLING FIELD DIMENSIONS BEFORE ORDERING OR FABRICATING ANY MATERIAL.

PLAN - RETAINING WALL 1575
1" = 10'-0"

	BY	CHECKED
DESIGN	A. Logus	C. Hensel
DETAILS	T. Cotton	C. Hensel
QUANTITIES	S. Moradi/A. Logus	R. Novik/J. Jauregui

STATE OF CALIFORNIA
DEPARTMENT OF TRANSPORTATION

DIVISION OF ENGINEERING SERVICES
STRUCTURE DESIGN
DESIGN BRANCH 15

BRIDGE NO. 53E0163
POST MILE 29.8

RETAINING WALL NO. 1575
STRUCTURE PLAN NO. 1

STRUCTURES DESIGN DETAIL SHEET (ENGLISH) (REV. 09-01-10)

ORIGINAL SCALE IN INCHES FOR REDUCED PLANS 0 1 2 3

UNIT: 3604
PROJECT NUMBER & PHASE: 0700021119
CONTRACT NO.: 07-1218W1

DISREGARD PRINTS BEARING EARLIER REVISION DATES

REVISION DATES: 03-30-12 04-16-12 04-18-12 04-27-12

SHEET 6 OF 26

FILE => 53e0163-g-sp_01.dgn

USERNAME => s124936 DATE PLOTTED => 11-JUL-2012 TIME PLOTTED => 14:04

DIST	COUNTY	ROUTE	POST MILES TOTAL PROJECT	SHEET No.	TOTAL SHEETS
07	LA	5	29.4/31.6	866	1931

REGISTERED CIVIL ENGINEER — DATE 2-15-12

5-21-12
PLANS APPROVAL DATE

REGISTERED PROFESSIONAL ENGINEER — Ulysses N. Smpardos — No. 61018 — Exp. 12/31/12 — CIVIL — STATE OF CALIFORNIA

The State of California or its officers or agents shall not be responsible for the accuracy or completeness of electronic copies of this plan sheet.

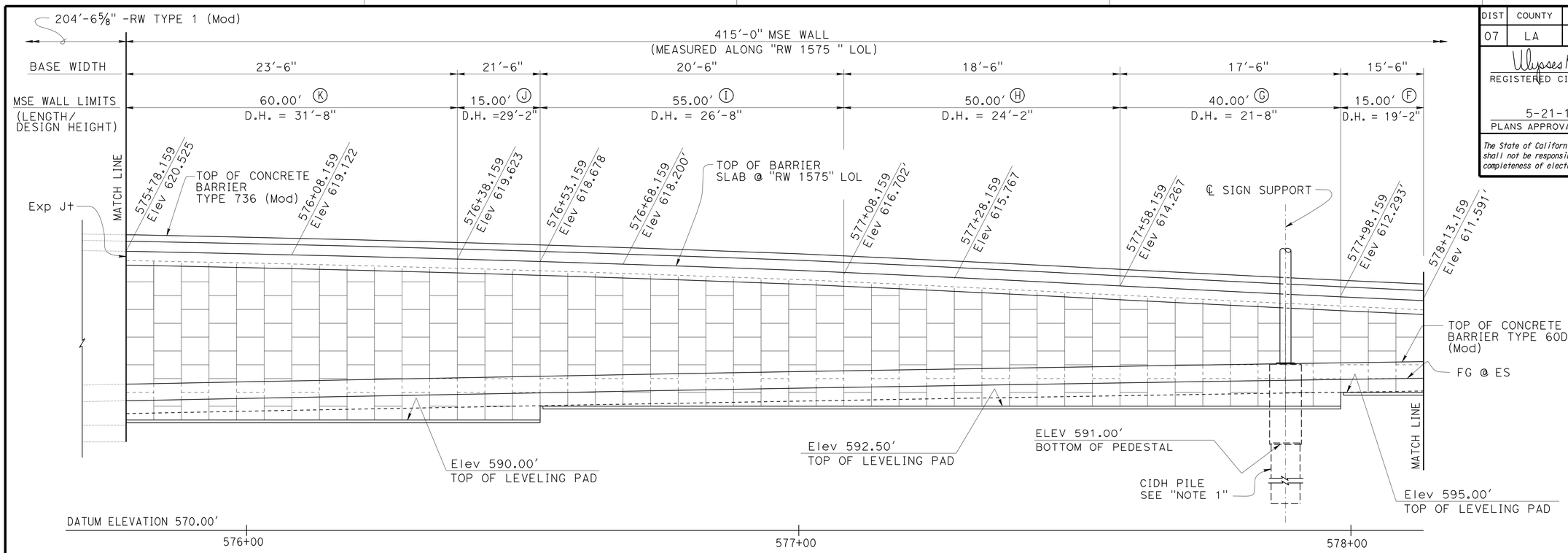

ELEVATION

1" = 10'-0"

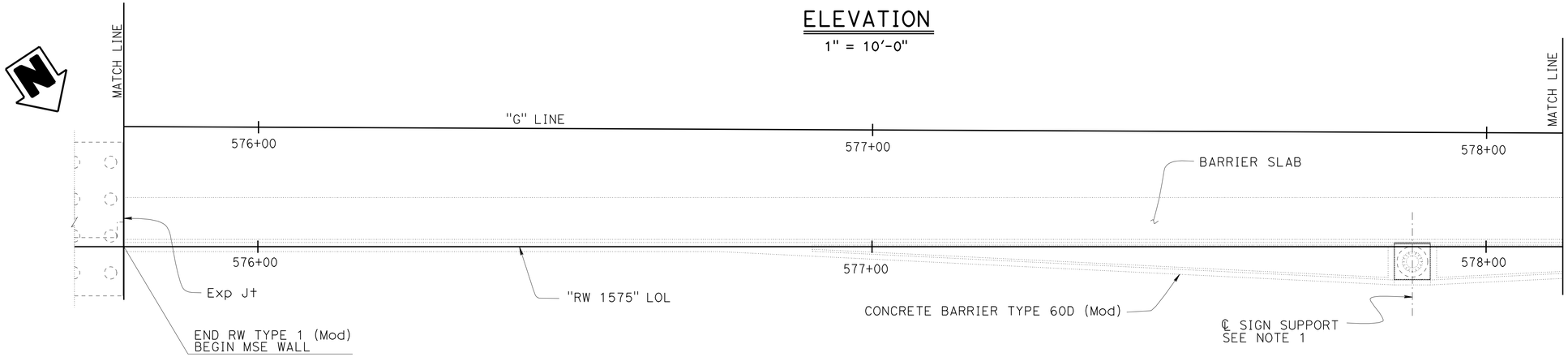

PLAN

1" = 10'-0"

Note:

1. For Sign Support details , see "SIGN SUPPORT DETAILS" sheet.

Legend:

K to F - Indicates Soil Reinforcement designation letter. For details, see "STEEL REINFORCEMENT FOR LOAD CASE 1" Table on "INDEX TO PLANS" sheet.

D.H. - Denote Design Height.

	BY	CHECKED
DESIGN	G. Galo/T. Menard	S. Pahlavan
DETAILS	Stan Cholda/T. Cotton	S. Pahlavan
QUANTITIES	S. Moradi/A. Logus	R. Novik/J. Jauregui

STATE OF CALIFORNIA
DEPARTMENT OF TRANSPORTATION

DIVISION OF ENGINEERING SERVICES
STRUCTURE DESIGN
DESIGN BRANCH 15

BRIDGE NO. 53E0163
POST MILE 29.8

RETAINING WALL NO. 1575
STRUCTURE PLAN NO. 2

STRUCTURES DESIGN DETAIL SHEET (ENGLISH) (REV. 09-01-10)

ORIGINAL SCALE IN INCHES FOR REDUCED PLANS 0 1 2 3

UNIT: 3604
PROJECT NUMBER & PHASE: 0700021119
CONTRACT NO.: 07-1218W1

DISREGARD PRINTS BEARING EARLIER REVISION DATES

REVISION DATES: 04-12-12 07-11-12 08-28-12 07-09-12

SHEET 7 OF 26

FILE => 53e0163-g-sp_02.dgn

USERNAME => s124936 DATE PLOTTED => 11-JUL-2012 TIME PLOTTED => 14:04

DIST	COUNTY	ROUTE	POST MILES TOTAL PROJECT	SHEET No.	TOTAL SHEETS
07	LA	5	29.4/31.6	867	1931

REGISTERED CIVIL ENGINEER — DATE 2-15-12

PLANS APPROVAL DATE 5-21-12

REGISTERED PROFESSIONAL ENGINEER — Ulysses N. Smpardos — No. 61018 — Exp. 12/31/12 — CIVIL — STATE OF CALIFORNIA

The State of California or its officers or agents shall not be responsible for the accuracy or completeness of electronic copies of this plan sheet.

Legend:

Ⓔ to Ⓒ - Indicates Soil Reinforcement designation letter. For details, see "STEEL REINFORCEMENT FOR LOAD CASE 1" Table on "INDEX TO PLANS" sheet.

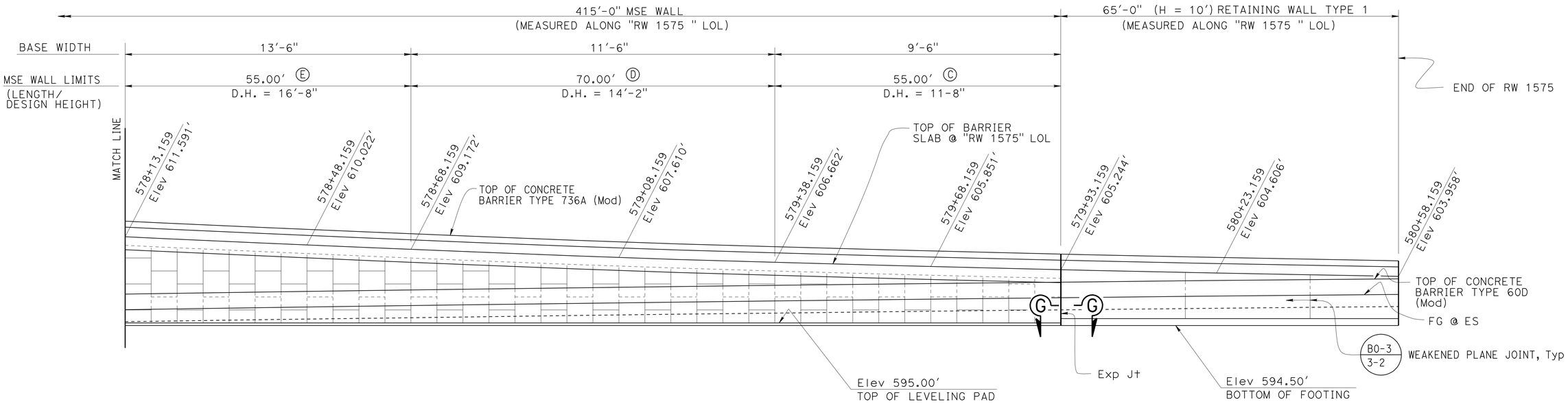

ELEVATION

1" = 10'-0"

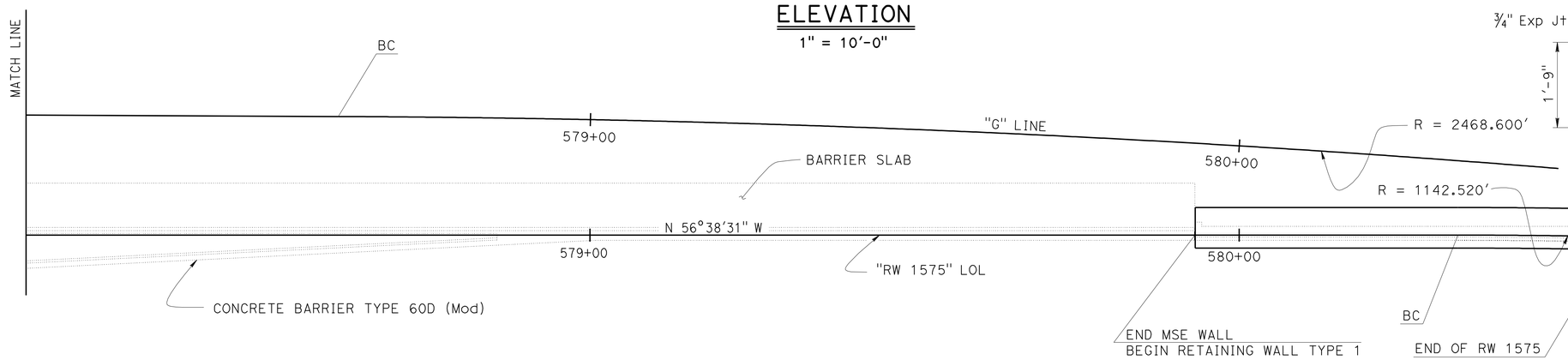

PLAN

1" = 10'-0"

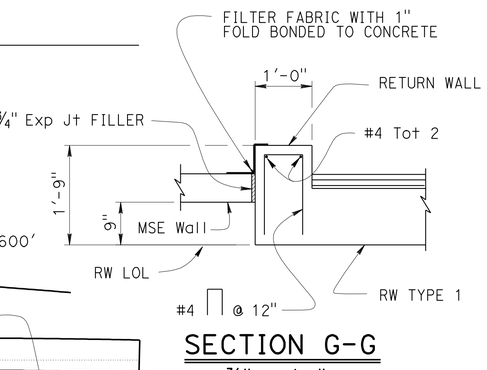

SECTION G-G

3/4" = 1'-0"

DESIGN	BY G. Galo/T. Menard	CHECKED S. Pahlavan	
DETAILS	BY Stan Cholda/T. Cotton	CHECKED S. Pahlavan	
QUANTITIES	BY S. Moradi/A. Logus	CHECKED R. Novik/J. Jauregui	

STATE OF CALIFORNIA
DEPARTMENT OF TRANSPORTATION

DIVISION OF ENGINEERING SERVICES
STRUCTURE DESIGN
DESIGN BRANCH 15

BRIDGE NO. 53E0163
POST MILE 29.8

RETAINING WALL NO. 1575
STRUCTURE PLAN NO. 3

STRUCTURES DESIGN DETAIL SHEET (ENGLISH) (REV. 09-01-10)

ORIGINAL SCALE IN INCHES FOR REDUCED PLANS 0 1 2 3

UNIT: 3604
PROJECT NUMBER & PHASE: 0700021119
CONTRACT NO.: 07-1218W1

DISREGARD PRINTS BEARING EARLIER REVISION DATES

REVISION DATES: 03-15-12 07-09-12 07-11-12 07-02-12

SHEET 8 OF 26

FILE => 53e0163-g-sp_03.dgn

USERNAME => s124496 DATE PLOTTED => 11-JUL-2012 TIME PLOTTED => 14:04

DIST	COUNTY	ROUTE	POST MILES TOTAL PROJECT	SHEET No.	TOTAL SHEETS
07	LA	5	29.4/31.6	868	1931

REGISTERED CIVIL ENGINEER 2-15-12 DATE

5-21-12
PLANS APPROVAL DATE

REGISTERED PROFESSIONAL ENGINEER Ulysses N. Smpardos No. 61018 Exp. 12/31/12 CIVIL STATE OF CALIFORNIA

The State of California or its officers or agents shall not be responsible for the accuracy or completeness of electronic copies of this plan sheet.

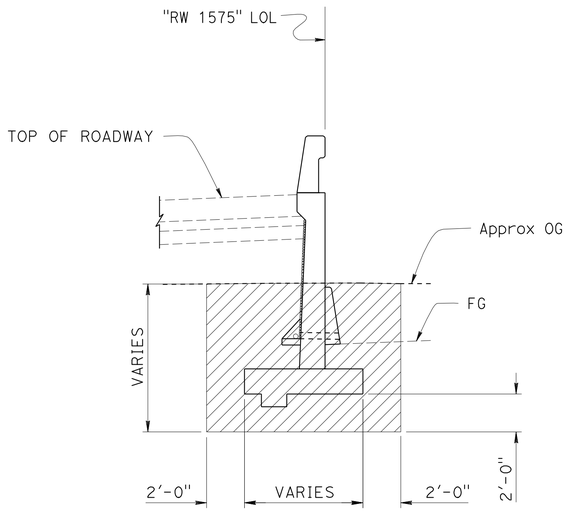

LIMITS OF EXCAVATION

1/4" = 1'-0"

Legend:

Limits of Structure Excavation (Retaining Wall).

Limits of Structure Backfill (Retaining Wall).

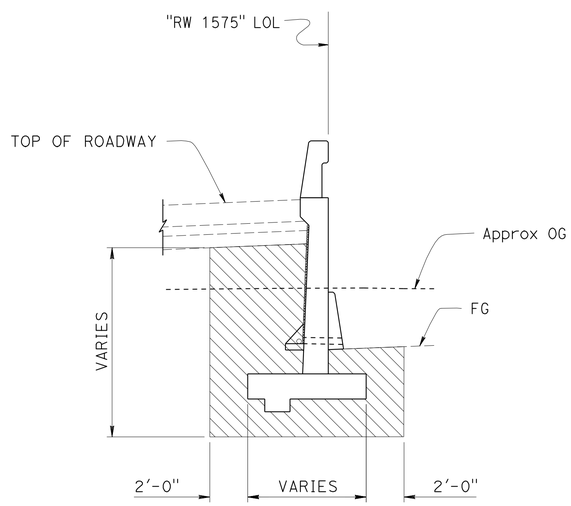

LIMITS OF BACKFILL

1/4" = 1'-0"

Notes

1. Locate underdrain behind bottom level of welded wire mats wherever possible, or at elevation needed to drain, as shown elsewhere on plans.
2. Maximum spacing of outlet pipe shall be 200 feet.
3. At sags in profile of underdrain, install outlet pipe for each direction of flow.
4. Place perforated pipe underdrain of diameter shown elswhere on plans or minimum 4" Ø smoothed wall PVC.
5. For MSE Wall details, see "STRUCTURE PLAN NO. 1" through "STRUCTURE PLAN NO. 3" sheet.

RETAINING WALL TYPE 1- LIMITS OF EXCAVATION AND BACKFILL

	BY	CHECKED
DESIGN	G. Galo	S. Pahlavan
DETAILS	Stan Cholda	S. Pahlavan
QUANTITIES	S. Moradi/A. Logus	R. Novik/J. Jauregui

STATE OF CALIFORNIA
DEPARTMENT OF TRANSPORTATION

DIVISION OF ENGINEERING SERVICES
STRUCTURE DESIGN
DESIGN BRANCH 15

BRIDGE NO. 53E0163
POST MILE 29.8

RETAINING WALL NO. 1575
MISCELLANEOUS DETAILS NO. 1

STRUCTURES DESIGN DETAIL SHEET (ENGLISH) (REV. 09-01-10)

ORIGINAL SCALE IN INCHES FOR REDUCED PLANS 0 1 2 3

UNIT: 3604
PROJECT NUMBER & PHASE: 0700021119
CONTRACT NO.: 07-1218W1

DISREGARD PRINTS BEARING EARLIER REVISION DATES

REVISION DATES 05-09-12 07-09-12

SHEET 9 OF 26

FILE => 53e0163-h-misc_01.dgn

USERNAME => s124496 DATE PLOTTED => 11-JUL-2012 TIME PLOTTED => 14:04

DIST	COUNTY	ROUTE	POST MILES TOTAL PROJECT	SHEET No.	TOTAL SHEETS
07	LA	5	29.4/31.6	869	1931

Ulysses N. Smpardos 2-15-12
REGISTERED CIVIL ENGINEER DATE

5-21-12
PLANS APPROVAL DATE

REGISTERED PROFESSIONAL ENGINEER
Ulysses N. Smpardos
No. 61018
Exp. 12/31/12
CIVIL
STATE OF CALIFORNIA

The State of California or its officers or agents shall not be responsible for the accuracy or completeness of electronic copies of this plan sheet.

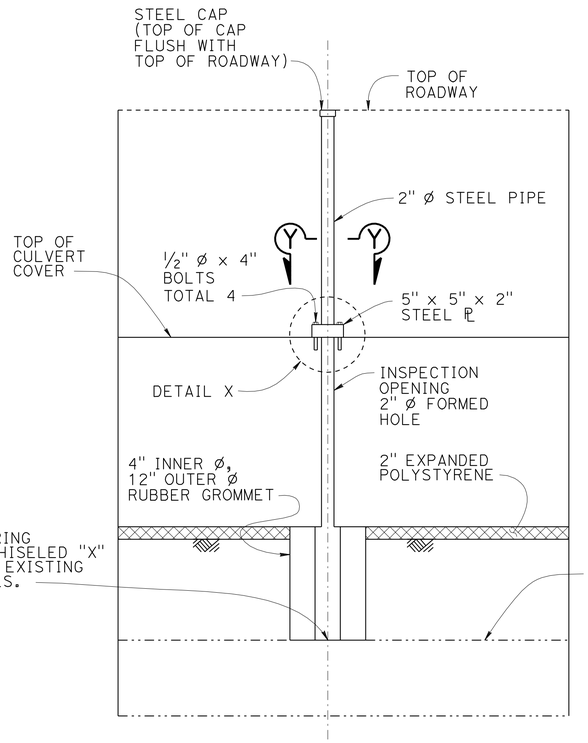

ELEVATION
NO SCALE

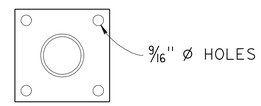

Note:
½" Ø Bolts not shown for clarity.

VIEW Y-Y
NO SCALE

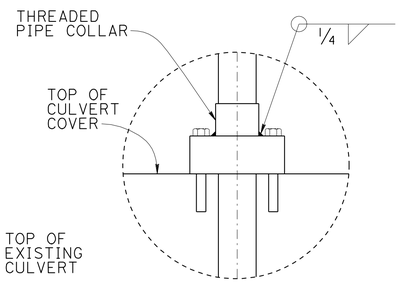

DETAIL X
NO SCALE

INSPECTION OPENING

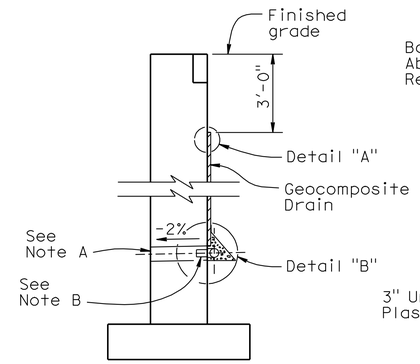

WALL SECTION

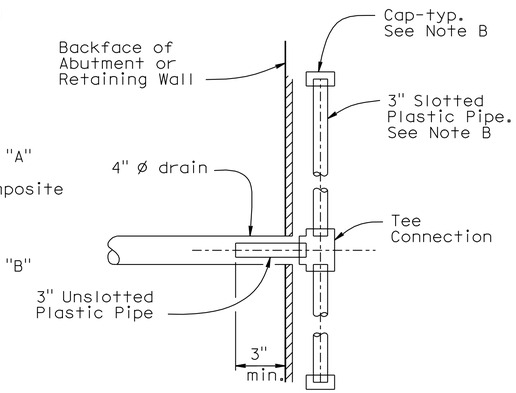

SECTION Z-Z

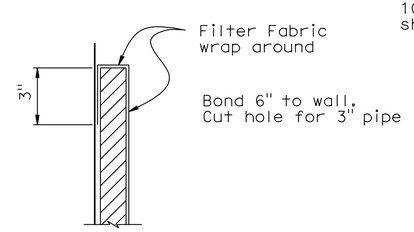

DETAIL "A"

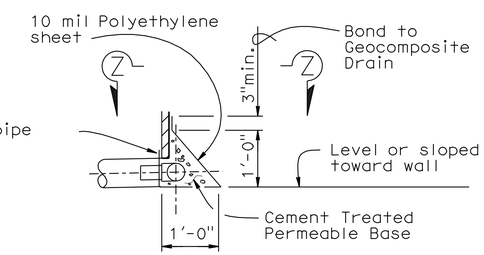

DETAIL "B"

WEEP HOLE AND GEOCOMPOSITE DRAIN

ALTERNATIVE TO BRIDGE DETAIL (BO-3 / 3-1)

Notes:

A. 4" Ø drains at intermediate sag points and at 25' max center to center (9' c-c for Type 3 and 9'-3" c-c for Type 4 retaining walls).
For walls adjacent to sidewalks or curbs, provide 4" cast iron or asbestos cement pipe under the sidewalk to discharge through curb face.
Exposed wall drains shall be located 3"± above finished grade.

B. Geocomposite drain, cement treated permeable base, and 3"Ø slotted plastic pipe continuous behind retaining wall or abutment. Cap ends of pipe. Provide "Tee" connection at each 4" Ø drain.

C. Connect the low end of plastic pipe to the main outlet pipe as apprlicable.

	BY	CHECKED
DESIGN	G. Galo/T. Menard	C. Hensel
DETAILS	Stan Cholda	C. Hensel
QUANTITIES	S. Moradi/A. Logus	R. Novik/J. Jauregui

STATE OF CALIFORNIA
DEPARTMENT OF TRANSPORTATION

DIVISION OF ENGINEERING SERVICES
STRUCTURE DESIGN
DESIGN BRANCH 15

BRIDGE NO. 53E0163
POST MILE 29.8

RETAINING WALL NO. 1575
MISCELLANEOUS DETAILS NO. 2

STRUCTURES DESIGN DETAIL SHEET (ENGLISH) (REV. 09-01-10)

ORIGINAL SCALE IN INCHES FOR REDUCED PLANS 0 1 2 3

UNIT: 3604
PROJECT NUMBER & PHASE: 0700021119
CONTRACT NO.: 07-1218W1

DISREGARD PRINTS BEARING EARLIER REVISION DATES

REVISION DATES: 05-09-12 06-18-12 07-09-12

SHEET 10 OF 26

FILE => 53e0163-h-misc_02.dgn

USERNAME => s124496 DATE PLOTTED => 11-JUL-2012 TIME PLOTTED => 14:05

DIST	COUNTY	ROUTE	POST MILES TOTAL PROJECT	SHEET No.	TOTAL SHEETS
07	LA	5	29.4/31.6	870	1931

José L. Higareda 2-15-12
REGISTERED CIVIL ENGINEER DATE

5-21-12
PLANS APPROVAL DATE

REGISTERED PROFESSIONAL ENGINEER
JOSE L. HIGAREDA
No. 62338
Exp. 9-30-13
CIVIL
STATE OF CALIFORNIA

The State of California or its officers or agents shall not be responsible for the accuracy or completeness of electronic copies of this plan sheet.

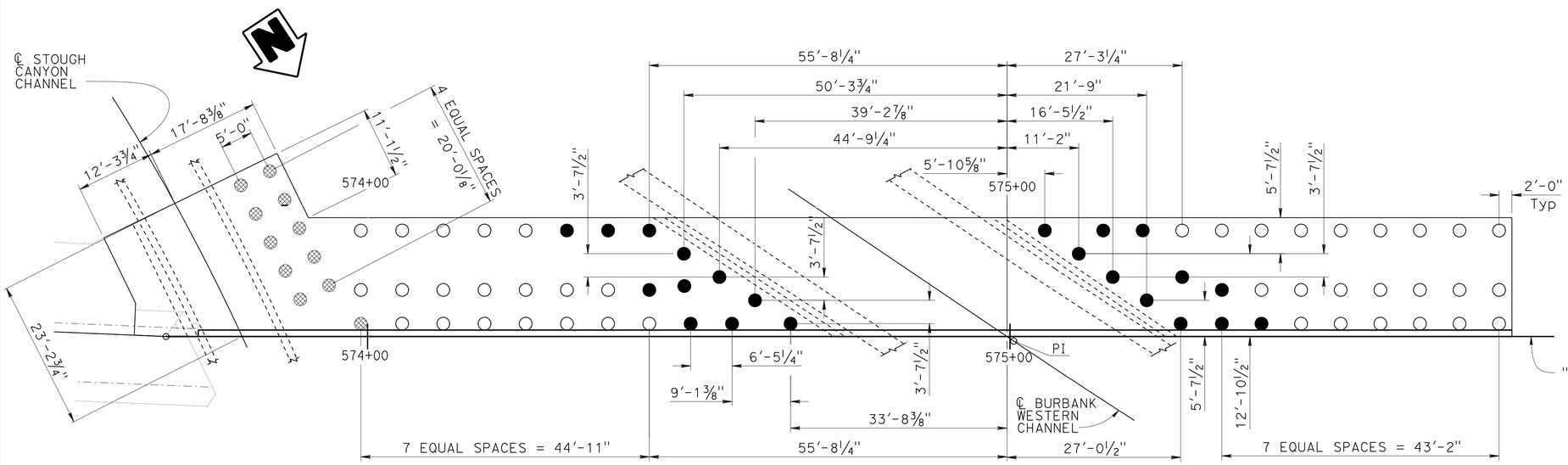

LEGEND:

- ○ Indicates 24" Ø CIDH Piles
- ⊗ Indicates 24" Ø CIDH Piles with 18'-0" Long Cardboard Casing
- ● Indicates 24" Ø CIDH Piles with 26'-3" Long Cardboard Casing

PLAN - FOOTING AND PILE LAYOUT - TYPE 3 (Mod) RETAINING WALL

1" = 10'-0"

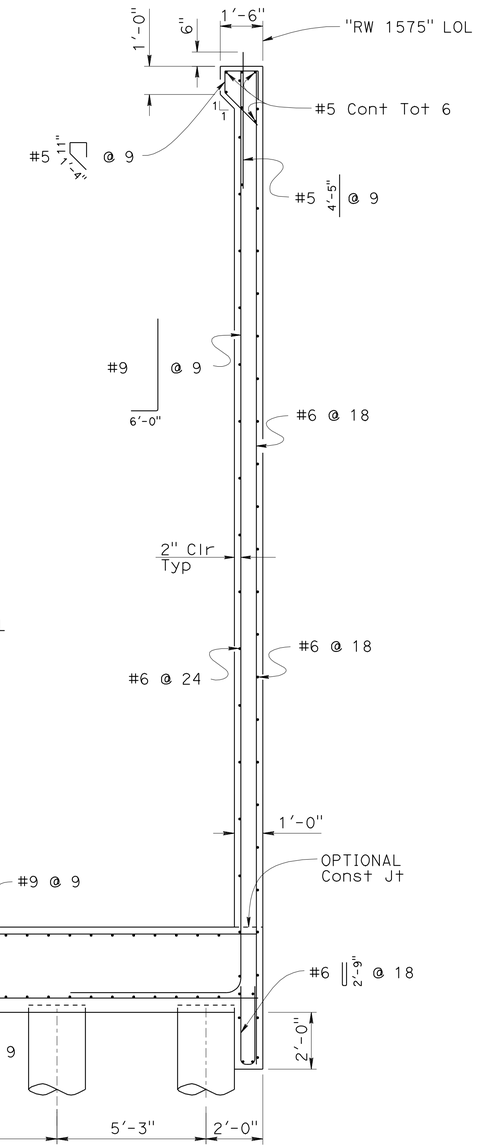

SECTION A-A

⅜" = 1'-0"

NOTE:
THE CONTRACTOR SHALL VERIFY ALL CONTROLLING FIELD DIMENSIONS BEFORE ORDERING OR FABRICATING ANY MATERIAL.

	BY	CHECKED
DESIGN	A. Logus	C. Hensel
DETAILS	T. Cotton	C. Hensel
QUANTITIES	S. Moradi/A. Logus	R. Novik/J. Jauregui

STATE OF CALIFORNIA
DEPARTMENT OF TRANSPORTATION

DIVISION OF ENGINEERING SERVICES
STRUCTURE DESIGN
DESIGN BRANCH 15

BRIDGE NO. 53E0163
POST MILE 29.8

RETAINING WALL NO. 1575
MISCELLANEOUS DETAILS NO. 3

STRUCTURES DESIGN DETAIL SHEET (ENGLISH) (REV. 09-01-10)

ORIGINAL SCALE IN INCHES FOR REDUCED PLANS 0 1 2 3

UNIT: 3604
PROJECT NUMBER & PHASE: 0700021119
CONTRACT NO.: 07-1218W1

DISREGARD PRINTS BEARING EARLIER REVISION DATES

REVISION DATES: 06-29-12

SHEET 11 OF 26

FILE => 53e0163-h-misc_03.dgn

USERNAME => DATE PLOTTED => 11-JUL-2012 TIME PLOTTED => 14:05

DIST	COUNTY	ROUTE	POST MILES TOTAL PROJECT	SHEET No.	TOTAL SHEETS
07	LA	5	29.4/31.6	871	1931

José L. Higareda 2-15-12
REGISTERED CIVIL ENGINEER DATE

5-21-12
PLANS APPROVAL DATE

REGISTERED PROFESSIONAL ENGINEER
JOSE L. HIGAREDA
No. 62338
Exp. 9-30-13
CIVIL
STATE OF CALIFORNIA

The State of California or its officers or agents shall not be responsible for the accuracy or completeness of electronic copies of this plan sheet.

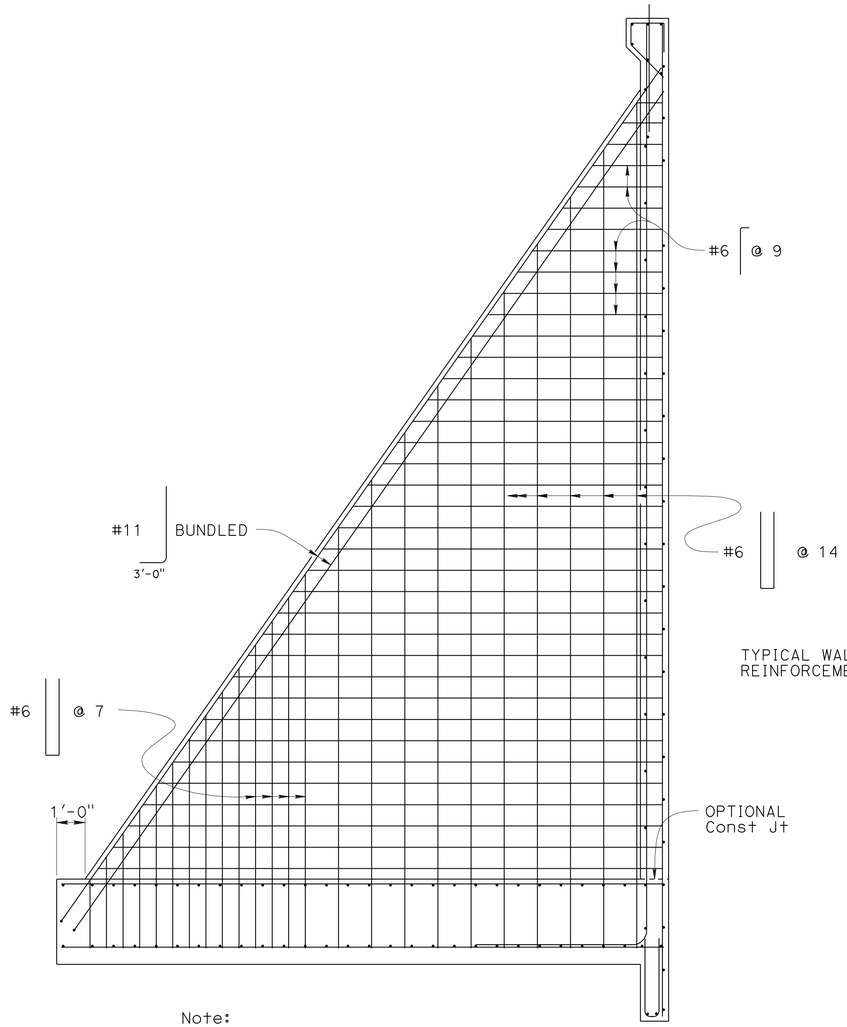

Note:

For details not shown see "SECTION A-A" on "MISCELLANEOUS DETAILS NO. 3" sheet.

SECTION B-B

3/8" = 1'-0"

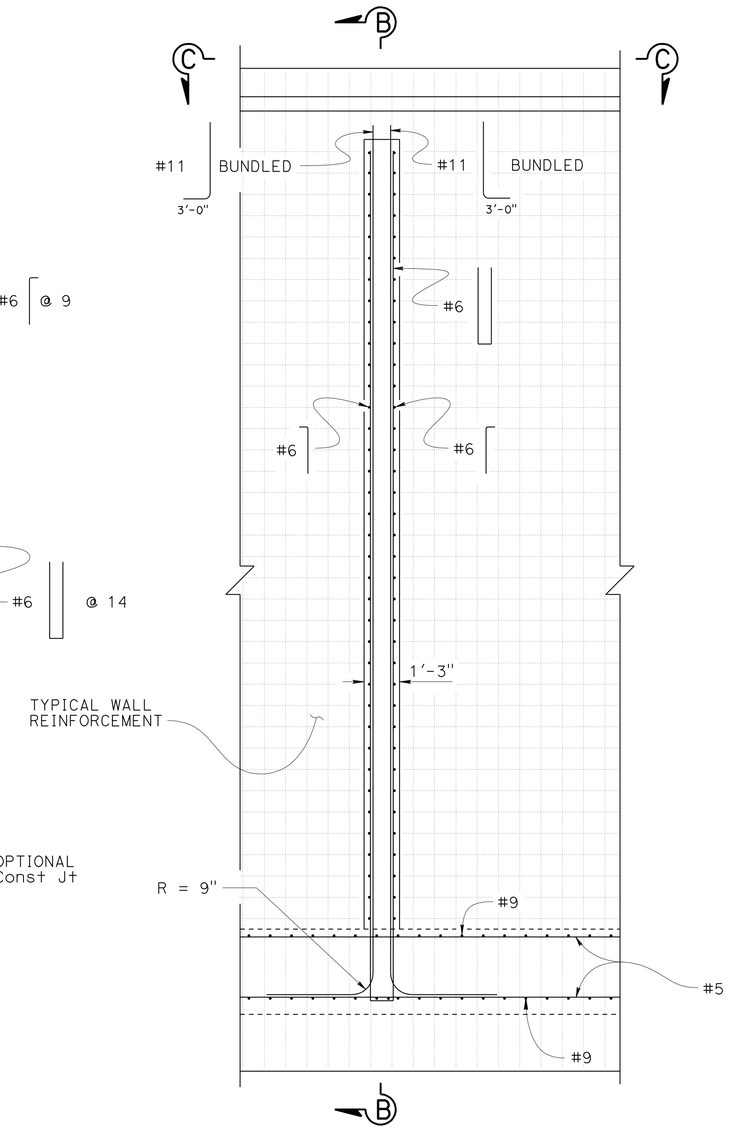

DETAIL B

3/8" = 1'-0"

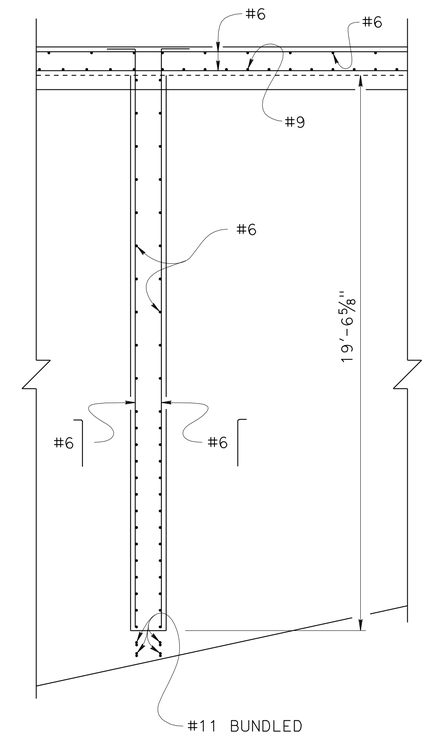

VIEW C-C

3/8" = 1'-0"

NOTE:
THE CONTRACTOR SHALL VERIFY ALL CONTROLLING FIELD DIMENSIONS BEFORE ORDERING OR FABRICATING ANY MATERIAL.

	BY	CHECKED
DESIGN	A. Logus	C. Hensel
DETAILS	H. Mauroschadt	C. Hensel
QUANTITIES	S. Moradi	N. Tiongco

STATE OF CALIFORNIA
DEPARTMENT OF TRANSPORTATION

DIVISION OF ENGINEERING SERVICES
STRUCTURE DESIGN
DESIGN BRANCH 15

BRIDGE NO. 53E0163
POST MILE 29.8

RETAINING WALL NO. 1575
MISCELLANEOUS DETAILS NO. 4

STRUCTURES DESIGN DETAIL SHEET (ENGLISH) (REV. 09-01-10)

ORIGINAL SCALE IN INCHES FOR REDUCED PLANS 0 1 2 3

UNIT: 3604
PROJECT NUMBER & PHASE: 0700021119
CONTRACT NO.: 07-1218W1

DISREGARD PRINTS BEARING EARLIER REVISION DATES

REVISION DATES: 07-06-12 07-11-12

SHEET 12 OF 26

FILE => 53e0163-h-misc_04.dgn

USERNAME => s124496 DATE PLOTTED => 11-JUL-2012 TIME PLOTTED => 14:05

DIST	COUNTY	ROUTE	POST MILES TOTAL PROJECT	SHEET No.	TOTAL SHEETS
07	LA	5	29.4/31.6	872	1931

José L. Higareda 2-15-12
REGISTERED CIVIL ENGINEER DATE

5-21-12
PLANS APPROVAL DATE

REGISTERED PROFESSIONAL ENGINEER
JOSE L. HIGAREDA
No. 62338
Exp. 9-30-13
CIVIL
STATE OF CALIFORNIA

The State of California or its officers or agents shall not be responsible for the accuracy or completeness of electronic copies of this plan sheet.

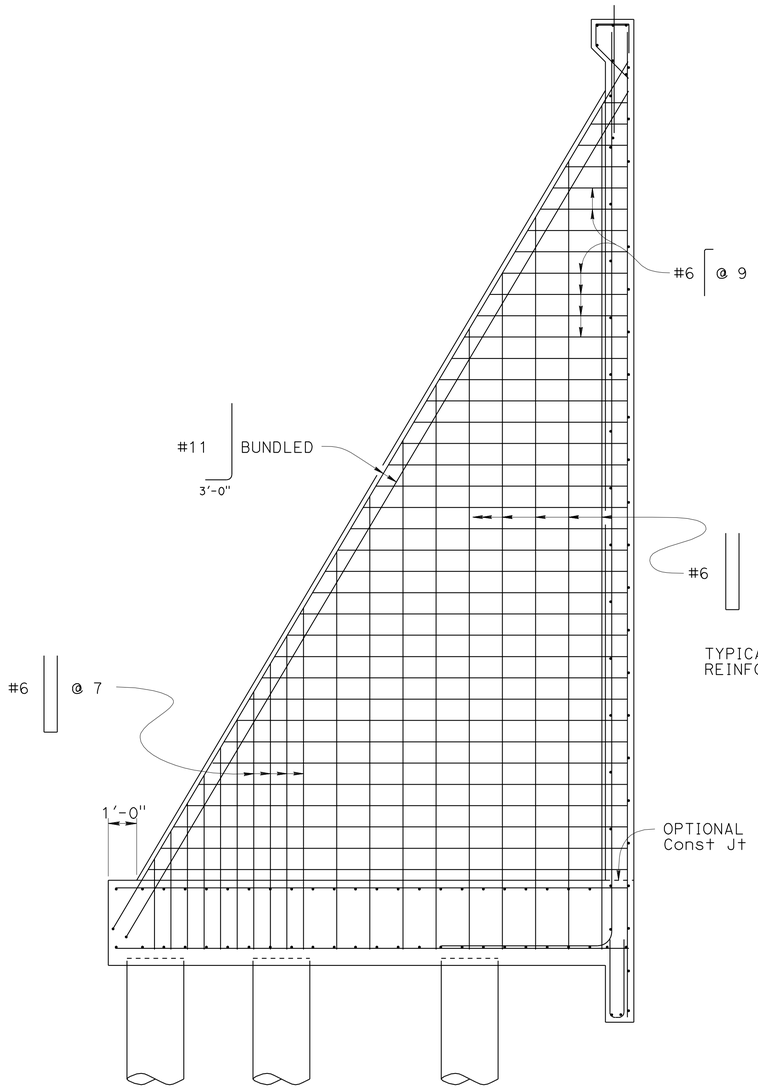

Note:

For details not shown see "SECTION A-A" on "MISCELLANEOUS DETAILS NO. 3" sheet.

SECTION D-D

3/8" = 1'-0"

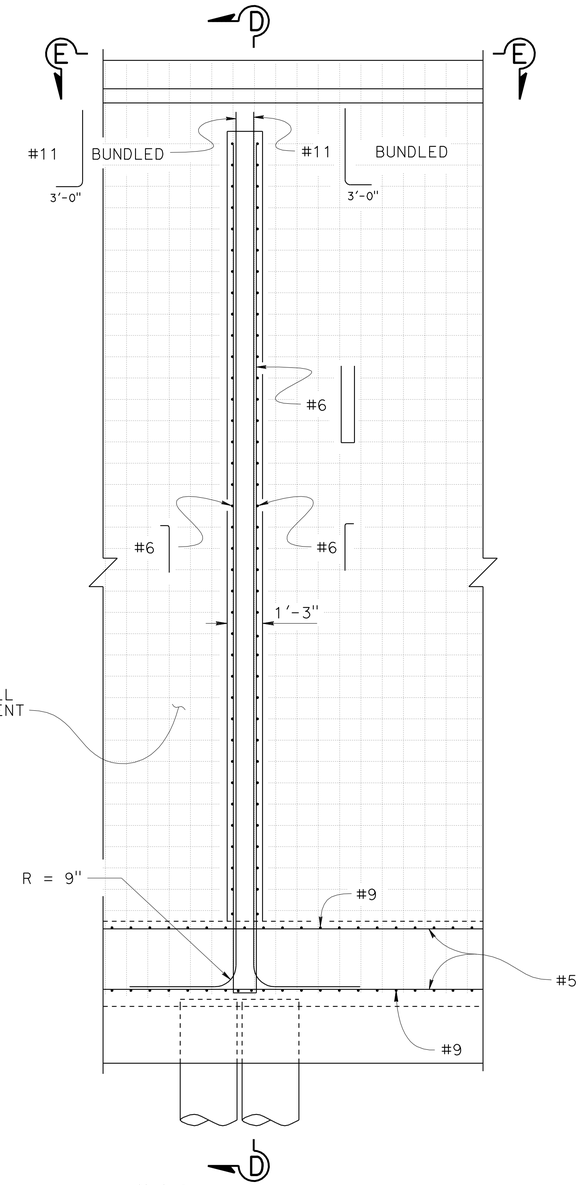

Note:
Not all piles shown for clarity.

DETAIL C

3/8" = 1'-0"

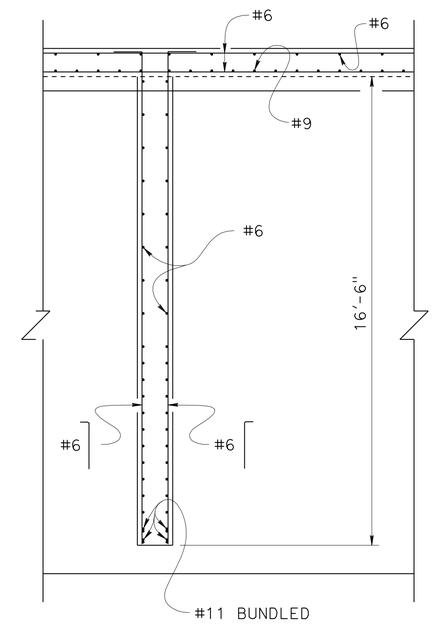

VIEW E-E

3/8" = 1'-0"

NOTE:
THE CONTRACTOR SHALL VERIFY ALL CONTROLLING FIELD DIMENSIONS BEFORE ORDERING OR FABRICATING ANY MATERIAL.

	BY	CHECKED
DESIGN	A. Logus	C. Hensel
DETAILS	H. Mauroschadt	C. Hensel
QUANTITIES	S. Moradi	N. Tiongco

STATE OF CALIFORNIA
DEPARTMENT OF TRANSPORTATION

DIVISION OF ENGINEERING SERVICES
STRUCTURE DESIGN
DESIGN BRANCH 15

BRIDGE NO. 53E0163
POST MILE 29.8

RETAINING WALL NO. 1575
MISCELLANEOUS DETAILS NO. 5

STRUCTURES DESIGN DETAIL SHEET (ENGLISH) (REV. 09-01-10)

ORIGINAL SCALE IN INCHES FOR REDUCED PLANS 0 1 2 3

UNIT: 3604
PROJECT NUMBER & PHASE: 0700021119
CONTRACT NO.: 07-1218W1

DISREGARD PRINTS BEARING EARLIER REVISION DATES

REVISION DATES: 07-06-12 07-11-12

SHEET 13 OF 26

FILE => 53e0163-h-misc_05.dgn

USERNAME => s124936 DATE PLOTTED => 11-JUL-2012 TIME PLOTTED => 14:05

DIST	COUNTY	ROUTE	POST MILES TOTAL PROJECT	SHEET No.	TOTAL SHEETS
07	LA	5	29.4/31.6	873	1931

Ulysses N. Smpardos 2-15-12
REGISTERED CIVIL ENGINEER DATE

5-21-12
PLANS APPROVAL DATE

REGISTERED PROFESSIONAL ENGINEER Ulysses N. Smpardos No. 61018 Exp. 12/31/12 CIVIL STATE OF CALIFORNIA

The State of California or its officers or agents shall not be responsible for the accuracy or completeness of electronic copies of this plan sheet.

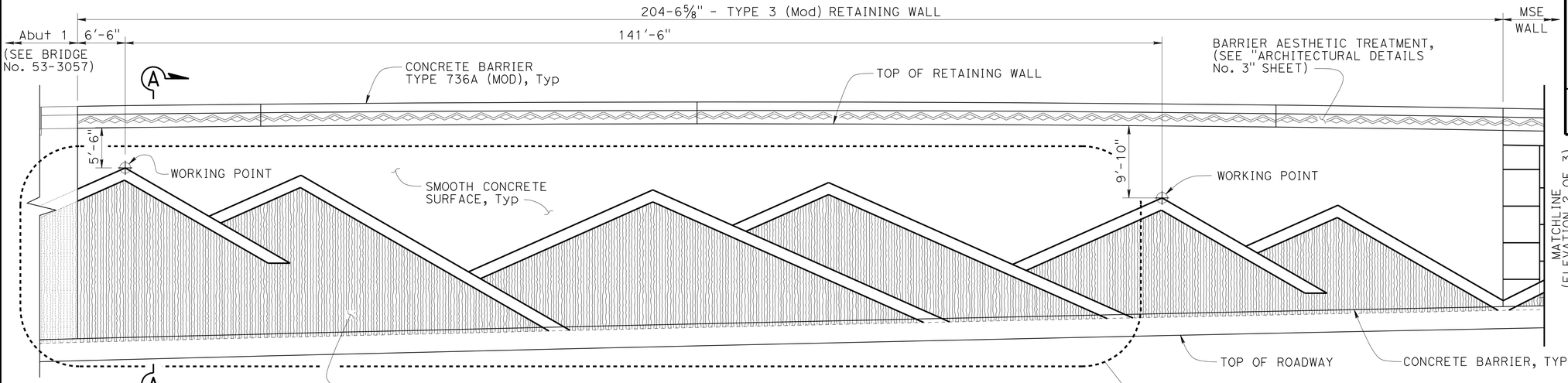

RETAINING WALL 1575 ELEVATION 1 OF 3

⅛" = 1'-0"

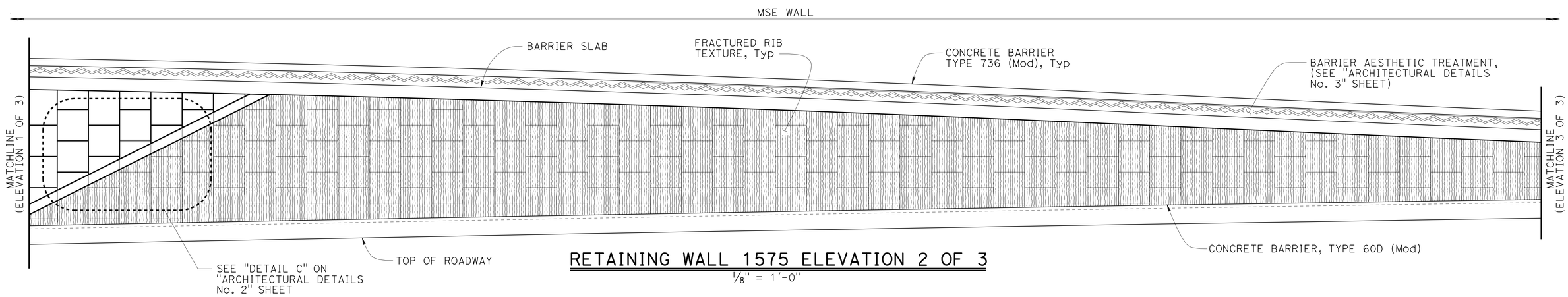

RETAINING WALL 1575 ELEVATION 2 OF 3

⅛" = 1'-0"

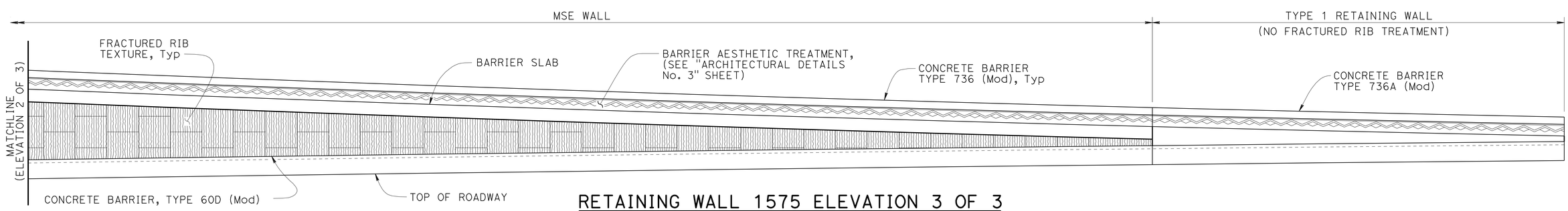

RETAINING WALL 1575 ELEVATION 3 OF 3

⅛" = 1'-0"

	BY	CHECKED
DESIGN	I. Tasabia	H. Chavez
DETAILS	T. Trefz/I. Tasabia	H. Chavez
QUANTITIES	S. Moradi/A. Logus	R. Novik/J. Jauregui

STATE OF CALIFORNIA
DEPARTMENT OF TRANSPORTATION

DIVISION OF ENGINEERING SERVICES
STRUCTURE DESIGN
DESIGN BRANCH 15

BRIDGE NO. 53E0163
POST MILE 29.8

RETAINING WALL NO. 1575
ARCHITECTURAL DETAILS No. 1

STRUCTURES DESIGN DETAIL SHEET (ENGLISH) (REV. 09-01-10)

ORIGINAL SCALE IN INCHES FOR REDUCED PLANS 0 1 2 3

UNIT: 3604
PROJECT NUMBER & PHASE: 0700021119
CONTRACT NO.: 07-1218W1

DISREGARD PRINTS BEARING EARLIER REVISION DATES

REVISION DATES: 02-08-12 04-12-12 06-28-12 07-09-12

SHEET 14 OF 26

FILE => 53e0163-p-arch_01.dgn

USERNAME => s124496 DATE PLOTTED => 11-JUL-2012 TIME PLOTTED => 14:05

DIST	COUNTY	ROUTE	POST MILES TOTAL PROJECT	SHEET No.	TOTAL SHEETS
07	LA	5	29.4/31.6	874	1931

Ulysses N. Smpardos 2-15-12
REGISTERED CIVIL ENGINEER DATE

5-21-12
PLANS APPROVAL DATE

REGISTERED PROFESSIONAL ENGINEER Ulysses N. Smpardos No. 61018 Exp. 12/31/12 CIVIL STATE OF CALIFORNIA

The State of California or its officers or agents shall not be responsible for the accuracy or completeness of electronic copies of this plan sheet.

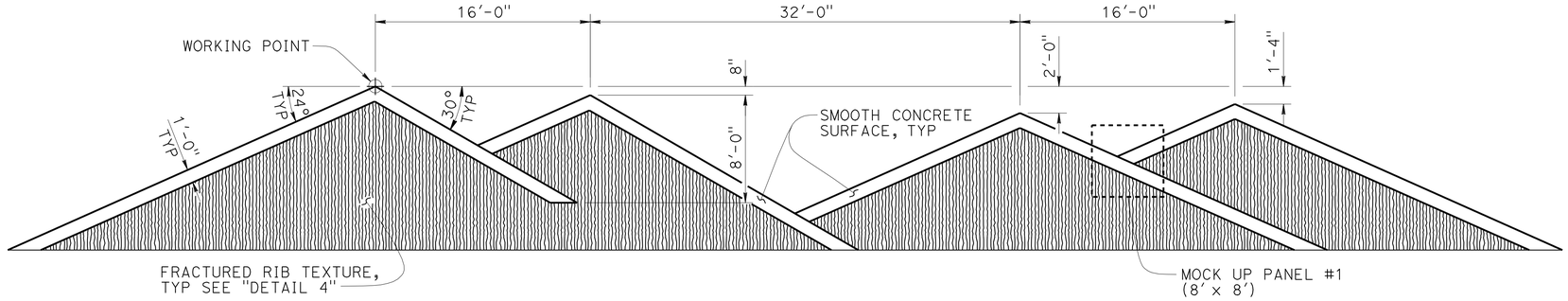

TYPICAL ABUTMENT ARCHITECTURAL TREATMENT

1/8 " = 1'-0"

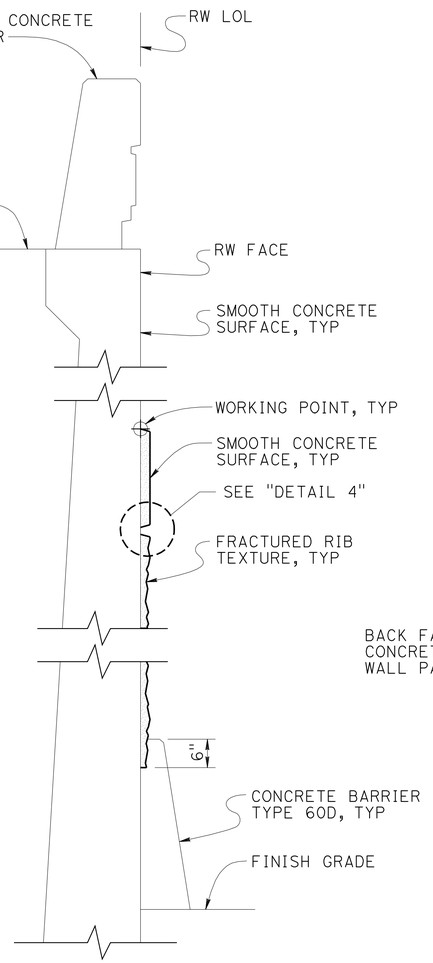

SECTION A-A

NO SCALE

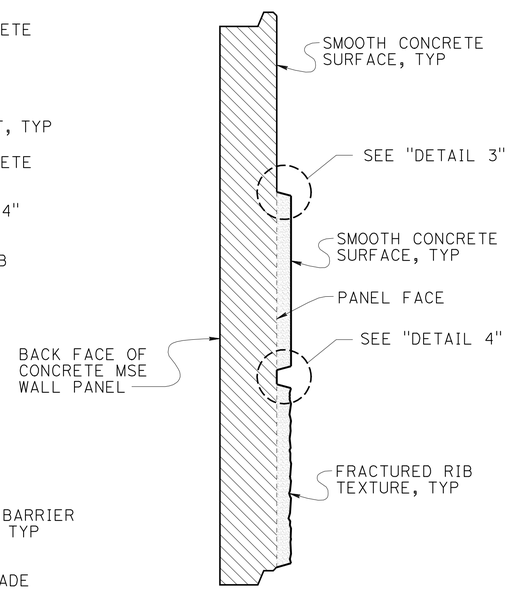

SECTION B-B

NO SCALE

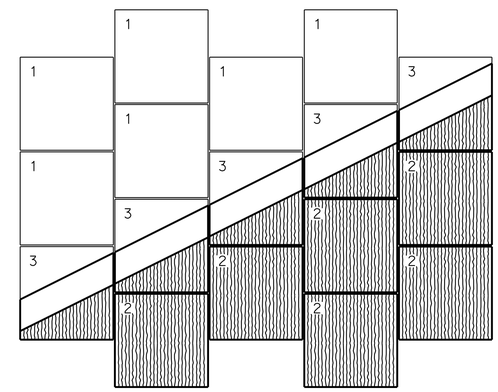

DETAIL 1

NO SCALE

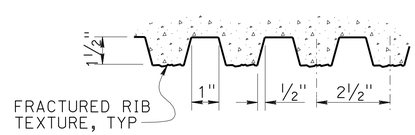

DETAIL 2

NO SCALE

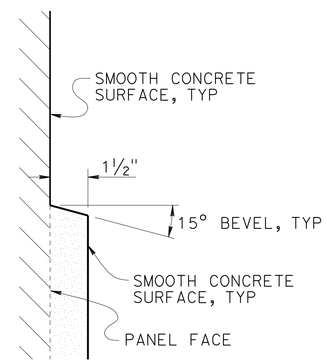

DETAIL 3

NO SCALE

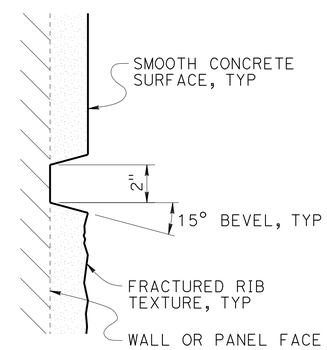

DETAIL 4

NO SCALE

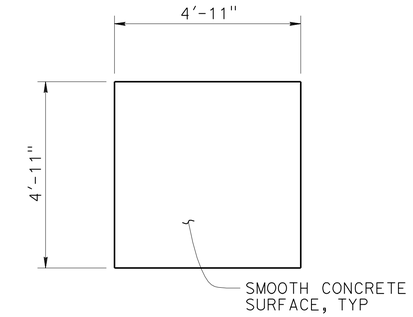

PANEL 1

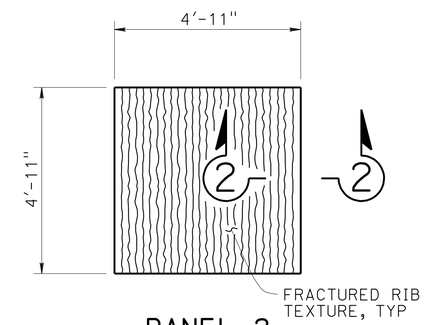

PANEL 2

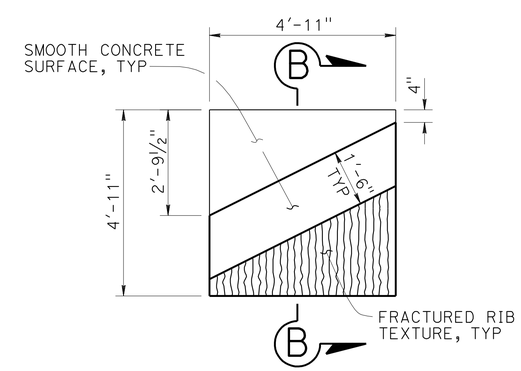

PANEL 3

DESIGN	BY I. Tasabia	CHECKED H. Chavez	
DETAILS	BY T. Trefz/I. Tasabia	CHECKED H. Charvez	
QUANTITIES	BY S. Moradi/A. Logus	CHECKED R. Novik/J. Jauregui	

STATE OF CALIFORNIA
DEPARTMENT OF TRANSPORTATION

DIVISION OF ENGINEERING SERVICES
STRUCTURE DESIGN
DESIGN BRANCH 15

BRIDGE NO. 53E0163
POST MILE 29.8

RETAINING WALL NO. 1575
ARCHITECTURAL DETAILS NO. 2

STRUCTURES DESIGN DETAIL SHEET (ENGLISH) (REV. 09-01-10)

ORIGINAL SCALE IN INCHES FOR REDUCED PLANS 0 1 2 3

UNIT: 3604
PROJECT NUMBER & PHASE: 0700021119
CONTRACT NO.: 07-1218W1

DISREGARD PRINTS BEARING EARLIER REVISION DATES

REVISION DATES 02-08-12 04-13-12 04-21-12

SHEET 15 OF 26

FILE => 53e0163-q-arch_02.dgn

USERNAME => s114640 DATE PLOTTED => 22-MAY-2012 TIME PLOTTED => 07:25

DIST	COUNTY	ROUTE	POST MILES TOTAL PROJECT	SHEET No.	TOTAL SHEETS
07	LA	5	29.4/31.6	875	1931

Ulysses N. Smpardos 2-15-12
REGISTERED CIVIL ENGINEER DATE

5-21-12
PLANS APPROVAL DATE

REGISTERED PROFESSIONAL ENGINEER
Ulysses N. Smpardos
No. 61018
Exp. 12/31/12
CIVIL
STATE OF CALIFORNIA

The State of California or its officers or agents shall not be responsible for the accuracy or completeness of electronic copies of this plan sheet.

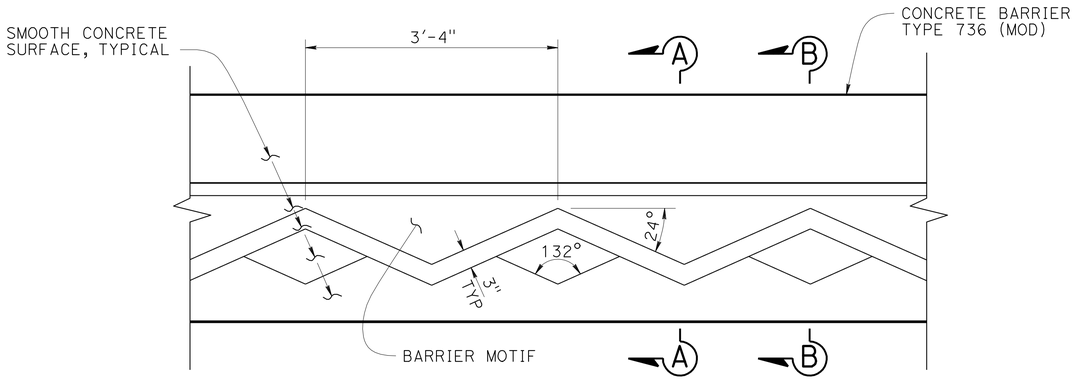

ELEVATION
1" = 1'-0"

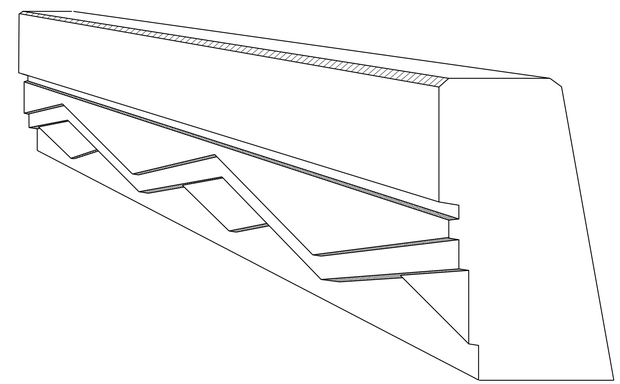

PERSPECTIVE VIEW
NO SCALE

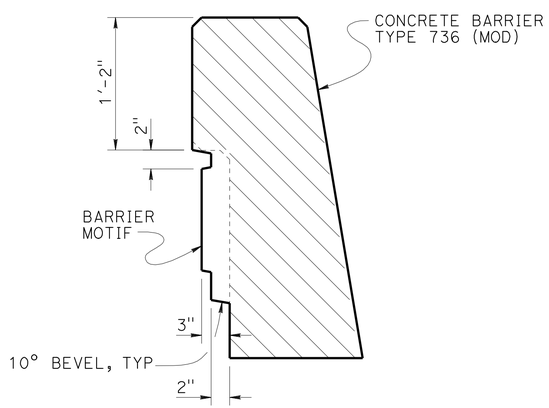

SECTION A-A
1½" = 1'-0"

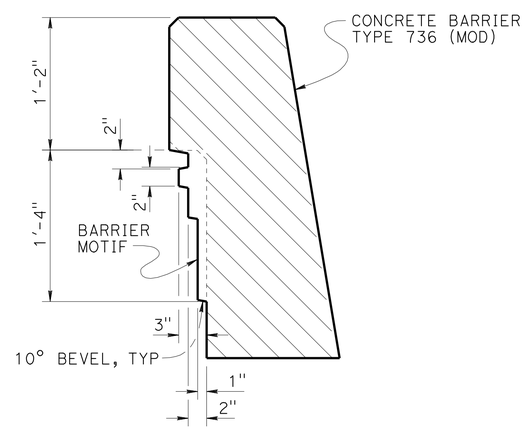

SECTION B-B
1½" = 1'-0"

DESIGN	BY I. Tasabia	CHECKED H. Chavez	
DETAILS	BY T. Trefz/I. Tasabia	CHECKED H. Chavez	
QUANTITIES	BY S. Moradi/A. Logus	CHECKED R. Novik/J. Jauregui	

STATE OF CALIFORNIA
DEPARTMENT OF TRANSPORTATION

DIVISION OF ENGINEERING SERVICES
STRUCTURE DESIGN
DESIGN BRANCH 15

BRIDGE NO. 53E0163
POST MILE 29.8

RETAINING WALL NO. 1575
ARCHITECTURAL DETAILS NO. 3

STRUCTURES DESIGN DETAIL SHEET (ENGLISH) (REV. 09-01-10)

ORIGINAL SCALE IN INCHES FOR REDUCED PLANS 0 1 2 3

UNIT: 3604
PROJECT NUMBER & PHASE: 0700021119
CONTRACT NO.: 07-1218W1

DISREGARD PRINTS BEARING EARLIER REVISION DATES
REVISION DATES 02-09-12 04-12-12

SHEET 16 OF 26

FILE => 53e0163-q-arch_03.dgn

USERNAME => s114640 DATE PLOTTED => 22-MAY-2012 TIME PLOTTED => 07:25

DIST	COUNTY	ROUTE	POST MILES TOTAL PROJECT	SHEET No.	TOTAL SHEETS
07	LA	5	29.4/31.6	876	1931

Ulysses N. Smpardos 2-15-12
REGISTERED CIVIL ENGINEER DATE

5-21-12
PLANS APPROVAL DATE

REGISTERED PROFESSIONAL ENGINEER Ulysses N. Smpardos No. 61018 Exp. 12/31/12 CIVIL STATE OF CALIFORNIA

The State of California or its officers or agents shall not be responsible for the accuracy or completeness of electronic copies of this plan sheet.

NOTES:

1. Reinforcement shall extend continuously through construction joints.
2. Contractor options for fill between concrete barrier walls:
   A. Place 4" PCC at base between concrete barrier walls.
   B. Place 1'-0" of granular material at base between walls.
   C. Place granular material from base to bottom of 4" cap.
   D. Monolithic concrete with foam blockouts is not permitted.
3. Adjust height of concrete barrier wall at MSE panel at superelevated roadways to provide level grade across top of concrete barrier cap.

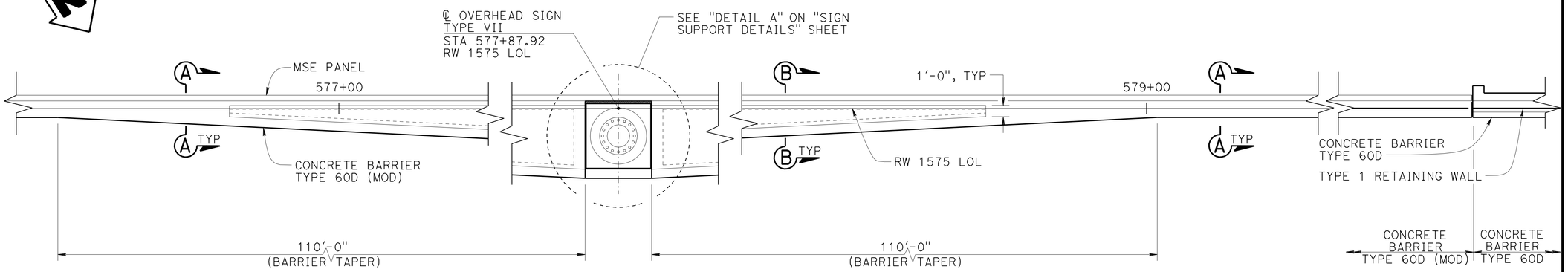

PLAN
1" = 5'-0"

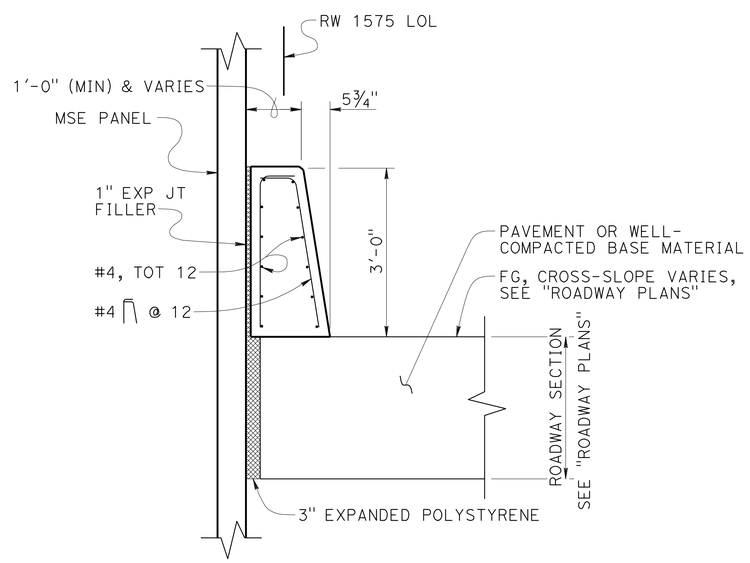

SECTION A-A
¾" = 1'-0"

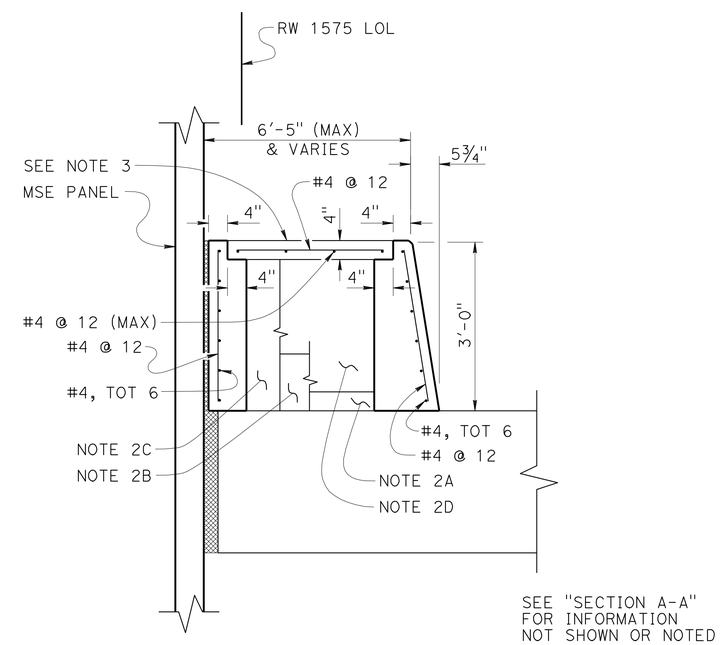

SECTION B-B
¾" = 1'-0"

	BY	CHECKED
DESIGN	A. Herrera	U. Smpardos
DETAILS	T. Trefz	U. Smpardos
QUANTITIES	S. Moradi/A. Logus	R. Novik/J. Jauregui

STATE OF CALIFORNIA
DEPARTMENT OF TRANSPORTATION

DIVISION OF ENGINEERING SERVICES
STRUCTURE DESIGN
DESIGN BRANCH 15

BRIDGE NO. 53E0163
POST MILE 29.8

RETAINING WALL NO. 1575
CONCRETE BARRIER TYPE 60D (MOD)

STRUCTURES DESIGN DETAIL SHEET (ENGLISH) (REV. 09-01-10)

ORIGINAL SCALE IN INCHES FOR REDUCED PLANS 0 1 2 3

UNIT: 3604
PROJECT NUMBER & PHASE: 0700021119
CONTRACT NO.: 07-1218W1

DISREGARD PRINTS BEARING EARLIER REVISION DATES

REVISION DATES: 02-17-12 02-23-12 04-12-12

SHEET 17 OF 26

FILE => 53e0163-r-bar_01.dgn

USERNAME => s114640 DATE PLOTTED => 22-MAY-2012 TIME PLOTTED => 07:25

DIST	COUNTY	ROUTE	POST MILES TOTAL PROJECT	SHEET No.	TOTAL SHEETS
07	LA	5	29.4/31.6	877	1931

REGISTERED CIVIL ENGINEER 2-15-12 DATE

5-21-12
PLANS APPROVAL DATE

REGISTERED PROFESSIONAL ENGINEER Ulysses N. Smpardos No. 61018 Exp. 12/31/12 CIVIL STATE OF CALIFORNIA

The State of California or its officers or agents shall not be responsible for the accuracy or completeness of electronic copies of this plan sheet.

NOTES:

1. For baseplate and anchorage details not shown or noted, see S3
2. For pedestal and CIDH pile details not shown or noted, see S7

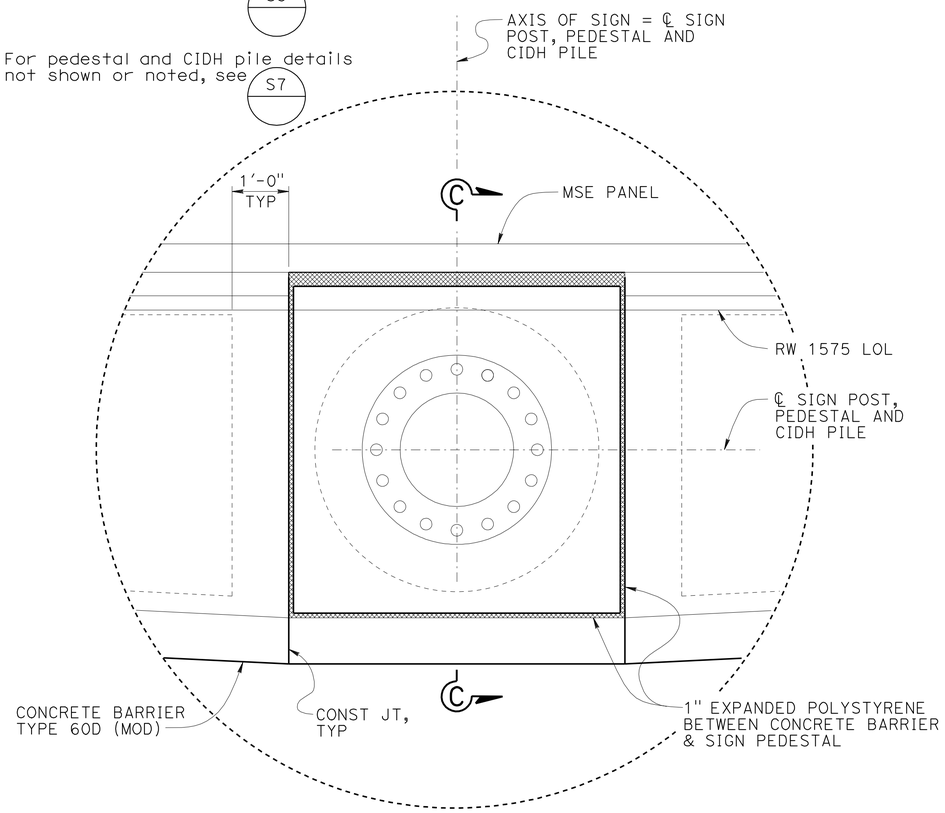

DETAIL A

3/4" = 1'-0"

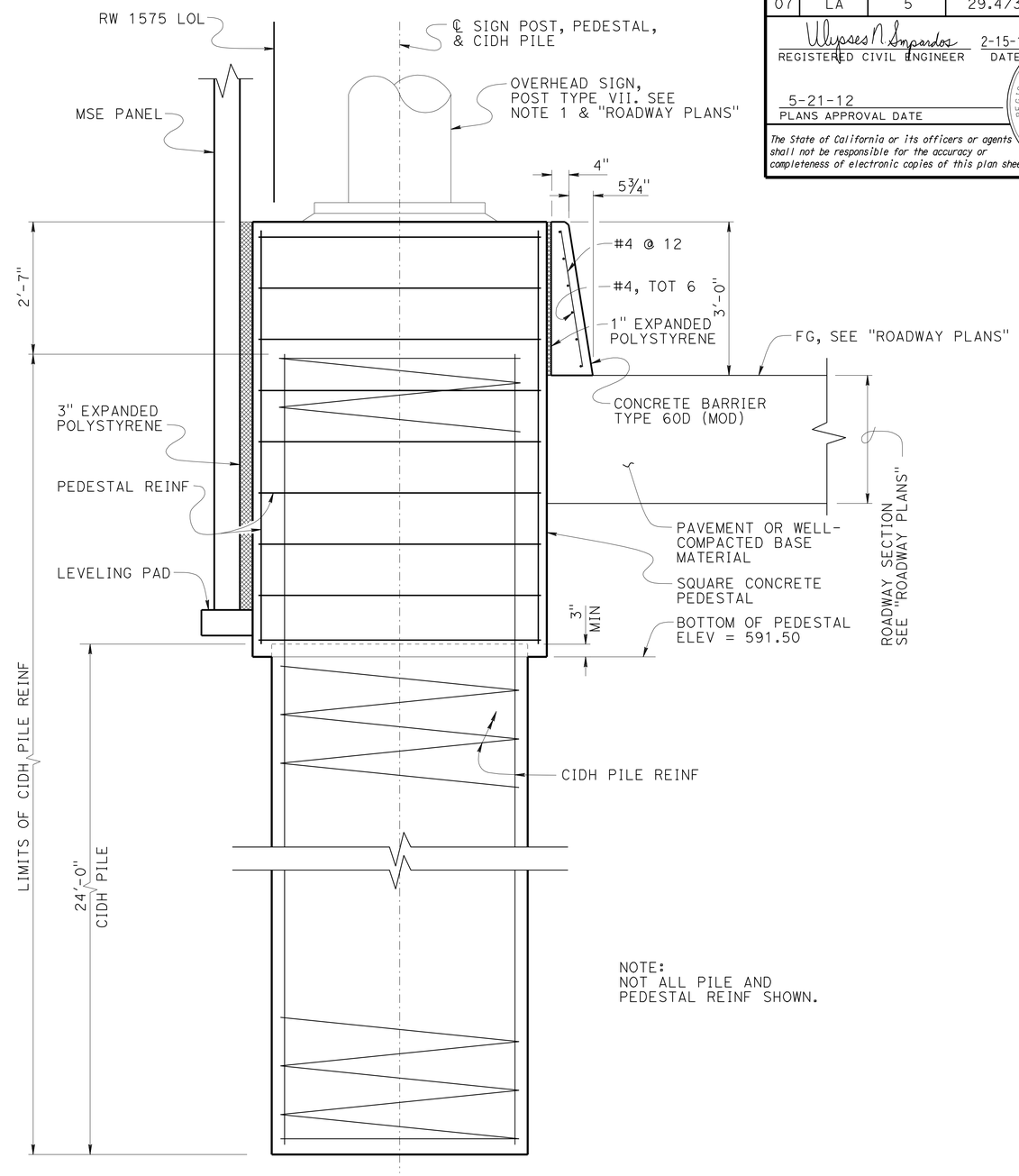

NOTE:
NOT ALL PILE AND PEDESTAL REINF SHOWN.

SECTION C-C

3/4" = 1'-0"

	BY	CHECKED
DESIGN	A. Herrera	U. Smpardos
DETAILS	T. Trefz	U. Smpardos
QUANTITIES	S. Moradi/A. Logus	R. Novik/J. Jauregui

STATE OF CALIFORNIA
DEPARTMENT OF TRANSPORTATION

DIVISION OF ENGINEERING SERVICES
STRUCTURE DESIGN
DESIGN BRANCH 15

BRIDGE NO. 53E0163
POST MILE 29.8

RETAINING WALL NO. 1575
SIGN SUPPORT DETAILS

STRUCTURES DESIGN DETAIL SHEET (ENGLISH) (REV. 09-01-10)

ORIGINAL SCALE IN INCHES FOR REDUCED PLANS 0 1 2 3

UNIT: 3604
PROJECT NUMBER & PHASE: 0700021119
CONTRACT NO.: 07-1218W1

DISREGARD PRINTS BEARING EARLIER REVISION DATES

REVISION DATES: 03-05-12 04-18-12 04-27-12

SHEET 18 OF 26

FILE => 53e0163-t-ssdt.dgn

USERNAME => s114640 DATE PLOTTED => 22-MAY-2012 TIME PLOTTED => 07:25

DIST	COUNTY	ROUTE	POST MILES TOTAL PROJECT	SHEET No.	TOTAL SHEETS
07	LA	5	29.4/31.6	878	1931

Ulysses N. Smpardos 2-15-12
REGISTERED CIVIL ENGINEER DATE

5-21-12
PLANS APPROVAL DATE

REGISTERED PROFESSIONAL ENGINEER Ulysses N. Smpardos No. 61018 Exp. 12/31/12 CIVIL STATE OF CALIFORNIA

The State of California or its officers or agents shall not be responsible for the accuracy or completeness of electronic copies of this plan sheet.

DESIGN DATA

DESIGN: AASHTO LRFD Bridge Design Specifications, 4th Edition with California Amendments.

WS: 33 psf on sound wall

F_t : 54 kips on barrier

EQE: $k_h = 0.2$
$k_v = 0.0$

REINFORCED CONCRETE: f'c = 3600 psi
fy = 60 ksi
n = 8

3 NOTES:

1. Clearance to reinforcing steel in concrete barrier to be 1".
2. Not all barrier reinforcement shown.
3. No expansion joints in concrete barrier or barrier slab within wall limits.
4. Specific concrete barrier to be used is shown elsewhere in Project Plans.
5. Minimum slab length: 40 ft

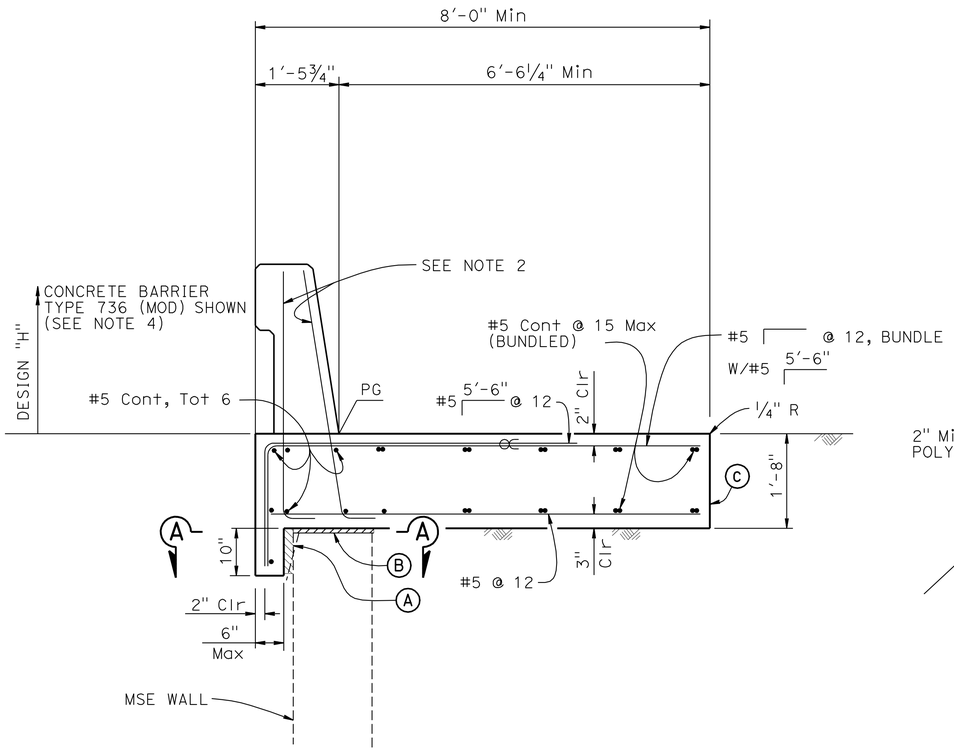

2 CONCRETE BARRIER SLAB

¾" = 1'-0"

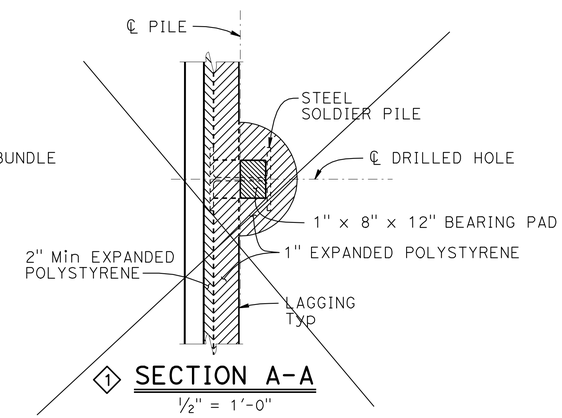

1 SECTION A-A

½" = 1'-0"

(For Soldier Pile Wall only)

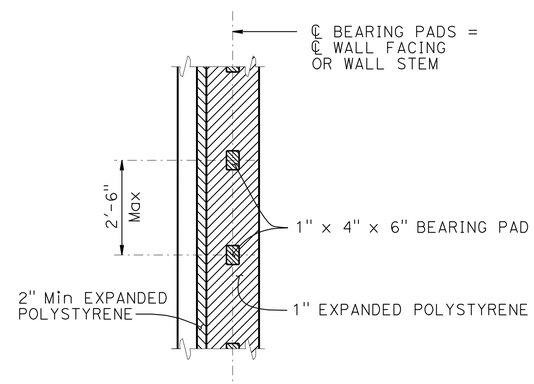

SECTION A-A

½" = 1'-0"

(For all other Earth Retaining Systems)

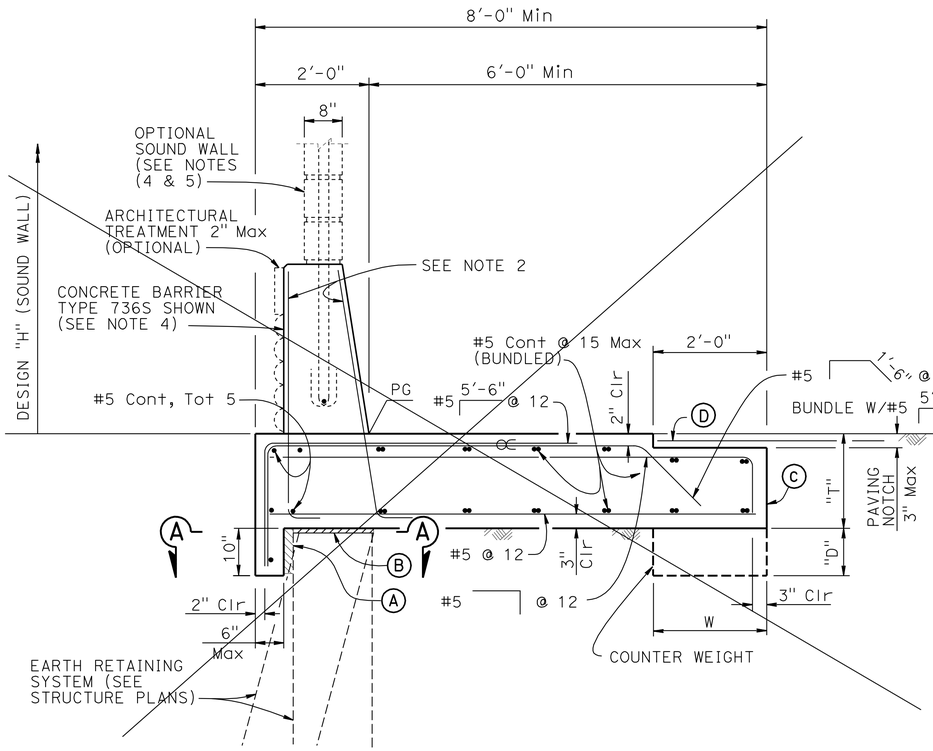

1 CONCRETE BARRIER SLAB WITH PAVING NOTCH

¾" = 1'-0"

1 BARRIER SLAB DIMENSIONS

DESIGN "H" OF SOUND WALL	NO SW	12'-4"	14'-4"	16'-4"
BARRIER TYPE	732 736 742	736 S	736 S	736 S
T	1'-8"	1'-8"	2'-0"	2'-0"
W	N/A	N/A	N/A	2'-0"
D	N/A	N/A	N/A	0'-9"

NOTES:

(A) 2" Min Expanded polystyrene

(B) 1" Expanded Polystyrene on MSE and concrete stem walls, See "SECTION A-A" for Soldier PIle Walls

(C) Contact joint

1 ~~(D) 4'-0" wide pavement reinforcing fabric~~

∝ Indicates bundled bars

STANDARD DRAWING

FILE NO. xs12-090

APPROVAL DATE January 2012

1 Deleted Detail
2 Modified Detail
3 Modified Notes

STATE OF CALIFORNIA DEPARTMENT OF TRANSPORTATION

DIVISION OF ENGINEERING SERVICES

BRIDGE NO. 53E0163
POST MILE 29.8

RETAINING WALL NO. 1575
CONCRETE BARRIER SLAB DETAILS

DS OSD 2147A (ENGLISH STANDARD DRAWING "XS" BORDER REV. (02-02-11)

ORIGINAL SCALE IN INCHES FOR REDUCED PLANS 0 1 2 3

UNIT: 3604
PROJECT NUMBER & PHASE: 0700021119
CONTRACT NO.: 07-1218W1

DISREGARD PRINTS BEARING EARLIER REVISION DATES

REVISION DATES 04-12-12 06-06-12 07-11-12

SHEET 19 OF 26

FILE => 53e0163-u-csd.dgn

USERNAME => s124496 DATE PLOTTED => 11-JUL-2012 TIME PLOTTED => 14:05

DIST	COUNTY	ROUTE	POST MILES TOTAL PROJECT	SHEET No.	TOTAL SHEETS
07	LA	5	29.4/31.6	879	1931

REGISTERED CIVIL ENGINEER — DATE 2-15-12

5-21-12
PLANS APPROVAL DATE

REGISTERED PROFESSIONAL ENGINEER — Ulysses N. Smpardos — No. 61018 — Exp. 12/31/12 — CIVIL — STATE OF CALIFORNIA

The State of California or its officers or agents shall not be responsible for the accuracy or completeness of electronic copies of this plan sheet.

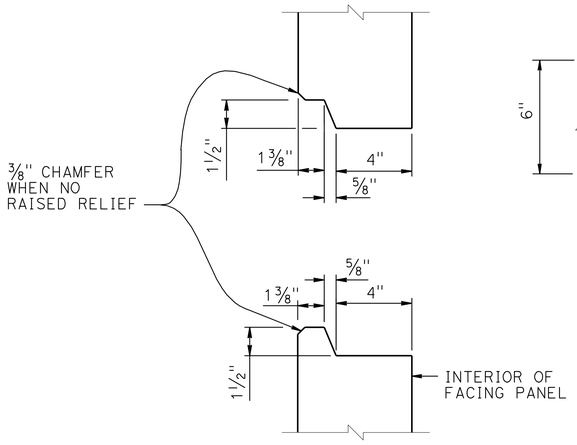

HORIZONTAL JOINT DETAIL

3" = 1'-0"

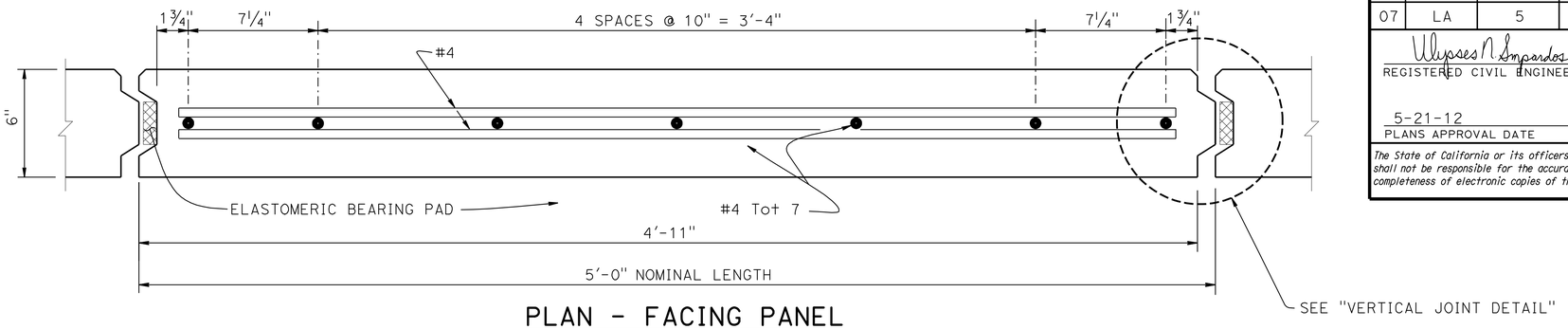

PLAN - FACING PANEL

3" = 1'-0"

NOTES:

1. Architectural treatment not shown
2. Place reinforced elastomeric bearing pads in all of the panel joints between the panels. Place one in each vertical joint where the horizontal joints intersect. Place two per panel in each horizontal joint:
   3/4" x 2 3/8" x 6" for vertical joints
   3/4" x 4" x 6" for horizontal joints
3. Bond a strip of filter fabric, 1'-0" wide, over the full length of all panel joints
4. Top layer of welded wire mats attached parallel to top of panel when top of wall is angled or curved as shown elsewhere in "STRUCTURE PLANS"
5. Eliminate mid level mat when closer then 6" to top mat, continue variable dimension between remaining mats

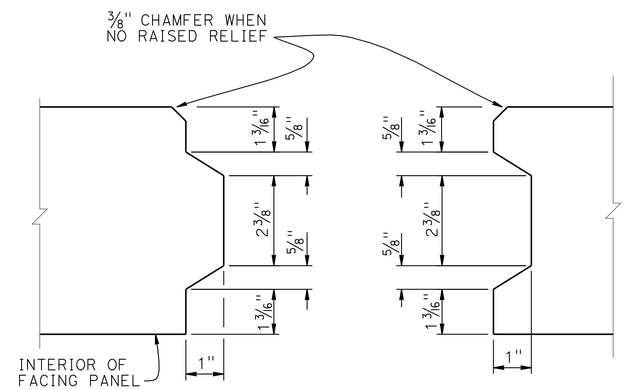

VERTICAL JOINT DETAIL

6" = 1'-0"

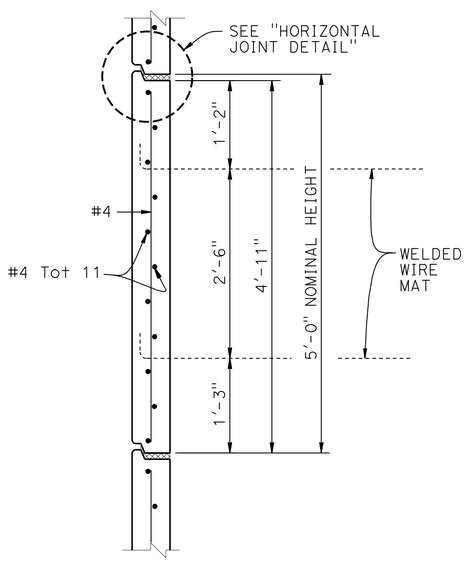

INTERMEDIATE PANEL

1" = 1'-0"

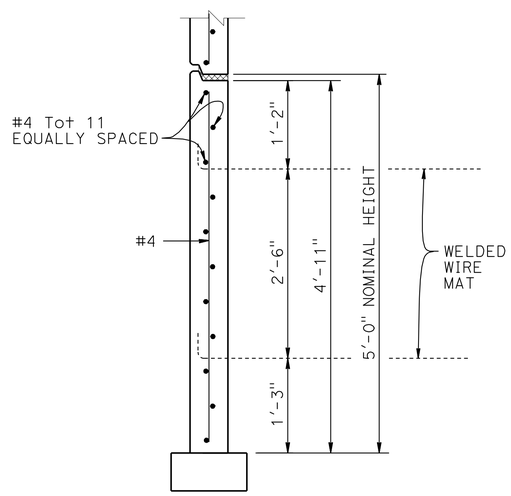

BOTTOM PANEL

1" = 1'-0"

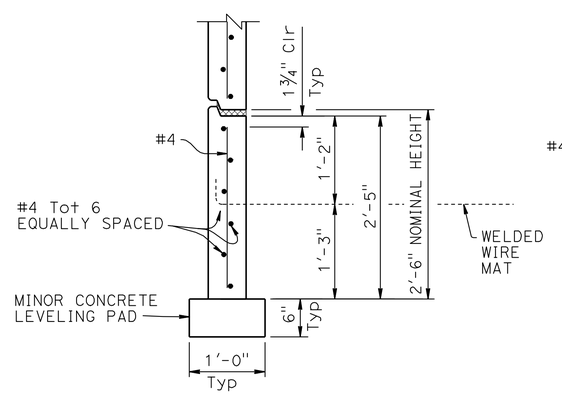

BOTTOM HALF PANEL

1" = 1'-0"

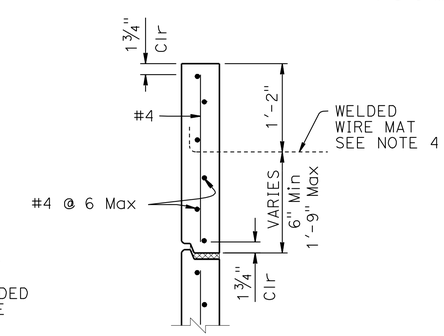

TOP HALF PANEL

1" = 1'-0"

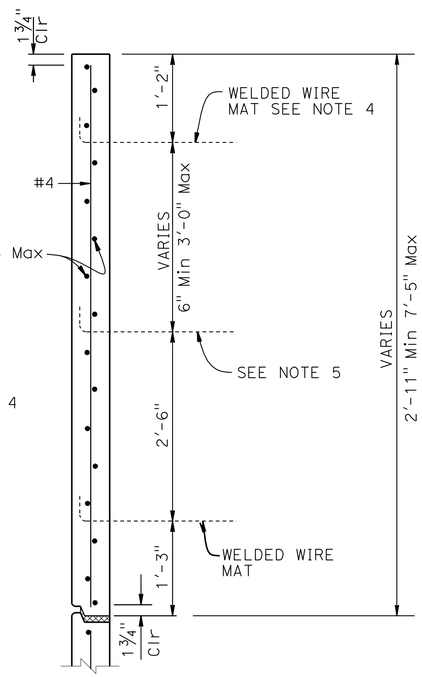

TOP PANEL WITH MULTIPLE MATS

1" = 1'-0"

STANDARD DRAWING					
FILE NO. xs13-020-1	APPROVAL DATE July 2011	STATE OF CALIFORNIA DEPARTMENT OF TRANSPORTATION	DIVISION OF ENGINEERING SERVICES	BRIDGE NO. 53E0163 / POST MILE 29.8	RETAINING WALL 1575 — MECHANICALLY STABILIZED EMBANKMENT — DETAILS NO. 1

DS OSD 2147A (ENGLISH STANDARD DRAWING "XS" BORDER REV. (02-02-11)

ORIGINAL SCALE IN INCHES FOR REDUCED PLANS 0 1 2 3

UNIT: 3604
PROJECT NUMBER & PHASE: 0700021119
CONTRACT NO.: 07-1218W1

DISREGARD PRINTS BEARING EARLIER REVISION DATES

REVISION DATES: 01-19-12 04-12-12

SHEET 20 OF 26

FILE => 53e0163-x-mse_01.dgn

USERNAME => s114640 DATE PLOTTED => 22-MAY-2012 TIME PLOTTED => 07:25

DIST	COUNTY	ROUTE	POST MILES TOTAL PROJECT	SHEET No.	TOTAL SHEETS
07	LA	5	29.4/31.6	880	1931

Ulysses N. Smpardos 2-15-12
REGISTERED CIVIL ENGINEER DATE

5-21-12
PLANS APPROVAL DATE

REGISTERED PROFESSIONAL ENGINEER Ulysses N. Smpardos No. 61018 Exp. 12/31/12 CIVIL STATE OF CALIFORNIA

The State of California or its officers or agents shall not be responsible for the accuracy or completeness of electronic copies of this plan sheet.

GENERAL NOTES
LOAD & RESISTANCE FACTOR DESIGN

DESIGN: AASHTO LFRD Bridge Design Specifications, 4th Edition with California Amendments

LIVE LOAD: Surcharge = 240 lb/ft^2

SOIL PARAMETERS:

Internal design ϕ = 34°, γ = 120 lb/ft^3

External design ϕ(Retained Backfill) = 30°, γ = 120 lb/ft^3

ϕ(Foundation) = 30°

K_h = 0.2

PRECAST CONCRETE PANELS:

f'c = 4,000 psi (Concrete compressive strength at 28 days)

fy = 60,000 psi (Yield strength of reinforcement)

SOIL REINFORCEMENT:

Welded wire mats: fy = 65,000 psi (Yield strength)

Coupler: fy = 36,000 psi (Yield strength)

Corrosion rate = 1.1 mils/year

REINFORCED CONCRETE:

f'c = 3,600 psi, except as noted

(Concrete compressive strength at 28 days)

fy = 60,000 psi (Yield strength of reinforcement)

MSE = Mechanically Stabilized Embankment

NOTES:

(A) Distance as required to permit coupler to be swaged

(B) Place #4 x 3'-2", centered on connector mat, but not welded to it

(C) Length equals "BASE WIDTH" of wall

(D) All transverse wires size W15 at various spacing as shown elsewhere in plans

(E) Size of longitudinal wires shown elsewhere in plans

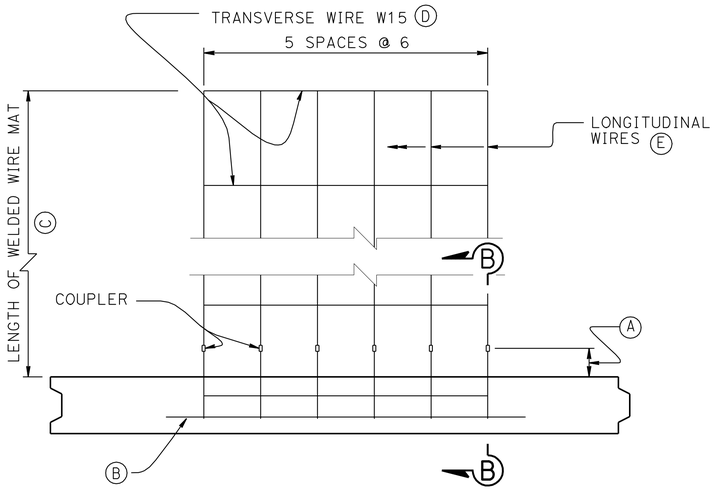

PLAN OF PANEL WITH SIX WIRE MAT

1½" = 1'-0"

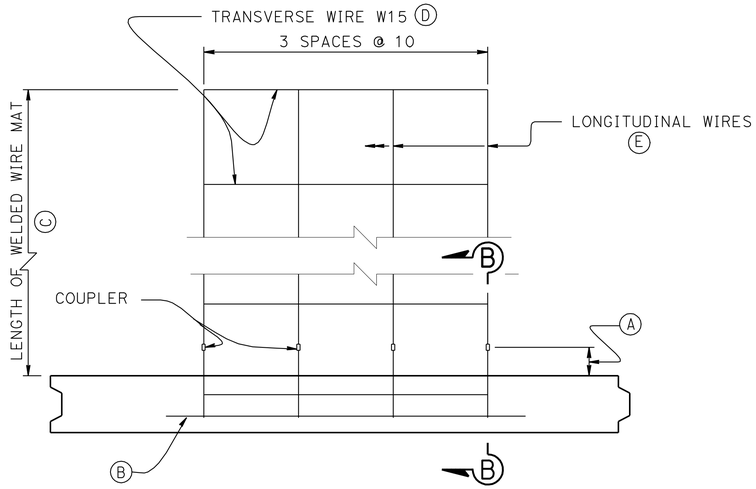

PLAN OF PANEL WITH FOUR WIRE MAT

1½" = 1'-0"

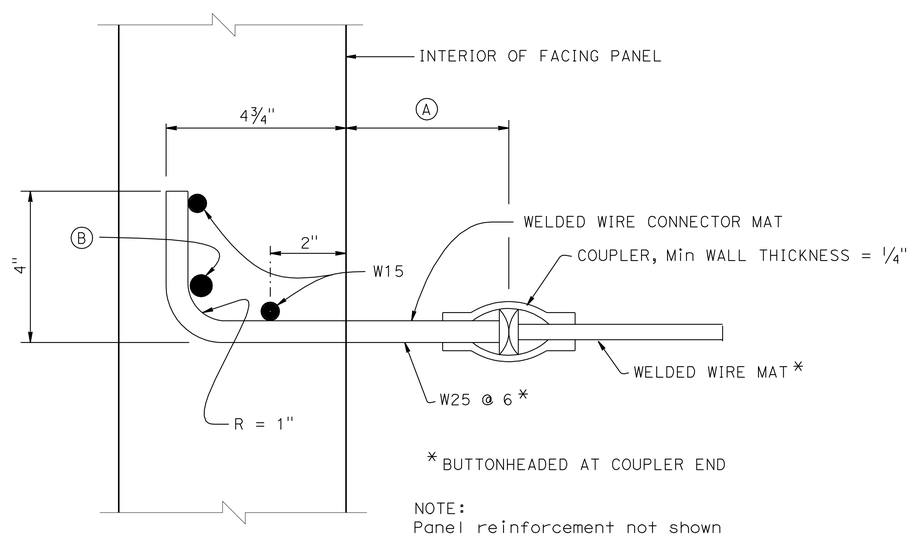

* BUTTONHEADED AT COUPLER END

NOTE:
Panel reinforcement not shown

SECTION B-B

6" = 1'-0"

STANDARD DRAWING

FILE NO. xs13-020-2

APPROVAL DATE July 2011

STATE OF CALIFORNIA DEPARTMENT OF TRANSPORTATION

DIVISION OF ENGINEERING SERVICES

BRIDGE NO. 53E0163

POST MILE 29.8

RETAINING WALL 1575
MECHANICALLY STABILIZED EMBANKMENT
DETAILS NO. 2

DS OSD 2147A (ENGLISH STANDARD DRAWING "XS" BORDER REV. (02-02-11)

ORIGINAL SCALE IN INCHES FOR REDUCED PLANS 0 1 2 3

UNIT: 3604
PROJECT NUMBER & PHASE: 0700021119 CONTRACT NO.: 07-1218W1

DISREGARD PRINTS BEARING EARLIER REVISION DATES

REVISION DATES 01-19-12 04-12-12

SHEET 21 OF 26

FILE => 53e0163-x-mse_02.dgn

USERNAME => s114640 DATE PLOTTED => 22-MAY-2012 TIME PLOTTED => 07:25

DIST	COUNTY	ROUTE	POST MILES TOTAL PROJECT	SHEET No.	TOTAL SHEETS
07	LA	5	29.4/31.6	881	1931

Ulysses N. Smpardos 2-15-12
REGISTERED CIVIL ENGINEER DATE

5-21-12
PLANS APPROVAL DATE

REGISTERED PROFESSIONAL ENGINEER
Ulysses N. Smpardos
No. 61018
Exp. 12/31/12
CIVIL
STATE OF CALIFORNIA

The State of California or its officers or agents shall not be responsible for the accuracy or completeness of electronic copies of this plan sheet.

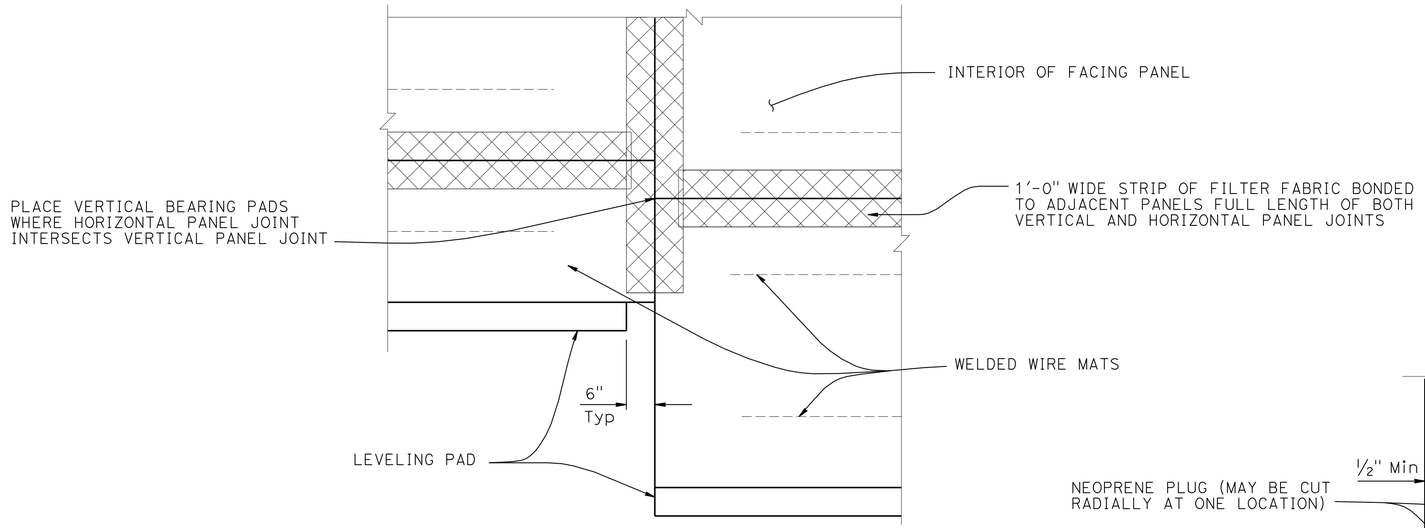

PART ELEVATION

3/4" = 1'-0"

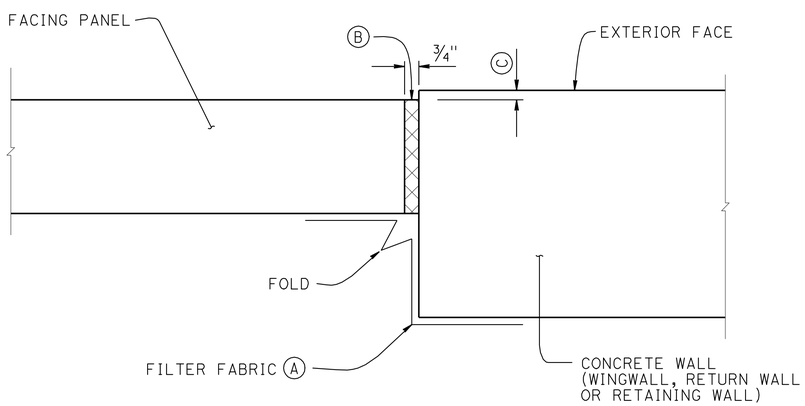

MSE FACING PANEL-TO-CONCRETE WALL JOINT DETAIL

3" = 1'-0"

NOTES:

(A) Bond a strip of filter fabric, 1'-6" wide, to back of MSE panels and the adjacent concrete wall for entire length of vertical joint

(B) Bond expansion joint material to the concrete wall

(C) Offset between face of MSE facing panel and face of the concrete wall as dictated by location of layout lines shown elsewhere in "STRUCTURE PLANS"

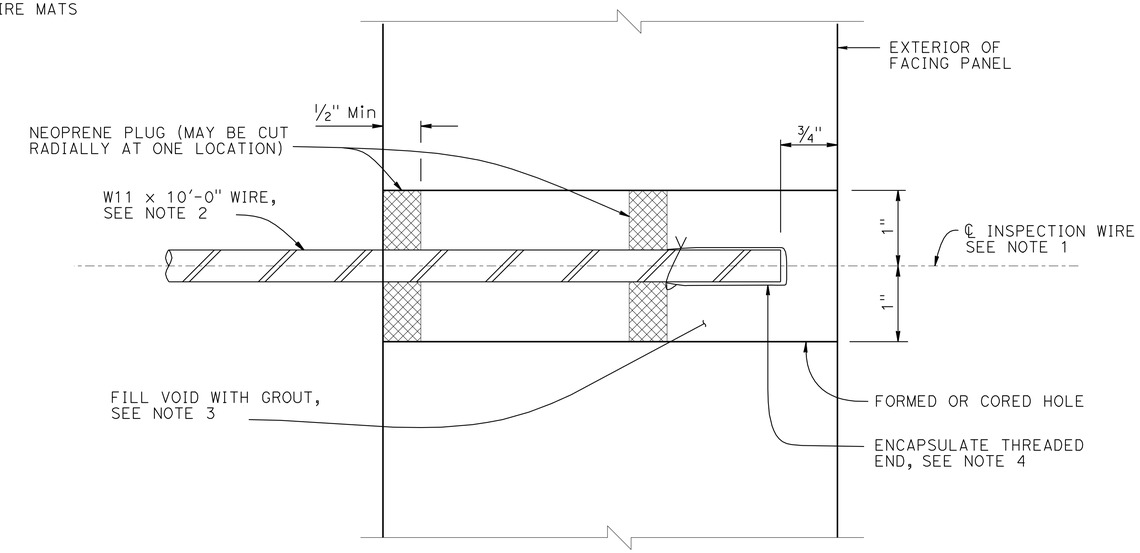

SECTION THRU INSPECTION WIRE

NO SCALE

NOTES:

1. Center inspection wire in facing panel
2. Fabricated inspection wire from W11 wire representative of the welded wire mats, with 3/8" ø 16 UNC threads for at least 1 1/2" of one end
3. Place inspection wire horizontal and perpendicular to the wall panel prior to backfilling. After backfill placement to a level at least 2'-0" above the inspection wire, dry pack opening with 1000 to 1500, psi mortar. Trowel mortar smooth and flush with facing panel
4. Encapsulate threaded end with corrosion inhibiting mastic, vinyl covering, and secure with plastic tie

UNC = Unified Coarse Threads

RETAINING WALL 1575

MECHANICALLY STABILIZED EMBANKMENT

DETAILS NO. 3

STANDARD DRAWING

FILE NO. xs13-020-3

APPROVAL DATE July 2011

STATE OF CALIFORNIA DEPARTMENT OF TRANSPORTATION

DIVISION OF ENGINEERING SERVICES

BRIDGE NO. 53E0163

POST MILE 29.8

DS OSD 2147A (ENGLISH STANDARD DRAWING "XS" BORDER REV. (02-02-11)

ORIGINAL SCALE IN INCHES FOR REDUCED PLANS 0 1 2 3

UNIT: 3604
PROJECT NUMBER & PHASE: 0700021119
CONTRACT NO.: 07-1218W1

DISREGARD PRINTS BEARING EARLIER REVISION DATES

REVISION DATES 01-18-12 04-12-12

SHEET 22 OF 26

FILE => 53e0163-x-mse_03.dgn

USERNAME => s114640 DATE PLOTTED => 22-MAY-2012 TIME PLOTTED => 07:25

DIST	COUNTY	ROUTE	POST MILES TOTAL PROJECT	SHEET No	TOTAL SHEETS
07	LA	5	29.4/31.6	882	1931

REGISTERED GEOTECHNICAL ENGINEER 1-13-12

5-21-12
PLANS APPROVAL DATE

REGISTERED PROFESSIONAL ENGINEER Deepa Wathugala No. 2674 Exp. 9-30-12 GEOTECHNICAL STATE OF CALIFORNIA

The State of California or its officers or agents shall not be responsible for the accuracy or completeness of electronic copies of this plan sheet.

This LOTB sheet was prepared in accordance with the Caltrans Soil & Rock Logging, Classification, & Presentation Manual (2010 Edition).

BENCH MARK

BM PRHV 1005 Elev +617.66′
Fd Lead and Tack on TOC of the median island of Burbank Blvd O.C. Fwy 5, +/- 13′ E of the W end of the median island.
NAVD 88

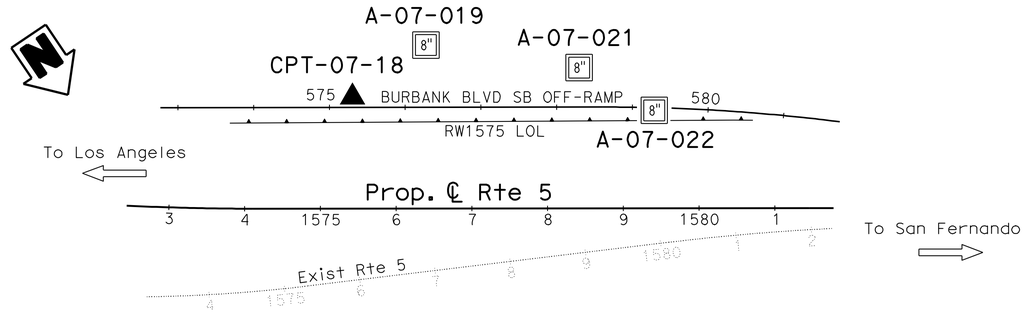

PLAN

1" = 100′

Note: Ground water was not encountered in boring A-07-019.

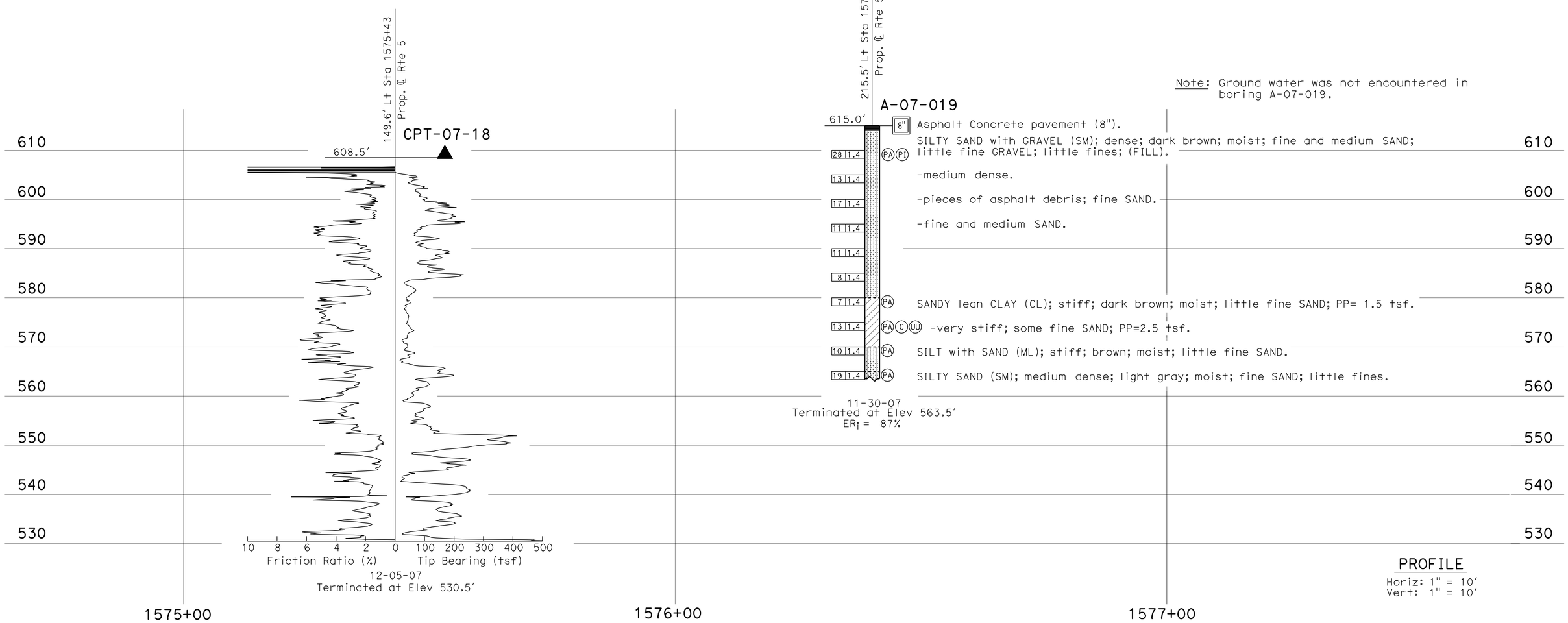

PROFILE

Horiz: 1" = 10′
Vert: 1" = 10′

ENGINEERING SERVICES	MATERIALS AND GEOTECHNICAL SERVICES	STATE OF CALIFORNIA DEPARTMENT OF TRANSPORTATION	DIVISION OF ENGINEERING SERVICES STRUCTURE DESIGN DESIGN BRANCH 15	BRIDGE NO. 53E0163 POST MILE 29.83/29.96	RETAINING WALL NO. 1575 LOG OF TEST BORINGS 1 OF 4
FUNCTIONAL SUPERVISOR NAME: C. Liu	DRAWN BY: C. Christian, I.G-Remmen CHECKED BY: F. Gerami	FIELD INVESTIGATION BY: C. Lee			

OGS CIVIL LOG OF TEST BORINGS SHEET

ORIGINAL SCALE IN INCHES FOR REDUCED PLANS 0 1 2 3

UNIT: 3643
PROJECT NUMBER & PHASE: 07000211191 CONTRACT NO.: 07-1218W1

DISREGARD PRINTS BEARING EARLIER REVISION DATES

REVISION DATES: 09-30-11 10-25-11 01-10-12 04-12-12 SHEET 23 OF 26

FILE => 53e0163-z-ltb_01.dgn

USERNAME => s114640 DATE PLOTTED => 22-MAY-2012 TIME PLOTTED => 07:25

DIST	COUNTY	ROUTE	POST MILES TOTAL PROJECT	SHEET No	TOTAL SHEETS
07	LA	5	29.4/31.6	883	1931

REGISTERED GEOTECHNICAL ENGINEER 1-13-12

5-21-12
PLANS APPROVAL DATE

REGISTERED PROFESSIONAL ENGINEER
Deepa Wathugala
No. 2674
Exp. 9-30-12
GEOTECHNICAL
STATE OF CALIFORNIA

The State of California or its officers or agents shall not be responsible for the accuracy or completeness of electronic copies of this plan sheet.

This LOTB sheet was prepared in accordance with the Caltrans Soil & Rock Logging, Classification, & Presentation Manual (2010 Edition).

FOR PLAN VIEW, SEE
"LOG OF TEST BORINGS 1 OF 4"

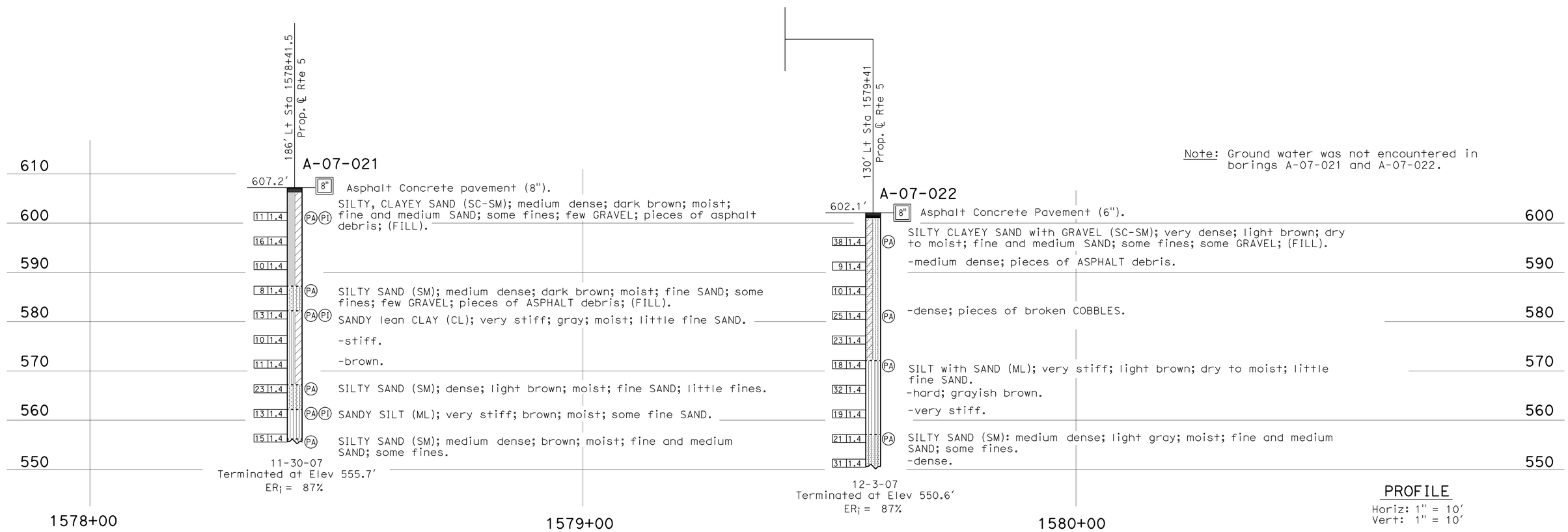

ENGINEERING SERVICES	MATERIALS AND GEOTECHNICAL SERVICES	STATE OF CALIFORNIA DEPARTMENT OF TRANSPORTATION	DIVISION OF ENGINEERING SERVICES STRUCTURE DESIGN DESIGN BRANCH 15	BRIDGE NO. 53E0163 POST MILE 29.83/29.96	RETAINING WALL NO. 1575 LOG OF TEST BORINGS 2 OF 4
FUNCTIONAL SUPERVISOR NAME: C. Liu	DRAWN BY: C. Christian, I.G-Remmen CHECKED BY: F. Gerami	FIELD INVESTIGATION BY: C. Lee			

OGS CIVIL LOG OF TEST BORINGS SHEET

ORIGINAL SCALE IN INCHES FOR REDUCED PLANS 0 1 2 3

UNIT: 3643
PROJECT NUMBER & PHASE: 07000211191 CONTRACT NO.: 07-1218W1

DISREGARD PRINTS BEARING EARLIER REVISION DATES

REVISION DATES				SHEET	OF
08-30-11	10-25-11	01-30-12	04-12-12	24	26

FILE => 53e0163-z-ltb_02.dgn

USERNAME => s114640 DATE PLOTTED => 22-MAY-2012 TIME PLOTTED => 07:25

DIST	COUNTY	ROUTE	POST MILES TOTAL PROJECT	SHEET No	TOTAL SHEETS
07	LA	5	29.4/31.6	884	1931

REGISTERED GEOTECHNICAL ENGINEER 1-13-12

5-21-12
PLANS APPROVAL DATE

REGISTERED PROFESSIONAL ENGINEER Deepa Wathugala No. 2674 Exp. 9-30-12 GEOTECHNICAL STATE OF CALIFORNIA

The State of California or its officers or agents shall not be responsible for the accuracy or completeness of electronic copies of this plan sheet.

REFERENCE: CALTRANS SOIL & ROCK LOGGING, CLASSIFICATION, AND PRESENTATION MANUAL (2010)

CEMENTATION

Description	Criteria
Weak	Crumbles or breaks with handling or little finger pressure.
Moderate	Crumbles or breaks with considerable finger pressure.
Strong	Will not crumble or break with finger pressure.

BOREHOLE IDENTIFICATION

Symbol	Hole Type	Description
Size	A	Auger Boring (hollow or solid stem bucket)
Size	R RW RC P	Rotary drilled boring (conventional) Rotary drilled with self-casing wire-line Rotary core with continuously-sampled, self-casing wire-line Rotary percussion boring (air)
Size	R	Rotary drilled diamond core
Size	HD HA	Hand driven (1-inch soil tube) Hand Auger
●	D	Dynamic Cone Penetration Boring
▲	CPT	Cone Penetration Test (ASTM D 5778)
⬚	O	Other (note on LOTB)

Note: Size in inches.

CONSISTENCY OF COHESIVE SOILS

Description	Shear Strength (tsf)	Pocket Penetrometer Measurement, PP, (tsf)	Torvane Measurement, TV, (tsf)	Vane Shear Measurement, VS, (tsf)
Very Soft	Less than 0.12	Less than 0.25	Less than 0.12	Less than 0.12
Soft	0.12 - 0.25	0.25 - 0.5	0.12 - 0.25	0.12 - 0.25
Medium Stiff	0.25 - 0.5	0.5 - 1	0.25 - 0.5	0.25 - 0.5
Stiff	0.5 - 1	1 - 2	0.5 - 1	0.5 - 1
Very Stiff	1 - 2	2 - 4	1 - 2	1 - 2
Hard	Greater than 2	Greater than 4	Greater than 2	Greater than 2

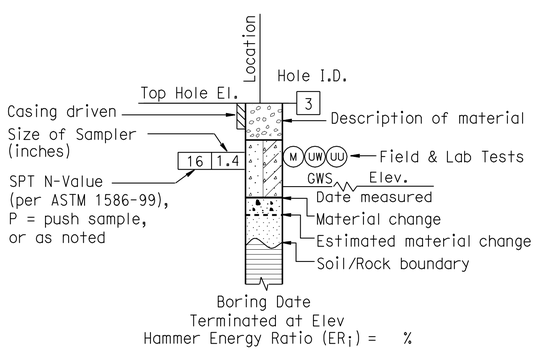

ROTARY BORING

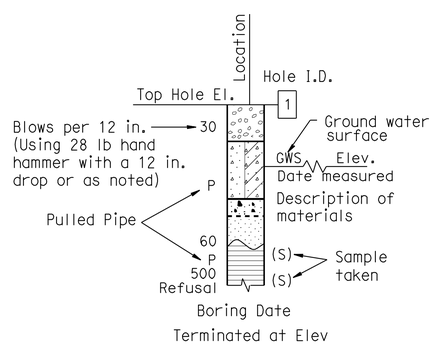

HAND BORING

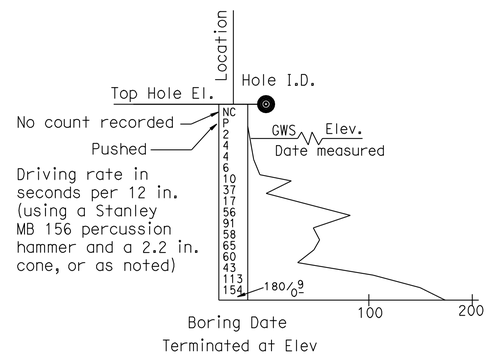

DYNAMIC CONE PENETRATION BORING

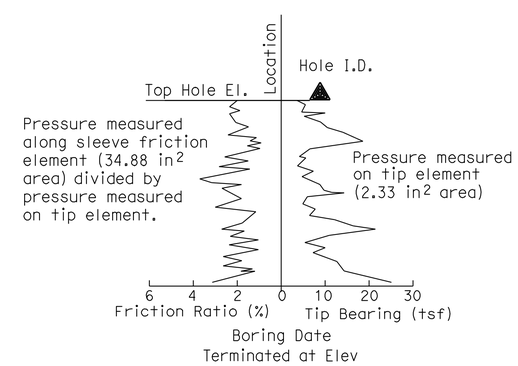

CONE PENETRATION TEST (CPT) BORING

ENGINEERING SERVICES	GEOTECHNICAL SERVICES	STATE OF CALIFORNIA DEPARTMENT OF TRANSPORTATION	DIVISION OF ENGINEERING SERVICES STRUCTURE DESIGN DESIGN BRANCH 15	BRIDGE NO. 53E0163 / POST MILE 29.83/29.96	RETAINING WALL NO. 1575
	PREPARED BY: I.G-Remmen				LOG OF TEST BORINGS 3 OF 4

GS LOTB SOIL LEGEND

ORIGINAL SCALE IN INCHES FOR REDUCED PLANS 0 1 2 3

UNIT: 3643
PROJECT NUMBER & PHASE: 07000211191 CONTRACT NO.: 07-1218W1

DISREGARD PRINTS BEARING EARLIER REVISION DATES → 04-12-12

REVISION DATES | SHEET 25 OF 26

FILE => 53e0163-z-ltb_03.dgn

USERNAME => s114640 DATE PLOTTED => 22-MAY-2012 TIME PLOTTED => 07:25

REFERENCE: CALTRANS SOIL & ROCK LOGGING, CLASSIFICATION, AND PRESENTATION MANUAL (2010)

DIST	COUNTY	ROUTE	POST MILES TOTAL PROJECT	SHEET No	TOTAL SHEETS
07	LA	5	29.4/31.6	885	1931

REGISTERED GEOTECHNICAL ENGINEER 1-13-12

5-21-12
PLANS APPROVAL DATE

REGISTERED PROFESSIONAL ENGINEER Deepa Wathugala No. 2674 Exp. 9-30-12 GEOTECHNICAL STATE OF CALIFORNIA

The State of California or its officers or agents shall not be responsible for the accuracy or completeness of electronic copies of this plan sheet.

GROUP SYMBOLS AND NAMES

Graphic/Symbol	Group Names
GW	Well-graded GRAVEL Well-graded GRAVEL with SAND
GP	Poorly-graded GRAVEL Poorly-graded GRAVEL with SAND
GW-GM	Well-graded GRAVEL with SILT Well-graded GRAVEL with SILT and SAND
GW-GC	Well-graded GRAVEL with CLAY (or SILTY CLAY) Well-graded GRAVEL with CLAY and SAND (or SILTY CLAY and SAND)
GP-GM	Poorly-graded GRAVEL with SILT Poorly-graded GRAVEL with SILT and SAND
GP-GC	Poorly-graded GRAVEL with CLAY (or SILTY CLAY) Poorly-graded GRAVEL with CLAY and SAND (or SILTY CLAY and SAND)
GM	SILTY GRAVEL SILTY GRAVEL with SAND
GC	CLAYEY GRAVEL CLAYEY GRAVEL with SAND
GC-GM	SILTY, CLAYEY GRAVEL SILTY, CLAYEY GRAVEL with SAND
SW	Well-graded SAND Well-graded SAND with GRAVEL
SP	Poorly-graded SAND Poorly-graded SAND with GRAVEL
SW-SM	Well-graded SAND with SILT Well-graded SAND with SILT and GRAVEL
SW-SC	Well-graded SAND with CLAY (or SILTY CLAY) Well-graded SAND with CLAY and GRAVEL (or SILTY CLAY and GRAVEL)
SP-SM	Poorly-graded SAND with SILT Poorly-graded SAND with SILT and GRAVEL
SP-SC	Poorly-graded SAND with CLAY (or SILTY CLAY) Poorly-graded SAND with CLAY and GRAVEL (or SILTY CLAY and GRAVEL)
SM	SILTY SAND SILTY SAND with GRAVEL
SC	CLAYEY SAND CLAYEY SAND with GRAVEL
SC-SM	SILTY, CLAYEY SAND SILTY, CLAYEY SAND with GRAVEL
PT	PEAT
	COBBLES COBBLES and BOULDERS BOULDERS

Graphic/Symbol	Group Names
CL	Lean CLAY Lean CLAY with SAND Lean CLAY with GRAVEL SANDY lean CLAY SANDY lean CLAY with GRAVEL GRAVELLY lean CLAY GRAVELLY lean CLAY with SAND
CL-ML	SILTY CLAY SILTY CLAY with SAND SILTY CLAY with GRAVEL SANDY SILTY CLAY SANDY SILTY CLAY with GRAVEL GRAVELLY SILTY CLAY GRAVELLY SILTY CLAY with SAND
ML	SILT SILT with SAND SILT with GRAVEL SANDY SILT SANDY SILT with GRAVEL GRAVELLY SILT GRAVELLY SILT with SAND
OL	ORGANIC lean CLAY ORGANIC lean CLAY with SAND ORGANIC lean CLAY with GRAVEL SANDY ORGANIC lean CLAY SANDY ORGANIC lean CLAY with GRAVEL GRAVELLY ORGANIC lean CLAY GRAVELLY ORGANIC lean CLAY with SAND
OL	ORGANIC SILT ORGANIC SILT with SAND ORGANIC SILT with GRAVEL SANDY ORGANIC SILT SANDY ORGANIC SILT with GRAVEL GRAVELLY ORGANIC SILT GRAVELLY ORGANIC SILT with SAND
CH	Fat CLAY Fat CLAY with SAND Fat CLAY with GRAVEL SANDY fat CLAY SANDY fat CLAY with GRAVEL GRAVELLY fat CLAY GRAVELLY fat CLAY with SAND
MH	Elastic SILT Elastic SILT with SAND Elastic SILT with GRAVEL SANDY elastic SILT SANDY elastic SILT with GRAVEL GRAVELLY elastic SILT GRAVELLY elastic SILT with SAND
OH	ORGANIC fat CLAY ORGANIC fat CLAY with SAND ORGANIC fat CLAY with GRAVEL SANDY ORGANIC fat CLAY SANDY ORGANIC fat CLAY with GRAVEL GRAVELLY ORGANIC fat CLAY GRAVELLY ORGANIC fat CLAY with SAND
OH	ORGANIC elastic SILT ORGANIC elastic SILT with SAND ORGANIC elastic SILT with GRAVEL SANDY ORGANIC elastic SILT SANDY ORGANIC elastic SILT with GRAVEL GRAVELLY ORGANIC elastic SILT GRAVELLY ORGANIC elastic SILT with SAND
OL/OH	ORGANIC SOIL ORGANIC SOIL with SAND ORGANIC SOIL with GRAVEL SANDY ORGANIC SOIL SANDY ORGANIC SOIL with GRAVEL GRAVELLY ORGANIC SOIL GRAVELLY ORGANIC SOIL with SAND

FIELD AND LABORATORY TESTING

- (C) Consolidation (ASTM D 2435)
- (CL) Collapse Potential (ASTM D 5333)
- (CP) Compaction Curve (CTM 216)
- (CR) Corrosivity Testing (CTM 643, CTM 422, CTM 417)
- (CU) Consolidated Undrained Triaxial (ASTM D 4767)
- (DS) Direct Shear (ASTM D 3080)
- (EI) Expansion Index (ASTM D 4829)
- (M) Moisture Content (ASTM D 2216)
- (OC) Organic Content-% (ASTM D 2974)
- (P) Permeability (CTM 220)
- (PA) Particle Size Analysis (ASTM D 422)
- (PI) Plasticity Index (AASHTO T 90) Liquid Limit (AASHTO T 89)
- (PL) Point Load Index (ASTM D 5731)
- (PM) Pressure Meter
- (R) R-Value (CTM 301)
- (SE) Sand Equivalent (CTM 217)
- (SG) Specific Gravity (AASHTO T 100)
- (SL) Shrinkage Limit (ASTM D 427)
- (SW) Swell Potential (ASTM D 4546)
- (UC) Unconfined Compression-Soil (ASTM D 2166) Unconfined Compression-Rock (ASTM D 2938)
- (UU) Unconsolidated Undrained Triaxial (ASTM D 2850)
- (UW) Unit Weight (ASTM D 4767)

APPARENT DENSITY OF COHESIONLESS SOILS

Description	SPT N_{60} (Blows / 12 in.)
Very Loose	0 - 5
Loose	5 - 10
Medium Dense	10 - 30
Dense	30 - 50
Very Dense	Greater than 50

MOISTURE

Description	Criteria
Dry	No discernable moisture
Moist	Moisture present, but no free water
Wet	Visible free water

PERCENT OR PROPORTION OF SOILS

Description	Criteria
Trace	Particles are present but estimated to be less than 5%
Few	5% - 10%
Little	15% - 25%
Some	30% - 45%
Mostly	50% - 100%

PARTICLE SIZE

Description		Size (in.)
Boulder		Greater than 12
Cobble		3 - 12
Gravel	Coarse	3/4 - 3
	Fine	1/5 - 3/4
Sand	Coarse	1/16 - 1/5
	Medium	1/64 - 1/16
	Fine	1/300 - 1/64
Silt and Clay		Less than 1/300

ENGINEERING SERVICES

GEOTECHNICAL SERVICES

PREPARED BY: I.G-Remmen

STATE OF CALIFORNIA DEPARTMENT OF TRANSPORTATION

DIVISION OF ENGINEERING SERVICES STRUCTURE DESIGN DESIGN BRANCH 15

BRIDGE NO. 53E0163

POST MILE 29.83/29.96

RETAINING WALL NO. 1575

LOG OF TEST BORINGS 4 OF 4

GS LOTB SOIL LEGEND

ORIGINAL SCALE IN INCHES FOR REDUCED PLANS 0 1 2 3

UNIT: 3643
PROJECT NUMBER & PHASE: 07000211191
CONTRACT NO.: 07-1218W1

DISREGARD PRINTS BEARING EARLIER REVISION DATES

REVISION DATES 04-12-12

SHEET 26 OF 26

FILE => 53e0163-z-ltb_04.dgn

USERNAME => s114640 DATE PLOTTED => 22-MAY-2012 TIME PLOTTED => 07:25

DIST	COUNTY	ROUTE	POST MILES TOTAL PROJECT	SHEET No.	TOTAL SHEETS
07	LA	5	29.4/31.6	886	1931

Ulysses N. Smpardos 2-03-12
REGISTERED CIVIL ENGINEER DATE

5-21-12
PLANS APPROVAL DATE

REGISTERED PROFESSIONAL ENGINEER Ulysses N. Smpardos No. 61018 Exp. 12/31/12 CIVIL STATE OF CALIFORNIA

The State of California or its officers or agents shall not be responsible for the accuracy or completeness of electronic copies of this plan sheet.

LEGEND:

* Measured along "RW 1576" LOL

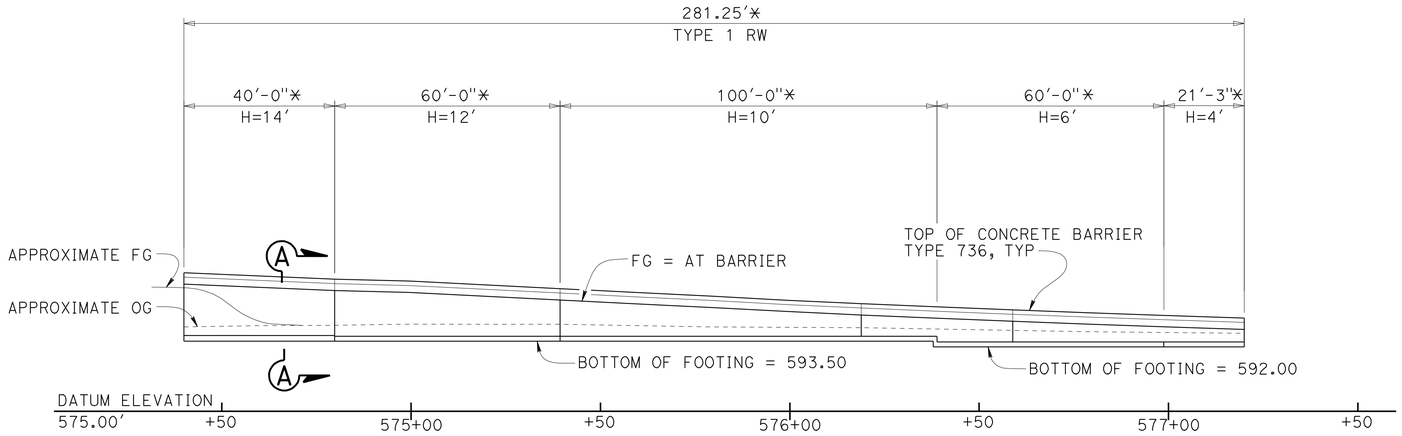

DEVELOPED ELEVATION

1" = 20'

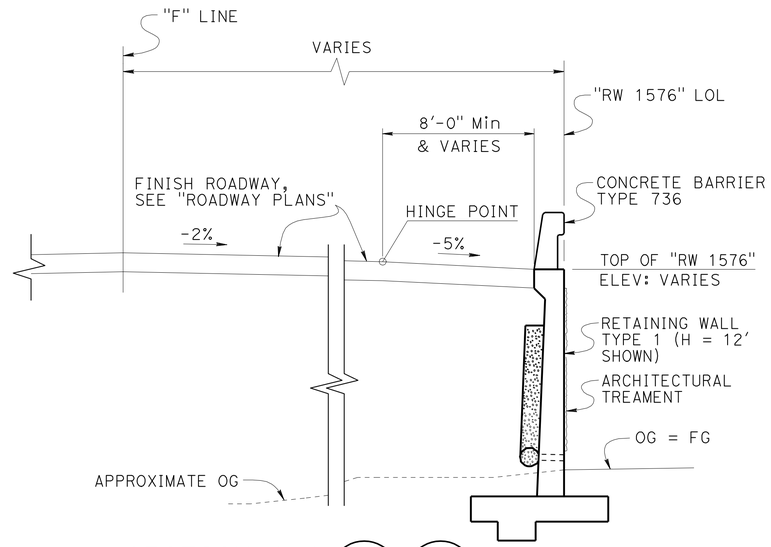

SECTION A-A

B0-3 B3-1

¼" = 1'-0"

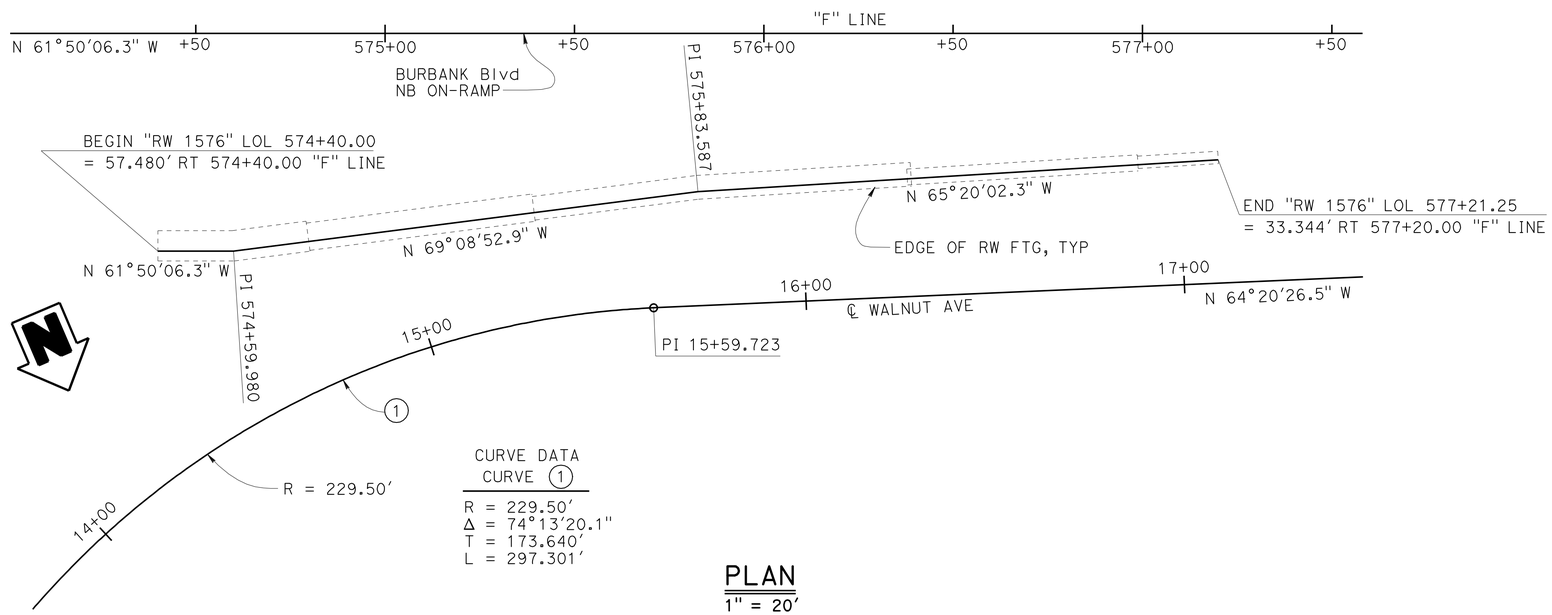

CURVE DATA
CURVE 1

R = 229.50'
Δ = 74°13'20.1"
T = 173.640'
L = 297.301'

PLAN

1" = 20'

QUANTITIES

STRUCTURE EXCAVATION (RETAINING WALL)	675	CY
STRUCTURE BACKFILL (RETAINING WALL)	790	CY
STRUCTURAL CONCRETE, RETAINING WALL	212	CY
ARCHITECTURAL TREATMENT	2,222	SQFT
BAR REINFORCING STEEL (RETAINING WALL)	16,080	LB
CONCRETE BARRIER (TYPE 736)	281	LF

Traci Menard
DESIGN ENGINEER

	BY	CHECKED			
DESIGN	T. Menard	S. Moradi	LOAD & RESISTANCE FACTOR DESIGN	LIVE LOADING: HL93 W/"LOW-BOY"; PERMIT DESIGN VEHICLE	
DETAILS	T. Trefz	S. Moradi	LAYOUT	T. Menard	S. Moradi
QUANTITIES	T. Menard	S. Moradi	SPECIFICATIONS	J. Choi	PLANS AND SPECS COMPARED U. Smpardos

ORIGINAL SCALE IN INCHES FOR REDUCED PLANS 0 1 2 3

STATE OF CALIFORNIA
DEPARTMENT OF TRANSPORTATION

DIVISION OF ENGINEERING SERVICES
STRUCTURE DESIGN
DESIGN BRANCH 15

BRIDGE NO. N/A
POST MILE 29.8

RETAINING WALL NO. 1576
GENERAL PLAN

UNIT: 3604
PROJECT NUMBER & PHASE: 0700021119
CONTRACT NO.: 07-1218W1

DISREGARD PRINTS BEARING EARLIER REVISION DATES

REVISION DATES 05-02-12 02-03-12 04-24-12 SHEET 1 OF 8

USERNAME => s114640 DATE PLOTTED => 22-MAY-2012 TIME PLOTTED => 07:25

STRUCTURES DESIGN GENERAL PLAN SHEET (ENGLISH) (REV.09-01-10)

FILE => rw1576-a-gp.dgn

DIST	COUNTY	ROUTE	POST MILES TOTAL PROJECT	SHEET No.	TOTAL SHEETS
07	LA	5	29.4/31.6	887	1931

Ulysses N. Smpardos 2-03-12
REGISTERED CIVIL ENGINEER DATE

5-21-12
PLANS APPROVAL DATE

REGISTERED PROFESSIONAL ENGINEER Ulysses N. Smpardos No. 61018 Exp. 12/31/12 CIVIL STATE OF CALIFORNIA

The State of California or its officers or agents shall not be responsible for the accuracy or completeness of electronic copies of this plan sheet.

INDEX TO PLANS

SHEET NO.	TITLE
1	GENERAL PLAN
2	INDEX TO PLANS
3	FOUNDATION PLAN
4	STRUCTURE PLAN
5	ARCHITECTURAL TREATMENT
6	LOG OF TEST BORINGS, 1 OF 3
7	LOG OF TEST BORINGS, 2 OF 3
8	LOG OF TEST BORINGS, 3 OF 3

STANDARD PLANS DATED MAY 2006

A10A	ACRONYMS AND ABBREVIATIONS (SHEET 1 OF 2)
A10B	ACRONYMS AND ABBREVIATIONS (SHEET 2 OF 2)
A10C	SYMBOLS (SHEET 1 OF 2)
B0-3	BRIDGE DETAILS
B3-1	RETAINING WALL TYPE 1 H=4′ THROUGH H=30′
B3-8	RETAINING WALL DETAILS NO. 1
B3-9	RETAINING WALL DETAILS NO. 2
B11-56	CONCRETE BARRIER TYPE 736

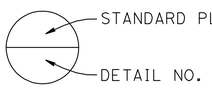

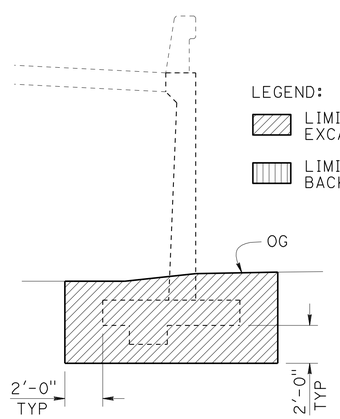

LIMITS OF EXCAVATION
¼" = 1′-0"

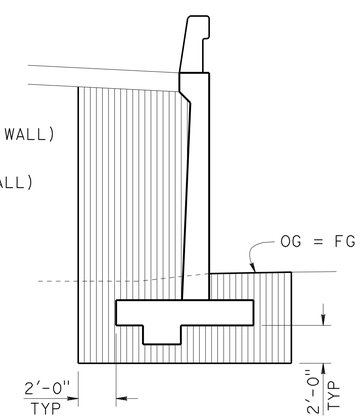

LIMITS OF BACKFILL
¼" = 1′-0"

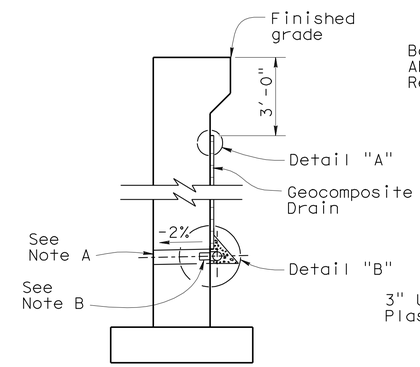

WALL SECTION

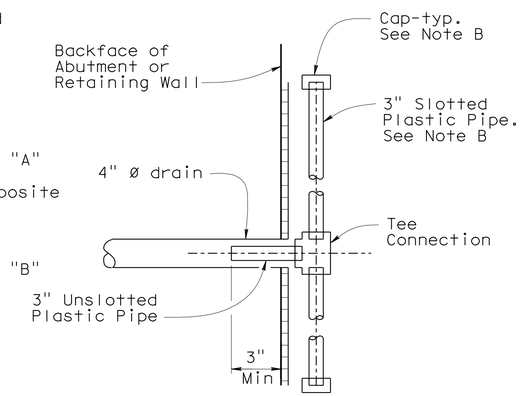

SECTION A-A

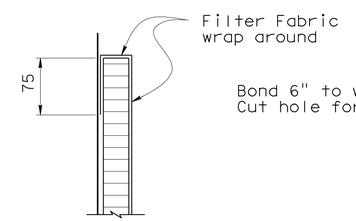

DETAIL "A"

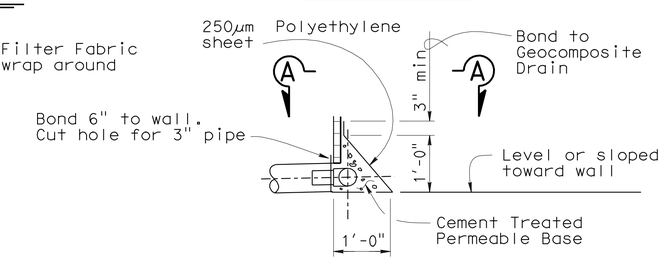

DETAIL "B"

WEEP HOLE AND GEOCOMPOSITE DRAIN ALTERNATIVE

Not to scale

Notes:

A. 4" ø drains at intermediate sag points and at 25′-0" center to center (9′-0" c-c for Type 3 and 9′-2" c-c for Type 4 retaining walls). For walls adjacent to sidewalks or curbs, provide 4" cast iron or asbestos cement pipe under the sidewalk to discharge through curb face. Exposed wall drains shall be located 3" ± above finished grade.

B. Geocomposite drain, cement treated permeable base, and 3" ø slotted plastic pipe continuous behind retaining wall or abutment. Cap ends of pipe. Provide "Tee" connection at each 4" ø drain.

C. Connect the low end of plastic pipe to the main outlet pipe as applicable.

	BY	CHECKED
DESIGN	T. Menard	S. Moradi
DETAILS	T. Trefz	S. Moradi
QUANTITIES	T. Menard	S. Moradi

STATE OF CALIFORNIA
DEPARTMENT OF TRANSPORTATION

DIVISION OF ENGINEERING SERVICES
STRUCTURE DESIGN
DESIGN BRANCH 15

BRIDGE NO. N/A
POST MILE 29.8

RETAINING WALL NO. 1576
INDEX TO PLANS

STRUCTURES DESIGN DETAIL SHEET (ENGLISH) (REV. 09-01-10)

ORIGINAL SCALE IN INCHES FOR REDUCED PLANS 0 1 2 3

UNIT: 3604
PROJECT NUMBER & PHASE: 0700021119
CONTRACT NO.: 07-1218W1

DISREGARD PRINTS BEARING EARLIER REVISION DATES

REVISION DATES 11-30-11 02-03-12

SHEET 2 OF 8

FILE => rw1576-b-itp.dgn

USERNAME => s114640 DATE PLOTTED => 22-MAY-2012 TIME PLOTTED => 07:25

DIST	COUNTY	ROUTE	POST MILES TOTAL PROJECT	SHEET No.	TOTAL SHEETS
07	LA	5	29.4/31.6	888	1931

Ulysses N. Smpardos 2-03-12
REGISTERED CIVIL ENGINEER DATE

5-21-12
PLANS APPROVAL DATE

REGISTERED PROFESSIONAL ENGINEER
Ulysses N. Smpardos
No. 61018
Exp. 12/31/12
CIVIL
STATE OF CALIFORNIA

The State of California or its officers or agents shall not be responsible for the accuracy or completeness of electronic copies of this plan sheet.

LEGEND:

XX.XX Indicates bottom of footing elevation

CURVE DATA

No.	R	Δ	T	L
A	2000.00	34°57′20"	629.75	1220.18

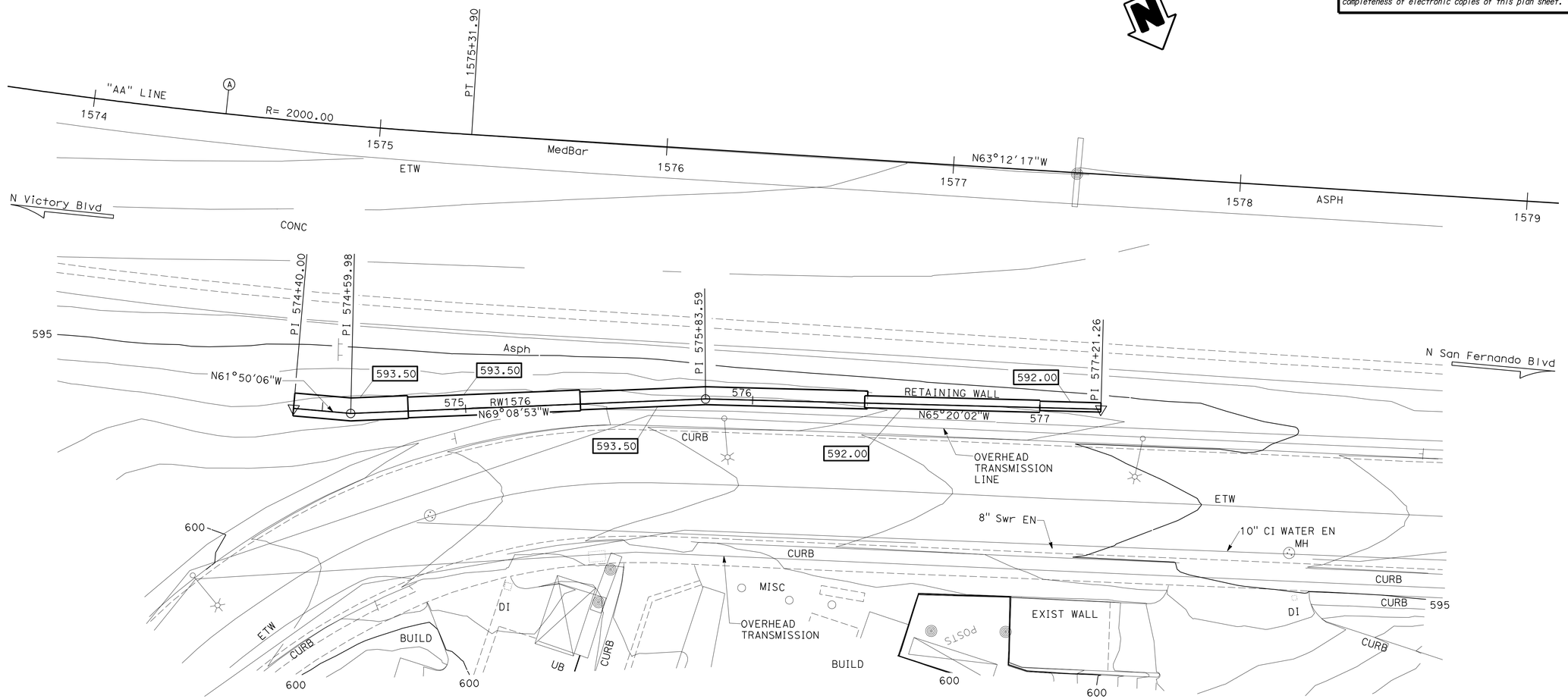

SURVEY CONTROL

PRHV123 (NOT SHOWN ON THE PLAN)

Fnd PK NAIL WIHT WASHER STAMPED CALTRANS 123
88.00 Lt "A1" LINE. Rte 5
Sta. 1581+75.69
N 1,890,470.97
E 6,464,594.96
EL.=598.93

PRHV127 (NOT SHOWN ON THE PLAN)

Fnd PK NAIL WIHT WASHER STAMPED CALTRANS 127
67.36 Lt "A1" LINE. Rte 5
Sta. 1585+96.99
N 1,890,753.54
E 6,464,269.04
EL.=604.23

PRELIMINARY INVESTIGATION SECTION

SCALE 1"=20′	VERT.DATUM NAVD88	PHOTOGRAMMETRY AS OF: X			
	HORZ.DATUM NAD83(1991.35)	SURVEYED	BY District	CHECKED	BY Don Ivy 10/24/11
ALIGNMENT TIES Dist. Traverse Sheet		DRAFTED	BY J. Zhou 10/24/11	CHECKED	BY L. LEW 10/24/11

DESIGN	BY U. Smpardos	CHECKED S. Moradi
DETAILS	BY T. Trefz	CHECKED S. Moradi
QUANTITIES	BY T. Menard	CHECKED S. Moradi

STATE OF CALIFORNIA
DEPARTMENT OF TRANSPORTATION

DIVISION OF ENGINEERING SERVICES
STRUCTURE DESIGN
DESIGN BRANCH 15

BRIDGE NO. N/A
POST MILE 29.8

RETAINING WALL NO. 1576
FOUNDATION PLAN

STRUCTURES FOUNDATION PLAN SHEET (ENGLISH) (REV. 09-01-10)

ORIGINAL SCALE IN INCHES FOR REDUCED PLANS 0 1 2 3

UNIT: 3646
PROJECT NUMBER & PHASE: 07000000021119 CONTRACT NO.: 07-1218W1

DISREGARD PRINTS BEARING EARLIER REVISION DATES

REVISION DATES: 02-04-12 04-04-12

SHEET 3 OF 8

FILE => rw1576-e-fndp.dgn

DIST	COUNTY	ROUTE	POST MILES TOTAL PROJECT	SHEET No.	TOTAL SHEETS
07	LA	5	29.4/31.6	889	1931

Ulysses N. Smpardos 2-03-12
REGISTERED CIVIL ENGINEER DATE

5-21-12
PLANS APPROVAL DATE

REGISTERED PROFESSIONAL ENGINEER
Ulysses N. Smpardos
No. 61018
Exp. 12/31/12
CIVIL
STATE OF CALIFORNIA

The State of California or its officers or agents shall not be responsible for the accuracy or completeness of electronic copies of this plan sheet.

NOTES:
1. Architectural Treatment not shown. For details see "ARCHITECTURAL TREATMENT" sheet.

LEGEND:
* Measured along "RW 1576" LOL
** Elevations are given at top of retaining wall

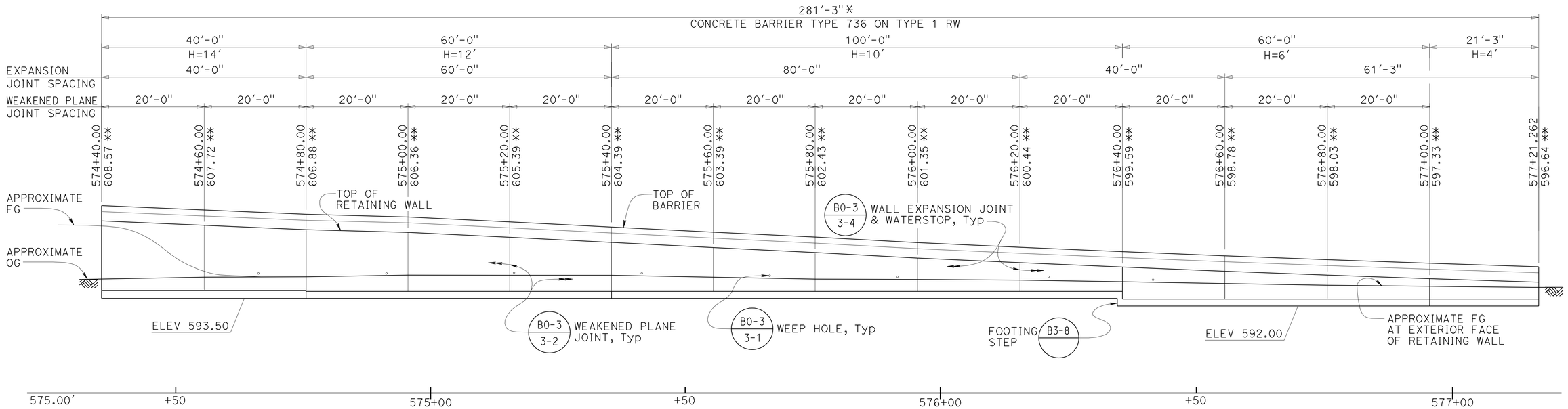

DEVELOPED ELEVATION
1" = 10'

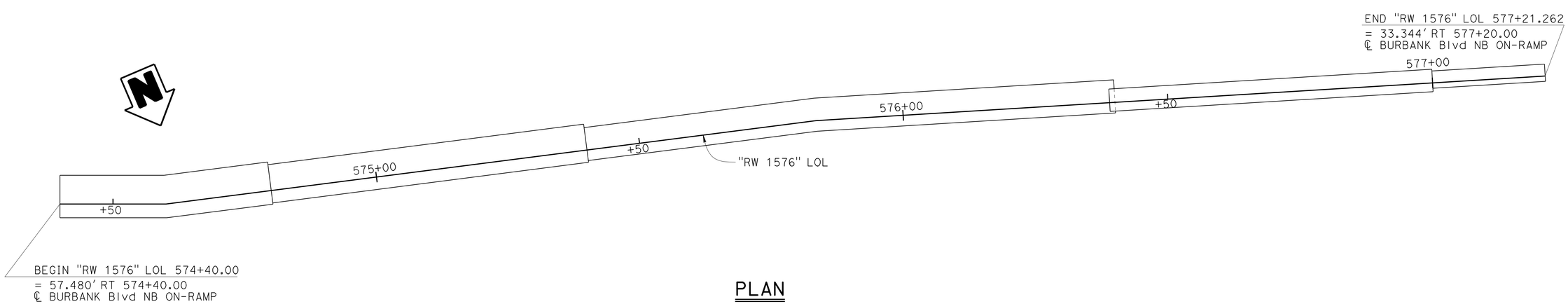

PLAN
1" = 10'

DESIGN	BY T. Menard	CHECKED S. Moradi	
DETAILS	BY T. Trefz	CHECKED S. Moradi	
QUANTITIES	BY T. Menard	CHECKED S. Moradi	

ORIGINAL SCALE IN INCHES FOR REDUCED PLANS 0 1 2 3

STATE OF CALIFORNIA
DEPARTMENT OF TRANSPORTATION

DIVISION OF ENGINEERING SERVICES
STRUCTURE DESIGN
DESIGN BRANCH 15

BRIDGE NO. N/A
POST MILE 29.8

RETAINING WALL NO. 1576
STRUCTURE PLAN

UNIT: 3604
PROJECT NUMBER & PHASE: 070021119
CONTRACT NO.: 07-1218W1

DISREGARD PRINTS BEARING EARLIER REVISION DATES

REVISION DATES 10-26-11 02-02-12 04-05-12

SHEET 4 OF 8

USERNAME => s114640 DATE PLOTTED => 22-MAY-2012 TIME PLOTTED => 07:25

STRUCTURES DESIGN GENERAL PLAN SHEET (ENGLISH) (REV.09-01-10)

FILE => rw1576-s-sp_01.dgn

DIST	COUNTY	ROUTE	POST MILES TOTAL PROJECT	SHEET No.	TOTAL SHEETS
07	LA	5	29.4/31.6	890	1931

Ulysses N. Smpardos 2-03-12
REGISTERED CIVIL ENGINEER DATE

5-21-12
PLANS APPROVAL DATE

REGISTERED PROFESSIONAL ENGINEER Ulysses N. Smpardos No. 61018 Exp. 12/31/12 CIVIL STATE OF CALIFORNIA

The State of California or its officers or agents shall not be responsible for the accuracy or completeness of electronic copies of this plan sheet.

NOTE:
FRACTURED GRANITE TEXTURE SHALL RUN PERPENDICULAR TO PLUMB.

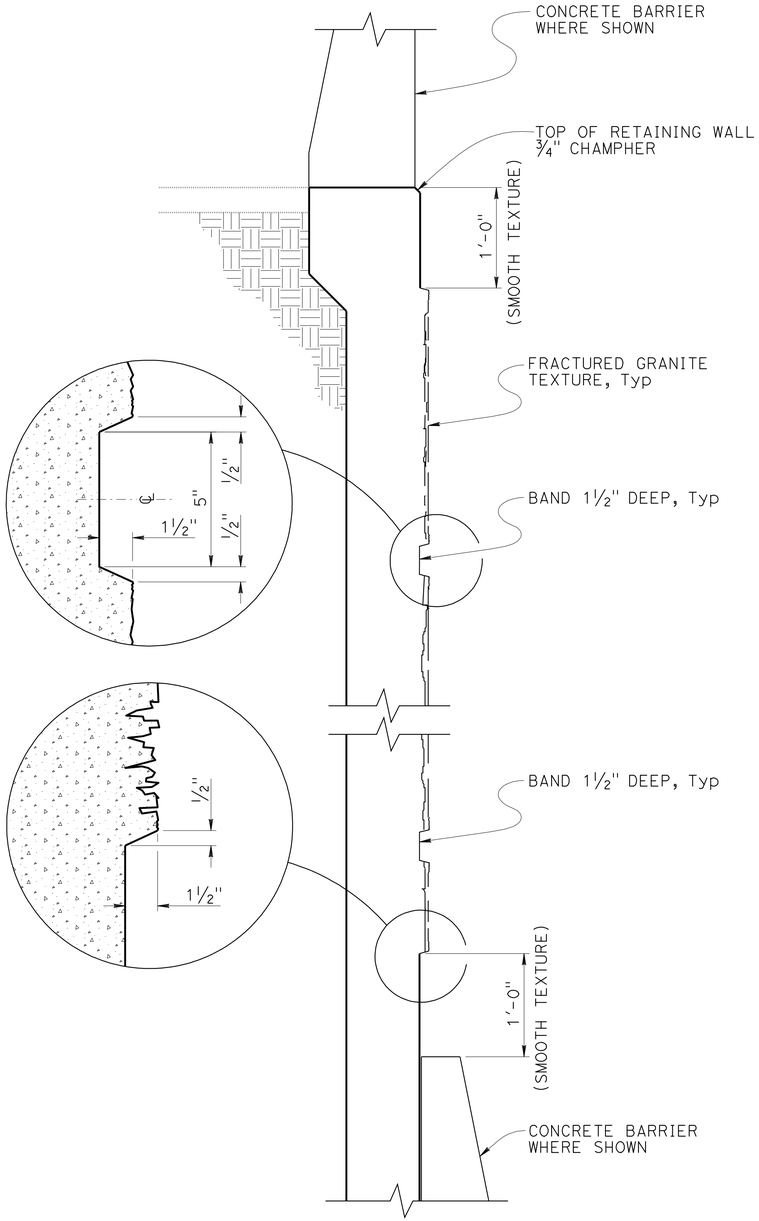

RETAINING WALL-TYPICAL SECTION

NO SCALE

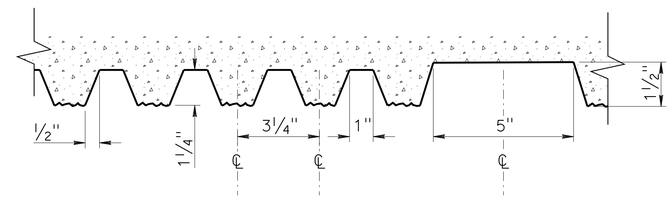

(ARCHITECTURAL TREATMENT SECTION FOR RETAINING WALL)

FRACTURED GRANITE TEXTURE & BAND

NO SCALE

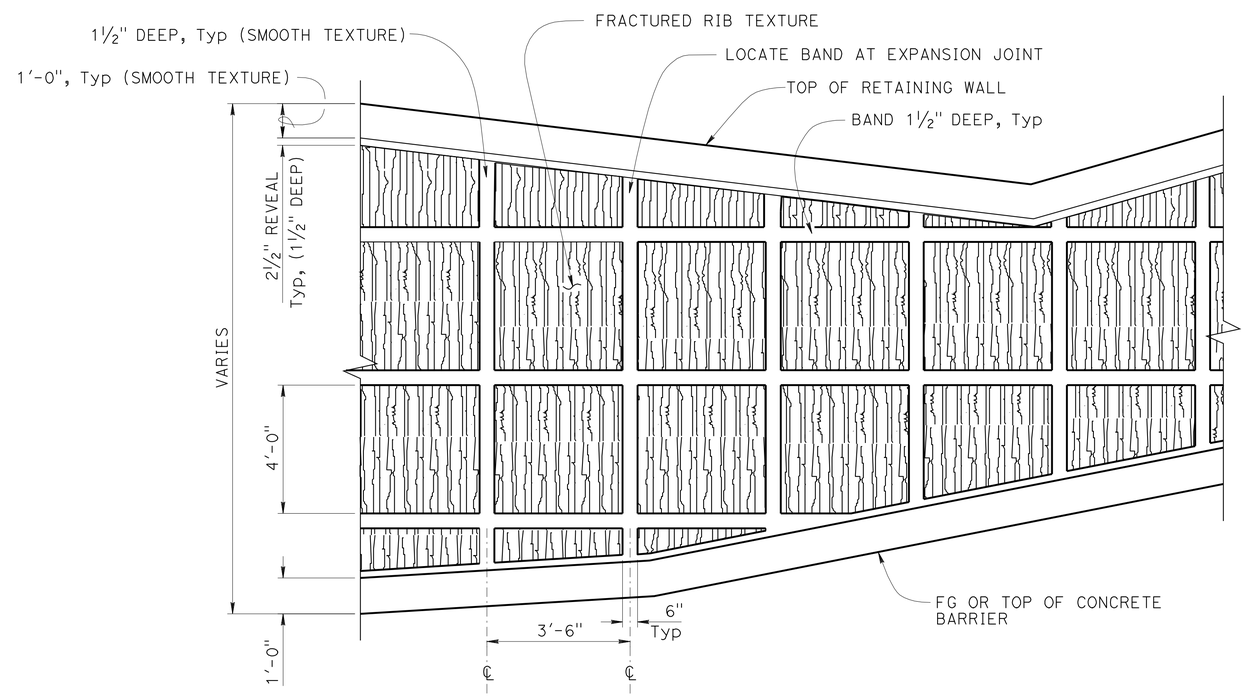

RETAINING WALL-TYPICAL ELEVATION

NO SCALE

DESIGN	BY T. Menard	CHECKED S. Moradi	
DETAILS	BY T. Trefz	CHECKED S. Moradi	
QUANTITIES	BY T. Menard	CHECKED S. Moradi	

STATE OF CALIFORNIA
DEPARTMENT OF TRANSPORTATION

DIVISION OF ENGINEERING SERVICES
STRUCTURE DESIGN
DESIGN BRANCH 15

BRIDGE NO. N/A
POST MILE 29.8

RETAINING WALL NO. 1576
ARCHITECTURAL TREATMENT

STRUCTURES DESIGN DETAIL SHEET (ENGLISH) (REV. 09-01-10)

ORIGINAL SCALE IN INCHES FOR REDUCED PLANS 0 1 2 3

UNIT: 3604
PROJECT NUMBER & PHASE: 070021119
CONTRACT NO.: 07-1218W1

DISREGARD PRINTS BEARING EARLIER REVISION DATES

REVISION DATES: 02-03-12

SHEET 5 OF 8

FILE => rw1576-t-arch.dgn

USERNAME => s109858 DATE PLOTTED => 22-MAY-2012 TIME PLOTTED => 08:37

DIST	COUNTY	ROUTE	POST MILES TOTAL PROJECT	SHEET No	TOTAL SHEETS
07	LA	5	29.4/31.6	891	1931

REGISTERED GEOTECHNICAL ENGINEER 1-13-12

5-21-12
PLANS APPROVAL DATE

REGISTERED PROFESSIONAL ENGINEER Deepa Wathugala No. 2674 Exp. 9-30-12 GEOTECHNICAL STATE OF CALIFORNIA

The State of California or its officers or agents shall not be responsible for the accuracy or completeness of electronic copies of this plan sheet.

This LOTB sheet was prepared in accordance with the Caltrans Soil & Rock Logging, Classification, & Presentation Manual (2010 Edition).

BENCH MARK

BM PRHV 1005 Elev +617.66′
Fd Lead and Tack on TOC of the median island of Burbank Blvd O.C. Fwy 5, +/- 13′ E of the W end of the median island.
NAVD 88

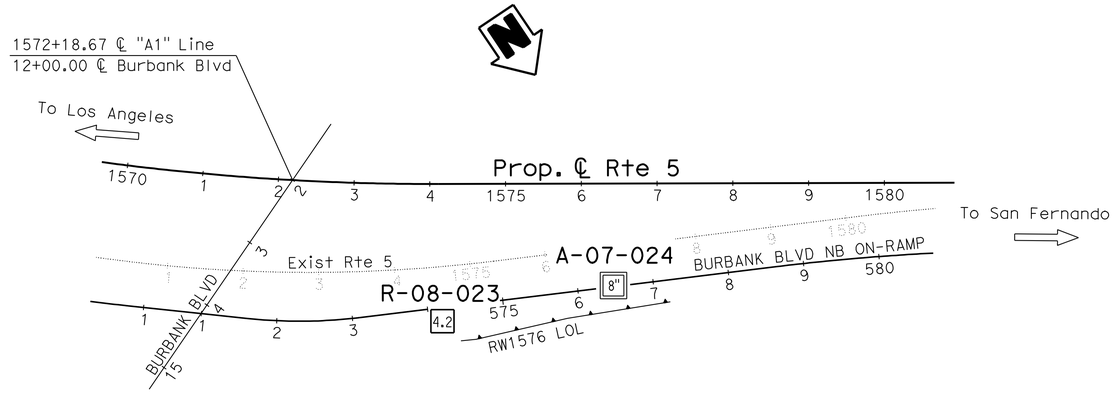

PLAN

1" = 100′

Note: Ground water was not encountered in borings R-07-023 and A-07-024.

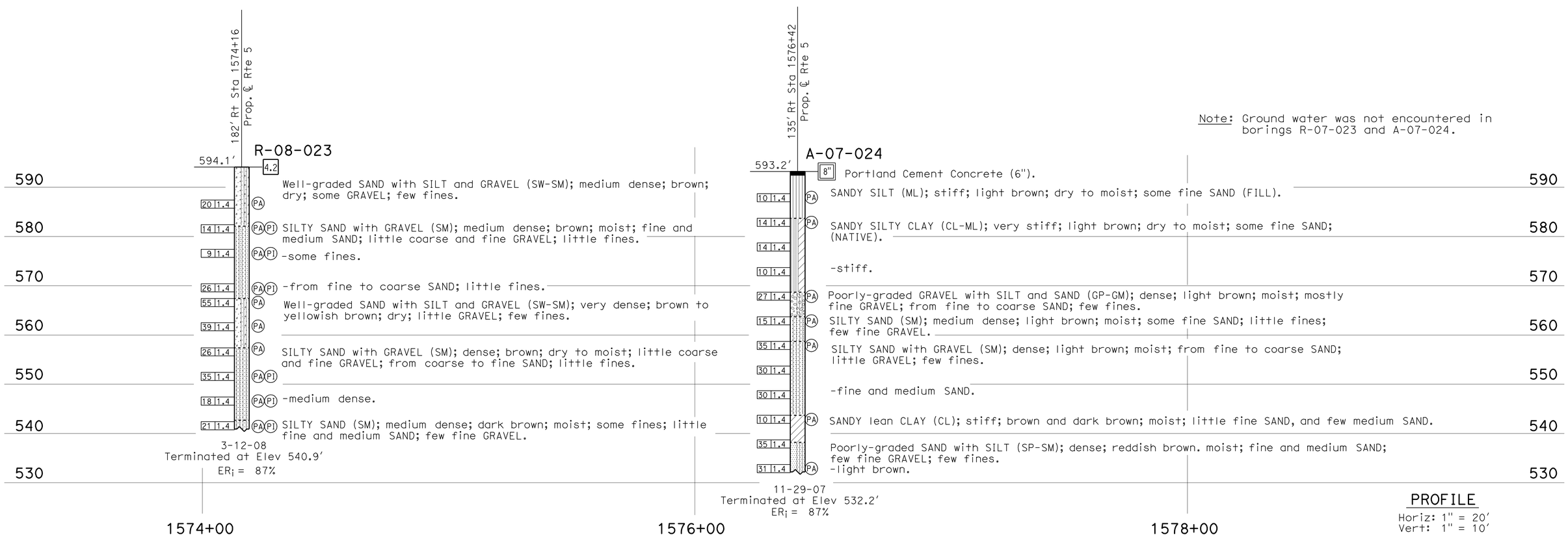

PROFILE

Horiz: 1" = 20′
Vert: 1" = 10′

ENGINEERING SERVICES	MATERIALS AND GEOTECHNICAL SERVICES	STATE OF CALIFORNIA DEPARTMENT OF TRANSPORTATION	DIVISION OF ENGINEERING SERVICES STRUCTURE DESIGN DESIGN BRANCH 15	BRIDGE NO. N/A / POST MILE 29.8	RETAINING WALL NO. 1576 LOG OF TEST BORINGS 1 OF 3
FUNCTIONAL SUPERVISOR NAME: C. Liu	DRAWN BY: C. Christian, I.G-Remmen / CHECKED BY: F. Gerami	FIELD INVESTIGATION BY: C. Lee, M. Islam			

OGS CIVIL LOG OF TEST BORINGS SHEET

ORIGINAL SCALE IN INCHES FOR REDUCED PLANS 0 1 2 3

UNIT: 3643
PROJECT NUMBER & PHASE: 07000211191 CONTRACT NO.: 07-1218W1

DISREGARD PRINTS BEARING EARLIER REVISION DATES → REVISION DATES 09-30-11 10-25-11 01-04-12 SHEET 6 OF 8

FILE => rw1576-z-ltb_01.dgn

USERNAME => s109858 DATE PLOTTED => 22-MAY-2012 TIME PLOTTED => 08:37

DIST	COUNTY	ROUTE	POST MILES TOTAL PROJECT	SHEET No	TOTAL SHEETS
07	LA	5	29.4/31.6	892	1931

REGISTERED GEOTECHNICAL ENGINEER 1-13-12

5-21-12
PLANS APPROVAL DATE

REGISTERED PROFESSIONAL ENGINEER Deepa Wathugala No. 2674 Exp. 9-30-12 GEOTECHNICAL STATE OF CALIFORNIA

The State of California or its officers or agents shall not be responsible for the accuracy or completeness of electronic copies of this plan sheet.

REFERENCE: CALTRANS SOIL & ROCK LOGGING, CLASSIFICATION, AND PRESENTATION MANUAL (2010)

CEMENTATION

Description	Criteria
Weak	Crumbles or breaks with handling or little finger pressure.
Moderate	Crumbles or breaks with considerable finger pressure.
Strong	Will not crumble or break with finger pressure.

BOREHOLE IDENTIFICATION

Symbol	Hole Type	Description
Size	A	Auger Boring (hollow or solid stem bucket)
Size	R RW RC P	Rotary drilled boring (conventional) Rotary drilled with self-casing wire-line Rotary core with continuously-sampled, self-casing wire-line Rotary percussion boring (air)
Size	R	Rotary drilled diamond core
Size	HD HA	Hand driven (1-inch soil tube) Hand Auger
●	D	Dynamic Cone Penetration Boring
▲	CPT	Cone Penetration Test (ASTM D 5778)
⬚	O	Other (note on LOTB)

Note: Size in inches.

CONSISTENCY OF COHESIVE SOILS

Description	Shear Strength (tsf)	Pocket Penetrometer Measurement, PP, (tsf)	Torvane Measurement, TV, (tsf)	Vane Shear Measurement, VS, (tsf)
Very Soft	Less than 0.12	Less than 0.25	Less than 0.12	Less than 0.12
Soft	0.12 - 0.25	0.25 - 0.5	0.12 - 0.25	0.12 - 0.25
Medium Stiff	0.25 - 0.5	0.5 - 1	0.25 - 0.5	0.25 - 0.5
Stiff	0.5 - 1	1 - 2	0.5 - 1	0.5 - 1
Very Stiff	1 - 2	2 - 4	1 - 2	1 - 2
Hard	Greater than 2	Greater than 4	Greater than 2	Greater than 2

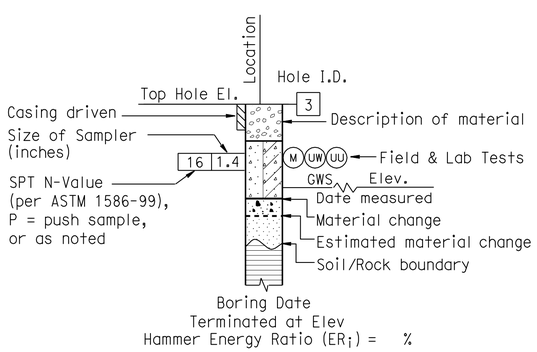

ROTARY BORING

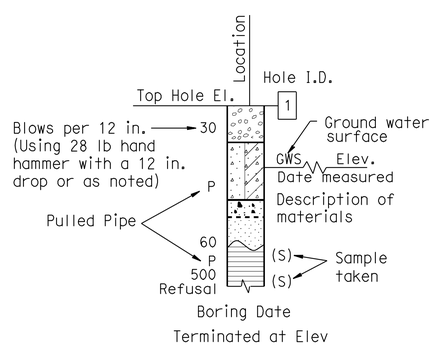

HAND BORING

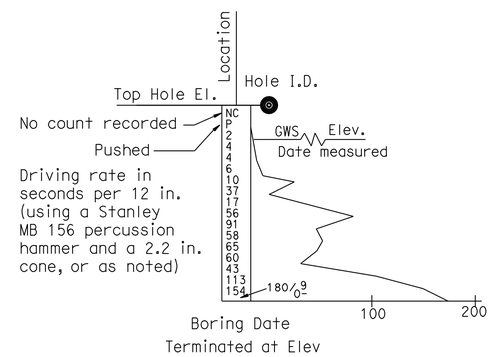

DYNAMIC CONE PENETRATION BORING

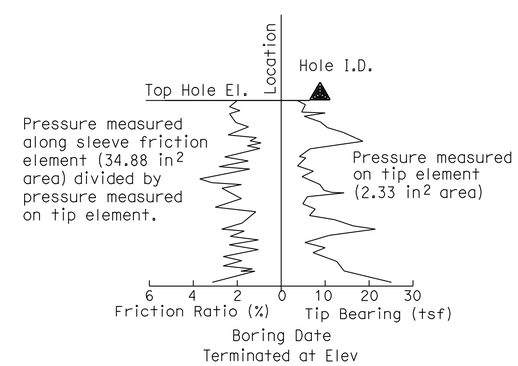

CONE PENETRATION TEST (CPT) BORING

ENGINEERING SERVICES	GEOTECHNICAL SERVICES	STATE OF CALIFORNIA DEPARTMENT OF TRANSPORTATION	DIVISION OF ENGINEERING SERVICES STRUCTURE DESIGN DESIGN BRANCH 15	BRIDGE NO. N/A	RETAINING WALL NO. 1576
	PREPARED BY: I.G-Remmen			POST MILE 29.8	LOG OF TEST BORINGS 2 OF 3

GS LOTB SOIL LEGEND

ORIGINAL SCALE IN INCHES FOR REDUCED PLANS 0 1 2 3

UNIT: 3643
PROJECT NUMBER & PHASE: 07000211191 CONTRACT NO.: 07-1218W1

DISREGARD PRINTS BEARING EARLIER REVISION DATES

REVISION DATES 01-04-12 SHEET 7 OF 8

FILE => rw1576-z-ltb_02.dgn

USERNAME => s109858 DATE PLOTTED => 22-MAY-2012 TIME PLOTTED => 08:37

REFERENCE: CALTRANS SOIL & ROCK LOGGING, CLASSIFICATION, AND PRESENTATION MANUAL (2010)

DIST	COUNTY	ROUTE	POST MILES TOTAL PROJECT	SHEET No	TOTAL SHEETS
07	LA	5	29.4/31.6	893	1931

REGISTERED GEOTECHNICAL ENGINEER 1-13-12

5-21-12
PLANS APPROVAL DATE

REGISTERED PROFESSIONAL ENGINEER Deepa Wathugala No. 2674 Exp. 9-30-12 GEOTECHNICAL STATE OF CALIFORNIA

The State of California or its officers or agents shall not be responsible for the accuracy or completeness of electronic copies of this plan sheet.

GROUP SYMBOLS AND NAMES

Graphic/Symbol	Group Names	Graphic/Symbol	Group Names
GW	Well-graded GRAVEL Well-graded GRAVEL with SAND	CL	Lean CLAY Lean CLAY with SAND Lean CLAY with GRAVEL SANDY lean CLAY SANDY lean CLAY with GRAVEL GRAVELLY lean CLAY GRAVELLY lean CLAY with SAND
GP	Poorly-graded GRAVEL Poorly-graded GRAVEL with SAND		
GW-GM	Well-graded GRAVEL with SILT Well-graded GRAVEL with SILT and SAND	CL-ML	SILTY CLAY SILTY CLAY with SAND SILTY CLAY with GRAVEL SANDY SILTY CLAY SANDY SILTY CLAY with GRAVEL GRAVELLY SILTY CLAY GRAVELLY SILTY CLAY with SAND
GW-GC	Well-graded GRAVEL with CLAY (or SILTY CLAY) Well-graded GRAVEL with CLAY and SAND (or SILTY CLAY and SAND)		
GP-GM	Poorly-graded GRAVEL with SILT Poorly-graded GRAVEL with SILT and SAND	ML	SILT SILT with SAND SILT with GRAVEL SANDY SILT SANDY SILT with GRAVEL GRAVELLY SILT GRAVELLY SILT with SAND
GP-GC	Poorly-graded GRAVEL with CLAY (or SILTY CLAY) Poorly-graded GRAVEL with CLAY and SAND (or SILTY CLAY and SAND)		
GM	SILTY GRAVEL SILTY GRAVEL with SAND	OL	ORGANIC lean CLAY ORGANIC lean CLAY with SAND ORGANIC lean CLAY with GRAVEL SANDY ORGANIC lean CLAY SANDY ORGANIC lean CLAY with GRAVEL GRAVELLY ORGANIC lean CLAY GRAVELLY ORGANIC lean CLAY with SAND
GC	CLAYEY GRAVEL CLAYEY GRAVEL with SAND		
GC-GM	SILTY, CLAYEY GRAVEL SILTY, CLAYEY GRAVEL with SAND	OL	ORGANIC SILT ORGANIC SILT with SAND ORGANIC SILT with GRAVEL SANDY ORGANIC SILT SANDY ORGANIC SILT with GRAVEL GRAVELLY ORGANIC SILT GRAVELLY ORGANIC SILT with SAND
SW	Well-graded SAND Well-graded SAND with GRAVEL		
SP	Poorly-graded SAND Poorly-graded SAND with GRAVEL	CH	Fat CLAY Fat CLAY with SAND Fat CLAY with GRAVEL SANDY fat CLAY SANDY fat CLAY with GRAVEL GRAVELLY fat CLAY GRAVELLY fat CLAY with SAND
SW-SM	Well-graded SAND with SILT Well-graded SAND with SILT and GRAVEL		
SW-SC	Well-graded SAND with CLAY (or SILTY CLAY) Well-graded SAND with CLAY and GRAVEL (or SILTY CLAY and GRAVEL)	MH	Elastic SILT Elastic SILT with SAND Elastic SILT with GRAVEL SANDY elastic SILT SANDY elastic SILT with GRAVEL GRAVELLY elastic SILT GRAVELLY elastic SILT with SAND
SP-SM	Poorly-graded SAND with SILT Poorly-graded SAND with SILT and GRAVEL		
SP-SC	Poorly-graded SAND with CLAY (or SILTY CLAY) Poorly-graded SAND with CLAY and GRAVEL (or SILTY CLAY and GRAVEL)	OH	ORGANIC fat CLAY ORGANIC fat CLAY with SAND ORGANIC fat CLAY with GRAVEL SANDY ORGANIC fat CLAY SANDY ORGANIC fat CLAY with GRAVEL GRAVELLY ORGANIC fat CLAY GRAVELLY ORGANIC fat CLAY with SAND
SM	SILTY SAND SILTY SAND with GRAVEL		
SC	CLAYEY SAND CLAYEY SAND with GRAVEL	OH	ORGANIC elastic SILT ORGANIC elastic SILT with SAND ORGANIC elastic SILT with GRAVEL SANDY ORGANIC elastic SILT SANDY ORGANIC elastic SILT with GRAVEL GRAVELLY ORGANIC elastic SILT GRAVELLY ORGANIC elastic SILT with SAND
SC-SM	SILTY, CLAYEY SAND SILTY, CLAYEY SAND with GRAVEL		
PT	PEAT	OL/OH	ORGANIC SOIL ORGANIC SOIL with SAND ORGANIC SOIL with GRAVEL SANDY ORGANIC SOIL SANDY ORGANIC SOIL with GRAVEL GRAVELLY ORGANIC SOIL GRAVELLY ORGANIC SOIL with SAND
	COBBLES COBBLES and BOULDERS BOULDERS		

FIELD AND LABORATORY TESTING

- (C) Consolidation (ASTM D 2435)
- (CL) Collapse Potential (ASTM D 5333)
- (CP) Compaction Curve (CTM 216)
- (CR) Corrosivity Testing (CTM 643, CTM 422, CTM 417)
- (CU) Consolidated Undrained Triaxial (ASTM D 4767)
- (DS) Direct Shear (ASTM D 3080)
- (EI) Expansion Index (ASTM D 4829)
- (M) Moisture Content (ASTM D 2216)
- (OC) Organic Content-% (ASTM D 2974)
- (P) Permeability (CTM 220)
- (PA) Particle Size Analysis (ASTM D 422)
- (PI) Plasticity Index (AASHTO T 90) Liquid Limit (AASHTO T 89)
- (PL) Point Load Index (ASTM D 5731)
- (PM) Pressure Meter
- (R) R-Value (CTM 301)
- (SE) Sand Equivalent (CTM 217)
- (SG) Specific Gravity (AASHTO T 100)
- (SL) Shrinkage Limit (ASTM D 427)
- (SW) Swell Potential (ASTM D 4546)
- (UC) Unconfined Compression-Soil (ASTM D 2166) Unconfined Compression-Rock (ASTM D 2938)
- (UU) Unconsolidated Undrained Triaxial (ASTM D 2850)
- (UW) Unit Weight (ASTM D 4767)

APPARENT DENSITY OF COHESIONLESS SOILS

Description	SPT N_{60} (Blows / 12 in.)
Very Loose	0 - 5
Loose	5 - 10
Medium Dense	10 - 30
Dense	30 - 50
Very Dense	Greater than 50

MOISTURE

Description	Criteria
Dry	No discernable moisture
Moist	Moisture present, but no free water
Wet	Visible free water

PERCENT OR PROPORTION OF SOILS

Description	Criteria
Trace	Particles are present but estimated to be less than 5%
Few	5% - 10%
Little	15% - 25%
Some	30% - 45%
Mostly	50% - 100%

PARTICLE SIZE

Description		Size (in.)
Boulder		Greater than 12
Cobble		3 - 12
Gravel	Coarse	3/4 - 3
	Fine	1/5 - 3/4
Sand	Coarse	1/16 - 1/5
	Medium	1/64 - 1/16
	Fine	1/300 - 1/64
Silt and Clay		Less than 1/300

ENGINEERING SERVICES

GEOTECHNICAL SERVICES

PREPARED BY: I.G-Remmen

STATE OF CALIFORNIA DEPARTMENT OF TRANSPORTATION

DIVISION OF ENGINEERING SERVICES STRUCTURE DESIGN DESIGN BRANCH 15

BRIDGE NO. N/A

POST MILE 29.8

RETAINING WALL NO. 1576

LOG OF TEST BORINGS 3 OF 3

GS LOTB SOIL LEGEND

ORIGINAL SCALE IN INCHES FOR REDUCED PLANS 0 1 2 3

UNIT: 3643
PROJECT NUMBER & PHASE: 07000211191
CONTRACT NO.: 07-1218W1

DISREGARD PRINTS BEARING EARLIER REVISION DATES

REVISION DATES 01-04-12

SHEET 8 OF 8

FILE => rw1576-z-ltb_03.dgn

USERNAME => s103858 DATE PLOTTED => 22-MAY-2012 TIME PLOTTED => 08:38

DIST	COUNTY	ROUTE	POST MILES TOTAL PROJECT	SHEET No.	TOTAL SHEETS
07	LA	5	29.4/31.6	894	1931

Ulysses N. Smpardos 2-04-12
REGISTERED CIVIL ENGINEER DATE

5-21-12
PLANS APPROVAL DATE

REGISTERED PROFESSIONAL ENGINEER Ulysses N. Smpardos No. 61018 Exp. 12/31/12 CIVIL STATE OF CALIFORNIA

The State of California or its officers or agents shall not be responsible for the accuracy or completeness of electronic copies of this plan sheet.

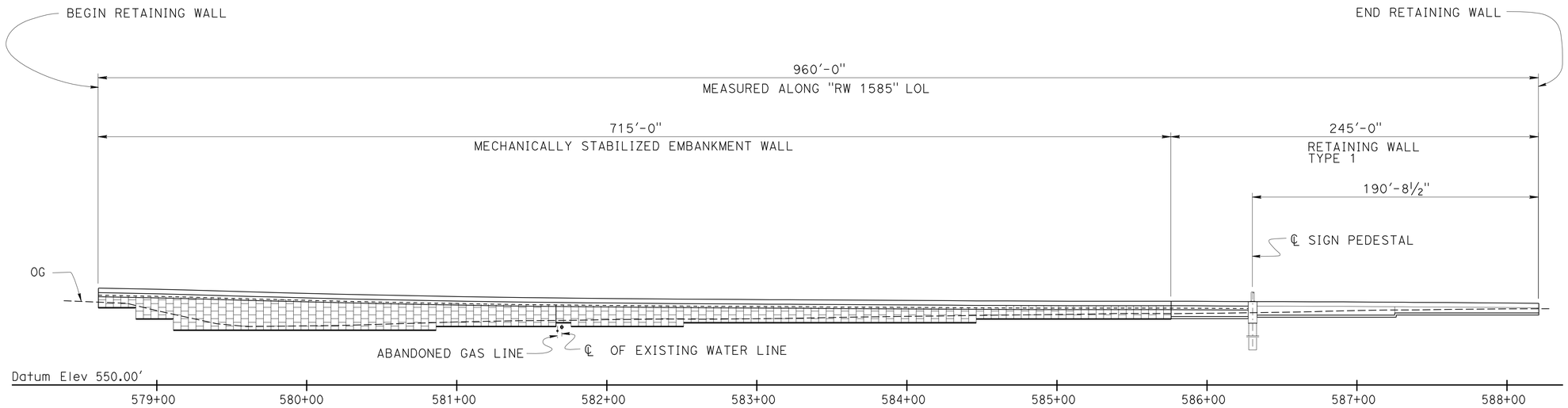

ELEVATION (DEVELOPED & MIRRORED)

1" = 40'-0"

QUANTITIES

STRUCTURE EXCAVATION (RETAINING WALL)	429	CY
STRUCTURE BACKFILL (RETAINING WALL)	428	CY
MECHANICALLY STABILIZED EMBANKMENT, LOCATION D	9,799	SQFT
60" CAST-IN-DRILLED-HOLE CONCRETE PILING	30	LF
STRUCTURAL CONCRETE, RETAINING WALL	129	CY
STRUCTURAL CONCRETE, BARRIER SLAB	365	CY
ARCHITECTURAL TREATMENT	7,145	SQFT
BAR REINFORCING STEEL (RETAINING WALL)	22,213	LB
CONCRETE BARRIER (TYPE 736)	715	LF
CONCRETE BARRIER (TYPE 736A)	239	LF

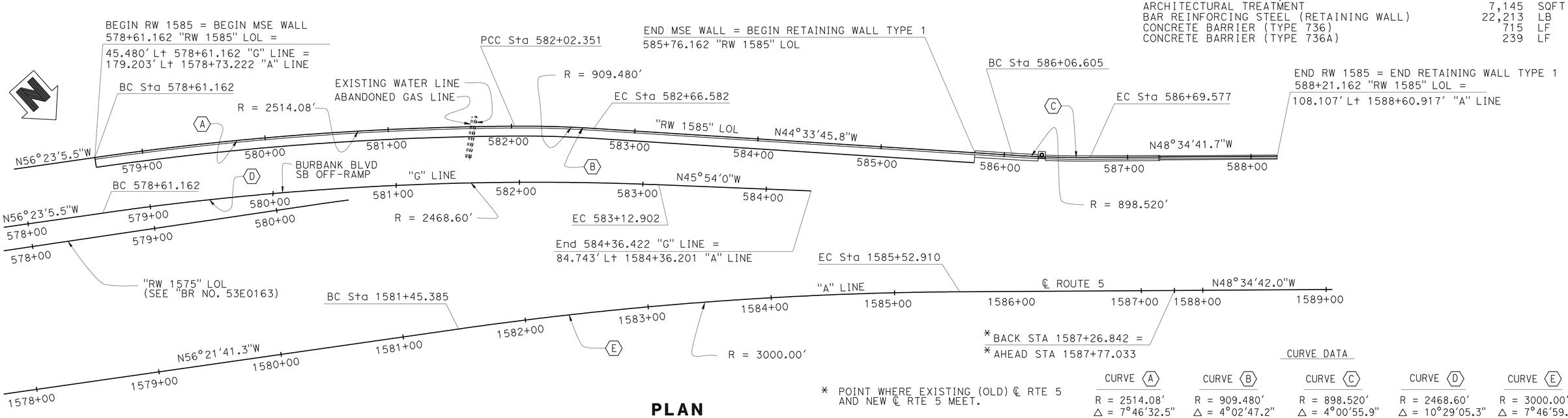

* POINT WHERE EXISTING (OLD) ℄ RTE 5 AND NEW ℄ RTE 5 MEET.

PLAN

1"=40'-0"

CURVE DATA

CURVE A	CURVE B	CURVE C	CURVE D	CURVE E
R = 2514.08'	R = 909.480'	R = 898.520'	R = 2468.60'	R = 3000.00'
Δ = 7°46'32.5"	Δ = 4°02'47.2"	Δ = 4°00'55.9"	Δ = 10°29'05.3"	Δ = 7°46'59.3"
T = 170.857'	T = 32.129'	T = 31.499'	T = 226.503'	T = 204.076'
L = 341.189'	L = 64.231'	L = 62.972'	L = 451.740'	L = 407.525'

Traci Menard
DESIGN ENGINEER

	BY	CHECKED			
DESIGN	Gabriel Galo	Shervin Pahlavan	LOAD & RESISTANCE FACTOR DESIGN	LIVE LOADING: HL93 W/"LOW-BOY"; PERMIT DESIGN VEHICLE	
DETAILS	L. Goldthwait/S. Cholda	Shervin Pahlavan	LAYOUT	Gabriel Galo	Shervin Pahlavan
QUANTITIES	Gabriel Galo	Traci Menard	SPECIFICATIONS	James Choi	PLANS AND SPECS COMPARED Ulysses Smpardos

ORIGINAL SCALE IN INCHES FOR REDUCED PLANS 0 1 2 3

STATE OF CALIFORNIA
DEPARTMENT OF TRANSPORTATION

DIVISION OF ENGINEERING SERVICES
STRUCTURE DESIGN
DESIGN BRANCH 15

BRIDGE NO. 53E0164
POST MILE 29.9

RETAINING WALL NO. 1585
GENERAL PLAN NO. 1

UNIT: 3604
PROJECT NUMBER & PHASE: 0700021119
CONTRACT NO.: 07-1218W1

DISREGARD PRINTS BEARING EARLIER REVISION DATES

REVISION DATES 11-25-11 06-12-12 05-08-12 06-06-12

SHEET 1 OF 26

STRUCTURES DESIGN GENERAL PLAN SHEET (ENGLISH) (REV.09-01-10)

FILE => 53e0164-a-gp01.dgn

USERNAME => s121614 DATE PLOTTED => 13-JUN-2012 TIME PLOTTED => 09:42

DIST	COUNTY	ROUTE	POST MILES TOTAL PROJECT	SHEET No.	TOTAL SHEETS
07	LA	5	29.4/31.6	895	1931

Ulysses N. Smpardos 2-04-12
REGISTERED CIVIL ENGINEER DATE

5-21-12
PLANS APPROVAL DATE

REGISTERED PROFESSIONAL ENGINEER
Ulysses N. Smpardos
No. 61018
Exp. 12/31/12
CIVIL
STATE OF CALIFORNIA

The State of California or its officers or agents shall not be responsible for the accuracy or completeness of electronic copies of this plan sheet.

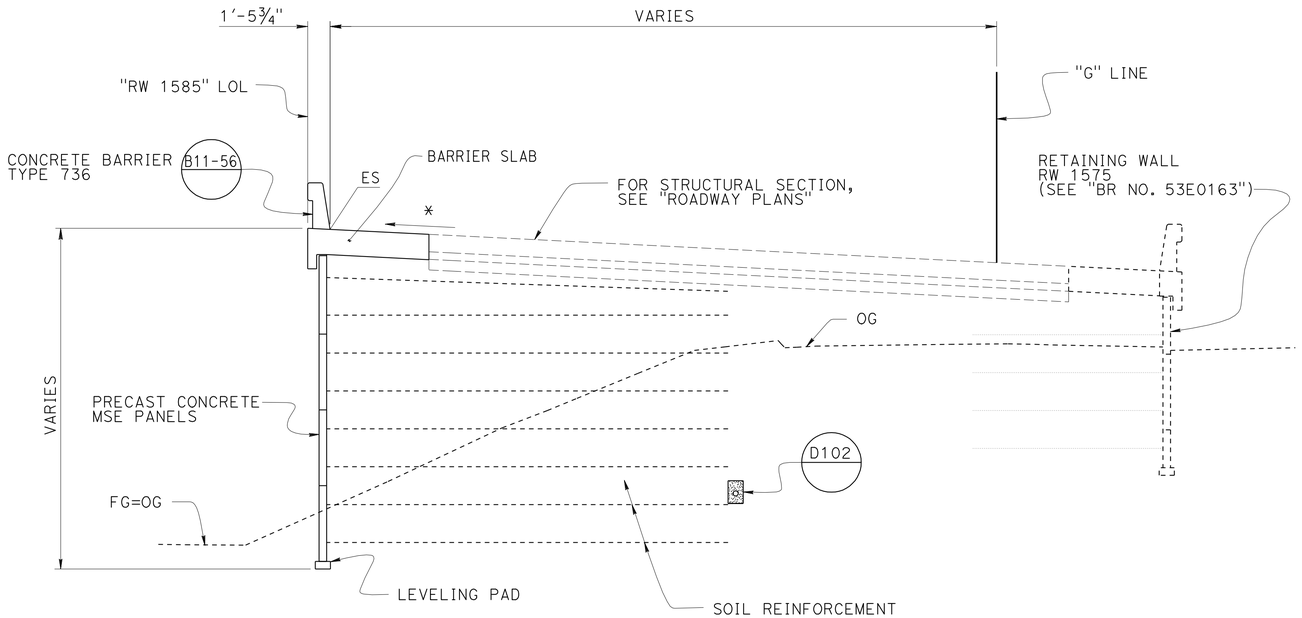

* MATCH ROADWAY SLOPE

TYPICAL SECTION

1" = 5'-0"

STA 578+61.16 "RW 1585" LOL TO STA 580+62.79 "RW 1585" LOL

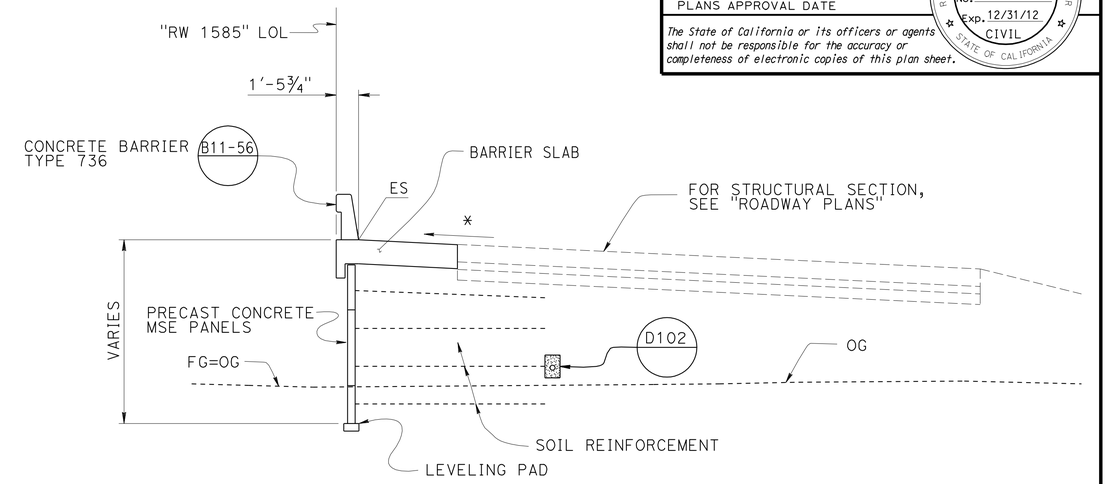

* MATCH ROADWAY SLOPE

TYPICAL SECTION

1" = 5'-0"

STA 580+62.79 "RW 1585" LOL TO STA 585+76.16 "RW 1585" LOL

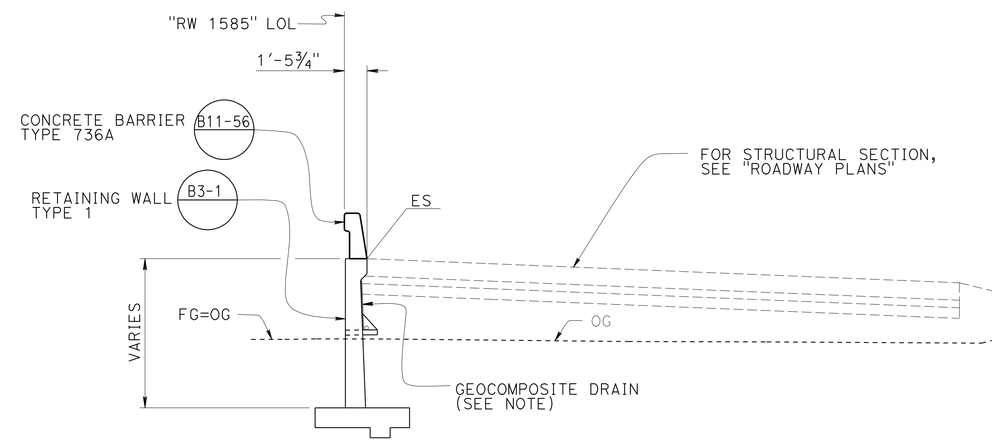

Note:
For Drain details, see "WEEP HOLE AND GEOCOMPOSITE DRAIN" on MISCELLANEOUS DETAILS NO. 1" sheet.

TYPICAL SECTION

1" = 5'-0"

STA 585+76.16 "RW 1585" LOL TO STA 586.27.579 "RW 1585" LOL & STA 586+33.33 "RW 1585" LOL TO STA 588+21.16 "RW 1585" LOL

Traci Menard
DESIGN ENGINEER

	BY	CHECKED			
DESIGN	Gabriel Galo	Shervin Pahlavan	LOAD & RESISTANCE FACTOR DESIGN	LIVE LOADING: HL93 W/"LOW-BOY"; PERMIT DESIGN VEHICLE	
DETAILS	L. Goldthwait/S. Cholda	Shervin Pahlavan	LAYOUT	Gabriel Galo	Shervin Pahlavan
QUANTITIES	Gabriel Galo	Traci Menard	SPECIFICATIONS	James Hoi	PLANS AND SPECS COMPARED Ulysses Smpardos

ORIGINAL SCALE IN INCHES FOR REDUCED PLANS 0 1 2 3

STATE OF CALIFORNIA
DEPARTMENT OF TRANSPORTATION

DIVISION OF ENGINEERING SERVICES
STRUCTURE DESIGN
DESIGN BRANCH 15

BRIDGE NO. 53E0164
POST MILE 29.9

RETAINING WALL NO. 1585
GENERAL PLAN NO. 2

UNIT: 3604
PROJECT NUMBER & PHASE: 0700021119
CONTRACT NO.: 07-1218W1

DISREGARD PRINTS BEARING EARLIER REVISION DATES

REVISION DATES: 01-19-12 06-07-12 06-11-12 06-12-12

SHEET 2 OF 26

USERNAME => s124496 DATE PLOTTED => 10-JUL-2012 TIME PLOTTED => 15:56

STRUCTURES DESIGN GENERAL PLAN SHEET (ENGLISH) (REV.09-01-10)

FILE => 53e0164-a-gp02.dgn

DIST	COUNTY	ROUTE	POST MILES TOTAL PROJECT	SHEET No.	TOTAL SHEETS
07	LA	5	29.4/31.6	896	1931

Ulysses N. Smpardos 2-04-12
REGISTERED CIVIL ENGINEER DATE

5-21-12
PLANS APPROVAL DATE

REGISTERED PROFESSIONAL ENGINEER Ulysses N. Smpardos No. 61018 Exp. 12/31/12 CIVIL STATE OF CALIFORNIA

The State of California or its officers or agents shall not be responsible for the accuracy or completeness of electronic copies of this plan sheet.

INDEX TO PLANS

SHEET NO.	TITLE
1.	GENERAL PLAN NO. 1
2.	GENERAL PLAN NO. 2
3.	INDEX TO PLANS
4.	FOUNDATION PLAN NO. 1
5.	FOUNDATION PLAN NO. 2
6.	STRUCTURE PLAN NO. 1
7.	STRUCTURE PLAN NO. 2
8.	STRUCTURE PLAN NO. 3
9.	STRUCTURE PLAN NO. 4
10.	STRUCTURE PLAN NO. 5
11.	MISCELLANEOUS DETAILS NO. 1
12.	MISCELLANEOUS DETAILS NO. 2
13.	DRAINAGE DETAILS NO. 1
14.	DRAINAGE DETAILS NO. 2
15.	DRAINAGE DETAILS NO. 3
16.	DRAINAGE DETAILS NO. 4
17.	SIGN SUPPORT DETAILS
18.	CONCRETE BARRIER SLAB DETAILS
19.	MECHANICALLY STABILIZED EMBANKMENT DETAILS NO. 1
20.	MECHANICALLY STABILIZED EMBANKMENT DETAILS NO. 2
21.	MECHANICALLY STABILIZED EMBANKMENT DETAILS NO. 3
22.	MECHANICALLY STABILIZED EMBANKMENT DETAILS NO. 6*
23.	LOG OF TEST BORINGS 1 OF 4
24.	LOG OF TEST BORINGS 2 OF 4
25.	LOG OF TEST BORINGS 3 OF 4
26.	LOG OF TEST BORINGS 4 OF 4

* "MECHANICALLY STABILIZED EMBANKMENT DETAILS NO. 4" and "MECHANICALLY STABILIZED EMBANKMENT NO. 5" sheets are not part of "INDEX TO PLANS"

STANDARD PLANS DATED MAY 2006

A10A	ACRONYMS AND ABBREVIATIONS (SHEET 1 OF 2)
A10B	ACRONYMS AND ABBREVIATIONS (SHEET 2 OF 2)
B0-3	BRIDGE DETAILS
B3-1	RETAINING WALL TYPE 1 - H=4' THROUGH 30'
B3-8	RETAINING WALL DETAILS NO. 1
B11-56	CONCRETE BARRIER TYPE 736
D102	UNDERDRAINS
S3	OVERHEAD SIGN - TRUSS SINGLE POST TYPE BASE PLATE AND ANCHORAGE DETAILS
S7	OVERHEAD SIGN - TRUSS SINGLE POST TYPE SQUARE PEDESTAL PILE FOUNDATION

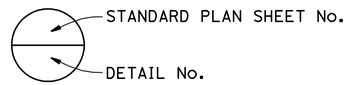

Notes:

For General Notes, see "DESIGN DATA" on "CONCRETE BARRIER SLAB DETAILS" sheet and "GENERAL NOTES LOAD AND RESISTANCE FACTOR DESIGN" on "MECHANICALLY STABILIZED EMBANKMENT-DETAILS NO. 2" sheet.

STEEL SOIL REINFORCEMENT FOR LOAD CASE 1

SOIL REINFORCEMENT DESIGNATION LETTER	Ⓐ	Ⓑ	Ⓒ	Ⓓ	Ⓔ	Ⓕ	Ⓖ	Ⓗ
WALL HEIGHT	6'-8"	9'-2"	11'-8"	14'-2"	16'-8"	19'-2"	21'-8"	24'-2"
WALL BASE WIDTH	9'-6"	9'-6"	9'-6"	11'-6"	13'-6"	15'-6"	17'-6"	18'-6"
	TOP 4-W15xW15 @ 6	TOP 4-W15xW15 @ 6	TOP 4-W15xW15 @ 6	TOP 4-W15xW15 @ 6	TOP 4-W15xW15 @ 6	TOP 4-W15xW15 @ 6	TOP 4-W15xW15 @ 6	TOP 4-W15xW15 @ 6
	BOT 4-W15xW15 @ 6	1 OF 4-W15xW15 @ 6	2 OF 4-W15xW15 @ 6	3 OF 4-W15xW15 @ 6	3 OF 4-W15xW15 @ 6	4 OF 4-W15xW15 @ 6	4 OF 4-W15xW15 @ 18	4 OF 4-W15xW15 @ 18
	———	BOT 4-W15xW15 @ 6	BOT 4-W20xW15 @ 9	BOT 4-W20xW15 @ 9	1 OF 4-W20xW15 @ 9	1 OF 4-W20xW15 @ 9	2 OF 4-W20xW15 @ 24	3 OF 4-W20xW15 @ 24
	———	———	———	———	BOT 4-W20xW15 @ 9	BOT 4-W20xW15 @ 9	BOT 4-W20xW15 @ 24	BOT 4-W20xW15 @ 24
SOIL REINFORCEMENT DESIGNATION LETTER	Ⓘ	Ⓙ	Ⓚ	Ⓛ	Ⓜ	Ⓝ	Ⓞ	Ⓟ
WALL HEIGHT	26'-8"	29'-2"	31'-8"	34'-2"	36'-8"	39'-2"	41'-8"	44'-2"
WALL BASE WIDTH	20'-6"	21'-6"	23'-6"	25'-6"	26'-6"	29'-6"	30'-6"	33'-6"
	TOP 4-W15xW15 @ 6	TOP 4-W15xW15 @ 6	TOP 4-W15xW15 @ 6	TOP 4-W15xW15 @ 18	TOP 4-W15xW15 @ 18	TOP 4-W15xW15 @ 18	TOP 4-W15xW15 @ 18	TOP 4-W15xW15 @ 18
	4 OF 4-W15xW15 @ 18	4 OF 4-W15xW15 @ 18	4 OF 4-W15xW15 @ 18	4 OF 4-W15xW15 @ 18	4 OF 4-W15xW15 @ 18	4 OF 4-W15xW15 @ 18	4 OF 4-W15xW15 @ 18	4 OF 4-W15xW15 @ 18
	3 OF 4-W20xW15 @ 24	3 OF 4-W20xW15 @ 24	4 OF 4-W20xW15 @ 24	4 OF 4-W20xW15 @ 24	4 OF 4-W20xW15 @ 24	5 OF 4-W20xW15 @ 24	5 OF 4-W20xW15 @ 24	5 OF 4-W20xW15 @ 24
	1 OF 6-W25xW15 @ 24	2 OF 6-W25xW15 @ 24	2 OF 6-W25xW15 @ 30	3 OF 6-W25xW15 @ 30	4 OF 6-W25xW15 @ 30	4 OF 6-W25xW15 @ 30	5 OF 6-W25xW15 @ 30	6 OF 6-W25xW15 @ 30
	BOT 6-W25xW15 @ 24	BOT 6-W25xW15 @ 24	BOT 6-W25xW15 @ 30	BOT 6-W25xW15 @ 30	BOT 6-W25xW15 @ 30	BOT 6-W25xW15 @ 30	BOT 6-W25xW15 @ 30	BOT 6-W25xW15 @ 30

	BY	CHECKED
DESIGN	Gabriel Galo	Shervin Pahlavan
DETAILS	Stan Cholda	Shervin Pahlavan
QUANTITIES	Gabriel Galo	Traci Menard

STATE OF CALIFORNIA
DEPARTMENT OF TRANSPORTATION

DIVISION OF ENGINEERING SERVICES
STRUCTURE DESIGN
DESIGN BRANCH 15

BRIDGE NO. 53E0164
POST MILE 29.9

RETAINING WALL NO. 1585
INDEX TO PLANS

STRUCTURES DESIGN DETAIL SHEET (ENGLISH) (REV. 09-01-10)

ORIGINAL SCALE IN INCHES FOR REDUCED PLANS 0 1 2 3

UNIT: 3604
PROJECT NUMBER & PHASE: 0700021119
CONTRACT NO.: 07-1218W1

DISREGARD PRINTS BEARING EARLIER REVISION DATES

REVISION DATES 01-19-12 07-10-12 04-12-12 04-24-12

SHEET 3 OF 26

FILE => 53e0164-a-ltp.dgn

USERNAME => s124496 DATE PLOTTED => 10-JUL-2012 TIME PLOTTED => 15:51

DIST	COUNTY	ROUTE	POST MILES TOTAL PROJECT	SHEET No.	TOTAL SHEETS
07	LA	5	29.4/31.6	897	1931

Ulysses N. Smpardos 2-04-12
REGISTERED CIVIL ENGINEER DATE

5-21-12
PLANS APPROVAL DATE

REGISTERED PROFESSIONAL ENGINEER Ulysses N. Smpardos No. 61018 Exp. 12/31/12 CIVIL STATE OF CALIFORNIA

The State of California or its officers or agents shall not be responsible for the accuracy or completeness of electronic copies of this plan sheet.

CURVE DATA

No.	R	Δ	T	L
A	2514.08	7°46'32.5"	170.86	341.19
B	909.48	4°02'47.2"	32.13	64.23
C	3000.00	07°46'59"	204.08	407.52

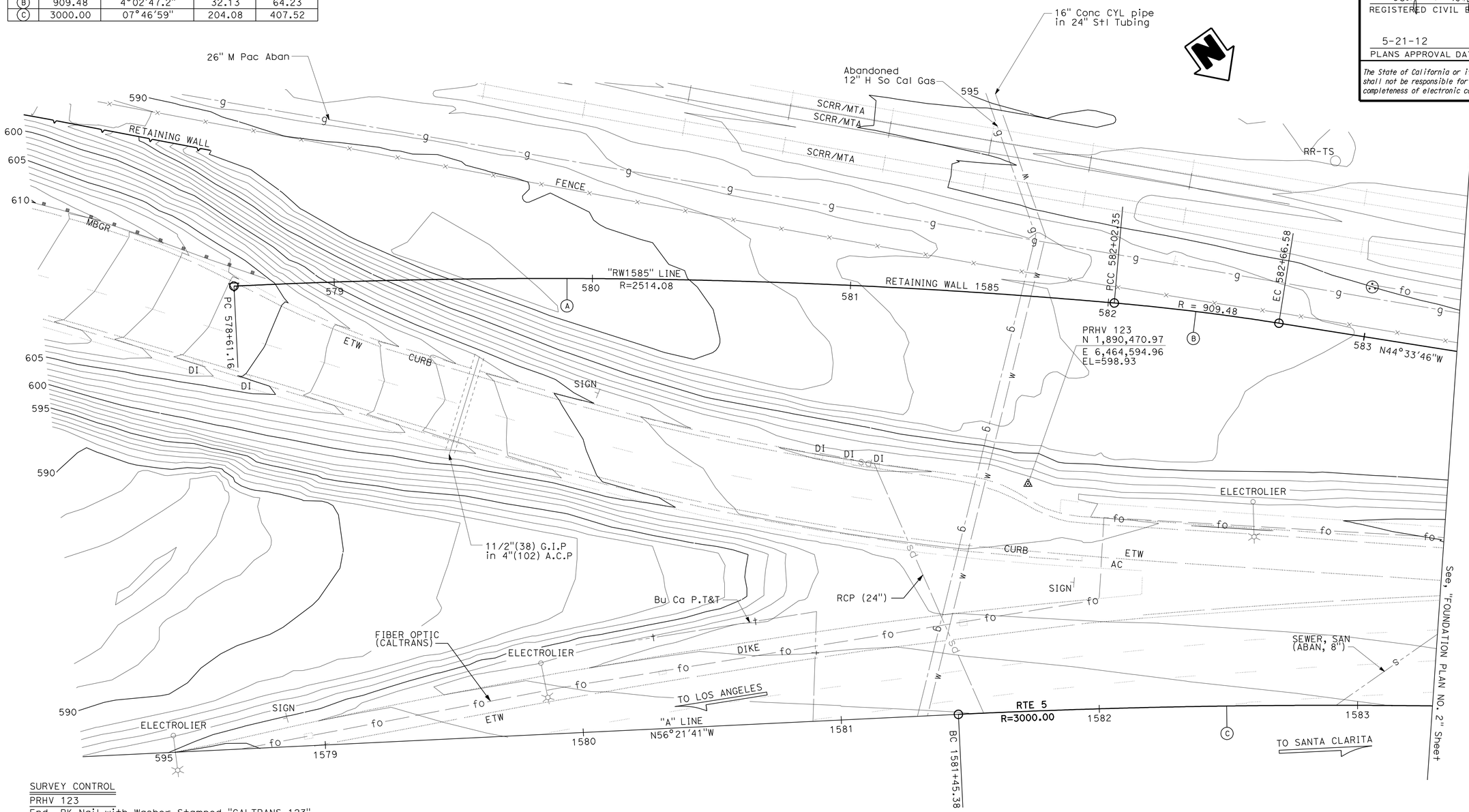

SURVEY CONTROL

PRHV 123

Fnd PK Nail with Washer Stamped "CALTRANS 123"
88.00 Ft Lt. Rte 5
Sta. 1581+75.69
N 1,890,470.97
E 6,464,594.96
Elev. = 598.93

PRHV 127 (Shown on "FOUNDATION PLAN NO. 2" Sheet

Fnd PK Nail with Washer Stamped "CALTRANS 127"
67.36 Ft Lt. Rte 5
Sta. 1585+96.99
N 1,890,753.54
E 6,464,269.04
Elev. = 604.23

FOUNDATION PLAN

1" = 20'-0"

PRELIMINARY INVESTIGATION SECTION

SCALE	VERT.DATUM NAVD88	PHOTOGRAMMETRY AS OF: X			
1"=20'	HORZ.DATUM NAD83	SURVEYED	BY District	CHECKED	BY J. PALLARES 10/2011
ALIGNMENT TIES Dist. Traverse Sheet		DRAFTED	BY C. Fassett 10/2011	CHECKED	BY J. PALLARES 10/2011

	BY	CHECKED
DESIGN	Gabriel Galo	Shervin Pahlavan
DETAILS	Stan Cholda	Shervin Pahlavan
QUANTITIES	Gabriel Galo	Traci Menard

STATE OF CALIFORNIA DEPARTMENT OF TRANSPORTATION

DIVISION OF ENGINEERING SERVICES STRUCTURE DESIGN DESIGN BRANCH 15

BRIDGE NO. 53E0164
POST MILE 29.9

RETAINING WALL NO. 1585
FOUNDATION PLAN NO. 1

STRUCTURES FOUNDATION PLAN SHEET (ENGLISH) (REV. 09-01-10)

ORIGINAL SCALE IN INCHES FOR REDUCED PLANS 0 1 2 3

UNIT: 3604
PROJECT NUMBER & PHASE: 0700021119 CONTRACT NO.: 07-1218W1

DISREGARD PRINTS BEARING EARLIER REVISION DATES

REVISION DATES 10/31/11 06/11/12 06/12/12 03/30/12

SHEET 4 OF 25

FILE => 53e0164-e-fdp_01.dgn

DIST	COUNTY	ROUTE	POST MILES TOTAL PROJECT	SHEET No.	TOTAL SHEETS
07	LA	5	29.4/31.6	898	1931

Ulysses N. Smpardos 2-04-12
REGISTERED CIVIL ENGINEER DATE

5-21-12
PLANS APPROVAL DATE

REGISTERED PROFESSIONAL ENGINEER
Ulysses N. Smpardos
No. 61018
Exp. 12/31/12
CIVIL
STATE OF CALIFORNIA

The State of California or its officers or agents shall not be responsible for the accuracy or completeness of electronic copies of this plan sheet.

CURVE DATA

No.	R	Δ	T	L
(D)	898.52	-4°00'56"	31.50	62.97

Legend:

XXX.XX Denotes bottom of footing elevation

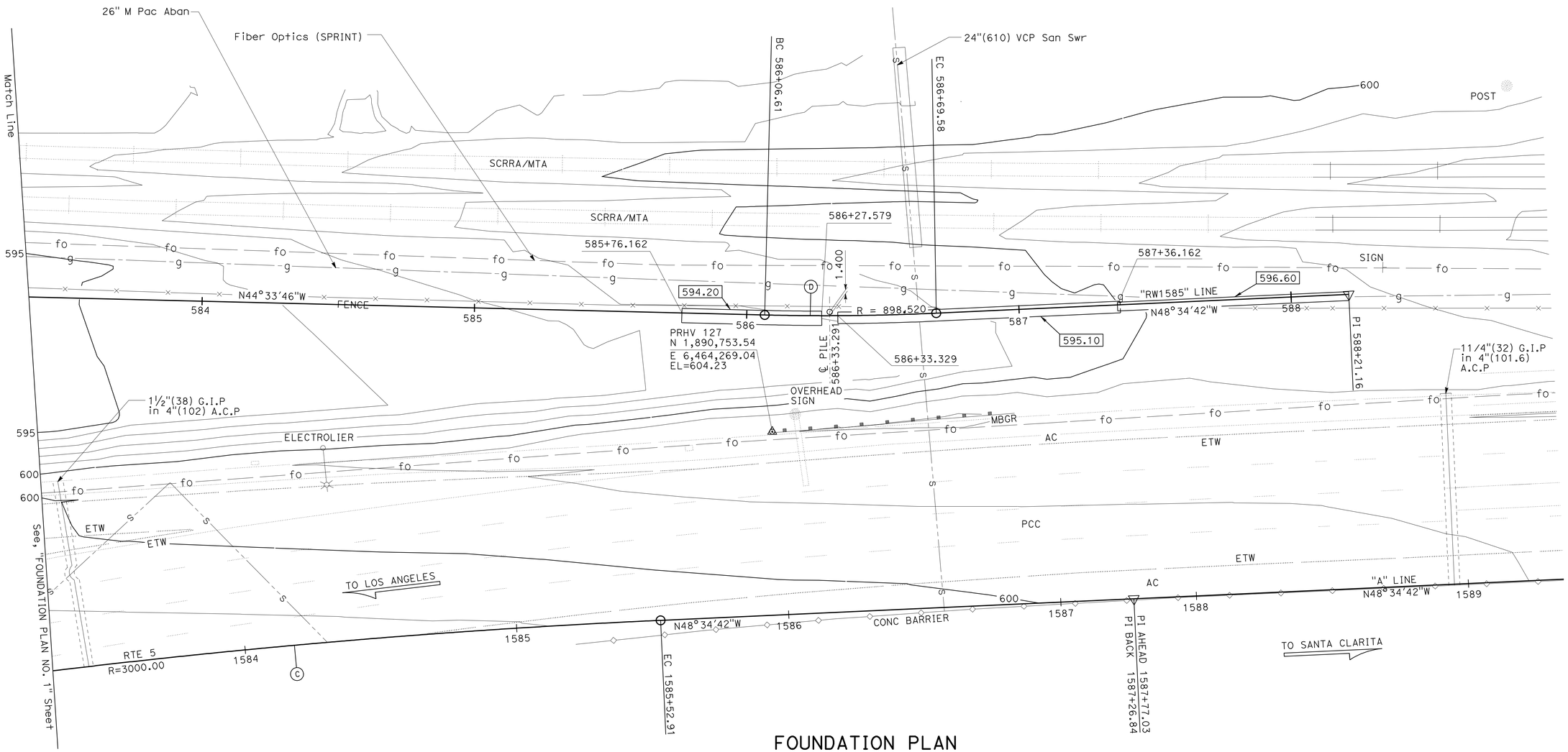

FOUNDATION PLAN

1" = 20'-0"

PRELIMINARY INVESTIGATION SECTION									
SCALE 1"=20'	VERT.DATUM NAVD88	PHOTOGRAMMETRY AS OF: X							
	HORZ.DATUM NAD83	SURVEYED	BY District		CHECKED	BY J. PALLARES	10/2011		
	ALIGNMENT TIES Dist. Traverse Sheet	DRAFTED	BY C. Fassett	10/2011	CHECKED	BY J. PALLARES	10/2011		

	BY	CHECKED
DESIGN	Gabriel Galo	Shervin Pahlavan
DETAILS	Stan Cholda	Shervin Pahlavan
QUANTITIES	Gabriel Galo	Traci Menard

STATE OF CALIFORNIA
DEPARTMENT OF TRANSPORTATION

DIVISION OF ENGINEERING SERVICES
STRUCTURE DESIGN
DESIGN BRANCH 15

BRIDGE NO. 53E0164
POST MILE 29.9

RETAINING WALL NO. 1585
FOUNDATION PLAN NO. 2

STRUCTURES FOUNDATION PLAN SHEET (ENGLISH) (REV. 09-01-10)

ORIGINAL SCALE IN INCHES FOR REDUCED PLANS 0 1 2 3

UNIT: 3604
PROJECT NUMBER & PHASE: 0700021119
CONTRACT NO.: 07-1218WI

DISREGARD PRINTS BEARING EARLIER REVISION DATES

REVISION DATES: 10/31/11 02-08-12 03-07-12 03-15-12

SHEET 5 OF 25

FILE => 53e0164-e-fdp_02.dgn

DIST	COUNTY	ROUTE	POST MILES TOTAL PROJECT	SHEET No.	TOTAL SHEETS
07	LA	5	29.4/31.6	899	1931

REGISTERED CIVIL ENGINEER — DATE 2-04-12

5-21-12
PLANS APPROVAL DATE

REGISTERED PROFESSIONAL ENGINEER — Ulysses N. Smpardos — No. 61018 — Exp. 12/31/12 — CIVIL — STATE OF CALIFORNIA

The State of California or its officers or agents shall not be responsible for the accuracy or completeness of electronic copies of this plan sheet.

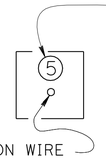

PANEL LEGEND

NO SCALE

Notes:

1. For Architectural Treatment on MSE Wall, see "MISCELLANEOUS DETAILS NO. 2" sheet.
2. Finish Grade approximaly equal to Original Ground.

Legend:

(H) to (G) - Indicates Soil Reinforcement designation letter. For details, see "STEEL REINFORCEMENT FOR LOAD CASE 1" Table on "INDEX TO PLANS" sheet.

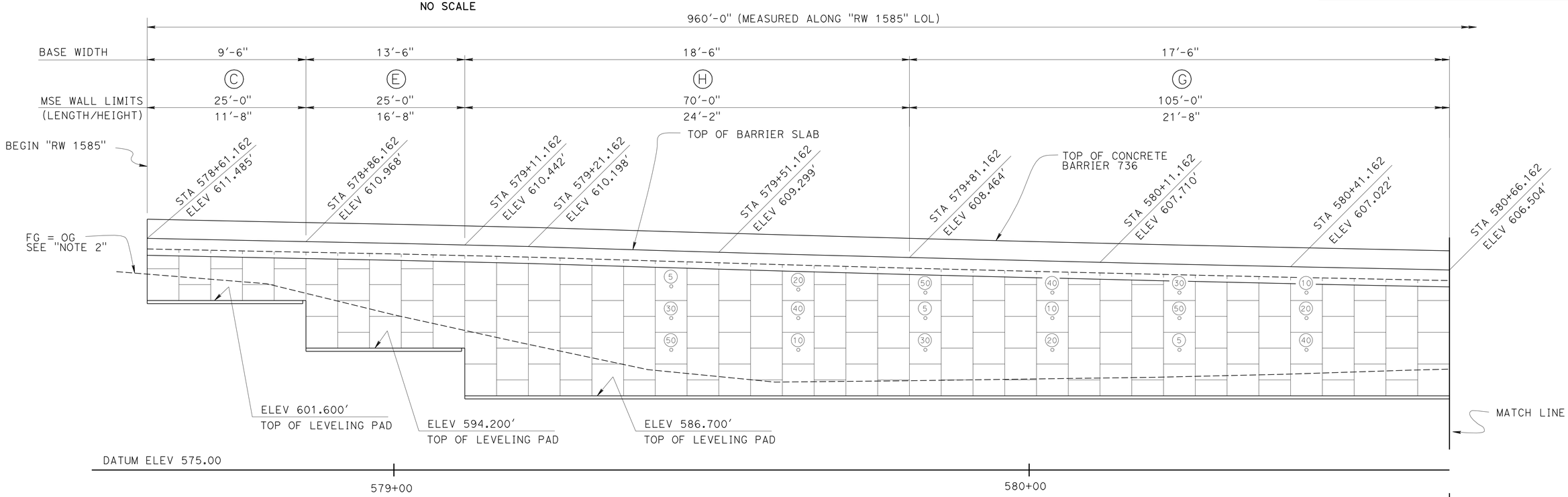

ELEVATION (MIRRORED & DEVELOPED)

1/8" = 1'-0"

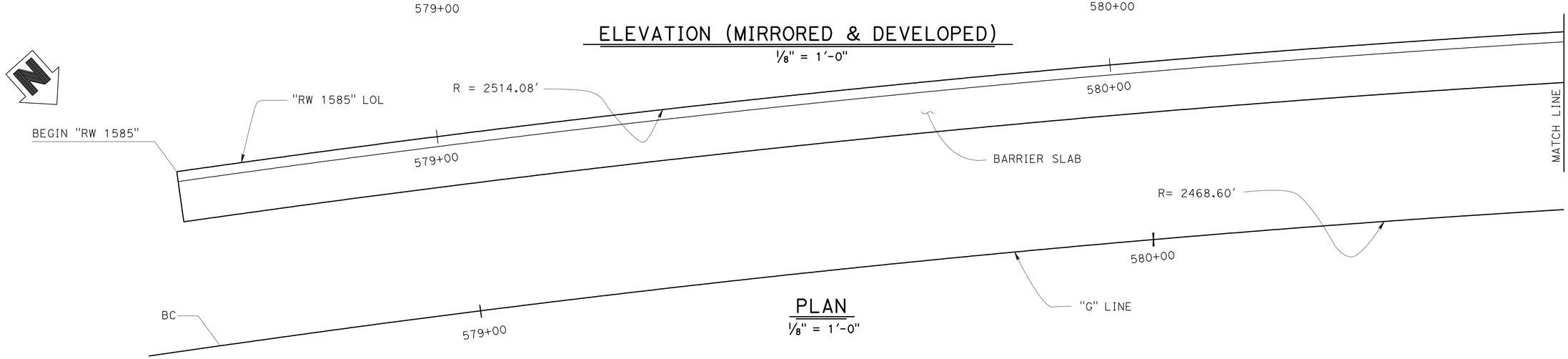

PLAN

1/8" = 1'-0"

DESIGN	BY Gabriel Galo	CHECKED Shervin Pahlavan	
DETAILS	BY L. Goldthwait/S. Cholda	CHECKED Shervin Pahlavan	
QUANTITIES	BY Gabriel Galo	CHECKED Traci Menard	

STATE OF CALIFORNIA
DEPARTMENT OF TRANSPORTATION

DIVISION OF ENGINEERING SERVICES
STRUCTURE DESIGN
DESIGN BRANCH 15

BRIDGE NO. 53E0164
POST MILE 29.9

RETAINING WALL NO. 1585
STRUCTURE PLAN NO. 1

STRUCTURES DESIGN DETAIL SHEET (ENGLISH) (REV. 09-01-10)

ORIGINAL SCALE IN INCHES FOR REDUCED PLANS 0 1 2 3

UNIT: 3604
PROJECT NUMBER & PHASE: 0700021119
CONTRACT NO.: 07-1218W1

DISREGARD PRINTS BEARING EARLIER REVISION DATES

REVISION DATES: 12-01-11 06-11-12 06-12-12 06-05-12

SHEET 6 OF 26

FILE => 53e0164-g-det01.dgn

USERNAME => s121614 DATE PLOTTED => 13-JUN-2012 TIME PLOTTED => 09:43

DIST	COUNTY	ROUTE	POST MILES TOTAL PROJECT	SHEET No.	TOTAL SHEETS
07	LA	5	29.4/31.6	900	1931

REGISTERED CIVIL ENGINEER — DATE 2-04-12

5-21-12
PLANS APPROVAL DATE

REGISTERED PROFESSIONAL ENGINEER — Ulysses N. Smpardos — No. 61018 — Exp. 12/31/12 — CIVIL — STATE OF CALIFORNIA

The State of California or its officers or agents shall not be responsible for the accuracy or completeness of electronic copies of this plan sheet.

Notes:

1. For Architectural Treatment on MSE Wall, see "MISCELLANEOUS DETAILS NO. 2" sheet.
2. Finish Grade approximaly equal to Original Ground.

Legend:

Ⓖ to Ⓓ - Indicates Soil Reinforcement designation letter. For details, see "STEEL REINFORCEMENT FOR LOAD CASE 1" Table on "INDEX TO PLANS" sheet.

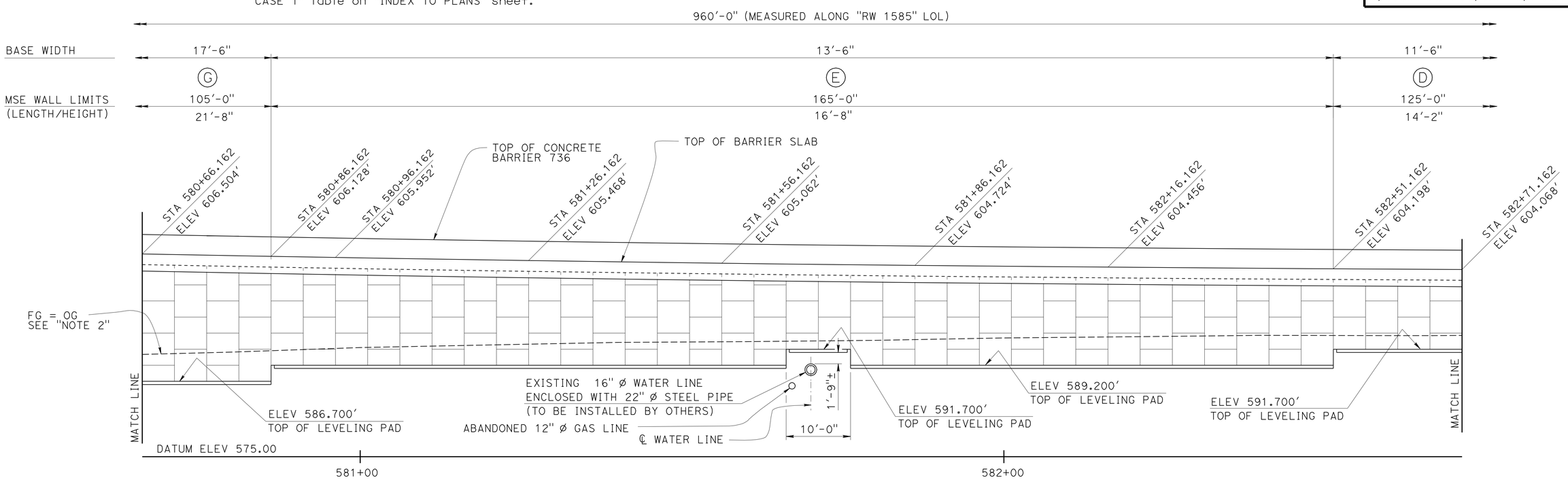

ELEVATION (MIRRORED & DEVELOPED)

1/8" = 1'-0"

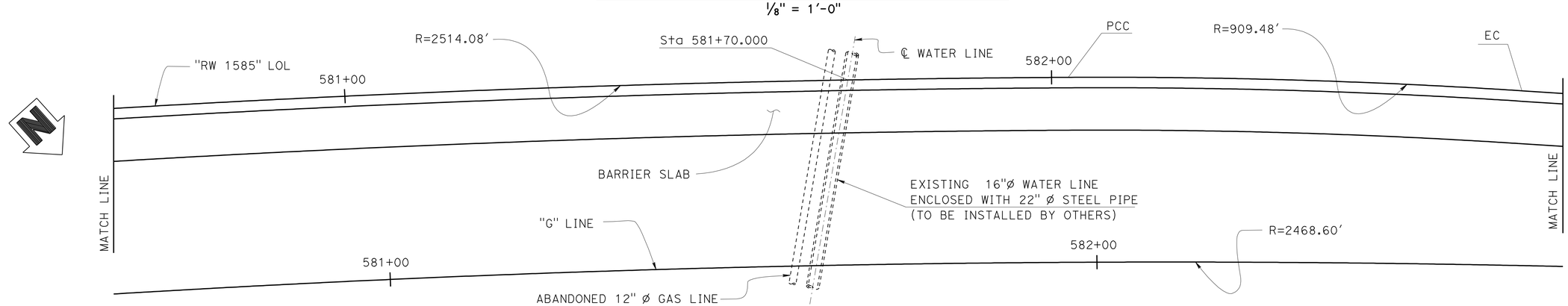

PLAN

1/8" = 1'-0"

DESIGN	BY Gabriel Galo	CHECKED Shervin Pahlavan	
DETAILS	BY L. Goldthwait/S. Cholda	CHECKED Shervin Pahlavan	
QUANTITIES	BY Gabriel Galo	CHECKED Traci Menard	

STATE OF CALIFORNIA
DEPARTMENT OF TRANSPORTATION

DIVISION OF ENGINEERING SERVICES
STRUCTURE DESIGN
DESIGN BRANCH 15

BRIDGE NO. 53E0164
POST MILE 29.9

RETAINING WALL NO. 1585
STRUCTURE PLAN NO. 2

STRUCTURES DESIGN DETAIL SHEET (ENGLISH) (REV. 09-01-10)

ORIGINAL SCALE IN INCHES FOR REDUCED PLANS 0 1 2 3

UNIT: 3604
PROJECT NUMBER & PHASE: 0700021119
CONTRACT NO.: 07-1218W1

DISREGARD PRINTS BEARING EARLIER REVISION DATES

REVISION DATES: 12-01-11 06-01-12 06-11-12 06-12-12

SHEET 7 OF 26

FILE => 53e0164-g-det02.dgn

USERNAME => s132614 DATE PLOTTED => 13-JUN-2012 TIME PLOTTED => 09:43