Dist	COUNTY	ROUTE	POST MILES TOTAL PROJECT	SHEET No.	TOTAL SHEETS
07	LA	5	29.4/31.6	101	1931

REGISTERED CIVIL ENGINEER 1/20/12 DATE

5-21-12
PLANS APPROVAL DATE

REGISTERED PROFESSIONAL ENGINEER THAO T. TRAN No. C66879 Exp. 9/30/12 CIVIL STATE OF CALIFORNIA

THE STATE OF CALIFORNIA OR ITS OFFICERS OR AGENTS SHALL NOT BE RESPONSIBLE FOR THE ACCURACY OR COMPLETENESS OF SCANNED COPIES OF THIS PLAN SHEET.

CURVE DATA

No. ⊙	R	Δ	T	L
47	164.04′	30°59′43"	45.49′	88.74′
48	60.00′	111°8′11"	87.52′	116.38′
49	531.50′	3°53′02"	18.02′	36.03′

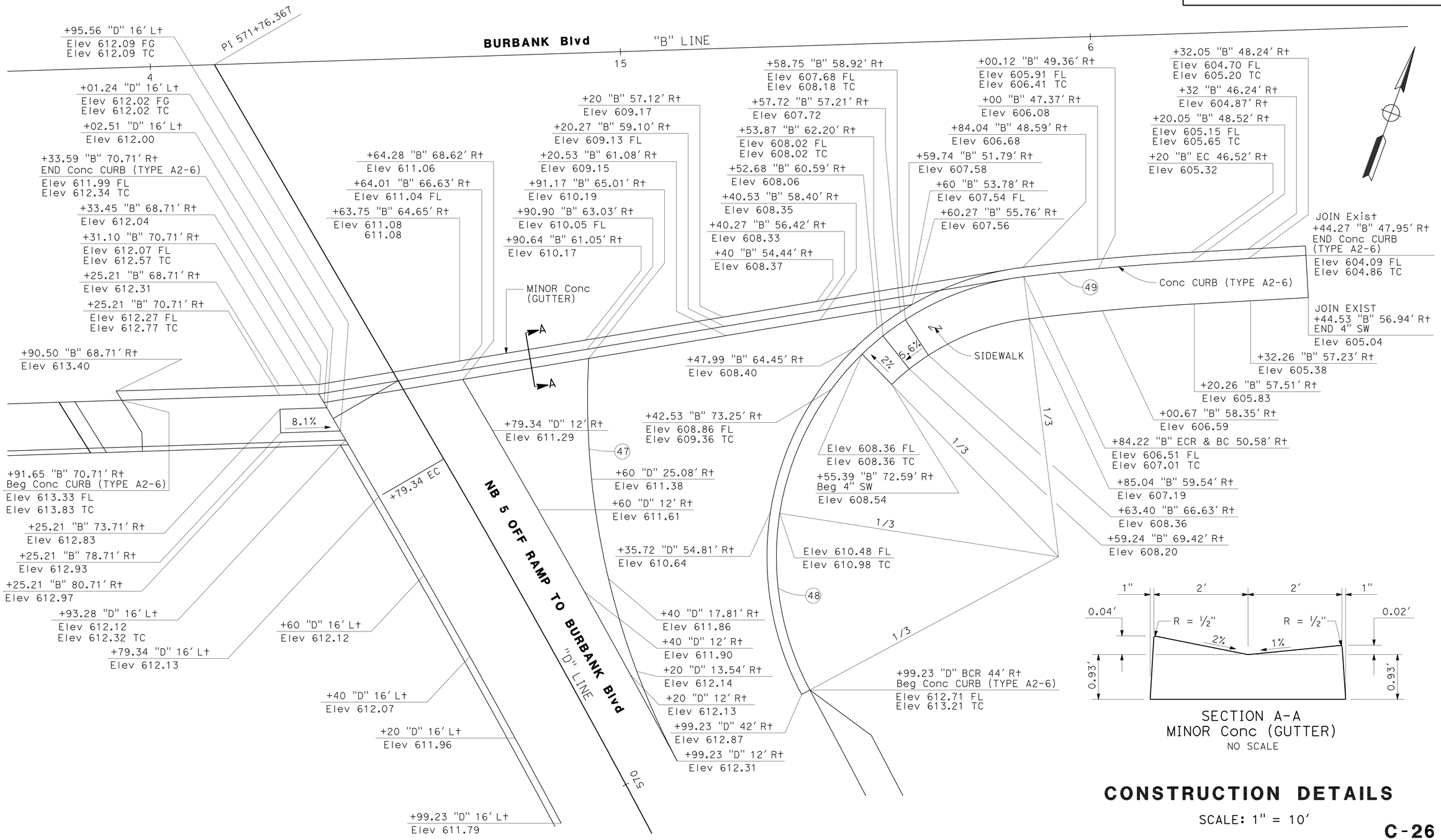

CONSTRUCTION DETAILS

SCALE: 1" = 10′

C-26

REVISED BY	DATE REVISED

CALCULATED-DESIGNED BY: I. L. REYNON JR.
CHECKED BY: THAO TRAN
FUNCTIONAL SUPERVISOR: CHARLES P. TON

STATE OF CALIFORNIA - DEPARTMENT OF TRANSPORTATION
Caltrans®
DESIGN

LAST REVISION 00-00-00
DATE PLOTTED => 21-MAY-2012
TIME PLOTTED => 16:41

Dist	COUNTY	ROUTE	POST MILES TOTAL PROJECT	SHEET No.	TOTAL SHEETS
07	LA	5	29.4/31.6	102	1931

REGISTERED CIVIL ENGINEER 1/20/12 DATE

5-21-12
PLANS APPROVAL DATE

REGISTERED PROFESSIONAL ENGINEER
THAO T. TRAN
No. C66879
Exp. 9/30/12
CIVIL
STATE OF CALIFORNIA

THE STATE OF CALIFORNIA OR ITS OFFICERS OR AGENTS SHALL NOT BE RESPONSIBLE FOR THE ACCURACY OR COMPLETENESS OF SCANNED COPIES OF THIS PLAN SHEET.

CURVE DATA

No. ⊙	R	Δ	T	L
50	12.00′	130°3′01″	25.76′	27.24′
51	80.00′	46°46′47″	34.60′	65.32′
52	1544.00′	1°17′49″	17.48′	34.95′

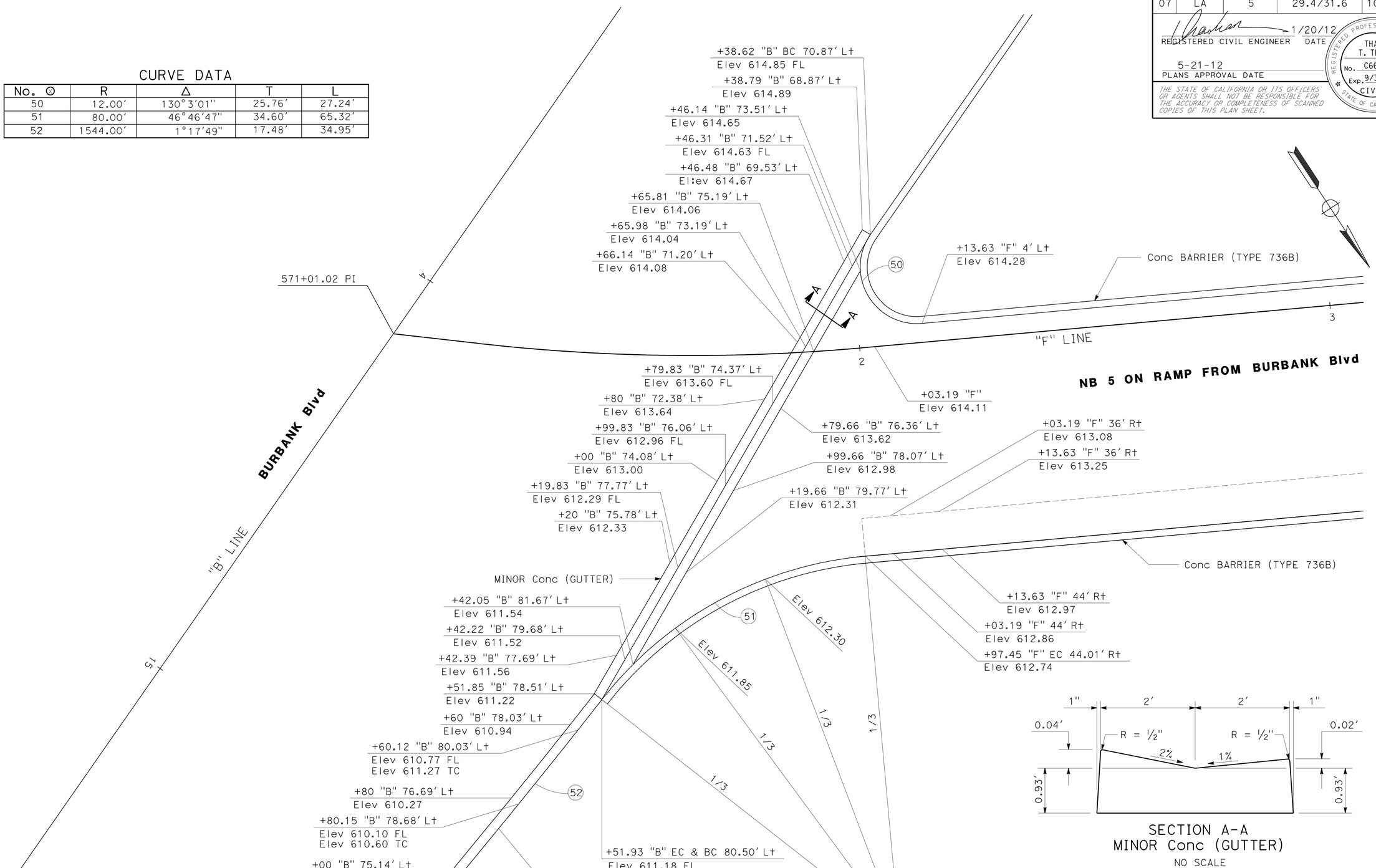

SECTION A-A
MINOR Conc (GUTTER)
NO SCALE

CONSTRUCTION DETAILS

SCALE: 1" = 10′

C-27

STATE OF CALIFORNIA - DEPARTMENT OF TRANSPORTATION
Caltrans
DESIGN

FUNCTIONAL SUPERVISOR: CHARLES P. TON
CALCULATED-DESIGNED BY: I. L. REYNON JR.
CHECKED BY: THAO TRAN
REVISED BY
DATE REVISED

LAST REVISION 00-00-00
DATE PLOTTED => 21-MAY-2012
TIME PLOTTED => 16:41

Dist	COUNTY	ROUTE	POST MILES TOTAL PROJECT	SHEET No.	TOTAL SHEETS
07	LA	5	29.4/31.6	103	1931

REGISTERED CIVIL ENGINEER DATE 1/20/12

5-21-12
PLANS APPROVAL DATE

REGISTERED PROFESSIONAL ENGINEER THAO T. TRAN No. C66879 Exp. 9/30/12 CIVIL STATE OF CALIFORNIA

THE STATE OF CALIFORNIA OR ITS OFFICERS OR AGENTS SHALL NOT BE RESPONSIBLE FOR THE ACCURACY OR COMPLETENESS OF SCANNED COPIES OF THIS PLAN SHEET.

CURVE DATA

No. ⊗	R	Δ	T	L
53	60.00′	105°55′34"	79.52′	110.93′
54	125.00′	18°0′30"	19.81′	39.29′
55	165.00′	33°45′09"	50.06′	97.20′
56	70.00′	39°59′09"	25.47′	48.85′

SECTION A-A
MINOR Conc (GUTTER)
NO SCALE

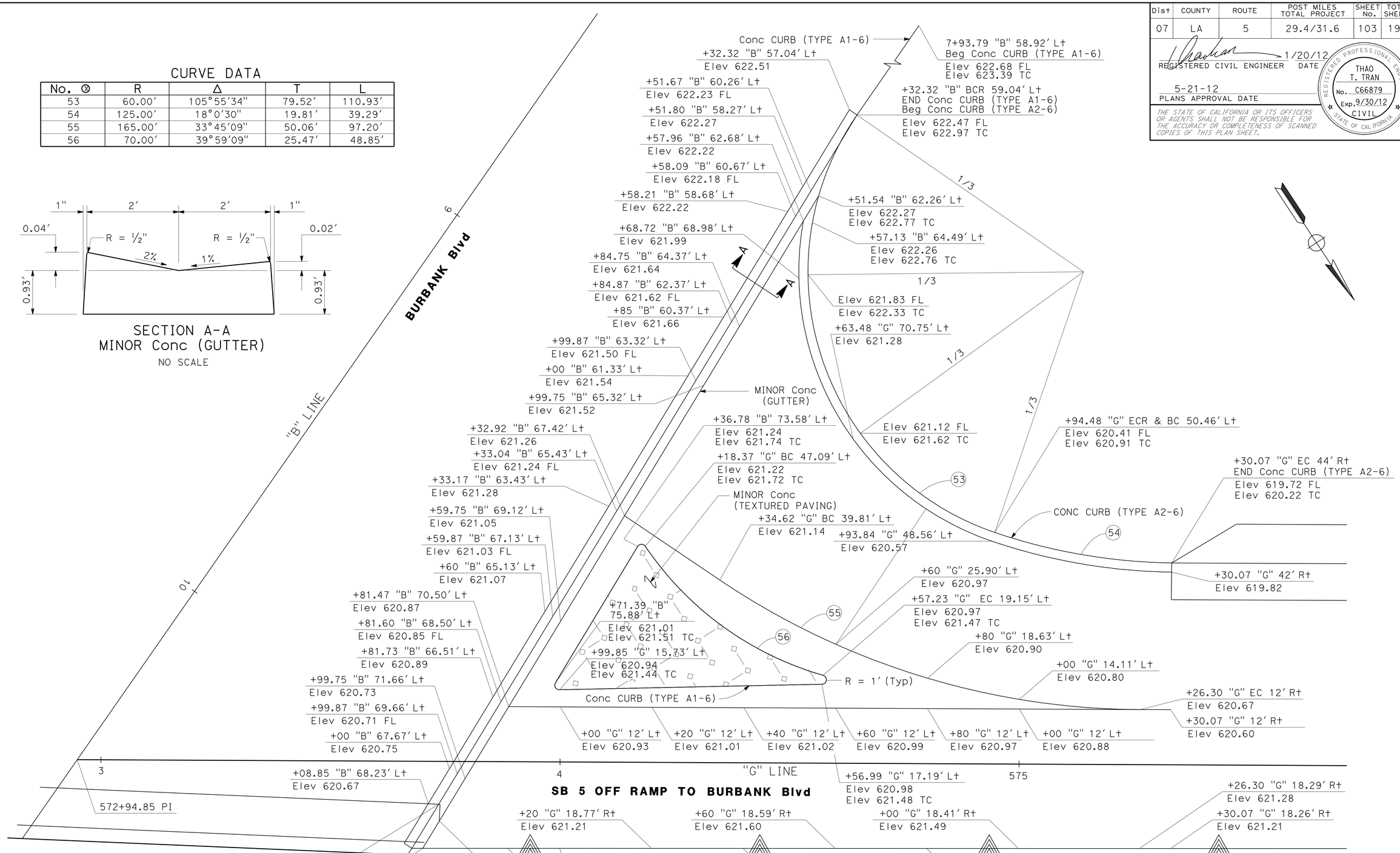

CONSTRUCTION DETAILS

SCALE: 1" = 10′

C-28

STATE OF CALIFORNIA - DEPARTMENT OF TRANSPORTATION
Caltrans
DESIGN

FUNCTIONAL SUPERVISOR: CHARLES P. TON
CALCULATED-DESIGNED BY: I. L. REYNON JR.
CHECKED BY: THAO TRAN
REVISED BY
DATE REVISED

LAST REVISION 00-00-00
DATE PLOTTED => 21-MAY-2012
TIME PLOTTED => 16:41

Dist	COUNTY	ROUTE	POST MILES TOTAL PROJECT	SHEET No.	TOTAL SHEETS
07	LA	5	29.4/31.6	104	1931

REGISTERED CIVIL ENGINEER — DATE 1/20/12

5-21-12
PLANS APPROVAL DATE

REGISTERED PROFESSIONAL ENGINEER — THAO T. TRAN — No. C66879 — Exp. 9/30/12 — CIVIL — STATE OF CALIFORNIA

THE STATE OF CALIFORNIA OR ITS OFFICERS OR AGENTS SHALL NOT BE RESPONSIBLE FOR THE ACCURACY OR COMPLETENESS OF SCANNED COPIES OF THIS PLAN SHEET.

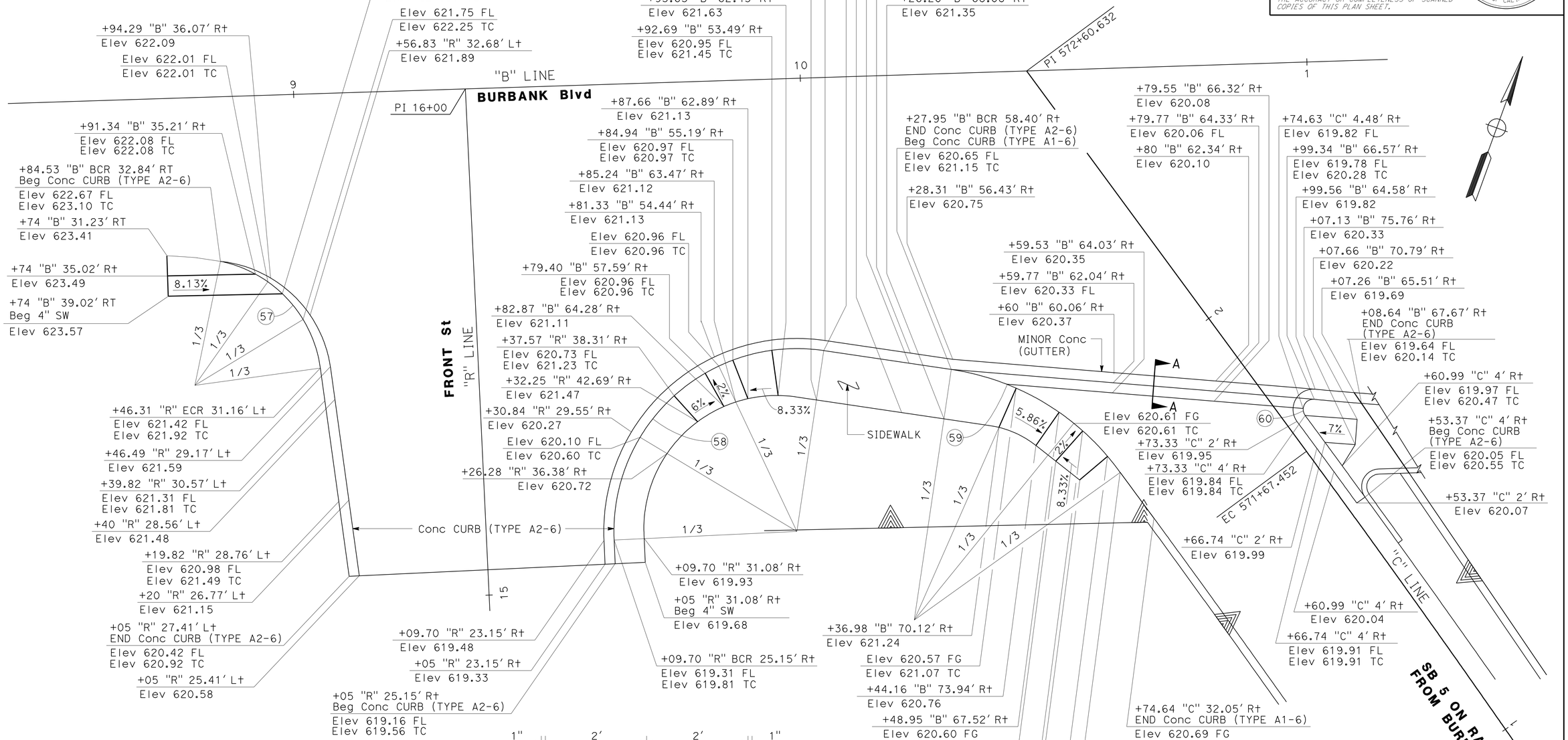

CURVE DATA

No. ⓪	R	Δ	T	L
57	25.00'	70°27'29"	17.65'	30.74'
58	36.09'	101°6'09"	43.86'	63.68'
59	50.00'	45°55'48"	21.19'	40.08'
60	2.00'	131°53'26"	4.48'	4.60'

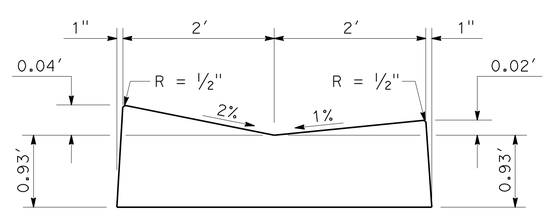

SECTION A-A
MINOR Conc (GUTTER)
NO SCALE

CONSTRUCTION DETAILS

SCALE: 1" = 10'

C-29

STATE OF CALIFORNIA - DEPARTMENT OF TRANSPORTATION
DESIGN
FUNCTIONAL SUPERVISOR: CHARLES P. TON
CALCULATED-DESIGNED BY: I. L. REYNON JR.
CHECKED BY: THAO TRAN
REVISED BY
DATE REVISED

LAST REVISION 00-00-00
DATE PLOTTED => 21-MAY-2012
TIME PLOTTED => 16:41

Dist	COUNTY	ROUTE	POST MILES TOTAL PROJECT	SHEET No.	TOTAL SHEETS
07	LA	5	29.4/31.6	105	1931

REGISTERED CIVIL ENGINEER 1/20/12 DATE

5-21-12
PLANS APPROVAL DATE

REGISTERED PROFESSIONAL ENGINEER THAO T. TRAN No. C66879 Exp. 9/30/12 CIVIL STATE OF CALIFORNIA

THE STATE OF CALIFORNIA OR ITS OFFICERS OR AGENTS SHALL NOT BE RESPONSIBLE FOR THE ACCURACY OR COMPLETENESS OF SCANNED COPIES OF THIS PLAN SHEET.

CURVE DATA

No. ⓧ	R	Δ	T	L
36	983.17′	23°35′11"	205.27′	404.73′
61	30.00′	27°31′58"	7.35′	14.42′
62	3.00′	145°43′43"	9.73′	7.63′
46	20.00′	16°49′49"	2.96′	5.87′

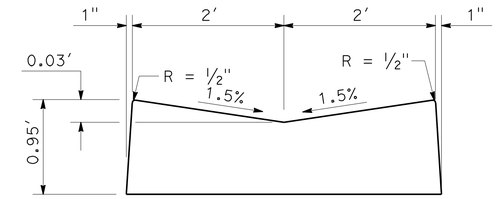

SECTION A-A
MINOR Conc (GUTTER)
NO SCALE

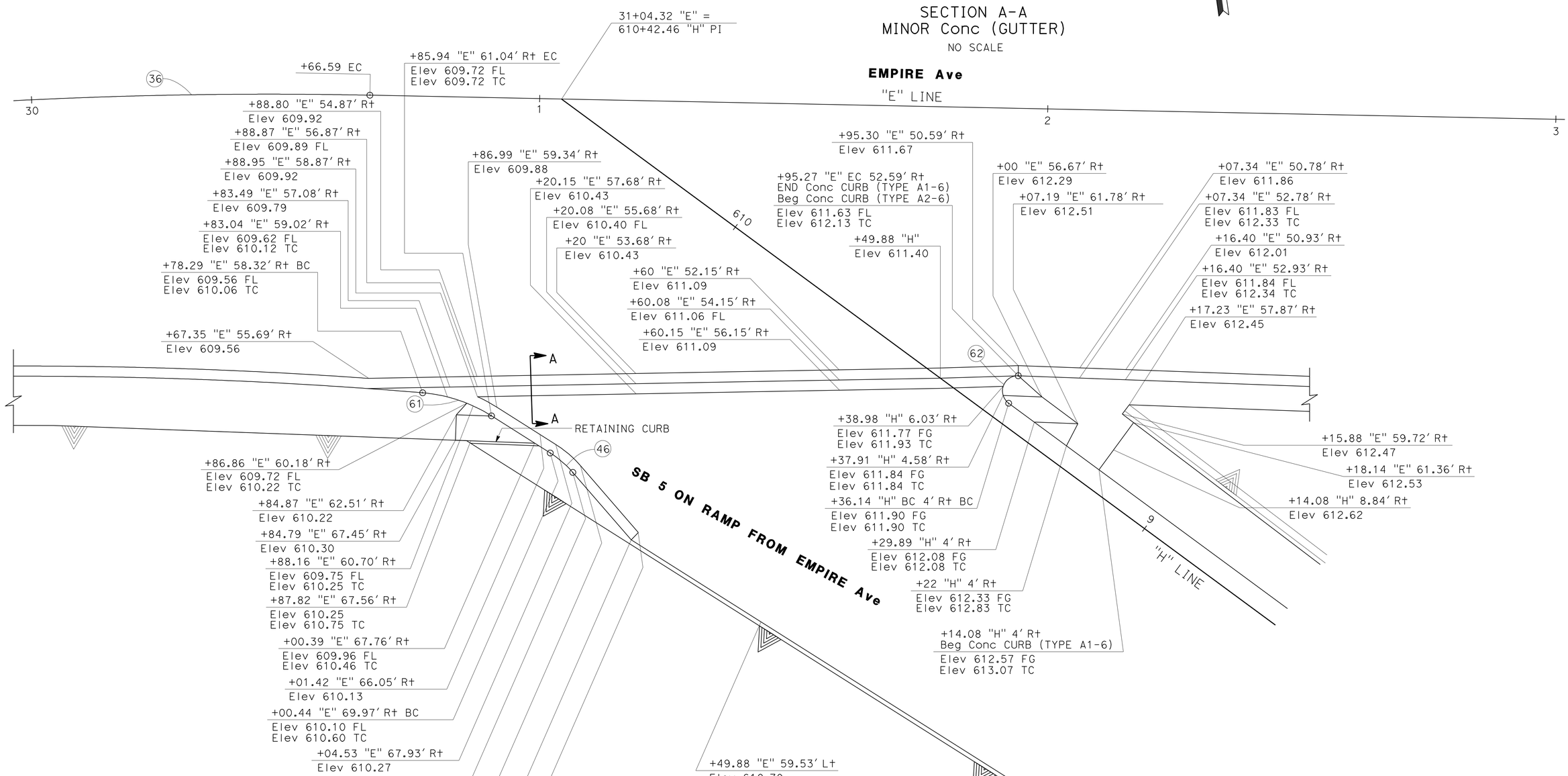

CONSTRUCTION DETAILS

SCALE: 1" = 10′

C-30

STATE OF CALIFORNIA - DEPARTMENT OF TRANSPORTATION
Caltrans®
DESIGN

FUNCTIONAL SUPERVISOR: CHARLES P. TON
CALCULATED-DESIGNED BY: I. L. REYNON JR.
CHECKED BY: THAO TRAN
REVISED BY
DATE REVISED

LAST REVISION 00-00-00
DATE PLOTTED => 21-MAY-2012
TIME PLOTTED => 16:41

Dist	COUNTY	ROUTE	POST MILES TOTAL PROJECT	SHEET No.	TOTAL SHEETS
07	LA	5	29.4/31.6	106	1931

REGISTERED CIVIL ENGINEER 1/20/12 DATE

5-21-12
PLANS APPROVAL DATE

REGISTERED PROFESSIONAL ENGINEER THAO T. TRAN No. C66879 Exp. 9/30/12 CIVIL STATE OF CALIFORNIA

THE STATE OF CALIFORNIA OR ITS OFFICERS OR AGENTS SHALL NOT BE RESPONSIBLE FOR THE ACCURACY OR COMPLETENESS OF SCANNED COPIES OF THIS PLAN SHEET.

CURVE DATA

No. ⊗	R	Δ	T	L
36	983.17′	23°35′11"	205.27′	404.73′
63	25.41′	51°25′24"	12.24′	22.81′
64	24.50′	82°3′01"	21.32′	35.09′
65	52.52′	31°33′09"	14.84′	28.92′

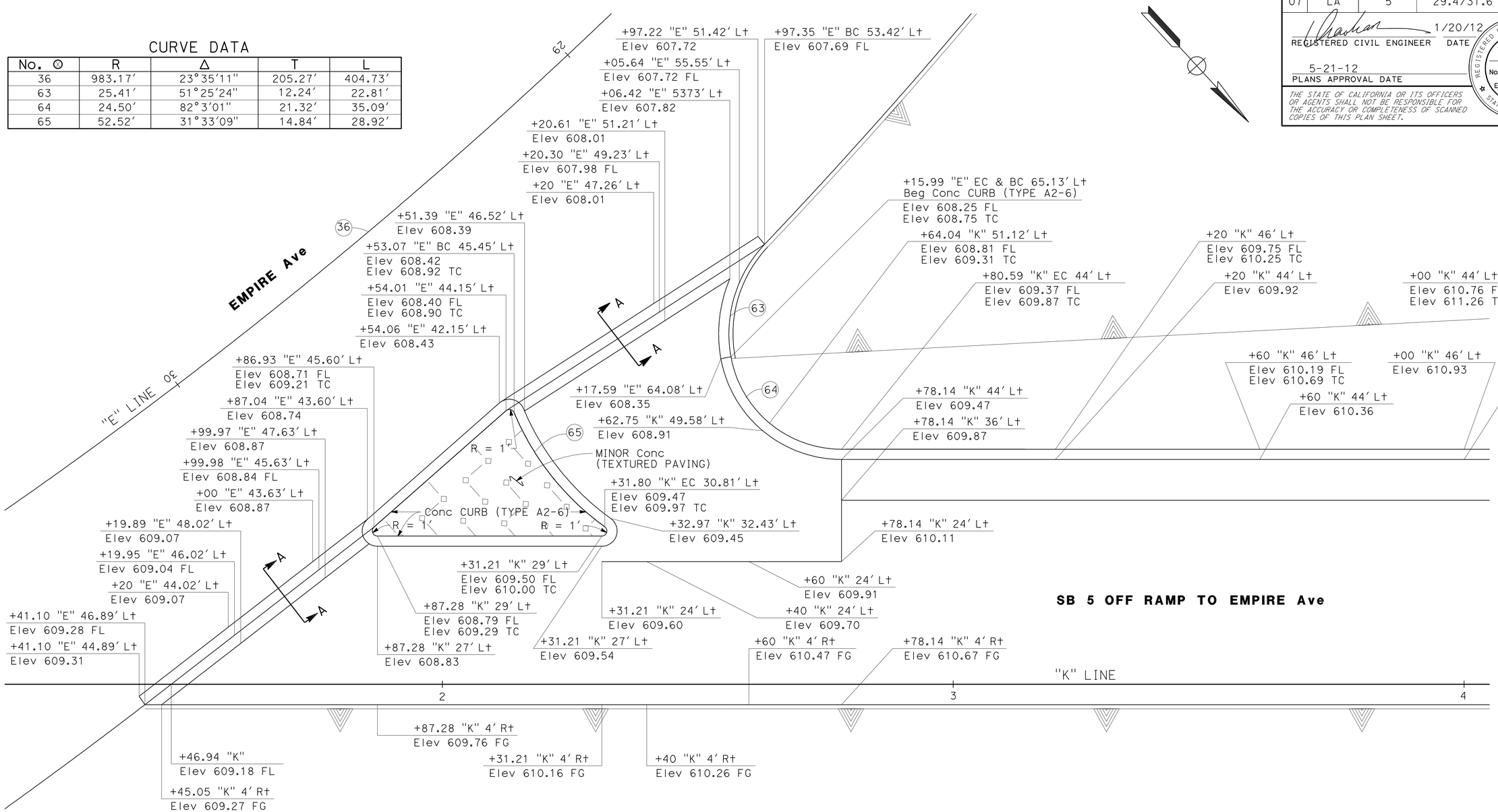

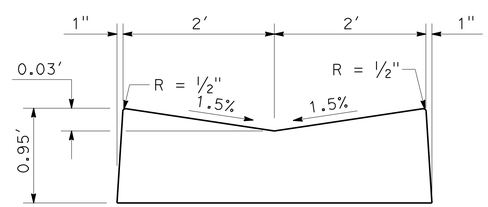

SECTION A-A
MINOR Conc (GUTTER)
NO SCALE

CONSTRUCTION DETAILS

SCALE: 1" = 10′

C-31

STATE OF CALIFORNIA - DEPARTMENT OF TRANSPORTATION
Caltrans
DESIGN

FUNCTIONAL SUPERVISOR: CHARLES P. TON
CALCULATED-DESIGNED BY: I. L. REYNON JR.
CHECKED BY: THAO TRAN
REVISED BY
DATE REVISED

LAST REVISION 00-00-00
DATE PLOTTED => 21-MAY-2012
TIME PLOTTED => 16:41

Dist	COUNTY	ROUTE	POST MILES TOTAL PROJECT	SHEET No.	TOTAL SHEETS
07	LA	5	29.4/31.6	107	1931

REGISTERED CIVIL ENGINEER 1/20/12 DATE

5-21-12
PLANS APPROVAL DATE

REGISTERED PROFESSIONAL ENGINEER THAO T. TRAN No. C66879 Exp. 9/30/12 CIVIL STATE OF CALIFORNIA

THE STATE OF CALIFORNIA OR ITS OFFICERS OR AGENTS SHALL NOT BE RESPONSIBLE FOR THE ACCURACY OR COMPLETENESS OF SCANNED COPIES OF THIS PLAN SHEET.

SECTION A-A
NO SCALE

SECTION B-B
MINOR Conc (GUTTER)
NO SCALE

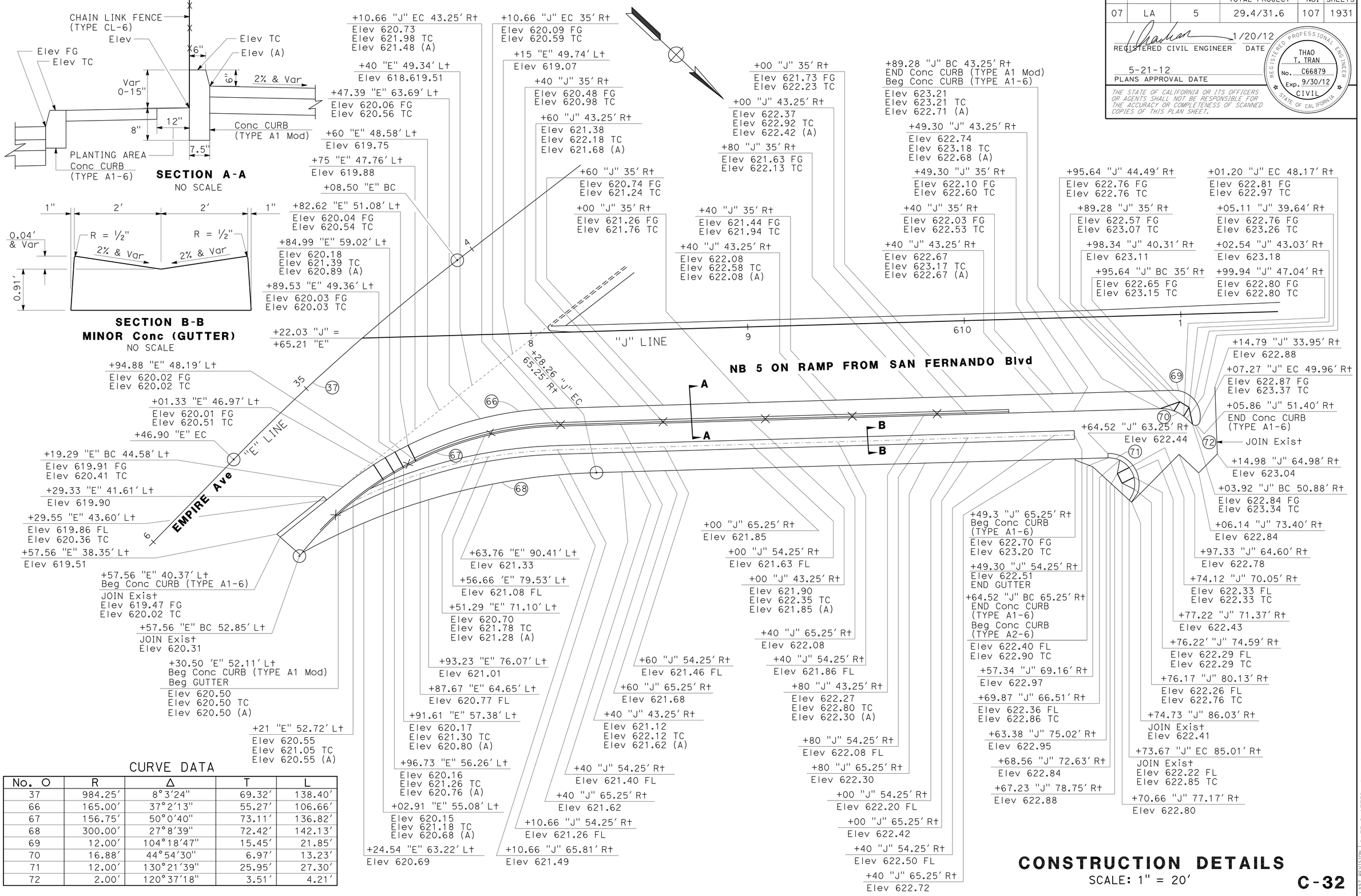

CURVE DATA

No. O	R	Δ	T	L
37	984.25'	8°3'24"	69.32'	138.40'
66	165.00'	37°2'13"	55.27'	106.66'
67	156.75'	50°0'40"	73.11'	136.82'
68	300.00'	27°8'39"	72.42'	142.13'
69	12.00'	104°18'47"	15.45'	21.85'
70	16.88'	44°54'30"	6.97'	13.23'
71	12.00'	130°21'39"	25.95'	27.30'
72	2.00'	120°37'18"	3.51'	4.21'

CONSTRUCTION DETAILS
SCALE: 1" = 20'

C-32

STATE OF CALIFORNIA - DEPARTMENT OF TRANSPORTATION
Caltrans® DESIGN
FUNCTIONAL SUPERVISOR: CHARLES P. TON
CALCULATED-DESIGNED BY: I. L. REYNON JR.
CHECKED BY: THAO TRAN
REVISED BY
DATE REVISED

LAST REVISION 00-00-00 | DATE PLOTTED => 21-MAY-2012 | TIME PLOTTED => 16:42

Dist	COUNTY	ROUTE	POST MILES TOTAL PROJECT	SHEET No.	TOTAL SHEETS
07	LA	5	29.4/31.6	108	1931

REGISTERED CIVIL ENGINEER 5-20-12 DATE

5-21-12
PLANS APPROVAL DATE

REGISTERED PROFESSIONAL ENGINEER THAO T. TRAN No. C66879 Exp. 9/30/12 CIVIL STATE OF CALIFORNIA

THE STATE OF CALIFORNIA OR ITS OFFICERS OR AGENTS SHALL NOT BE RESPONSIBLE FOR THE ACCURACY OR COMPLETENESS OF SCANNED COPIES OF THIS PLAN SHEET.

CURVE DATA

No. ⊗	R	Δ	T	L
37	984.25′	8°3′24″	69.32′	138.40′
73	994.00′	6°19′04″	54.86′	109.60′
74	12.50′	35°32′18″	4.01′	7.75′
75	30.00′	19°22′46″	5.12′	10.15′
81	994.00′	0°54′13″	7.84′	15.68′
82	1663.49′	0°20′24″	4.93′	9.87′

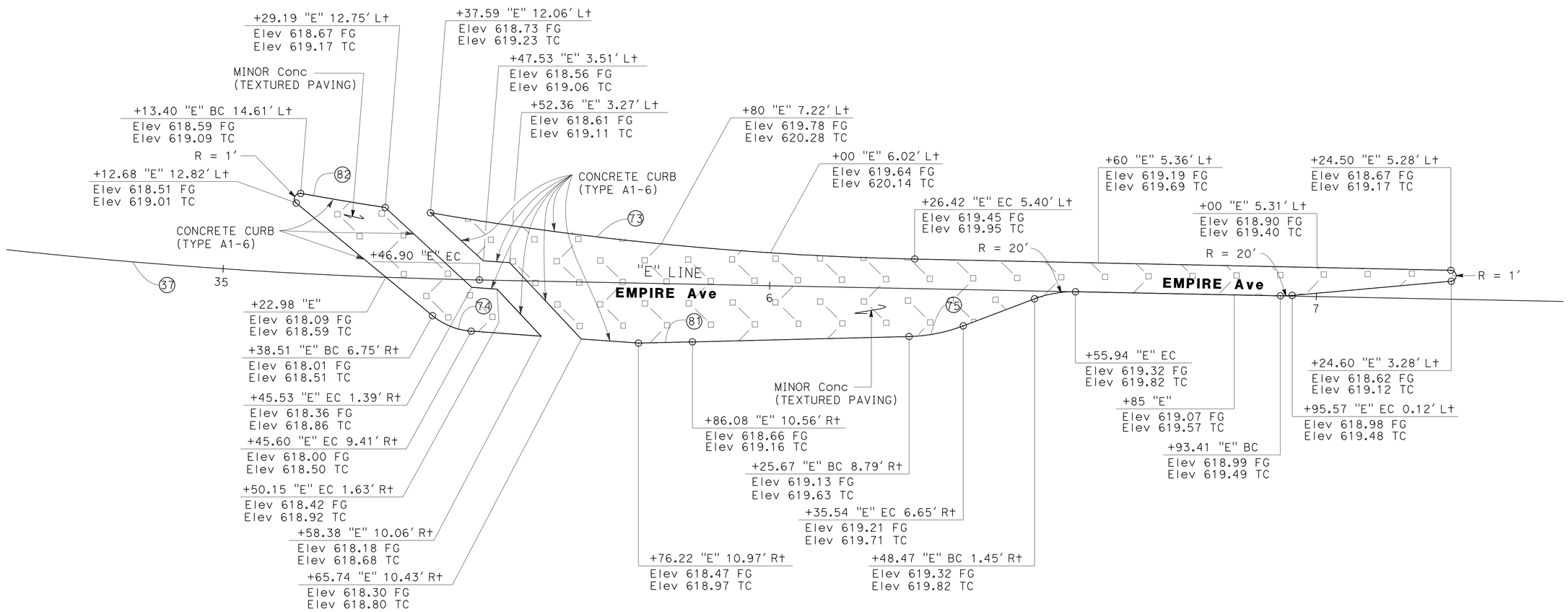

CONSTRUCTION DETAILS

SCALE: 1" = 10′

C-33

STATE OF CALIFORNIA - DEPARTMENT OF TRANSPORTATION
Caltrans DESIGN

FUNCTIONAL SUPERVISOR: CHARLES P. TON
CALCULATED-DESIGNED BY: I. L. REYNON JR.
CHECKED BY: THAO TRAN
REVISED BY
DATE REVISED

LAST REVISION 00-00-00
DATE PLOTTED => 21-MAY-2012
TIME PLOTTED => 16:42

Dist	COUNTY	ROUTE	POST MILES TOTAL PROJECT	SHEET No.	TOTAL SHEETS
07	LA	5	29.4/31.6	109	1931

REGISTERED CIVIL ENGINEER 5-20-12 DATE

5-21-12
PLANS APPROVAL DATE

REGISTERED PROFESSIONAL ENGINEER THAO T. TRAN No. C66879 Exp. 9/30/12 CIVIL STATE OF CALIFORNIA

THE STATE OF CALIFORNIA OR ITS OFFICERS OR AGENTS SHALL NOT BE RESPONSIBLE FOR THE ACCURACY OR COMPLETENESS OF SCANNED COPIES OF THIS PLAN SHEET.

CURVE DATA

No. O	R	Δ	T	L
26	3000.00′	12°58′21"	341.07′	679.23′
76	294.00′	5°51′42"	15.05′	30.08′
77	307.00′	5°42′36"	15.31′	30.60′
78	300.00′	5°58′38"	15.66′	31.30′
79	300.00′	5°42′36"	14.96′	29.90′
80	300.00′	5°45′57"	15.11′	30.19′
105	20.00′	77°12′44"	15.97′	26.95′
106	20.00′	57°41′41"	11.02′	20.14′

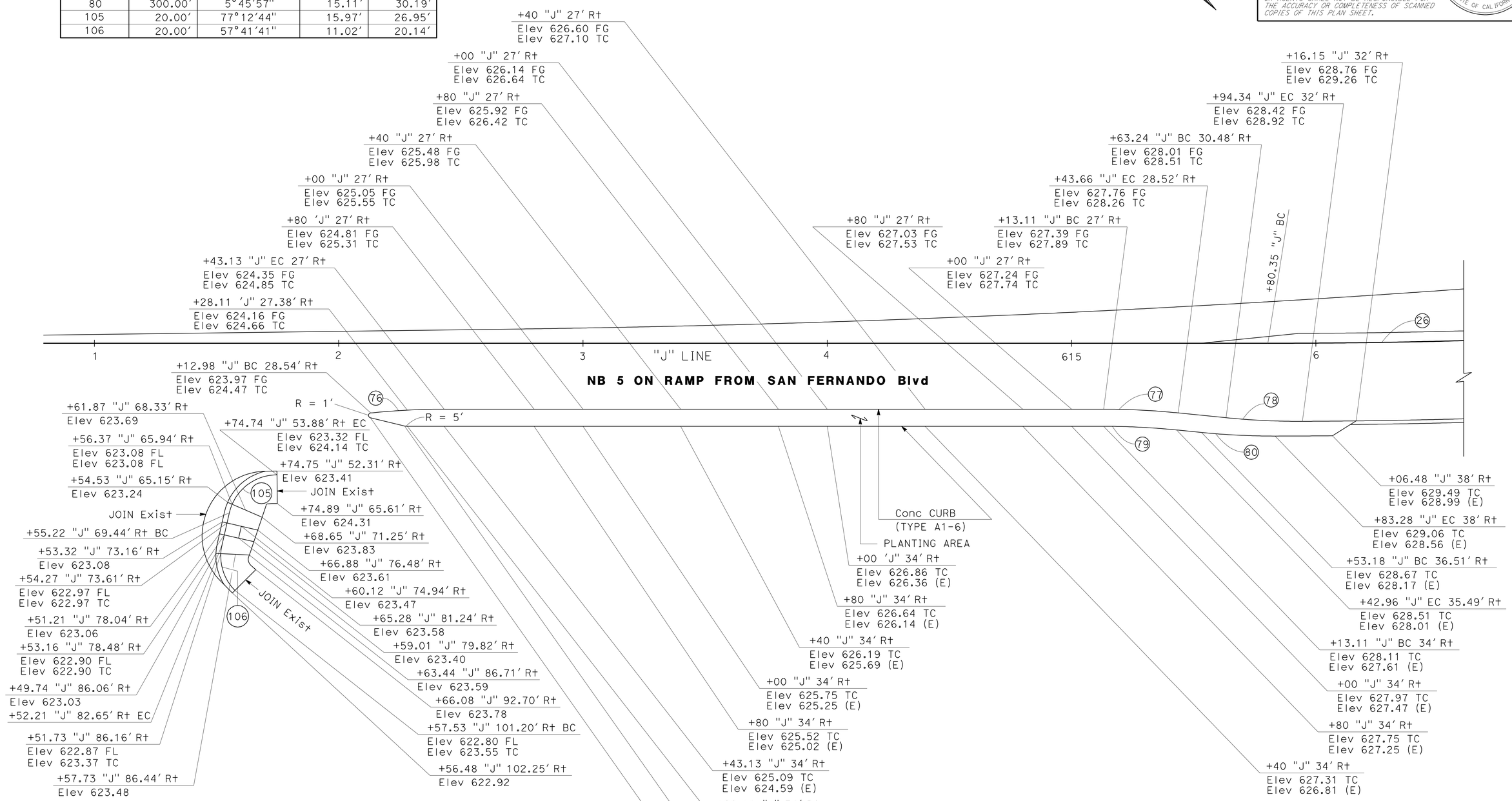

CONSTRUCTION DETAILS

SCALE: 1" = 20′

C-34

STATE OF CALIFORNIA - DEPARTMENT OF TRANSPORTATION
DESIGN
Caltrans

FUNCTIONAL SUPERVISOR: CHARLES P. TON
CALCULATED-DESIGNED BY: I. L. REYNON JR.
CHECKED BY: THAO TRAN
REVISED BY
DATE REVISED

LAST REVISION 00-00-00
DATE PLOTTED => 21-MAY-2012
TIME PLOTTED => 16:42

Dist	COUNTY	ROUTE	POST MILES TOTAL PROJECT	SHEET No.	TOTAL SHEETS
07	LA	5	29.4/31.6	110	1931

REGISTERED CIVIL ENGINEER 1/20/12 DATE

5-21-12
PLANS APPROVAL DATE

REGISTERED PROFESSIONAL ENGINEER THAO T. TRAN No. C66879 Exp. 9/30/12 CIVIL STATE OF CALIFORNIA

THE STATE OF CALIFORNIA OR ITS OFFICERS OR AGENTS SHALL NOT BE RESPONSIBLE FOR THE ACCURACY OR COMPLETENESS OF SCANNED COPIES OF THIS PLAN SHEET.

CURVE DATA

No. ⊙	R	Δ	T	L
25	5000.97′	2°6′06"	91.73′	183.43′
37	984.25′	8°3′24"	69.32′	138.40′
83	7.00′	45°59′23"	2.97′	5.62′
84	40.00′	65°2′19"	25.50′	45.41′
85	48.04′	18°18′54"	7.74′	15.36′
86	30.08′	125°0′19"	57.79′	65.62′
87	28.00′	56°9′25"	14.94′	27.44′

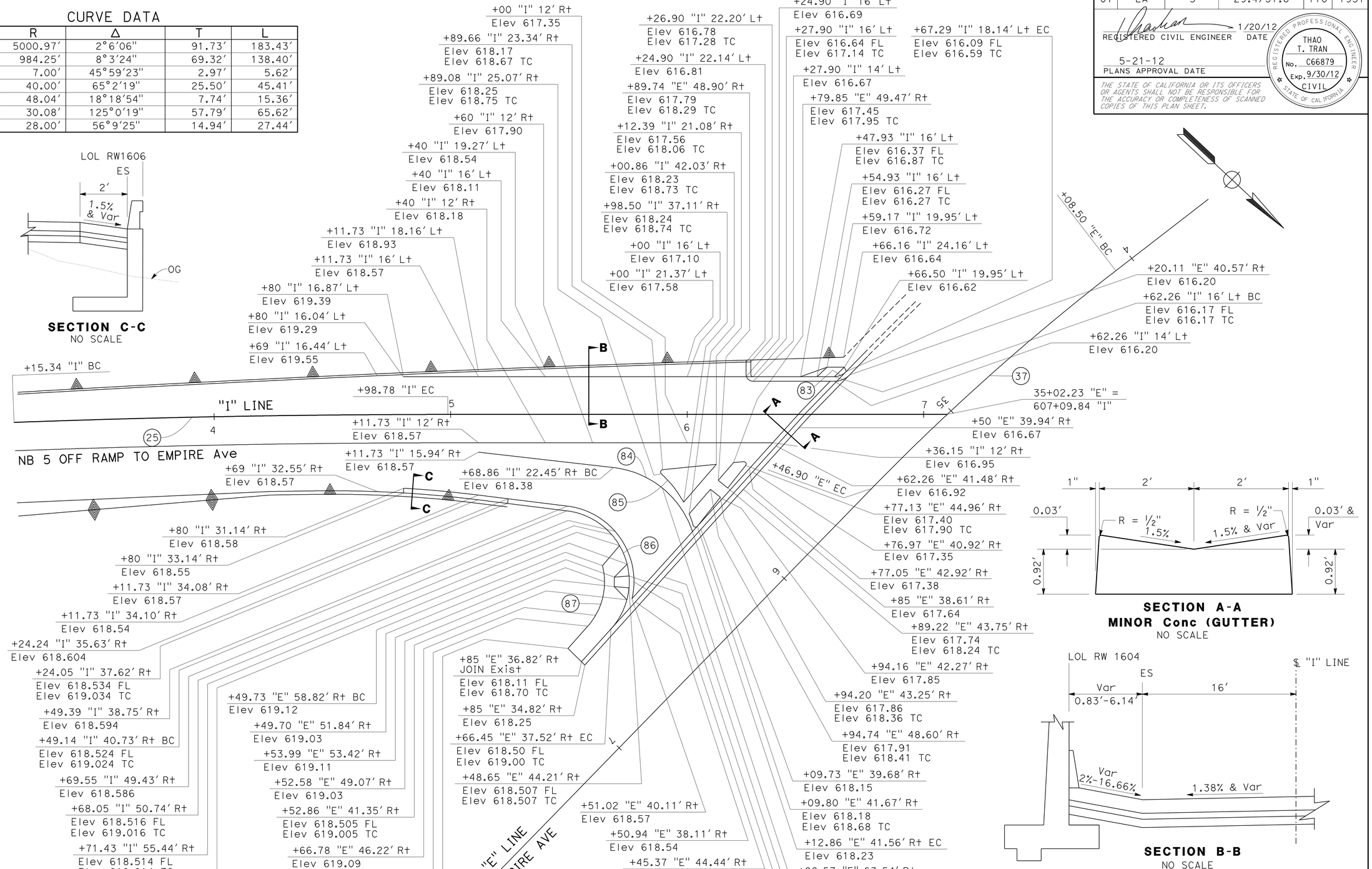

CONSTRUCTION DETAILS

SCALE: 1" = 20′

C-35

STATE OF CALIFORNIA - DEPARTMENT OF TRANSPORTATION
Caltrans DESIGN

FUNCTIONAL SUPERVISOR: CHARLES P. TON
CALCULATED-DESIGNED BY: I. L. REYNON JR.
CHECKED BY: THAO TRAN
REVISED BY / DATE REVISED

LAST REVISION 00-00-00 | DATE PLOTTED => 21-MAY-2012 | TIME PLOTTED => 16:42

Dist	COUNTY	ROUTE	POST MILES TOTAL PROJECT	SHEET No.	TOTAL SHEETS
07	LA	5	29.4/31.6	111	1931

REGISTERED CIVIL ENGINEER DATE

5-21-12
PLANS APPROVAL DATE

REGISTERED PROFESSIONAL ENGINEER
THAO T. TRAN
No. C66879
Exp. 09/30/12
CIVIL
STATE OF CALIFORNIA

THE STATE OF CALIFORNIA OR ITS OFFICERS OR AGENTS SHALL NOT BE RESPONSIBLE FOR THE ACCURACY OR COMPLETENESS OF SCANNED COPIES OF THIS PLAN SHEET.

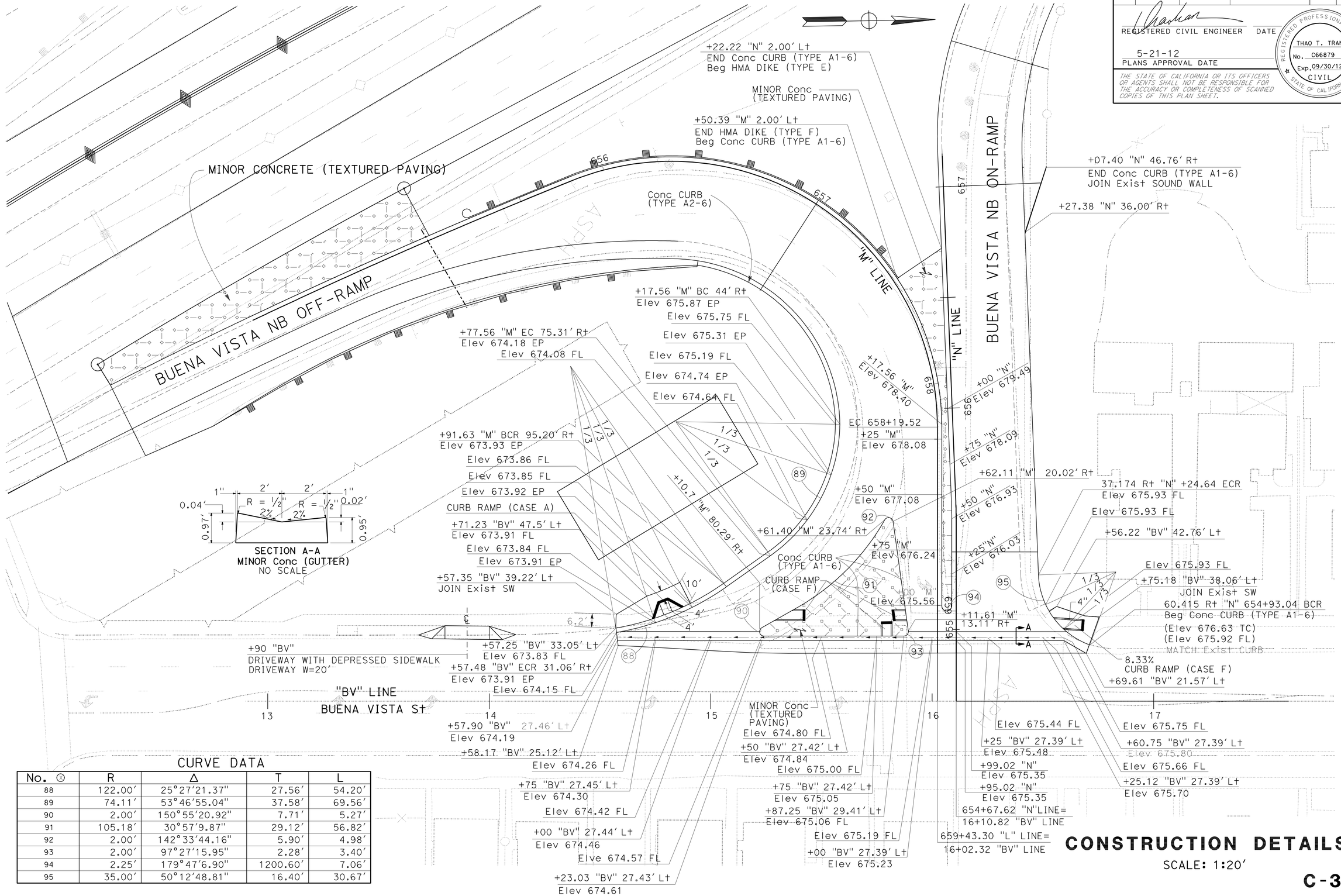

CURVE DATA

No. ⓧ	R	Δ	T	L
88	122.00'	25°27'21.37"	27.56'	54.20'
89	74.11'	53°46'55.04"	37.58'	69.56'
90	2.00'	150°55'20.92"	7.71'	5.27'
91	105.18'	30°57'9.87"	29.12'	56.82'
92	2.00'	142°33'44.16"	5.90'	4.98'
93	2.00'	97°27'15.95"	2.28'	3.40'
94	2.25'	179°47'6.90"	1200.60'	7.06'
95	35.00'	50°12'48.81"	16.40'	30.67'

CONSTRUCTION DETAILS

SCALE: 1:20'

C-36

REVISED BY | DATE REVISED
TRIEU T. NGUYEN | THAO TRAN
CALCULATED-DESIGNED BY | CHECKED BY
FUNCTIONAL SUPERVISOR
CHARLES P. TON

STATE OF CALIFORNIA - DEPARTMENT OF TRANSPORTATION
Caltrans
DESIGN

LAST REVISION 00-00-00 | DATE PLOTTED => 21-MAY-2012 | TIME PLOTTED => 16:42

Dist	COUNTY	ROUTE	POST MILES TOTAL PROJECT	SHEET No.	TOTAL SHEETS
07	LA	5	29.4/31.6	112	1931

REGISTERED CIVIL ENGINEER 1/20/12 DATE

5-21-12
PLANS APPROVAL DATE

REGISTERED PROFESSIONAL ENGINEER
THAO T. TRAN
No. C66879
Exp. 9/30/12
CIVIL
STATE OF CALIFORNIA

THE STATE OF CALIFORNIA OR ITS OFFICERS OR AGENTS SHALL NOT BE RESPONSIBLE FOR THE ACCURACY OR COMPLETENESS OF SCANNED COPIES OF THIS PLAN SHEET.

LEGEND:

(XXX.XX) = Exist ELEVATION
XXX.XX = PROPOSED ELEVATION

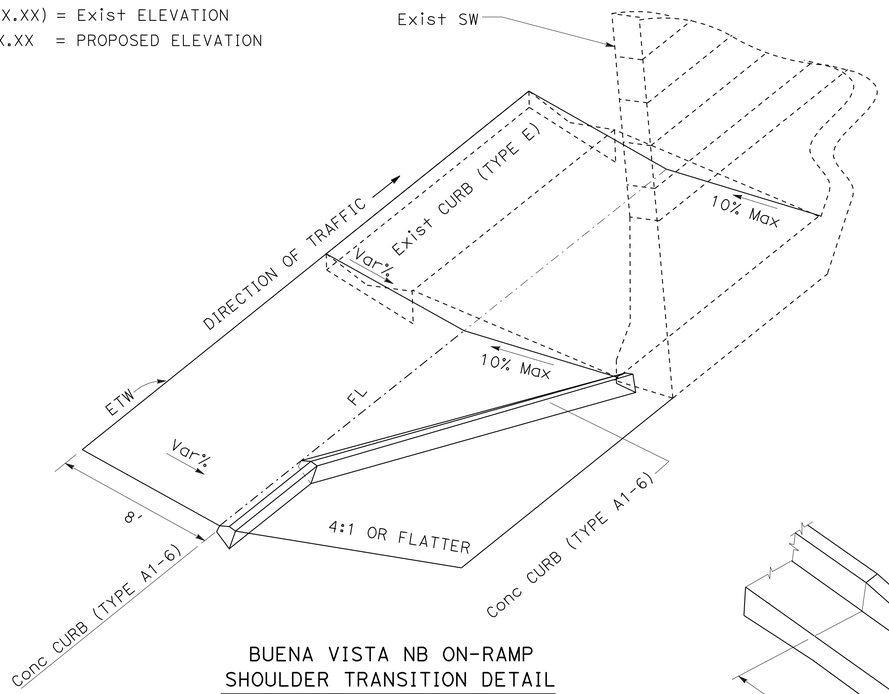

BUENA VISTA NB ON-RAMP
SHOULDER TRANSITION DETAIL

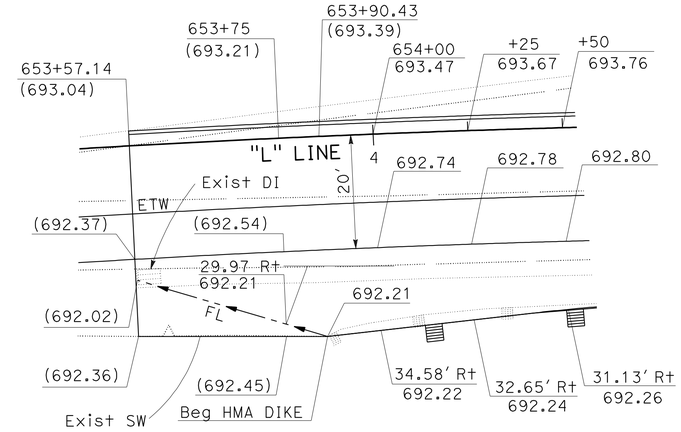

653+57.14 TO 653+90.43
BUENA VISTA NB OFF-RAMP
FLOWLINE TRANSITION DETAIL

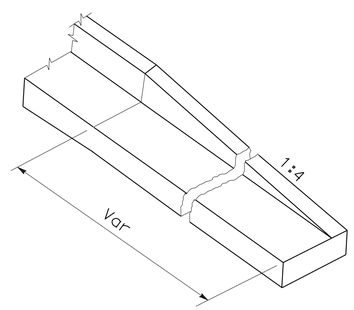

DETAIL A
TYPICAL CURB TRANSITION

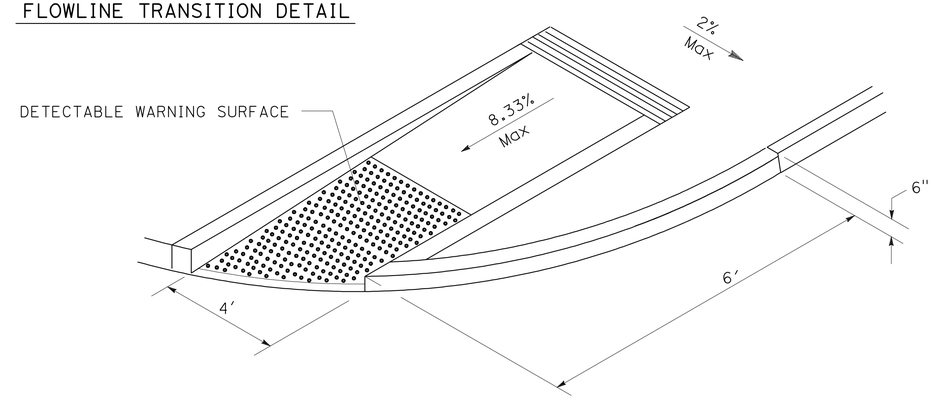

CURB RAMP (CASE F)

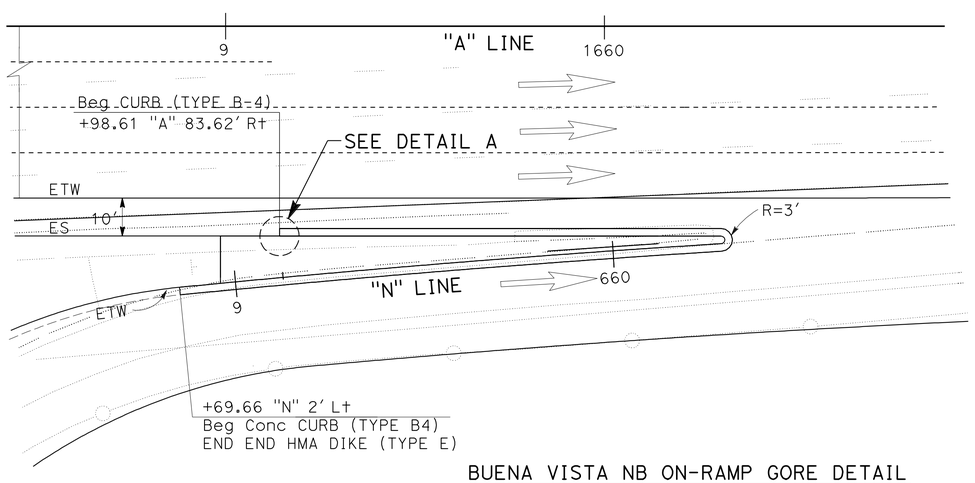

BUENA VISTA NB ON-RAMP GORE DETAIL

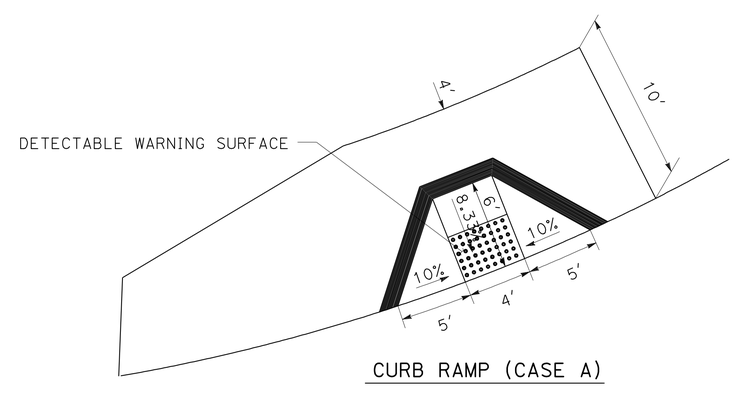

CURB RAMP (CASE A)

CONSTRUCTION DETAILS

NO SCALE

C-37

STATE OF CALIFORNIA - DEPARTMENT OF TRANSPORTATION
DESIGN

FUNCTIONAL SUPERVISOR: CHARLES P. TON
CALCULATED-DESIGNED BY: TRIEU T. NGUYEN
CHECKED BY: THAO TRAN
REVISED BY
DATE REVISED

LAST REVISION 00-00-00
DATE PLOTTED => 21-MAY-2012
TIME PLOTTED => 16:42

Dist	COUNTY	ROUTE	POST MILES TOTAL PROJECT	SHEET No.	TOTAL SHEETS
07	LA	5	29.4/31.6	113	1931

REGISTERED CIVIL ENGINEER 1/20/12 DATE

5-21-12
PLANS APPROVAL DATE

REGISTERED PROFESSIONAL ENGINEER THAO T. TRAN No. C66879 Exp. 9/30/12 CIVIL STATE OF CALIFORNIA

THE STATE OF CALIFORNIA OR ITS OFFICERS OR AGENTS SHALL NOT BE RESPONSIBLE FOR THE ACCURACY OR COMPLETENESS OF SCANNED COPIES OF THIS PLAN SHEET.

LEGEND:
(XXX.XX) = Exist ELEVATION
XXX.XX = PROPOSED ELEVATION

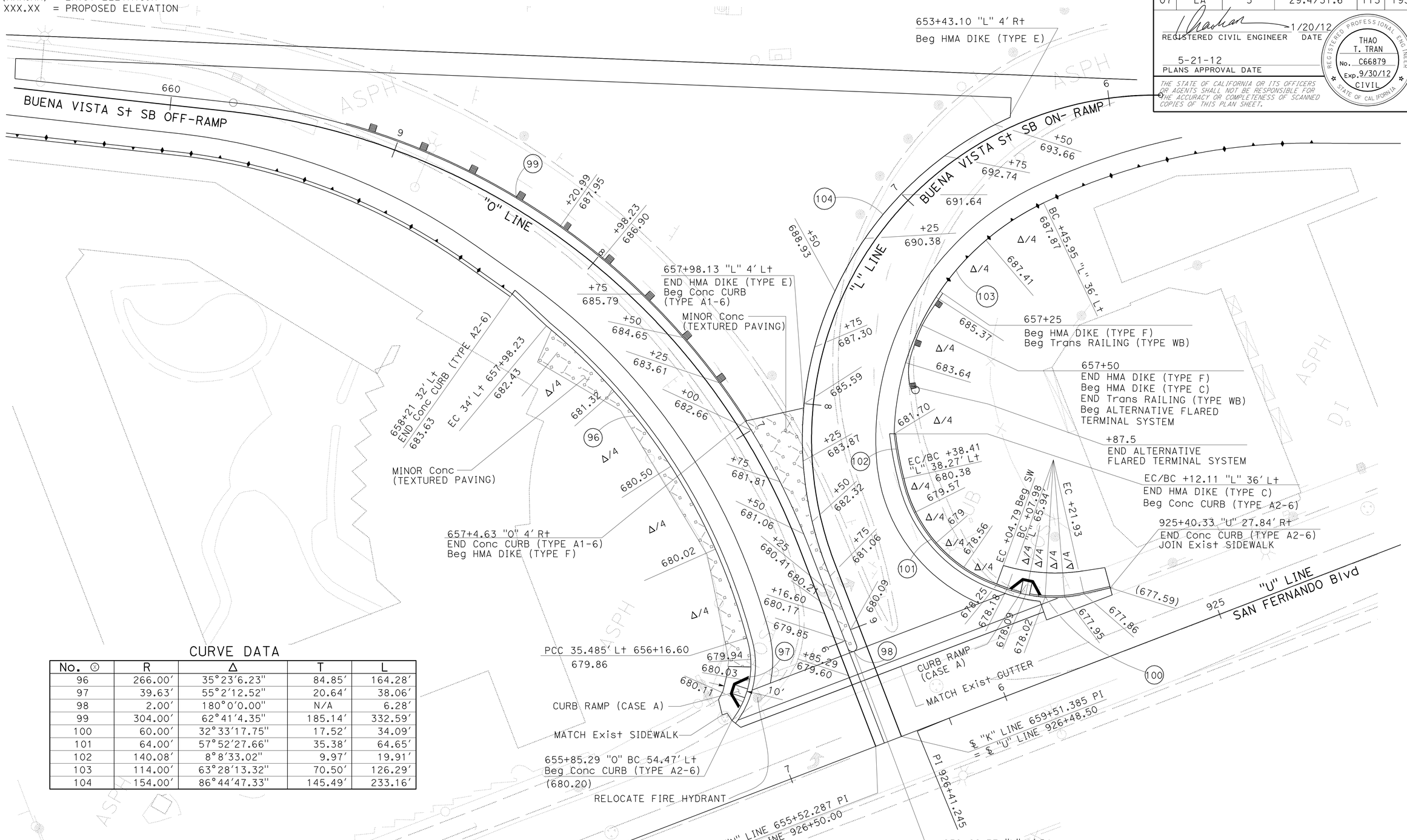

CURVE DATA

No. ⊗	R	Δ	T	L
96	266.00'	35°23'6.23"	84.85'	164.28'
97	39.63'	55°2'12.52"	20.64'	38.06'
98	2.00'	180°0'0.00"	N/A	6.28'
99	304.00'	62°41'4.35"	185.14'	332.59'
100	60.00'	32°33'17.75"	17.52'	34.09'
101	64.00'	57°52'27.66"	35.38'	64.65'
102	140.08'	8°8'33.02"	9.97'	19.91'
103	114.00'	63°28'13.32"	70.50'	126.29'
104	154.00'	86°44'47.33"	145.49'	233.16'

CONSTRUCTION DETAILS

SCALE: 1" = 20'

C-38

STATE OF CALIFORNIA - DEPARTMENT OF TRANSPORTATION
DESIGN
Caltrans
FUNCTIONAL SUPERVISOR: CHARLES P. TON
CALCULATED-DESIGNED BY: TRIEU T. NGUYEN
CHECKED BY: THAO TRAN
REVISED BY / DATE REVISED

LAST REVISION 00-00-00
DATE PLOTTED => 21-MAY-2012
TIME PLOTTED => 16:42

Dist	COUNTY	ROUTE	POST MILES TOTAL PROJECT	SHEET No.	TOTAL SHEETS
07	LA	5	29.4/31.6	114	1931

REGISTERED CIVIL ENGINEER 1/20/12 DATE

5-21-12
PLANS APPROVAL DATE

REGISTERED PROFESSIONAL ENGINEER
THAO T. TRAN
No. C66879
Exp. 09/30/12
CIVIL
STATE OF CALIFORNIA

THE STATE OF CALIFORNIA OR ITS OFFICERS OR AGENTS SHALL NOT BE RESPONSIBLE FOR THE ACCURACY OR COMPLETENESS OF SCANNED COPIES OF THIS PLAN SHEET.

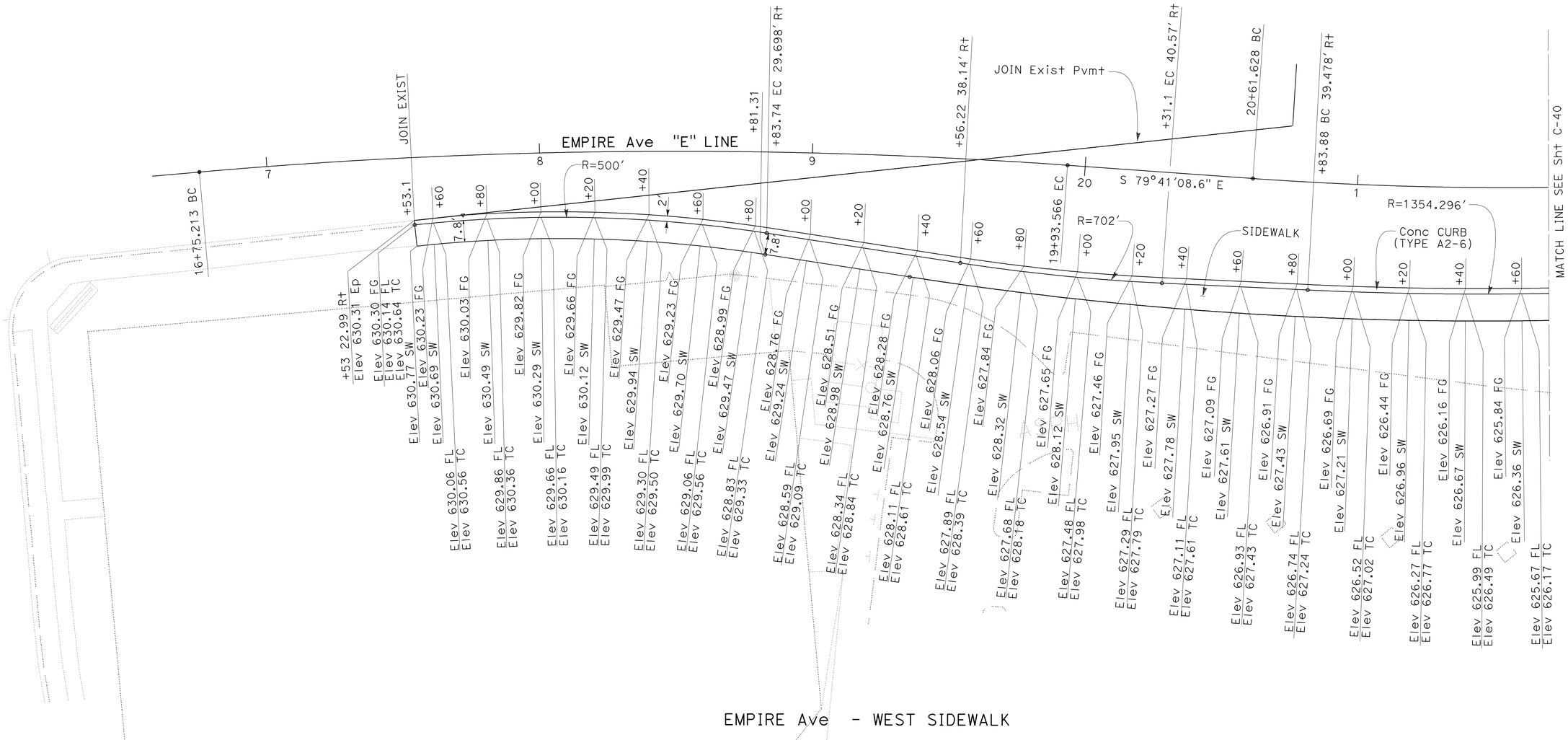

CONSTRUCTION DETAILS

SCALE 1" = 20'

C-39

STATE OF CALIFORNIA - DEPARTMENT OF TRANSPORTATION
Caltrans
DESIGN
FUNCTIONAL SUPERVISOR: CHARLES P. TON
CALCULATED-DESIGNED BY: VICTOR PONCE
CHECKED BY: XXXXX
REVISED BY
DATE REVISED

LAST REVISION 00-00-00
DATE PLOTTED => 21-MAY-2012
TIME PLOTTED => 16:42

Dist	COUNTY	ROUTE	POST MILES TOTAL PROJECT	SHEET No.	TOTAL SHEETS
07	LA	5	29.4/31.6	115	1931

REGISTERED CIVIL ENGINEER — DATE 1/20/12

5-21-12
PLANS APPROVAL DATE

REGISTERED PROFESSIONAL ENGINEER
THAO T. TRAN
No. C66879
Exp. 9/30/12
CIVIL
STATE OF CALIFORNIA

THE STATE OF CALIFORNIA OR ITS OFFICERS OR AGENTS SHALL NOT BE RESPONSIBLE FOR THE ACCURACY OR COMPLETENESS OF SCANNED COPIES OF THIS PLAN SHEET.

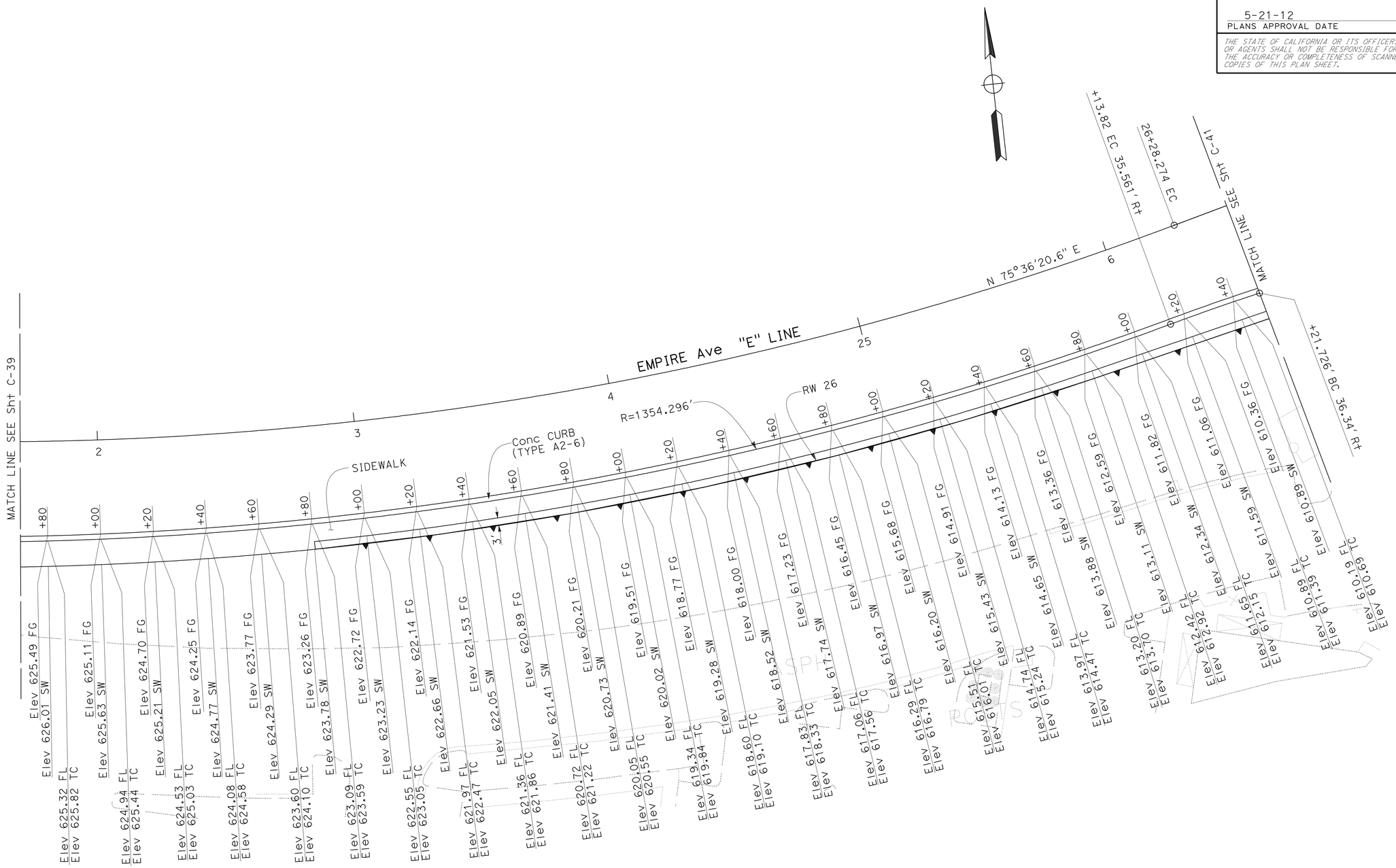

EMPIRE Ave - WEST SIDEWALK

CONSTRUCTION DETAILS

SCALE: 1" = 20'

C-40

REVISED BY	VICTOR PONCE
DATE REVISED	XXXXX
CALCULATED-DESIGNED BY	
CHECKED BY	
FUNCTIONAL SUPERVISOR	CHARLES P. TON

STATE OF CALIFORNIA - DEPARTMENT OF TRANSPORTATION

Caltrans®

DESIGN

LAST REVISION 00-00-00 | DATE PLOTTED => 21-MAY-2012 | TIME PLOTTED => 16:43

Dist	COUNTY	ROUTE	POST MILES TOTAL PROJECT	SHEET No.	TOTAL SHEETS
07	LA	5	29.4/31.6	116	1931

REGISTERED CIVIL ENGINEER 1/20/12 DATE

5-21-12
PLANS APPROVAL DATE

REGISTERED PROFESSIONAL ENGINEER
THAO T. TRAN
No. C66879
Exp. 9/30/12
CIVIL
STATE OF CALIFORNIA

THE STATE OF CALIFORNIA OR ITS OFFICERS OR AGENTS SHALL NOT BE RESPONSIBLE FOR THE ACCURACY OR COMPLETENESS OF SCANNED COPIES OF THIS PLAN SHEET.

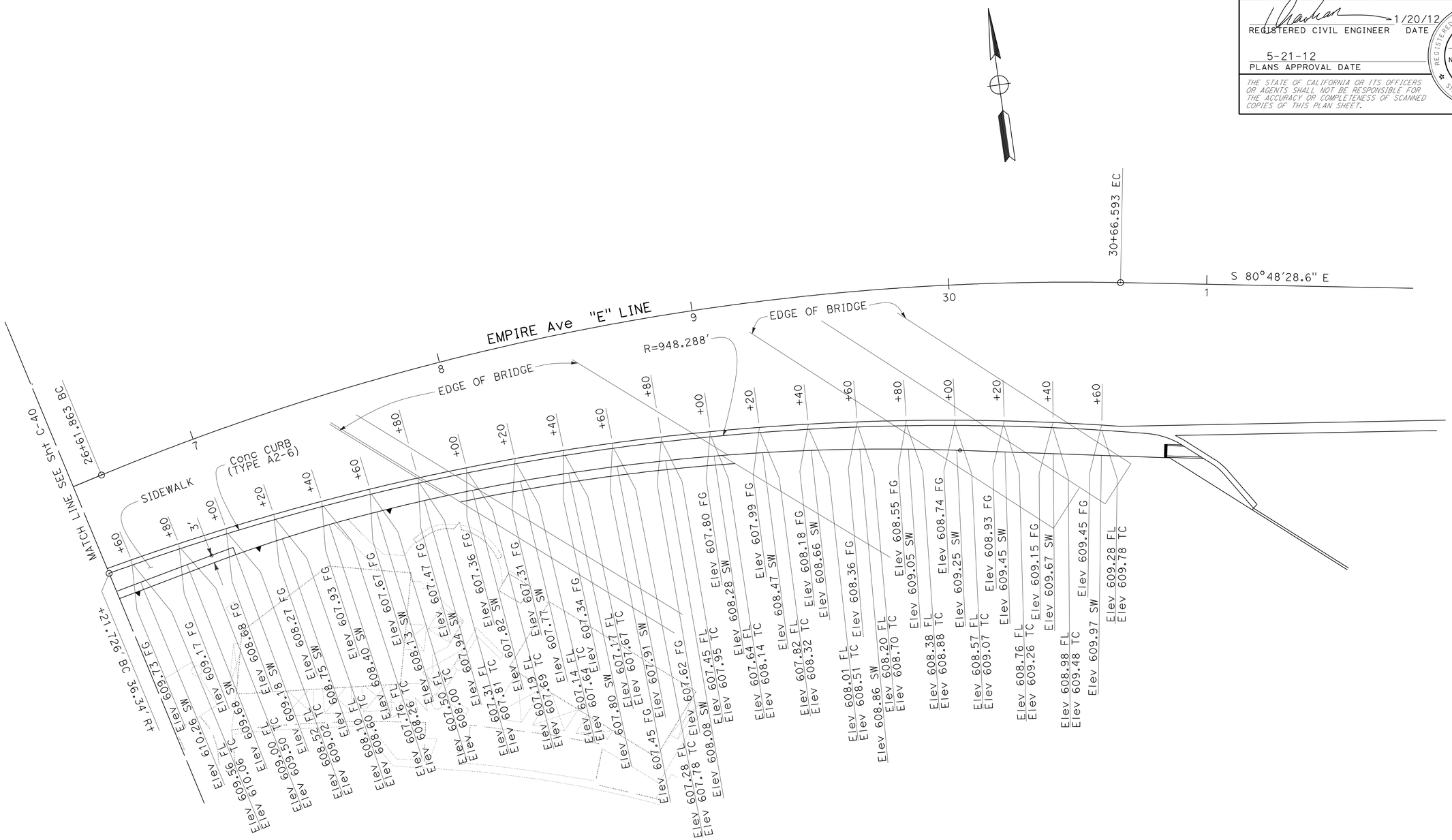

EMPIRE Ave - WEST SIDEWALK

CONSTRUCTION DETAILS

SCALE: 1" = 20'

C-41

STATE OF CALIFORNIA - DEPARTMENT OF TRANSPORTATION
Caltrans
DESIGN

FUNCTIONAL SUPERVISOR: CHARLES P. TON

CALCULATED-DESIGNED BY: VICTOR PONCE
CHECKED BY: XXXXX

REVISED BY
DATE REVISED

LAST REVISION 00-00-00
DATE PLOTTED => 21-MAY-2012
TIME PLOTTED => 16:43

Dist	COUNTY	ROUTE	POST MILES TOTAL PROJECT	SHEET No.	TOTAL SHEETS
07	LA	5	29.4/31.6	117	1931

REGISTERED CIVIL ENGINEER 1/20/12 DATE

5-21-12
PLANS APPROVAL DATE

REGISTERED PROFESSIONAL ENGINEER
THAO T. TRAN
No. C66879
Exp. 9/30/12
CIVIL
STATE OF CALIFORNIA

THE STATE OF CALIFORNIA OR ITS OFFICERS OR AGENTS SHALL NOT BE RESPONSIBLE FOR THE ACCURACY OR COMPLETENESS OF SCANNED COPIES OF THIS PLAN SHEET.

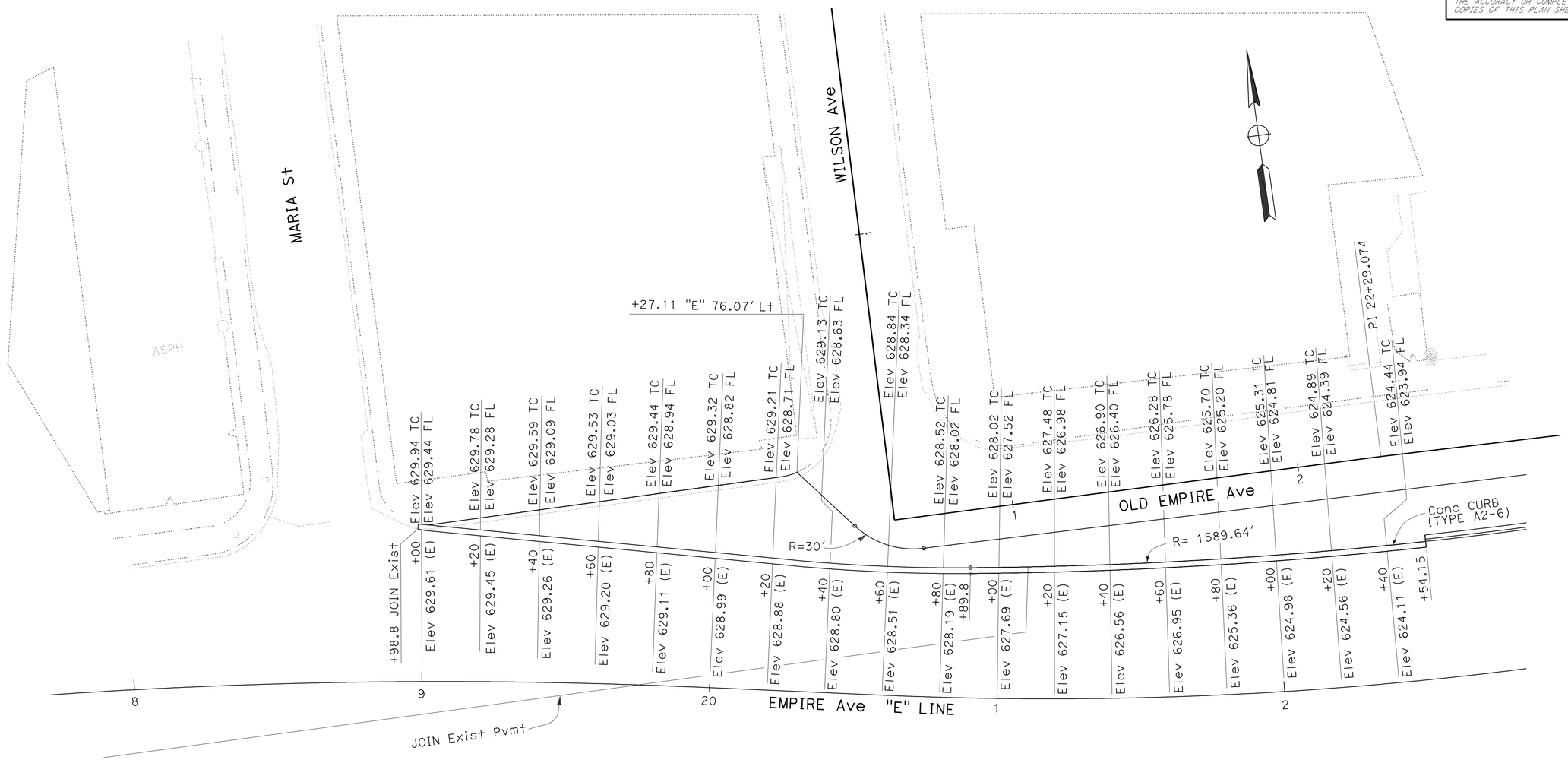

EMPIRE Ave - CURB AND GUTTER

CONSTRUCTION DETAILS

SCALE: 1" = 20'

C-42

STATE OF CALIFORNIA - DEPARTMENT OF TRANSPORTATION
Caltrans® DESIGN

FUNCTIONAL SUPERVISOR: CHARLES P. TON
CALCULATED-DESIGNED BY: VICTOR PONCE
CHECKED BY: XXXXX
REVISED BY
DATE REVISED

LAST REVISION 00-00-00
DATE PLOTTED => 21-MAY-2012
TIME PLOTTED => 16:43

Dist	COUNTY	ROUTE	POST MILES TOTAL PROJECT	SHEET No.	TOTAL SHEETS
07	LA	5	29.4/31.6	118	1931

RECISTERED CIVIL ENGINEER 1/20/12 DATE

5-21-12
PLANS APPROVAL DATE

REGISTERED PROFESSIONAL ENGINEER
THAO T. TRAN
No. C66879
Exp. 9/30/12
CIVIL
STATE OF CALIFORNIA

THE STATE OF CALIFORNIA OR ITS OFFICERS OR AGENTS SHALL NOT BE RESPONSIBLE FOR THE ACCURACY OR COMPLETENESS OF SCANNED COPIES OF THIS PLAN SHEET.

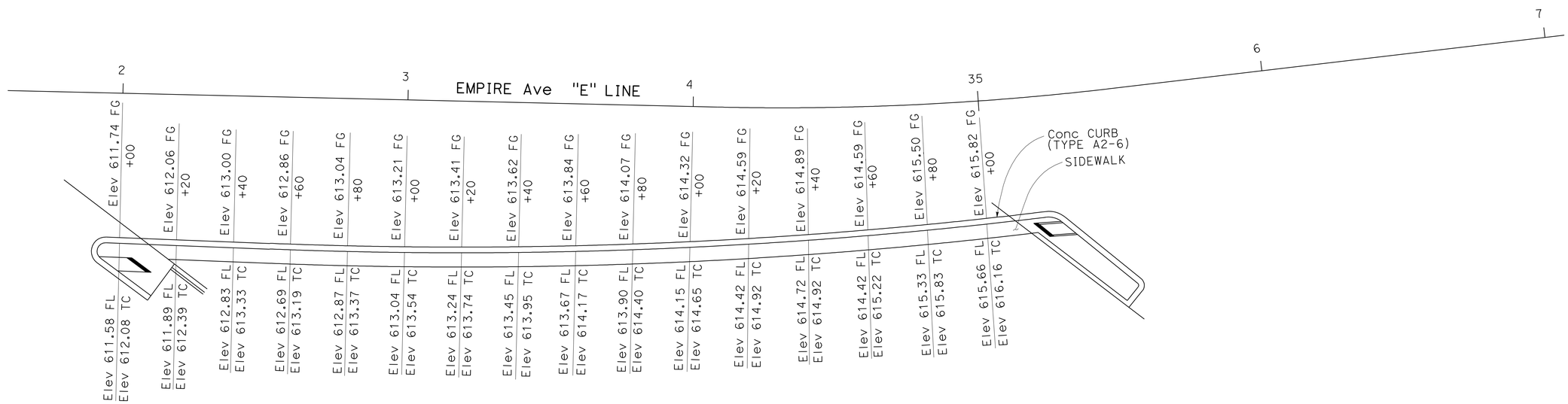

EMPIRE Ave - SIDEWALK UNDER ROUTE 5

CONSTRUCTION DETAILS

SCALE: 1" = 20'

C-43

STATE OF CALIFORNIA - DEPARTMENT OF TRANSPORTATION
Caltrans
DESIGN

FUNCTIONAL SUPERVISOR: CHARLES P. TON
CALCULATED-DESIGNED BY: VICTOR PONCE
CHECKED BY: XXXXX
REVISED BY
DATE REVISED

LAST REVISION 00-00-00
DATE PLOTTED => 21-MAY-2012
TIME PLOTTED => 16:43

Dist	COUNTY	ROUTE	POST MILES TOTAL PROJECT	SHEET No.	TOTAL SHEETS
07	LA	5	29.4/31.6	119	1931

REGISTERED CIVIL ENGINEER 1/20/12 DATE

5-21-12
PLANS APPROVAL DATE

REGISTERED PROFESSIONAL ENGINEER THAO T. TRAN No. C66879 Exp. 9/30/12 CIVIL STATE OF CALIFORNIA

THE STATE OF CALIFORNIA OR ITS OFFICERS OR AGENTS SHALL NOT BE RESPONSIBLE FOR THE ACCURACY OR COMPLETENESS OF SCANNED COPIES OF THIS PLAN SHEET.

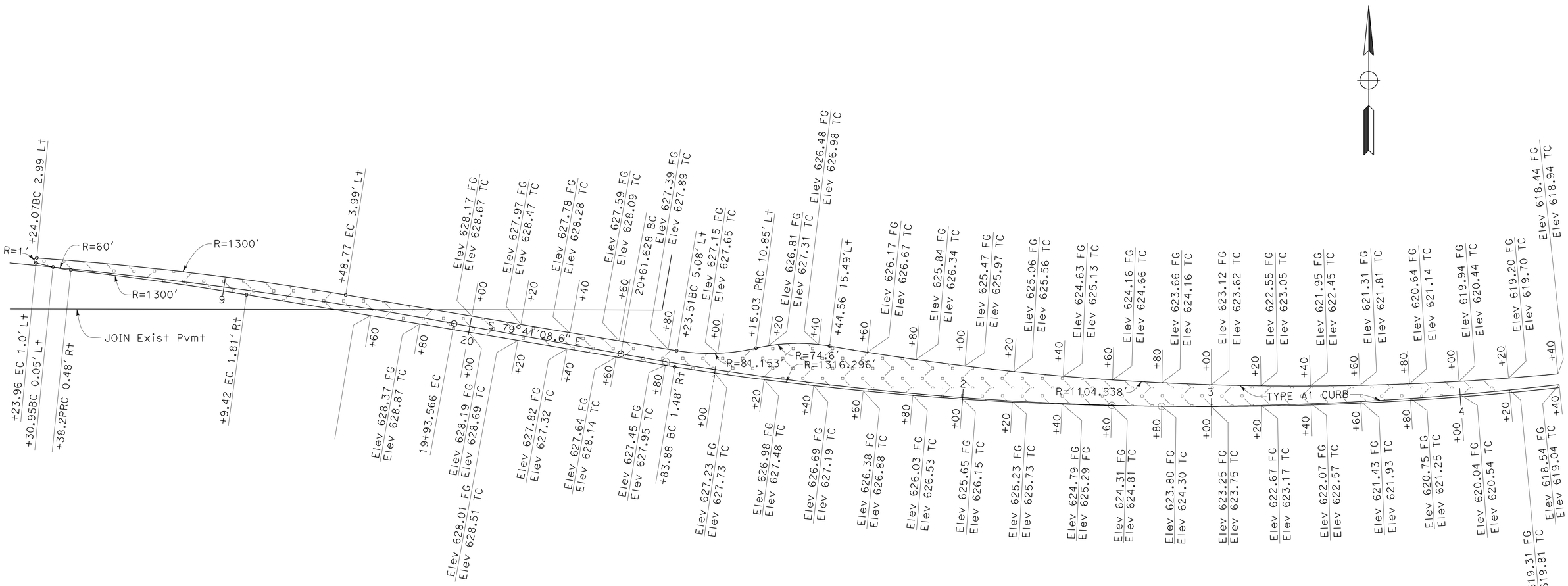

EMPIRE Ave - WEST ISLAND

CONSTRUCTION DETAILS

SCALE: 1" = 20'

C-44

CALCULATED-DESIGNED BY	VICTOR PONCE	REVISED BY	
CHECKED BY	XXXXX	DATE REVISED	
FUNCTIONAL SUPERVISOR	CHARLES P. TON		

STATE OF CALIFORNIA - DEPARTMENT OF TRANSPORTATION

Caltrans®

DESIGN

LAST REVISION 00-00-00 | DATE PLOTTED => 21-MAY-2012 | TIME PLOTTED => 16:43

Dist	COUNTY	ROUTE	POST MILES TOTAL PROJECT	SHEET No.	TOTAL SHEETS
07	LA	5	29.4/31.6	120	1931

REGISTERED CIVIL ENGINEER — DATE 1/20/12

5-21-12
PLANS APPROVAL DATE

REGISTERED PROFESSIONAL ENGINEER — THAO T. TRAN — No. C66879 — Exp. 9/30/12 — CIVIL — STATE OF CALIFORNIA

THE STATE OF CALIFORNIA OR ITS OFFICERS OR AGENTS SHALL NOT BE RESPONSIBLE FOR THE ACCURACY OR COMPLETENESS OF SCANNED COPIES OF THIS PLAN SHEET.

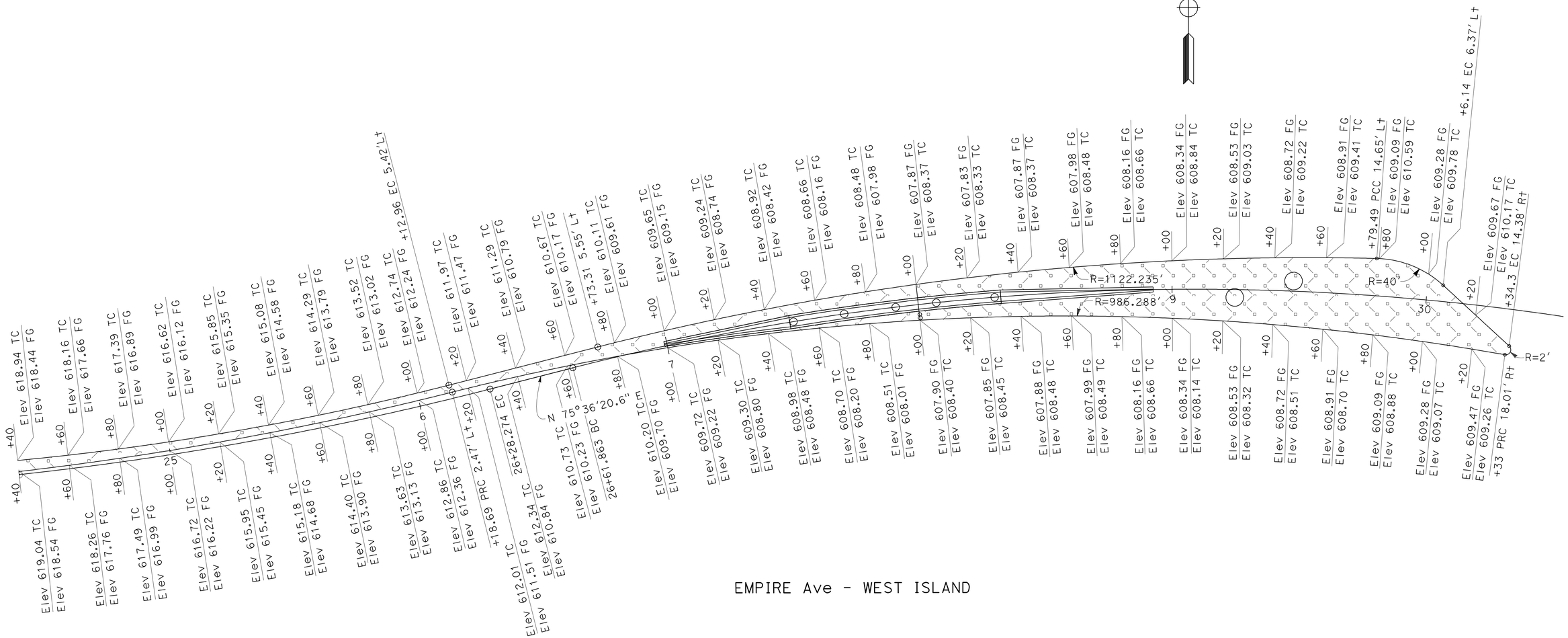

EMPIRE Ave - WEST ISLAND

CONSTRUCTION DETAILS

SCALE: 1" = 20'

C-45

STATE OF CALIFORNIA - DEPARTMENT OF TRANSPORTATION
Caltrans®
DESIGN

FUNCTIONAL SUPERVISOR: CHARLES P. TON
CALCULATED-DESIGNED BY: VICTOR PONCE
CHECKED BY: XXXXX
REVISED BY
DATE REVISED

LAST REVISION 00-00-00
DATE PLOTTED => 21-MAY-2012
TIME PLOTTED => 16:43

Dist	COUNTY	ROUTE	POST MILES TOTAL PROJECT	SHEET No.	TOTAL SHEETS
07	LA	5	29.4/31.6	121	1931

REGISTERED CIVIL ENGINEER 1/20/12 DATE

5-21-12
PLANS APPROVAL DATE

REGISTERED PROFESSIONAL ENGINEER
THAO T. TRAN
No. C66879
Exp. 9/30/12
CIVIL
STATE OF CALIFORNIA

THE STATE OF CALIFORNIA OR ITS OFFICERS OR AGENTS SHALL NOT BE RESPONSIBLE FOR THE ACCURACY OR COMPLETENESS OF SCANNED COPIES OF THIS PLAN SHEET.

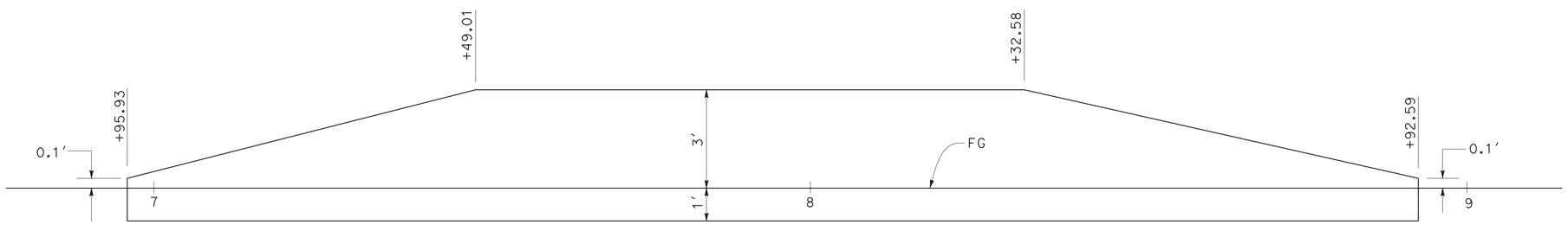

ELEVATION

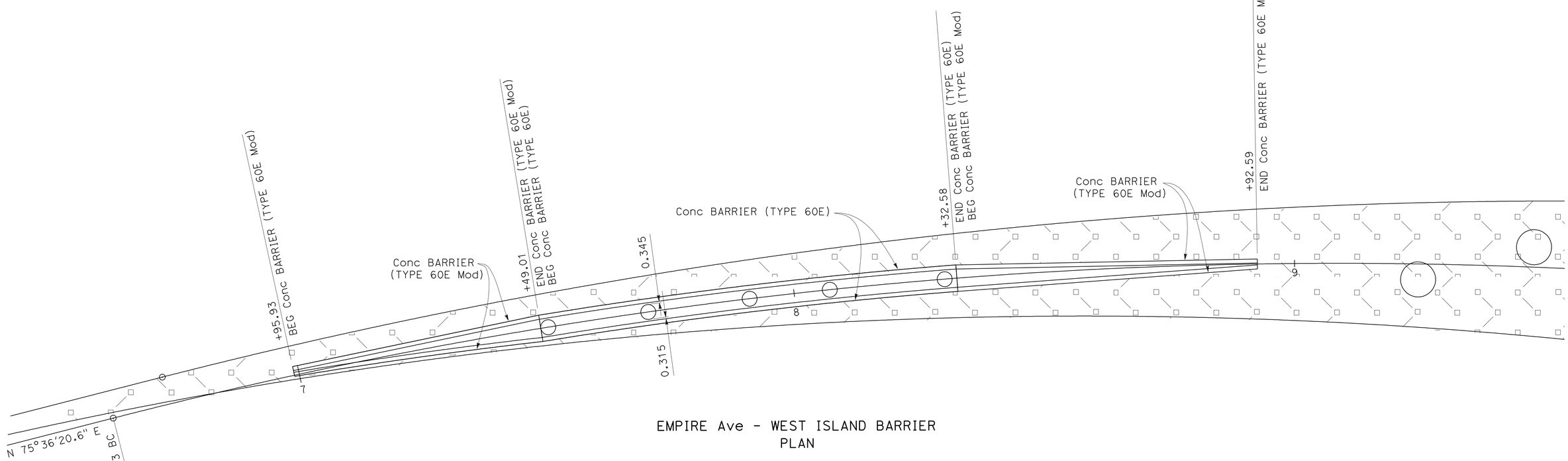

EMPIRE Ave - WEST ISLAND BARRIER
PLAN

CONSTRUCTION DETAILS

SCALE: 1" = 10′

C-46

STATE OF CALIFORNIA - DEPARTMENT OF TRANSPORTATION
DESIGN
Caltrans

FUNCTIONAL SUPERVISOR: CHARLES P. TON
CALCULATED-DESIGNED BY: VICTOR PONCE
CHECKED BY: XXXXX
REVISED BY
DATE REVISED

LAST REVISION 00-00-00
DATE PLOTTED => 21-MAY-2012
TIME PLOTTED => 15:45

Dist	COUNTY	ROUTE	POST MILES TOTAL PROJECT	SHEET No.	TOTAL SHEETS
07	LA	5	29.4/31.6	122	1931

REGISTERED CIVIL ENGINEER 1/20/12 DATE

5-21-12
PLANS APPROVAL DATE

REGISTERED PROFESSIONAL ENGINEER THAO T. TRAN No. C66879 Exp. 9/30/12 CIVIL STATE OF CALIFORNIA

THE STATE OF CALIFORNIA OR ITS OFFICERS OR AGENTS SHALL NOT BE RESPONSIBLE FOR THE ACCURACY OR COMPLETENESS OF SCANNED COPIES OF THIS PLAN SHEET.

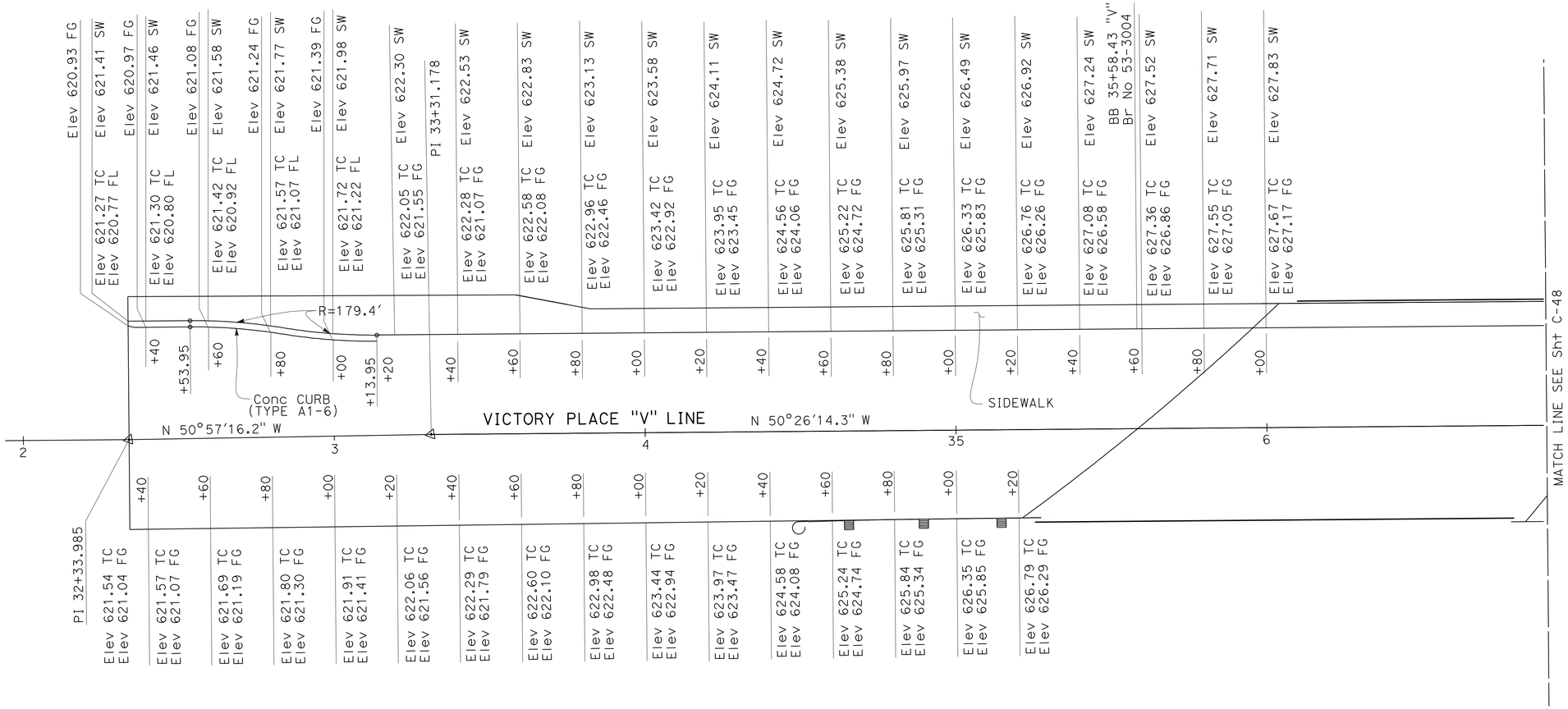

CONSTRUCTION DETAILS

SCALE: 1" = 20'

C-47

STATE OF CALIFORNIA - DEPARTMENT OF TRANSPORTATION
Caltrans DESIGN

FUNCTIONAL SUPERVISOR: CHARLES P. TON
CALCULATED-DESIGNED BY: VICTOR PONCE
CHECKED BY: XXXXX
REVISED BY
DATE REVISED

LAST REVISION 00-00-00
DATE PLOTTED => 21-MAY-2012
TIME PLOTTED => 15:45

Dist	COUNTY	ROUTE	POST MILES TOTAL PROJECT	SHEET No.	TOTAL SHEETS
07	LA	5	29.4/31.6	123	1931

REGISTERED CIVIL ENGINEER 1/20/12 DATE

5-21-12
PLANS APPROVAL DATE

REGISTERED PROFESSIONAL ENGINEER THAO T. TRAN No. C66879 Exp. 9/30/12 CIVIL STATE OF CALIFORNIA

THE STATE OF CALIFORNIA OR ITS OFFICERS OR AGENTS SHALL NOT BE RESPONSIBLE FOR THE ACCURACY OR COMPLETENESS OF SCANNED COPIES OF THIS PLAN SHEET.

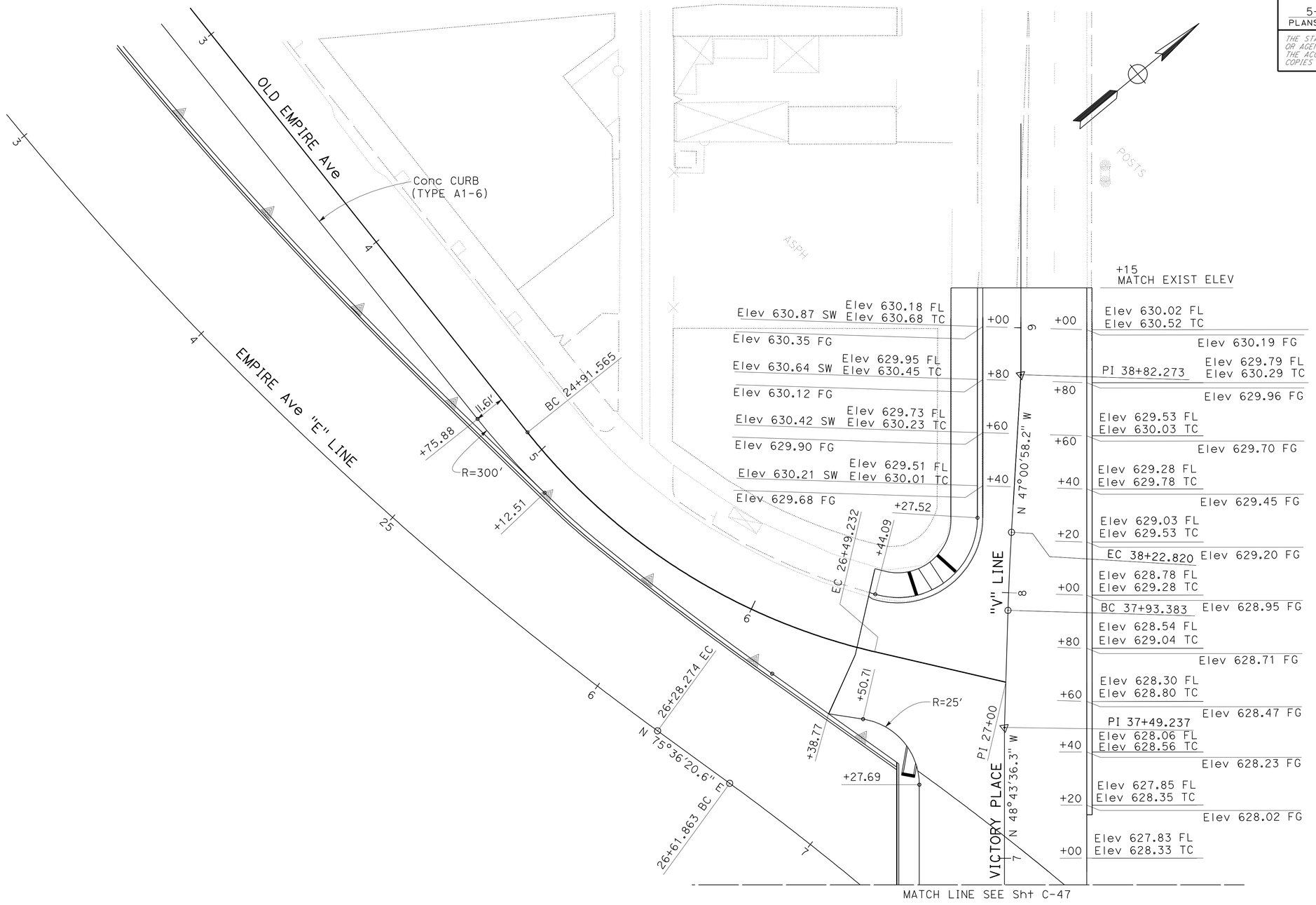

CONSTRUCTION DETAILS

SCALE: 1" = 20'

C-48

REVISED BY	DATE REVISED

CALCULATED-DESIGNED BY	CHECKED BY
VICTOR PONCE	XXXXX

FUNCTIONAL SUPERVISOR: CHARLES P. TON

STATE OF CALIFORNIA - DEPARTMENT OF TRANSPORTATION

Caltrans

DESIGN

LAST REVISION 00-00-00 | DATE PLOTTED => 21-MAY-2012 | TIME PLOTTED => 15:45

Dist	COUNTY	ROUTE	POST MILES TOTAL PROJECT	SHEET No.	TOTAL SHEETS
07	LA	5	29.4/31.6	124	1931

REGISTERED CIVIL ENGINEER 1/20/12 DATE

5-21-12
PLANS APPROVAL DATE

REGISTERED PROFESSIONAL ENGINEER
THAO T. TRAN
No. C66879
Exp. 9/30/12
CIVIL
STATE OF CALIFORNIA

THE STATE OF CALIFORNIA OR ITS OFFICERS OR AGENTS SHALL NOT BE RESPONSIBLE FOR THE ACCURACY OR COMPLETENESS OF SCANNED COPIES OF THIS PLAN SHEET.

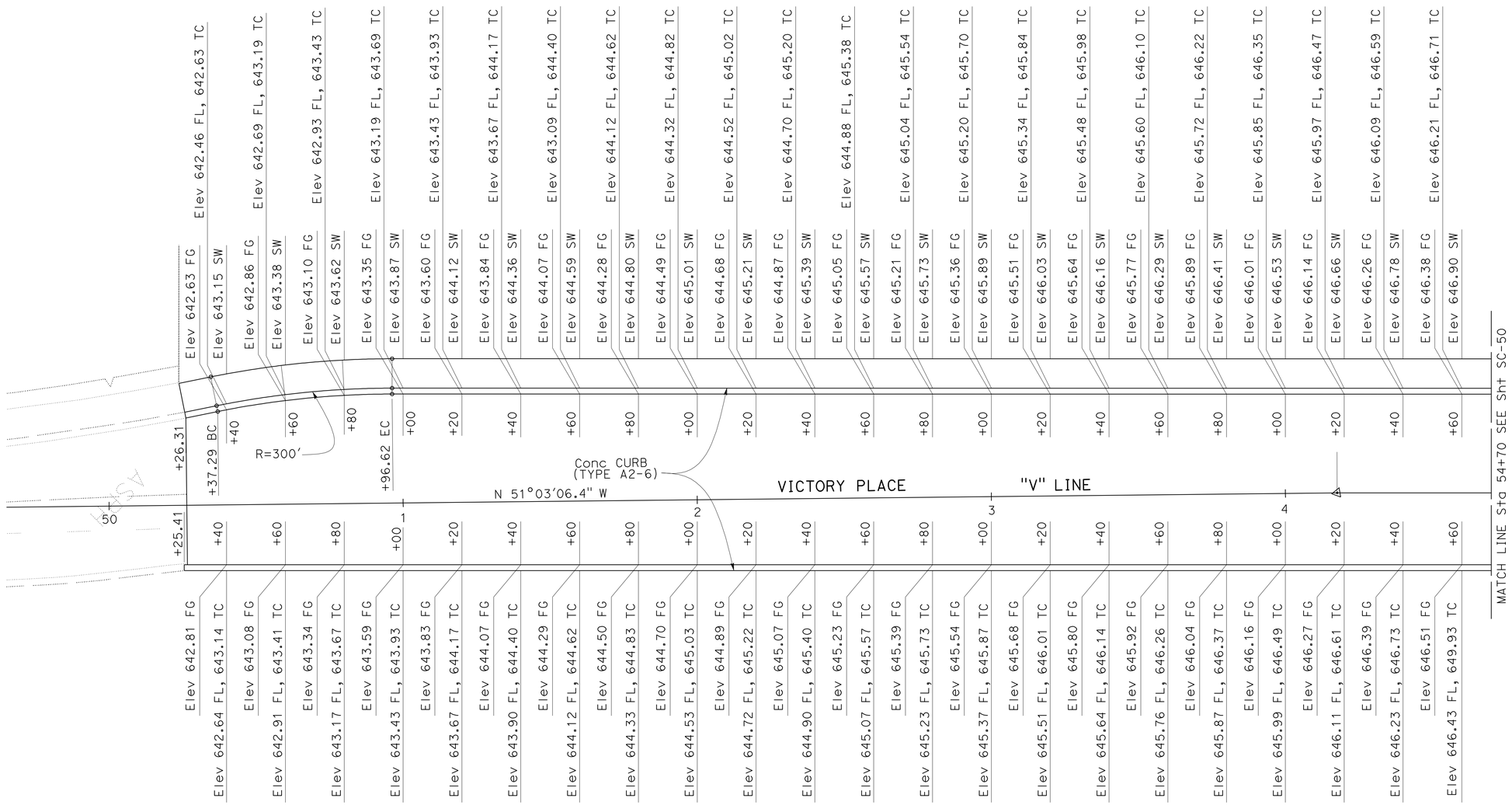

CONSTRUCTION DETAILS

SCALE: 1" = 20'

C-49

STATE OF CALIFORNIA - DEPARTMENT OF TRANSPORTATION
Caltrans® DESIGN

FUNCTIONAL SUPERVISOR: CHARLES P. TON
CALCULATED-DESIGNED BY: VICTOR PONCE
CHECKED BY: XXXXX
REVISED BY
DATE REVISED

LAST REVISION 00-00-00 | DATE PLOTTED => 21-MAY-2012 | TIME PLOTTED => 15:45

Dist	COUNTY	ROUTE	POST MILES TOTAL PROJECT	SHEET No.	TOTAL SHEETS
07	LA	5	29.4/31.6	125	1931

REGISTERED CIVIL ENGINEER 1/20/12 DATE

5-21-12
PLANS APPROVAL DATE

REGISTERED PROFESSIONAL ENGINEER
THAO T. TRAN
No. C66879
Exp. 9/30/12
CIVIL
STATE OF CALIFORNIA

THE STATE OF CALIFORNIA OR ITS OFFICERS OR AGENTS SHALL NOT BE RESPONSIBLE FOR THE ACCURACY OR COMPLETENESS OF SCANNED COPIES OF THIS PLAN SHEET.

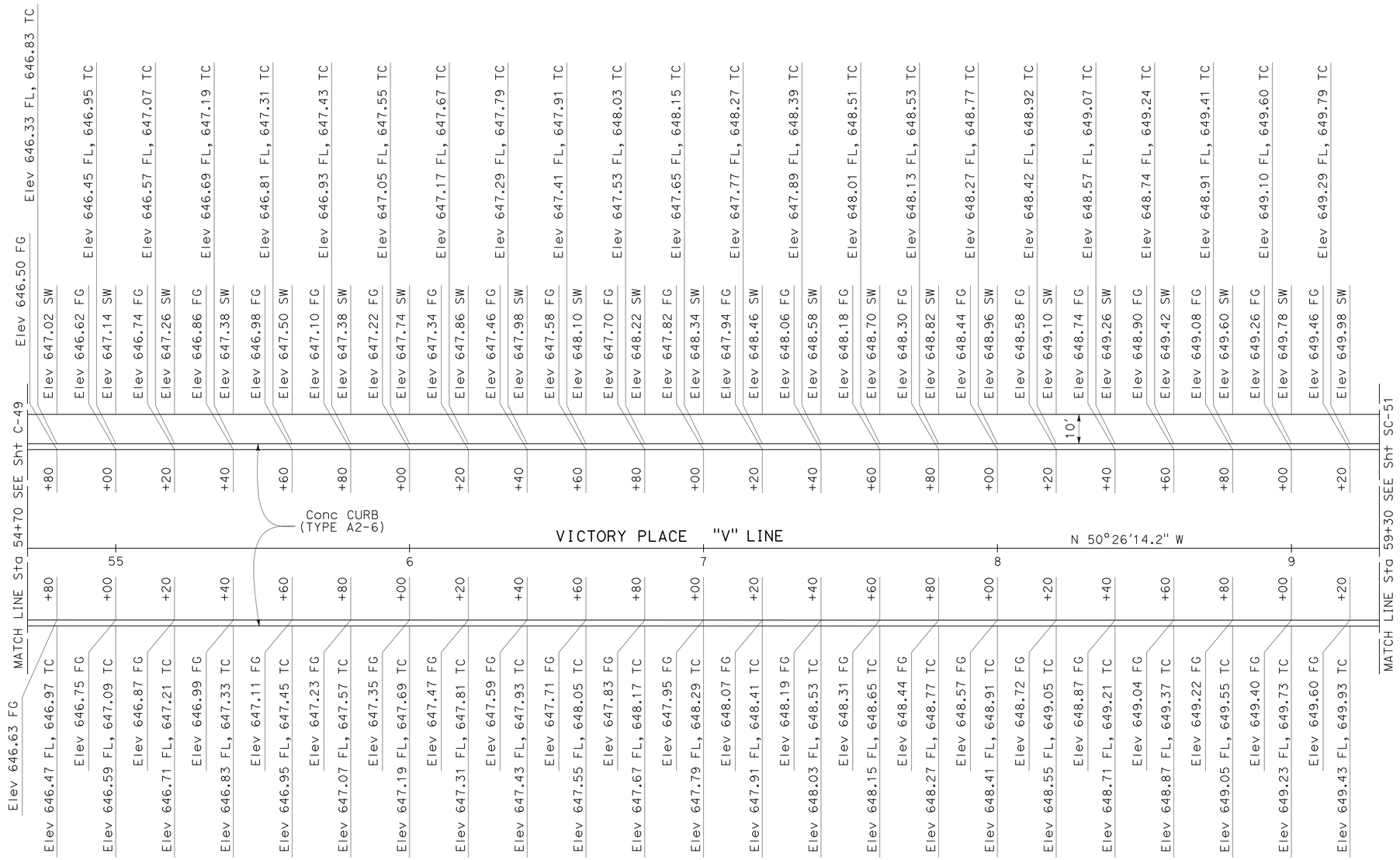

CONSTRUCTION DETAILS

SCALE: 1" = 20'

C-50

STATE OF CALIFORNIA - DEPARTMENT OF TRANSPORTATION	VICTOR PONCE	FUNCTIONAL SUPERVISOR	REVISED BY
Caltrans® DESIGN	XXXXX	CHARLES P. TON	DATE REVISED
	CALCULATED-DESIGNED BY		
	CHECKED BY		

LAST REVISION 00-00-00 | DATE PLOTTED => 21-MAY-2012 | TIME PLOTTED => 15:45

Dist	COUNTY	ROUTE	POST MILES TOTAL PROJECT	SHEET No.	TOTAL SHEETS
07	LA	5	29.4/31.6	126	1931

REGISTERED CIVIL ENGINEER DATE

5-21-12
PLANS APPROVAL DATE

REGISTERED PROFESSIONAL ENGINEER
THAO T. TRAN
No. C66879
Exp. 09/30/12
CIVIL
STATE OF CALIFORNIA

THE STATE OF CALIFORNIA OR ITS OFFICERS OR AGENTS SHALL NOT BE RESPONSIBLE FOR THE ACCURACY OR COMPLETENESS OF SCANNED COPIES OF THIS PLAN SHEET.

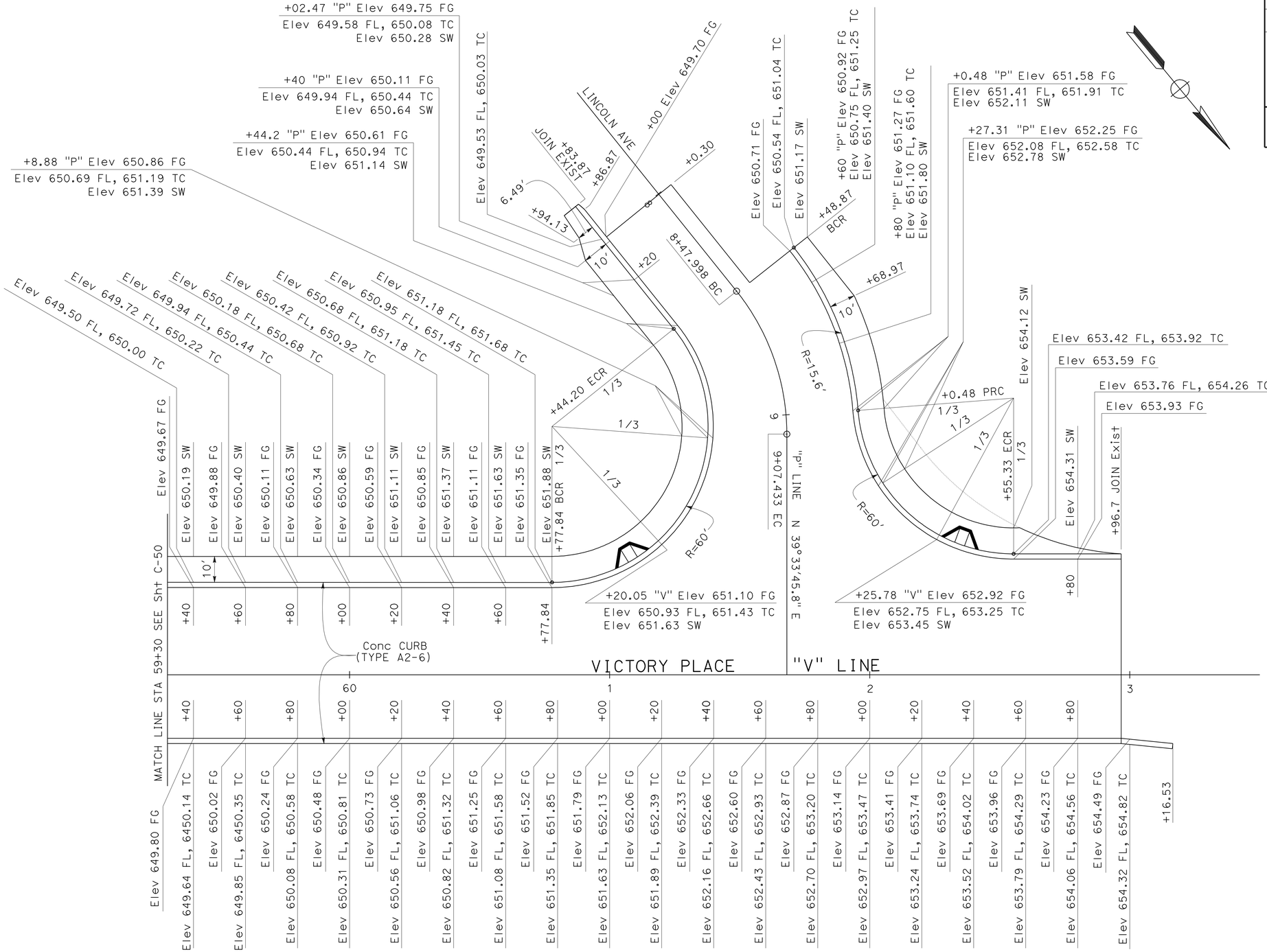

CONSTRUCTION DETAILS

SCALE: 1" = 20'

C-51

STATE OF CALIFORNIA - DEPARTMENT OF TRANSPORTATION
Caltrans
DESIGN

FUNCTIONAL SUPERVISOR: CHARLES P. TON
CALCULATED-DESIGNED BY: VICTOR PONCE
CHECKED BY: XXXXX
REVISED BY
DATE REVISED

LAST REVISION 00-00-00
DATE PLOTTED => 21-MAY-2012
TIME PLOTTED => 16:02

Dist	COUNTY	ROUTE	POST MILES TOTAL PROJECT	SHEET No.	TOTAL SHEETS
07	LA	5	29.4/31.6	127	1931

REGISTERED CIVIL ENGINEER 1/20/12 DATE

5-21-12
PLANS APPROVAL DATE

REGISTERED PROFESSIONAL ENGINEER THAO T. TRAN No. C66879 Exp. 9/30/12 CIVIL STATE OF CALIFORNIA

THE STATE OF CALIFORNIA OR ITS OFFICERS OR AGENTS SHALL NOT BE RESPONSIBLE FOR THE ACCURACY OR COMPLETENESS OF SCANNED COPIES OF THIS PLAN SHEET.

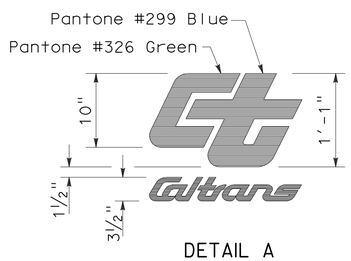

DETAIL A

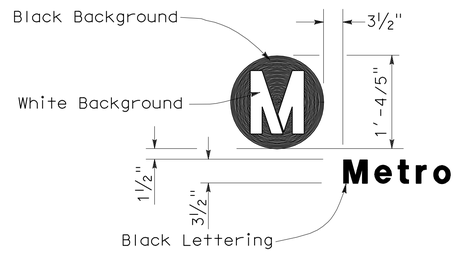

DETAIL B

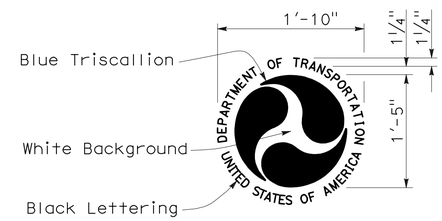

DETAIL C

NOTES:

1. THE BORDER OF THE SIGN SHALL BE PURPLE. (PANTONE #520)
2. EXCEPT AS OTHERWISE SHOWN, THE LEGEND OF THE SIGNS SHALL BE BLACK, WHITE AND ORANGE.
3. THE BACKGROUND OF THE SIGNS SHALL BE PURPLE (PANTONE #520) AND WHITE.
4. ALL COLORS EXCEPT BLACK SHALL BE RETROREFLECTIVE. (RSTM II)
5. SIGN PANELS SHALL COMPLY WITH STANDARD PLANS S93 AND S94.

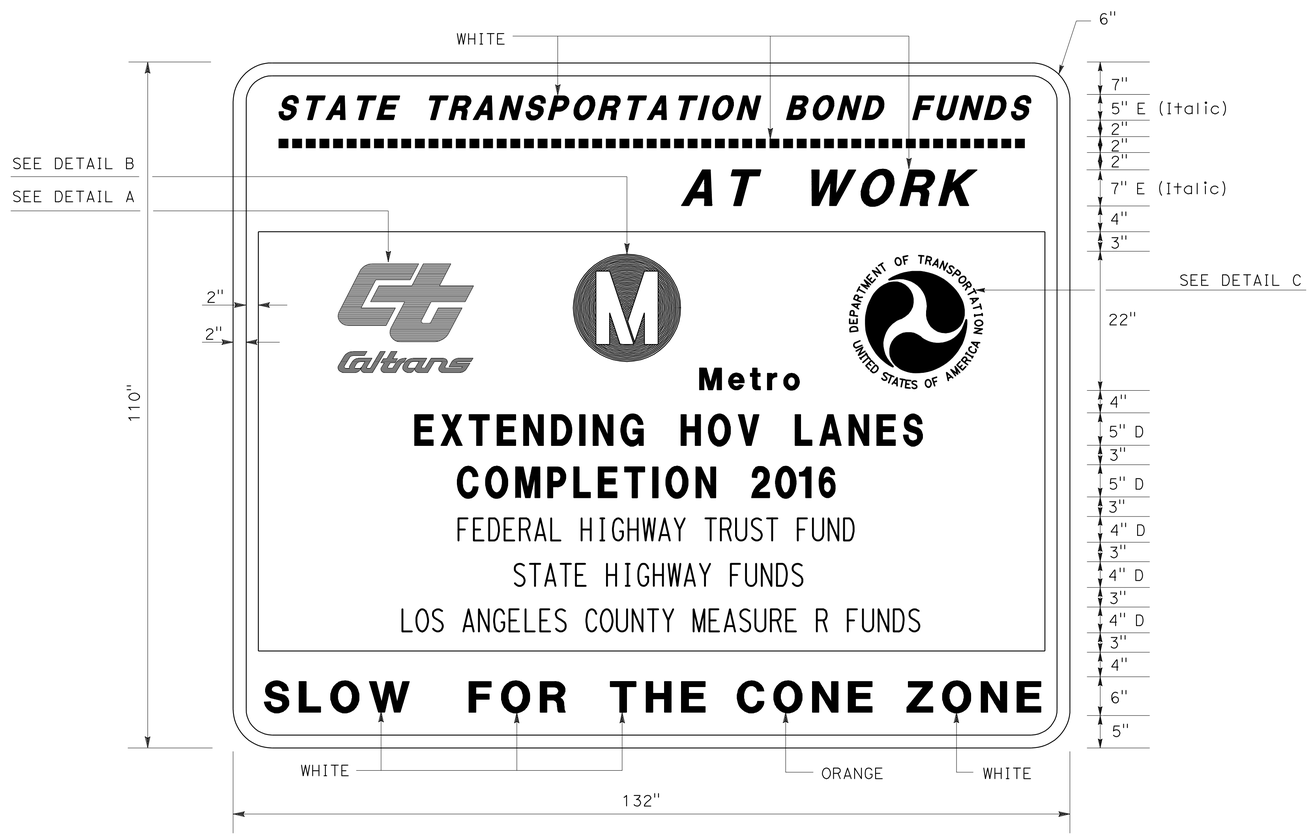

CONSTRUCTION PROJECT FUNDING IDENTIFICATION SIGNS

NO SCALE

C-52

STATE OF CALIFORNIA - DEPARTMENT OF TRANSPORTATION
Caltrans DESIGN

FUNCTIONAL SUPERVISOR: CHARLES P. TON
CALCULATED-DESIGNED BY: LARRY QUANG
CHECKED BY: THAO TRAN
REVISED BY
DATE REVISED

LAST REVISION 00-00-00
DATE PLOTTED => 19-JUN-2012
TIME PLOTTED => 11:32

Dist	COUNTY	ROUTE	POST MILES TOTAL PROJECT	SHEET No.	TOTAL SHEETS
07	LA	5	29.4/31.6	128	1931

REGISTERED CIVIL ENGINEER 2/10/12 DATE

5-21-12
PLANS APPROVAL DATE

REGISTERED PROFESSIONAL ENGINEER THAO T. TRAN No. C66879 Exp. 9/30/12 CIVIL STATE OF CALIFORNIA

THE STATE OF CALIFORNIA OR ITS OFFICERS OR AGENTS SHALL NOT BE RESPONSIBLE FOR THE ACCURACY OR COMPLETENESS OF SCANNED COPIES OF THIS PLAN SHEET.

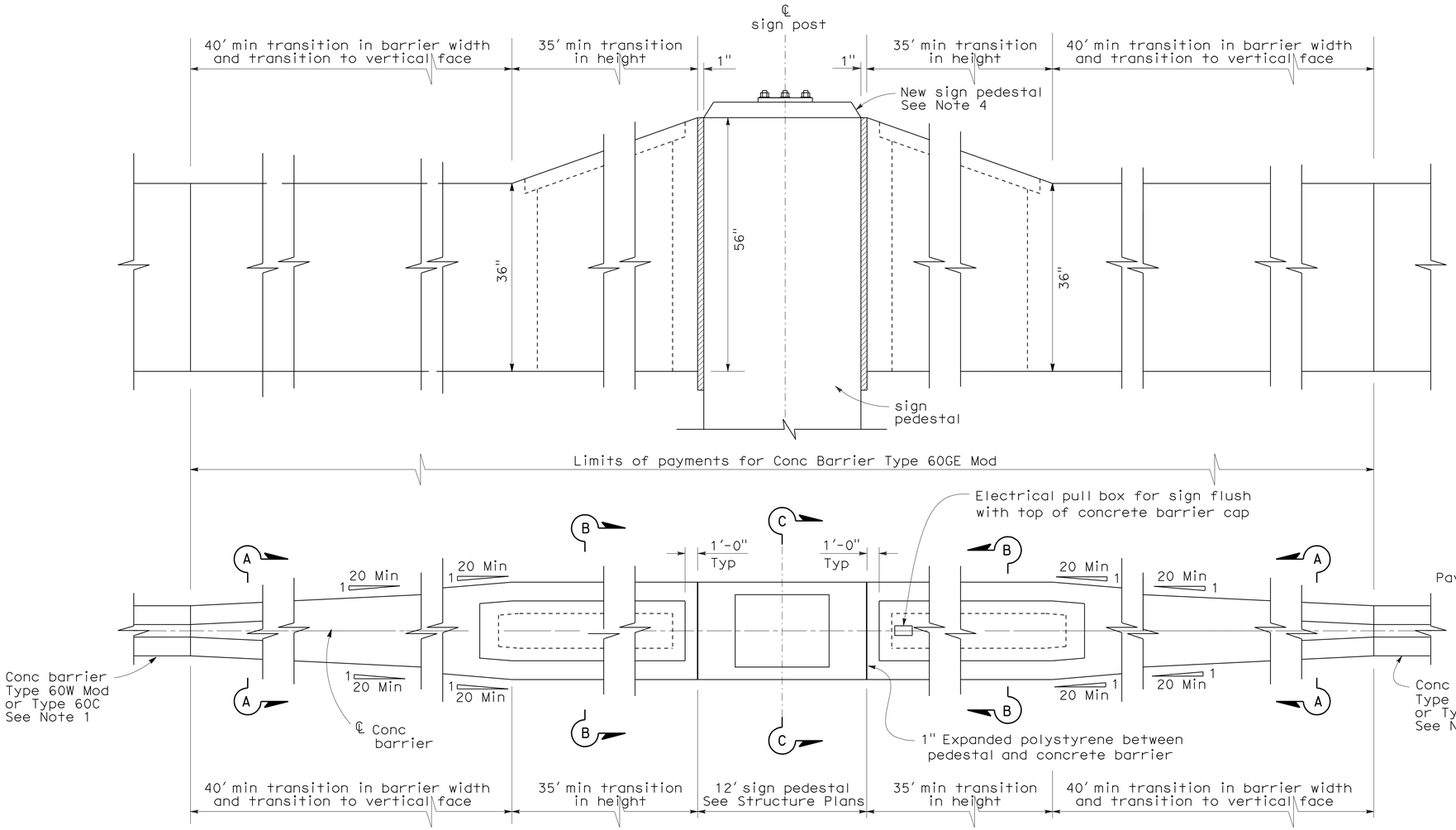

TRANSITION AT SIGN PEDESTAL

CONCRETE BARRIER TYPE 60GE Mod

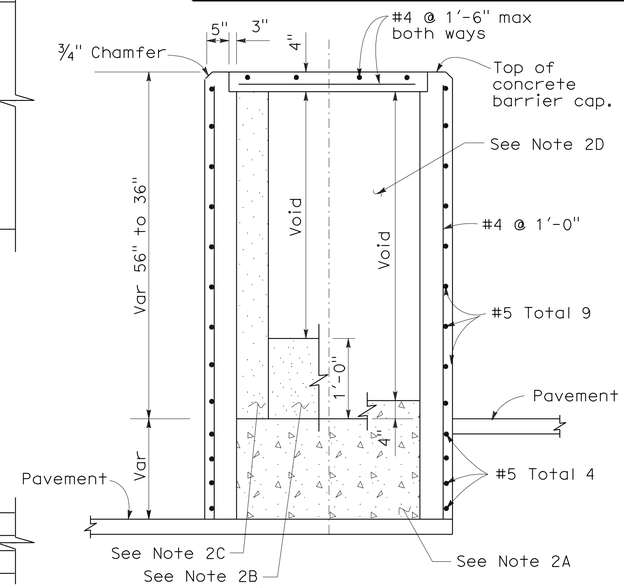

SECTION B-B

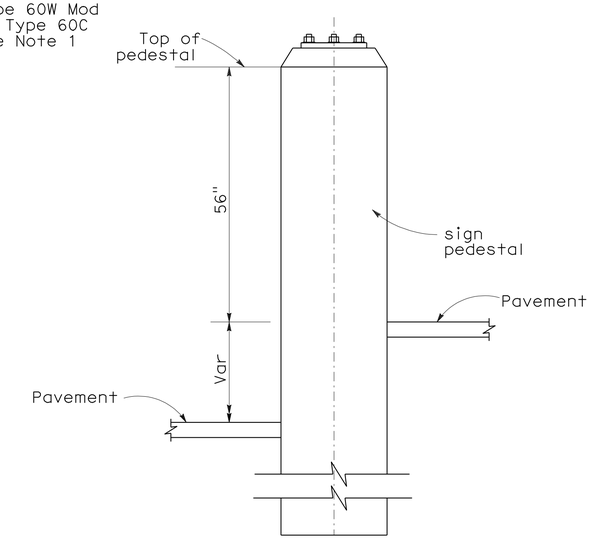

SECTION C-C

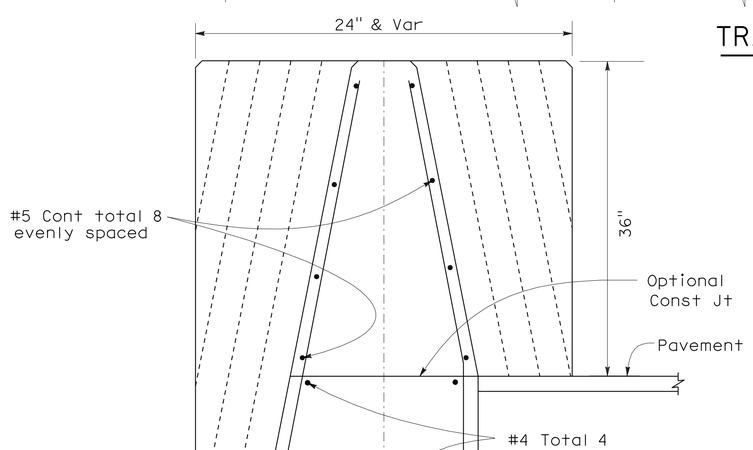

SECTION A-A

NOTES:

1. See RSP A76A for Concrete Barrier Type 60C, and Drainage Details plans for Concrete Barrier Type 60W Mod.
2. Contractor options for fill between concrete barrier walls:
   A. Place 4" PCC at base between concrete barrier walls.
   B. Place 1′-0" of granular material at base between walls.
   C. Place granular material from base to bottom of 4" cap.
   D. Monolithic concrete with foam blockouts is not permitted.
3. Reinforcing steel shall extend continuous through construction joints.
4. See "Overhead Sign" plans for sign pedestal elevations on new construction, and Structure plans for pedestal details.
5. See Overhead Signs Standard Plan Pile Foundation Tables.
6. Forming material for 4" cap may remain in place.

CONSTRUCTION DETAILS

NO SCALE

C-53

REVISED BY	DATE REVISED
THAO TRAN	CHARLES TON
CALCULATED-DESIGNED BY	CHECKED BY
FUNCTIONAL SUPERVISOR	CHARLES P. TON

STATE OF CALIFORNIA - DEPARTMENT OF TRANSPORTATION
Caltrans
DESIGN

LAST REVISION 00-00-00 | DATE PLOTTED => 21-MAY-2012 | TIME PLOTTED => 15:46

Dist	COUNTY	ROUTE	POST MILES TOTAL PROJECT	SHEET No.	TOTAL SHEETS
07	LA	5	29.4/31.6	129	1931

REGISTERED CIVIL ENGINEER 5/15/12 DATE

5-21-12
PLANS APPROVAL DATE

REGISTERED PROFESSIONAL ENGINEER
RICHARD STEVEN AGOR
No. 57082
Exp. 12/31/13
CIVIL
STATE OF CALIFORNIA

THE STATE OF CALIFORNIA OR ITS OFFICERS OR AGENTS SHALL NOT BE RESPONSIBLE FOR THE ACCURACY OR COMPLETENESS OF SCANNED COPIES OF THIS PLAN SHEET.

CITY OF BURBANK
150 N 3RD ST
BURBANK, CA 91510

TETRA TECH
17885 VON KARMAN AVE
IRVINE, CA 92614

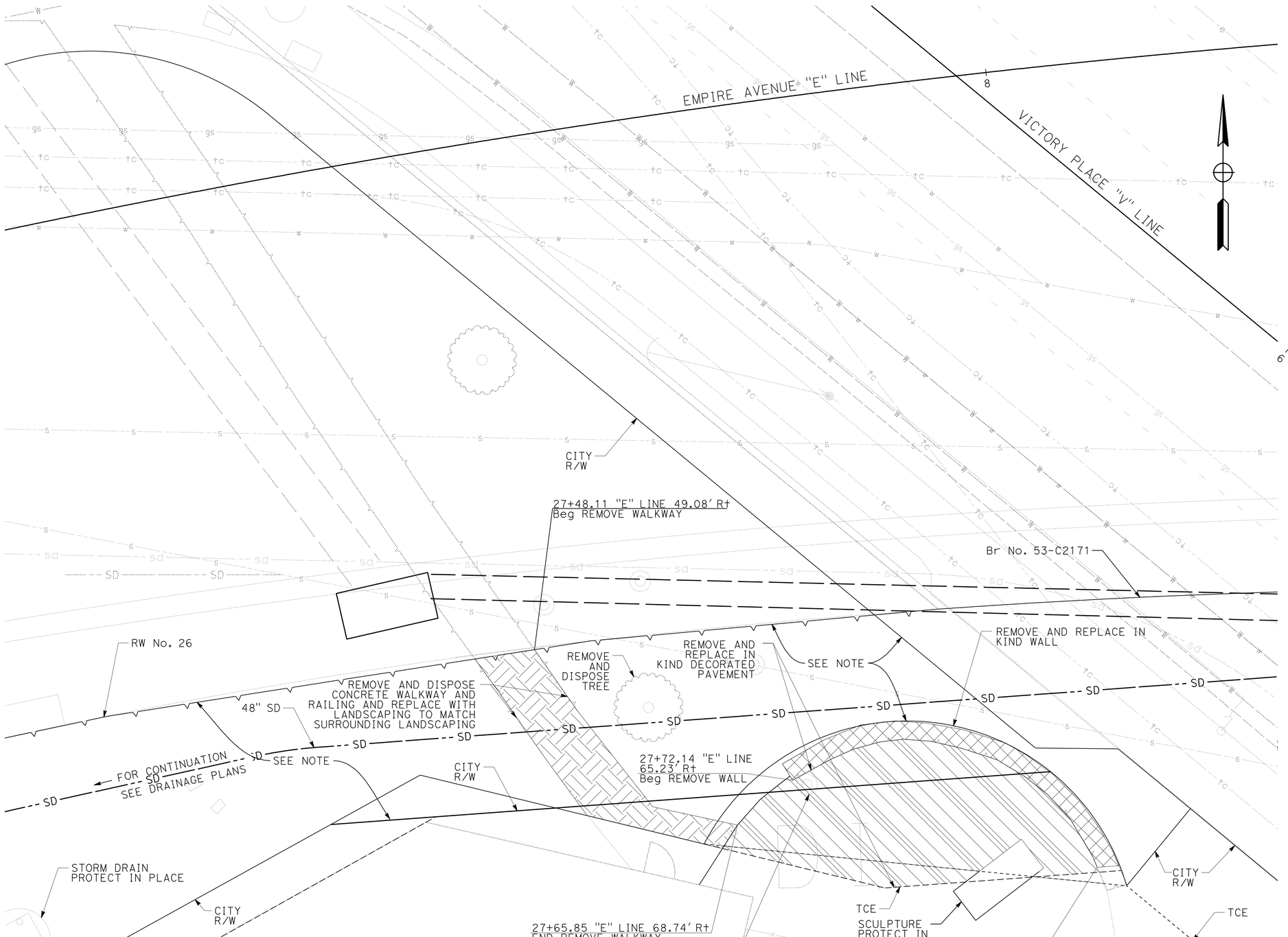

LEGEND:

- REMOVE AND REPLACE WALL
- REMOVE CONCRETE WALKWAY
- REMOVE AND REPLACE PAVING

NOTES:

ALL LANDSCAPING AND GRASS AREAS SHALL BE RESTORED TO ITS ORIGINAL CONDITION. ALL IRRIGATION LINES, SPRINKLER CONTROL WIRES AND CONTROL BOXES THAT ARE DAMAGED DURING CONSTRUCTION SHALL BE REPAIRED TO THE SATISFACTION OF THE ENGINEER AND THE CITY OF BURBANK.

CONSTRUCTION DETAIL

SCALE: 1" = 5'

C-54

STATE OF CALIFORNIA - DEPARTMENT OF TRANSPORTATION
Caltrans
HYDRAULICS
CONSULTANT FUNCTIONAL SUPERVISOR: STEVEN AGOR
CALCULATED-DESIGNED BY: CRISNA ESTRADA
CHECKED BY: STEVEN AGOR
REVISED BY
DATE REVISED

LAST REVISION 02-14-12
DATE PLOTTED => 21-MAY-2012
TIME PLOTTED => 16:03

Dist	COUNTY	ROUTE	POST MILES TOTAL PROJECT	SHEET No.	TOTAL SHEETS
07	LA	5	29.4/31.6	130	1931

REGISTERED CIVIL ENGINEER 5/15/12 DATE

5-21-12
PLANS APPROVAL DATE

REGISTERED PROFESSIONAL ENGINEER RICHARD STEVEN AGOR No. 57082 Exp. 12/31/13 CIVIL STATE OF CALIFORNIA

THE STATE OF CALIFORNIA OR ITS OFFICERS OR AGENTS SHALL NOT BE RESPONSIBLE FOR THE ACCURACY OR COMPLETENESS OF SCANNED COPIES OF THIS PLAN SHEET.

CITY OF BURBANK
150 N 3RD ST
BURBANK, CA 91510

TETRA TECH
17885 VON KARMAN AVE
IRVINE, CA 92614

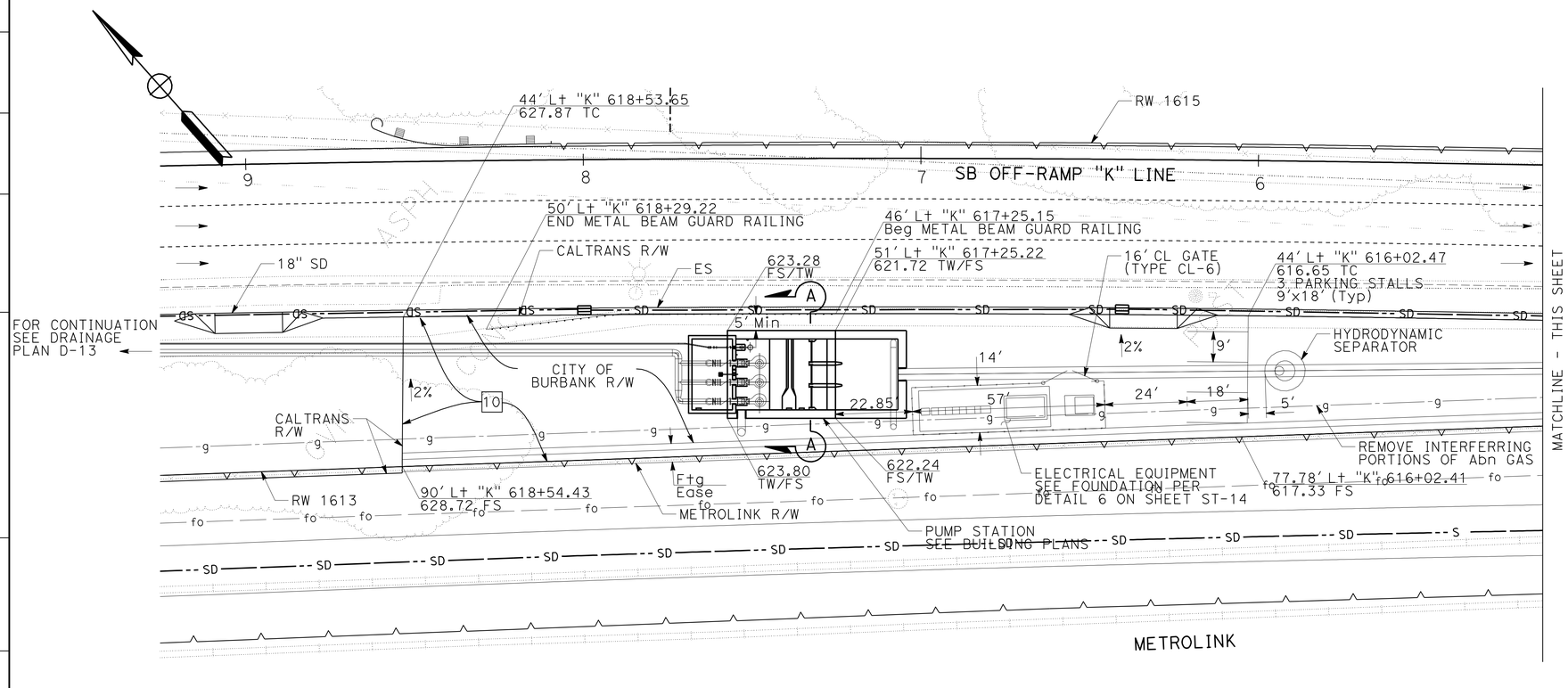

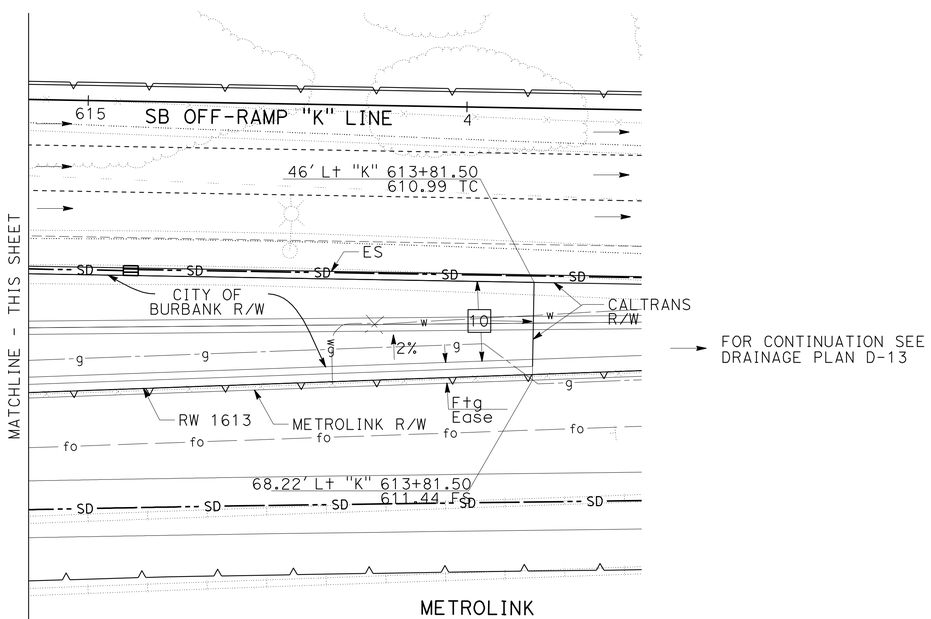

SUMMARY OF QUANTITIES

HMA	380	TON
Class 3AB	193	CY
CL FENCE(TYPE CL-6)	126	LF
METAL BEAM GUARD RAILING (WOOD POST)	104	LF
18' CL GATE(TYPE CL-6)	2	EA

NOTE: FOR INFORMATION ONLY, THESE QUANTITIES ARE ALREADY INCLUDED IN THE QUANTITIES SHEETS

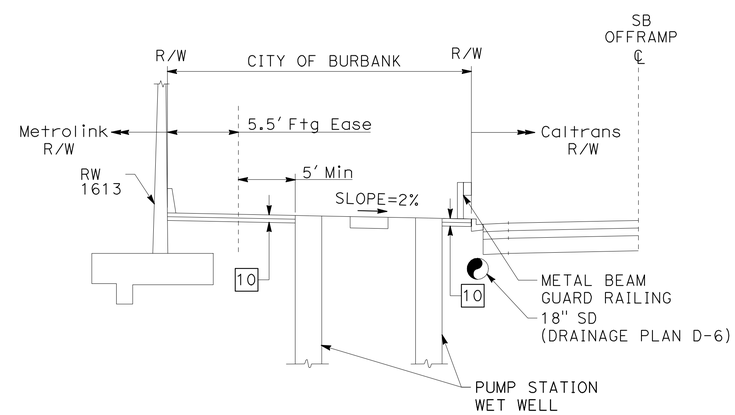

SECTION A-A
NO SCALE

CONSTRUCTION DETAIL

SCALE: 1" = 20'

C-55

STATE OF CALIFORNIA - DEPARTMENT OF TRANSPORTATION
Caltrans
HYDRAULICS
CONSULTANT FUNCTIONAL SUPERVISOR: STEVEN AGOR
CALCULATED-DESIGNED BY: CRISNA ESTRADA
CHECKED BY: STEVEN AGOR
REVISED BY
DATE REVISED

LAST REVISION 02-14-12
DATE PLOTTED => 21-MAY-2012
TIME PLOTTED => 16:03

Dist	COUNTY	ROUTE	POST MILES TOTAL PROJECT	SHEET No.	TOTAL SHEETS
07	LA	5	29.4/31.6	131	1931

REGISTERED CIVIL ENGINEER 2/10/12 DATE

5-21-12
PLANS APPROVAL DATE

REGISTERED PROFESSIONAL ENGINEER THAO T. TRAN No. C66879 Exp. 9/30/12 CIVIL STATE OF CALIFORNIA

THE STATE OF CALIFORNIA OR ITS OFFICERS OR AGENTS SHALL NOT BE RESPONSIBLE FOR THE ACCURACY OR COMPLETENESS OF SCANNED COPIES OF THIS PLAN SHEET.

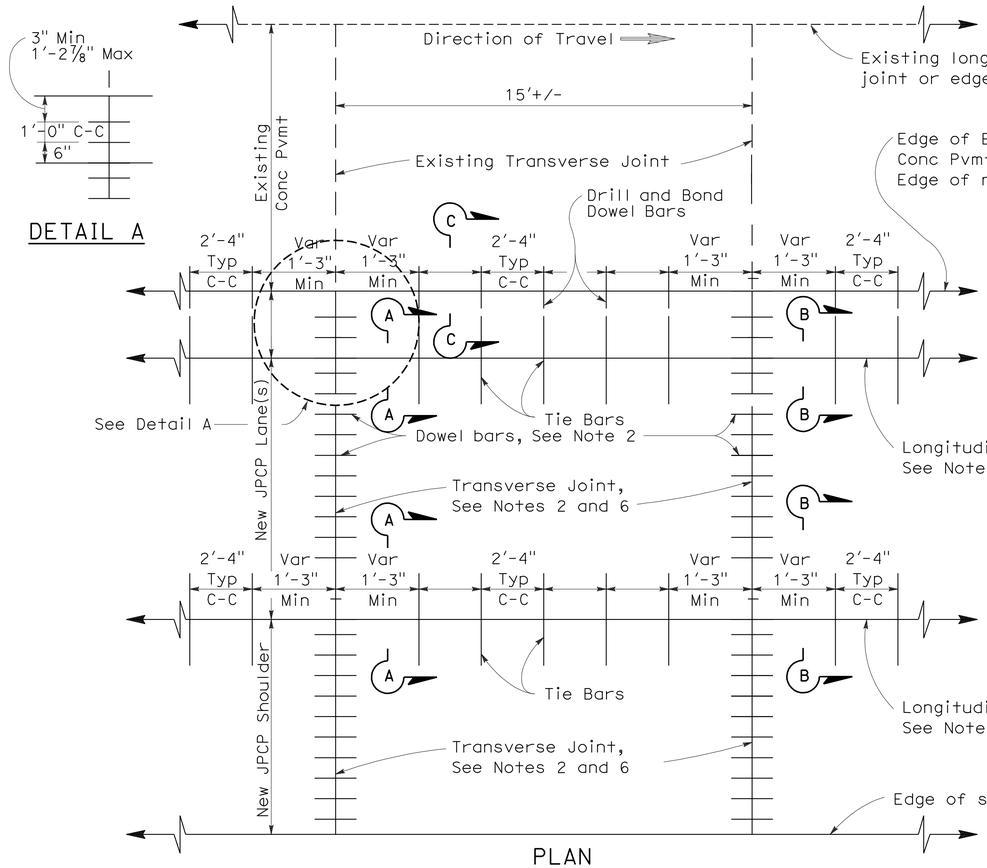

PLAN

LANE/SHOULDER ADDITION OR RECONSTRUCTION

See Notes 6 and 7

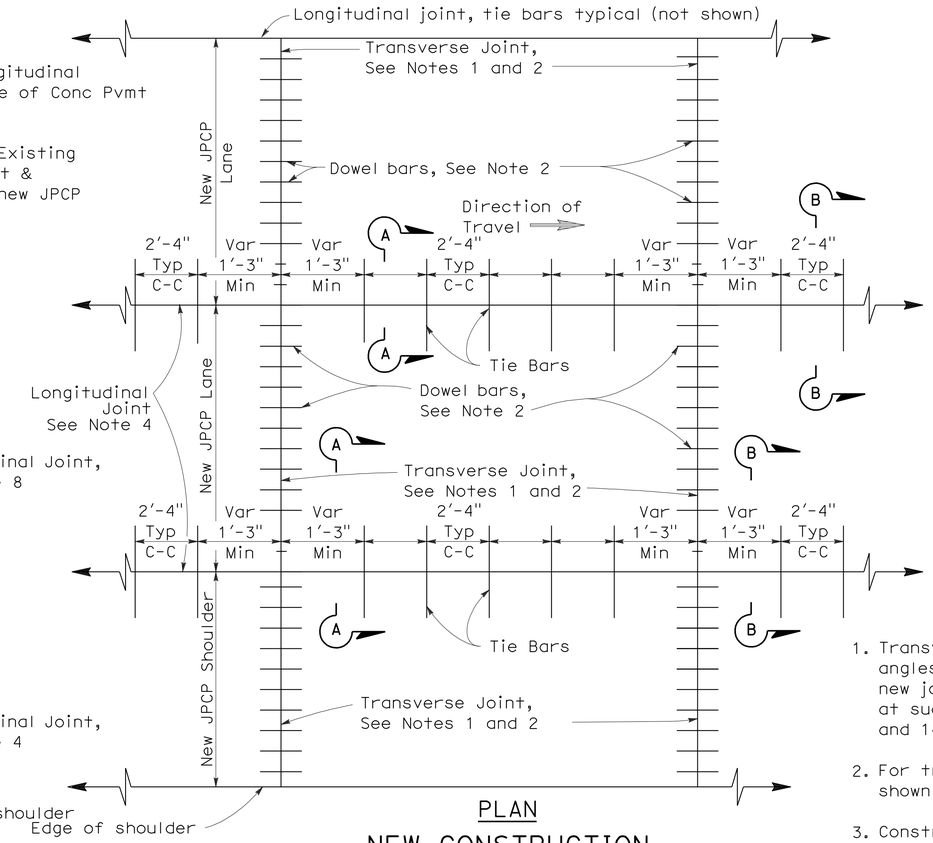

PLAN

NEW CONSTRUCTION

See Notes 6 and 7

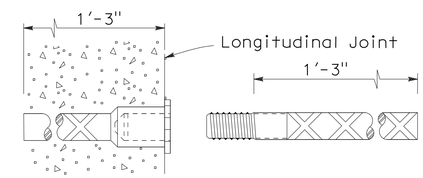

ALTERNATIVE TIE BAR SPLICE DETAIL

(Splice Coupler)

NOTES:

1. Transverse joints shall be constructed at right angles to the longitudinal pavement joints in new jointed plain concrete pavement and spaced at successive repeated intervals of 12', 15', 13' and 14'.
2. For transverse joint and dowel bar details not shown, See Revised Standard Plan RSP P10.
3. Construct longitudinal contraction joints as shown in Section A-A when more than one lane or shoulder widths are placed at one time. If constructing one lane at a time, use longitudinal construction joint, as shown in Section B-B.
4. For additional longitudinal joint details, see Revised Standard Plan RSP P18.
5. If fresh concrete is placed adjacent to existing concrete, the top corner of the new hardened concrete does not need to be rounded to the ¼" radius as shown.
6. Transverse joints shall be constructed at right angle to longitudinal pavement joints and match spacing of existing transverse joints.
7. Details can also apply to inside widening.
8. Omit Longitudinal joint when edge of new concrete pavement is less than 3'-3" from JPCP lane line.

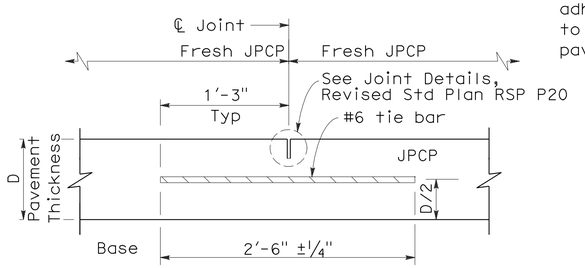

SECTION A-A

LONGITUDINAL CONTRACTION JOINT

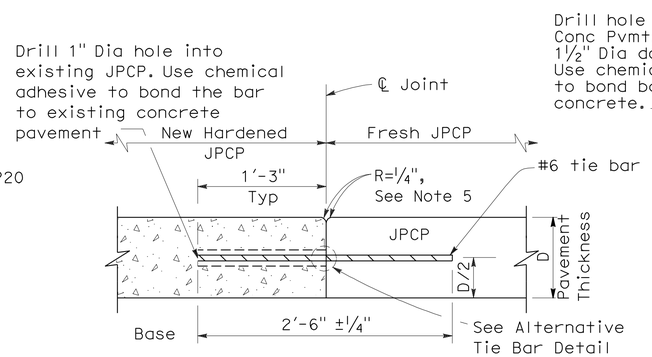

SECTION B-B

LONGITUDINAL CONSTRUCTION JOINT TIE BAR DETAILS

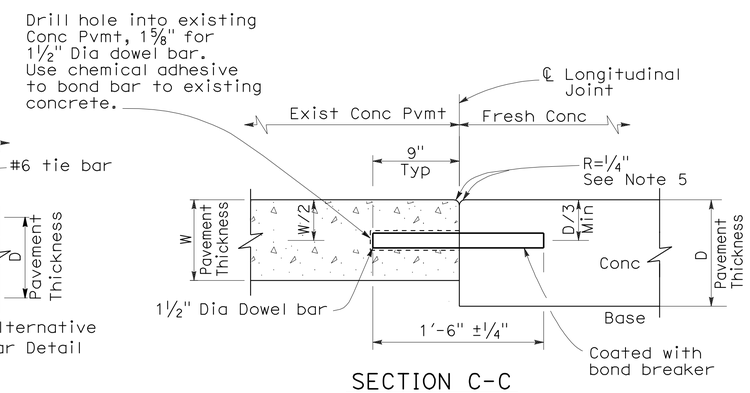

SECTION C-C

LONGITUDINAL CONSTRUCTION JOINT WITH DOWEL BARS

JOINTED PLAIN CONCRETE PAVEMENT CONSTRUCTION DETAILS

NO SCALE

C-56

STATE OF CALIFORNIA - DEPARTMENT OF TRANSPORTATION
DESIGN
FUNCTIONAL SUPERVISOR: CHARLES P. TON
CALCULATED-DESIGNED BY: THAO TRAN
CHECKED BY: CHARLES TON
REVISED BY
DATE REVISED

LAST REVISION 00-00-00
DATE PLOTTED => 21-MAY-2012
TIME PLOTTED => 15:46

Dist	COUNTY	ROUTE	POST MILES TOTAL PROJECT	SHEET No.	TOTAL SHEETS
07	LA	5	29.4/31.6	132	1931

11/18/11
REGISTERED CIVIL ENGINEER DATE

5-21-12
PLANS APPROVAL DATE

REGISTERED PROFESSIONAL ENGINEER
THAO T. TRAN
No. C66879
Exp. 09/30/12
CIVIL
STATE OF CALIFORNIA

THE STATE OF CALIFORNIA OR ITS OFFICERS OR AGENTS SHALL NOT BE RESPONSIBLE FOR THE ACCURACY OR COMPLETENESS OF SCANNED COPIES OF THIS PLAN SHEET.

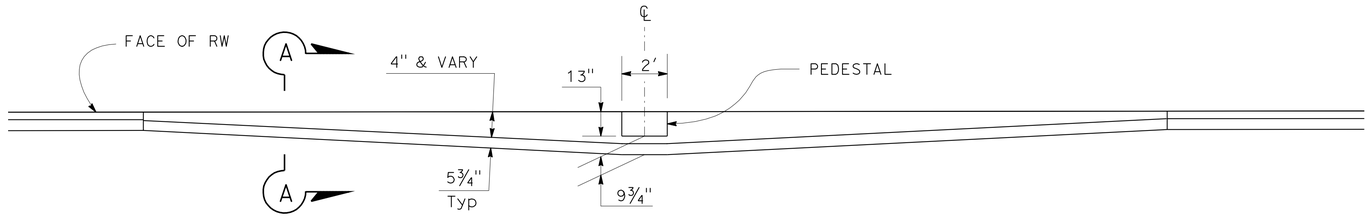

DETAIL A
NO SCALE

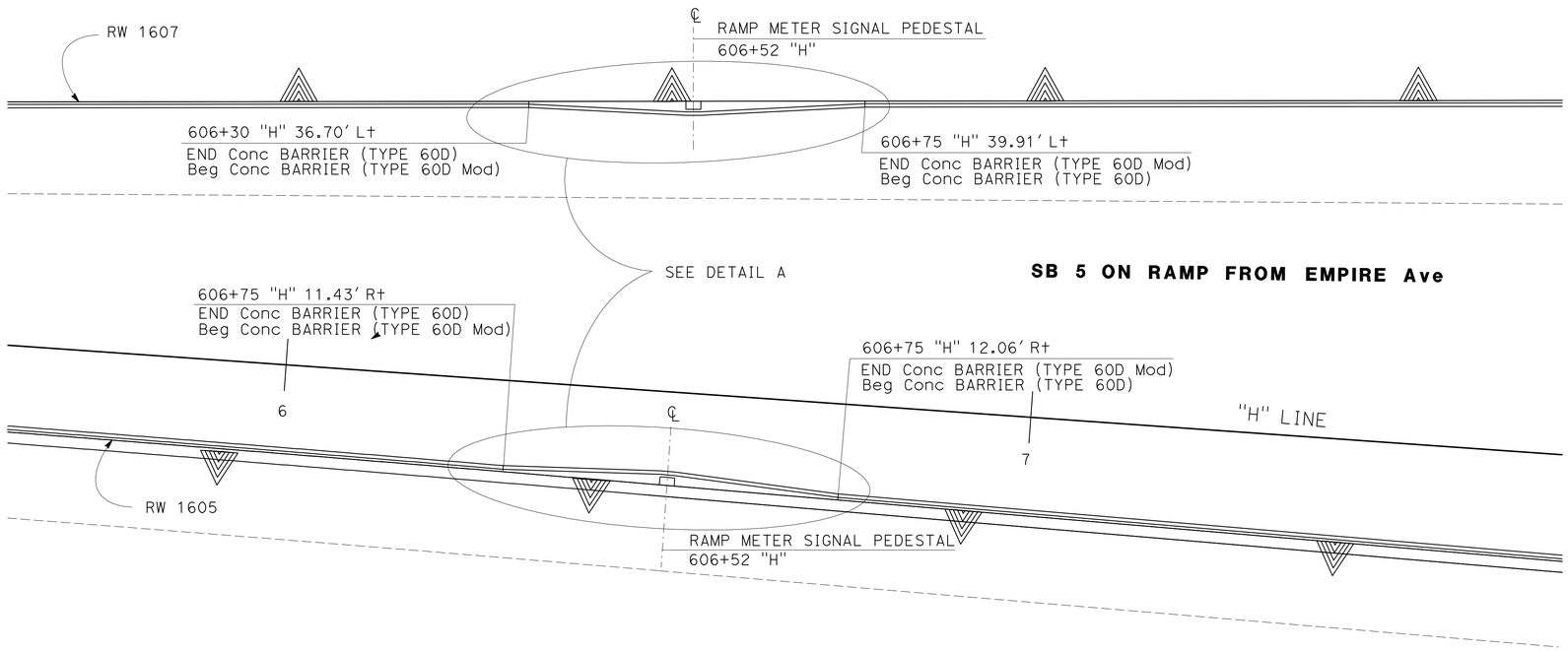

PLAN
SCALE 1"=10'

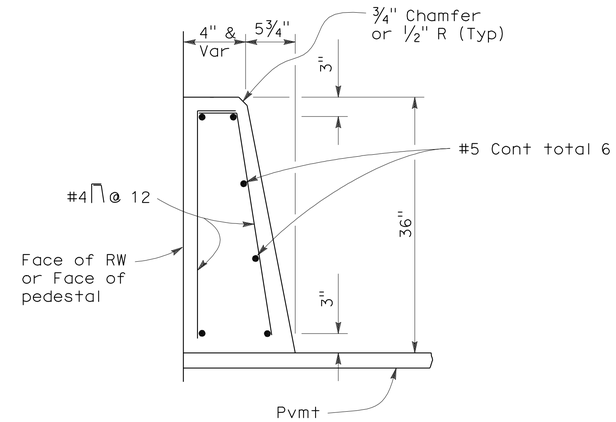

CONCRETE BARRIER TYPE 60D Mod
SECTION A-A
NO SCALE

CONSTRUCTION DETAILS

SCALE: 1" = 10'

C-57

STATE OF CALIFORNIA - DEPARTMENT OF TRANSPORTATION
Caltrans DESIGN
FUNCTIONAL SUPERVISOR: CHARLES P. TON
CALCULATED-DESIGNED BY: THAO TRAN
CHECKED BY: VICTOR PONCE
REVISED BY
DATE REVISED

LAST REVISION 04-13-12
DATE PLOTTED => 13-JUL-2012
TIME PLOTTED => 15:25

Dist	COUNTY	ROUTE	POST MILES TOTAL PROJECT	SHEET No.	TOTAL SHEETS
07	LA	5	29.4/31.6	133	1931

REGISTERED CIVIL ENGINEER 11/18/11 DATE

5-21-12
PLANS APPROVAL DATE

REGISTERED PROFESSIONAL ENGINEER
THAO T. TRAN
No. C66879
Exp. 09/30/12
CIVIL
STATE OF CALIFORNIA

THE STATE OF CALIFORNIA OR ITS OFFICERS OR AGENTS SHALL NOT BE RESPONSIBLE FOR THE ACCURACY OR COMPLETENESS OF SCANNED COPIES OF THIS PLAN SHEET.

DETAIL B

NO SCALE

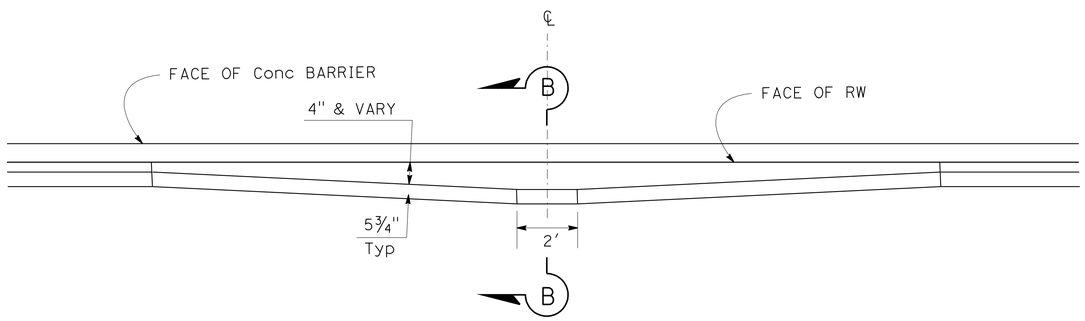

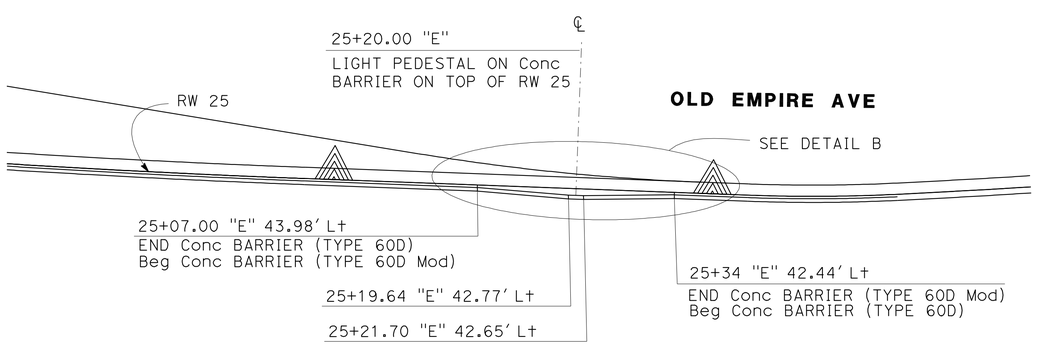

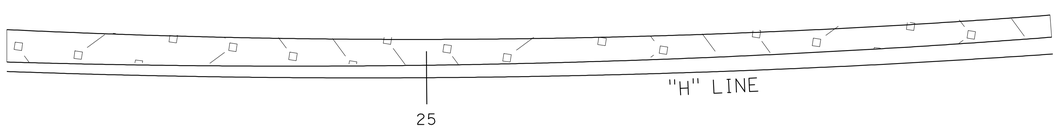

PLAN

SCALE 1"=10'

NOTE: SEE SECTION A-A ON SHEET C-57 FOR OTHER BARRIER DETAILS

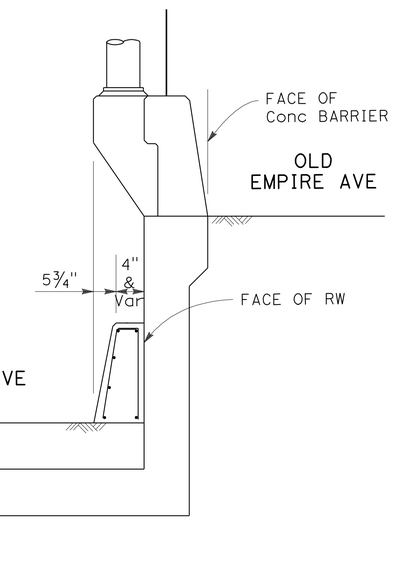

CONCRETE BARRIER TYPE 60D Mod

SECTION B-B

NO SCALE

CONSTRUCTION DETAILS

SCALE: 1" = 10'

C-58

REVISED BY	DATE REVISED
THAO TRAN	VICTOR PONCE
CALCULATED-DESIGNED BY	CHECKED BY
FUNCTIONAL SUPERVISOR	CHARLES P. TON

STATE OF CALIFORNIA - DEPARTMENT OF TRANSPORTATION
Caltrans DESIGN

LAST REVISION 04-13-12 | DATE PLOTTED => 13-JUL-2012 | TIME PLOTTED => 15:25

Dist	COUNTY	ROUTE	POST MILES TOTAL PROJECT	SHEET No.	TOTAL SHEETS
07	LA	5	29.4/31.6	134	1931

LICENSED LANDSCAPE ARCHITECT

5-21-12
PLANS APPROVAL DATE

LICENSED LANDSCAPE ARCHITECT JOSEPH MILLMAN No. 1831 Signature 07/31/2012 Renewal Date 12/2/2011 Date STATE OF CALIFORNIA

THE STATE OF CALIFORNIA OR ITS OFFICERS OR AGENTS SHALL NOT BE RESPONSIBLE FOR THE ACCURACY OR COMPLETENESS OF SCANNED COPIES OF THIS PLAN SHEET.

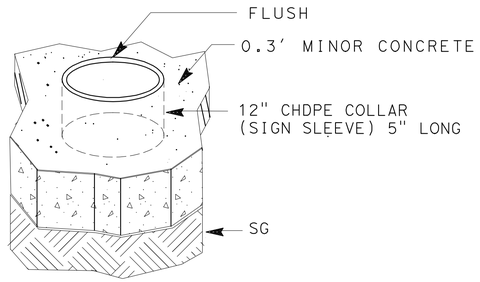

SIGN POST COLLAR DETAIL

NOTE:
PLACE 12" Dia. CHDPE COLLAR (5" LENGTH)
AS FORM (CLEAR) AROUND POST

SEE STANDARD DETAIL FOR AROUND MBGR POST

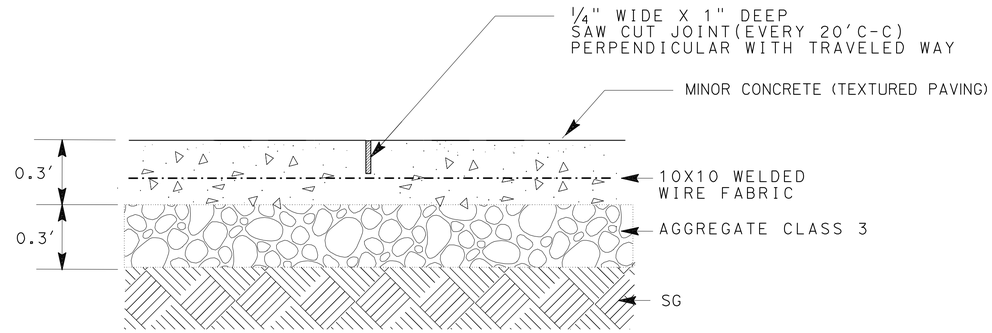

EXPANSION JOINT DETAIL

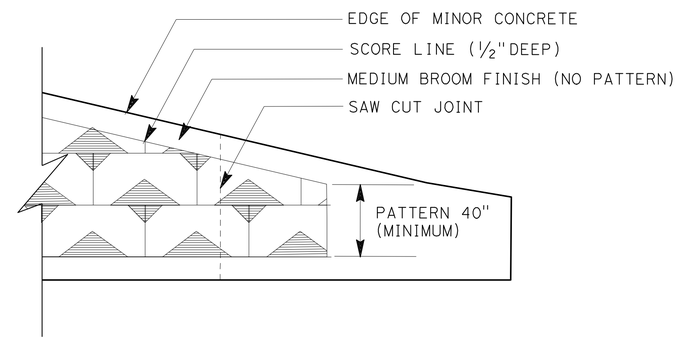

MINIMUM PATTERN DETAIL

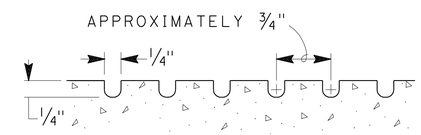

GROOVE SHALL BE 1/4" GROOVES
APPROXIMATELY 3/4" ON CENTER

GROOVING DETAIL

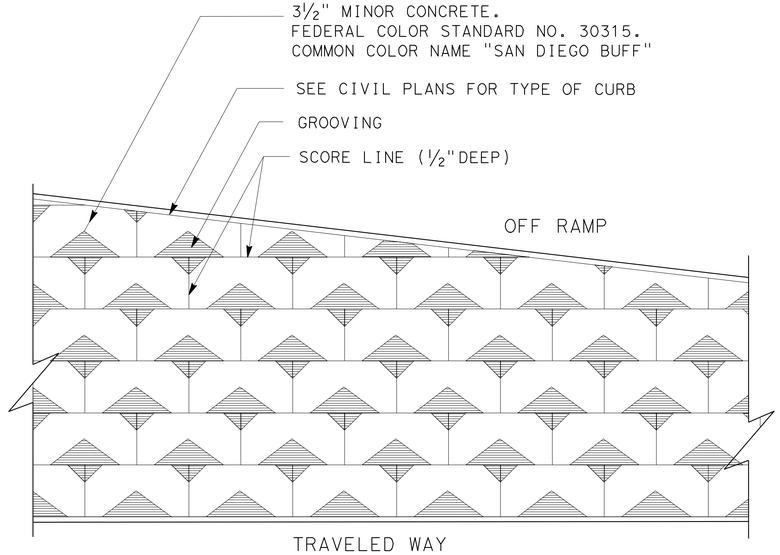

TYPICAL PAVEMENT LAYOUT

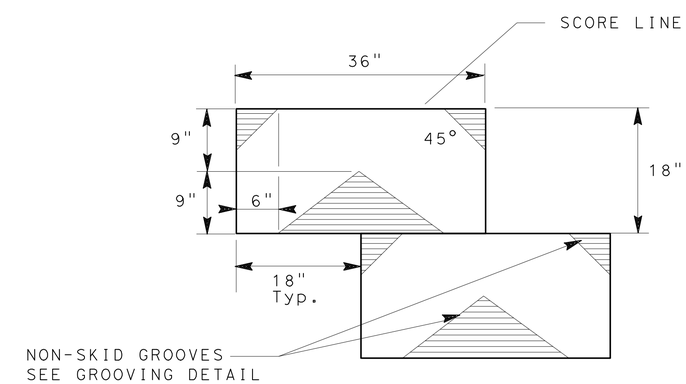

TEXTURED CONCRETE DETAIL

APPROVED FOR LANDSCAPE WORK ONLY

MINOR CONCRETE (TEXTURED PAVING)

NO SCALE

C-59

STATE OF CALIFORNIA - DEPARTMENT OF TRANSPORTATION
Caltrans® LANDSCAPE ARCHITECTURE

SENIOR LANDSCAPE ARCHITECT: PATTY WATANABE
CALCULATED-DESIGNED BY: JOSEPH MILLMAN
CHECKED BY: KEITH SELLERS
REVISED BY
DATE REVISED

LAST REVISION 00-00-00
DATE PLOTTED => 13-JUL-2012
TIME PLOTTED => 15:25

Dist	COUNTY	ROUTE	POST MILES TOTAL PROJECT	SHEET No.	TOTAL SHEETS
07	LA	5	29.4/31.6	135	1931

Timothy B Sobelman 6-3-09
REGISTERED CIVIL ENGINEER DATE

5-21-12
PLANS APPROVAL DATE

REGISTERED PROFESSIONAL ENGINEER TIMOTHY B. SOBELMAN No. 59249 Exp 6-30-13 CIVIL STATE OF CALIFORNIA

THE STATE OF CALIFORNIA OR ITS OFFICERS OR AGENTS SHALL NOT BE RESPONSIBLE FOR THE ACCURACY OR COMPLETENESS OF SCANNED COPIES OF THIS PLAN SHEET.

GENERAL NOTES

Designation:
Partial Austin Vault Sand Filters (AVSFs) are open air reinforced concrete vaults utilizing both sedimentation and sand filtration basins. Type designation is based on length configuration, water quality volume to be drained in a 24 hour period, and average depth of water.

Standard configurations are noted for the following design water quality volumes (WQV): 5,000, 10,000, and 15,000 cubic feet. Length configurations are either short (S) or long (L). The average water depth can be either 3 ft, 4.5 ft, or 6 ft as designed in Design Water Quality Volumes (WQV) table.

Special Reinforcement Coverage:
AVSF Standard Details are not to be used in a corrosive environment or where there is a severe abrasive flow condition or in freeze-thaw locations.

Special Design:
Required for the following conditions:
ground water conditions above bottom of AVSF, surcharge loads exceeding HS20 truck load, design bearing pressures or sizes greater than those on this plan, inlet velocities which exceed 8.0 ft/sec at gabion wall, and settlement due to liquefaction.

DESIGN WATER QUALITY VOLUMES (WQV)

AVSF Type*	WQV (ft^3)	W(ft)	Ls(ft)	Lf(ft)	Hw(ft)
S-3500-3	3,500	21	14	38	3
L-3500-3	3,500	15	18	53	3
S-3500-4.5	4,380	21	14	38	4.5
L-3500-4.5	4,380	15	18	53	4.5
S-3500-6	5,260	21	14	38	6
L-3500-6	5,260	15	18	53	6
S-5000-3	5,000	27	15	42	3
L-5000-3	5,000	18	21	63	3
S-5000-4.5	6,250	27	15	42	4.5
L-5000-4.5	6,250	18	21	63	4.5
S-5000-6	7,500	27	15	42	6
L-5000-6	7,500	18	21	63	6
S-10000-3	10,000	36	21	63	3
L-10000-3	10,000	24	30	94	3
S-10000-4.5	12,500	36	21	63	4.5
L-10000-4.5	12,500	24	30	94	4.5
S-10000-6	15,000	36	21	63	6
L-10000-6	15,000	24	30	94	6
S-15000-3	15,000	45	25	76	3
L-15000-3	15,000	30	37	115	3
S-15000-4.5	18,750	45	25	76	4.5
L-15000-4.5	18,750	30	37	115	4.5
S-15000-6	22,500	45	25	76	6
L-15000-6	22,500	30	37	115	6

* AVSF Type = Length configuration (S or L) - water quality volume (CF) - design water depth (Hw elevation)

DESIGN NOTES

Specifications:
Design:
Bridge Design Specification April 2000 (LFD)
(1996 AASHTO) with interims and revisions by Caltrans

Wall & Footing (LFD): 1.5 D + 1.5 E + 1.5 W + 1.5 SC
Where D = Dead Load
E = Earth Load
W = Water Load
SC = Surcharge

Capacity reduction factor is included.

Earth Load:
125 lb/ft^3 vertical,

Water Load:
62.4 lb/ft^3 horizontal/vertical,

Earth pressure for 2:1 unlimited slope determined from Rankine's formula with ø = 33°42′ (Case II).

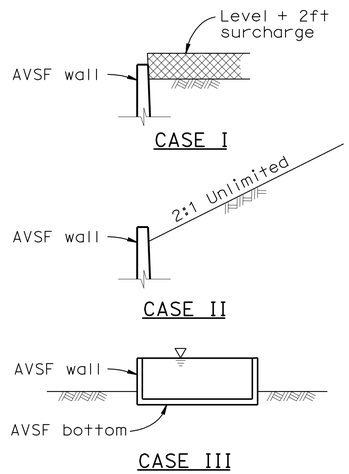

DETAIL OF DESIGN LOADING CASES

CASE I Level + 2ft surcharge, AVSF empty
CASE II 2:1 Unlimited slope, AVSF empty
CASE III AVSF full of water, no soil pressure

Unit Stresses:
f'_c = 4,000 psi
fy = 60,000 psi

INDEX TO PLAN

SHEET No.	TITLE
1	GENERAL NOTES
2	LAYOUT No. 1
3	LAYOUT No. 2
4	WALL DETAILS
5	DETAILS No. 1
6	DETAILS No. 2
7	DETAILS No. 3
8	DETAILS No. 4
9	MISCELLANEOUS DETAILS No. 1

CONSTRUCTION NOTES

Expansion joints:
Inverts and sidewalls - Place ½" expansion joint filler and waterstop where indicated. see "Details No. 2" sheet for specific wall & invert details.

Construction Joints:
Shall be placed where indicated on plans.

Backfill:
See Standard Specifications, except the difference in backfill shall not exceed 8′-0" between side walls and inlet and outlet walls.

Earthwork:
Limits of payment for excavation and backfill.

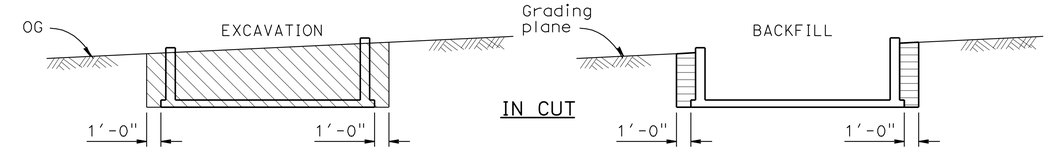

LEGEND:
- Structure excavation (AVSF)
- Structure backfill (AVSF)
- Original ground, OG

NOTES:
1. Slope or shore excavation sides as necessary.
2. Dimensions shown are minimum.
3. 95% compaction 1′-0" below floor slabs.

STANDARD PLANS DATED JULY 2006

B0-3	BRIDGE DETAILS
B3-9	RETAINING WALL DETAILS No. 2
RSP B6-21	JOINT SEALS (MAXIMUM MOVEMENT RATING = 2")
RSP B11-47	CABLE RAILING
D100A	GABION BASKET DETAILS No. 1
D100B	GABION BASKET DETAILS No. 2

STANDARD PLAN SHEET No.
DETAIL No.

AUSTIN VAULT SAND FILTER GENERAL NOTES

WATER POLLUTION CONTROL

W-1

STATE OF CALIFORNIA - DEPARTMENT OF TRANSPORTATION
Caltrans DESIGN
FUNCTIONAL SUPERVISOR TIMOTHY B. SOBELMAN
CALCULATED-DESIGNED BY L. HE
CHECKED BY D. WANG
REVISED BY
DATE REVISED

LAST REVISION 00-00-00
DATE PLOTTED => 21-MAY-2012
TIME PLOTTED => 15:47

Dist	COUNTY	ROUTE	POST MILES TOTAL PROJECT	SHEET No.	TOTAL SHEETS
07	LA	5	29.4/31.6	136	1931

REGISTERED CIVIL ENGINEER 6-3-09 DATE

5-21-12
PLANS APPROVAL DATE

REGISTERED PROFESSIONAL ENGINEER TIMOTHY B. SOBELMAN No. 59249 Exp 6-30-13 CIVIL STATE OF CALIFORNIA

THE STATE OF CALIFORNIA OR ITS OFFICERS OR AGENTS SHALL NOT BE RESPONSIBLE FOR THE ACCURACY OR COMPLETENESS OF SCANNED COPIES OF THIS PLAN SHEET.

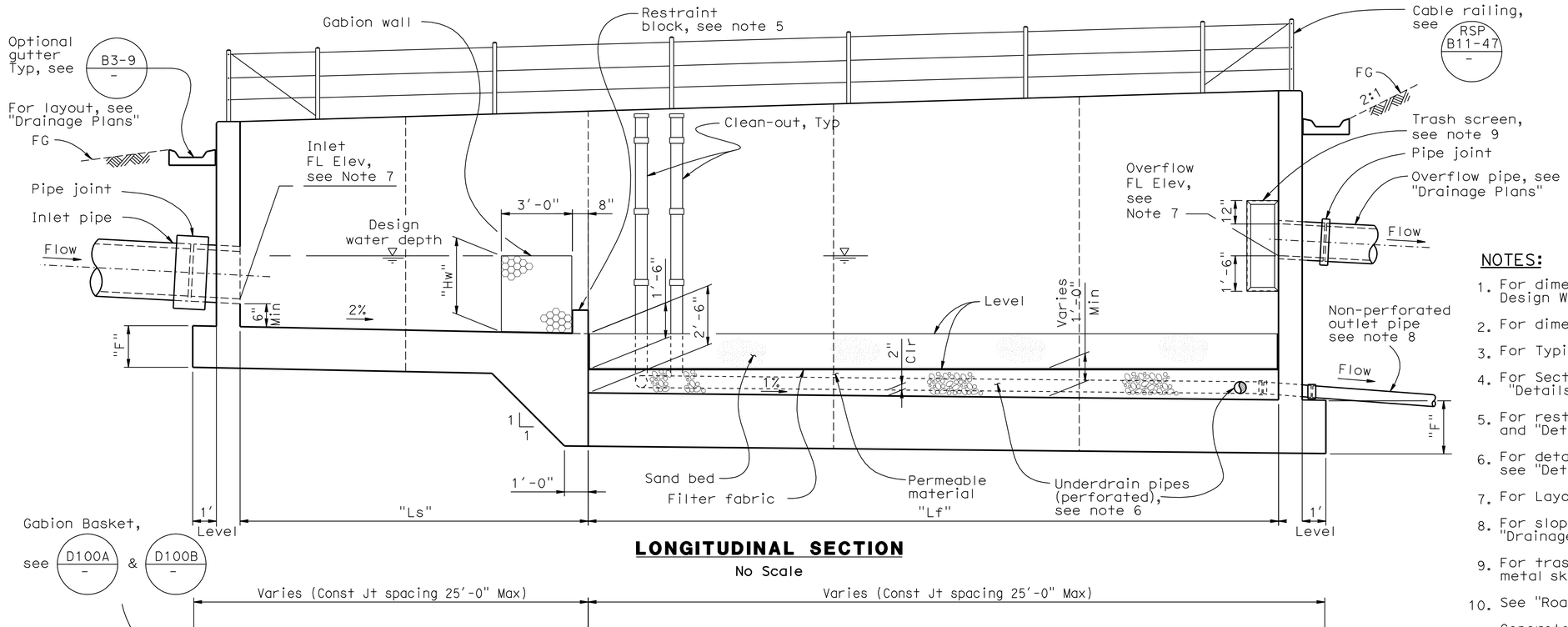

LONGITUDINAL SECTION

No Scale

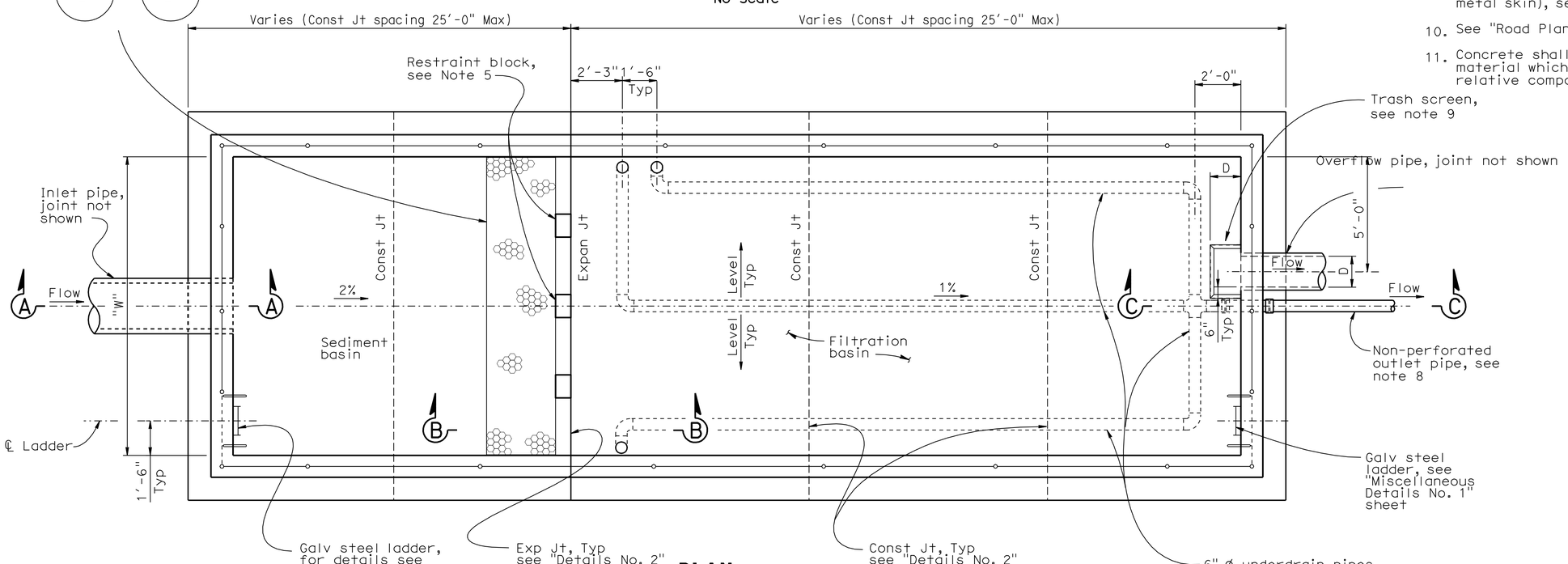

PLAN

No Scale

Note: Gutter not shown for clarity.

NOTES:

1. For dimensions "W", "Ls", "Lf" and "Hw", see Design WQV table on "General Notes" sheet.
2. For dimensions "C" and "F", see "Wall Details" sheet.
3. For Typical Section, see "Wall Details" sheet.
4. For Section A - A, B - B and C - C, see "Details No. 1" sheet.
5. For restraint block details, see "Details No. 1" and "Details No. 2" sheets.
6. For details of underdrain (sand filter), see "Details No. 4" sheet.
7. For Layout and FL elevation, see "Drainage Plans".
8. For slope of non-perforated outlet pipe, see "Drainage Plans".
9. For trash screen details (frame and perforated metal skin), see "Details No 3" sheet.
10. See "Road Plans" for top of wall elevations.
11. Concrete shall be placed on base or native material which has been compacted to 95% relative compaction.

AUSTIN VAULT SAND FILTER

LAYOUT No. 1

WATER POLLUTION CONTROL

W-2

REVISED BY	DATE REVISED	CALCULATED-DESIGNED BY	CHECKED BY	FUNCTIONAL SUPERVISOR
D. WANG	L. HE			TIMOTHY B. SOBELMAN

STATE OF CALIFORNIA - DEPARTMENT OF TRANSPORTATION
Caltrans
DESIGN

LAST REVISION 00-00-00 | DATE PLOTTED => 21-MAY-2012 | TIME PLOTTED => 15:47

Dist	COUNTY	ROUTE	POST MILES TOTAL PROJECT	SHEET No.	TOTAL SHEETS
07	LA	5	29.4/31.6	137	1931

Timothy B Sobelman 6-3-09
REGISTERED CIVIL ENGINEER DATE

5-21-12
PLANS APPROVAL DATE

REGISTERED PROFESSIONAL ENGINEER TIMOTHY B SOBELMAN No. 59249 Exp 6-30-13 CIVIL STATE OF CALIFORNIA

THE STATE OF CALIFORNIA OR ITS OFFICERS OR AGENTS SHALL NOT BE RESPONSIBLE FOR THE ACCURACY OR COMPLETENESS OF SCANNED COPIES OF THIS PLAN SHEET.

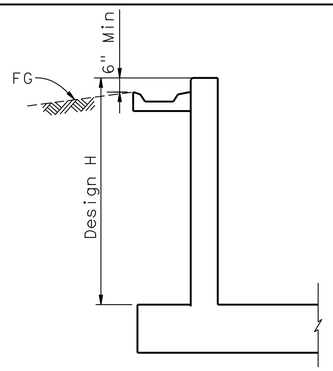

TYPICAL WALL SECTION
(INLET, OUTLET, AND SIDEWALL)
No scale

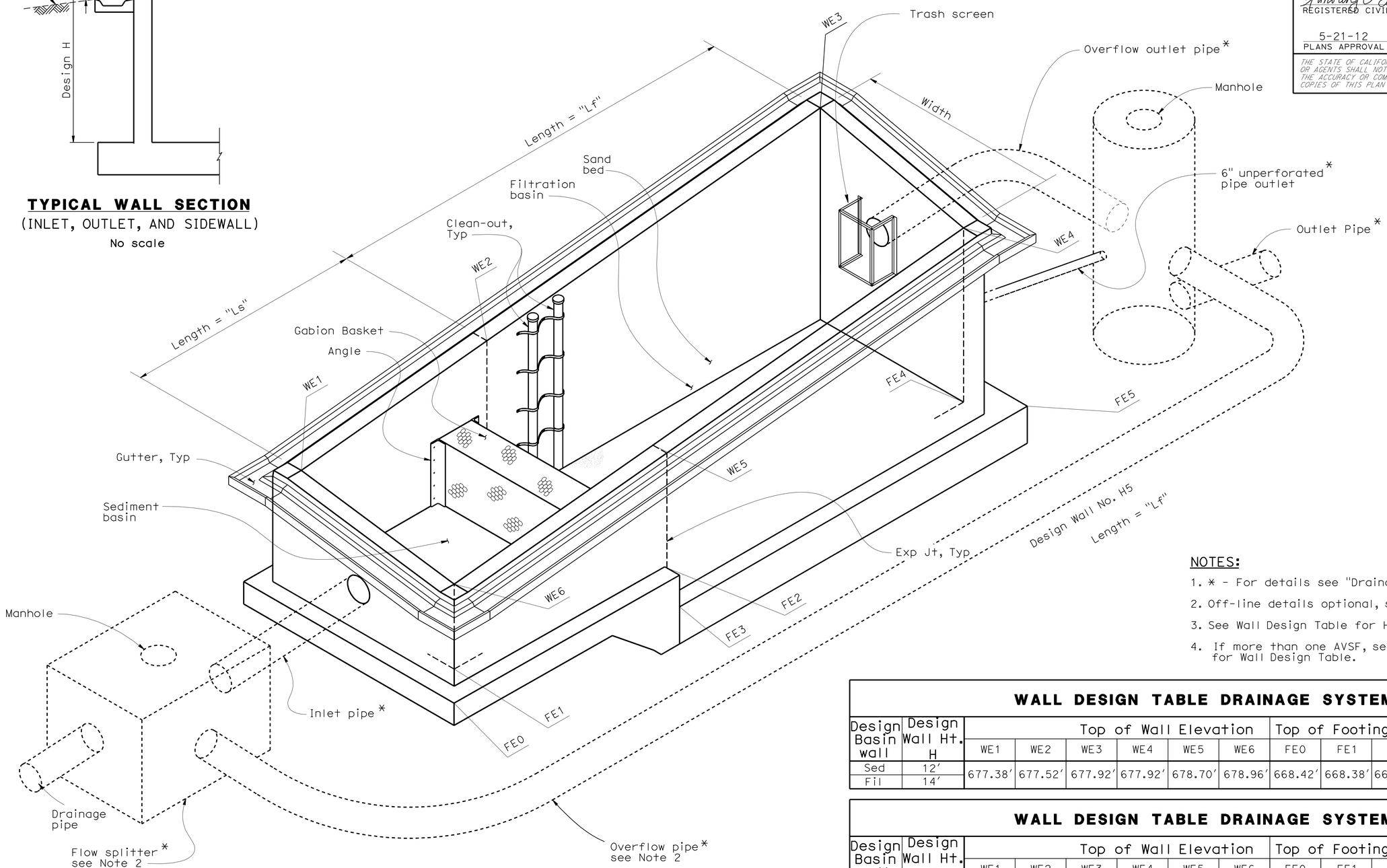

ISOMETRIC VIEW - AUSTIN VAULT SAND FILTER DRAINAGE SYSTEM
No Scale
NOTE: Steel ladders and cable railings not shown for clarity.

NOTES:
1. * - For details see "Drainage Plans".
2. Off-line details optional, see "Drainage Plans".
3. See Wall Design Table for Height.
4. If more than one AVSF, see Drainage/Layout Plans for Wall Design Table.

WALL DESIGN TABLE DRAINAGE SYSTEM 58

Design Basin wall	Design Wall Ht. H	Top of Wall Elevation						Top of Footing Elevation					
		WE1	WE2	WE3	WE4	WE5	WE6	FE0	FE1	FE2	FE3	FE4	FE5
Sed	12′	677.38′	677.52′	677.92′	677.92′	678.70′	678.96′	668.42′	668.38′	667.96′	665.46′	664.83′	664.81′
Fil	14′												

WALL DESIGN TABLE DRAINAGE SYSTEM 65

Design Basin wall	Design Wall Ht. H	Top of Wall Elevation						Top of Footing Elevation					
		WE1	WE2	WE3	WE4	WE5	WE6	FE0	FE1	FE2	FE3	FE4	FE5
Sed	10′	710.47′	710.23′	709.50′	709.50′	709.55′	709.57′	701.42′	701.38′	700.96′	698.46′	697.83′	697.81′
Fil	14′												

AUSTIN VAULT SAND FILTER LAYOUT No. 2

WATER POLLUTION CONTROL

W-3

STATE OF CALIFORNIA - DEPARTMENT OF TRANSPORTATION
Caltrans
DESIGN
FUNCTIONAL SUPERVISOR: TIMOTHY B. SOBELMAN
CALCULATED-DESIGNED BY: D. WANG
CHECKED BY: L. HE
REVISED BY
DATE REVISED

LAST REVISION 00-00-00
DATE PLOTTED => 29-MAY-2012
TIME PLOTTED => 11:50

Dist	COUNTY	ROUTE	POST MILES TOTAL PROJECT	SHEET No.	TOTAL SHEETS
07	LA	5	29.4/31.6	138	1931

Timothy B Sobelman 6-3-09
REGISTERED CIVIL ENGINEER DATE

5-21-12
PLANS APPROVAL DATE

REGISTERED PROFESSIONAL ENGINEER TIMOTHY B. SOBELMAN No. 59249 Exp 6-30-13 CIVIL STATE OF CALIFORNIA

THE STATE OF CALIFORNIA OR ITS OFFICERS OR AGENTS SHALL NOT BE RESPONSIBLE FOR THE ACCURACY OR COMPLETENESS OF SCANNED COPIES OF THIS PLAN SHEET.

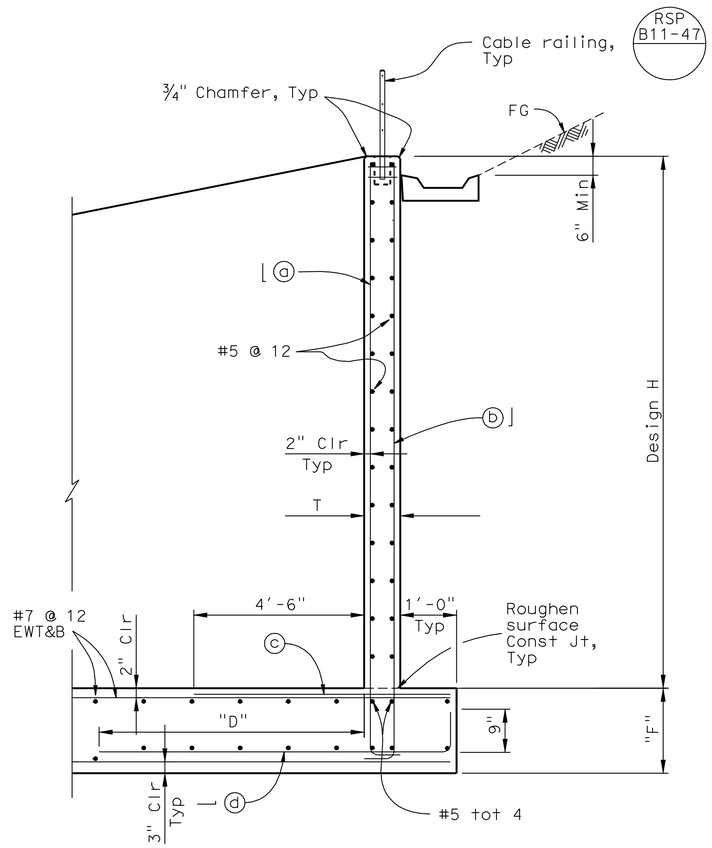

TYPICAL SECTION
No Scale

NOTES:

1. For width dimension "W", see "General Notes" sheet.
2. For footing details not shown, see "Footing Details" sheet.
3. The contractor shall have the option of matching the Sedimentation Basin wall thickness with the Filtration Basin wall thickness. This shall be at no
4. additional cost to the State.

   Reinforcement notation "EWT&B" is acronym for "Each Way Top & Bottom".
5. Width "W" is the inside width between walls, see "Layout No. 1" sheet and the Design WQV table on "General Notes" sheet.
6. For additional corner reinforcement not indicated see "Typical Corner Detail" on "Details No. 1" sheet.

NOTES:

"D" = 8'-0" when "W" ≤ 30'-0"

"D" = 12'-0" when "W" > 30'-0"

TABLE OF REINFORCING STEEL DIMENSIONS AND DATA FOR WALL

Design H	6'	8'	10'	12'	14'	16'
T	12"	12"	12"	12"	14"	14"
F	1'-3"	1'-3"	1'-3"	1'-6"	1'-9"	1'-9"
⌋ ⓐ bars # @ "	6 @ 12	6 @ 12	6 @ 8	7 @ 8	8 @ 8	9 @ 6
⌊ ⓑ bars # @ "	6 @ 12	6 @ 12	6 @ 8	7 @ 8	8 @ 8	8 @ 6
ⓒ bars # @ "	6 @ 12	6 @ 12	6 @ 8	6 @ 8	7 @ 8	7 @ 6
— ⓓ bars # @ "	6 @ 12	6 @ 12	6 @ 8	6 @ 8	7 @ 8	7 @ 6

AUSTIN VAULT SAND FILTER
WALL DETAILS

WATER POLLUTION CONTROL

W-4

STATE OF CALIFORNIA - DEPARTMENT OF TRANSPORTATION
DESIGN
Caltrans

FUNCTIONAL SUPERVISOR: TIMOTHY B. SOBELMAN
CALCULATED-DESIGNED BY: D. WANG
CHECKED BY: L. HE
REVISED BY
DATE REVISED

LAST REVISION 00-00-00
DATE PLOTTED => 21-MAY-2012
TIME PLOTTED => 15:47

Dist	COUNTY	ROUTE	POST MILES TOTAL PROJECT	SHEET No.	TOTAL SHEETS
07	LA	5	29.4/31.6	139	1931

Timothy B Sobelman 6-3-09
REGISTERED CIVIL ENGINEER DATE

5-21-12
PLANS APPROVAL DATE

REGISTERED PROFESSIONAL ENGINEER TIMOTHY B. SOBELMAN No. 59249 Exp. 6-30-13 CIVIL STATE OF CALIFORNIA

THE STATE OF CALIFORNIA OR ITS OFFICERS OR AGENTS SHALL NOT BE RESPONSIBLE FOR THE ACCURACY OR COMPLETENESS OF SCANNED COPIES OF THIS PLAN SHEET.

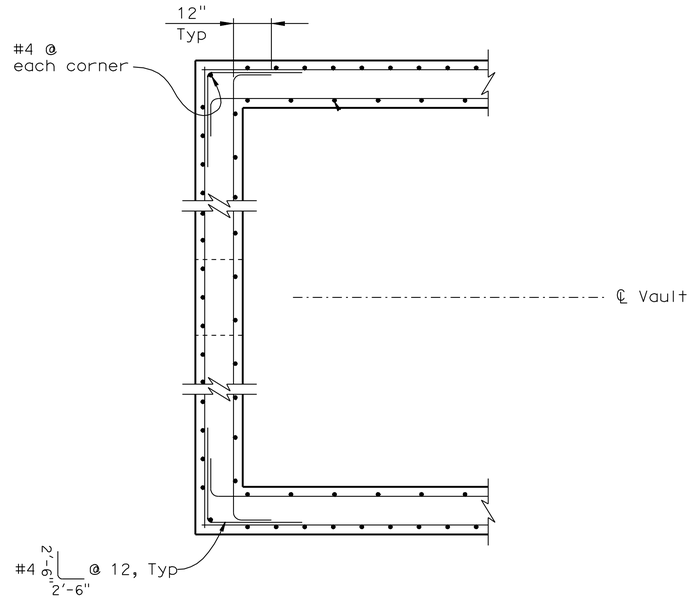

TYPICAL CORNER DETAIL

No Scale

NOTE: Inlet wall shown, outlet wall similar.

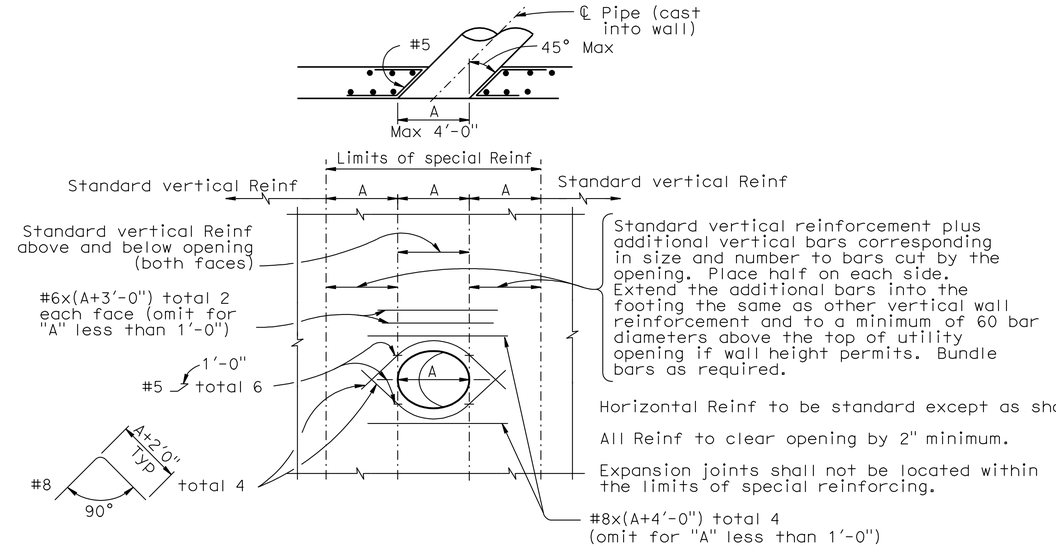

WALL OPENING DETAIL

No Scale

To be used at inlet, outlet and overflow pipe locations

NOTE: The rebar lengths shown are maximum and shall be adjusted due to the limitations of space.

NOTES:

1. For section locations, see "Layout No. 1 " sheet.
2. For wall and footing reinforcement details, see Typical Section on "Wall Details" sheet.

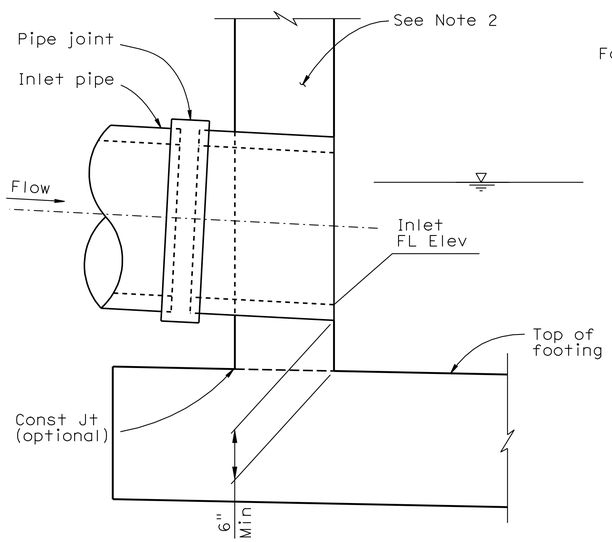

SECTION A - A

No Scale

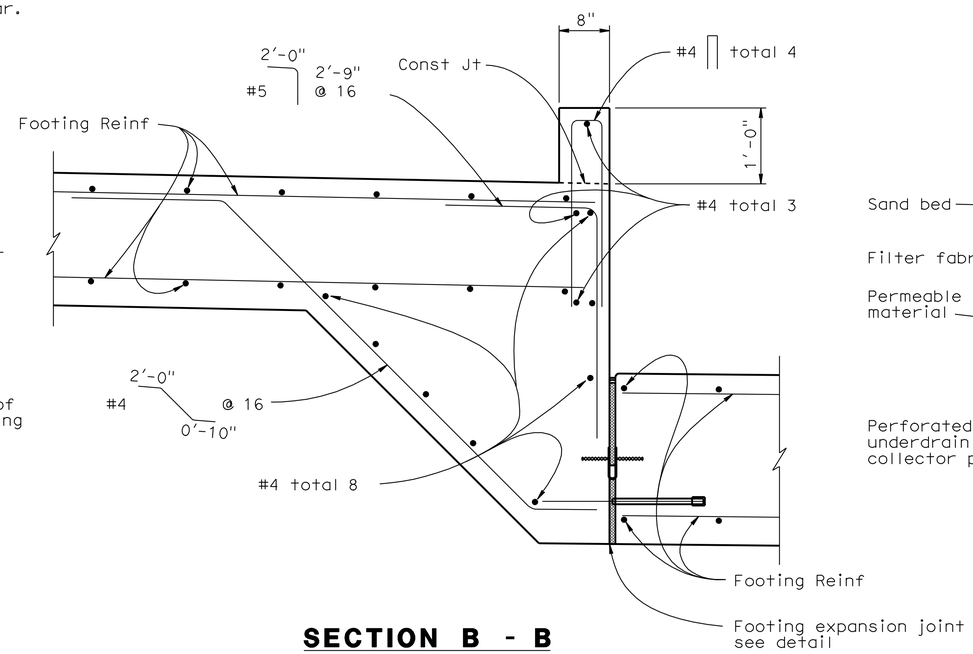

SECTION B - B

No Scale

(Gabion wall and other details not shown for clarity)

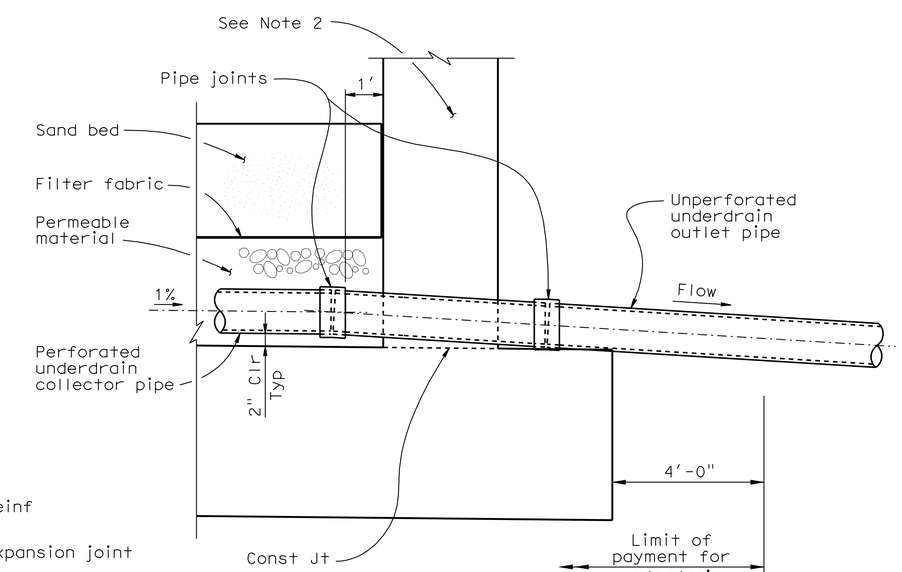

SECTION C - C

No Scale

AUSTIN VAULT SAND FILTER DETAILS No. 1

WATER POLLUTION CONTROL

W-5

STATE OF CALIFORNIA - DEPARTMENT OF TRANSPORTATION
Caltrans
DESIGN
FUNCTIONAL SUPERVISOR: TIMOTHY B. SOBELMAN
CALCULATED-DESIGNED BY: D. WANG
CHECKED BY: L. HE
REVISED BY
DATE REVISED

LAST REVISION 00-00-00
DATE PLOTTED => 21-MAY-2012
TIME PLOTTED => 15:47

Dist	COUNTY	ROUTE	POST MILES TOTAL PROJECT	SHEET No.	TOTAL SHEETS
07	LA	5	29.4/31.6	140	1931

REGISTERED CIVIL ENGINEER 6-3-09 DATE

5-21-12
PLANS APPROVAL DATE

REGISTERED PROFESSIONAL ENGINEER TIMOTHY B. SOBELMAN No. 59249 Exp 6-30-13 CIVIL STATE OF CALIFORNIA

THE STATE OF CALIFORNIA OR ITS OFFICERS OR AGENTS SHALL NOT BE RESPONSIBLE FOR THE ACCURACY OR COMPLETENESS OF SCANNED COPIES OF THIS PLAN SHEET.

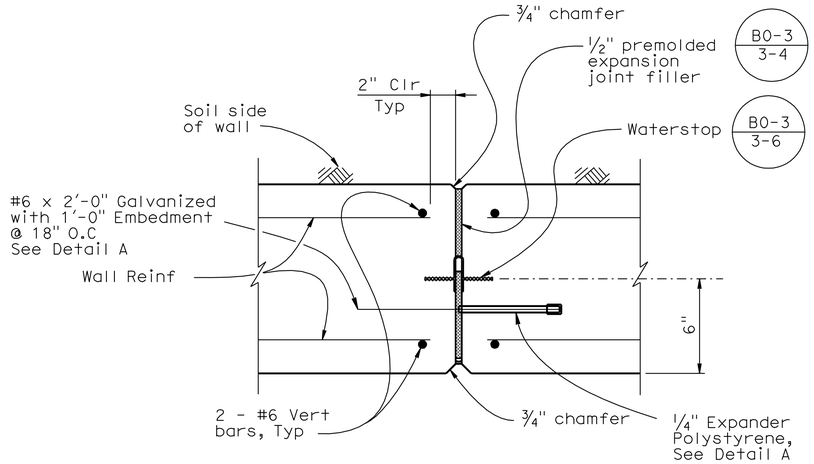

WALL EXPANSION JOINT DETAIL - PLAN SECTION

No Scale

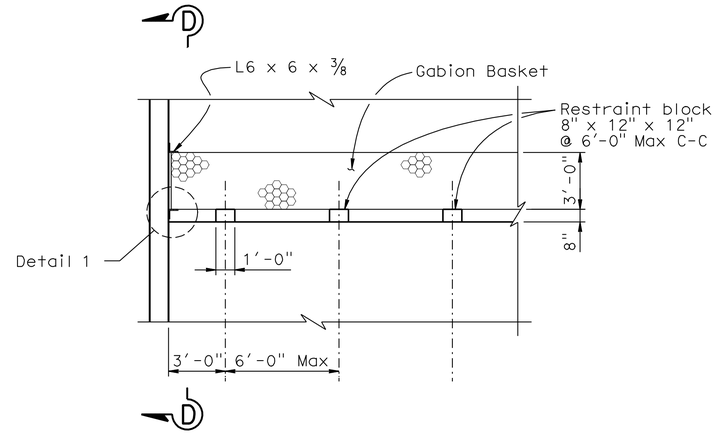

RESTRAINT BLOCK DETAIL

No Scale

Notes:

1. Stagger splices unless noted otherwise.

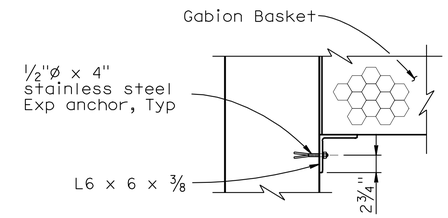

DETAIL 1

No Scale

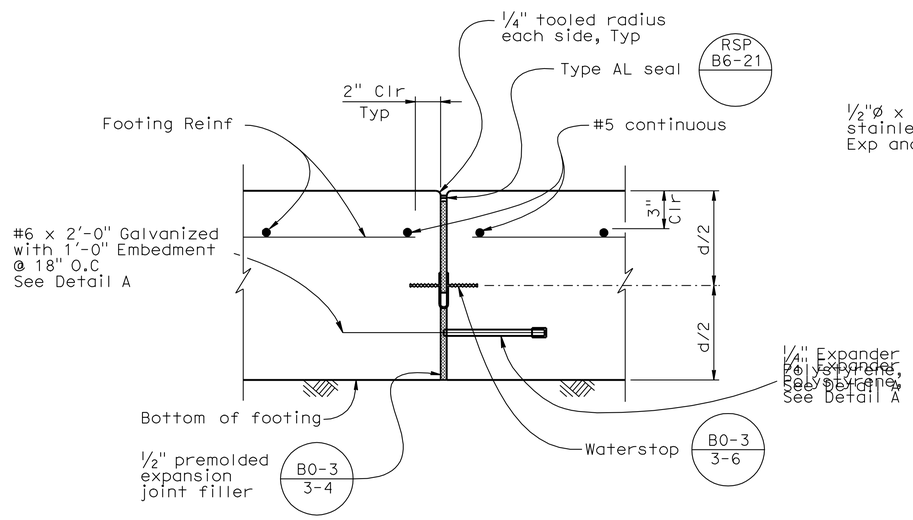

FOOTING EXPANSION JOINT DETAIL

No Scale

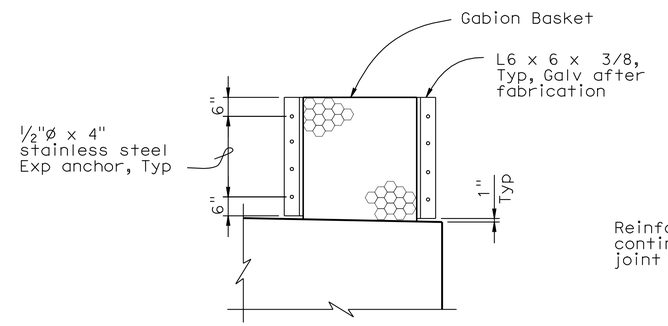

SECTION D - D

No Scale

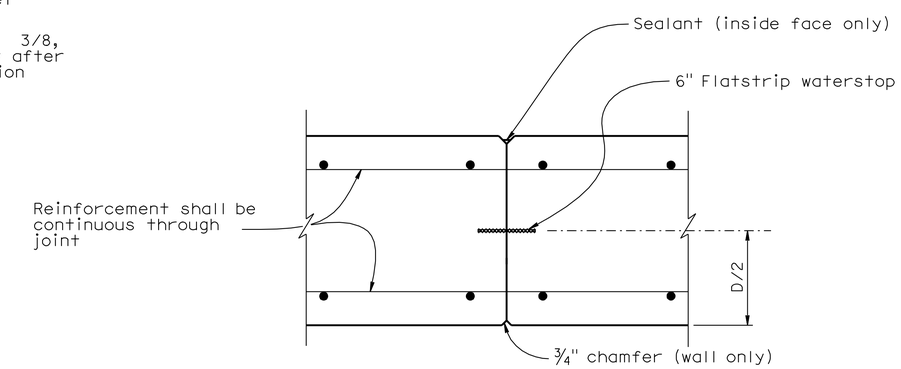

WALL CONSTRUCTION JOINT DETAIL

No Scale

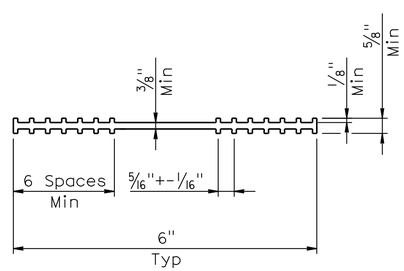

6" FLATSTRIP WATER STOP DETAIL

No Scale

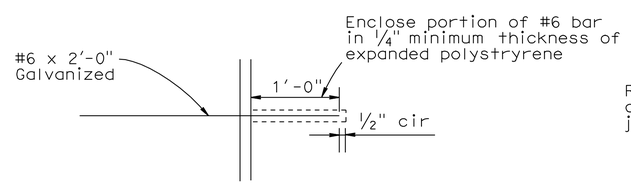

DETAIL A

No Scale

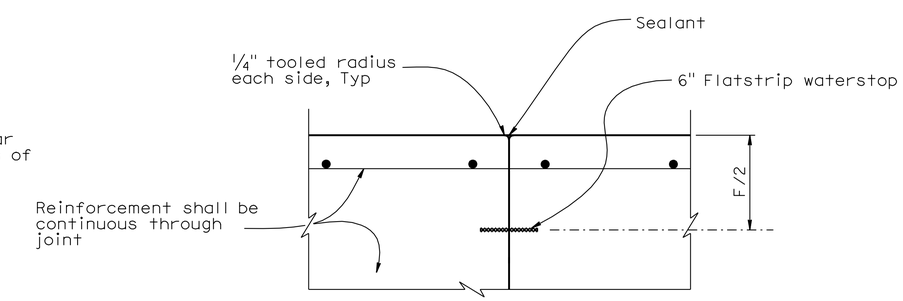

FOOTING CONSTRUCTION JOINT DETAIL

No Scale

AUSTIN VAULT SAND FILTER DETAILS No. 2

WATER POLLUTION CONTROL

W-6

STATE OF CALIFORNIA - DEPARTMENT OF TRANSPORTATION
DESIGN
Caltrans

FUNCTIONAL SUPERVISOR: TIMOTHY B. SOBELMAN
CALCULATED-DESIGNED BY: D. WANG
CHECKED BY: L. HE
REVISED BY
DATE REVISED

LAST REVISION 00-00-00
DATE PLOTTED => 21-MAY-2012
TIME PLOTTED => 15:47

Dist	COUNTY	ROUTE	POST MILES TOTAL PROJECT	SHEET No.	TOTAL SHEETS
07	LA	5	29.4/31.6	141	1931

REGISTERED CIVIL ENGINEER 6-3-09 DATE

5-21-12
PLANS APPROVAL DATE

REGISTERED PROFESSIONAL ENGINEER TIMOTHY B. SOBELMAN No. 59249 Exp 6-30-13 CIVIL STATE OF CALIFORNIA

THE STATE OF CALIFORNIA OR ITS OFFICERS OR AGENTS SHALL NOT BE RESPONSIBLE FOR THE ACCURACY OR COMPLETENESS OF SCANNED COPIES OF THIS PLAN SHEET.

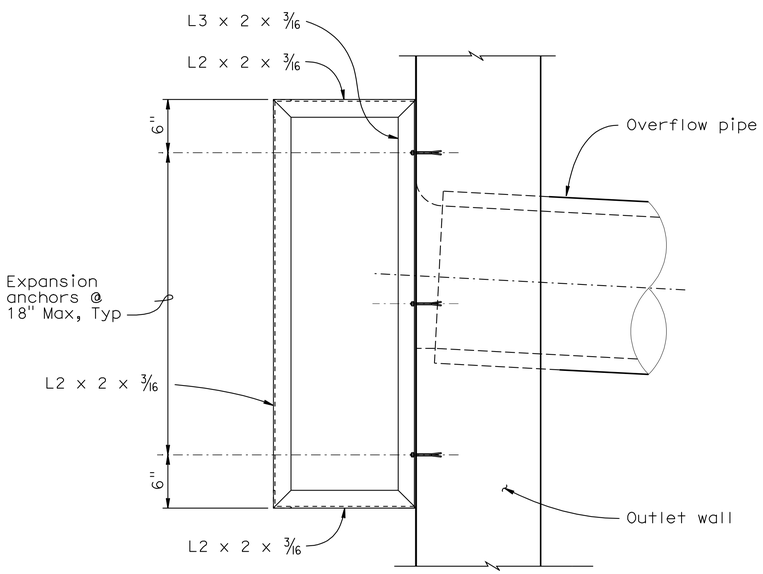

TRASH SCREEN - SIDE ELEVATION
No scale

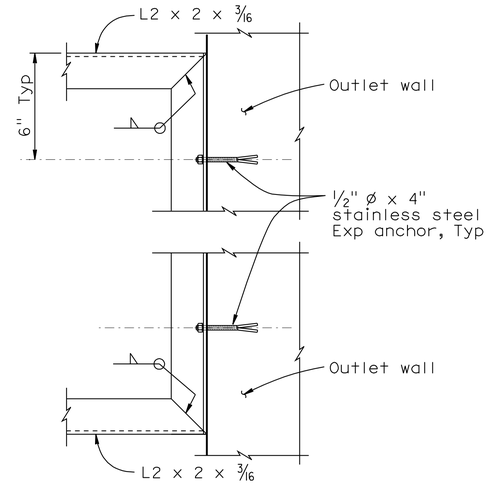

SECTION F - F
No Scale

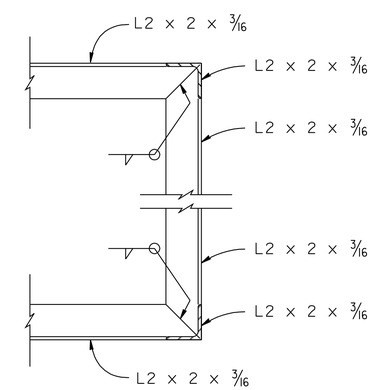

SECTION E - E
No Scale

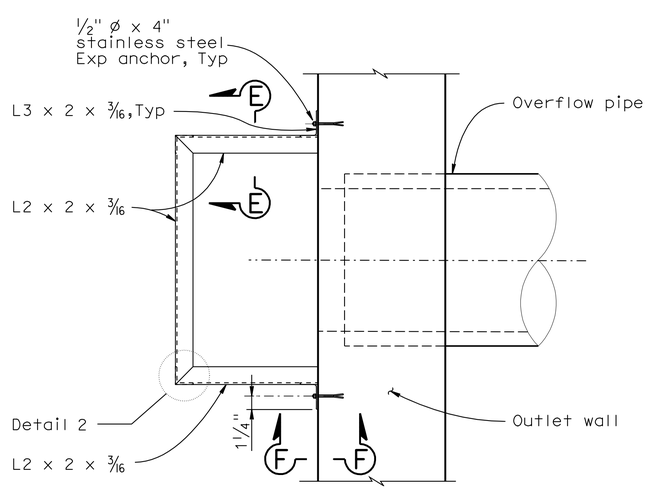

TRASH SCREEN - PLAN
No Scale

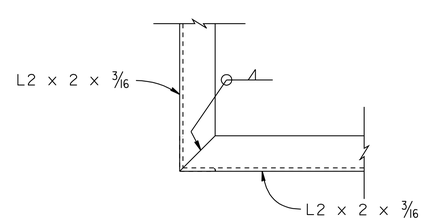

DETAIL 2
No Scale

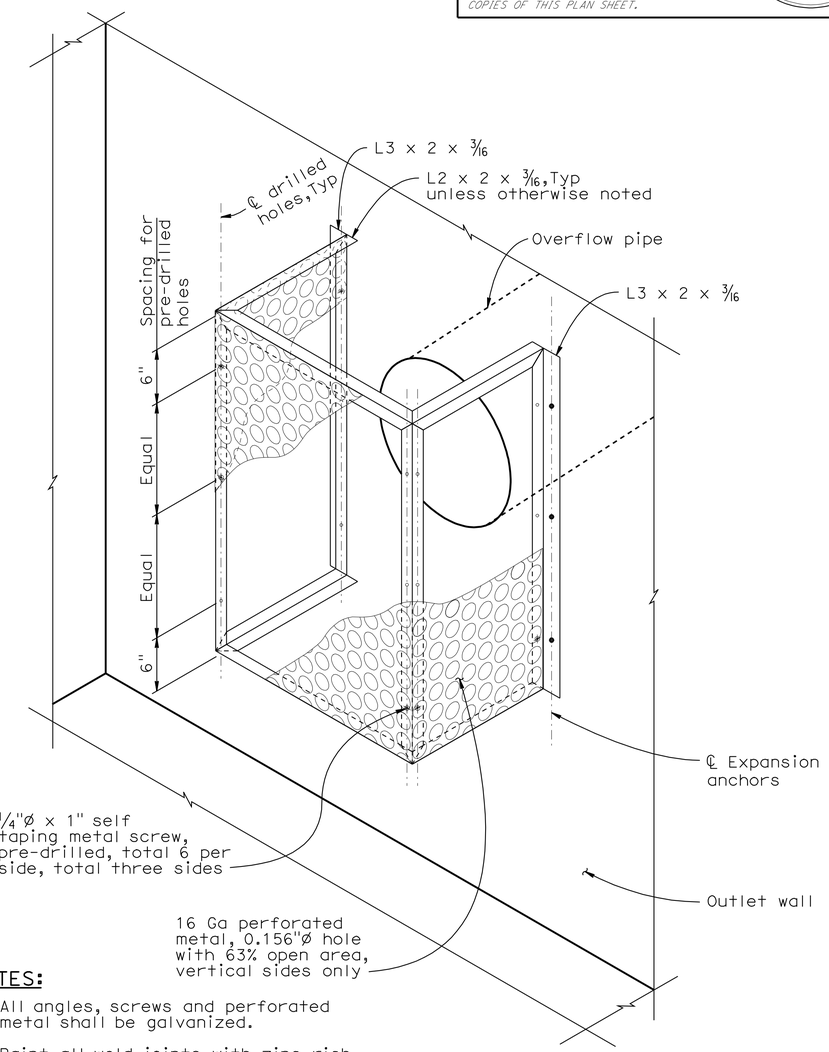

NOTES:

1. All angles, screws and perforated metal shall be galvanized.
2. Paint all weld joints with zinc rich paint or galvanize after welding.

ISOMETRIC VIEW - TRASH SCREEN
No scale

NOTE: Metal hole ø exaggerated for emphasis.

AUSTIN VAULT SAND FILTER DETAILS No. 3

WATER POLLUTION CONTROL

W-7

STATE OF CALIFORNIA - DEPARTMENT OF TRANSPORTATION
Caltrans® DESIGN

FUNCTIONAL SUPERVISOR: TIMOTHY B. SOBELMAN
CALCULATED-DESIGNED BY: D. WANG
CHECKED BY: L. HE
REVISED BY
DATE REVISED

LAST REVISION 00-00-00
DATE PLOTTED => 21-MAY-2012
TIME PLOTTED => 15:48

Dist	COUNTY	ROUTE	POST MILES TOTAL PROJECT	SHEET No.	TOTAL SHEETS
07	LA	5	29.4/31.6	142	1931

REGISTERED CIVIL ENGINEER 6-3-09 DATE

5-21-12
PLANS APPROVAL DATE

REGISTERED PROFESSIONAL ENGINEER TIMOTHY B. SOBELMAN No. 59249 Exp 6-30-13 CIVIL STATE OF CALIFORNIA

THE STATE OF CALIFORNIA OR ITS OFFICERS OR AGENTS SHALL NOT BE RESPONSIBLE FOR THE ACCURACY OR COMPLETENESS OF SCANNED COPIES OF THIS PLAN SHEET.

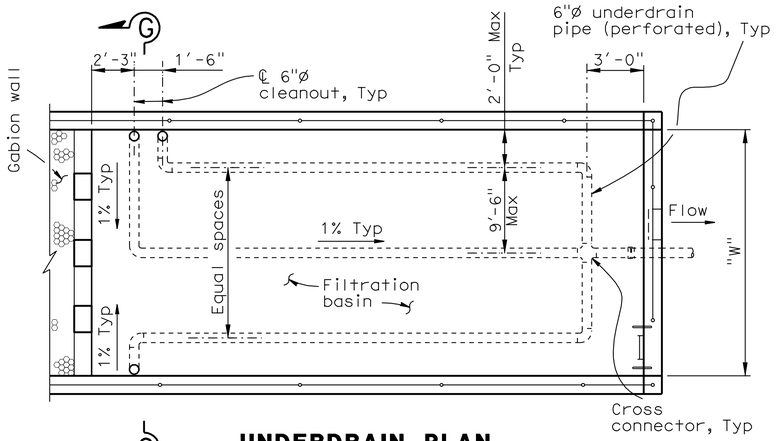

UNDERDRAIN PLAN (FILTRATION BASIN)

"W" = 15' - 21'
No Scale
AVSF Type = (S or L 3500)

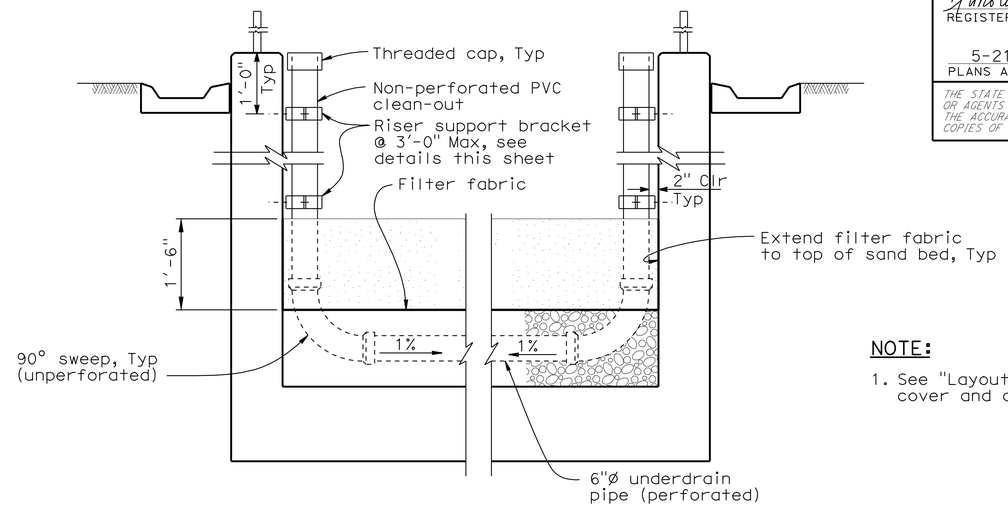

SECTION G - G

No Scale

NOTE:

1. See "Layout No. 1" sheet for Typical cover and depth of sand bed.

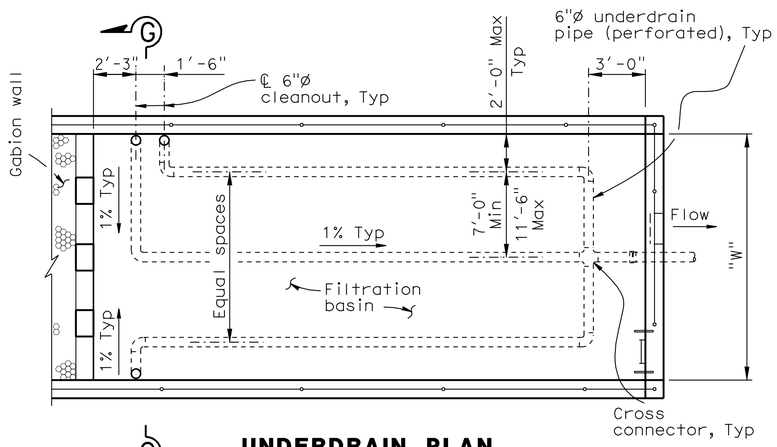

UNDERDRAIN PLAN (FILTRATION BASIN)

"W" = 18' - 24' - 27'
No Scale
AVSF Type = (S or L 5000) L 10000)

No Scale

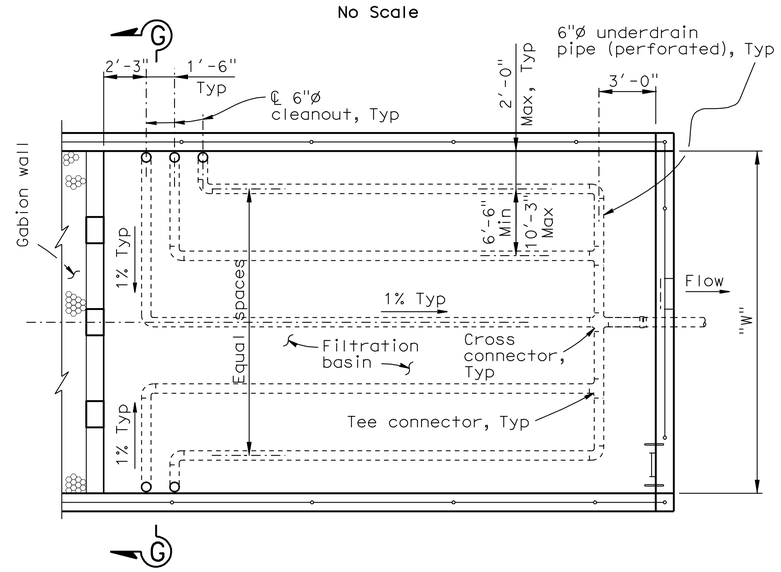

UNDERDRAIN PLAN (FILTRATION BASIN)

"W" = 30' - 36' - 45'
No Scale
AVSF Type = (S 10000, S or L 15000)

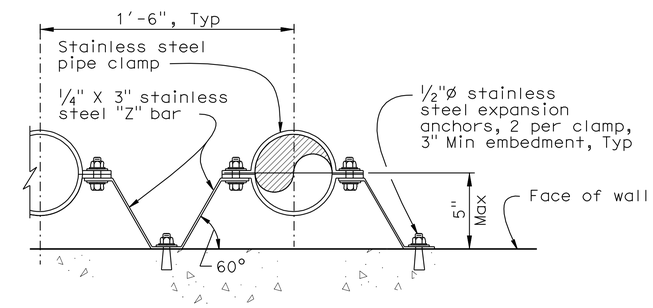

RISER SUPPORT BRACKET DETAIL

No Scale

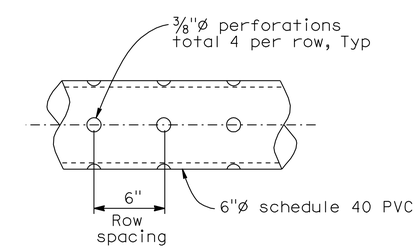

PERFORATED UNDERDRAIN PIPE

No Scale

AUSTIN VAULT SAND FILTER DETAILS No. 4

WATER POLLUTION CONTROL

W-8

STATE OF CALIFORNIA - DEPARTMENT OF TRANSPORTATION
Caltrans DESIGN
FUNCTIONAL SUPERVISOR: TIMOTHY B. SOBELMAN
CALCULATED-DESIGNED BY: D. WANG
CHECKED BY: L. HE
REVISED BY
DATE REVISED

LAST REVISION 00-00-00 | DATE PLOTTED => 21-MAY-2012 | TIME PLOTTED => 15:48

Dist	COUNTY	ROUTE	POST MILES TOTAL PROJECT	SHEET No.	TOTAL SHEETS
07	LA	5	29.4/31.6	143	1931

Timothy B Sobelman 6-3-09
REGISTERED CIVIL ENGINEER DATE

5-21-12
PLANS APPROVAL DATE

REGISTERED PROFESSIONAL ENGINEER TIMOTHY B. SOBELMAN No. 59249 Exp 6-30-13 CIVIL STATE OF CALIFORNIA

THE STATE OF CALIFORNIA OR ITS OFFICERS OR AGENTS SHALL NOT BE RESPONSIBLE FOR THE ACCURACY OR COMPLETENESS OF SCANNED COPIES OF THIS PLAN SHEET.

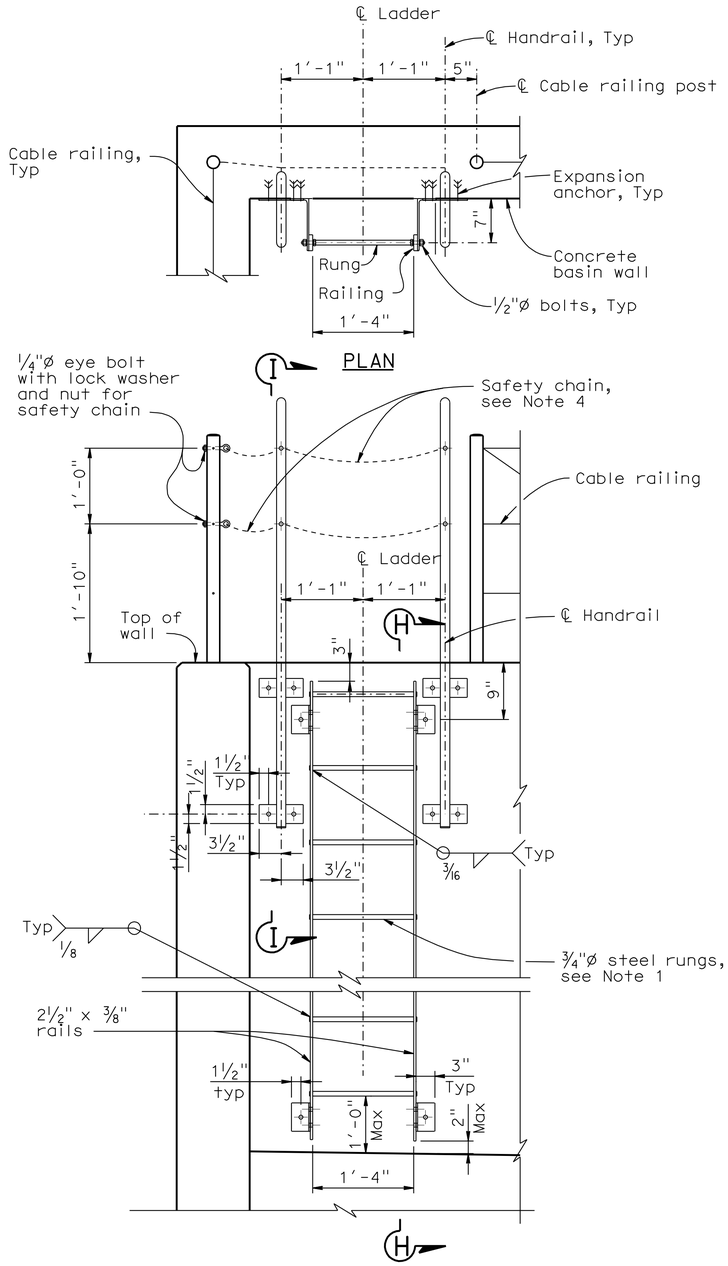

ELEVATION

LADDER

No Scale

NOTE: Cable railing not shown for clarity.

NOTES:

1. The distance between rungs shall not exceed 1'-0" and shall be uniform throughout the length of wall.
2. Hardware shall be galvanized after fabrication.
3. Grind exposed corners to 3/16" radius.
4. Safety chain shall be 1/4" galvanized steel coil chain, approximately 12 links per foot. Length shall be minimum which allows lock-up of safety railing. Minimum of two safety chains per safety railing. Material shall be grade 43 high test chain ASTM A413.

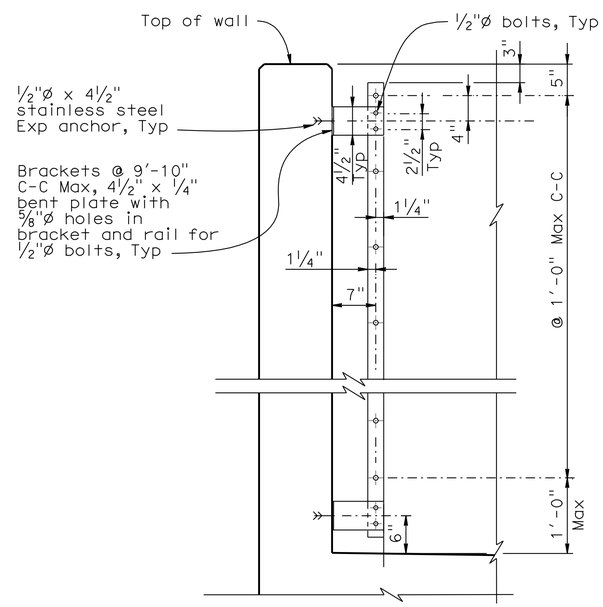

SECTION H - H

No Scale

NOTE: Handrail and cable railing not shown for clarity.

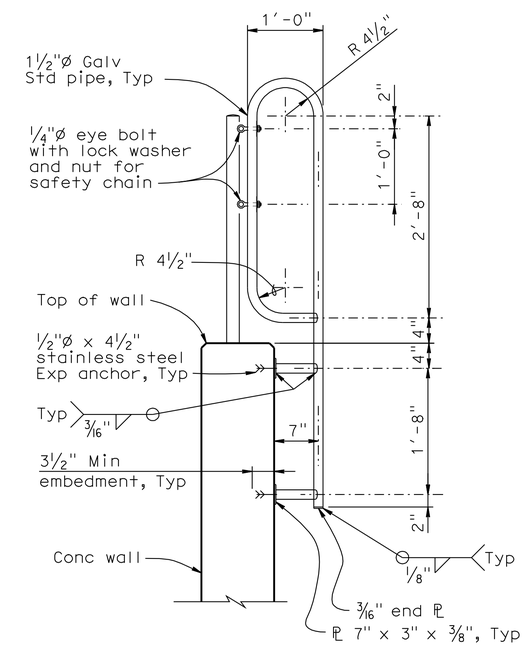

SECTION I - I

No Scale

AUSTIN VAULT SAND FILTER
MISCELLANEOUS DETAILS No. 1

WATER POLLUTION CONTROL

W-9

REVISED BY	DATE REVISED	D. WANG	L. HE	TIMOTHY B. SOBELMAN	DESIGN
		CALCULATED-DESIGNED BY	CHECKED BY	FUNCTIONAL SUPERVISOR	

STATE OF CALIFORNIA - DEPARTMENT OF TRANSPORTATION

Caltrans

LAST REVISION 00-00-00 | DATE PLOTTED => 21-MAY-2012 | TIME PLOTTED => 15:48

Dist	COUNTY	ROUTE	POST MILES TOTAL PROJECT	SHEET No.	TOTAL SHEETS
07	LA	5	29.4/31.6	144	1931

1-20-12
REGISTERED CIVIL ENGINEER DATE

5-21-12
PLANS APPROVAL DATE

REGISTERED PROFESSIONAL ENGINEER
THAO T. TRAN
No. C66879
Exp. 9/30/12
CIVIL
STATE OF CALIFORNIA

THE STATE OF CALIFORNIA OR ITS OFFICERS OR AGENTS SHALL NOT BE RESPONSIBLE FOR THE ACCURACY OR COMPLETENESS OF SCANNED COPIES OF THIS PLAN SHEET.

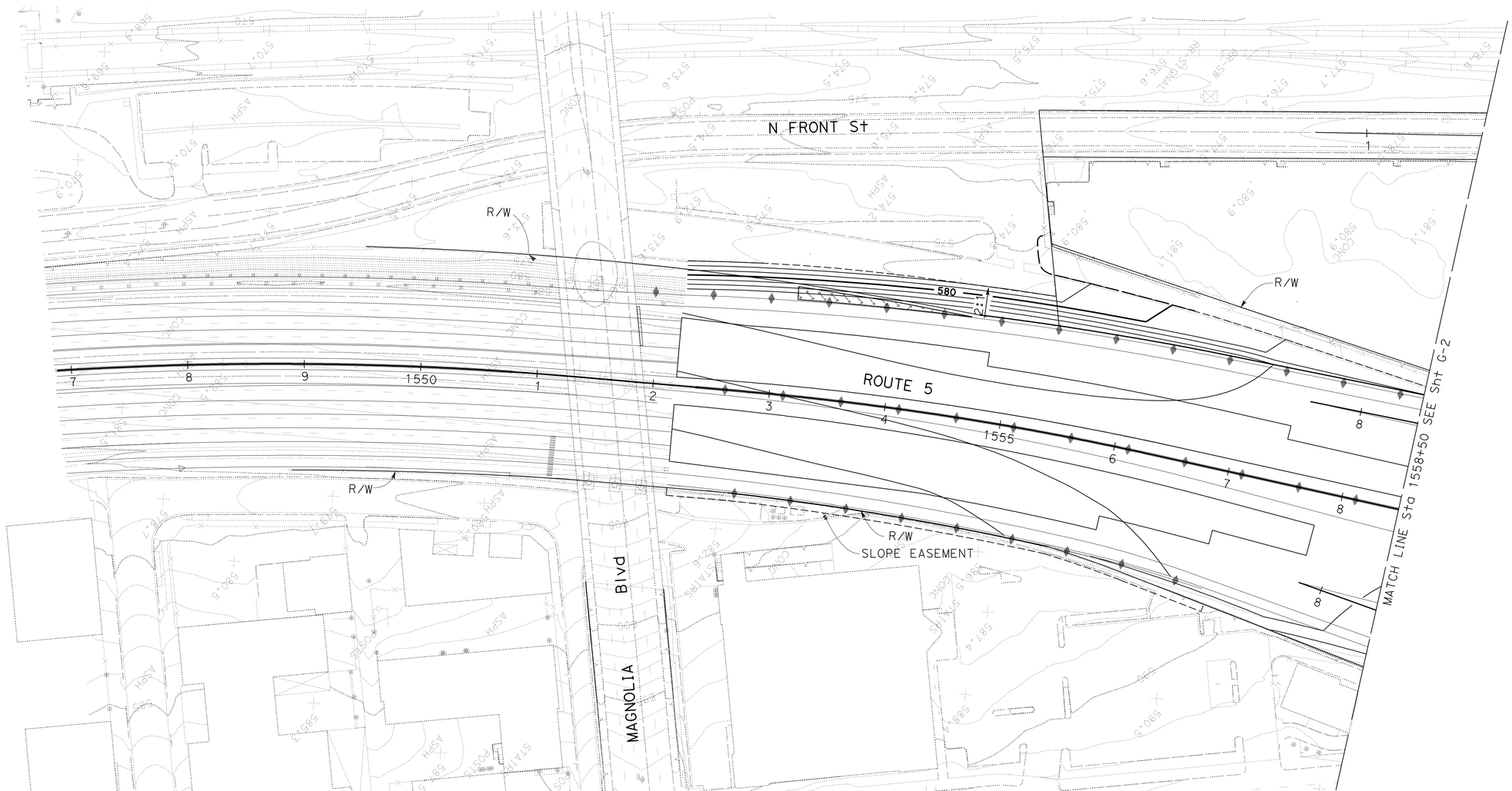

CONTOUR GRADING

SCALE: 1" = 50'

G-1

APPROVED FOR CONTOUR GRADING WORK ONLY

STATE OF CALIFORNIA - DEPARTMENT OF TRANSPORTATION
Caltrans
DESIGN

FUNCTIONAL SUPERVISOR: CHARLES P. TON
CALCULATED-DESIGNED BY: KEVIN MAI
CHECKED BY: VICTOR PONCE
REVISED BY
DATE REVISED

LAST REVISION 01-26-12
DATE PLOTTED => 21-MAY-2012
TIME PLOTTED => 15:48

Dist	COUNTY	ROUTE	POST MILES TOTAL PROJECT	SHEET No.	TOTAL SHEETS
07	LA	5	29.4/31.6	145	1931

REGISTERED CIVIL ENGINEER 5-20-12 DATE

5-21-12
PLANS APPROVAL DATE

REGISTERED PROFESSIONAL ENGINEER
THAO T. TRAN
No. C66879
Exp 9/30/12
CIVIL
STATE OF CALIFORNIA

THE STATE OF CALIFORNIA OR ITS OFFICERS OR AGENTS SHALL NOT BE RESPONSIBLE FOR THE ACCURACY OR COMPLETENESS OF SCANNED COPIES OF THIS PLAN SHEET.

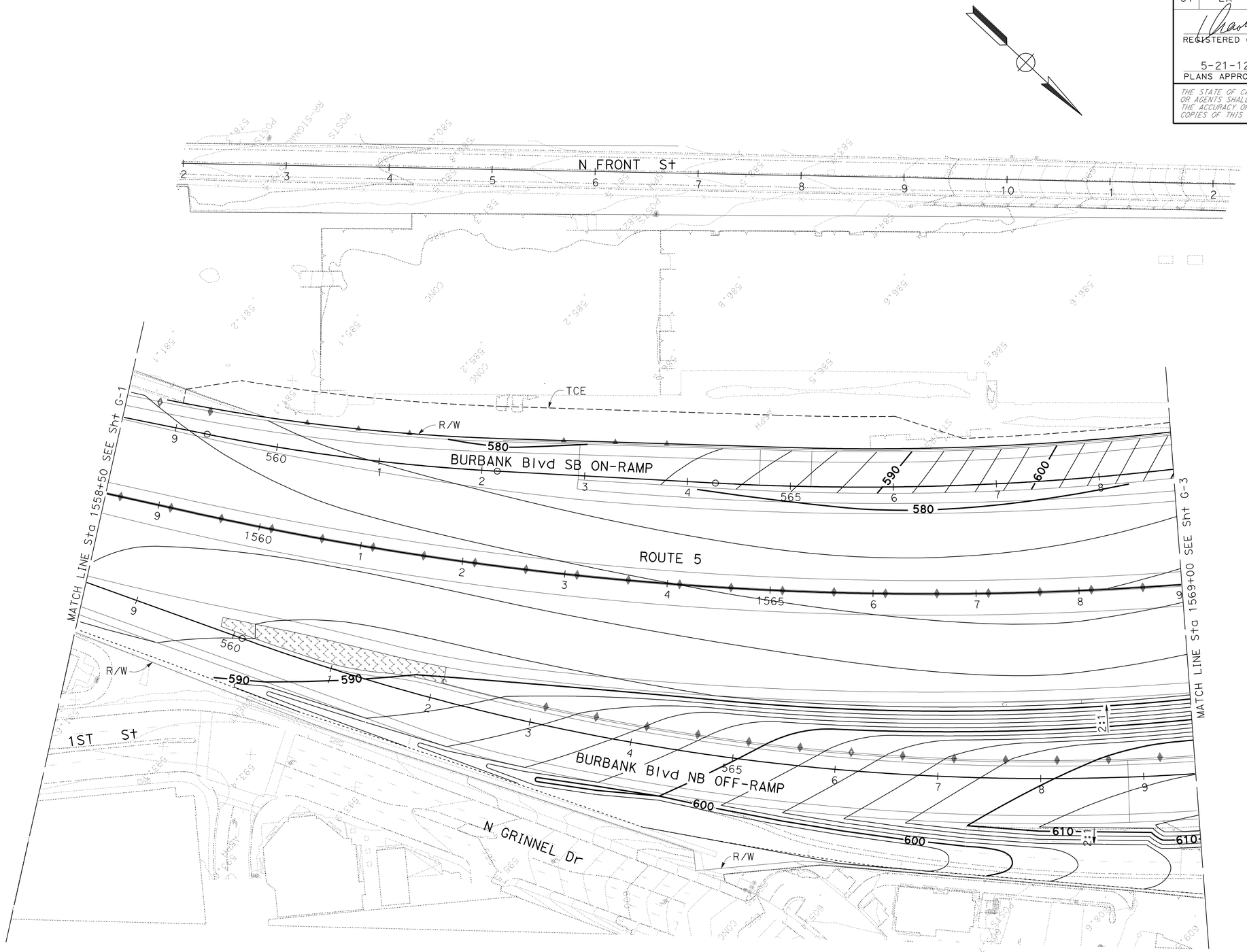

CONTOUR GRADING

SCALE: 1" = 50'

G-2

APPROVED FOR CONTOUR GRADING WORK ONLY

REVISED BY | DATE REVISED
KEVIN MAI | VICTOR PONCE
CALCULATED-DESIGNED BY | CHECKED BY
FUNCTIONAL SUPERVISOR: CHARLES P. TON

STATE OF CALIFORNIA - DEPARTMENT OF TRANSPORTATION
Caltrans
DESIGN

LAST REVISION 01-26-12 | DATE PLOTTED => 21-MAY-2012 | TIME PLOTTED => 15:48

Dist	COUNTY	ROUTE	POST MILES TOTAL PROJECT	SHEET No.	TOTAL SHEETS
07	LA	5	29.4/31.6	146	1931

REGISTERED CIVIL ENGINEER 1-20-12 DATE

5-21-12
PLANS APPROVAL DATE

REGISTERED PROFESSIONAL ENGINEER
THAO T. TRAN
No. C66879
Exp. 9/30/12
CIVIL
STATE OF CALIFORNIA

THE STATE OF CALIFORNIA OR ITS OFFICERS OR AGENTS SHALL NOT BE RESPONSIBLE FOR THE ACCURACY OR COMPLETENESS OF SCANNED COPIES OF THIS PLAN SHEET.

CONTOUR GRADING

SCALE 1" = 50'

G-3

APPROVED FOR CONTOUR GRADING WORK ONLY

STATE OF CALIFORNIA - DEPARTMENT OF TRANSPORTATION
Caltrans
DESIGN

FUNCTIONAL SUPERVISOR: CHARLES P. TON
CALCULATED-DESIGNED BY: KEVIN MAI
CHECKED BY: VICTOR PONCE
REVISED BY
DATE REVISED

LAST REVISION 01-26-12
DATE PLOTTED => 21-MAY-2012
TIME PLOTTED => 16:03

Dist	COUNTY	ROUTE	POST MILES TOTAL PROJECT	SHEET No.	TOTAL SHEETS
07	LA	5	29.4/31.6	147	1931

REGISTERED CIVIL ENGINEER 1-20-12 DATE

5-21-12
PLANS APPROVAL DATE

REGISTERED PROFESSIONAL ENGINEER
THAO T. TRAN
No. C66879
Exp 9/30/12
CIVIL
STATE OF CALIFORNIA

THE STATE OF CALIFORNIA OR ITS OFFICERS OR AGENTS SHALL NOT BE RESPONSIBLE FOR THE ACCURACY OR COMPLETENESS OF SCANNED COPIES OF THIS PLAN SHEET.

APPROVED FOR CONTOUR GRADING WORK ONLY

CONTOUR GRADING

SCALE: 1" = 50'

G-4

STATE OF CALIFORNIA - DEPARTMENT OF TRANSPORTATION
Caltrans
DESIGN

FUNCTIONAL SUPERVISOR: CHARLES P. TON
CALCULATED-DESIGNED BY: KEVIN MAI
CHECKED BY: VICTOR PONCE
REVISED BY
DATE REVISED

LAST REVISION 01-26-12
DATE PLOTTED => 21-MAY-2012
TIME PLOTTED => 15:48

Dist	COUNTY	ROUTE	POST MILES TOTAL PROJECT	SHEET No.	TOTAL SHEETS
07	LA	5	29.4/31.6	148	1931

REGISTERED CIVIL ENGINEER 1-20-12 DATE

5-21-12
PLANS APPROVAL DATE

REGISTERED PROFESSIONAL ENGINEER THAO T. TRAN No. C66879 Exp. 9/30/12 CIVIL STATE OF CALIFORNIA

THE STATE OF CALIFORNIA OR ITS OFFICERS OR AGENTS SHALL NOT BE RESPONSIBLE FOR THE ACCURACY OR COMPLETENESS OF SCANNED COPIES OF THIS PLAN SHEET.

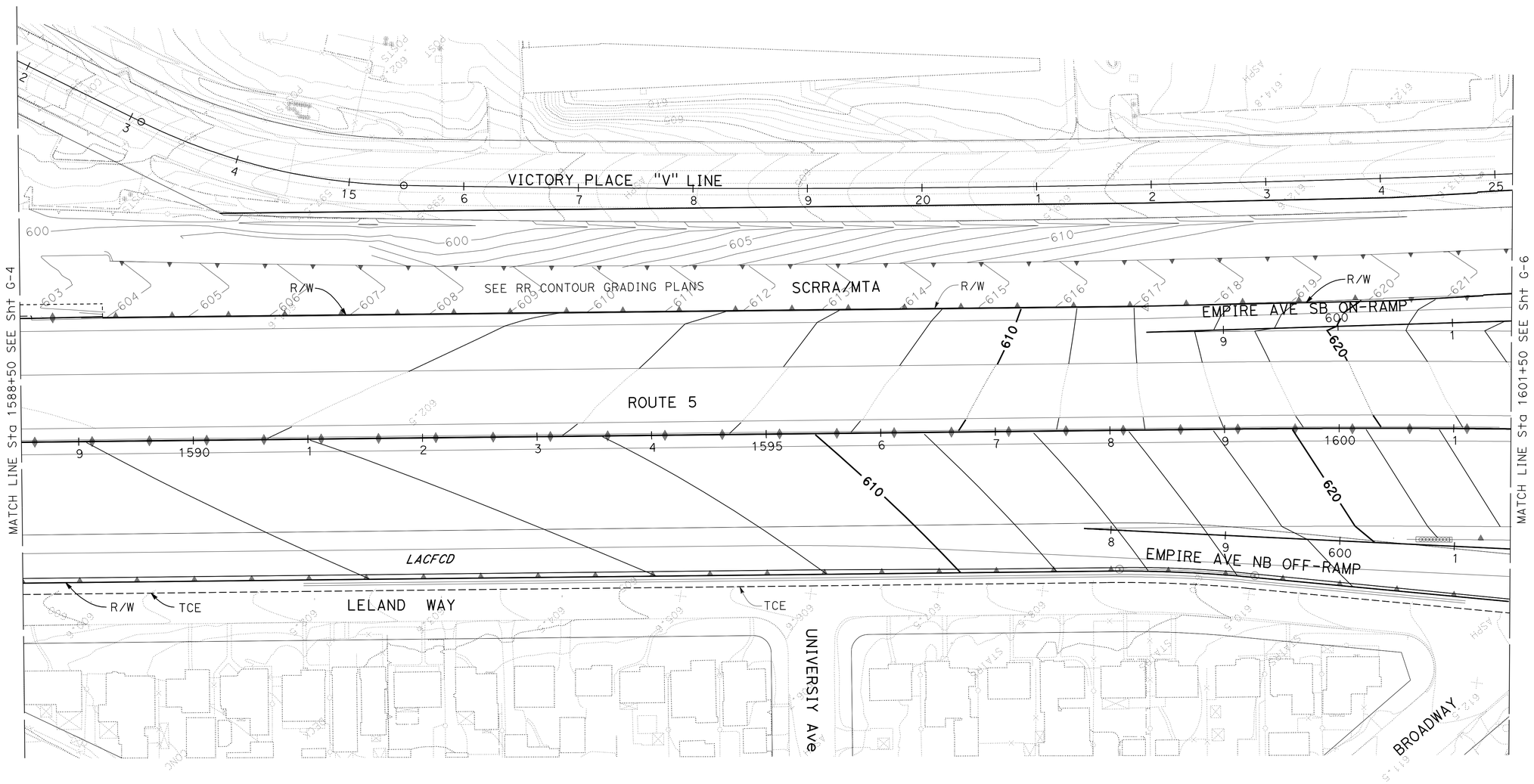

CONTOUR GRADING

SCALE: 1" = 50'

G-5

APPROVED FOR CONTOUR GRADING WORK ONLY

STATE OF CALIFORNIA - DEPARTMENT OF TRANSPORTATION

Caltrans

DESIGN

FUNCTIONAL SUPERVISOR: CHARLES P. TON

CALCULATED-DESIGNED BY: KEVIN MAI

CHECKED BY: VICTOR PONCE

REVISED BY

DATE REVISED

LAST REVISION 01-26-12

DATE PLOTTED => 21-MAY-2012
TIME PLOTTED => 15:49

Dist	COUNTY	ROUTE	POST MILES TOTAL PROJECT	SHEET No.	TOTAL SHEETS
07	LA	5	29.4/31.6	149	1931

REGISTERED CIVIL ENGINEER 1-20-12 DATE

5-21-12
PLANS APPROVAL DATE

REGISTERED PROFESSIONAL ENGINEER
THAO T. TRAN
No. C66879
Exp. 9/30/12
CIVIL
STATE OF CALIFORNIA

THE STATE OF CALIFORNIA OR ITS OFFICERS OR AGENTS SHALL NOT BE RESPONSIBLE FOR THE ACCURACY OR COMPLETENESS OF SCANNED COPIES OF THIS PLAN SHEET.

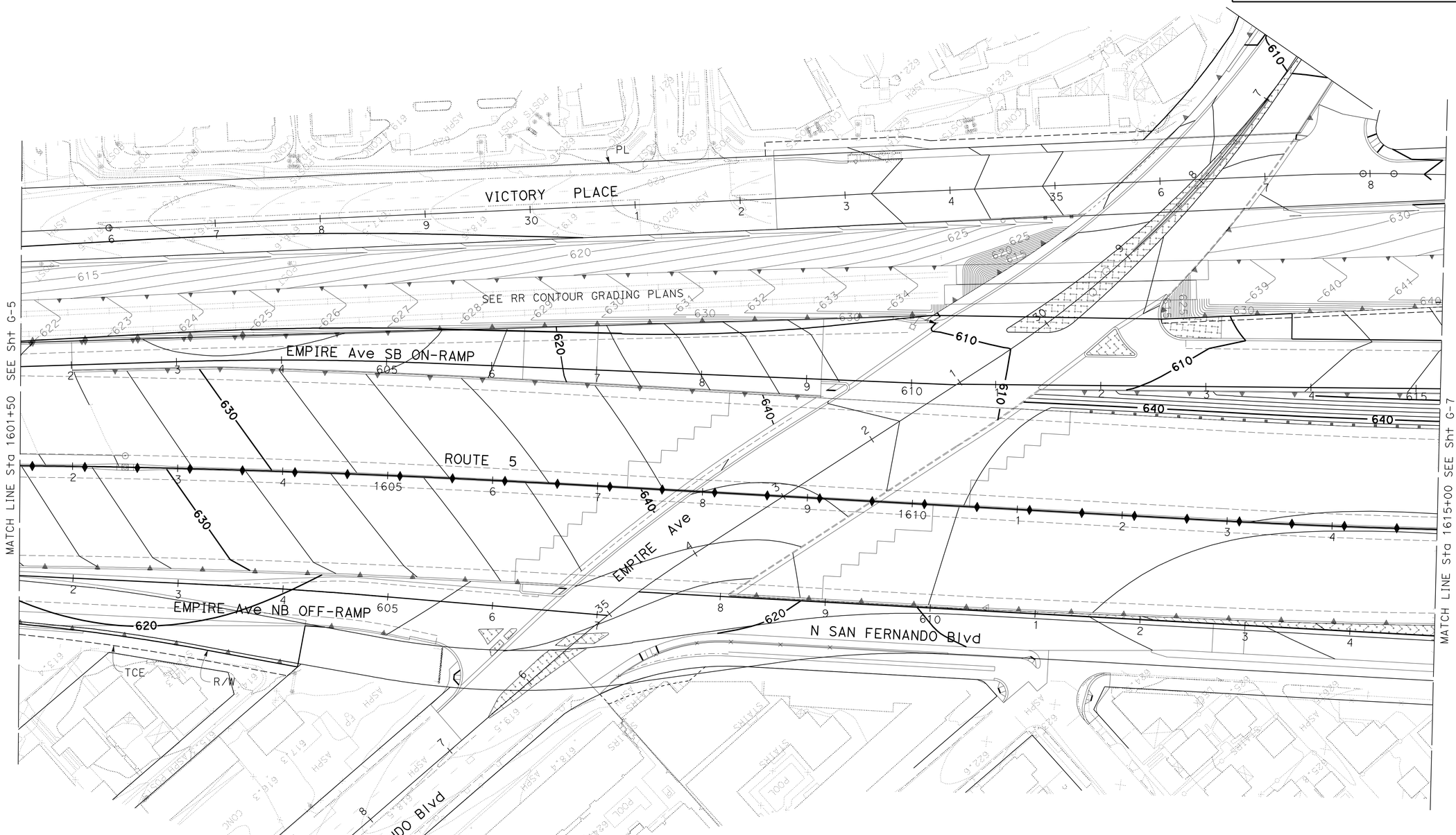

CONTOUR GRADING

SCALE: 1" = 50'

APPROVED FOR CONTOUR GRADING WORK ONLY

G-6

STATE OF CALIFORNIA - DEPARTMENT OF TRANSPORTATION
Caltrans
DESIGN

FUNCTIONAL SUPERVISOR: CHARLES P. TON
CALCULATED-DESIGNED BY: KEVIN MAI
CHECKED BY: VICTOR PONCE
REVISED BY
DATE REVISED

LAST REVISION 01-26-12
DATE PLOTTED => 21-MAY-2012
TIME PLOTTED => 16:03

Dist	COUNTY	ROUTE	POST MILES TOTAL PROJECT	SHEET No.	TOTAL SHEETS
07	LA	5	29.4/31.6	150	1931

REGISTERED CIVIL ENGINEER 1-20-12 DATE

5-21-12
PLANS APPROVAL DATE

REGISTERED PROFESSIONAL ENGINEER
THAO T. TRAN
No. C66879
Exp. 9/30/12
CIVIL
STATE OF CALIFORNIA

THE STATE OF CALIFORNIA OR ITS OFFICERS OR AGENTS SHALL NOT BE RESPONSIBLE FOR THE ACCURACY OR COMPLETENESS OF SCANNED COPIES OF THIS PLAN SHEET.

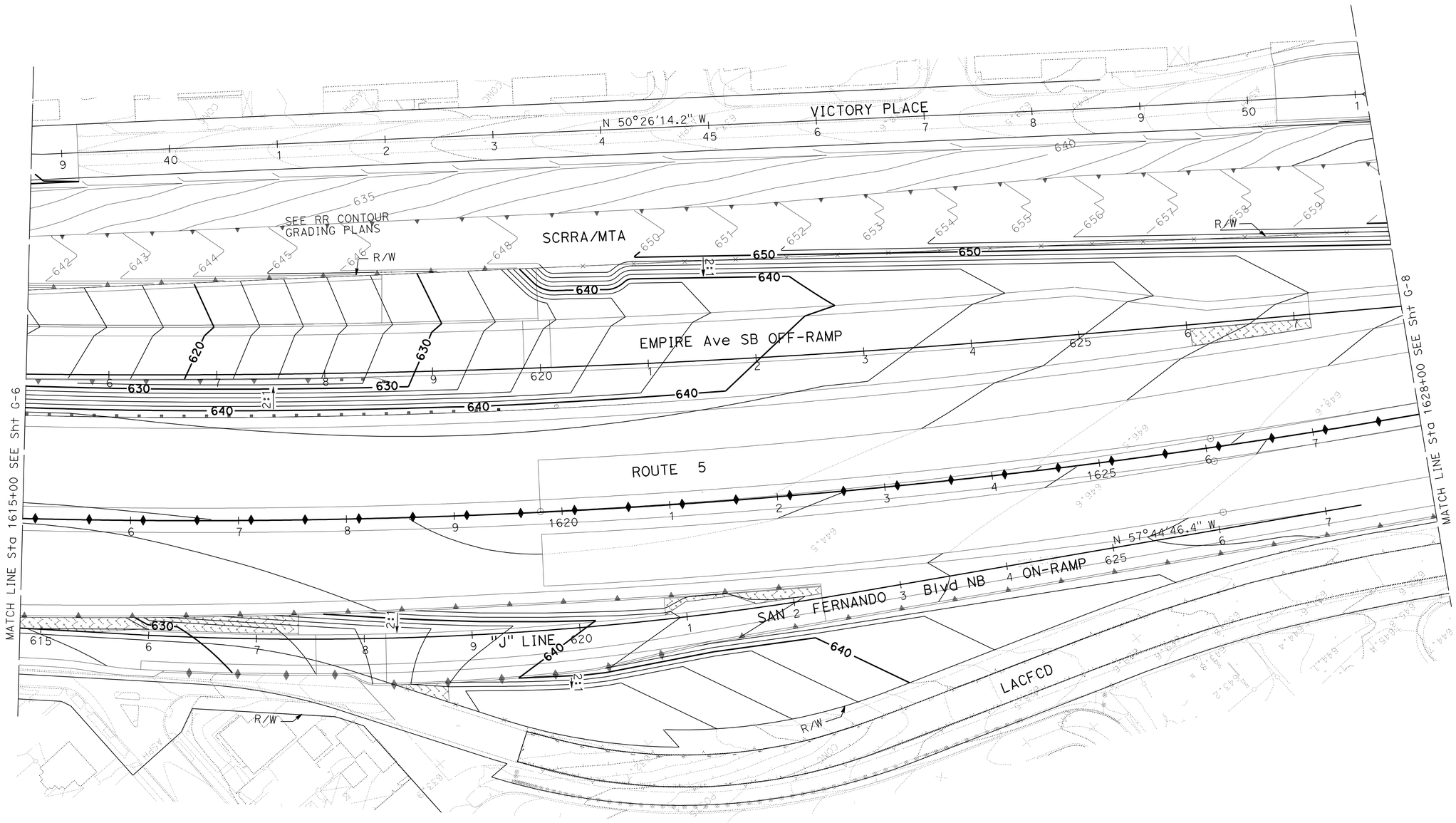

APPROVED FOR CONTOUR GRADING WORK ONLY

CONTOUR GRADING

SCALE: 1" = 50'

G-7

STATE OF CALIFORNIA - DEPARTMENT OF TRANSPORTATION
Caltrans
DESIGN

FUNCTIONAL SUPERVISOR: CHARLES P. TON
CALCULATED-DESIGNED BY: KEVIN MAI
CHECKED BY: VICTOR PONCE
REVISED BY
DATE REVISED

LAST REVISION 01-26-12
DATE PLOTTED => 21-MAY-2012
TIME PLOTTED => 15:49

Dist	COUNTY	ROUTE	POST MILES TOTAL PROJECT	SHEET No.	TOTAL SHEETS
07	LA	5	29.4/31.6	151	1931

REGISTERED CIVIL ENGINEER 1-20-12 DATE

5-21-12
PLANS APPROVAL DATE

REGISTERED PROFESSIONAL ENGINEER
THAO T. TRAN
No. C66879
Exp. 9/30/12
CIVIL
STATE OF CALIFORNIA

THE STATE OF CALIFORNIA OR ITS OFFICERS OR AGENTS SHALL NOT BE RESPONSIBLE FOR THE ACCURACY OR COMPLETENESS OF SCANNED COPIES OF THIS PLAN SHEET.

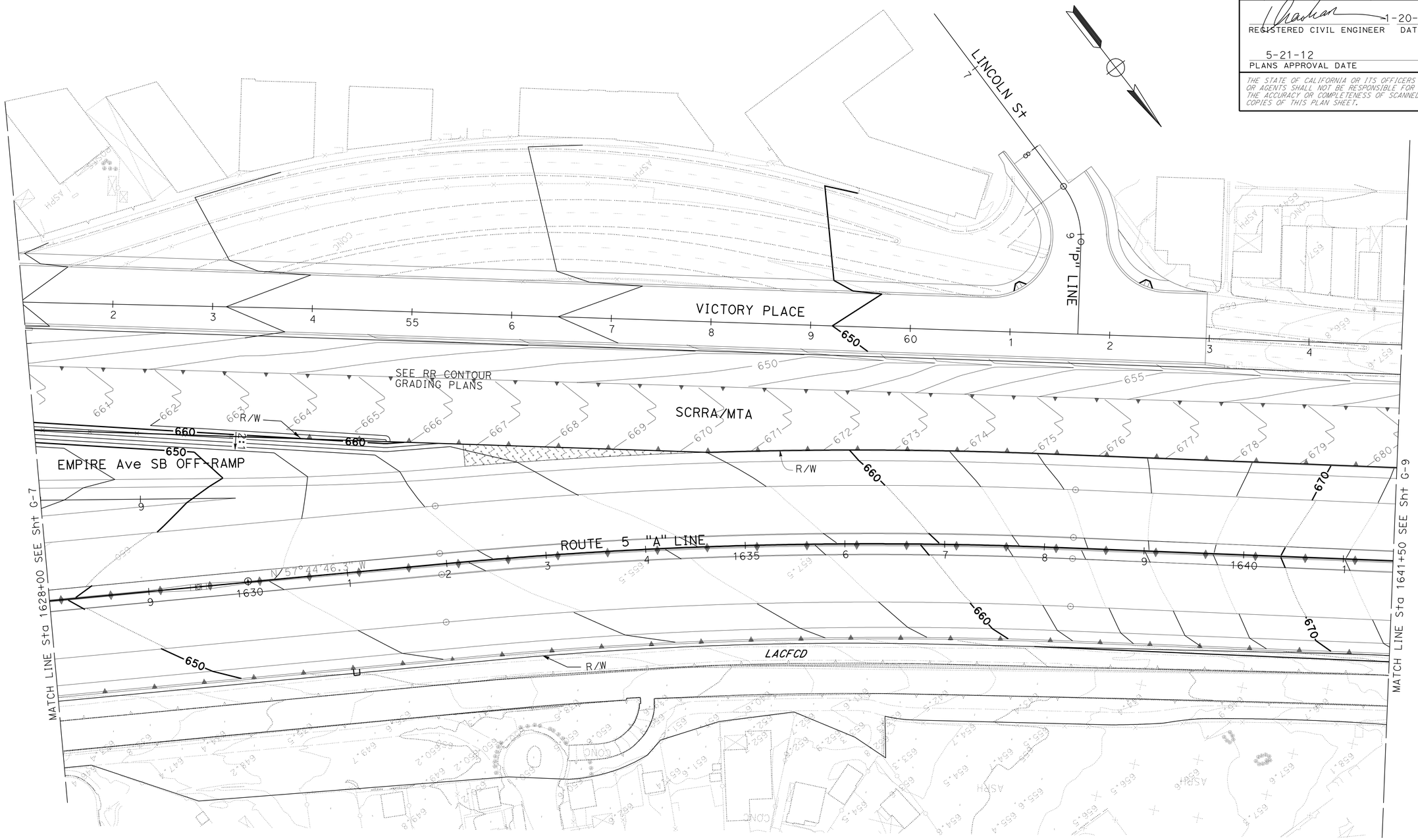

CONTOUR GRADING

SCALE: 1" = 50'

G-8

APPROVED FOR CONTOUR GRADING WORK ONLY

STATE OF CALIFORNIA - DEPARTMENT OF TRANSPORTATION
Caltrans®
DESIGN

FUNCTIONAL SUPERVISOR: CHARLES P. TON
CALCULATED-DESIGNED BY: KEVIN MAI
CHECKED BY: VICTOR PONCE
REVISED BY
DATE REVISED

LAST REVISION 01-26-12
DATE PLOTTED => 14-JUN-2012
TIME PLOTTED => 08:15

Dist	COUNTY	ROUTE	POST MILES TOTAL PROJECT	SHEET No.	TOTAL SHEETS
07	LA	5	29.4/31.6	152	1931

REGISTERED CIVIL ENGINEER 1-20-12 DATE

5-21-12
PLANS APPROVAL DATE

REGISTERED PROFESSIONAL ENGINEER
THAO T. TRAN
No. C66879
Exp. 9/30/12
CIVIL
STATE OF CALIFORNIA

THE STATE OF CALIFORNIA OR ITS OFFICERS OR AGENTS SHALL NOT BE RESPONSIBLE FOR THE ACCURACY OR COMPLETENESS OF SCANNED COPIES OF THIS PLAN SHEET.

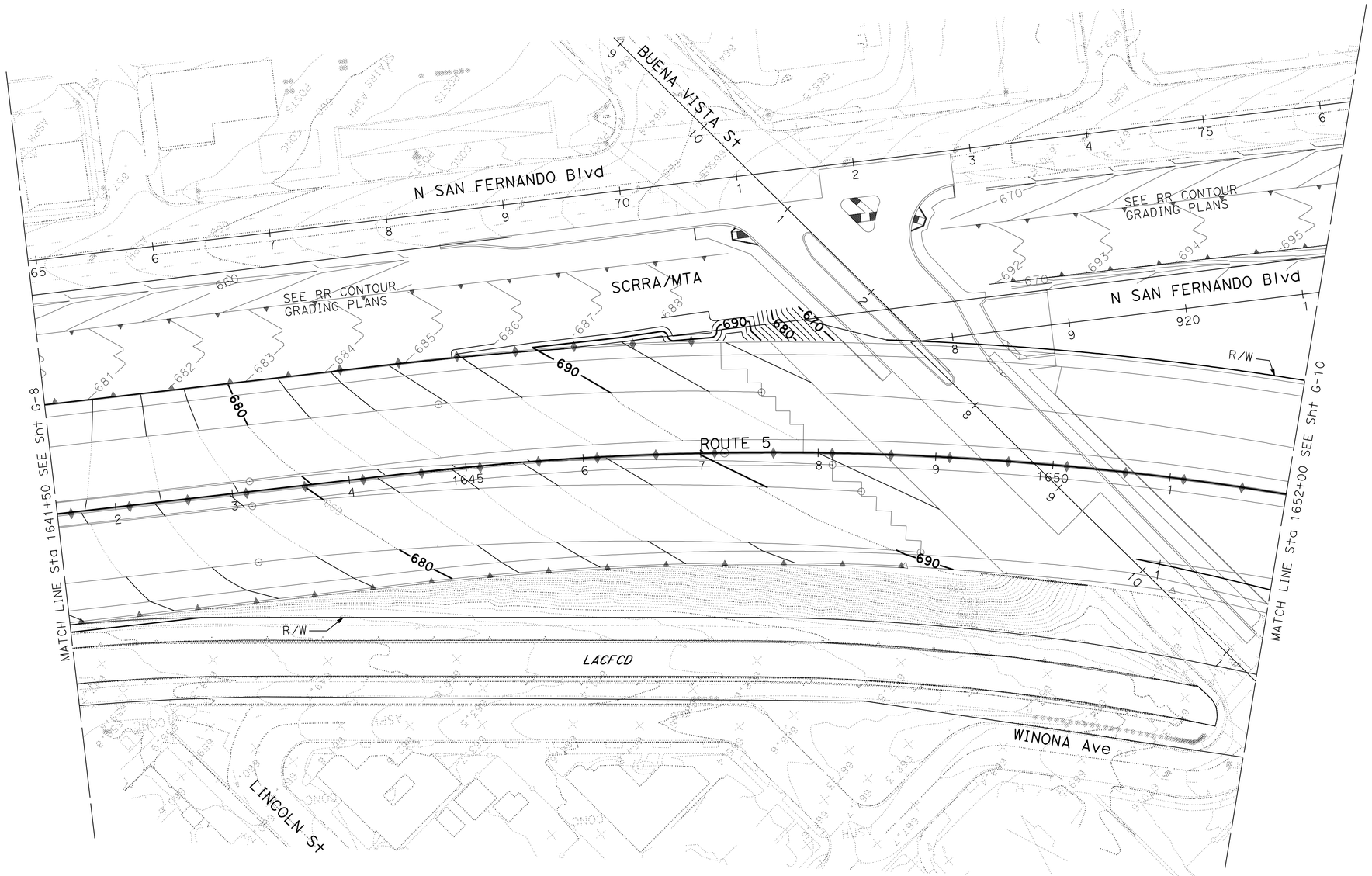

CONTOUR GRADING

SCALE: 1" = 50'

G-9

APPROVED FOR CONTOUR GRADING WORK ONLY

STATE OF CALIFORNIA - DEPARTMENT OF TRANSPORTATION
Caltrans®
DESIGN

FUNCTIONAL SUPERVISOR: CHARLES P. TON
CALCULATED-DESIGNED BY: KEVIN MAI
CHECKED BY: VICTOR PONCE
REVISED BY
DATE REVISED

LAST REVISION 01-26-12
DATE PLOTTED => 21-MAY-2012
TIME PLOTTED => 15:49

Dist	COUNTY	ROUTE	POST MILES TOTAL PROJECT	SHEET No.	TOTAL SHEETS
07	LA	5	29.4/31.6	153	1931

REGISTERED CIVIL ENGINEER 1-20-12 DATE

5-21-12
PLANS APPROVAL DATE

REGISTERED PROFESSIONAL ENGINEER
THAO T. TRAN
No. C66879
Exp. 9/30/12
CIVIL
STATE OF CALIFORNIA

THE STATE OF CALIFORNIA OR ITS OFFICERS OR AGENTS SHALL NOT BE RESPONSIBLE FOR THE ACCURACY OR COMPLETENESS OF SCANNED COPIES OF THIS PLAN SHEET.

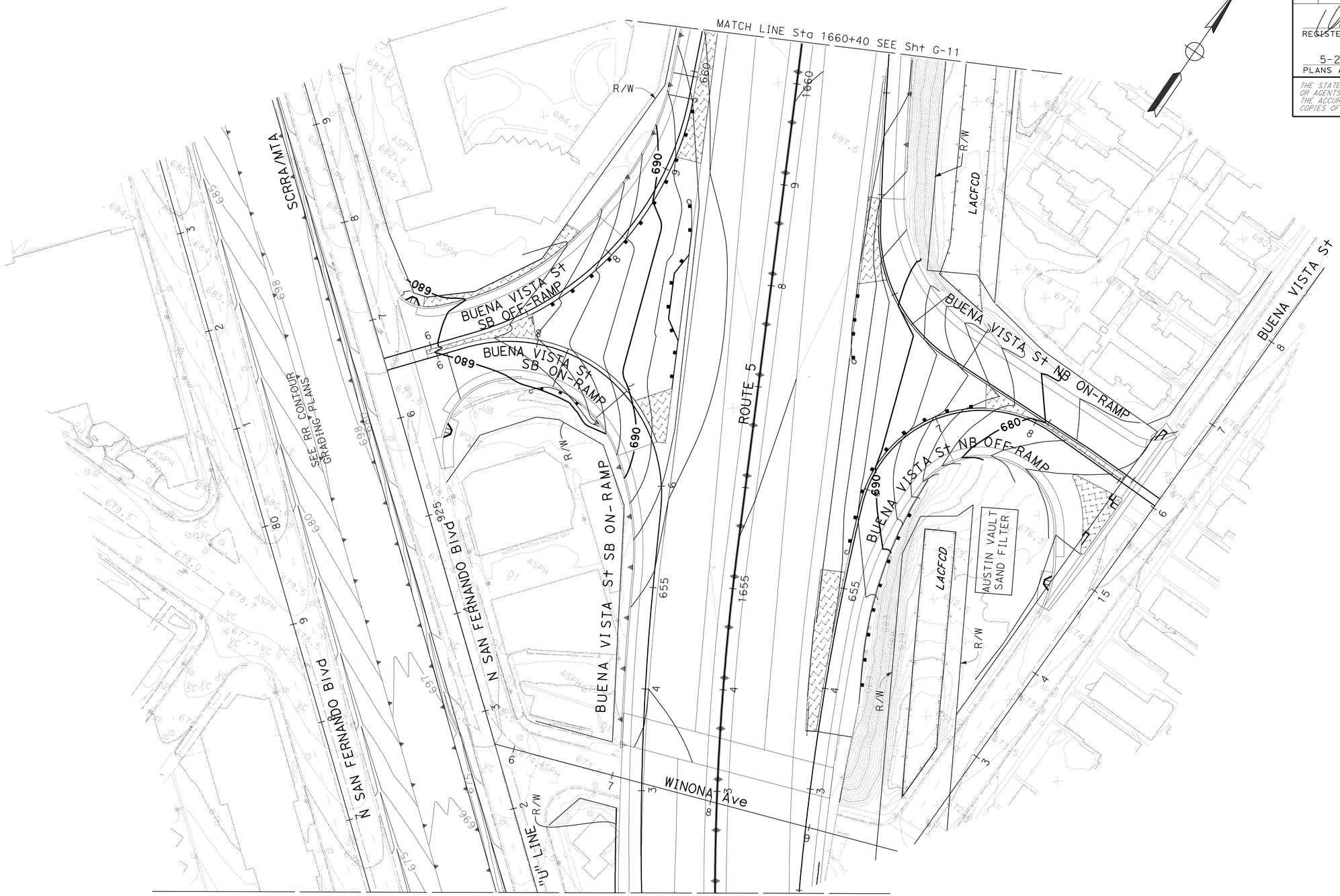

APPROVED FOR CONTOUR GRADING WORK ONLY

CONTOUR GRADING

SCALE: 1" = 50'

G-10

STATE OF CALIFORNIA - DEPARTMENT OF TRANSPORTATION
Caltrans
DESIGN

FUNCTIONAL SUPERVISOR: CHARLES P. TON
CALCULATED-DESIGNED BY: KEVIN MAI
CHECKED BY: VICTOR PONCE
REVISED BY
DATE REVISED

LAST REVISION 01-26-12 | DATE PLOTTED => 21-MAY-2012 | TIME PLOTTED => 15:49

Dist	COUNTY	ROUTE	POST MILES TOTAL PROJECT	SHEET No.	TOTAL SHEETS
07	LA	5	29.4/31.6	154	1931

REGISTERED CIVIL ENGINEER 1-20-12 DATE

5-21-12
PLANS APPROVAL DATE

REGISTERED PROFESSIONAL ENGINEER
THAO T. TRAN
No. C66879
Exp. 9/30/12
CIVIL
STATE OF CALIFORNIA

THE STATE OF CALIFORNIA OR ITS OFFICERS OR AGENTS SHALL NOT BE RESPONSIBLE FOR THE ACCURACY OR COMPLETENESS OF SCANNED COPIES OF THIS PLAN SHEET.

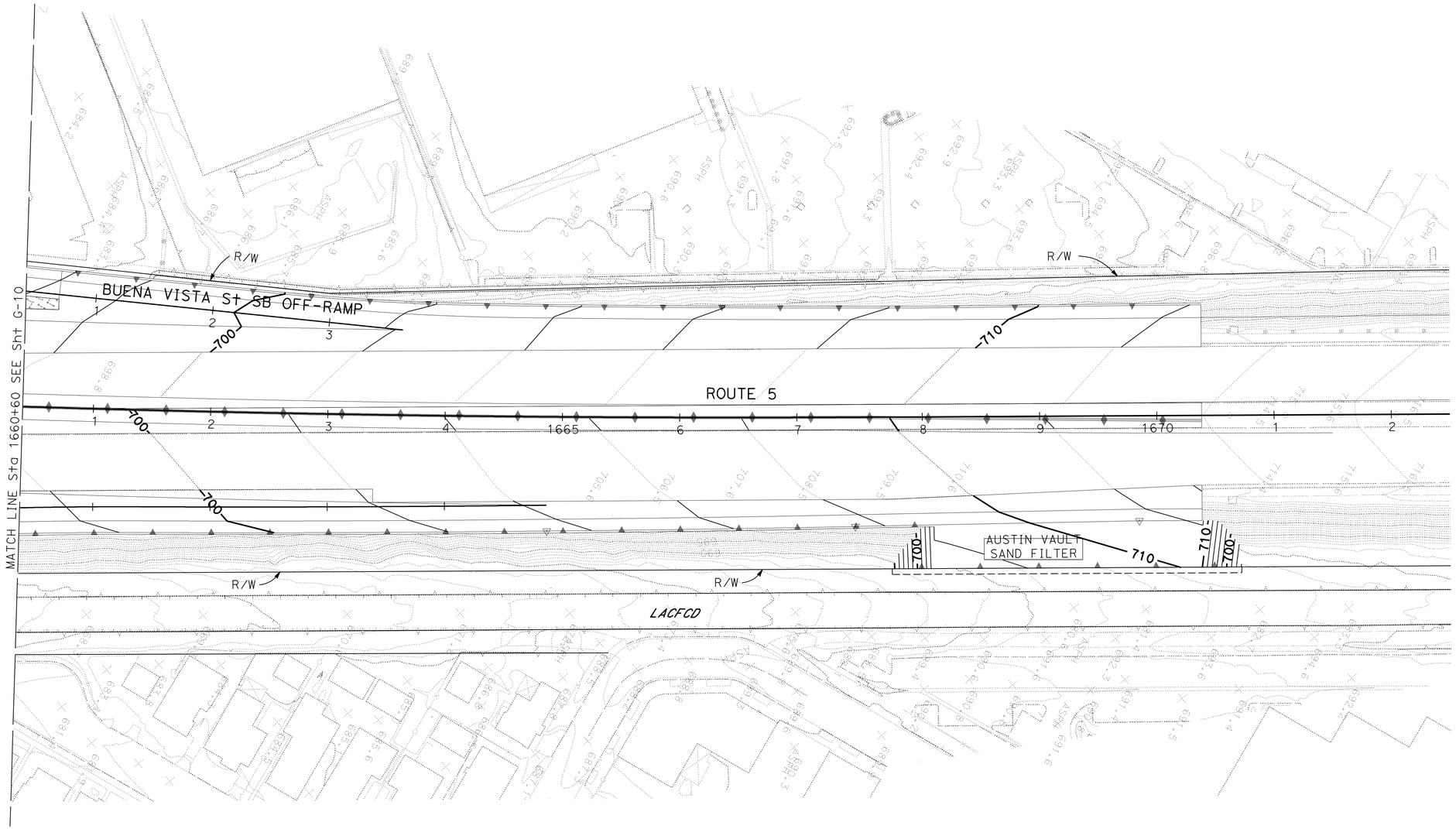

CONTOUR GRADING

SCALE: 1" = 50'

G-11

APPROVED FOR CONTOUR GRADING WORK ONLY

STATE OF CALIFORNIA - DEPARTMENT OF TRANSPORTATION
Caltrans
DESIGN

FUNCTIONAL SUPERVISOR: CHARLES P. TON
CALCULATED-DESIGNED BY: KEVIN MAI
CHECKED BY: VICTOR PONCE
REVISED BY
DATE REVISED

LAST REVISION 01-26-12
DATE PLOTTED => 21-MAY-2012
TIME PLOTTED => 15:49

Dist	COUNTY	ROUTE	POST MILES TOTAL PROJECT	SHEET No.	TOTAL SHEETS
07	LA	5	29.4/31.6	155	1931

REGISTERED CIVIL ENGINEER 1-20-12 DATE

5-21-12
PLANS APPROVAL DATE

REGISTERED PROFESSIONAL ENGINEER
THAO T. TRAN
No. C66879
Exp. 9/30/12
CIVIL
STATE OF CALIFORNIA

THE STATE OF CALIFORNIA OR ITS OFFICERS OR AGENTS SHALL NOT BE RESPONSIBLE FOR THE ACCURACY OR COMPLETENESS OF SCANNED COPIES OF THIS PLAN SHEET.

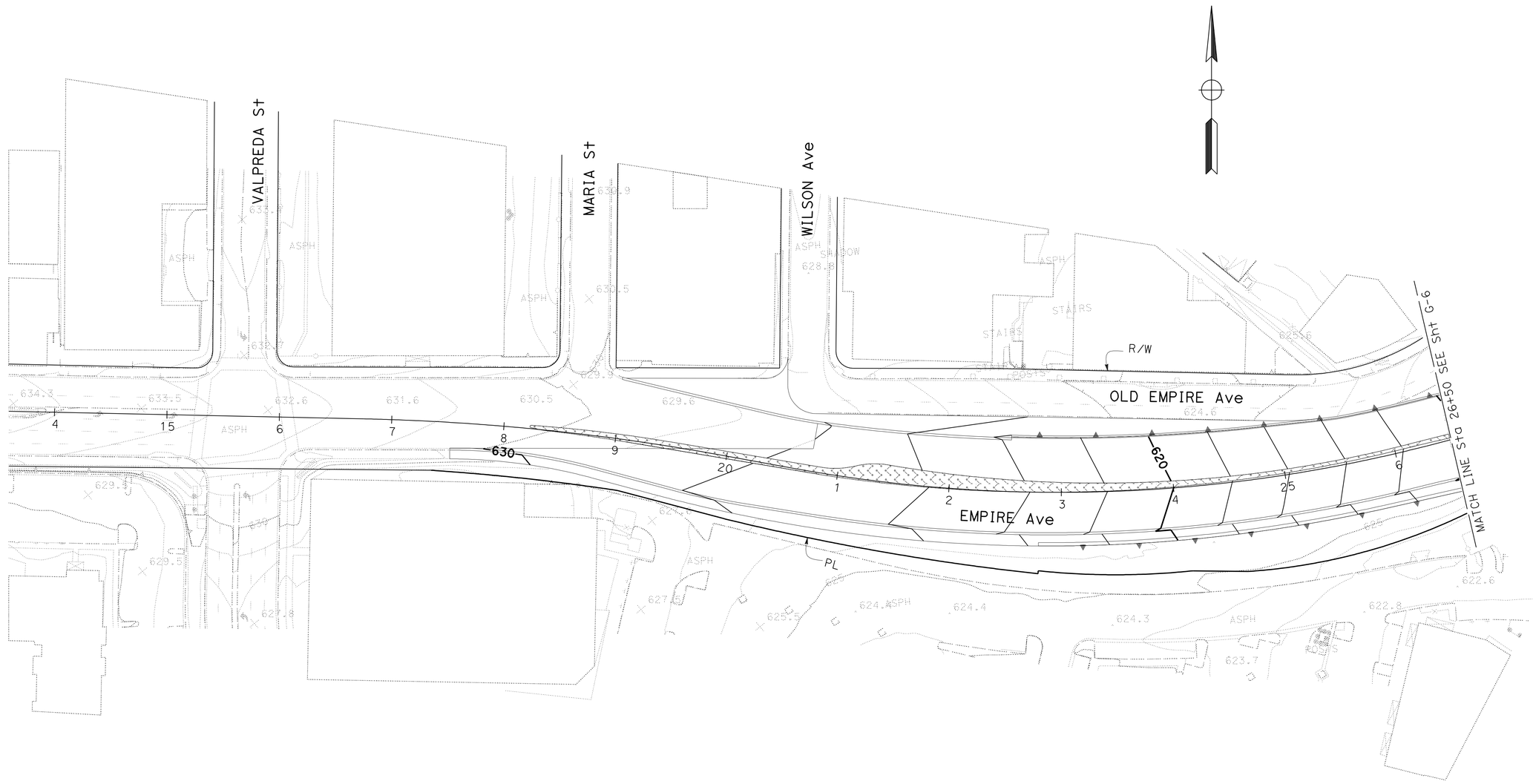

APPROVED FOR CONTOUR GRADING WORK ONLY

CONTOUR GRADING

SCALE: 1" = 50'

G-12

REVISED BY	DATE REVISED

CALCULATED-DESIGNED BY	KEVIN MAI
CHECKED BY	VICTOR PONCE

FUNCTIONAL SUPERVISOR: CHARLES P. TON

STATE OF CALIFORNIA - DEPARTMENT OF TRANSPORTATION

Caltrans

DESIGN

LAST REVISION 01-26-12 | DATE PLOTTED => 21-MAY-2012 | TIME PLOTTED => 15:50

Dist	COUNTY	ROUTE	POST MILES TOTAL PROJECT	SHEET No.	TOTAL SHEETS
07	LA	5	29.4/31.6	156	1931

REGISTERED CIVIL ENGINEER DATE 1/31/12

5-21-12
PLANS APPROVAL DATE

REGISTERED PROFESSIONAL ENGINEER R.M SASAKI No. 30849 Exp. 3/31/12 CIVIL STATE OF CALIFORNIA

THE STATE OF CALIFORNIA OR ITS OFFICERS OR AGENTS SHALL NOT BE RESPONSIBLE FOR THE ACCURACY OR COMPLETENESS OF SCANNED COPIES OF THIS PLAN SHEET.

NOTES:

1. FOR ACCURATE RIGHT OF WAY DATA, CONTACT RIGHT OF WAY ENGINEERING AT DISTRICT OFFICE.
2. THE CONTRACTOR SHALL VERIFY EXISTING ROADWAY CONDITIONS BEFORE COMMENCING CONSTRUCTION.

1

a	CAP INLET	h	CLEANOUT
b	CAP INLET	i	18" SCSP
c	24" RCP	j	CLEANOUT
d	G-2 INLET	k	18" SCSP
e	18" SCSP	l	CLEANOUT
f	CLEANOUT	m	18" SCSP
g	18" SCSP		

2

a	CAP INLET	h	CLEANOUT
b	CAP INLET	i	CLEANOUT
c	CAP INLET	j	CLEANOUT
d	24" RCP		
e	G-2 INLET		
f	CLEANOUT		
g	CLEANOUT		

LEGEND

DRAINAGE SYSTEM

DRAINAGE UNIT

RCP - REINFORCED CONCRETE PIPE

SCSP - SLOTTED CORRUGATED STEEL PIPE

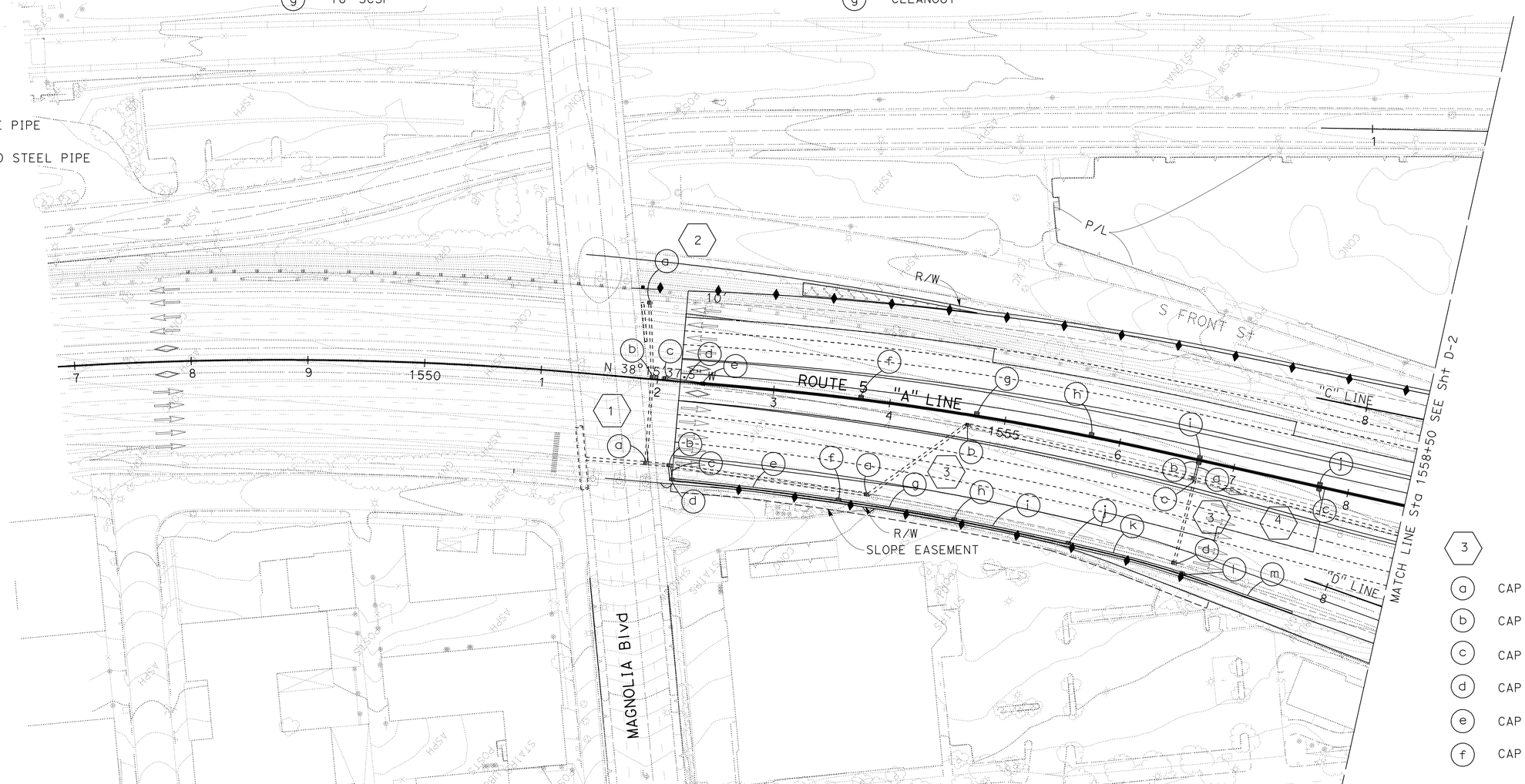

3

a	CAP INLET
b	CAP INLET
c	CAP INLET
d	CAP INLET
e	CAP INLET
f	CAP INLET

DRAINAGE PLAN

SCALE 1" = 50'

D-1

APPROVED FOR DRAINAGE WORK

STATE OF CALIFORNIA - DEPARTMENT OF TRANSPORTATION

Caltrans

HYDRAULICS

FUNCTIONAL SUPERVISOR: R.M SASAKI

CALCULATED-DESIGNED BY: SIDDHARTH RANA

CHECKED BY: R.M SASAKI

REVISED BY

DATE REVISED

LAST REVISION 00-00-00

DATE PLOTTED => 21-MAY-2012
TIME PLOTTED => 16:44

Dist	COUNTY	ROUTE	POST MILES TOTAL PROJECT	SHEET No.	TOTAL SHEETS
07	LA	5	29.4/31.6	157	1931

REGISTERED CIVIL ENGINEER 1/31/12 DATE

5-21-12
PLANS APPROVAL DATE

REGISTERED PROFESSIONAL ENGINEER R.M SASAKI No. 30849 Exp. 3-31-12 CIVIL STATE OF CALIFORNIA

THE STATE OF CALIFORNIA OR ITS OFFICERS OR AGENTS SHALL NOT BE RESPONSIBLE FOR THE ACCURACY OR COMPLETENESS OF SCANNED COPIES OF THIS PLAN SHEET.

NOTES:

1. FOR ACCURATE RIGHT OF WAY DATA, CONTACT RIGHT OF WAY ENGINEERING AT DISTRICT OFFICE.
2. CONTRACTOR SHALL VERIFY EXISTING ROADWAY CONDITIONS BEFORE COMMENCING CONSTRUCTION.

5
- a CAP INLET
- b CAP INLET

6
- a CAP INLET
- b CAP INLET
- c CAP INLET
- d 24" RCP
- e G-2 INLET

7
- a CAP INLET
- b CAP INLET

4
- a 24" RCP
- b CLEANOUT
- c CLEANOUT
- d CLEANOUT
- e CLEANOUT
- f CLEANOUT
- g CLEANOUT
- h CLEANOUT
- i CLEANOUT
- j CLEANOUT
- k CLEANOUT
- l CLEANOUT
- m G-2 INLET

8
- a CAP INLET
- b CAP INLET
- c CAP INLET
- d CAP INLET
- e CAP INLET
- f CAP INLET
- g CAP INLET

9
- a CAP INLET
- b CAP INLET
- c CAP INLET
- d CAP INLET
- e CAP INLET
- f CAP INLET
- g CAP INLET

10
- a G-2 INLET
- b 24" RCP
- c G-2 INLET
- d 24" RCP
- e 24" RCP
- f CAP INLET
- g CAP INLET
- h CAP INLET
- i CAP INLET
- j CAP INLET
- k CAP INLET
- l CAP INLET

11
- a 24" RCP
- b G-2 INLET

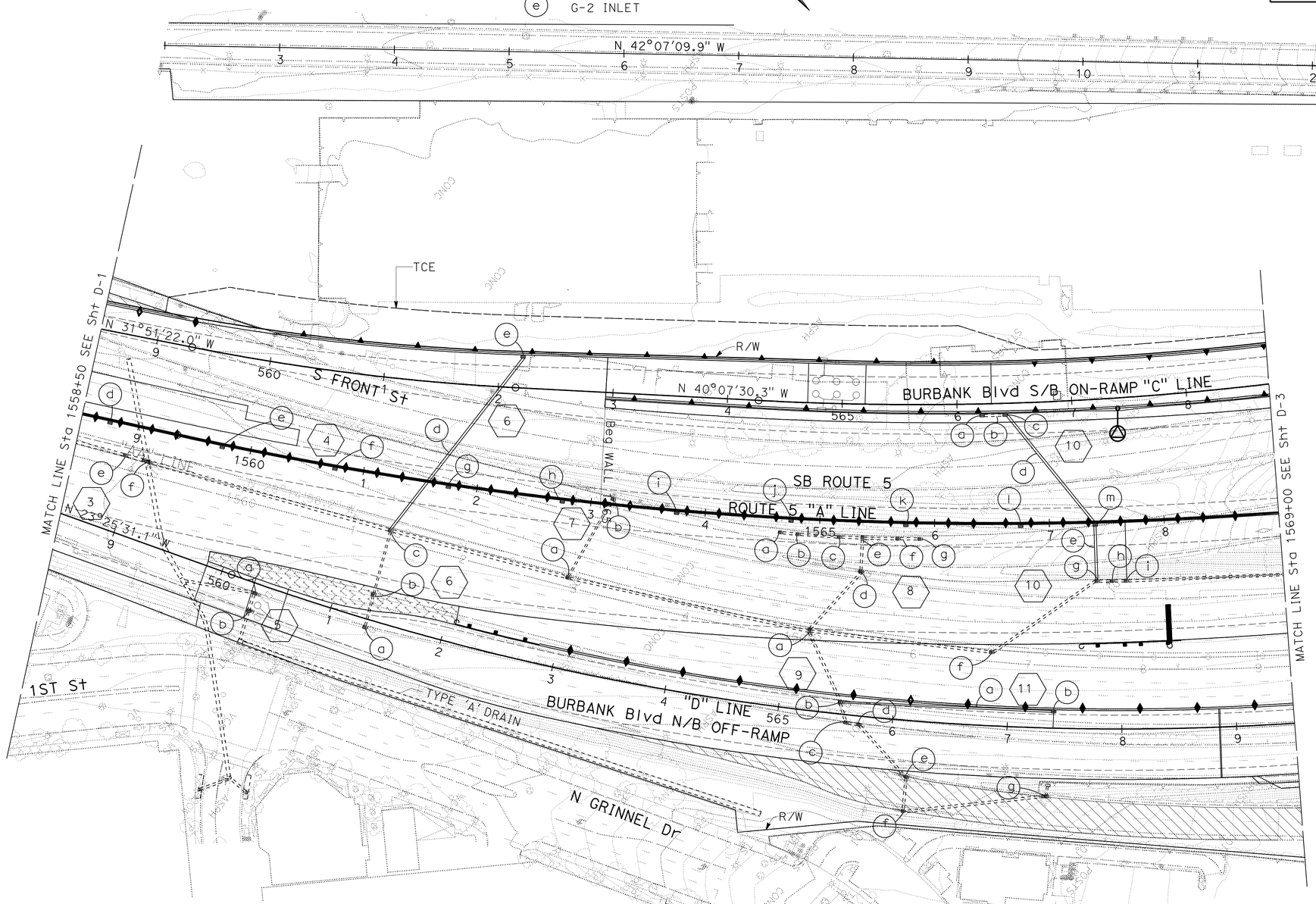

DRAINAGE PLAN

SCALE: 1"=50'

D-2

APPROVED FOR DRAINAGE WORK

STATE OF CALIFORNIA - DEPARTMENT OF TRANSPORTATION
Caltrans
HYDRAULICS

FUNCTIONAL SUPERVISOR: R.M SASAKI
CALCULATED-DESIGNED BY: SIDDHARTH RANA
CHECKED BY: R.M SASAKI
REVISED BY
DATE REVISED

LAST REVISION 00-00-00
DATE PLOTTED => 21-MAY-2012
TIME PLOTTED => 16:44

Dist	COUNTY	ROUTE	POST MILES TOTAL PROJECT	SHEET No.	TOTAL SHEETS
07	LA	5	29.4/31.6	158	1931

REGISTERED CIVIL ENGINEER 1/31/12 DATE

5-21-12
PLANS APPROVAL DATE

REGISTERED PROFESSIONAL ENGINEER R.M SASAKI No. 30849 Exp. 3-31-12 CIVIL STATE OF CALIFORNIA

THE STATE OF CALIFORNIA OR ITS OFFICERS OR AGENTS SHALL NOT BE RESPONSIBLE FOR THE ACCURACY OR COMPLETENESS OF SCANNED COPIES OF THIS PLAN SHEET.

NOTES:

1. FOR ACCURATE RIGHT OF WAY DATA, CONTACT RIGHT OF WAY ENGINEERING AT DISTRICT OFFICE.
2. CONTRACTOR SHALL VERIFY EXISTING ROADWAY CONDITIONS BEFORE COMMENCING CONSTRUCTION.

(12)

- (a) CAP INLET
- (b) CAP INLET
- (c) CAP INLET
- (d) CAP INLET
- (e) CAP INLET
- (f) CAP INLET
- (g) CAP INLET
- (h) CAP INLET
- (i) CAP INLET
- (j) CAP INLET
- (k) CAP INLET
- (l) CAP INLET
- (m) CAP INLET
- (n) CAP INLET

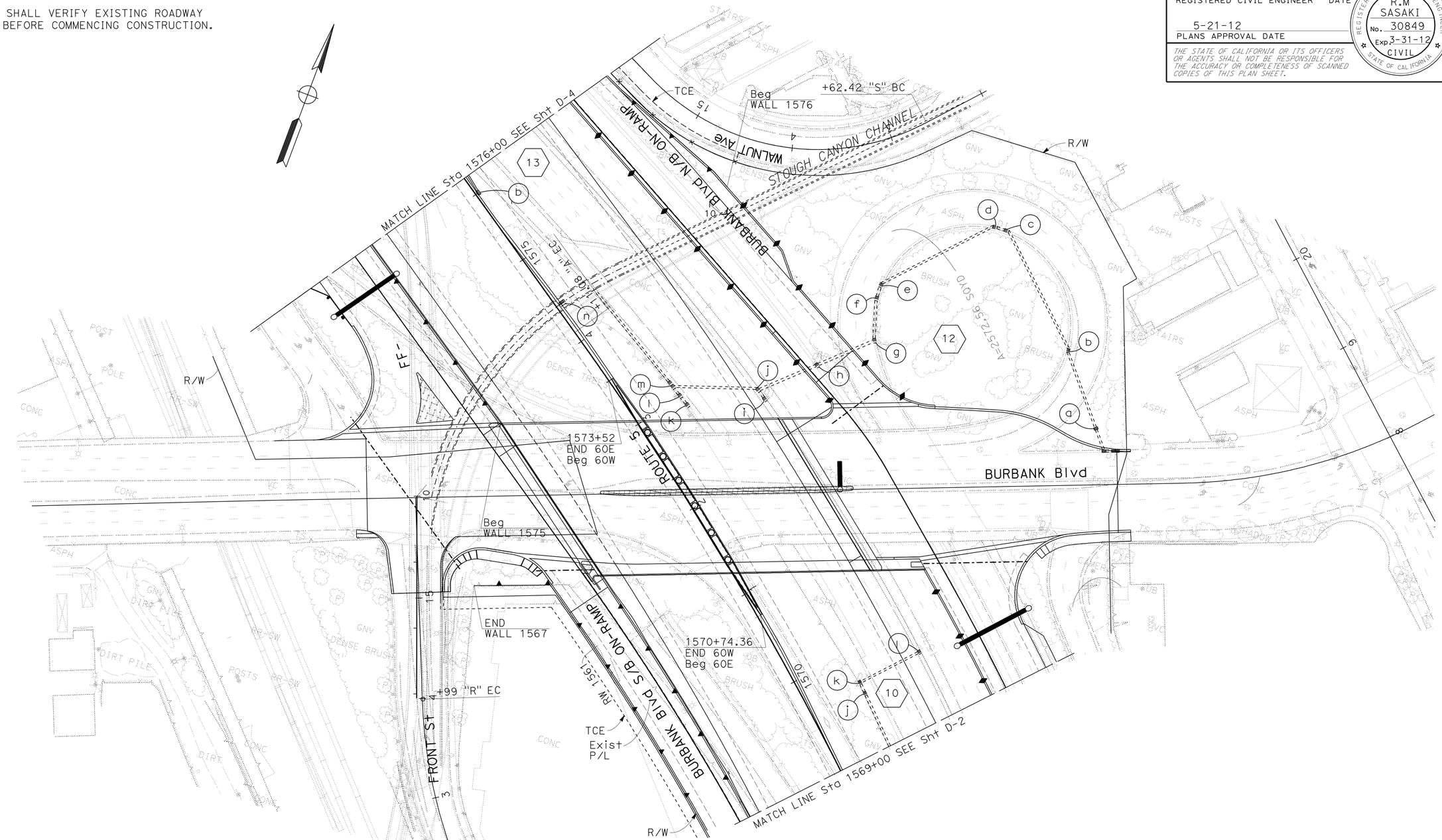

DRAINAGE PLAN

SCALE: 1" = 50'

D-3

APPROVED FOR DRAINAGE WORK

STATE OF CALIFORNIA - DEPARTMENT OF TRANSPORTATION
Caltrans
HYDRAULICS

FUNCTIONAL SUPERVISOR: R.M SASAKI
CALCULATED-DESIGNED BY: SIDDHARTH RANA
CHECKED BY: R.M SASAKI
REVISED BY
DATE REVISED

LAST REVISION 00-00-00
DATE PLOTTED => 21-MAY-2012
TIME PLOTTED => 16:44

Dist	COUNTY	ROUTE	POST MILES TOTAL PROJECT	SHEET No.	TOTAL SHEETS
07	LA	5	29.4/31.6	159	1931

REGISTERED CIVIL ENGINEER DATE 1/31/12

5-21-12
PLANS APPROVAL DATE

REGISTERED PROFESSIONAL ENGINEER R.M SASAKI No. 30849 Exp. 3-31-12 CIVIL STATE OF CALIFORNIA

THE STATE OF CALIFORNIA OR ITS OFFICERS OR AGENTS SHALL NOT BE RESPONSIBLE FOR THE ACCURACY OR COMPLETENESS OF SCANNED COPIES OF THIS PLAN SHEET.

NOTES:

1. FOR ACCURATE RIGHT OF WAY DATA, CONTACT RIGHT OF WAY ENGINEERING AT DISTRICT OFFICE.
2. CONTRACTOR SHALL VERIFY EXISTING ROADWAY CONDITIONS BEFORE COMMENCING CONSTRUCTION.

13
- a 24" RCP
- b G-2 INLET
- c CLEANOUT
- d CLEANOUT

14
- a CAP INLET
- b CAP INLET
- c CAP INLET
- d CAP INLET

15
- a CAP INLET
- b CAP INLET
- c CAP INLET
- d REMOVE SCSP

16
- a 24" RCP
- b G-2 INLET
- c 18" SCSP

17
- a 24" RCP
- b CAP INLET
- c G-2 INLET
- d CLEANOUT
- e CLEANOUT
- f CLEANOUT

18
- a CAP INLET
- b CAP INLET
- c CAP INLET
- d REMOVE 24" RCP
- e 24" RCP
- f CONCRETE COLLAR
- g CONCRETE COLLAR
- h CLEANOUT
- j CAP INLET
- j CAP INLET
- k REMOVE 18" SCSP
- l CLEANOUT
- m CLEANOUT
- n CLEANOUT
- o CLEANOUT
- p CLEANOUT
- q CLEANOUT
- r CLEANOUT

19
- a CLEANOUT
- b 18" SCSP
- c G-2 INLET
- d 18" RCP
- e CAP INLET
- f CAP INLET
- g CAP INLET
- h CAP INLET
- j 18" SCSP
- j CLEANOUT
- k REMOVE INLET
- l REMOVE INLET
- m REMOVE INLET
- n REMOVE PIPE
- o 18" SCSP
- p CLEANOUT
- q 18' SCSP

20
- a 15" RCP
- b CONCRETE COLLAR
- c 15" RCP
- d CONCRETE COLLAR
- e 15" RCP
- f G-2 INLET
- g 15" RCP
- h G-2 INLET

75
- a REMOVE HEADWALL
- b REMOVE 24" RCP
- c REMOVE INLET
- d REMOVE 24" RCP
- e REMOVE INLET
- f REMOVE 24" RCP
- g REMOVE HEADWALL

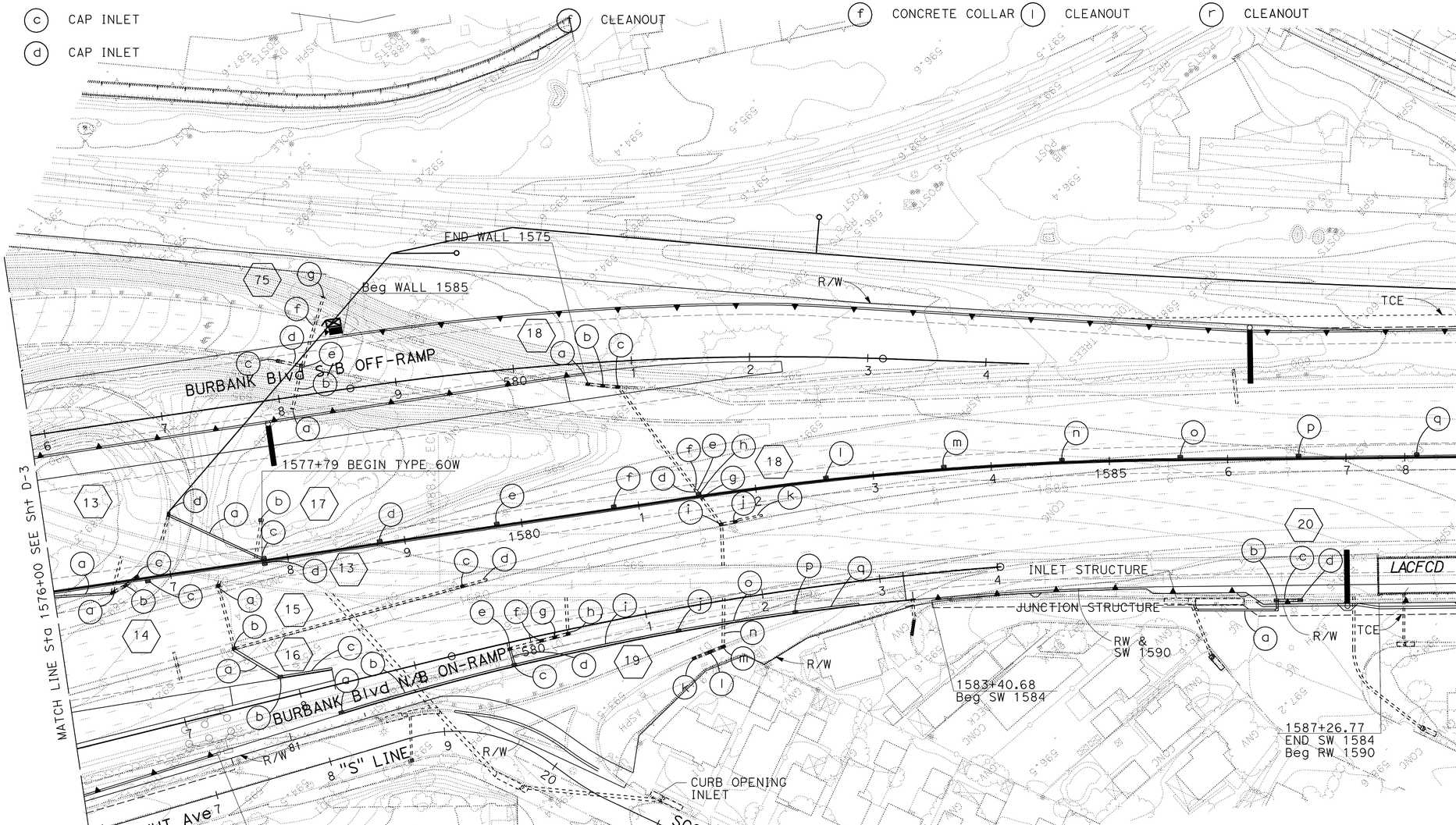

DRAINAGE PLAN

SCALE: 1" = 50'

D-4

APPROVED FOR DRAINAGE WORK

STATE OF CALIFORNIA - DEPARTMENT OF TRANSPORTATION
Caltrans
HYDRAULICS

FUNCTIONAL SUPERVISOR: R.M SASAKI
CALCULATED-DESIGNED BY: SIDDHARTH RANA
CHECKED BY: R.M SASAKI
REVISED BY
DATE REVISED

LAST REVISION 00-00-00
DATE PLOTTED => 21-MAY-2012
TIME PLOTTED => 16:55

Dist	COUNTY	ROUTE	POST MILES TOTAL PROJECT	SHEET No.	TOTAL SHEETS
07	LA	5	29.4/31.6	160	1931

REGISTERED CIVIL ENGINEER DATE 1/31/12

5-21-12
PLANS APPROVAL DATE

REGISTERED PROFESSIONAL ENGINEER R.M SASAKI No. 30849 Exp. 3-31-12 CIVIL STATE OF CALIFORNIA

THE STATE OF CALIFORNIA OR ITS OFFICERS OR AGENTS SHALL NOT BE RESPONSIBLE FOR THE ACCURACY OR COMPLETENESS OF SCANNED COPIES OF THIS PLAN SHEET.

NOTES:

1. FOR ACCURATE RIGHT OF WAY DATA, CONTACT RIGHT OF WAY ENGINEERING AT DISTRICT OFFICE.
2. CONTRACTOR SHALL VERIFY EXISTING ROADWAY CONDITIONS BEFORE COMMENCING CONSTRUCTION.

21
- a CAP INLET
- b CAP INLET
- c CAP INLET
- d ADJUST INLET

22
- a CAP INLET
- b CAP INLET
- c CAP INLET
- d CAP INLET

23
- a 24" RCP
- b G-2 INLET
- c 18" SCSP
- d CLEANOUT
- e 18" SCSP
- f CLEANOUT
- g 18" SCSP
- h CLEANOUT
- i 18" SCSP
- j CLEANOUT
- k 18" SCSP
- l CLEANOUT
- m 18" SCSP
- n CLEANOUT
- o 18" SCSP
- p CLEANOUT
- q 18" SCSP
- r CLEANOUT

24
- a CAP INLET
- b CAP INLET

25
- a CAP INLET
- b CAP INLET
- c CAP INLET
- d ADJUST INLET
- e REMOVE 18" SCSP
- f REMOVE INLET
- g REMOVE 18" SCSP

26
- a 18" RCP
- b G-2 INLET
- c CLEANOUT
- d CLEANOUT
- e CLEANOUT
- f CLEANOUT
- g CLEANOUT
- h CLEANOUT
- i CLEANOUT

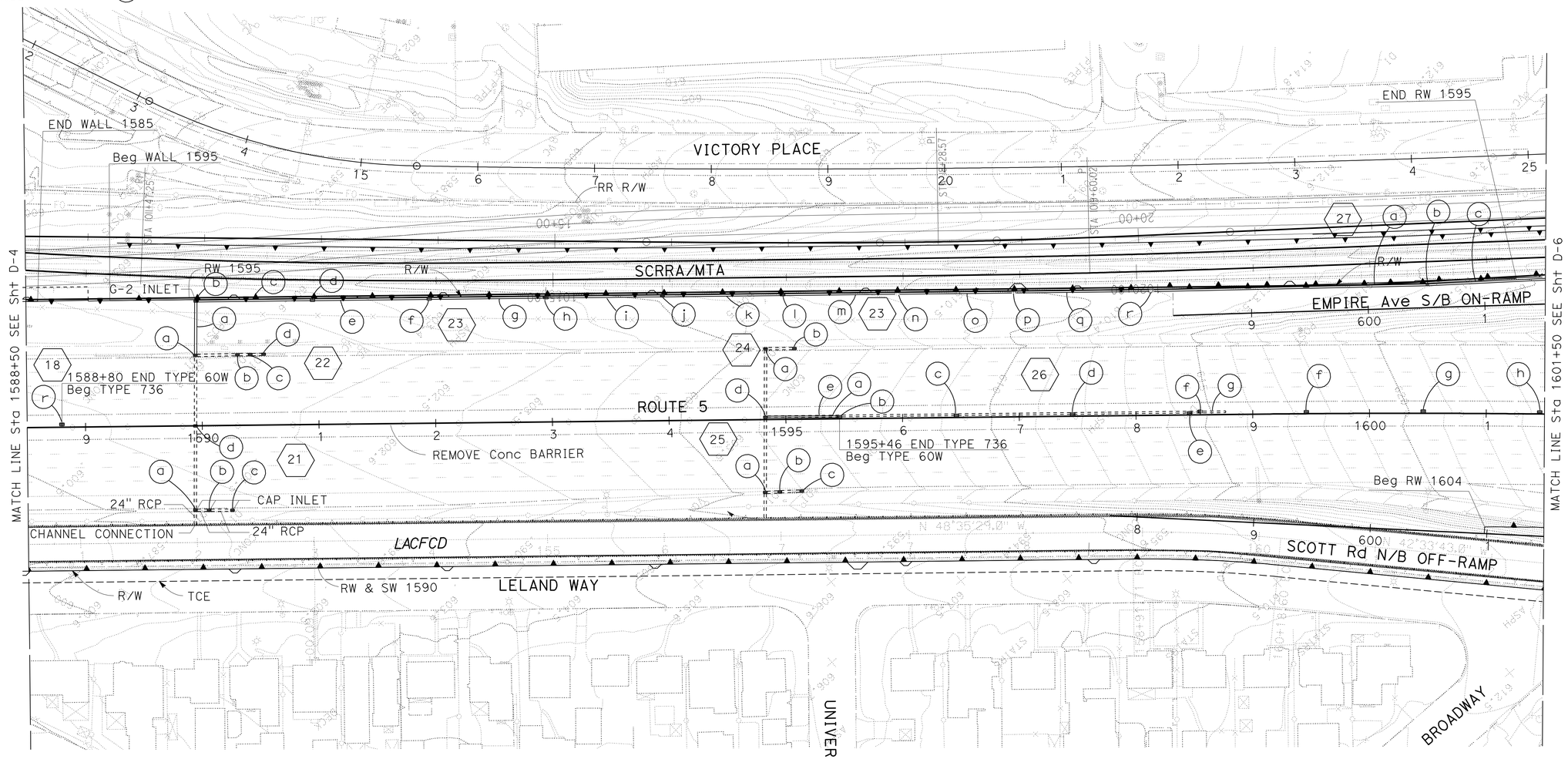

DRAINAGE PLAN

SCALE: 1"=50'

D-5

APPROVED FOR DRAINAGE WORK

STATE OF CALIFORNIA - DEPARTMENT OF TRANSPORTATION
Caltrans
HYDRAULICS

FUNCTIONAL SUPERVISOR: R.M SASAKI
CALCULATED-DESIGNED BY: SIDDARTH RANA
CHECKED BY: R.M SASAKI
REVISED BY
DATE REVISED

LAST REVISION 00-00-00
DATE PLOTTED => 21-MAY-2012
TIME PLOTTED => 16:45

BORDER LAST REVISED 7/2/2010
USERNAME => s114937
DGN FILE => 71218wia005.dgn
RELATIVE BORDER SCALE IS IN INCHES 0 1 2 3
UNIT 1835
PROJECT NUMBER & PHASE 07000211191

Dist	COUNTY	ROUTE	POST MILES TOTAL PROJECT	SHEET No.	TOTAL SHEETS
07	LA	5	29.4/31.6	161	1931

REGISTERED CIVIL ENGINEER DATE 1/31/12

5-21-12
PLANS APPROVAL DATE

REGISTERED PROFESSIONAL ENGINEER R.M SASAKI No. 30849 Exp. 3-31-12 CIVIL STATE OF CALIFORNIA

THE STATE OF CALIFORNIA OR ITS OFFICERS OR AGENTS SHALL NOT BE RESPONSIBLE FOR THE ACCURACY OR COMPLETENESS OF SCANNED COPIES OF THIS PLAN SHEET.

27
- (a) 18" RCP
- (b) CONCRETE COLLAR
- (c) 18" RCP
- (d) G-2 INLET
- (e) 18" RCP
- (f) G-2 INLET
- (g) 18" RCP
- (h) G-2 INLET
- (i) 18" RCP
- (j) G-2 INLET

28
- (a) CAP INLET
- (b) CAP INLET
- (c) CAP INLET
- (d) CAP INLET
- (e) CAP INLET
- (f) REMOVE 18" CSP

29
- (a) CLEANOUT
- (b) CLEANOUT
- (c) CLEANOUT
- (d) CLEANOUT

30
- (a) G-2 INLET
- (b) 18" RCP
- (c) G-2 INLET
- (d) 18" RCP
- (e) MANHOLE #1
- (f) 18" RCP

31
- (a) ADJUST INLET
- (b) ADJUST INLET

32
- (a) REMOVE 24" RCP
- (b) REMOVE INLET
- (c) REMOVE 24" RCP
- (d) REMOVE INLET
- (e) REMOVE 24" RCP
- (f) REMOVE INLET
- (g) REMOVE 24" RCP
- (h) REMOVE INLET
- (i) REMOVE24" RCP
- (j) REMOVE INLET
- (k) REMOVE 24" RCP
- (l) REMOVE INLET
- (m) REMOVE 24" RCP
- (n) REMOVE INLET
- (o) REMOVE 24" RCP
- (p) REMOVE INLET

33
- (a) 12" RCP
- (b) G-2 INLET
- (c) CLEANOUT
- (d) CLEANOUT
- (e) CLEANOUT
- (f) CLEANOUT

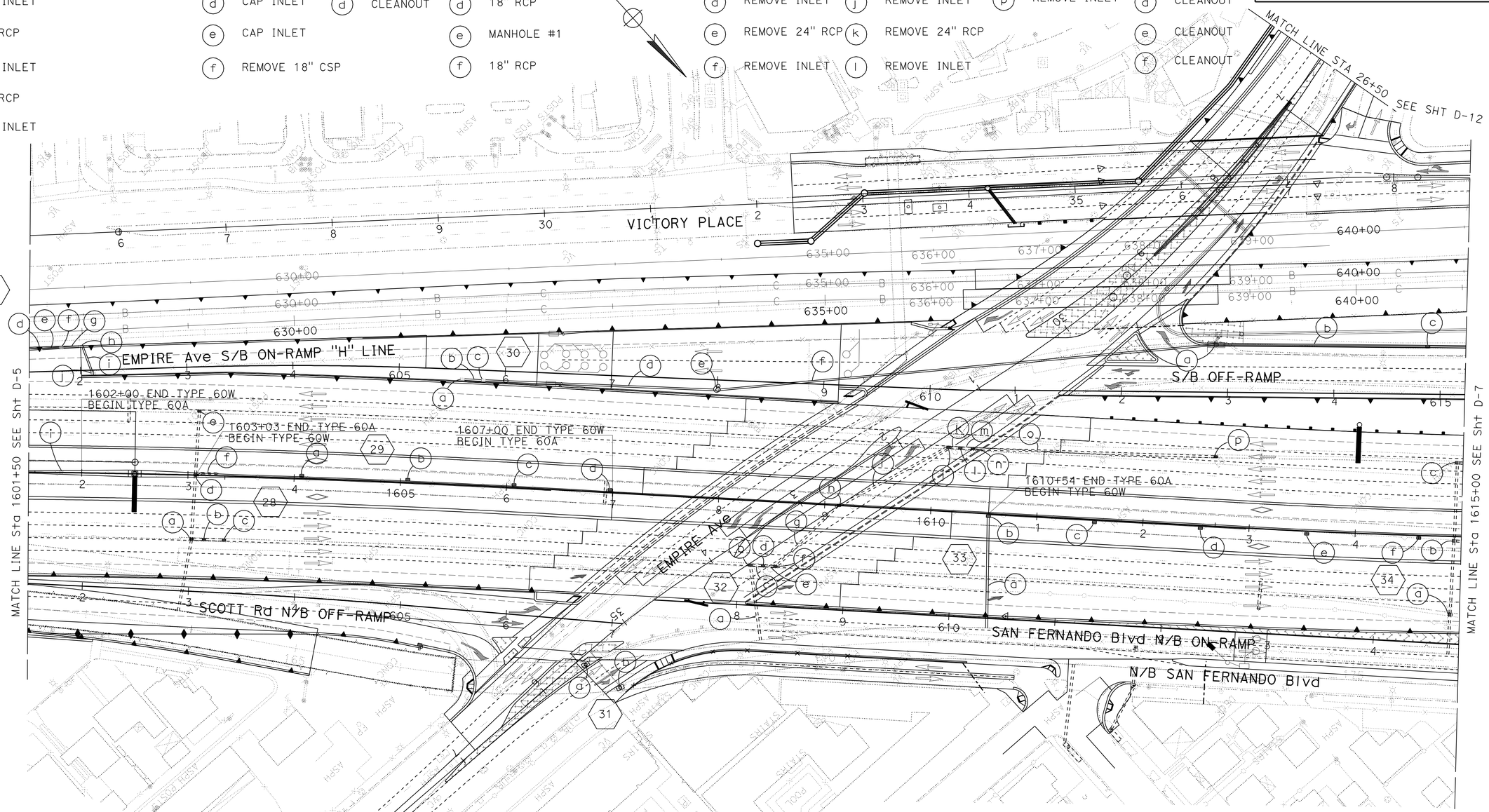

NOTES:

1. FOR ACCURATE RIGHT OF WAY DATA, CONTACT RIGHT OF WAY ENGINEERING AT DISTRICT OFFICE.
2. CONTRACTOR SHALL VERIFY EXISTING ROADWAY CONDITIONS BEFORE COMMENCING CONSTRUCTION.

APPROVED FOR DRAINAGE WORK

DRAINAGE PLAN

SCALE: 1" = 50'

D-6

STATE OF CALIFORNIA - DEPARTMENT OF TRANSPORTATION
Caltrans® HYDRAULICS

FUNCTIONAL SUPERVISOR: R.M SASAKI
CALCULATED-DESIGNED BY: SIDDHARTH RANA
CHECKED BY: R.M SASAKI
REVISED BY
DATE REVISED

LAST REVISION 00-00-00
DATE PLOTTED => 21-MAY-2012
TIME PLOTTED => 16:45

Dist	COUNTY	ROUTE	POST MILES TOTAL PROJECT	SHEET No.	TOTAL SHEETS
07	LA	5	29.4/31.6	162	1931

REGISTERED CIVIL ENGINEER DATE 1/31/12

5-21-12
PLANS APPROVAL DATE

REGISTERED PROFESSIONAL ENGINEER R.M SASAKI No. 30849 Exp. 3-31-12 CIVIL STATE OF CALIFORNIA

THE STATE OF CALIFORNIA OR ITS OFFICERS OR AGENTS SHALL NOT BE RESPONSIBLE FOR THE ACCURACY OR COMPLETENESS OF SCANNED COPIES OF THIS PLAN SHEET.

NOTES:

1. FOR ACCURATE RIGHT OF WAY DATA, CONTACT RIGHT OF WAY ENGINEERING AT DISTRICT OFFICE.
2. CONTRACTOR SHALL VERIFY EXISTING ROADWAY CONDITIONS BEFORE COMMENCING CONSTRUCTION.

35
- a CLEANOUT
- b CLEANOUT
- c CLEANOUT
- d G-2 INLET
- e 24" RCP

36
- a CAP INLET
- b CAP INLET
- c CAP INLET
- d CAP INLET
- e CAP INLET
- f CAP INLET
- g CAP INLET
- h CAP INLET

37
- a 18" RCP
- b G-2 INLET
- c 18" SCSP
- d CLEANOUT
- e 18" SCSP
- f CLEANOUT
- g 18" SCSP
- h CLEANOUT
- i 18" SCSP
- j CLEANOUT

38
- a CLEANOUT
- b CLEANOUT
- c CLEANOUT
- d CLEANOUT
- e CLEANOUT

39
- a CAP INLET
- b REMOVE 18" SCSP
- c CAP INLET
- d CAP NLET
- e CAP INLET

40
- a 18" RCP
- b G-2 INLET
- c CLEANOUT
- d CLEANOUT
- e CLEANOUT

41
- a 18" RCP
- b G-2 INLET
- c 18" SCSP
- d CLEANOUT
- e 18" SCSP

34
- a CAP INLET
- b CAP INLET
- c CAP INLET
- d CAP INLET
- e CAP INLET
- f CAP INLET
- g CAP INLET
- h REMOVE 18" SCSP

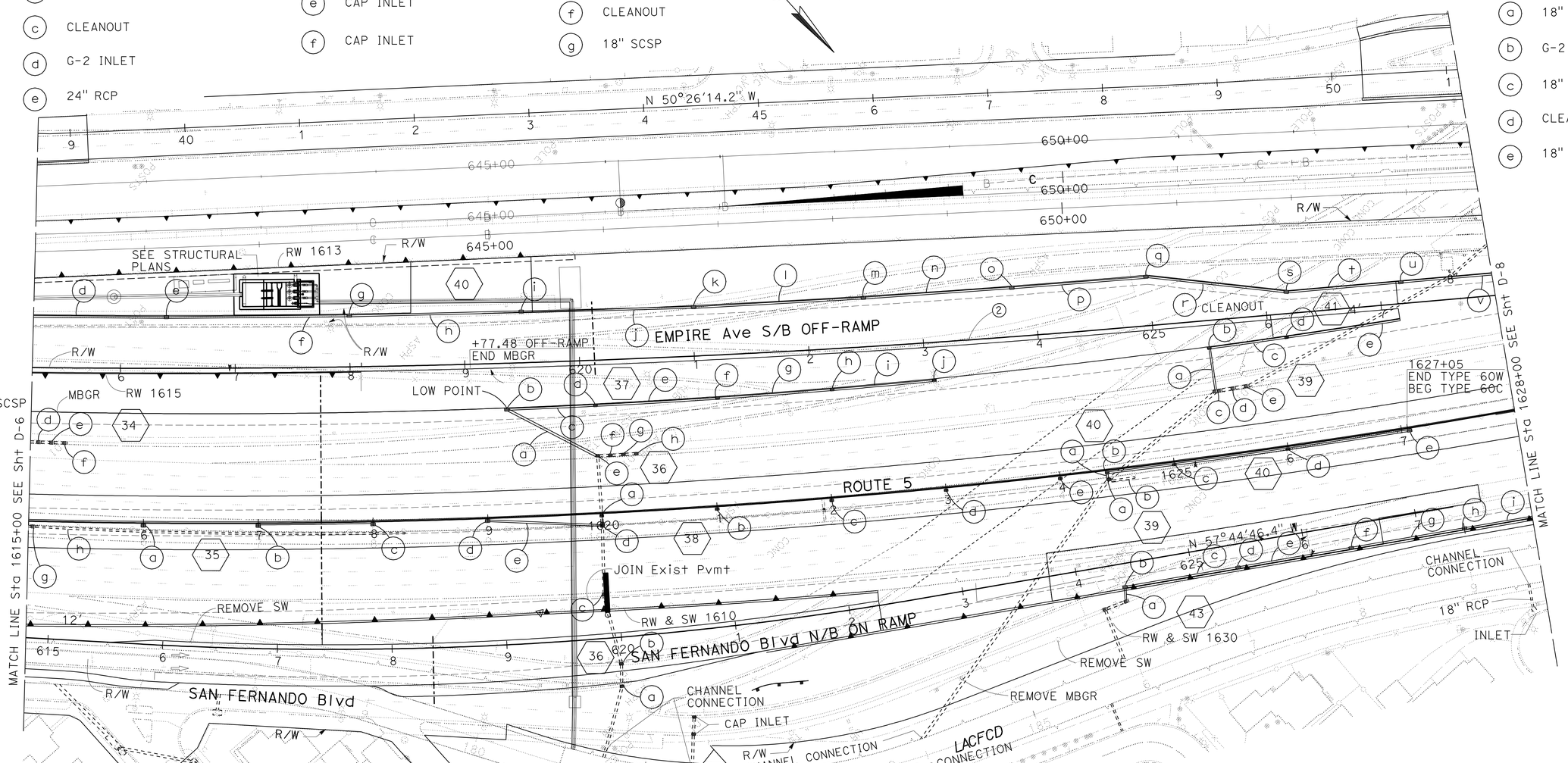

42
- a G-2 INLET
- b 18" RCP
- c G-2 INLET
- d 18" RCP
- e G-2 INLET
- f 18" RCP
- g G-2 INLET
- h 18" RCP
- i G-2 INLET
- j 18" SCSP
- k G-2 INLET
- l 18" RCP
- m G-2 INLET
- n 18" RCP
- o G-2 INLET
- p 18" RCP
- q G-2 INLET
- r 18" RCP
- s G-2 INLET
- t 18" SCSP
- u CLEANOUT
- v 18" SCSP
- w CLEANOUT
- x 18" SCSP
- y CLEANOUT
- z 18" SCSP

43
- a 18" RCP
- b G-2 INLET
- c 18" SCSP
- d CLEANOUT
- e 18" SCSP
- f CLEANOUT
- g 18" SCSP
- h CLEANOUT
- i 18" SCSP
- j CLEANOUT
- k 18" SCSP

APPROVED FOR DRAINAGE WORK

DRAINAGE PLAN

SCALE: 1" = 50'

D-7

STATE OF CALIFORNIA - DEPARTMENT OF TRANSPORTATION
Caltrans
HYDRAULICS

FUNCTIONAL SUPERVISOR: R.M SASAKI
CALCULATED-DESIGNED BY: SIDDHARTH RANA
CHECKED BY: R.M SASAKI
REVISED BY
DATE REVISED

LAST REVISION 00-00-00
DATE PLOTTED => 21-MAY-2012
TIME PLOTTED => 16:46

Dist	COUNTY	ROUTE	POST MILES TOTAL PROJECT	SHEET No.	TOTAL SHEETS
07	LA	5	29.4/31.6	163	1931

REGISTERED CIVIL ENGINEER DATE 1/31/12

5-21-12
PLANS APPROVAL DATE

REGISTERED PROFESSIONAL ENGINEER R.M SASAKI No. 30849 Exp. 3-31-12 CIVIL STATE OF CALIFORNIA

THE STATE OF CALIFORNIA OR ITS OFFICERS OR AGENTS SHALL NOT BE RESPONSIBLE FOR THE ACCURACY OR COMPLETENESS OF SCANNED COPIES OF THIS PLAN SHEET.

NOTES:

1. FOR ACCURATE RIGHT OF WAY DATA, CONTACT RIGHT OF WAY ENGINEERING AT DISTRICT OFFICE.
2. CONTRACTOR SHALL VERIFY EXISTING ROADWAY CONDITIONS BEFORE COMMENCING CONSTRUCTION.

44
- (a) CAP INLET
- (b) CAP INLET
- (c) CAP INLET
- (d) REMOVE 18" SCSP
- (e) REMOVE INLET

45
- (a) 18" HDPE PIPE
- (b) G-2 INLET
- (c) CLEANOUT
- (d) CLEANOUT
- (e) CLEANOUT
- (f) CLEANOUT

46
- (a) REMOVE PIPE
- (b) G-2 INLET
- (c) 24" CSP
- (d) CONCRETE COLLAR
- (e) CONCRETE COLLAR
- (f) 18" SCSP
- (g) CLEANOUT
- (h) 18" SCSP
- (i) CLEANOUT
- (j) 18" SCSP
- (k) CLEANOUT
- (l) 18" SCSP
- (m) CLEANOUT
- (n) 18" SCSP

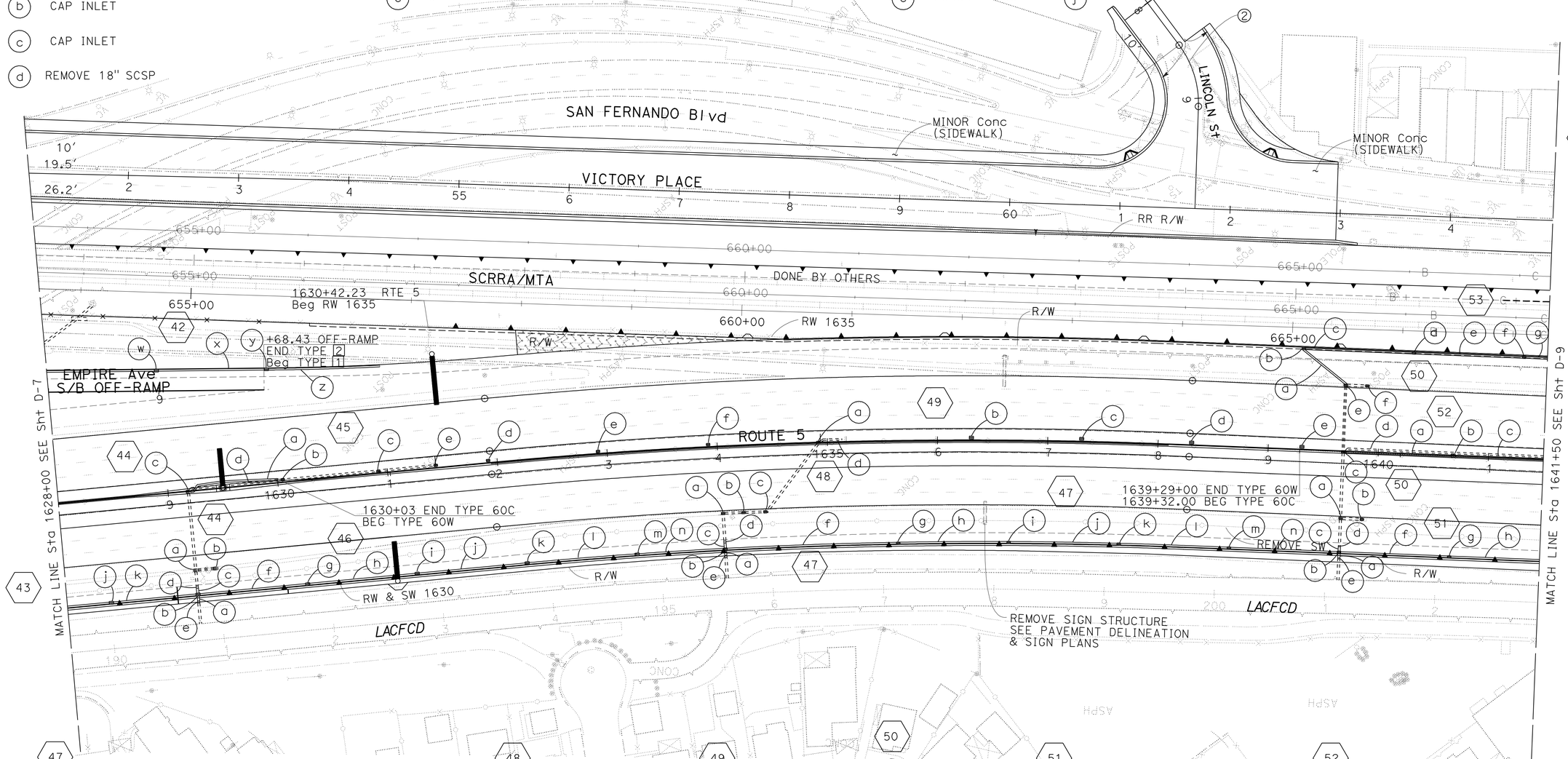

53
- (a) 18" RCP
- (b) G-2 INLET
- (c) 18" SCSP
- (d) CLEANOUT
- (e) 18" SCSP
- (f) CLEANOUT
- (g) 18" SCSP

47
- (a) REMOVE PIPE
- (b) G-2 INLET
- (c) 24" CSP
- (d) CONCRETE COLLAR
- (e) CONCRETE COLLAR
- (f) 18" SCSP
- (g) CLEANOUT
- (h) 18" SCSP
- (i) CLEANOUT
- (j) 18" SCSP
- (k) CLEANOUT
- (l) 18" SCSP
- (m) CLEANOUT
- (n) 18" SCSP

48
- (a) CAP INLET
- (b) CAP INLET
- (c) CAP INLET
- (d) REMOVE 18" SCSP

49
- (a) ADJUST INLET
- (b) CLEANOUT
- (c) CLEANOUT
- (d) CLEANOUT
- (e) CLEANOUT

50
- (a) CAP INLET
- (b) CAP INLET
- (c) ADJUST INLET
- (d) REMOVE 18" SCSP
- (e) CAP INLET
- (f) CAP INLET

51
- (a) REMOVE PIPE
- (b) G-2 INLET
- (c) 24" CSP
- (d) CONCRETE COLLAR
- (e) CONCRETE COLLAR
- (f) 18" SCSP
- (g) CLEANOUT
- (h) 18" SCSP
- (i) CLEANOUT

52
- (a) 24" RCP
- (b) G-2 INLET
- (c) 24" RCP
- (d) CLEANOUT

APPROVED FOR DRAINAGE WORK

DRAINAGE PLAN

SCALE: 1" = 50'

D-8

STATE OF CALIFORNIA - DEPARTMENT OF TRANSPORTATION
Caltrans
HYDRAULICS

FUNCTIONAL SUPERVISOR: R.M SASAKI
CALCULATED-DESIGNED BY: SIDDHARTH RANA
CHECKED BY: R.M SASAKI
REVISED BY
DATE REVISED

LAST REVISION 00-00-00
DATE PLOTTED => 21-MAY-2012
TIME PLOTTED => 16:46

Dist	COUNTY	ROUTE	POST MILES TOTAL PROJECT	SHEET No.	TOTAL SHEETS
07	LA	5	29.4/31.6	164	1931

REGISTERED CIVIL ENGINEER DATE 1/31/12

5-21-12
PLANS APPROVAL DATE

REGISTERED PROFESSIONAL ENGINEER R.M SASAKI No. 30849 Exp. 3-31-12 CIVIL STATE OF CALIFORNIA

THE STATE OF CALIFORNIA OR ITS OFFICERS OR AGENTS SHALL NOT BE RESPONSIBLE FOR THE ACCURACY OR COMPLETENESS OF SCANNED COPIES OF THIS PLAN SHEET.

NOTES:

1. FOR ACCURATE RIGHT OF WAY DATA, CONTACT RIGHT OF WAY ENGINEERING AT DISTRICT OFFICE.
2. CONTRACTOR SHALL VERIFY EXISTING ROADWAY CONDITIONS BEFORE COMMENCING CONSTRUCTION.

54

- (a) CAP INLET
- (b) CAP INLET
- (c) CAP INLET

55

- (a) CAP INLET
- (b) CAP INLET
- (c) CAP INLET
- (d) REMOVE 18" SCSP

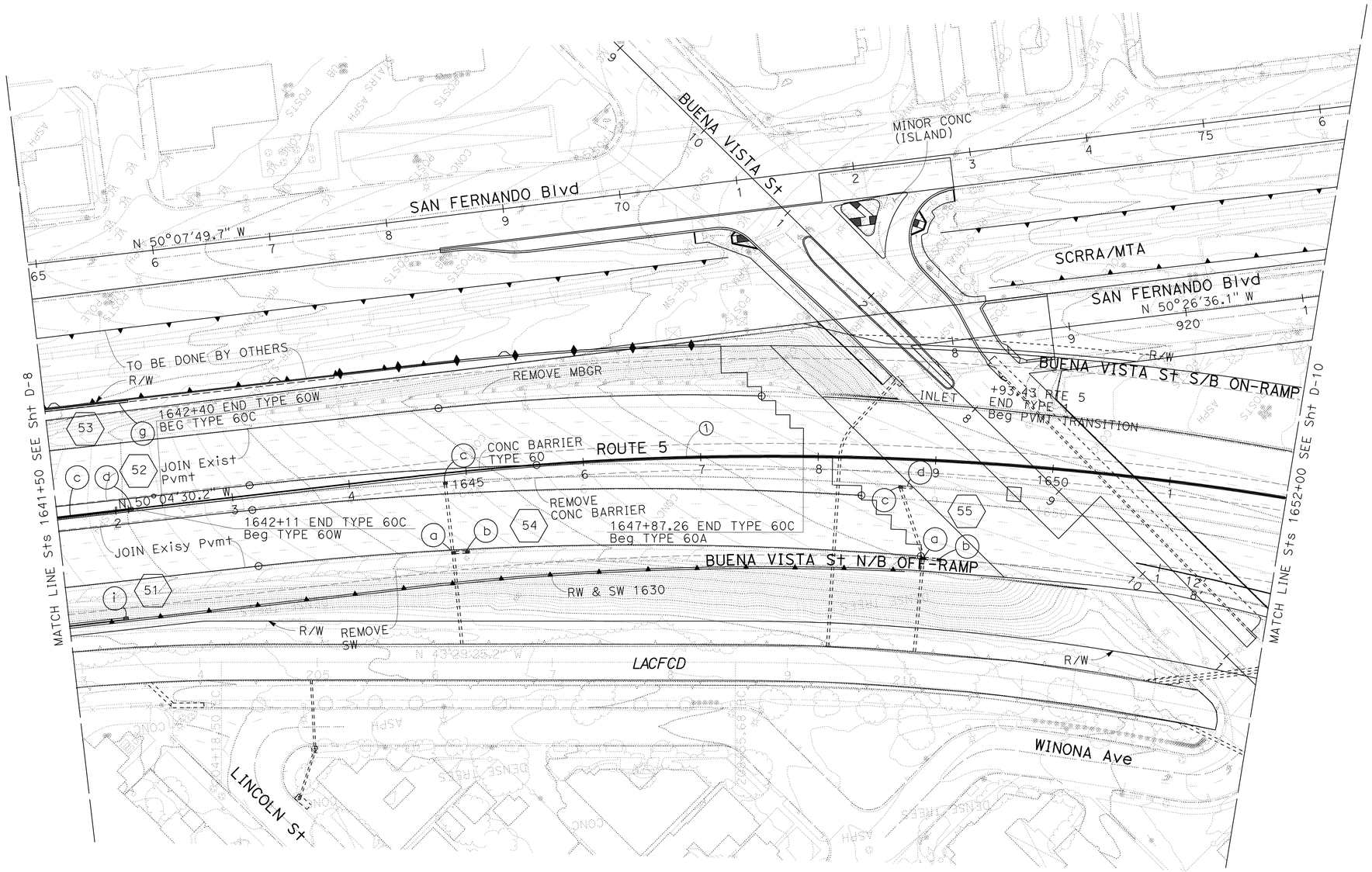

DRAINAGE PLAN

SCALE: 1" = 50'

D-9

APPROVED FOR DRAINAGE WORK

STATE OF CALIFORNIA - DEPARTMENT OF TRANSPORTATION
Caltrans
HDRAULICS

FUNCTIONAL SUPERVISOR: R.M SASAKI
CALCULATED-DESIGNED BY: SIDDHARTH RANA
CHECKED BY: R.M SASAKI
REVISED BY
DATE REVISED

LAST REVISION 00-00-00
DATE PLOTTED => 21-MAY-2012
TIME PLOTTED => 16:46

Dist	COUNTY	ROUTE	POST MILES TOTAL PROJECT	SHEET No.	TOTAL SHEETS
07	LA	5	29.4/31.6	165	1931

REGISTERED CIVIL ENGINEER DATE 1/31/12

5-21-12
PLANS APPROVAL DATE

REGISTERED PROFESSIONAL ENGINEER R.M SASAKI No. 30849 Exp. 3-31-12 CIVIL STATE OF CALIFORNIA

THE STATE OF CALIFORNIA OR ITS OFFICERS OR AGENTS SHALL NOT BE RESPONSIBLE FOR THE ACCURACY OR COMPLETENESS OF SCANNED COPIES OF THIS PLAN SHEET.

1. FOR ACCURATE RIGHT OF WAY DATA, CONTACT RIGHT OF WAY ENGINEERING AT DISTRICT OFFICE.
2. CONTRACTOR SHALL VERIFY EXISTING ROADWAY CONDITIONS BEFORE COMMENCING CONSTRUCTION.

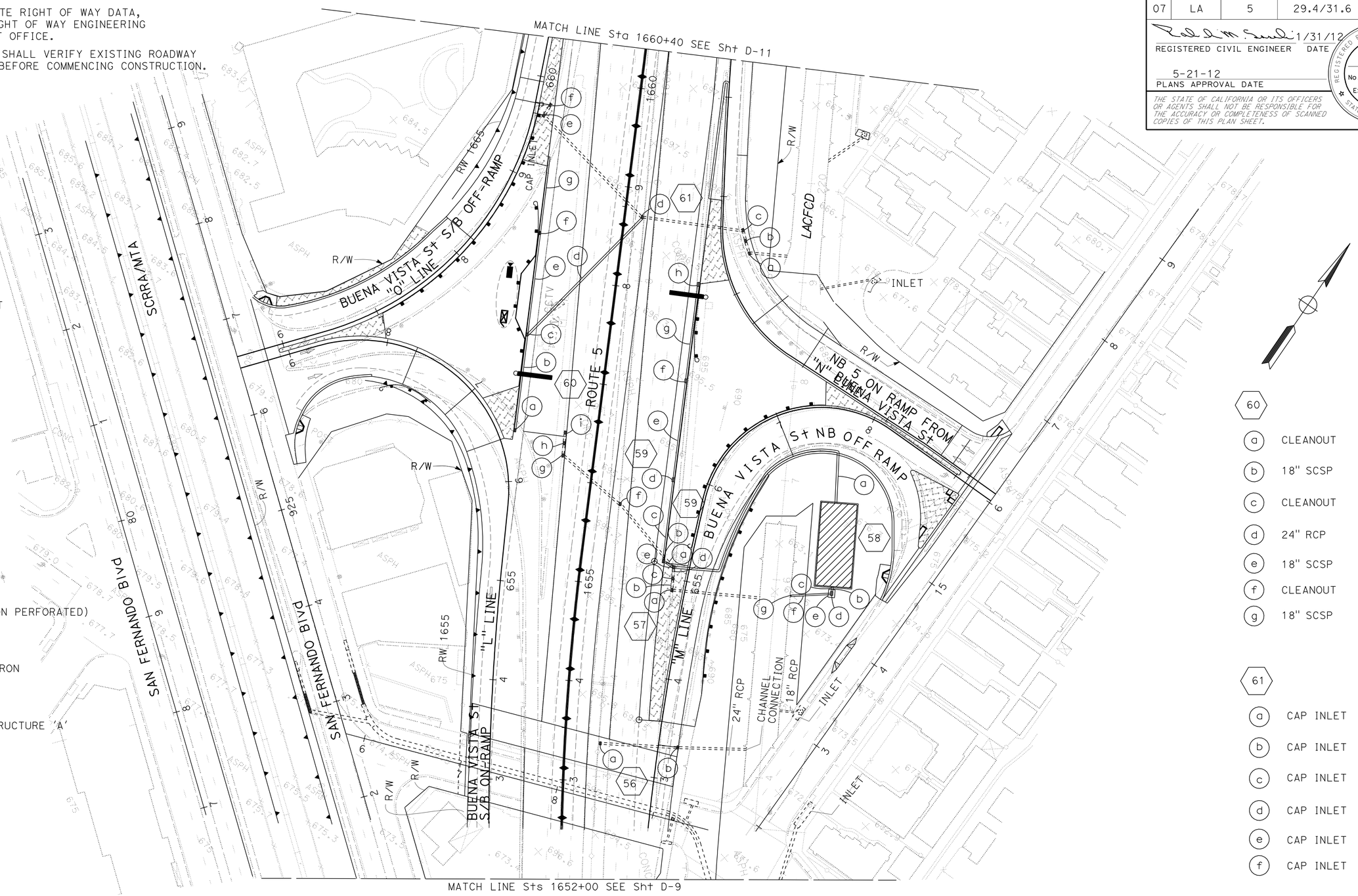

56
- a CAP INLET
- b CAP INLET

57
- a CAP INLET
- b REMOVE PIPE
- c REMOVE INLET
- d REMOVE PIPE
- e CAP INLET
- f CAP INLET
- g CAP INLET
- h CAP INLET
- i CAP INLET

58
- a 24" RCP
- b 24" CSP
- c 6" PP UD (NON PERFORATED)
- d G-2 INLET
- b CONCRETE APRON
- a 8" PVC PIPE
- b JUNCTION STRUCTURE 'A'

59
- a 18" RCP
- b G-2 INLET
- c 18" SCSP
- d CLEANOUT
- e 18" SCSP
- f CLEANOUT
- g 18" SCSP
- h CLEANOUT

60
- a CLEANOUT
- b 18" SCSP
- c CLEANOUT
- d 24" RCP
- e 18" SCSP
- f CLEANOUT
- g 18" SCSP

61
- a CAP INLET
- b CAP INLET
- c CAP INLET
- d CAP INLET
- e CAP INLET
- f CAP INLET

DRAINAGE PLAN

SCALE: 1"=50'

APPROVED FOR DRAINAGE WORK

D-10

STATE OF CALIFORNIA - DEPARTMENT OF TRANSPORTATION
Caltrans
HYDRAULICS

FUNCTIONAL SUPERVISOR: R.M SASAKI
CALCULATED-DESIGNED BY: SIDDHARTH RANA
CHECKED BY: R.M SASAKI
REVISED BY
DATE REVISED

LAST REVISION 00-00-00
DATE PLOTTED => 21-MAY-2012
TIME PLOTTED => 16:46

Dist	COUNTY	ROUTE	POST MILES TOTAL PROJECT	SHEET No.	TOTAL SHEETS
07	LA	5	29.4/31.6	166	1931

REGISTERED CIVIL ENGINEER 1/31/12 DATE

5-21-12
PLANS APPROVAL DATE

REGISTERED PROFESSIONAL ENGINEER R.M SASAKI No. 30849 Exp. 3-31-12 CIVIL STATE OF CALIFORNIA

THE STATE OF CALIFORNIA OR ITS OFFICERS OR AGENTS SHALL NOT BE RESPONSIBLE FOR THE ACCURACY OR COMPLETENESS OF SCANNED COPIES OF THIS PLAN SHEET.

NOTES:

1. FOR ACCURATE RIGHT OF WAY DATA, CONTACT RIGHT OF WAY ENGINEERING AT DISTRICT OFFICE.
2. CONTRACTOR SHALL VERIFY EXISTING ROADWAY CONDITIONS BEFORE COMMENCING CONSTRUCTION.

62

- (a) JUNCTION STRUCTURE 2
- (b) 24" RCP
- (c) G-2 INLET
- (d) 18" SCSP
- (e) CLEANOUT
- (f) 18" SCSP
- (g) CLEANOUT
- (h) 18" SCSP

63

- (a) HEADWALL
- (b) 24" RCP
- (c) G-2 INLET
- (d) 18" SCSP
- (e) CLEANOUT
- (f) 18" SCSP
- (g) CLEANOUT
- (h) 18" SCSP

66

- (a) CAP INLET
- (b) ABANDON PIPE
- (c) CAP INLET
- (d) CAP INLET
- (e) CAP INLET
- (f) CAP INLET
- (g) CAP INLET
- (h) CAP INLET

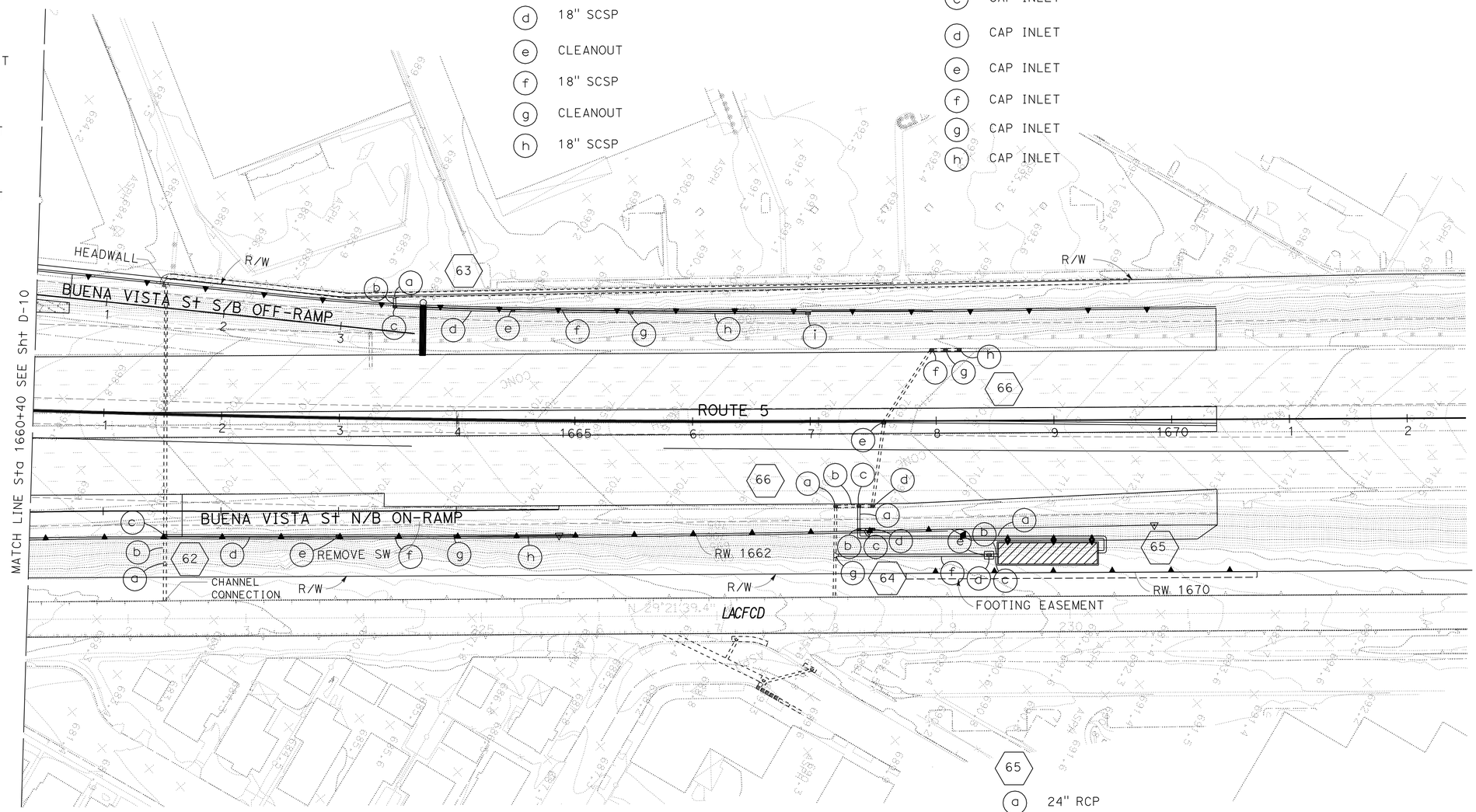

64

- (a) 24" RCP
- (b) G-2 INLET
- (c) 24" RCP
- (d) G-2 INLET

65

- (a) 24" RCP
- (b) 24" CSP
- (c) 6" NON PERFORATED PIPE
- (d) G-2 INLET
- (e) CONCRETE APRON
- (f) 24" RCP
- (g) JUNCTION STRUCTURE #2

DRAINAGE PLAN

SCALE: 1"=50'

APPROVED FOR DRAINAGE WORK

D-11

REVISED BY | DATE REVISED
SIDDHARTH RANA | R.M SASAKI
CALCULATED-DESIGNED BY | CHECKED BY
FUNCTIONAL SUPERVISOR | R.M SASAKI

STATE OF CALIFORNIA - DEPARTMENT OF TRANSPORTATION
Caltrans
HYDRAULICS

LAST REVISION 00-00-00 | DATE PLOTTED => 21-MAY-2012 | TIME PLOTTED => 16:46

Dist	COUNTY	ROUTE	POST MILES TOTAL PROJECT	SHEET No.	TOTAL SHEETS
07	LA	5	29.4/31.6	167	1931

REGISTERED CIVIL ENGINEER 5/15/12 DATE

5-21-12
PLANS APPROVAL DATE

REGISTERED PROFESSIONAL ENGINEER RICHARD STEVEN AGOR No. 57082 Exp. 12/31/13 CIVIL STATE OF CALIFORNIA

THE STATE OF CALIFORNIA OR ITS OFFICERS OR AGENTS SHALL NOT BE RESPONSIBLE FOR THE ACCURACY OR COMPLETENESS OF SCANNED COPIES OF THIS PLAN SHEET.

CITY OF BURBANK
150 N 3RD ST
BURBANK, CA 91510

TETRA TECH
17885 VON KARMAN AVE
IRVINE, CA 92614

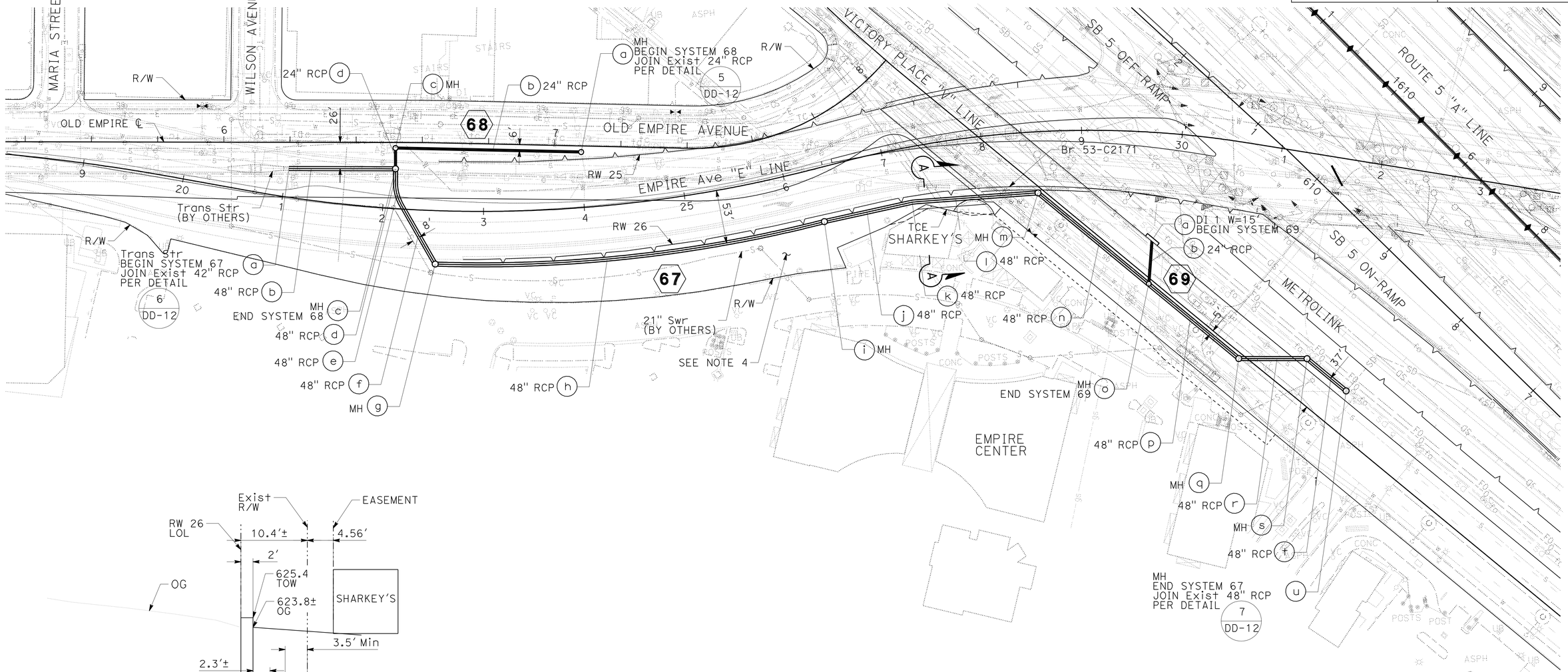

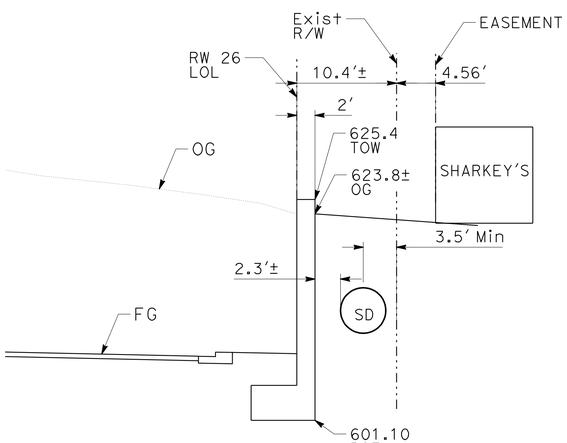

SECTION A-A

NOTES:

1. CONNECTION POINTS AND CROSSING UTILITIES SHALL BE POTHOLED PRIOR TO CONSTRUCTION ACTIVITIES.
2. FOR SITE IMPROVEMENTS IN THE VICINITY OF SHARKEY'S RESTAURANT, SEE CONSTRUCTION DETAIL C-54.
3. PIPE TRENCHING PER DETAIL 2 / DD-13
4. ALL LANDSCAPING AND GRASS AREAS SHALL BE RESTORED TO ITS ORIGINAL CONDITION. ALL IRRIGATION LINES, SPRINKLER CONTROL WIRES AND CONTROL BOXES THAT ARE DAMAGED DURING CONSTRUCTION SHALL BE REPAIRED TO THE SATISFACTION OF THE ENGINEER AND CITY OF BURBANK.

DRAINAGE PLAN SYSTEM A

SCALE: 1"=50'

D-12

APPROVED FOR DRAINAGE WORK ONLY

STATE OF CALIFORNIA - DEPARTMENT OF TRANSPORTATION
Caltrans®
HYDRAULICS
CONSULTANT FUNCTIONAL SUPERVISOR: STEVEN AGOR
CALCULATED-DESIGNED BY: ERICA JENKINS
CHECKED BY: STEVEN AGOR
REVISED BY
DATE REVISED

LAST REVISION 02-14-12 | DATE PLOTTED => 08-JUN-2012 | TIME PLOTTED => 06:51

Dist	COUNTY	ROUTE	POST MILES TOTAL PROJECT	SHEET No.	TOTAL SHEETS
07	LA	5	29.4/31.6	168	1931

REGISTERED CIVIL ENGINEER 5/15/12 DATE

5-21-12
PLANS APPROVAL DATE

REGISTERED PROFESSIONAL ENGINEER RICHARD STEVEN AGOR No. 57082 Exp. 12/31/13 CIVIL STATE OF CALIFORNIA

THE STATE OF CALIFORNIA OR ITS OFFICERS OR AGENTS SHALL NOT BE RESPONSIBLE FOR THE ACCURACY OR COMPLETENESS OF SCANNED COPIES OF THIS PLAN SHEET.

CITY OF BURBANK
150 N 3RD ST
BURBANK, CA 91510

TETRA TECH
17885 VON KARMAN AVE
IRVINE, CA 92614

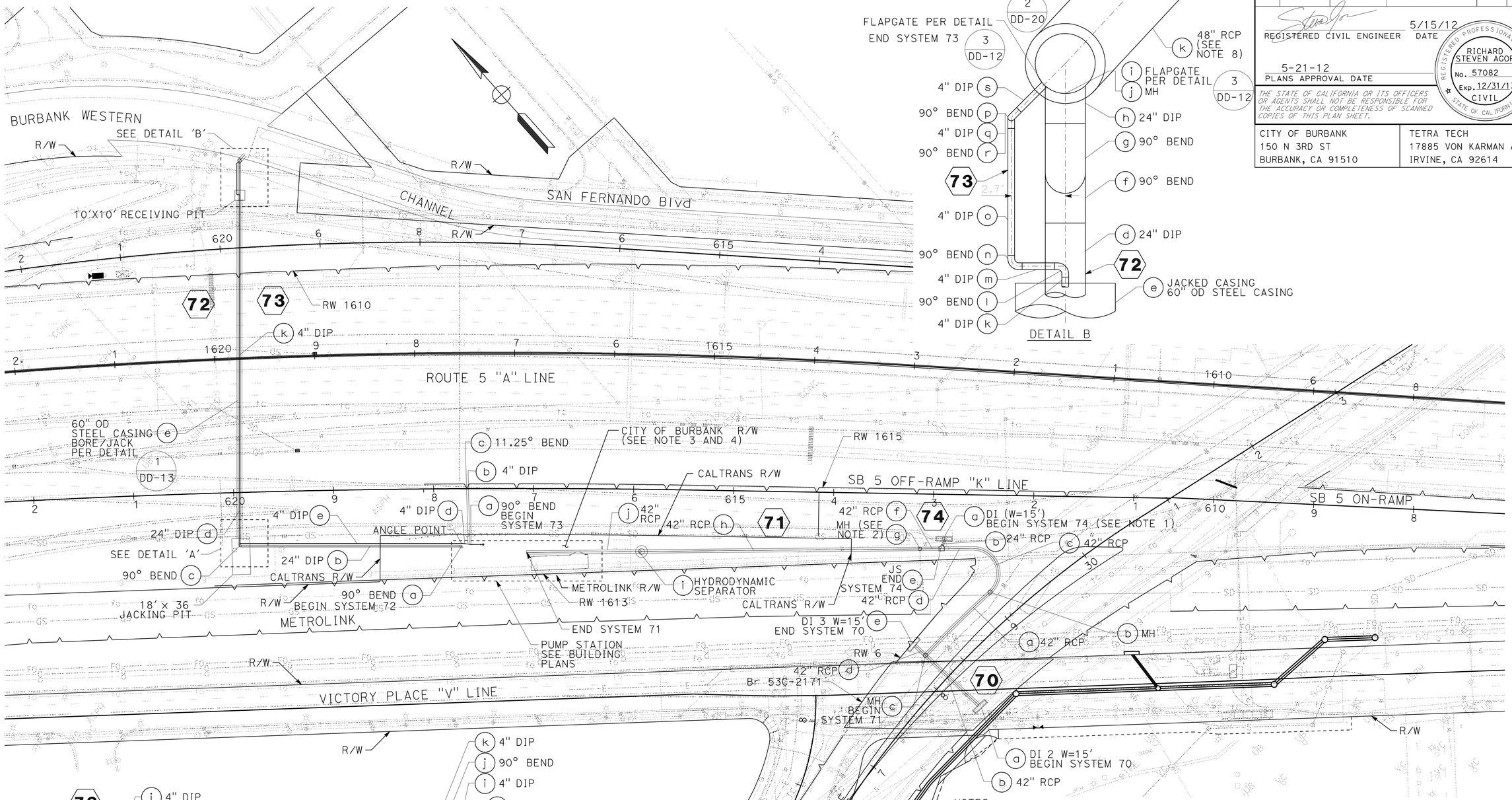

NOTES:

1. SEE DRAINAGE PLANS D-6 FOR PROPOSED 18" SD FOR SB ON-RAMP & OFF-RAMP.
2. SEE DRAINAGE PLANS RR-DR-004 FOR 12" SD FOR METROLINK RR.
3. FOR Pvmt Sec AND SLOPE OF FG WITHIN CITY R/W, SEE Const DETAIL C-55.
4. FOR SITE IMPROVEMENTS AT PUMP STATION, SEE Const DETAIL C-54.
5. PIPE TRENCHING PER DETAIL 2 / DD-13
6. CONNECTION POINTS AND CROSSING UTILITIES SHAL BE POTHOLED PRIOR TO Const ACTIVITIES.
7. RESTRAIN ALL DUCTILE IRON PIPE AND FITTINGS PER SPECIAL PROVISIONS.
8. FOR CHANNEL CONNECTION, PROVIDE SLURRY BACKFILL WITHIN THE PIPE ZONE.

DRAINAGE PLAN SYSTEM B

SCALE: 1"=50'

APPROVED FOR DRAINAGE WORK ONLY

D-13

STATE OF CALIFORNIA - DEPARTMENT OF TRANSPORTATION
Caltrans
HYDRAULICS
CONSULTANT FUNCTIONAL SUPERVISOR: STEVEN AGOR
CALCULATED-DESIGNED BY: CRISNA ESTRADA
CHECKED BY: STEVEN AGOR
REVISED BY
DATE REVISED

LAST REVISION 02-14-12 | DATE PLOTTED => 08-JUN-2012 | TIME PLOTTED => 06:51

Dist	COUNTY	ROUTE	POST MILES TOTAL PROJECT	SHEET No.	TOTAL SHEETS
07	LA	5	29.4/31.6	169	1931

REGISTERED CIVIL ENGINEER DATE 1/31/12

5-21-12
PLANS APPROVAL DATE

REGISTERED PROFESSIONAL ENGINEER R.M SASAKI No. 30849 Exp. 3-31-12 CIVIL STATE OF CALIFORNIA

THE STATE OF CALIFORNIA OR ITS OFFICERS OR AGENTS SHALL NOT BE RESPONSIBLE FOR THE ACCURACY OR COMPLETENESS OF SCANNED COPIES OF THIS PLAN SHEET.

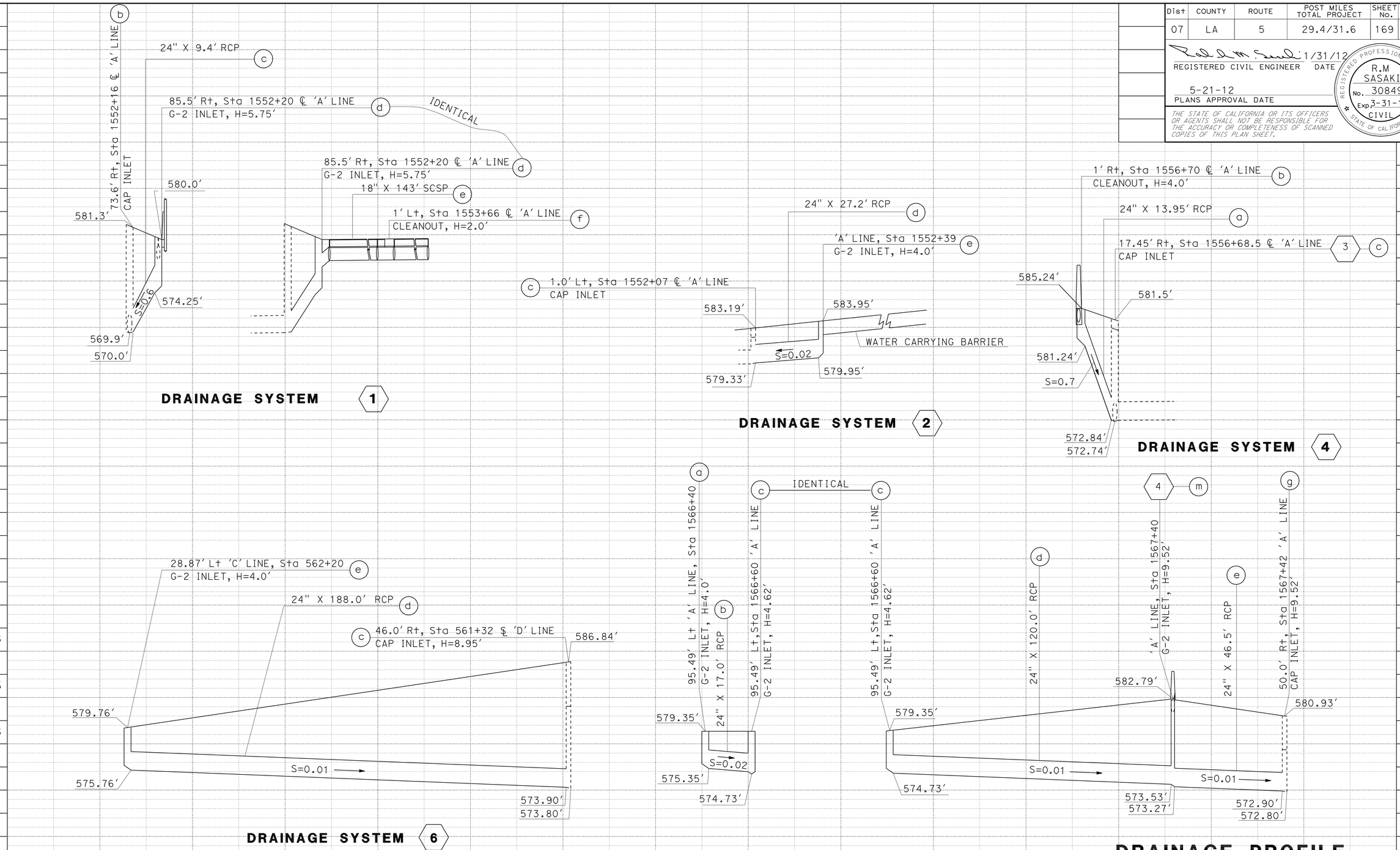

STATION

STATE OF CALIFORNIA - DEPARTMENT OF TRANSPORTATION
HYDRAULICS
Caltrans

FUNCTIONAL SUPERVISOR: R.M SASAKI
CALCULATED-DESIGNED BY: SIDDHARTH RANA
CHECKED BY: R.M SASAKI
REVISED BY
DATE REVISED

LAST REVISION 00-00-00
DATE PLOTTED => 21-MAY-2012
TIME PLOTTED => 16:47

Dist	COUNTY	ROUTE	POST MILES TOTAL PROJECT	SHEET No.	TOTAL SHEETS
07	LA	5	29.4/31.6	170	1931

REGISTERED CIVIL ENGINEER DATE 1/31/12

5-21-12
PLANS APPROVAL DATE

REGISTERED PROFESSIONAL ENGINEER R.M SASAKI No. 30849 Exp. 3-31-12 CIVIL STATE OF CALIFORNIA

THE STATE OF CALIFORNIA OR ITS OFFICERS OR AGENTS SHALL NOT BE RESPONSIBLE FOR THE ACCURACY OR COMPLETENESS OF SCANNED COPIES OF THIS PLAN SHEET.

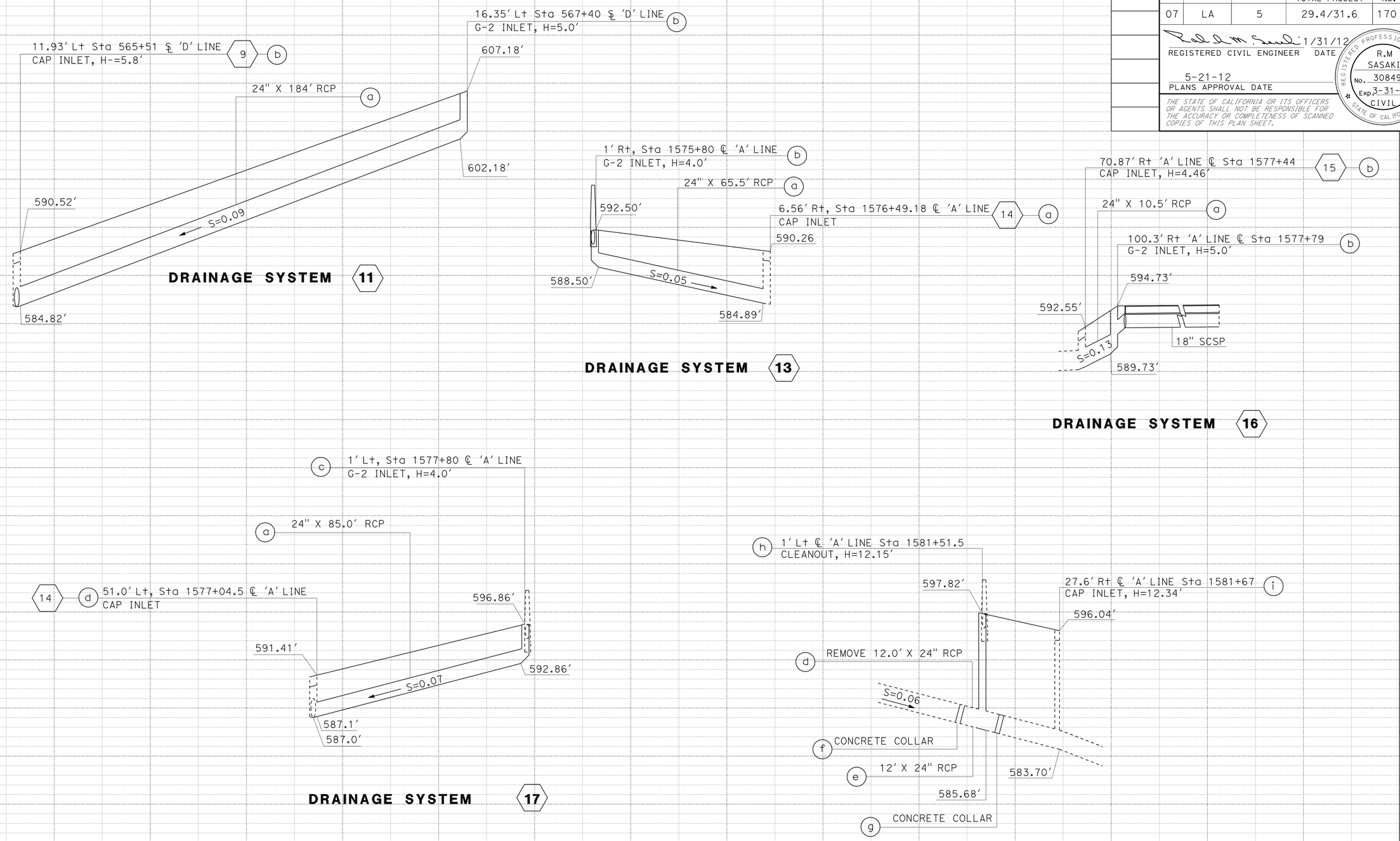

DRAINAGE PROFILE

SCALE: Horiz 1" = 20'
Vert 1" = 5'

DP-2

STATION

STATE OF CALIFORNIA - DEPARTMENT OF TRANSPORTATION
Caltrans
HYDRAULICS

FUNCTIONAL SUPERVISOR: R.M SASAKI
CALCULATED-DESIGNED BY: SIDDHARTH RANA
CHECKED BY: R.M SASAKI
REVISED BY
DATE REVISED

LAST REVISION 00-00-00
DATE PLOTTED => 21-MAY-2012
TIME PLOTTED => 16:47

Dist	COUNTY	ROUTE	POST MILES TOTAL PROJECT	SHEET No.	TOTAL SHEETS
07	LA	5	29.4/31.6	171	1931

REGISTERED CIVIL ENGINEER DATE 1/31/12

5-21-12
PLANS APPROVAL DATE

REGISTERED PROFESSIONAL ENGINEER R.M SASAKI No. 30849 Exp. 3-31-12 CIVIL STATE OF CALIFORNIA

THE STATE OF CALIFORNIA OR ITS OFFICERS OR AGENTS SHALL NOT BE RESPONSIBLE FOR THE ACCURACY OR COMPLETENESS OF SCANNED COPIES OF THIS PLAN SHEET.

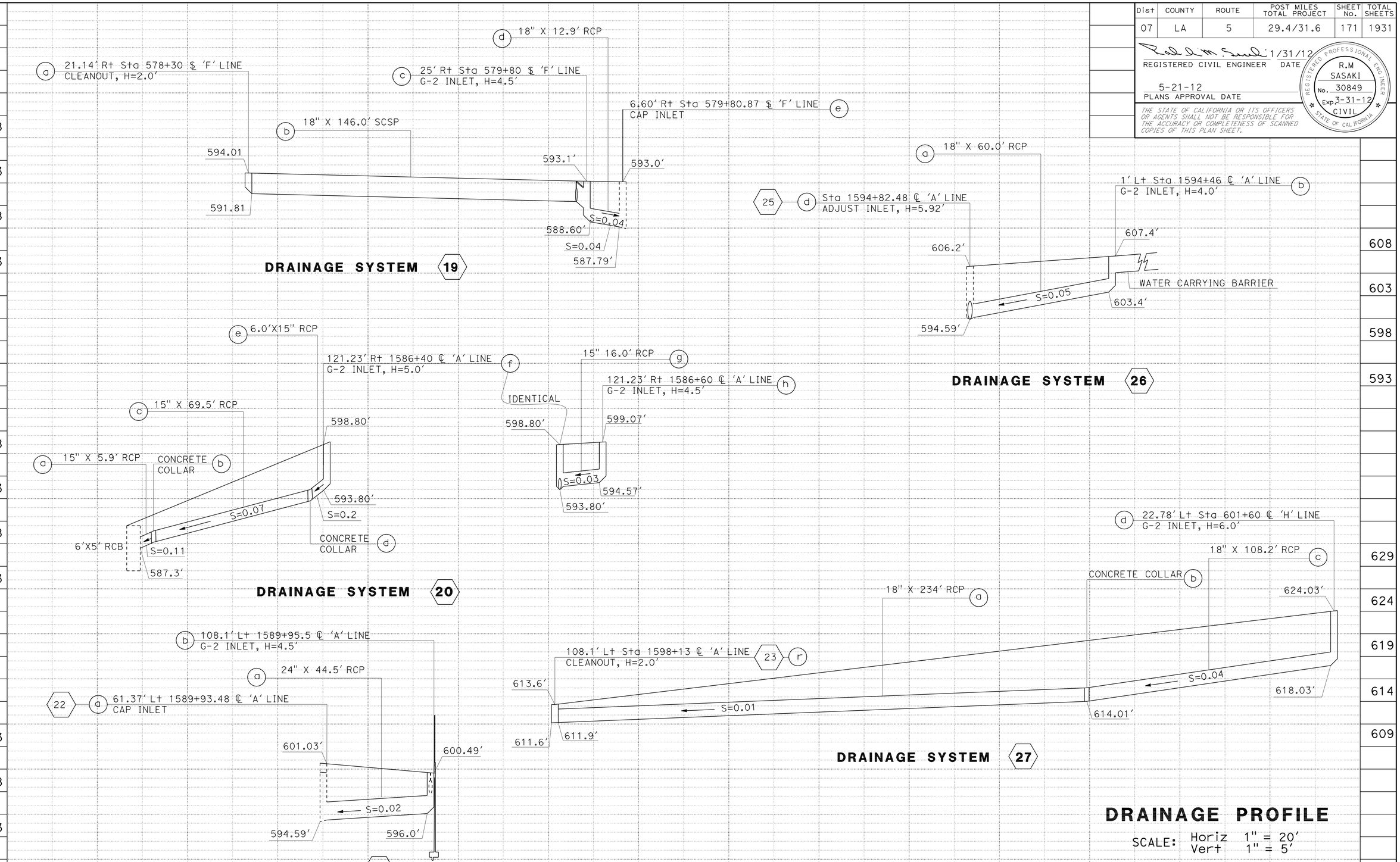

DRAINAGE PROFILE

SCALE: Horiz 1" = 20'
Vert 1" = 5'

DP-3

STATE OF CALIFORNIA - DEPARTMENT OF TRANSPORTATION
HYDRAULICS
Caltrans

FUNCTIONAL SUPERVISOR: R.M SASAKI
CALCULATED-DESIGNED BY: SIDDHARTH RANA
CHECKED BY: R.M SASAKI
REVISED BY
DATE REVISED

LAST REVISION 00-00-00
DATE PLOTTED => 21-MAY-2012
TIME PLOTTED => 16:47

Dist	COUNTY	ROUTE	POST MILES TOTAL PROJECT	SHEET No.	TOTAL SHEETS
07	LA	5	29.4/31.6	172	1931

REGISTERED CIVIL ENGINEER DATE 1/31/12

5-21-12
PLANS APPROVAL DATE

REGISTERED PROFESSIONAL ENGINEER R.M SASAKI No. 30849 Exp. 3-31-12 CIVIL STATE OF CALIFORNIA

THE STATE OF CALIFORNIA OR ITS OFFICERS OR AGENTS SHALL NOT BE RESPONSIBLE FOR THE ACCURACY OR COMPLETENESS OF SCANNED COPIES OF THIS PLAN SHEET.

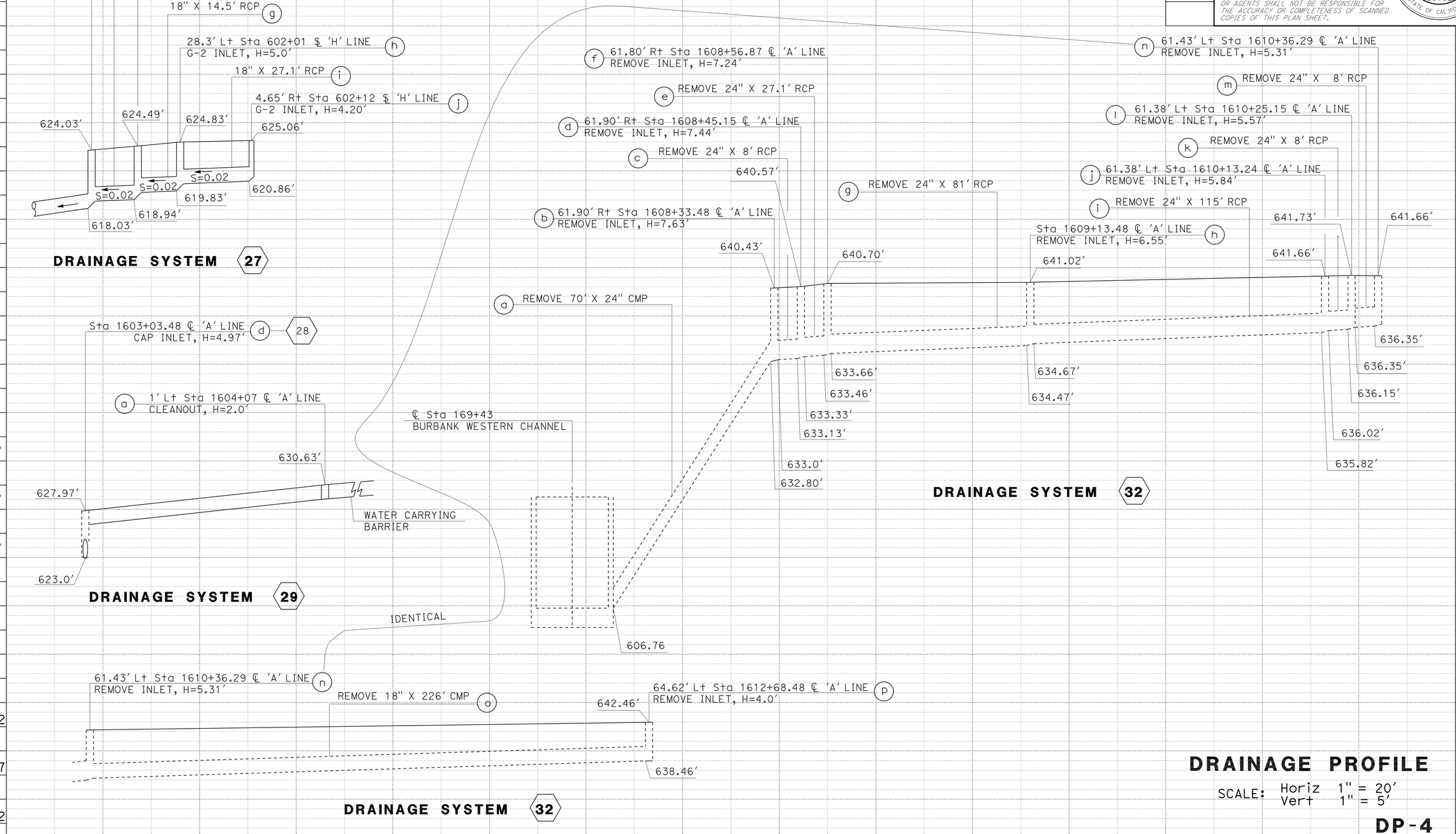

DRAINAGE PROFILE

SCALE: Horiz 1" = 20'
Vert 1" = 5'

DP-4

STATE OF CALIFORNIA - DEPARTMENT OF TRANSPORTATION
Caltrans
HYDRAULICS

FUNCTIONAL SUPERVISOR: R.M SASAKI
CALCULATED-DESIGNED BY: SIDDHARTH RANA
CHECKED BY: R.M SASAKI
REVISED BY
DATE REVISED

LAST REVISION 00-00-00
DATE PLOTTED => 21-MAY-2012
TIME PLOTTED => 16:47

Dist	COUNTY	ROUTE	POST MILES TOTAL PROJECT	SHEET No.	TOTAL SHEETS
07	LA	5	29.4/31.6	173	1931

REGISTERED CIVIL ENGINEER DATE 1/31/12

5-21-12
PLANS APPROVAL DATE

REGISTERED PROFESSIONAL ENGINEER R.M SASAKI No. 30849 Exp. 3-31-12 CIVIL STATE OF CALIFORNIA

THE STATE OF CALIFORNIA OR ITS OFFICERS OR AGENTS SHALL NOT BE RESPONSIBLE FOR THE ACCURACY OR COMPLETENESS OF SCANNED COPIES OF THIS PLAN SHEET.

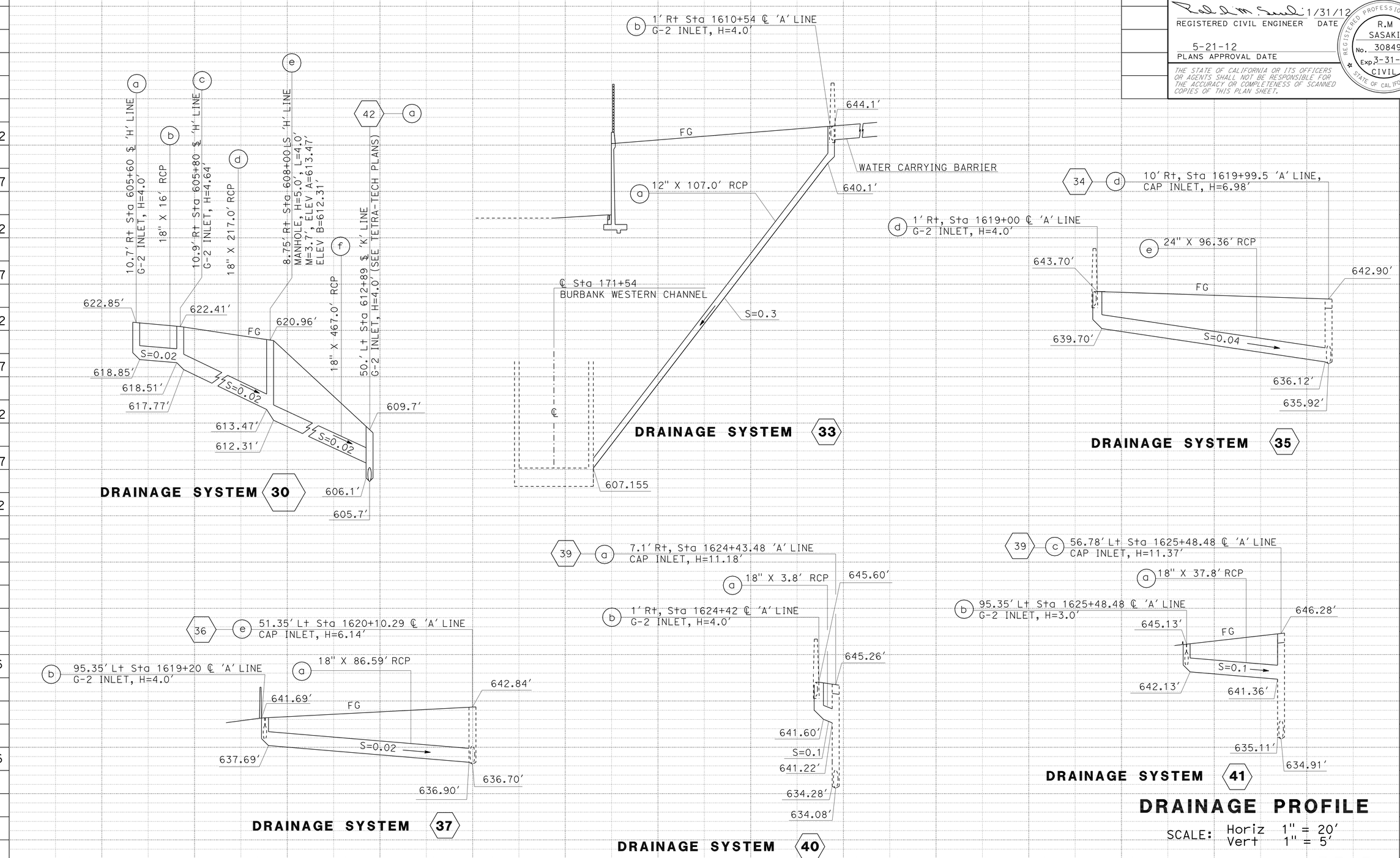

DRAINAGE PROFILE

SCALE: Horiz 1" = 20'
Vert 1" = 5'

DP-5

STATION

STATE OF CALIFORNIA - DEPARTMENT OF TRANSPORTATION
Caltrans
HYDRAULICS

FUNCTIONAL SUPERVISOR: R.M SASAKI
CALCULATED-DESIGNED BY: SIDDHARTH RANA
CHECKED BY: R.M SASAKI
REVISED BY
DATE REVISED

LAST REVISION 00-00-00
DATE PLOTTED => 21-MAY-2012
TIME PLOTTED => 16:47

Dist	COUNTY	ROUTE	POST MILES TOTAL PROJECT	SHEET No.	TOTAL SHEETS
07	LA	5	29.4/31.6	174	1931

REGISTERED CIVIL ENGINEER DATE 1/31/12

5-21-12
PLANS APPROVAL DATE

REGISTERED PROFESSIONAL ENGINEER R.M SASAKI No. 30849 Exp. 3-31-12 CIVIL STATE OF CALIFORNIA

THE STATE OF CALIFORNIA OR ITS OFFICERS OR AGENTS SHALL NOT BE RESPONSIBLE FOR THE ACCURACY OR COMPLETENESS OF SCANNED COPIES OF THIS PLAN SHEET.

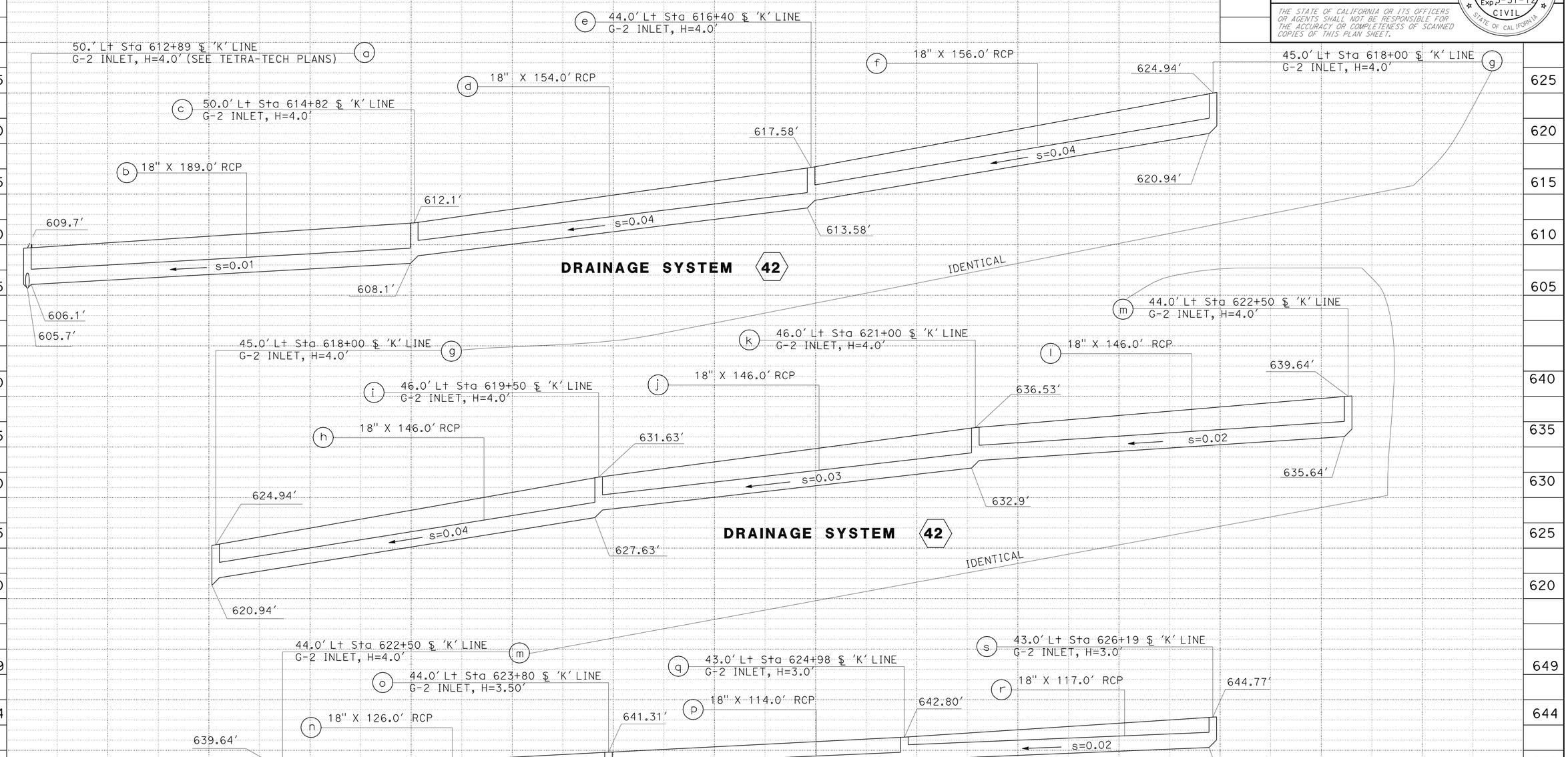

DRAINAGE PROFILE

SCALE: Horiz 1" = 20'
Vert 1" = 5'

DP-6

STATE OF CALIFORNIA - DEPARTMENT OF TRANSPORTATION
Caltrans
HYDRAULICS

FUNCTIONAL SUPERVISOR: R.M SASAKI
CALCULATED-DESIGNED BY: SIDDHARTH RANA
CHECKED BY: R.M SASAKI
REVISED BY
DATE REVISED

STATION

LAST REVISION 00-00-00
DATE PLOTTED => 21-MAY-2012
TIME PLOTTED => 16:47

Dist	COUNTY	ROUTE	POST MILES TOTAL PROJECT	SHEET No.	TOTAL SHEETS
07	LA	5	29.4/31.6	175	1931

REGISTERED CIVIL ENGINEER DATE 1/31/12

5-21-12
PLANS APPROVAL DATE

REGISTERED PROFESSIONAL ENGINEER R.M SASAKI No. 30849 Exp. 3-31-12 CIVIL STATE OF CALIFORNIA

THE STATE OF CALIFORNIA OR ITS OFFICERS OR AGENTS SHALL NOT BE RESPONSIBLE FOR THE ACCURACY OR COMPLETENESS OF SCANNED COPIES OF THIS PLAN SHEET.

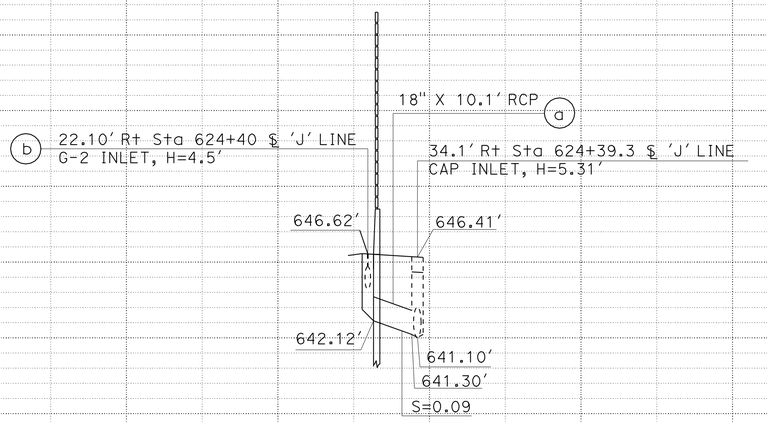

DRAINAGE SYSTEM 43

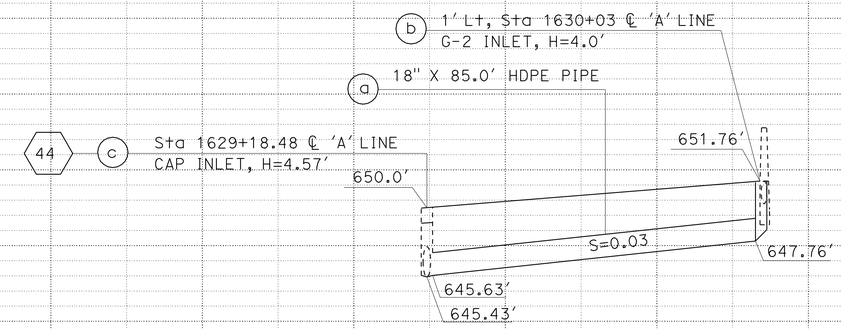

DRAINAGE SYSTEM 45

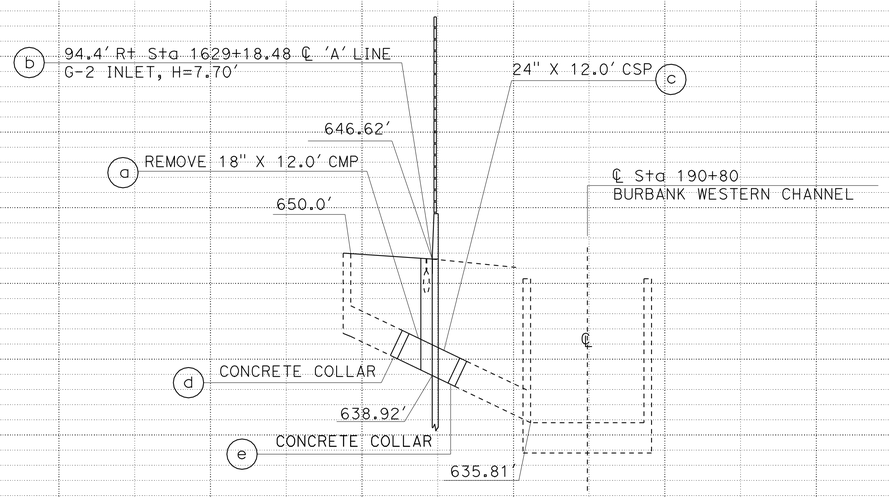

DRAINAGE SYSTEM 46

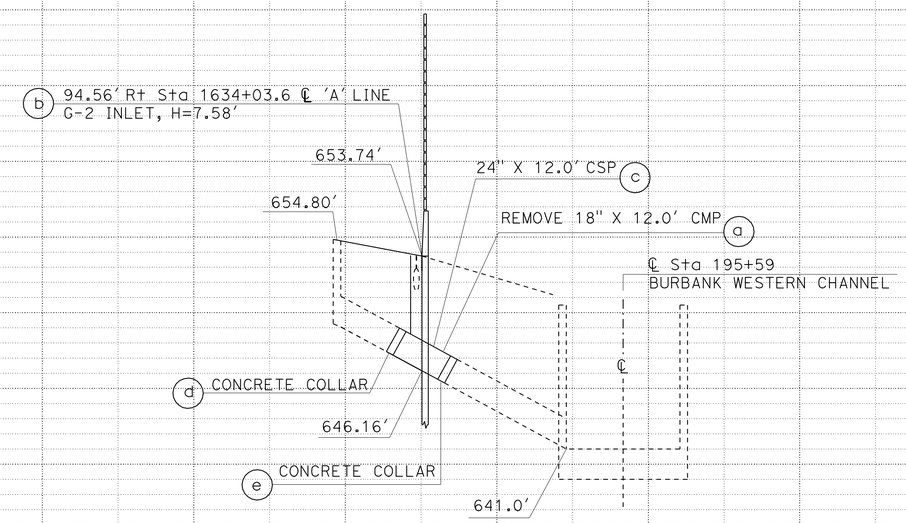

DRAINAGE SYSTEM 47

DRAINAGE PROFILE

SCALE: Horiz 1" = 20'
Vert 1" = 5'

DP-7

STATION

STATE OF CALIFORNIA - DEPARTMENT OF TRANSPORTATION
Caltrans
HYDRAULICS
FUNCTIONAL SUPERVISOR: R.M SASAKI
CALCULATED-DESIGNED BY: SIDDHARTH RANA
CHECKED BY: R.M SASAKI
REVISED BY
DATE REVISED

LAST REVISION 00-00-00
DATE PLOTTED => 21-MAY-2012
TIME PLOTTED => 16:48

Dist	COUNTY	ROUTE	POST MILES TOTAL PROJECT	SHEET No.	TOTAL SHEETS
07	LA	5	29.4/31.6	176	1931

REGISTERED CIVIL ENGINEER DATE 1/31/12

5-21-12
PLANS APPROVAL DATE

REGISTERED PROFESSIONAL ENGINEER R.M SASAKI No. 30849 Exp. 3-31-12 CIVIL STATE OF CALIFORNIA

THE STATE OF CALIFORNIA OR ITS OFFICERS OR AGENTS SHALL NOT BE RESPONSIBLE FOR THE ACCURACY OR COMPLETENESS OF SCANNED COPIES OF THIS PLAN SHEET.

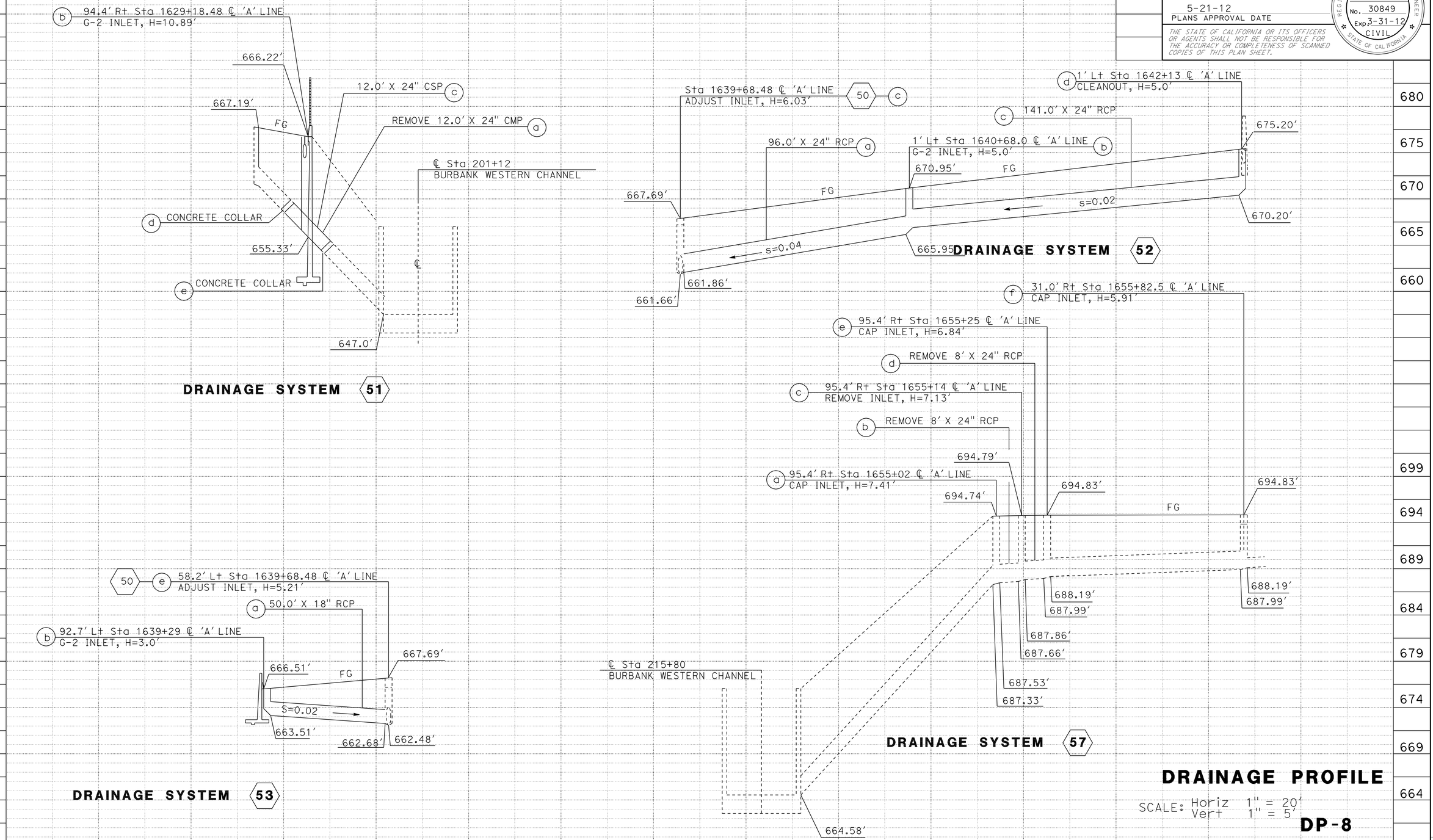

DRAINAGE PROFILE

SCALE: Horiz 1" = 20'
Vert 1" = 5'

DP-8

STATE OF CALIFORNIA - DEPARTMENT OF TRANSPORTATION
HYDRAULICS
Caltrans

FUNCTIONAL SUPERVISOR: R.M SASAKI
CALCULATED-DESIGNED BY: SIDDHARTH RANA
CHECKED BY: R.M SASAKI
REVISED BY
DATE REVISED

LAST REVISION 00-00-00
DATE PLOTTED => 21-MAY-2012
TIME PLOTTED => 16:47

Dist	COUNTY	ROUTE	POST MILES TOTAL PROJECT	SHEET No.	TOTAL SHEETS
07	LA	5	29.4/31.6	177	1931

REGISTERED CIVIL ENGINEER 1/31/12 DATE

5-21-12
PLANS APPROVAL DATE

REGISTERED PROFESSIONAL ENGINEER R.M SASAKI No. 30849 Exp. 3-31-12 CIVIL STATE OF CALIFORNIA

THE STATE OF CALIFORNIA OR ITS OFFICERS OR AGENTS SHALL NOT BE RESPONSIBLE FOR THE ACCURACY OR COMPLETENESS OF SCANNED COPIES OF THIS PLAN SHEET.

NOTES:

1. MINIMUM COVER FOR ALL PIPE CONNECTIONS TO AVSF EXCEED THE 1' MINIMUM COVER
2. * FG SHALL BE 0.5' BELOW WE ELEVATIONS SHOWN IN WALL DESIGN TABLE

WALL DESIGN TABLE

DESIGN BASIN WALL	DESIGN WALL Ht. H	TOP OF WALL ELEVATION						TOP OF FOOTING ELEVATION					
		WE1	WE2	WE3	WE4	WE5	WE6	FE0	FE1	FE2	FE3	FE4	FE5
Sed	12'	677.38'	677.52'	677.92'	677.92'	678.70'	678.96'	668.42'	668.38'	667.96'	665.46'	664.83'	664.81'
Fil	14'												

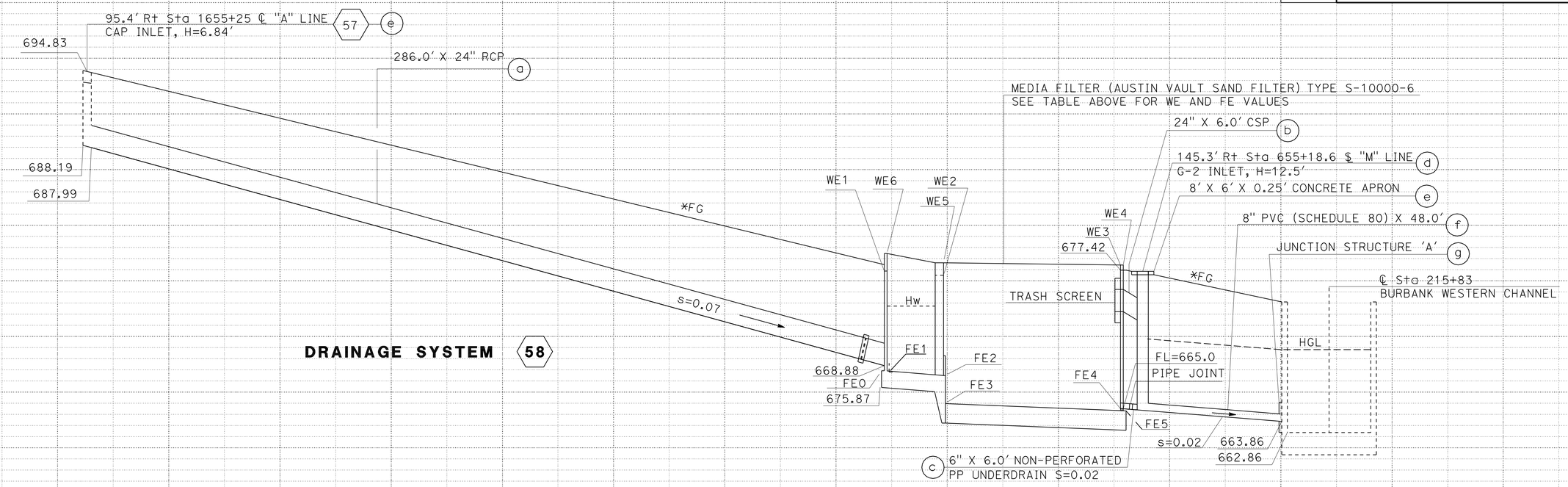

DRAINAGE PROFILE

SCALE: Horiz 1" = 20'
Vert 1" = 5'

DP-9

STATION

STATE OF CALIFORNIA - DEPARTMENT OF TRANSPORTATION
Caltrans
HYDRAULICS

FUNCTIONAL SUPERVISOR R.M SASAKI
CALCULATED-DESIGNED BY SIDDHARTH RANA
CHECKED BY R.M SASAKI
REVISED BY
DATE REVISED

LAST REVISION 00-00-00
DATE PLOTTED => 21-MAY-2012
TIME PLOTTED => 16:47

Dist	COUNTY	ROUTE	POST MILES TOTAL PROJECT	SHEET No.	TOTAL SHEETS
07	LA	5	29.4/31.6	178	1931

REGISTERED CIVIL ENGINEER DATE 1/31/12

5-21-12
PLANS APPROVAL DATE

REGISTERED PROFESSIONAL ENGINEER R.M SASAKI No. 30849 Exp. 3-31-12 CIVIL STATE OF CALIFORNIA

THE STATE OF CALIFORNIA OR ITS OFFICERS OR AGENTS SHALL NOT BE RESPONSIBLE FOR THE ACCURACY OR COMPLETENESS OF SCANNED COPIES OF THIS PLAN SHEET.

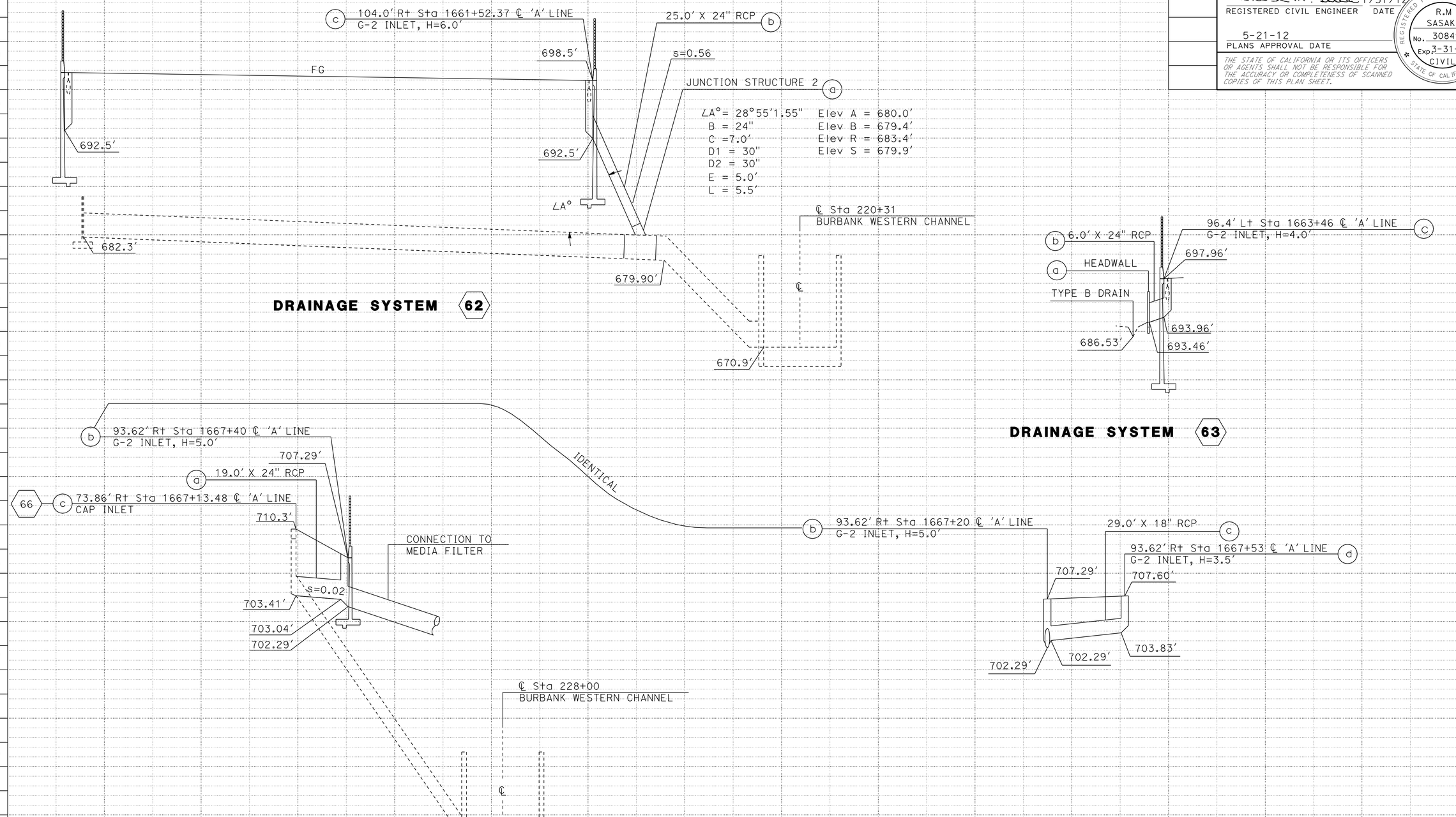

DRAINAGE PROFILE

SCALE: Horiz 1" = 20'
Vert 1" = 5'

DP-10

SIDDHARTH RANA — R.M SASAKI — REVISED BY — DATE REVISED

CALCULATED-DESIGNED BY — CHECKED BY

FUNCTIONAL SUPERVISOR — R.M SASAKI

STATE OF CALIFORNIA - DEPARTMENT OF TRANSPORTATION — HYDRAULICS — Caltrans

LAST REVISION 00-00-00 — DATE PLOTTED => 21-MAY-2012 — TIME PLOTTED => 16:48

Dist	COUNTY	ROUTE	POST MILES TOTAL PROJECT	SHEET No.	TOTAL SHEETS
07	LA	5	29.4/31.6	179	1931

REGISTERED CIVIL ENGINEER 1/31/12 DATE

5-21-12
PLANS APPROVAL DATE

REGISTERED PROFESSIONAL ENGINEER R.M SASAKI No. 30849 Exp. 3-31-12 CIVIL STATE OF CALIFORNIA

THE STATE OF CALIFORNIA OR ITS OFFICERS OR AGENTS SHALL NOT BE RESPONSIBLE FOR THE ACCURACY OR COMPLETENESS OF SCANNED COPIES OF THIS PLAN SHEET.

NOTES:

1. MINIMUM COVER FOR ALL PIPE CONNECTIONS TO AVSF EXCEED THE 1' MINIMUM COVER
2. * FG SHALL BE 0.5' BELOW WE ELEVATIONS SHOWN IN WALL DESIGN TABLE

WALL DESIGN TABLE

DESIGN BASIN WALL	DESIGN WALL Ht. H	TOP OF WALL ELEVATION						TOP OF FOOTING ELEVATION					
		WE1	WE2	WE3	WE4	WE5	WE6	FE0	FE1	FE2	FE3	FE4	FE5
Sed	10'	710.47'	710.25'	709.50'	709.50'	709.55'	709.57'	701.42'	701.38'	700.96'	698.46'	697.83'	697.81'
Fil	14'												

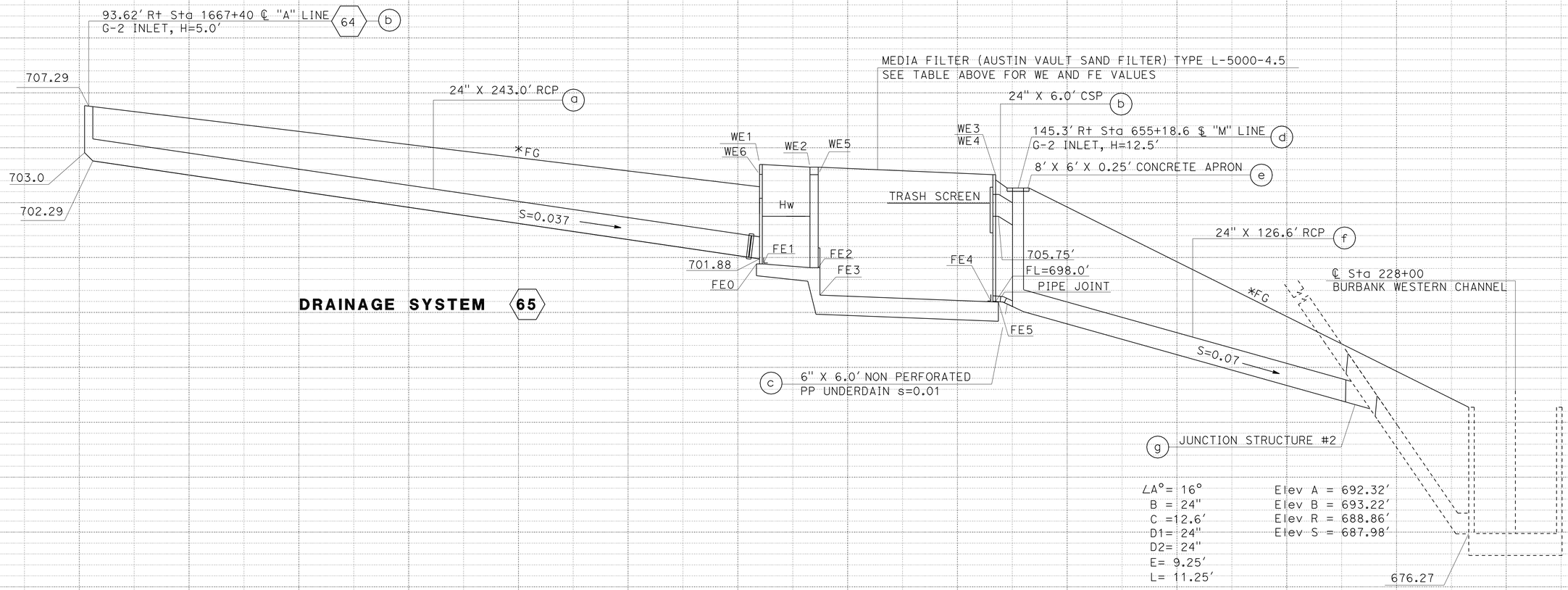

DRAINAGE SYSTEM 65

DRAINAGE PROFILE

SCALE: Horiz 1" = 20'
Vert 1" = 5'

DP-11

STATION

REVISED BY | DATE REVISED

SIDDHARTH RANA | R.M SASAKI

CALCULATED-DESIGNED BY | CHECKED BY

FUNCTIONAL SUPERVISOR | R.M SASAKI

STATE OF CALIFORNIA - DEPARTMENT OF TRANSPORTATION

Caltrans

HYDRAULICS

LAST REVISION 00-00-00 | DATE PLOTTED => 29-MAY-2012 | TIME PLOTTED => 11:51

Dist	COUNTY	ROUTE	POST MILES TOTAL PROJECT	SHEET No.	TOTAL SHEETS
07	LA	5	29.4/31.6	180	1931

REGISTERED CIVIL ENGINEER 5/15/12 DATE

5-21-12
PLANS APPROVAL DATE

REGISTERED PROFESSIONAL ENGINEER RICHARD STEVEN AGOR No. 57082 Exp. 12/31/13 CIVIL STATE OF CALIFORNIA

THE STATE OF CALIFORNIA OR ITS OFFICERS OR AGENTS SHALL NOT BE RESPONSIBLE FOR THE ACCURACY OR COMPLETENESS OF SCANNED COPIES OF THIS PLAN SHEET.

CITY OF BURBANK
150 N 3RD ST
BURBANK, CA 91510

TETRA TECH
17885 VON KARMAN AVE
IRVINE, CA 92614

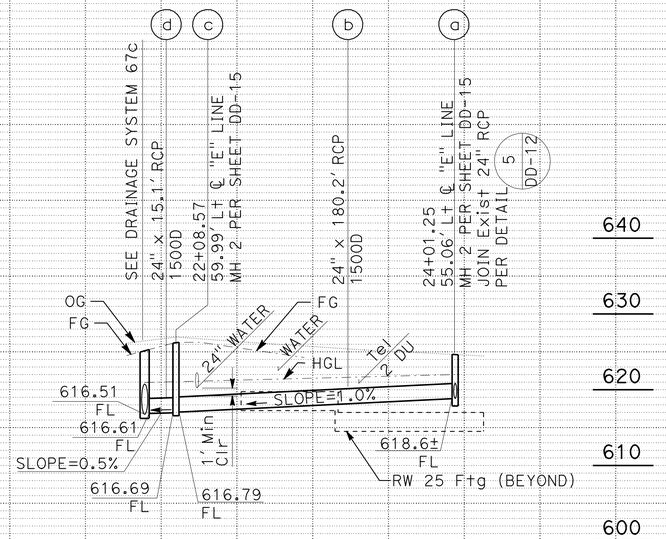

DRAINAGE SYSTEM 68

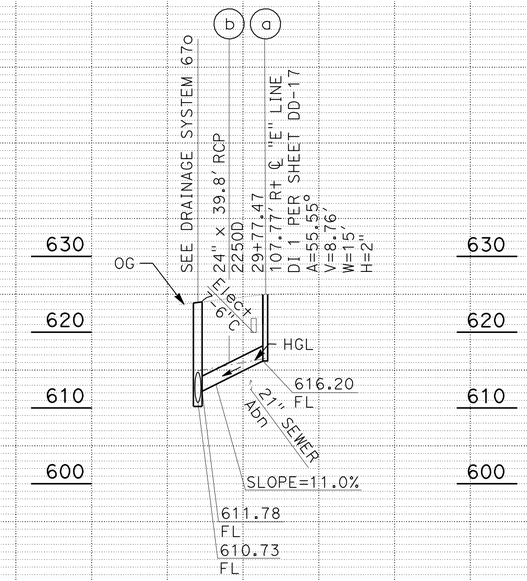

DRAINAGE SYSTEM 69

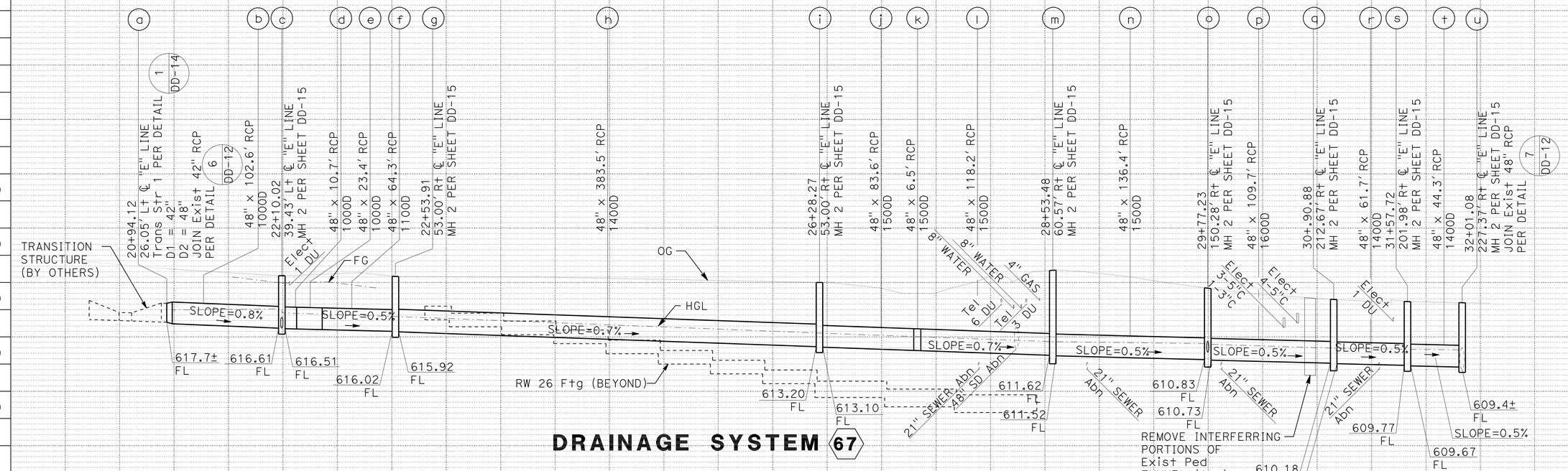

DRAINAGE SYSTEM 67

DRAINAGE PROFILE SYSTEM A

SCALE: Horiz 1" = 50'
Vert 1" = 10'

DP-12

STATE OF CALIFORNIA - DEPARTMENT OF TRANSPORTATION
Caltrans
HYDRAULICS
CONSULTANT FUNCTIONAL SUPERVISOR: STEVEN AGOR
CALCULATED-DESIGNED BY: ERICA JENKINS
CHECKED BY: STEVEN AGOR
REVISED BY
DATE REVISED

LAST REVISION 02-14-12 | DATE PLOTTED => 19-JUN-2012 | TIME PLOTTED => 09:38

Dist	COUNTY	ROUTE	POST MILES TOTAL PROJECT	SHEET No.	TOTAL SHEETS
07	LA	5	29.4/31.6	181	1931

REGISTERED CIVIL ENGINEER 5/15/12 DATE

5-21-12
PLANS APPROVAL DATE

REGISTERED PROFESSIONAL ENGINEER RICHARD STEVEN AGOR No. 57082 Exp. 12/31/13 CIVIL STATE OF CALIFORNIA

THE STATE OF CALIFORNIA OR ITS OFFICERS OR AGENTS SHALL NOT BE RESPONSIBLE FOR THE ACCURACY OR COMPLETENESS OF SCANNED COPIES OF THIS PLAN SHEET.

CITY OF BURBANK
150 N 3RD ST
BURBANK, CA 91510

TETRA TECH
17885 VON KARMAN AVE
IRVINE, CA 92614

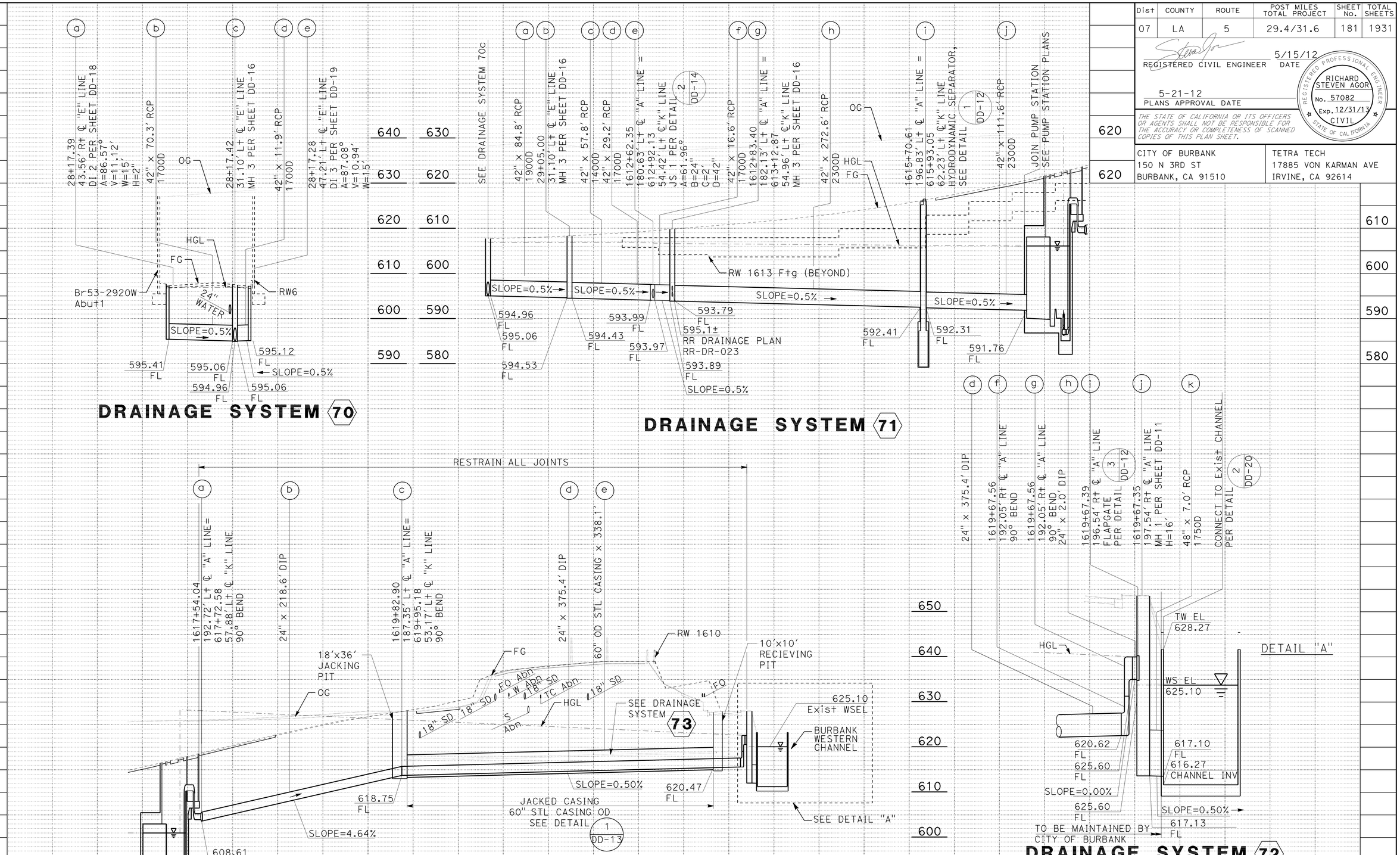

STATE OF CALIFORNIA - DEPARTMENT OF TRANSPORTATION
HYDRAULICS
CONSULTANT FUNCTIONAL SUPERVISOR: STEVEN AGOR
CALCULATED-DESIGNED BY: CRISNA ESTRADA
CHECKED BY: STEVEN AGOR
REVISED BY / DATE REVISED

LAST REVISION DATE PLOTTED => 06-JUN-2012
02-14-12 TIME PLOTTED => 07:53

Dist	COUNTY	ROUTE	POST MILES TOTAL PROJECT	SHEET No.	TOTAL SHEETS
07	LA	5	29.4/31.6	182	1931

REGISTERED CIVIL ENGINEER 5/15/12 DATE

5-21-12
PLANS APPROVAL DATE

REGISTERED PROFESSIONAL ENGINEER RICHARD STEVEN AGOR No. 57082 Exp. 12/31/13 CIVIL STATE OF CALIFORNIA

THE STATE OF CALIFORNIA OR ITS OFFICERS OR AGENTS SHALL NOT BE RESPONSIBLE FOR THE ACCURACY OR COMPLETENESS OF SCANNED COPIES OF THIS PLAN SHEET.

630

CITY OF BURBANK
150 N 3RD ST
BURBANK, CA 91510

TETRA TECH
17885 VON KARMAN AVE
IRVINE, CA 92614

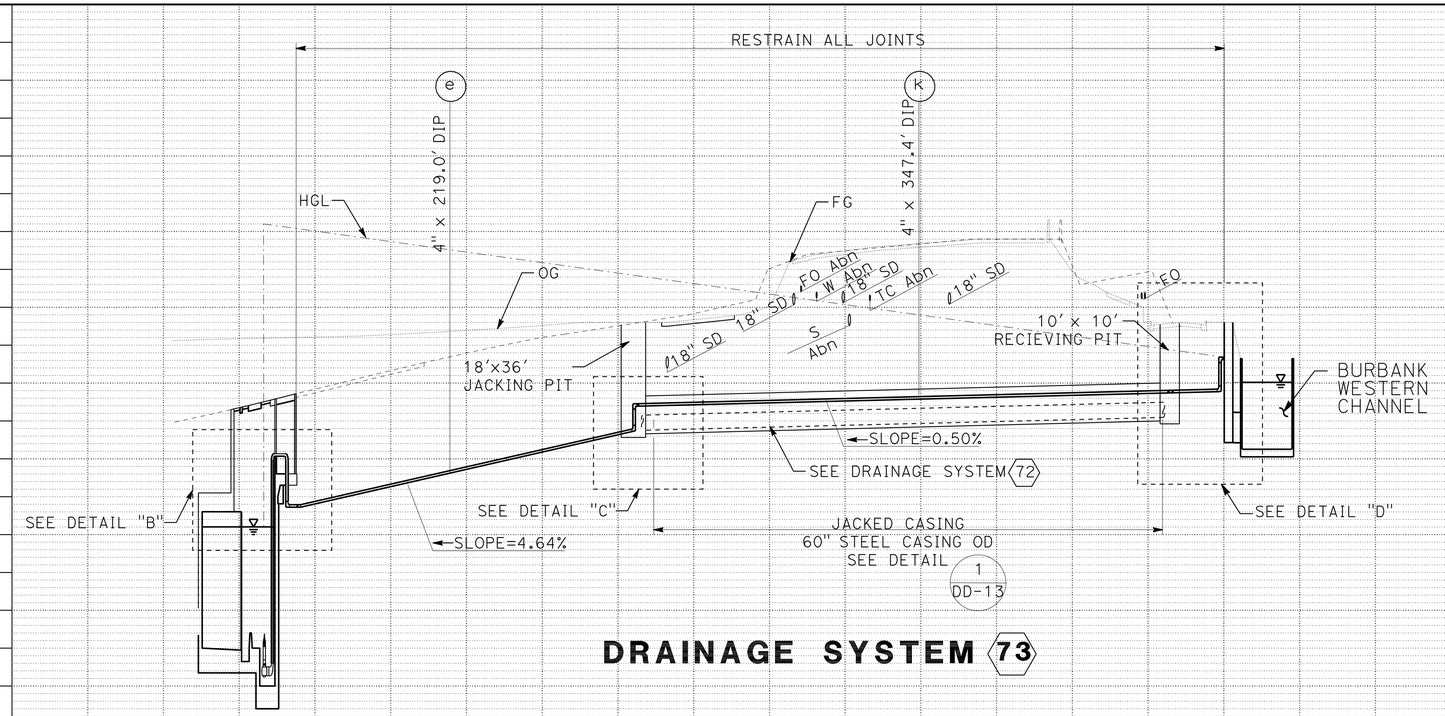

DRAINAGE SYSTEM 73

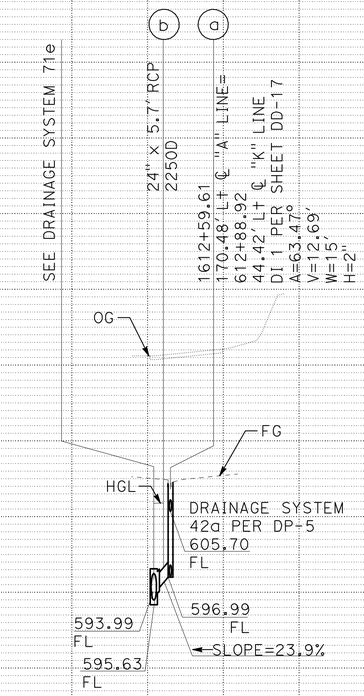

DRAINAGE SYSTEM 74

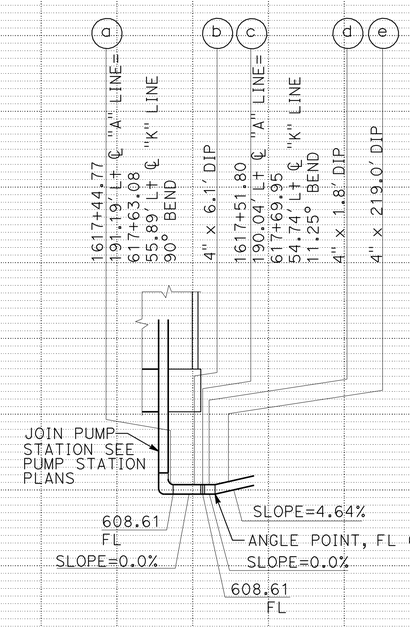

DETAIL "B"

DRAINAGE SYSTEM 73

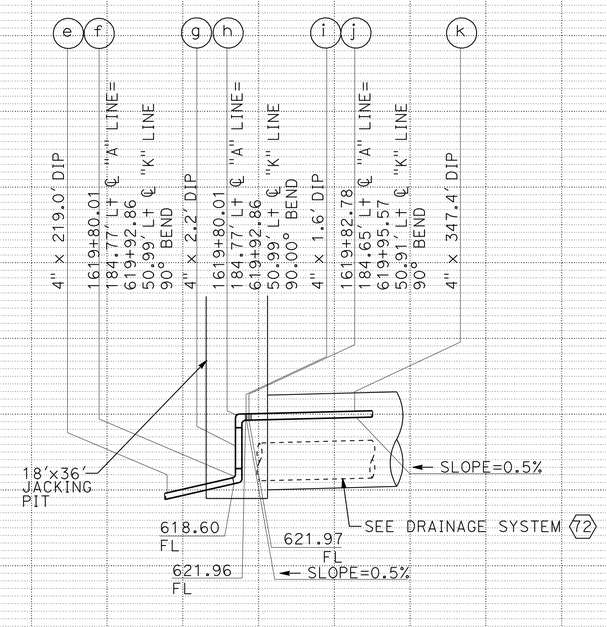

DETAIL "C"

DRAINAGE SYSTEM 73

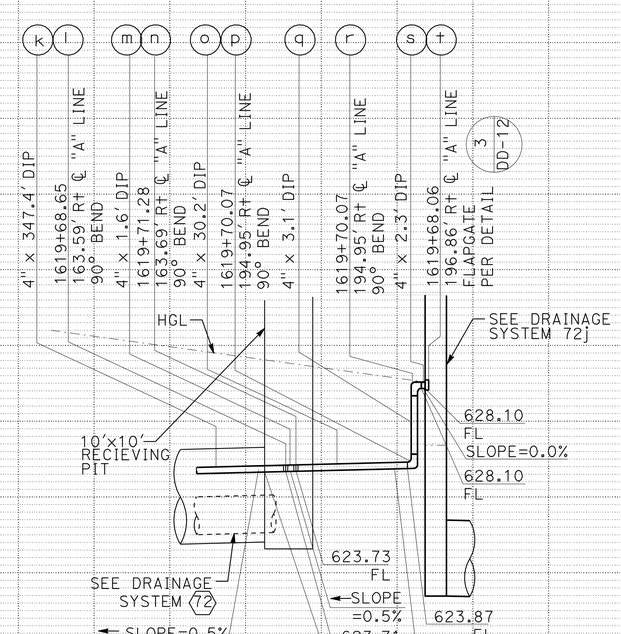

DETAIL "D"

DRAINAGE SYSTEM 73

DRAINAGE PROFILE SYSTEM B

SCALE: Horiz 1"=50'
Vert 1"=10'

DP-14

STATE OF CALIFORNIA - DEPARTMENT OF TRANSPORTATION
Caltrans
HYDRAULICS
CONSULTANT FUNCTIONAL SUPERVISOR: STEVEN AGOR
CALCULATED-DESIGNED BY: CRISNA ESTRADA
CHECKED BY: STEVEN AGOR
REVISED BY
DATE REVISED

LAST REVISION 02-14-12
DATE PLOTTED => 06-JUN-2012
TIME PLOTTED => 07:53

Dist	COUNTY	ROUTE	POST MILES TOTAL PROJECT	SHEET No.	TOTAL SHEETS
07	LA	5	29.4/31.6	183	1931

REGISTERED CIVIL ENGINEER DATE 1/31/12

5-21-12
PLANS APPROVAL DATE

REGISTERED PROFESSIONAL ENGINEER R.M SASAKI No. 30849 Exp. 3-31-12 CIVIL STATE OF CALIFORNIA

THE STATE OF CALIFORNIA OR ITS OFFICERS OR AGENTS SHALL NOT BE RESPONSIBLE FOR THE ACCURACY OR COMPLETENESS OF SCANNED COPIES OF THIS PLAN SHEET.

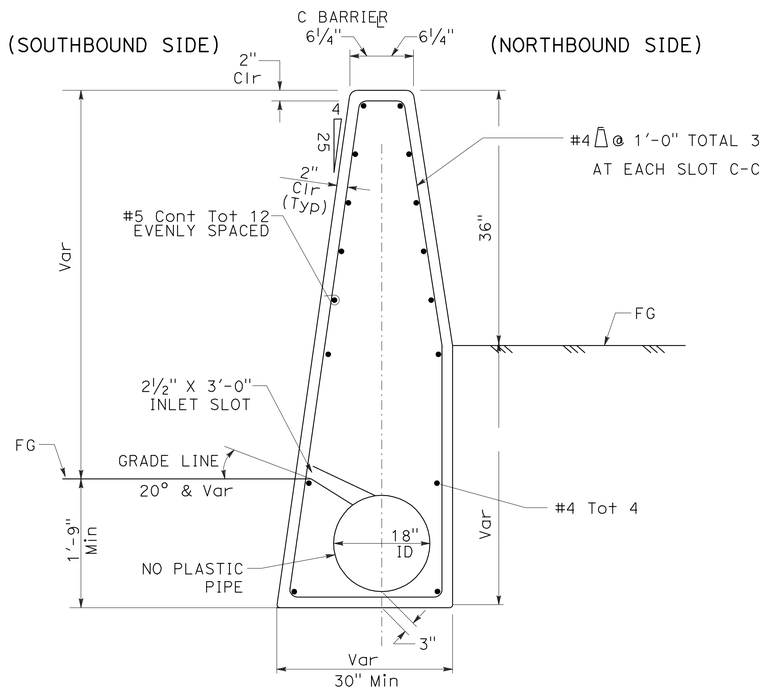

CASE 1
TYPICAL SECTION

Beg Sta 60W (Mod)	END Sta 60W (Mod)
1585+60	1588+80
1595+46	1602+00
1603+03	1607+00

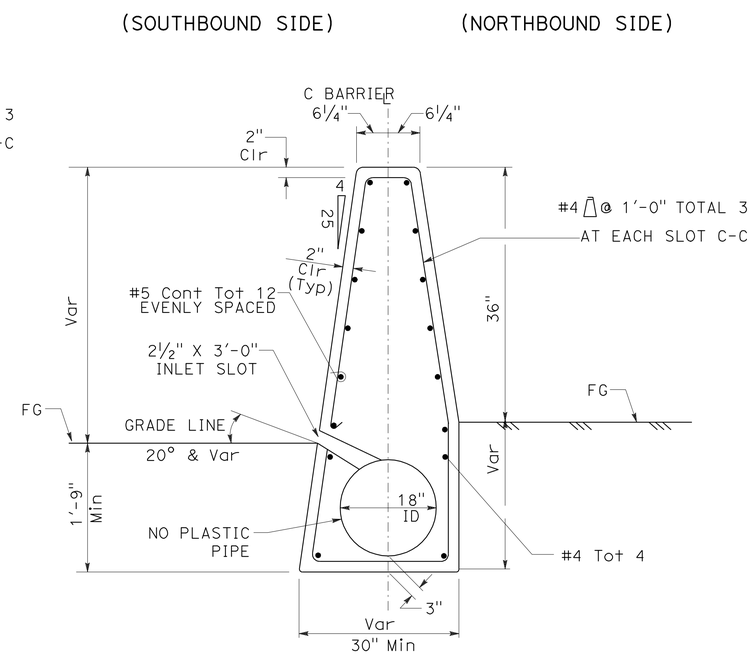

CASE 2
TYPICAL SECTION

Beg Sta 60W (Mod)	END Sta 60W (Mod)
1552+37	1557+75
1581+60	1585+60
1631+02	1639+29
1642+11	1642+40
1656+00	1656+43

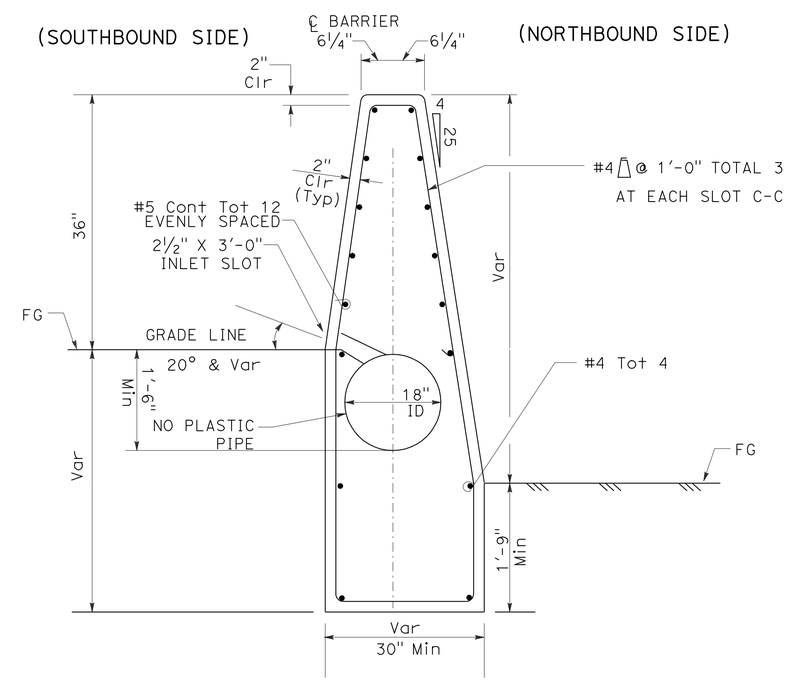

CASE 3
TYPICAL SECTION

Beg Sta 60W (Mod)	END Sta 60W (Mod)
1577+79	1581+60

CONCRETE BARRIER
(TYPE 60W Mod)

DRAINAGE DETAILS

NO SCALE **DD-1**

STATE OF CALIFORNIA - DEPARTMENT OF TRANSPORTATION
Caltrans®
HYDRAULICS

FUNCTIONAL SUPERVISOR: R.M SASAKI
CALCULATED-DESIGNED BY: SIDDHARTH RANA
CHECKED BY: R.M SASAKI
REVISED BY
DATE REVISED

LAST REVISION 00-00-00
DATE PLOTTED => 21-MAY-2012
TIME PLOTTED => 16:48

Dist	COUNTY	ROUTE	POST MILES TOTAL PROJECT	SHEET No.	TOTAL SHEETS
07	LA	5	29.4/31.6	184	1931

REGISTERED CIVIL ENGINEER 1/31/12 DATE

5-21-12
PLANS APPROVAL DATE

REGISTERED PROFESSIONAL ENGINEER R.M SASAKI No. 30849 Exp. 3-31-12 CIVIL STATE OF CALIFORNIA

THE STATE OF CALIFORNIA OR ITS OFFICERS OR AGENTS SHALL NOT BE RESPONSIBLE FOR THE ACCURACY OR COMPLETENESS OF SCANNED COPIES OF THIS PLAN SHEET.

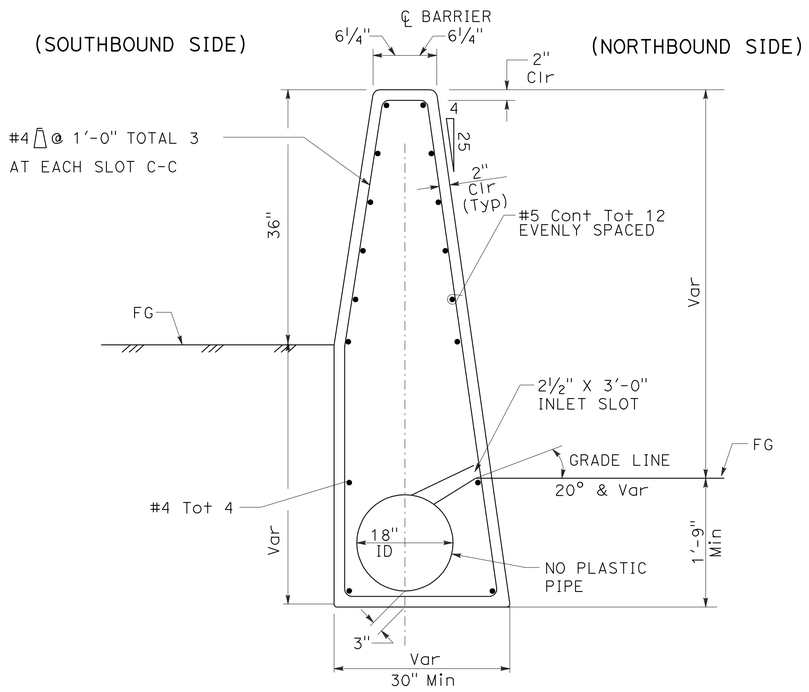

CASE 4

TYPICAL SECTION

Beg Sta 60W (Mod)	END Sta 60W(Mod)
1557+75	1568+00
1575+80	1577+79

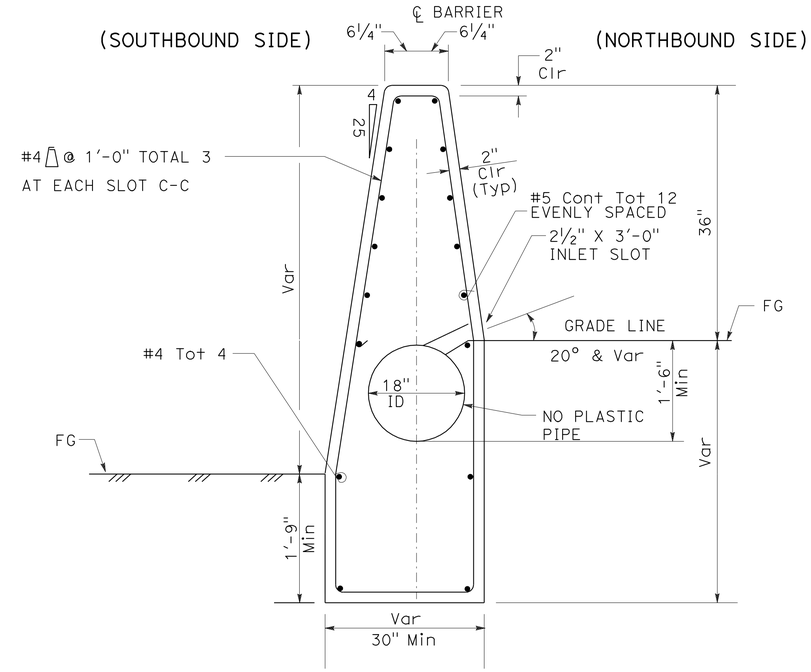

CASE 5

TYPICAL SECTION

Beg Sta 60W (Mod)	END Sta 60W (Mod)
1610+54	1627+05

CONCRETE BARRIER

(TYPE 60W Mod)

DRAINAGE DETAILS

NO SCALE **DD-2**

STATE OF CALIFORNIA - DEPARTMENT OF TRANSPORTATION
Caltrans
HYDRAULICS

FUNCTIONAL SUPERVISOR: R.M SASAKI
CALCULATED-DESIGNED BY: SIDDHARTH RANA
CHECKED BY: R.M SASAKI
REVISED BY
DATE REVISED

LAST REVISION 00-00-00
DATE PLOTTED => 21-MAY-2012
TIME PLOTTED => 16:48

Dist	COUNTY	ROUTE	POST MILES TOTAL PROJECT	SHEET No.	TOTAL SHEETS
07	LA	5	29.4/31.6	185	1931

REGISTERED CIVIL ENGINEER DATE 1/31/12

5-21-12
PLANS APPROVAL DATE

REGISTERED PROFESSIONAL ENGINEER R.M SASAKI No. 30849 Exp. 3-31-12 CIVIL STATE OF CALIFORNIA

THE STATE OF CALIFORNIA OR ITS OFFICERS OR AGENTS SHALL NOT BE RESPONSIBLE FOR THE ACCURACY OR COMPLETENESS OF SCANNED COPIES OF THIS PLAN SHEET.

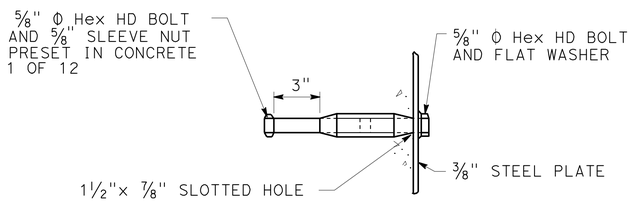

DETAIL "F"

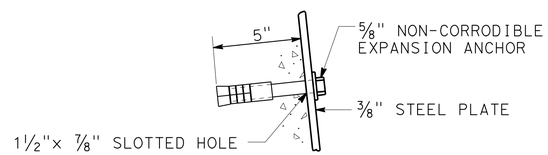

ALTERNATE DETAIL "F"

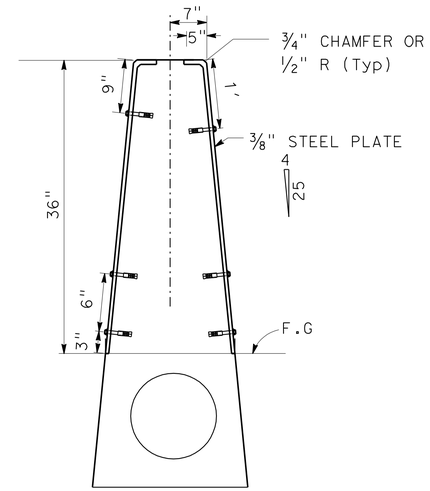

SECTION A-A

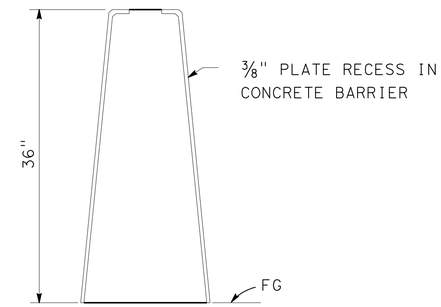

RECESS DETAIL

CLOSURE PLATE ANCHOR BOLT DETAILS

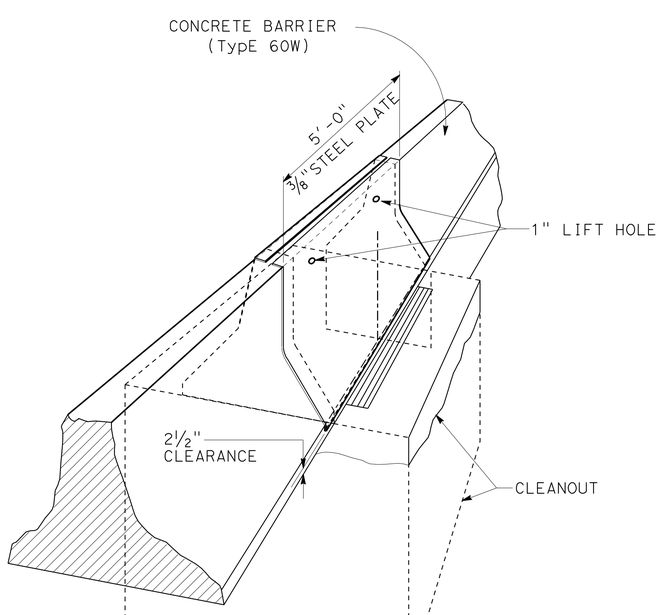

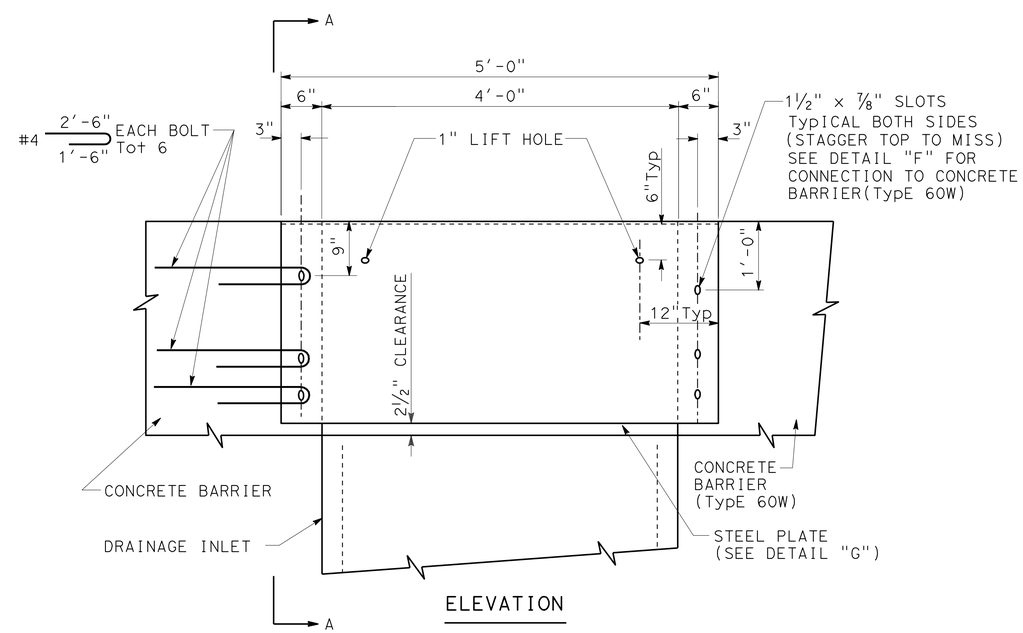

ELEVATION

STEEL PLATE DETAIL

DETAILS OF CONCRETE BARRIER (TYPE 60W) OVER INLET

DRAINAGE DETAILS

NO SCALE

DD-3

STATE OF CALIFORNIA - DEPARTMENT OF TRANSPORTATION
Caltrans
HYDRAULICS

FUNCTIONAL SUPERVISOR: R.M SASAKI
CALCULATED-DESIGNED BY: SIDDHARTH RANA
CHECKED BY: R.M SASAKI
REVISED BY
DATE REVISED

LAST REVISION 00-00-00
DATE PLOTTED => 21-MAY-2012
TIME PLOTTED => 16:49

Dist	COUNTY	ROUTE	POST MILES TOTAL PROJECT	SHEET No.	TOTAL SHEETS
07	LA	5	29.4/31.6	186	1931

REGISTERED CIVIL ENGINEER DATE 1/31/12

5-21-12
PLANS APPROVAL DATE

REGISTERED PROFESSIONAL ENGINEER R.M SASAKI No. 30849 Exp. 3-31-12 CIVIL STATE OF CALIFORNIA

THE STATE OF CALIFORNIA OR ITS OFFICERS OR AGENTS SHALL NOT BE RESPONSIBLE FOR THE ACCURACY OR COMPLETENESS OF SCANNED COPIES OF THIS PLAN SHEET.

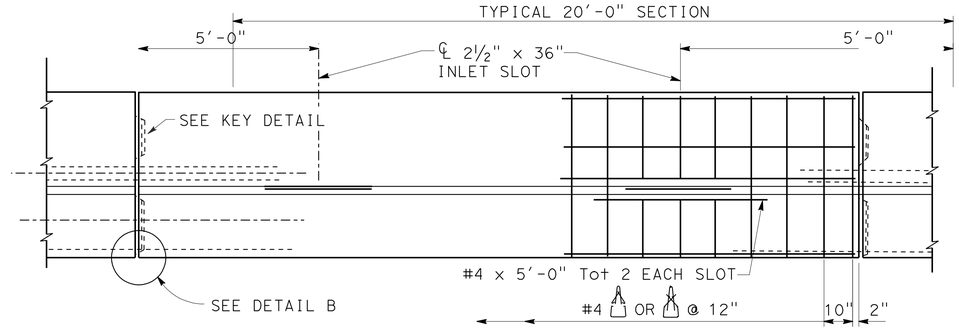

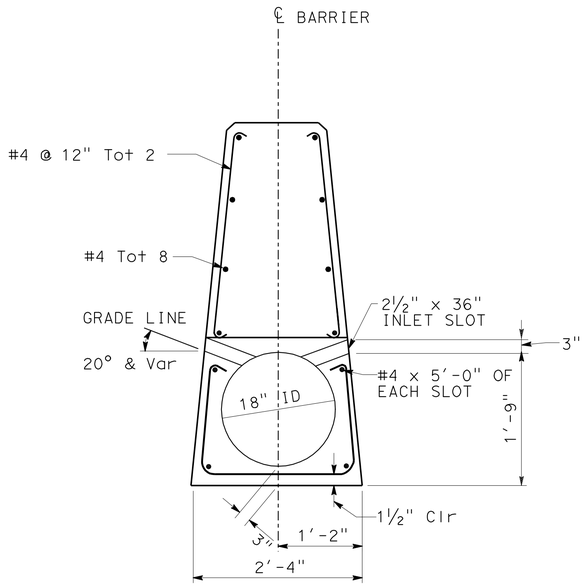

TYPICAL SECTION

ELEVATION

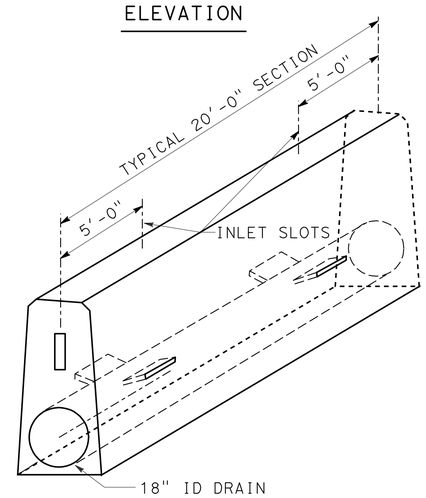

WATER-CARRYING CONCRETE BARRIER

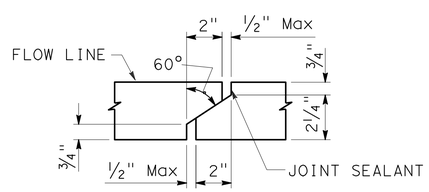

DETAIL "B"
(AT ℄ BARRIER)

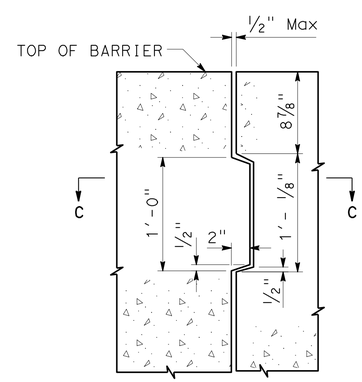

KEY DETAIL

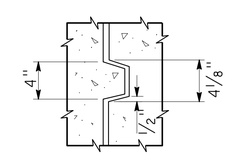

SECTION C-C

CONCRETE MEDIAN BARRIER

TYPE 60W(WATER-CARRYING)

DRAINAGE DETAILS

NO SCALE

DD-4

STATE OF CALIFORNIA - DEPARTMENT OF TRANSPORTATION
Caltrans
HYDRAULICS

FUNCTIONAL SUPERVISOR: R.M SASAKI
CALCULATED-DESIGNED BY: SIDDHARTH RANA
CHECKED BY: R.M SASAKI
REVISED BY
DATE REVISED

LAST REVISION 00-00-00
DATE PLOTTED => 21-MAY-2012
TIME PLOTTED => 16:49

Dist	COUNTY	ROUTE	POST MILES TOTAL PROJECT	SHEET No.	TOTAL SHEETS
07	LA	5	29.4/31.6	187	1931

REGISTERED CIVIL ENGINEER DATE 1/31/12

5-21-12
PLANS APPROVAL DATE

REGISTERED PROFESSIONAL ENGINEER R.M SASAKI No. 30849 Exp. 3-31-12 CIVIL STATE OF CALIFORNIA

THE STATE OF CALIFORNIA OR ITS OFFICERS OR AGENTS SHALL NOT BE RESPONSIBLE FOR THE ACCURACY OR COMPLETENESS OF SCANNED COPIES OF THIS PLAN SHEET.

NOTES:

1. SEE STEEL PLATE CLOSURE DETAILS ON SHEET DD-3.
2. FOR CONCRETE BARRIER (TYPE 60, 60C, 60E, 60W) SEE STD PLAN A76B.

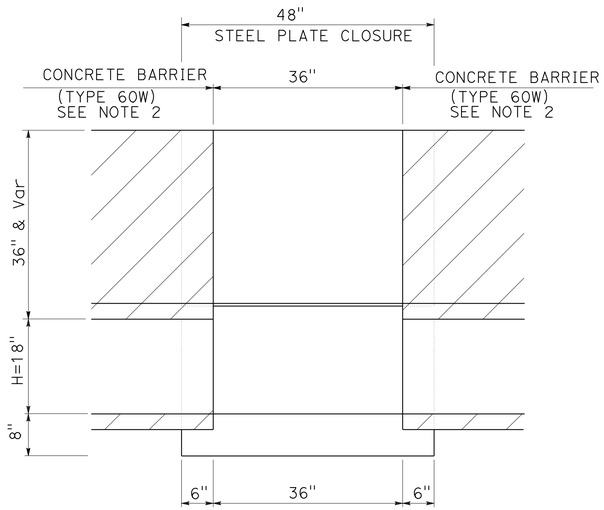

INTERMEDIATE CLEANOUT
CASE 1
SECTION E-E

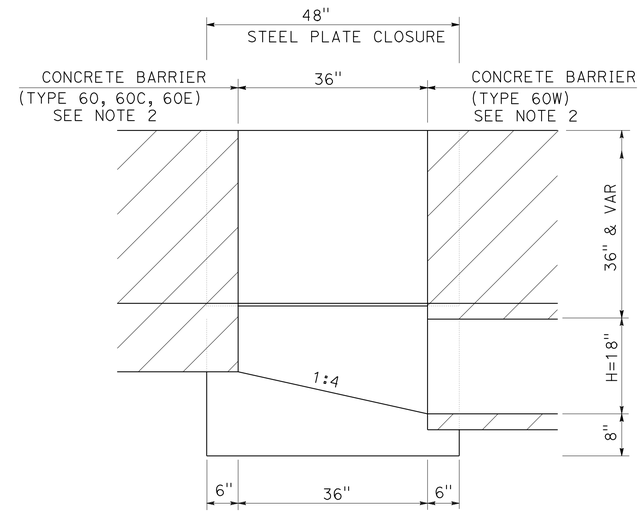

BEGINNING CLEANOUT
CASE 2
SECTION E-E

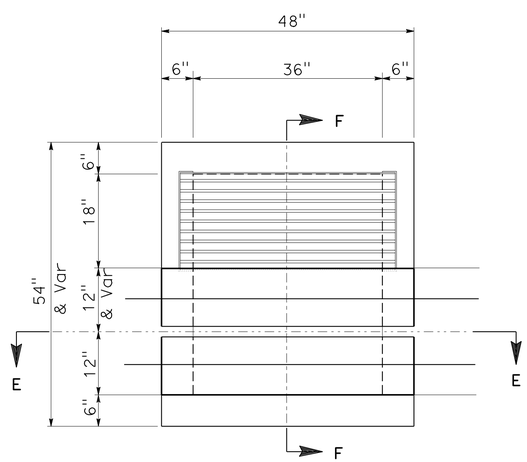

TYPE CLEANOUT

PLAN

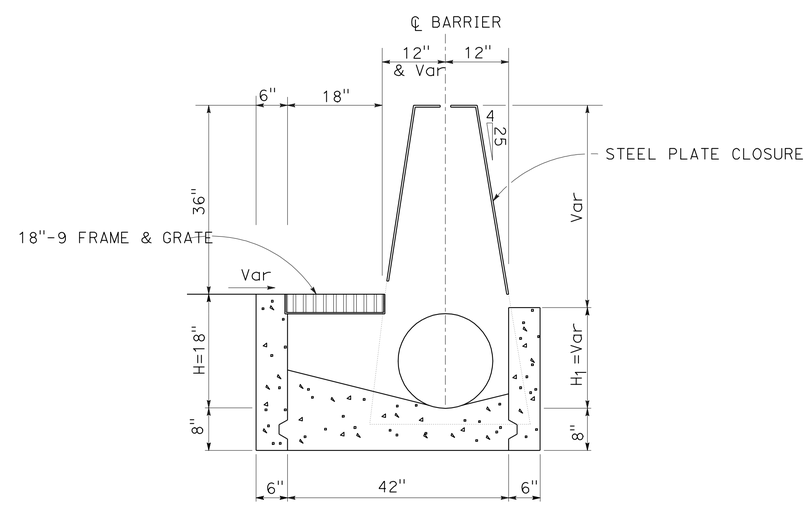

TYPE CLEANOUT

SECTION F-F

TYPE 60W CLEANOUT DETAILS
(WITH STEEL PLATE CLOSURE)

DRAINAGE DETAILS

NO SCALE

DD-5

STATE OF CALIFORNIA - DEPARTMENT OF TRANSPORTATION
Caltrans
HYDRAULICS

FUNCTIONAL SUPERVISOR: R.M SASAKI
CALCULATED-DESIGNED BY: SIDDHARTH RANA
CHECKED BY: R.M SASAKI
REVISED BY
DATE REVISED

LAST REVISION 00-00-00
DATE PLOTTED => 21-MAY-2012
TIME PLOTTED => 16:49

Dist	COUNTY	ROUTE	POST MILES TOTAL PROJECT	SHEET No.	TOTAL SHEETS
07	LA	5	29.4/31.6	188	1931

REGISTERED CIVIL ENGINEER DATE 1/31/12

5-21-12
PLANS APPROVAL DATE

REGISTERED PROFESSIONAL ENGINEER R.M SASAKI No. 30849 Exp. 3-31-12 CIVIL STATE OF CALIFORNIA

THE STATE OF CALIFORNIA OR ITS OFFICERS OR AGENTS SHALL NOT BE RESPONSIBLE FOR THE ACCURACY OR COMPLETENESS OF SCANNED COPIES OF THIS PLAN SHEET.

NOTES:

1. FOR INFORMATION AND DETAILS NOT SHOWN SEE STD PLANS D73, D77A, D98A AND D98B.
2. LENGTH OF CSP IS INCLUDED IN THE LENGTH OF SCSP INVOLVED SHOWN ON THE SUMMARY OF DRAINAGE QUANTITIES.

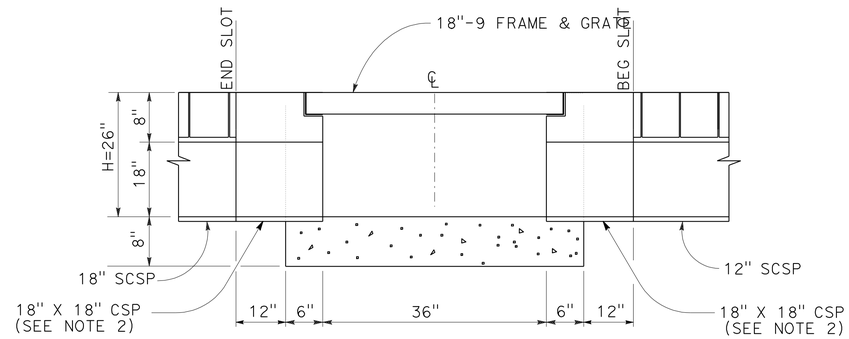

SECTION B-B

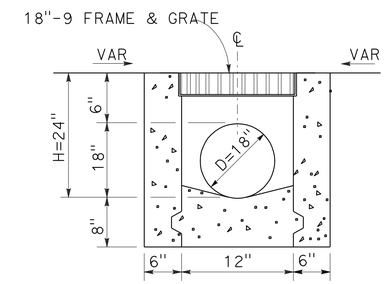

SECTION C-C

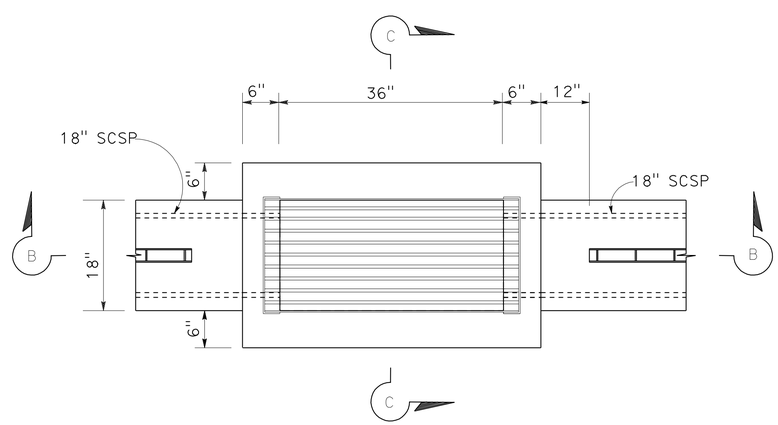

INTERMEDIATE CLEANOUT

PLAN

DRAINAGE DETAILS

NO SCALE

DD-6

STATE OF CALIFORNIA - DEPARTMENT OF TRANSPORTATION
Caltrans® HYDRAULICS

FUNCTIONAL SUPERVISOR: R.M SASAKI
CALCULATED-DESIGNED BY: SIDDHARTH RANA
CHECKED BY: R.M SASAKI
REVISED BY
DATE REVISED

LAST REVISION 00-00-00
DATE PLOTTED => 21-MAY-2012
TIME PLOTTED => 16:49

Dist	COUNTY	ROUTE	POST MILES TOTAL PROJECT	SHEET No.	TOTAL SHEETS
07	LA	5	29.4/31.6	189	1931

REGISTERED CIVIL ENGINEER DATE 1/31/12

5-21-12
PLANS APPROVAL DATE

REGISTERED PROFESSIONAL ENGINEER R.M SASAKI No. 30849 Exp. 3-31-12 CIVIL STATE OF CALIFORNIA

THE STATE OF CALIFORNIA OR ITS OFFICERS OR AGENTS SHALL NOT BE RESPONSIBLE FOR THE ACCURACY OR COMPLETENESS OF SCANNED COPIES OF THIS PLAN SHEET.

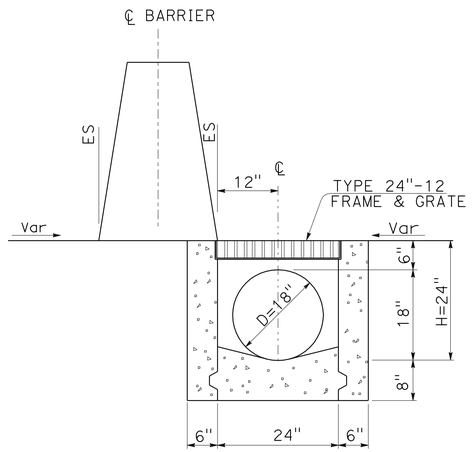

AT CONCRETE BARRIER

CASE 1

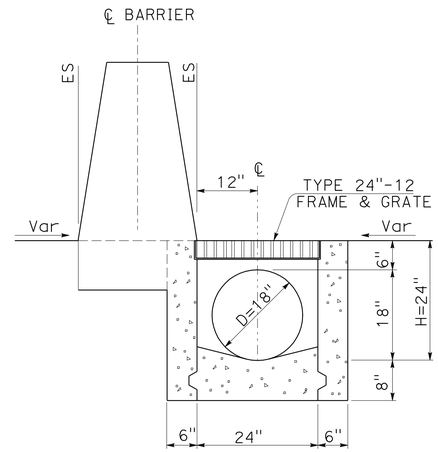

AT END OF CONCRETE BARRIER

CASE 2

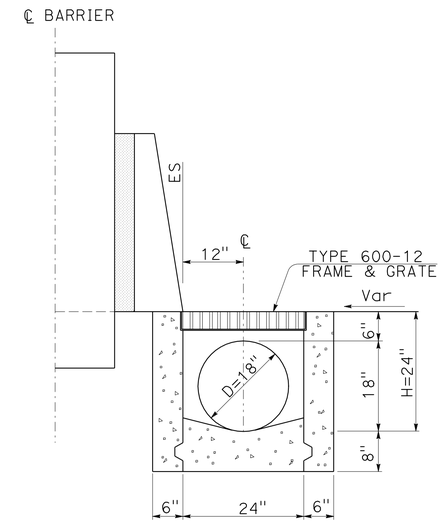

AT CONCRETE BARRIER TRANSITION

CASE 3

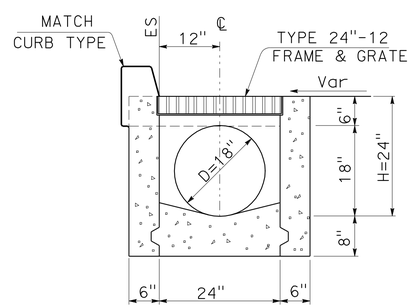

AT CURB AND GUTTER

CASE 4

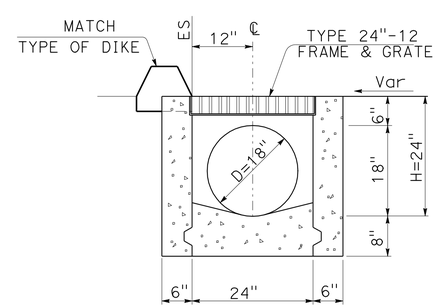

AT AC DIKE

CASE 5

TYPE G2 INLET

18" SCSP

CLEANOUT DETAILS

DRAINAGE DETAILS

NO SCALE

DD-7

STATE OF CALIFORNIA - DEPARTMENT OF TRANSPORTATION
Caltrans
HYDRAULICS

FUNCTIONAL SUPERVISOR: R.M SASAKI

CALCULATED-DESIGNED BY: SIDDHARTH RANA
CHECKED BY: R.M SASAKI

REVISED BY | DATE REVISED

LAST REVISION 00-00-00 | DATE PLOTTED => 21-MAY-2012 | TIME PLOTTED => 16:49

Dist	COUNTY	ROUTE	POST MILES TOTAL PROJECT	SHEET No.	TOTAL SHEETS
07	LA	5	29.4/31.6	190	1931

REGISTERED CIVIL ENGINEER DATE 1/31/12

5-21-12
PLANS APPROVAL DATE

REGISTERED PROFESSIONAL ENGINEER R.M SASAKI No. 30849 Exp. 3-31-12 CIVIL STATE OF CALIFORNIA

THE STATE OF CALIFORNIA OR ITS OFFICERS OR AGENTS SHALL NOT BE RESPONSIBLE FOR THE ACCURACY OR COMPLETENESS OF SCANNED COPIES OF THIS PLAN SHEET.

NOTES:

1. FOR INFORMATION AND DETAILS NOT SHOWN SEE STD PLANS D73, D77A, D98A AND D98B.

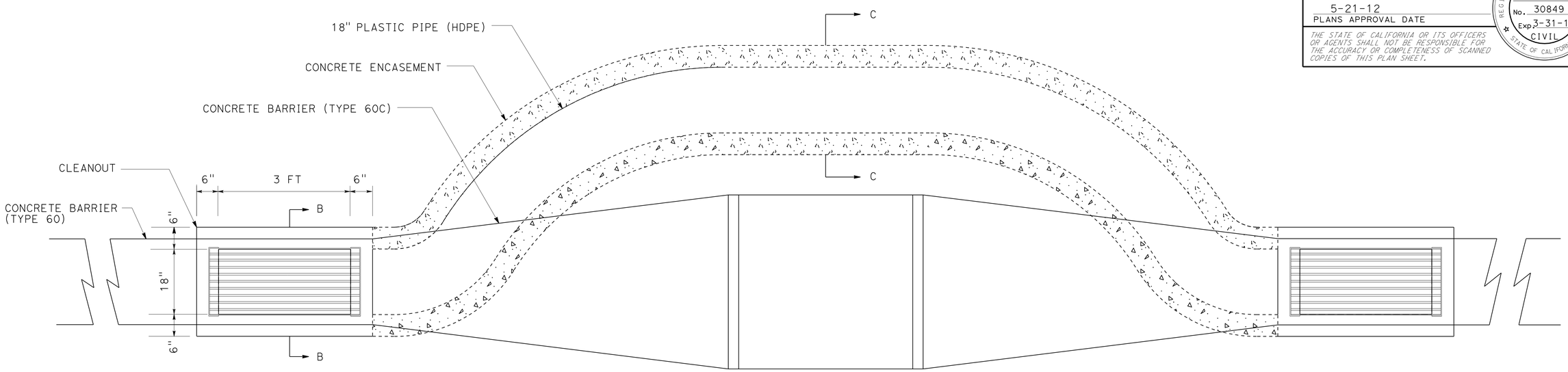

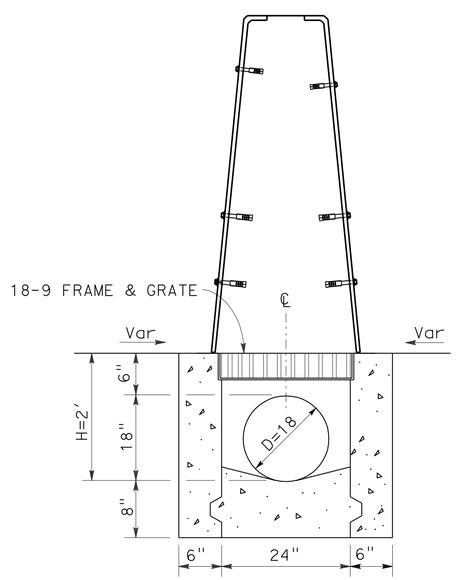

SECTION B-B

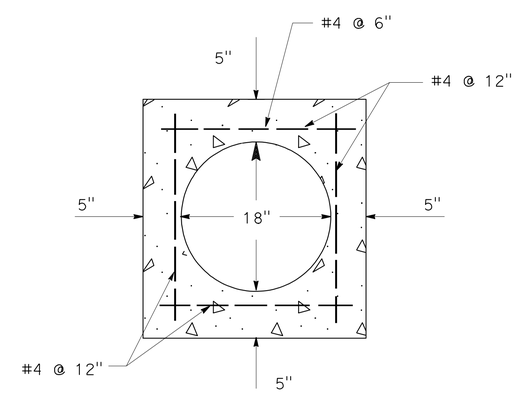

SECTION C-C

DRAINAGE DETAILS

NO SCALE

DD-8

STATE OF CALIFORNIA - DEPARTMENT OF TRANSPORTATION
Caltrans
HYDRAULICS

FUNCTIONAL SUPERVISOR: R.M SASAKI
CALCULATED-DESIGNED BY: SIDDHARTH RANA
CHECKED BY: R.M SASAKI
REVISED BY
DATE REVISED

LAST REVISION 00-00-00
DATE PLOTTED => 21-MAY-2012
TIME PLOTTED => 16:49

Dist	COUNTY	ROUTE	POST MILES TOTAL PROJECT	SHEET No.	TOTAL SHEETS
07	LA	5	29.4/31.6	191	1931

REGISTERED CIVIL ENGINEER DATE 1/31/12

5-21-12
PLANS APPROVAL DATE

REGISTERED PROFESSIONAL ENGINEER R.M SASAKI No. 30849 Exp. 3-31-12 CIVIL STATE OF CALIFORNIA

THE STATE OF CALIFORNIA OR ITS OFFICERS OR AGENTS SHALL NOT BE RESPONSIBLE FOR THE ACCURACY OR COMPLETENESS OF SCANNED COPIES OF THIS PLAN SHEET.

NOTES:

1. ROUND EDGE OF OUTLET TO 3" RADIUS.
2. REINFORCEMENT SHALL BE 1½" CLEAR FROM THE FACE OF CONCRETE.
3. IN CONNECTING TO AN EXISTING STRUCTURE BREAK OUT PORTIONS OF THE EXISTING STRUCTURE SIX INCHES OUTSIDE ITS INTERSECTION WITH THE NEW CONNECTION. BEND ENDS OF #4 BARS OVER CONNECTION OPENING AS REQUIRED.

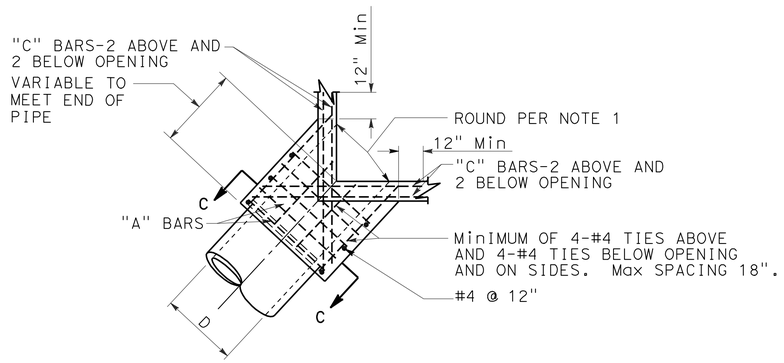

PLAN
CORNER CONNECTION

D	T	"A"	"B"-"C"
18"	5"	#4 @ 6"	#5
24"	6"		

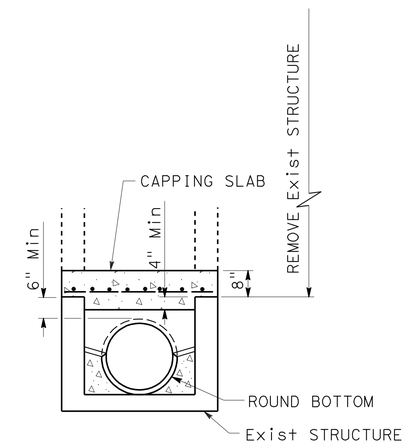

SECTION A-A

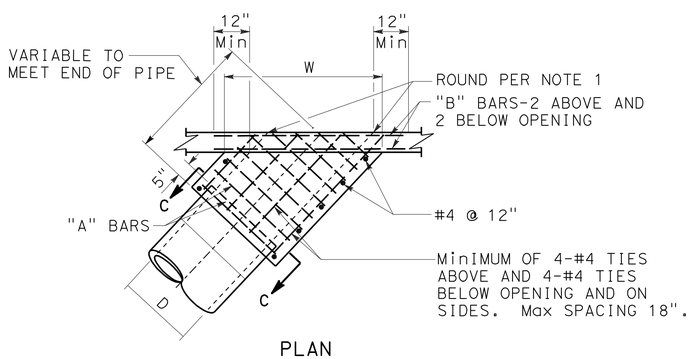

PLAN
SIDE CONNECTION

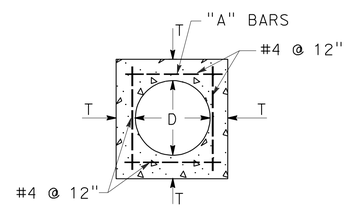

SECTION C-C

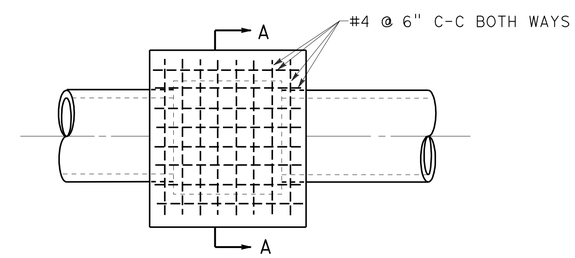

PLAN
CAP INLET DETAIL

DRAINAGE DETAILS

NO SCALE

DD-9

STATE OF CALIFORNIA - DEPARTMENT OF TRANSPORTATION
Caltrans
HYDRAULICS

FUNCTIONAL SUPERVISOR: R.M SASAKI
CALCULATED-DESIGNED BY: SIDDHARTH RANA
CHECKED BY: R.M SASAKI
REVISED BY
DATE REVISED

LAST REVISION 00-00-00
DATE PLOTTED => 21-MAY-2012
TIME PLOTTED => 16:49

Dist	COUNTY	ROUTE	POST MILES TOTAL PROJECT	SHEET No.	TOTAL SHEETS
07	LA	5	29.4/31.6	192	1931

REGISTERED CIVIL ENGINEER DATE 1/31/12

5-21-12
PLANS APPROVAL DATE

REGISTERED PROFESSIONAL ENGINEER R.M SASAKI No. 30849 Exp. 3-31-12 CIVIL STATE OF CALIFORNIA

THE STATE OF CALIFORNIA OR ITS OFFICERS OR AGENTS SHALL NOT BE RESPONSIBLE FOR THE ACCURACY OR COMPLETENESS OF SCANNED COPIES OF THIS PLAN SHEET.

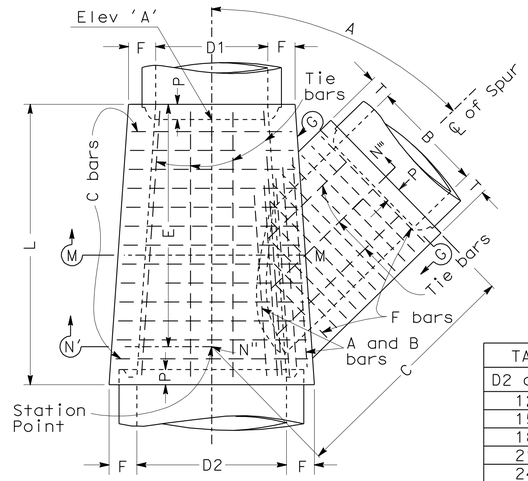

PLAN

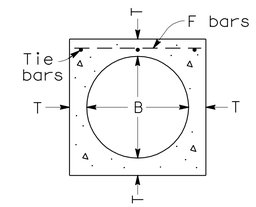

SECTION G-G

TABLE OF VALUES FOR F AND T			
D2 or B	F or T	D2 or B	F or T
12"	4"	63"	10"
15"	4 1/4"	66"	10 1/4"
18"	4 1/2"	69"	10 3/4"
21"	5"	72"	11"
24"	5 1/4"	78"	11 3/4"
27"	5 1/2"	84"	12 1/2"
30"	6"	90"	13 1/4"
33"	6 1/4"	96"	14"
36"	6 1/2"	102"	15 1/2"
39"	7"	108"	16"
42"	7 1/2"	114"	16 1/2"
45"	7 3/4"	120"	17"
48"	8"	126"	17"
51"	8 1/2"	132"	17 1/2"
54"	9"	138"	17 1/2"
57"	9 1/4"	144"	18"
60"	9 1/2"		

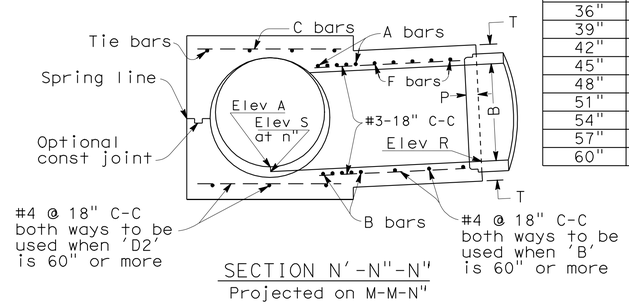

SECTION N'-N"-N"
Projected on M-M-N"

NOTES

1. VALUES for 'A', 'B', 'C', 'D1', 'D2', 'E', 'L', Elev 'A', Elev 'B', Elev 'R' and Elev 'S' are shown on Drainage Plans.
2. EMBEDMENT 'P' shall be 5" for pipe diameters 12" to 96" and 8" for pipe diameters 102" to 144".
3. FLOOR of structure shall be steel troweled to spring line.
4. REINFORCEMENT STEEL shall be 1½" clear from face of concrete unless otherwise shown. A and B bars need not be longer than the outside diagonal width of the lateral spur.
5. STEEL SCHEDULE:

Dia B or D2	A or B bars	C or F bars
12" to 39"	#5 @ 3"	#4 @ 6"
42" to 84"	#6 @ 3"	#5 @ 6"
90" to 144"	#7 @ 3"	#6 @ 6"
Tie bars - #3 @ 18" C-C		

6. ELEVATION 'S' applies at center of main line on prolongation of invert of spur.
7. JUNCTION STRUCTURE shall be poured in one continuous operation, except that the Contractor shall have the option of placing at the spring line a construction joint with a longitudinal keyway.
8. LATERALS - Where laterals enter both sides of structure, they shall be designated on the Drainage Plan as a right or left, facing in the direction of stationing.

JUNCTION STRUCTURE NO 2 (JS 2)

DRAINAGE DETAILS

NO SCALE

DD-10

STATE OF CALIFORNIA - DEPARTMENT OF TRANSPORTATION
Caltrans® HYDRAULICS

FUNCTIONAL SUPERVISOR: R.M SASAKI
CALCULATED-DESIGNED BY: SIDDHARTH RANA
CHECKED BY: R.M SASAKI
REVISED BY
DATE REVISED

LAST REVISION 00-00-00
DATE PLOTTED => 21-MAY-2012
TIME PLOTTED => 16:49

Dist	COUNTY	ROUTE	POST MILES TOTAL PROJECT	SHEET No.	TOTAL SHEETS
07	LA	5	29.4/31.6	193	1931

REGISTERED CIVIL ENGINEER DATE 1/31/12

5-21-12
PLANS APPROVAL DATE

REGISTERED PROFESSIONAL ENGINEER R.M SASAKI No. 30849 Exp. 3-31-12 CIVIL STATE OF CALIFORNIA

THE STATE OF CALIFORNIA OR ITS OFFICERS OR AGENTS SHALL NOT BE RESPONSIBLE FOR THE ACCURACY OR COMPLETENESS OF SCANNED COPIES OF THIS PLAN SHEET.

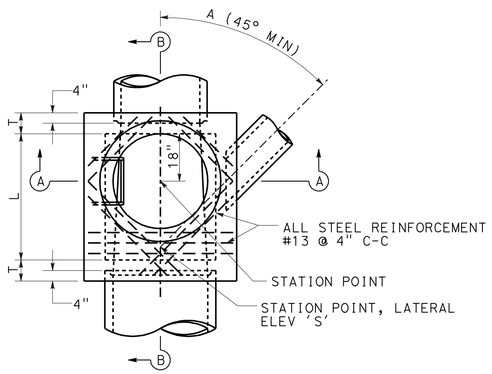

PLAN
(SHAFT NOT SHOWN)

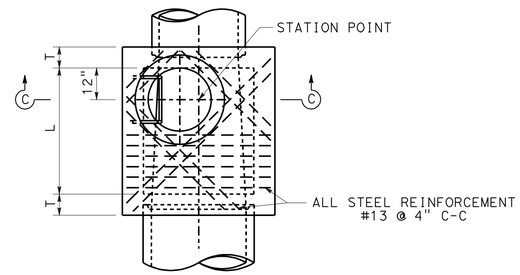

PLAN
(SHAFT NOT SHOWN)

NOTES

1. HEIGHT "H" (IN SEC A-A AND SEC B-B) SHALL BE NOT LESS THAN 4.6′, BUT MAY BE INCREASED PROVIDED THAT THE VALUE OF "M" SHALL NOT BE LESS THAN THE MINIMUM SPECIFIED AND THAT THE REDUCER SHALL BE USED. FOR "H" (IN SEC C-C) SEE NOTE 4.
2. LENGTH "L" SHALL BE 4.0′ UNLESS SHOWN OTHERWISE ON DRAINAGE PLAN.
3. SHAFT SHALL BE CONSTRUCTED AS PER SEC C-C AND DETAIL N WHEN DEPTH "M" FROM STREET GRADE TO TOP OF BOX IS LESS THAN 2.85′ FOR PAVED STREETS OR 3.5′ FOR UNPAVED STREETS.
4. DEPTH "P" MAY BE REDUCED TO AN ABSOLUTE LIMIT OF 6" WHEN LARGER VALUES OF "P" WOULD REDUCE "H" (IN SEC C-C) TO 3.5′ OR LESS.
5. "T" SHALL BE 8" FOR VALUES OF "H" UP TO AND INCLUDING 8′. "T" SHALL BE 10" FOR VALUES OF "H" OVER 8′.
6. UNLESS OTHERWISE SHOWN, STEPS SHALL BE PLACED ON 12" ON CENTERS. THE LOWEST STEP SHALL BE NOT MORE THAN 16" ABOVE THE LEDGE AT THE SIDE OF MANHOLE FLOOR.
7. BODY OF MANHOLE SHALL BE POURED IN ONE CONTINUOUS OPERATION, EXCEPT THAT THE CONTRACTOR SHALL HAVE THE OPTION OF PLACING AT THE SPRING LINE A CONSTRUCTION JOINT WITH A LONGITUDINAL KEYWAY.
8. REINFORCING STEEL SHALL BE 1.6" CLEAR FROM FACE OF CONCRETE.
9. FLOOR OF MANHOLE SHALL BE STEEL-TROWELED TO SPRING LINE.
10. RINGS, REDUCER, AND PIPE FOR ACCESS SHAFT SHALL BE SEATED IN 1:2 CEMENT MORTAR AND NEATLY POINTED OR WIPED INSIDE SHAFT.
11. MANHOLE FRAME AND COVER PER STANDARD PLAN B7-11 DETAIL U45.
12. STEP DETAIL PER STANDARD PLANS D74C.

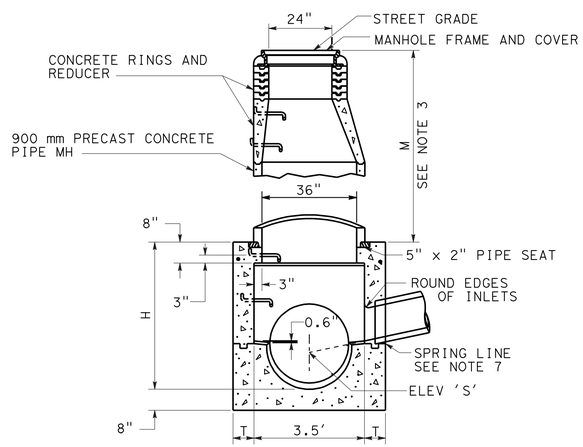

SECTION A-A

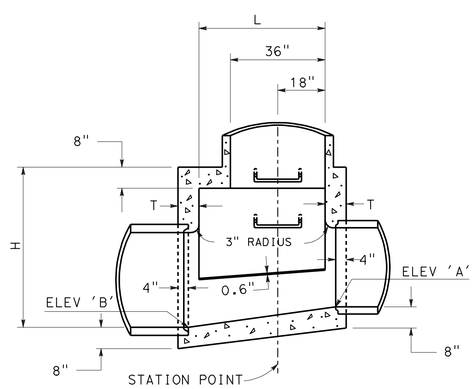

SECTION B-B

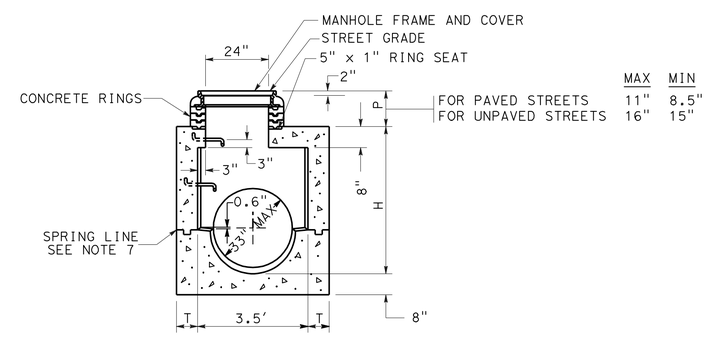

	MAX	MIN
FOR PAVED STREETS	11"	8.5"
FOR UNPAVED STREETS	16"	15"

SECTION C-C

MANHOLE NO 1 (MH NO 1)

DRAINAGE DETAILS

NO SCALE

DD-11

STATE OF CALIFORNIA - DEPARTMENT OF TRANSPORTATION
Caltrans® HYDRAULICS

FUNCTIONAL SUPERVISOR: R.M SASAKI
CALCULATED-DESIGNED BY: SIDDHARTH RANA
CHECKED BY: R.M SASAKI
REVISED BY / DATE REVISED

LAST REVISION 00-00-00 | DATE PLOTTED => 21-MAY-2012 | TIME PLOTTED => 16:49

Dist	COUNTY	ROUTE	POST MILES TOTAL PROJECT	SHEET No.	TOTAL SHEETS
07	LA	5	29.4/31.6	194	1931

REGISTERED CIVIL ENGINEER 5/15/12 DATE

5-21-12
PLANS APPROVAL DATE

REGISTERED PROFESSIONAL ENGINEER RICHARD STEVEN AGOR No. 57082 Exp. 12/31/13 CIVIL STATE OF CALIFORNIA

THE STATE OF CALIFORNIA OR ITS OFFICERS OR AGENTS SHALL NOT BE RESPONSIBLE FOR THE ACCURACY OR COMPLETENESS OF SCANNED COPIES OF THIS PLAN SHEET.

CITY OF BURBANK
150 N 3RD ST
BURBANK, CA 91510

TETRA TECH
17885 VON KARMAN AVE
IRVINE, CA 92614

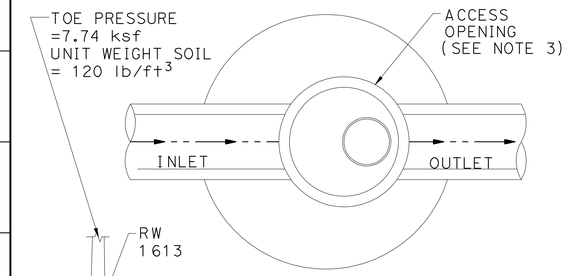

PLAN VIEW

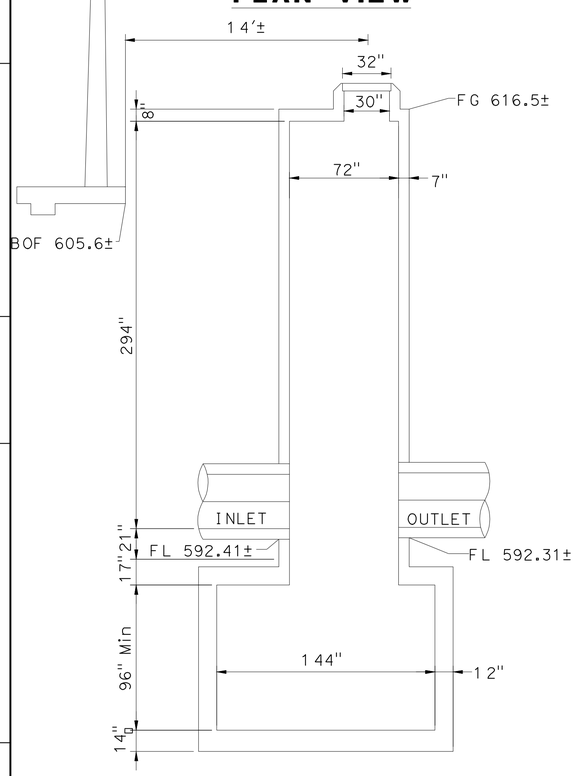

ELEVATION VIEW

NOTE:

1. THE CONTRACTOR SHALL PROVIDE 7200 US GALLON CAPACITY HYDRODYNAMIC SEPARATOR.
2. THE HYDRODYNAMIC SEPARATOR IS WITHIN CLOSE PROXIMITY OF CALTRANS RW 1613 AND FALLS WITHIN THE LINE OF INFLUENCE OF THE RETAINING WALL FOOTING. ADDITIONAL REINFORCEMENT IS REQUIRED AND SHALL BE SUBMITTED FOR REVIEW PRIOR TO PURCHASE OF SEPARATOR.
3. THE COVER SHOULD BE POSITIONED PER MANUFACTURER REQUIREMENTS.
4. THE DIFFERENCE BETWEEN THE SEPARATOR INLET PIPE ELEVATION AND THE SEPARATOR OUTLET PIPE ELEVATION MUST BE 1 INCH.

1 HYDRODYNAMIC SEPARATOR DETAIL
NO SCALE

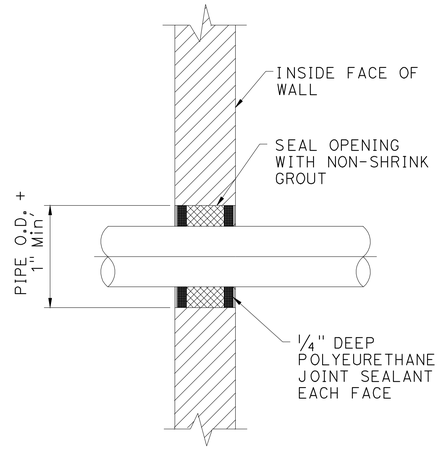

NOTE:

A CEMENT MORTAR PATCH COATING SHALL EXTEND APPROXIMATELY 3" AROUND OPENING.

2 PIPE PENETRATION WALL
NO SCALE

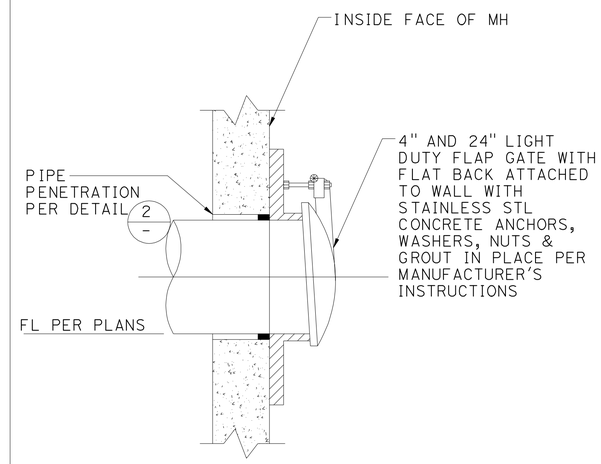

3 FLAPGATE DETAIL
NO SCALE

4 NOT USED

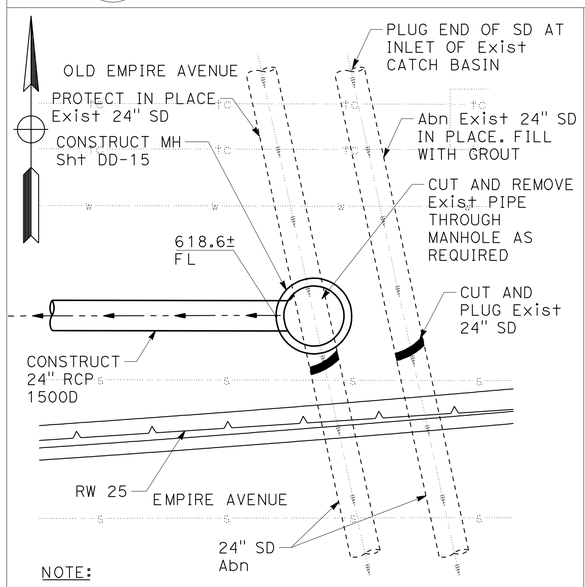

NOTE:

THE CONTRACTOR SHALL POTHOLE AND VERIFY POINTS OF CONNECTION PRIOR TO ANY CONSTRUCTION ACTIVITY.

5 24" RCP CONNECTION DETAIL
SCALE 1" = 5'

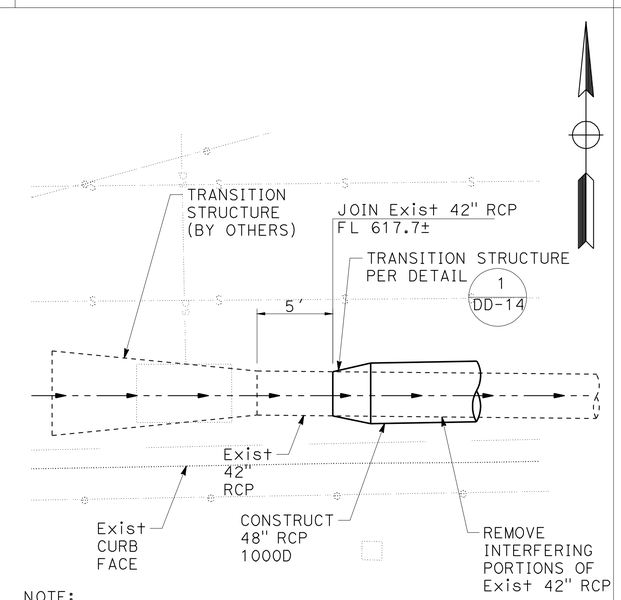

NOTE:

THE CONTRACTOR SHALL POTHOLE AND VERIFY POINTS OF CONNECTION PRIOR TO ANY CONSTRUCTION ACTIVITY.

6 42" RCP CONNECTION DETAIL
SCALE 1" = 5'

NOTE:

THE CONTRACTOR SHALL POTHOLE AND VERIFY POINTS OF CONNECTION PRIOR TO ANY CONSTRUCTION ACTIVITY.

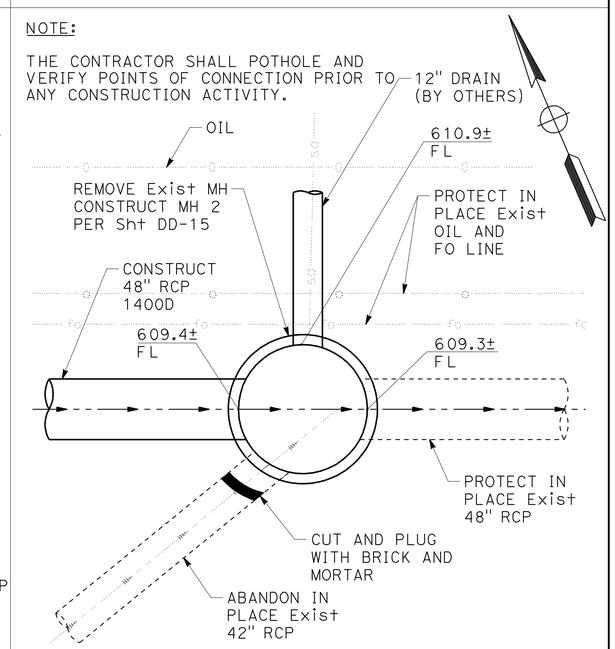

7 48" RCP CONNECTION DETAIL
SCALE 1" = 5'

DRAINAGE DETAILS
SCALE AS SHOWN

DD-12

STATE OF CALIFORNIA - DEPARTMENT OF TRANSPORTATION
Caltrans
HYDRAULICS
CONSULTANT FUNCTIONAL SUPERVISOR: STEVEN AGOR
CALCULATED-DESIGNED BY: CRISNA ESTRADA
CHECKED BY: STEVEN AGOR
REVISED BY
DATE REVISED

LAST REVISION 02-14-12
DATE PLOTTED => 21-MAY-2012
TIME PLOTTED => 16:49

Dist	COUNTY	ROUTE	POST MILES TOTAL PROJECT	SHEET No.	TOTAL SHEETS
07	LA	5	29.4/31.6	195	1931

REGISTERED CIVIL ENGINEER 5/15/12 DATE

5-21-12
PLANS APPROVAL DATE

REGISTERED PROFESSIONAL ENGINEER RICHARD STEVEN AGOR No. 57082 Exp. 12/31/13 CIVIL STATE OF CALIFORNIA

THE STATE OF CALIFORNIA OR ITS OFFICERS OR AGENTS SHALL NOT BE RESPONSIBLE FOR THE ACCURACY OR COMPLETENESS OF SCANNED COPIES OF THIS PLAN SHEET.

CITY OF BURBANK
150 N 3RD ST
BURBANK, CA 91510

TETRA TECH
17885 VON KARMAN AVE
IRVINE, CA 92614

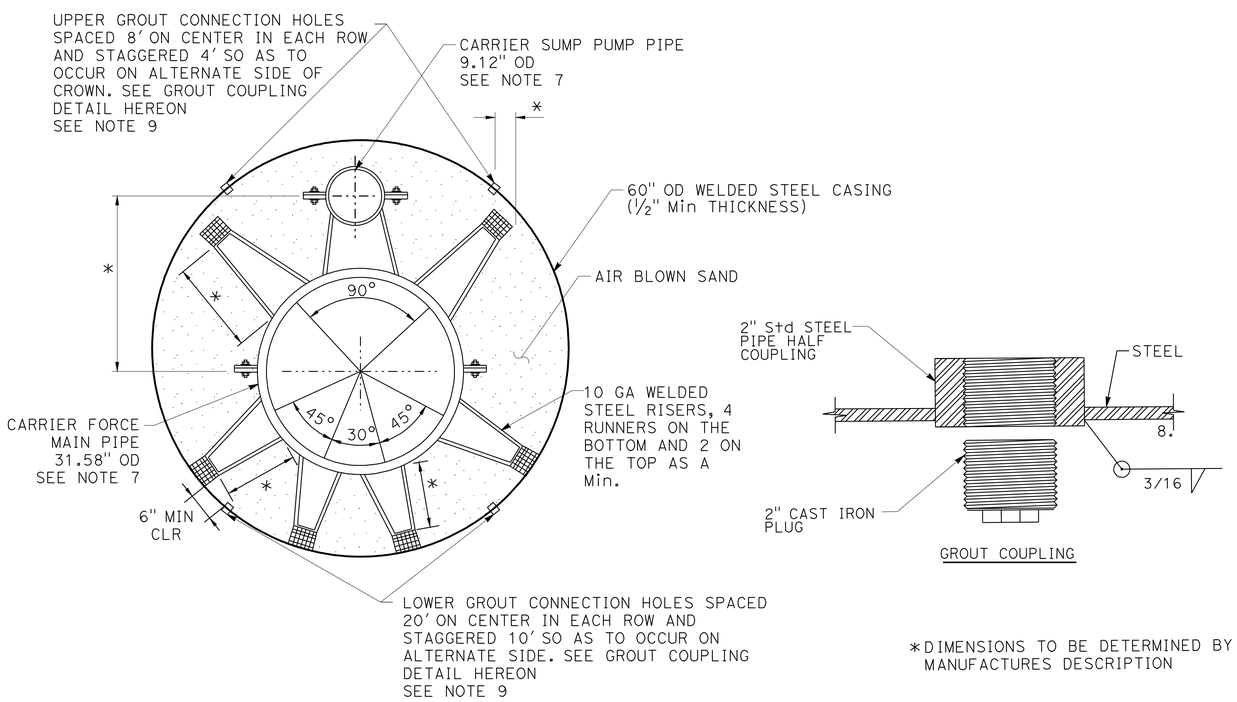

*DIMENSIONS TO BE DETERMINED BY MANUFACTURES DESCRIPTION

1 JACKED STEEL CASING
NO SCALE

NOTES:

1. CASING SHALL BE INSTALLED BY THE BORE AND JACK METHOD.
2. CASING SPACERS SHALL BE EPOXY COATED (0.4-0.6 INCHES THICK) CUSTOM MADE AND SHALL BE CONSTRUCTED PER MANUFACTURER'S RECOMMENDATIONS.
3. THE ENTIRE CASING SHALL BE JOINED BY Cont WELD. ALL FIELD WELDS SHALL BE BUTT WELDED, FULL CIRCUMFERENCE WITH FULL PENETRATION.
4. CASINGS SHALL BE BORED AND JACKED TO A TOLERANCE AS SPECIFIED IN THE SPECIAL PROVISIONS. UPSTREAM AND DOWNSTREAM Elev OF CARRIER PIPE TO BE VERIFIED PRIOR TO FILLING ANNULAR SPACE WITH SAND.
5. CASING PIPE SHALL BE NEW.
6. CARRIER PIPE SHALL BE AIR PRESSURE TESTED AND VIDEO INSPECTED PRIOR TO FILLING ANNULAR SPACE.
   PERIPHERY OF CASING TO BE PRESSURE GROUTED AS SHOWN.
7. THE CONTRACTOR SHALL CONFIRM THE ACTUAL OUTSIDE Dia OF THE CARRIER PIPE PRIOR TO ORDERING THE CUSTOMIZED CASING SPACERS. SHOP DRAWINGS SHALL BE SUBMITTED PRIOR TO ORDERING THE CASING SPACERS.
8. PERIPHERY OF CASING TO BE PRESSURE GROUTED AS SHOWN.
9. THE CONTRACTOR SHALL COORDINATE THE LOCATIONS OF THE CASING SPACERS AND GROUT CONNECTION HOLES TO MAINTAIN A Min 6" CLEARANCE.

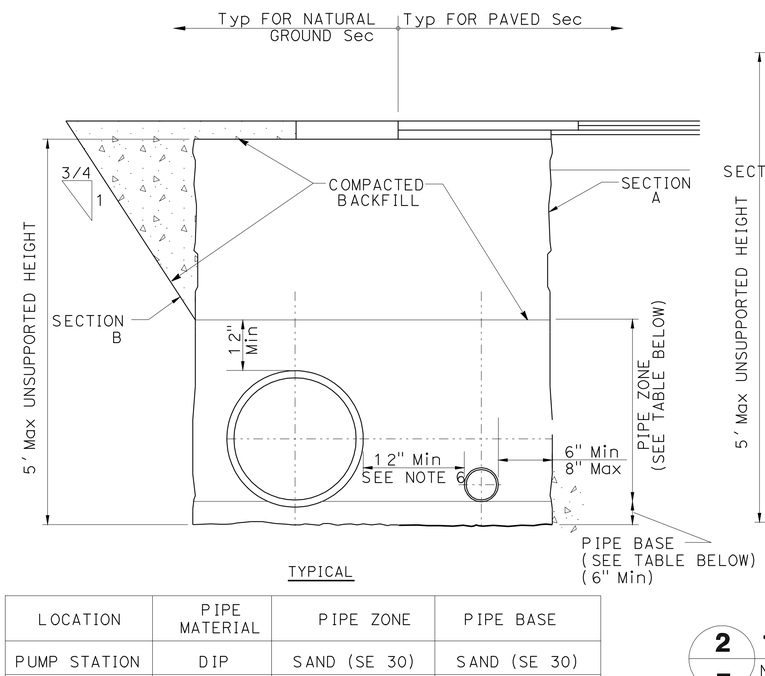

TYPICAL

LOCATION	PIPE MATERIAL	PIPE ZONE	PIPE BASE
PUMP STATION	DIP	SAND (SE 30)	SAND (SE 30)
EMPIRE Ave	RCP	1" CRUSHED ROCK	1" CRUSHED ROCK

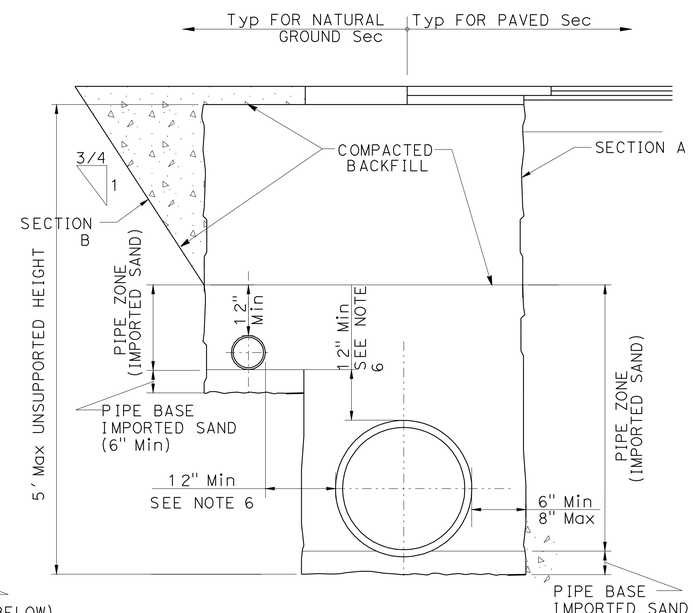

SAN FERNANDO Blvd
10'x10' RECIEVING PIT TO DRAINAGE SYSTEM 72j MH

2 TRENCH DETAIL
NO SCALE

NOTES:

1. ALTERNATE TRENCH SECTIONS (A AND B) ARE FOR USE ONLY WHERE STABLE, COMPACT SOIL CONDITIONS EXIST. WHERE BOULDERS OR LARGE OBSTRUCTIONS ARE ENCOUNTERED, THE TRENCH SECTION MAY BE WIDER AND DEEPER THAN THAT SHOWN. REMEDIAL MEASURES MAY THEN BE REQUIRED BY THE ENGINEER OR OWNER'S REPRESENTATIVE.
   A. VERTICAL TRENCH WALL SECTION
      1. FOR DEPTH UP TO 5 FEET, NO TRENCH SUPPORT IS REQUIRED.
      2. FOR DEPTH EXCEEDING 5 FEET, SHORING OR SOLID SHEATHING IS REQUIRED.
   B. COMBINATION OF VERTICAL AND SLOPING TRENCH WALL SECTION
      1. TRENCH DEPTH NOT EXCEEDING 5 FEET SHALL HAVE VERTICAL WALLS IN PIPE ZONE UNLESS OTHERWISE APPROVED, BY ENGINEER, OR WHERE SPECIFIED.
      2. FOR TRENCHES WITH COMBINED WALLS AND ANY DEPTH EXCEEDING 5 FEET, DESIGN CALCULATIONS BY A REGISTERED CALIFORNIA CIVIL/STRUCTURAL ENGINEER AND APPROVAL BY GOVERNING AGENCY OF ACCEPTABLE METHODS ARE REQUIRED.
2. WHERE WET, UNSTABLE OR RUNNING SOIL IS ENCOUNTERED, SOLID SHEATHING IS REQUIRED FOR ALL VERTICAL TRENCH WALLS. WORK WILL STOP UNTIL NEW CALCULATIONS FOR SUCH ARE SUBMITTED AND ACCEPTED.
3. ALL PIPE SHALL BE CONSTRUCTED WITH A MINIMUM OF 48" OF COVER UNLESS OTHERWISE NOTED ON THE PLANS.
4. THE CONTRACTOR SHALL PROVIDE HAND EXCAVATED "BELL HOLE" FOR EACH PIPE JOINT SO THAT WEIGHT OF PIPE DOES NOT BEAR ON THE BELL. CONTRACTOR SHALL REFILL AND HAND-TAMP EACH "BELL HOLE" PRIOR TO COMPLETING THE PLACEMENT OF PIPE BEDDING.
5. THE CONTRACTOR SHALL ENCASE UTILITIES CROSSING THE TRENCH WITH ONE FOOT OF SAND AROUND THE UTILITY WHEN BACKFILL IS ONE SACK SLURRY. SLURRY BACKFILL SHALL NOT ENCROACH WITHIN ONE FOOT OF UTILITY.
6. FOR MULTIPLE PIPE CONSTRUCTION, OD SEPARATION SHALL BE MEASURED FROM RESTRAINT JOINTS.
7. FOR CHANNEL CONNECTION, PROVIDE SLURRY BACKFILL WITHIN THE PIPE ZONE.

DRAINAGE DETAILS

SCALE AS SHOWN

DD-13

STATE OF CALIFORNIA - DEPARTMENT OF TRANSPORTATION
Caltrans
HYDRAULICS
CONSULTANT FUNCTIONAL SUPERVISOR: STEVEN AGOR
CALCULATED-DESIGNED BY: CRISNA ESTRADA
CHECKED BY: STEVEN AGOR
REVISED BY
DATE REVISED

LAST REVISION 02-14-12
DATE PLOTTED => 08-JUN-2012
TIME PLOTTED => 06:52

Dist	COUNTY	ROUTE	POST MILES TOTAL PROJECT	SHEET No.	TOTAL SHEETS
07	LA	5	29.4/31.6	196	1931

REGISTERED CIVIL ENGINEER 5/15/12 DATE

5-21-12
PLANS APPROVAL DATE

REGISTERED PROFESSIONAL ENGINEER RICHARD STEVEN AGOR No. 57082 Exp. 12/31/13 CIVIL STATE OF CALIFORNIA

THE STATE OF CALIFORNIA OR ITS OFFICERS OR AGENTS SHALL NOT BE RESPONSIBLE FOR THE ACCURACY OR COMPLETENESS OF SCANNED COPIES OF THIS PLAN SHEET.

CITY OF BURBANK
150 N 3RD ST
BURBANK, CA 91510

TETRA TECH
17885 VON KARMAN AVE
IRVINE, CA 92614

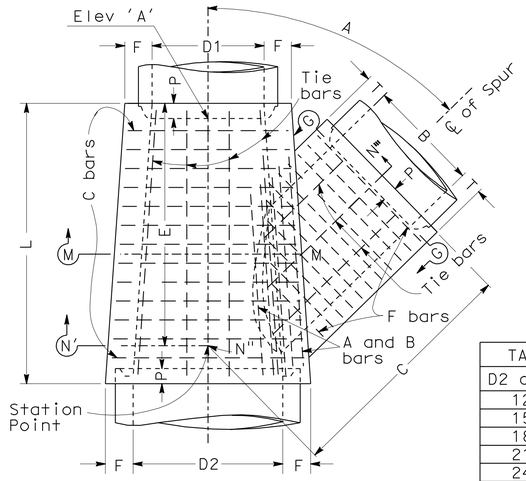

PLAN

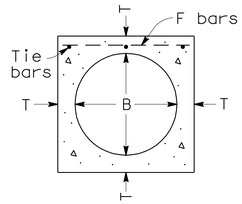

SECTION G-G

TABLE OF VALUES FOR F AND T			
D2 or B	F or T	D2 or B	F or T
12"	4"	63"	10"
15"	4 1/4"	66"	10 1/4"
18"	4 1/2"	69"	10 3/4"
21"	5"	72"	11"
24"	5 1/4"	78"	11 3/4"
27"	5 1/2"	84"	12 1/2"
30"	6"	90"	13 1/4"
33"	6 1/4"	96"	14"
36"	6 1/2"	102"	15 1/2"
39"	7"	108"	16"
42"	7 1/2"	114"	16 1/2"
45"	7 3/4"	120"	17"
48"	8"	126"	17"
51"	8 1/2"	132"	17 1/2"
54"	9"	138"	17 1/2"
57"	9 1/4"	144"	18"
60"	9 1/2"		

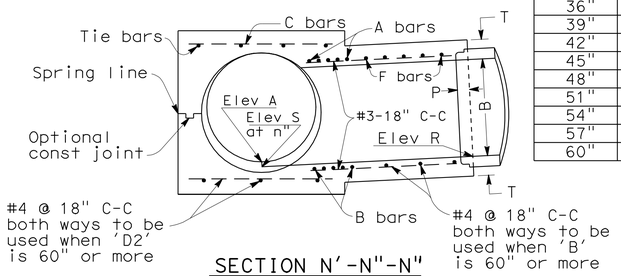

SECTION N'-N"-N"
Projected on M-M-N"

NOTES

1. VALUES for 'A', 'B', 'C', 'D1', 'D2', 'E', 'L', Elev 'A', Elev 'B', Elev 'R' and Elev 'S' are shown on Drainage Plans.
2. EMBEDMENT 'P' shall be 5" for pipe diameters 12" to 96" and 8" for pipe diameters 102" to 144".
3. FLOOR of structure shall be steel troweled to spring line.
4. REINFORCEMENT STEEL shall be 1½" clear from face of concrete unless otherwise shown. A and B bars need not be longer than the outside diagonal width of the lateral spur.
5. STEEL SCHEDULE:

Dia B or D2	A or B bars	C or F bars
12" to 39"	#5 @ 3"	#4 @ 6"
42" to 84"	#6 @ 3"	#5 @ 6"
90" to 144"	#7 @ 3"	#6 @ 6"
Tie bars - #3 @ 18" C-C		

6. ELEVATION 'S' applies at center of main line on prolongation of invert of spur.
7. JUNCTION STRUCTURE shall be poured in one continuous operation, except that the Contractor shall have the option of placing at the spring line a construction joint with a longitudinal keyway.
8. LATERALS - Where laterals enter both sides of structure, they shall be designated on the Drainage Plan as a right or left, facing in the direction of stationing.

1 TRANSITION STRUCTURE No. 1
NO SCALE

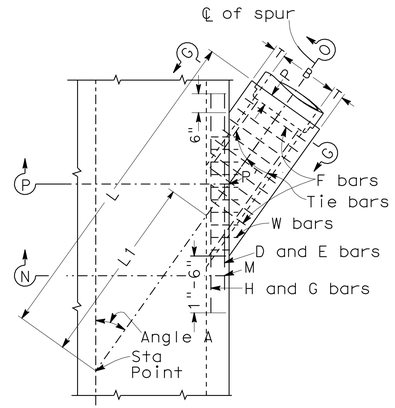

PLAN

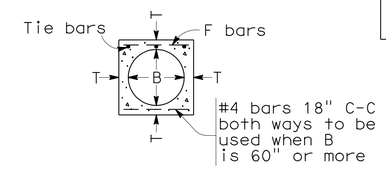

SECTION G-G

TABLE OF VALUES FOR T			
B	T	B	T
12"	4"	63"	10"
15"	4 1/4"	66"	10 1/4"
18"	4 1/2"	69"	10 3/4"
21"	5"	72"	11"
24"	5 1/4"	78"	11 3/4"
27"	5 1/2"	84"	12 1/2"
30"	6"	90"	13 1/4"
33"	6 1/4"	96"	14"
36"	6 1/2"	102"	15 1/2"
39"	7"	108"	16"
42"	7 1/2"	114"	16 1/2"
45"	7 3/4"	120"	17"
48"	8"	126"	17"
51"	8 1/2"	132"	17 1/2"
54"	9"	138"	17 1/2"
57"	9 1/4"	144"	18"
60"	9 1/2"		

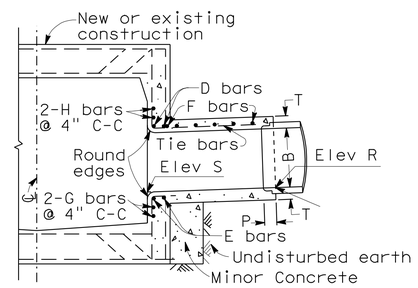

SECTION N-M-P'-O
Projected on P-P'-O

NOTES

1. VALUES for 'A', 'B', 'L', 'L1', 'Elev R' and 'Elev S' are shown on Drainage Plan.
2. STATIONS specified in Drainage Plan apply at intersection of centerlines of main line and lateral.
3. EMBEDMENT 'P' shall be 5" for pipe diameters 12" to 96" and 8" for pipe diameters 102" to 144".
4. REINFORCING STEEL shall be 1½" clear from face of concrete unless otherwise shown. W BARS are of size and spacing specified for wall steel on Drainage Plan, and shall be cut in center of opening and bent into top and bottom of junction structure. OMIT H BARS when soffit of spur is 1' or less below soffit of main line, and omit G bars when invert of spur is 1' or less above floor of main line.
5. STEEL SCHEDULE:

Dia B	D,E,H,G Bars	F Bars
12" to 39"	#5	#4 @ 6" C-C
42" to 84"	#6	#5 @ 6" C-C
90" to 144"	#7	#6 @ 6" C-C
Tie bars - #3 @ 18" C-C		

6. JUNCTION STRUCTURE shall be poured monolithic with main line storm drain or manhole.
7. FLOOR of structure shall be steel-troweled.

2 JUNCTION STRUCTURE No. 1
NO SCALE

DRAINAGE DETAILS
SCALE AS SHOWN
DD-14

STATE OF CALIFORNIA - DEPARTMENT OF TRANSPORTATION
Caltrans HYDRAULICS
CONSULTANT FUNCTIONAL SUPERVISOR STEVEN AGOR
CALCULATED-DESIGNED BY CRISNA ESTRADA
CHECKED BY STEVEN AGOR
REVISED BY
DATE REVISED

LAST REVISION 02-14-12
DATE PLOTTED => 21-MAY-2012
TIME PLOTTED => 16:50

Dist	COUNTY	ROUTE	POST MILES TOTAL PROJECT	SHEET No.	TOTAL SHEETS
07	LA	5	29.4/31.6	197	1931

REGISTERED CIVIL ENGINEER 5/15/12 DATE

5-21-12
PLANS APPROVAL DATE

REGISTERED PROFESSIONAL ENGINEER RICHARD STEVEN AGOR No. 57082 Exp. 12/31/13 CIVIL STATE OF CALIFORNIA

THE STATE OF CALIFORNIA OR ITS OFFICERS OR AGENTS SHALL NOT BE RESPONSIBLE FOR THE ACCURACY OR COMPLETENESS OF SCANNED COPIES OF THIS PLAN SHEET.

CITY OF BURBANK
150 N 3RD ST
BURBANK, CA 91510

TETRA TECH
17885 VON KARMAN AVE
IRVINE, CA 92614

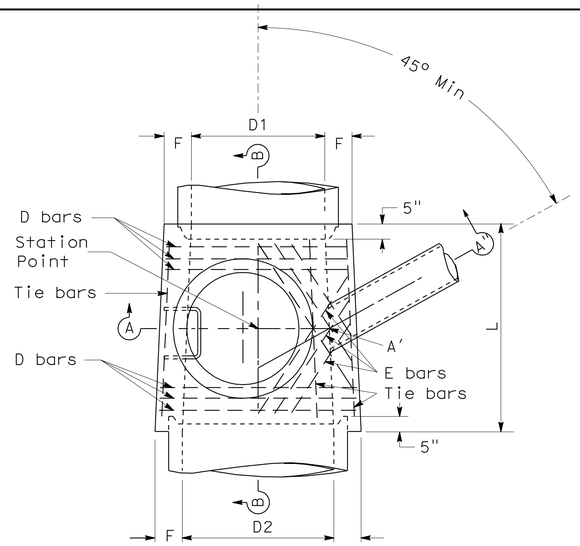

PLAN
(Shaft not shown)

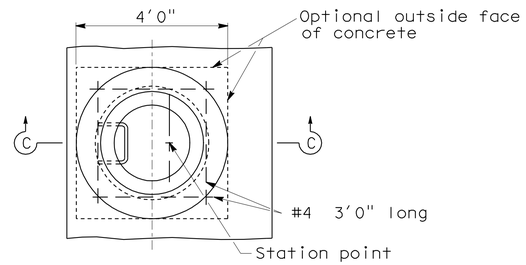

DETAIL N
(Shaft not shown)

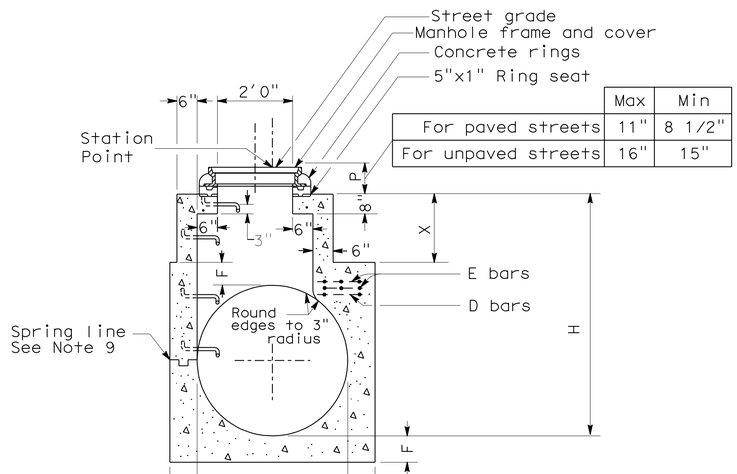

	Max	Min
For paved streets	11"	8 1/2"
For unpaved streets	16"	15"

SECTION C-C
(See note 10)

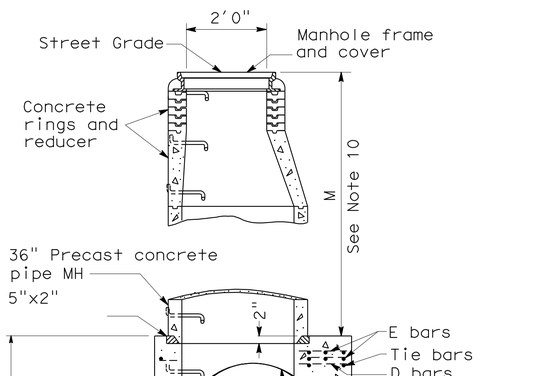

SECTION A-A'-A"

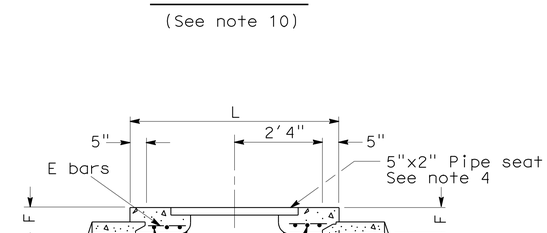

SECTION B-B

NOTES

1. Values for Elev 'A', Elev 'B', 'H', 'L', 'M' or 'P' and 'X' are shown on the drainage plan.
2. Center of manhole shaft shall be located over centerline of storm drain when diameter 'D1' is 48" or less, in which case place E bar symmetrically around shaft at 45° with centerline.
3. Length 'L' shall be 5'-6" unless shown otherwise on drainage plan.
4. Thickness of 'F' shall vary when necessary to provide level pipeseat, but shall not be less than tabular values for 'F' shown on this plan.
5. Reinforcing steel shall be 1 1/2" clear from face of concrete unless shown otherwise. Sizes and lengths are shown in table below.
6. Unless otherwise shown, steps shall be placed 12" on centers. The lowest step shall be not more than 16" above the ledge at side of manhole floor.
7. Rings, reducer, and pipe for access shaft shall be seated in 1:2 cement mortar and neatly pointed or wiped inside the shaft.
8. Floor of manhole shall be steel-troweled to spring line.
9. Body of manhole shall be poured in one continous operation, except that the contractor shall have the option of placing at the spring line a construction joint with a longitudinal keyway.
10. Section C-C: When depth of manhole from street grade to top of box is less than 2'-10 1/2" for paved streets or 3'-6" for unpaved streets, construct monolithic shaft as per section. When diameter 'D' is 48" or less, center of shaft shall be located as per note 2.
11. Manhole frame and cover per Standard Plan B7-11 detail 'U45'.
12. Step detail per Standard Plans D74C and D75C.
13. D bars shall be placed 3" C-C. E bars shall be spaced 4" C-C. Tie bars shall be #3 spaced 18" C-C or less.
14. When 'L' greater than 5'-6" is specified on drainage plan, continue D bars at 6" C-C.
15. Lengths shown in table are for longest bars. Where shorter bars are required, bend or cut to meet field requirements.

TABLE OF VALUES FOR F	
D2	F
36"	6 1/2"
39"	7"
42"	7 1/2"
45"	7 3/4"
48"	8"
51"	8 1/2"
54"	9"
57"	9 1/4"
60"	9 1/2"
63"	10"
66"	10 1/4"
69"	10 3/4"
72"	11"
78"	11 3/4"
84"	12 1/2"
90"	13 1/4"
96"	14"

STEEL TABLE						
	D bars			E bars		
D2	No Req	Size	Length	No Req	Size	Length
36"	6	#4	3'-10"	4	#4	2'-9"
39"	6	"	4'-2"	4	"	2'-11"
42"	6	#5	4'-6"	4	"	3'-2"
45"	6	"	4'-10"	4	"	3'-5"
48"	6	"	5'-1"	4	"	3'-7"
51"	6	"	5'-5"	6	"	4'-9"
54"	6	"	5'-9"	6	"	5'-1"
57"	6	"	6'-1"	6	"	5'-6"
60"	6	"	6'-4"	6	"	5'-11"
63"	6	"	6'-8"	6	"	6'-3"
66"	6	"	7'-0"	8	"	6'-8"
69"	6	"	7'-4"	8	"	6'-8"
72"	6	"	7'-7"	8	"	6'-8"
78"	6	"	8'-3"	8	"	6'-8"
84"	6	"	8'-10"	10	"	6'-8"
90"	6	#6	9'-6"	10	"	6'-8"
	6	"	10'-1"	10	"	6'-8"

1 **MANHOLE No. 2**
NO SCALE

DRAINAGE DETAILS
SCALE AS SHOWN
DD-15

STATE OF CALIFORNIA - DEPARTMENT OF TRANSPORTATION
Caltrans
HYDRAULICS
CONSULTANT FUNCTIONAL SUPERVISOR: STEVEN AGOR
CALCULATED-DESIGNED BY: CRISNA ESTRADA
CHECKED BY: STEVEN AGOR
REVISED BY
DATE REVISED

LAST REVISION 02-14-12
DATE PLOTTED => 21-MAY-2012
TIME PLOTTED => 16:50

Dist	COUNTY	ROUTE	POST MILES TOTAL PROJECT	SHEET No.	TOTAL SHEETS
07	LA	5	29.4/31.6	198	1931

REGISTERED CIVIL ENGINEER 5/15/12 DATE

5-21-12
PLANS APPROVAL DATE

REGISTERED PROFESSIONAL ENGINEER RICHARD STEVEN AGOR No. 57082 Exp. 12/31/13 CIVIL STATE OF CALIFORNIA

THE STATE OF CALIFORNIA OR ITS OFFICERS OR AGENTS SHALL NOT BE RESPONSIBLE FOR THE ACCURACY OR COMPLETENESS OF SCANNED COPIES OF THIS PLAN SHEET.

CITY OF BURBANK
150 N 3RD ST
BURBANK, CA 91510

TETRA TECH
17885 VON KARMAN AVE
IRVINE, CA 92614

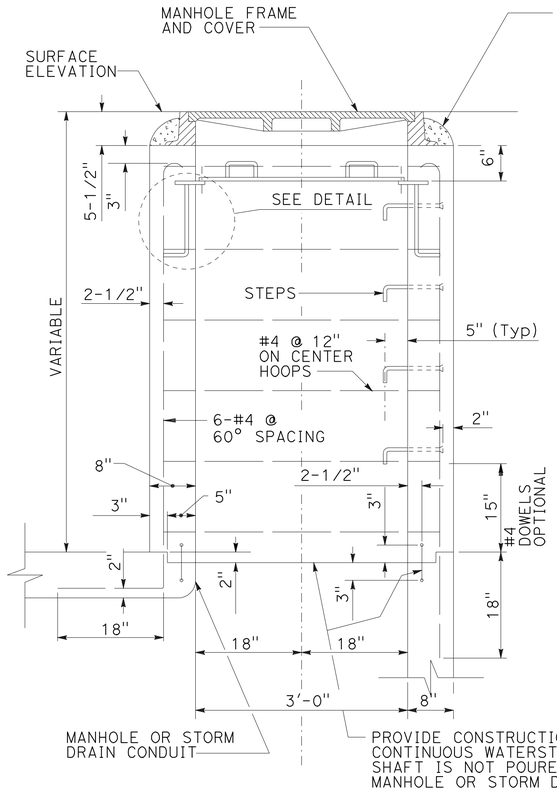

VERTICAL SECTION OF SPECIAL PRESSURE MANHOLE SHAFT

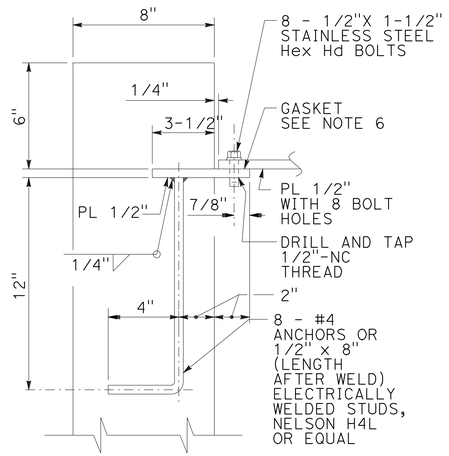

DETAIL

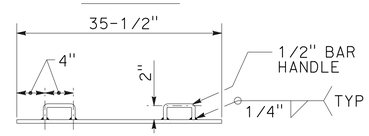

SECTION A-A

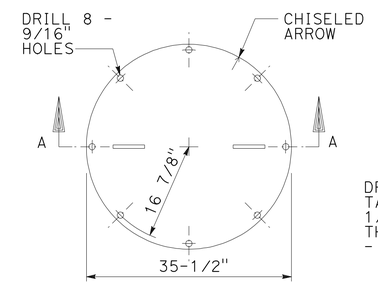

PLAN
PRESSURE PLATE

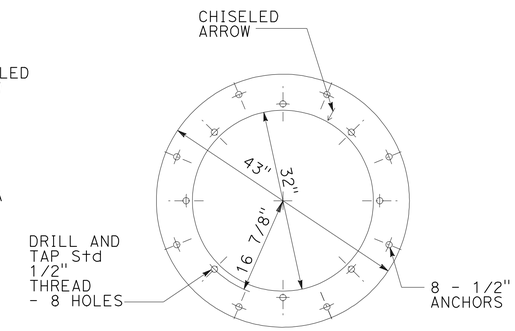

PLAN
PRESSURE PLATE RING

1 MANHOLE No. 3
NO SCALE

NOTES:

1. THIS STRUCTURE MAY BE USED FOR HYDROSTATIC HEADS UP TO 25' ABOVE THE PRESSURE PLATE.
2. 36" MANHOLE FRAME AND COVER PER STANDARD PLAN B7-11 DETAIL U46.
3. REINFORCEMENT SHALL BE PER ASTM A 615, GRADE 40 AND SHALL TERMINATE 1-1/2" CLEAR OF CONCRETE SURFACES UNLESS OTHERWISE SHOWN. HOOPS MAY BE ELECTRICALLY BUTT WELDED OR THE ENDS LAPPED 18".
4. THE MANHOLE SHAFT SHALL BE LOCATED ABOVE AND IN LINE WITH THE SIDE OF THE CONDUIT BELOW.
5. STEPS DETAIL PER STANDARD PLAN D74C. UNLESS OTHERWISE SHOWN, STEPS SHALL BE UNIFORMLY SPACED 14" TO 15" ON CENTER.
6. GASKET MATERIAL SHALL BE NEOPRENE 1/16" THICK BY 1-1/4" WIDE.
7. BOLTS SHALL BE STAINLESS STEEL CONFORMING TO ASTM A 320, GRADE B8.
8. PRESSURE PLATE AND PRESSURE PLATE RING SHALL BE STEEL CONFORMING TO ASTM A 36 AND SHALL BE GALVANIZED. PLATES SHALL BE MARKED IN SETS AND A CHISELED ARROW STAMPED ON BOTH PLATES, AFTER DRILLING AND TAPPING, TO FACILITATE FIELD ASSEMBLY.
9. FOR PHYSICAL REQUIREMENTS OF WATERSTOP PER CALTRANS STANDARD SPECIFICATIONS 51-1.14 WATER STOPS.

DRAINAGE DETAILS
SCALE AS SHOWN
DD-16

STATE OF CALIFORNIA - DEPARTMENT OF TRANSPORTATION
Caltrans HYDRAULICS
CONSULTANT FUNCTIONAL SUPERVISOR STEVEN AGOR
CALCULATED-DESIGNED BY CRISNA ESTRADA
CHECKED BY STEVEN AGOR
REVISED BY
DATE REVISED

LAST REVISION 02-14-12
DATE PLOTTED => 21-MAY-2012
TIME PLOTTED => 16:50

Dist	COUNTY	ROUTE	POST MILES TOTAL PROJECT	SHEET No.	TOTAL SHEETS
07	LA	5	29.4/31.6	199	1931

REGISTERED CIVIL ENGINEER 5/15/12 DATE

5-21-12
PLANS APPROVAL DATE

REGISTERED PROFESSIONAL ENGINEER RICHARD STEVEN AGOR No. 57082 Exp. 12/31/13 CIVIL STATE OF CALIFORNIA

THE STATE OF CALIFORNIA OR ITS OFFICERS OR AGENTS SHALL NOT BE RESPONSIBLE FOR THE ACCURACY OR COMPLETENESS OF SCANNED COPIES OF THIS PLAN SHEET.

CITY OF BURBANK
150 N 3RD ST
BURBANK, CA 91510

TETRA TECH
17885 VON KARMAN AVE
IRVINE, CA 92614

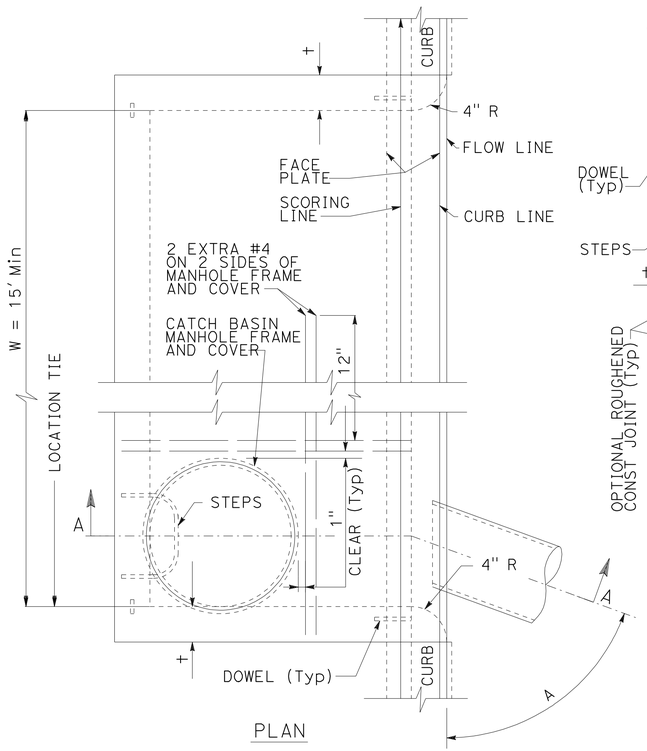

PLAN

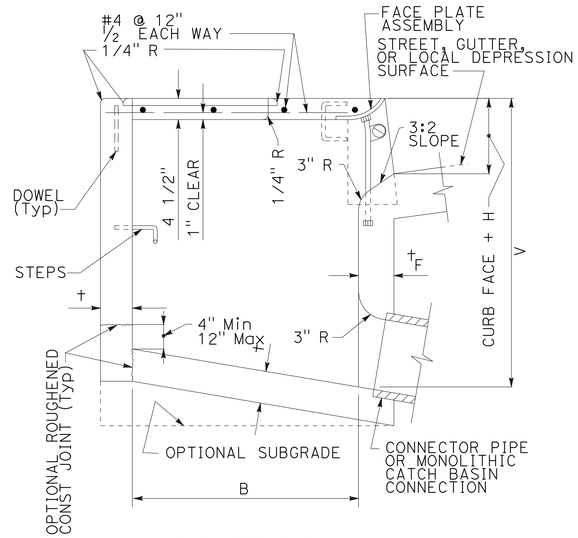

SECTION A-A

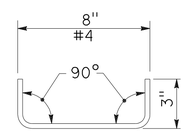

DOWEL DETAIL

STRUCTURAL DATA

WALL AND SLAB DIMENSIONS AND REINFORCEMENT REQUIREMENTS

Max W	Max V	†	$†_F$	REINFORCEMENT REQUIRED IN: FRONT WALL	REAR WALL	BOTTOM SLAB	END WALL
3.5'	8'	6"	6"	NO REINFORCEMENT	REINFORCEMENT REQUIRED		
3.5'	12'	8"	8"				
7'	6'	6"	6"				
7'	12'	8"	8"				
14'	4'	6"	6"				
↕	8'	6"	8"				
14'	12'	8"	10"				
21' AND 28'	4'	6"	6"			REQUIRED	
	6'	6"	8"				
	8'	8"	8"				
	10'	8"	10"				
	12'	8"	10"				

FOR W > 28', V > 12' OR B > 4' SEE PLANS

NOTES:

1. WHERE THE BASIN IS TO BE CONSTRUCTED WITHIN THE LIMITS OF EXISTING OR PROPOSED SIDEWALK OR IS CONTIGUOUS TO SUCH SIDEWALK, THE TOP SLAB OF THE BASIN MAY BE POURED EITHER MONOLITHIC WITH THE SIDEWALK OR SEPARATELY, USING THE SAME CLASS OF CONCRETE AS IN THE BASIN. WHEN POURED MONOLITHICALLY, THE SIDEWALK SHALL BE PROVIDED WITH A WEAKENED PLANE OR A 1" DEEP SAWCUT CONTINUOUSLY AROUND THE EXTERNAL PERIMETER OF THE CATCH BASIN WALLS, INCLUDING ACROSS THE FULL WIDTH OF THE SIDEWALK. SURFACE OF ALL EXPOSED CONCRETE SHALL CONFORM IN SLOPE, GRADE, COLOR, FINISH, AND SCORING TO EXISTING OR PROPOSED CURB AND WALK ADJACENT TO THE BASIN.

2. ALL CURVED CONCRETE SURFACES SHALL BE FORMED BY CURVED FORMS, AND SHALL NOT BE SHAPED BY PLASTERING.

3. FLOOR OF BASIN SHALL BE GIVEN A STEEL TROWEL FINISH AND SHALL HAVE A LONGITUDINAL AND LATERAL SLOPE OF 1:12 MINIMUM AND 1:3 MAXIMUM, EXCEPT WHERE THE GUTTER GRADE EXCEEDS 8%, IN WHICH CASE THE LONGITUDINAL SLOPE OF THE FLOOR SHALL BE THE SAME AS THE GUTTER GRADE. SLOPE FLOOR FROM ALL DIRECTIONS TO THE OUTLET.

4. DIMENSIONS:

   B = 3'-2"

   V = THE DIFFERENCE IN ELEVATION BETWEEN THE TOP OF THE CURB AND THE INVERT OF THE CATCH BASIN AT THE OUTLET = 4.5'.

   V_U= THE DIFFERENCE IN ELEVATION BETWEEN THE TOP OF THE CURB AND THE INVERT AT THE UPSTREAM END OF THE BASIN, AND SHALL BE DETERMINED BY THE REQUIREMENTS OF NOTE 3, BUT SHALL NOT BE LESS THAN CURB FACE PLUS 12".

   V_I= THE DIFFERENCE IN ELEVATION BETWEEN THE TOP OF THE CURB AND THE INVERT OF THE INLET, NOTED ON THE PLANS.

   H = NOTED ON THE PLANS.

   W = NOTED ON THE PLANS.

   A = THE ANGLE, IN DEGREES, INTERCEPTED BY THE CENTERLINE OF THE CONNECTOR PIPE AND THE CATCH BASIN WALL TO WHICH THE CONNECTOR PIPE IS ATTACHED.

5. PLACE CONNECTOR PIPES AS INDICATED ON THE PLANS. UNLESS OTHERWISE SPECIFIED, THE CONNECTOR PIPE SHALL BE LOCATED AT THE DOWNSTREAM END OF THE BASIN. WHERE THE CONNECTOR PIPE IS SHOWN AT A CORNER, THE CENTERLINE OF THE PIPE SHALL INTERSECT THE INSIDE CORNER OF THE BASIN. THE PIPE MAY BE CUT AND TRIMMED AT A SKEW NECESSARY TO INSURE MINIMUM 3" PIPE EMBEDMENT, ALL AROUND, WITHIN THE CATCH BASIN WALL, AND 3" RADIUS OF ROUNDING OF STRUCTURE CONCRETE, ALL AROUND, ADJACENT TO PIPE ENDS. A MONOLITHIC CATCH BASIN CONNECTION SHALL BE USED TO JOIN THE CONNECTOR PIPE TO THE CATCH BASIN WHENEVER ANGLE "A" IS LESS THAN 70° OR GREATER THAN 110°, OR WHENEVER THE CONNECTOR PIPE IS LOCATED IN A CORNER. THE OPTIONAL USE OF A MONOLITHIC CATCH BASIN CONNECTION IN ANY CASE IS PERMITTED. MONOLITHIC CATCH BASIN CONNECTIONS MAY BE CONSTRUCTED TO AVOID CUTTING STANDARD LENGTHS OF PIPE.

6. STEPS SHALL BE LOCATED AS SHOWN. IF THE CONNECTOR PIPE INTERFERES WITH THE STEPS, THEY SHALL BE LOCATED AT THE CENTERLINE OF THE DOWNSTREAM END WALL. STEPS SHALL BE SPACED 12" APART. THE TOP STEP SHALL BE 7" BELOW THE TOP OF THE MANHOLE AND PROJECT 2-1/2". ALL OTHER STEPS SHALL PROJECT 5".

7. DOWELS ARE REQUIRED AT EACH CORNER AND AT 7' ON CENTER (MAXIMUM) ALONG THE BACKWALL.

1 **DRAINAGE INLET No. 1**
NO SCALE

DRAINAGE DETAILS
SCALE AS SHOWN
DD-17

STATE OF CALIFORNIA - DEPARTMENT OF TRANSPORTATION
Caltrans
HYDRAULICS
CONSULTANT FUNCTIONAL SUPERVISOR: STEVEN AGOR
CALCULATED-DESIGNED BY: CRISNA ESTRADA
CHECKED BY: STEVEN AGOR
REVISED BY
DATE REVISED

LAST REVISION 02-14-12
DATE PLOTTED => 21-MAY-2012
TIME PLOTTED => 16:50

Dist	COUNTY	ROUTE	POST MILES TOTAL PROJECT	SHEET No.	TOTAL SHEETS
07	LA	5	29.4/31.6	200	1931

REGISTERED CIVIL ENGINEER 5/15/12 DATE

5-21-12
PLANS APPROVAL DATE

REGISTERED PROFESSIONAL ENGINEER RICHARD STEVEN AGOR No. 57082 Exp. 12/31/13 CIVIL STATE OF CALIFORNIA

THE STATE OF CALIFORNIA OR ITS OFFICERS OR AGENTS SHALL NOT BE RESPONSIBLE FOR THE ACCURACY OR COMPLETENESS OF SCANNED COPIES OF THIS PLAN SHEET.

CITY OF BURBANK
150 N 3RD ST
BURBANK, CA 91510

TETRA TECH
17885 VON KARMAN AVE
IRVINE, CA 92614

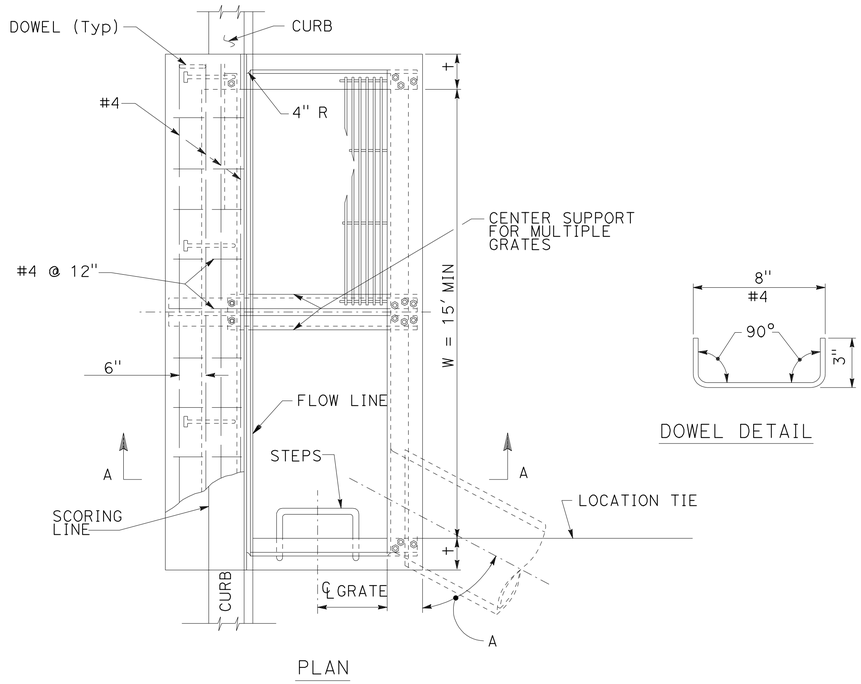

PLAN

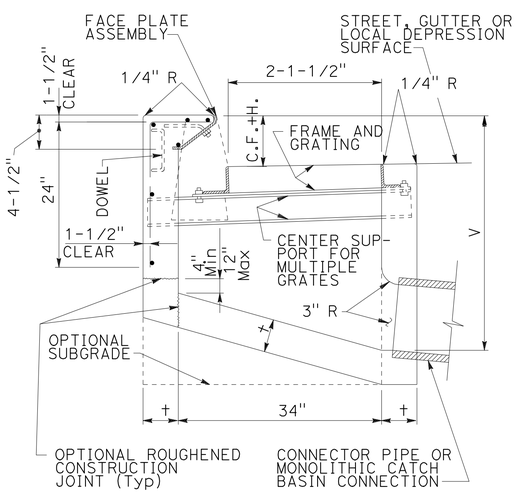

SECTION A-A

STRUCTURAL DATA			
WALL AND SLAB DIMENSIONS AND REINFORCEMENT REQUIREMENTS			
No. OF GRATES	MAXIMUM V	†	REINFORCEMENT FOR WALLS AND SLABS
1-2	4′	6"	NOT REQUIRED
1-2	8′	8"	
1-2	10′	10"	
1-2	12′	10"	REQUIRED
3-4	4′	6"	NOT REQUIRED
3-4	7′	8"	
3-4	8′	8"	REQUIRED
3-4	12′	10"	
5-6	4′	6"	NOT REQUIRED
5-6	6′	8"	
5-6	8′	8"	REQUIRED
5-6	12′	10"	
> 6	4′	6"	
> 6	8′	8"	
> 6	12′	10"	

NOTES:

1. WHERE THE BASIN IS TO BE CONSTRUCTED WITHIN THE LIMITS OF EXISTING OR PROPOSED SIDEWALK OR IS CONTIGUOUS TO SUCH SIDEWALK, THE TOP SLAB OF THE BASIN MAY BE POURED EITHER MONOLITHIC WITH THE SIDEWALK OR SEPARATELY, USING THE SAME CLASS OF CONCRETE AS IN THE BASIN. WHEN POURED MONOLITHICALLY, THE SIDEWALK SHALL BE PROVIDED WITH A WEAKENED PLANE OR A 1" DEEP SAWCUT CONTINUOUSLY AROUND THE EXTERNAL PERIMETER OF THE CATCH BASIN WALLS, INCLUDING ACROSS THE FULL WIDTH OF THE SIDEWALK. SURFACE OF ALL EXPOSED CONCRETE SHALL CONFORM IN SLOPE, GRADE, COLOR, FINISH, AND SCORING TO EXISTING OR PROPOSED CURB AND WALK ADJACENT TO THE BASIN.
2. ALL CURVED CONCRETE SURFACES SHALL BE FORMED BY CURVED FORMS, AND SHALL NOT BE SHAPED BY PLASTERING.
3. ONE GRATING IS REQUIRED UNLESS OTHERWISE SHOWN ON THE PROJECT PLAN.
4. FLOOR OF BASIN SHALL BE GIVEN A STEEL TROWEL FINISH AND SHALL HAVE A LONGITUDINAL AND LATERAL SLOPE OF 1:12 MINIMUM AND 1:3 MAXIMUM, EXCEPT WHERE THE GUTTER GRADE EXCEEDS 8%, IN WHICH CASE THE LONGITUDINAL SLOPE OF THE FLOOR SHALL BE THE SAME AS THE GUTTER GRADE. SLOPE FLOOR FROM ALL DIRECTIONS TO THE OUTLET.
5. DIMENSIONS:
   - V = THE DIFFERENCE IN ELEVATION BETWEEN THE TOP OF THE CURB AND THE INVERT OF THE CATCH BASIN AT THE OUTLET = 4.5′.
   - V_U = THE DIFFERENCE IN ELEVATION BETWEEN THE TOP OF THE CURB AND THE INVERT AT THE UPSTREAM END OF THE BASIN, AND SHALL BE DETERMINED BY THE REQUIREMENTS OF NOTE 4, BUT SHALL NOT BE LESS THAN CURB FACE PLUS 12".
   - V_1 = THE DIFFERENCE IN ELEVATION BETWEEN THE TOP OF THE CURB AND THE INVERT OF THE INLET, NOTED ON THE PLANS.
   - H = NOTED ON THE PROJECT PLANS.
   - W = 2′-11 3/8" FOR ONE GRATING; ADD 3′-5 3/8" FOR EACH ADDITIONAL GRATING.
   - A = THE ANGLE, IN DEGREES, INTERCEPTED BY THE CENTERLINE OF THE CONNECTOR PIPE AND THE CATCH BASIN WALL TO WHICH THE CONNECTOR PIPE IS ATTACHED.
6. PLACE CONNECTOR PIPES AS INDICATED ON THE PLANS. UNLESS OTHERWISE SPECIFIED, THE CONNECTOR PIPE SHALL BE LOCATED AT THE DOWNSTREAM END OF THE BASIN. WHERE THE CONNECTOR PIPE IS SHOWN AT A CORNER, THE CENTERLINE OF THE PIPE SHALL INTERSECT THE INSIDE CORNER OF THE BASIN. THE PIPE MAY BE CUT AND TRIMMED AT A SKEW NECESSARY TO INSURE MINIMUM 3" PIPE EMBEDMENT, ALL AROUND, WITHIN THE CATCH BASIN WALL, AND 3" RADIUS OF ROUNDING OF STRUCTURE CONCRETE, ALL AROUND, ADJACENT TO PIPE ENDS, A MONOLITHIC CATCH BASIN CONNECTION SHALL BE USED TO JOIN THE CONNECTOR PIPE TO THE CATCH BASIN WHENEVER ANGLE "A" IS LESS THAN 70° OR GREATER THAN 110 °, OR WHENEVER THE CONNECTOR PIPE IS LOCATED IN A CORNER. THE OPTIONAL USE OF A MONOLITHIC CATCH BASIN CONNECTION IN ANY CASE IS PERMITTED. MONOLITHIC CATCH BASIN CONNECTIONS MAY BE CONSTRUCTED TO AVOID CUTTING STANDARD LENGTHS OF PIPE.
7. STEPS SHALL BE LOCATED AS SHOWN. IF THE CONNECTOR PIPE INTERFERES WITH THE STEPS, THEY SHALL BE LOCATED ON THE FRONT WALL AT THE CENTERLINE OF THE DOWNSTREAM GRATING. STEPS SHALL BE SPACED 12" APART. THE TOP STEP SHALL BE 7" BELOW THE TOP OF THE GRATING AND PROJECT 2-1/2". ALL OTHER STEPS SHALL PROJECT 5".
8. DOWELS ARE REQUIRED AT EACH CORNER AND AT 7′ ON CENTER (MAXIMUM) ALONG THE BACKWALL.

1 **DRAINAGE INLET No. 2**
NO SCALE

DRAINAGE DETAILS
SCALE AS SHOWN
DD-18

STATE OF CALIFORNIA - DEPARTMENT OF TRANSPORTATION
Caltrans® HYDRAULICS
CONSULTANT FUNCTIONAL SUPERVISOR STEVEN AGOR
CALCULATED-DESIGNED BY CRISNA ESTRADA
CHECKED BY STEVEN AGOR
REVISED BY
DATE REVISED

LAST REVISION 02-14-12
DATE PLOTTED => 21-MAY-2012
TIME PLOTTED => 16:50